Dist	COUNTY	ROUTE	POST MILES TOTAL PROJECT	SHEET No.	TOTAL SHEETS
09	Mno	167	0.0/10.0	1	13

INDEX OF PLANS

SHEET No.	DESCRIPTION
1	TITLE AND LOCATION MAP
2	TYPICAL CROSS SECTIONS
3-4	CONSTRUCTION DETAILS
5	TEMPORARY WATER POLLUTION CONTROL DETAILS
6	TEMPORARY WATER POLLUTION CONTROL QUANTITIES
7	CONSTRUCTION AREA SIGNS
8	SUMMARY OF QUANTITIES
9-13	REVISED AND NEW STANDARD PLANS

THE STANDARD PLANS LIST APPLICABLE TO THIS CONTRACT IS INCLUDED IN THE NOTICE TO BIDDERS AND SPECIAL PROVISIONS BOOK.

STATE OF CALIFORNIA

DEPARTMENT OF TRANSPORTATION

PROJECT PLANS FOR CONSTRUCTION ON

STATE HIGHWAY

IN MONO COUNTY NEAR LEE VINING FROM ROUTE 395 TO 10.0 MILES EAST OF ROUTE 395

TO BE SUPPLEMENTED BY STANDARD PLANS DATED MAY 2006

LOCATION MAP

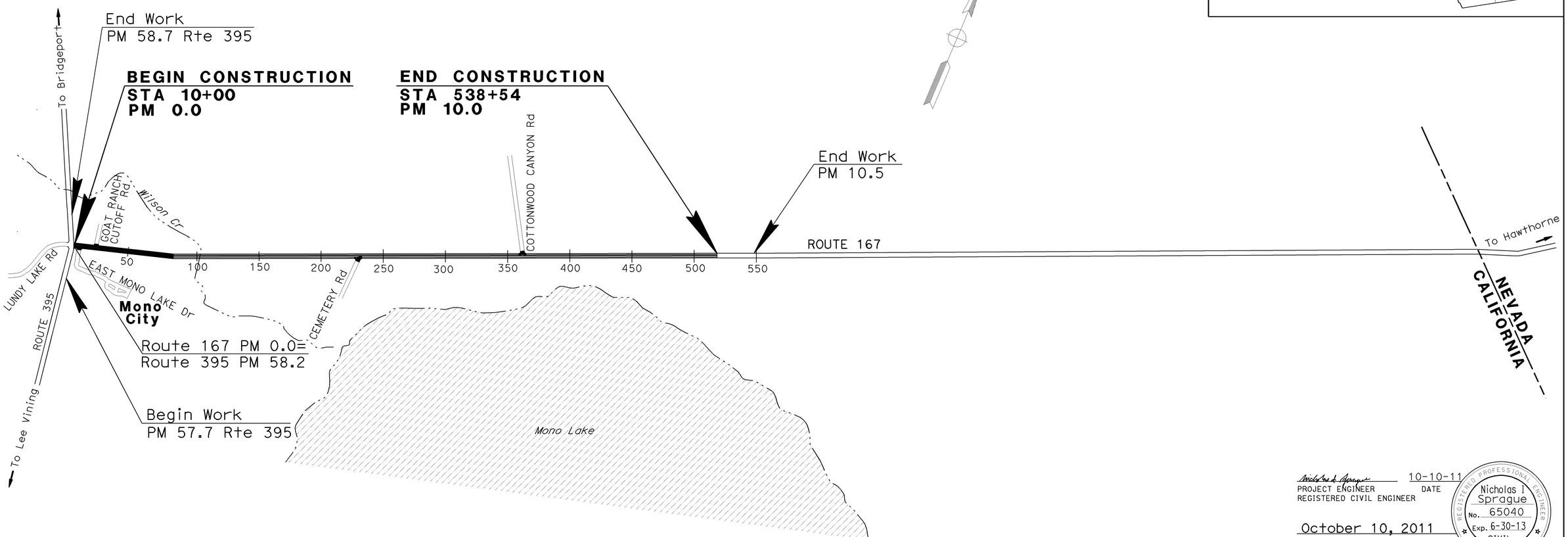

NO SCALE

THE CONTRACTOR SHALL POSSESS THE CLASS (OR CLASSES) OF LICENSE AS SPECIFIED IN THE "NOTICE TO BIDDERS."

PROJECT MANAGER JOHN FOX

DESIGN ENGINEER JOHN FOX

Nicholas I. Sprague 10-10-11
PROJECT ENGINEER DATE
REGISTERED CIVIL ENGINEER

October 10, 2011
PLANS APPROVAL DATE

REGISTERED PROFESSIONAL ENGINEER Nicholas I Sprague No. 65040 Exp. 6-30-13 CIVIL STATE OF CALIFORNIA

THE STATE OF CALIFORNIA OR ITS OFFICERS OR AGENTS SHALL NOT BE RESPONSIBLE FOR THE ACCURACY OR COMPLETENESS OF SCANNED COPIES OF THIS PLAN SHEET.

CONTRACT No.	09-347804
PROJECT ID	0900020092

LAST REVISION 10-10-11

DATE PLOTTED => 11-OCT-2011
TIME PLOTTED => 14:55

Dist	COUNTY	ROUTE	POST MILES TOTAL PROJECT	SHEET No.	TOTAL SHEETS
09	Mno	167	0.0/10.0	2	13

REGISTERED CIVIL ENGINEER 10-10-11 DATE

10-10-11
PLANS APPROVAL DATE

REGISTERED PROFESSIONAL ENGINEER Nicholas I. Sprague No. 65040 Exp. 6-30-13 CIVIL STATE OF CALIFORNIA

THE STATE OF CALIFORNIA OR ITS OFFICERS OR AGENTS SHALL NOT BE RESPONSIBLE FOR THE ACCURACY OR COMPLETENESS OF SCANNED COPIES OF THIS PLAN SHEET.

NOTES:

1. DIMENSIONS OF THE PAVEMENT STRUCTURES (STRUCTURAL SECTIONS) ARE SUBJECT TO TOLERANCES SPECIFIED IN THE STANDARD SPECIFICATIONS.
2. SUPERELEVATION AS SHOWN OR AS DIRECTED BY THE ENGINEER.
3. FOR ACCURATE RIGHT OF WAY DATA, CONTACT RIGHT OF WAY ENGINEERING AT THE DISTRICT OFFICE.
4. PROTECT FLASHING BEACONS NEAR 17+92 (PM 0.15) AND TRAFFIC LOOPS NEAR STA 22+40 (PM 0.23) Lt & Rt.

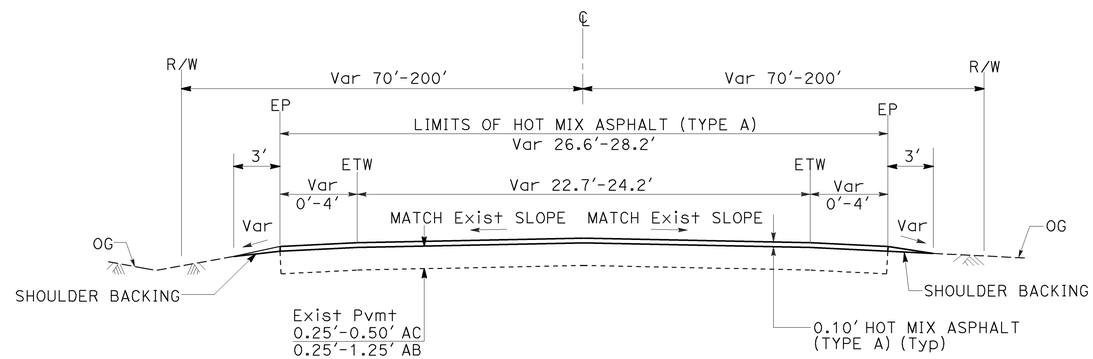

ROUTE 167

PM 0.0/10.0
STA 10+00 TO STA 538+54

TYPICAL CROSS SECTIONS

NO SCALE **X-1**

STATE OF CALIFORNIA - DEPARTMENT OF TRANSPORTATION
Caltrans® MAINTENANCE ENGINEERING

FUNCTIONAL SUPERVISOR: JOHN FOX
CALCULATED-DESIGNED BY: MONTASHEEMA AFROZE
CHECKED BY: NICHOLAS SPRAGUE
REVISED BY: MA
DATE REVISED: 06-28-11
NS: 06-13-11

LAST REVISION 10-10-11
DATE PLOTTED => 11-OCT-2011
TIME PLOTTED => 14:55

Dist	COUNTY	ROUTE	POST MILES TOTAL PROJECT	SHEET No.	TOTAL SHEETS
09	Mno	167	0.0/10.0	3	13

Nicholas I. Sprague 10-10-11
REGISTERED CIVIL ENGINEER DATE

10-10-11
PLANS APPROVAL DATE

REGISTERED PROFESSIONAL ENGINEER Nicholas I. Sprague No. 65040 Exp. 6-30-13 CIVIL STATE OF CALIFORNIA

THE STATE OF CALIFORNIA OR ITS OFFICERS OR AGENTS SHALL NOT BE RESPONSIBLE FOR THE ACCURACY OR COMPLETENESS OF SCANNED COPIES OF THIS PLAN SHEET.

NOTES:

1. PROTECT TRAFFIC LOOPS NEAR Sta 22+40 Lt & Rt.

LEGEND:

- LIMITS OF COLD PLANE AC AND HMA
- HMA
- DIRECTION OF TRAVEL

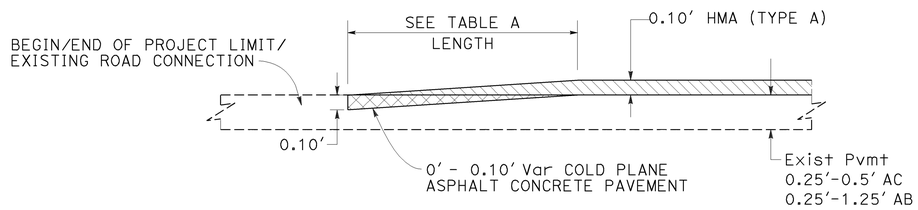

SECTION A-A
COLD PLANE ASPHALT CONCRETE PAVEMENT AT CONFORM (TYPICAL)

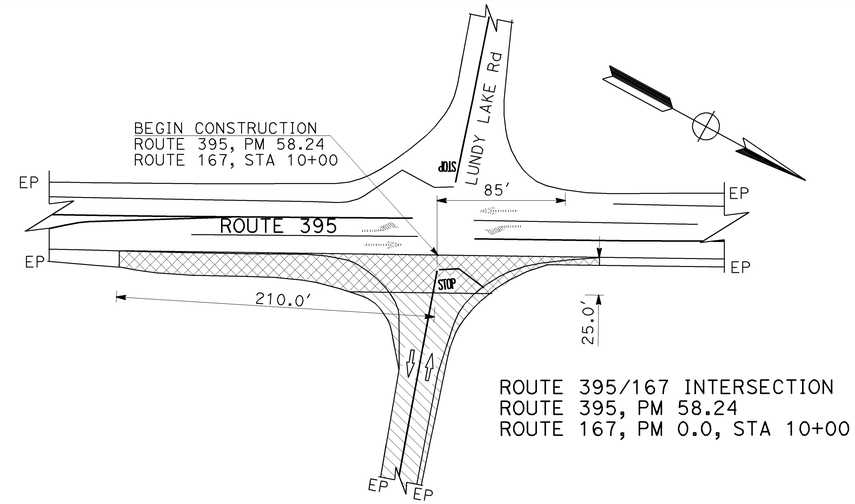

ROUTE 395/167 INTERSECTION
ROUTE 395, PM 58.24
ROUTE 167, PM 0.0, STA 10+00

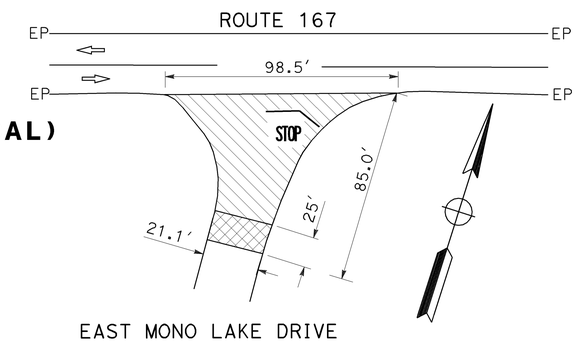

EAST MONO LAKE DRIVE
PM 0.06, STA 12+42

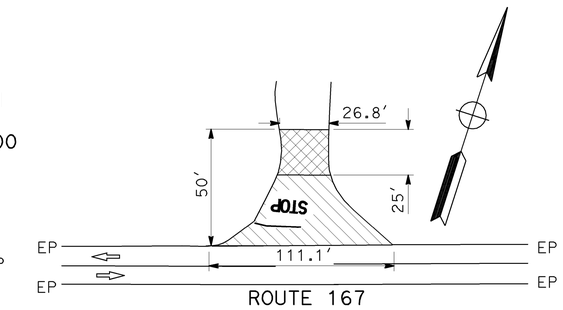

GOAT RANCH CUTOFF ROAD
PM 0.36, STA 28+57

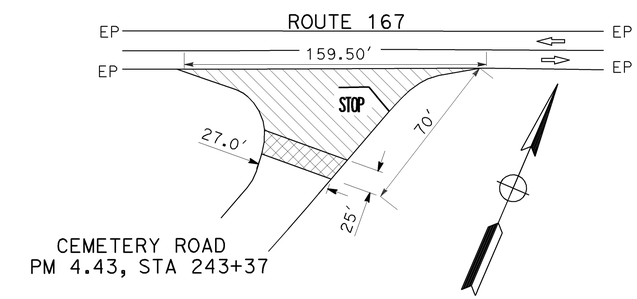

CEMETERY ROAD
PM 4.43, STA 243+37

TABLE A
COLD PLANE ASPHALT CONCRETE PAVEMENT

PM	STATION	DESCRIPTION	LENGTH	WIDTH	DEPTH	NOTES
0.0	10+00	CONFORM GRIND	25'	295.0'	0.10'	BEGIN CONSTRUCTION
0.06	12+42	CONFORM GRIND	25'	21.1'	0.10'	EAST MONO LAKE DRIVE, Rt
0.36	28+57	CONFORM GRIND	25'	26.8'	0.10'	GOAT RANCH CUTOFF Rd, Lt
2.54	144+70	CONFORM GRIND	25'	15.3'	0.10'	ROAD CONNECTION, Lt
4.43	243+37	CONFORM GRIND	25'	27.0'	0.10'	CEMETERY Rd, Rt
7.01	382+24	CONFORM GRIND	25'	22.0'	0.10'	COTTONWOOD CANYON Rd, Lt
9.72	523+22	CONFORM GRIND	3'	118.0'	0.10'	PAVED AREA, Lt
9.90	532+72	CONFORM GRIND	3'	80.0'	0.10'	ROAD CONNECTION, Rt
10.0	538+29	CONFORM GRIND	25'	27.8'	0.10'	END CONSTRUCTION

ROAD CONNECTION HMA PAVING LIMITS

PM	STATION	Lt	Rt	"X" LF	"Y" LF	"Z" LF	DESCRIPTION
0.04	12+09	X		66.0	32.8	13.3	ROAD CONNECTION (DIRT ROAD)
0.06	12+42		X	98.5	85.0	21.1	EAST MONO LAKE DRIVE
0.36	28+57	X		111.1	50.0	26.8	GOAT RANCH CUTOFF ROAD
2.54	144+70	X		70.5	49.0	15.3	ROAD CONNECTION (DIRT ROAD)
4.43	243+37		X	159.5	70.0	27.0	CEMETERY ROAD
6.88	373+42		X	92.0	47.8	11.8	ROAD CONNECTION (DIRT ROAD)
7.01	382+24	X		305.5	115.0	22.0	COTTONWOOD CANYON ROAD
9.48	510+33		X	57.5	34.7	13.0	ROAD CONNECTION (DIRT ROAD)
9.51	512+06	X		58.0	50.0	11.5	ROAD CONNECTION

EXISTING UTILITY FACILITIES HAVE NOT BEEN PLOTTED ON THESE PLANS

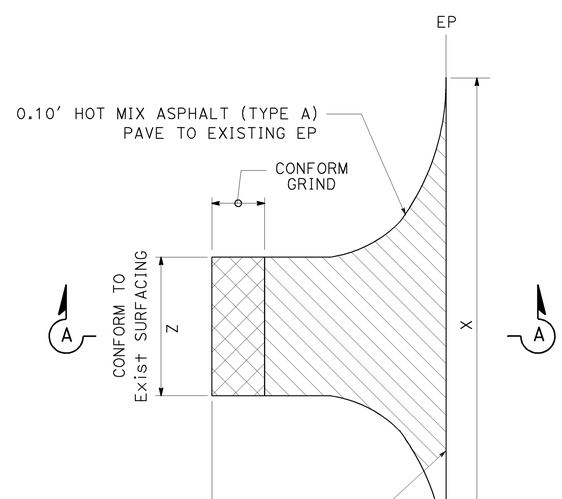

TYPICAL ROAD CONNECTION HMA PAVING LIMITS

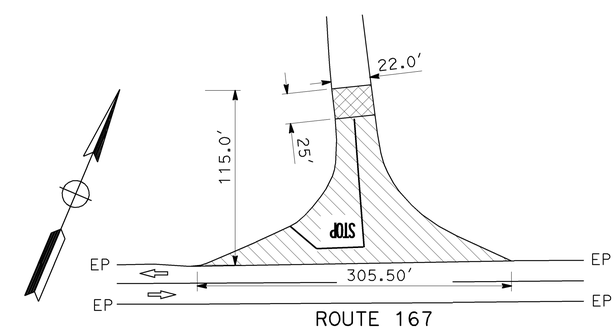

COTTONWOOD CANYON ROAD
PM 7.01, STA 382+24

CONSTRUCTION DETAILS
NO SCALE

C-1

NS	06-10-11
MA	06-29-11
REVISED BY	DATE REVISED
MONTASHEEMA AFROZE	NICHOLAS SPRAGUE
CALCULATED-DESIGNED BY	CHECKED BY
FUNCTIONAL SUPERVISOR	JOHN FOX

STATE OF CALIFORNIA - DEPARTMENT OF TRANSPORTATION
Caltrans® MAINTENANCE ENGINEERING

LAST REVISION 10-10-11
DATE PLOTTED => 11-OCT-2011
TIME PLOTTED => 14:55

Dist	COUNTY	ROUTE	POST MILES TOTAL PROJECT	SHEET No.	TOTAL SHEETS
09	Mno	167	0.0/10.0	4	13

REGISTERED CIVIL ENGINEER 10-10-11 DATE

PLANS APPROVAL DATE 10-10-11

REGISTERED PROFESSIONAL ENGINEER Nicholas I. Sprague No. 65040 Exp. 6-30-13 CIVIL STATE OF CALIFORNIA

THE STATE OF CALIFORNIA OR ITS OFFICERS OR AGENTS SHALL NOT BE RESPONSIBLE FOR THE ACCURACY OR COMPLETENESS OF SCANNED COPIES OF THIS PLAN SHEET.

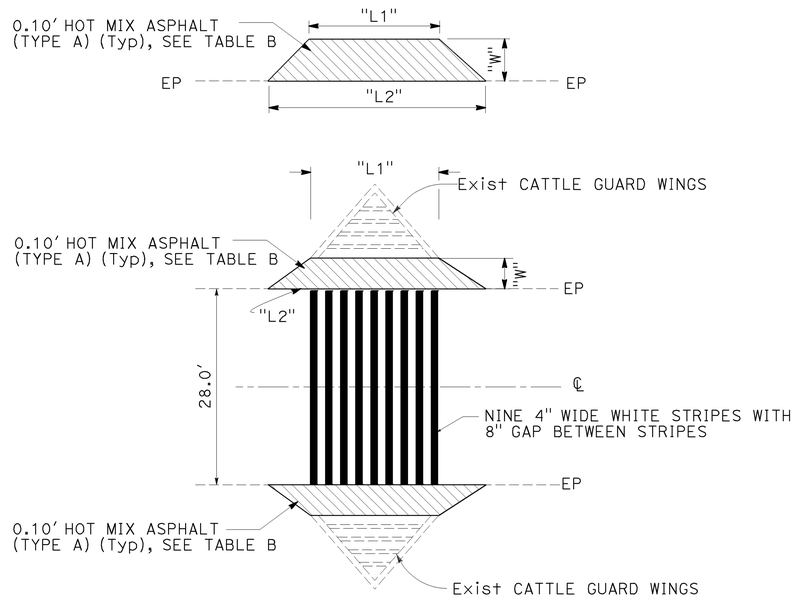

CATTLE GUARD DETAIL
ROUTE 167

PM 0.03; STA 11+76
PM 8.63; STA 466+17
PM 8.68; STA 469+16

TABLE B

PAVE INTO EXISTING CATTLE GUARD WINGS

PM	STATION	DIMENSION (L1 x L2 x W)	L†	R†	AREA (SQYD)
0.03	11+76	3' x 7' x 2.5'	X	X	3.0
8.63	466+17	5' x 12' x 3'	X	X	6.0
8.68	469+16	5' x 12' x 3'	X	X	6.0

EXISTING UTILITY FACILITIES HAVE NOT BEEN PLOTTED ON THESE PLANS

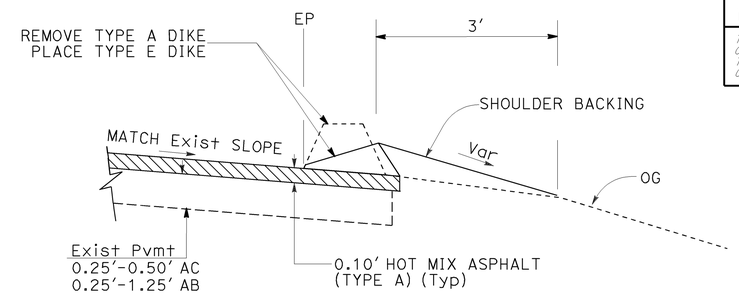

HMA DIKE PAVING DETAIL (TYPICAL)
REMOVE TYPE A AND PLACE TYPE E DIKE

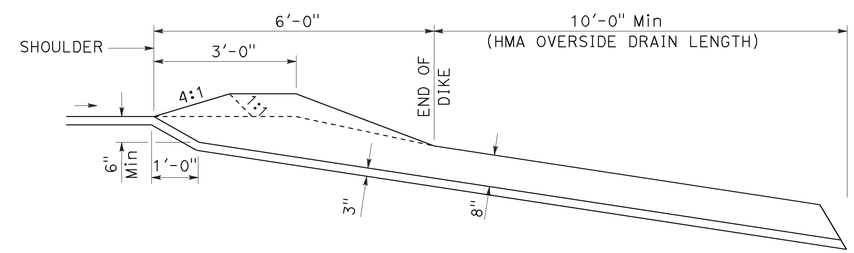

HMA OVERSIDE DRAIN PAVING DETAIL (TYPICAL)

HOT MIX ASPHALT DIKE AND OVERSIDE DRAIN

PM	STATION TO STATION		L†	R†	REMOVE AC DIKE (LF)	PLACE HMA DIKE (TYPE E) (LF)	REMOVE HMA OVERSIDE DRAIN LF (N)	HMA OVERSIDE DRAIN LF (N)
	FROM	TO						
1.80-1.87	104+95	108+61	X		366	366		
1.80-1.88	105+57	109+16		X	359	359		
4.16-4.25	229+76	234+10		X	434	434		
4.65-4.70	255+52	258+36	X		284	284		
4.66-4.70	255+81	258+29		X	248	248		
4.90-4.94	268+65	270+94		X	229	229		
5.01-5.04	274+75	276+27	X		152	152		
5.02-5.05	274+91	276+50		X	159	159		
5.07-5.12	277+87	280+29		X	242	242	2	10
6.72-6.77	364+67	367+54	X		287	287		
6.72-6.78	364+67	367+77		X	310	310		
TOTAL					3070	3070	2	10

(N)-NOT A SEPARATE PAY ITEM, FOR INFORMATION ONLY

CONSTRUCTION DETAILS
NO SCALE

C-2

STATE OF CALIFORNIA - DEPARTMENT OF TRANSPORTATION
Caltrans MAINTENANCE ENGINEERING

FUNCTIONAL SUPERVISOR: JOHN FOX
CALCULATED-DESIGNED BY: MONTASHEEMA AFROZE
CHECKED BY: NICHOLAS SPRAGUE
REVISED BY: MA
DATE REVISED: 05-18-11
NS 06-09-11

LAST REVISION 10-10-11
DATE PLOTTED => 11-OCT-2011
TIME PLOTTED => 14:55

Dist	COUNTY	ROUTE	POST MILES TOTAL PROJECT	SHEET No.	TOTAL SHEETS
09	Mno	167	0.0/10.0	5	13

REGISTERED CIVIL ENGINEER 10-10-11 DATE

10-10-11
PLANS APPROVAL DATE

REGISTERED PROFESSIONAL ENGINEER Nicholas I. Sprague No. 65040 Exp. 6-30-13 CIVIL STATE OF CALIFORNIA

THE STATE OF CALIFORNIA OR ITS OFFICERS OR AGENTS SHALL NOT BE RESPONSIBLE FOR THE ACCURACY OR COMPLETENESS OF SCANNED COPIES OF THIS PLAN SHEET.

NOTE:
1. EXACT LOCATION AND POSITION OF TEMPORARY DRAINAGE PROTECTION AS APPROVED BY THE ENGINEER.

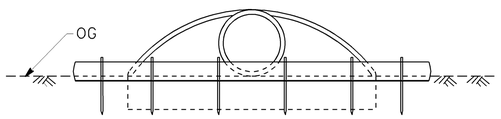

ELEVATION

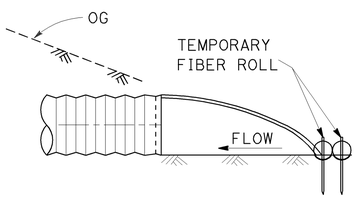

TYPICAL CROSS-SECTION

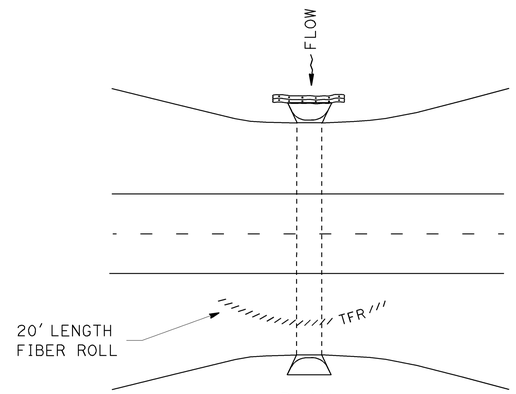

PLAN

TEMPORARY DRAINAGE INLET PROTECTION (DRY CULVERT PLAN VIEW)

LEGEND

/// TFR /// TEMPORARY FIBER ROLL

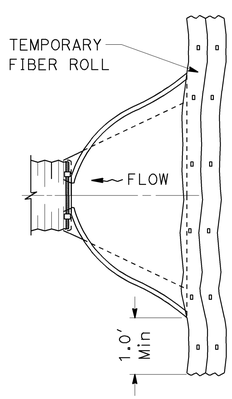

PLAN

TEMPORARY DRAINAGE INLET PROTECTION (DRY CULVERT INLET)

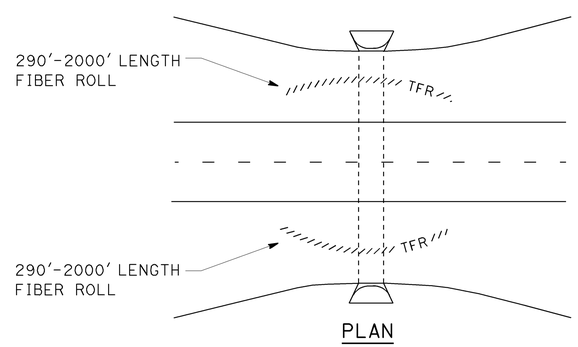

PLAN

TEMPORARY FIBER ROLL (LIVE WATER PLAN VIEW)

PM 1.87; PM 6.74; PM 8.99

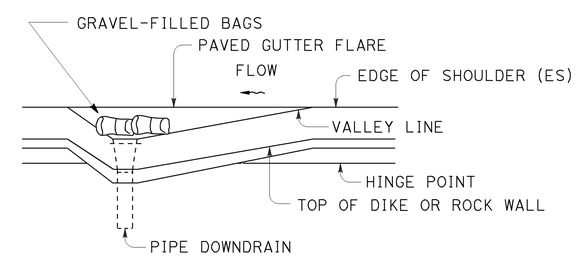

TEMPORARY DRAINAGE INLET PROTECTION AT PIPE DOWNDRAIN (TYPICAL)

PM 1.80; PM 1.85

EXISTING UTILITY FACILITIES HAVE NOT BEEN PLOTTED ON THESE PLANS

TEMPORARY WATER POLLUTION CONTROL DETAILS

NO SCALE **WPCD-1**

STATE OF CALIFORNIA - DEPARTMENT OF TRANSPORTATION
Caltrans MAINTENANCE ENGINEERING

FUNCTIONAL SUPERVISOR: JOHN FOX
CALCULATED-DESIGNED BY: NICHOLAS SPRAGUE
CHECKED BY: MONTASHEEMA AFROZE
REVISED BY: MA
DATE REVISED: 06-29-11
NS 06-10-11

LAST REVISION 10-10-11
DATE PLOTTED => 11-OCT-2011
TIME PLOTTED => 14:55

Dist	COUNTY	ROUTE	POST MILES TOTAL PROJECT	SHEET No.	TOTAL SHEETS
09	Mno	167	0.0/10.0	6	13

REGISTERED CIVIL ENGINEER 10-10-11 DATE

10-10-11
PLANS APPROVAL DATE

REGISTERED PROFESSIONAL ENGINEER Nicholas I. Sprague No. 65040 Exp. 6-30-13 CIVIL STATE OF CALIFORNIA

THE STATE OF CALIFORNIA OR ITS OFFICERS OR AGENTS SHALL NOT BE RESPONSIBLE FOR THE ACCURACY OR COMPLETENESS OF SCANNED COPIES OF THIS PLAN SHEET.

NOTES:
1. EXACT LOCATION AND POSITION OF TEMPORARY DRAINAGE PROTECTION AS APPROVED BY THE ENGINEER.

TEMPORARY DRAINAGE INLET PROTECTION

POST MILE	STATION	L†	R†	EA	FIBER ROLL LF (N)	DESCRIPTION
0.35	28+57	X		1	27	CULVERT INLET, 18" x 42' CMP (INCLUDED IN TEMPORARY DRAINAGE INLET PROTECTION)
1.09	67+57	X		1	27	CULVERT INLET, 18" x 60' CMP, CONSTRUCTION DITCH
1.80	104+94	X		1		PIPE DOWNDRAIN
1.85	107+71	X		1		60" x 210' CMP, PIPE DOWNDRAIN
2.08	119+63	X		1	30	36" x 60' CMP, Const INLET DITCH
2.19	125+56	X		1	27	CULVERT INLET, 18" x 60' CMP
2.55	144+63	X		1	27	CULVERT INLET, 18" x 28' CMP (ASBUILT)
3.57	198+63	X		1	27	CULVERT INLET, 18" x 60' CMP
4.03	222+63	X		1	27	CULVERT INLET, 18" x 58' CMP
4.68	256+94	X		1	30	CULVERT INLET, 30" x 72' CMP
5.12	280+29		X			REPLACE OVERSIDE DRAIN
5.43	296+63	X		1	27	CULVERT INLET, 18" x 50' CMP
5.70	310+77	X		1	27	CULVERT INLET, 18" x 50' CMP
5.96	324+63	X		1	27	CULVERT INLET, 18" x 60' CMP, Const OUTLET DITCH
6.85	371+94	X		1	28	CULVERT INLET, 24" x 52' CMP
6.98	378+63	X		1	27	CULVERT INLET, 18" x 60' CMP, Const OUTLET DITCH
7.53	407+65	X		1	27	CULVERT INLET, 18" x 64' CMP, Const OUTLET DITCH
7.80	422+02	X		1	27	CULVERT INLET
8.16	440+83	X		1	27	CULVERT INLET, 18" x 60' CMP
8.84	476+90	X		1	27	29" x 18" x 24' CMP ARCH PIPE
9.18	494+74	X		1	27	CULVERT INLET, 18" x 54' CMP
9.36	504+40	X		1	30	CULVERT INLET, 36" x 54' CMP, METAL END SECTION
9.46	509+71	X		1	27	CULVERT INLET, 18" x 60' CMP
9.51	512+03	X		1	27	CULVERT INLET, 18" x 32' CMP
9.72	522+95	X		1	27	CULVERT INLET, 18" x 28' CMP
TOTAL				24		

(N) NOT A SEPARATE PAY ITEM, FOR INFORMATION ONLY.

EXISTING UTILITY FACILITIES HAVE NOT BEEN PLOTTED ON THESE PLANS

TEMPORARY WATER POLLUTION CONTROL QUANTITIES WPCQ-1

STATE OF CALIFORNIA - DEPARTMENT OF TRANSPORTATION
Caltrans MAINTENANCE ENGINEERING

FUNCTIONAL SUPERVISOR: JOHN FOX
CALCULATED-DESIGNED BY: MONTASHEEMA AFROZE
CHECKED BY: NICHOLAS SPRAGUE
REVISED BY: MA NS
DATE REVISED: 06-29-11 06-10-11

LAST REVISION 10-10-11
DATE PLOTTED => 11-OCT-2011
TIME PLOTTED => 14:55

Dist	COUNTY	ROUTE	POST MILES TOTAL PROJECT	SHEET No.	TOTAL SHEETS
09	Mno	167	0.0/10.0	7	13

REGISTERED CIVIL ENGINEER 10-10-11 DATE

10-10-11
PLANS APPROVAL DATE

REGISTERED PROFESSIONAL ENGINEER Nicholas I. Sprague No. 65040 Exp. 6-30-13 CIVIL STATE OF CALIFORNIA

THE STATE OF CALIFORNIA OR ITS OFFICERS OR AGENTS SHALL NOT BE RESPONSIBLE FOR THE ACCURACY OR COMPLETENESS OF SCANNED COPIES OF THIS PLAN SHEET.

NOTES:

1. FOR SIGN INSTALLATION DETAILS AND DIMENSIONS NOT SHOWN SEE Std PLANS.
2. SEE TABLE FOR PLACEMENT TYPE. EXACT LOCATION AND POSITION OF CONSTRUCTION AREA SIGNS TO BE DETERMINED BY THE ENGINEER.

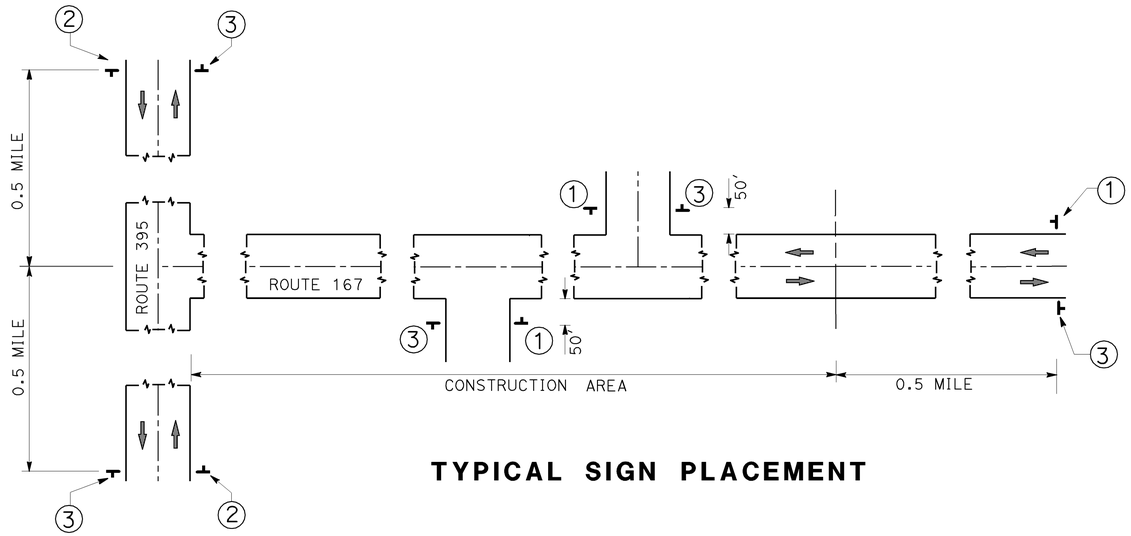

TYPICAL SIGN PLACEMENT

STATIONARY MOUNTED CONSTRUCTION AREA SIGNS

LAYOUT	TYPE	PANEL SIZE (Inch)	SIGN MESSAGE	No. OF POST AND SIZE (Inch)	EACH
1	W20-1	48" x 48"	ROAD WORK AHEAD	1 - 6" x 6"	5
	C23B (CA)	60" x 24"	PAVEMENT MAINTENANCE		
2	W20-1	48" x 48"	ROAD WORK AHEAD	1 - 6" x 6"	2
	C23B (CA) (SPECIAL)	48" x 30"	PAVEMENT MAINTENANCE ON ROUTE 167		
3	G20-2	36" x 18"	END ROAD WORK	1 - 4" x 4"	7

STATIONARY MOUNTED CONSTRUCTION AREA SIGNS

COUNTY	ROUTE	PM	PLACEMENT	REMARKS
Mno	395	57.74	2,3	BEGIN WORK, END WORK ROUTE 395
Mno	167	0.06	3,1	END WORK, BEGIN WORK EAST MONO LAKE DRIVE, R†
Mno	167	0.36	3,1	END WORK, BEGIN WORK GOAT RANCH CUTOFF, L†
Mno	167	4.43	3,1	END WORK, BEGIN WORK CEMETERY ROAD, R†
Mno	167	7.01	3,1	END WORK, BEGIN WORK COTTONWOOD CANYON Rd. L†
Mno	167	10.50	3,1	END WORK, BEGIN WORK ROUTE 167
Mno	395	58.74	3,2	END WORK, BEGIN WORK ROUTE 395

THIS PLAN ACCURATE FOR CONSTRUCTION AREA SIGN WORK ONLY

PORTABLE CHANGEABLE MESSAGE SIGNS

MESSAGE FOR ROUTE 167		
USE CAUTION	PREPARE TO STOP	EXPECT 20 MINUTE DELAY
MESSAGE FOR ROUTE 395		
EXPECT 20 MINUTE DELAY	STATE ROUTE 167	PAVEMENT MAINTENANCE

1. PORTABLE CHANGEABLE MESSAGE SIGN LOCATIONS TO BE CONFIRMED BY THE ENGINEER BEFORE THE ACTUAL CLOSURE.
2. ALTERNATE MESSAGES MUST BE APPROVED BY THE ENGINEER.
3. MESSAGE MAY BE ALTERED BY THE ENGINEER.
4. WHEN CONSTRUCTION OPERATIONS ARE NOT ACTIVELY IN PROGRESS, PORTABLE CHANGEABLE MESSAGE SIGNS SHALL NOT DISPLAY A MESSAGE UNLESS DIRECTED BY THE ENGINEER.

MAINTAINING EXISTING TRAFFIC MANAGEMENT SYSTEM ELEMENTS DURING CONSTRUCTION

ROUTE	PM	STATION	No.	REMARKS
167	0.14	17+40	2	FLASHING BEACONS FOR TWO SIGNS, L† & R†.
167	0.23	22+40	2	TRAFFIC COUNT STATION
TOTAL			4	

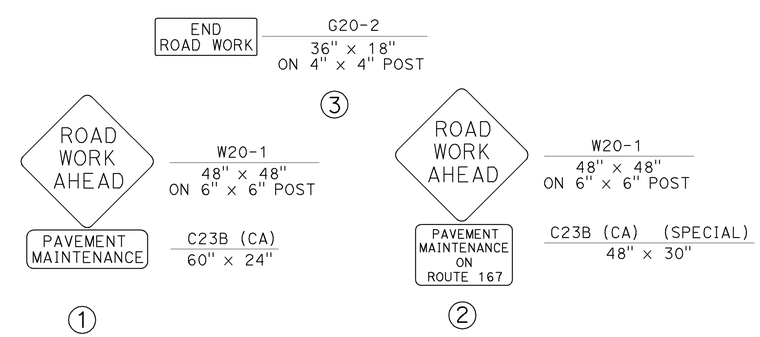

TYPICAL SIGN LAYOUT

CONSTRUCTION AREA SIGNS
NO SCALE

CS-1

STATE OF CALIFORNIA - DEPARTMENT OF TRANSPORTATION
Caltrans MAINTENANCE ENGINEERING

FUNCTIONAL SUPERVISOR: JOHN FOX
CALCULATED-DESIGNED BY: MONTASHEEMA AFROZE
CHECKED BY: NICHOLAS SPRAGUE
REVISED BY: MA
DATE REVISED: 06-29-11
NS 06-10-11

LAST REVISION 10-10-11
DATE PLOTTED => 11-OCT-2011
TIME PLOTTED => 14:55

Dist	COUNTY	ROUTE	POST MILES TOTAL PROJECT	SHEET No.	TOTAL SHEETS
09	Mno	167	0.0/10.0	8	13

REGISTERED CIVIL ENGINEER 10-10-11 DATE

10-10-11
PLANS APPROVAL DATE

REGISTERED PROFESSIONAL ENGINEER Nicholas I. Sprague No. 65040 Exp. 6-30-13 CIVIL STATE OF CALIFORNIA

THE STATE OF CALIFORNIA OR ITS OFFICERS OR AGENTS SHALL NOT BE RESPONSIBLE FOR THE ACCURACY OR COMPLETENESS OF SCANNED COPIES OF THIS PLAN SHEET.

ROADWAY QUANTITY SUMMARY

PM 0.0 TO 10.0	HOT MIX ASPHALT (TYPE A)	MINOR HMA	PLACE HMA (Misc AREA)	COLD PLANE ASPHALT CONCRETE PAVEMENT	TACK COAT	REMOVE AC DIKE	PLACE HMA DIKE (TYPE E)
	TON	TON*	SQYD**	SQYD	TON	LF	LF
STA 10+00 TO STA 538+54	11,298	83	21	922	41	3070	3070
TOTAL	11,298	83	21	922	41	3070	3070

*THIS QUANTITY IS FOR HMA OVERSIDE DRAIN AND PLACE HMA DIKE

**THIS QUANTITY INCLUDES AREAS FOR HMA OVERSIDE DRAIN AND CATTLE GUARDS

PAINT TRAFFIC STRIPE (2-COAT)

PM 0.0 TO 10.0	DETAIL NUMBER			
	5	18	21	27B
	LF	LF	LF	LF
STA 10+00 TO STA 538+54	36,208	10,399	6008	105,708
TOTAL	158,323***			

*** THIS QUANTITY INCLUDES 83' LONG SINGLE YELLOW LINE AT COTTONWOOD CANYON ROAD INTERSECTION

SHOULDER BACKING

PM 0.0 TO 10.0	STATION	LEFT	RIGHT	QUANTITY
				TON
	10+00 TO 538+54	X	X	2062
TOTAL				2062

PAINT PAVEMENT MARKING (2-COAT)

PM 0.0 TO 10.0	LIMIT LINE		CATTLEGUARD		"AHEAD"		"STOP"	
	LF(N)	SQFT	EA(N)	SQFT	EA(N)	SQFT	EA(N)	SQFT
STA 10+00 TO STA 538+54	184	184	3	102	1	31	6	22
SUBTOTAL	184		306		31		132	
TOTAL	653							

(N)-NOT A SEPARATE PAY ITEM, FOR INFORMATION ONLY

TEMPORARY FIBER ROLL

PM	STATION	LF	NOTES
1.87	108+98	920	WILSON CREEK
6.74	365+74	580	LIVE STREAM
8.99	484+86	4000	LIVE WATER, VEGETATION
TOTAL		5500	

EXISTING UTILITY FACILITIES HAVE NOT BEEN PLOTTED ON THESE PLANS

SUMMARY OF QUANTITIES
Q-1

NICHOLAS SPRAGUE	REVISED BY	MA	NS
MONTASHEEMA AFROZE	DATE REVISED	06-29-11	06-10-11
CALCULATED-DESIGNED BY			
CHECKED BY			
FUNCTIONAL SUPERVISOR	JOHN FOX		

STATE OF CALIFORNIA - DEPARTMENT OF TRANSPORTATION
Caltrans® MAINTENANCE ENGINEERING

LAST REVISION 10-10-11 | DATE PLOTTED => 11-OCT-2011 | TIME PLOTTED => 14:55

Dist	COUNTY	ROUTE	POST MILES TOTAL PROJECT	SHEET No.	TOTAL SHEETS
09	Mno	167	0.0/10.0	9	13

Randell D. Hiatt
REGISTERED CIVIL ENGINEER

May 20, 2011
PLANS APPROVAL DATE

REGISTERED PROFESSIONAL ENGINEER
Randell D. Hiatt
No. C50200
Exp. 6-30-11
CIVIL
STATE OF CALIFORNIA

The State of California or its officers or agents shall not be responsible for the accuracy or completeness of electronic copies of this plan sheet.

To accompany plans dated 10-10-11

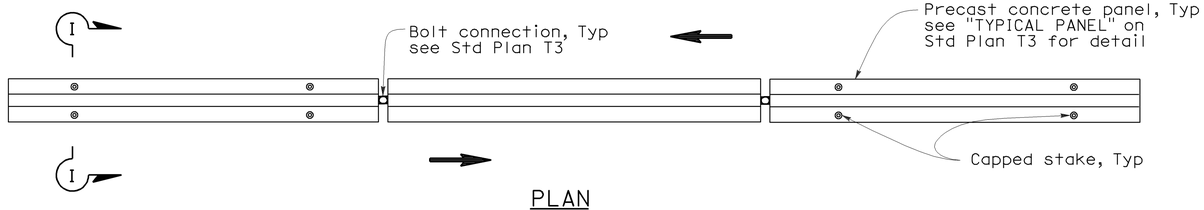

PLAN

RAILING STAKING CONFIGURATION FOR TWO-WAY TRAFFIC

See Note 1

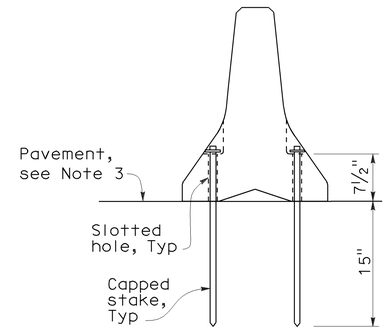

SECTION I-I

NOTES:

1. Where Type K Temporary Railing is placed as a temporary or long term barrier in two-way traffic on highways with less than 24" from the edge of traveled way, use four capped stakes per every other panel with end panels staked.
2. Where Type K Temporary Railing is placed 3" to 24" from the edge of an excavation on highways, use two capped stakes per panel along the traffic side.
3. Staked Type K Temporary Railing must be supported by at least 4" thick concrete, hot mix asphalt or existing asphalt concrete pavement.
4. The minimum yield strength for the washer must be 60,000 psi.
5. Direction of adjacent traffic indicated by ⟹.

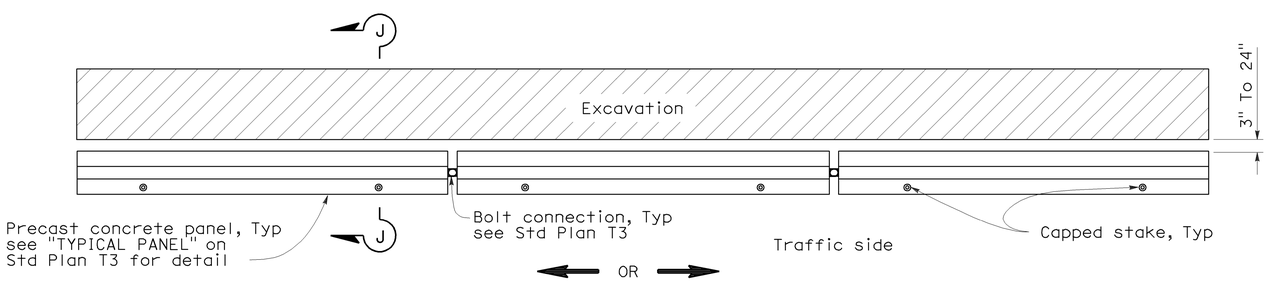

PLAN

RAILING STAKING CONFIGURATION ADJACENT TO AN EXCAVATION

See Note 2

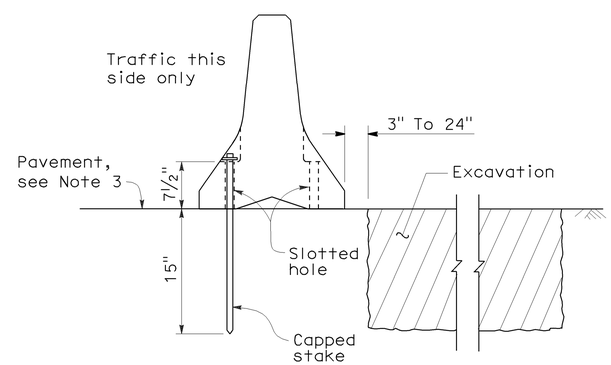

SECTION J-J

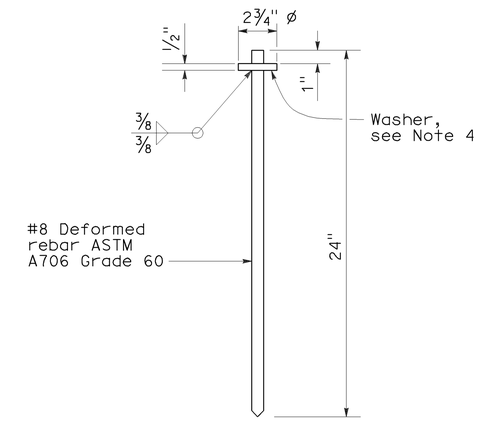

CAPPED STAKE DETAIL

STATE OF CALIFORNIA
DEPARTMENT OF TRANSPORTATION

TEMPORARY RAILING (TYPE K)

NO SCALE

NSP T3A DATED MAY 20, 2011 SUPPLEMENTS
THE STANDARD PLANS BOOK DATED MAY 2006.

NEW STANDARD PLAN NSP T3A

2006 NEW STANDARD PLAN NSP T3A

8-31-10

DIST	COUNTY	ROUTE	POST MILES TOTAL PROJECT	SHEET NO.	TOTAL SHEETS
09	Mno	167	0.0/10.0	10	13

Randell D. Hiatt
REGISTERED CIVIL ENGINEER

June 6, 2008
PLANS APPROVAL DATE

REGISTERED PROFESSIONAL ENGINEER
Randell D. Hiatt
No. C50200
Exp. 6-30-09
CIVIL
STATE OF CALIFORNIA

The State of California or its officers or agents shall not be responsible for the accuracy or completeness of electronic copies of this plan sheet.

To accompany plans dated 10-10-11

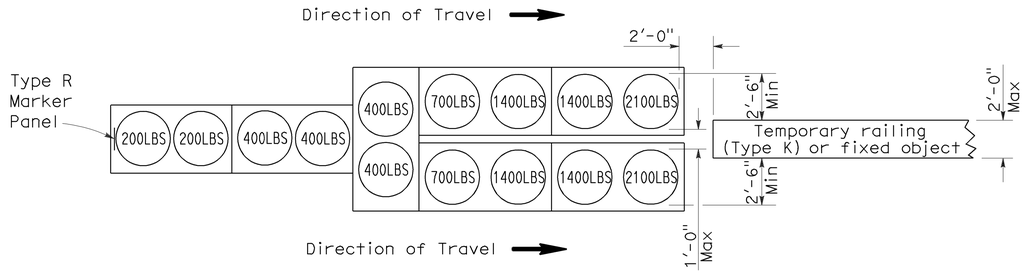

ARRAY 'TU14'

Approach speed 45 mph or more

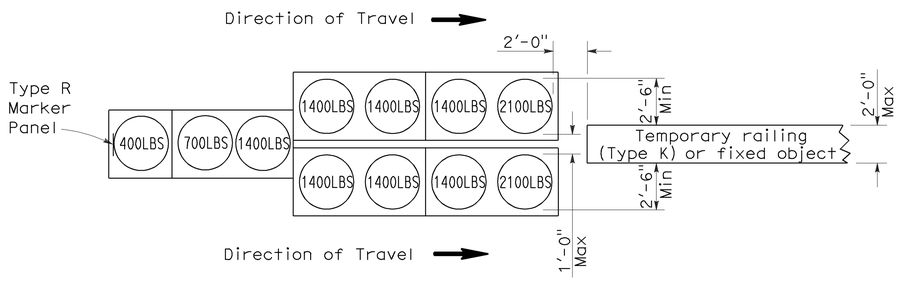

ARRAY 'TU11'

Approach speed less than 45 mph

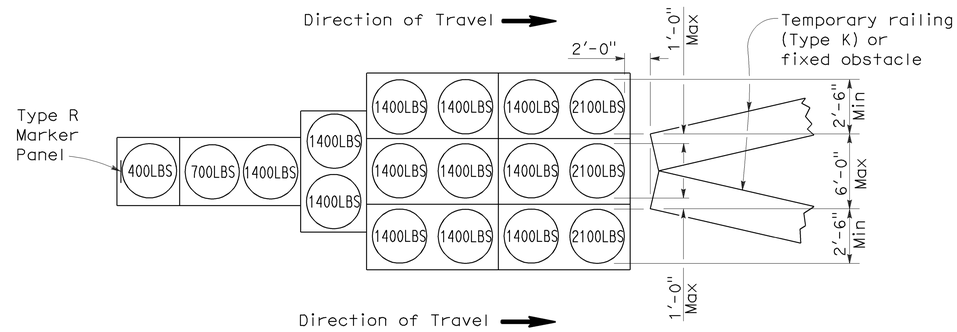

ARRAY 'TU17'

Approach speed less than 45 mph

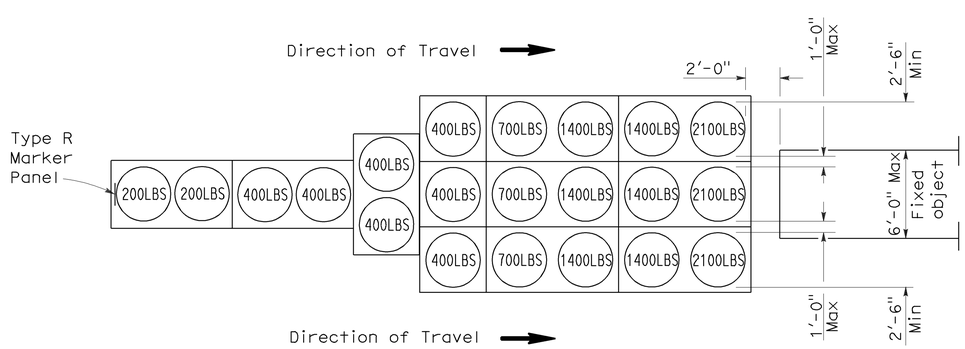

ARRAY 'TU21'

Approach speed 45 mph or more

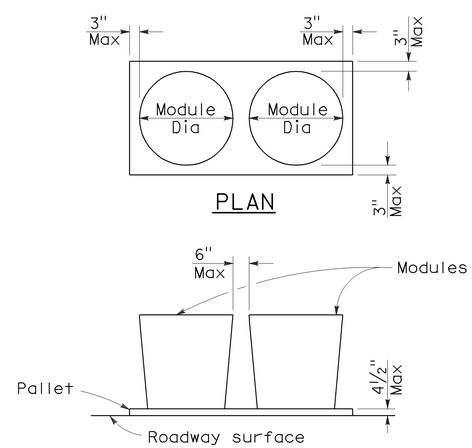

ELEVATION

CRASH CUSHION PALLET DETAIL

See Note 7

NOTES:

1. (XXX) Indicates sand filled module location and weight of sand in pounds for each module. Module spacing is based on the greater diameter of the module.
2. All sand weights are nominal.
3. Temporary crash cushion arrays shall not encroach on the traveled way.
4. Place the top of Type R marker panel 1" below the module lid.
5. Refer to Standard Plan A73B for marker details.
6. Approach speeds indicated conform to NCHRP 350 Report criteria.
7. Use of pallets is optional.

STATE OF CALIFORNIA
DEPARTMENT OF TRANSPORTATION

TEMPORARY CRASH CUSHION, SAND FILLED (UNIDIRECTIONAL)

NO SCALE

RSP T1A DATED JUNE 6, 2008 SUPERSEDES STANDARD PLAN T1A
DATED MAY 1, 2006 - PAGE 211 OF THE STANDARD PLANS BOOK DATED MAY 2006.

REVISED STANDARD PLAN RSP T1A

2006 REVISED STANDARD PLAN RSP T1A

5-15-08

DIST	COUNTY	ROUTE	POST MILES TOTAL PROJECT	SHEET NO.	TOTAL SHEETS
09	Mno	167	0.0/10.0	11	13

Randell D. Hiatt
REGISTERED CIVIL ENGINEER

June 6, 2008
PLANS APPROVAL DATE

REGISTERED PROFESSIONAL ENGINEER
Randell D. Hiatt
No. C50200
Exp. 6-30-09
CIVIL
STATE OF CALIFORNIA

The State of California or its officers or agents shall not be responsible for the accuracy or completeness of electronic copies of this plan sheet.

To accompany plans dated 10-10-11

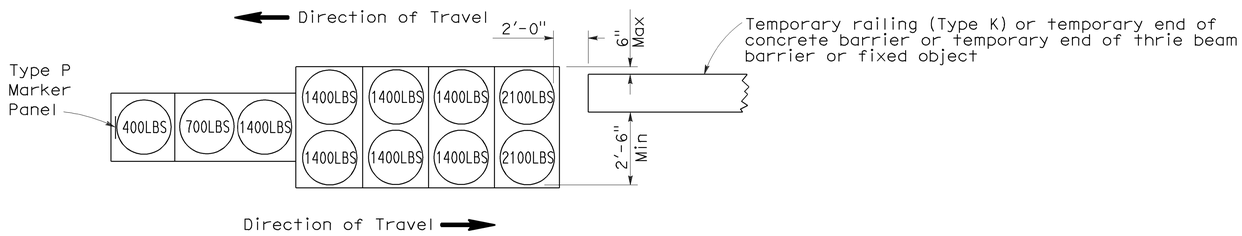

ARRAY 'TB11'

Approach speed less than 45 mph

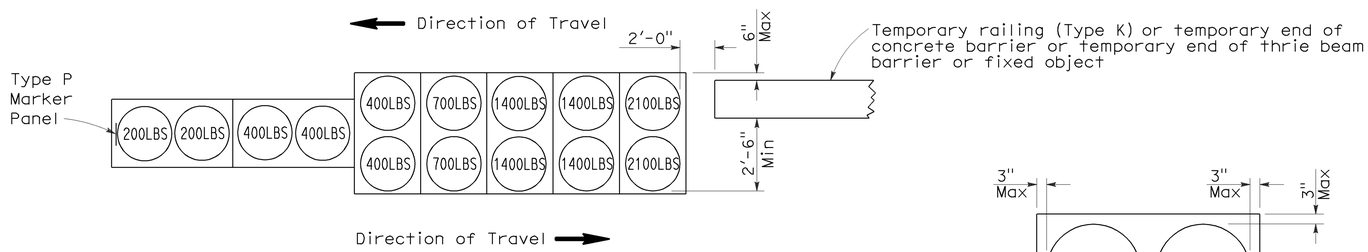

ARRAY 'TB14'

Approach speed 45 mph or more

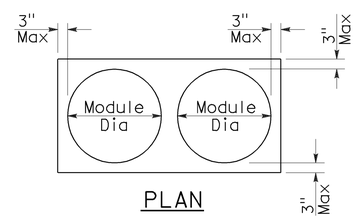

PLAN

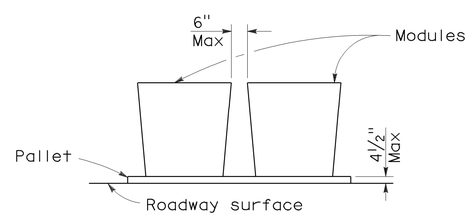

ELEVATION

CRASH CUSHION PALLET DETAIL

See Note 7

NOTES:

1. (XXX) Indicates sand filled module location and weight of sand in pounds for each module. Module spacing is based on the greater diameter of the module.
2. All sand weights are nominal.
3. Temporary crash cushion arrays shall not encroach on the traveled way.
4. Place the Type P marker panel so that the bottom of the panel rests upon the pallet.
5. Refer to Standard Plan A73B for marker details.
6. Approach speeds indicated conform to NCHRP 350 Report criteria.
7. Use of pallets is optional.

STATE OF CALIFORNIA
DEPARTMENT OF TRANSPORTATION

TEMPORARY CRASH CUSHION, SAND FILLED (BIDIRECTIONAL)

NO SCALE

RSP T1B DATED JUNE 6, 2008 SUPERSEDES STANDARD PLAN T1B
DATED MAY 1, 2006 - PAGE 212 OF THE STANDARD PLANS BOOK DATED MAY 2006.

REVISED STANDARD PLAN RSP T1B

2006 REVISED STANDARD PLAN RSP T1B

5-15-08

DIST	COUNTY	ROUTE	POST MILES TOTAL PROJECT	SHEET NO.	TOTAL SHEETS
09	Mno	167	0.0/10.0	12	13

Randell D. Hiatt
REGISTERED CIVIL ENGINEER

June 6, 2008
PLANS APPROVAL DATE

REGISTERED PROFESSIONAL ENGINEER
Randell D. Hiatt
No. C50200
Exp. 6-30-09
CIVIL
STATE OF CALIFORNIA

The State of California or its officers or agents shall not be responsible for the accuracy or completeness of electronic copies of this plan sheet.

To accompany plans dated 10-10-11

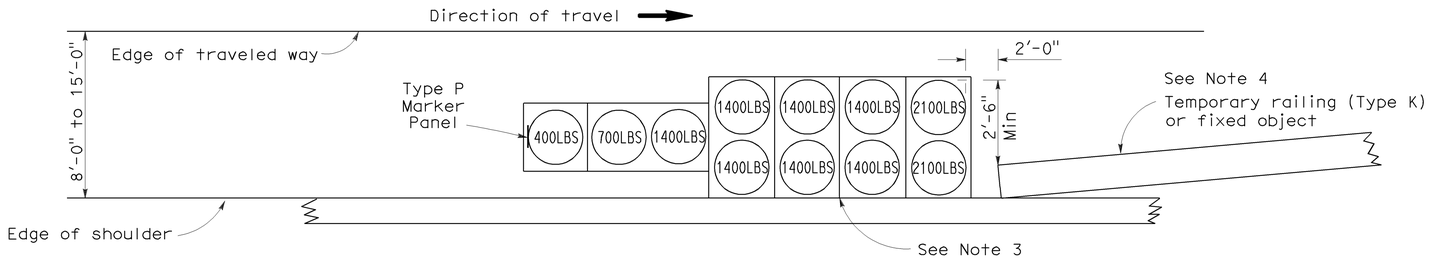

ARRAY 'TS11'

Approach speed less than 45 mph
See Note 9

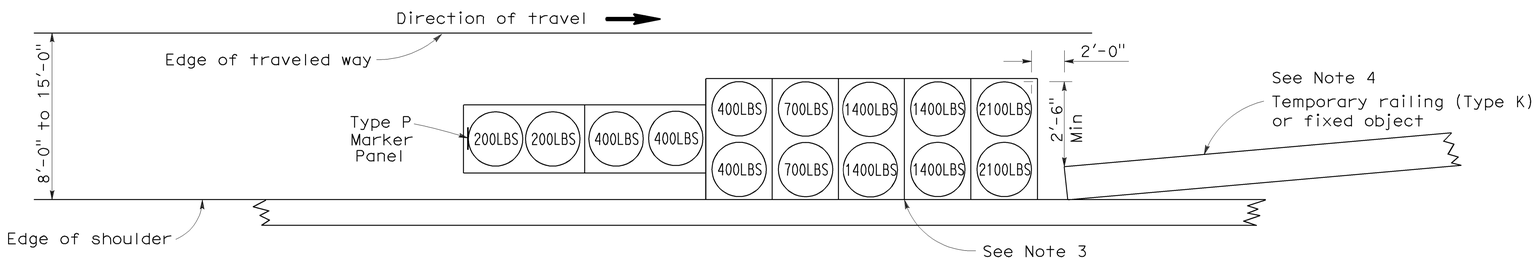

ARRAY 'TS14'

Approach speed 45 mph or more
See Note 9

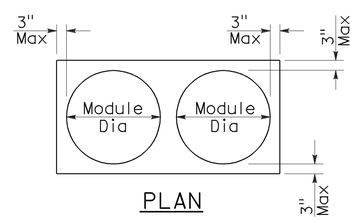

PLAN

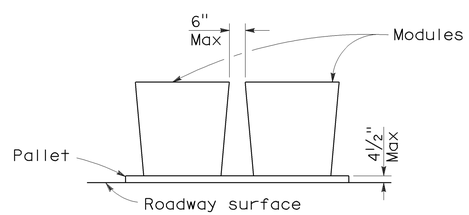

ELEVATION

CRASH CUSHION PALLET DETAIL

See Note 11

NOTES:

1. (XXX) Indicates sand filled module location and weight of sand in pounds for each module. Module spacing is based on the greater diameter of the module.
2. All sand weights are nominal.
3. The temporary crash cushion arrays shown on this plan shall be used only in locations where there will be traffic on one side of the temporary crash cushion array.
4. If the fixed object or approach end of the temporary railing is less than 15'-0" from the edge of traveled way, a temporary crash cushion is required in a construction or work zone.
5. Temporary crash cushion arrays shall not encroach on the traveled way.
6. Arrays for median shoulders shall conform to details shown on this plan for outside shoulders.
7. Place the Type P marker panel so that the bottom of the panel rests upon the pallet and faces traffic.
8. Refer to Standard Plan A73B for marker details.
9. For shoulder widths less than 8'-0", appropriate approved crash cushion protection, other than sand filled modules, shall be provided at fixed objects and at approach ends of temporary railing. The specific type of crash cushion shall be as shown on the project plans or as specified in the Special Provisions, or if not shown on the project plans or specified in the Special Provisions, shall be as approved by the Engineer.
10. Approach speeds indicated conform to NCHRP 350 Report criteria.
11. Use of pallets is optional.

STATE OF CALIFORNIA
DEPARTMENT OF TRANSPORTATION

TEMPORARY CRASH CUSHION, SAND FILLED (SHOULDER INSTALLATIONS)

NO SCALE

RSP T2 DATED JUNE 6, 2008 SUPERSEDES STANDARD PLAN T2
DATED MAY 1, 2006 - PAGE 213 OF THE STANDARD PLANS BOOK DATED MAY 2006.

REVISED STANDARD PLAN RSP T2

2006 REVISED STANDARD PLAN RSP T2

5-15-08

DIST	COUNTY	ROUTE	POST MILES TOTAL PROJECT	SHEET NO.	TOTAL SHEETS
09	Mno	167	0.0/10.0	13	13

LICENSED LANDSCAPE ARCHITECT

April 3, 2009
PLANS APPROVAL DATE

The State of California or its officers or agents shall not be responsible for the accuracy or completeness of electronic copies of this plan sheet.

LICENSED LANDSCAPE ARCHITECT
Robert B. Schott 3695
Signature
11-30-10
Renewal Date
2-25-09
Date
STATE OF CALIFORNIA

To accompany plans dated 10-10-11

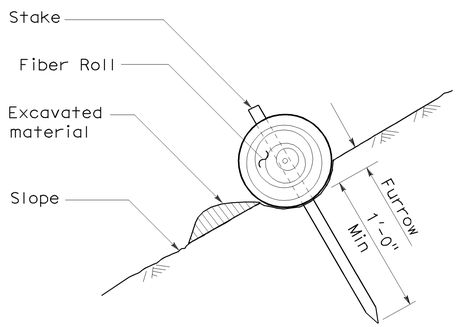

SECTION

TEMPORARY FIBER ROLL (TYPE 1)

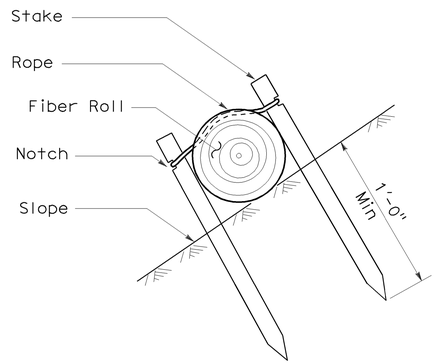

SECTION

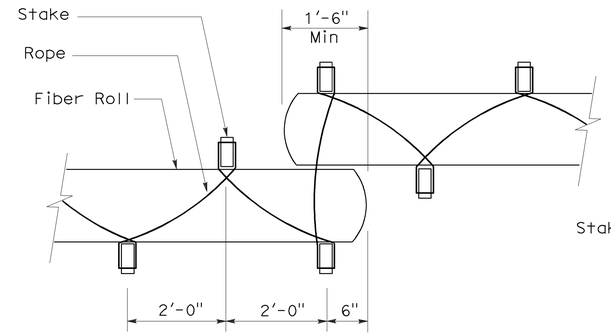

PLAN

TEMPORARY FIBER ROLL (TYPE 2)

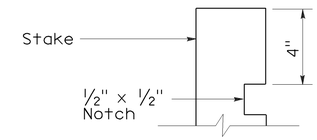

ELEVATION

STAKE NOTCH DETAIL

NOTES:

1. Temporary fiber roll spacing varies depending upon slope inclination.
2. Installations shown in the perspectives are for slope inclination of 10:1 and steeper.

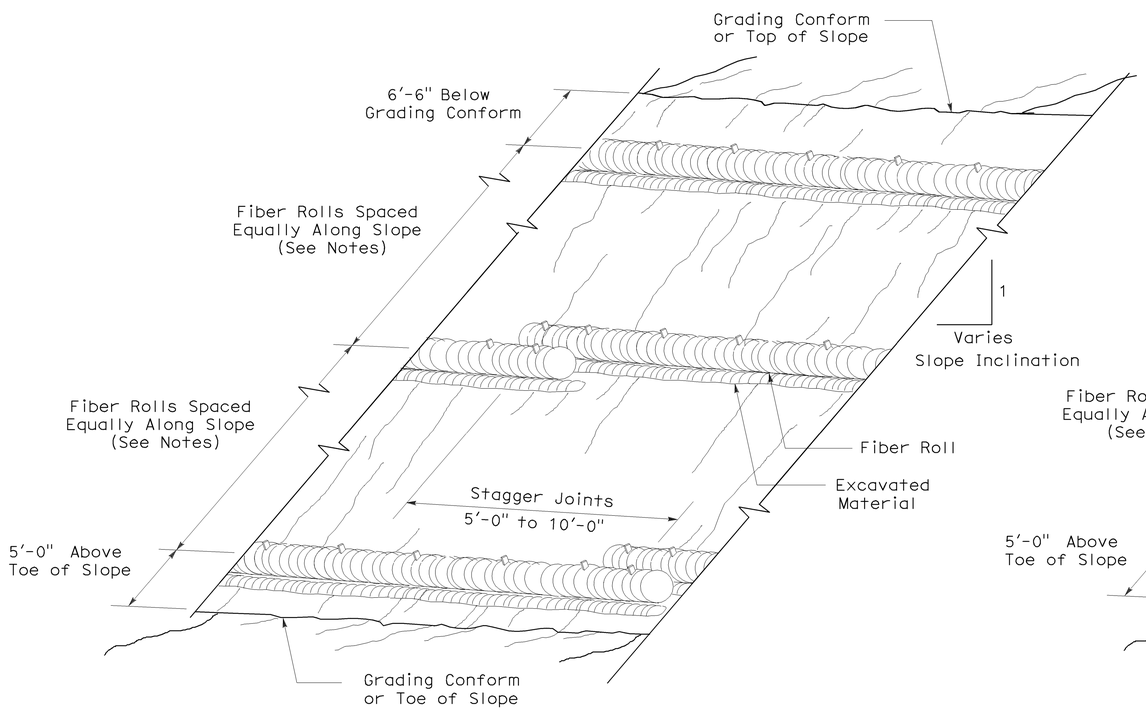

PERSPECTIVE

TEMPORARY FIBER ROLL (TYPE 1)

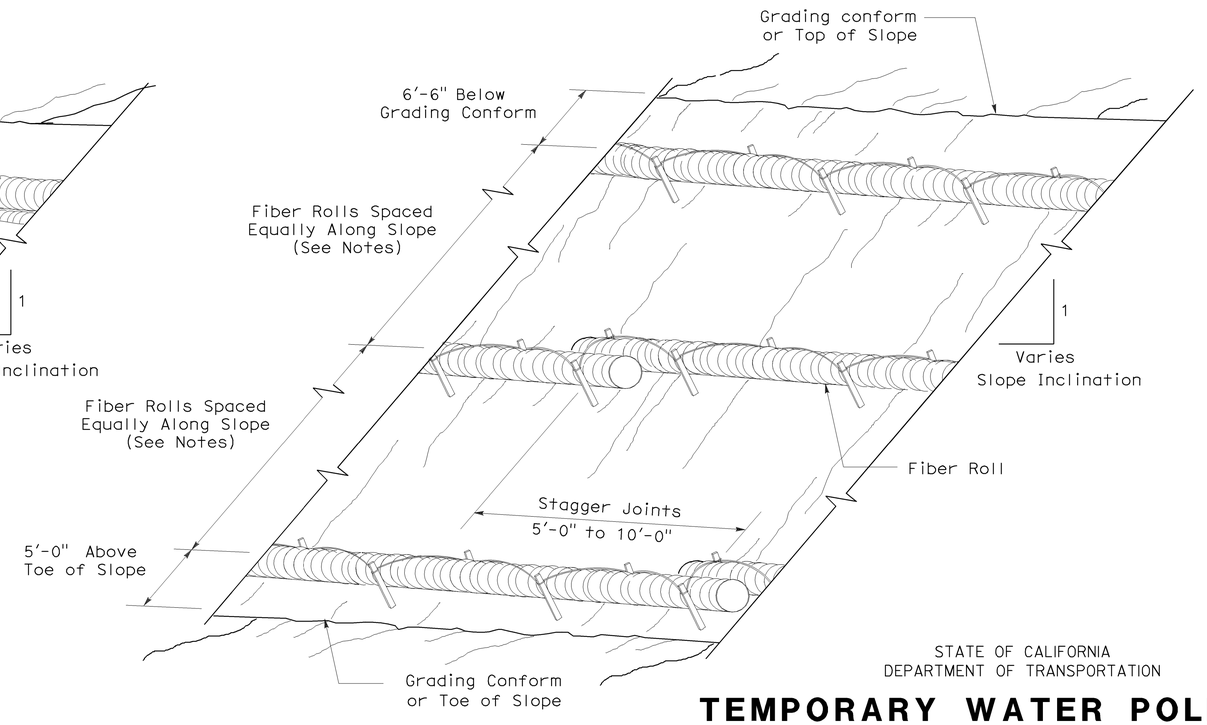

PERSPECTIVE

TEMPORARY FIBER ROLL (TYPE 2)

STATE OF CALIFORNIA
DEPARTMENT OF TRANSPORTATION

TEMPORARY WATER POLLUTION CONTROL DETAILS (TEMPORARY FIBER ROLL)

NO SCALE

RSP T56 DATED APRIL 3, 2009 SUPERSEDES STANDARD PLAN T56 DATED MAY 1, 2006 - PAGE 232 OF THE STANDARD PLANS BOOK DATED MAY 2006.

REVISED STANDARD PLAN RSP T56

2006 REVISED STANDARD PLAN RSP T56

2-23-09