Dist	COUNTY	ROUTE	POST MILES TOTAL PROJECT	SHEET No.	TOTAL SHEETS
09	Mno	395	36.1/40.1	1	26

STATE OF CALIFORNIA

DEPARTMENT OF TRANSPORTATION

NH-P395(230)E

PROJECT PLANS FOR CONSTRUCTION ON

STATE HIGHWAY

IN MONO COUNTY ABOUT 15 MILES SOUTH OF LEE VINING FROM 0.4 MILE SOUTH OF OBSIDIAN DOME ROAD TO 0.2 MILE SOUTH OF SOUTH JUNCTION ROUTE 158

TO BE SUPPLEMENTED BY STANDARD PLANS DATED MAY 2006

INDEX OF PLANS

SHEET No.	DESCRIPTION
1	TITLE AND LOCATION MAP
2-3	TYPICAL CROSS SECTIONS
4-5	CONSTRUCTION DETAILS
6	CONSTRUCTION AREA SIGNS
7-12	PAVEMENT DELINEATION PLANS, DETAILS, AND QUANTITIES
13	SUMMARY OF QUANTITIES
14	ELECTRICAL PLAN
15-26	NEW AND REVISED STANDARD PLANS

THE STANDARD PLANS LIST APPLICABLE TO THIS CONTRACT IS INCLUDED IN THE NOTICE TO BIDDERS AND SPECIAL PROVISIONS BOOK.

LOCATION MAP

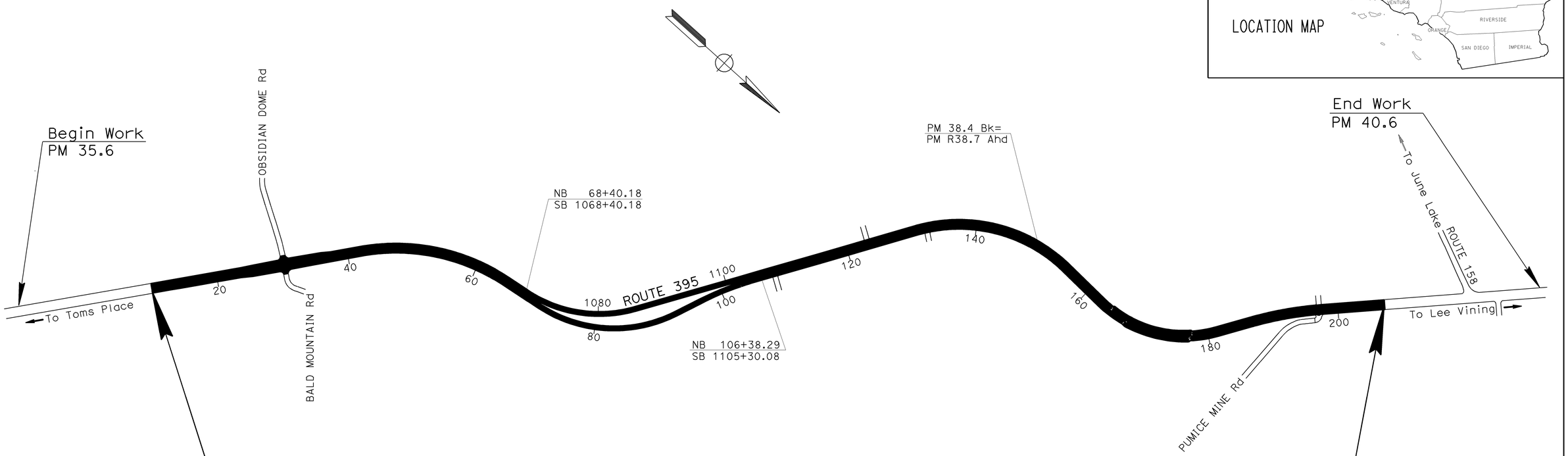

NO SCALE

THE CONTRACTOR SHALL POSSESS THE CLASS (OR CLASSES) OF LICENSE AS SPECIFIED IN THE "NOTICE TO BIDDERS."

PROJECT MANAGER: CEDRIK ZEMITIS

DESIGN ENGINEER: STEPHEN WINZENREAD

PROJECT ENGINEER / REGISTERED CIVIL ENGINEER — DATE: 5-17-10

REGISTERED PROFESSIONAL ENGINEER — Stephen Winzenread — No. 64274 — Exp. 6-30-11 — CIVIL — STATE OF CALIFORNIA

May 17, 2010
PLANS APPROVAL DATE

THE STATE OF CALIFORNIA OR ITS OFFICERS OR AGENTS SHALL NOT BE RESPONSIBLE FOR THE ACCURACY OR COMPLETENESS OF SCANNED COPIES OF THIS PLAN SHEET.

CONTRACT No.	09-343404
PROJECT ID	0900000145

LAST REVISION 07-12-10

DATE PLOTTED => 13-JUL-2010
TIME PLOTTED => 11:55

Dist	COUNTY	ROUTE	POST MILES TOTAL PROJECT	SHEET No.	TOTAL SHEETS
09	Mno	395	36.1/40.1	2	26

REGISTERED CIVIL ENGINEER 5-17-10 DATE

5-17-10
PLANS APPROVAL DATE

REGISTERED PROFESSIONAL ENGINEER STEPHEN WINZENREAD No. 64274 Exp. 6-30-11 CIVIL STATE OF CALIFORNIA

THE STATE OF CALIFORNIA OR ITS OFFICERS OR AGENTS SHALL NOT BE RESPONSIBLE FOR THE ACCURACY OR COMPLETENESS OF SCANNED COPIES OF THIS PLAN SHEET.

NOTES:

1. DIMENSIONS OF THE PAVEMENT STRUCTURES (STRUCTURAL SECTIONS) ARE SUBJECT TO TOLERANCES SPECIFIED IN THE STANDARD SPECIFICATIONS.
2. SUPERELEVATION AS SHOWN OR AS DIRECTED BY THE ENGINEER.
3. EXACT DEPTH MAY VARY DEPENDING ON JOB MIX FORMULA.

ABBREVIATIONS:

CIPR - COLD IN-PLACE RECYCLE

EXISTING STRUCTURAL SECTION:

1
- 0.08′ RUBBERIZED ASPHALT CONCRETE (TYPE-G)
- 0.40′ ASPHALT CONCRETE (TYPE B)
- SLURRY SEAL
- 0.45′ ASPHALT CONCRETE (TYPE B)
- 0.35′ CLASS 2 AGGREGATE BASE

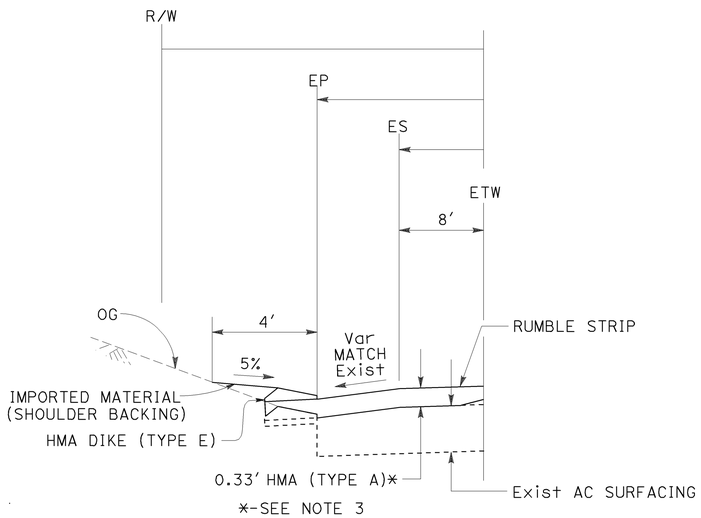

*-SEE NOTE 3

108+33 TO 115+88
116+52 TO 119+57
123+40 TO 136+26
164+56 TO 177+52
197+56 TO 203+08
205+61 TO 207+10

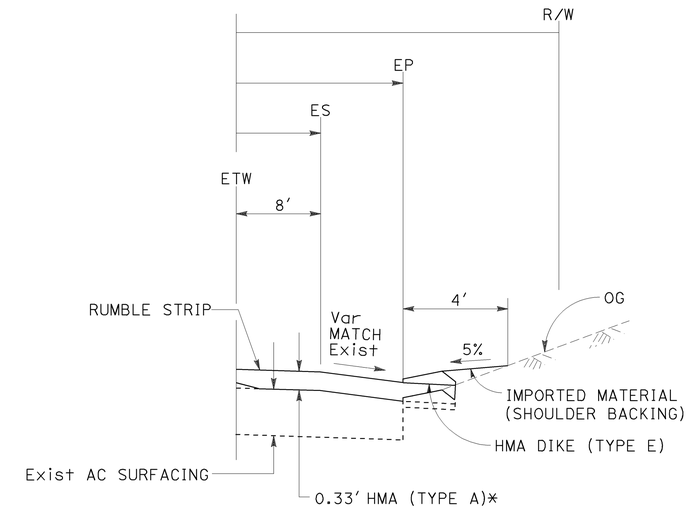

*-SEE NOTE 3

33+77 TO 68+40.18
167+22 TO 177+49
108+85 TO 114+49

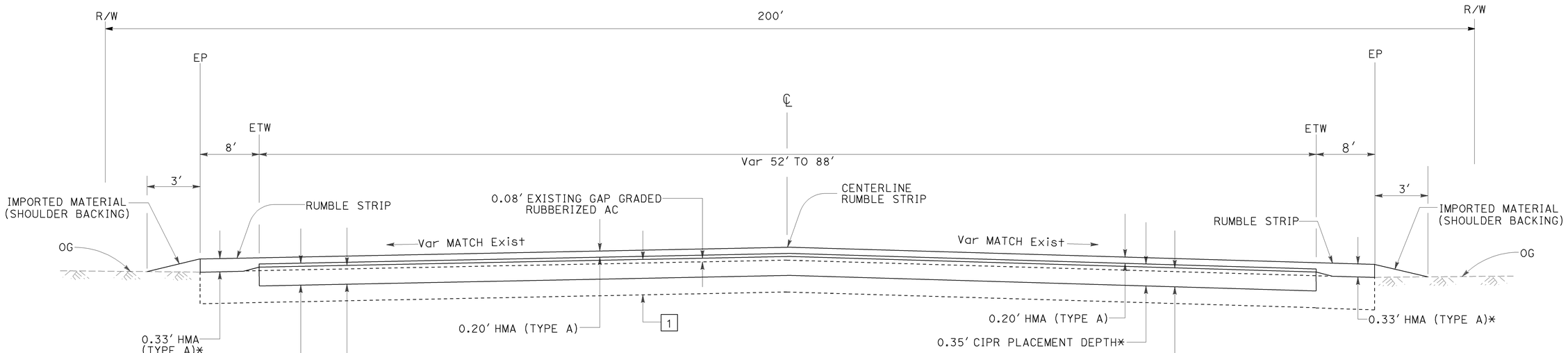

*-SEE NOTE 3

*-SEE NOTE 3

ROUTE 395
10+00 TO 68+40.18
106+38.29 TO 207+10

TYPICAL CROSS SECTIONS

NO SCALE

X-1

STATE OF CALIFORNIA - DEPARTMENT OF TRANSPORTATION
Caltrans
DESIGN

FUNCTIONAL SUPERVISOR: RORY QUINCE
CALCULATED-DESIGNED BY: MICHAEL COLLINS
CHECKED BY: STEPHEN WINZENREAD
REVISED BY: YKF
DATE REVISED: 4-7-10

LAST REVISION 05-17-10
DATE PLOTTED => 13-JUL-2010
TIME PLOTTED => 11:55

Dist	COUNTY	ROUTE	POST MILES TOTAL PROJECT	SHEET No.	TOTAL SHEETS
09	Mno	395	36.1/40.1	3	26

REGISTERED CIVIL ENGINEER 5-17-10 DATE

5-17-10
PLANS APPROVAL DATE

REGISTERED PROFESSIONAL ENGINEER STEPHEN WINZENREAD No. 64274 Exp. 6-30-11 CIVIL STATE OF CALIFORNIA

THE STATE OF CALIFORNIA OR ITS OFFICERS OR AGENTS SHALL NOT BE RESPONSIBLE FOR THE ACCURACY OR COMPLETENESS OF SCANNED COPIES OF THIS PLAN SHEET.

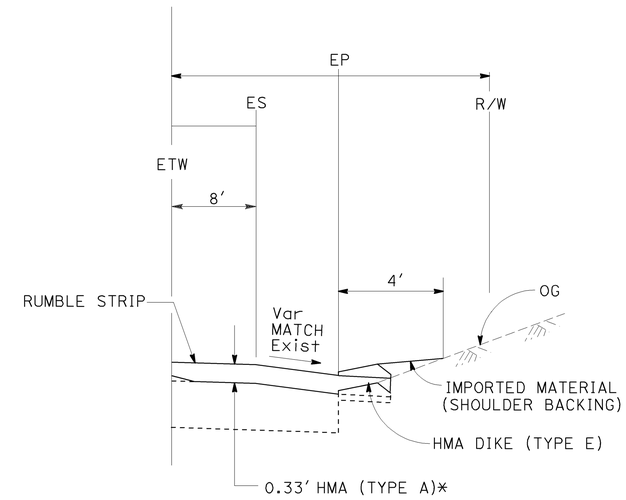

*-SEE NOTE 3

NB 68+40.18 TO 74+65

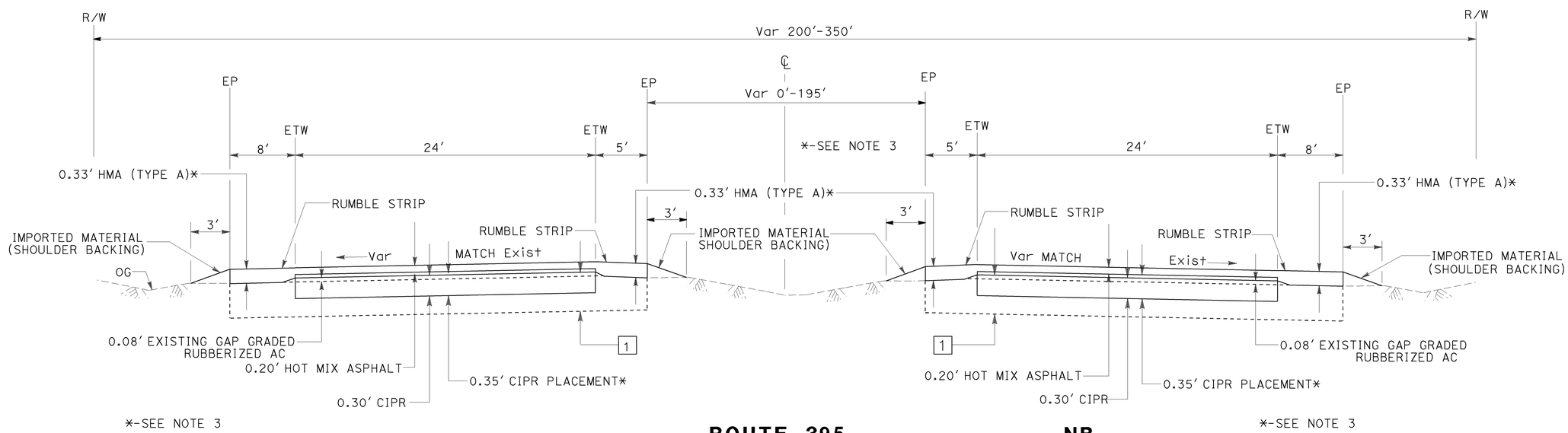

*-SEE NOTE 3

SB
1068+40.18 TO 1105+30.08

ROUTE 395

NB
68+40.18 TO 106+38.29

*-SEE NOTE 3

TYPICAL CROSS SECTIONS X-2

NO SCALE

STATE OF CALIFORNIA - DEPARTMENT OF TRANSPORTATION
Caltrans® DESIGN

FUNCTIONAL SUPERVISOR: RORY QUINCE

CALCULATED-DESIGNED BY: MICHAEL COLLINS
CHECKED BY: STEPHEN WINZENREAD

REVISED BY: YKF
DATE REVISED: 4-7-10

LAST REVISION 05-17-10
DATE PLOTTED => 13-JUL-2010
TIME PLOTTED => 11:55

Dist	COUNTY	ROUTE	POST MILES TOTAL PROJECT	SHEET No.	TOTAL SHEETS
09	Mno	395	36.1/40.1	4	26

REGISTERED CIVIL ENGINEER 5-17-10 DATE

5-17-10
PLANS APPROVAL DATE

REGISTERED PROFESSIONAL ENGINEER STEPHEN WINZENREAD No. 64274 Exp. 6-30-11 CIVIL STATE OF CALIFORNIA

THE STATE OF CALIFORNIA OR ITS OFFICERS OR AGENTS SHALL NOT BE RESPONSIBLE FOR THE ACCURACY OR COMPLETENESS OF SCANNED COPIES OF THIS PLAN SHEET.

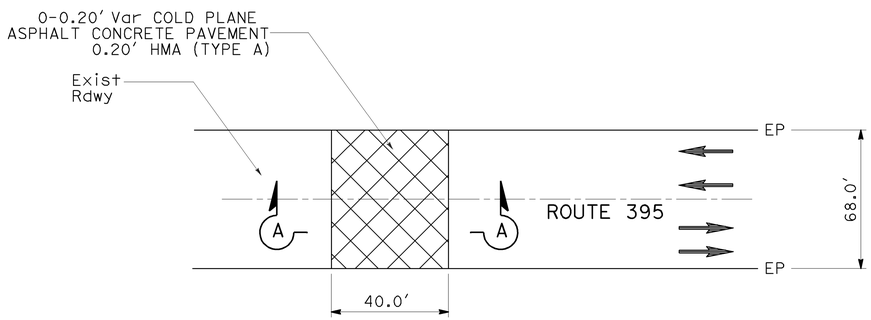

COLD PLANE AND HMA PAVING LIMITS

Sta 10+00
Sta 207+10

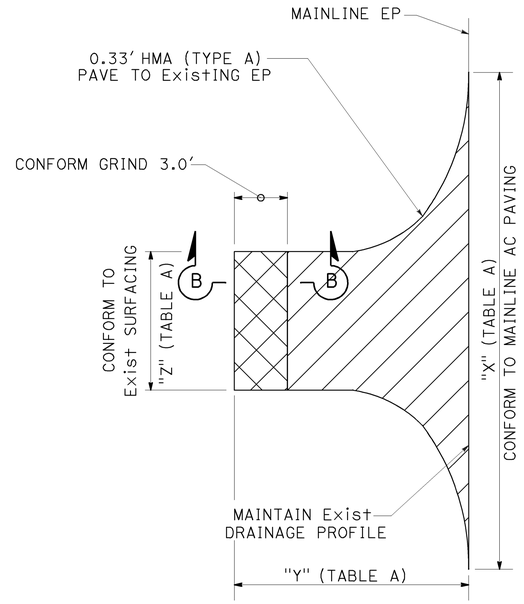

TYPICAL ROAD CONNECTION COLD PLANE AND HMA PAVING LIMITS

LEGEND:

- COLD PLANE ASPHALT CONCRETE PAVEMENT
- 0.33' HMA (TYPE A)
- DIRECTION OF TRAVEL

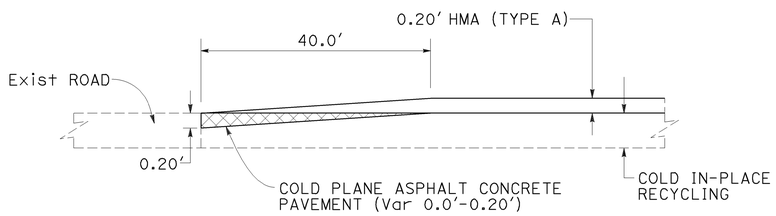

SECTION A-A

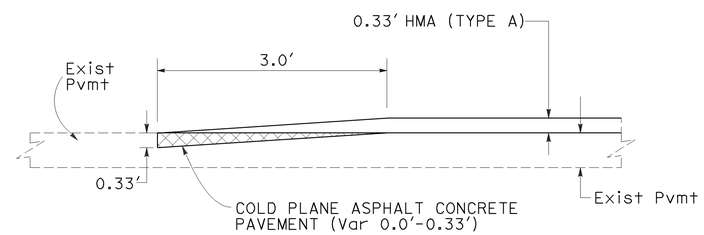

SECTION B-B

Sta Rt 197+17

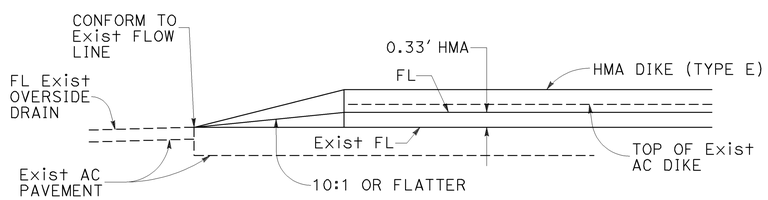

HMA CONFORM AT OVERSIDE DRAINS

Sta	NB 33+77	NB114+49
	SB115+88	SB119+57
	SB136+26	SB164+56
	NB167+53	SB203+08

TABLE A

ROAD CONNECTION HMA PAVING LIMITS

Sta	Lt	Rt	"X"	"Y"	"Z"	DESCRIPTION
30+33	X		109.9	52.0	26.5	OBSIDIAN DOME Rd
30+33		X	138.3	56.5	23.2	BALD Mtn Rd
108+48		X	79.3	41.5	13.0	
123+26	X		53.0	41.5	13.0	
132+38		X	53.4	41.3	13.0	
197+17	X		53.3	24.0	13.0	FOREST Rd
197+17		X	62.5	53.1	37.0	PUMICE MINE Rd CONFORM WITH EXISTING ROAD
205+35	X		53.0	41.5	13.0	
205+35		X	53.0	28.0	13.0	

CONSTRUCTION DETAILS

NO SCALE

C-1

STATE OF CALIFORNIA - DEPARTMENT OF TRANSPORTATION
Caltrans® DESIGN

FUNCTIONAL SUPERVISOR: RORY QUINCE
CALCULATED-DESIGNED BY: MICHAEL COLLINS
CHECKED BY: STEPHEN WINZENREAD
REVISED BY: YKF
DATE REVISED: 4-7-10

LAST REVISION 05-17-10
DATE PLOTTED => 13-JUL-2010
TIME PLOTTED => 11:55

Dist	COUNTY	ROUTE	POST MILES TOTAL PROJECT	SHEET No.	TOTAL SHEETS
09	Mno	395	36.1/40.1	5	26

REGISTERED CIVIL ENGINEER 5-17-10 DATE

5-17-10
PLANS APPROVAL DATE

REGISTERED PROFESSIONAL ENGINEER STEPHEN WINZENREAD No. 64274 Exp. 6-30-11 CIVIL STATE OF CALIFORNIA

THE STATE OF CALIFORNIA OR ITS OFFICERS OR AGENTS SHALL NOT BE RESPONSIBLE FOR THE ACCURACY OR COMPLETENESS OF SCANNED COPIES OF THIS PLAN SHEET.

NOTES:

1. FOR ADDITIONAL RUMBLE STRIP DETAILS SEE A40B OF THE STANDARD PLANS.
2. FOG SEAL COAT APPLIED TO THE GROUND AREAS SHALL NOT COVER THE EXISTING TRAFFIC STRIPE.

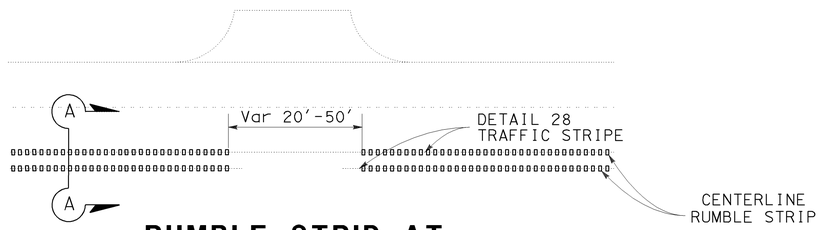

RUMBLE STRIP AT DRIVEWAYS AND MINOR ROAD CONNECTIONS

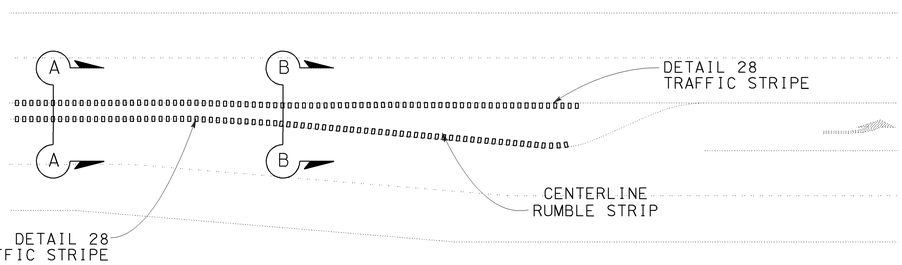

RUMBLE STRIP AT BAY TAPER

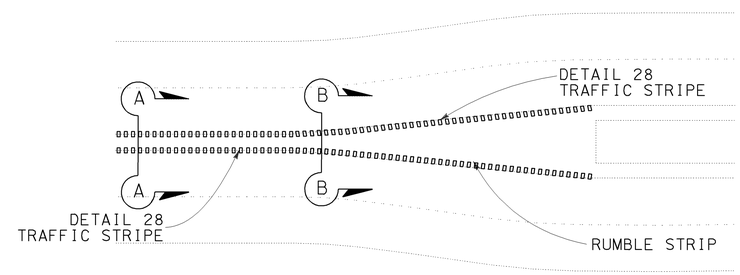

RUMBLE STRIP AT TRANSITION TO DIVIDED HIGHWAY

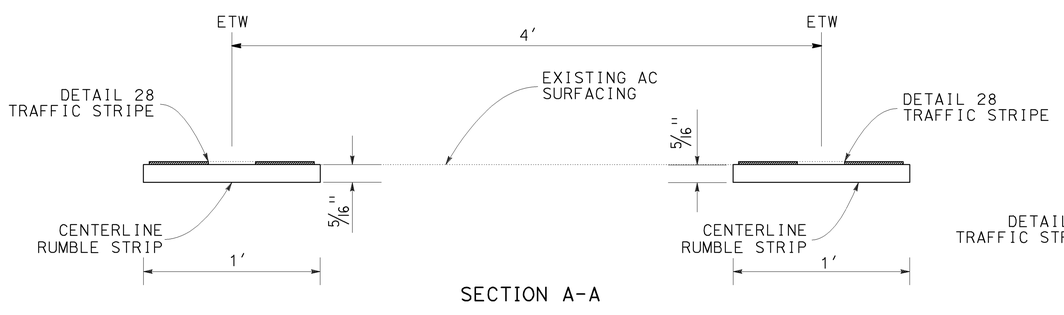

SECTION A-A

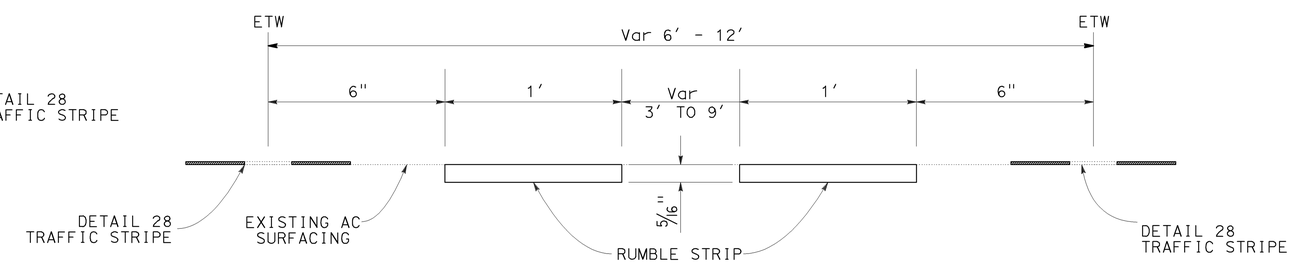

SECTION B-B

CONSTRUCTION DETAILS

NO SCALE

C-2

STATE OF CALIFORNIA - DEPARTMENT OF TRANSPORTATION
Caltrans®
DESIGN

FUNCTIONAL SUPERVISOR: RORY QUINCE

CALCULATED-DESIGNED BY: MICHAEL COLLINS
CHECKED BY: STEPHEN WINZENREAD

REVISED BY: YKF
DATE REVISED: 4-7-10

LAST REVISION 05-17-10
DATE PLOTTED => 13-JUL-2010
TIME PLOTTED => 11:55

Dist	COUNTY	ROUTE	POST MILES TOTAL PROJECT	SHEET No.	TOTAL SHEETS
09	Mno	395	36.1/40.1	6	26

REGISTERED CIVIL ENGINEER 5-17-10 DATE

5-17-10
PLANS APPROVAL DATE

REGISTERED PROFESSIONAL ENGINEER STEPHEN WINZENREAD No. 64274 Exp. 6-30-11 CIVIL STATE OF CALIFORNIA

THE STATE OF CALIFORNIA OR ITS OFFICERS OR AGENTS SHALL NOT BE RESPONSIBLE FOR THE ACCURACY OR COMPLETENESS OF SCANNED COPIES OF THIS PLAN SHEET.

NOTES:

1. FOR SIGN INSTALLATION DETAILS AND DIMENSIONS NOT SHOWN SEE Std PLANS.
2. SEE TABLE FOR PLACEMENT TYPE. EXACT LOCATION AND POSITION OF CONSTRUCTION AREA SIGNS TO BE DETERMINED BY THE ENGINEER.

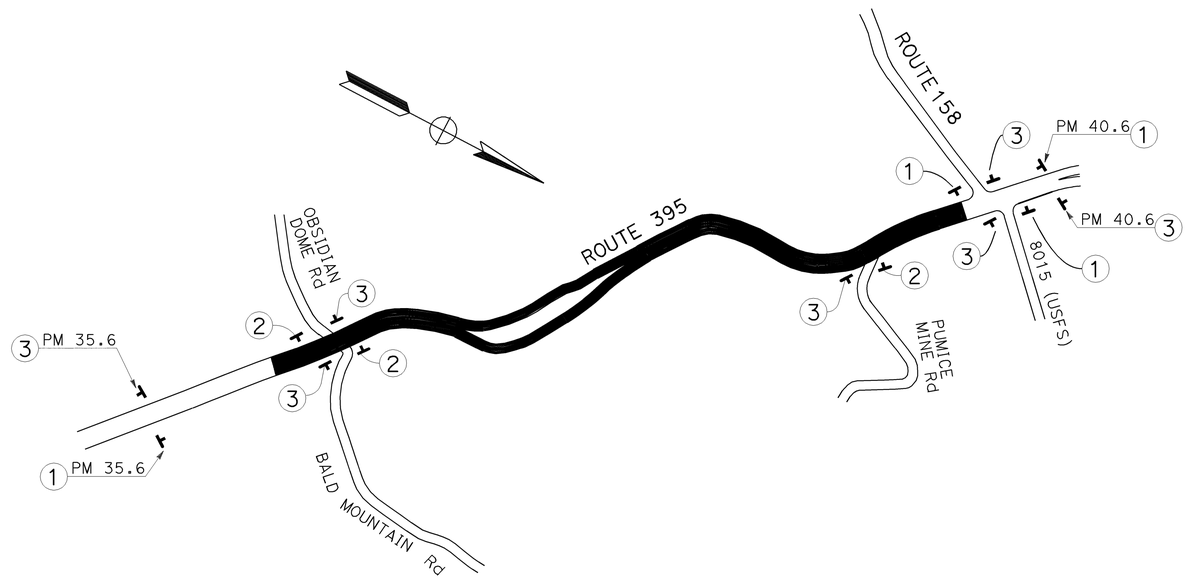

PORTABLE CHANGEABLE MESSAGE SIGNS
EA
2

PORTABLE CHANGEABLE MESSAGE SIGNS		
MESSAGE FOR DIVIDED HIGHWAY		
LANE CLOSED AHEAD	REDUCE SPEED	WATCH FOR TRUCKS

1. PORTABLE CHANGEABLE MESSAGE SIGN LOCATIONS TO BE CONFIRMED BY THE ENGINEER BEFORE THE ACTUAL CLOSURE.
2. ALTERNATE MESSAGES MUST BE APPROVED BY THE ENGINEER.
3. MESSAGE MAY BE ALTERED BY THE ENGINEER.
4. WHEN CONSTRUCTION OPERATIONS ARE NOT ACTIVELY IN PROGRESS, PORTABLE CHANGEABLE MESSAGE SIGNS SHALL NOT DISPLAY A MESSAGE UNLESS DIRECTED BY THE ENGINEER.

STATIONARY MOUNTED CONSTRUCTION AREA SIGNS

LOCATION	Lt	Rt	CODE	MESSAGE	FNBT	FSBT	FEBT	FWBT	No. of Signs	COMMENTS
PM 35.6	X		G20-2	END ROAD WORK		X			1	
PM 35.6		X	W20-1 C23B (CA)	ROAD WORK AHEAD PAVEMENT MAINTENANCE	X				1	
STA 30+33	X		G20-2	END ROAD WORK			X		1	BALD MOUNTAIN Rd
STA 30+33		X	W20-1	ROAD WORK AHEAD				X	1	BALD MOUNTAIN Rd
STA 30+33	X		W20-1	ROAD WORK AHEAD			X		1	OBSIDIAN DOME Rd
STA 30+33		X	G20-2	END ROAD WORK				X	1	OBSIDIAN DOME Rd
STA 197+17	X		G20-2	END ROAD WORK			X		1	PUMICE MINE Rd
STA 197+17		X	W20-1	ROAD WORK AHEAD				X	1	PUMICE MINE Rd
PM 40.3	X		G20-2	END ROAD WORK			X		1	8015 (USFS)
PM 40.3		X	W20-1	ROAD WORK AHEAD				X	1	8015 (USFS)
PM 40.3	X		W20-1	ROAD WORK AHEAD			X		1	ROUTE 158
PM 40.3		X	G20-2	END ROAD WORK				X	1	ROUTE 158
PM 40.6	X		W20-1 C23B (CA)	ROAD WORK AHEAD PAVEMENT MAINTENANCE		X			1	
PM 40.6		X	G20-2	END ROAD WORK	X				1	
TOTAL									14	

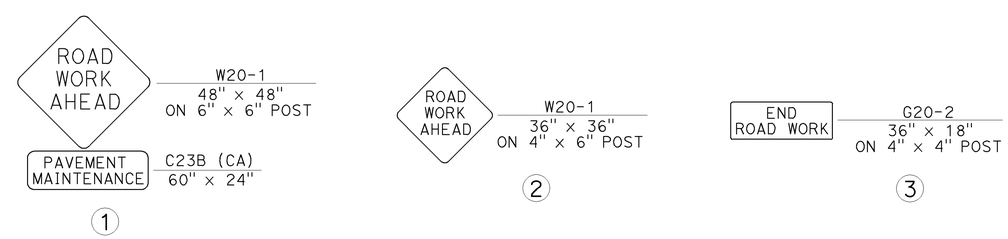

TYPICAL SIGN LAYOUT

THIS PLAN ACCURATE FOR CONSTRUCTION AREA SIGN WORK ONLY

CONSTRUCTION AREA SIGNS

NO SCALE

CS-1

STATE OF CALIFORNIA - DEPARTMENT OF TRANSPORTATION
Caltrans
DESIGN

FUNCTIONAL SUPERVISOR: RORY QUINCE

MICHAEL COLLINS
STEPHEN WINZENREAD

REVISED BY: YKF
DATE REVISED: 4-7-10

CALCULATED-DESIGNED BY
CHECKED BY

LAST REVISION 05-04-10
DATE PLOTTED => 13-JUL-2010
TIME PLOTTED => 11:55

Dist	COUNTY	ROUTE	POST MILES TOTAL PROJECT	SHEET No.	TOTAL SHEETS
09	Mno	395	36.1/40.1	7	26

REGISTERED CIVIL ENGINEER 5-17-10 DATE

5-17-10
PLANS APPROVAL DATE

REGISTERED PROFESSIONAL ENGINEER STEPHEN WINZENREAD No. 64274 Exp. 6-30-11 CIVIL STATE OF CALIFORNIA

THE STATE OF CALIFORNIA OR ITS OFFICERS OR AGENTS SHALL NOT BE RESPONSIBLE FOR THE ACCURACY OR COMPLETENESS OF SCANNED COPIES OF THIS PLAN SHEET.

LEGEND:

- TYPE III ARROW
- TYPE V ARROW
- 1'-0" WIDE LIMIT LINE
- BEGIN OR END TRAFFIC STRIPE DETAIL
- XX - TRAFFIC STRIPE DETAIL NUMBER

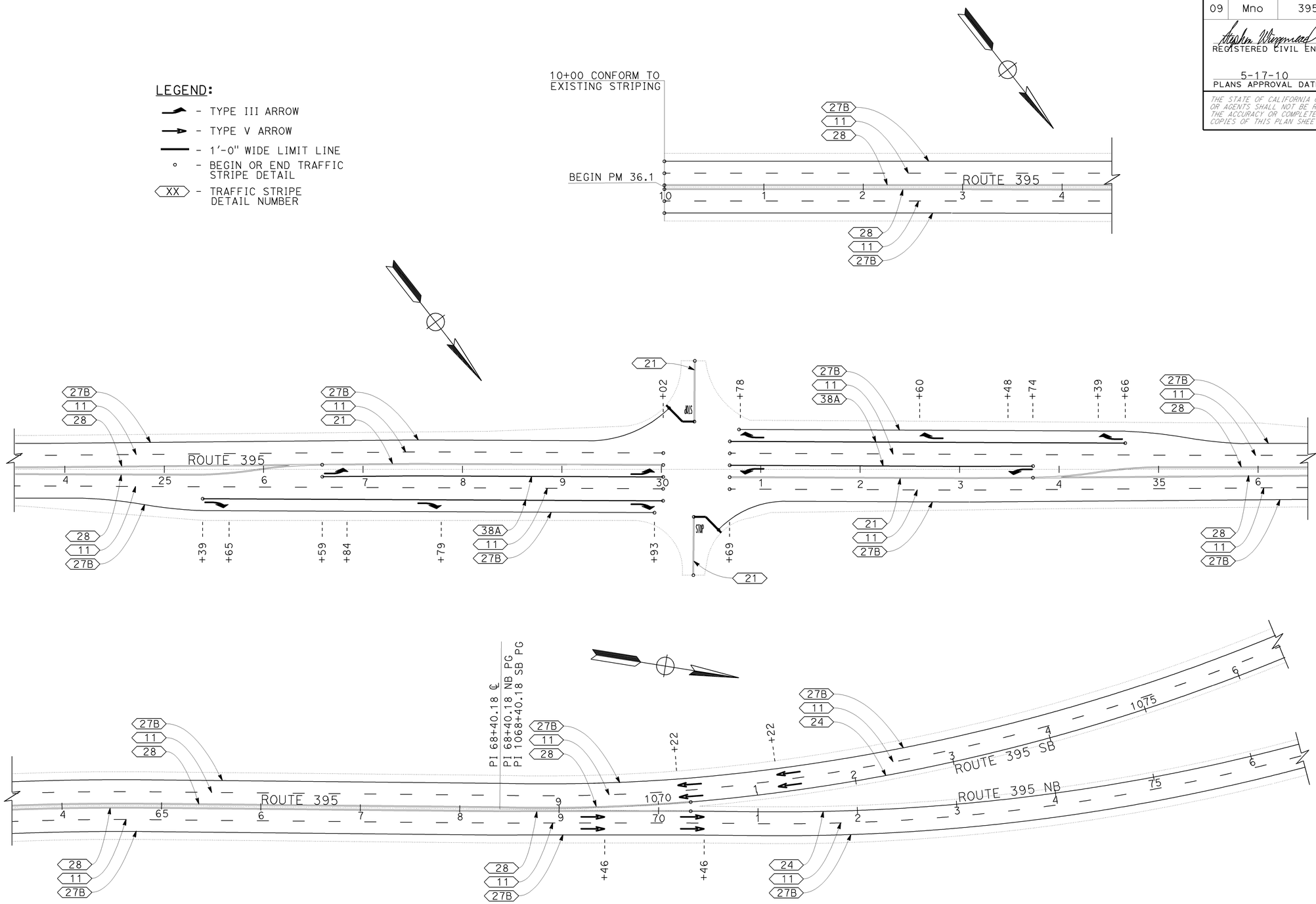

THIS PLAN ACCURATE FOR PAVEMENT DELINATION WORK ONLY

PAVEMENT DELINEATION PLAN

SCALE: 1"=50'

PD-1

STATE OF CALIFORNIA - DEPARTMENT OF TRANSPORTATION

Caltrans®

DESIGN

FUNCTIONAL SUPERVISOR: RORY QUINCE

CALCULATED-DESIGNED BY: STEPHEN WINZENREAD

CHECKED BY: MICHAEL COLLINS

REVISED BY: YKF

DATE REVISED: 4-7-10

LAST REVISION: DATE PLOTTED => 13-JUL-2010 TIME PLOTTED => 11:55

05-17-10

BORDER LAST REVISED 7/2/2010

USERNAME => S123915
DGN FILE => 934340na001.dgn

RELATIVE BORDER SCALE IS IN INCHES 0 1 2 3

UNIT 1445

PROJECT NUMBER & PHASE 09000001451

Dist	COUNTY	ROUTE	POST MILES TOTAL PROJECT	SHEET No.	TOTAL SHEETS
09	Mno	395	36.1/40.1	8	26

REGISTERED CIVIL ENGINEER 5-17-10 DATE

5-17-10
PLANS APPROVAL DATE

STEPHEN WINZENREAD No. 64274 Exp. 6-30-11 CIVIL
REGISTERED PROFESSIONAL ENGINEER
STATE OF CALIFORNIA

THE STATE OF CALIFORNIA OR ITS OFFICERS OR AGENTS SHALL NOT BE RESPONSIBLE FOR THE ACCURACY OR COMPLETENESS OF SCANNED COPIES OF THIS PLAN SHEET.

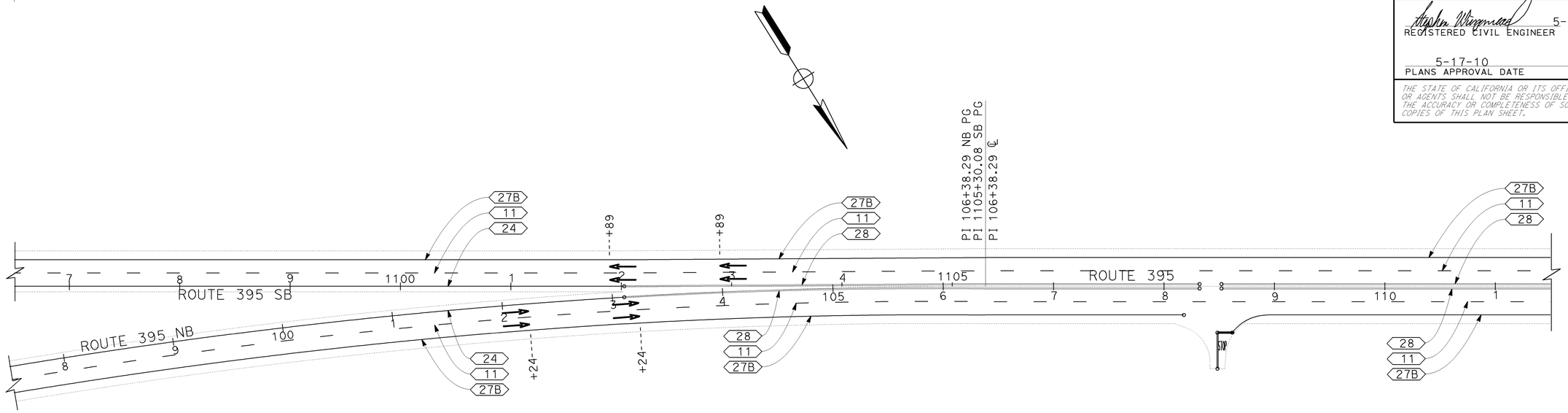

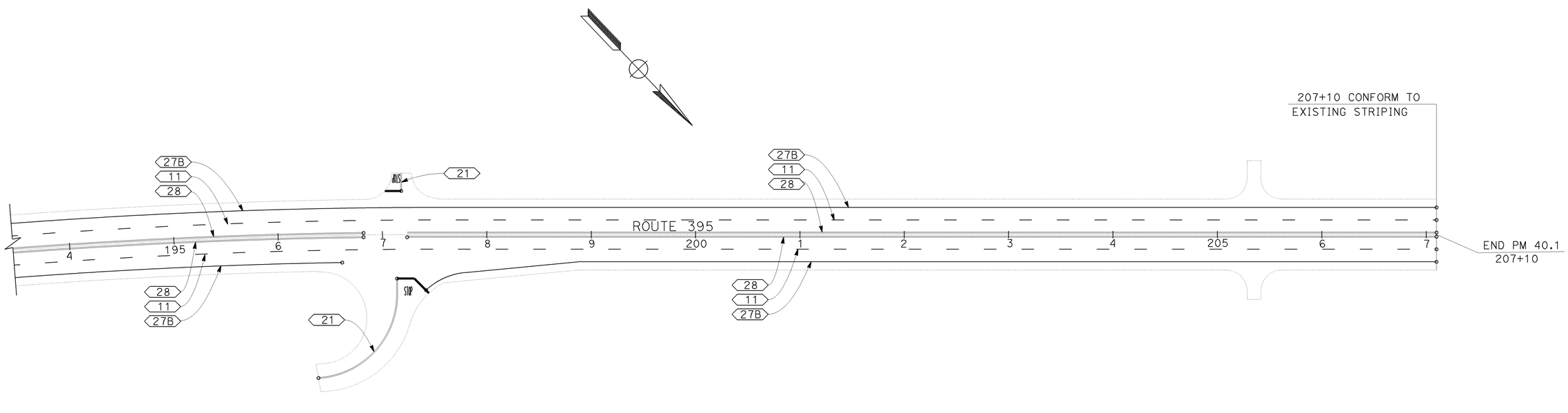

THIS PLAN ACCURATE FOR PAVEMENT DELINATION WORK ONLY

PAVEMENT DELINEATION PLAN
SCALE: 1"=50'

PD-2

STATE OF CALIFORNIA - DEPARTMENT OF TRANSPORTATION
Caltrans®
DESIGN

FUNCTIONAL SUPERVISOR: RORY QUINCE
CALCULATED-DESIGNED BY: STEPHEN WINZENREAD
CHECKED BY: MICHAEL COLLINS
REVISED BY: YKF
DATE REVISED: 4-7-10

LAST REVISION 05-17-10
DATE PLOTTED => 13-JUL-2010
TIME PLOTTED => 11:55

Dist	COUNTY	ROUTE	POST MILES TOTAL PROJECT	SHEET No.	TOTAL SHEETS
09	Mno	395	36.1/40.1	9	26

REGISTERED CIVIL ENGINEER 4-12-10 DATE

5-17-10
PLANS APPROVAL DATE

REGISTERED PROFESSIONAL ENGINEER DONNA HOLLAND No. 64205 Exp. 6-30-11 CIVIL STATE OF CALIFORNIA

THE STATE OF CALIFORNIA OR ITS OFFICERS OR AGENTS SHALL NOT BE RESPONSIBLE FOR THE ACCURACY OR COMPLETENESS OF SCANNED COPIES OF THIS PLAN SHEET.

NOTES:

1. FOR ADDITIONAL DELINEATOR DETAILS, SEE STD PLANS A73C.
2. HARDWARE FOR ATTACHING THE TARGET PLATES SHALL CONSIST OF 3/16" BLIND ALUMINUM RIVETS AND WASHERS.
3. EXACT LOCATION OF MARKERS AND DELINEATORS SHALL BE DETERMINED BY THE ENGINEER.

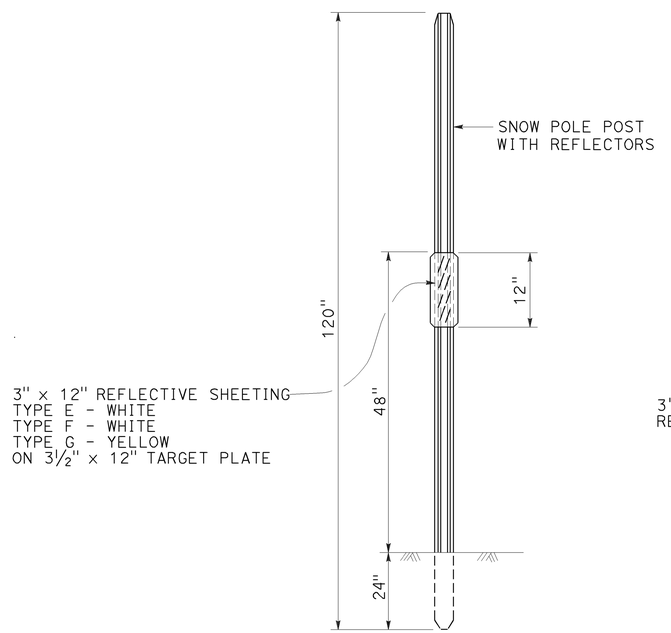

(FRONT)
(APPLIES TO TYPE E, F, AND G)

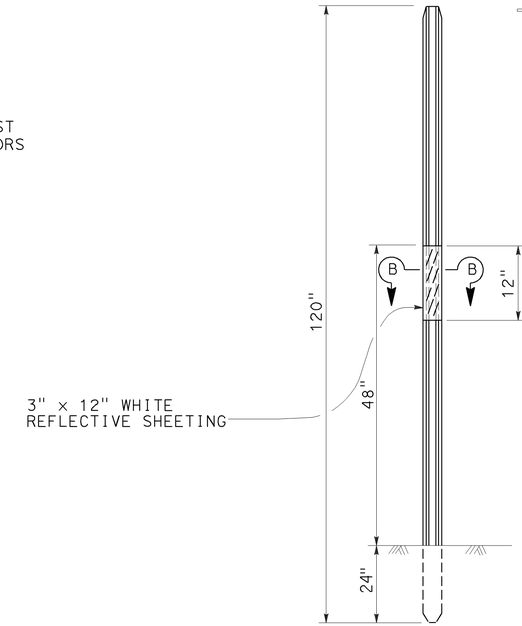

(BACK)
(APPLIES TO TYPE E ONLY)

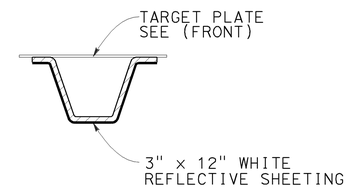

SECTION B-B

DELINEATOR (SPECIAL)

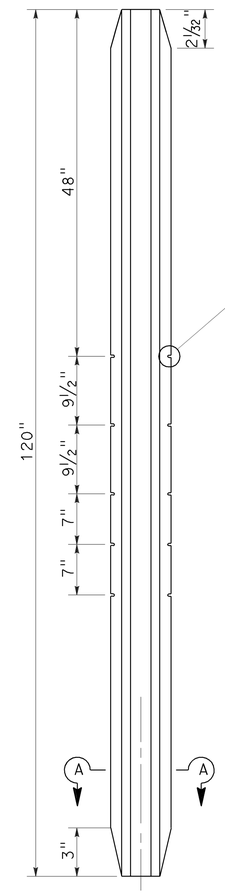

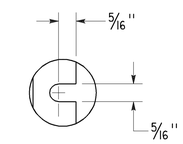

DETAIL A

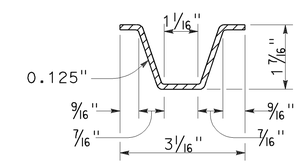

SECTION A-A

METAL POST TO BE AS SHOWN EXCEPT THAT MINOR VARIATIONS IN DESIGN AND DIMENSIONS WILL BE PERMITTED TO MEET MANUFACTURER'S STANDARDS

DELINEATOR (SPECIAL) SNOW POLE
METAL POST DETAIL

PAVEMENT DELINEATION DETAILS

NO SCALE

PDD-1

REVISED BY	DATE REVISED
YKF	4-7-10

CALCULATED-DESIGNED BY: JOEL NASH
CHECKED BY: DONNA HOLLAND
FUNCTIONAL SUPERVISOR: TERESA ERLWEIN

STATE OF CALIFORNIA - DEPARTMENT OF TRANSPORTATION
Caltrans TRAFFIC OPERATIONS

LAST REVISION 05-17-10
DATE PLOTTED => 13-JUL-2010
TIME PLOTTED => 11:55

Dist	COUNTY	ROUTE	POST MILES TOTAL PROJECT	SHEET No.	TOTAL SHEETS
09	Mno	395	36.1/40.1	10	26

REGISTERED CIVIL ENGINEER 5-17-10 DATE

5-17-10
PLANS APPROVAL DATE

REGISTERED PROFESSIONAL ENGINEER STEPHEN WINZENREAD No. 64274 Exp. 6-30-11 CIVIL STATE OF CALIFORNIA

THE STATE OF CALIFORNIA OR ITS OFFICERS OR AGENTS SHALL NOT BE RESPONSIBLE FOR THE ACCURACY OR COMPLETENESS OF SCANNED COPIES OF THIS PLAN SHEET.

NOTES:
(N) NOT A SEPARATE ITEM, FOR INFORMATION ONLY.

PAINT TRAFFIC STRIPE (2-COAT)

STATION TO STATION (LOCATION)		LENGTH (N)	DETAIL No. 11	21	24	27B	28	38A
		LF	LF	LF	LF	LF	LF	LF
10+00	25+39	1539	3078			3078	3078	
25+39	26+59	120	240			240	240	120
26+59	29+93	334	668	334		668		668
29+93	30+02	9	18	9		9		18
30+02	30+08	6				6		
30+57	30+69	12				12		
30+69	30+78	9	18	9		9		18
30+78	33+74	296	592	296		592		592
33+74	34+66	92	184			184	184	92
34+66	68+40	3374	6748			6748	6748	
68+40	70+32	192	192			192	192	
70+32	103+11	3279	3279		3279	3279		
103+11	106+38	327	327			327	327	
106+38	108+18	180	360			360	360	
108+18	108+32	14	28			14	28	
108+32	108+52	20	40			20		
108+52	108+62	10	20			10	20	
108+62	196+61	8799	17,598			17,598	17,598	
196+61	196+81	20	40			20	40	
196+81	197+23	42	84			42		
197+23	197+42	19	38			19	38	
197+42	207+10	968	1936			1936	1936	
1068+40	1070+32	192	192			192	192	
1070+32	1102+03	3171	3171		3171	3171		
1102+03	1105+30	327	327			327	327	
30+33 (OBSIDIAN DOME ROAD - Lt)		61		61				
30+33 (BALD MOUNTAIN ROAD - Rt)		59		59				
108+48 (ROAD APPROACH - Rt)		33		33				
197+14 (PUMICE MINE ROAD - Rt)		135		135				
197+18 (ROAD APPROACH - Lt)		17		17				
SUBTOTAL			39,178	953	6450	39,053	31,308	1508
TOTAL			118,450					

PAINT PAVEMENT MARKINGS (2-COAT)

STATION (LOCATION)	Lt	Rt	LIMIT LINE	WORDS "STOP"		ARROWS TYPE III (L)		TYPE III (R)		TYPE V	
			SQFT	EA (N)	SQFT	EA (N)	SQFT	EA (N)	SQFT	EA (N)	SQFT
25+65		X						1	42		
26+84		X				1	42				
27+79		X						1	42		
29+93	X	X				1	42	1	42		
30+33 (OBSIDION DOME ROAD - Lt)	X		35	1	22						
30+33 (BALD MOUNTAIN ROAD - Lt)		X	35	1	22						
30+78	X					1	42	1	42		
32+60	X							1	42		
33+48	X					1	42				
34+39	X							1	42		
69+46		X								2	66
70+46		X								2	66
102+24		X								2	66
103+24		X								2	66
108+48 (ROAD APPROACH - Rt)		X	15	1	22						
197+14 (PUMICE MINE Rd - Rt)		X	36	1	22						
197+18 (ROAD APPROACH - Lt)	X		15	1	22						
1070+22	X									2	66
1071+22	X									2	66
1101+89	X									2	66
1102+89	X									2	66
SUBTOTAL			136		110		168		252		528
TOTAL			1,194								

PAVEMENT DELINEATION QUANTITIES
PDQ-1

STATE OF CALIFORNIA - DEPARTMENT OF TRANSPORTATION
Caltrans DESIGN

FUNCTIONAL SUPERVISOR: RORY QUINCE
CALCULATED-DESIGNED BY: STEPHEN WINZENREAD
CHECKED BY: MICHAEL COLLINS
REVISED BY: YKF
DATE REVISED: 4-7-10

LAST REVISION: DATE PLOTTED => 13-JUL-2010 TIME PLOTTED => 11:55
05-17-10

Dist	COUNTY	ROUTE	POST MILES TOTAL PROJECT	SHEET No.	TOTAL SHEETS
09	Mno	395	36.1/40.1	11	26

REGISTERED CIVIL ENGINEER 4-12-10 DATE

5-17-10
PLANS APPROVAL DATE

REGISTERED PROFESSIONAL ENGINEER DONNA HOLLAND No. 64205 Exp.6-30-11 CIVIL STATE OF CALIFORNIA

THE STATE OF CALIFORNIA OR ITS OFFICERS OR AGENTS SHALL NOT BE RESPONSIBLE FOR THE ACCURACY OR COMPLETENESS OF SCANNED COPIES OF THIS PLAN SHEET.

REMOVE DELINEATORS

STA TO STA	REMOVE DELINEATORS EA
10+00 TO 206+50	269
1070+00 TO 1103+00	47
TOTAL	316

NOTE:
REMOVE DELINEATORS SHALL INCLUDE REMOVAL OF ANY DELINEATOR OR DELINEATOR (SPECIAL) AS DIRECTED BY THE ENGINEER.

DELINEATORS (SPECIAL)

STA	L+	R+	DELINEATOR (SPECIAL) TYPE E EA	TYPE F EA	TYPE G EA	SNOW POLE EA	REMARKS
10+00	X	X	2				
11+50	X	X				2	
13+00	X	X				2	
14+50	X	X	2				
16+00	X	X				2	
17+50	X	X				2	
19+00	X	X	2				
20+50	X	X				2	
22+00	X	X				2	
23+50	X	X	2				
25+00	X	X				2	
26+50	X	X				2	
28+00	X	X	2				
29+50	X	X				2	
31+00	X	X				2	
32+50	X	X	2				
34+00	X	X				2	
35+50		X				1	
35+50	X		1				
37+00		X	1				
37+00	X					1	
38+50	X		1				
38+50		X				1	
40+00	X	X				2	
41+50	X	X	2				
43+00		X				1	
43+00	X		1				
44+50		X				1	
44+50	X		1				
46+00	X	X	2				
47+50		X				1	
47+50	X		1				
49+00		X				1	
49+00	X		1				
50+50	X	X	2				
52+00		X				1	
52+00	X		1				
53+50		X				1	
53+50	X		1				
55+00	X	X	2				
56+50		X				1	
56+50	X		1				
58+00		X				1	
58+00	X		1				
59+50	X	X	2				
61+00		X				1	
SUBTOTAL Col 1			33	0	0	36	

STA	L+	R+	DELINEATOR (SPECIAL) TYPE E EA	TYPE F EA	TYPE G EA	SNOW POLE EA	REMARKS
61+00	X		1				
62+50		X				1	
62+50	X		1				
64+00	X	X	2				
65+50	X	X				2	
67+00		X				1	
67+00	X		1				
68+50		X	1				
68+50	X					1	
70+00		X				1	
71+03		X		1			BC
71+50	X				1		
72+36		X		1			
73+00	X					1	
73+69		X		1			
74+50	X					1	
75+02		X		1			
76+00	X				1		
76+35		X		1			
77+50	X					1	
77+68		X		1			
79+00	X					1	
79+01		X		1			
80+34		X		1			
80+50	X				1		
81+67		X		1			
82+00	X					1	
83+00		X		1			
83+50	X					1	
84+34		X		1			
85+00	X				1		
85+67		X		1			
86+50	X					1	
87+00		X		1			
88+00	X					1	
88+33		X		1			
89+50	X				1		
89+66		X		1			
90+99		X		1			
91+00	X					1	
92+32		X		1			EC
92+50	X					1	
94+00	X	X				2	
95+50		X		1			
95+50	X				1		
SUBTOTAL Col 2			6	18	6	18	

STA	L+	R+	DELINEATOR (SPECIAL) TYPE E EA	TYPE F EA	TYPE G EA	SNOW POLE EA	REMARKS
97+00		X				1	
97+00	X				1		
98+50		X		1			
98+50	X				1		
100+00		X				1	
100+00	X				1		
101+50		X		1			
101+50	X				1		
103+00		X				1	
104+50		X				1	
106+00	X	X	2				
107+50	X	X				2	
109+00	X	X				2	
110+50	X	X	2				
112+00	X	X				2	
113+50	X	X				2	
115+00	X	X	2				
116+50	X	X				2	
118+00	X	X				2	
119+50	X	X	2				
121+00	X	X				2	
122+50		X				1	
122+50	X		1				
124+00		X	1				
124+00	X					1	
125+50		X				1	
125+50	X		1				
127+00	X	X				2	
128+50	X	X	2				
130+00		X				1	
130+78	X		1				BC
131+50		X				1	
132+14	X		1				
133+00		X	1				
133+49	X		1				
134+50		X				1	
134+85	X		1				
136+00		X				1	
136+21	X		1				
137+50		X	1				
137+57	X		1				
138+93	X		1				
139+00		X				1	
140+29	X		1				
140+50		X				1	
141+64	X		1				
SUBTOTAL Col 3			24	2	4	29	
SUBTOTAL Col 1			33	0	0	36	
SUBTOTAL Col 2			6	18	6	18	
SUBTOTAL PDQ-2			63	20	10	83	

(N) - NOT A SEPARATE PAY ITEM - FOR INFORMATION PURPOSES ONLY.

PAVEMENT DELINEATION QUANTITIES
PDQ-2

REVISED BY	DATE REVISED
YKF	4-7-10

CALCULATED-DESIGNED BY: JOEL NASH
CHECKED BY: DONNA HOLLAND
FUNCTIONAL SUPERVISOR: TERESA ERLWEIN

STATE OF CALIFORNIA - DEPARTMENT OF TRANSPORTATION
Caltrans TRAFFIC OPERATIONS

LAST REVISION 04-14-10 | DATE PLOTTED => 13-JUL-2010 | TIME PLOTTED => 11:55

Dist	COUNTY	ROUTE	POST MILES TOTAL PROJECT	SHEET No.	TOTAL SHEETS
09	Mno	395	36.1/40.1	12	26

REGISTERED CIVIL ENGINEER 4-12-10 DATE

5-17-10
PLANS APPROVAL DATE

REGISTERED PROFESSIONAL ENGINEER DONNA HOLLAND No. 64205 Exp. 6-30-11 CIVIL STATE OF CALIFORNIA

THE STATE OF CALIFORNIA OR ITS OFFICERS OR AGENTS SHALL NOT BE RESPONSIBLE FOR THE ACCURACY OR COMPLETENESS OF SCANNED COPIES OF THIS PLAN SHEET.

DELINEATORS (SPECIAL)

STA	L†	R†	DELINEATOR (SPECIAL) TYPE E EA	TYPE F EA	TYPE G EA	SNOW POLE EA	REMARKS
142+00		X	1				
143+00	X		1				
143+50		X				1	
144+36	X		1				
145+00		X				1	
145+72	X		1				
146+50		X	1				
147+08	X		1				
148+00		X				1	
148+43	X		1				
149+50		X				1	
149+79	X		1				
151+00		X	1				
151+15	X		1				
152+50		X				1	
152+51	X		1				
153+87	X		1				
154+00		X				1	
155+23	X		1				EC
155+50		X	1				
157+00	X	X				2	
158+50		X				1	
158+50	X		1				
160+00		X	1				
160+00	X					1	
161+50	X	X				2	
162+56		X	1				BC
163+00	X		1				
163+74		X	1				
164+50	X					1	
164+91		X	1				
166+00	X					1	
166+09		X	1				
167+27		X	1				
167+50	X		1				
168+45		X	1				
169+00	X					1	
169+63		X	1				
170+50	X					1	
170+81		X	1				
171+99		X	1				
172+00	X		1				
173+17		X	1				
173+50	X					1	
174+35		X	1				
175+00	X					1	
SUBTOTAL Col 1			30	0	0	18	

STA	L†	R†	DELINEATOR (SPECIAL) TYPE E EA	TYPE F EA	TYPE G EA	SNOW POLE EA	REMARKS
175+53		X	1				
176+50	X		1				
176+70		X	1				
177+88		X	1				
178+00	X					1	
179+06		X	1				
179+50	X					1	
180+24		X	1				
181+00	X		1				
181+42		X	1				EC
182+50	X	X				2	
184+00	X	X	2				
185+50	X	X				2	
187+00	X	X	2				
188+50		X				1	
188+50	X		1				
190+00		X				1	
190+00	X		1				
191+50	X	X	2				
193+00		X				1	
193+00	X		1				
194+50		X				1	
194+50	X		1				
196+00	X	X	2				
197+50		X				1	
197+50	X		1				
199+00	X	X				2	
200+50	X	X	2				
202+00	X	X				2	
203+50		X				1	
203+50	X		1				
205+00		X	1				
205+00	X					1	
206+50		X				1	
206+50	X		1				
1070+00	X			1			
1070+89		X			1		
1071+50	X					1	
1072+13		X			1		
1073+00	X			1			
1073+38		X			1		
1074+50	X					1	
1074+62		X			1		
1075+86		X			1		
1076+00	X					1	
1077+11		X			1		
SUBTOTAL Col 2			26	2	6	21	

STA	L†	R†	DELINEATOR (SPECIAL) TYPE E EA	TYPE F EA	TYPE G EA	SNOW POLE EA	REMARKS
1077+50	X			1			
1078+35		X			1		
1079+00	X					1	
1079+59		X			1		
1080+50	X					1	
1080+84		X			1		
1082+00	X			1			
1082+08		X			1		
1083+32		X			1		
1083+50	X					1	
1084+57		X			1		
1085+00	X					1	
1085+81		X			1		EC
1086+50	X			1			
1088+00	X					1	
1088+00		X			1		
1089+50	X	X				2	
1091+00		X			1		
1091+00	X			1			
1092+50	X	X				2	
1094+00	X	X				2	
1095+50		X			1		
1095+50	X			1			
1097+00	X	X				2	
1098+50	X	X				2	
1100+00		X			1		
1100+00	X			1			
1101+50	X	X				2	
1103+00	X					1	
SUBTOTAL Col 3			0	6	11	18	
SUBTOTAL Col 1			30	0	0	18	
SUBTOTAL Col 2			26	2	6	21	
SUBTOTAL PDQ-3			56	8	17	57	
SUBTOTAL PDQ-2			63	20	10	83	
SUBTOTAL			119	28	27	140	
TOTAL			314				

(N) - NOT A SEPARATE PAY ITEM - FOR INFORMATION PURPOSES ONLY.

PAVEMENT DELINEATION QUANTITIES
PDQ-3

STATE OF CALIFORNIA - DEPARTMENT OF TRANSPORTATION
Caltrans TRAFFIC OPERATIONS

FUNCTIONAL SUPERVISOR: TERESA ERLWEIN

CALCULATED-DESIGNED BY: JOEL NASH
CHECKED BY: DONNA HOLLAND

REVISED BY: YKF
DATE REVISED: 4-7-10

LAST REVISION: 04-14-10
DATE PLOTTED => 13-JUL-2010
TIME PLOTTED => 11:55

Dist	COUNTY	ROUTE	POST MILES TOTAL PROJECT	SHEET No.	TOTAL SHEETS
09	Mno	395	36.1/40.1	13	26

REGISTERED CIVIL ENGINEER 5-17-10 DATE

5-17-10
PLANS APPROVAL DATE

REGISTERED PROFESSIONAL ENGINEER STEPHEN WINZENREAD No. 64274 Exp. 6-30-11 CIVIL STATE OF CALIFORNIA

THE STATE OF CALIFORNIA OR ITS OFFICERS OR AGENTS SHALL NOT BE RESPONSIBLE FOR THE ACCURACY OR COMPLETENESS OF SCANNED COPIES OF THIS PLAN SHEET.

NOTES:
1. (N) - NOT A SEPARATE PAY ITEM, FOR INFORMATION ONLY.
2. EXACT LOCATION OF TEMPORARY FIBER ROLL SHALL BE DETERMINED BY THE ENGINEER.

ROADWAY QUANTITIES

LOCATION	COLD IN-PLACE RECYCLING	EMULSIFIED RECYCLING AGENT	ASPHALTIC EMULSION (FOG SEAL COAT)	SAND COVER	HMA (TYPE A)	TACK COAT	IMPORTED MATERIAL (SHOULDER BACKING)	COLD PLANE ASPHALT CONCRETE PAVEMENT
STATION TO STATION	SQYD	TON	TON	TON	TON	TON	TON	SQYD
10+00 - 68+40	39,104	268	21	39	7878	22	583	70
68+40 - 106+38	10,738	74	6	11	2669	7	424	
106+38 - 207+10	61,100	419	33	61	13,519	36	1003	
1068+40 - 1105+30	10,435	71	6	10	2500	7	441	
HMA DIKE					253			70
TOTAL	121,377	832	66	121	26,819	72	2451	140

RUMBLE STRIP

LOCATION	DIRECTION	LENGTH (N)	RUMBLE STRIP Lt	RUMBLE STRIP Rt	CENTERLINE RUMBLE STRIP
STATION TO STATION		LF	Sta	Sta	Sta
10+00 TO 21+00	NB/SB	1100	11.00	11.00	22.00
21+00 TO 24+18	NB/SB	318	3.18	3.18	6.36
24+18 TO 25+39	NB/SB	121	1.21		2.42
25+39 TO 29+26	NB/SB	387	3.87		
31+25 TO 34+66	NB/SB	341		3.41	
34+66 TO 35+86	NB/SB	120		1.20	2.40
35+86 TO 39+00	NB/SB	314	3.14	3.14	6.28
39+00 TO 68+40	NB/SB	2940	29.40	29.40	58.80
68+40 TO 106+38	NB	3798	37.98	37.98	
106+38 TO 108+28	NB/SB	190	1.90	1.90	3.80
108+68 TO 123+06	NB/SB	1438	14.38	14.38	28.76
123+46 TO 132+18	NB/SB	872	8.72	8.72	17.44
132+58 TO 197+02	NB/SB	6444	64.44	64.44	128.88
197+42 TO 205+20	NB/SB	778	7.78	7.78	15.56
205+60 TO 207+10	NB/SB	150	1.50	1.50	3.00
SB 1068+40 TO SB 1105+30	SB	3690	36.90	36.90	
SUBTOTAL			225.40	224.93	295.70
TOTAL			445.30		295.70

PLACE HMA DIKE (TYPE E)

LOCATION STATION TO STATION	Lt	Rt	LENGTH LF	HMA TON *
33+77 TO 74+65		X	4088	104
108+33 TO 115+88	X		755	19
108+85 TO 114+49		X	564	14
116+52 TO 119+57	X		305	8
123+39 TO 136+26	X		1287	33
164+56 TO 177+52	X		1296	33
167+53 TO 177+05		X	952	24
197+56 TO 203+08	X		552	14
205+61 TO 207+10	X		149	4
TOTAL			9948	253

* THIS QUANTITY INCLUDED IN HMA (TYPE A) ROADWAY QUANTITIES

TEMPORARY TRAFFIC STRIPE (PAINT)

STATION TO STATION (LOCATION)		LENGTH (N)	DETAIL No. 11	21	24	27B	28	38A
		LF	LF	LF	LF	LF	LF	LF
10+00	25+39	1539	3078			3078	3078	
25+39	26+59	120	240			240	240	120
26+59	29+93	334	668	334		668		668
29+93	30+02	9	18	9		9		18
30+02	30+08	6				6		
30+57	30+69	12				12		
30+69	30+78	9	18	9		9		18
30+78	33+74	296	592	296		592		592
33+74	34+66	92	184			184	184	92
34+66	68+40	3374	6748			6748	6748	
68+40	70+32	192	192			192	192	
70+32	103+11	3279	3279		3279	3279		
103+11	106+38	327	327			327	327	
106+38	108+18	180	360			360	360	
108+18	108+32	14	28			14	28	
108+32	108+52	20	40			20		
108+52	108+62	10	20			10	20	
108+62	196+61	8799	17,598			17,598	17,598	
196+61	196+81	20	40			20	40	
196+81	197+23	42	84			42		
197+23	197+42	19	38			19	38	
197+42	207+10	968	1936			1936	1936	
1068+40	1070+32	192	192			192	192	
1070+32	1102+03	3171	3171		3171	3171		
1102+03	1105+30	327	327			327	327	
30+33 (OBSIDIAN DOME ROAD - Lt)		61		61				
30+33 (BALD MOUNTAIN ROAD - Rt)		59		59				
108+48 (ROAD APPROACH - Rt)		33		33				
197+14 (PUMICE MINE ROAD - Rt)		135		135				
197+18 (ROAD APPROACH - Lt)		17		17				
SUBTOTAL			39,178	953	6450	39,053	31,308	1508
TOTAL			118,450					

DETECTOR LOOP

LOCATION	EACH
PM 40.06	4
TOTAL	4

TEMPORARY DRAINAGE INLET PROTECTION

LOCATION STATION	NB	SB	EACH
33+77	X		1
114+49	X		1
115+88		X	1
119+57		X	1
136+26		X	1
164+56		X	1
167+53	X		1
203+08		X	1
TOTAL			8

SUMMARY OF QUANTITIES
Q-1

STATE OF CALIFORNIA - DEPARTMENT OF TRANSPORTATION
Caltrans DESIGN
FUNCTIONAL SUPERVISOR: RORY QUINCE
CALCULATED-DESIGNED BY: MICHAEL COLLINS
CHECKED BY: STEPHEN WINZENREAD
REVISED BY: YKF
DATE REVISED: 4-7-10

LAST REVISION DATE PLOTTED => 13-JUL-2010
05-17-10 TIME PLOTTED => 11:55

Dist	COUNTY	ROUTE	POST MILES TOTAL PROJECT	SHEET No.	TOTAL SHEETS
09	Mno	395	36.1/40.1	14	26

REGISTERED CIVIL ENGINEER 5-17-10 DATE

5-17-10
PLANS APPROVAL DATE

REGISTERED PROFESSIONAL ENGINEER MITCHELL NGO No. 18920 Exp. 12-31-11 ELECTRICAL STATE OF CALIFORNIA

THE STATE OF CALIFORNIA OR ITS OFFICERS OR AGENTS SHALL NOT BE RESPONSIBLE FOR THE ACCURACY OR COMPLETENESS OF SCANNED COPIES OF THIS PLAN SHEET.

NOTES:

1. COIL 6′ OF LOOP CONDUCTORS IN EXISTING TYPE M CABINET.
2. DETECTOR LOOPS SHALL BE INSTALLED WITH 4 TURNS OF LOOP WIRE.

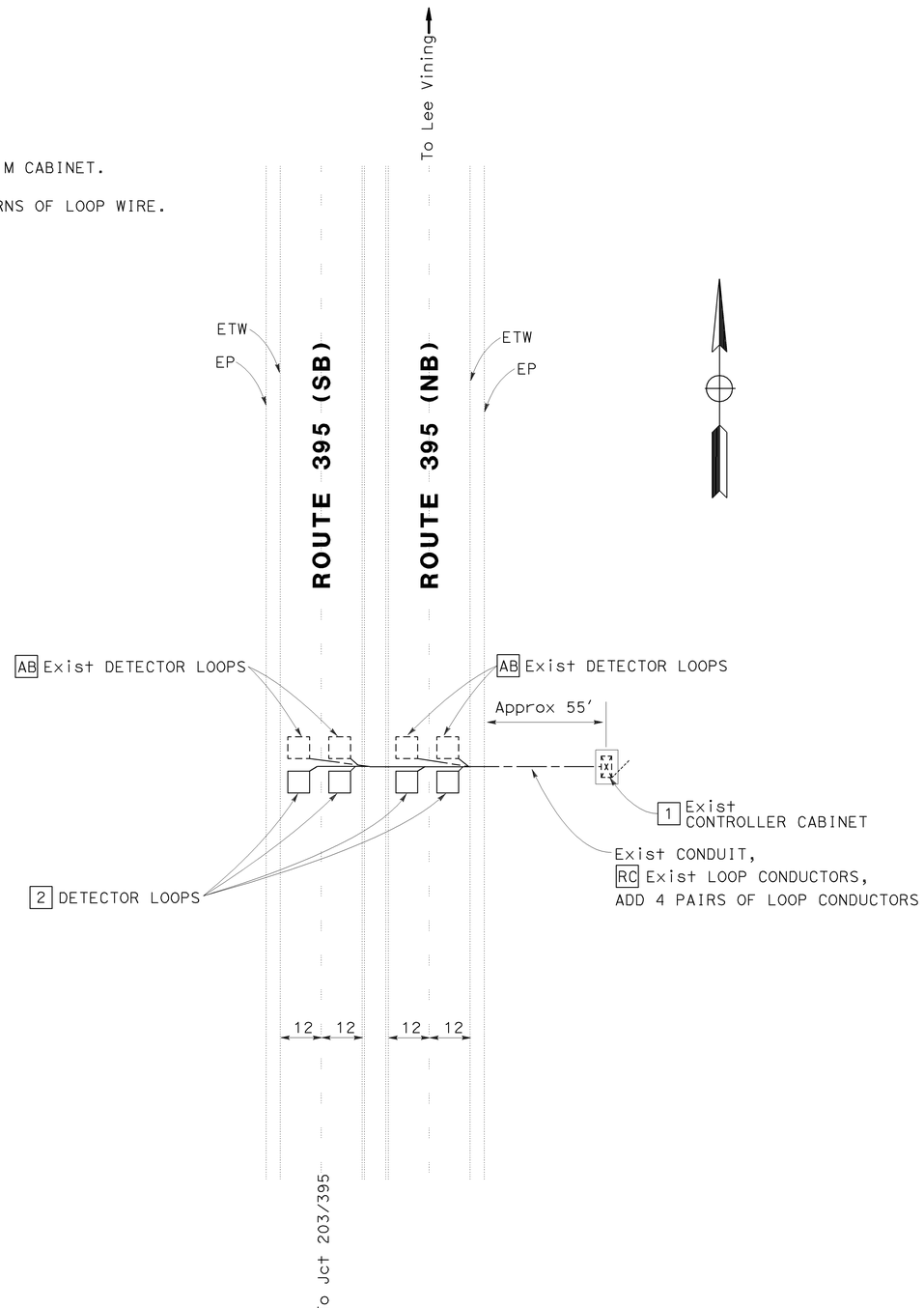

PM 40.060

DETECTOR LOOP

NO SCALE **E-1**

STATE OF CALIFORNIA - DEPARTMENT OF TRANSPORTATION
Caltrans TRAFFIC OPERATIONS

FUNCTIONAL SUPERVISOR: TERRY ERLWEIN
CALCULATED-DESIGNED BY: MITCHELL NGO
CHECKED BY: RANDALL WEICHE
REVISED BY
DATE REVISED

LAST REVISION 05-17-10
DATE PLOTTED => 13-JUL-2010
TIME PLOTTED => 11:55

DIST	COUNTY	ROUTE	POST MILES TOTAL PROJECT	SHEET NO.	TOTAL SHEETS
09	Mno	395	36.1/40.1	15	26

Randell D. Hiatt
REGISTERED CIVIL ENGINEER

June 6, 2008
PLANS APPROVAL DATE

REGISTERED PROFESSIONAL ENGINEER
Randell D. Hiatt
No. C50200
Exp. 6-30-09
CIVIL
STATE OF CALIFORNIA

The State of California or its officers or agents shall not be responsible for the accuracy or completeness of electronic copies of this plan sheet.

To accompany plans dated 5-17-10

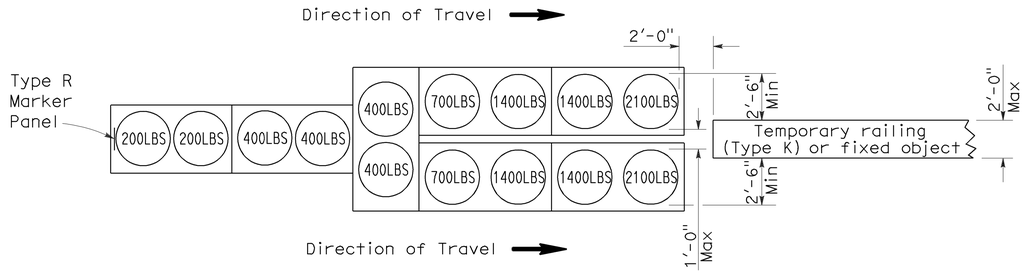

ARRAY 'TU14'

Approach speed 45 mph or more

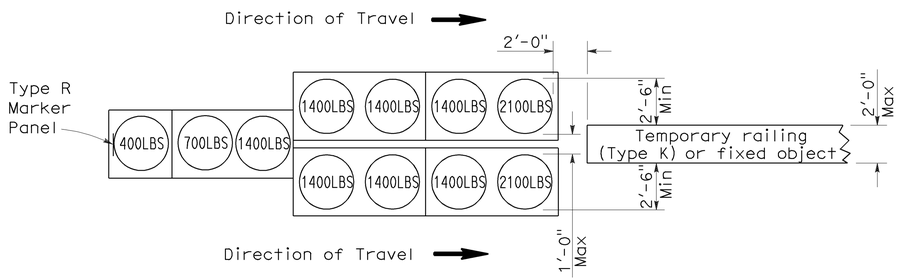

ARRAY 'TU11'

Approach speed less than 45 mph

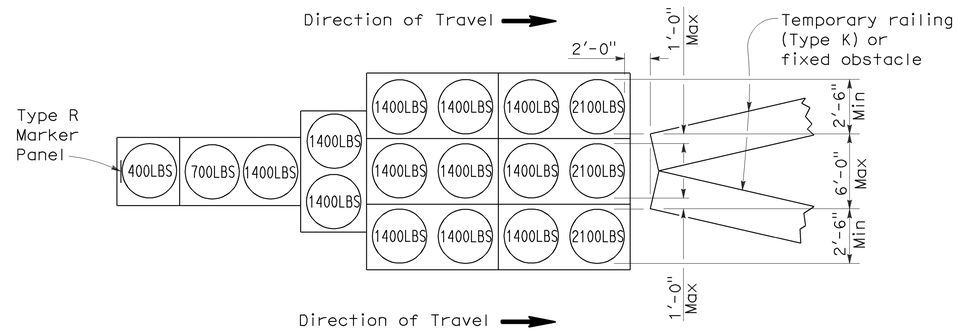

ARRAY 'TU17'

Approach speed less than 45 mph

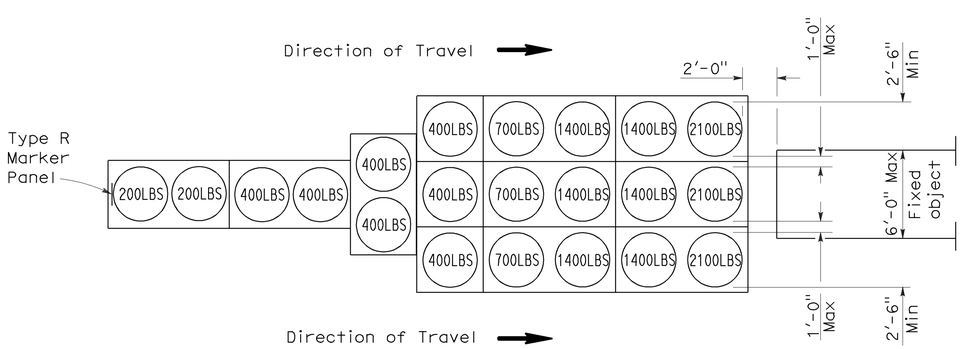

ARRAY 'TU21'

Approach speed 45 mph or more

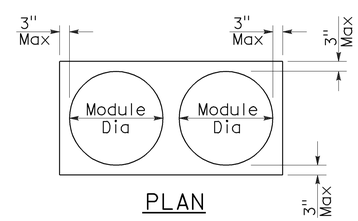

PLAN

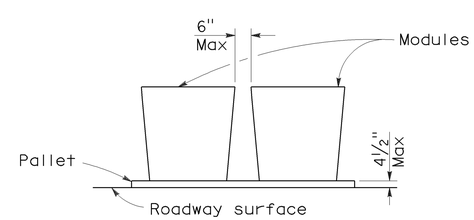

ELEVATION

CRASH CUSHION PALLET DETAIL

See Note 7

NOTES:

1. (XXX) Indicates sand filled module location and weight of sand in pounds for each module. Module spacing is based on the greater diameter of the module.
2. All sand weights are nominal.
3. Temporary crash cushion arrays shall not encroach on the traveled way.
4. Place the top of Type R marker panel 1" below the module lid.
5. Refer to Standard Plan A73B for marker details.
6. Approach speeds indicated conform to NCHRP 350 Report criteria.
7. Use of pallets is optional.

STATE OF CALIFORNIA
DEPARTMENT OF TRANSPORTATION

TEMPORARY CRASH CUSHION, SAND FILLED (UNIDIRECTIONAL)

NO SCALE

RSP T1A DATED JUNE 6, 2008 SUPERSEDES STANDARD PLAN T1A
DATED MAY 1, 2006 - PAGE 211 OF THE STANDARD PLANS BOOK DATED MAY 2006.

REVISED STANDARD PLAN RSP T1A

2006 REVISED STANDARD PLAN RSP T1A

5-15-08

DIST	COUNTY	ROUTE	POST MILES TOTAL PROJECT	SHEET NO.	TOTAL SHEETS
09	Mno	395	36.1/40.1	16	26

Randell D. Hiatt
REGISTERED CIVIL ENGINEER

June 6, 2008
PLANS APPROVAL DATE

REGISTERED PROFESSIONAL ENGINEER
Randell D. Hiatt
No. C50200
Exp. 6-30-09
CIVIL
STATE OF CALIFORNIA

The State of California or its officers or agents shall not be responsible for the accuracy or completeness of electronic copies of this plan sheet.

To accompany plans dated 5-17-10

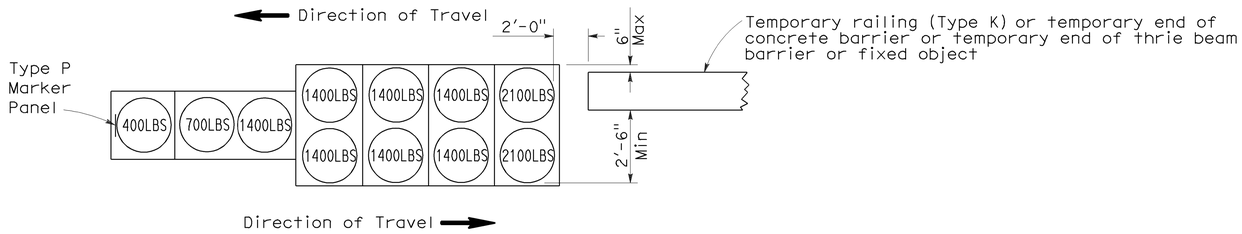

ARRAY 'TB11'

Approach speed less than 45 mph

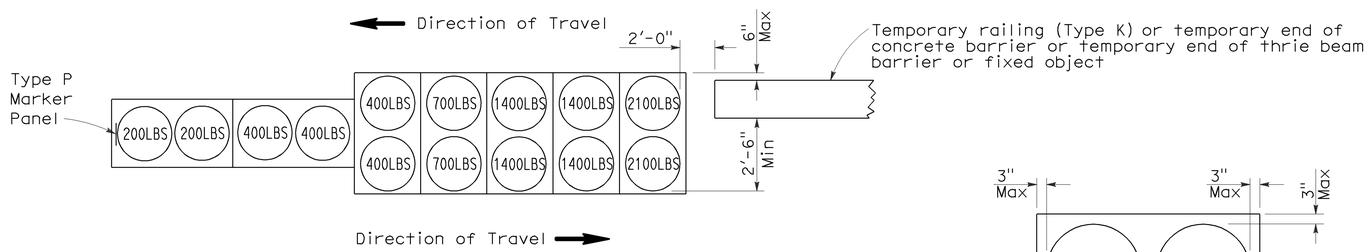

ARRAY 'TB14'

Approach speed 45 mph or more

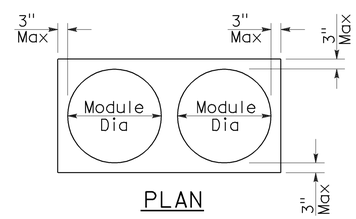

PLAN

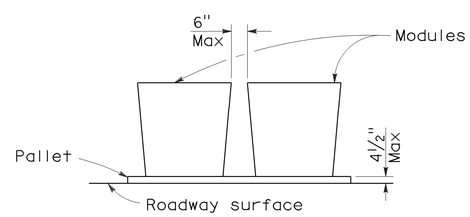

ELEVATION

CRASH CUSHION PALLET DETAIL

See Note 7

NOTES:

1. (XXX) Indicates sand filled module location and weight of sand in pounds for each module. Module spacing is based on the greater diameter of the module.
2. All sand weights are nominal.
3. Temporary crash cushion arrays shall not encroach on the traveled way.
4. Place the Type P marker panel so that the bottom of the panel rests upon the pallet.
5. Refer to Standard Plan A73B for marker details.
6. Approach speeds indicated conform to NCHRP 350 Report criteria.
7. Use of pallets is optional.

STATE OF CALIFORNIA
DEPARTMENT OF TRANSPORTATION

TEMPORARY CRASH CUSHION, SAND FILLED (BIDIRECTIONAL)

NO SCALE

RSP T1B DATED JUNE 6, 2008 SUPERSEDES STANDARD PLAN T1B
DATED MAY 1, 2006 - PAGE 212 OF THE STANDARD PLANS BOOK DATED MAY 2006.

REVISED STANDARD PLAN RSP T1B

2006 REVISED STANDARD PLAN RSP T1B

DIST	COUNTY	ROUTE	POST MILES TOTAL PROJECT	SHEET NO.	TOTAL SHEETS
09	Mno	395	36.1/40.1	17	26

Randell D. Hiatt
REGISTERED CIVIL ENGINEER

June 6, 2008
PLANS APPROVAL DATE

REGISTERED PROFESSIONAL ENGINEER
Randell D. Hiatt
No. C50200
Exp. 6-30-09
CIVIL
STATE OF CALIFORNIA

The State of California or its officers or agents shall not be responsible for the accuracy or completeness of electronic copies of this plan sheet.

To accompany plans dated 5-17-10

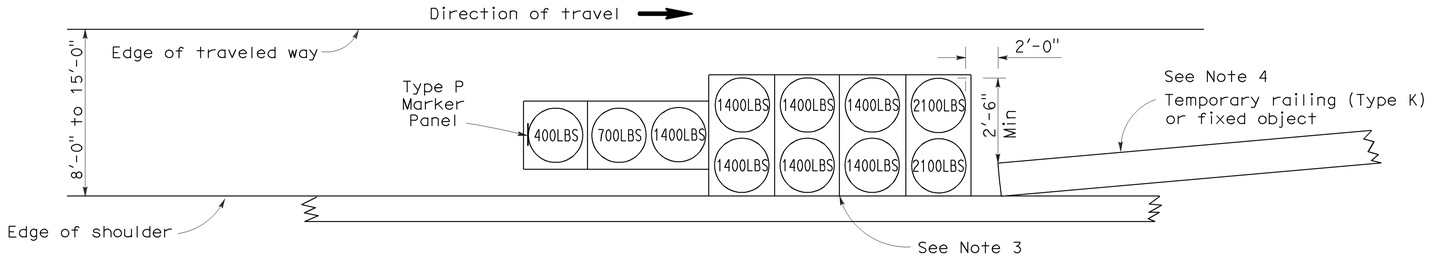

ARRAY 'TS11'

Approach speed less than 45 mph
See Note 9

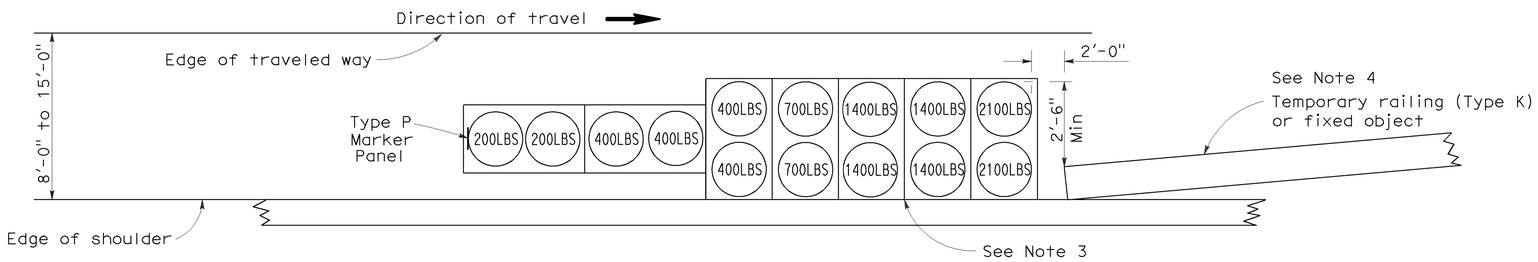

ARRAY 'TS14'

Approach speed 45 mph or more
See Note 9

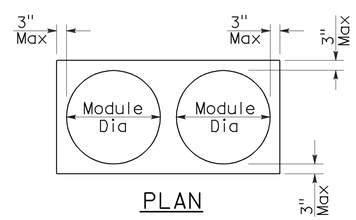

PLAN

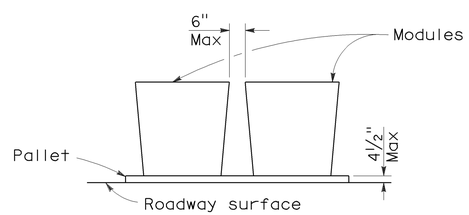

ELEVATION

CRASH CUSHION PALLET DETAIL

See Note 11

NOTES:

1. (XXX) Indicates sand filled module location and weight of sand in pounds for each module. Module spacing is based on the greater diameter of the module.
2. All sand weights are nominal.
3. The temporary crash cushion arrays shown on this plan shall be used only in locations where there will be traffic on one side of the temporary crash cushion array.
4. If the fixed object or approach end of the temporary railing is less than 15'-0" from the edge of traveled way, a temporary crash cushion is required in a construction or work zone.
5. Temporary crash cushion arrays shall not encroach on the traveled way.
6. Arrays for median shoulders shall conform to details shown on this plan for outside shoulders.
7. Place the Type P marker panel so that the bottom of the panel rests upon the pallet and faces traffic.
8. Refer to Standard Plan A73B for marker details.
9. For shoulder widths less than 8'-0", appropriate approved crash cushion protection, other than sand filled modules, shall be provided at fixed objects and at approach ends of temporary railing. The specific type of crash cushion shall be as shown on the project plans or as specified in the Special Provisions, or if not shown on the project plans or specified in the Special Provisions, shall be as approved by the Engineer.
10. Approach speeds indicated conform to NCHRP 350 Report criteria.
11. Use of pallets is optional.

STATE OF CALIFORNIA
DEPARTMENT OF TRANSPORTATION

TEMPORARY CRASH CUSHION, SAND FILLED (SHOULDER INSTALLATIONS)

NO SCALE

RSP T2 DATED JUNE 6, 2008 SUPERSEDES STANDARD PLAN T2
DATED MAY 1, 2006 - PAGE 213 OF THE STANDARD PLANS BOOK DATED MAY 2006.

REVISED STANDARD PLAN RSP T2

2006 REVISED STANDARD PLAN RSP T2

5-15-08

DIST	COUNTY	ROUTE	POST MILES TOTAL PROJECT	SHEET NO.	TOTAL SHEETS
09	Mno	395	36.1/40.1	18	26

REGISTERED CIVIL ENGINEER

November 17, 2006
PLANS APPROVAL DATE

REGISTERED PROFESSIONAL ENGINEER Greg W. Edwards No. C36386 Exp. 6-30-08 CIVIL STATE OF CALIFORNIA

The State of California or its officers or agents shall not be responsible for the accuracy or completeness of electronic copies of this plan sheet.

To accompany plans dated 5-17-10

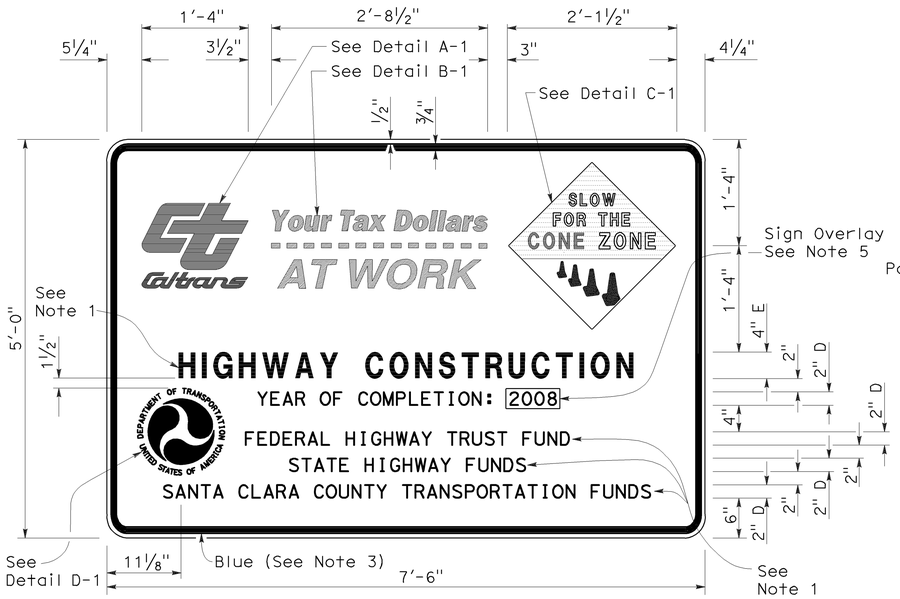

TYPE 1

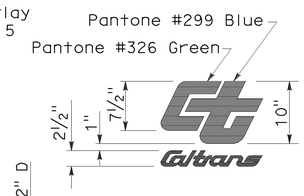

DETAIL A-1

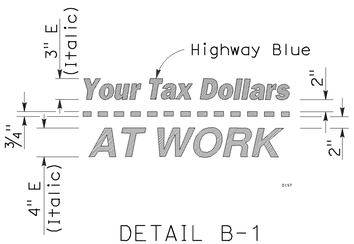

DETAIL B-1
(See Note 3)

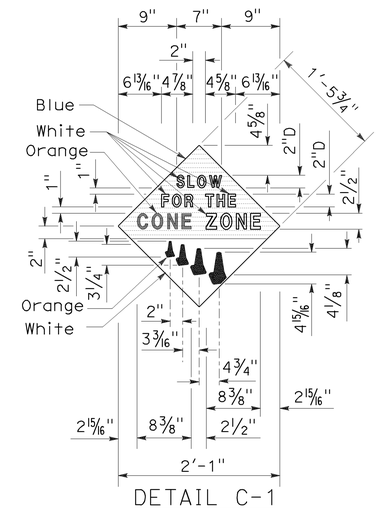

DETAIL C-1
(See Note 4)

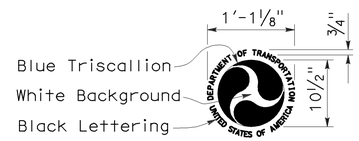

DETAIL D-1
(See Note 6)

NOTES:

1. The sign messages shown for type of project and fund types are examples only. See the Special Provisions for the applicable type of project and fund type messages to be used.
2. Except as otherwise shown, the legend of sign shall be black on a white background (non-reflective).
3. The border of the signs and details "B-1" and "B-2" shall be blue (non-reflective).
4. The diamond in details "C-1" and "C-2" shall be blue for the background of message, " SLOW FOR THE CONE ZONE", and white background for the orange cones. The color and type of font for the "SLOW FOR THE CONE ZONE" message shall be: "SLOW" white D; "FOR THE" white D; "CONE" orange Arial font; "ZONE" white Arial font.
5. Year of completion of project construction shown on the overlay is an example only. See the Special Provisions.
6. Use when the Project involves Federal Highway Trust Fund.

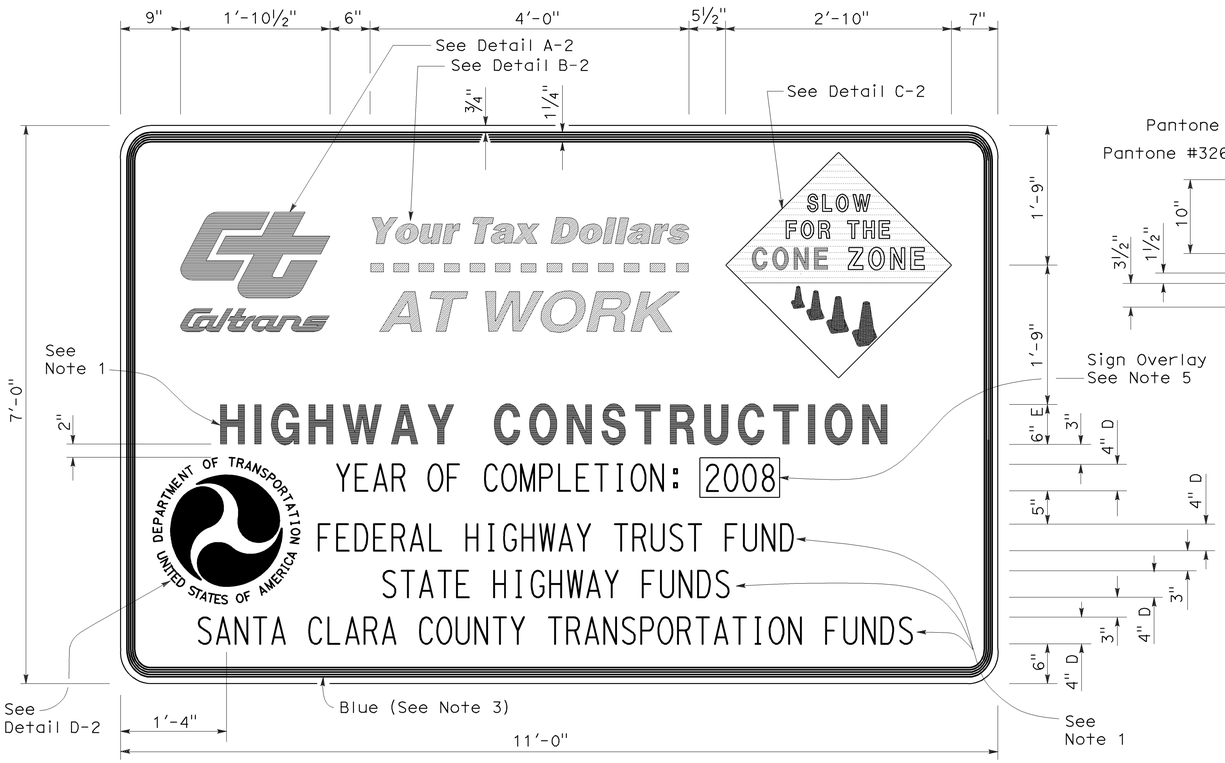

TYPE 2

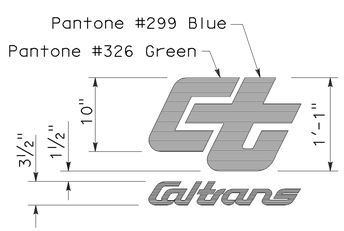

DETAIL A-2

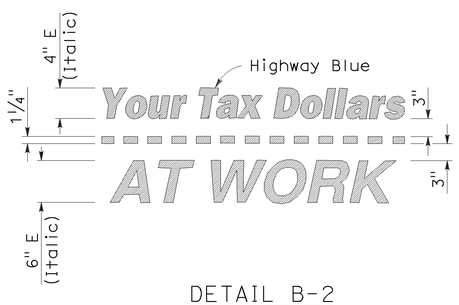

DETAIL B-2
(See Note 3)

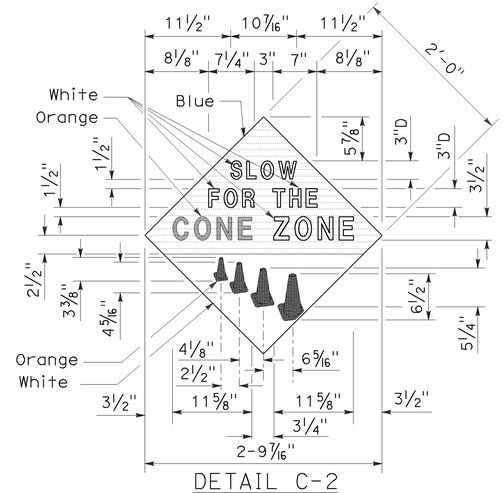

DETAIL C-2
(See Note 4)

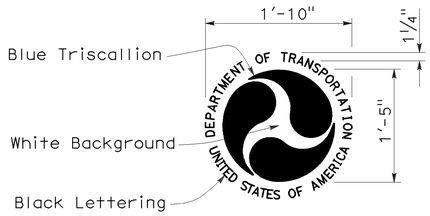

DETAIL D-2
(See Note 6)

STATE OF CALIFORNIA
DEPARTMENT OF TRANSPORTATION

CONSTRUCTION PROJECT FUNDING IDENTIFICATION SIGNS

NO SCALE

RSP T7 DATED NOVEMBER 17, 2006 SUPERSEDES STANDARD PLAN T7
DATED MAY 1, 2006 - PAGE 217 OF THE STANDARD PLANS BOOK DATED MAY 2006.

REVISED STANDARD PLAN RSP T7

2006 REVISED STANDARD PLAN RSP T7

9-7-06

DIST	COUNTY	ROUTE	POST MILES TOTAL PROJECT	SHEET NO.	TOTAL SHEETS
09	Mno	395	36.1/40.1	19	26

Robert B Schott
LICENSED LANDSCAPE ARCHITECT

August 15, 2008
PLANS Approval DATE

LICENSED LANDSCAPE ARCHITECT
Robert B. Schott 3695
Signature
11-04-08
Renewal Date
08-11-08
Date
STATE OF CALIFORNIA

The State of California or its officers or agents shall not be responsible for the accuracy or completeness of electronic copies of this plan sheet.

To accompany plans dated 5-17-10

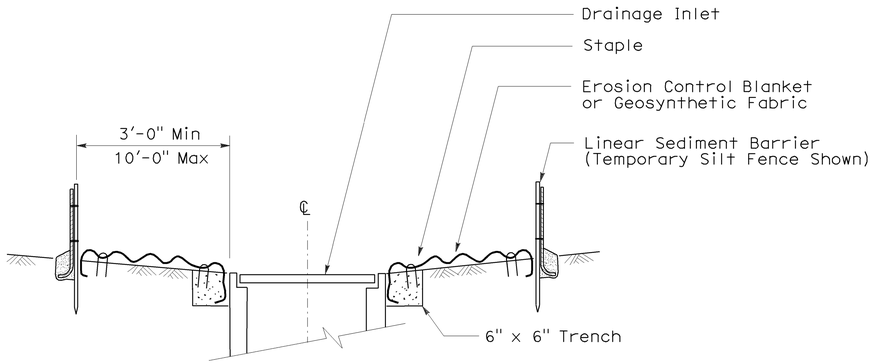

SECTION A-A

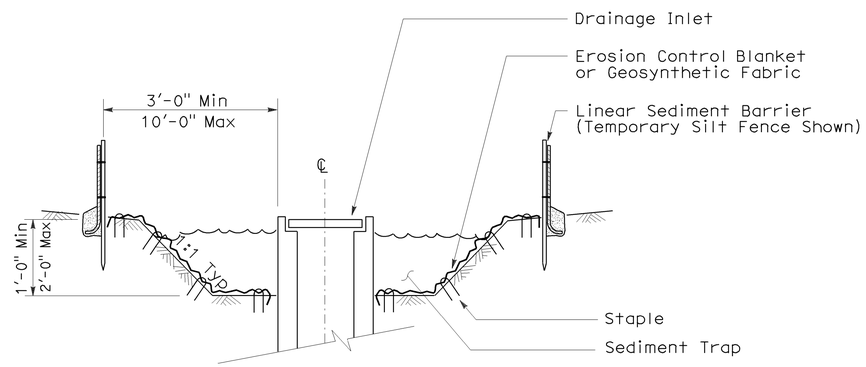

SECTION B-B

NOTES:

1. See Standard Plan T51 for Temporary Silt Fence.
2. Dimensions may vary to fit field conditions.

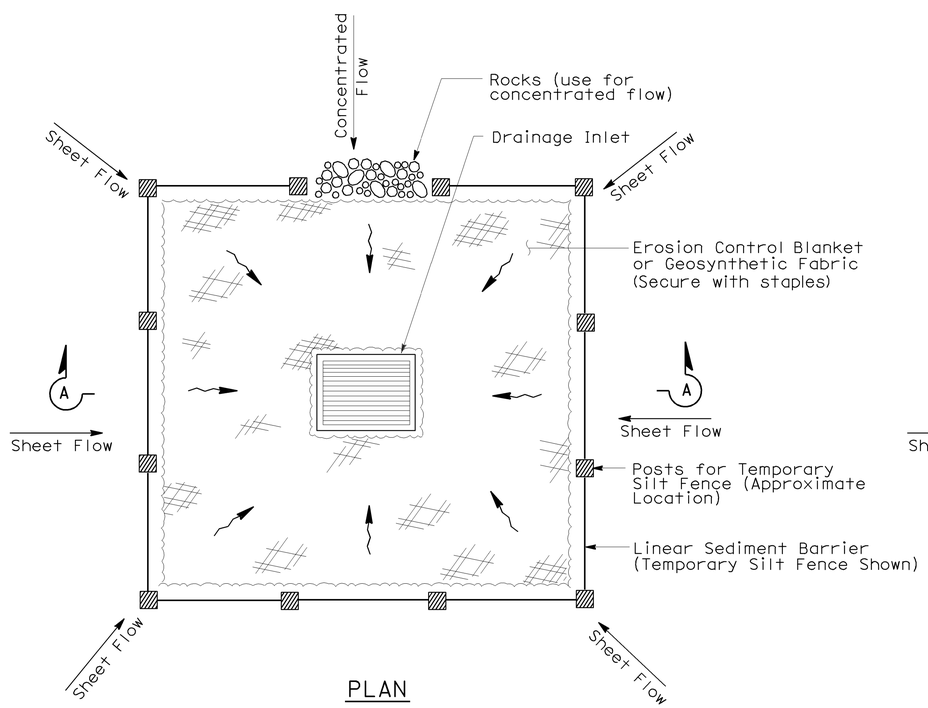

PLAN

TEMPORARY DRAINAGE INLET PROTECTION (TYPE 1)

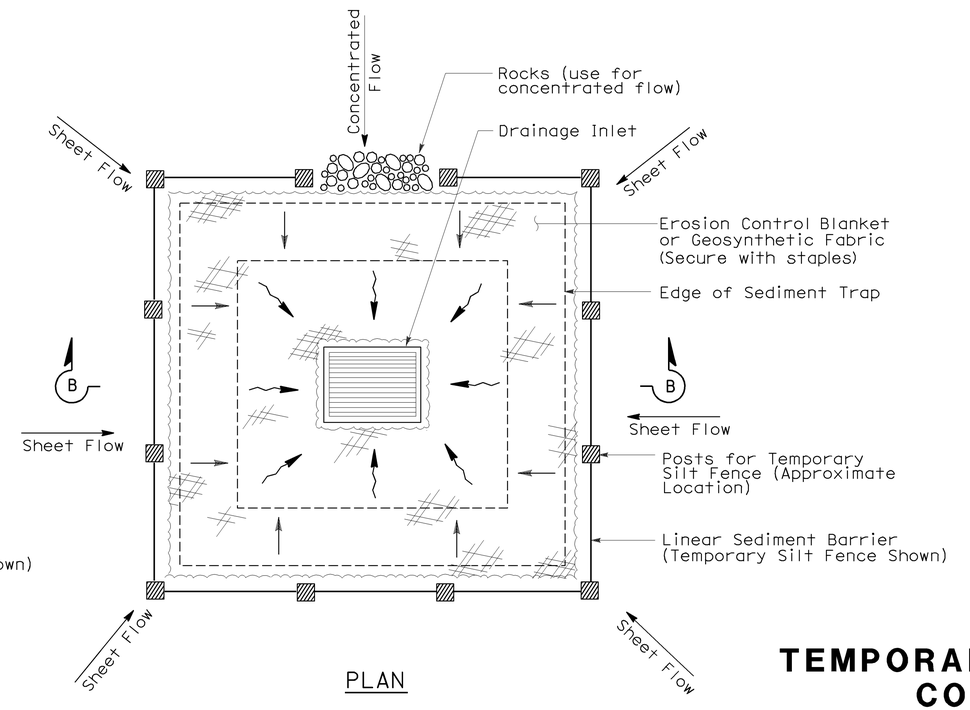

PLAN

TEMPORARY DRAINAGE INLET PROTECTION (TYPE 2) (EXCAVATED SEDIMENT TRAP)

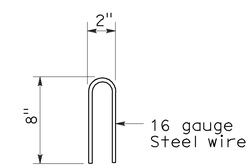

STAPLE DETAIL

STATE OF CALIFORNIA
DEPARTMENT OF TRANSPORTATION

TEMPORARY WATER POLLUTION CONTROL DETAILS (TEMPORARY DRAINAGE INLET PROTECTION)

NO SCALE

Nsp t61 dated august 15, 2008 supplements the standard plans book dated may 2006.

NEW STANDARD PLAN NSP T61

2006 NEW STANDARD PLAN NSP T61

7-11-08

DIST	COUNTY	ROUTE	POST MILES TOTAL PROJECT	SHEET NO.	TOTAL SHEETS
09	Mno	395	36.1/40.1	20	26

LICENSED LANDSCAPE ARCHITECT

August 15, 2008
PLANS APPROVAL DATE

The State of California or its officers or agents shall not be responsible for the accuracy or completeness of electronic copies of this plan sheet.

LICENSED LANDSCAPE ARCHITECT — Robert B. Schott — Signature — 11-04-08 Renewal Date — 08-11-08 Date — STATE OF CALIFORNIA

To accompany plans dated 5-17-10

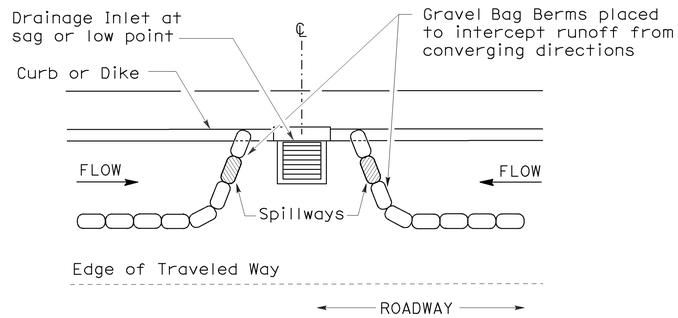

PLAN

CONFIGURATION FOR SAG POINT INLET (GRAVEL BAG BERM)

GRAVEL BAG BERM (TYPE 3A) SPACING TABLE

SLOPE OF ROADWAY (PERCENT)	1 to 3.9	4 to 5.9	6 to 7.9	8 to 10	10+
INTERVAL BETWEEN BERM	100′	75′	50′	25′	12′

For slope of less than 1%, install barriers only if erosion/sediment is prevalent

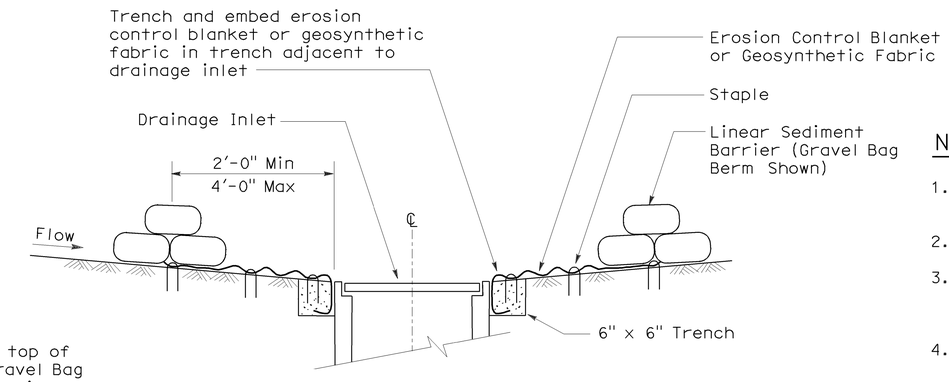

SECTION A-A

NOTES:

1. Place safety cones adjacent to drainage inlet protection.
2. Dimensions may vary to fit field conditions.
3. Install a minimum of 3 gravel bag berms upstream of each drainage inlet to be protected.
4. Position erosion control blanket or geosynthetic fabric at edge of concrete apron and secure in trench.
5. Erosion control blanket or geosynthetic fabric is not required if the area adjacent to the drainage inlet is vegetated or paved.

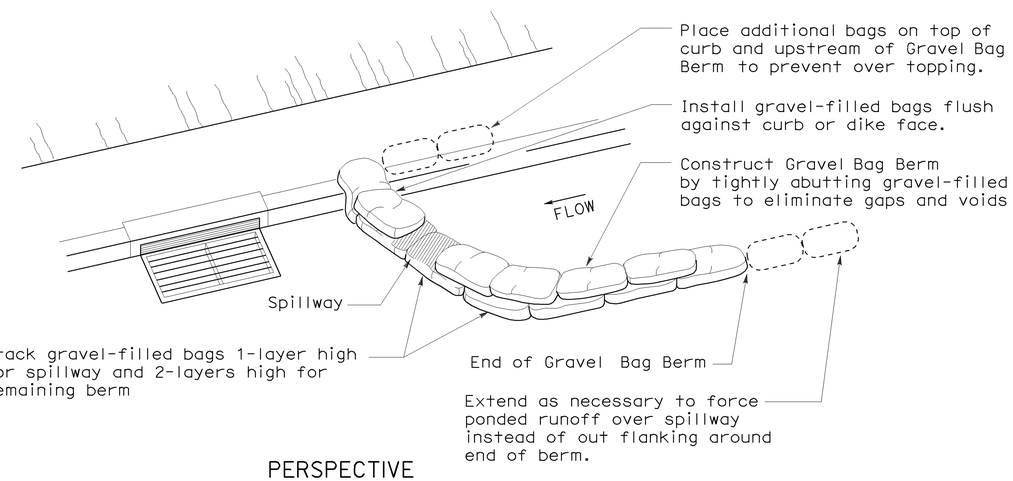

PERSPECTIVE

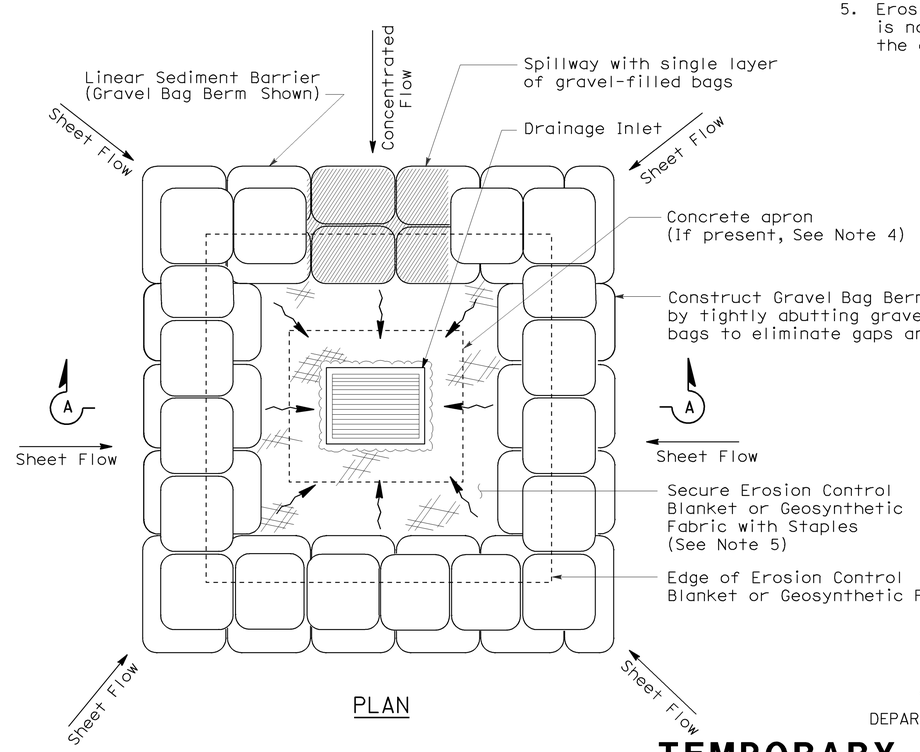

PLAN

TEMPORARY DRAINAGE INLET PROTECTION (TYPE 3B)

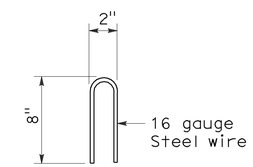

STAPLE DETAIL

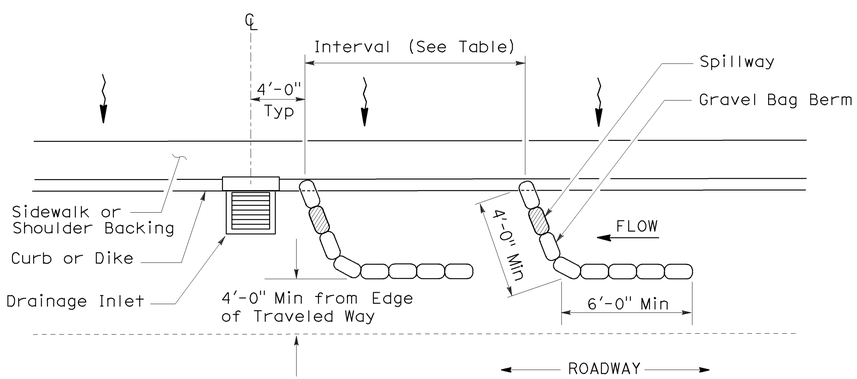

PLAN

TEMPORARY DRAINAGE INLET PROTECTION (TYPE 3A) (GRAVEL BAG BERM)

STATE OF CALIFORNIA
DEPARTMENT OF TRANSPORTATION

TEMPORARY WATER POLLUTION CONTROL DETAILS (TEMPORARY DRAINAGE INLET PROTECTION)

NO SCALE

NSP T62 DATED AUGUST 15, 2008 SUPPLEMENTS THE STANDARD PLANS BOOK DATED MAY 2006.

NEW STANDARD PLAN NSP T62

2006 NEW STANDARD PLAN NSP T62

7-11-08

DIST	COUNTY	ROUTE	POST MILES TOTAL PROJECT	SHEET NO.	TOTAL SHEETS
09	Mno	395	36.1/40.1	21	26

LICENSED LANDSCAPE ARCHITECT

August 15, 2008
PLANS APPROVAL DATE

The State of California or its officers or agents shall not be responsible for the accuracy or completeness of electronic copies of this plan sheet.

LICENSED LANDSCAPE ARCHITECT Robert B. Schott 3885 Signature 11-04-08 Renewal Date 08-11-08 Date STATE OF CALIFORNIA

To accompany plans dated 5-17-10

FLEXIBLE SEDIMENT BARRIER SPACING TABLE

SLOPE OF ROADWAY (PERCENT)	0 to 0.9	1 to 1.9	2 to 2.9	3 to 4	5+
INTERVAL BETWEEN BARRIERS	50′	35′	30′	25′	20′
ANGLE FROM FACE OF CURB	70°	70°	70°	45°	45°
SUGGESTED BARRIER LENGTH	6′	6′	6′	6′	6′

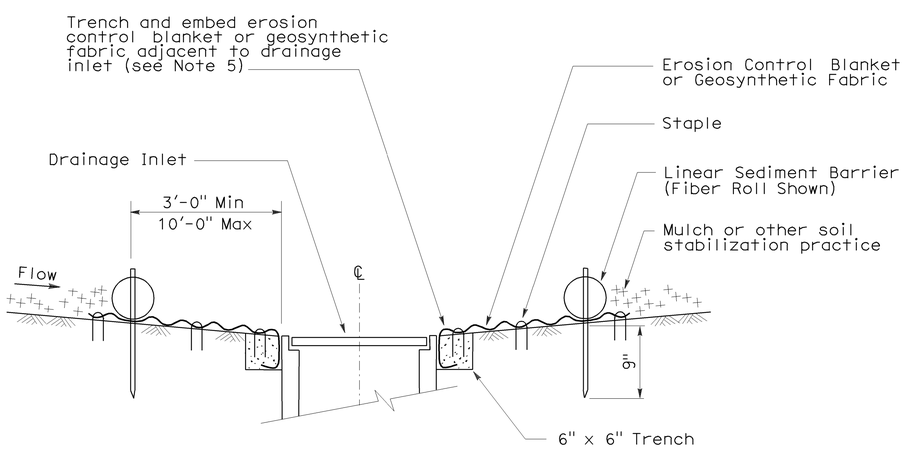

SECTION A-A

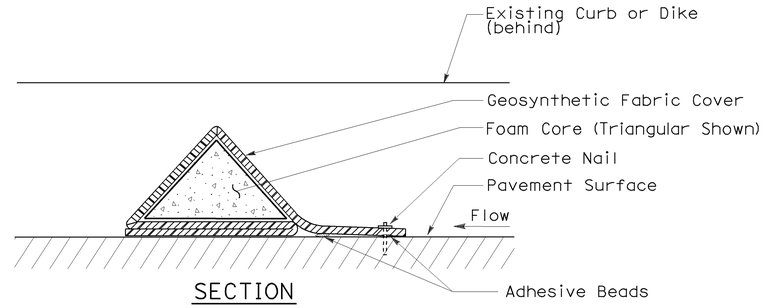

SECTION

FLEXIBLE SEDIMENT BARRIER DETAIL (FOAM BARRIER SHOWN)

NOTES:

1. See Standard Plan T51 for Temporary Silt Fence.
2. Dimensions may vary to fit field conditions.
3. Install a minimum of 3 flexible sediment barriers upstream of each drainage inlet to be protected.
4. Position erosion control blanket or geosynthetic fabric at edge of concrete apron and secure in trench.
5. Erosion control blanket or geosynthetic fabric is not required if the area adjacent to the drainage inlet is vegetated.

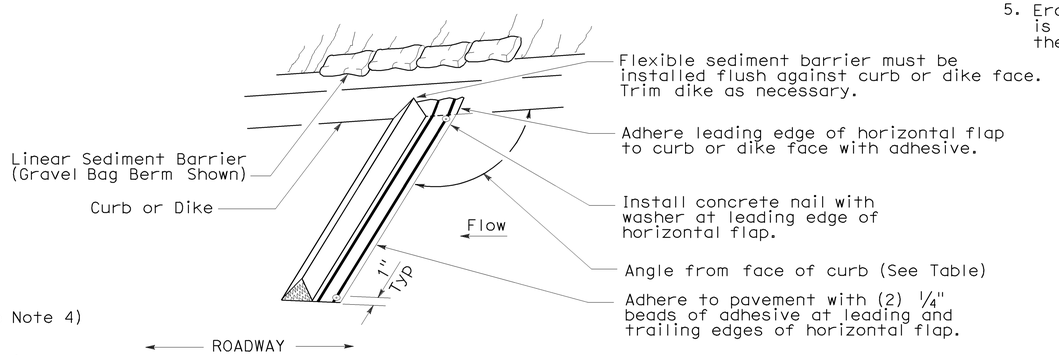

PERSPECTIVE

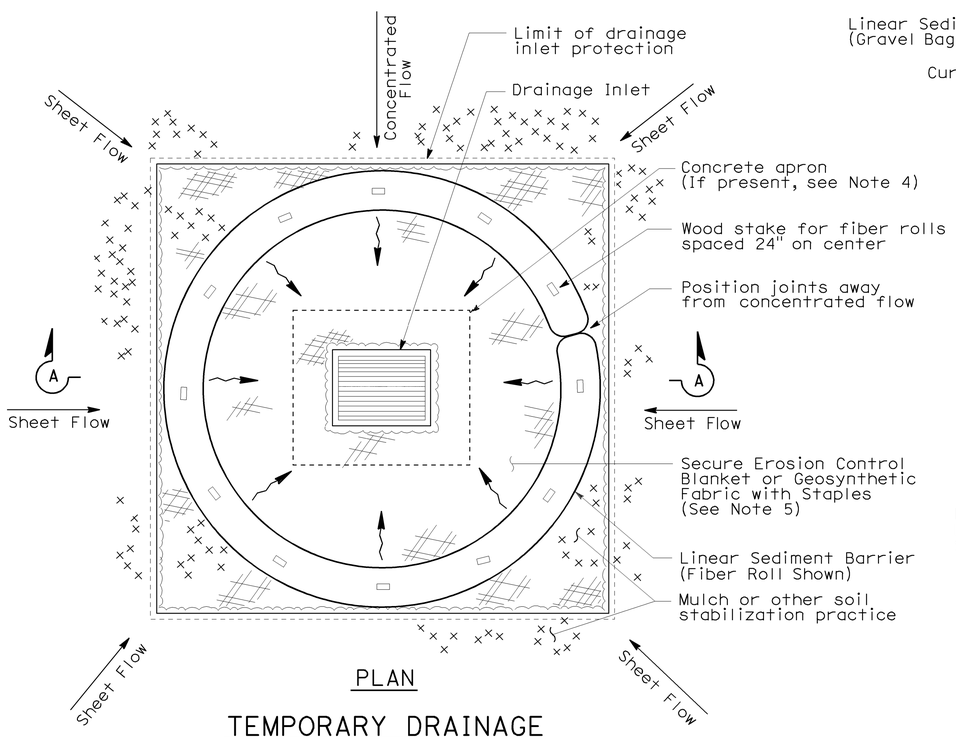

PLAN

TEMPORARY DRAINAGE INLET PROTECTION (TYPE 4A)

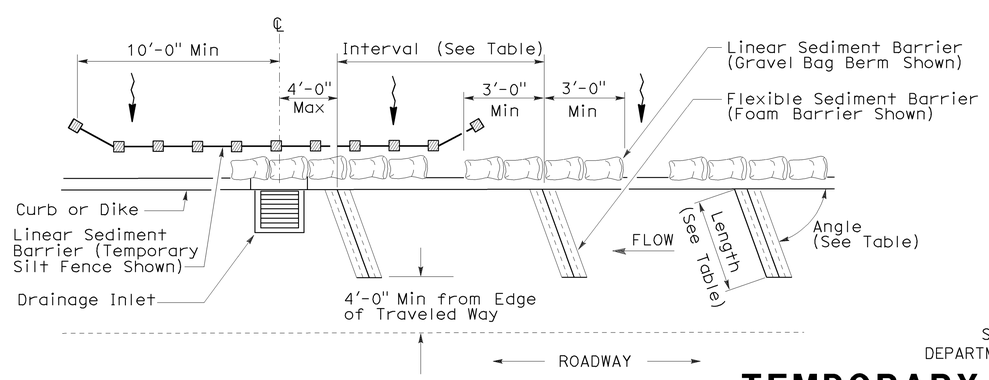

PLAN

TEMPORARY DRAINAGE INLET PROTECTION (TYPE 4B) FLEXIBLE SEDIMENT BARRIER

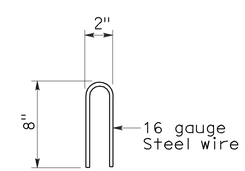

STAPLE DETAIL

STATE OF CALIFORNIA
DEPARTMENT OF TRANSPORTATION

TEMPORARY WATER POLLUTION CONTROL DETAILS (TEMPORARY DRAINAGE INLET PROTECTION)

NO SCALE

NSP T63 DATED AUGUST 15, 2008 SUPPLEMENTS THE STANDARD PLANS BOOK DATED MAY 2006.

NEW STANDARD PLAN NSP T63

2006 NEW STANDARD PLAN NSP T63

7-11-08

DIST	COUNTY	ROUTE	POST MILES TOTAL PROJECT	SHEET NO.	TOTAL SHEETS
09	Mno	395	36.1/40.1	22	26

LICENSED LANDSCAPE ARCHITECT

August 15, 2008
PLANS APPROVAL DATE

LICENSED LANDSCAPE ARCHITECT
Robert B. Schott 3695
Signature
11-04-08
Renewal Date
08-11-08
Date
STATE OF CALIFORNIA

The State of California or its officers or agents shall not be responsible for the accuracy or completeness of electronic copies of this plan sheet.

To accompany plans dated 5-17-10

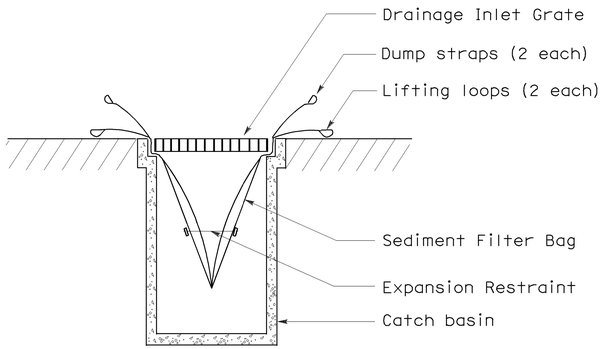

SECTION B-B

SEDIMENT FILTER BAG DETAIL

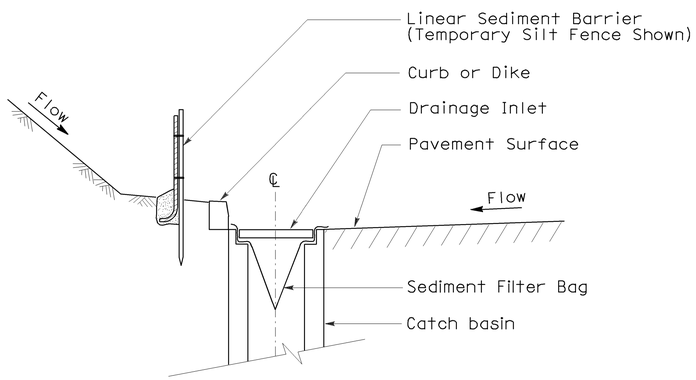

SECTION A-A

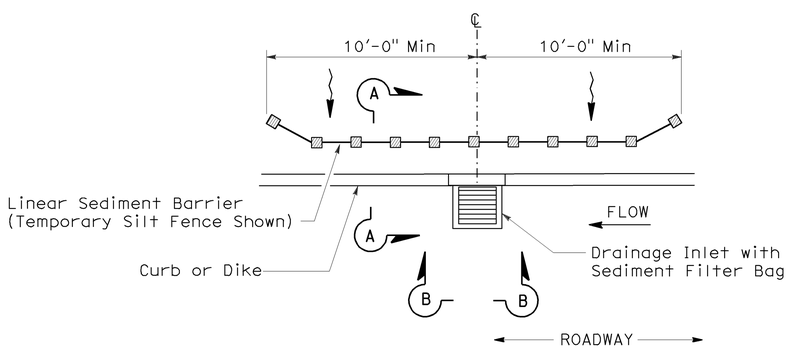

PLAN

TEMPORARY DRAINAGE INLET PROTECTION (TYPE 5) (SEDIMENT FILTER BAG)

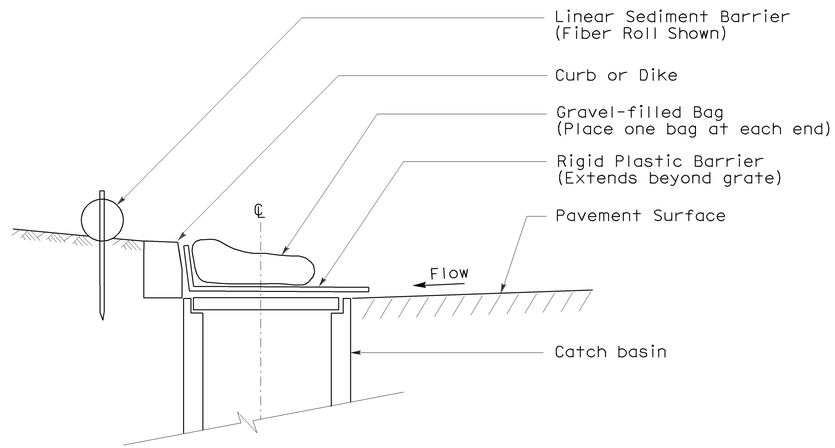

SECTION

TEMPORARY DRAINAGE INLET PROTECTION (TYPE 6A) (CATCH BASIN WITH GRATE)

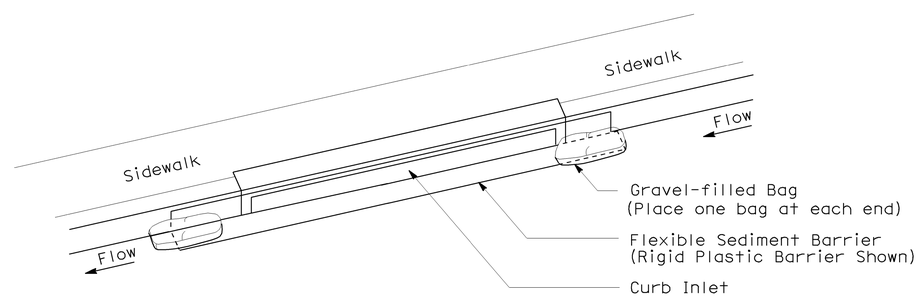

PERSPECTIVE

TEMPORARY DRAINAGE INLET PROTECTION (TYPE 6B) (CURB INLET WITHOUT GRATE)

NOTES:

1. See Standard Plan T51 for Temporary Silt Fence.
2. Dimensions may vary to fit field conditions.

STATE OF CALIFORNIA
DEPARTMENT OF TRANSPORTATION

TEMPORARY WATER POLLUTION CONTROL DETAILS (TEMPORARY DRAINAGE INLET PROTECTION)

NO SCALE

NSP T64 DATED AUGUST 15, 2008 SUPPLEMENTS
THE STANDARD PLANS BOOK DATED MAY 2006.

NEW STANDARD PLAN NSP T64

2006 NEW STANDARD PLAN NSP T64

7-11-08

DIST	COUNTY	ROUTE	POST MILES TOTAL PROJECT	SHEET NO.	TOTAL SHEETS
09	Mno	395	36.1/40.1	23	26

REGISTERED ELECTRICAL ENGINEER

October 5, 2007
PLANS APPROVAL DATE

REGISTERED PROFESSIONAL ENGINEER
Jeffery G. McRae
No. E14512
Exp. 6-30-08
ELECTRICAL
STATE OF CALIFORNIA

The State of California or its officers or agents shall not be responsible for the accuracy or completeness of electronic copies of this plan sheet.

To accompany plans dated 5-17-10

ELECTROLIERS

STANDARD TYPES
15, 15D
15 STRUCTURE
21, 21D STRUCTURE
30
31
32
35
36-20A

High mast light pole

Double Arm lighting standard

Existing electrolier

Electrolier foundation (Future installation)

NOTES:

1. Luminaires shall be 310 W HPS when installed on Type 21, 21D, 30, 31, 32, 35 and 36-20A Standards, unless otherwise specified. Luminaires shall be 200 W HPS when installed on other type standards or poles, unless otherwise specified.
2. Luminaires shall be the cutoff type, ANSI Type Ⅲ medium cutoff lighting distribution, unless otherwise specified.
3. Variations noted adjacent to symbol on project plans.

Electrolier (see project notes or project plans)

Luminaire on wood pole

STANDARD NOTES:

- AB Abandon. If applied to conduit, remove conductors.
- BC Install pull box in existing conduit run.
- BP Pedestrian barricade, type as indicated on plan.
- CB Install conduit into existing pull box.
- CC Connect new and existing conduit. Remove existing conductors and install conductors as indicated.
- CF Conduit to remain for future use. Remove conductors. Install pull wire or rope.
- DH Detector handhole.
- FA Foundation to be abandoned.
- IS Install sign on signal mast arm.
- NS No slip base on standard.
- PEC Photoelectric control.
- PEU Photoelectric unit.
- RC Equipment or material to be removed and become the property of the Contractor.
- RE Remove electrolier, fuses and ballast. Tape ends of conductors.
- RL Relocate equipment.
- RR Remove and reuse equipment.
- RS Remove and salvage equipment.
- SC Splice new to existing conductors.
- SD Service disconnect.
- SF Standard to remain for future use. Remove luminaire, pole conductors, fuses and ballast.
- TSP Telephone service point.

ABBREVIATIONS AND EQUIPMENT DESIGNATIONS

PROPOSED	EXISTING	
BBS	bbs	Battery backup system
BC	bc	Bolt circle
C	C	Conduit
CCTV	cctv	Closed circuit television
CKT	ckt	Circuit
CMS	cms	Changeable message sign
DLC	dlc	Loop detector lead-in cable
EMS	ems	Extinguishable message sign
EVC	evc	Emergency vehicle cable
EVD	evd	Emergency vehicle detector
FB	fb	Flashing beacon
FBCA	fbca	Flashing beacon control assembly
FBS	fbs	Flashing beacon with slip base
FO	fo	Fiber optic
G	G	Ground (Equipment Grounding Conductor)
GFCI	GFCI	Ground fault circuit interrupt
HAR	har	Highway advisory radio
HEX	hex	Hexagonal
HPS	hps	High pressure sodium
IISNS	iisns	Internally illuminated street name sign
ISL	isl	Induction sign lighting
LED	led	Light emitting diode
LMA	lma	Luminaire mast arm
LPS	lps	Low pressure sodium
LTG	ltg	Lighting
LUM	lum	Luminaire
MAT	mat	Mast arm mounting vehicle signal faces, top attachment
MAS	mas	Mast arm mounting vehicle signal faces, side attachment
MAS-4A	mas-4A	Mast arm mounting vehicle signal faces, side attachment - 4 signal section
MAS-4B	mas-4B	
MAS-4C	mas-4C	
MAS-5A	mas-5A	Mast arm mounting vehicle signal faces, side attachment - 5 signal section
MAS-5B	mas-5B	
MC	mc	Mercury contactor
M/M	m/m	Multiple to multiple transformer
MT	mt	Conduit with pull wire or rope only
MTG	mtg	Mounting
	mv	Mercury vapor lighting fixture
N	N	Neutral (Grounded Conductor)
NC	NC	Normally closed
NO	NO	Normally open
PB	pb	Pull box
PEC	pec	Photoelectric control (Type Ⅰ, Ⅱ, Ⅲ, Ⅳ or Ⅴ as shown)
PED	ped	Pedestrian
PEU	peu	Photoelectric unit
PPB	ppb	Pedestrian push button
RL		Relocated equipment
RM	rm	Ramp metering
SB	sb	Slip base
SIC	sic	Signal interconnect cable
SIG	sig	Signal
SMA	sma	Signal mast arm
SNS	sns	Street name sign
SP	sp	Service point
TDC	tdc	Telephone demarcation cabinet
TMS	tms	Traffic monitoring station
TOS	tos	Traffic Operations System
VEH	veh	Vehicle
XFMR	xfmr	Transformer
COMM	comm	Communication
RWIS	rwis	Roadway weather information system

SOFFIT AND WALL MOUNTED LUMINAIRES

Pendant, 70 W HPS unless otherwise specified.

Flush, 70 W HPS unless otherwise specified.

Wall surface, 70 W HPS unless otherwise specified.

Existing soffit or wall luminaire to remain unmodified.

Existing soffit or wall luminaire to be modified as specified.

NOTE:

Arrow indicates "street side" of luminaire.

STATE OF CALIFORNIA
DEPARTMENT OF TRANSPORTATION

ELECTRICAL SYSTEMS (SYMBOLS AND ABBREVIATIONS)

NO SCALE

RSP ES-1A DATED OCTOBER 5, 2007 SUPERSEDES STANDARD PLAN ES-1A DATED MAY 1, 2006 - PAGE 400 OF THE STANDARD PLANS BOOK DATED MAY 2006.

REVISED STANDARD PLAN RSP ES-1A

2006 REVISED STANDARD PLAN RSP ES-1A

DIST	COUNTY	ROUTE	POST MILES TOTAL PROJECT	SHEET NO.	TOTAL SHEETS
09	Mno	395	36.1/40.1	24	26

REGISTERED ELECTRICAL ENGINEER

October 5, 2007
PLANS APPROVAL DATE

REGISTERED PROFESSIONAL ENGINEER
Jeffery G. McRae
No. E14512
Exp. 6-30-08
ELECTRICAL
STATE OF CALIFORNIA

The State of California or its officers or agents shall not be responsible for the accuracy or completeness of electronic copies of this plan sheet.

To accompany plans dated 5-17-10

CONDUIT

PROPOSED	EXISTING	
		Lighting Conduit, unless otherwise indicated or noted
		Traffic signal conduit
C	c	Communication conduit
T	t	Telephone conduit
F	f	Fire alarm conduit
FO	fo	Fiber optic conduit
		Conduit termination (RSP ES-9A C)
R	r	Conduit riser in/on structure or service pole

SERVICE EQUIPMENT

PROPOSED	EXISTING	
OH	oh	Overhead lines
U	U	Wood pole "U" indicates utility owned
		Pole guy with anchor
		Utility transformer - ground mounted
III		Service equipment enclosure type
		Service equipment enclosure door indicates front of enclosure
T	t	Telephone demarcation cabinet

POLE-MOUNTED SERVICE DESIGNATION

Type of installation

TYPE H SERVICE - 28'-10" ← Pole height above grade

ILLUMINATED OVERHEAD SIGN

PROPOSED	EXISTING	
		Overhead sign - Single post
		Overhead sign - Two post
		Overhead sign - Mounted on structure
		Overhead sign with electrolier

SIGNAL EQUIPMENT

PROPOSED	EXISTING	
		Pedestrian signal face
		Pedestrian push button post
		Pedestrian barricade
		Vehicle signal face (with backplate, 3-Section: red, yellow and green)
		Vehicle signal face with angle visors
PV	PV	Modifications of basic symbols: "L" indicates all non-arrow sections louvered "LG" indicates louvered green section only "PV" indicates 12" programmed visibility sections "8" indicates all 8" sections (only when specified)
		Type 15TS and Vehicle signal face
		Vehicle signal face with red, yellow and green left arrow sections
		Vehicle signal face with red and yellow sections and up green arrow
		Vehicle signal face (5 Section) with red, yellow and green sections and yellow and green right arrows
		Type 1 Standard and attached vehicle signal faces
		Standard with signal mast arm only and attached vehicle signal faces and internally illuminated street name sign
		Type 33 Standard, Left-turn vehicle signal face and sign
		Standard with luminaire and signal mast arms and attached vehicle signal faces
		Cantilever flashing beacon Type 9 Frame, with a sign unless otherwise specified or indicated
		Type 15-FBS Standard with two vehicle signal face sections with lens, backplate and visor with a sign
R	Y	Flashing beacon. One vehicle signal face section with lens, backplate and visor. "R" indicates red indication, "Y" indicates yellow indication
		Controller assembly. Door indicates front of cabinet

SIGNAL EQUIPMENT Cont

PROPOSED	EXISTING	
		Guard post
		Type 1 Standard with "Meter On" sign
		Emergency Vehicle detector

NOTES:

1. All signal sections shall be 12" unless shown otherwise.
2. Signal heads shall be provided with backplates unless shown otherwise.
3. Signal indication shall be LED.

STATE OF CALIFORNIA
DEPARTMENT OF TRANSPORTATION

ELECTRICAL SYSTEMS (SYMBOLS AND ABBREVIATIONS)

NO SCALE

RSP ES-1B DATED OCTOBER 5, 2007 SUPERCEDES STANDARD PLAN ES-1B DATED MAY 1, 2006 - PAGE 401 OF THE STANDARD PLANS BOOK DATED MAY 2006.

REVISED STANDARD PLAN RSP ES-1B

2006 REVISED STANDARD PLAN RSP ES-1B

7-10-07

DIST	COUNTY	ROUTE	POST MILES TOTAL PROJECT	SHEET NO.	TOTAL SHEETS
09	Mno	395	36.1/40.1	25	26

REGISTERED ELECTRICAL ENGINEER

October 5, 2007
PLANS APPROVAL DATE

REGISTERED PROFESSIONAL ENGINEER
Jeffery G. McRae
No. E14512
Exp. 6-30-08
ELECTRICAL
STATE OF CALIFORNIA

The State of California or its officers or agents shall not be responsible for the accuracy or completeness of electronic copies of this plan sheet.

To accompany plans dated 5-17-10

EQUIPMENT IDENTIFICATION

ILLUMINATED SIGN IDENTIFICATION NUMBER:

Sign No. 12345
10 ISL SCI 1.0

- Sign number - Place on post or structure
- Transformer rating (kVA)
- Lighting control type
- Number and type of fixtures

Do NOT place on standard or structure

ELECTROLIER OR EQUIPMENT IDENTIFICATION NUMBER:

12345 - 15'-0"

- Mast arm length, if shown. Do not place on standard or structure.
- Equipment number - Place on standard or structure. Existing equipment numbers are shown in parenthesis

CONDUIT AND CONDUCTOR IDENTIFICATION:

1½"C, 2#10, 15#14, 2 DLC

- Number and size of conductors and cables
- Size of conduit in inches

ø1, ø2, ø2P, etc.	Traffic phase identification for signal faces, detectors and phase diagrams
1 2 3	Project note numbers
A B C	Equipment description, installation or item numbers
1 2 3	Conduit run numbers

SIGNAL AND LIGHTING STANDARD (TYPICAL DESIGNATION):

19A - 3 - 100

- Wind velocity = 100 mph
- Case 3 arm loading
- Standard type
- Standard Plan sheet number
- Detail number or letter

MISCELLANEOUS EQUIPMENT

PROPOSED	EXISTING	
CMS	cms	Changeable message sign
		Closed circuit television camera
		Highway advisory radio pole and antenna
EMS	ems	Extinguishable message sign
M V	m v	Detection device M = Microwave sensor V = Video image sensor

WIRING DIAGRAM LEGEND

P	Pole
CB	Circuit breaker
A	Ampere
V	Volt
M	Metered
UM	Unmetered
NB	Neutral bus
GB	Ground bus
G	Equipment grounding conductor
N	Grounded conductor (Neutral)

- External conductor
- Conductor or bus
- Tie point
- Contactor coil
- Contactor, Contact NO
- Terminal blocks
- Contactor, Contact NC
- Enclosure bond
- Grounding electrode
- Circuit breaker
- Receptacle

PULL BOXES

PROPOSED	EXISTING	
		Pull box-No. 5 unless otherwise indicated or noted.
3	9A(21)	Pull box-Additional designations or descriptions

3 = No. 3½ pull box
5 = No. 5 pull box
6 = No. 6 pull box
7 = No. 7 (Ceiling pull box)
8 = No. 8 (Pendant soffit pull box)
9 = No. 9 pull box
9A = No. 9A pull box

(C) = Communications pull box
(E) = Pull box with extension
(S) = Sprinkler control pull box
(21) = Anchor bolts and conduit for future installation of Type 21 Standard
(T) = Traffic pull box

VEHICLE DETECTORS

5 J 9 U

- Vehicle detector designation
- U = Upper
  L = Lower
- Slot number in input file
- Input file (I or J)
- Phase

PROPOSED	EXISTING	
		Type A detector loop. Outline of sawcut shown.
		Type B detector loop. Outline of sawcut shown.
		Type C detector loop. Outline of sawcut shown.
		Type D detector loop. Outline of sawcut shown.
		Type E detector loop. Outline of sawcut shown.
		Type Q detector loop. Outline of sawcut shown.
		Magnetic detector
DH	dh	Detector handhole
		Microwave or video detection zone

STATE OF CALIFORNIA
DEPARTMENT OF TRANSPORTATION

ELECTRICAL SYSTEMS (SYMBOLS AND ABBREVIATIONS)

NO SCALE

RSP ES-1C DATED OCTOBER 5, 2007 SUPERCEDES STANDARD PLAN ES-1C DATED MAY 1, 2006 - PAGE 402 OF THE STANDARD PLANS BOOK DATED MAY 2006.

REVISED STANDARD PLAN RSP ES-1C

2006 REVISED STANDARD PLAN RSP ES-1C

DIST	COUNTY	ROUTE	POST MILES TOTAL PROJECT	SHEET NO.	TOTAL SHEETS
09	Mno	395	36.1/40.1	26	26

REGISTERED ELECTRICAL ENGINEER

October 5, 2007
PLANS APPROVAL DATE

REGISTERED PROFESSIONAL ENGINEER Jeffery G. McRae No. E14512 Exp. 6-30-08 ELECTRICAL STATE OF CALIFORNIA

The State of California or its officers or agents shall not be responsible for the accuracy or completeness of electronic copies of this plan sheet.

To accompany plans dated 5-17-10

LOOP INSTALLATION PROCEDURE

1. Loops shall be centered in lanes.
2. Saw slots in pavement for loop conductors as shown in details.
3. Distance between side of loop and a lead-in saw cut from adjacent detectors shall be 2'-0" minimum. Distance between lead-in saw cuts shall be 6" minimum.
4. Bottom of saw slot shall be smooth with no sharp edges.
5. Slots shall be washed until clean, blown out and thoroughly dried before installing loop conductors.
6. Adjacent loops on the same sensor unit channel shall be wound in opposite directions.
7. Identify and tag loop circuit pairs in the pull box with loop number, start (S) and finish (F) of conductor. Identify and tag lead-in-cable with sensor number and phase.
8. Install loop conductor in slot using a 3/16" to 1/4" thick wood paddle. Hold loop conductors with wood paddles (at the bottom of the sawed slot) during sealant placement.
9. No more than 2 twisted pairs shall be installed in one sawed slot.
10. Allow additional 5'-0" of slack length of conductor for the lead-in run to pull box.
11. The additional length of each conductor for each loop shall be twisted together into a pair (6 turns per 3'-4" minimum) before being placed in the slot and conduit leading to pull box.
12. Test each loop circuit for continuity, circuit resistance and insulation resistance at the pull box before filling slots.
13. Fill slots as shown in details.
14. Splice loop conductors to lead-in-cable. Splices shall be soldered.
15. End of lead-in-cable and Type 2 loop conductor shall be waterproofed prior to installing in conduit to prevent moisture from entering the cable.
16. Lead-in-cable shall not be spliced between the pull box and the controller cabinet terminals.
17. Test each loop circuit for continuity, circuit resistance and insulation resistance at the controller cabinet location.
18. Where loop conductors are not to be spliced to a lead-in-cable, the ends of the conductors shall be taped and waterproofed with electrical insulating coating.

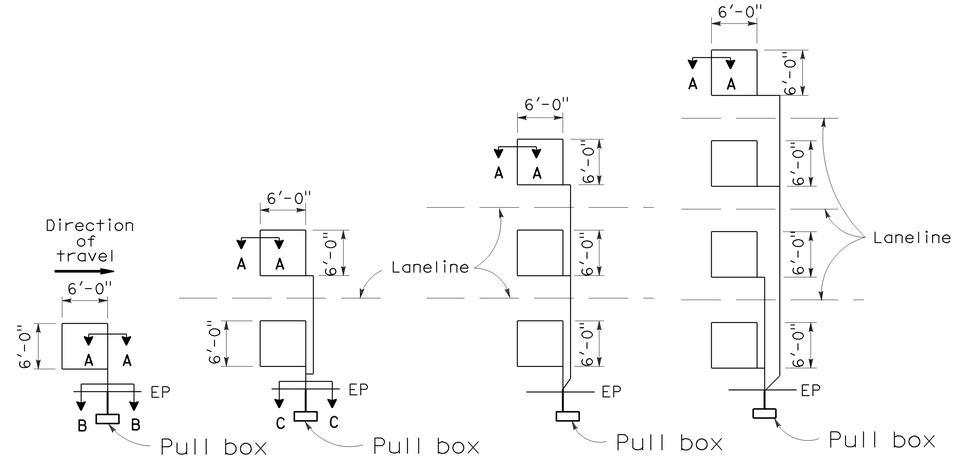

TYPE 1A INSTALLATION | TYPE 2A INSTALLATION | TYPE 3A INSTALLATION | TYPE 4A INSTALLATION

SAWCUT DETAILS

(Type A loop detector configurations illustrated)

1. 1A thru 4A = 1 Type A loop configuration in each lane.
2. 1B thru 4B = 1 Type B loop configuration in each lane.
3. 1C = 1 Type C loop configuration entering lanes as required.
4. 1D thru 4D = 1 Type D loop configuration in each lane.
5. 1E thru 4E = 1 Type E loop configuration in each lane.
6. 1Q thru 4Q = 1 Type Q loop configuration in each lane.
   (Use Type A, B, C, D, E or Q loop detector configurations only when specified or shown on plans)

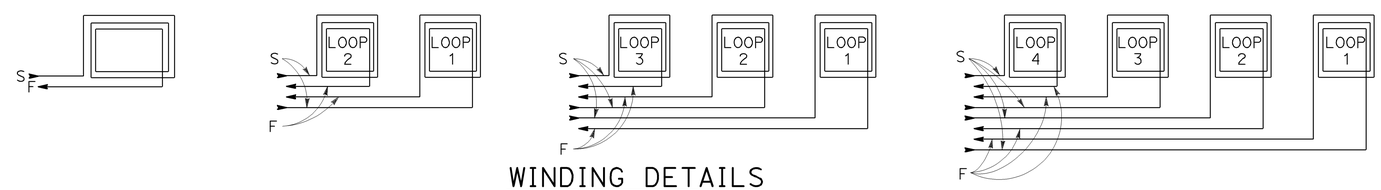

WINDING DETAILS

See Notes 6 and 7

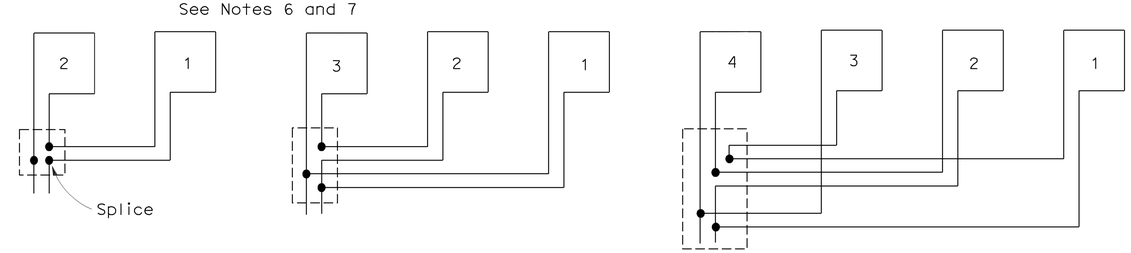

TYPICAL LOOP CONNECTIONS

(Dashed lines represent the pull box)

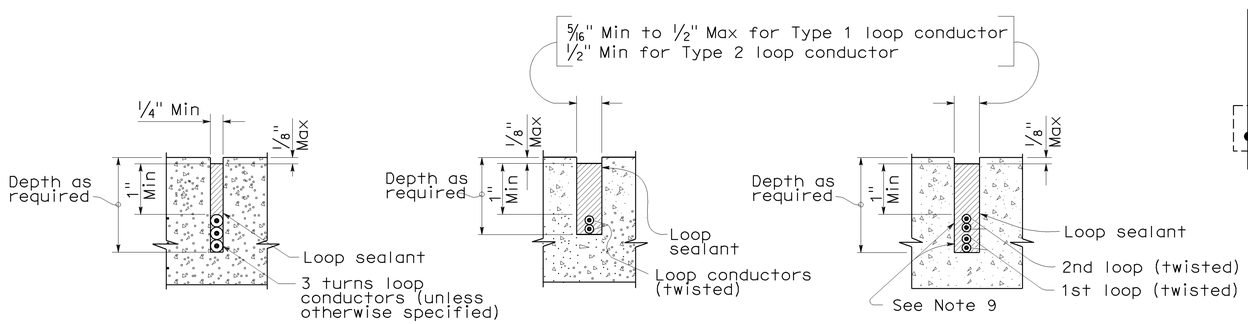

SECTION A-A | SECTION B-B | SECTION C-C

SLOT DETAILS - TYPE 1 AND TYPE 2 LOOP CONDUCTOR

STATE OF CALIFORNIA
DEPARTMENT OF TRANSPORTATION

ELECTRICAL SYSTEMS (DETECTORS)

NO SCALE

RSP ES-5A DATED OCTOBER 5, 2007 SUPERCEDES STANDARD PLAN ES-5A DATED MAY 1, 2006 - PAGE 423 OF THE STANDARD PLANS BOOK DATED MAY 2006.

REVISED STANDARD PLAN RSP ES-5A

2006 REVISED STANDARD PLAN RSP ES-5A

8-17-07