ACHSNH-P395(234)E

Dist	COUNTY	ROUTE	POST MILES TOTAL PROJECT	SHEET No.	TOTAL SHEETS
09	Mno	395	78.8/80.6	1	52

STATE OF CALIFORNIA
DEPARTMENT OF TRANSPORTATION

PROJECT PLANS FOR CONSTRUCTION ON
STATE HIGHWAY

IN MONO COUNTY
NEAR BRIDGEPORT
FROM 1.7 MILES NORTH OF EMIGRANT STREET TO BUCKEYE ROAD

TO BE SUPPLEMENTED BY STANDARD PLANS DATED MAY 2006

INDEX OF PLANS

SHEET No.	DESCRIPTION
1	TITLE AND LOCATION MAP
2	TYPICAL CROSS SECTIONS
3-6	LAYOUTS
7	PROFILES AND SUPERELEVATION DIAGRAMS
8-11	CONSTRUCTION DETAILS
12	CONSTRUCTION AREA SIGNS
13-21	TRAFFIC HANDLING PLANS, DETAILS AND QUANTITIES
22-26	PAVEMENT DELINEATION PLANS, DETAILS AND QUANTITIES
27-32	SIGN, DETAILS AND QUANTITIES
33	SUMMARY OF QUANTITIES
34	ELECTRICAL PLANS
35-52	REVISED STANDARD PLANS

THE STANDARD PLANS LIST APPLICABLE TO THIS CONTRACT IS INCLUDED IN THE NOTICE TO BIDDERS AND SPECIAL PROVISIONS BOOK.

LOCATION MAP

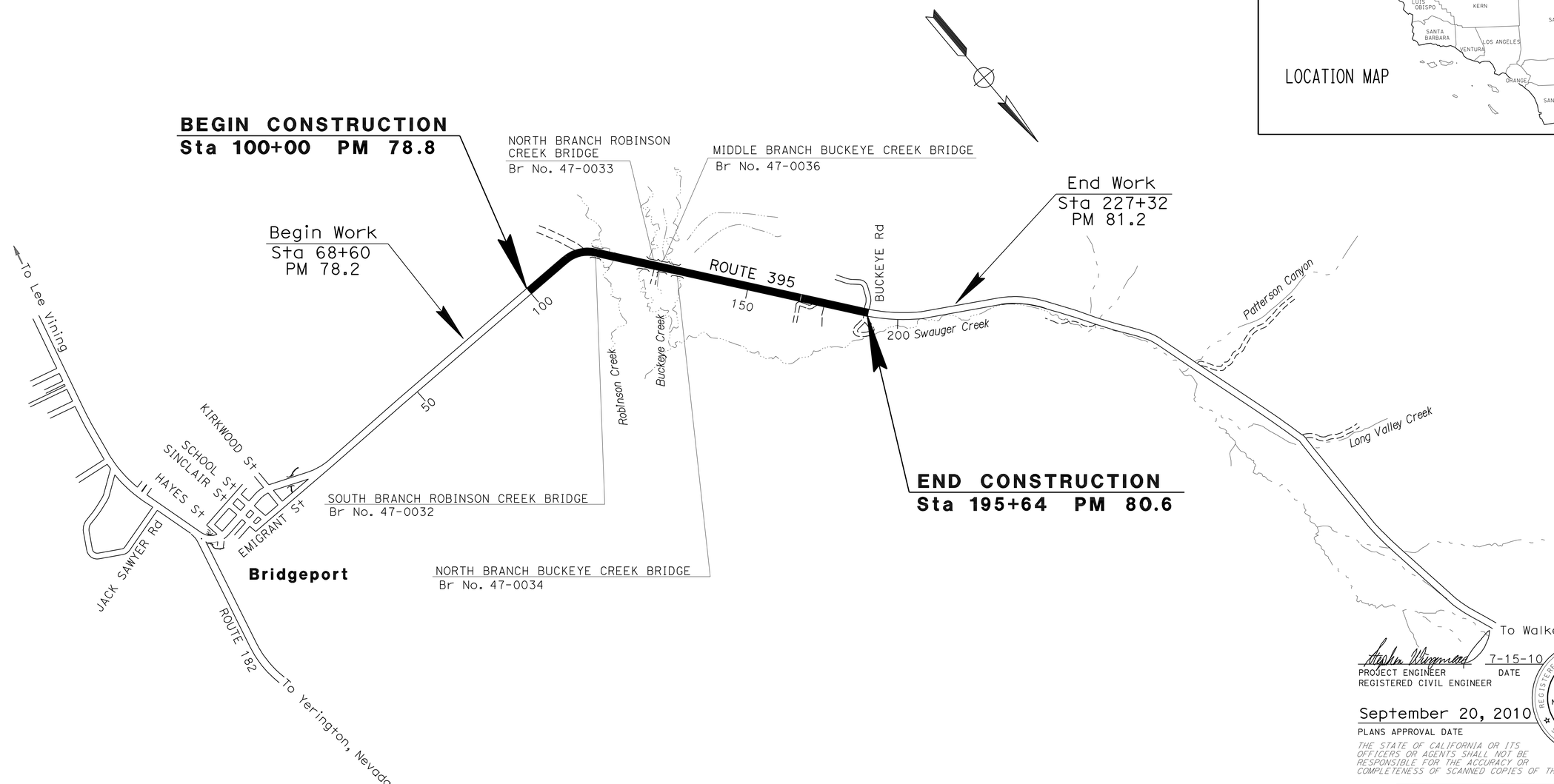

NO SCALE

THE CONTRACTOR SHALL POSSESS THE CLASS (OR CLASSES) OF LICENSE AS SPECIFIED IN THE "NOTICE TO BIDDERS."

PROJECT MANAGER: BRIAN MCELWAIN

DESIGN ENGINEER: STEPHEN WINZENREAD

Stephen Winzenread 7-15-10
PROJECT ENGINEER DATE
REGISTERED CIVIL ENGINEER

September 20, 2010
PLANS APPROVAL DATE

REGISTERED PROFESSIONAL ENGINEER Stephen Winzenread No. 64274 Exp. 6-30-11 CIVIL STATE OF CALIFORNIA

THE STATE OF CALIFORNIA OR ITS OFFICERS OR AGENTS SHALL NOT BE RESPONSIBLE FOR THE ACCURACY OR COMPLETENESS OF SCANNED COPIES OF THIS PLAN SHEET.

CONTRACT No.	09-342504
PROJECT ID	0900000139

LAST REVISION 07-16-10 DATE PLOTTED => 23-NOV-2010 TIME PLOTTED => 10:22

Dist	COUNTY	ROUTE	POST MILES TOTAL PROJECT	SHEET No.	TOTAL SHEETS
09	Mno	395	78.8/80.6	2	52

REGISTERED CIVIL ENGINEER 7-15-10 DATE

9-20-10
PLANS APPROVAL DATE

REGISTERED PROFESSIONAL ENGINEER STEPHEN WINZENREAD No. 64274 Exp. 6-30-11 CIVIL STATE OF CALIFORNIA

THE STATE OF CALIFORNIA OR ITS OFFICERS OR AGENTS SHALL NOT BE RESPONSIBLE FOR THE ACCURACY OR COMPLETENESS OF SCANNED COPIES OF THIS PLAN SHEET.

NOTES:

1. DIMENSIONS OF THE PAVEMENT STRUCTURES (STRUCTURAL SECTIONS) ARE SUBJECT TO TOLERANCES SPECIFIED IN THE STANDARD SPECIFICATIONS.
2. SUPERELEVATIONS AS SHOWN OR AS DIRECTED BY THE ENGINEER.

ABBREVIATIONS:

CP - CATCH POINT
TL - TRIM LINE

DESIGN DESIGNATION

ADT (2011) = 3860	D = 56.51%
ADT (2021) = 4050	TI_{20} = 10.0
DHV (2011) = 620	V = 55 mph
DHV (2031) = 690	T = 11%

TYPICAL STRUCTURAL SECTION

1 — 0.50′ HMA (TYPE A)
0.35′ CI 2 AB

2 — 0.35′ AC Typ
0.40′ AB Typ

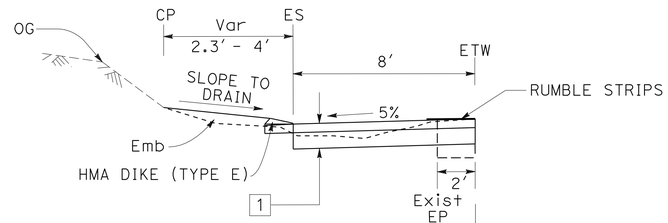

Sta 175+10 to 179+40

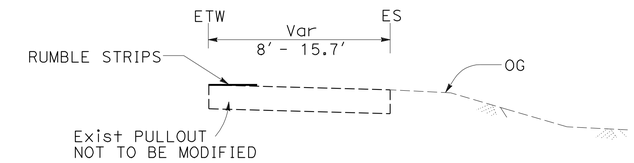

Sta 181+55 - 186+46

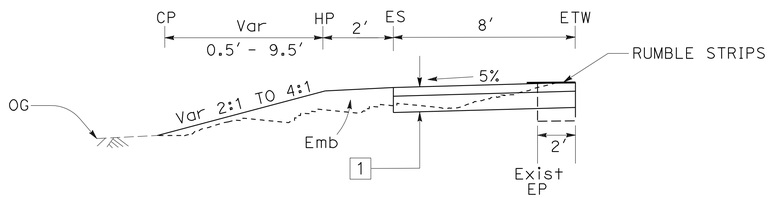

Sta 109+70 - 112+30
Sta 114+70 - 117+40
Sta 138+20 - 139+10

Sta 141+60 - 166+50
Sta 173+30 - 174+10
Sta 189+50

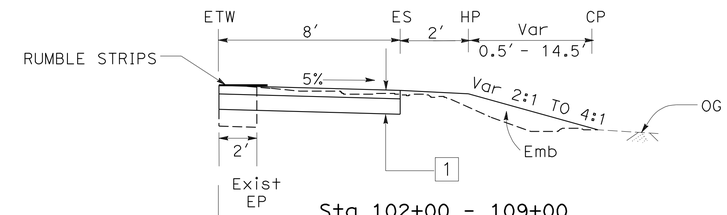

Sta 102+00 - 109+00
Sta 114+20 - 118+00
Sta 141+40 - 172+80
Sta 174+20 - 174+70

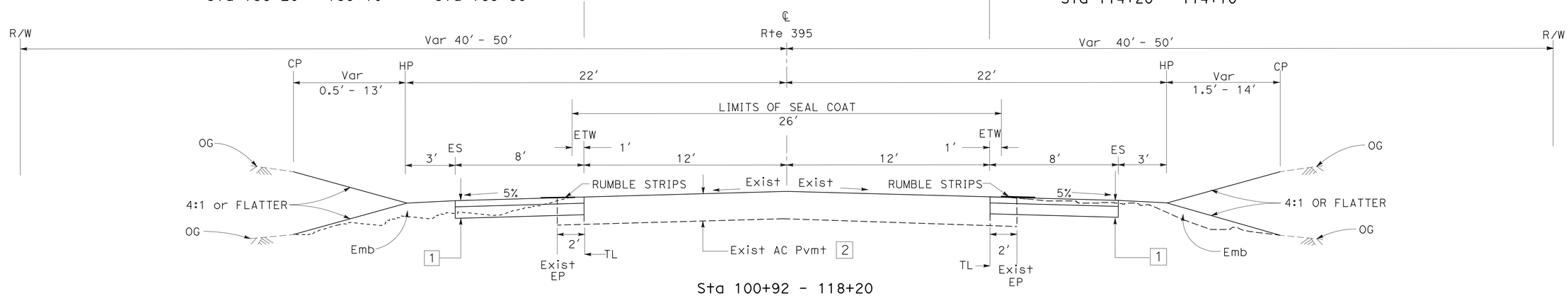

Sta 100+92 - 118+20
Sta 138+00 - 195+64

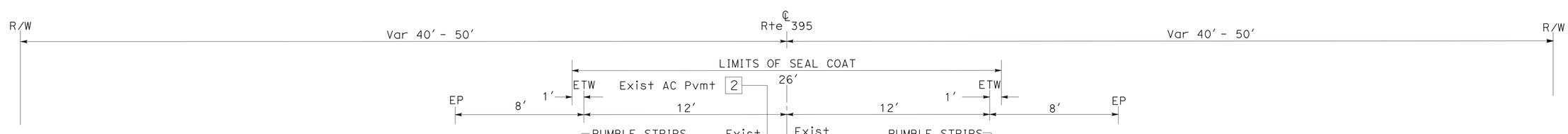

Sta 100+00 - 100+92
Sta 118+20 - 138+00

ROUTE 395
Sta 100+00 TO 195+64

TYPICAL CROSS SECTIONS X-1

NO SCALE

STATE OF CALIFORNIA - DEPARTMENT OF TRANSPORTATION
Caltrans®
DESIGN

FUNCTIONAL SUPERVISOR: RORY QUINCE
CALCULATED-DESIGNED BY: ADAM ZUMSTEIN
CHECKED BY: STEPHEN WINZENREAD
REVISED BY
DATE REVISED

LAST REVISION 07-16-10
DATE PLOTTED => 23-SEP-2010
TIME PLOTTED => 14:24

Dist	COUNTY	ROUTE	POST MILES TOTAL PROJECT	SHEET No.	TOTAL SHEETS
09	Mno	395	78.8/80.6	3	52

REGISTERED CIVIL ENGINEER 7-15-10 DATE

9-20-10
PLANS APPROVAL DATE

REGISTERED PROFESSIONAL ENGINEER STEPHEN WINZENREAD No. 64274 Exp. 6-30-11 CIVIL STATE OF CALIFORNIA

THE STATE OF CALIFORNIA OR ITS OFFICERS OR AGENTS SHALL NOT BE RESPONSIBLE FOR THE ACCURACY OR COMPLETENESS OF SCANNED COPIES OF THIS PLAN SHEET.

NOTE:
FOR ACCURATE RIGHT OF WAY AND ACCESS DATA, CONTACT RIGHT OF WAY ENGINEERING AT THE DISTRICT OFFICE.

ABBREVIATIONS:
AFTS - ALTERNATIVE FLARED TERMINAL SYSTEM

LEGEND:
TFESA - TEMPORARY FENCE (TYPE ESA)

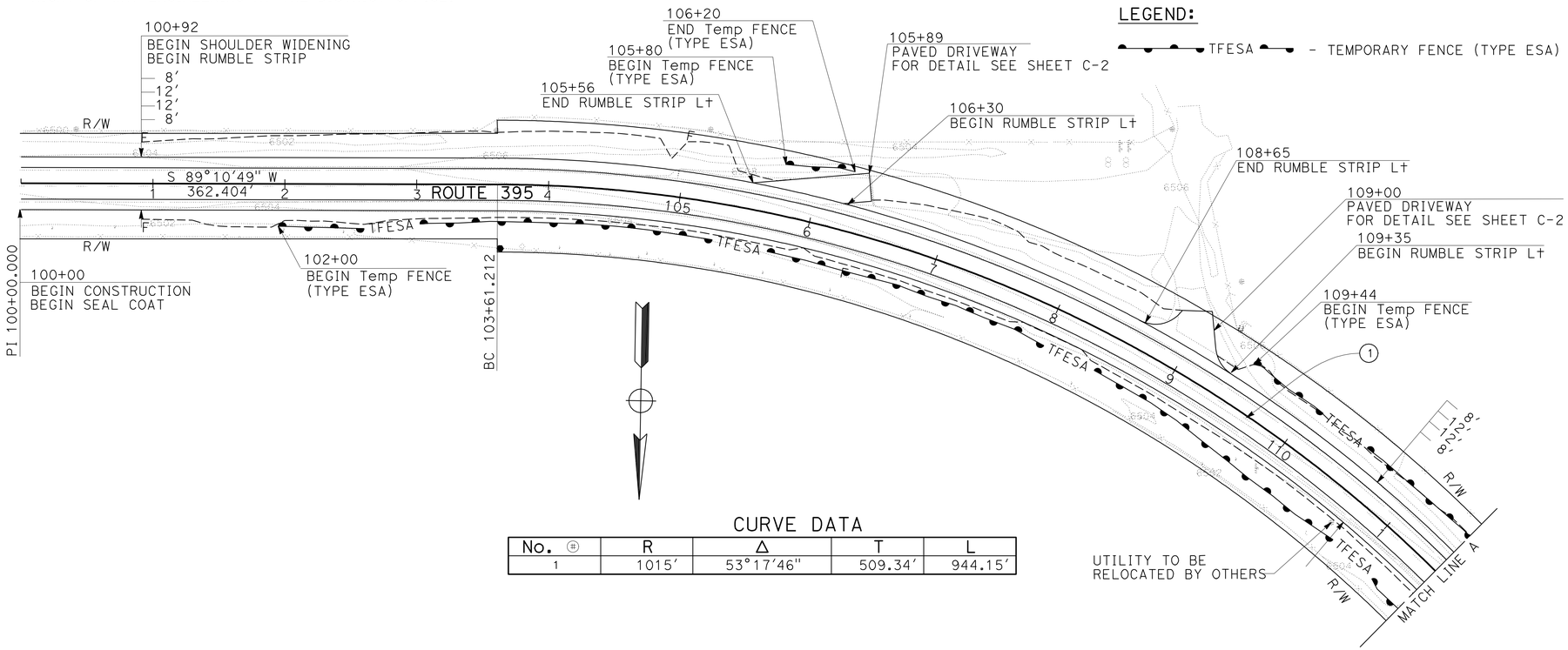

CURVE DATA

No. ⊕	R	Δ	T	L
1	1015'	53°17'46"	509.34'	944.15'

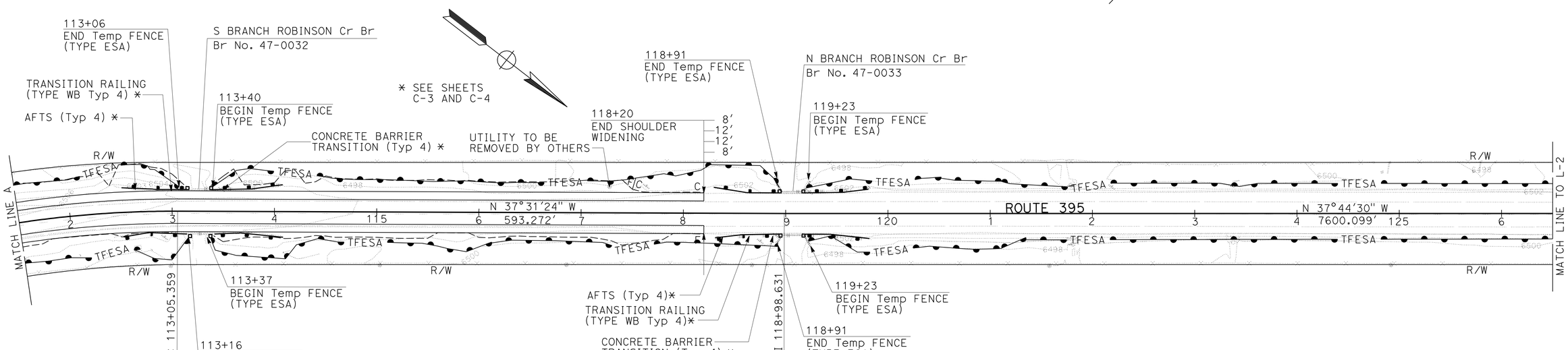

LAYOUT

SCALE: 1" = 50'

L-1

STATE OF CALIFORNIA - DEPARTMENT OF TRANSPORTATION
Caltrans
DESIGN

FUNCTIONAL SUPERVISOR: RORY QUINCE
CALCULATED-DESIGNED BY: KAMI CASTILLO
CHECKED BY: STEPHEN WINZENREAD
REVISED BY
DATE REVISED

LAST REVISION 07-16-10 | DATE PLOTTED => 23-SEP-2010 | TIME PLOTTED => 14:25

Dist	COUNTY	ROUTE	POST MILES TOTAL PROJECT	SHEET No.	TOTAL SHEETS
09	Mno	395	78.8/80.6	4	52

REGISTERED CIVIL ENGINEER 7-15-10 DATE

9-20-10
PLANS APPROVAL DATE

REGISTERED PROFESSIONAL ENGINEER STEPHEN WINZENREAD No. 64274 Exp. 6-30-11 CIVIL STATE OF CALIFORNIA

THE STATE OF CALIFORNIA OR ITS OFFICERS OR AGENTS SHALL NOT BE RESPONSIBLE FOR THE ACCURACY OR COMPLETENESS OF SCANNED COPIES OF THIS PLAN SHEET.

NOTE:
FOR ACCURATE RIGHT OF WAY AND ACCESS DATA, CONTACT RIGHT OF WAY ENGINEERING AT THE DISTRICT OFFICE.

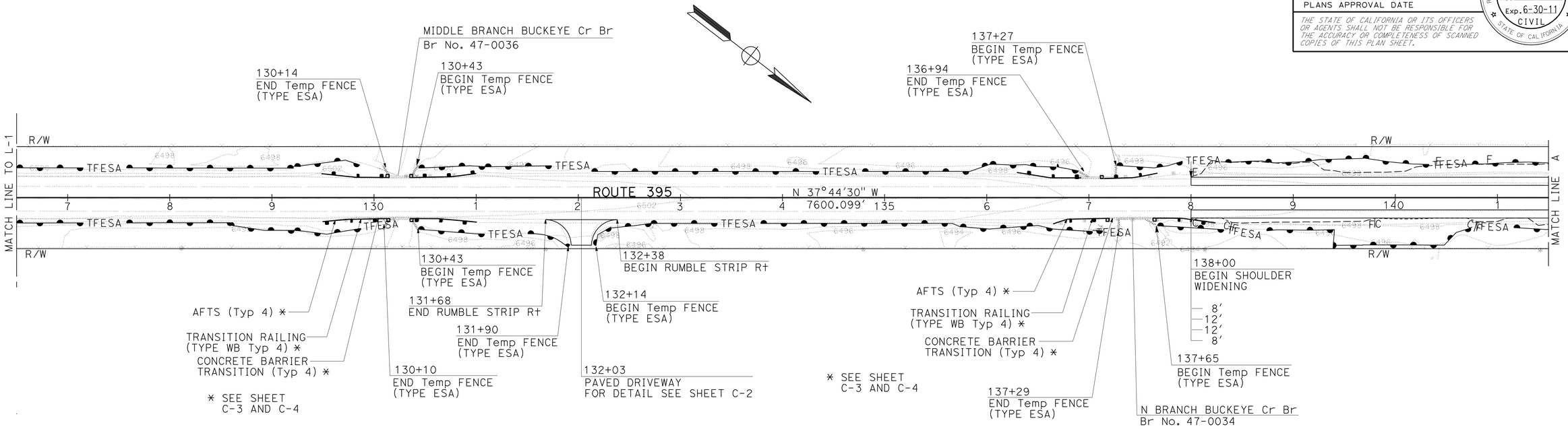

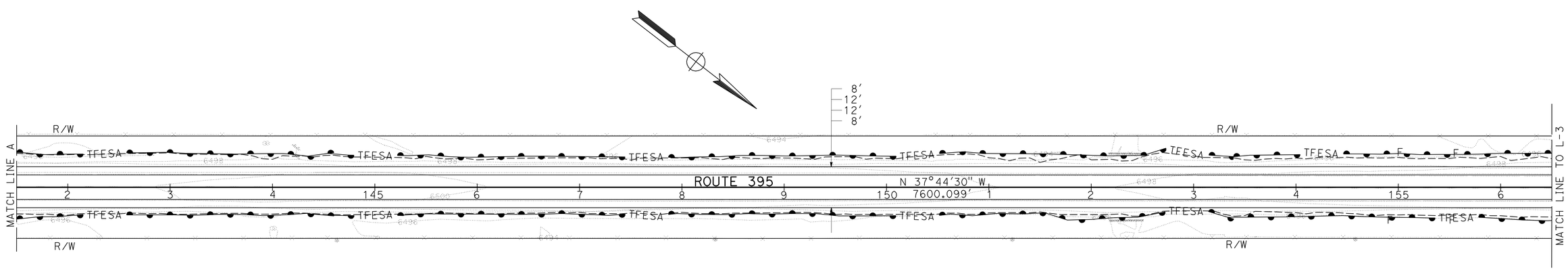

LAYOUT

SCALE: 1" = 50'

L-2

REVISED BY	DATE REVISED
KAMI CASTILLO	STEPHEN WINZENREAD
CALCULATED-DESIGNED BY	CHECKED BY
FUNCTIONAL SUPERVISOR	RORY QUINCE

STATE OF CALIFORNIA - DEPARTMENT OF TRANSPORTATION
Caltrans
DESIGN

LAST REVISION 07-16-10
DATE PLOTTED => 23-SEP-2010
TIME PLOTTED => 14:25

Dist	COUNTY	ROUTE	POST MILES TOTAL PROJECT	SHEET No.	TOTAL SHEETS
09	Mno	395	78.8/80.6	5	52

REGISTERED CIVIL ENGINEER 7-15-10 DATE

9-20-10
PLANS APPROVAL DATE

REGISTERED PROFESSIONAL ENGINEER STEPHEN WINZENREAD No. 64274 Exp. 6-30-11 CIVIL STATE OF CALIFORNIA

THE STATE OF CALIFORNIA OR ITS OFFICERS OR AGENTS SHALL NOT BE RESPONSIBLE FOR THE ACCURACY OR COMPLETENESS OF SCANNED COPIES OF THIS PLAN SHEET.

NOTE:
FOR ACCURATE RIGHT OF WAY AND ACCESS DATA, CONTACT RIGHT OF WAY ENGINEERING AT THE DISTRICT OFFICE.

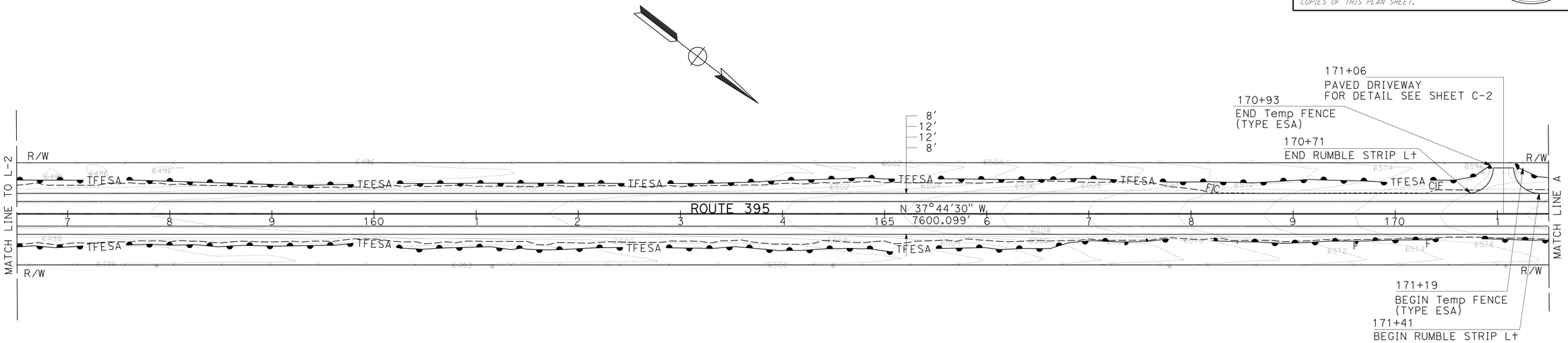

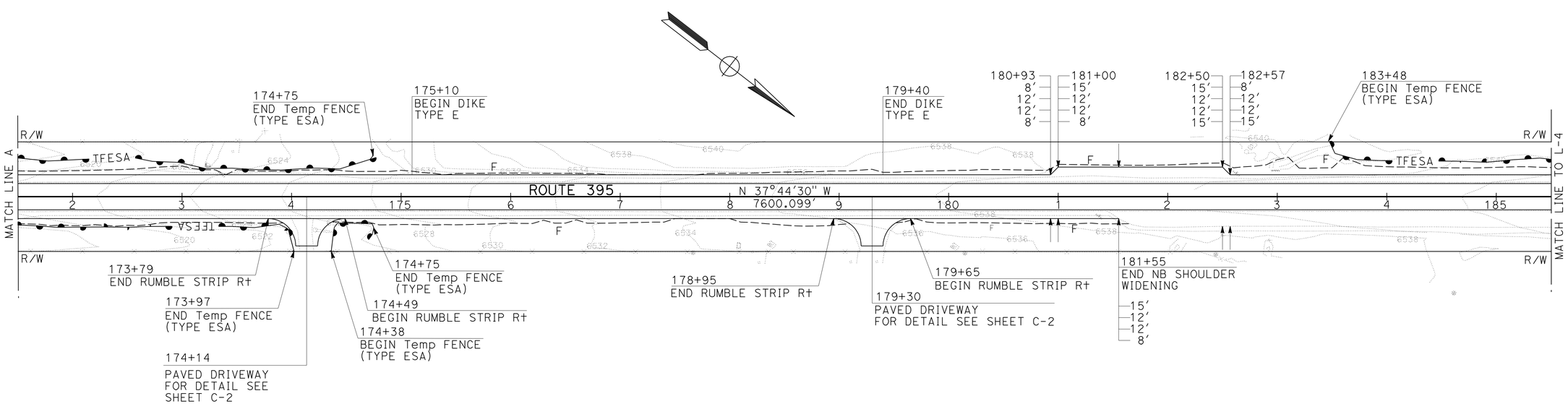

LAYOUT
SCALE: 1" = 50′ **L-3**

STATE OF CALIFORNIA - DEPARTMENT OF TRANSPORTATION
Caltrans®
DESIGN

FUNCTIONAL SUPERVISOR: RORY QUINCE
CALCULATED-DESIGNED BY: STEPHEN WINZENREAD
CHECKED BY:
REVISED BY:
DATE REVISED:
KAMI CASTILLO

LAST REVISION 07-16-10
DATE PLOTTED => 23-SEP-2010
TIME PLOTTED => 15:45

Dist	COUNTY	ROUTE	POST MILES TOTAL PROJECT	SHEET No.	TOTAL SHEETS
09	Mno	395	78.8/80.6	6	52

REGISTERED CIVIL ENGINEER 7-15-10 DATE

9-20-10
PLANS APPROVAL DATE

REGISTERED PROFESSIONAL ENGINEER STEPHEN WINZENREAD No. 64274 Exp. 6-30-11 CIVIL STATE OF CALIFORNIA

THE STATE OF CALIFORNIA OR ITS OFFICERS OR AGENTS SHALL NOT BE RESPONSIBLE FOR THE ACCURACY OR COMPLETENESS OF SCANNED COPIES OF THIS PLAN SHEET.

NOTE:
FOR ACCURATE RIGHT OF WAY AND ACCESS DATA, CONTACT RIGHT OF WAY ENGINEERING AT THE DISTRICT OFFICE.

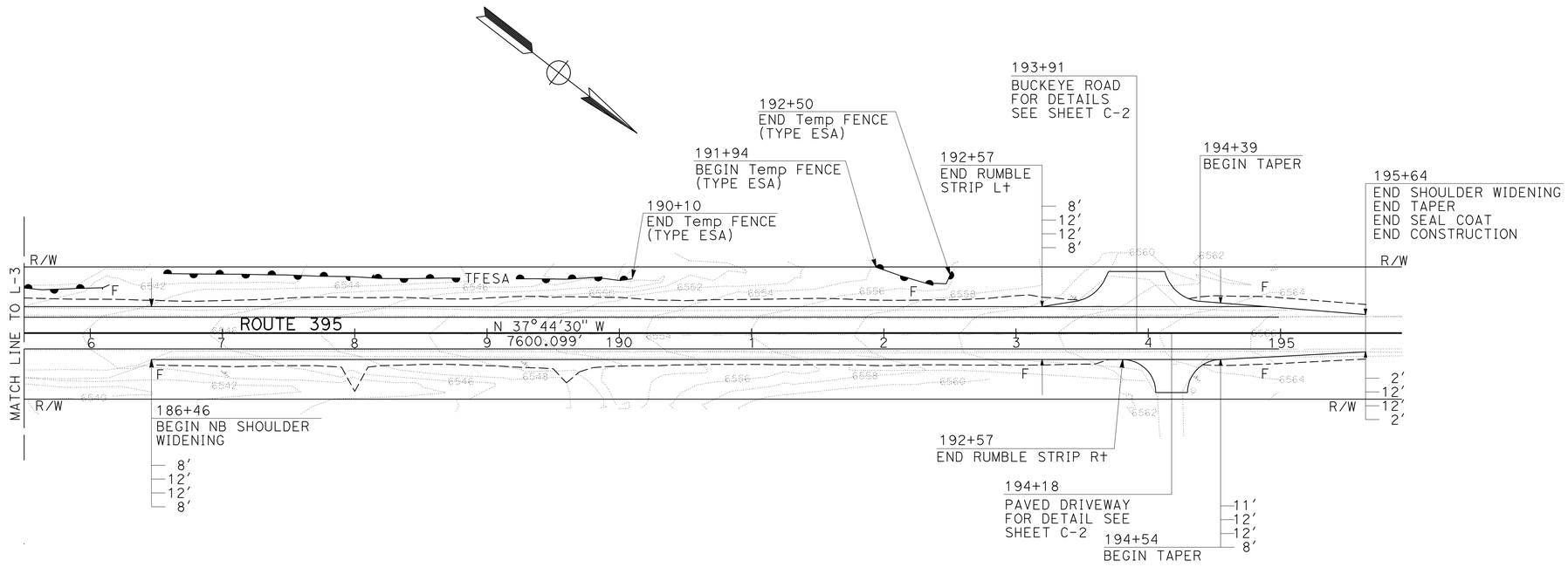

LAYOUT
SCALE: 1" = 50′ **L-4**

STATE OF CALIFORNIA - DEPARTMENT OF TRANSPORTATION
Caltrans® **DESIGN**

FUNCTIONAL SUPERVISOR: RORY QUINCE
CALCULATED-DESIGNED BY: KAMI CASTILLO
CHECKED BY: STEPHEN WINZENREAD
REVISED BY
DATE REVISED

LAST REVISION 07-16-10
DATE PLOTTED => 23-SEP-2010
TIME PLOTTED => 15:45

Dist	COUNTY	ROUTE	POST MILES TOTAL PROJECT	SHEET No.	TOTAL SHEETS
09	Mno	395	78.8/80.6	7	52

REGISTERED CIVIL ENGINEER 7-15-10 DATE

9-20-10
PLANS APPROVAL DATE

REGISTERED PROFESSIONAL ENGINEER STEPHEN WINZENREAD No. 64274 Exp. 6-30-11 CIVIL STATE OF CALIFORNIA

THE STATE OF CALIFORNIA OR ITS OFFICERS OR AGENTS SHALL NOT BE RESPONSIBLE FOR THE ACCURACY OR COMPLETENESS OF SCANNED COPIES OF THIS PLAN SHEET.

NOTES: EXISTING LEFT TRAVELED WAY AND EXISTING RIGHT TRAVELED WAY SHOWN FOR INFORMATION ONLY.

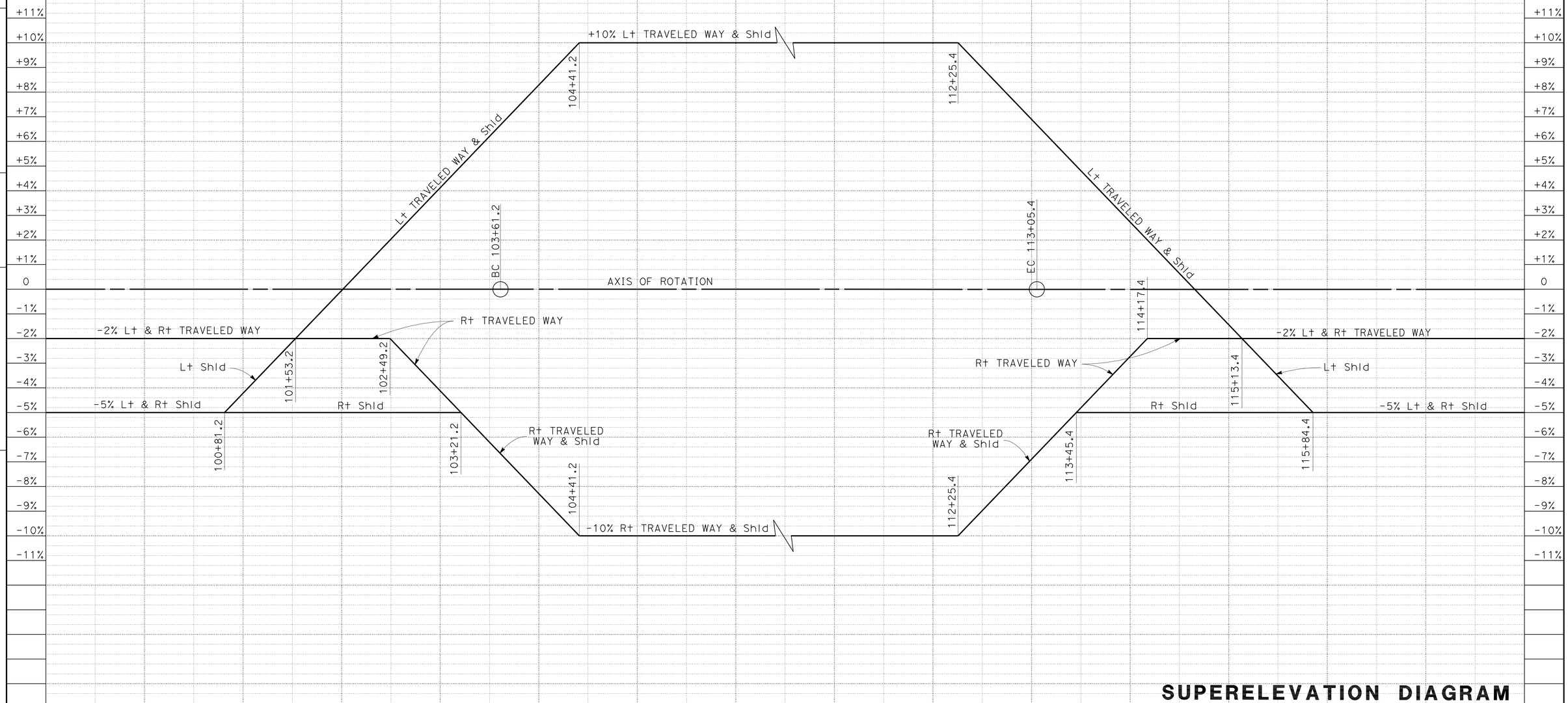

SUPERELEVATION DIAGRAM

SCALE: 1" = 50' **SE-1**

STATION	100+00	101+00	102+00	103+00	104+00	105+00	106+00	111+00	112+00	113+00	114+00	115+00	116+00	117+00	TOTAL
CY Exc															
CY Emb															

REVISED BY | DATE REVISED

KAMI CASTILLO — CALCULATED-DESIGNED BY
STEPHEN WINZENREAD — CHECKED BY

FUNCTIONAL SUPERVISOR: RORY QUINCE

STATE OF CALIFORNIA - DEPARTMENT OF TRANSPORTATION
Caltrans
DESIGN

LAST REVISION 07-16-10 | DATE PLOTTED => 23-SEP-2010 | TIME PLOTTED => 15:46

Dist	COUNTY	ROUTE	POST MILES TOTAL PROJECT	SHEET No.	TOTAL SHEETS
09	Mno	395	78.8/80.6	8	52

REGISTERED CIVIL ENGINEER 7-15-10 DATE

9-20-10
PLANS APPROVAL DATE

REGISTERED PROFESSIONAL ENGINEER STEPHEN WINZENREAD No. 64274 Exp. 6-30-11 CIVIL STATE OF CALIFORNIA

THE STATE OF CALIFORNIA OR ITS OFFICERS OR AGENTS SHALL NOT BE RESPONSIBLE FOR THE ACCURACY OR COMPLETENESS OF SCANNED COPIES OF THIS PLAN SHEET.

ABBREVIATIONS:

AFTS - ALTERNATIVE FLARED TERMINAL SYSTEM
CP - CATCH POINT

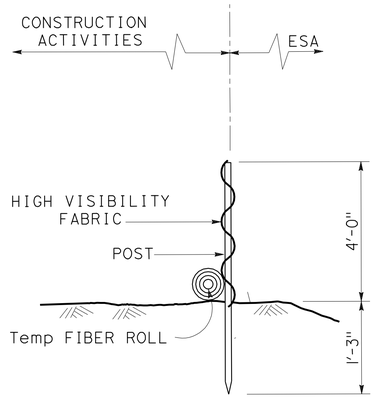

TEMPORARY FENCE (TYPE ESA) WITH FIBER ROLL

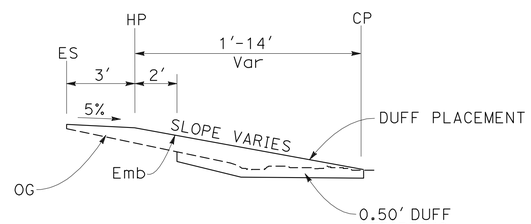

TYPICAL DUFF STRIPPING DETAIL

DUFF STRIPPING AND PLACEMENT					
STATION TO STATION	DIRECTION SB	DIRECTION NB	STATION TO STATION	DIRECTION SB	DIRECTION NB
100+10 TO 102+30		X	144+10 TO 146+00	X	
102+30 TO 103+10	X	X	146+20 TO 151+20	X	
103+10 TO 105+30	X		152+60 TO 153+60	X	
106+30 TO 108+90	X		154+00 TO 155+90	X	
109+50 TO 113+00	X		155+90 TO 157+40	X	X
113+50 TO 113+80		X	157+40 TO 158+50	X	
114+10 TO 114+30		X	161+60 TO 162+90		X
114+60 TO 115+40	X		163+30 TO 163+80	X	
115+80 TO 117+00	X		163+80 TO 166+50	X	X
117+20 TO 117+50	X	X	166+50 TO 167+80	X	
117+50 TO 117+70		X	182+80 TO 183+20	X	
138+20 TO 139+30	X		183+60 TO 183+90	X	
140+20 TO 143+90	X				

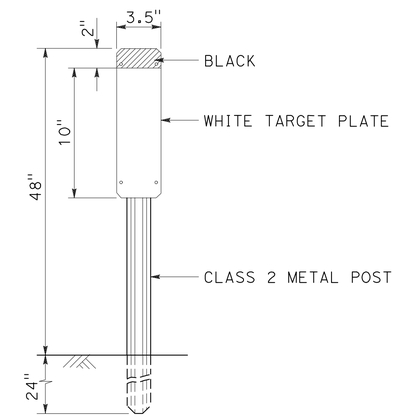

MARKER (CULVERT) PLATE AND POST DETAIL

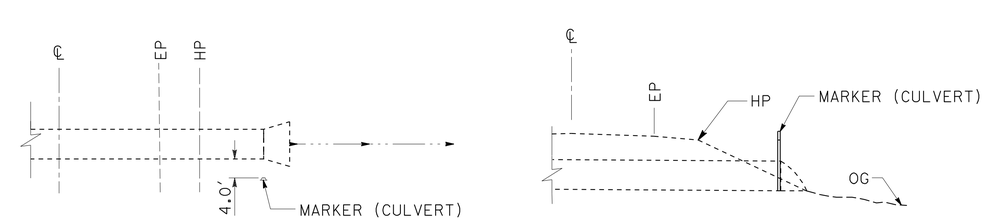

TYPICAL MARKER (CULVERT) PLACEMENT

CONSTRUCTION DETAILS
NO SCALE
C-1

STATE OF CALIFORNIA - DEPARTMENT OF TRANSPORTATION
Caltrans DESIGN
FUNCTIONAL SUPERVISOR: RORY QUINCE
CALCULATED-DESIGNED BY: ADAM ZUMSTEIN
CHECKED BY: STEPHEN WINZENREAD
REVISED BY
DATE REVISED

LAST REVISION 07-16-10 | DATE PLOTTED => 23-SEP-2010 | TIME PLOTTED => 16:43

Dist	COUNTY	ROUTE	POST MILES TOTAL PROJECT	SHEET No.	TOTAL SHEETS
09	Mno	395	78.8/80.6	9	52

REGISTERED CIVIL ENGINEER 7-15-10 DATE

9-20-10
PLANS APPROVAL DATE

REGISTERED PROFESSIONAL ENGINEER STEPHEN WINZENREAD No. 64274 Exp. 6-30-11 CIVIL STATE OF CALIFORNIA

THE STATE OF CALIFORNIA OR ITS OFFICERS OR AGENTS SHALL NOT BE RESPONSIBLE FOR THE ACCURACY OR COMPLETENESS OF SCANNED COPIES OF THIS PLAN SHEET.

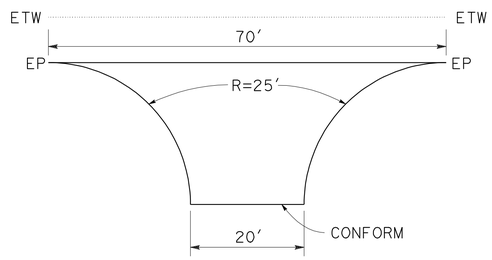

DRIVEWAY PAVING PLAN

Sta 132+03 Rt
Sta 171+06 Lt
Sta 174+14 Rt
Sta 179+30 Rt
Sta 194+18 Rt

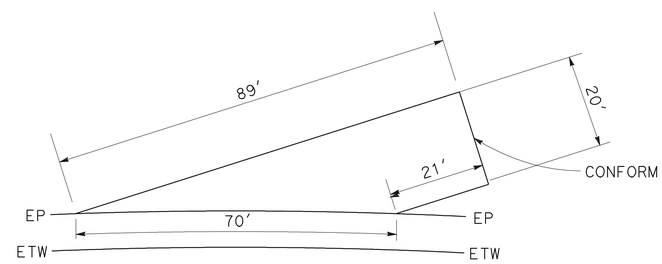

DRIVEWAY PAVING PLAN

Sta 105+89 Lt

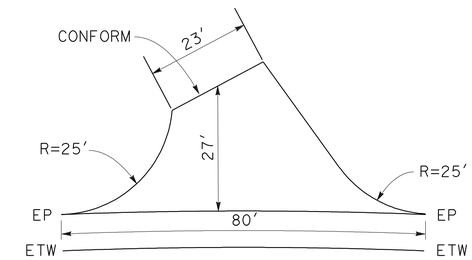

DRIVEWAY PAVING PLAN

Sta 109+00 Lt

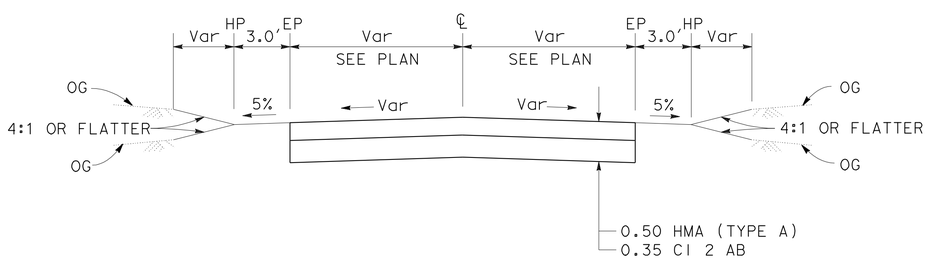

TYPICAL DRIVEWAY AND ROAD CONNECTION STRUCTURAL SECTION

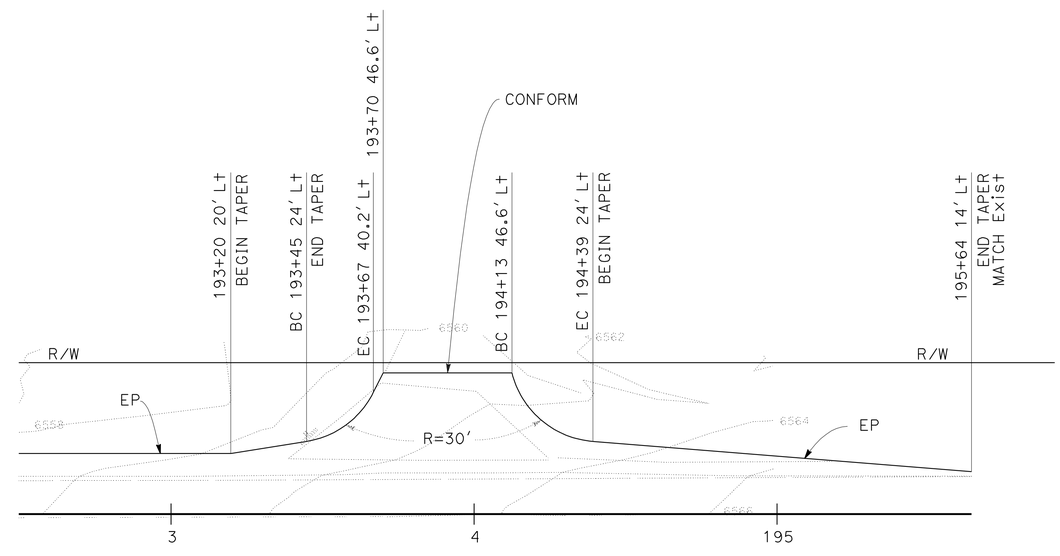

BUCKEYE ROAD

Sta 193+91

CONSTRUCTION DETAILS
NO SCALE
C-2

STATE OF CALIFORNIA - DEPARTMENT OF TRANSPORTATION
Caltrans
DESIGN
FUNCTIONAL SUPERVISOR: RORY QUINCE
CALCULATED-DESIGNED BY: ADAM ZUMSTEIN
CHECKED BY: STEPHEN WINZENREAD
REVISED BY
DATE REVISED

LAST REVISION 07-16-10
DATE PLOTTED => 23-SEP-2010
TIME PLOTTED => 16:43

Dist	COUNTY	ROUTE	POST MILES TOTAL PROJECT	SHEET No.	TOTAL SHEETS
09	Mno	395	78.8/80.6	10	52

REGISTERED CIVIL ENGINEER 7-15-10 DATE

9-20-10
PLANS APPROVAL DATE

REGISTERED PROFESSIONAL ENGINEER STEPHEN WINZENREAD No. 64274 Exp. 6-30-11 CIVIL STATE OF CALIFORNIA

THE STATE OF CALIFORNIA OR ITS OFFICERS OR AGENTS SHALL NOT BE RESPONSIBLE FOR THE ACCURACY OR COMPLETENESS OF SCANNED COPIES OF THIS PLAN SHEET.

ABBREVIATIONS:

AFTS - ALTERNATIVE FLARED TERMINAL SYSTEM

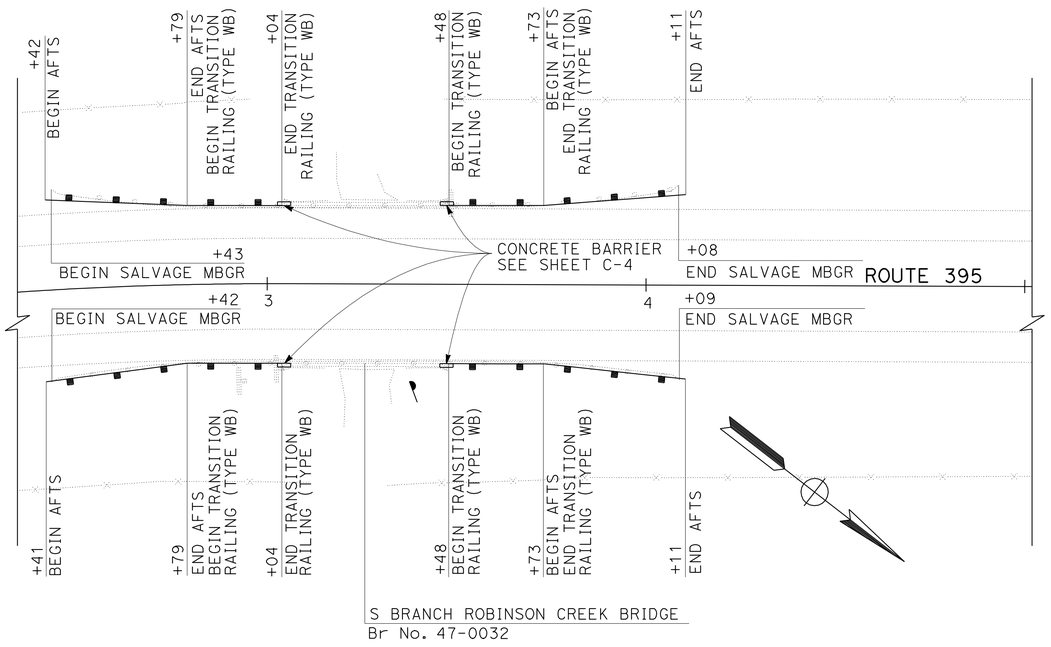

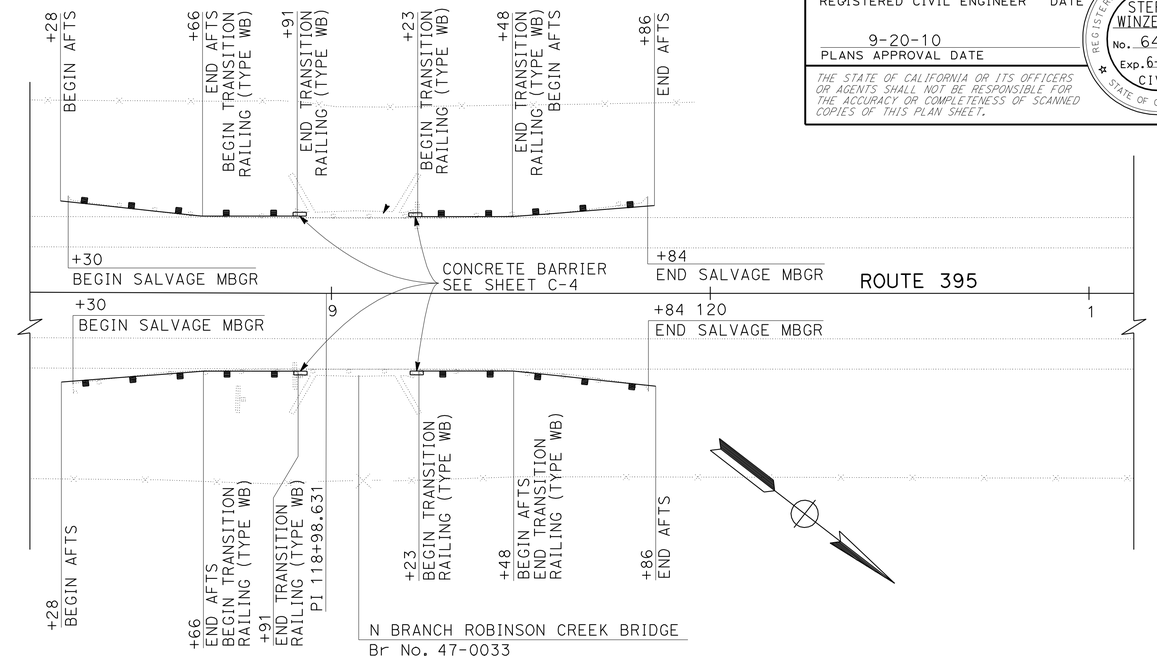

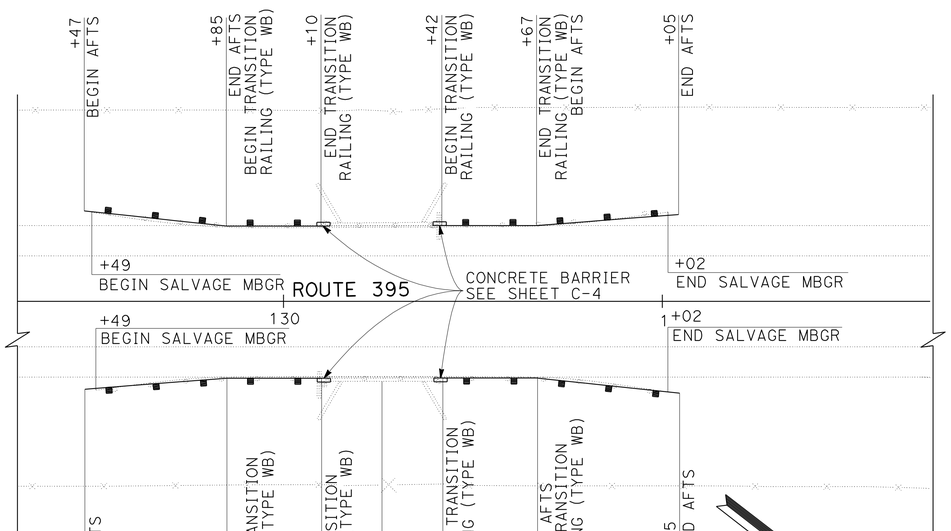

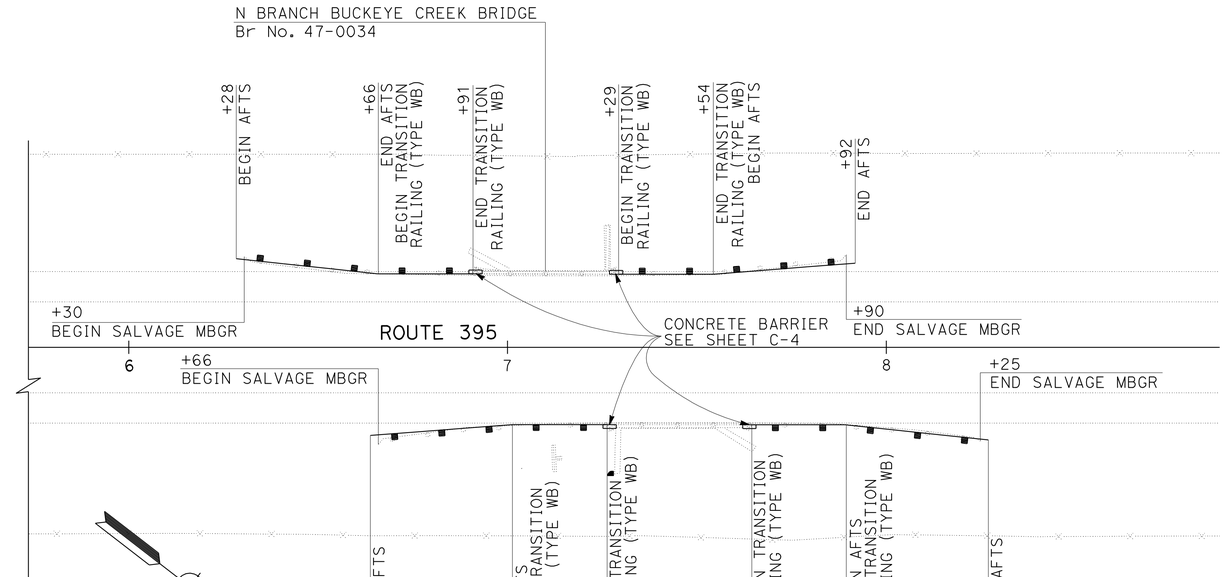

ALTERNATIVE FLARED TERMINAL SYSTEM AND TRANSITION RAILING LAYOUT

CONSTRUCTION DETAILS
NO SCALE
C-3

STATE OF CALIFORNIA - DEPARTMENT OF TRANSPORTATION
Caltrans® DESIGN

FUNCTIONAL SUPERVISOR: RORY QUINCE

CALCULATED-DESIGNED BY: KAMI CASTILLO
CHECKED BY: STEPHEN WINZENREAD

REVISED BY / DATE REVISED

LAST REVISION 07-16-10 | DATE PLOTTED => 23-SEP-2010 | TIME PLOTTED => 16:05

Dist	COUNTY	ROUTE	POST MILES TOTAL PROJECT	SHEET No.	TOTAL SHEETS
09	Mno	395	78.8/80.6	11	52

REGISTERED CIVIL ENGINEER 7-15-10 DATE

9-20-10
PLANS APPROVAL DATE

REGISTERED PROFESSIONAL ENGINEER STEPHEN WINZENREAD No. 64274 Exp. 6-30-11 CIVIL STATE OF CALIFORNIA

THE STATE OF CALIFORNIA OR ITS OFFICERS OR AGENTS SHALL NOT BE RESPONSIBLE FOR THE ACCURACY OR COMPLETENESS OF SCANNED COPIES OF THIS PLAN SHEET.

NOTES:

1. FOR DETAILS NOT SHOWN, SEE STANDARD PLANS.
2. DEPENDENT DIMENSIONS WILL BE VERIFIED IN THE FIELD BEFORE FABRICATING ANY END CONNECTION TO CONFORM WITH EXISTING PAVED CONDITIONS.
3. ALL PLATES AND BOLTS ARE GALVANIZED.
4. CUT AND REMOVE PORTION OF EXISTING CONCRETE BARRIER AS REQUIRED.
5. TAPER THE TOP OF THE END OF THE CONCRETE BARRIER AT 4:1 TO MATCH THE TOP ELEVATION OF THE TRANSITION RAILING (TYPE WB).

LEGEND:

- REMOVE CONCRETE
- STANDARD PLAN SHEET No.
- DETAIL No.

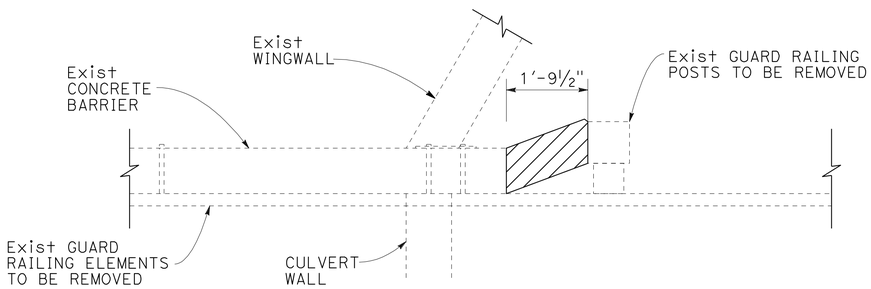

PLAN

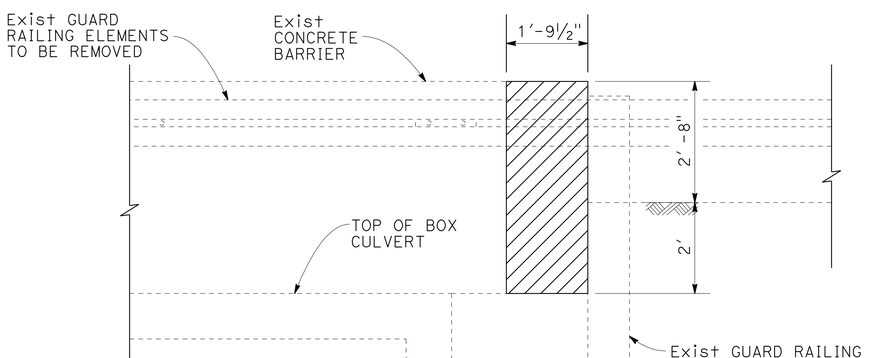

ELEVATION

CONCRETE REMOVAL

(TYPICAL ALL CORNERS)

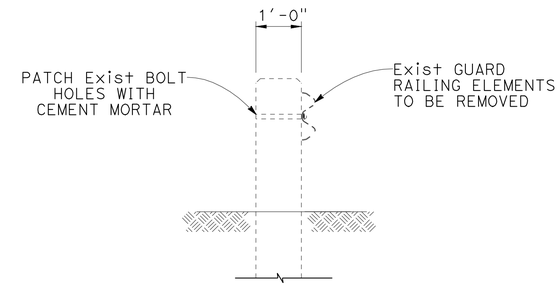

TYPICAL SECTION

(EXISTING CONCRETE BARRIER)

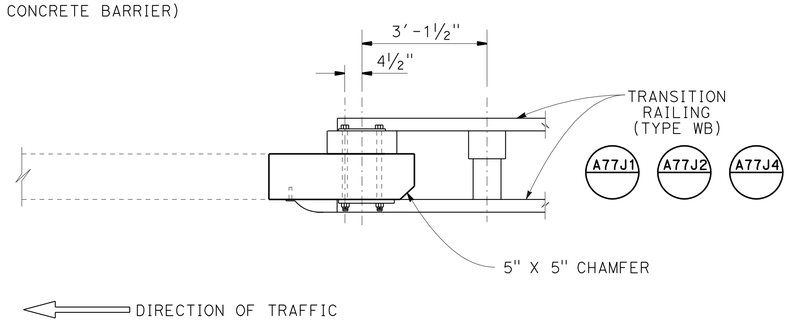

PLAN

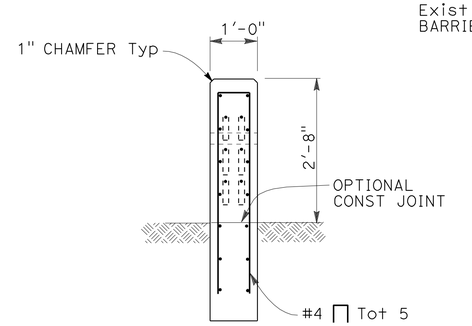

SECTION A-A

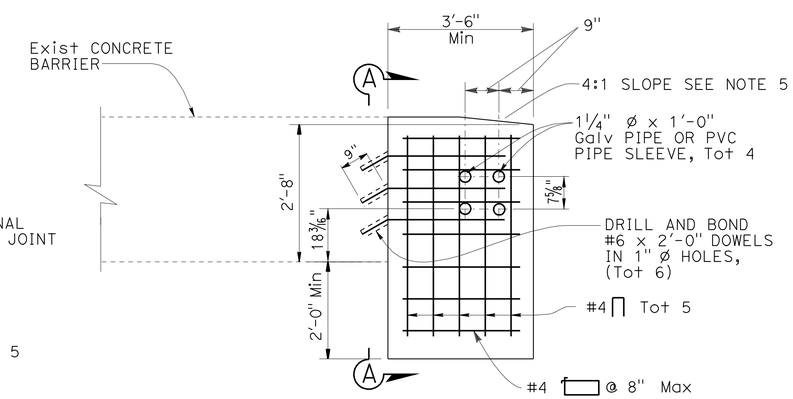

ELEVATION

CONCRETE BARRIER

(TYPICAL ALL CORNERS)

PM	BRIDGE No.	BRIDGE NAME	NB	SB	TRANSITION RAILING (TYPE WB)		ALTERNATIVE FLARED TERMINAL SYSTEM	
					APPROACH END	DEPARTURE END	APPROACH END	DEPARTURE END
79.029	47-0032	SOUTH BRANCH ROBINSON CREEK	X	X	X	X	X	X
79.168	47-0033	NORTH BRANCH ROBINSON CREEK	X	X	X	X	X	X
79.379	47-0036	MIDDLE BRANCH BUCKEYE CREEK	X	X	X	X	X	X
79.479	47-0034	NORTH BRANCH BUCKEYE CREEK	X	X	X	X	X	X

CONSTRUCTION DETAILS

NO SCALE

C-4

STATE OF CALIFORNIA - DEPARTMENT OF TRANSPORTATION
Caltrans® DESIGN
FUNCTIONAL SUPERVISOR RORY QUINCE
CALCULATED-DESIGNED BY STEPHEN WINZENREAD
CHECKED BY FELIX ALTAMIRANO
REVISED BY
DATE REVISED

LAST REVISION 07-15-10
DATE PLOTTED => 23-SEP-2010
TIME PLOTTED => 16:13

Dist	COUNTY	ROUTE	POST MILES TOTAL PROJECT	SHEET No.	TOTAL SHEETS
09	Mno	395	78.8/80.6	12	52

REGISTERED CIVIL ENGINEER 7-15-10 DATE

9-20-10
PLANS APPROVAL DATE

REGISTERED PROFESSIONAL ENGINEER STEPHEN WINZENREAD No. 64274 Exp. 6-30-11 CIVIL STATE OF CALIFORNIA

THE STATE OF CALIFORNIA OR ITS OFFICERS OR AGENTS SHALL NOT BE RESPONSIBLE FOR THE ACCURACY OR COMPLETENESS OF SCANNED COPIES OF THIS PLAN SHEET.

NOTES:

1. LOCATION AND POSITION OF CONSTRUCTION AREA SIGNS AND PORTABLE CHANGEABLE MESSAGE SIGNS ARE APPROXIMATE. EXACT LOCATION TO BE DETERMINED BY THE ENGINEER.
2. SEE TRAFFIC HANDLING PLANS FOR ADDITIONAL CONSTRUCTION AREA SIGNS AND ADDITIONAL CHANGEABLE MESSAGE SIGN.

LEGEND:

(X) - PLACEMENT TYPE

- CONSTRUCTION AREA SIGNS (ONE POST)

- PORTABLE CHANGEABLE MESSAGE SIGN (CMS)

- PORTABLE FLASHING BEACON

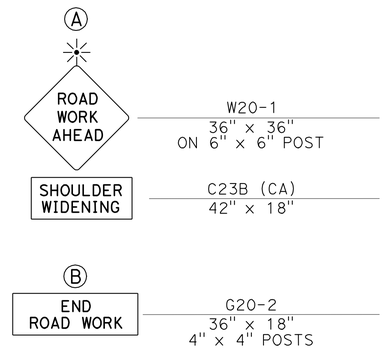

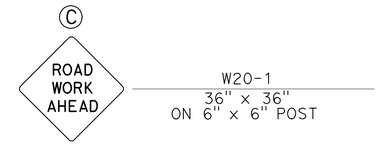

STATIONARY MOUNTED CONSTRUCTION AREA SIGNS		
PLACEMENT TYPE	NUMBER OF POSTS AND SIZE	NUMBER OF SIGNS
(A)	1 - 6" x 6"	2
(B)	1 - 4" x 4"	3
(C)	1 - 6" x 6"	1

PORTABLE CHANGEABLE MESSAGE SIGNS		
MESSAGING FOR ONE-WAY TRAFFIC CONTROL		
FIRST FRAME	SECOND FRAME	THIRD FRAME
FLAGGER AHEAD	REDUCE SPEED	EXPECT DELAYS

PORTABLE CHANGEABLE MESSAGE SIGN
No. OF SIGNS
2

PORTABLE FLASHING BEACON
EA
2

NOTES:

1. PORTABLE CHANGEABLE MESSAGE SIGN LOCATIONS TO BE CONFIRMED BY THE ENGINEER BEFORE THE ACTUAL CLOSURE.
2. ALTERNATE MESSAGES MUST BE APPROVED BY THE ENGINEER.
3. MESSAGE MAY BE ALTERED BY THE ENGINEER.
4. WHEN CONSTRUCTION OPERATIONS ARE NOT ACTIVELY IN PROGRESS, PORTABLE CHANGEABLE MESSAGE SIGNS SHALL NOT DISPLAY A MESSAGE UNLESS DIRECTED BY THE ENGINEER.

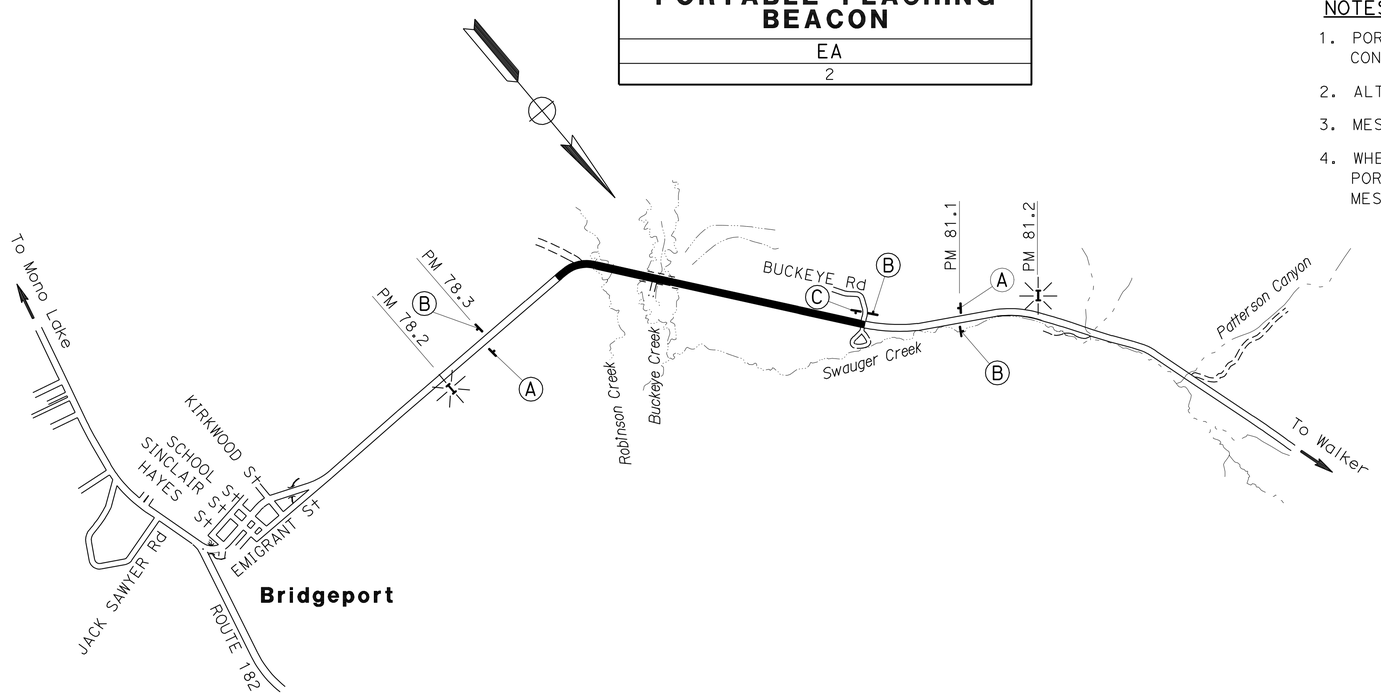

THIS PLAN ACCURATE FOR CONSTRUCTION AREA SIGN WORK ONLY.

CONSTRUCTION AREA SIGNS
NO SCALE

CS-1

STATE OF CALIFORNIA - DEPARTMENT OF TRANSPORTATION
Caltrans
DESIGN

FUNCTIONAL SUPERVISOR: RORY QUINCE
CALCULATED-DESIGNED BY: TONY SYMANOVICH
CHECKED BY: STEPHEN WINZENREAD
REVISED BY
DATE REVISED

LAST REVISION 07-16-10
DATE PLOTTED => 23-SEP-2010
TIME PLOTTED => 16:43

Dist	COUNTY	ROUTE	POST MILES TOTAL PROJECT	SHEET No.	TOTAL SHEETS
09	Mno	395	78.8/80.6	13	52

REGISTERED CIVIL ENGINEER 7-15-10 DATE

9-20-10
PLANS APPROVAL DATE

REGISTERED PROFESSIONAL ENGINEER STEPHEN WINZENREAD No. 64274 Exp. 6-30-11 CIVIL STATE OF CALIFORNIA

THE STATE OF CALIFORNIA OR ITS OFFICERS OR AGENTS SHALL NOT BE RESPONSIBLE FOR THE ACCURACY OR COMPLETENESS OF SCANNED COPIES OF THIS PLAN SHEET.

LEGEND:

- BEGIN OR END STRIPE DETAIL
- CHANNELIZER (SURFACE MOUNTED)
- CONSTRUCTION AREA SIGNS
- PORTABLE CHANGEABLE MESSAGE SIGN (CMS)
- TEMPORARY RAILING (TYPE K)
- XX - STRIPE DETAIL
- TEMPORARY CRASH CUSHION (ARRAY 'TS14')

NOTES:

1. NORTHBOUND TRANSITION RAILING TRAFFIC HANDLING AND SOUTHBOUND TRANSITION RAILING TRAFFIC HANDLING SHALL NOT BE CONCURRENT.
2. CHANNELIZER (SURFACE MOUNTED) SPACING:
   UPSTREAM TAPER: 45' Max
   TANGENT: 50' Max
   DOWNSTREAM TAPER: 20' Max
3. SIGNS 1, 2, 3, 4, 11, 12, 13 AND 14 SHALL REMAIN IN PLACE FOR BOTH NORTHBOUND TRANSITION RAILING TRAFFIC HANDLING AND SOUTHBOUND TRANSITION RAILING TRAFFIC HANDLING.
4. DETAIL 21 TEMPORARY TRAFFIC STRIPE SHALL REMAIN IN PLACE FOR BOTH NORTHBOUND TRANSITION RAILING TRAFFIC HANDLING AND SOUTHBOUND TRANSITION RAILING TRAFFIC HANDLING.
5. LOCATION AND POSITION OF CONSTRUCTION AREA SIGNS ARE APPROXIMATE, EXACT LOCATION AND POSITION TO BE DETERMINED BY THE ENGINEER.

PORTABLE CHANGEABLE MESSAGE SIGNS

MESSAGING FOR TRANSITION RAILING TRAFFIC HANDLING

FIRST FRAME	SECOND FRAME	THIRD FRAME
ROAD NARROWS AHEAD	REDUCE SPEED	45 MPH ZONE AHEAD

NOTES:

1. PORTABLE CHANGEABLE MESSAGE SIGN LOCATIONS TO BE CONFIRMED BY THE ENGINEER BEFORE THE ACTUAL CLOSURE.
2. ALTERNATE MESSAGES MUST BE APPROVED BY THE ENGINEER.
3. MESSAGE MAY BE ALTERED BY THE ENGINEER.

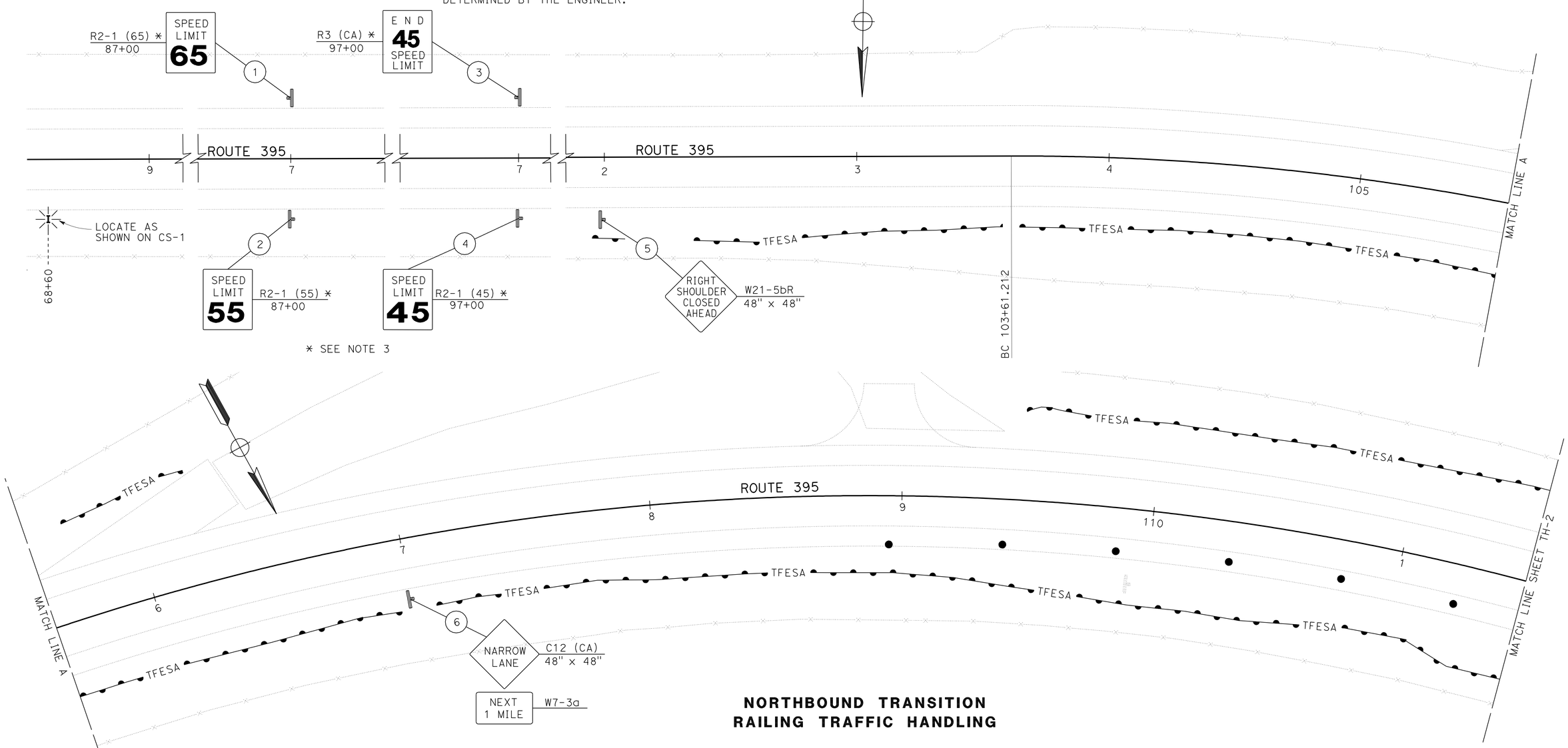

NORTHBOUND TRANSITION RAILING TRAFFIC HANDLING

TRAFFIC HANDLING PLAN TH-1

SCALE: 1" = 20'

THIS PLAN ACCURATE FOR TRAFFIC HANDLING ONLY

STATE OF CALIFORNIA - DEPARTMENT OF TRANSPORTATION
Caltrans DESIGN

FUNCTIONAL SUPERVISOR: RORY QUINCE
CALCULATED-DESIGNED BY: TONY SYMANOVICH
CHECKED BY: STEPHEN WINZENREAD
REVISED BY / DATE REVISED

LAST REVISION 07-16-10
DATE PLOTTED => 23-SEP-2010
TIME PLOTTED => 16:43

Dist	COUNTY	ROUTE	POST MILES TOTAL PROJECT	SHEET No.	TOTAL SHEETS
09	Mno	395	78.8/80.6	14	52

REGISTERED CIVIL ENGINEER 7-15-10 DATE

9-20-10
PLANS APPROVAL DATE

REGISTERED PROFESSIONAL ENGINEER STEPHEN WINZENREAD No. 64274 Exp. 6-30-11 CIVIL STATE OF CALIFORNIA

THE STATE OF CALIFORNIA OR ITS OFFICERS OR AGENTS SHALL NOT BE RESPONSIBLE FOR THE ACCURACY OR COMPLETENESS OF SCANNED COPIES OF THIS PLAN SHEET.

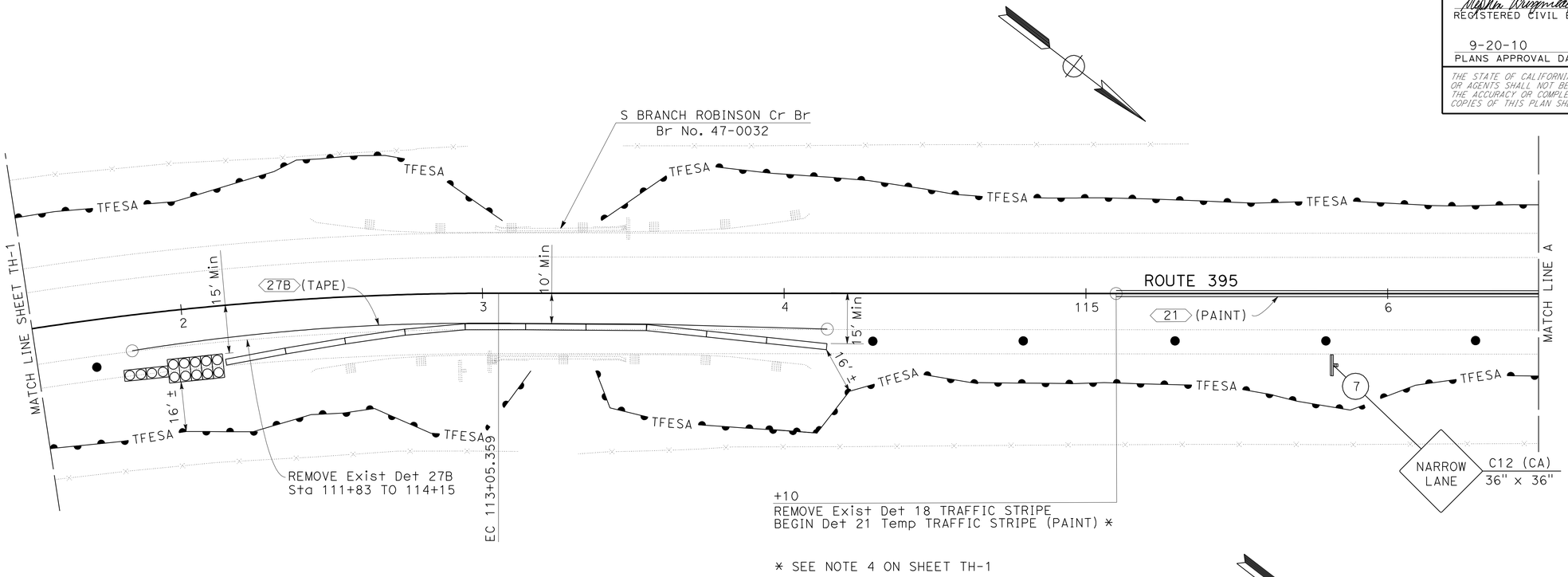

* SEE NOTE 4 ON SHEET TH-1

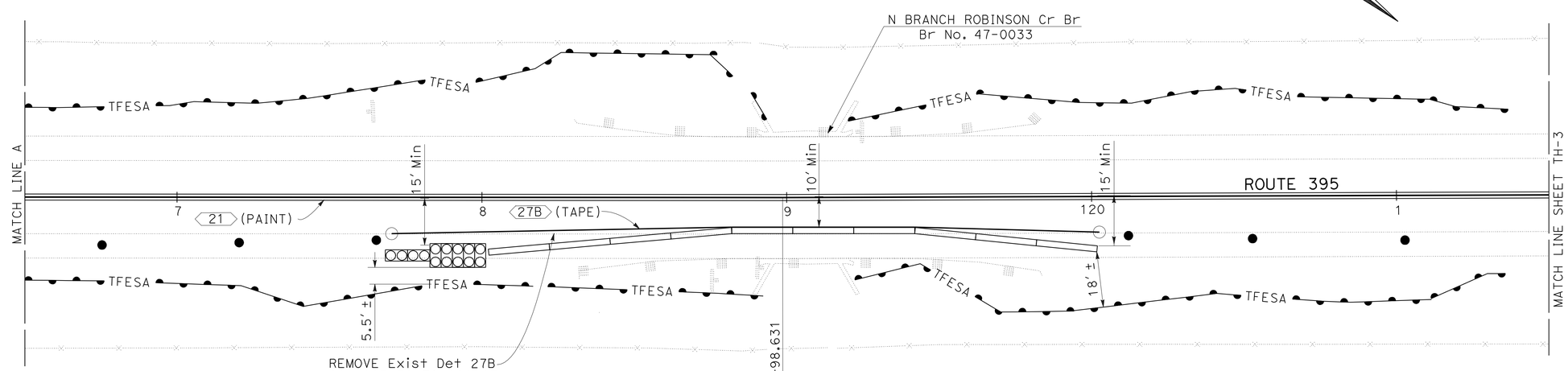

NORTHBOUND TRANSITION
RAILING TRAFFIC HANDLING

THIS PLAN ACCURATE FOR TRAFFIC HANDLING ONLY

TRAFFIC HANDLING PLAN TH-2

SCALE: 1" = 20'

STATE OF CALIFORNIA - DEPARTMENT OF TRANSPORTATION
Caltrans®
DESIGN

FUNCTIONAL SUPERVISOR: RORY QUINCE
CALCULATED-DESIGNED BY: TONY SYMANOVICH
CHECKED BY: STEPHEN WINZENREAD
REVISED BY
DATE REVISED

LAST REVISION 07-16-10
DATE PLOTTED => 23-SEP-2010
TIME PLOTTED => 16:43

Dist	COUNTY	ROUTE	POST MILES TOTAL PROJECT	SHEET No.	TOTAL SHEETS
09	Mno	395	78.8/80.6	15	52

REGISTERED CIVIL ENGINEER 7-15-10 DATE

9-20-10
PLANS APPROVAL DATE

REGISTERED PROFESSIONAL ENGINEER STEPHEN WINZENREAD No. 64274 Exp. 6-30-11 CIVIL STATE OF CALIFORNIA

THE STATE OF CALIFORNIA OR ITS OFFICERS OR AGENTS SHALL NOT BE RESPONSIBLE FOR THE ACCURACY OR COMPLETENESS OF SCANNED COPIES OF THIS PLAN SHEET.

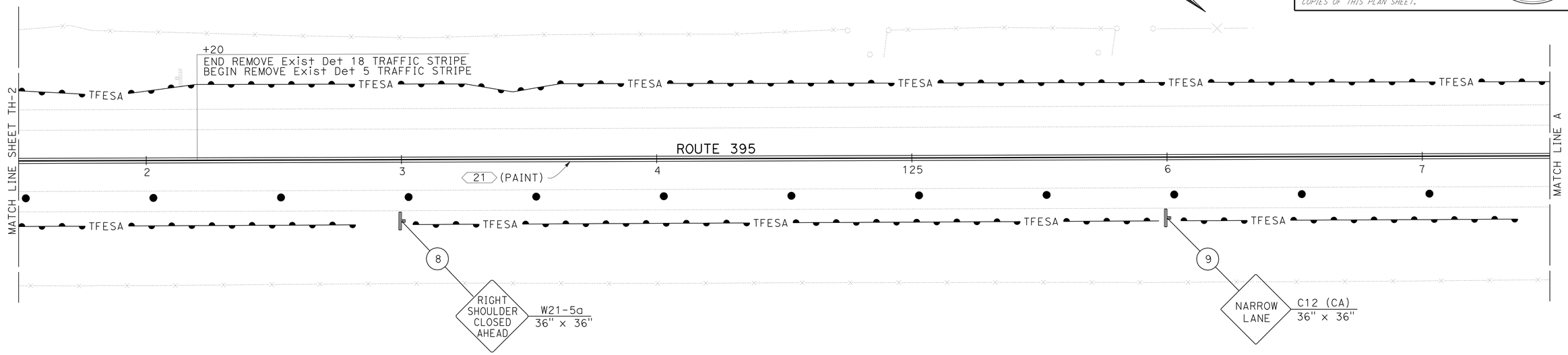

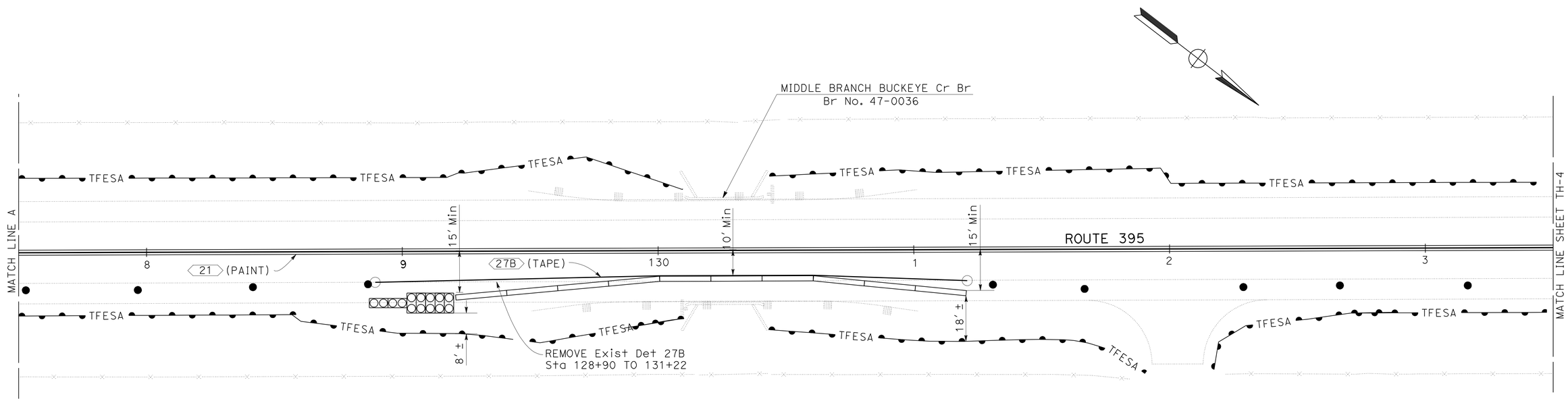

NORTHBOUND TRANSITION
RAILING TRAFFIC HANDLING

THIS PLAN ACCURATE FOR TRAFFIC HANDLING ONLY

TRAFFIC HANDLING PLAN TH-3

SCALE: 1" = 20'

STATE OF CALIFORNIA - DEPARTMENT OF TRANSPORTATION
Caltrans
DESIGN

FUNCTIONAL SUPERVISOR: RORY QUINCE
CALCULATED-DESIGNED BY: TONY SYMANOVICH
CHECKED BY: STEPHEN WINZENREAD
REVISED BY
DATE REVISED

LAST REVISION 07-16-10
DATE PLOTTED => 23-SEP-2010
TIME PLOTTED => 16:43

Dist	COUNTY	ROUTE	POST MILES TOTAL PROJECT	SHEET No.	TOTAL SHEETS
09	Mno	395	78.8/80.6	16	52

REGISTERED CIVIL ENGINEER 7-15-10 DATE

9-20-10
PLANS APPROVAL DATE

REGISTERED PROFESSIONAL ENGINEER STEPHEN WINZENREAD No. 64274 Exp. 6-30-11 CIVIL STATE OF CALIFORNIA

THE STATE OF CALIFORNIA OR ITS OFFICERS OR AGENTS SHALL NOT BE RESPONSIBLE FOR THE ACCURACY OR COMPLETENESS OF SCANNED COPIES OF THIS PLAN SHEET.

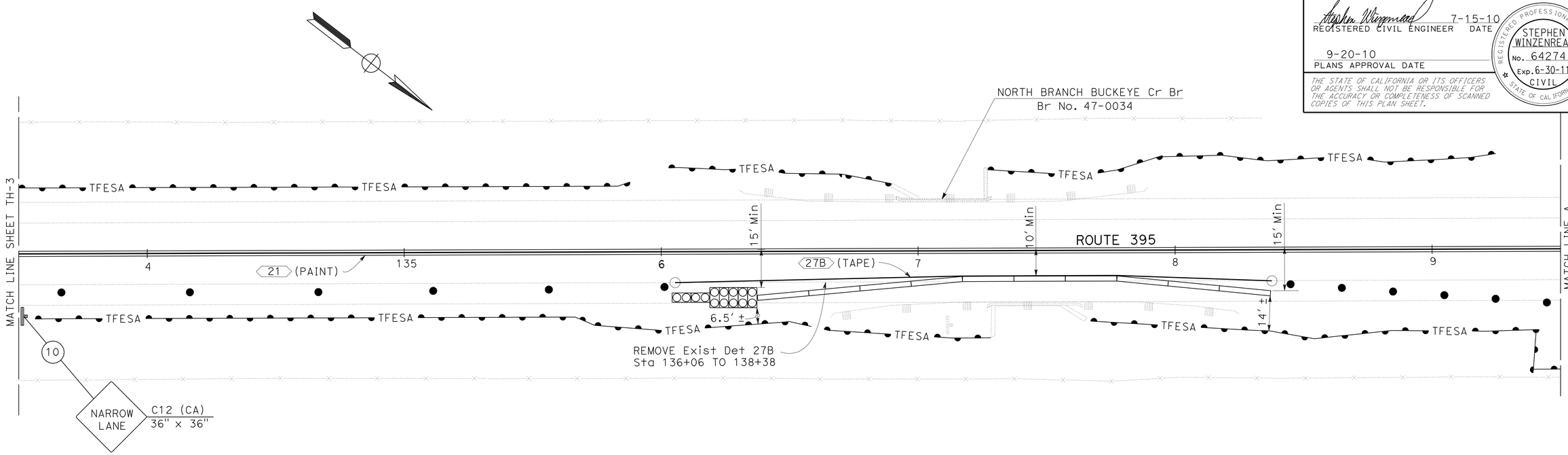

* SEE NOTES 3 AND 4 ON SHEET TH-1

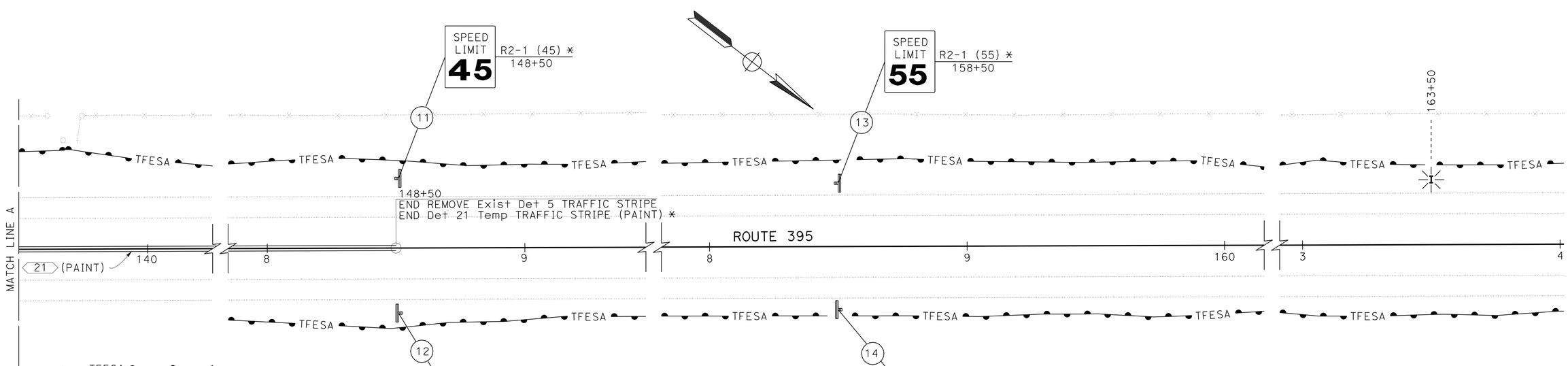

NORTHBOUND TRANSITION
RAILING TRAFFIC HANDLING

THIS PLAN ACCURATE FOR TRAFFIC HANDLING ONLY

TRAFFIC HANDLING PLAN
SCALE: 1" = 20'
TH-4

STATE OF CALIFORNIA - DEPARTMENT OF TRANSPORTATION
Caltrans
DESIGN

FUNCTIONAL SUPERVISOR: RORY QUINCE
CALCULATED-DESIGNED BY: TONY SYMANOVICH
CHECKED BY: STEPHEN WINZENREAD
REVISED BY
DATE REVISED

LAST REVISION 07-16-10
DATE PLOTTED => 23-SEP-2010
TIME PLOTTED => 16:43

Dist	COUNTY	ROUTE	POST MILES TOTAL PROJECT	SHEET No.	TOTAL SHEETS
09	Mno	395	78.8/80.6	17	52

REGISTERED CIVIL ENGINEER 7-15-10 DATE

9-20-10
PLANS APPROVAL DATE

REGISTERED PROFESSIONAL ENGINEER STEPHEN WINZENREAD No. 64274 Exp. 6-30-11 CIVIL STATE OF CALIFORNIA

THE STATE OF CALIFORNIA OR ITS OFFICERS OR AGENTS SHALL NOT BE RESPONSIBLE FOR THE ACCURACY OR COMPLETENESS OF SCANNED COPIES OF THIS PLAN SHEET.

NOTE:

DETAIL 27B TEMPORARY TRAFFIC STRIPE SHALL BE REMOVED UPON COMPLETION OF SOUTHBOUND TRAFFIC HANDLING AND DETAIL 27B TEMPORARY TRAFFIC STRIPE SHALL BE PLACED ALONG ORIGINAL EDGE OF TRAVELED WAY.

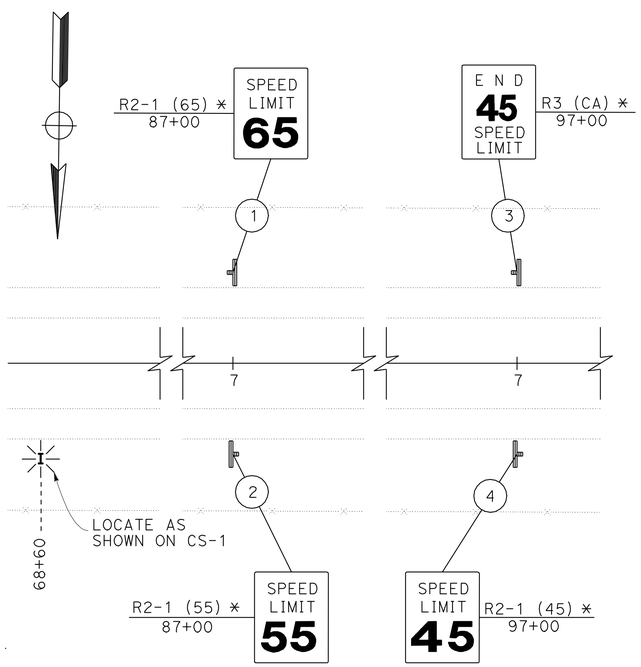

* SEE NOTES 3 AND 4 ON SHEET TH-1

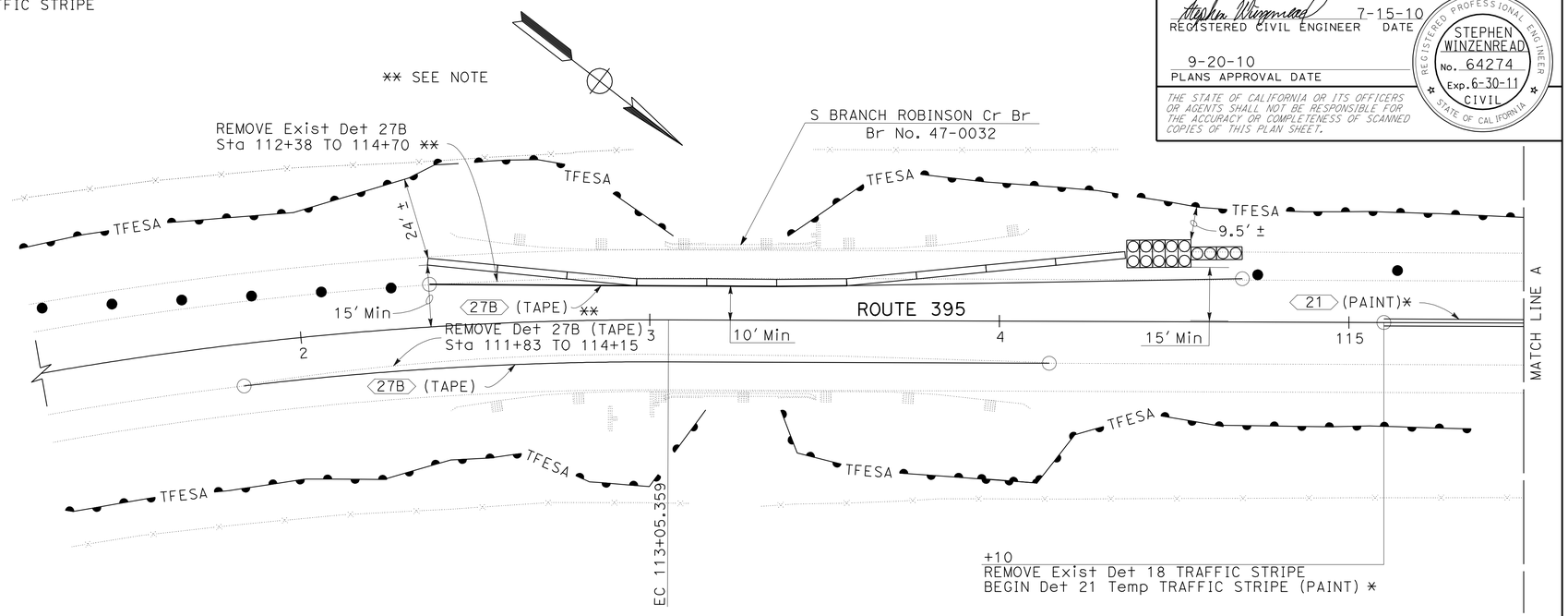

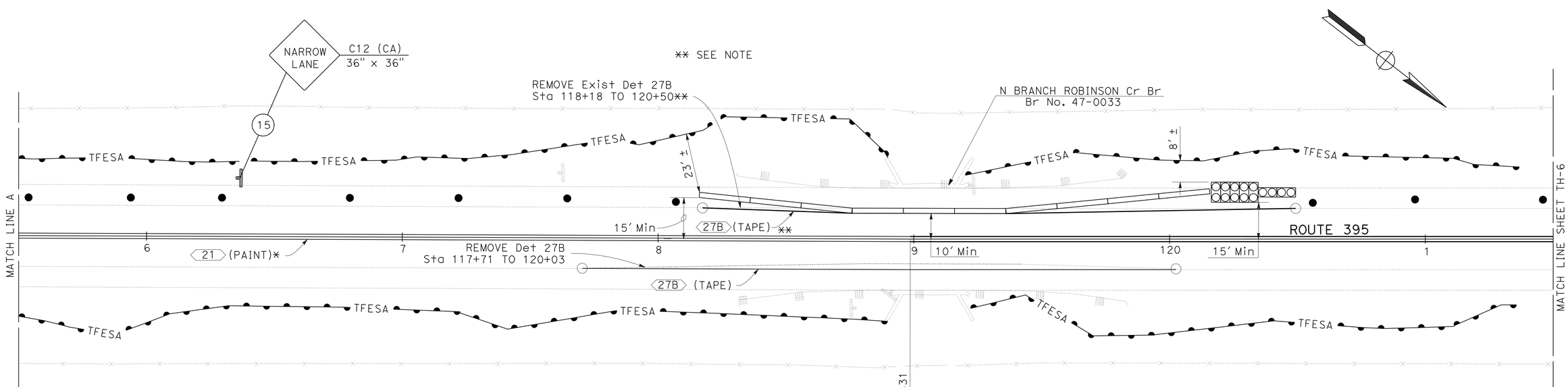

SOUTHBOUND TRANSITION RAILING TRAFFIC HANDLING

THIS PLAN ACCURATE FOR TRAFFIC HANDLING ONLY

TRAFFIC HANDLING PLAN TH-5

SCALE: 1" = 20'

STATE OF CALIFORNIA - DEPARTMENT OF TRANSPORTATION
Caltrans DESIGN

FUNCTIONAL SUPERVISOR: RORY QUINCE
CALCULATED-DESIGNED BY: STEPHEN WINZENREAD
CHECKED BY: TONY SYMANOVICH
REVISED BY / DATE REVISED

LAST REVISION 07-16-10
DATE PLOTTED => 23-SEP-2010
TIME PLOTTED => 16:43

Dist	COUNTY	ROUTE	POST MILES TOTAL PROJECT	SHEET No.	TOTAL SHEETS
09	Mno	395	78.8/80.6	18	52

REGISTERED CIVIL ENGINEER 7-15-10 DATE

9-20-10
PLANS APPROVAL DATE

REGISTERED PROFESSIONAL ENGINEER STEPHEN WINZENREAD No. 64274 Exp. 6-30-11 CIVIL STATE OF CALIFORNIA

THE STATE OF CALIFORNIA OR ITS OFFICERS OR AGENTS SHALL NOT BE RESPONSIBLE FOR THE ACCURACY OR COMPLETENESS OF SCANNED COPIES OF THIS PLAN SHEET.

NOTE:

DETAIL 27B TEMPORARY TRAFFIC STRIPE SHALL BE REMOVED UPON COMPLETION OF SOUTHBOUND TRAFFIC HANDLING AND DETAIL 27B TEMPORARY TRAFFIC STRIPE SHALL BE PLACED ALONG ORIGINAL EDGE OF TRAVELED WAY.

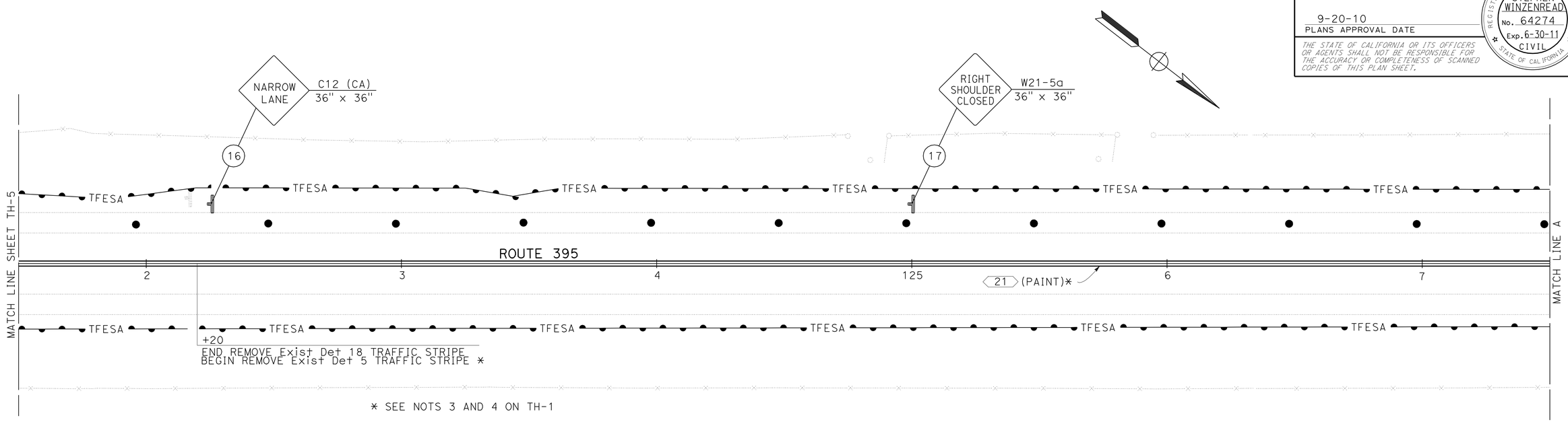

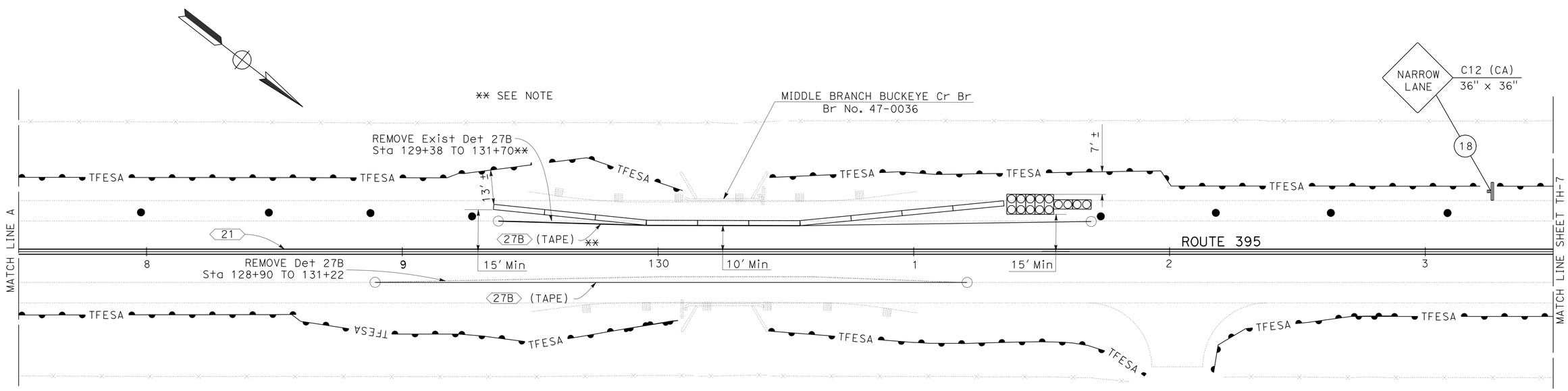

SOUTHBOUND TRANSITION
RAILING TRAFFIC HANDLING

THIS PLAN ACCURATE FOR TRAFFIC HANDLING ONLY

TRAFFIC HANDLING PLAN TH-6

SCALE: 1" = 20'

STATE OF CALIFORNIA - DEPARTMENT OF TRANSPORTATION
Caltrans® DESIGN

FUNCTIONAL SUPERVISOR: RORY QUINCE

CALCULATED-DESIGNED BY: TONY SYMANOVICH
CHECKED BY: STEPHEN WINZENREAD

REVISED BY | DATE REVISED

LAST REVISION 07-16-10
DATE PLOTTED => 23-SEP-2010
TIME PLOTTED => 16:43

Dist	COUNTY	ROUTE	POST MILES TOTAL PROJECT	SHEET No.	TOTAL SHEETS
09	Mno	395	78.8/80.6	19	52

REGISTERED CIVIL ENGINEER 7-15-10 DATE

9-20-10
PLANS APPROVAL DATE

REGISTERED PROFESSIONAL ENGINEER STEPHEN WINZENREAD No. 64274 Exp. 6-30-11 CIVIL STATE OF CALIFORNIA

THE STATE OF CALIFORNIA OR ITS OFFICERS OR AGENTS SHALL NOT BE RESPONSIBLE FOR THE ACCURACY OR COMPLETENESS OF SCANNED COPIES OF THIS PLAN SHEET.

NOTE:

DETAIL 27B TEMPORARY TRAFFIC STRIPE SHALL BE REMOVED UPON COMPLETION OF SOUTHBOUND TRAFFIC HANDLING AND DETAIL 27B TEMPORARY TRAFFIC STRIPE SHALL BE PLACED ALONG ORIGINAL EDGE OF TRAVELED WAY.

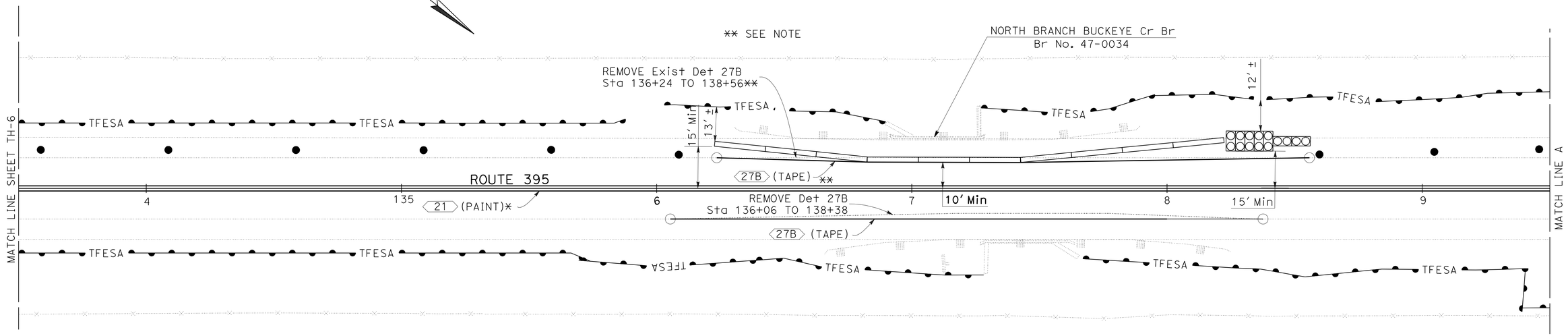

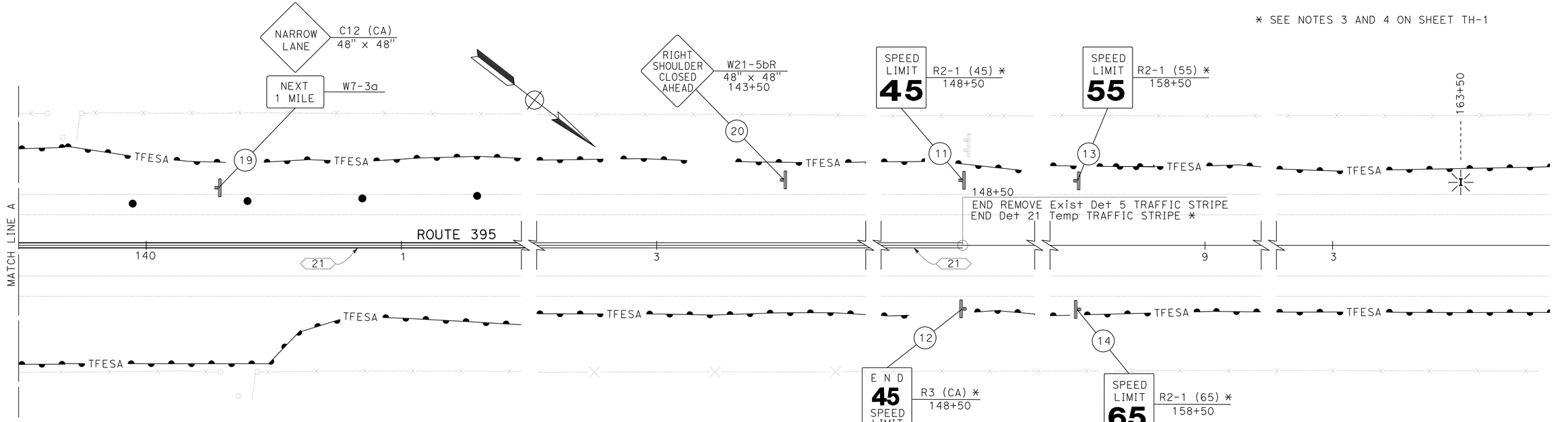

SOUTHBOUND TRANSITION
RAILING TRAFFIC HANDLING

THIS PLAN ACCURATE FOR TRAFFIC HANDLING ONLY

TRAFFIC HANDLING PLAN
SCALE: 1" = 20'

TH-7

STATE OF CALIFORNIA - DEPARTMENT OF TRANSPORTATION
Caltrans® DESIGN

FUNCTIONAL SUPERVISOR: RORY QUINCE
CALCULATED-DESIGNED BY: TONY SYMANOVICH
CHECKED BY: STEPHEN WINZENREAD
REVISED BY / DATE REVISED

LAST REVISION 07-16-10
DATE PLOTTED => 23-SEP-2010
TIME PLOTTED => 16:44

Dist	COUNTY	ROUTE	POST MILES TOTAL PROJECT	SHEET No.	TOTAL SHEETS
09	Mno	395	78.8/80.6	20	52

REGISTERED CIVIL ENGINEER 7-15-10 DATE

9-20-10
PLANS APPROVAL DATE

REGISTERED PROFESSIONAL ENGINEER STEPHEN WINZENREAD No. 64274 Exp. 6-30-11 CIVIL STATE OF CALIFORNIA

THE STATE OF CALIFORNIA OR ITS OFFICERS OR AGENTS SHALL NOT BE RESPONSIBLE FOR THE ACCURACY OR COMPLETENESS OF SCANNED COPIES OF THIS PLAN SHEET.

NOTE:

SEE CONSTRUCTION AREA SIGNS FOR ADDITIONAL PORTABLE CHANGEABLE MESSAGE SIGNS AND ADDITIONAL CONSTRUCTION AREA SIGNS.

TRAFFIC HANDLING SIGN SUMMARY

	SIGN NUMBER	STATION	LEFT	RIGHT	SIGN PANEL CODE	SIGN PANEL MESSAGE	SIGN PANEL SIZE (L x D)	SIGN PANEL BACKGROUND SHEETING COLOR	SIGN PANEL LEGEND SHEETING COLOR	POSTS SINGLE	POSTS SIZE (L x D)	FNBT	FSBT
NORTHBOUND TRANSITION RAILING TRAFFIC HANDLING	1	87+00	X		R2-1 (65)	SPEED LIMIT 65	36" x 48"	WHITE	BLACK	X	4" x 6"		X
	2	87+00		X	R2-1 (55)	SPEED LIMIT 55	36" x 48"	WHITE	BLACK	X	4" x 6"	X	
	3	97+00	X		R3 (CA)	END 45 SPEED LIMIT	36" x 48"	WHITE	BLACK	X	4" x 6"		X
	4	97+00		X	R2-1 (45)	SPEED LIMIT 45	36" x 48"	WHITE	BLACK	X	4" x 6"	X	
	5	102+00		X	W21-5bR	RIGHT SHOULDER CLOSED AHEAD	48" x 48"	FLUORESCENT ORANGE	BLACK	X	4" x 6"	X	
	6	107+00		X	C12 (CA)	NARROW LANE	48" x 48"	FLUORESCENT ORANGE	BLACK	X	4" x 6"	X	
					W7-3a	NEXT 1 MILE	18" x 24"	FLUORESCENT ORANGE	BLACK	X			
	7	115+83		X	C12 (CA)	NARROW LANE	36" x 36"	FLUORESCENT ORANGE	BLACK	X	4" x 6"	X	
	8	123+00		X	W21-5a	RIGHT SHOULDER CLOSED	36" x 36"	FLUORESCENT ORANGE	BLACK	X	4" x 6"	X	
	9	126+00		X	C12 (CA)	NARROW LANE	36" x 36"	FLUORESCENT ORANGE	BLACK	X	4" x 6"	X	
	10	133+50		X	C12 (CA)	NARROW LANE	36" x 36"	FLUORESCENT ORANGE	BLACK	X	4" x 6"	X	
	11	148+50	X		R2-1 (45)	SPEED LIMIT 45	36" x 48"	WHITE	BLACK	X	4" x 6"		X
	12	148+50		X	R3 (CA)	END 45 SPEED LIMIT	36" x 48"	WHITE	BLACK	X	4" x 6"	X	
	13	158+50	X		R2-1 (55)	SPEED LIMIT 55	36" x 48"	WHITE	BLACK	X	4" x 6"		X
	14	158+50		X	R2-1 (65)	SPEED LIMIT 65	36" x 48"	WHITE	BLACK	X	4" x 6"	X	
SOUTHBOUND TRANSITION RAILING TRAFFIC HANDLING	15	116+37	X		C12 (CA)	NARROW LANE	36" x 36"	FLUORESCENT ORANGE	BLACK	X	4" x 6"		X
	16	122+26	X		C12 (CA)	NARROW LANE	36" x 36"	FLUORESCENT ORANGE	BLACK	X	4" x 6"		X
	17	125+00	X		W21-5a	RIGHT SHOULDER CLOSED	36" x 36"	FLUORESCENT ORANGE	BLACK	X	4" x 6"		X
	18	133+26	X		C12 (CA)	NARROW LANE	36" x 36"	FLUORESCENT ORANGE	BLACK	X	4" x 6"		X
	19	140+29	X		C12 (CA)	NARROW LANE	48" x 48"	FLUORESCENT ORANGE	BLACK	X	4" x 6"		X
					W7-3a	NEXT 1 MILE	18" x 24"	FLUORESCENT ORANGE	BLACK	X			
	20	143+50	X		W21-5bR	RIGHT SHOULDER CLOSED AHEAD	48" x 48"	FLUORESCENT ORANGE	BLACK	X	4" x 6"		X

PORTABLE CHANGEABLE MESSAGE SIGNS
No. OF SIGNS *
1

* SEE SHEET TH-4

TRAFFIC HANDLING QUANTITIES THQ-1

STATE OF CALIFORNIA - DEPARTMENT OF TRANSPORTATION
Caltrans DESIGN

FUNCTIONAL SUPERVISOR: RORY QUINCE
CALCULATED-DESIGNED BY: TONY SYMANOVICH
CHECKED BY: STEPHEN WINZENREAD
REVISED BY
DATE REVISED

LAST REVISION 07-16-10
DATE PLOTTED => 23-SEP-2010
TIME PLOTTED => 16:44

Dist	COUNTY	ROUTE	POST MILES TOTAL PROJECT	SHEET No.	TOTAL SHEETS
09	Mno	395	78.8/80.6	21	52

REGISTERED CIVIL ENGINEER 7-15-10 DATE

9-20-10
PLANS APPROVAL DATE

REGISTERED PROFESSIONAL ENGINEER STEPHEN WINZENREAD No. 64274 Exp. 6-30-11 CIVIL STATE OF CALIFORNIA

THE STATE OF CALIFORNIA OR ITS OFFICERS OR AGENTS SHALL NOT BE RESPONSIBLE FOR THE ACCURACY OR COMPLETENESS OF SCANNED COPIES OF THIS PLAN SHEET.

REMOVE PAINTED TRAFFIC STRIPE

STATION TO STATION	Lt	Rt	Det 5 LF	Det 18 LF	Det 27B LF	COMMENTS
115+10 - 122+20				710		NB AND SB TRANSITION RAILING TRAFFIC HANDLING
122+20 - 148+50			2630			NB AND SB TRANSITION RAILING TRAFFIC HANDLING
111+83 - 114+15		X			232	NB TRANSITION RAILING TRAFFIC HANDLING
117+71 - 120+03		X			232	NB TRANSITION RAILING TRAFFIC HANDLING
128+90 - 131+22		X			232	NB TRANSITION RAILING TRAFFIC HANDLING
136+06 - 138+38		X			232	NB TRANSITION RAILING TRAFFIC HANDLING
112+38 - 114+70	X				232	SB TRANSITION RAILING TRAFFIC HANDLING
118+18 - 120+50	X				232	SB TRANSITION RAILING TRAFFIC HANDLING
129+38 - 131+70	X				232	SB TRANSITION RAILING TRAFFIC HANDLING
136+24 - 138+56	X				232	SB TRANSITION RAILING TRAFFIC HANDLING
SUBTOTAL			2630	710	1856	
TOTAL			5196			

TEMPORARY CRASH CUSHION MODULE

STATION	Lt	Rt	TEMPORARY CRASH CUSHION, SAND FILLED (ARRAY 'TS14') EA (N)	TEMPORARY CRASH CUSHION MODULE EA	COMMENTS
111+87		X	1	14	NB TRANSITION RAILING TRAFFIC HANDLING
117+69		X	1	14	NB TRANSITION RAILING TRAFFIC HANDLING
128+88		X	1	14	NB TRANSITION RAILING TRAFFIC HANDLING
136+05		X	1	14	NB TRANSITION RAILING TRAFFIC HANDLING
114+37	X		1	14	SB TRANSITION RAILING TRAFFIC HANDLING
120+17	X		1	14	SB TRANSITION RAILING TRAFFIC HANDLING
131+37	X		1	14	SB TRANSITION RAILING TRAFFIC HANDLING
138+24	X		1	14	SB TRANSITION RAILING TRAFFIC HANDLING
TOTAL				112	

(N) NOT A SEPARATE PAY ITEM, FOR INFORMATION ONLY.

TEMPORARY TRAFFIC STRIPE (TAPE)

STATION TO STATION	Lt	Rt	DETAIL 27B LF	COMMENTS
111+83 - 114+15		X	232	NB TRANSITION RAILING TRAFFIC HANDLING
117+71 - 120+03		X	232	NB TRANSITION RAILING TRAFFIC HANDLING
128+90 - 131+22		X	232	NB TRANSITION RAILING TRAFFIC HANDLING
136+06 - 138+38		X	232	NB TRANSITION RAILING TRAFFIC HANDLING
111+83 - 114+15		X	232	ON ORIGINAL NB ETW UPON COMPLETION OF NB TRAFFIC HANDLING
117+71 - 120+03		X	232	ON ORIGINAL NB ETW UPON COMPLETION OF NB TRAFFIC HANDLING
128+90 - 131+22		X	232	ON ORIGINAL NB ETW UPON COMPLETION OF NB TRAFFIC HANDLING
136+06 - 138+38		X	232	ON ORIGINAL NB ETW UPON COMPLETION OF NB TRAFFIC HANDLING
112+38 - 114+70	X		232	SB TRANSITION RAILING TRAFFIC HANDLING
118+18 - 120+50	X		232	SB TRANSITION RAILING TRAFFIC HANDLING
129+38 - 131+70	X		232	SB TRANSITION RAILING TRAFFIC HANDLING
136+24 - 138+56	X		232	SB TRANSITION RAILING TRAFFIC HANDLING
112+38 - 114+70	X		232	ON ORIGINAL SB ETW UPON COMPLETION OF NB TRAFFIC HANDLING
118+18 - 120+50	X		232	ON ORIGINAL SB ETW UPON COMPLETION OF NB TRAFFIC HANDLING
129+38 - 131+70	X		232	ON ORIGINAL SB ETW UPON COMPLETION OF NB TRAFFIC HANDLING
136+24 - 138+56	X		232	ON ORIGINAL SB ETW UPON COMPLETION OF NB TRAFFIC HANDLING
TOTAL			3712	

CHANNELIZER (SURFACE MOUNTED)

STATION TO STATION	Lt	Rt	EA	COMMENTS
108+95 - 139+45		X	51	NB TRANSITION RAILING TRAFFIC HANDLING
110+28 - 141+30	X		51	SB TRANSITION RAILING TRAFFIC HANDLING
TOTAL			102	

TEMPORARY RAILING (TYPE K)

STATION TO STATION	Lt	Rt	LF	COMMENTS
112+13 - 114+15		X	200	NB TRANSITION RAILING TRAFFIC HANDLING
118+03 - 120+03		X	200	NB TRANSITION RAILING TRAFFIC HANDLING
129+21 - 131+21		X	200	NB TRANSITION RAILING TRAFFIC HANDLING
136+38 - 138+38		X	200	NB TRANSITION RAILING TRAFFIC HANDLING
112+38 - 114+37	X		200	SB TRANSITION RAILING TRAFFIC HANDLING
118+17 - 120+17	X		200	SB TRANSITION RAILING TRAFFIC HANDLING
129+36 - 131+36	X		200	SB TRANSITION RAILING TRAFFIC HANDLING
136+23 - 138+23	X		200	SB TRANSITION RAILING TRAFFIC HANDLING
TOTAL			1600	

TEMPORARY TRAFFIC STRIPE (PAINT)

STATION TO STATION	DETAIL 21 LF	COMMENTS
115+10 - 148+50	3340	NB AND SB TRANSITION RAILING TRAFFIC HANDLING
TOTAL	3340	

TRAFFIC HANDLING QUANTITIES
THQ-2

STATE OF CALIFORNIA - DEPARTMENT OF TRANSPORTATION
Caltrans DESIGN

FUNCTIONAL SUPERVISOR: RORY QUINCE
CALCULATED-DESIGNED BY: TONY SYMANOVICH
CHECKED BY: STEPHEN WINZENREAD
REVISED BY
DATE REVISED

LAST REVISION 07-16-10
DATE PLOTTED => 23-SEP-2010
TIME PLOTTED => 16:44

Dist	COUNTY	ROUTE	POST MILES TOTAL PROJECT	SHEET No.	TOTAL SHEETS
09	Mno	395	78.8/80.6	22	52

Teresa Erlwein PE 7-15-10
REGISTERED CIVIL ENGINEER DATE

9-20-10
PLANS APPROVAL DATE

REGISTERED PROFESSIONAL ENGINEER TERESA ERLWEIN No. 61355 Exp. 6-30-11 CIVIL STATE OF CALIFORNIA

THE STATE OF CALIFORNIA OR ITS OFFICERS OR AGENTS SHALL NOT BE RESPONSIBLE FOR THE ACCURACY OR COMPLETENESS OF SCANNED COPIES OF THIS PLAN SHEET.

LEGEND:

- LIMIT LINE
- X I - DELINEATOR
- MM I - MILEPOST MARKER
- XX - STRIPING DETAIL NUMBER
- BEGIN/END STRIPING DETAIL
- ROADSIDE SIGNS
- XX - SIGN NUMBER

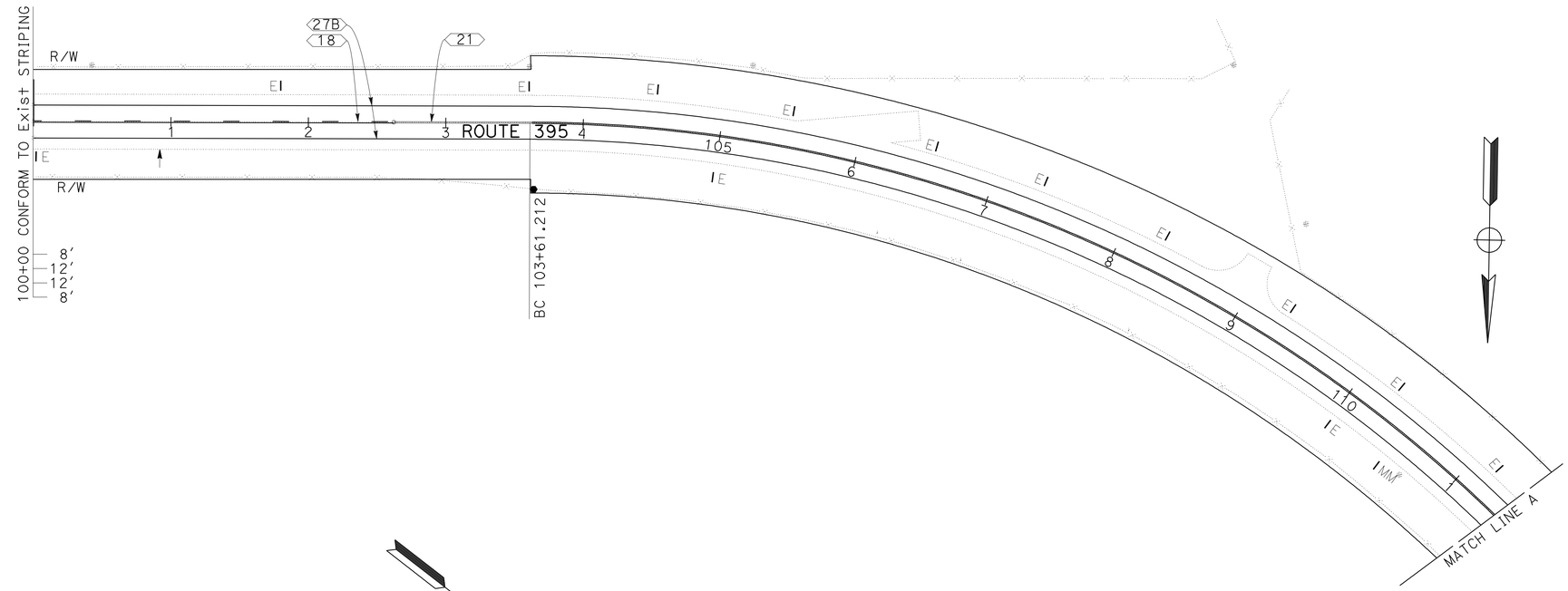

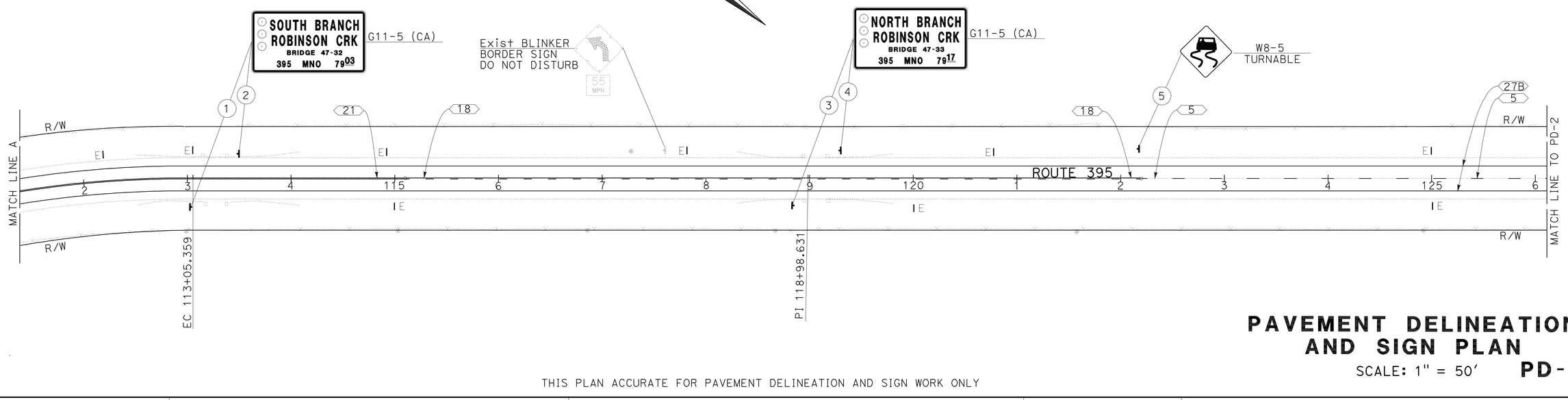

PAVEMENT DELINEATION AND SIGN PLAN

SCALE: 1" = 50'

PD-1

THIS PLAN ACCURATE FOR PAVEMENT DELINEATION AND SIGN WORK ONLY

STATE OF CALIFORNIA - DEPARTMENT OF TRANSPORTATION
Caltrans TRAFFIC OPERATIONS

FUNCTIONAL SUPERVISOR: TERRY ERLWEIN
CALCULATED-DESIGNED BY: JOEL NASH
CHECKED BY: DONNA HOLLAND
REVISED BY / DATE REVISED

LAST REVISION 07-16-10 | DATE PLOTTED => 23-SEP-2010 | TIME PLOTTED => 16:44

Dist	COUNTY	ROUTE	POST MILES TOTAL PROJECT	SHEET No.	TOTAL SHEETS
09	Mno	395	78.8/80.6	23	52

Teresa Erlwein PE 7-15-10
REGISTERED CIVIL ENGINEER DATE

9-20-10
PLANS APPROVAL DATE

REGISTERED PROFESSIONAL ENGINEER
TERESA ERLWEIN
No. 61355
Exp. 6-30-11
CIVIL
STATE OF CALIFORNIA

THE STATE OF CALIFORNIA OR ITS OFFICERS OR AGENTS SHALL NOT BE RESPONSIBLE FOR THE ACCURACY OR COMPLETENESS OF SCANNED COPIES OF THIS PLAN SHEET.

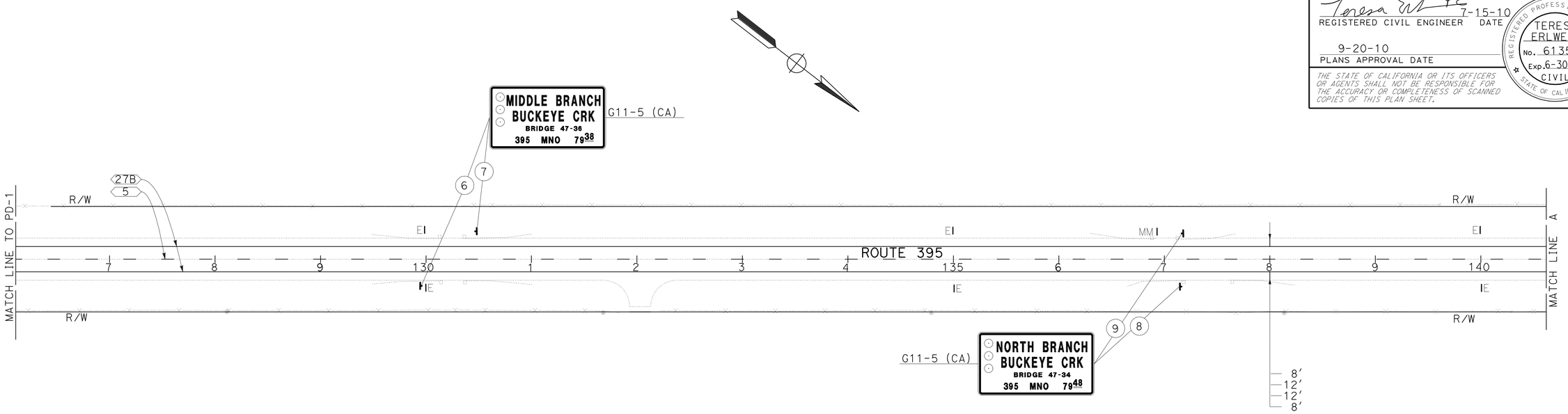

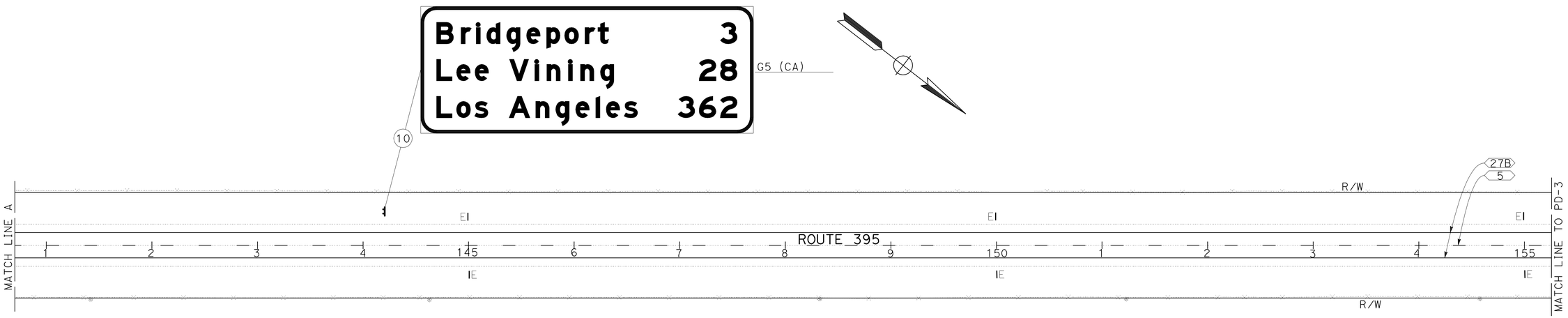

THIS PLAN ACCURATE FOR PAVEMENT DELINEATION AND SIGN WORK ONLY

PAVEMENT DELINEATION AND SIGN PLAN

SCALE: 1" = 50′

PD-2

REVISED BY	DATE REVISED
JOEL NASH	DONNA HOLLAND

CALCULATED-DESIGNED BY
CHECKED BY

FUNCTIONAL SUPERVISOR
TERRY ERLWEIN

STATE OF CALIFORNIA - DEPARTMENT OF TRANSPORTATION
Caltrans® TRAFFIC OPERATIONS

LAST REVISION 07-18-10
DATE PLOTTED => 23-SEP-2010
TIME PLOTTED => 14:41

Dist	COUNTY	ROUTE	POST MILES TOTAL PROJECT	SHEET No.	TOTAL SHEETS
09	Mno	395	78.8/80.6	24	52

Teresa Erlwein PE 7-15-10
REGISTERED CIVIL ENGINEER DATE

9-20-10
PLANS APPROVAL DATE

REGISTERED PROFESSIONAL ENGINEER
TERESA ERLWEIN
No. 61355
Exp. 6-30-11
CIVIL
STATE OF CALIFORNIA

THE STATE OF CALIFORNIA OR ITS OFFICERS OR AGENTS SHALL NOT BE RESPONSIBLE FOR THE ACCURACY OR COMPLETENESS OF SCANNED COPIES OF THIS PLAN SHEET.

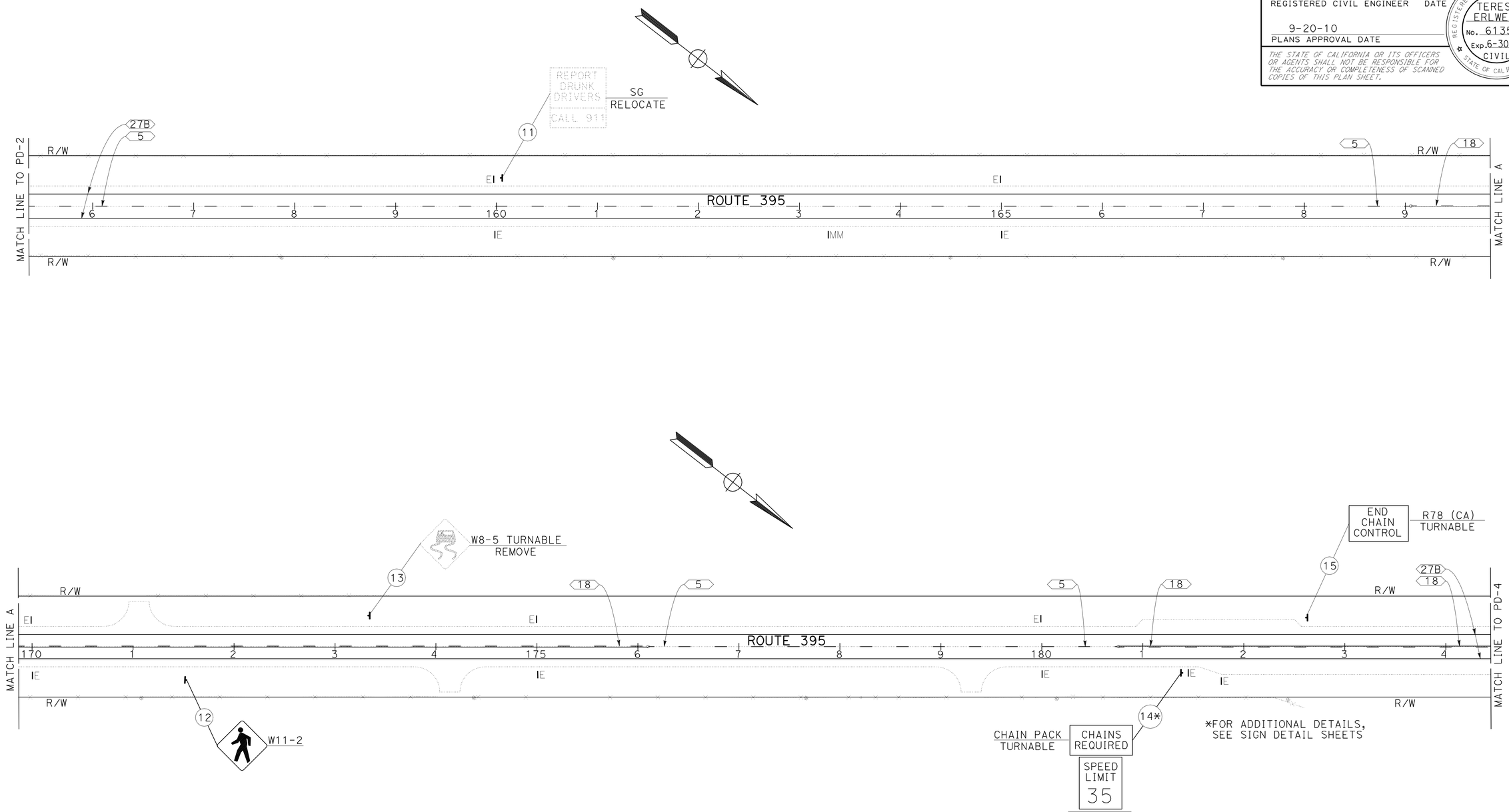

THIS PLAN ACCURATE FOR PAVEMENT DELINEATION AND SIGN WORK ONLY

PAVEMENT DELINEATION AND SIGN PLAN

SCALE: 1" = 50'

PD-3

REVISED BY	DATE REVISED
JOEL NASH	DONNA HOLLAND
CALCULATED-DESIGNED BY	CHECKED BY
FUNCTIONAL SUPERVISOR	TERRY ERLWEIN

STATE OF CALIFORNIA - DEPARTMENT OF TRANSPORTATION
Caltrans TRAFFIC OPERATIONS

LAST REVISION 07-16-10 | DATE PLOTTED => 23-SEP-2010 | TIME PLOTTED => 14:41

Dist	COUNTY	ROUTE	POST MILES TOTAL PROJECT	SHEET No.	TOTAL SHEETS
09	Mno	395	78.8/80.6	25	52

Teresa Erlwein PE 7-15-10
REGISTERED CIVIL ENGINEER DATE

9-20-10
PLANS APPROVAL DATE

REGISTERED PROFESSIONAL ENGINEER
TERESA ERLWEIN
No. 61355
Exp. 6-30-11
CIVIL
STATE OF CALIFORNIA

THE STATE OF CALIFORNIA OR ITS OFFICERS OR AGENTS SHALL NOT BE RESPONSIBLE FOR THE ACCURACY OR COMPLETENESS OF SCANNED COPIES OF THIS PLAN SHEET.

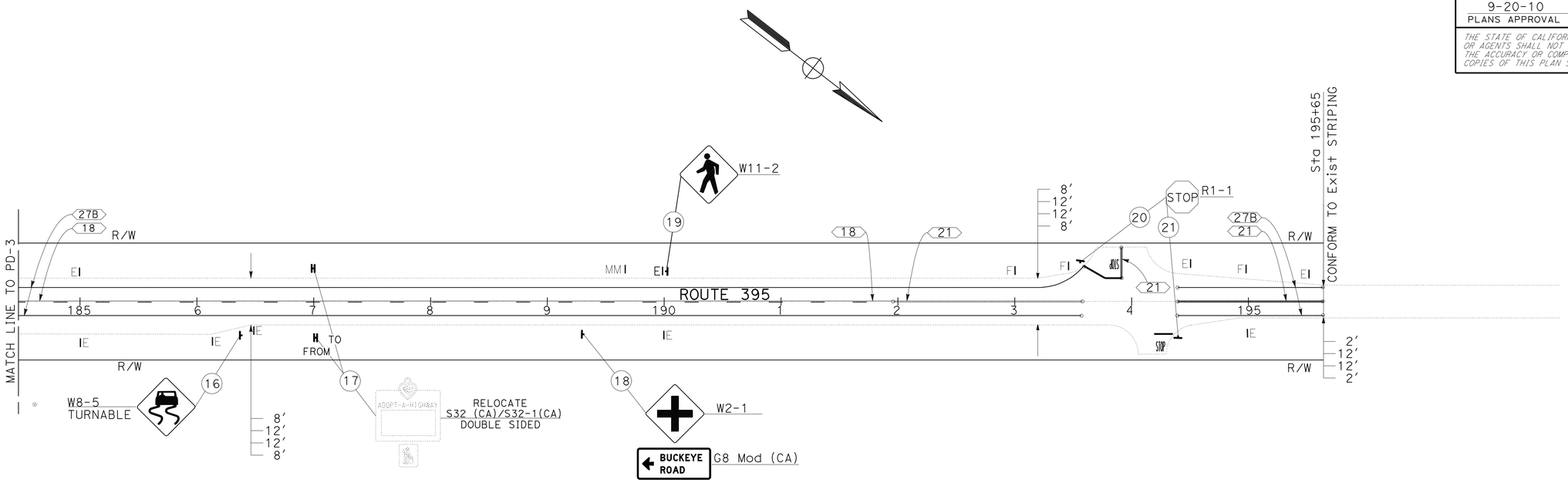

THIS PLAN ACCURATE FOR PAVEMENT DELINEATION AND SIGN WORK ONLY

PAVEMENT DELINEATION AND SIGN PLAN

SCALE: 1" = 50′

PD-4

STATE OF CALIFORNIA - DEPARTMENT OF TRANSPORTATION
Caltrans® **TRAFFIC OPERATIONS**

FUNCTIONAL SUPERVISOR: TERRY ERLWEIN

CALCULATED-DESIGNED BY: JOEL NASH
CHECKED BY: DONNA HOLLAND

REVISED BY
DATE REVISED

LAST REVISION 07-16-10
DATE PLOTTED => 23-SEP-2010
TIME PLOTTED => 14:41

Dist	COUNTY	ROUTE	POST MILES TOTAL PROJECT	SHEET No.	TOTAL SHEETS
09	Mno	395	78.8/80.6	26	52

Teresa Erlwein PE 7-15-10
REGISTERED CIVIL ENGINEER DATE

9-20-10
PLANS APPROVAL DATE

REGISTERED PROFESSIONAL ENGINEER TERESA ERLWEIN No. 61355 Exp. 6-30-11 CIVIL STATE OF CALIFORNIA

THE STATE OF CALIFORNIA OR ITS OFFICERS OR AGENTS SHALL NOT BE RESPONSIBLE FOR THE ACCURACY OR COMPLETENESS OF SCANNED COPIES OF THIS PLAN SHEET.

NOTE:

(N) NOT A SEPARATE ITEM, FOR INFORMATION ONLY.

PAINT TRAFFIC STRIPE (2-COAT)

STATION TO STATION (LOCATION)			LENGTH (N)	DETAIL No. 5	18	21	27B
			LF	LF	LF	LF	LF
100+00	-	102+62	262		262		524
102+62	-	115+10	1248			1248	2496
115+10	-	122+20	710		710		1420
122+20	-	169+06	4686	4686			9372
169+06	-	176+10	704		704		1408
176+10	-	180+75	465	465			930
180+75	-	191+95	1120		1120		2240
191+95	-	193+58	163			163	326
193+58	-	194+40	82				
194+40	-	195+65	125			125	250
193+92 (BUCKEYE Rd - Lt)			20			20	
SUBTOTAL				5151	2796	1556	18966
TOTAL				28469			

PAINT PAVEMENT MARKINGS (2-COAT)

STATION (LOCATION)	Lt	Rt	LIMIT LINE	WORDS "STOP"	
			SQ FT	EA (N)	SQ FT
193+92 (BUCKEYE Rd - Lt)	X		30	1	22
193+92 (Dwy - Rt)	X		16	1	22
SUBTOTAL			46		44
TOTAL			90		

REMOVE MARKERS AND DELINEATORS

STATION TO STATION	REMOVE DELINEATOR	REMOVE MARKER
	EA	EA
100+00 TO 195+50	58	18
TOTAL	58	18

MILEPOST MARKER

STATION	Lt	Rt	MILEPOST MARKER	MESSAGE
			EA	
110+56		X	1	395 Mno 79.0
136+96	X		1	395 Mno 79.5
163+36		X	1	396 Mno 80.0
189+76	X		1	397 Mno 80.5
TOTAL			4	

DELINEATOR (CLASS 2)

STATION	Lt	Rt	DELINEATOR (CLASS 2) TYPE E	TYPE F	REMARKS
			EA	EA	
100+00		X	1		
101+72	X		1		
103+61	X		1		
104+55	X		1		
105+00		X	1		
105+50	X		1		
106+44	X		1		
107+39	X		1		
108+33	X		1		
109+27	X		1		
110+00		X	1		
110+22	X		1		
111+16	X		1		
112+11	X		1		
113+05	X		1		
114+94	X		1		
115+00		X	1		
117+77	X		1		
120+00		X	1		
120+77	X		1		
125+00	X	X	2		
130+00	X	X	2		
135+00	X	X	2		
140+00	X	X	2		
145+00	X	X	2		
150+00	X	X	2		
155+00	X	X	2		
160+00	X	X	2		
165+00	X	X	2		
170+00	X	X	2		
175+00	X	X	2		
180+00	X	X	2		
181+55		X	1		
181+80		X	1		
185+00	X	X	2		
186+15		X	1		
186+45		X	1		
190+00	X	X	2		
193+00	X			1	
193+50	X			1	
194+50	X		1		
195+00	X	X	1	1	
195+50	X		1		
SUBTOTAL			55	3	
TOTAL			58		

PAVEMENT DELINEATION QUANTITIES
PDQ-1

STATE OF CALIFORNIA - DEPARTMENT OF TRANSPORTATION
Caltrans TRAFFIC OPERATIONS

FUNCTIONAL SUPERVISOR: TERRY ERLWEIN
CALCULATED-DESIGNED BY: JOEL NASH
CHECKED BY: DONNA HOLLAND
REVISED BY
DATE REVISED

LAST REVISION 07-16-10 | DATE PLOTTED => 23-SEP-2010 | TIME PLOTTED => 17:49

Dist	COUNTY	ROUTE	POST MILES TOTAL PROJECT	SHEET No.	TOTAL SHEETS
09	Mno	395	78.8/80.6	27	52

Teresa Erlwein PE 7-15-10
REGISTERED CIVIL ENGINEER DATE

9-20-10
PLANS APPROVAL DATE

REGISTERED PROFESSIONAL ENGINEER TERESA ERLWEIN No. 61355 Exp. 6-30-11 CIVIL STATE OF CALIFORNIA

THE STATE OF CALIFORNIA OR ITS OFFICERS OR AGENTS SHALL NOT BE RESPONSIBLE FOR THE ACCURACY OR COMPLETENESS OF SCANNED COPIES OF THIS PLAN SHEET.

SIGN 1 2

SIGN 3 4

NOTES FOR G11-5 (CA):
REFER TO THE APPROVED SIGN DESIGN FOR DETAILS NOT SHOWN

NOTES FOR G5 (CA):
8" UPPERCASE, 6" LOWER CASE, E MODIFIED FONT
1.25" BORDER, 6" CORNER RADIUS
NO MARGIN, NO TRIMMED CORNERS

SIGN 10

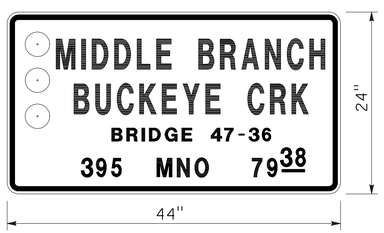

SIGN 6 7

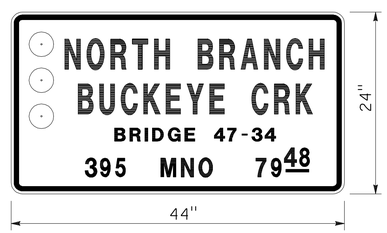

SIGN 8 9

NOTES FOR G11-5 (CA):
REFER TO THE APPROVED SIGN DESIGN FOR DETAILS NOT SHOWN.

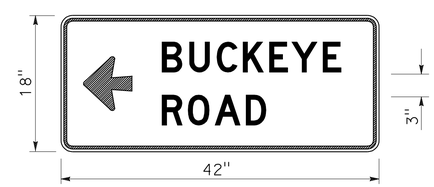

NOTES FOR G8 Mod (CA):
BLACK ON YELLOW
4" UPPERCASE, D FONT
0.5" BORDER, 1.5" CORNER RADIUS
0.5" MARGIN, TRIMMED CORNERS

SIGN 18

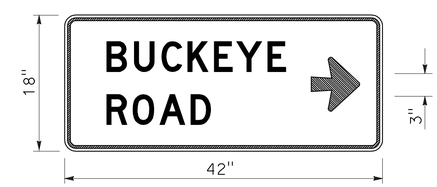

NOTES FOR G8 Mod (CA):
BLACK ON YELLOW
4" UPPERCASE, D FONT
0.5" BORDER, 1.5" CORNER RADIUS
0.5" MARGIN, TRIMMED CORNERS

SIGN 22

SIGN DETAILS
NO SCALE **SD-1**

STATE OF CALIFORNIA - DEPARTMENT OF TRANSPORTATION
Caltrans® TRAFFIC OPERATIONS

FUNCTIONAL SUPERVISOR: TERRY ERLWEIN
CALCULATED-DESIGNED BY: JOEL NASH
CHECKED BY: DONNA HOLLAND
REVISED BY / DATE REVISED

LAST REVISION 07-16-10
DATE PLOTTED => 23-SEP-2010
TIME PLOTTED => 17:49

Dist	COUNTY	ROUTE	POST MILES TOTAL PROJECT	SHEET No.	TOTAL SHEETS
09	Mno	395	78.8/80.6	28	52

REGISTERED CIVIL ENGINEER 7-15-10 DATE

9-20-10
PLANS APPROVAL DATE

REGISTERED PROFESSIONAL ENGINEER TERESA ERLWEIN No. 61355 Exp. 6-30-11 CIVIL STATE OF CALIFORNIA

THE STATE OF CALIFORNIA OR ITS OFFICERS OR AGENTS SHALL NOT BE RESPONSIBLE FOR THE ACCURACY OR COMPLETENESS OF SCANNED COPIES OF THIS PLAN SHEET.

NOTES:

1. EXACT LOCATION AND POSITION OF ROADSIDE SIGNS TO BE DETERMINED BY THE ENGINEER.
2. THIS PLAN ACCURATE FOR SIGN WORK ONLY.
3. BACKGROUND AND TEXT COLOR, FONT, CORNER RADII, AND BORDERS SHALL CONFORM TO SIGN SPECIFICATIONS R77 (CA), R79 (CA), AND R80-1 (CA), UNLESS OTHERWISE SHOWN ON THIS PLAN.
4. CALIFORNIA SIGN CODES ARE DENOTED BY (CA). OTHERWISE, FEDERAL SIGN CODES ARE SHOWN.

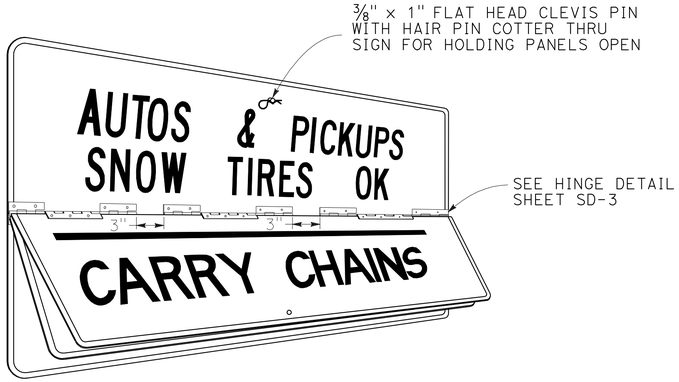

R79 Mod (CA)

R80-1 Mod (CA)

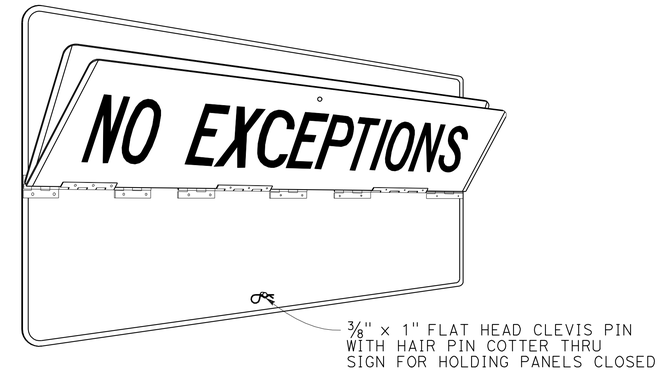

R77 Mod (CA)

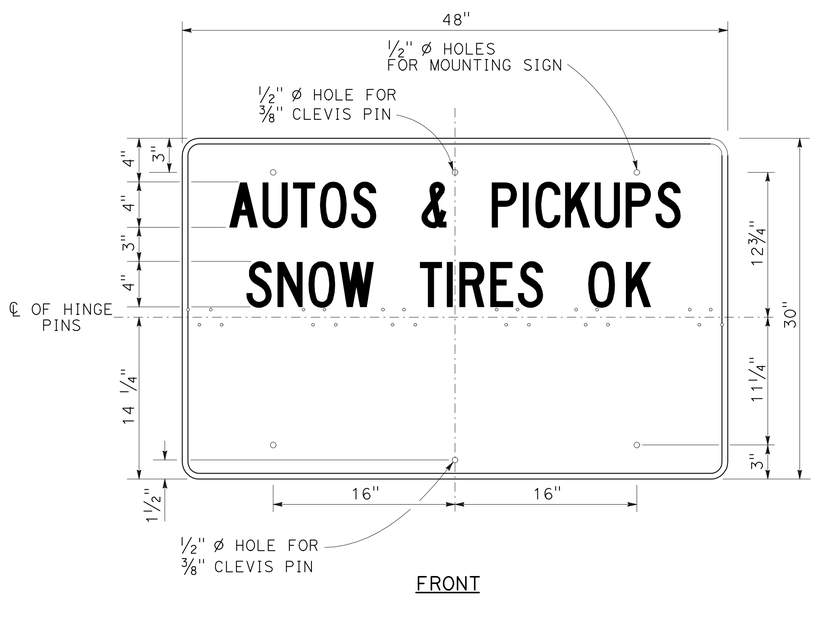

PANEL 1

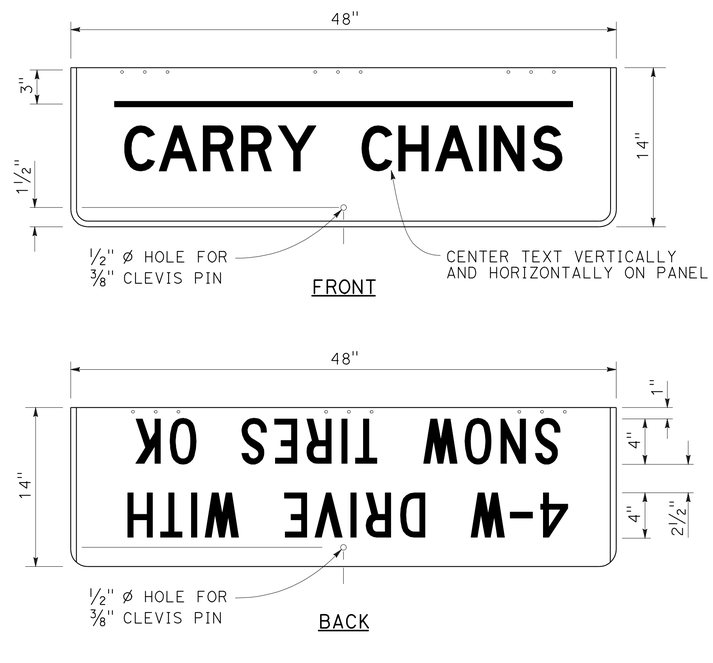

PANEL 2

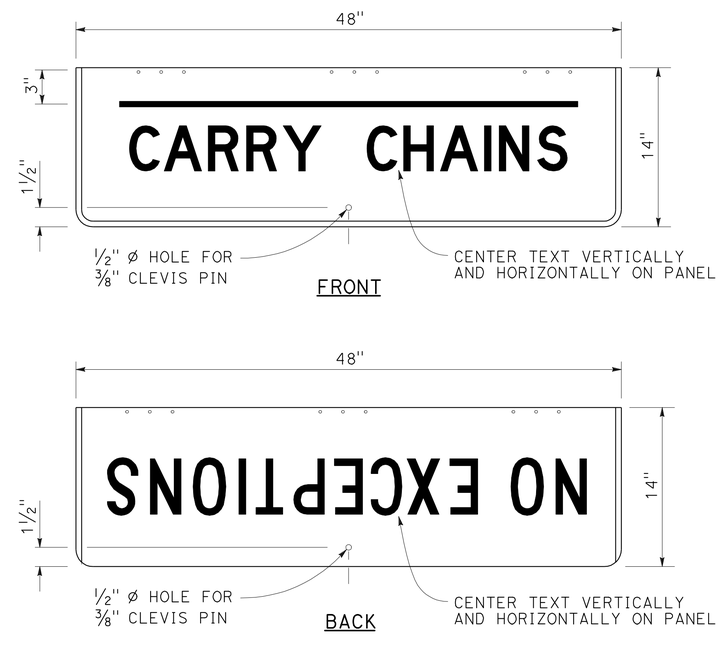

PANEL 3

SIGN DETAILS

NO SCALE **SD-2**

STATE OF CALIFORNIA - DEPARTMENT OF TRANSPORTATION
Caltrans® TRAFFIC OPERATIONS

FUNCTIONAL SUPERVISOR: TERRY ERLWEIN
CALCULATED-DESIGNED BY: JOEL NASH
CHECKED BY: DONNA HOLLAND
REVISED BY
DATE REVISED

LAST REVISION 07-16-10
DATE PLOTTED => 23-SEP-2010
TIME PLOTTED => 17:49

Dist	COUNTY	ROUTE	POST MILES TOTAL PROJECT	SHEET No.	TOTAL SHEETS
09	Mno	395	78.8/80.6	29	52

REGISTERED CIVIL ENGINEER 7-15-10 DATE

9-20-10
PLANS APPROVAL DATE

REGISTERED PROFESSIONAL ENGINEER TERESA ERLWEIN No. 61355 Exp. 6-30-11 CIVIL STATE OF CALIFORNIA

THE STATE OF CALIFORNIA OR ITS OFFICERS OR AGENTS SHALL NOT BE RESPONSIBLE FOR THE ACCURACY OR COMPLETENESS OF SCANNED COPIES OF THIS PLAN SHEET.

NOTES:

1. HINGE SHALL BE A STAINLESS STEEL PIANO HINGE AND MEET THE FOLLOWING SPECIFICATIONS:
   - GUAGE: 0.09 in
   - OPEN WIDTH: 2 in
   - PIN DIAMETER: 0.25 in
   - KNUCKLE: 1 in
2. RIVETS SHALL BE 0.125 in DIAMETER, DOME HEAD, HOLLOW CORE, ALLUMINUM, OPEN END BLIND RIVETS.
3. RIVET LENGTH SHALL BE SELECTED BASED ON COMBINED THICKNESS OF HINGE AND SIGN PANEL.

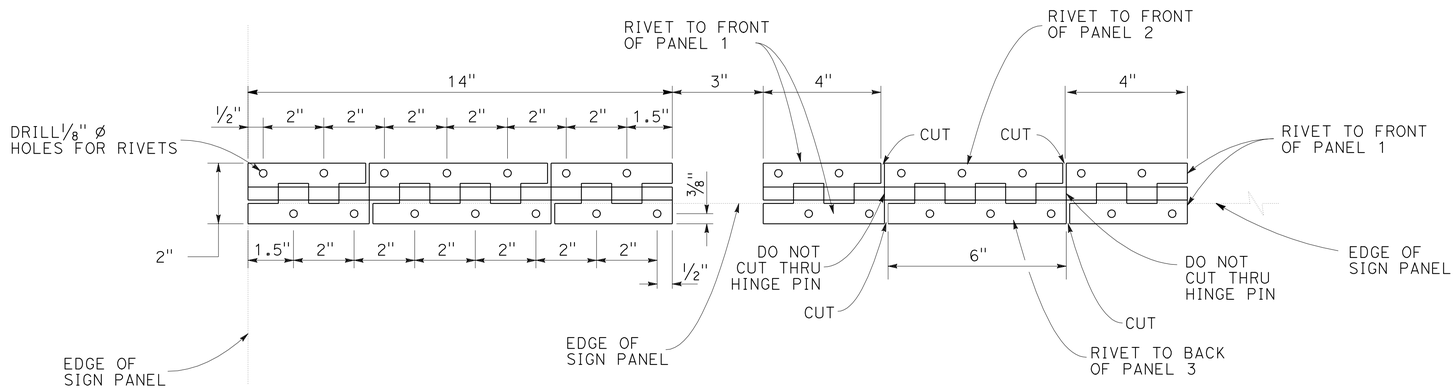

HINGE DETAILS (Typ)

SIGN DETAILS

NO SCALE

SD-3

STATE OF CALIFORNIA - DEPARTMENT OF TRANSPORTATION
Caltrans® TRAFFIC OPERATIONS

FUNCTIONAL SUPERVISOR: TERRY ERLWEIN
CALCULATED-DESIGNED BY: JOEL NASH
CHECKED BY: DONNA HOLLAND
REVISED BY
DATE REVISED

LAST REVISION 07-16-10 | DATE PLOTTED => 23-SEP-2010 | TIME PLOTTED => 17:49

Dist	COUNTY	ROUTE	POST MILES TOTAL PROJECT	SHEET No.	TOTAL SHEETS
09	Mno	395	78.8/80.6	30	52

Teresa Erlwein PE 7-15-10
REGISTERED CIVIL ENGINEER DATE

9-20-10
PLANS APPROVAL DATE

REGISTERED PROFESSIONAL ENGINEER TERESA ERLWEIN No. 61355 Exp. 6-30-11 CIVIL STATE OF CALIFORNIA

THE STATE OF CALIFORNIA OR ITS OFFICERS OR AGENTS SHALL NOT BE RESPONSIBLE FOR THE ACCURACY OR COMPLETENESS OF SCANNED COPIES OF THIS PLAN SHEET.

NOTES:

1. EXACT LOCATION OF SIGN SHALL BE DETERMINED BY THE ENGINEER.
2. ALL PARTS SHALL BE PAINTED WITH ONE COAT OF RUST RESISTANT PRIMER AND TWO COATS OF YELLOW GLOSS ENAMEL.
3. HARDWARE TO BE SUPPLIED BY THE CONTRACTOR.
4. STANDARD 1/8" PIPE FITTING TO BE SUPPLIED BY THE CONTRACTOR (GREASE ZERK).
5. DRILL 1/2" HOLES AS NECESSARY TO MOUNT SIGN PANEL TO FRAME.

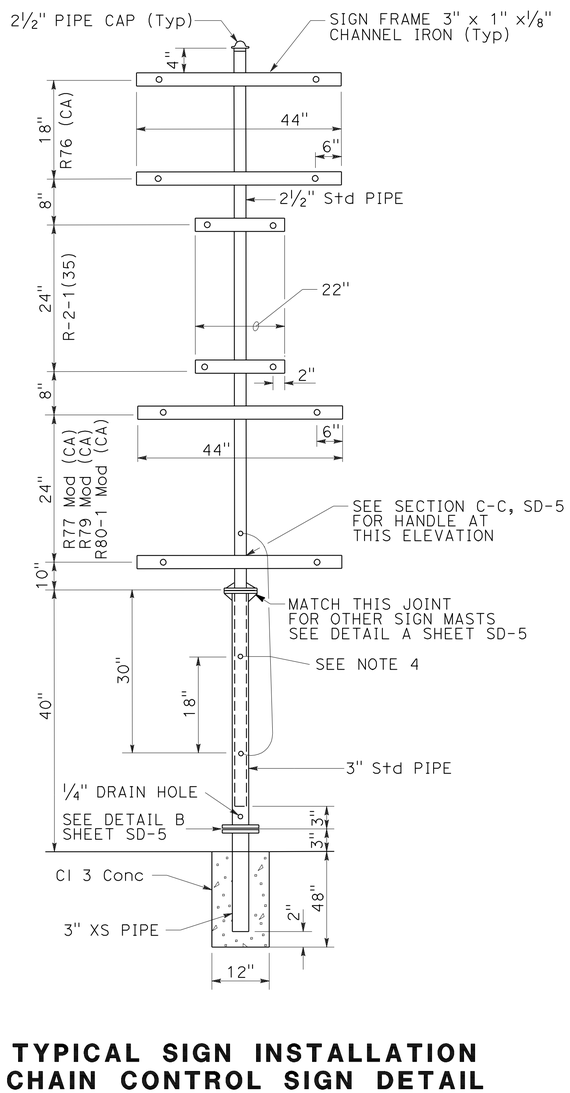

TYPICAL SIGN INSTALLATION CHAIN CONTROL SIGN DETAIL
SHOWN WITH SIGN MAST

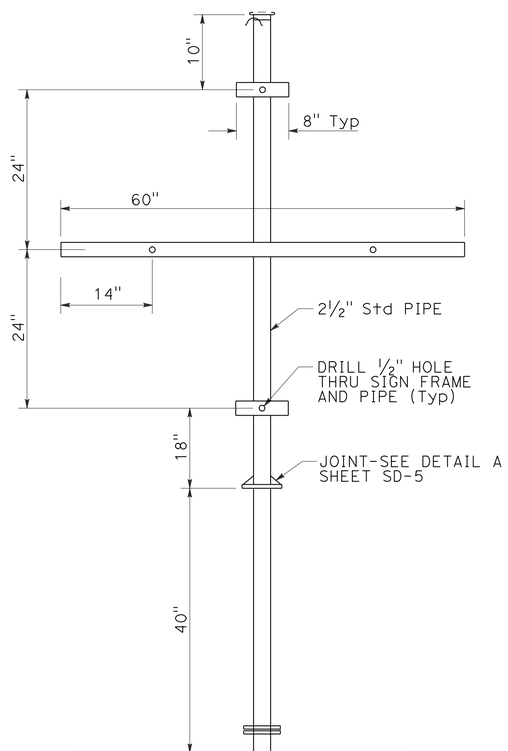

SIGN MAST SLIPPERY WHEN WET

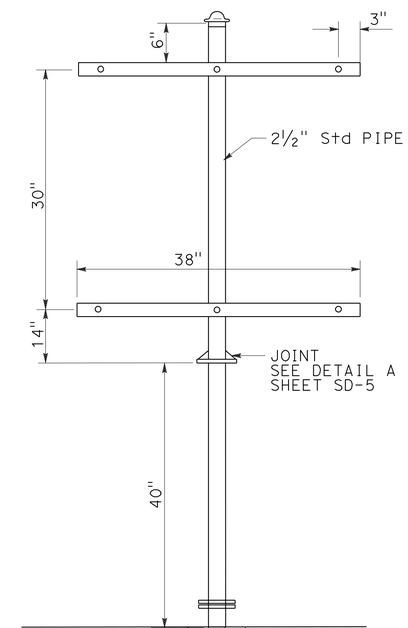

SIGN MAST END CHAIN CONTROL

SIGN DETAILS
NO SCALE **SD-4**

STATE OF CALIFORNIA - DEPARTMENT OF TRANSPORTATION
Caltrans® **TRAFFIC OPERATIONS**

FUNCTIONAL SUPERVISOR: TERRY ERLWEIN
CALCULATED-DESIGNED BY: JOEL NASH
CHECKED BY: DONNA HOLLAND
REVISED BY
DATE REVISED

LAST REVISION 07-16-10 | DATE PLOTTED => 23-SEP-2010 | TIME PLOTTED => 17:49

Dist	COUNTY	ROUTE	POST MILES TOTAL PROJECT	SHEET No.	TOTAL SHEETS
09	Mno	395	78.8/80.6	31	52

Teresa Erlwein PE 7-15-10
REGISTERED CIVIL ENGINEER DATE

9-20-10
PLANS APPROVAL DATE

REGISTERED PROFESSIONAL ENGINEER TERESA ERLWEIN No. 61355 Exp. 6-30-11 CIVIL STATE OF CALIFORNIA

THE STATE OF CALIFORNIA OR ITS OFFICERS OR AGENTS SHALL NOT BE RESPONSIBLE FOR THE ACCURACY OR COMPLETENESS OF SCANNED COPIES OF THIS PLAN SHEET.

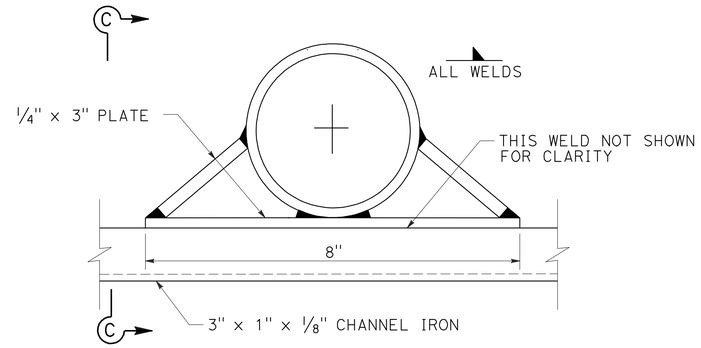

SIGN FRAME DETAIL (Typ)

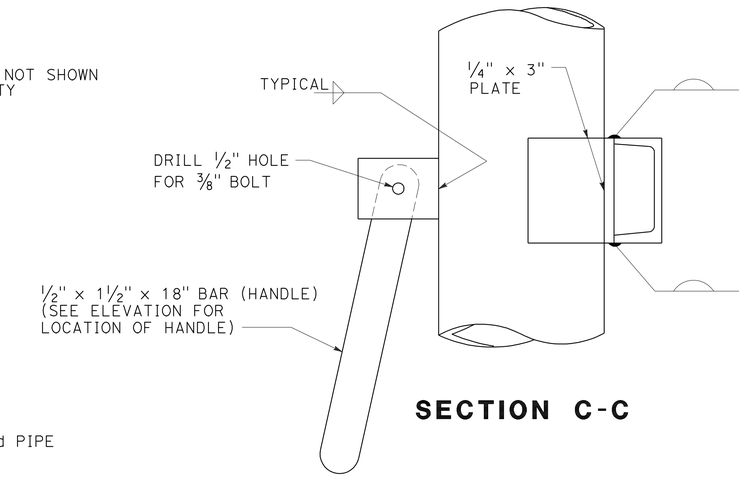

SECTION C-C

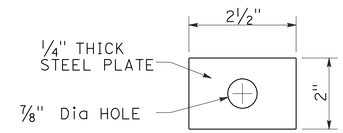

PLATE WASHER

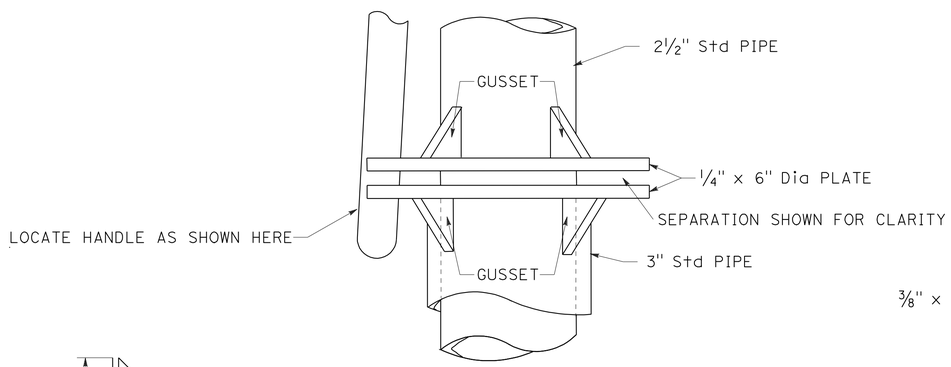

ELEVATION

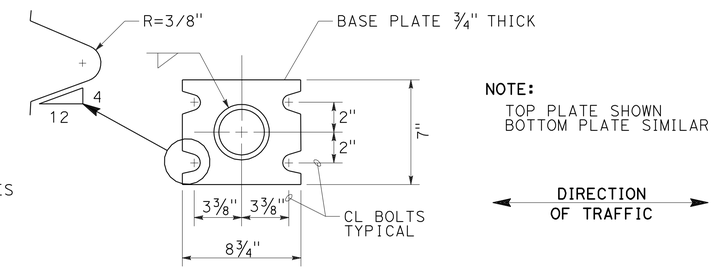

NOTE:
TOP PLATE SHOWN
BOTTOM PLATE SIMILAR

DIRECTION OF TRAFFIC

SECTION B-B
BREAKAWAY PLATE

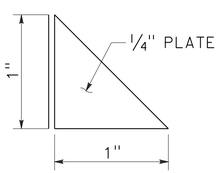

GUSSET

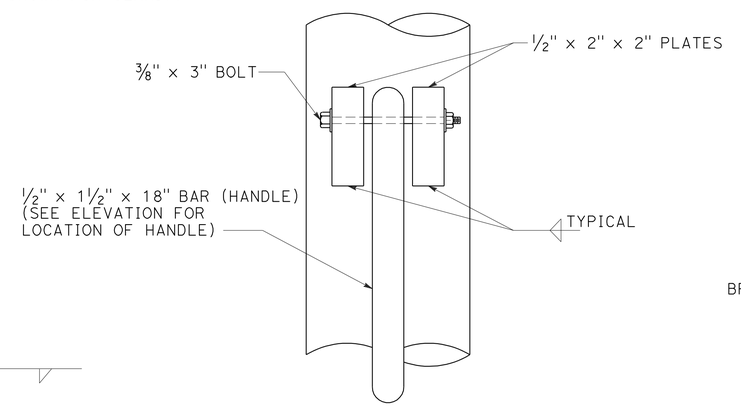

HANDLE DETAIL

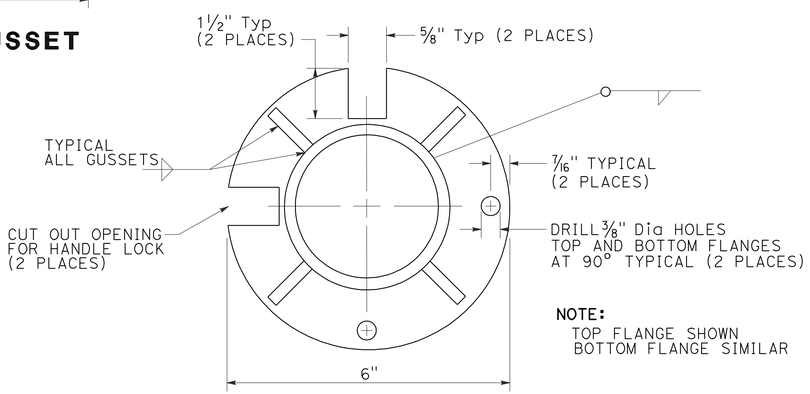

NOTE:
TOP FLANGE SHOWN
BOTTOM FLANGE SIMILAR

PLAN
LOCKING FLANGE
DETAIL A

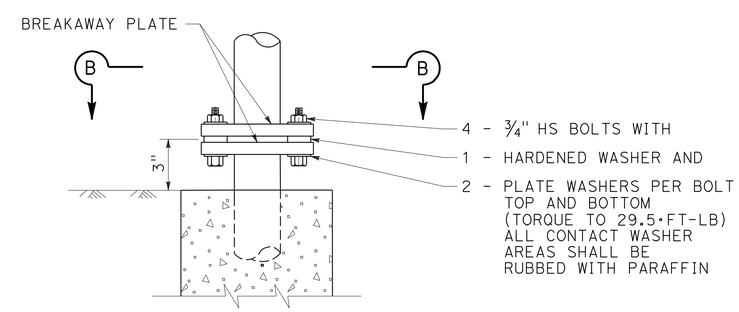

ELEVATION
DETAIL-B

SIGN DETAILS

NO SCALE **SD-5**

STATE OF CALIFORNIA - DEPARTMENT OF TRANSPORTATION
Caltrans® TRAFFIC OPERATIONS

FUNCTIONAL SUPERVISOR: TERRY ERLWEIN
CALCULATED-DESIGNED BY: JOEL NASH
CHECKED BY: DONNA HOLLAND
REVISED BY
DATE REVISED

LAST REVISION 07-16-10
DATE PLOTTED => 23-SEP-2010
TIME PLOTTED => 17:50

Dist	COUNTY	ROUTE	POST MILES TOTAL PROJECT	SHEET No.	TOTAL SHEETS
09	Mno	395	78.8/80.6	32	52

Teresa Erlwein PE 7-15-10
REGISTERED CIVIL ENGINEER DATE

9-20-10
PLANS APPROVAL DATE

REGISTERED PROFESSIONAL ENGINEER TERESA ERLWEIN No. 61355 Exp. 6-30-11 CIVIL STATE OF CALIFORNIA

THE STATE OF CALIFORNIA OR ITS OFFICERS OR AGENTS SHALL NOT BE RESPONSIBLE FOR THE ACCURACY OR COMPLETENESS OF SCANNED COPIES OF THIS PLAN SHEET.

NOTES:

1. EXACT LOCATION OF ROADSIDE SIGNS TO BE DETERMINED BY THE ENGINEER.
2. EXISTING SIGN PANELS AND TURNABLE SIGN MASTS AND STEEL PORTION OF FOUNDATION TO BE REMOVED SHALL BE SALVAGED.

SIGN SUMMARY

SIGN NUMBER	STATION	LEFT	RIGHT	CODE	MESSAGE	SIZE (L x D)	REMOVE ROADSIDE SIGN (EA)	RELOCATE ROADSIDE SIGN (EA)	ROADSIDE SIGN (ONE POST) (EA)	ROADSIDE SIGN (TWO POST) (EA)	ROADSIDE SIGN (TURNABLE METAL POST) (EA)	FURNISH SINGLE SHEET ALUMINUM SIGN 0.080"-UNFRAMED (SQFT)	FURNISH SINGLE SHEET ALUMINUM SIGN 0.080"-FRAMED (SQFT)	SINGLE FACED	DOUBLE FACED	BACKGROUND SHEETING COLOR	BACKGROUND RETROREFLECTIVE ASTM TYPE	LEGEND SHEETING COLOR	LEGEND RETROREFLECTIVE ASTM TYPE	GRAFFITI FILM STANDARD	GRAFFITI FILM PREMIUM	POSTS SIZE	FNBT	FSBT	FEBT	FWBT	REMARK
1	113+05		X	G11-5 (CA)	SOUTH BRANCH ROBINSON CREEK	44" x 24"	1		1			7.34		X		WHITE	II	BLACK			X	4" x 6"	X				SIGN SHALL HAVE 2 BRACES
2	113+50	X		G11-5 (CA)	SOUTH BRANCH ROBINSON CREEK	44" x 24"	1		1			7.34		X		WHITE	II	BLACK			X	4" x 6"		X			SIGN SHALL HAVE 2 BRACES
3	118+85		X	G11-5 (CA)	NORTH BRANCH ROBINSON CREEK	44" x 24"	1		1			7.34		X		WHITE	II	BLACK			X	4" x 6"	X				SIGN SHALL HAVE 2 BRACES
4	119+30	X		G11-5 (CA)	NORTH BRANCH ROBINSON CREEK	44" x 24"	1		1			7.34		X		WHITE	II	BLACK			X	4" x 6"		X			SIGN SHALL HAVE 2 BRACES
5	122+20	X		W8-5	SLIPPERY WHEN WET	48" x 48"	1				1	16.00		X		YELLOW	III	BLACK		X		TURNABLE		X			
6	129+95		X	G11-5 (CA)	MIDDLE BRANCH BUCKEYE CREEK	44" x 24"	1		1			7.34		X		WHITE	II	BLACK			X	4" x 6"	X				SIGN SHALL HAVE 2 BRACES
7	130+50	X		G11-5 (CA)	MIDDLE BRANCH BUCKEYE CREEK	44" x 24"	1		1			7.34		X		WHITE	II	BLACK			X	4" x 6"		X			SIGN SHALL HAVE 2 BRACES
8	137+15		X	G11-5 (CA)	NORTH BRANCH BUCKEYE CREEK	44" x 24"	1		1			7.34		X		WHITE	II	BLACK			X	4" x 6"	X				SIGN SHALL HAVE 2 BRACES
9	137+20	X		G11-5 (CA)	NORTH BRANCH BUCKEYE CREEK	44" x 24"	1		1			7.34		X		WHITE	II	BLACK			X	4" x 6"		X			SIGN SHALL HAVE 2 BRACES
10	144+20	X		G5 (CA)	BRIDGEPORT LEE VINING LA	126" x 48"	1			1			42.00	X		GREEN	III	WHITE	IV		X	6" x 8"		X			
11	160+00	X		SG	REPORT DRUNK DRIVERS	-		1														-		X			RESET AT SAME STATION
12	171+50		X	W11-2	PEDESTRIAN SYMBOL	36" x 36"			1			9.00		X		YELLOW	III	BLACK		X		4" x 6"	X				
13	173+20	X		W8-5	SLIPPERY WHEN WET	-	1															-		X			REMOVE TURNABLE
14	181+40		X	R76 (CA)	CHAINS REQUIRED	48" x 24"	1				1	8.00		X		BLACK		WHITE	III		X	TURNABLE	X				SEE HINGED CHAIN
				R2-1 (35)	SPEED LIMIT 35	24" x 30"						5.00		X		WHITE	III	BLACK		X			X				CONTROL PACKAGE DETAIL
				R79 Mod (CA)	AUTOS AND PICKUPS	48" x 30"						10.00		X		BLACK		WHITE	III		X		X				SD-2, SD-3
				R80-1 Mod (CA)	4-W DRIVE/SNOW TIRES	48" x 14"						4.67			X	BLACK		WHITE	III		X		X				
				R77 Mod (CA)	NO EXCEPTIONS	48" x 14"						4.67			X	BLACK		WHITE	III		X		X				
15	182+65	X		R78 (CA)	END CHAIN CONTROL	48" x 34"	1				1	11.33		X		BLACK		WHITE	III		X	TURNABLE		X			
16	186+35		X	W8-5	SLIPPERY WHEN WET	48" x 48"					1	16.00		X		YELLOW	III	BLACK		X		TURNABLE	X				
17	187+00	X	X	S32, S32-1 (CA)	ADOPT-A-HIGHAY	-		1														-	X	X			RELOCATE FROM R+ TO L+
18	189+25		X	W2-1	INTERSECTION	36" x 36"	1		1			9.00		X		YELLOW	III	BLACK		X		6" x 6"	X				
				G8 Mod (CA)	BUCKEYE ROAD	42" x 18"						5.25		X		YELLOW	III	BLACK			X		X				
19	190+00	X		W11-2	PEDESTRIAN SYMBOL	36" x 36"			1			9.00		X		YELLOW	III	BLACK		X		4" x 6"		X			
20	193+60	X		R1-1	STOP	36" x 36"	1		1			9.00		X		RED	VII	WHITE	VII	X		4" x 6"			X		
21	194+40		X	R1-1	STOP	36" x 36"	1		1			9.00		X		RED	VII	WHITE	VII	X		4" x 6"				X	
22	199+00	X		W2-1	INTERSECTION	36" x 36"	1		1			9.00		X		YELLOW	III	BLACK		X		6" x 6"		X			
				G8 Mod (CA)	BUCKEYE ROAD	42" x 18"						5.25		X		YELLOW	III	BLACK			X			X			
						TOTAL	17	2	14	1	4	198.89	42														

SIGN QUANTITIES

NO SCALE

SQ-1

JOEL NASH — REVISED BY
DONNA HOLLAND — DATE REVISED
CALCULATED-DESIGNED BY
CHECKED BY
FUNCTIONAL SUPERVISOR
TERRY ERLWEIN

STATE OF CALIFORNIA - DEPARTMENT OF TRANSPORTATION
Caltrans® TRAFFIC OPERATIONS

LAST REVISION 07-16-10 | DATE PLOTTED => 23-SEP-2010 | TIME PLOTTED => 17:50

Dist	COUNTY	ROUTE	POST MILES TOTAL PROJECT	SHEET No.	TOTAL SHEETS
09	Mno	395	78.8/80.6	33	52

REGISTERED CIVIL ENGINEER 7-15-10 DATE

9-20-10
PLANS APPROVAL DATE

REGISTERED PROFESSIONAL ENGINEER STEPHEN WINZENREAD No. 64274 Exp. 6-30-11 CIVIL STATE OF CALIFORNIA

THE STATE OF CALIFORNIA OR ITS OFFICERS OR AGENTS SHALL NOT BE RESPONSIBLE FOR THE ACCURACY OR COMPLETENESS OF SCANNED COPIES OF THIS PLAN SHEET.

EROSION CONTROL

STATION TO STATION	NB	SB	EROSION CONTROL (PUNCHED STRAW)	ROLLED EROSION CONTROL PRODUCT (BLANKET)	EROSION CONTROL (SEEDING)
			SQFT	SQFT	SQFT
102+00 TO 102+20	X		135		
103+00 TO 104+70	X		360		
106+70 TO 107+80	X		180		
109+70 TO 112+40		X		3825	3825
112+90 TO 113+10		X		315	315
113+50 TO 113+60		X	54		
114+30 TO 115+10	X		225		
116+00 TO 116+70		X		540	540
116+20 TO 117+40	X		270		
117+30 TO 117+50		X	135		
117+60 TO 118+10	X		180		
138+30 TO 139+10		X		990	990
141+60 TO 149+40	X		1755		
141+70 TO 142+40		X		648	648
144+70 TO 150+60		X	3465		
149+80 TO 151+70	X		405		
151+20 TO 151+50		X	135		
152+70 TO 172+90	X		7515		
153+10 TO 154+30		X	639		
155+20 TO 155+60		X	225		
156+50 TO 157+60		X	675		
158+00 TO 166+20		X	4455		
173+60 TO 174+00		X	45		
174+30 TO 174+80	X		63		
TOTAL			20,916	6318	6318

TEMPORARY FIBER ROLL AND TEMPORARY FENCE (TYPE ESA)

STATION TO STATION	NB	SB	TEMPORARY FENCE (TYPE ESA)	TEMPORARY FIBER ROLL
			LF	LF
102+00 TO 113+16	X		1,116	1,116
113+37 TO 118+91	X		577	577
119+23 TO 130+10	X		1,087	1,087
130+43 TO 131+90	X		150	150
132+14 TO 137+29	X		515	515
137+65 TO 173+97	X		3,656	3,656
174+38 TO 174+75	X		54	54
105+80 TO 106+20		X	53	53
109+44 TO 113+06		X	382	382
113+40 TO 118+91		X	562	562
119+23 TO 130+14		X	1,095	1,095
130+43 TO 136+94		X	670	670
137+27 TO 170+93		X	3,374	3,374
171+19 TO 174+75		X	423	423
183+48 TO 190+10		X	673	673
191+94 TO 192+50		X	62	62
TOTAL			14,449	14,449

CULVERT MARKER

STATION	Lt	Rt	EA
109+26	X		1
109+58		X	1
121+79	X		1
121+81		X	1
123+38		X	1
123+39	X		1
132+35	X		1
132+72		X	1
143+95	X		1
144+00		X	1
173+23	X	X	2
182+72	X		1
182+93		X	1
TOTAL			14

RUMBLE STRIP

STATION	TO	STATION	Length LF (N)	Lt Sta	Rt Sta
100+92	TO	105+56	464	4.64	4.64
105+56	TO	106+30	74		0.74
106+30	TO	108+65	235	2.35	2.35
108+65	TO	109+35	70		0.70
109+35	TO	131+68	2233	22.33	22.33
131+68	TO	132+38	70	0.70	
132+38	TO	170+71	3833	38.33	38.33
170+71	TO	171+41	70		0.70
171+41	TO	173+79	238	2.38	2.38
173+79	TO	174+49	70	0.70	
174+49	TO	178+95	446	4.46	4.46
178+95	TO	179+65	70	0.70	
179+65	TO	193+19	1354	13.54	13.54
193+19	TO	193+75	56		0.56
SUBTOTAL				90.13	90.73
TOTAL				180.86	

(N) - NOT A SEPARATE PAY ITEM, FOR INFORMATION ONLY

METAL BEAM GUARD RAILING AND CONCRETE BARRIER

STATION TO STATION LOCATION	BRIDGE No.	BRIDGE NAME	TRANSITION RAILING (TYPE WB)	ALTERNATIVE FLARED TERMINAL SYSTEM	CONCRETE BARRIER	REMOVE CONCRETE
			EA	EA	LF	LF
112+40 TO 114+11	47-0032	SOUTH BRANCH ROBINSON CREEK	4	4	14	7.2
118+28 TO 119+86	47-0033	NORTH BRANCH ROBINSON CREEK	4	4	14	7.2
129+47 TO 131+05	47-0036	MIDDLE BRANCH BUCKEYE CREEK	4	4	14	7.2
136+28 TO 137+92	47-0034	NORTH BRANCH BUCKEYE CREEK	4	4	14	7.2
		TOTAL	16	16	56	28.8

ROADWAY QUANTITIES

STATION TO STATION LOCATION	SALVAGE MBGR	ROADWAY EXCAVATION	CLASS 2 AB	HMA (TYPE A)	TACK COAT	HMA DIKE (TYPE E)	DUFF	EMBANKMENT	ASPHALTIC EMULSION (POLYMER MODIFIED)	SCREENINGS (MEDIUM)	ASPHALTIC EMULSION (FOG SEAL COAT)	SAND COVER
	LF	CY	CY	TON	TON	LF	SQYD	CY (N)	TON	TON	TON	TON
100+92 TO 118+20		665	384	1110	0.23		1762	1083				
138+00 TO 195+64		2452	1161	3410	0.77	430	2009	1099				
100+00 TO 195+64	1280								50	420	7	55
TOTAL	1280	3117	1545	4520	1	430	3771	2316	50	420	7	55

(N) - NOT A SEPARATE PAY ITEM, FOR INFORMATION ONLY.

SUMMARY OF QUANTITIES
Q-1

STATE OF CALIFORNIA - DEPARTMENT OF TRANSPORTATION
Caltrans® DESIGN

FUNCTIONAL SUPERVISOR: RORY QUINCE
CALCULATED-DESIGNED BY: ADAM ZUMSTEIN
CHECKED BY: STEPHEN WINZENREAD
REVISED BY / DATE REVISED

LAST REVISION 07-16-10
DATE PLOTTED => 23-SEP-2010
TIME PLOTTED => 17:50

Dist	COUNTY	ROUTE	POST MILES TOTAL PROJECT	SHEET No.	TOTAL SHEETS
09	Mno	395	78.8/80.6	34	52

REGISTERED ELECTRICAL ENGINEER 7-15-10 DATE

9-20-10
PLANS APPROVAL DATE

REGISTERED PROFESSIONAL ENGINEER MITCHELL NGO No. 18920 Exp. 12-01-11 ELECTRICAL STATE OF CALIFORNIA

THE STATE OF CALIFORNIA OR ITS OFFICERS OR AGENTS SHALL NOT BE RESPONSIBLE FOR THE ACCURACY OR COMPLETENESS OF SCANNED COPIES OF THIS PLAN SHEET.

NOTES:

1 COIL 6′ OF LOOP CONDUCTORS IN EXISTING TYPE M CABINET.

2 DETECTOR LOOPS SHALL BE INSTALLED WITH 4 TURNS OF LOOP CONDUCTOR.

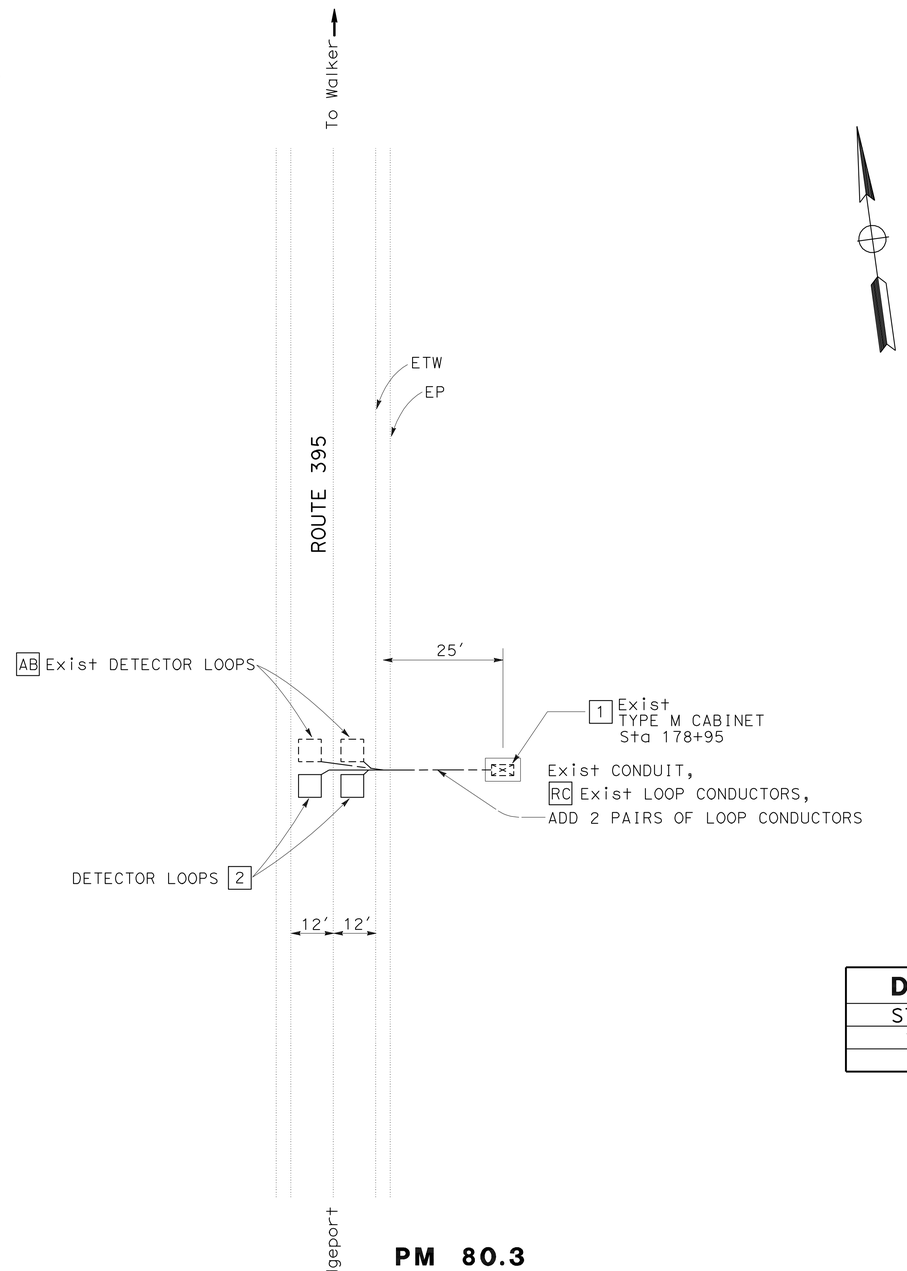

PM 80.3

DETECTOR LOOP	
STATION	EA
178+95	2
TOTAL	2

THIS PLAN IS ACCURATE FOR ELECTRICAL WORK ONLY.

DETECTOR LOOP

NO SCALE

E-1

STATE OF CALIFORNIA - DEPARTMENT OF TRANSPORTATION
Caltrans® TRAFFIC OPERATIONS

FUNCTIONAL SUPERVISOR: TERRY ERLWEIN

CALCULATED-DESIGNED BY: MITCHELL NGO
CHECKED BY: RANDALL WEICHE

REVISED BY
DATE REVISED

LAST REVISION 07-16-10
DATE PLOTTED => 23-SEP-2010
TIME PLOTTED => 17:50

DIST	COUNTY	ROUTE	POST MILES TOTAL PROJECT	SHEET NO.	TOTAL SHEETS
09	Mno	395	78.8/80.6	35	52

Randell D. Hiatt
REGISTERED CIVIL ENGINEER

June 6, 2008
PLANS APPROVAL DATE

REGISTERED PROFESSIONAL ENGINEER
Randell D. Hiatt
No. C50200
Exp. 6-30-09
CIVIL
STATE OF CALIFORNIA

The State of California or its officers or agents shall not be responsible for the accuracy or completeness of electronic copies of this plan sheet.

To accompany plans dated 9-20-10

NOTES:

1. When necessary to place dike in front of face of guard railing, only Type C dike may be used. For dike details, see Standard Plan A87B.
2. For standard railing post embedment, see Standard Plans A77C3.
3. Guard railing delineation to be used where shown on the Project Plans.
4. When dike or curb is placed under guard railing, the maximum height of the dike or curb shall be 4". Mountable dike should not be used. For dike and curb details, see Revised Standard Plans RSP A87A and Standard Plan A87B.
5. For details of typical distance between the face of rail and hinge point, see Standard Plan A77C3.

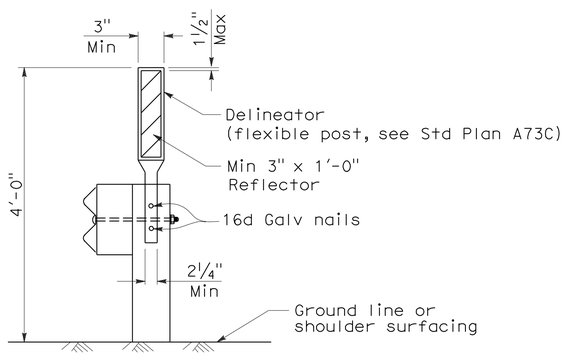

GUARD RAILING DELINEATION

See Note 3

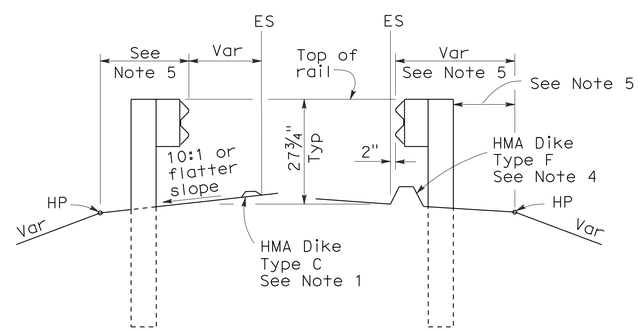

DIKE POSITIONING

See Note 1

STATE OF CALIFORNIA
DEPARTMENT OF TRANSPORTATION

METAL BEAM GUARD RAILING TYPICAL RAILING DELINEATION AND DIKE POSITIONING DETAILS

NO SCALE

RSP A77C4 DATED JUNE 6, 2008 SUPERSEDES STANDARD PLAN A77C4
DATED MAY 1, 2006 - PAGE 47 OF THE STANDARD PLANS BOOK DATED MAY 2006.

REVISED STANDARD PLAN RSP A77C4

2006 REVISED STANDARD PLAN RSP A77C4

12-10-07

DIST	COUNTY	ROUTE	POST MILES TOTAL PROJECT	SHEET NO.	TOTAL SHEETS
09	Mno	395	78.8/80.6	36	52

Randell D. Hiatt
REGISTERED CIVIL ENGINEER

June 6, 2008
PLANS APPROVAL DATE

REGISTERED PROFESSIONAL ENGINEER
Randell D. Hiatt
No. C50200
Exp. 6-30-09
CIVIL
STATE OF CALIFORNIA

The State of California or its officers or agents shall not be responsible for the accuracy or completeness of electronic copies of this plan sheet.

To accompany plans dated 9-20-10

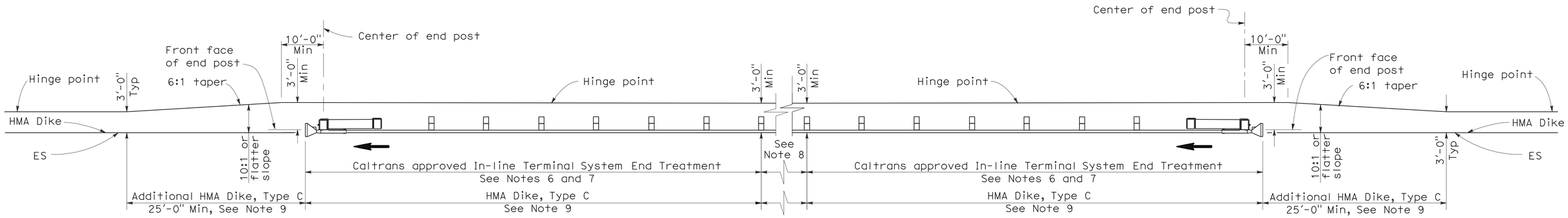

TYPE 11D LAYOUT

(EMBANKMENT GUARD RAILING INSTALLATION WITH IN-LINE END TREATMENT AT EACH END OF RAILING)
See Note 5

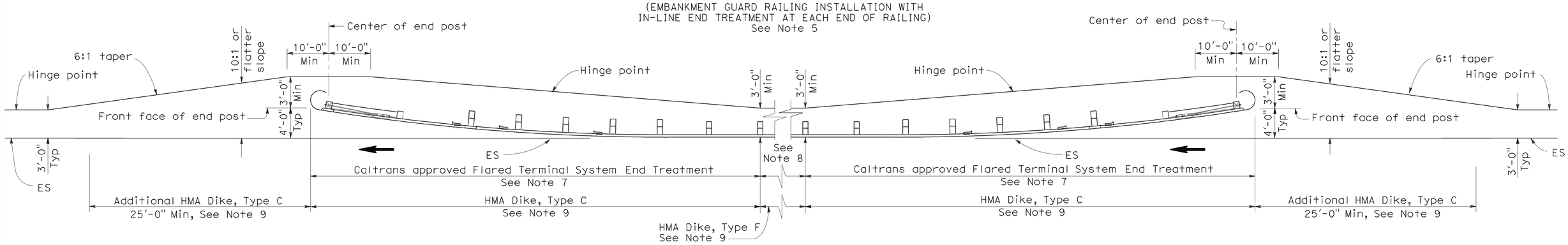

TYPE 11E LAYOUT

(EMBANKMENT GUARD RAILING INSTALLATION WITH FLARED END TREATMENT AT EACH END OF RAILING)
See Note 5

NOTES:

1. Line post, blocks and hardware to be used are shown on Standard Plans A77A1, A77A2, A77B1, A77C1 and A77C2.
2. Guard rail post spacing to be 6'-3" center to center, except as otherwise noted.
3. Except as noted, line posts are 6" x 8" x 6'-0" wood with 6" x 8" x 1'-2" wood blocks. W6 x 9 steel posts, 6'-0" in length, with 6" x 8" x 1'-2" notched wood blocks or plastic blocks may be used for 6" x 8" x 6'-0" wood post with 6" x 8" x 1'-2" wood blocks where applicable and when specified.
4. Direction of adjacent traffic indicated by ➡.
5. Layout Types 11D through 11L, shown on the A77E Series of Revised Standard Plans, are typically used where guard railing is recommended to shield embankment slopes and a crashworthy end treatment is required for both directions of traffic.
6. In-line Terminal System End Treatments are used where site conditions will not accommodate a flared end treatment.
7. The type of terminal system end treatment to be used will be shown on the Project Plans.
8. Dependent on site conditions (embankment height and side slope), construction of additional guard railing (length equal to multiples of 12'-6" with 6'-3" post spacing) may be advisable.
9. Where placement of dike is required with guard railing installations, see Revised Standard Plan RSP A77C4 for dike positioning details.

STATE OF CALIFORNIA
DEPARTMENT OF TRANSPORTATION

METAL BEAM GUARD RAILING TYPICAL LAYOUTS FOR EMBANKMENTS

NO SCALE

RSP A77E2 DATED JUNE 6, 2008 SUPERSEDES STANDARD PLAN A77E2
DATED MAY 1, 2006 - PAGE 49 OF THE STANDARD PLANS BOOK DATED MAY 2006.

REVISED STANDARD PLAN RSP A77E2

2006 REVISED STANDARD PLAN RSP A77E2

12-10-07

DIST	COUNTY	ROUTE	POST MILES TOTAL PROJECT	SHEET NO.	TOTAL SHEETS
09	Mno	395	78.8/80.6	37	52

Randell D. Hiatt
REGISTERED CIVIL ENGINEER

June 6, 2008
PLANS APPROVAL DATE

REGISTERED PROFESSIONAL ENGINEER
Randell D. Hiatt
No. C50200
Exp. 6-30-09
CIVIL
STATE OF CALIFORNIA

The State of California or its officers or agents shall not be responsible for the accuracy or completeness of electronic copies of this plan sheet.

To accompany plans dated 9-20-10

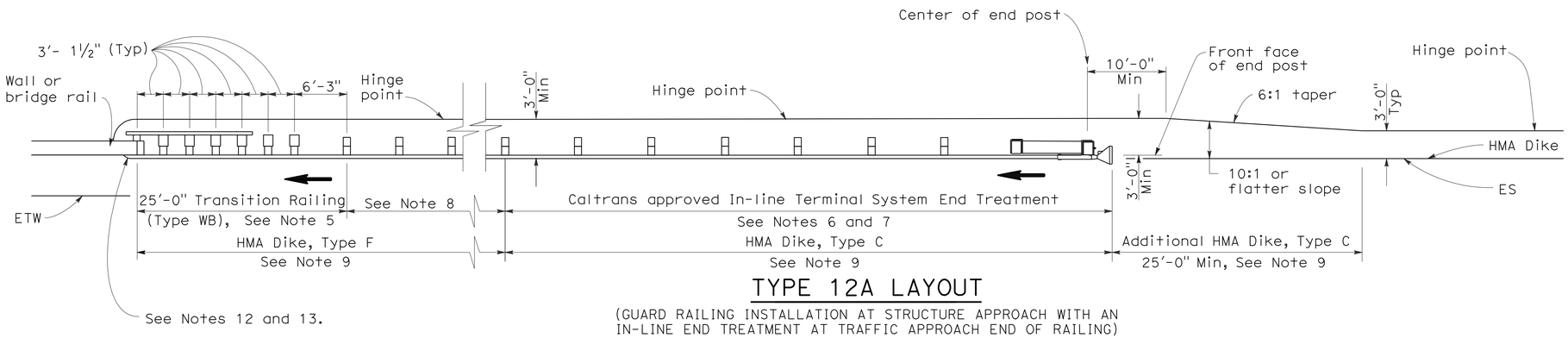

TYPE 12A LAYOUT

(GUARD RAILING INSTALLATION AT STRUCTURE APPROACH WITH AN IN-LINE END TREATMENT AT TRAFFIC APPROACH END OF RAILING)
See Notes 10

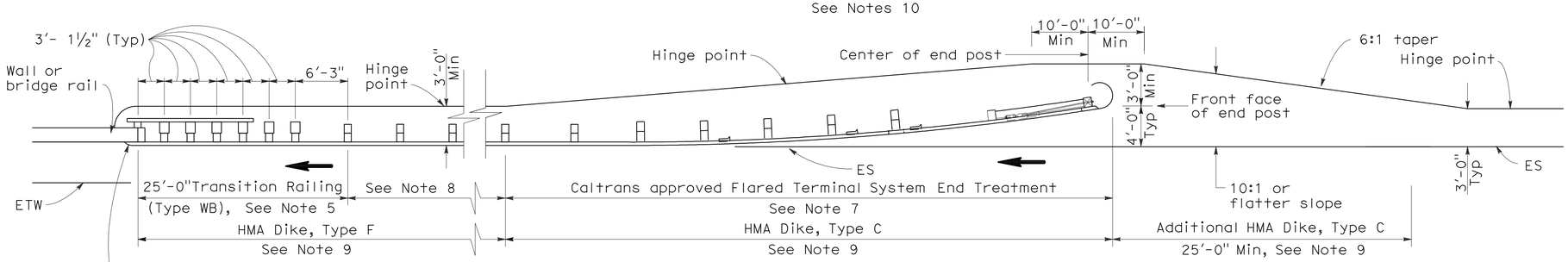

TYPE 12B LAYOUT

(GUARD RAILING INSTALLATION AT STRUCTURE APPROACH WITH A FLARED END TREATMENT AT TRAFFIC APPROACH END OF RAILING)
See Notes 10

NOTES:

1. Line post, blocks and hardware to be used are shown on Standard Plans A77A1, A77A2, A77B1, A77C1 and A77C2.
2. Guard rail post spacing to be 6'-3" center to center, except as otherwise noted.
3. Except as noted, line posts are 6" x 8" x 6'-0" wood with 6" x 8" x 1'-2" wood blocks. W6 x 9 steel posts, 6'-0" in length, with 6" x 8" x 1'-2" notched wood blocks or plastic blocks may be used for 6" x 8" x 6'-0" wood posts with 6" x 8" x 1'-2" wood blocks where applicable and when specified.
4. Direction of adjacent traffic indicated by ➡.
5. For Transition Railing (Type WB) details for Types 12A and 12B Layouts, see Standard Plan A77J4.
6. In-line Terminal System End Treatments are used where site conditions will not accommodate a flared end treatment.
7. The type of terminal system end treatment to be used will be shown on the Project Plans.
8. Dependent on site conditions (embankment height, side slopes, or other fixed objects), it may be advisable to construct additional guard railing (a length equal to multiples of 12'-6" with 6'-3" post spacing) between the transition railing and end treatment.
9. Where placement of dike is required with guard railing installations, see Revised Standard Plan RSP A77C4 for dike positioning details.
10. Type 12A or Type 12B Layouts are typically used:
    a. To the right of approaching traffic, at the end of a structure, on two-lane conventional highway where the roadbed width across the structure is less than 40 feet.
    b. To the left of approaching traffic, at the end of a structure, on two-lane conventional highway where the roadbed width across the structure is less than 40 feet.
    c. To the right of approaching traffic at the end of each structure on multilane freeways or expressways with separate adjacent or parallel bridges.
    d. To the right of approaching traffic at the end of the structure on multilane freeways or expressways with decked median on the bridge.
11. See Revised Standard Plan RSP A77F3 for typical layout used left of approaching traffic at the ends of each structure on multilane freeways or expressways with separate adjacent or parallel bridges.
12. For additional details of typical connections to bridge rail, see Connection Detail AA on Revised Standard Plans RSP A77J1 and RSP A77J2 and Connection Detail FF on Standard Plans A77K1 and A77K2.
13. For additional details of a typical connection to walls or abutments, see Standard Plan A77J3.

STATE OF CALIFORNIA
DEPARTMENT OF TRANSPORTATION

METAL BEAM GUARD RAILING TYPICAL LAYOUTS FOR STRUCTURE APPROACH

NO SCALE

RSP A77F1 DATED JUNE 6, 2008 SUPERSEDES STANDARD PLAN A77F1
DATED MAY 1, 2006 - PAGE 54 OF THE STANDARD PLANS BOOK DATED MAY 2006.

REVISED STANDARD PLAN RSP A77F1

2006 REVISED STANDARD PLAN RSP A77F1

12-10-07

DIST	COUNTY	ROUTE	POST MILES TOTAL PROJECT	SHEET NO.	TOTAL SHEETS
09	Mno	395	78.8/80.6	38	52

Randell D. Hiatt
REGISTERED CIVIL ENGINEER

June 6, 2008
PLANS APPROVAL DATE

REGISTERED PROFESSIONAL ENGINEER
Randell D. Hiatt
No. C50200
Exp. 6-30-09
CIVIL
STATE OF CALIFORNIA

The State of California or its officers or agents shall not be responsible for the accuracy or completeness of electronic copies of this plan sheet.

To accompany plans dated 9-20-10

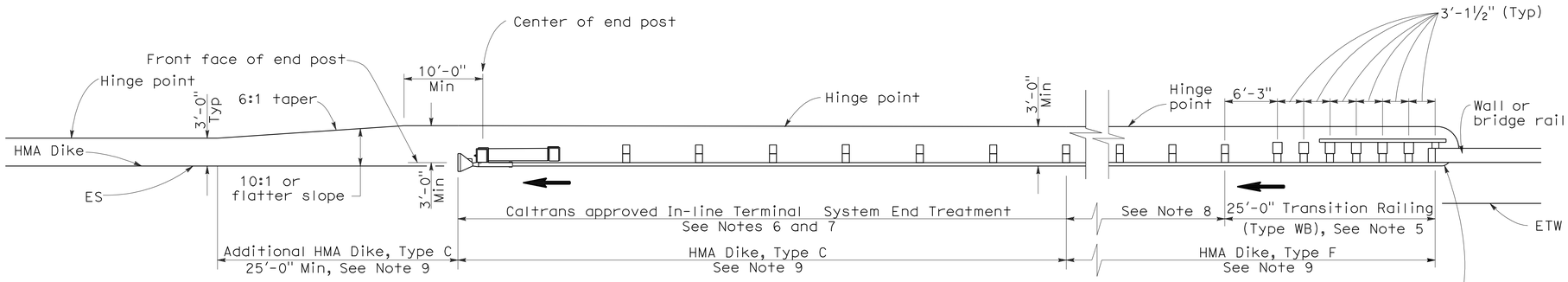

TYPE 12AA LAYOUT

(GUARD RAILING INSTALLATION AT STRUCTURE DEPARTURE WITH AN IN-LINE END TREATMENT AT TRAILING END OF RAILING)
See Notes 9 and 10

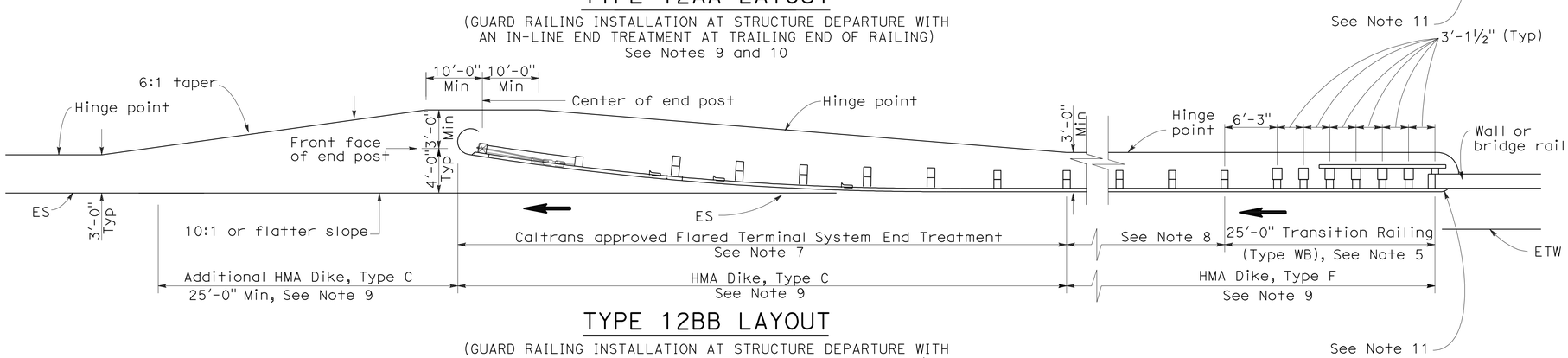

TYPE 12BB LAYOUT

(GUARD RAILING INSTALLATION AT STRUCTURE DEPARTURE WITH A FLARED END TREATMENT AT TRAILING END OF RAILING)
See Notes 9 and 10

NOTES:

1. Line post, blocks and hardware to be used are shown on Standard Plans A77A1, A77A2, A77B1, A77C1 and A77C2.
2. Guard rail post spacing to be 6'-3" center to center, except as otherwise noted.
3. Except as noted, line posts are 6" x 8" x 6'-0" wood with 6" x 8" x 1'-2" wood blocks. W6 x 9 steel posts, 6'-0" in length, with 6" x 8" x 1-2" notched wood blocks or notched recycled plastic blocks may be used for 6" x 8" x 6'-0" wood posts with 6" x 8" x 1'-2" wood blocks where applicable and when specified.
4. Direction of adjacent traffic indicated by ⟶.
5. For Transition Railing (Type WB) details for Types 12AA and 12BB Layouts, see Standard Plan A77J4.
6. In-line Terminal System Treatments are used where site conditions will not accommodate a flared end treatment.
7. The type of terminal system to be used will be shown on the Project Plans.
8. Dependent on site conditions (embankment height, side slopes, other fixed objects), it may be advisable to construct additional guard railing (a length equal to multiples of 12'-6" with 6'-3" post spacing) between the transition railing and end treatments.
9. Where placement of dike is required with guard railing installations, see Revised Standard Plan RSP A77C4 for dike positioning details.
10. Type 12AA or Type 12BB Layouts are typically used to the right of traffic departing a structure on two-way conventional highways where the roadbed width across the structure is less than 40 feet.
11. For additional details of typical connections to bridge rail, see Connection Detail CC on Revised Standard Plan RSP A77J2 and Connection Detail HH on Standard Plans A77k2.

STATE OF CALIFORNIA
DEPARTMENT OF TRANSPORTATION

METAL BEAM GUARD RAILING TYPICAL LAYOUTS FOR STRUCTURE DEPARTURE

NO SCALE

RSP A77F4 DATED JUNE 6, 2008 SUPERSEDES STANDARD PLAN A77F4
DATED MAY 1, 2006 - PAGE 57 OF THE STANDARD PLANS BOOK DATED MAY 2006.

REVISED STANDARD PLAN RSP A77F4

2006 REVISED STANDARD PLAN RSP A77F4

DIST	COUNTY	ROUTE	POST MILES TOTAL PROJECT	SHEET NO.	TOTAL SHEETS
09	Mno	395	78.8/80.6	39	52

Randell D. Hiatt
REGISTERED CIVIL ENGINEER

June 6, 2008
PLANS APPROVAL DATE

REGISTERED PROFESSIONAL ENGINEER
Randell D. Hiatt
No. C50200
Exp. 6-30-09
CIVIL
STATE OF CALIFORNIA

The State of California or its officers or agents shall not be responsible for the accuracy or completeness of electronic copies of this plan sheet.

To accompany plans dated 9-20-10

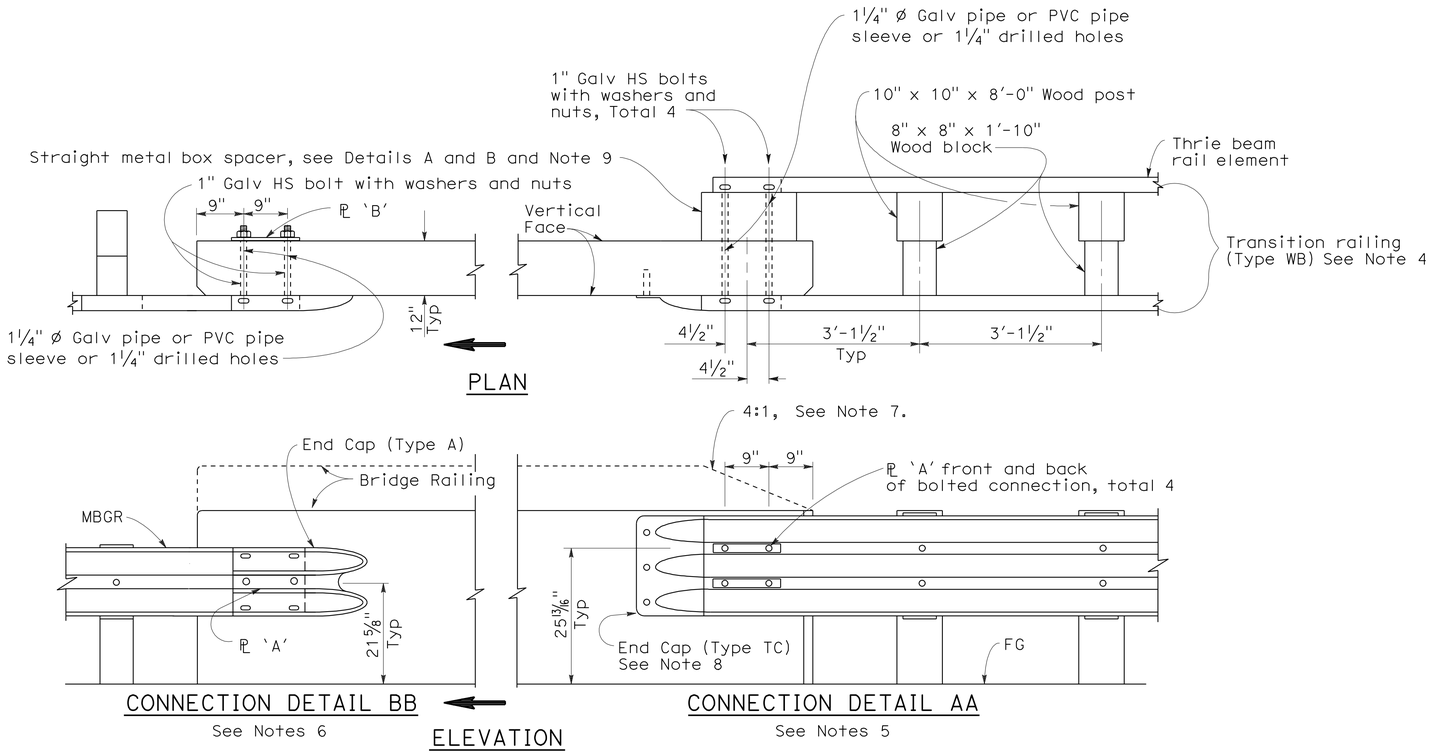

GUARD RAILING CONNECTION TO BRIDGE RAILING WITHOUT SIDEWALK

NOTES:

1. See Revised Standard Plan RSP A77J2 for additional connection details to bridges without sidewalks.
2. Additional details of posts, blocks and hardware are shown on Standard Plan A77B1, A77C1 and A77C2.
3. Direction of adjacent traffic indicated by ➡.
4. For additional details of Transition Railing (Type WB), see Standard Plan A77J4. Transition Railing (Type WB) transitions the 12 gage w-beam standard railing section of guard railing to a heavier gage nested thrie beam railing section which is connected to the concrete bridge railing.
5. For typical use of Connection Detail AA, see Layout Types 12A and 12B on Revised Standard Plan RSP A77F1, Layout Types 12C and 12D on Standard Plan A77F2, and Layout Type 12E on Revised Standard Plan RSP A77F3.
6. For typical use of Connection Detail BB, see Layout Type 12D (structure departure railing connection) on Standard Plan A77F2 and Layout Type 12DD on Standard Plan A77F5.
7. Where the height of the bridge railing exceeds the height of the thrie beam railing by more than 1" at Connection Detail AA, taper the top of the end of the bridge railing at 4:1 to match the top elevation of the thrie beam rail.
8. For details of End Cap (Type TC), see Standard Plan A77J4.
9. See Standard Plan A77J4 for additional details regarding depth dimension for straight metal box spacer.

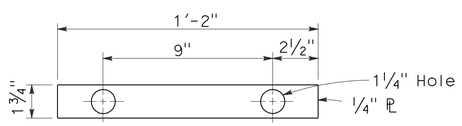

PLATE 'A'

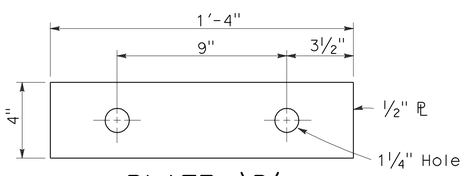

PLATE 'B'
(For backside of connection BB)

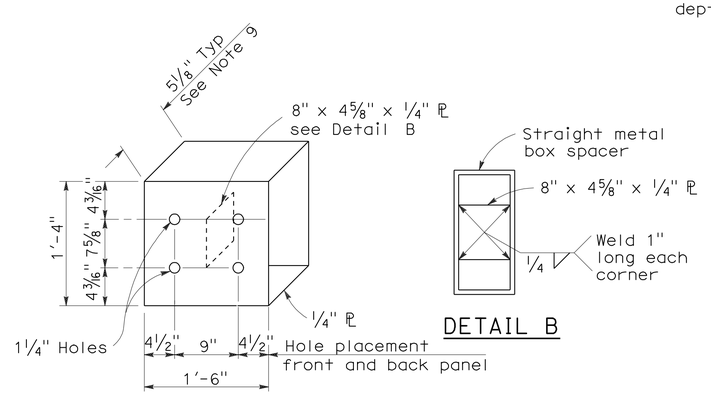

DETAIL A

DETAIL B

STRAIGHT METAL BOX SPACER

STATE OF CALIFORNIA
DEPARTMENT OF TRANSPORTATION

METAL BEAM GUARD RAILING CONNECTIONS TO BRIDGE RAILINGS WITHOUT SIDEWALKS DETAILS No.1

NO SCALE

RSP A77J1 DATED JUNE 6, 2008 SUPERSEDES STANDARD PLAN A77J1
DATED MAY 1, 2006 - PAGE 72 OF THE STANDARD PLANS BOOK DATED MAY 2006.

REVISED STANDARD PLAN RSP A77J1

2006 REVISED STANDARD PLAN RSP A77J1

12-10-07

DIST	COUNTY	ROUTE	POST MILES TOTAL PROJECT	SHEET NO.	TOTAL SHEETS
09	Mno	395	78.8/80.6	40	52

Randell D. Hiatt
REGISTERED CIVIL ENGINEER

June 6, 2008
PLANS APPROVAL DATE

REGISTERED PROFESSIONAL ENGINEER
Randell D. Hiatt
No. C50200
Exp. 6-30-09
CIVIL
STATE OF CALIFORNIA

The State of California or its officers or agents shall not be responsible for the accuracy or completeness of electronic copies of this plan sheet.

To accompany plans dated 9-20-10

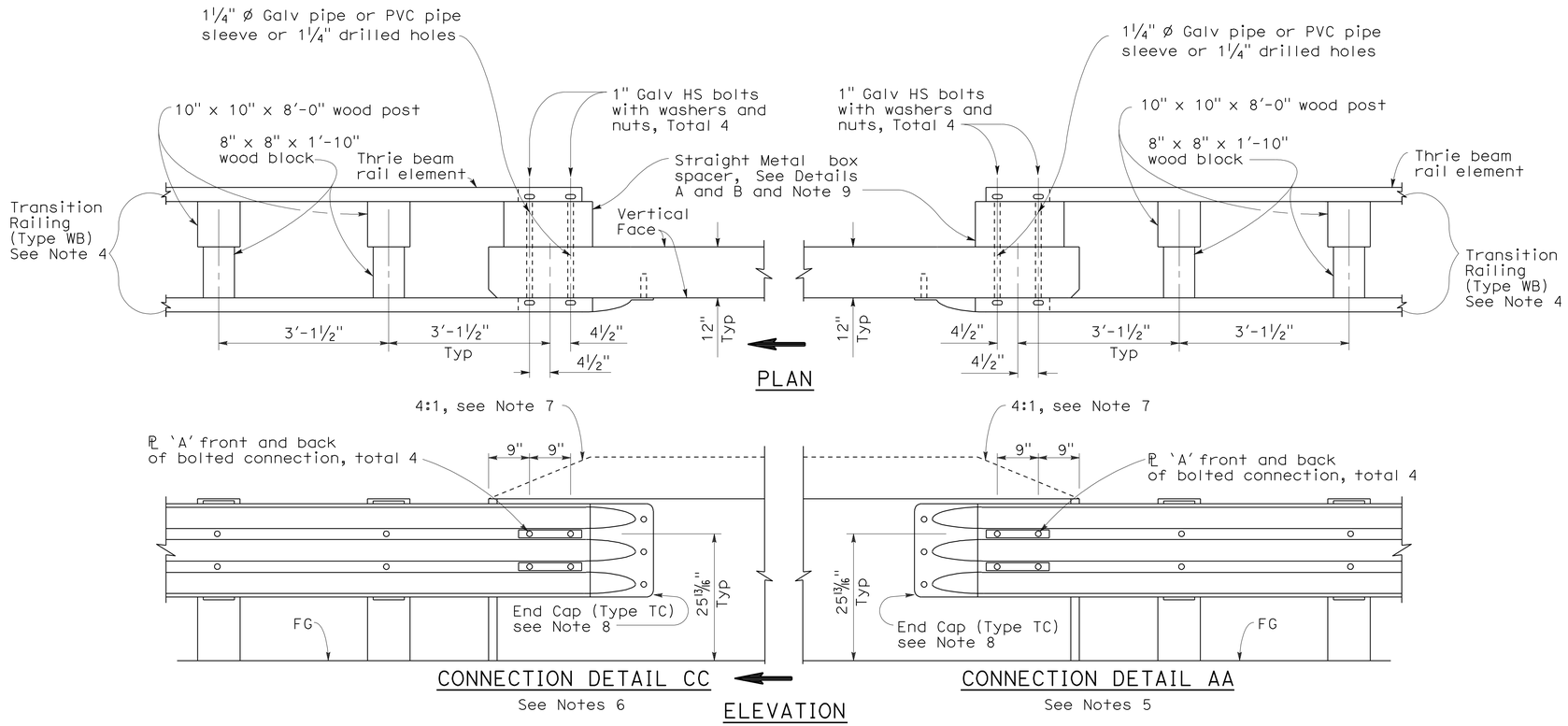

GUARD RAILING CONNECTION TO BRIDGE RAILING WITHOUT SIDEWALK

NOTES:

1. See Revised Standard Plan RSP A77J1 for additional connection details to bridges without sidewalks.
2. Additional details of posts, blocks and hardware are shown on Standard Plan A77B1, A77C1 and A77C2.
3. Direction of adjacent traffic indicated by ⟹.
4. For additional details of Transition Railing (Type WB), see Standard Plan A77J4. Transition Railing (Type WB) transitions the 12 gage w-beam standard railing section of guard railing to a heavier gage nested thrie beam railing section which is connected to the concrete bridge railing.
5. For typical use of Connection Detail AA, see Layout Types 12A and 12B on Revised Standard Plan RSP A77F1, Layout Types 12C and 12D on Standard Plan A77F2, and Layout Type 12E on Revised Standard Plan RSP A77F3.
6. For typical use of Connection Detail CC, see Layout Types 12AA and 12BB on Standard Plan A77F4 and Layout Type 12CC on Standard Plan A77F5.
7. Where the height of the bridge railing exceeds the height of the thrie beam railing by more than 1" at Connection Detail AA and connection Detail CC, taper the top of the end of the bridge railing at 4:1 to match the top elevation of the thrie beam railing.
8. For details of End Cap (Type TC), see Standard Plans A77J4.
9. See Standard Plans A77J4 for additional details regarding depth dimension for straight metal box spacer.

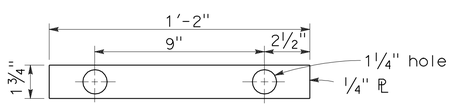

PLATE 'A'

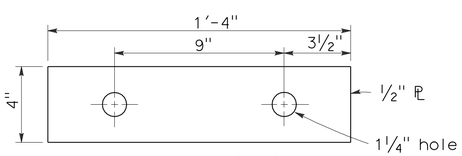

PLATE 'B'
(For backside of connection BB)

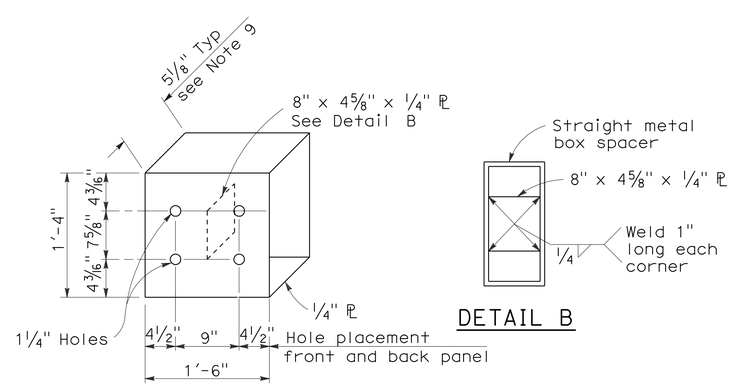

DETAIL A

DETAIL B

STRAIGHT METAL BOX SPACER

STATE OF CALIFORNIA
DEPARTMENT OF TRANSPORTATION

METAL BEAM GUARD RAILING CONNECTIONS TO BRIDGE RAILINGS WITHOUT SIDEWALKS DETAILS No.2

NO SCALE

RSP A77J2 DATED JUNE 6, 2008 SUPERSEDES STANDARD PLAN A77J2 DATED MAY 1, 2006 - PAGE 73 OF THE STANDARD PLANS BOOK DATED MAY 2006.

REVISED STANDARD PLAN RSP A77J2

2006 REVISED STANDARD PLAN RSP A77J2

12-10-07

DIST	COUNTY	ROUTE	POST MILES TOTAL PROJECT	SHEET NO.	TOTAL SHEETS
09	Mno	395	78.8/80.6	41	52

Randell D. Hiatt
REGISTERED CIVIL ENGINEER

June 5, 2009
PLANS APPROVAL DATE

REGISTERED PROFESSIONAL ENGINEER
Randell D. Hiatt
No. C50200
Exp. 6-30-09
CIVIL
STATE OF CALIFORNIA

The State of California or its officers or agents shall not be responsible for the accuracy or completeness of electronic copies of this plan sheet.

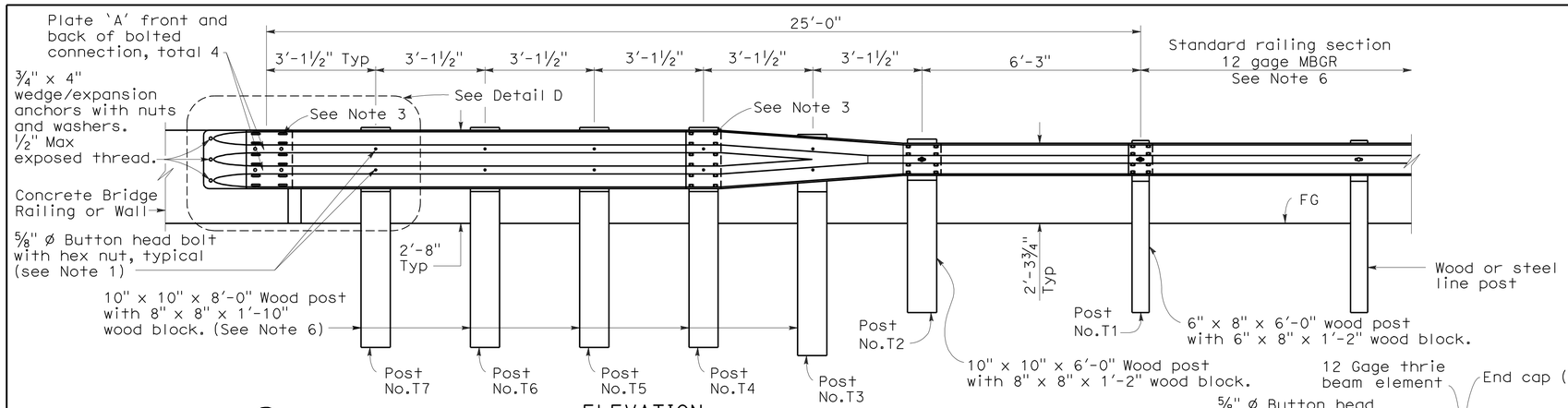

ELEVATION

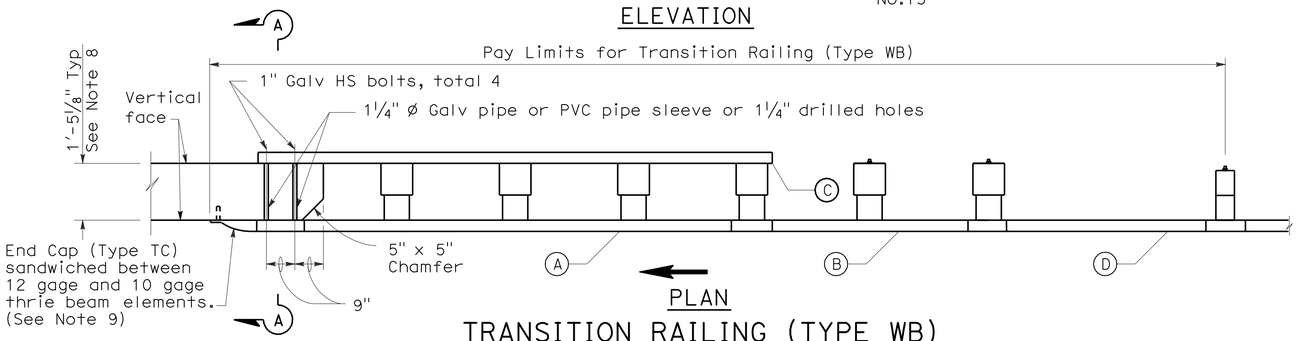

PLAN

TRANSITION RAILING (TYPE WB)

(No Blockout Attachment)

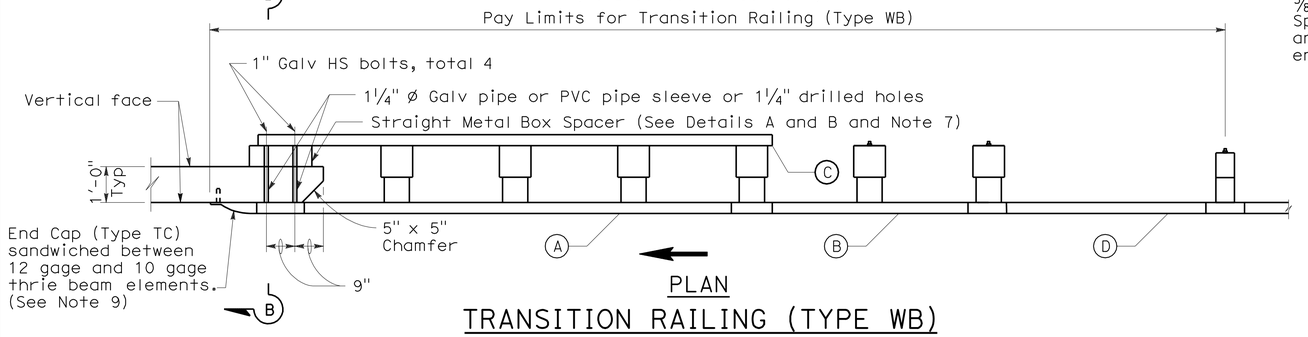

PLAN

TRANSITION RAILING (TYPE WB)

(Blockout Attachment)

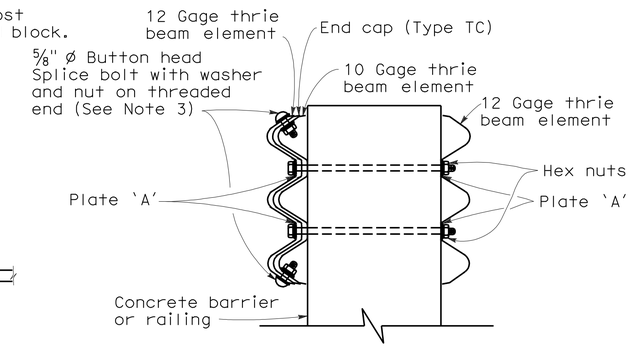

SECTION A-A

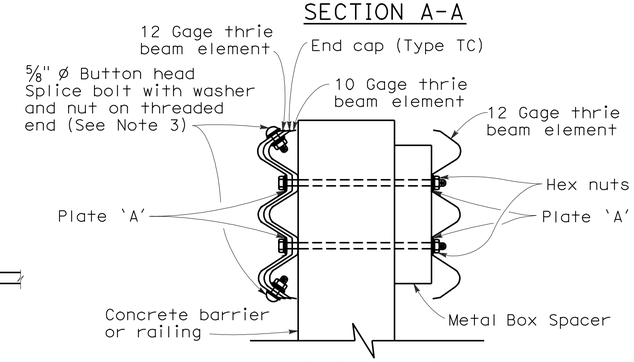

SECTION B-B

NOTES:

To accompany plans dated 9-20-10

1. Use 5/8 " ø Button head bolts and hex nuts for connections to posts. No washer on rail face for bolted connections to post.
2. The nested rail elements, end cap, and 'W' beam to thrie beam element may be spliced together prior to bolting the elements to the wood post and concrete barrier or railing.
3. Exterior splice bolt holes for rail element splices at Post No.T4 and the connection to the concrete barrier or railing shall be the standard 29/32 " x 1 1/8 " slot size. Interior splice bolt holes at these locations may be increased up to 1 1/4 " ø. Only the top 2 and the bottom 2 splice bolts with washers and nuts are required for rail splices at Post No.T4 and the connection to the concrete barrier or railing.
4. Direction of adjacent traffic indicated by →.
5. The top elevation of Post Nos.T2 through T7 shall not project more than 1" above the top elevation of the rail element.
6. Typically, the railing connected to Transition Railing (Type WB) will be either standard railing section of metal beam guard railing or an approved Caltrans end treatment attached to Post No.T1.
7. The depth of the metal box spacer varies from the 5 1/8 " to 1 1/2 " and is dependent on the width of the concrete railing or wall. The combined dimension for the depth of the metal box spacer plus the width of railing or wall is typically 17 1/8 ". Where the space between the backside of the concrete railing or wall and the rear thrie beam element is less than 1 1/2 ", metal plates similar to Plate 'A' are to be used as spacers.
8. Where the width of the concrete railing or wall is greater than 17 1/8 ", wood blocks are to be used to fill the space created between the backside of Posts No.4 through No.7 and the rear thrie beam element. These wood blocks shall be 8" in width and 1'-2" in length. The dimension between the front thrie beam element and the rear thrie beam element is to match the width of the concrete railing or wall.
9. End cap may be installed over 12 gage and 10 gage thrie beam elements where transition railing is installed on the departure end of bridge railing.

LEGEND

(A) Nested thrie beam elements (one 12 gage element nested over one 10 gage element).

(B) One 10 gage "W" beam to thrie beam element.

(C) One 12 gage thrie beam element.

(D) One 10 gage "W" beam rail element (7'-3½" length)

10 gage = 0.135" thick

12 gage = 0.108" thick

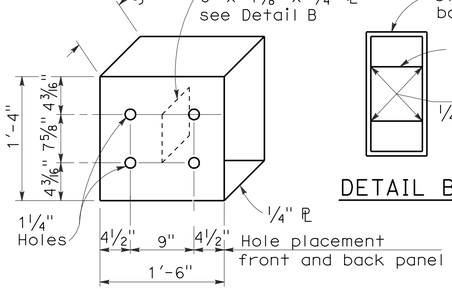

DETAIL A

STRAIGHT METAL BOX SPACER

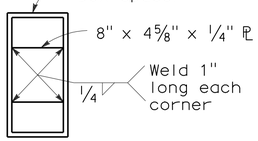

DETAIL B

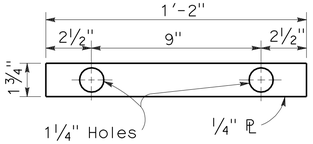

DETAIL C

PLATE 'A'

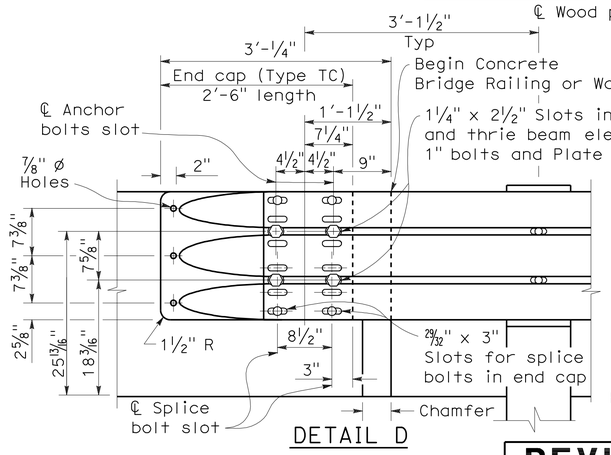

DETAIL D

STATE OF CALIFORNIA
DEPARTMENT OF TRANSPORTATION

METAL BEAM GUARD RAILING TRANSITION RAILING (TYPE WB)

NO SCALE

RSP A77J4 DATED JUNE 5, 2009 SUPERSEDES RSP A77J4 DATED JUNE 6, 2008 AND STANDARD PLAN A77J4 DATED MAY 1, 2006 - PAGE 75 OF THE STANDARD PLANS BOOK DATED MAY 2006.

REVISED STANDARD PLAN RSP A77J4

2006 REVISED STANDARD PLAN RSP A77J4

DIST	COUNTY	ROUTE	POST MILES TOTAL PROJECT	SHEET No.	TOTAL SHEETS
09	Mno	395	78.8/80.6	42	52

Randell D. Hiatt
REGISTERED CIVIL ENGINEER

June 6, 2008
PLANS APPROVAL DATE

REGISTERED PROFESSIONAL ENGINEER
Randell D. Hiatt
No. C50200
Exp. 6-30-09
CIVIL
STATE OF CALIFORNIA

The State of California or its officers or agents shall not be responsible for the accuracy or completeness of electronic copies of this plan sheet.

To accompany plans dated 9-20-10

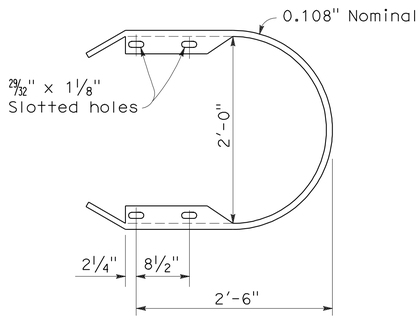

RETURN CAP
(TYPE TA)

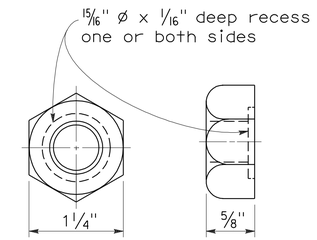

5/8" ø RECESS NUT

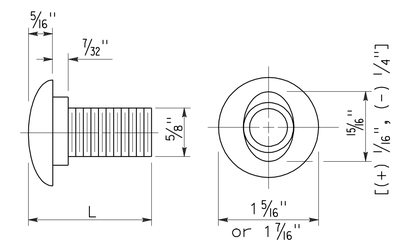

5/8" ø BUTTON HEAD BOLT

L	THREAD LENGTH
1 1/4"	full thread length
2"	full thread length
9 1/2"	4" Min thread length
18"	4" Min thread length

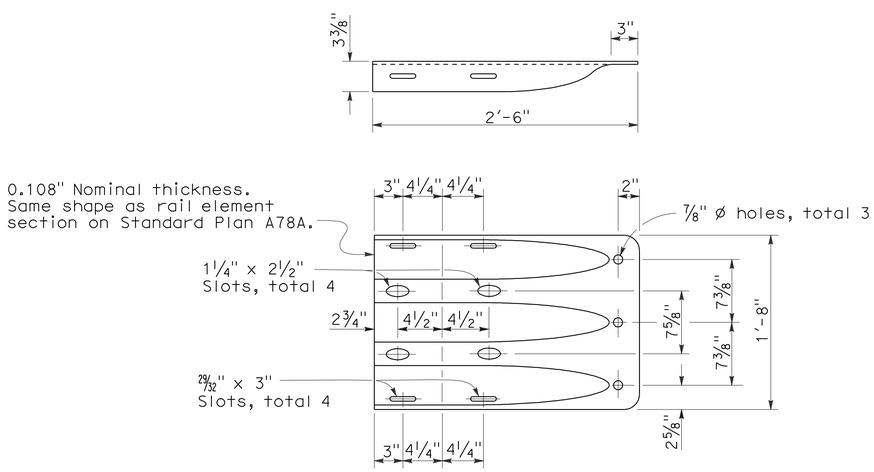

END CAP
(TYPE TC)

STATE OF CALIFORNIA
DEPARTMENT OF TRANSPORTATION

THRIE BEAM BARRIER STANDARD HARDWARE DETAILS

NO SCALE

RSP A78C1 DATED JUNE 6, 2008 SUPERSEDES STANDARD PLAN A78C1
DATED MAY 1, 2006 - PAGE 85 OF THE STANDARD PLANS BOOK DATED MAY 2006.

REVISED STANDARD PLAN RSP A78C1

2006 REVISED STANDARD PLAN RSP A78C1

4-21-08

DIST	COUNTY	ROUTE	POST MILES TOTAL PROJECT	SHEET NO.	TOTAL SHEETS
09	Mno	395	78.8/80.6	43	52

Randell D. Hiatt
REGISTERED CIVIL ENGINEER

June 6, 2008
PLANS APPROVAL DATE

REGISTERED PROFESSIONAL ENGINEER
Randell D. Hiatt
No. C50200
Exp. 6-30-09
CIVIL
STATE OF CALIFORNIA

The State of California or its officers or agents shall not be responsible for the accuracy or completeness of electronic copies of this plan sheet.

To accompany plans dated 9-20-10

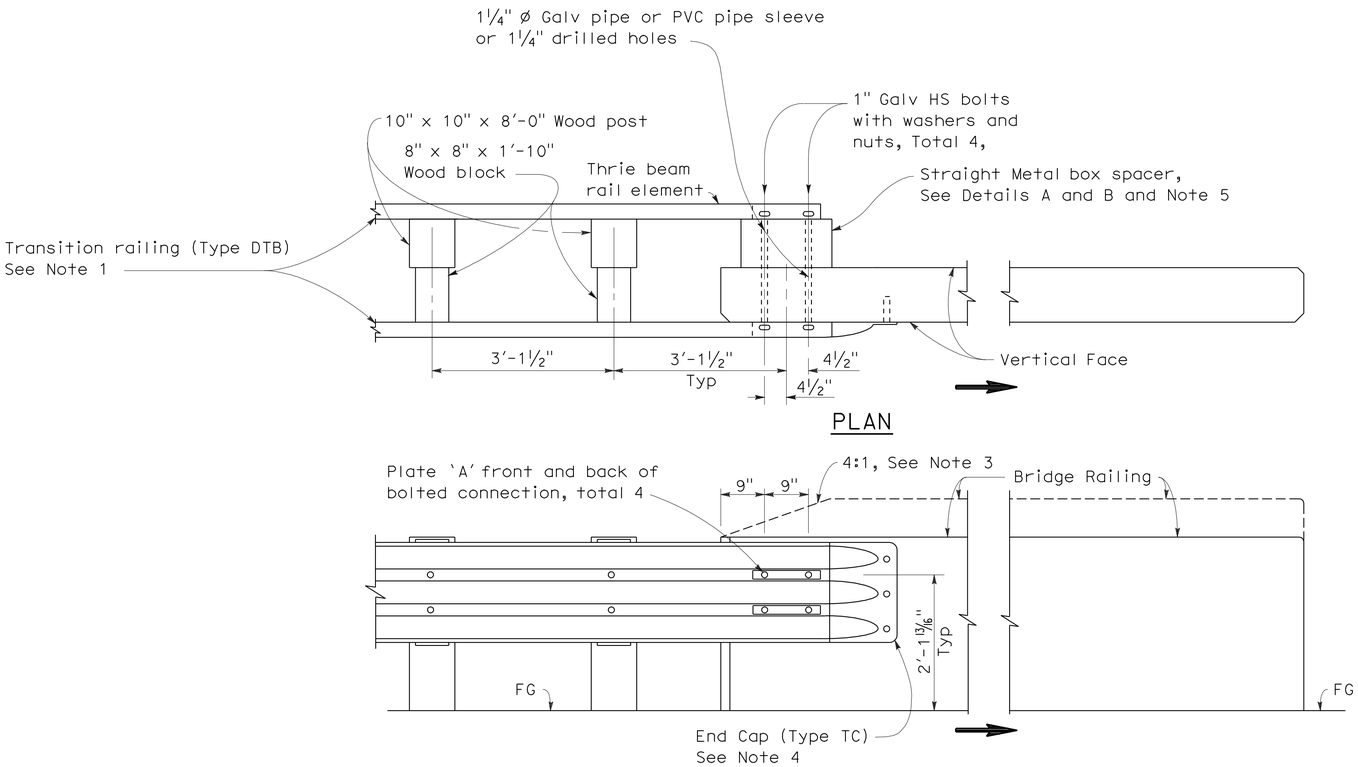

CONNECTION DETAIL 1A
See Note 2

DOUBLE THRIE BEAM BARRIER CONNECTION TO BRIDGE RAILING WITHOUT SIDEWALK

NOTES:

1. For additional details of Transition Railing (Type DTB), see Standard Plans A78K. Transition Railing (Type DTB) transitions the standard 12 gage double thrie beam barrier to a heavier gage double thrie beam railing section then to a heavier gage nested double thrie beam barrier section which then is connected to the concrete bridge railing.
2. For typical use of Connection Detail 1A, see Type 25A Connection Layout on Revised Standard Plan RSP A78H.
3. Where the height of the bridge railing exceeds the height of the thrie beam railing by more than 1" at Connection Detail 1A, taper the top of the end of the bridge railing at 4:1 to match the top elevation of the thrie beam railing.
4. For details of End Cap (Type TC), see Standard Plan A78C1.
5. See Standard Plan A78K for additional details regarding depth dimension for straight metal box spacer.
6. Direction of adjacent traffic indicated by ⟹.

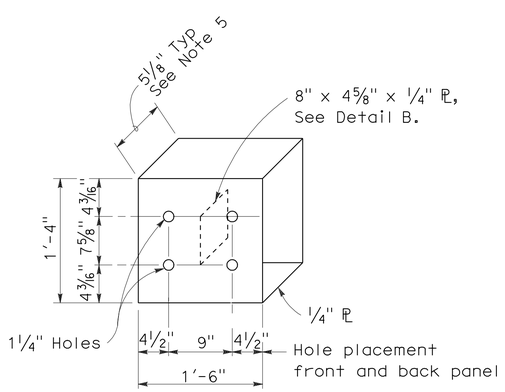

DETAIL A

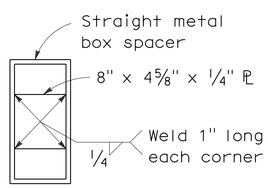

DETAIL B

STRAIGHT METAL BOX SPACER

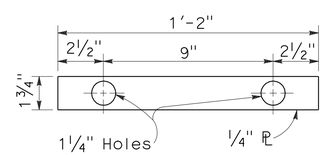

DETAIL C

PLATE 'A'

STATE OF CALIFORNIA
DEPARTMENT OF TRANSPORTATION

DOUBLE THRIE BEAM BARRIER CONNECTION TO BRIDGE RAILINGS WITHOUT SIDEWALKS

NO SCALE

RSP A78F1 DATED JUNE 6, 2008 SUPERSEDES STANDARD PLAN A78F1
DATED MAY 1, 2006 - PAGE 92 OF THE STANDARD PLANS BOOK DATED MAY 2006.

REVISED STANDARD PLAN RSP A78F1

2006 REVISED STANDARD PLAN RSP A78F1

12-10-07

DIST	COUNTY	ROUTE	POST MILES TOTAL PROJECT	SHEET NO.	TOTAL SHEETS
09	Mno	395	78.8/80.6	44	52

Randell D. Hiatt
REGISTERED CIVIL ENGINEER

June 6, 2008
PLANS APPROVAL DATE

REGISTERED PROFESSIONAL ENGINEER
Randell D. Hiatt
No. C50200
Exp. 6-30-09
CIVIL
STATE OF CALIFORNIA

The State of California or its officers or agents shall not be responsible for the accuracy or completeness of electronic copies of this plan sheet.

To accompany plans dated 9-20-10

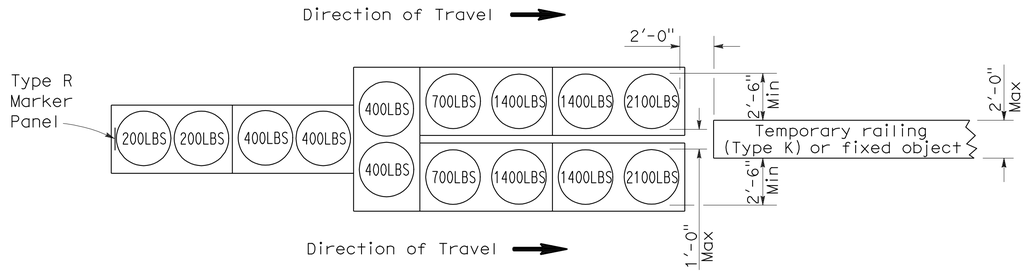

ARRAY `TU14'

Approach speed 45 mph or more

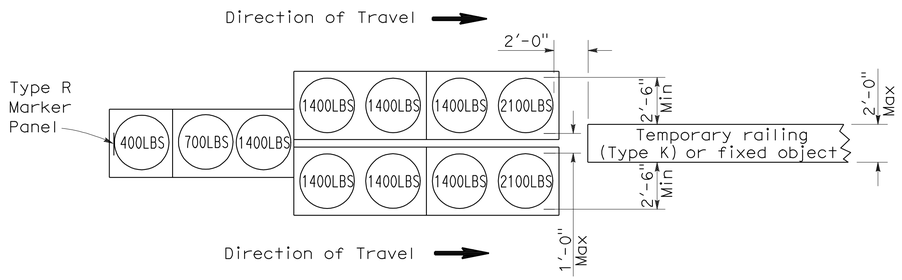

ARRAY `TU11'

Approach speed less than 45 mph

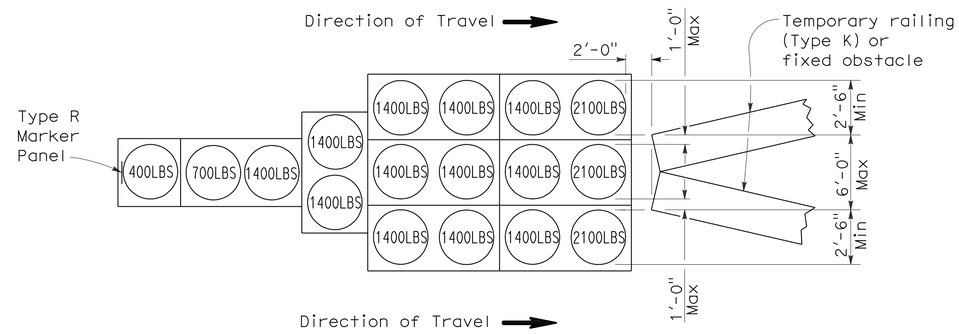

ARRAY `TU17'

Approach speed less than 45 mph

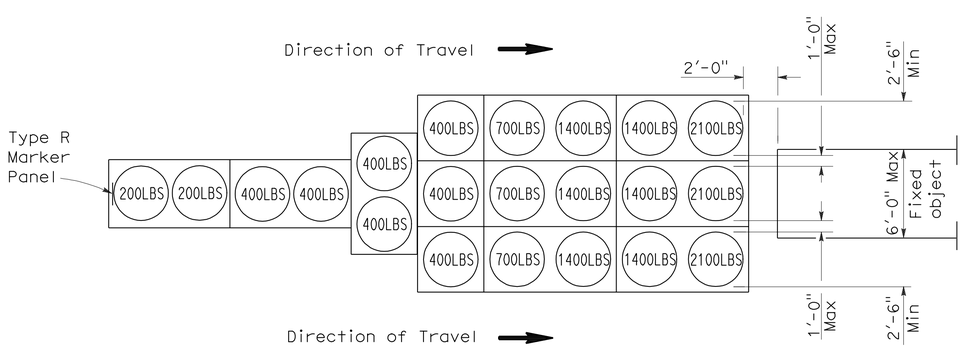

ARRAY `TU21'

Approach speed 45 mph or more

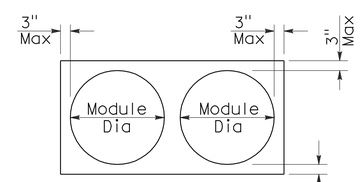

PLAN

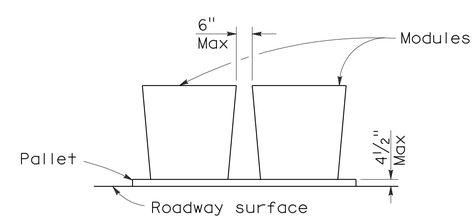

ELEVATION

CRASH CUSHION PALLET DETAIL

See Note 7

NOTES:

1. (XXX) Indicates sand filled module location and weight of sand in pounds for each module. Module spacing is based on the greater diameter of the module.
2. All sand weights are nominal.
3. Temporary crash cushion arrays shall not encroach on the traveled way.
4. Place the top of Type R marker panel 1" below the module lid.
5. Refer to Standard Plan A73B for marker details.
6. Approach speeds indicated conform to NCHRP 350 Report criteria.
7. Use of pallets is optional.

STATE OF CALIFORNIA
DEPARTMENT OF TRANSPORTATION

TEMPORARY CRASH CUSHION, SAND FILLED (UNIDIRECTIONAL)

NO SCALE

RSP T1A DATED JUNE 6, 2008 SUPERSEDES STANDARD PLAN T1A
DATED MAY 1, 2006 - PAGE 211 OF THE STANDARD PLANS BOOK DATED MAY 2006.

REVISED STANDARD PLAN RSP T1A

2006 REVISED STANDARD PLAN RSP T1A

DIST	COUNTY	ROUTE	POST MILES TOTAL PROJECT	SHEET NO.	TOTAL SHEETS
09	Mno	395	78.8/80.6	45	52

Randell D. Hiatt
REGISTERED CIVIL ENGINEER

June 6, 2008
PLANS APPROVAL DATE

REGISTERED PROFESSIONAL ENGINEER
Randell D. Hiatt
No. C50200
Exp. 6-30-09
CIVIL
STATE OF CALIFORNIA

The State of California or its officers or agents shall not be responsible for the accuracy or completeness of electronic copies of this plan sheet.

To accompany plans dated 9-20-10

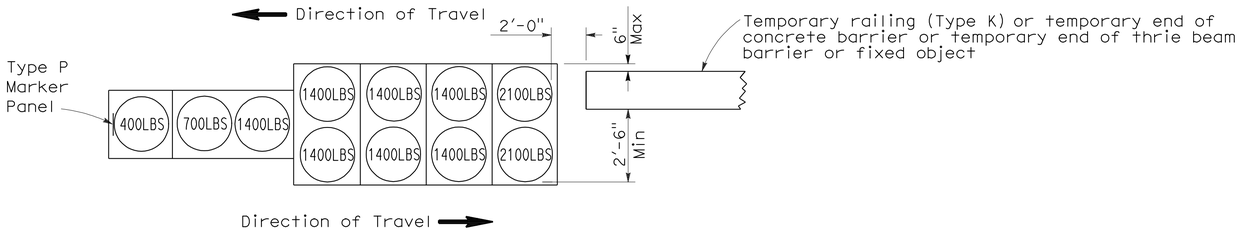

ARRAY 'TB11'

Approach speed less than 45 mph

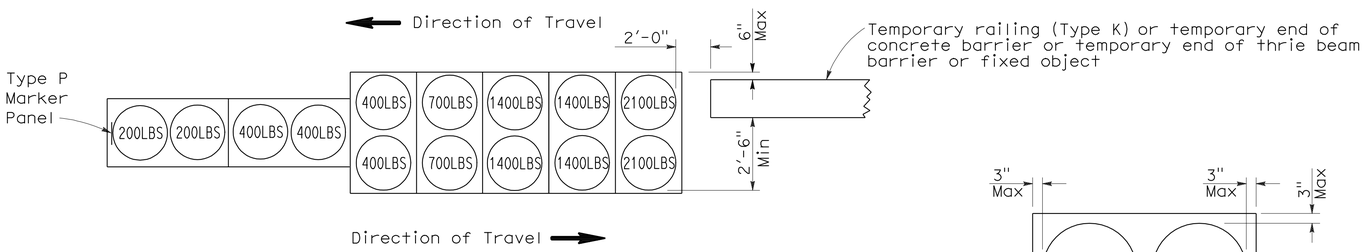

ARRAY 'TB14'

Approach speed 45 mph or more

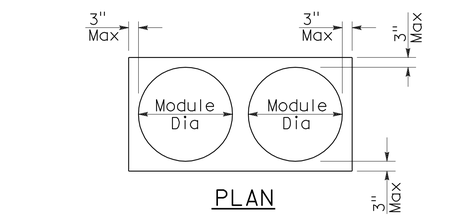

PLAN

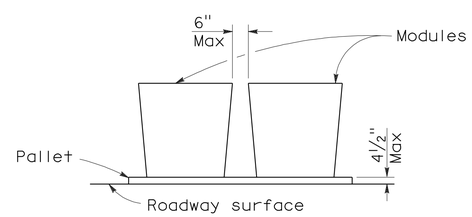

ELEVATION

CRASH CUSHION PALLET DETAIL

See Note 7

NOTES:

1. (XXX) Indicates sand filled module location and weight of sand in pounds for each module. Module spacing is based on the greater diameter of the module.
2. All sand weights are nominal.
3. Temporary crash cushion arrays shall not encroach on the traveled way.
4. Place the Type P marker panel so that the bottom of the panel rests upon the pallet.
5. Refer to Standard Plan A73B for marker details.
6. Approach speeds indicated conform to NCHRP 350 Report criteria.
7. Use of pallets is optional.

STATE OF CALIFORNIA
DEPARTMENT OF TRANSPORTATION

TEMPORARY CRASH CUSHION, SAND FILLED (BIDIRECTIONAL)

NO SCALE

RSP T1B DATED JUNE 6, 2008 SUPERSEDES STANDARD PLAN T1B
DATED MAY 1, 2006 - PAGE 212 OF THE STANDARD PLANS BOOK DATED MAY 2006.

REVISED STANDARD PLAN RSP T1B

2006 REVISED STANDARD PLAN RSP T1B

5-15-08

DIST	COUNTY	ROUTE	POST MILES TOTAL PROJECT	SHEET NO.	TOTAL SHEETS
09	Mno	395	78.8/80.6	46	52

Randell D. Hiatt
REGISTERED CIVIL ENGINEER

June 6, 2008
PLANS APPROVAL DATE

REGISTERED PROFESSIONAL ENGINEER
Randell D. Hiatt
No. C50200
Exp. 6-30-09
CIVIL
STATE OF CALIFORNIA

The State of California or its officers or agents shall not be responsible for the accuracy or completeness of electronic copies of this plan sheet.

To accompany plans dated 9-20-10

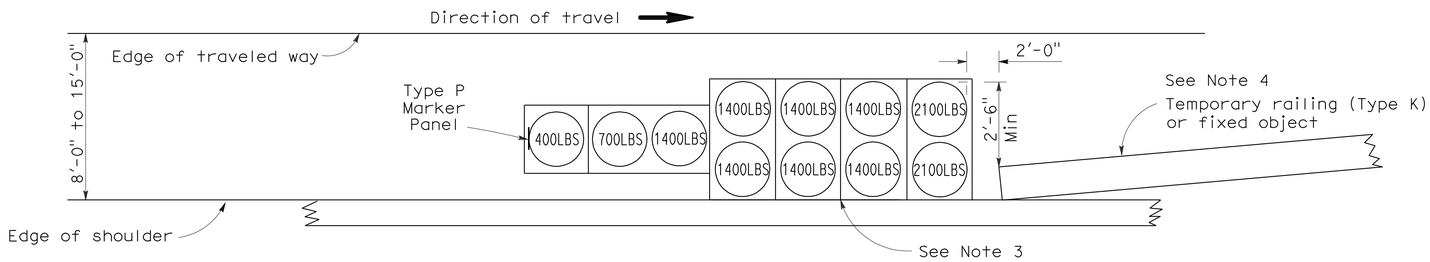

ARRAY 'TS11'

Approach speed less than 45 mph
See Note 9

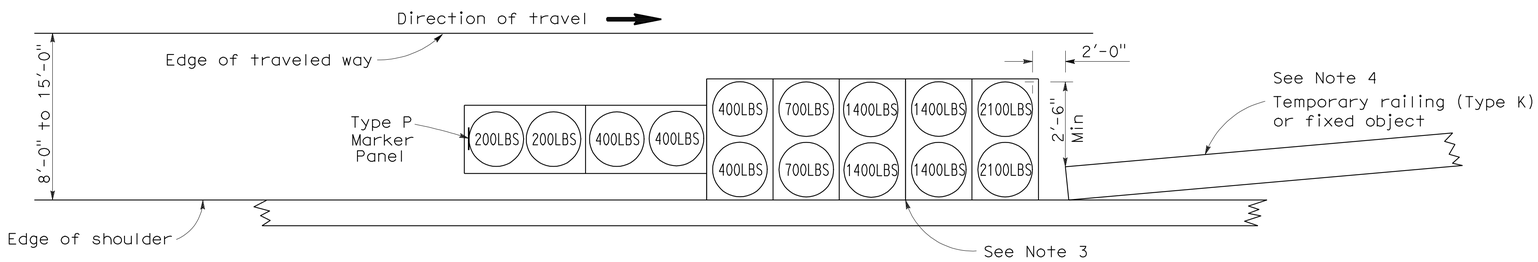

ARRAY 'TS14'

Approach speed 45 mph or more
See Note 9

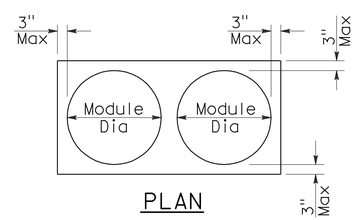

PLAN

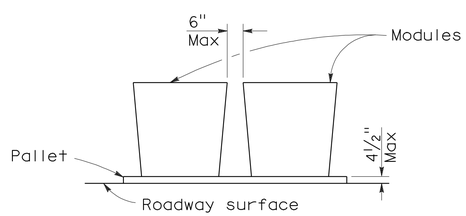

ELEVATION

CRASH CUSHION PALLET DETAIL

See Note 11

NOTES:

1. (XXX) Indicates sand filled module location and weight of sand in pounds for each module. Module spacing is based on the greater diameter of the module.
2. All sand weights are nominal.
3. The temporary crash cushion arrays shown on this plan shall be used only in locations where there will be traffic on one side of the temporary crash cushion array.
4. If the fixed object or approach end of the temporary railing is less than 15'-0" from the edge of traveled way, a temporary crash cushion is required in a construction or work zone.
5. Temporary crash cushion arrays shall not encroach on the traveled way.
6. Arrays for median shoulders shall conform to details shown on this plan for outside shoulders.
7. Place the Type P marker panel so that the bottom of the panel rests upon the pallet and faces traffic.
8. Refer to Standard Plan A73B for marker details.
9. For shoulder widths less than 8'-0", appropriate approved crash cushion protection, other than sand filled modules, shall be provided at fixed objects and at approach ends of temporary railing. The specific type of crash cushion shall be as shown on the project plans or as specified in the Special Provisions, or if not shown on the project plans or specified in the Special Provisions, shall be as approved by the Engineer.
10. Approach speeds indicated conform to NCHRP 350 Report criteria.
11. Use of pallets is optional.

STATE OF CALIFORNIA
DEPARTMENT OF TRANSPORTATION

TEMPORARY CRASH CUSHION, SAND FILLED (SHOULDER INSTALLATIONS)

NO SCALE

RSP T2 DATED JUNE 6, 2008 SUPERSEDES STANDARD PLAN T2
DATED MAY 1, 2006 - PAGE 213 OF THE STANDARD PLANS BOOK DATED MAY 2006.

REVISED STANDARD PLAN RSP T2

2006 REVISED STANDARD PLAN RSP T2

5-15-08

DIST	COUNTY	ROUTE	POST MILES TOTAL PROJECT	SHEET NO.	TOTAL SHEETS
09	Mno	395	78.8/80.6	47	52

REGISTERED CIVIL ENGINEER

November 17, 2006
PLANS APPROVAL DATE

REGISTERED PROFESSIONAL ENGINEER
Greg W. Edwards
No. C36386
Exp. 6-30-08
CIVIL
STATE OF CALIFORNIA

The State of California or its officers or agents shall not be responsible for the accuracy or completeness of electronic copies of this plan sheet.

To accompany plans dated 9-20-10

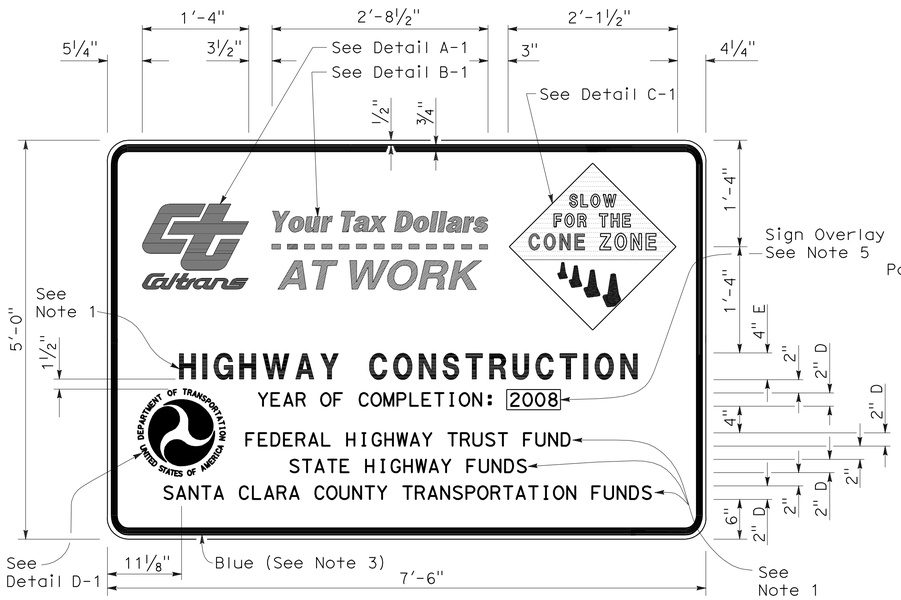

TYPE 1

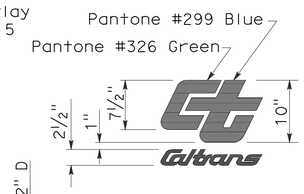

DETAIL A-1

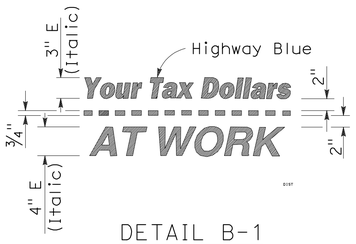

DETAIL B-1
(See Note 3)

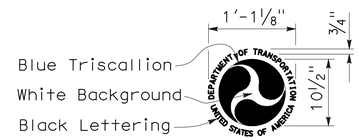

DETAIL D-1
(See Note 6)

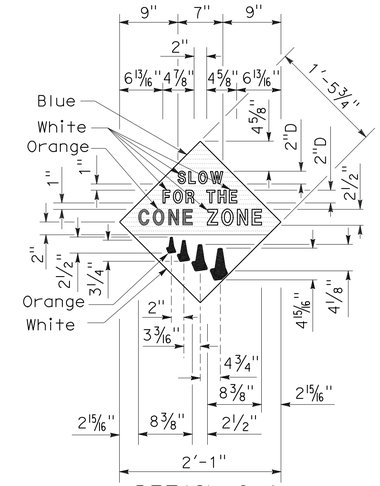

DETAIL C-1
(See Note 4)

NOTES:

1. The sign messages shown for type of project and fund types are examples only. See the Special Provisions for the applicable type of project and fund type messages to be used.
2. Except as otherwise shown, the legend of sign shall be black on a white background (non-reflective).
3. The border of the signs and details "B-1" and "B-2" shall be blue (non-reflective).
4. The diamond in details "C-1" and "C-2" shall be blue for the background of message, " SLOW FOR THE CONE ZONE", and white background for the orange cones. The color and type of font for the "SLOW FOR THE CONE ZONE" message shall be: "SLOW" white D; "FOR THE" white D; "CONE" orange Arial font; "ZONE" white Arial font.
5. Year of completion of project construction shown on the overlay is an example only. See the Special Provisions.
6. Use when the Project involves Federal Highway Trust Fund.

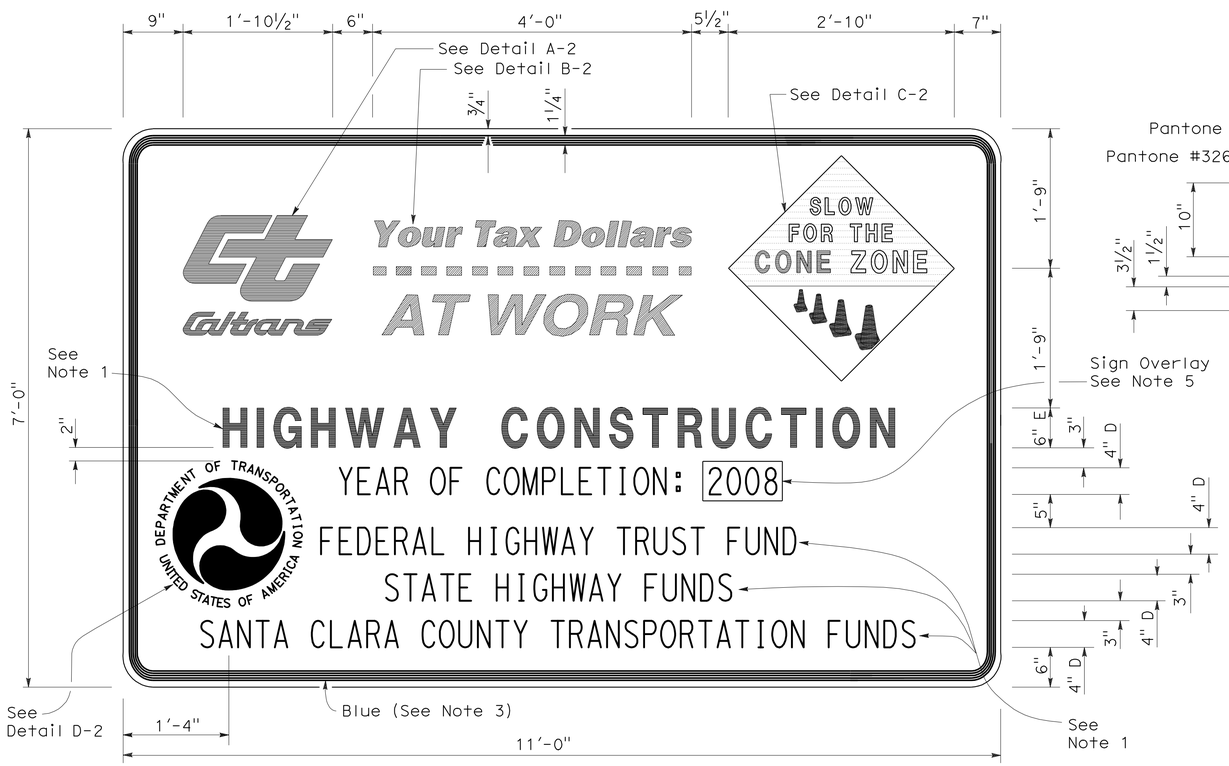

TYPE 2

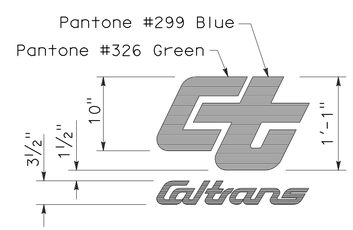

DETAIL A-2

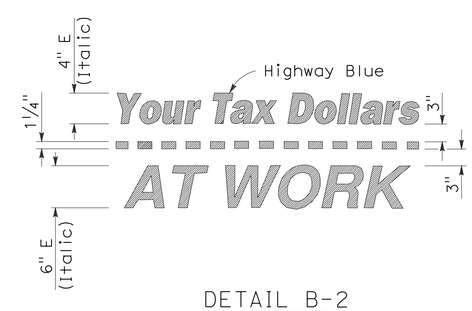

DETAIL B-2
(See Note 3)

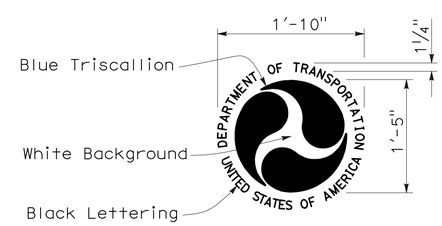

DETAIL D-2
(See Note 6)

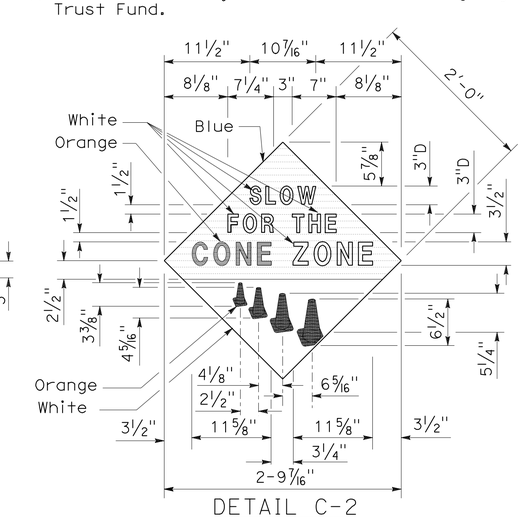

DETAIL C-2
(See Note 4)

STATE OF CALIFORNIA
DEPARTMENT OF TRANSPORTATION

CONSTRUCTION PROJECT FUNDING IDENTIFICATION SIGNS

NO SCALE

RSP T7 DATED NOVEMBER 17, 2006 SUPERSEDES STANDARD PLAN T7
DATED MAY 1, 2006 - PAGE 217 OF THE STANDARD PLANS BOOK DATED MAY 2006.

REVISED STANDARD PLAN RSP T7

2006 REVISED STANDARD PLAN RSP T7

9-7-06

DIST	COUNTY	ROUTE	POST MILES TOTAL PROJECT	SHEET NO.	TOTAL SHEETS
09	Mno	395	78.8/80.6	48	52

Robert B. Schott
LICENSED LANDSCAPE ARCHITECT

April 3, 2009
PLANS APPROVAL DATE

LICENSED LANDSCAPE ARCHITECT
Robert B. Schott 3635
Signature
11-30-10
Renewal Date
2-25-09
Date
STATE OF CALIFORNIA

The State of California or its officers or agents shall not be responsible for the accuracy or completeness of electronic copies of this plan sheet.

To accompany plans dated 9-20-10

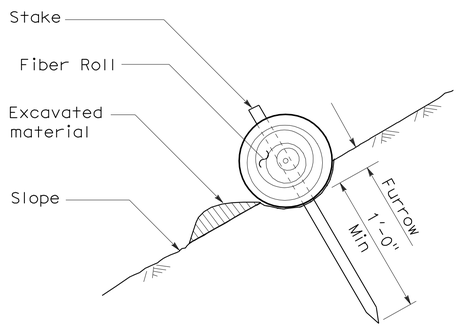

SECTION

TEMPORARY FIBER ROLL (TYPE 1)

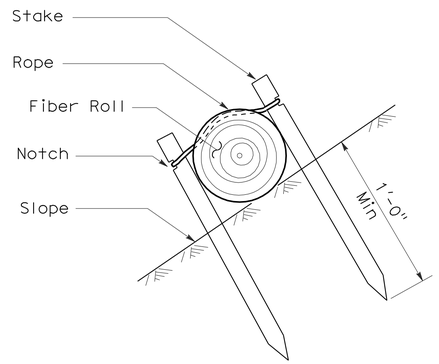

SECTION

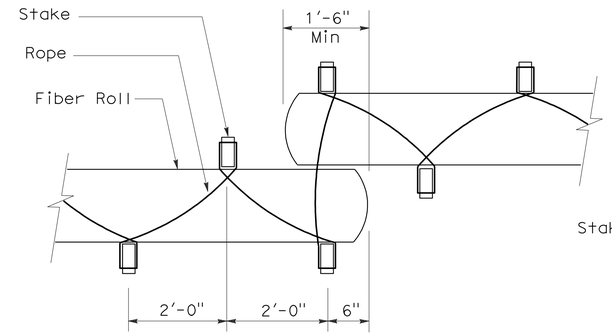

PLAN

TEMPORARY FIBER ROLL (TYPE 2)

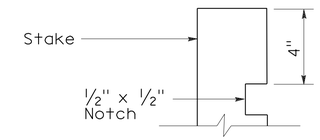

ELEVATION

STAKE NOTCH DETAIL

NOTES:

1. Temporary fiber roll spacing varies depending upon slope inclination.
2. Installations shown in the perspectives are for slope inclination of 10:1 and steeper.

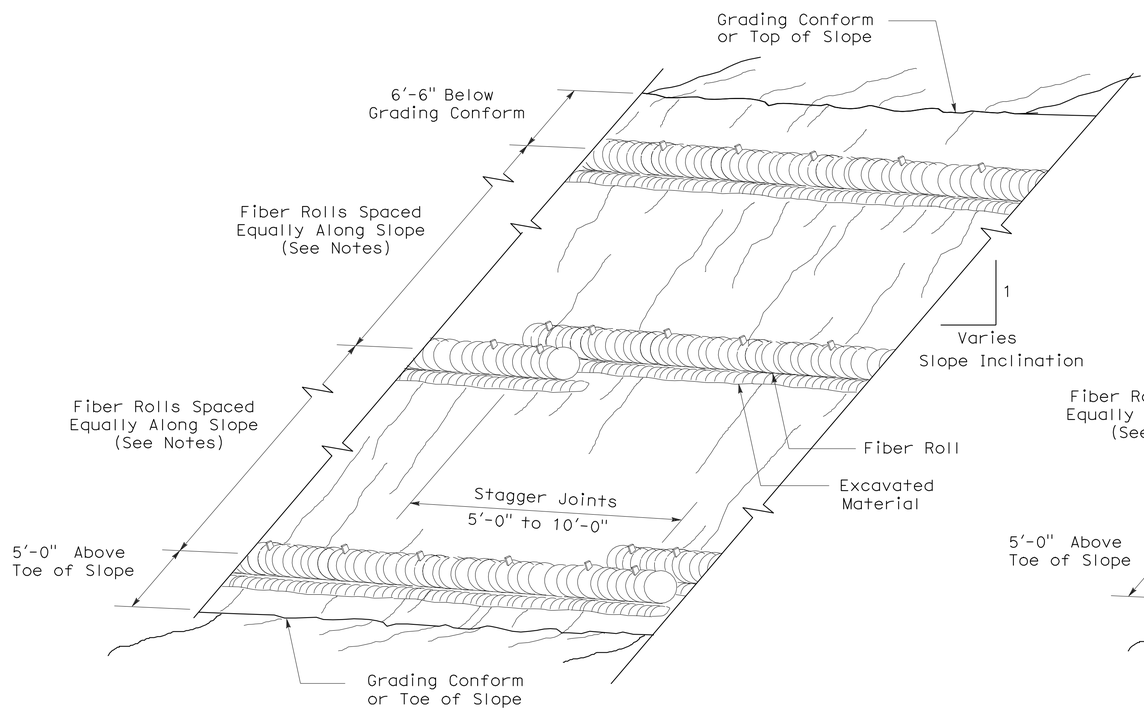

PERSPECTIVE

TEMPORARY FIBER ROLL (TYPE 1)

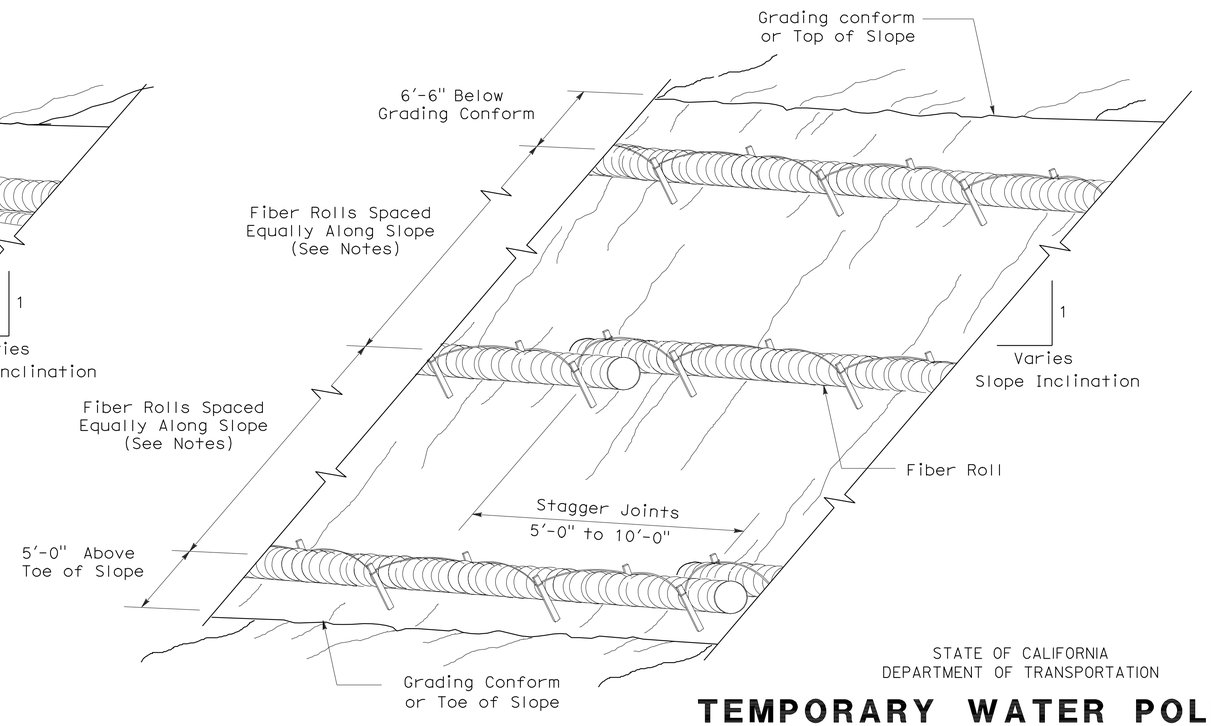

PERSPECTIVE

TEMPORARY FIBER ROLL (TYPE 2)

STATE OF CALIFORNIA
DEPARTMENT OF TRANSPORTATION

TEMPORARY WATER POLLUTION CONTROL DETAILS (TEMPORARY FIBER ROLL)

NO SCALE

RSP T56 DATED APRIL 3, 2009 SUPERSEDES STANDARD PLAN T56
DATED MAY 1, 2006 - PAGE 232 OF THE STANDARD PLANS BOOK DATED MAY 2006.

REVISED STANDARD PLAN RSP T56

2006 REVISED STANDARD PLAN RSP T56

2-23-09

DIST	COUNTY	ROUTE	POST MILES TOTAL PROJECT	SHEET NO.	TOTAL SHEETS
09	Mno	395	78.8/80.6	49	52

REGISTERED ELECTRICAL ENGINEER

October 5, 2007
PLANS APPROVAL DATE

REGISTERED PROFESSIONAL ENGINEER Jeffery G. McRae No. E14512 Exp. 6-30-08 ELECTRICAL STATE OF CALIFORNIA

The State of California or its officers or agents shall not be responsible for the accuracy or completeness of electronic copies of this plan sheet.

To accompany plans dated 9-20-10

ELECTROLIERS

STANDARD TYPES
15, 15D
15 STRUCTURE
21, 21D STRUCTURE
30
31
32
35
36-20A

High mast light pole

Double Arm lighting standard

Existing electrolier

Electrolier foundation (Future installation)

NOTES:

1. Luminaires shall be 310 W HPS when installed on Type 21, 21D, 30, 31, 32, 35 and 36-20A Standards, unless otherwise specified. Luminaires shall be 200 W HPS when installed on other type standards or poles, unless otherwise specified.
2. Luminaires shall be the cutoff type, ANSI Type Ⅲ medium cutoff lighting distribution, unless otherwise specified.
3. Variations noted adjacent to symbol on project plans.

Electrolier (see project notes or project plans)

Luminaire on wood pole

STANDARD NOTES:

- AB — Abandon. If applied to conduit, remove conductors.
- BC — Install pull box in existing conduit run.
- BP — Pedestrian barricade, type as indicated on plan.
- CB — Install conduit into existing pull box.
- CC — Connect new and existing conduit. Remove existing conductors and install conductors as indicated.
- CF — Conduit to remain for future use. Remove conductors. Install pull wire or rope.
- DH — Detector handhole.
- FA — Foundation to be abandoned.
- IS — Install sign on signal mast arm.
- NS — No slip base on standard.
- PEC — Photoelectric control.
- PEU — Photoelectric unit.
- RC — Equipment or material to be removed and become the property of the Contractor.
- RE — Remove electrolier, fuses and ballast. Tape ends of conductors.
- RL — Relocate equipment.
- RR — Remove and reuse equipment.
- RS — Remove and salvage equipment.
- SC — Splice new to existing conductors.
- SD — Service disconnect.
- SF — Standard to remain for future use. Remove luminaire, pole conductors, fuses and ballast.
- TSP — Telephone service point.

ABBREVIATIONS AND EQUIPMENT DESIGNATIONS

PROPOSED	EXISTING	
BBS	bbs	Battery backup system
BC	bc	Bolt circle
C	C	Conduit
CCTV	cctv	Closed circuit television
CKT	ckt	Circuit
CMS	cms	Changeable message sign
DLC	dlc	Loop detector lead-in cable
EMS	ems	Extinguishable message sign
EVC	evc	Emergency vehicle cable
EVD	evd	Emergency vehicle detector
FB	fb	Flashing beacon
FBCA	fbca	Flashing beacon control assembly
FBS	fbs	Flashing beacon with slip base
FO	fo	Fiber optic
G	G	Ground (Equipment Grounding Conductor)
GFCI	GFCI	Ground fault circuit interrupt
HAR	har	Highway advisory radio
HEX	hex	Hexagonal
HPS	hps	High pressure sodium
IISNS	iisns	Internally illuminated street name sign
ISL	isl	Induction sign lighting
LED	led	Light emitting diode
LMA	lma	Luminaire mast arm
LPS	lps	Low pressure sodium
LTG	ltg	Lighting
LUM	lum	Luminaire
MAT	mat	Mast arm mounting vehicle signal faces, top attachment
MAS	mas	Mast arm mounting vehicle signal faces, side attachment
MAS-4A	mas-4A	Mast arm mounting vehicle signal faces, side attachment - 4 signal section
MAS-4B	mas-4B	
MAS-4C	mas-4C	
MAS-5A	mas-5A	Mast arm mounting vehicle signal faces, side attachment - 5 signal section
MAS-5B	mas-5B	
MC	mc	Mercury contactor
M/M	m/m	Multiple to multiple transformer
MT	mt	Conduit with pull wire or rope only
MTG	mtg	Mounting
	mv	Mercury vapor lighting fixture
N	N	Neutral (Grounded Conductor)
NC	NC	Normally closed
NO	NO	Normally open
PB	pb	Pull box
PEC	pec	Photoelectric control (Type Ⅰ, Ⅱ, Ⅲ, Ⅳ or Ⅴ as shown)
PED	ped	Pedestrian
PEU	peu	Photoelectric unit
PPB	ppb	Pedestrian push button
RL		Relocated equipment
RM	rm	Ramp metering
SB	sb	Slip base
SIC	sic	Signal interconnect cable
SIG	sig	Signal
SMA	sma	Signal mast arm
SNS	sns	Street name sign
SP	sp	Service point
TDC	tdc	Telephone demarcation cabinet
TMS	tms	Traffic monitoring station
TOS	tos	Traffic Operations System
VEH	veh	Vehicle
XFMR	xfmr	Transformer
COMM	comm	Communication
RWIS	rwis	Roadway weather information system

SOFFIT AND WALL MOUNTED LUMINAIRES

Pendant, 70 W HPS unless otherwise specified.

Flush, 70 W HPS unless otherwise specified.

Wall surface, 70 W HPS unless otherwise specified.

Existing soffit or wall luminaire to remain unmodified.

Existing soffit or wall luminaire to be modified as specified.

NOTE:

Arrow indicates "street side" of luminaire.

STATE OF CALIFORNIA
DEPARTMENT OF TRANSPORTATION

ELECTRICAL SYSTEMS (SYMBOLS AND ABBREVIATIONS)

NO SCALE

RSP ES-1A DATED OCTOBER 5, 2007 SUPERSEDES STANDARD PLAN ES-1A DATED MAY 1, 2006 - PAGE 400 OF THE STANDARD PLANS BOOK DATED MAY 2006.

REVISED STANDARD PLAN RSP ES-1A

2006 REVISED STANDARD PLAN RSP ES-1A

DIST	COUNTY	ROUTE	POST MILES TOTAL PROJECT	SHEET NO.	TOTAL SHEETS
09	Mno	395	78.8/80.6	50	52

REGISTERED ELECTRICAL ENGINEER

October 5, 2007
PLANS APPROVAL DATE

REGISTERED PROFESSIONAL ENGINEER
Jeffery G. McRae
No. E14512
Exp. 6-30-08
ELECTRICAL
STATE OF CALIFORNIA

The State of California or its officers or agents shall not be responsible for the accuracy or completeness of electronic copies of this plan sheet.

To accompany plans dated 9-20-10

CONDUIT

PROPOSED	EXISTING	
		Lighting Conduit, unless otherwise indicated or noted
		Traffic signal conduit
C	c	Communication conduit
T	t	Telephone conduit
F	f	Fire alarm conduit
FO	fo	Fiber optic conduit
		Conduit termination (RSP ES-9A C)
R	r	Conduit riser in/on structure or service pole

SERVICE EQUIPMENT

PROPOSED	EXISTING	
OH	oh	Overhead lines
U	U	Wood pole "U" indicates utility owned
		Pole guy with anchor
		Utility transformer - ground mounted
III		Service equipment enclosure type
		Service equipment enclosure door indicates front of enclosure
T	t	Telephone demarcation cabinet

POLE-MOUNTED SERVICE DESIGNATION

Type of installation

TYPE H SERVICE - 28'-10" ← Pole height above grade

ILLUMINATED OVERHEAD SIGN

PROPOSED	EXISTING	
		Overhead sign - Single post
		Overhead sign - Two post
		Overhead sign - Mounted on structure
		Overhead sign with electrolier

SIGNAL EQUIPMENT

PROPOSED	EXISTING	
		Pedestrian signal face
		Pedestrian push button post
		Pedestrian barricade
		Vehicle signal face (with backplate, 3-Section: red, yellow and green)
		Vehicle signal face with angle visors
PV	PV	Modifications of basic symbols: "L" indicates all non-arrow sections louvered "LG" indicates louvered green section only "PV" indicates 12" programmed visibility sections "8" indicates all 8" sections (only when specified)
		Type 15TS and Vehicle signal face
		Vehicle signal face with red, yellow and green left arrow sections
		Vehicle signal face with red and yellow sections and up green arrow
		Vehicle signal face (5 Section) with red, yellow and green sections and yellow and green right arrows
		Type 1 Standard and attached vehicle signal faces
		Standard with signal mast arm only and attached vehicle signal faces and internally illuminated street name sign
		Type 33 Standard, Left-turn vehicle signal face and sign
		Standard with luminaire and signal mast arms and attached vehicle signal faces
		Cantilever flashing beacon Type 9 Frame, with a sign unless otherwise specified or indicated
		Type 15-FBS Standard with two vehicle signal face sections with lens, backplate and visor with a sign
R	Y	Flashing beacon. One vehicle signal face section with lens, backplate and visor. "R" indicates red indication, "Y" indicates yellow indication
		Controller assembly. Door indicates front of cabinet

SIGNAL EQUIPMENT Cont

PROPOSED	EXISTING	
		Guard post
		Type 1 Standard with "Meter On" sign
		Emergency Vehicle detector

NOTES:

1. All signal sections shall be 12" unless shown otherwise.
2. Signal heads shall be provided with backplates unless shown otherwise.
3. Signal indication shall be LED.

STATE OF CALIFORNIA
DEPARTMENT OF TRANSPORTATION

ELECTRICAL SYSTEMS (SYMBOLS AND ABBREVIATIONS)

NO SCALE

RSP ES-1B DATED OCTOBER 5, 2007 SUPERCEDES STANDARD PLAN ES-1B DATED MAY 1, 2006 - PAGE 401 OF THE STANDARD PLANS BOOK DATED MAY 2006.

REVISED STANDARD PLAN RSP ES-1B

2006 REVISED STANDARD PLAN RSP ES-1B

DIST	COUNTY	ROUTE	POST MILES TOTAL PROJECT	SHEET NO.	TOTAL SHEETS
09	Mno	395	78.8/80.6	51	52

REGISTERED ELECTRICAL ENGINEER

October 5, 2007
PLANS APPROVAL DATE

REGISTERED PROFESSIONAL ENGINEER
Jeffery G. McRae
No. E14512
Exp. 6-30-08
ELECTRICAL
STATE OF CALIFORNIA

The State of California or its officers or agents shall not be responsible for the accuracy or completeness of electronic copies of this plan sheet.

To accompany plans dated 9-20-10

2006 REVISED STANDARD PLAN RSP ES-1C

EQUIPMENT IDENTIFICATION

ILLUMINATED SIGN IDENTIFICATION NUMBER:

Sign No. 12345 — Sign number - Place on post or structure

10 ISL SCI 1.0

- 1.0 — Transformer rating (kVA)
- SCI — Lighting control type
- ISL — Number and type of fixtures

Do NOT place on standard or structure

ELECTROLIER OR EQUIPMENT IDENTIFICATION NUMBER:

12345 - 15'-0"

- 15'-0" — Mast arm length, if shown. Do not place on standard or structure.
- 12345 — Equipment number - Place on standard or structure. Existing equipment numbers are shown in parenthesis

CONDUIT AND CONDUCTOR IDENTIFICATION:

1½"C, 2#10, 15#14, 2 DLC

- 2#10, 15#14, 2 DLC — Number and size of conductors and cables
- 1½"C — Size of conduit in inches

Ø1, Ø2, Ø2P, etc.	Traffic phase identification for signal faces, detectors and phase diagrams
1 2 3	Project note numbers
A B C	Equipment description, installation or item numbers
1 2 3	Conduit run numbers

SIGNAL AND LIGHTING STANDARD (TYPICAL DESIGNATION):

19A - 3 - 100

- 100 — Wind velocity = 100 mph
- 3 — Case 3 arm loading
- 19A — Standard type
- Standard Plan sheet number
- Detail number or letter

MISCELLANEOUS EQUIPMENT

PROPOSED	EXISTING	
CMS	cms	Changeable message sign
		Closed circuit television camera
		Highway advisory radio pole and antenna
EMS	ems	Extinguishable message sign
M V	m v	Detection device M = Microwave sensor V = Video image sensor

WIRING DIAGRAM LEGEND

P	Pole
CB	Circuit breaker
A	Ampere
V	Volt
M	Metered
UM	Unmetered
NB	Neutral bus
GB	Ground bus
G	Equipment grounding conductor
N	Grounded conductor (Neutral)

- External conductor
- Conductor or bus
- Tie point
- Contactor coil
- Contactor, Contact NO
- Terminal blocks
- Contactor, Contact NC
- Enclosure bond
- Grounding electrode
- Circuit breaker
- Receptacle

PULL BOXES

PROPOSED	EXISTING	
		Pull box-No. 5 unless otherwise indicated or noted.
3	9A(21)	Pull box-Additional designations or descriptions

3 = No. 3½ pull box
5 = No. 5 pull box
6 = No. 6 pull box
7 = No. 7 (Ceiling pull box)
8 = No. 8 (Pendant soffit pull box)
9 = No. 9 pull box
9A = No. 9A pull box

(C) = Communications pull box
(E) = Pull box with extension
(S) = Sprinkler control pull box
(21) = Anchor bolts and conduit for future installation of Type 21 Standard
(T) = Traffic pull box

VEHICLE DETECTORS

5 J 9 U

- U = Upper
  L = Lower
- Slot number in input file
- Input file (I or J)
- Phase

PROPOSED	EXISTING	
		Type A detector loop. Outline of sawcut shown.
		Type B detector loop. Outline of sawcut shown.
		Type C detector loop. Outline of sawcut shown.
		Type D detector loop. Outline of sawcut shown.
		Type E detector loop. Outline of sawcut shown.
		Type Q detector loop. Outline of sawcut shown.
		Magnetic detector
DH	dh	Detector handhole
		Microwave or video detection zone

STATE OF CALIFORNIA
DEPARTMENT OF TRANSPORTATION

ELECTRICAL SYSTEMS (SYMBOLS AND ABBREVIATIONS)

NO SCALE

RSP ES-1C DATED OCTOBER 5, 2007 SUPERCEDES STANDARD PLAN ES-1C DATED MAY 1, 2006 - PAGE 402 OF THE STANDARD PLANS BOOK DATED MAY 2006.

REVISED STANDARD PLAN RSP ES-1C

DIST	COUNTY	ROUTE	POST MILES TOTAL PROJECT	SHEET NO.	TOTAL SHEETS
09	Mno	395	78.8/80.6	52	52

REGISTERED ELECTRICAL ENGINEER

October 5, 2007
PLANS APPROVAL DATE

REGISTERED PROFESSIONAL ENGINEER Jeffery G. McRae No. E14512 Exp. 6-30-08 ELECTRICAL STATE OF CALIFORNIA

The State of California or its officers or agents shall not be responsible for the accuracy or completeness of electronic copies of this plan sheet.

To accompany plans dated 9-20-10

LOOP INSTALLATION PROCEDURE

1. Loops shall be centered in lanes.
2. Saw slots in pavement for loop conductors as shown in details.
3. Distance between side of loop and a lead-in saw cut from adjacent detectors shall be 2'-0" minimum. Distance between lead-in saw cuts shall be 6" minimum.
4. Bottom of saw slot shall be smooth with no sharp edges.
5. Slots shall be washed until clean, blown out and thoroughly dried before installing loop conductors.
6. Adjacent loops on the same sensor unit channel shall be wound in opposite directions.
7. Identify and tag loop circuit pairs in the pull box with loop number, start (S) and finish (F) of conductor. Identify and tag lead-in-cable with sensor number and phase.
8. Install loop conductor in slot using a 3/16" to 1/4" thick wood paddle. Hold loop conductors with wood paddles (at the bottom of the sawed slot) during sealant placement.
9. No more than 2 twisted pairs shall be installed in one sawed slot.
10. Allow additional 5'-0" of slack length of conductor for the lead-in run to pull box.
11. The additional length of each conductor for each loop shall be twisted together into a pair (6 turns per 3'-4" minimum) before being placed in the slot and conduit leading to pull box.
12. Test each loop circuit for continuity, circuit resistance and insulation resistance at the pull box before filling slots.
13. Fill slots as shown in details.
14. Splice loop conductors to lead-in-cable. Splices shall be soldered.
15. End of lead-in-cable and Type 2 loop conductor shall be waterproofed prior to installing in conduit to prevent moisture from entering the cable.
16. Lead-in-cable shall not be spliced between the pull box and the controller cabinet terminals.
17. Test each loop circuit for continuity, circuit resistance and insulation resistance at the controller cabinet location.
18. Where loop conductors are not to be spliced to a lead-in-cable, the ends of the conductors shall be taped and waterproofed with electrical insulating coating.

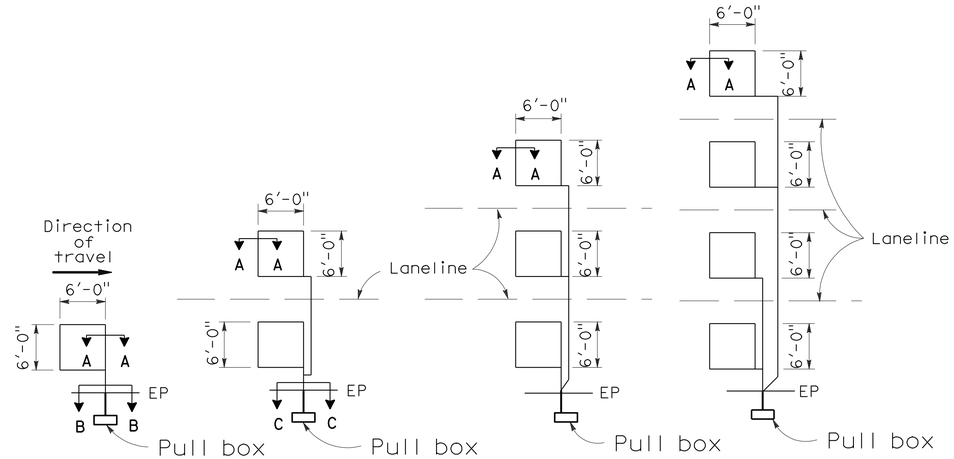

TYPE 1A INSTALLATION | TYPE 2A INSTALLATION | TYPE 3A INSTALLATION | TYPE 4A INSTALLATION

SAWCUT DETAILS

(Type A loop detector configurations illustrated)

1. 1A thru 4A = 1 Type A loop configuration in each lane.
2. 1B thru 4B = 1 Type B loop configuration in each lane.
3. 1C = 1 Type C loop configuration entering lanes as required.
4. 1D thru 4D = 1 Type D loop configuration in each lane.
5. 1E thru 4E = 1 Type E loop configuration in each lane.
6. 1Q thru 4Q = 1 Type Q loop configuration in each lane. (Use Type A, B, C, D, E or Q loop detector configurations only when specified or shown on plans)

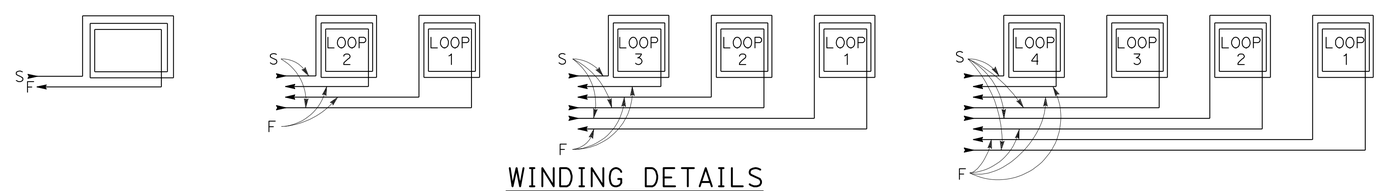

WINDING DETAILS

See Notes 6 and 7

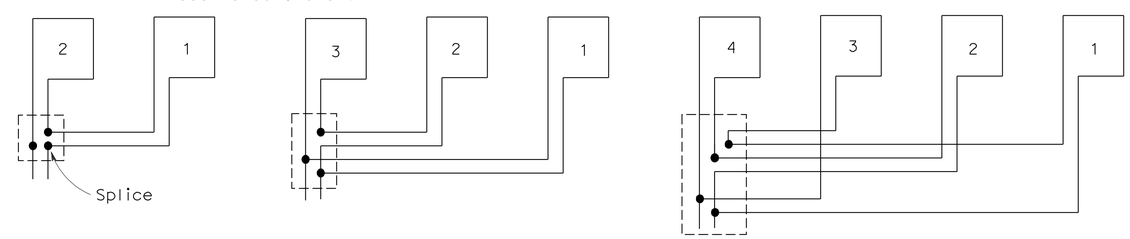

TYPICAL LOOP CONNECTIONS

(Dashed lines represent the pull box)

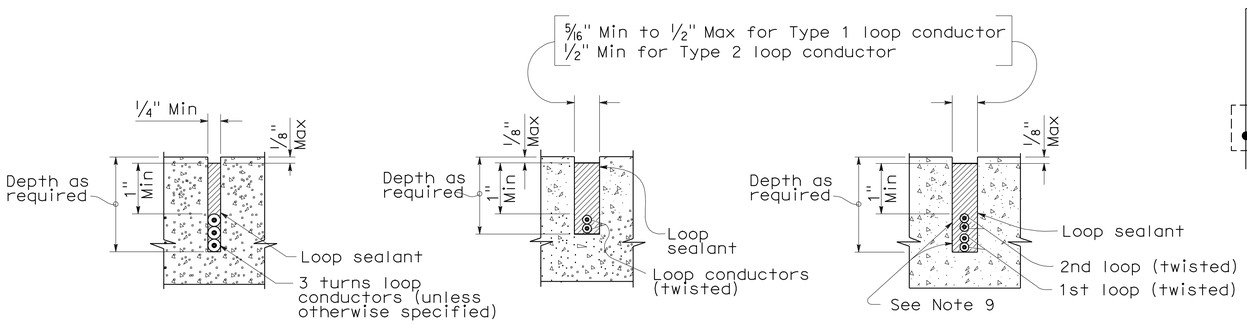

SECTION A-A | SECTION B-B | SECTION C-C

SLOT DETAILS - TYPE 1 AND TYPE 2 LOOP CONDUCTOR

STATE OF CALIFORNIA
DEPARTMENT OF TRANSPORTATION

ELECTRICAL SYSTEMS (DETECTORS)

NO SCALE

RSP ES-5A DATED OCTOBER 5, 2007 SUPERCEDES STANDARD PLAN ES-5A DATED MAY 1, 2006 - PAGE 423 OF THE STANDARD PLANS BOOK DATED MAY 2006.

REVISED STANDARD PLAN RSP ES-5A

2006 REVISED STANDARD PLAN RSP ES-5A