Dist	COUNTY	ROUTE	POST MILES TOTAL PROJECT	SHEET No.	TOTAL SHEETS
09	Mno	395	52.3/R53.7	1	69

STATE OF CALIFORNIA

DEPARTMENT OF TRANSPORTATION

ACHSNHP-P395(249)E

PROJECT PLANS FOR CONSTRUCTION ON

STATE HIGHWAY

IN MONO COUNTY NEAR LEE VINING FROM 0.4 MILE NORTH OF NATIONAL FOREST VISITOR CENTER ROAD TO 0.7 MILE NORTH OF PICNIC GROUNDS ROAD

TO BE SUPPLEMENTED BY STANDARD PLANS DATED 2010

INDEX OF PLANS

SHEET No.	DESCRIPTION
1	TITLE AND LOCATION MAP
2-5	TYPICAL CROSS SECTIONS
6-13	LAYOUTS
14-19	CONSTRUCTION DETAILS
20	TEMPORARY WATER POLLUTION CONTROL DETAILS
21-22	CONSTRUCTION AREA SIGNS
23	MOTORIST INFORMATION PLAN
24-41	STAGE CONSTRUCTION PLANS, DETAILS AND QUANTITIES
42	PAVEMENT DELINEATION QUANTITIES
43	SIGN DETAILS AND QUANTITIES
44	SUMMARY OF QUANTITIES
45-52	EROSION CONTROL LEGEND, PLANS, DETAILS AND QUANTITIES
53-56	PORTABLE TEMPORARY SIGNAL PLANS, DETAILS, AND QUANTITIES
57-69	REVISED STANDARD PLANS

THE STANDARD PLANS LIST APPLICABLE TO THIS CONTRACT IS INCLUDED IN THE NOTICE TO BIDDERS AND SPECIAL PROVISIONS BOOK.

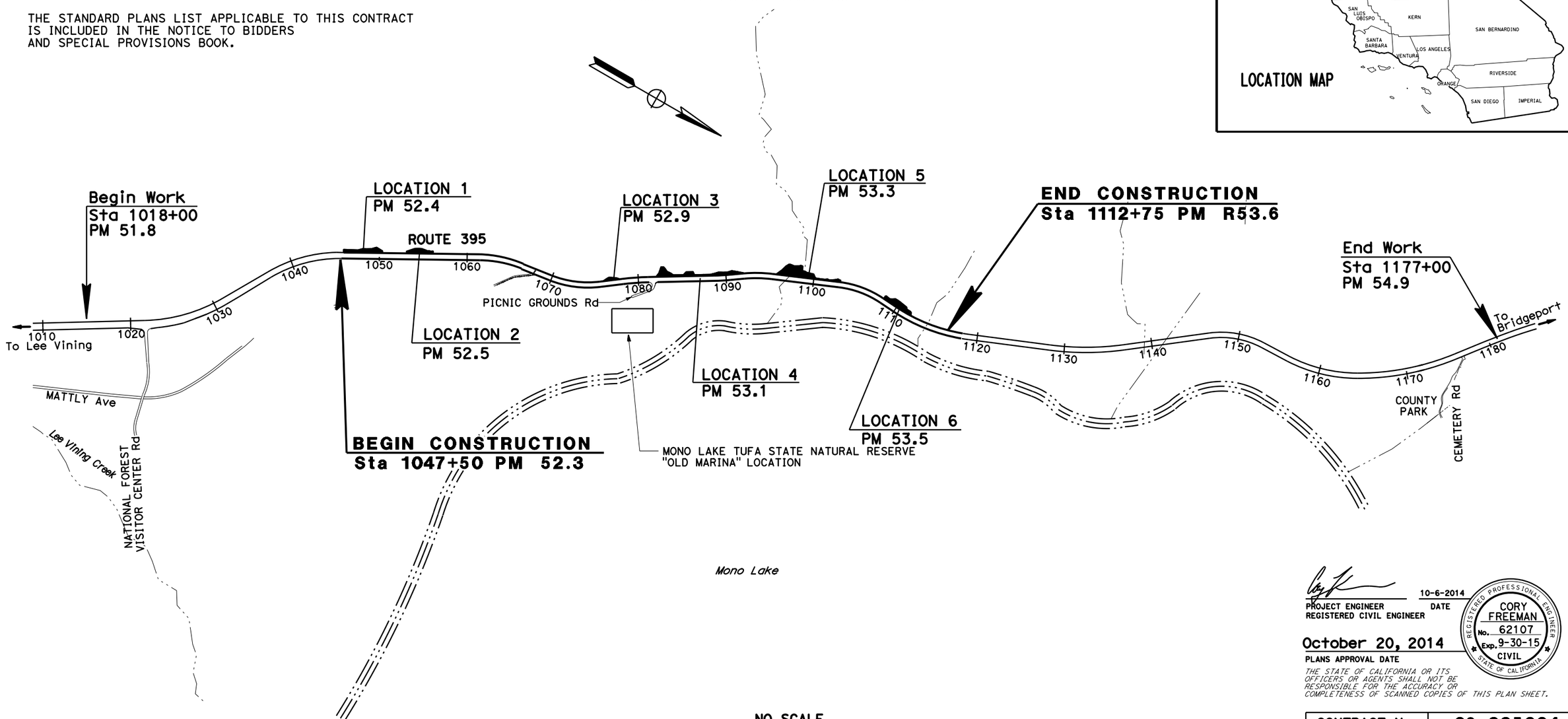

NO SCALE

THE CONTRACTOR SHALL POSSESS THE CLASS (OR CLASSES) OF LICENSE AS SPECIFIED IN THE "NOTICE TO BIDDERS."

PROJECT MANAGER CEDRIK ZEMITIS

DESIGN ENGINEER BRIAN WESLING

PROJECT ENGINEER REGISTERED CIVIL ENGINEER — DATE 10-6-2014

REGISTERED PROFESSIONAL ENGINEER CORY FREEMAN No. 62107 Exp. 9-30-15 CIVIL STATE OF CALIFORNIA

October 20, 2014
PLANS APPROVAL DATE

THE STATE OF CALIFORNIA OR ITS OFFICERS OR AGENTS SHALL NOT BE RESPONSIBLE FOR THE ACCURACY OR COMPLETENESS OF SCANNED COPIES OF THIS PLAN SHEET.

CONTRACT No.	09-335004
PROJECT ID	0900020002

LAST REVISION 07-28-14 DATE PLOTTED => 05-NOV-2014 TIME PLOTTED => 10:48

Dist	COUNTY	ROUTE	POST MILES TOTAL PROJECT	SHEET No.	TOTAL SHEETS
09	Mno	395	52.3/R53.7	2	69

REGISTERED CIVIL ENGINEER 10-6-14 DATE

10-20-14
PLANS APPROVAL DATE

REGISTERED PROFESSIONAL ENGINEER CORY FREEMAN No. 62107 Exp. 9-30-15 CIVIL STATE OF CALIFORNIA

THE STATE OF CALIFORNIA OR ITS OFFICERS OR AGENTS SHALL NOT BE RESPONSIBLE FOR THE ACCURACY OR COMPLETENESS OF SCANNED COPIES OF THIS PLAN SHEET.

NOTES:

1. DIMENSIONS OF PAVEMENT STRUCTURES (STRUCTURAL SECTIONS) ARE SUBJECT TO TOLERANCES SPECIFIED IN THE STANDARD SPECIFICATIONS.
2. EXISTING ROADWAY TO BE PROTECTED DURING CONSTRUCTION ACTIVITIES.
3. CONTRACTOR TO VERIFY EXISTING FIBER OPTIC LINE LOCATION PRIOR TO CONSTRUCTION.
4. SEE SHEETS SC-1 AND SC-2 FOR SEQUENCE OF WORK.
5. FOR EROSION CONTROL TYPES TO BE APPLIED SEE SHEET ECL-1.
6. FOR LOCATIONS OF WHERE TO APPLY EROSION CONTROL TYPES AND HOW SEE SHEETS EC-1 TO EC-5 AND DETAIL SHEET ECD-1 .
7. FOR Temp PINE NEEDLE WATTLE DETAILS AND LOCATIONS SEE Sht WPCD-1, L-1 TO L-6, AND STAGE CONSTRUCTION TRAFFIC HANDLING PLANS.

DESIGN DESIGNATION

2014 AADT = 3710 D = 55.36%
2034 AADT = 4620 T = 11.2%
DHV 2014 = 640 V = 60 mph
TI_{20} = 10

PAVEMENT CLIMATE REGION

HIGH DESERT

EXISTING STRUCTURAL SECTION:

1 — 0.65′ AC, 0.50′ AB

2 — 0.25′ AC, 0.35′ AB

NEW STRUCTURAL SECTION:

3 — 0.25′ MINOR HMA

ABBREVIATIONS:

ACNS - ANCHORED CABLE NET SYSTEM
ADTWMS - ANCHORED DOUBLE TWISTED WIRE MESH SYSTEM
C&G - CLEAR & GRUB
HRSS - HAND ROCK SLOPE SCALING
OM - ORGANIC MATERIAL
TPNW - Temp PINE NEEDLE WATTLE

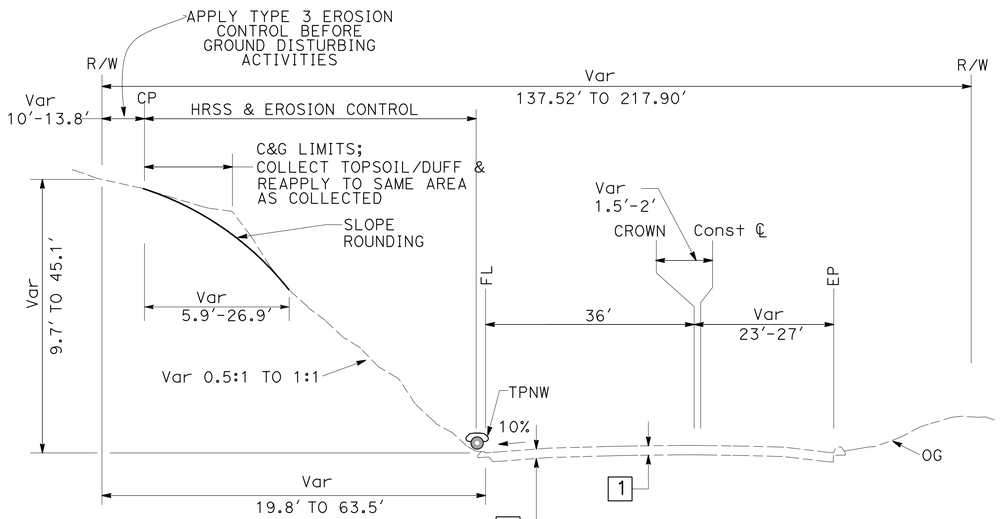

ROUTE 395
LOCATION 2
STA 1053+11.3 TO 1056+00

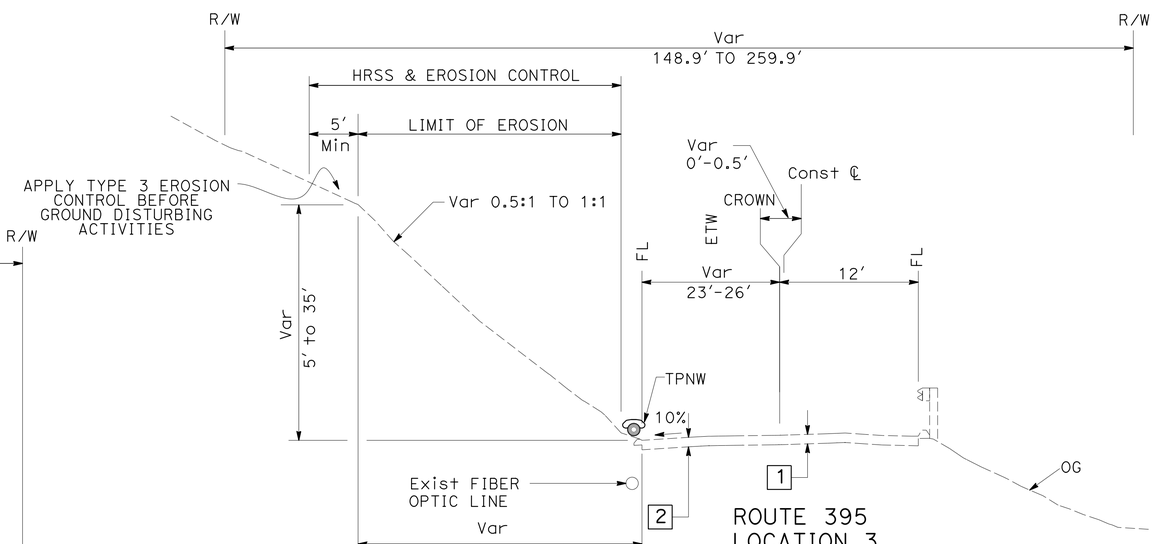

ROUTE 395
LOCATION 3
STA 1075+68.8 TO 1078+05

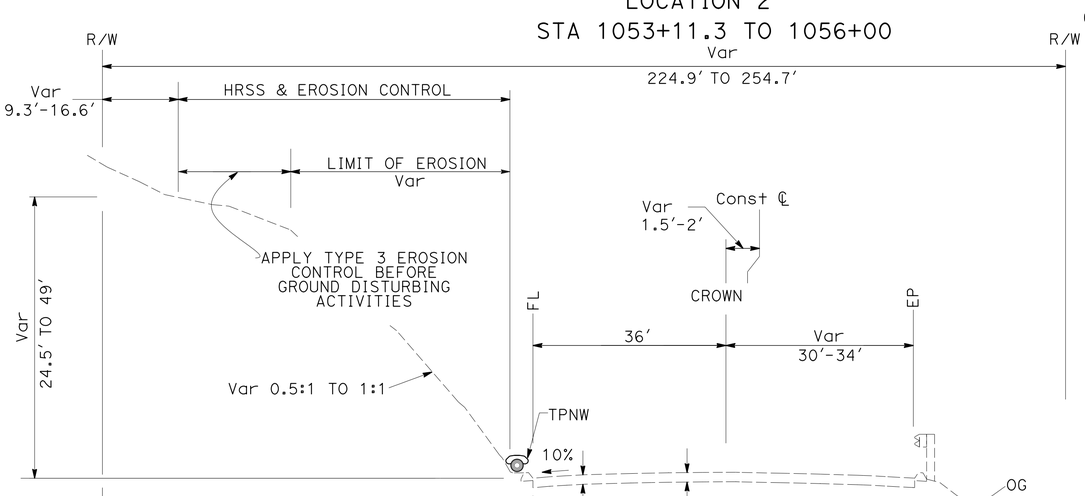

ROUTE 395
LOCATION 1
STA 1047+50.3 TO 1050+46.3

TYPICAL CROSS SECTIONS X-1

NO SCALE

STATE OF CALIFORNIA - DEPARTMENT OF TRANSPORTATION
Caltrans® DESIGN

FUNCTIONAL SUPERVISOR: BRIAN WESLING
CALCULATED-DESIGNED BY: CORY FREEMAN
CHECKED BY: BRIAN WESLING
REVISED BY / DATE REVISED

LAST REVISION 06-12-14
DATE PLOTTED => 05-NOV-2014
TIME PLOTTED => 08:33

Dist	COUNTY	ROUTE	POST MILES TOTAL PROJECT	SHEET No.	TOTAL SHEETS
09	Mno	395	52.3/R53.7	3	69

REGISTERED CIVIL ENGINEER 10-6-14 DATE

10-20-14
PLANS APPROVAL DATE

REGISTERED PROFESSIONAL ENGINEER CORY FREEMAN No. 62107 Exp. 9-30-15 CIVIL STATE OF CALIFORNIA

THE STATE OF CALIFORNIA OR ITS OFFICERS OR AGENTS SHALL NOT BE RESPONSIBLE FOR THE ACCURACY OR COMPLETENESS OF SCANNED COPIES OF THIS PLAN SHEET.

NOTES:

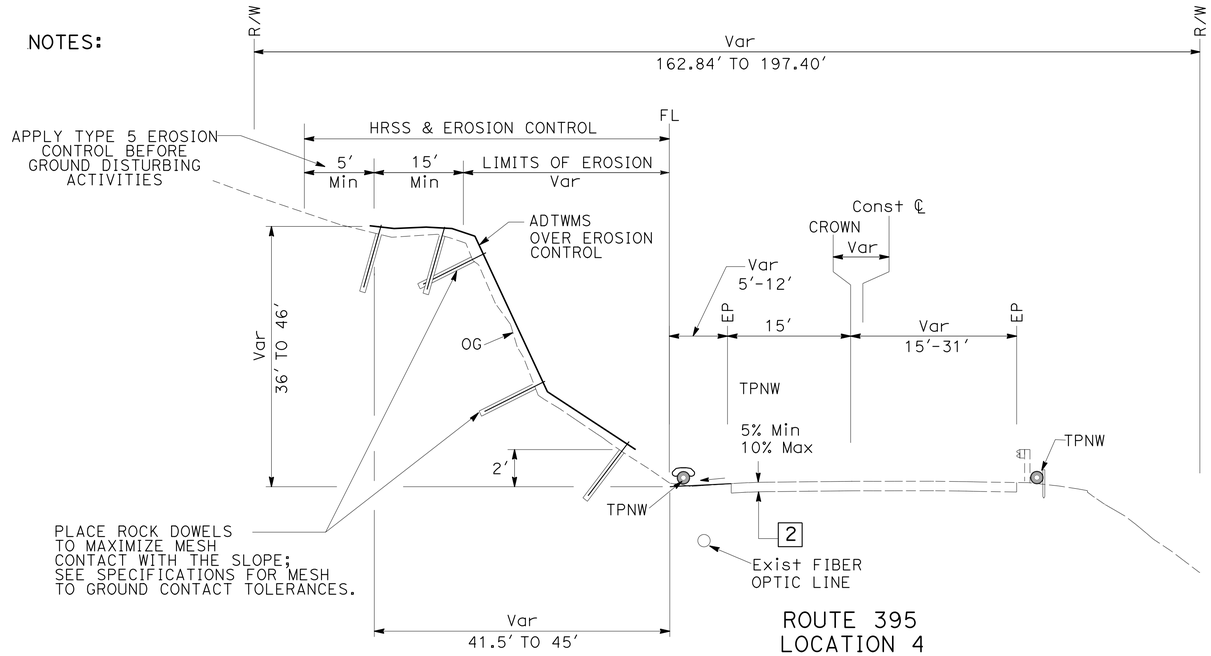

ROUTE 395
LOCATION 4
STA 1086+46.6 TO 1088+50.8

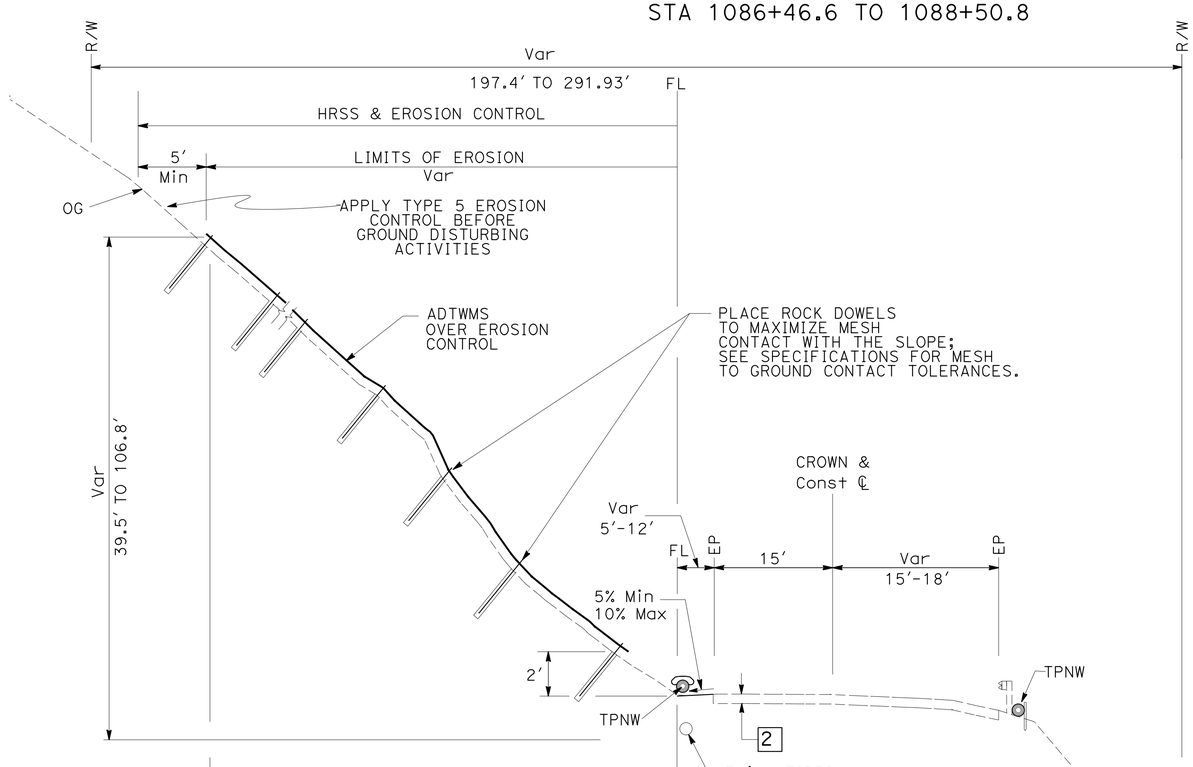

ROUTE 395
LOCATION 4
STA 1082+00 TO 1086+46.6

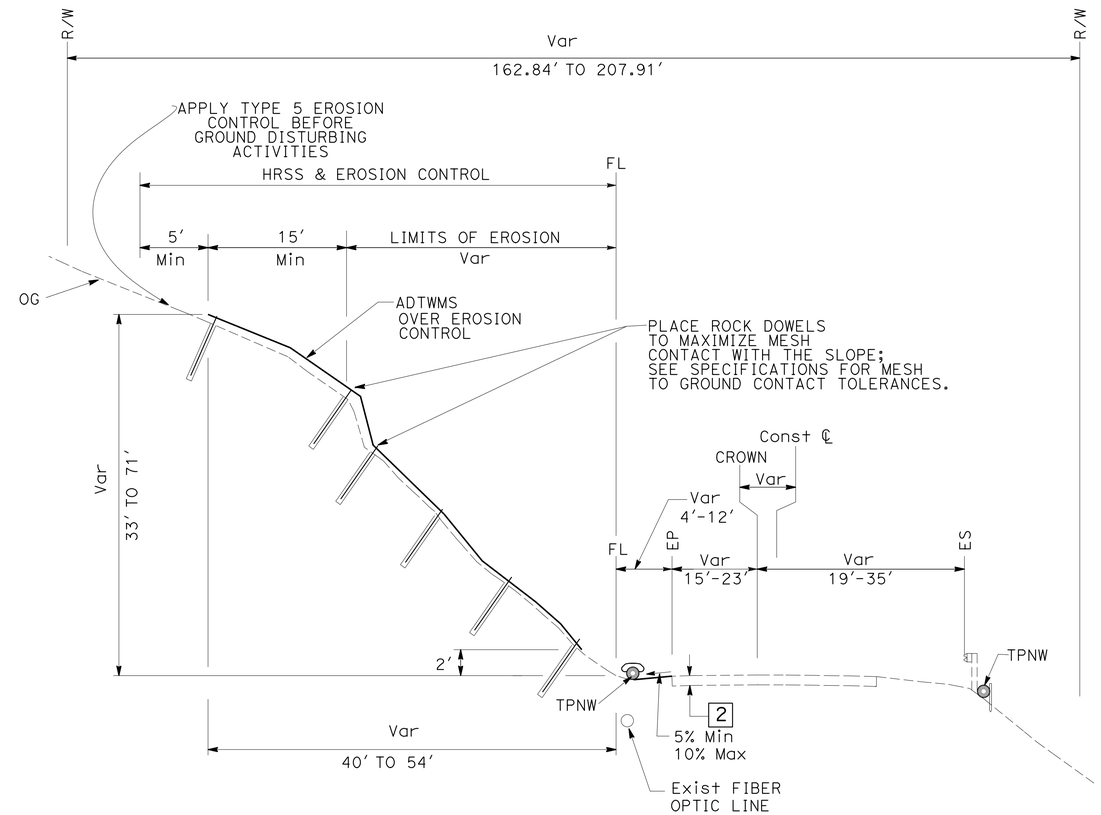

ROUTE 395
LOCATION 4
STA 1088+50.8 TO 1092+50.5

TYPICAL CROSS SECTIONS X-2

NO SCALE

STATE OF CALIFORNIA - DEPARTMENT OF TRANSPORTATION
Caltrans® DESIGN

FUNCTIONAL SUPERVISOR: BRIAN WESLING
CALCULATED-DESIGNED BY: CORY FREEMAN
CHECKED BY: BRIAN WESLING
REVISED BY
DATE REVISED

LAST REVISION 06-11-14
DATE PLOTTED => 05-NOV-2014
TIME PLOTTED => 08:33

Dist	COUNTY	ROUTE	POST MILES TOTAL PROJECT	SHEET No.	TOTAL SHEETS
09	Mno	395	52.3/R53.7	4	69

REGISTERED CIVIL ENGINEER 10-6-14 DATE

10-20-14
PLANS APPROVAL DATE

REGISTERED PROFESSIONAL ENGINEER CORY FREEMAN No. 62107 Exp. 9-30-15 CIVIL STATE OF CALIFORNIA

THE STATE OF CALIFORNIA OR ITS OFFICERS OR AGENTS SHALL NOT BE RESPONSIBLE FOR THE ACCURACY OR COMPLETENESS OF SCANNED COPIES OF THIS PLAN SHEET.

NOTES:

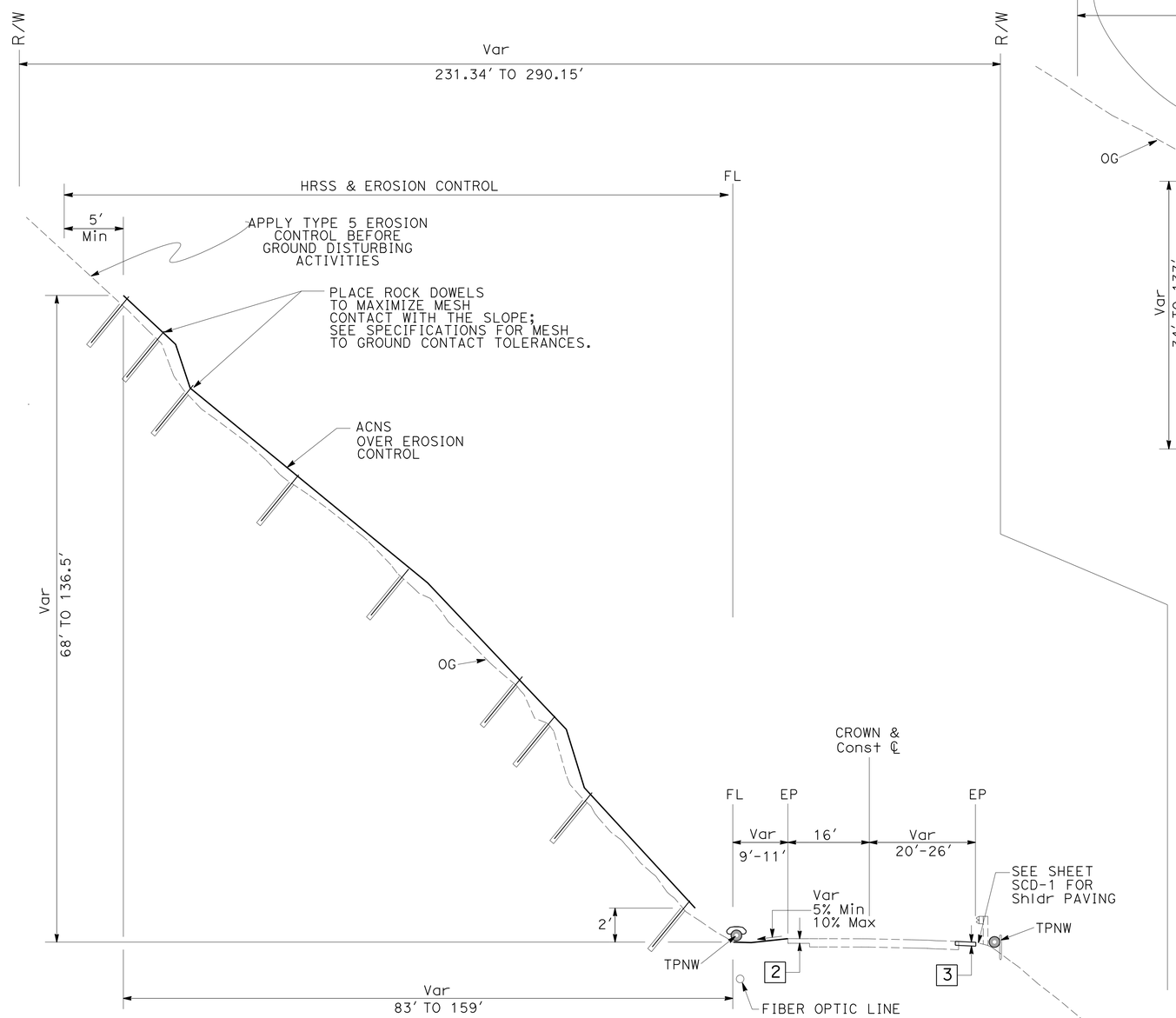

ROUTE 395
LOCATION 5
STA 1095+28 TO 1098+75.8

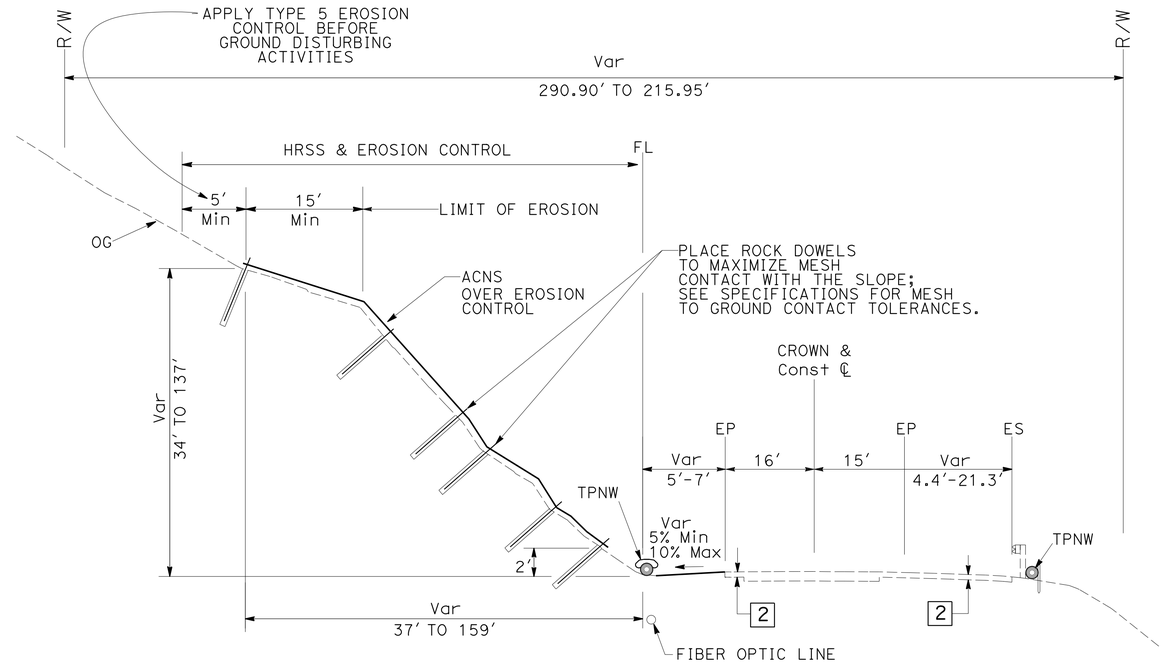

ROUTE 395
LOCATION 5
STA 1098+75.8 TO 1102+50

TYPICAL CROSS SECTIONS

NO SCALE

X-3

STATE OF CALIFORNIA - DEPARTMENT OF TRANSPORTATION
Caltrans
DESIGN

FUNCTIONAL SUPERVISOR: BRIAN WESLING
CALCULATED-DESIGNED BY: CORY FREEMAN
CHECKED BY: BRIAN WESLING
REVISED BY
DATE REVISED

LAST REVISION 06-12-14
DATE PLOTTED => 05-NOV-2014
TIME PLOTTED => 08:33

Dist	COUNTY	ROUTE	POST MILES TOTAL PROJECT	SHEET No.	TOTAL SHEETS
09	Mno	395	52.3/R53.7	5	69

REGISTERED CIVIL ENGINEER 10-6-14 DATE

10-20-14
PLANS APPROVAL DATE

REGISTERED PROFESSIONAL ENGINEER CORY FREEMAN No. 62107 Exp. 9-30-15 CIVIL STATE OF CALIFORNIA

THE STATE OF CALIFORNIA OR ITS OFFICERS OR AGENTS SHALL NOT BE RESPONSIBLE FOR THE ACCURACY OR COMPLETENESS OF SCANNED COPIES OF THIS PLAN SHEET.

NOTES:

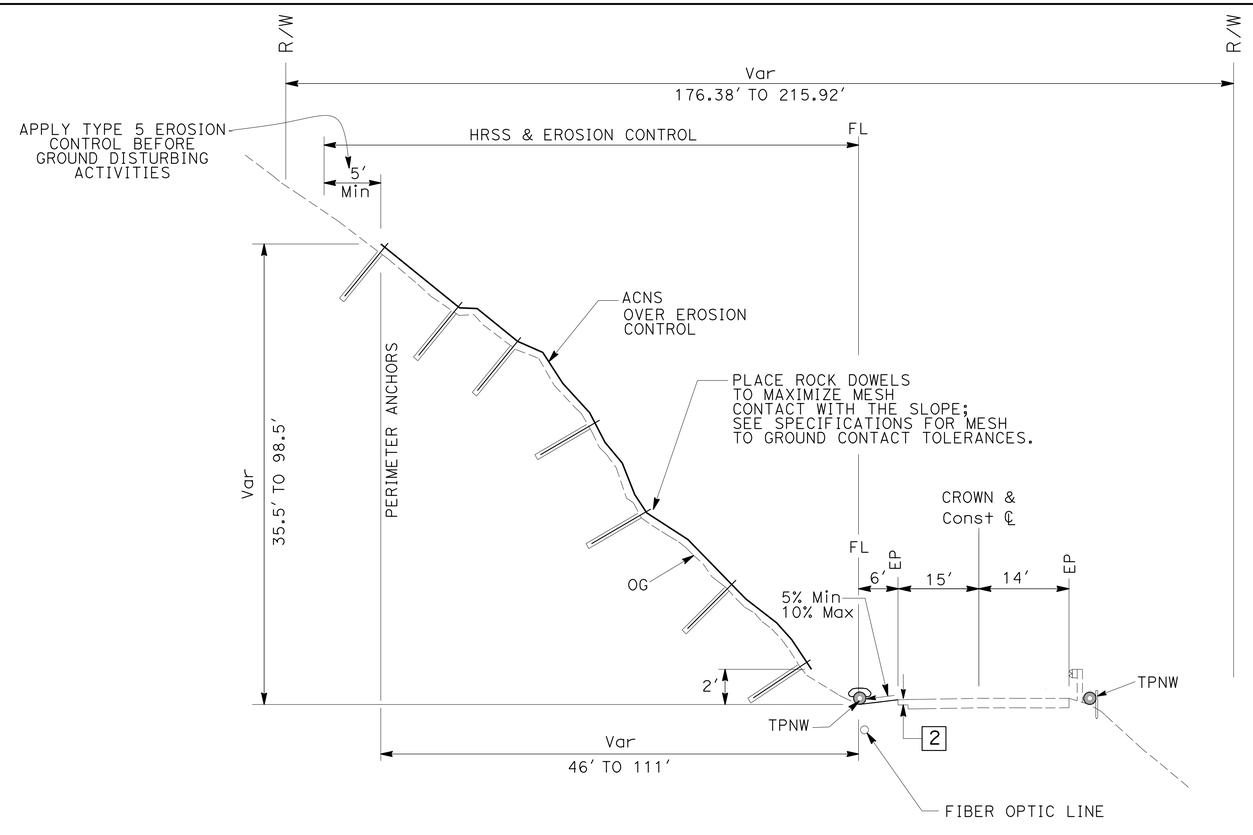

ROUTE 395
LOCATION 6
STA 1107+30.2 TO 1112+75.2

TYPICAL CROSS SECTIONS X-4

NO SCALE

STATE OF CALIFORNIA - DEPARTMENT OF TRANSPORTATION
Caltrans® DESIGN

FUNCTIONAL SUPERVISOR: BRIAN WESLING

CALCULATED-DESIGNED BY: CORY FREEMAN
CHECKED BY: BRIAN WESLING

REVISED BY | DATE REVISED

LAST REVISION | DATE PLOTTED => 05-NOV-2014
06-12-14 | TIME PLOTTED => 08:33

Dist	COUNTY	ROUTE	POST MILES TOTAL PROJECT	SHEET No.	TOTAL SHEETS
09	Mno	395	52.3/R53.7	6	69

REGISTERED CIVIL ENGINEER 10-6-14 DATE

10-20-14
PLANS APPROVAL DATE

REGISTERED PROFESSIONAL ENGINEER CORY FREEMAN No. 62107 Exp 9-30-15 CIVIL STATE OF CALIFORNIA

THE STATE OF CALIFORNIA OR ITS OFFICERS OR AGENTS SHALL NOT BE RESPONSIBLE FOR THE ACCURACY OR COMPLETENESS OF SCANNED COPIES OF THIS PLAN SHEET.

NOTES:

1. FOR ACCURATE RIGHT OF WAY DATA, CONTACT RIGHT OF WAY ENGINEERING AT THE DISTRICT OFFICE.
2. LOCATIONS OF UTILITY FACILITIES SHOWN ON THESE PLANS ARE APPROXIMATE AND SHALL BE VERIFIED BY THE CONTRACTOR BEFORE STARTING CONSTRUCTION.
3. STATIONING IS FOR CONSTRUCTION PURPOSES ONLY.
4. SEE EROSION CONTROL PLANS AND DETAILS FOR LIMITS OF EROSION CONTROL WORK
5. FOR MORE INFORMATION ABOUT LOCATION 4 SLOPE ZONES SEE INFORMATION HANDOUT.
6. SLOPE ZONES SHOWN ARE APPROXIMATE.
7. Temp BENCH SLOPES ARE NOT ALLOWED.
8. CLEAR AREA TO BE COVERED BY ADTWMS/ACNS PER CLEARING & GRUBBING SPECIFICATIONS.
8. CONTRACTOR SHALL MINIMIZE GROUND DISTURBANCE AND PRESERVE EXISTING VEGETATION FOR ALL AREAS EXCEPT AS DIRECTED BY THESE PLANS AND SPECIFICATIONS.

ABBREVIATIONS:

ADTWMS - ANCHORED DOUBLE TWISTED WIRE MESH SYSTEM
ACNS - ANCHORED CABLE NET SYSTEM
HRSS - HAND ROCK SLOPE SCALING
SZ - SLOPE ZONE
TPNW - Temp PINE NEEDLE WATTLE

LEGEND:

ADTWMS AREA OF COVERAGE
ACNS AREA OF COVERAGE
SZ LIMITS
TPNW

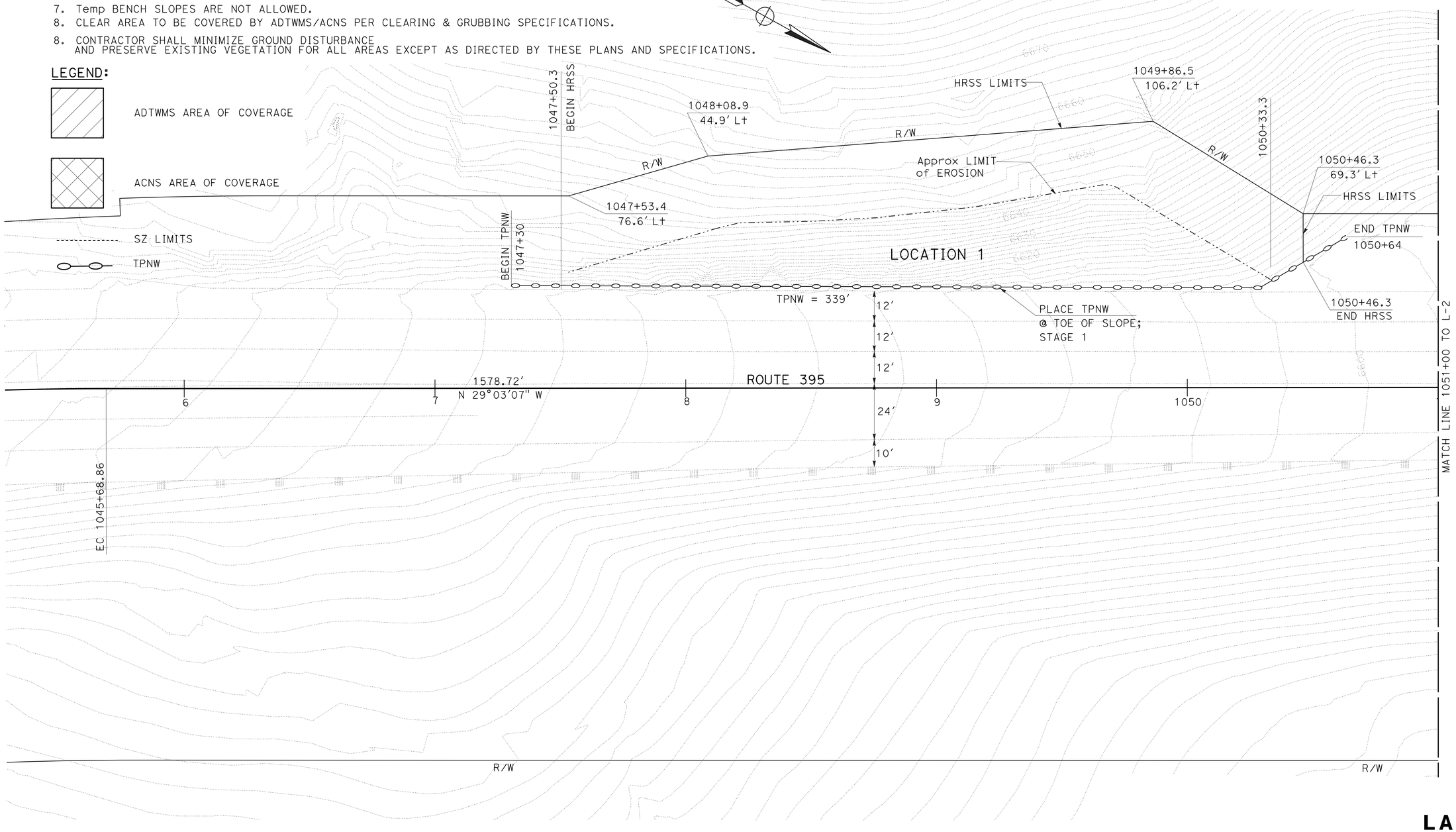

LAYOUT
SCALE: 1"=20′ **L-1**

STATE OF CALIFORNIA - DEPARTMENT OF TRANSPORTATION
Caltrans
DESIGN

FUNCTIONAL SUPERVISOR: BRIAN WESLING
CALCULATED-DESIGNED BY: CORY FREEMAN
CHECKED BY: BRIAN WESLING
REVISED BY
DATE REVISED

LAST REVISION 07-28-14
DATE PLOTTED => 05-NOV-2014
TIME PLOTTED => 08:33

Dist	COUNTY	ROUTE	POST MILES TOTAL PROJECT	SHEET No.	TOTAL SHEETS
09	Mno	395	52.3/R53.7	7	69

REGISTERED CIVIL ENGINEER 10-6-14 DATE

10-20-14
PLANS APPROVAL DATE

REGISTERED PROFESSIONAL ENGINEER CORY FREEMAN No. 62107 Exp 9-30-15 CIVIL STATE OF CALIFORNIA

THE STATE OF CALIFORNIA OR ITS OFFICERS OR AGENTS SHALL NOT BE RESPONSIBLE FOR THE ACCURACY OR COMPLETENESS OF SCANNED COPIES OF THIS PLAN SHEET.

NOTE:

FOR ACCURATE RIGHT OF WAY DATA, CONTACT RIGHT OF WAY ENGINEERING AT THE DISTRICT OFFICE.

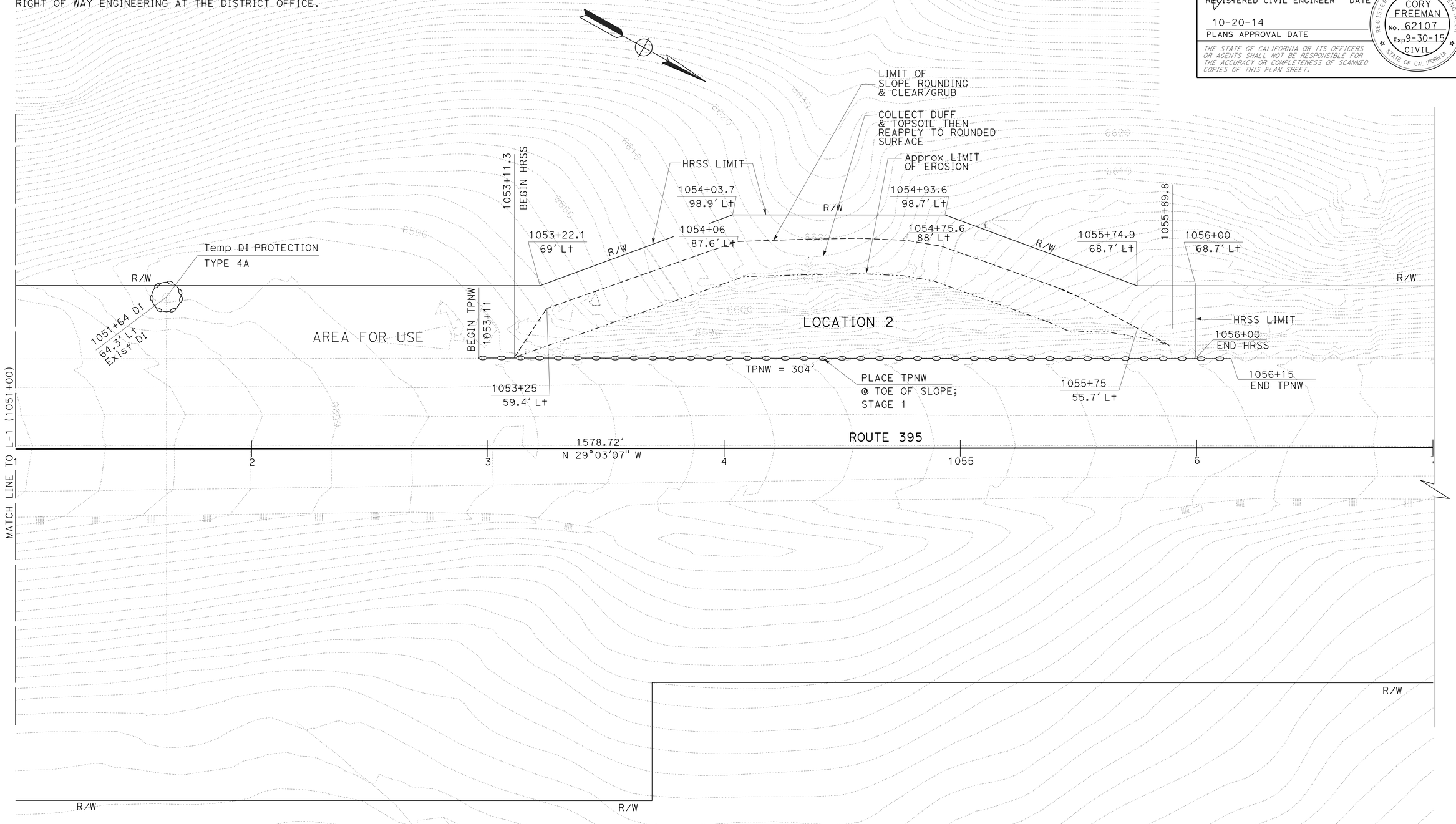

LAYOUT
SCALE: 1"=20' **L-2**

STATE OF CALIFORNIA - DEPARTMENT OF TRANSPORTATION
Caltrans® **DESIGN**

FUNCTIONAL SUPERVISOR: BRIAN WESLING
CALCULATED-DESIGNED BY: CORY FREEMAN
CHECKED BY: BRIAN WESLING
REVISED BY
DATE REVISED

LAST REVISION 07-28-14
DATE PLOTTED => 05-NOV-2014
TIME PLOTTED => 08:33

Dist	COUNTY	ROUTE	POST MILES TOTAL PROJECT	SHEET No.	TOTAL SHEETS
09	Mno	395	52.3/R53.7	8	69

REGISTERED CIVIL ENGINEER 10-6-14 DATE

10-20-14
PLANS APPROVAL DATE

REGISTERED PROFESSIONAL ENGINEER CORY FREEMAN No. 62107 Exp 9-30-15 CIVIL STATE OF CALIFORNIA

THE STATE OF CALIFORNIA OR ITS OFFICERS OR AGENTS SHALL NOT BE RESPONSIBLE FOR THE ACCURACY OR COMPLETENESS OF SCANNED COPIES OF THIS PLAN SHEET.

NOTE:

FOR ACCURATE RIGHT OF WAY DATA, CONTACT RIGHT OF WAY ENGINEERING AT THE DISTRICT OFFICE.

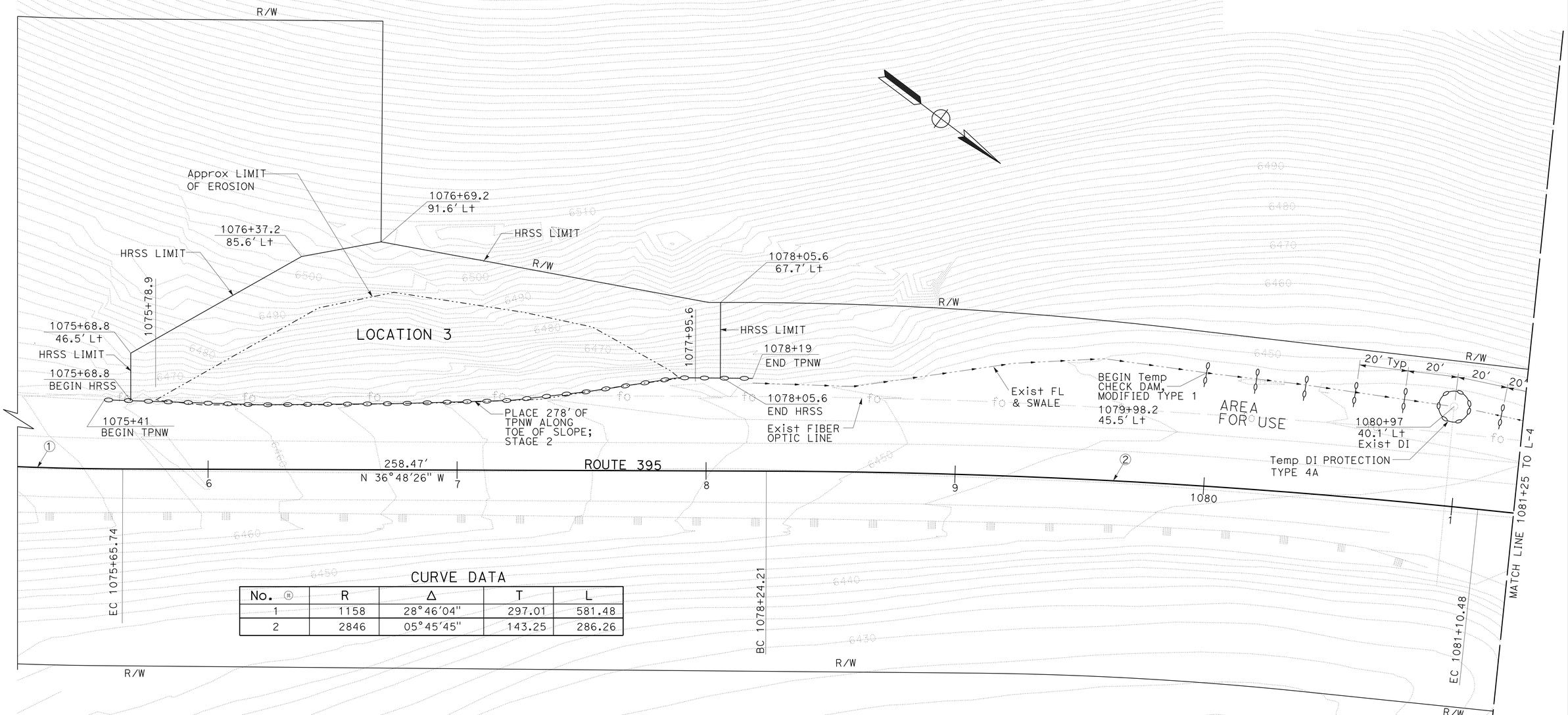

CURVE DATA

No.	R	Δ	T	L
1	1158	28°46'04"	297.01	581.48
2	2846	05°45'45"	143.25	286.26

LAYOUT

SCALE: 1"=20' **L-3**

STATE OF CALIFORNIA - DEPARTMENT OF TRANSPORTATION

Caltrans® **DESIGN**

FUNCTIONAL SUPERVISOR: BRIAN WESLING

CALCULATED-DESIGNED BY: CORY FREEMAN

CHECKED BY: BRIAN WESLING

REVISED BY

DATE REVISED

LAST REVISION DATE PLOTTED => 05-NOV-2014
TIME PLOTTED => 08:33
07-28-14

Dist	COUNTY	ROUTE	POST MILES TOTAL PROJECT	SHEET No.	TOTAL SHEETS
09	Mno	395	52.3/R53.7	9	69

REGISTERED CIVIL ENGINEER 10-6-14 DATE

10-20-14
PLANS APPROVAL DATE

REGISTERED PROFESSIONAL ENGINEER CORY FREEMAN No. 62107 Exp 9-30-15 CIVIL STATE OF CALIFORNIA

THE STATE OF CALIFORNIA OR ITS OFFICERS OR AGENTS SHALL NOT BE RESPONSIBLE FOR THE ACCURACY OR COMPLETENESS OF SCANNED COPIES OF THIS PLAN SHEET.

NOTE:

FOR ACCURATE RIGHT OF WAY DATA, CONTACT RIGHT OF WAY ENGINEERING AT THE DISTRICT OFFICE.

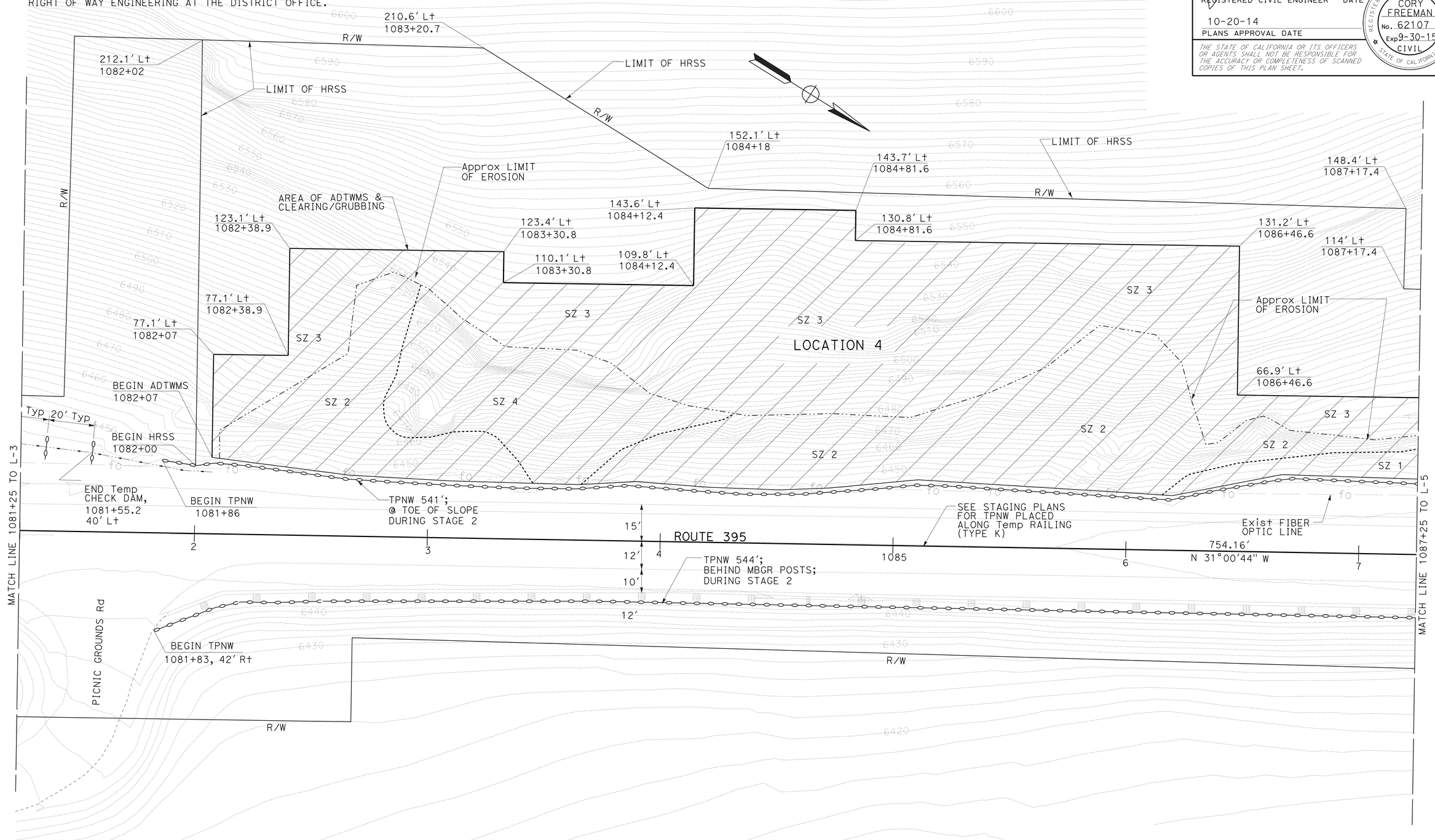

LAYOUT
SCALE: 1"=20' **L-4**

STATE OF CALIFORNIA - DEPARTMENT OF TRANSPORTATION
Caltrans® **DESIGN**

FUNCTIONAL SUPERVISOR: BRIAN WESLING
CORY FREEMAN — BRIAN WESLING
REVISED BY — DATE REVISED
CALCULATED-DESIGNED BY — CHECKED BY

LAST REVISION 07-28-14
DATE PLOTTED => 05-NOV-2014
TIME PLOTTED => 08:33

Dist	COUNTY	ROUTE	POST MILES TOTAL PROJECT	SHEET No.	TOTAL SHEETS
09	Mno	395	52.3/R53.7	10	69

REGISTERED CIVIL ENGINEER 10-6-14 DATE

10-20-14
PLANS APPROVAL DATE

REGISTERED PROFESSIONAL ENGINEER CORY FREEMAN No. 62107 Exp 9-30-15 CIVIL STATE OF CALIFORNIA

THE STATE OF CALIFORNIA OR ITS OFFICERS OR AGENTS SHALL NOT BE RESPONSIBLE FOR THE ACCURACY OR COMPLETENESS OF SCANNED COPIES OF THIS PLAN SHEET.

NOTE:

FOR ACCURATE RIGHT OF WAY DATA, CONTACT RIGHT OF WAY ENGINEERING AT THE DISTRICT OFFICE.

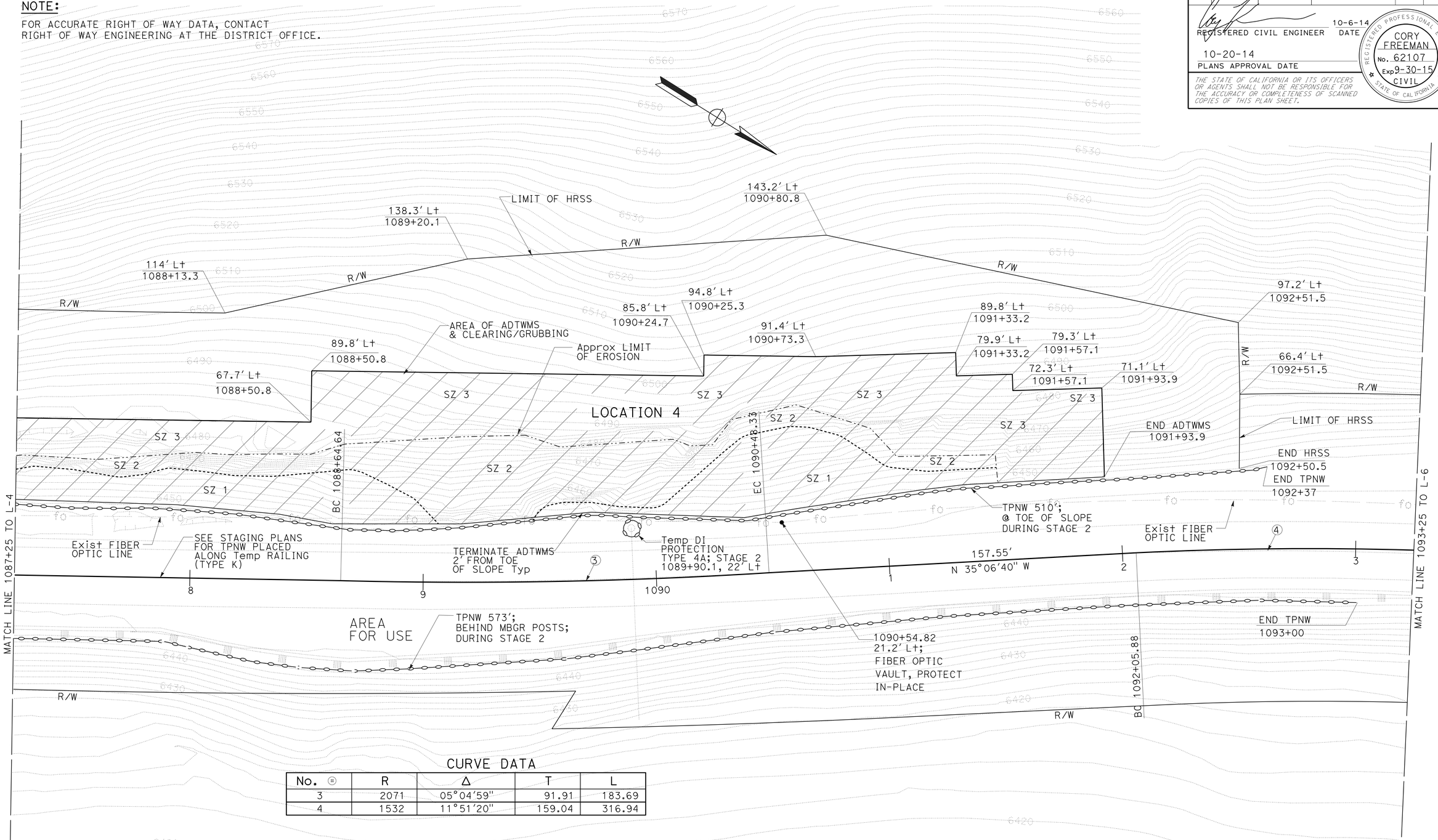

CURVE DATA

No. ⊕	R	Δ	T	L
3	2071	05°04'59"	91.91	183.69
4	1532	11°51'20"	159.04	316.94

LAYOUT

SCALE: 1"=20' **L-5**

STATE OF CALIFORNIA - DEPARTMENT OF TRANSPORTATION

DESIGN

Caltrans

FUNCTIONAL SUPERVISOR: BRIAN WESLING

CALCULATED-DESIGNED BY: CORY FREEMAN

CHECKED BY: BRIAN WESLING

REVISED BY

DATE REVISED

LAST REVISION 07-28-14

DATE PLOTTED => 05-NOV-2014
TIME PLOTTED => 08:33

Dist	COUNTY	ROUTE	POST MILES TOTAL PROJECT	SHEET No.	TOTAL SHEETS
09	Mno	395	52.3/R53.7	11	69

REGISTERED CIVIL ENGINEER 10-6-14 DATE

10-20-14
PLANS APPROVAL DATE

REGISTERED PROFESSIONAL ENGINEER CORY FREEMAN No. 62107 Exp 9-30-15 CIVIL STATE OF CALIFORNIA

THE STATE OF CALIFORNIA OR ITS OFFICERS OR AGENTS SHALL NOT BE RESPONSIBLE FOR THE ACCURACY OR COMPLETENESS OF SCANNED COPIES OF THIS PLAN SHEET.

NOTE:

FOR ACCURATE RIGHT OF WAY DATA, CONTACT RIGHT OF WAY ENGINEERING AT THE DISTRICT OFFICE.

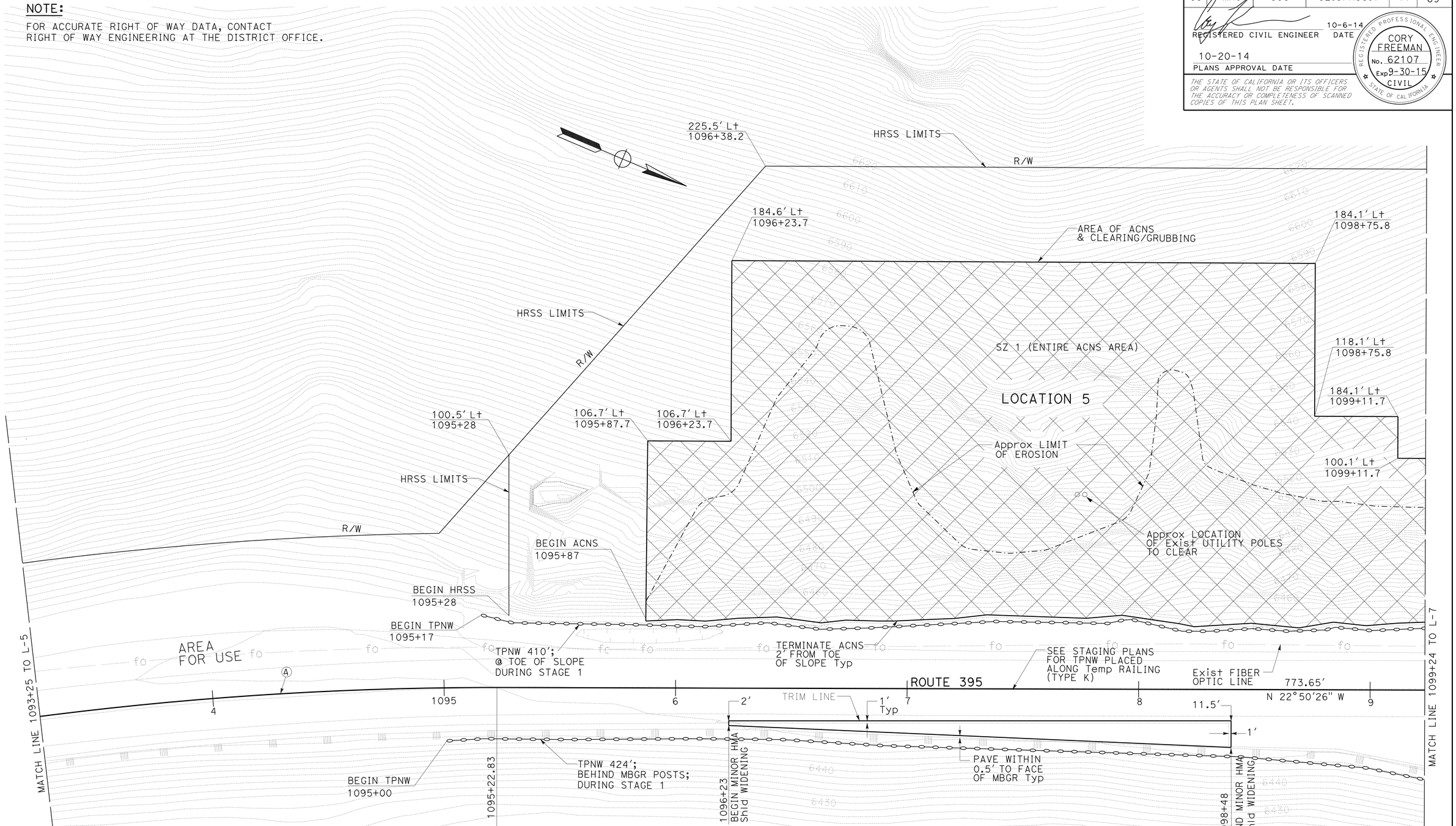

LAYOUT

SCALE: 1"=20' **L-6**

STATE OF CALIFORNIA - DEPARTMENT OF TRANSPORTATION

Caltrans® **DESIGN**

FUNCTIONAL SUPERVISOR: BRIAN WESLING

CALCULATED-DESIGNED BY: CORY FREEMAN

CHECKED BY: BRIAN WESLING

REVISED BY

DATE REVISED

LAST REVISION 07-28-14

DATE PLOTTED => 05-NOV-2014
TIME PLOTTED => 08:33

Dist	COUNTY	ROUTE	POST MILES TOTAL PROJECT	SHEET No.	TOTAL SHEETS
09	Mno	395	52.3/R53.7	12	69

REGISTERED CIVIL ENGINEER 10-6-14 DATE

10-20-14
PLANS APPROVAL DATE

REGISTERED PROFESSIONAL ENGINEER CORY FREEMAN No. 62107 Exp 9-30-15 CIVIL STATE OF CALIFORNIA

THE STATE OF CALIFORNIA OR ITS OFFICERS OR AGENTS SHALL NOT BE RESPONSIBLE FOR THE ACCURACY OR COMPLETENESS OF SCANNED COPIES OF THIS PLAN SHEET.

NOTE:

FOR ACCURATE RIGHT OF WAY DATA, CONTACT RIGHT OF WAY ENGINEERING AT THE DISTRICT OFFICE.

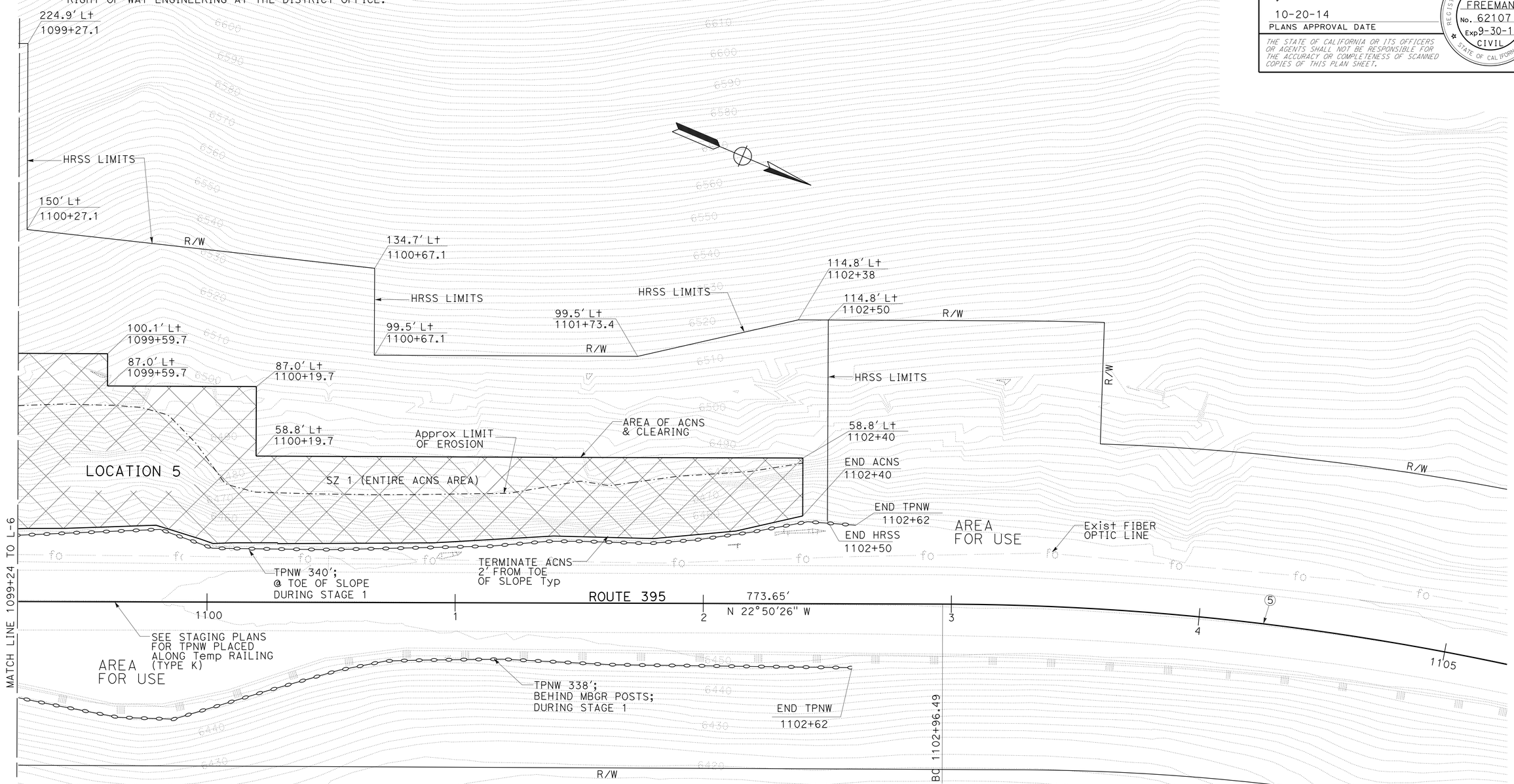

CURVE DATA

No. ⑤	R	Δ	T	L
5	1104	26°51'10"	263.65	517.61

LAYOUT

SCALE: 1"=20' **L-7**

STATE OF CALIFORNIA - DEPARTMENT OF TRANSPORTATION

Caltrans® **DESIGN**

FUNCTIONAL SUPERVISOR: BRIAN WESLING

CALCULATED-DESIGNED BY: CORY FREEMAN

CHECKED BY: BRIAN WESLING

REVISED BY

DATE REVISED

LAST REVISION 07-28-14

DATE PLOTTED => 05-NOV-2014
TIME PLOTTED => 08:33

Dist	COUNTY	ROUTE	POST MILES TOTAL PROJECT	SHEET No.	TOTAL SHEETS
09	Mno	395	52.3/R53.7	13	69

REGISTERED CIVIL ENGINEER 10-6-14 DATE

10-20-14
PLANS APPROVAL DATE

REGISTERED PROFESSIONAL ENGINEER CORY FREEMAN No. 62107 Exp 9-30-15 CIVIL STATE OF CALIFORNIA

THE STATE OF CALIFORNIA OR ITS OFFICERS OR AGENTS SHALL NOT BE RESPONSIBLE FOR THE ACCURACY OR COMPLETENESS OF SCANNED COPIES OF THIS PLAN SHEET.

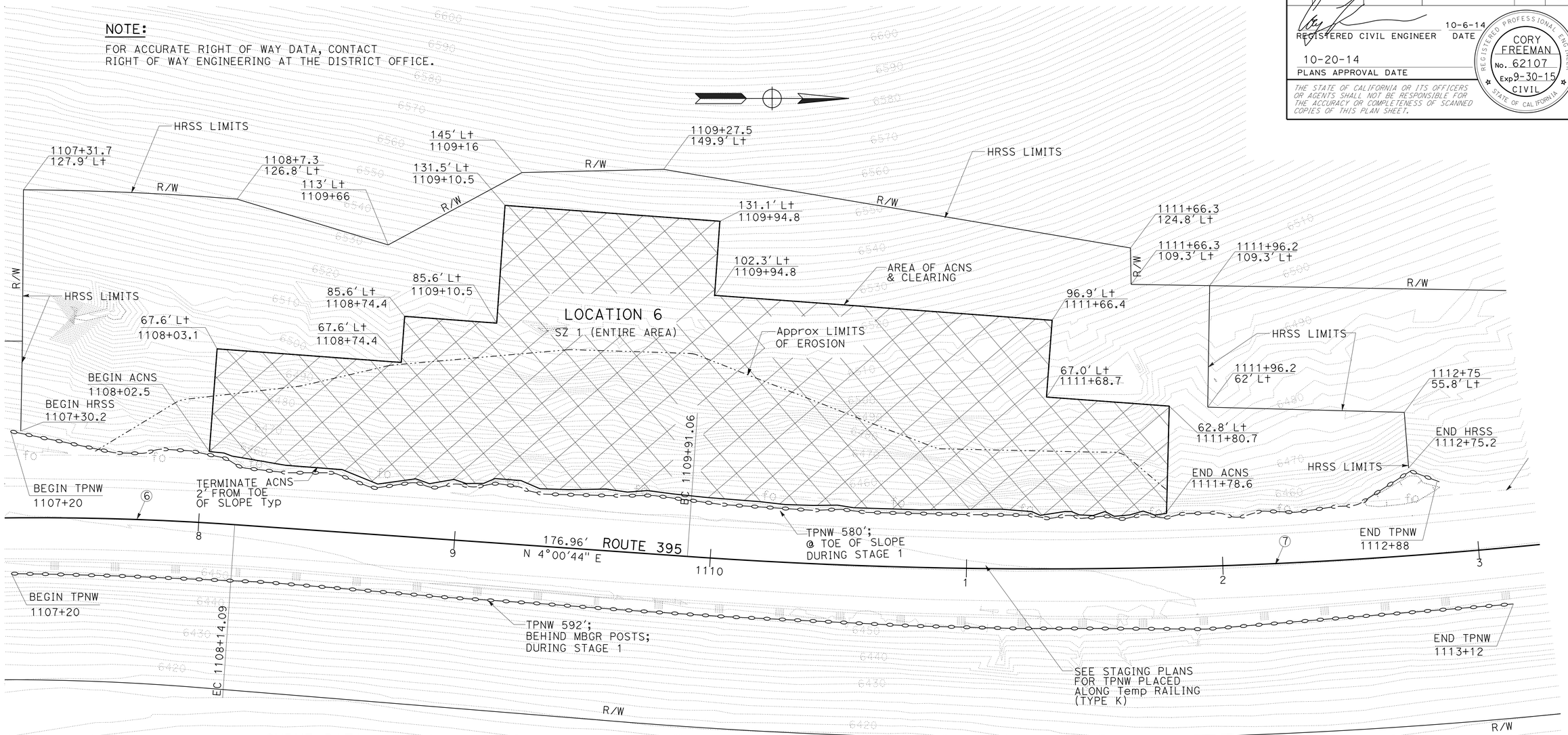

CURVE DATA

No.	R	Δ	T	L
6	1104	26°51'10"	263.65	517.61
7	1981	26°21'29"	463.92	911.42

LAYOUT

SCALE: 1"=20' **L-8**

STATE OF CALIFORNIA - DEPARTMENT OF TRANSPORTATION
Caltrans® DESIGN

FUNCTIONAL SUPERVISOR: BRIAN WESLING
CALCULATED-DESIGNED BY: CORY FREEMAN
CHECKED BY: BRIAN WESLING
REVISED BY
DATE REVISED

LAST REVISION 07-28-14
DATE PLOTTED => 05-NOV-2014
TIME PLOTTED => 08:33

Dist	COUNTY	ROUTE	POST MILES TOTAL PROJECT	SHEET No.	TOTAL SHEETS
09	Mno	395	52.3/R53.7	14	69

REGISTERED CIVIL ENGINEER 10-6-14 DATE

10-20-14
PLANS APPROVAL DATE

REGISTERED PROFESSIONAL ENGINEER CORY FREEMAN No. 62107 Exp 9-30-15 CIVIL STATE OF CALIFORNIA

THE STATE OF CALIFORNIA OR ITS OFFICERS OR AGENTS SHALL NOT BE RESPONSIBLE FOR THE ACCURACY OR COMPLETENESS OF SCANNED COPIES OF THIS PLAN SHEET.

NOTES:

1. MINIMUM ALLOWABLE DESIGN LOAD FOR EACH ROCK DOWEL IS 9.4 TONS.
2. FOR DESIGN PURPOSES THE UPPER 5 FEET IS CONSIDERED THE UNBONDED LENGTH OF EACH ROCK DOWEL.

ABBREVIATIONS:

ADTWMS - ANCHORED DOUBLE TWISTED WIRE MESH SYSTEM
ACNS - ANCHORED CABLE NET SYSTEM
EC - EROSION CONTROL
Fdn - FOUNDATION
OC - ON CENTER
Sq - SQUARE
TBD - TO BE DETERMENED

LEGEND:

ROCKDOWEL

ADTWMS

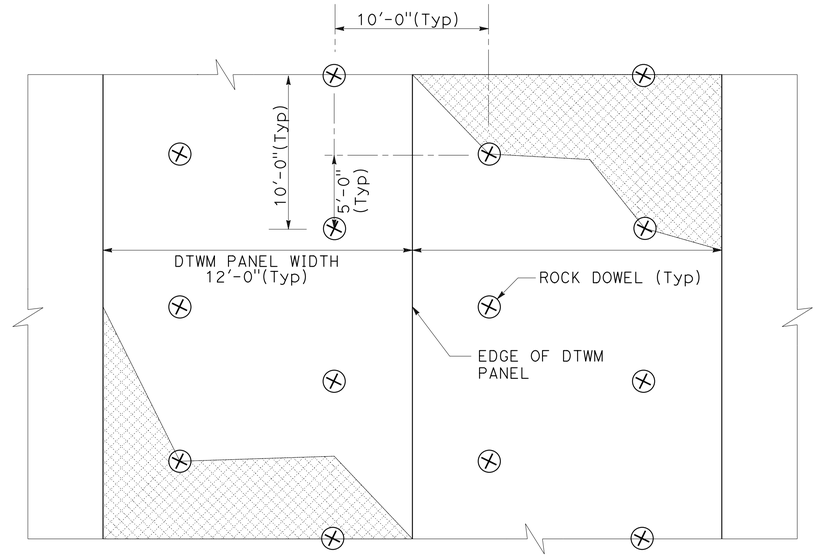

ROCK DOWEL AND PANEL LAYOUT

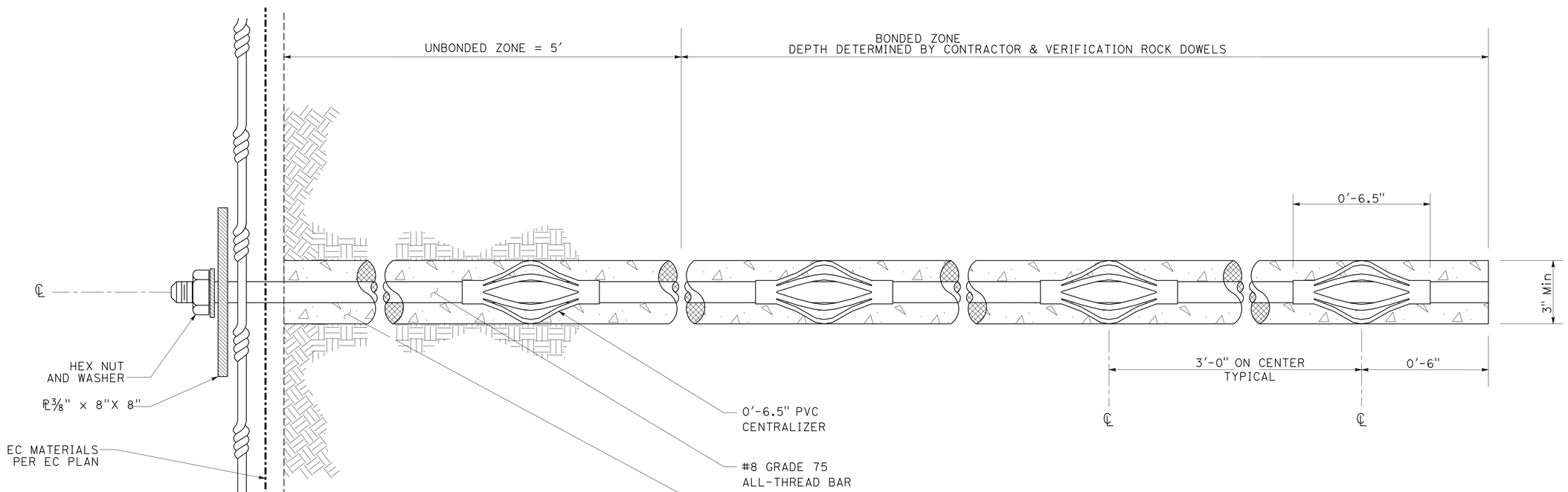

ROCK DOWEL DETAIL

CONSTRUCTION DETAILS
(TYPICAL ANCHOR ANCHORED DOUBLE TWISTED WIRE MESH SYSTEM)

NO SCALE

C-1

STATE OF CALIFORNIA - DEPARTMENT OF TRANSPORTATION
Caltrans
DESIGN
FUNCTIONAL SUPERVISOR: BRIAN WESLING
CALCULATED-DESIGNED BY: CORY FREEMAN
CHECKED BY: BRIAN WESLING
REVISED BY
DATE REVISED

LAST REVISION 07-28-14
DATE PLOTTED => 05-NOV-2014
TIME PLOTTED => 08:33

Dist	COUNTY	ROUTE	POST MILES TOTAL PROJECT	SHEET No.	TOTAL SHEETS
09	Mno	395	52.3/R53.7	15	69

REGISTERED CIVIL ENGINEER 10-6-14 DATE

10-20-14
PLANS APPROVAL DATE

REGISTERED PROFESSIONAL ENGINEER CORY FREEMAN No. 62107 Exp 9-30-15 CIVIL STATE OF CALIFORNIA

THE STATE OF CALIFORNIA OR ITS OFFICERS OR AGENTS SHALL NOT BE RESPONSIBLE FOR THE ACCURACY OR COMPLETENESS OF SCANNED COPIES OF THIS PLAN SHEET.

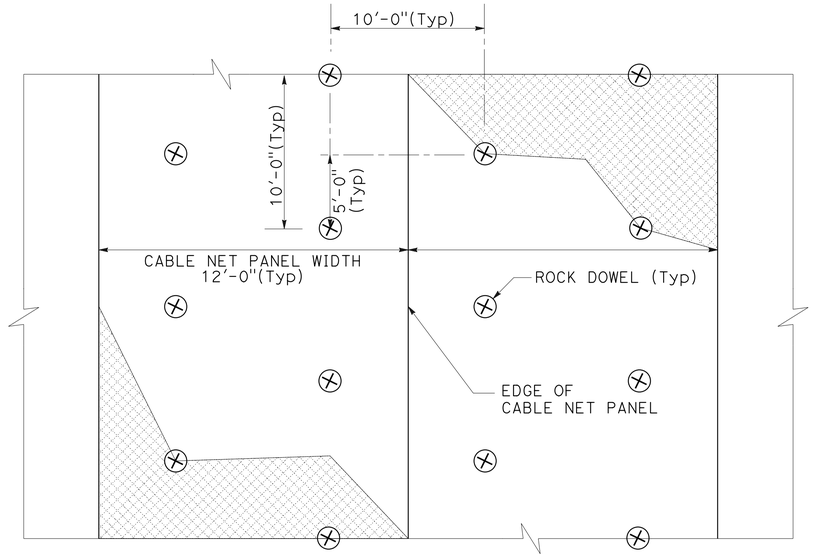

ROCK DOWEL AND PANEL LAYOUT

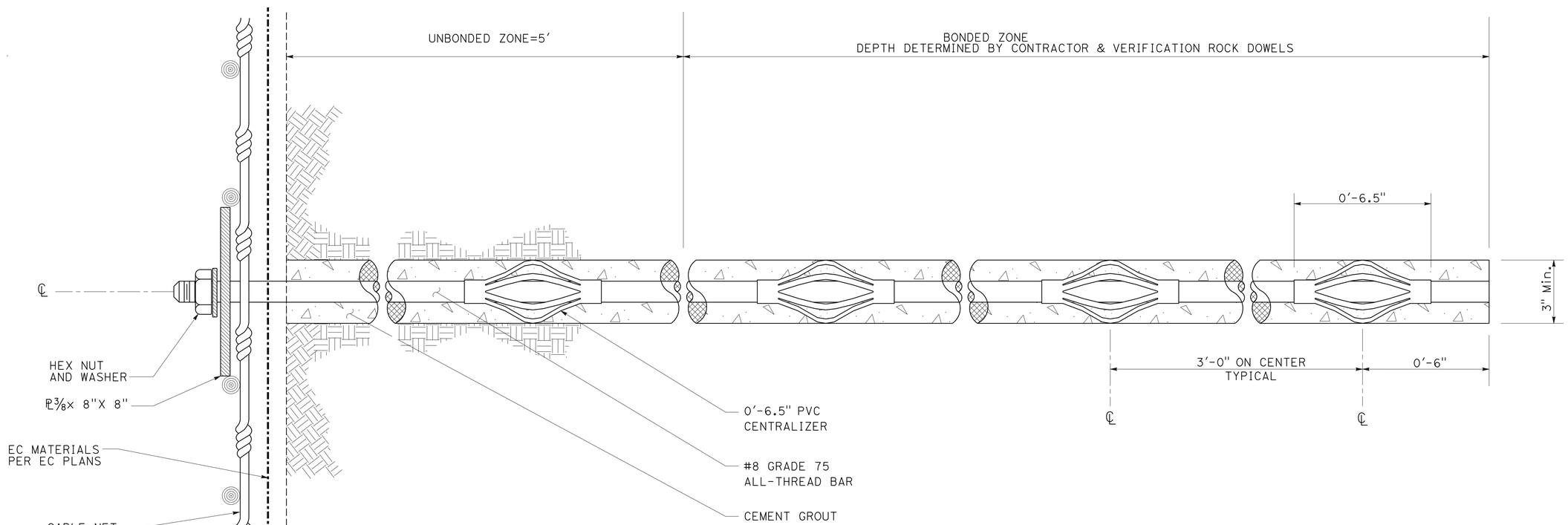

ROCK DOWEL DETAIL

CONSTRUCTION DETAILS
(TYPICAL ANCHOR ANCHORED CABLE NET SYSTEM)

NO SCALE

C-2

STATE OF CALIFORNIA - DEPARTMENT OF TRANSPORTATION
Caltrans®
DESIGN

CALCULATED-DESIGNED BY: CORY FREEMAN
CHECKED BY: BRIAN WESLING
FUNCTIONAL SUPERVISOR: BRIAN WESLING
REVISED BY
DATE REVISED

LAST REVISION 07-28-14
DATE PLOTTED => 05-NOV-2014
TIME PLOTTED => 08:33

Dist	COUNTY	ROUTE	POST MILES TOTAL PROJECT	SHEET No.	TOTAL SHEETS
09	Mno	395	52.3/R53.7	16	69

REGISTERED CIVIL ENGINEER 10-6-14 DATE

10-20-14
PLANS APPROVAL DATE

REGISTERED PROFESSIONAL ENGINEER CORY FREEMAN No. 62107 Exp 9-30-15 CIVIL STATE OF CALIFORNIA

THE STATE OF CALIFORNIA OR ITS OFFICERS OR AGENTS SHALL NOT BE RESPONSIBLE FOR THE ACCURACY OR COMPLETENESS OF SCANNED COPIES OF THIS PLAN SHEET.

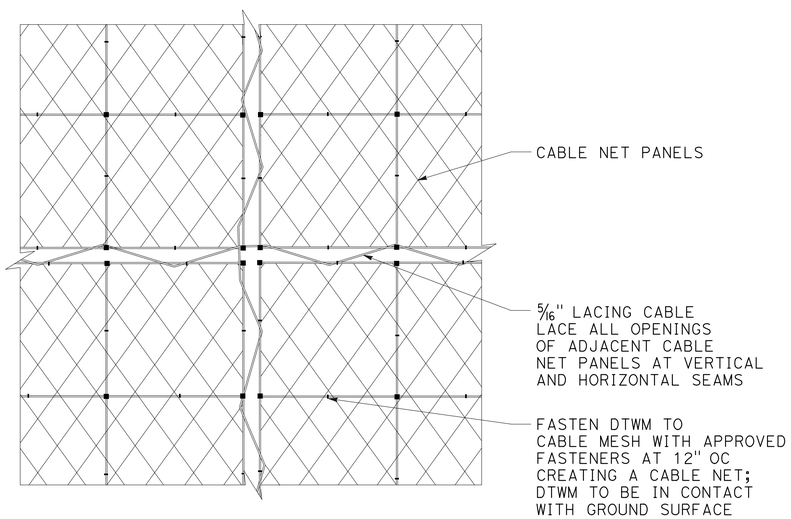

PANEL TO PANEL CONNECTIONS FOR SQUARE CABLE NET PANELS

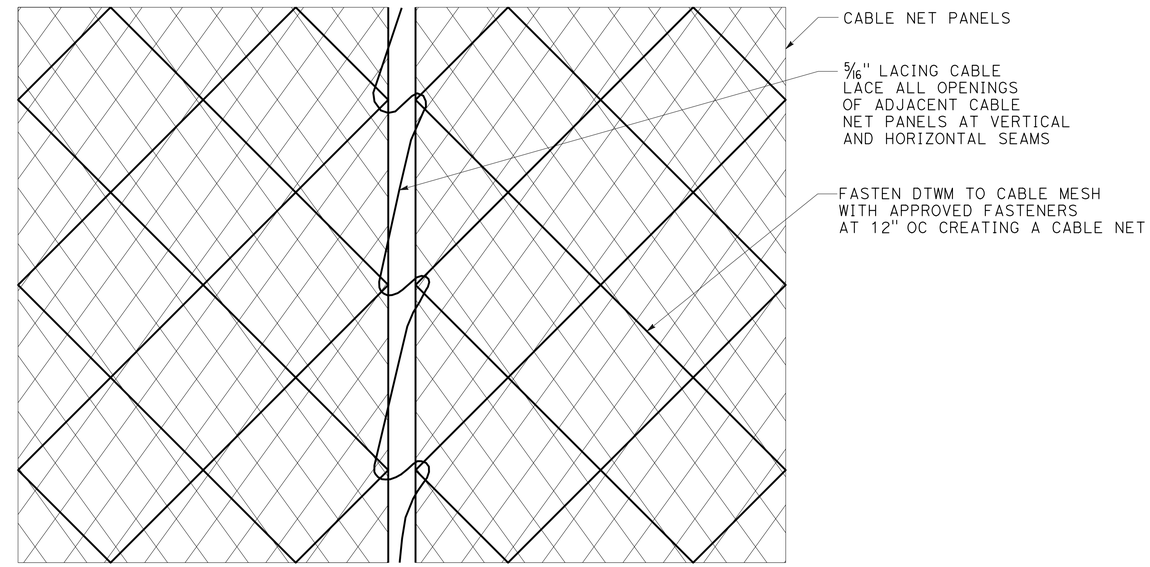

PANEL TO PANEL CONNECTIONS FOR DIAGONAL CABLE NET PANELS

WIRE ROPE

ROPE DIAMETER	WIRE ROPE CLIP SIZE	WIRE ROPE CLIP QUANTITY		A	B	C	TORQUE REQUIRED
INCHES		AA	BB	INCHES			FT-LBS
5/16"	5/16"	3	6	5"	5"	5"	30
1/2"	1/2"	4	8	7"	7"	7"	65
5/8"	5/8"	4	8	9"	9"	9"	95
3/4"	3/4"	5	10	11"	11"	11"	130

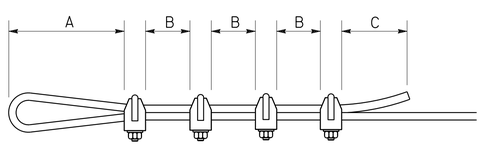

DETAIL "AA"

WIRE ROPE LOOP DETAIL

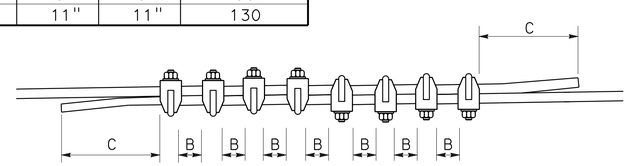

DETAIL "BB"

WIRE ROPE SPLICE DETAIL

CONSTRUCTION DETAILS
(WIRE ROPE & ANCHORED CABLE MESH SYSTEM)

NO SCALE

C-3

STATE OF CALIFORNIA - DEPARTMENT OF TRANSPORTATION
Caltrans® DESIGN

FUNCTIONAL SUPERVISOR: BRIAN WESLING
CALCULATED-DESIGNED BY: CORY FREEMAN
CHECKED BY: BRIAN WESLING
REVISED BY
DATE REVISED

LAST REVISION 07-28-14
DATE PLOTTED => 05-NOV-2014
TIME PLOTTED => 08:33

Dist	COUNTY	ROUTE	POST MILES TOTAL PROJECT	SHEET No.	TOTAL SHEETS
09	Mno	395	52.3/R53.7	17	69

REGISTERED CIVIL ENGINEER 10-6-14 DATE

10-20-14
PLANS APPROVAL DATE

REGISTERED PROFESSIONAL ENGINEER CORY FREEMAN No. 62107 Exp 9-30-15 CIVIL STATE OF CALIFORNIA

THE STATE OF CALIFORNIA OR ITS OFFICERS OR AGENTS SHALL NOT BE RESPONSIBLE FOR THE ACCURACY OR COMPLETENESS OF SCANNED COPIES OF THIS PLAN SHEET.

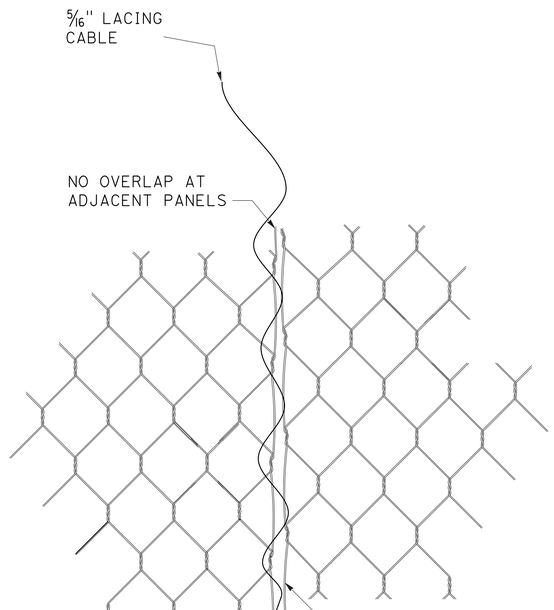

PANEL TO PANEL CONNECTION FOR DTWM ALTERNATIVE A

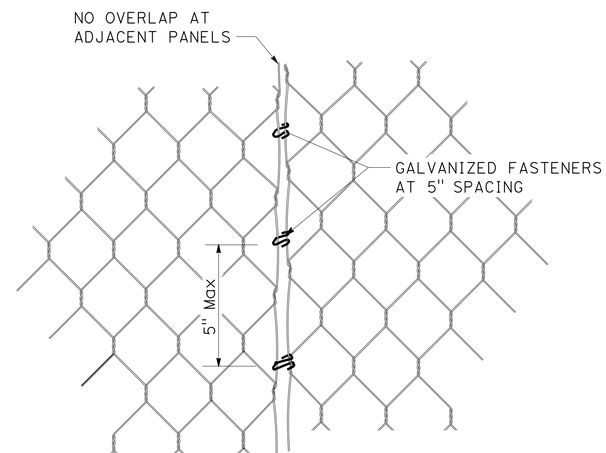

PANEL TO PANEL CONNECTION FOR DTWM ALTERNATIVE B

CONSTRUCTION DETAILS
(ANCHORED DOUBLE TWISTED WIRE MESH SYSTEM)

NO SCALE

C-4

STATE OF CALIFORNIA - DEPARTMENT OF TRANSPORTATION
Caltrans DESIGN

FUNCTIONAL SUPERVISOR: BRIAN WESLING
CALCULATED-DESIGNED BY: CORY FREEMAN
CHECKED BY: BRIAN WESLING
REVISED BY
DATE REVISED

LAST REVISION 07-28-14
DATE PLOTTED => 05-NOV-2014
TIME PLOTTED => 08:33

Dist	COUNTY	ROUTE	POST MILES TOTAL PROJECT	SHEET No.	TOTAL SHEETS
09	Mno	395	52.3/R53.7	18	69

REGISTERED CIVIL ENGINEER 10-6-14 DATE

10-20-14
PLANS APPROVAL DATE

REGISTERED PROFESSIONAL ENGINEER CORY FREEMAN No. 62107 Exp 9-30-15 CIVIL STATE OF CALIFORNIA

THE STATE OF CALIFORNIA OR ITS OFFICERS OR AGENTS SHALL NOT BE RESPONSIBLE FOR THE ACCURACY OR COMPLETENESS OF SCANNED COPIES OF THIS PLAN SHEET.

NOTE:
CHAIN LINK FENCE TO BE MOUNTED ON THE TRAFFIC SIDE.

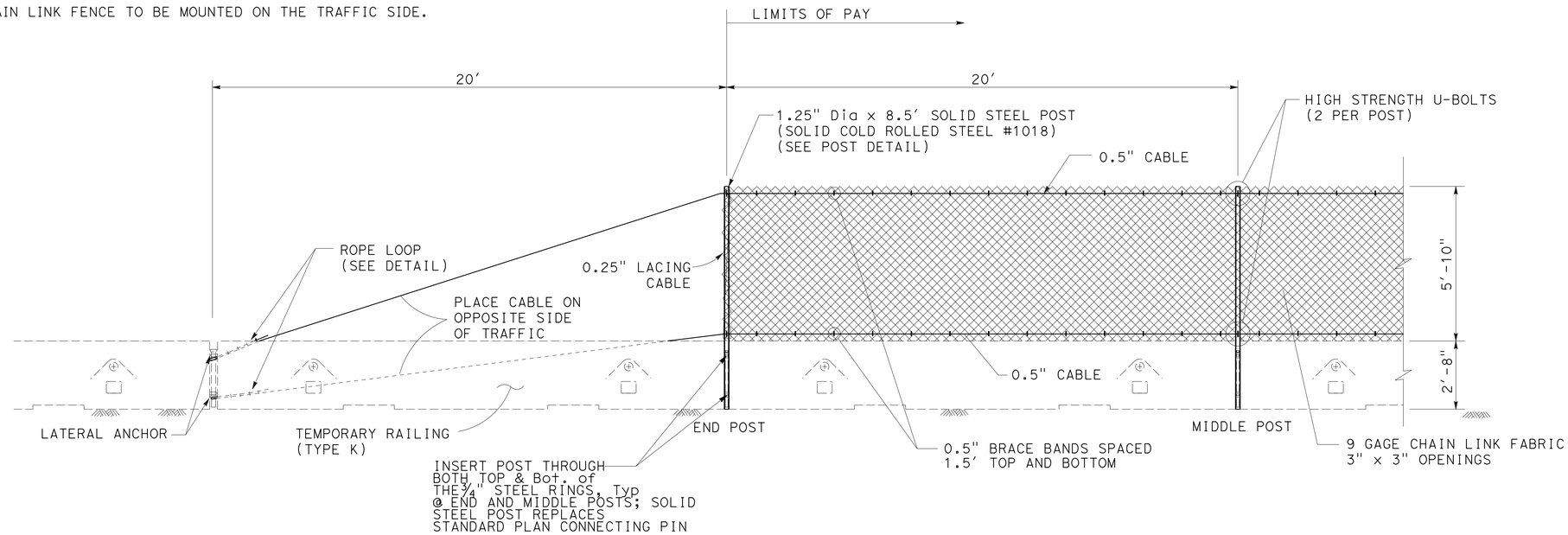

TEMPORARY FLEXIBLE ROCKFALL FENCE

ELEVATION

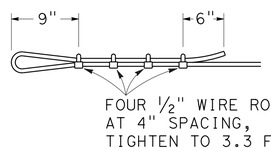

ROPE LOOP DETAIL

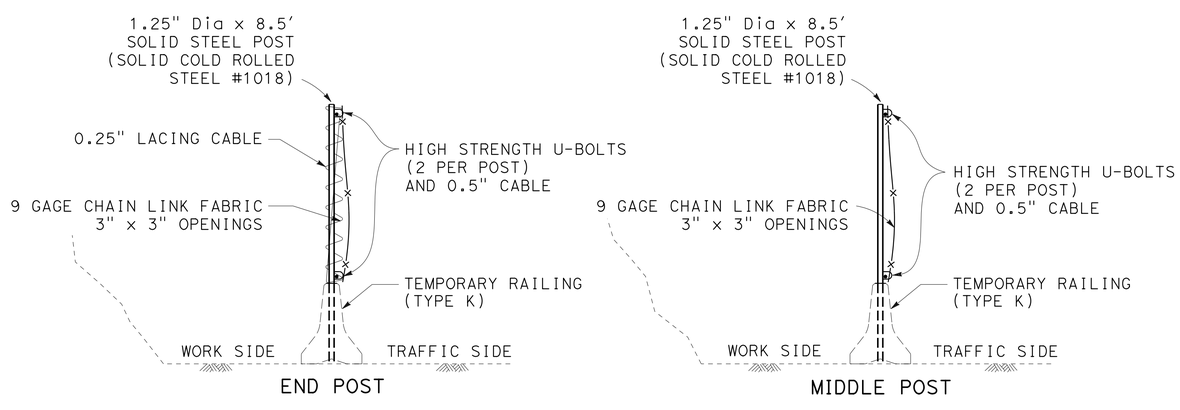

TYPICAL SECTIONS

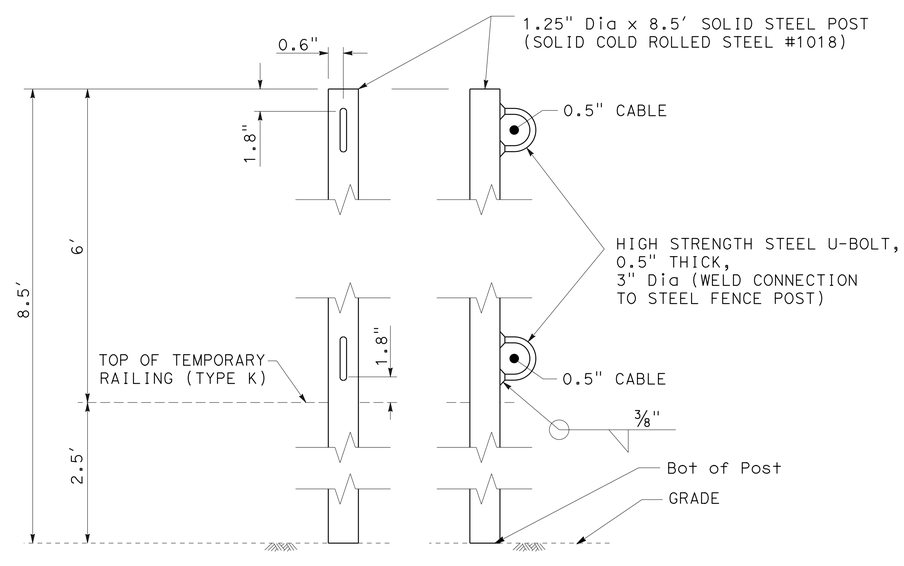

POST DETAIL

CONSTRUCTION DETAILS

NO SCALE

C-5

STATE OF CALIFORNIA - DEPARTMENT OF TRANSPORTATION
Caltrans® DESIGN

FUNCTIONAL SUPERVISOR: BRIAN WESLING
CALCULATED-DESIGNED BY: CORY FREEMAN
CHECKED BY: BRIAN WESLING
REVISED BY
DATE REVISED

LAST REVISION 07-28-14
DATE PLOTTED => 05-NOV-2014
TIME PLOTTED => 08:34

Dist	COUNTY	ROUTE	POST MILES TOTAL PROJECT	SHEET No.	TOTAL SHEETS
09	Mno	395	52.3/R53.7	19	69

REGISTERED CIVIL ENGINEER 10-6-14 DATE

10-20-14
PLANS APPROVAL DATE

REGISTERED PROFESSIONAL ENGINEER CORY FREEMAN No. 62107 Exp 9-30-15 CIVIL STATE OF CALIFORNIA

THE STATE OF CALIFORNIA OR ITS OFFICERS OR AGENTS SHALL NOT BE RESPONSIBLE FOR THE ACCURACY OR COMPLETENESS OF SCANNED COPIES OF THIS PLAN SHEET.

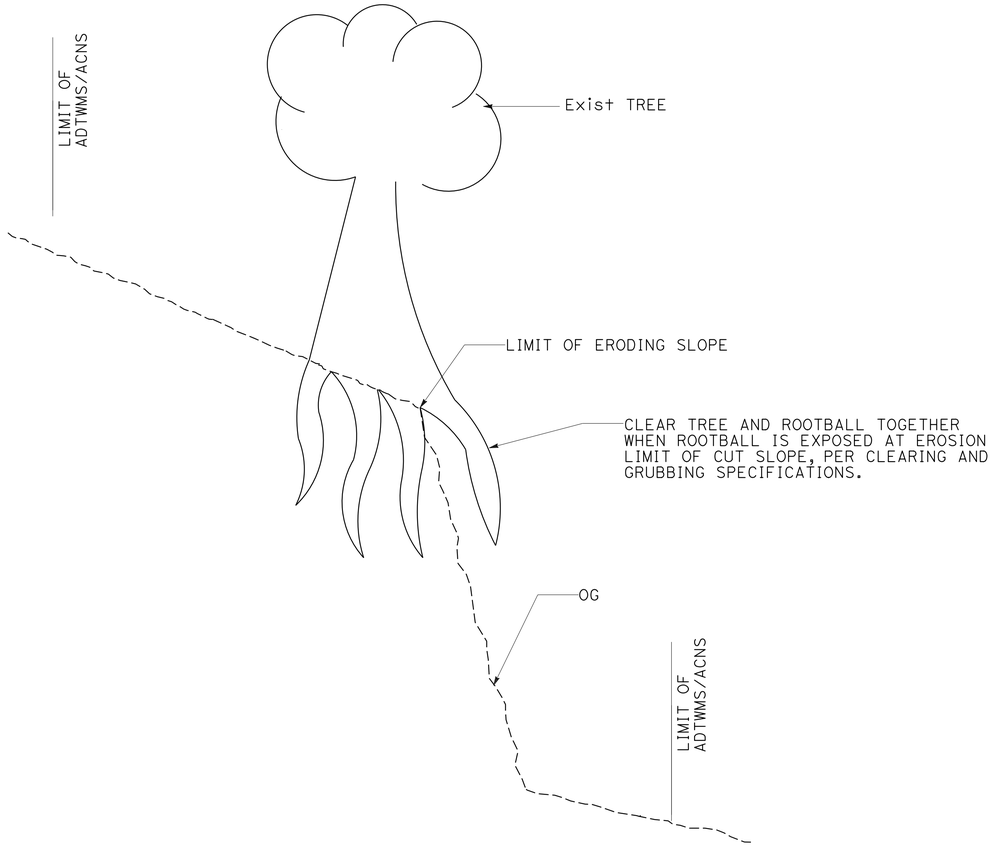

REMOVE TREE AND ROOTBALL DETAIL

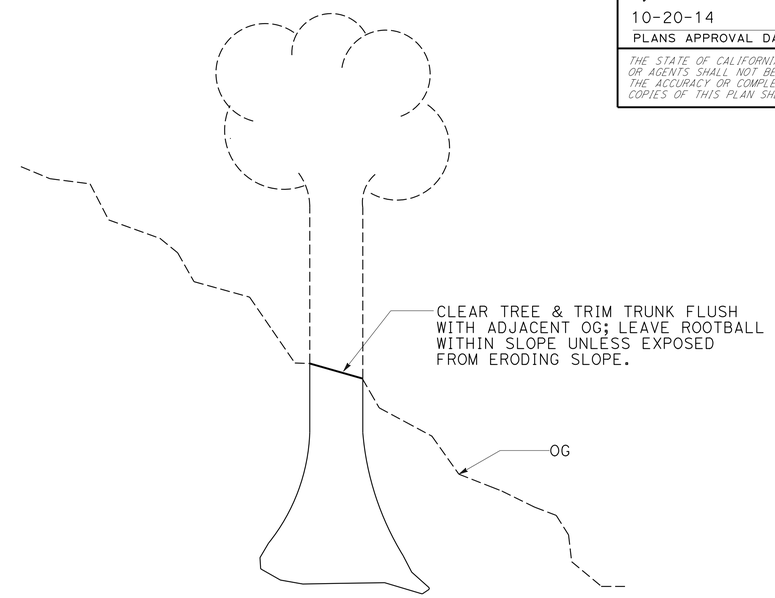

TYPICAL TREE REMOVAL DETAIL

WITHIN ADTWMS/ACNS LIMITS

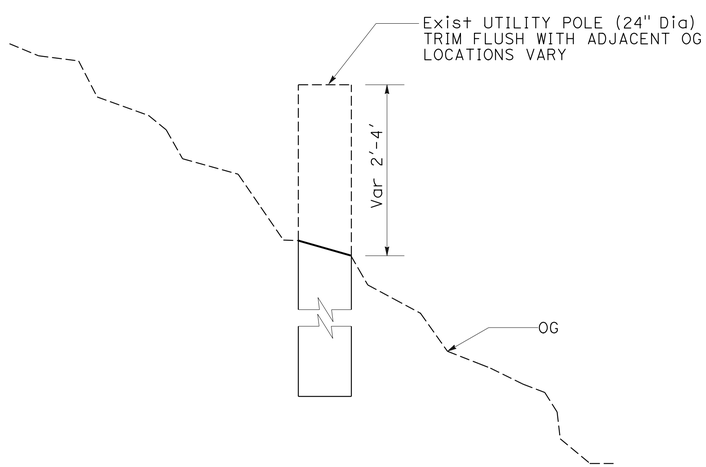

EXISTING UTILITY POLE CLEARING DETAIL

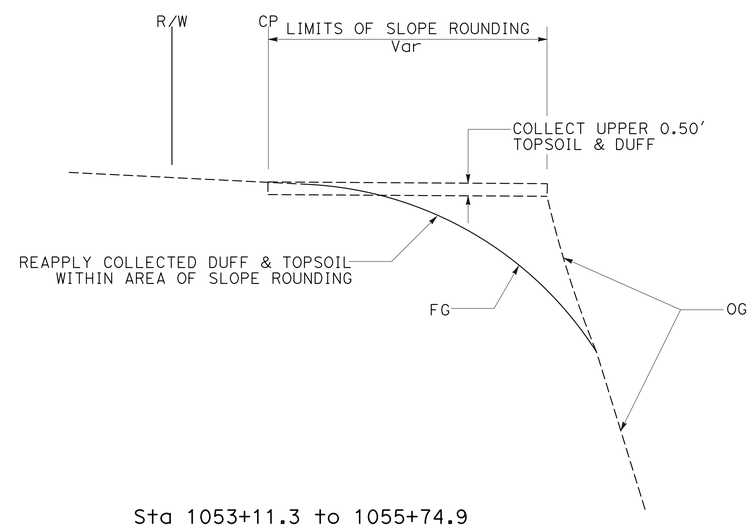

Sta 1053+11.3 to 1055+74.9

LOCAL TOPSOIL & DUFF COLLECTION DETAIL

CONSTRUCTION DETAILS

NO SCALE

C-6

STATE OF CALIFORNIA - DEPARTMENT OF TRANSPORTATION
Caltrans® **DESIGN**

FUNCTIONAL SUPERVISOR: BRIAN WESLING
CALCULATED-DESIGNED BY: CORY FREEMAN
CHECKED BY: BRIAN WESLING
REVISED BY
DATE REVISED

LAST REVISION 07-29-14
DATE PLOTTED => 05-NOV-2014
TIME PLOTTED => 08:34

Dist	COUNTY	ROUTE	POST MILES TOTAL PROJECT	SHEET No.	TOTAL SHEETS
09	Mno	395	52.3/R53.7	20	69

REGISTERED CIVIL ENGINEER 10-6-14 DATE

10-20-14
PLANS APPROVAL DATE

REGISTERED PROFESSIONAL ENGINEER CORY FREEMAN No. 62107 Exp 9-30-15 CIVIL STATE OF CALIFORNIA

THE STATE OF CALIFORNIA OR ITS OFFICERS OR AGENTS SHALL NOT BE RESPONSIBLE FOR THE ACCURACY OR COMPLETENESS OF SCANNED COPIES OF THIS PLAN SHEET.

ABBREVIATIONS:
TPNW - Temp PINE NEEDLE WATTLE

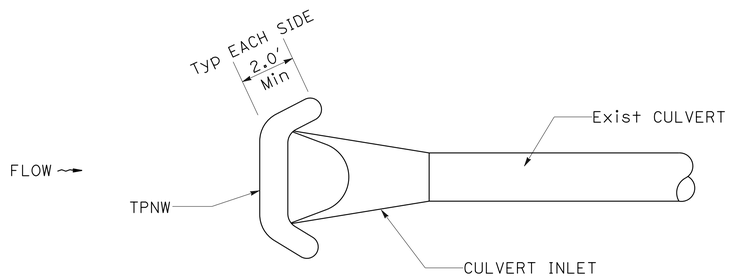

TYPICAL CULVERT INLET PROTECTION

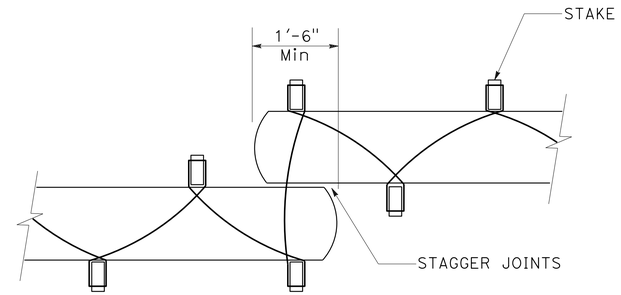

PLAN

Typ TPNW END DETAIL

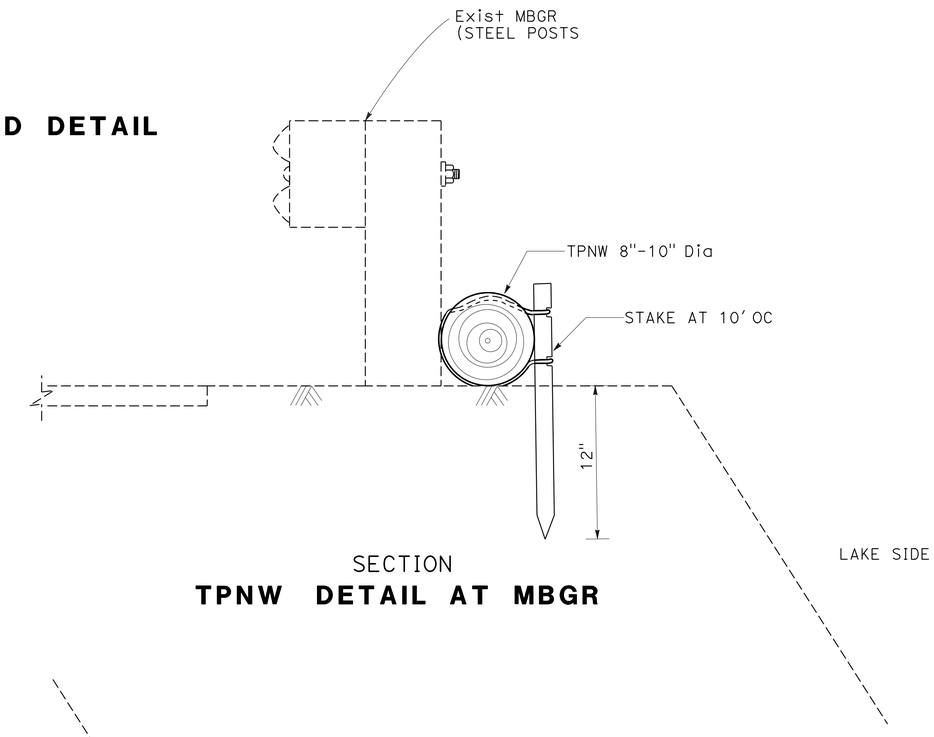

SECTION

TPNW DETAIL AT MBGR

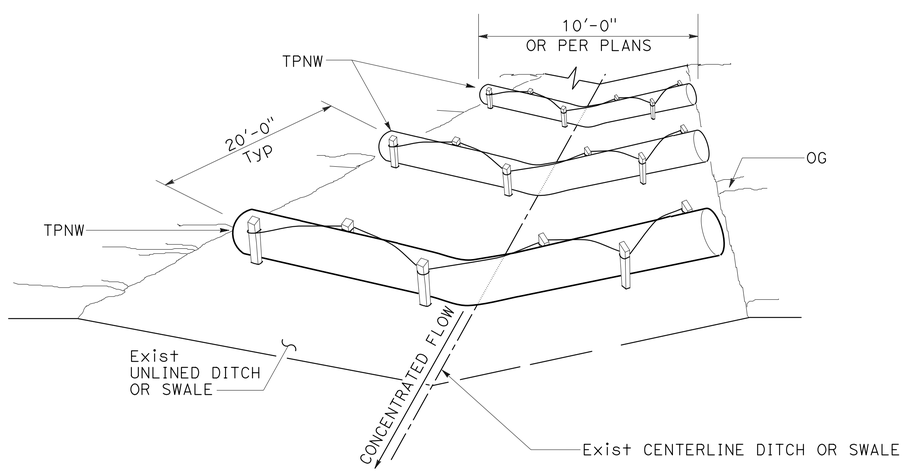

PERSPECTIVE

TEMPORARY CHECK DAM

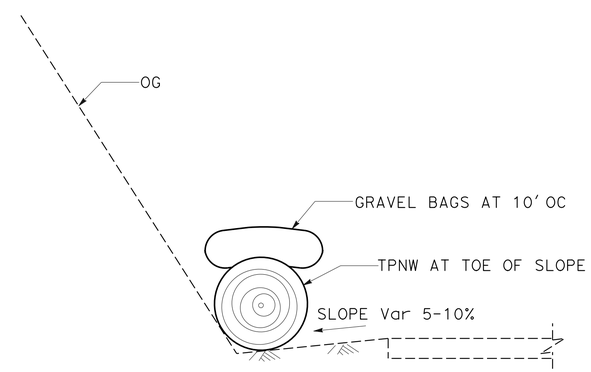

TPNW AT TOE OF SLOPE

WATER POLLUTION CONTROL DETAILS

NO SCALE **WPCD-1**

STATE OF CALIFORNIA - DEPARTMENT OF TRANSPORTATION
Caltrans® **DESIGN**
FUNCTIONAL SUPERVISOR: BRIAN WESLING
CALCULATED-DESIGNED BY: CORY FREEMAN
CHECKED BY: BRIAN WESLING
REVISED BY
DATE REVISED

LAST REVISION 07-30-14
DATE PLOTTED => 05-NOV-2014
TIME PLOTTED => 08:34

Dist	COUNTY	ROUTE	POST MILES TOTAL PROJECT	SHEET No.	TOTAL SHEETS
09	Mno	395	52.3/R53.7	21	69

REGISTERED CIVIL ENGINEER 10-6-14 DATE

10-20-14
PLANS APPROVAL DATE

REGISTERED PROFESSIONAL ENGINEER CORY FREEMAN No. 62107 Exp 9-30-15 CIVIL STATE OF CALIFORNIA

THE STATE OF CALIFORNIA OR ITS OFFICERS OR AGENTS SHALL NOT BE RESPONSIBLE FOR THE ACCURACY OR COMPLETENESS OF SCANNED COPIES OF THIS PLAN SHEET.

NOTES:

1. **CONTRACTOR TO VERIFY LOCATION OF Exist FIBER OPTIC LINE PRIOR TO STARTING WORK.**

1. LOCATION AND POSITION OF CONSTRUCTION AREA SIGNS AND PORTABLE CHANGEABLE MESSAGE SIGNS ARE APPROXIMATE. EXACT LOCATION TO BE DETERMINED BY THE ENGINEER.
2. ALTERNATE MESSAGES MUST BE APPROVED BY THE ENGINEER.
3. MESSAGE MAY BE ALTERED BY THE ENGINEER.
4. SEE STAGE CONSTRUCTION& TRAFFIC HANDING PLANS FOR ADDITIONAL CONSTRUCTION AREA SIGNS, PORTABLE FLASHING BEACONS, AND CHANGEABLE MESSAGE SIGNS.
5. WHEN CONSTRUCTION OPERATIONS ARE NOT ACTIVELY IN PROGRESS, PORTABLE CHANGEABLE MESSAGE SIGNS SHALL NOT DISPLAY A MESSAGE UNLESS DIRECTED BY THE ENGINEER.
6. **SEE CS-2 FOR STAGE 1 ITEM TABLES.**

LEGEND:

(X) - PLACEMENT TYPE

- CONSTRUCTION AREA SIGNS

- PORTABLE CHANGEABLE MESSAGE SIGN

- PORTABLE FLASHING BEACON

ABBREVIATIONS:

PCMS - PORTABLE CHANGEABLE MESSAGE SIGN

(A) ROAD WORK AHEAD — W20-1, 48" x 48", ON 4" x 6" POST

(B) END ROAD WORK — G20-2, 36" x 18", 4" x 4" POSTS

(C) TRAFFIC FINES DOUBLED IN CONSTRUCTION ZONES — C40(CA), 108" x 42", ON 4" x 6" POSTS

(D) ROAD WORK AHEAD — W20-1, 36" x 36", ON 4" x 4" POST

MAINTAIN EXISTING TRAFFIC MANAGEMENT SYSTEM ELEMENTS DURING CONSTRUCTION

COUNTY	ROUTE	PM	DESCRIPTION
MNO	395	51.927	TRAFFIC COUNT STATION (1022+50)

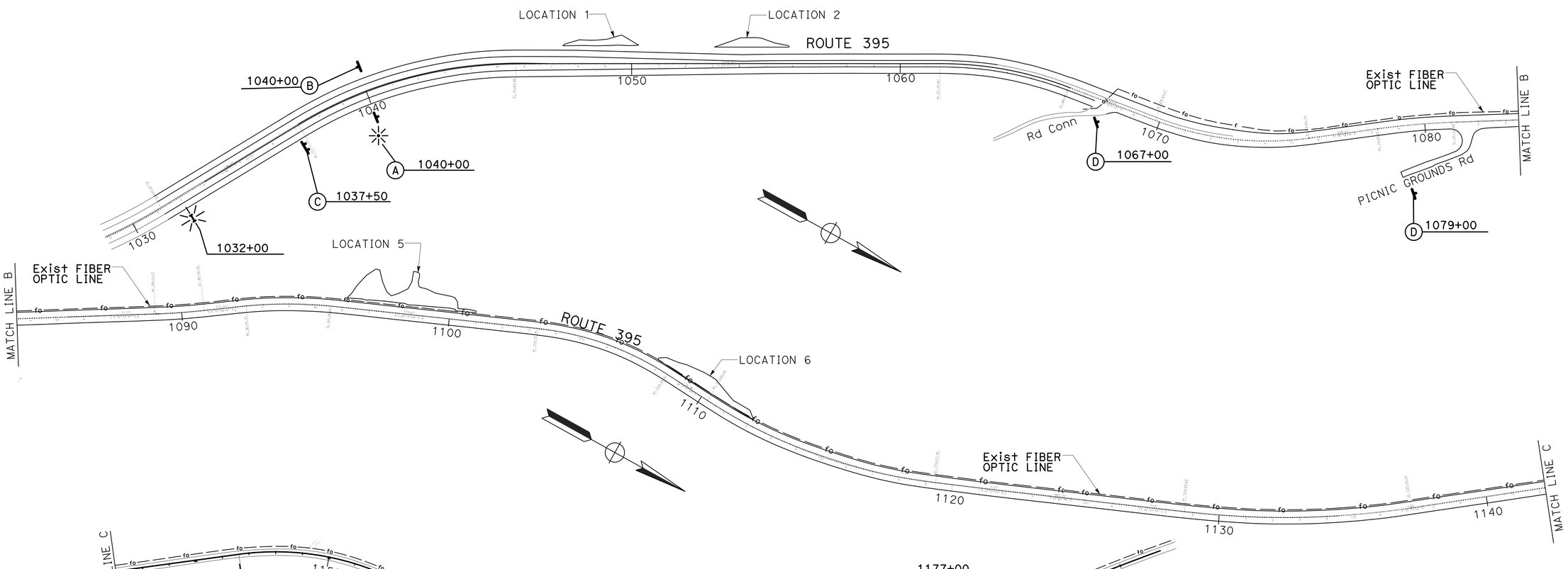

APPROVED FOR CONSTRUCTION AREA SIGN WORK ONLY

CONSTRUCTION AREA SIGNS
(STAGE 1)

NO SCALE

CS-1

REVISED BY | DATE REVISED

CORY FREEMAN | BRIAN WESLING

CALCULATED-DESIGNED BY | CHECKED BY

FUNCTIONAL SUPERVISOR: BRIAN WESLING

STATE OF CALIFORNIA - DEPARTMENT OF TRANSPORTATION

Caltrans® **DESIGN**

LAST REVISION 07-31-14 | DATE PLOTTED => 05-NOV-2014 | TIME PLOTTED => 08:34

Dist	COUNTY	ROUTE	POST MILES TOTAL PROJECT	SHEET No.	TOTAL SHEETS
09	Mno	395	52.3/R53.7	22	69

REGISTERED CIVIL ENGINEER 10-6-14 DATE

10-20-14
PLANS APPROVAL DATE

REGISTERED PROFESSIONAL ENGINEER CORY FREEMAN No. 62107 Exp 9-30-15 CIVIL STATE OF CALIFORNIA

THE STATE OF CALIFORNIA OR ITS OFFICERS OR AGENTS SHALL NOT BE RESPONSIBLE FOR THE ACCURACY OR COMPLETENESS OF SCANNED COPIES OF THIS PLAN SHEET.

PORTABLE CHANGEABLE MESSAGE SIGN

	No. OF SIGNS
STAGE 1,and 2	2
MI-1 Plan	4

STATIONARY MOUNTED CONSTRUCTION AREA SIGNS

PLACEMENT TYPE	NUMBER OF POSTS AND SIZE	STAGE	No. OF SIGNS
A	1 - 4" x 6"	STAGE 1	2
		STAGE 2	2
B	1 - 4" x 4"	STAGE 1	2
		STAGE 2	2
C	2 - 4" x 6"	STAGE 1	2
		STAGE 2	2
D	1 - 4" x 4"	STAGE 1	2
		STAGE 2	2

FLASHING BEACON (PORTABLE)

	EA
STAGE 1, CS-1	2
STAGE 2, CS-1	2
SUBTOTAL	4

PORTABLE CHANGEABLE MESSAGE SIGN

MESSAGING FOR REVERSIBLE TRAFFIC CONTROL	
FIRST PHASE	SECOND PHASE
PREPARE TO STOP	EXPECT 20 MIN DELAYS
MESSAGING FOR TEMPORARY TRAFFIC SIGNALS	
FIRST PHASE	SECOND PHASE
SIGNAL AHEAD	PREPARE TO STOP
MESSAGING FOR EXTENDED TRAFFIC CLOSURES	
FIRST PHASE	SECOND PHASE
US 395 CLOSED 1 MILE	US 395 CLOSED 6 AM - 7 AM

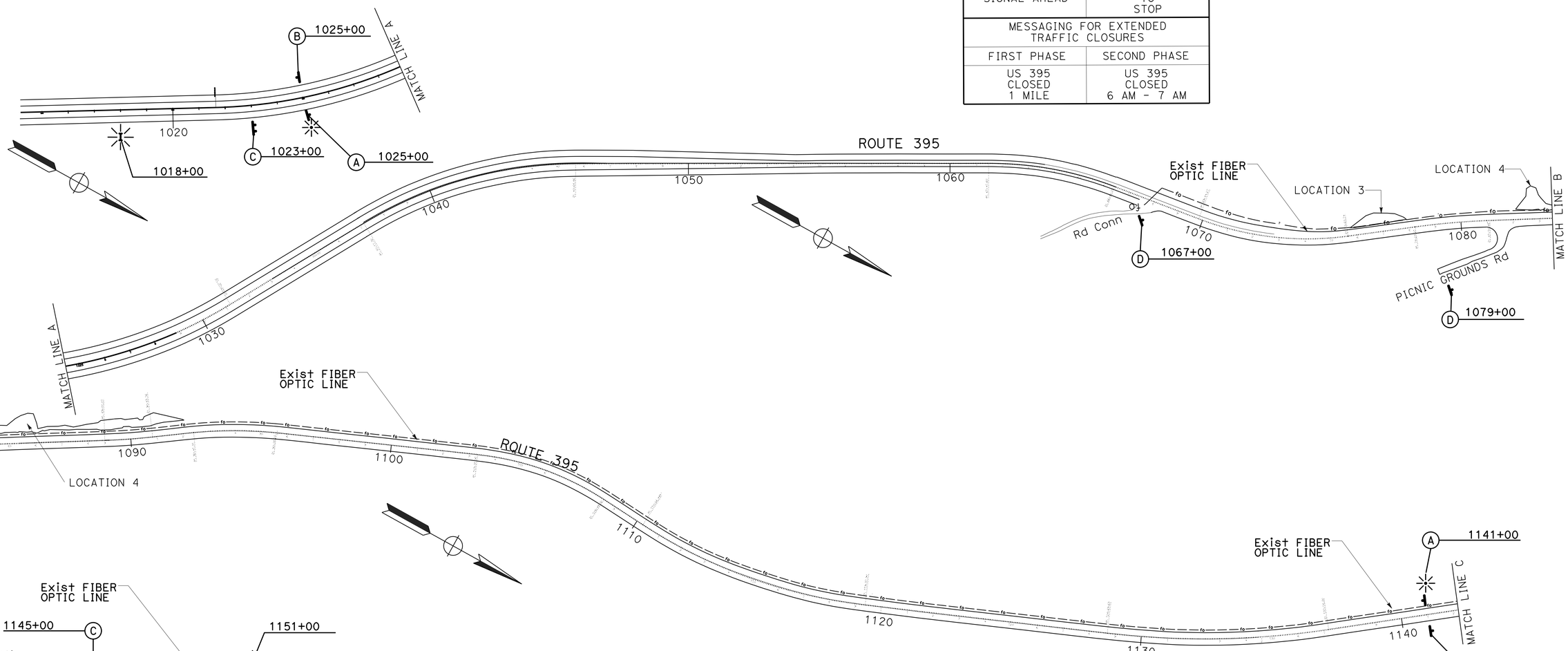

APPROVED FOR CONSTRUCTION AREA SIGN WORK ONLY

CONSTRUCTION AREA SIGNS
(STAGE 2)

NO SCALE

CS-2

STATE OF CALIFORNIA - DEPARTMENT OF TRANSPORTATION
Caltrans®
DESIGN

FUNCTIONAL SUPERVISOR: BRIAN WESLING
CALCULATED-DESIGNED BY: CORY FREEMAN
CHECKED BY: BRIAN WESLING
REVISED BY
DATE REVISED

LAST REVISION 07-31-14
DATE PLOTTED => 05-NOV-2014
TIME PLOTTED => 08:34

Dist	COUNTY	ROUTE	POST MILES TOTAL PROJECT	SHEET No.	TOTAL SHEETS
09	Mno	395	52.3/R53.7	23	69

REGISTERED CIVIL ENGINEER 10-6-14 DATE

10-20-14
PLANS APPROVAL DATE

REGISTERED PROFESSIONAL ENGINEER CORY FREEMAN No. 62107 Exp 9-30-15 CIVIL STATE OF CALIFORNIA

THE STATE OF CALIFORNIA OR ITS OFFICERS OR AGENTS SHALL NOT BE RESPONSIBLE FOR THE ACCURACY OR COMPLETENESS OF SCANNED COPIES OF THIS PLAN SHEET.

LEGEND:

- PORTABLE CHANGEABLE MESSAGE SIGN
- EXISTING CALTRANS CHANGEABLE MESSAGE SIGN

NOTES:

1. DAY OF WEEK AND DATES ON CMS AND PCMS TO BE DETERMINED BY THE ENGINEER.
2. FOR ADDITIONAL CHANGEABLE MESSAGE SIGN AND PORTABLE CHANGEABLE MESSAGE SIGN PLACEMENT AND MESSAGING SEE CONSTRUCTION AREA SIGNS SHEETS.
3. PORTABLE CHANGEABLE MESSAGE SIGN LOCATIONS TO BE CONFIRMED BY THE ENGINEER BEFORE THE ACTUAL EXTENDED CLOSURES BEGIN.
4. ALTERNATE MESSAGES FOR THE CHANGEABLE MESSAGE SIGNS MUST BE APPROVED BY THE ENGINEER.
5. MESSAGE MAY BE CHANGED BY THE ENGINEER.
6. MESSAGES ON THE CHANGEABLE MESSAGE SIGNS MUST BE COORDINATED THROUGH THE D9 CALTRANS DISPATCH CENTER.

EXISTING CALTRANS[1] CHANGEABLE MESSAGE SIGN MESSAGES

MESSAGING 7 DAYS PRIOR TO EXTENDED TRAFFIC CLOSURES	
FIRST PHASE	SECOND PHASE
US 395 CLOSED MONDAY-THURSDAY 6AM - 7AM	1 MILE NORTH OF LEE VINING MM-DD TO MM-DD
MESSAGING DURING EXTENDED TRAFFIC CLOSURES-EXCEPT MAMMOTH CMS	
FIRST PHASE	SECOND PHASE
US 395 CLOSED XX MILES AHEAD 6AM - 7AM	CAMPAIGN OR OTHER EMERGENCY MESSAGE
MESSAGING DURING EXTENDED TRAFFIC CLOSURES-MAMMOTH CMS	
FIRST PHASE	SECOND PHASE
395 NORTH CLOSED XX MILES AHEAD 6AM - 7AM	CAMPAIGN OR OTHER EMERGENCY MESSAGE

1. MESSAGES ENTERED BY ENGINEER.

EXISTING CALTRANS CHANGEABLE MESSAGE SIGNS

NAME	COUNTY-ROUTE-PM	FACING	XX
BISHOP CMS	INY-395-115.0	NB	68
CROWLEY CMS	MNO-395-13.5	NB	40
MAMMOTH CMS	MNO-203-7.0	EB	28
LEE VINING CMS	MNO-395-51.5	NB	1
BRIDGEPORT CMS	MNO-395-74.8	SB	21

PORTABLE CHANGEABLE SIGN MESSAGES

MESSAGING DURING EXTENDED TRAFFIC CLOSURES	
FIRST PHASE	SECOND PHASE
US 395 CLOSED XX MI AHD	US 395 CLOSED 6AM - 7AM

PORTABLE CHANGEABLE MESSAGE SIGNS

LOCATION	COUNTY-ROUTE-PM	FACING	XX
NORTH OF JUNE LAKE JCT	MNO-395-40.43	NB	13
NORTH OF N. JCT 158	MNO-395-46.45	NB	7
NORTH OF SR 167 JCT	MNO-395-58.50	SB	5
BRIDGEPORT	MNO-395-76.85	SB	23

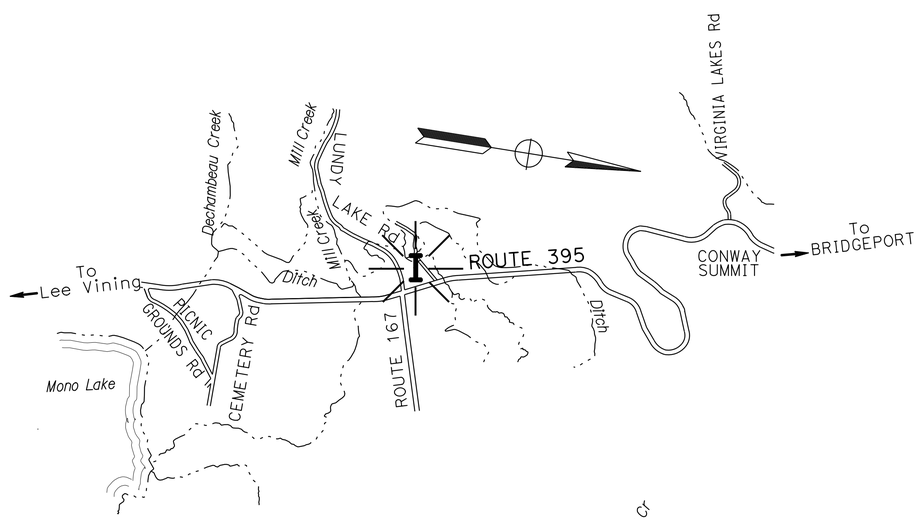

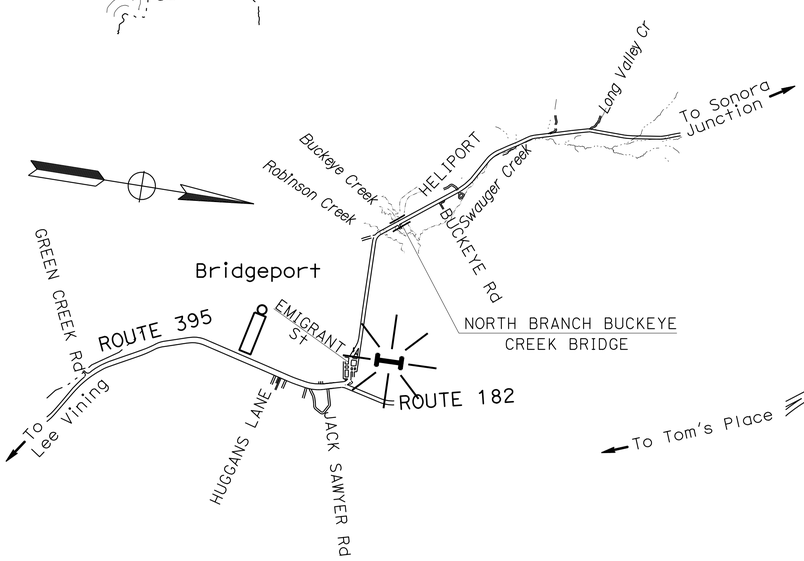

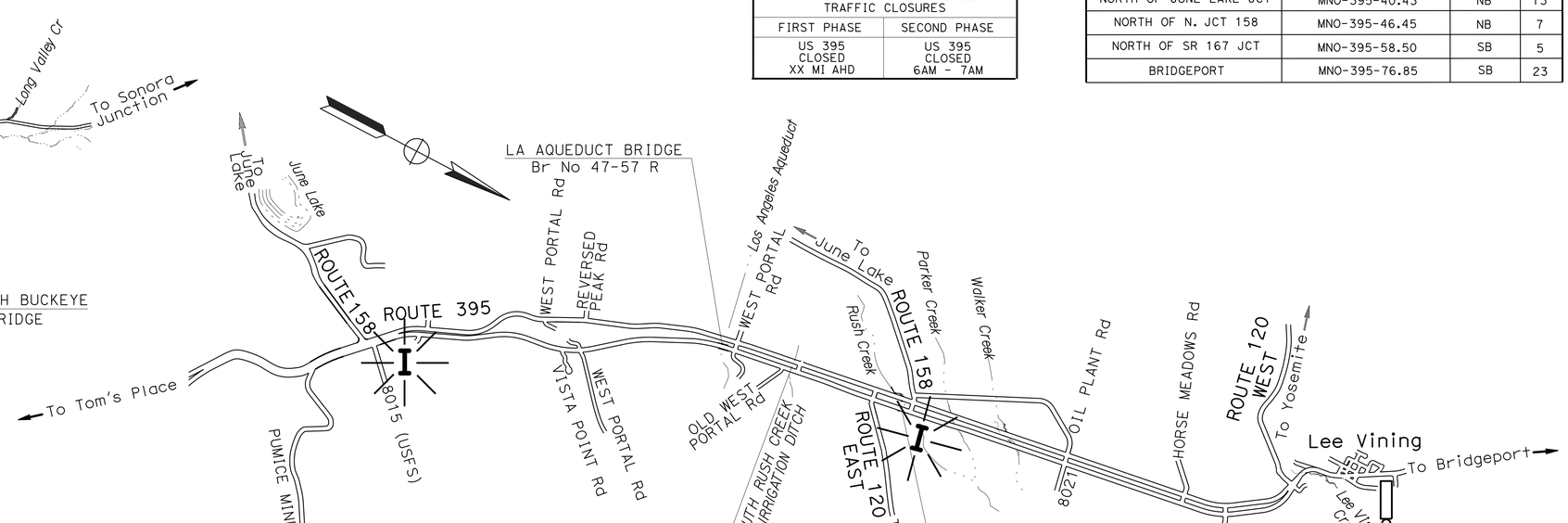

APPROVED FOR MOTORIST INFORMATION WORK ONLY

MOTORIST INFORMATION PLAN
NO SCALE

MI-1

STATE OF CALIFORNIA - DEPARTMENT OF TRANSPORTATION
Caltrans
DESIGN

FUNCTIONAL SUPERVISOR: BRIAN WESLING
CALCULATED-DESIGNED BY
CHECKED BY
REVISED BY
DATE REVISED

LAST REVISION 08-06-14
DATE PLOTTED => 05-NOV-2014
TIME PLOTTED => 08:34

Dist	COUNTY	ROUTE	POST MILES TOTAL PROJECT	SHEET No.	TOTAL SHEETS
09	Mno	395	52.3/R53.7	24	69

REGISTERED CIVIL ENGINEER 10-6-14 DATE

10-20-14
PLANS APPROVAL DATE

REGISTERED PROFESSIONAL ENGINEER CORY FREEMAN No. 62107 Exp 9-30-15 CIVIL STATE OF CALIFORNIA

THE STATE OF CALIFORNIA OR ITS OFFICERS OR AGENTS SHALL NOT BE RESPONSIBLE FOR THE ACCURACY OR COMPLETENESS OF SCANNED COPIES OF THIS PLAN SHEET.

LEGEND:

- CONSTRUCTION THIS STAGE
- AREA PREVIOUSLY CONSTRUCTED OR AREA OF NO WORK
- DIRECTION OF TRAFFIC FLOW
- PORTABLE DELINEATOR 25 Ft SPACING (Typ)
- TYPE III BARRICADE
- No - CONSTRUCTION AREA SIGN NO
- CONSTRUCTION AREA SIGNS
- XX Temp - Temp TRAFFIC STRIPE (TAPE) DETAIL
- CHANGEABLE MESSAGE SIGN
- Temp TRAFFIC SIGNAL(PORTABLE)
- LIGHT TOWER (PORTABLE)
- RESTROOM (PORTABLE)
- ALTERNATIVE TEMPORARY CRASH CUSION
- Temp PINE NEEDLE WATTLE
- FLASHING BEACON

NOTE:

1. ALL TRAFFIC CONTROL DEVICES AND CONSTRUCTION AREA SIGN LOCATIONS ARE APPROXIMATE, EXACT LOCATIONS WILL BE DETERMINED BY THE ENGINEER.
2. TAPER ALL Temp RAILING (TYPE K) @ 10:1 UON.
3. Temp TRAFFIC STRIPE (TAPE) SHALL BE APPLIED TO THE PAVEMENT IN A CONTINUOUS UNBROKEN LENGTH BETWEEN STATIONS AS SHOWN.
4. SEE CONSTRUCTION AREA SIGN SHEETS FOR ADDITIONAL CONSTRUCTION AREA SIGNS.

ABBREVIATIONS:

ADTWMS - ANCHORED DOUBLE TWISTED WIRE MESH SYSTEM
ACNS - ANCHORED CABLE NET SYSTEM
TPNW - TEMPORARY PINE NEEDLE WATTLE

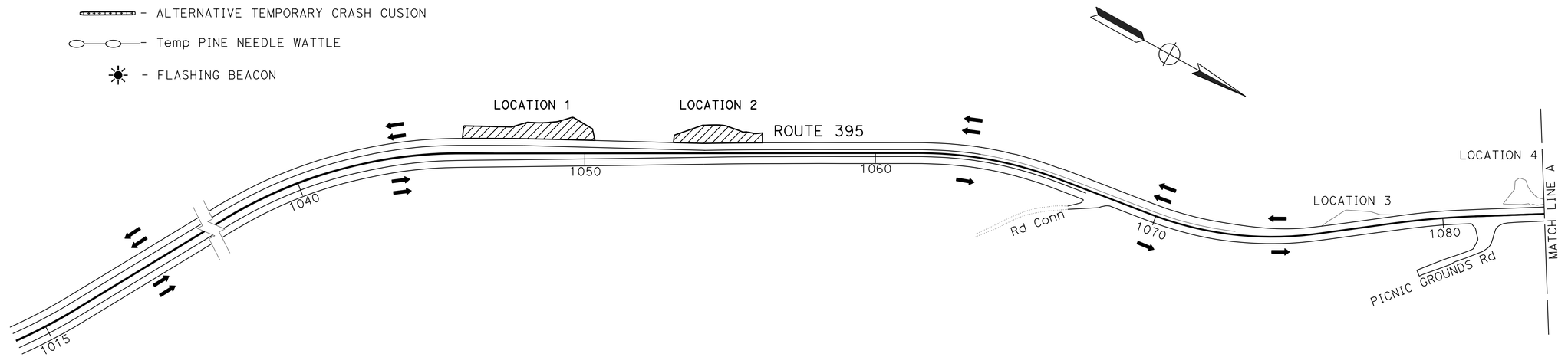

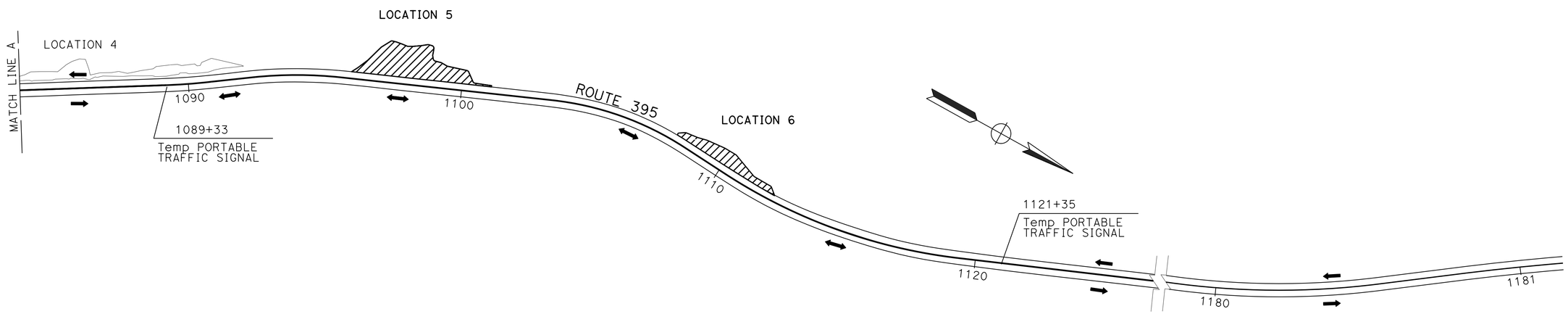

STAGE 1 - LOCATIONS 1, 2, 5 & 6

1. INSTALL CONSTRUCTION AREA SIGNS
2. INSTALL STORMWATER POLLUTION PREVENTION PLAN RELEVANT TO THIS STAGE OF WORK. REMOVE WHEN WORK ASSOCIATED WITH THIS STAGE IS COMPLETED.
3. PLACE MINOR HMA AT STA 1096+23 TO 1098+48 RT SIDE, SEE LAYOUT SHEET L-6
4. INSTALL PORTABLE Temp SIGNAL SYSTEM, Temp DELINEATION, Temp RAILING (TYPE K) AND Temp FLEXIBLE ROCKFALL FENCE.
5. PERFORM CLEARING & GRUBBING WITHIN AREA OF WORK AND ACQUIRE MULCH
6. PERFORM EARTHWORK AND HAND ROCK SLOPE SCALING
7. APPLY EROSION CONTROL PRODUCTS PER EROSION CONTROL PLANS TO LOCATIONS 1& 2.
8. INSTALL ROCK DOWELS @ LOCATIONS 5 & 6.
9. APPLY EROSION CONTROL PRODUCTS PER EROSION CONTROL PLANS TO LOCATIONS 5 & 6.
10. REMOVE PORTABLE Temp SIGNAL SYSTEM, Temp DELINEATION, Temp RAILING (TYPE K) AND Temp FLEXIBLE ROCKFALL FENCE.
11. INSTALL ANCHORED CABLE NET SYSTEM
12. RESET EXISTING SIGNS.

APPROVED FOR STAGE CONSTRUCTION TRAFFIC HANDLING WORK ONLY

STAGE CONSTRUCTION AND TRAFFIC HANDLING PLAN (STAGE 1)

NO SCALE

SC-1

STATE OF CALIFORNIA - DEPARTMENT OF TRANSPORTATION
Caltrans
DESIGN

FUNCTIONAL SUPERVISOR: BRIAN WESLING
CALCULATED-DESIGNED BY: CORY FREEMAN
CHECKED BY: BRIAN WESLING
REVISED BY
DATE REVISED

LAST REVISION 07-28-14
DATE PLOTTED => 05-NOV-2014
TIME PLOTTED => 08:34

Dist	COUNTY	ROUTE	POST MILES TOTAL PROJECT	SHEET No.	TOTAL SHEETS
09	Mno	395	52.3/R53.7	25	69

REGISTERED CIVIL ENGINEER 10-6-14 DATE

10-20-14
PLANS APPROVAL DATE

REGISTERED PROFESSIONAL ENGINEER CORY FREEMAN No. 62107 Exp 9-30-15 CIVIL STATE OF CALIFORNIA

THE STATE OF CALIFORNIA OR ITS OFFICERS OR AGENTS SHALL NOT BE RESPONSIBLE FOR THE ACCURACY OR COMPLETENESS OF SCANNED COPIES OF THIS PLAN SHEET.

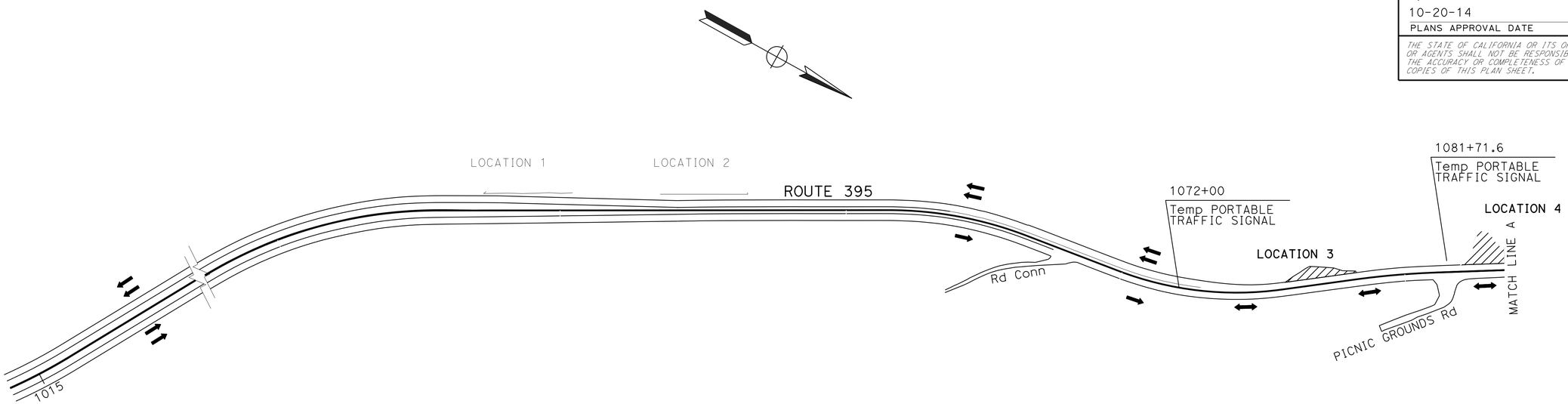

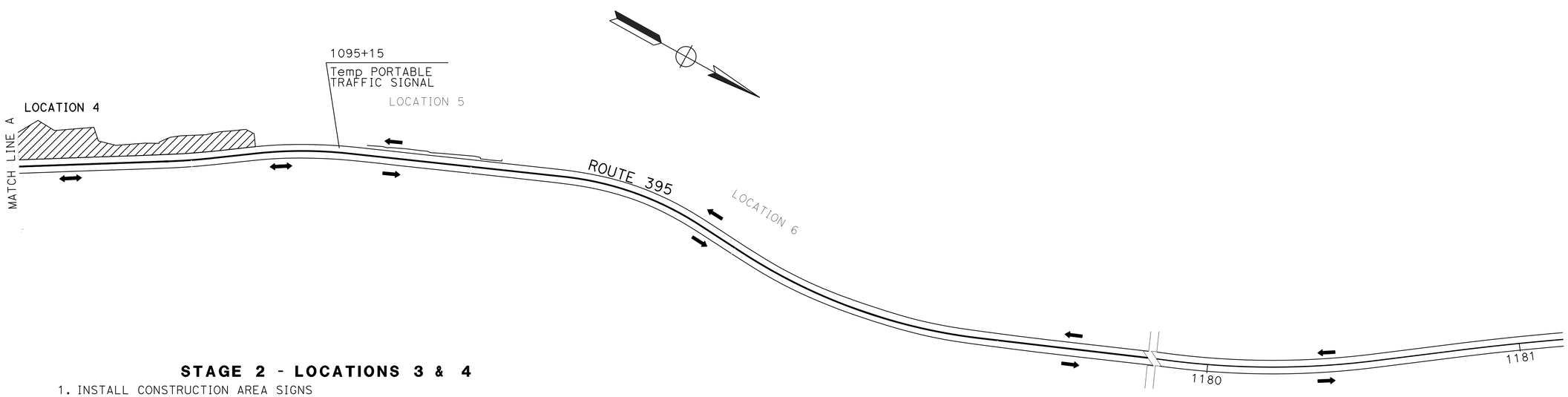

STAGE 2 - LOCATIONS 3 & 4

1. INSTALL CONSTRUCTION AREA SIGNS
2. INSTALL STORMWATER POLLUTION PREVENTION PLAN RELEVANT TO THIS STAGE OF WORK. REMOVE WHEN WORK ASSOCIATED WITH THIS STAGE IS COMPLETED.
3. INSTALL PORTABLE Temp SIGNAL SYSTEM, Temp DELINEATION, Temp RAILING (TYPE K) AND Temp FLEXIBLE ROCKFALL FENCE.
4. PERFORM CLEARING & GRUBBING WITHIN AREA OF WORK AND ACQUIRE MULCH
5. PERFORM EARTHWORK AND HAND ROCK SLOPE SCALING
6. APPLY EROSION CONTROL PRODUCTS PER EROSION CONTROL PLANS TO LOCATION 3.
7. INSTALL ROCK DOWELS @ LOCATION 4
8. APPLY EROSION CONTROL PRODUCTS PER EROSION CONTROL PLANS TO LOCATION 4.
9. REMOVE PORTABLE Temp SIGNAL SYSTEM, Temp DELINEATION, Temp RAILING (TYPE K) AND Temp FLEXIBLE ROCKFALL FENCE.
10. INSTALL ANCHORED CABLE NET SYSTEM
11. RESET EXISTING SIGNS.

APPROVED FOR STAGE CONSTRUCTION TRAFFIC HANDLING WORK ONLY

STAGE CONSTRUCTION AND TRAFFIC HANDLING PLAN (STAGE 2)

NO SCALE **SC-2**

REVISED BY | DATE REVISED
CORY FREEMAN | BRIAN WESLING
CALCULATED-DESIGNED BY | CHECKED BY
FUNCTIONAL SUPERVISOR: BRIAN WESLING

STATE OF CALIFORNIA - DEPARTMENT OF TRANSPORTATION
Caltrans
DESIGN

LAST REVISION 07-28-14 | DATE PLOTTED => 05-NOV-2014 | TIME PLOTTED => 08:34

Dist	COUNTY	ROUTE	POST MILES TOTAL PROJECT	SHEET No.	TOTAL SHEETS
09	Mno	395	52.3/R53.7	26	69

REGISTERED CIVIL ENGINEER 10-6-14 DATE

10-20-14
PLANS APPROVAL DATE

REGISTERED PROFESSIONAL ENGINEER CORY FREEMAN No. 62107 Exp 9-30-15 CIVIL STATE OF CALIFORNIA

THE STATE OF CALIFORNIA OR ITS OFFICERS OR AGENTS SHALL NOT BE RESPONSIBLE FOR THE ACCURACY OR COMPLETENESS OF SCANNED COPIES OF THIS PLAN SHEET.

NOTES:

1. SEE SCQ-1 FOR ADDITIONAL STAGE 1 SIGNS.
1. SEE SCQ-2 FOR ADDITIONAL STAGE 2 SIGNS.

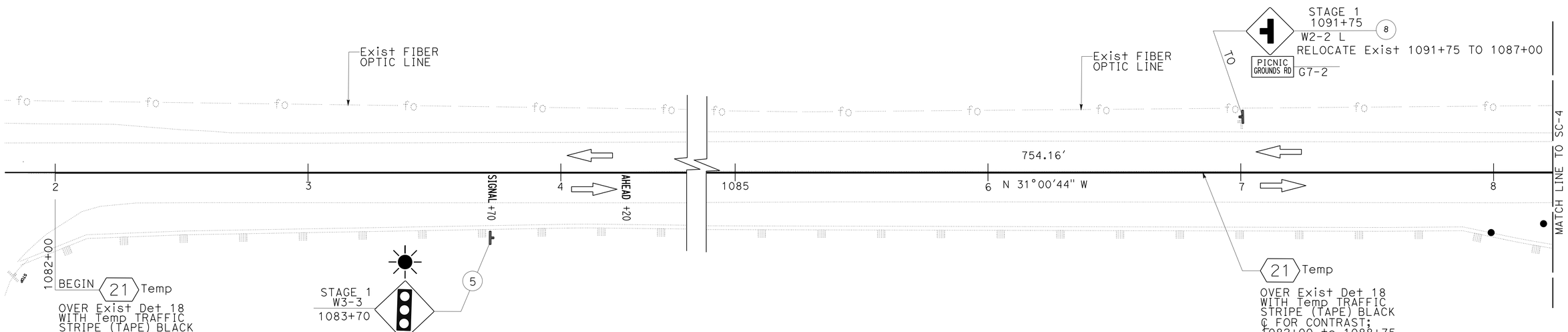

STAGE CONSTRUCTION AND TRAFFIC HANDLING PLAN (STAGE 1)

APPROVED FOR STAGE CONSTRUCTION TRAFFIC HANDLING WORK ONLY

SCALE: 1"=20'

SC-3

STATE OF CALIFORNIA - DEPARTMENT OF TRANSPORTATION
Caltrans® DESIGN

FUNCTIONAL SUPERVISOR: BRIAN WESLING
CALCULATED-DESIGNED BY: JOE BLOMMER
CHECKED BY: CORY FREEMAN
REVISED BY
DATE REVISED

LAST REVISION 07-31-14
DATE PLOTTED => 05-NOV-2014
TIME PLOTTED => 08:34

Dist	COUNTY	ROUTE	POST MILES TOTAL PROJECT	SHEET No.	TOTAL SHEETS
09	Mno	395	52.3/R53.7	27	69

REGISTERED CIVIL ENGINEER 10-6-14 DATE

10-20-14
PLANS APPROVAL DATE

REGISTERED PROFESSIONAL ENGINEER CORY FREEMAN No. 62107 Exp 9-30-15 CIVIL STATE OF CALIFORNIA

THE STATE OF CALIFORNIA OR ITS OFFICERS OR AGENTS SHALL NOT BE RESPONSIBLE FOR THE ACCURACY OR COMPLETENESS OF SCANNED COPIES OF THIS PLAN SHEET.

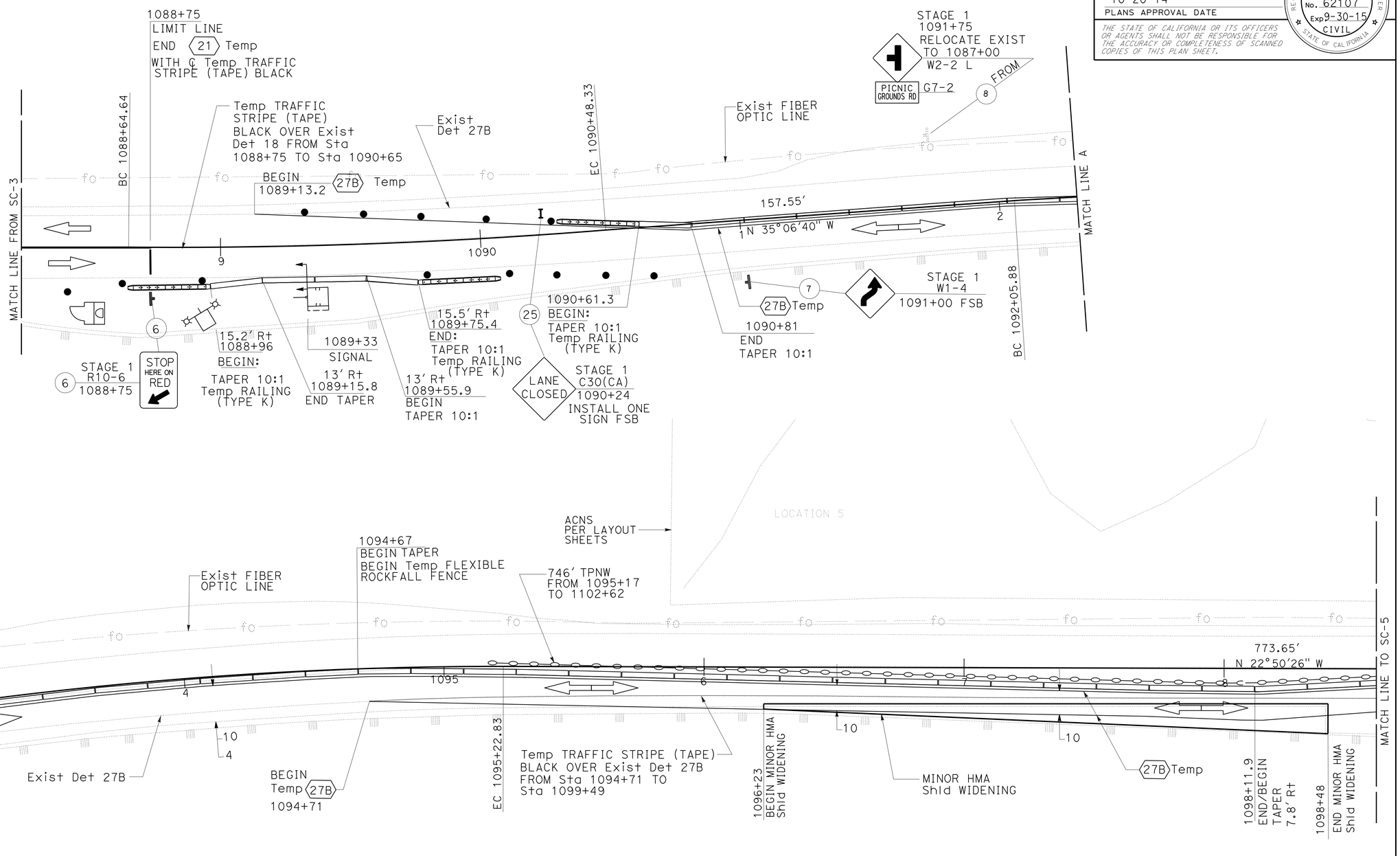

STAGE CONSTRUCTION AND TRAFFIC HANDLING PLAN (STAGE 1)

APPROVED FOR STAGE CONSTRUCTION TRAFFIC HANDLING WORK ONLY

SCALE: 1"=20'

SC-4

STATE OF CALIFORNIA - DEPARTMENT OF TRANSPORTATION
Caltrans® **DESIGN**

FUNCTIONAL SUPERVISOR: BRIAN WESLING
CALCULATED-DESIGNED BY: JOE BLOMMER
CHECKED BY: CORY FREEMAN
REVISED BY / DATE REVISED

LAST REVISION 08-01-14 | DATE PLOTTED => 05-NOV-2014 | TIME PLOTTED => 08:34

Dist	COUNTY	ROUTE	POST MILES TOTAL PROJECT	SHEET No.	TOTAL SHEETS
09	Mno	395	52.3/R53.7	28	69

REGISTERED CIVIL ENGINEER 10-6-14 DATE

10-20-14
PLANS APPROVAL DATE

REGISTERED PROFESSIONAL ENGINEER CORY FREEMAN No. 62107 Exp 9-30-15 CIVIL STATE OF CALIFORNIA

THE STATE OF CALIFORNIA OR ITS OFFICERS OR AGENTS SHALL NOT BE RESPONSIBLE FOR THE ACCURACY OR COMPLETENESS OF SCANNED COPIES OF THIS PLAN SHEET.

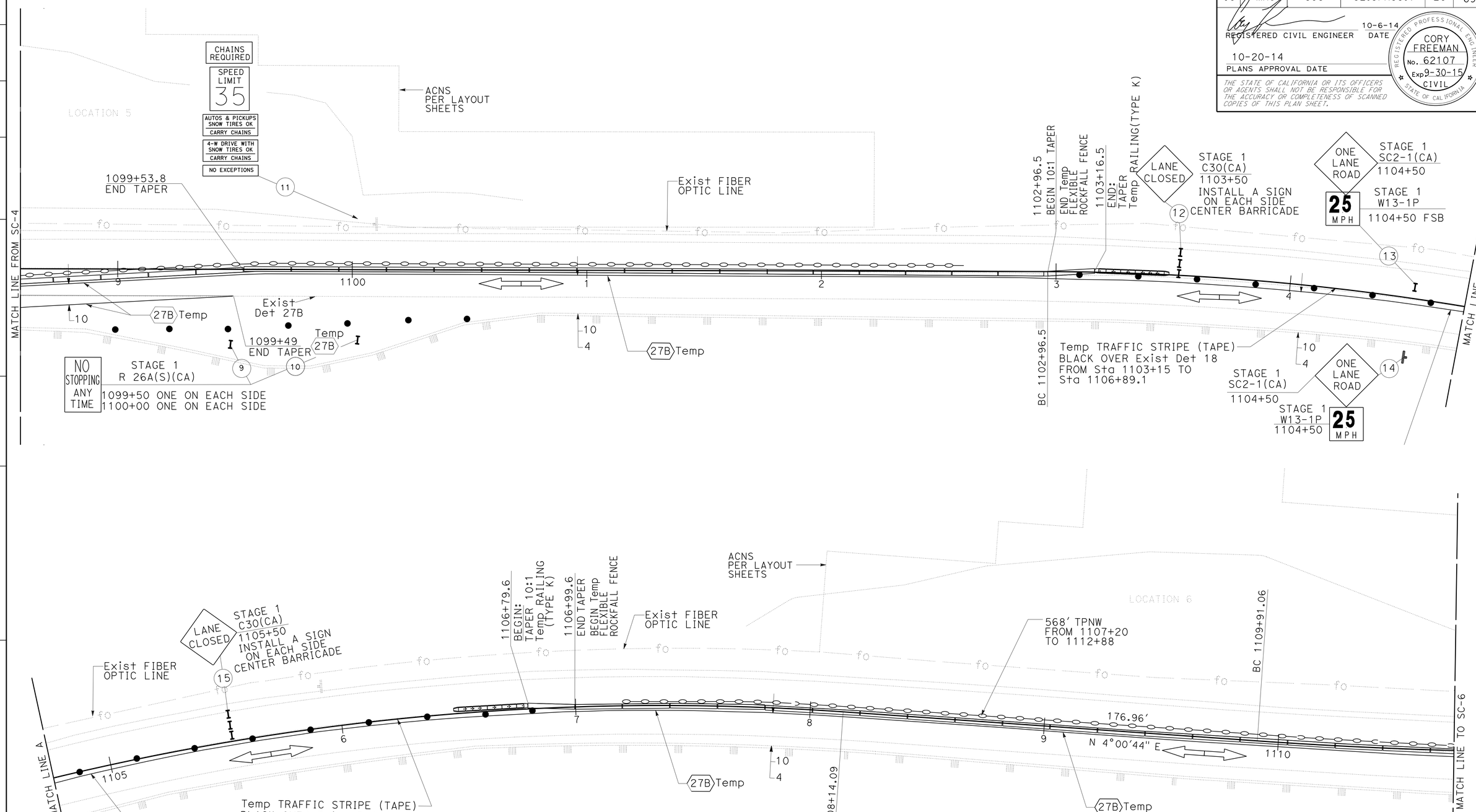

STAGE CONSTRUCTION AND TRAFFIC HANDLING PLAN (STAGE 1)

APPROVED FOR STAGE CONSTRUCTION TRAFFIC HANDLING WORK ONLY

SCALE: 1"=20'

SC-5

STATE OF CALIFORNIA - DEPARTMENT OF TRANSPORTATION
Caltrans® **DESIGN**

FUNCTIONAL SUPERVISOR: BRIAN WESLING
CALCULATED-DESIGNED BY: JOE BLOMMER
CHECKED BY: CORY FREEMAN
REVISED BY / DATE REVISED

LAST REVISION 07-28-14
DATE PLOTTED => 05-NOV-2014
TIME PLOTTED => 08:34

Dist	COUNTY	ROUTE	POST MILES TOTAL PROJECT	SHEET No.	TOTAL SHEETS
09	Mno	395	52.3/R53.7	29	69

REGISTERED CIVIL ENGINEER 10-6-14 DATE

10-20-14
PLANS APPROVAL DATE

REGISTERED PROFESSIONAL ENGINEER CORY FREEMAN No. 62107 Exp 9-30-15 CIVIL STATE OF CALIFORNIA

THE STATE OF CALIFORNIA OR ITS OFFICERS OR AGENTS SHALL NOT BE RESPONSIBLE FOR THE ACCURACY OR COMPLETENESS OF SCANNED COPIES OF THIS PLAN SHEET.

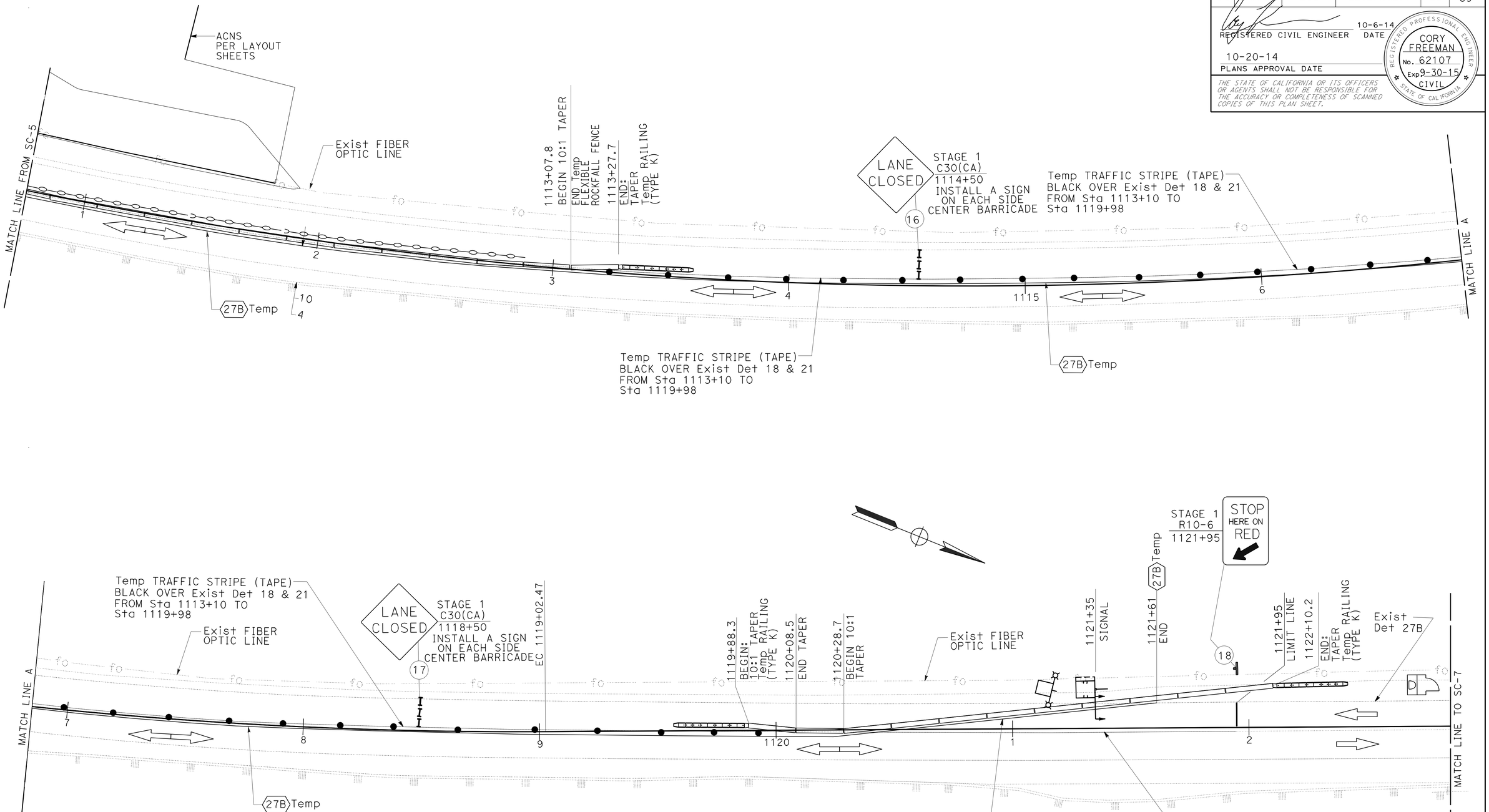

STAGE CONSTRUCTION AND TRAFFIC HANDLING PLAN (STAGE 1)

APPROVED FOR STAGE CONSTRUCTION TRAFFIC HANDLING WORK ONLY

SCALE: 1"=20'

SC-6

STATE OF CALIFORNIA - DEPARTMENT OF TRANSPORTATION
Caltrans® **DESIGN**

FUNCTIONAL SUPERVISOR: BRIAN WESLING
CALCULATED-DESIGNED BY: JOE BLOMMER
CHECKED BY: CORY FREEMAN
REVISED BY / DATE REVISED

LAST REVISION 08-01-14
DATE PLOTTED => 05-NOV-2014
TIME PLOTTED => 08:34

Dist	COUNTY	ROUTE	POST MILES TOTAL PROJECT	SHEET No.	TOTAL SHEETS
09	Mno	395	52.3/R53.7	30	69

REGISTERED CIVIL ENGINEER 10-6-14 DATE

10-20-14
PLANS APPROVAL DATE

REGISTERED PROFESSIONAL ENGINEER CORY FREEMAN No. 62107 Exp 9-30-15 CIVIL STATE OF CALIFORNIA

THE STATE OF CALIFORNIA OR ITS OFFICERS OR AGENTS SHALL NOT BE RESPONSIBLE FOR THE ACCURACY OR COMPLETENESS OF SCANNED COPIES OF THIS PLAN SHEET.

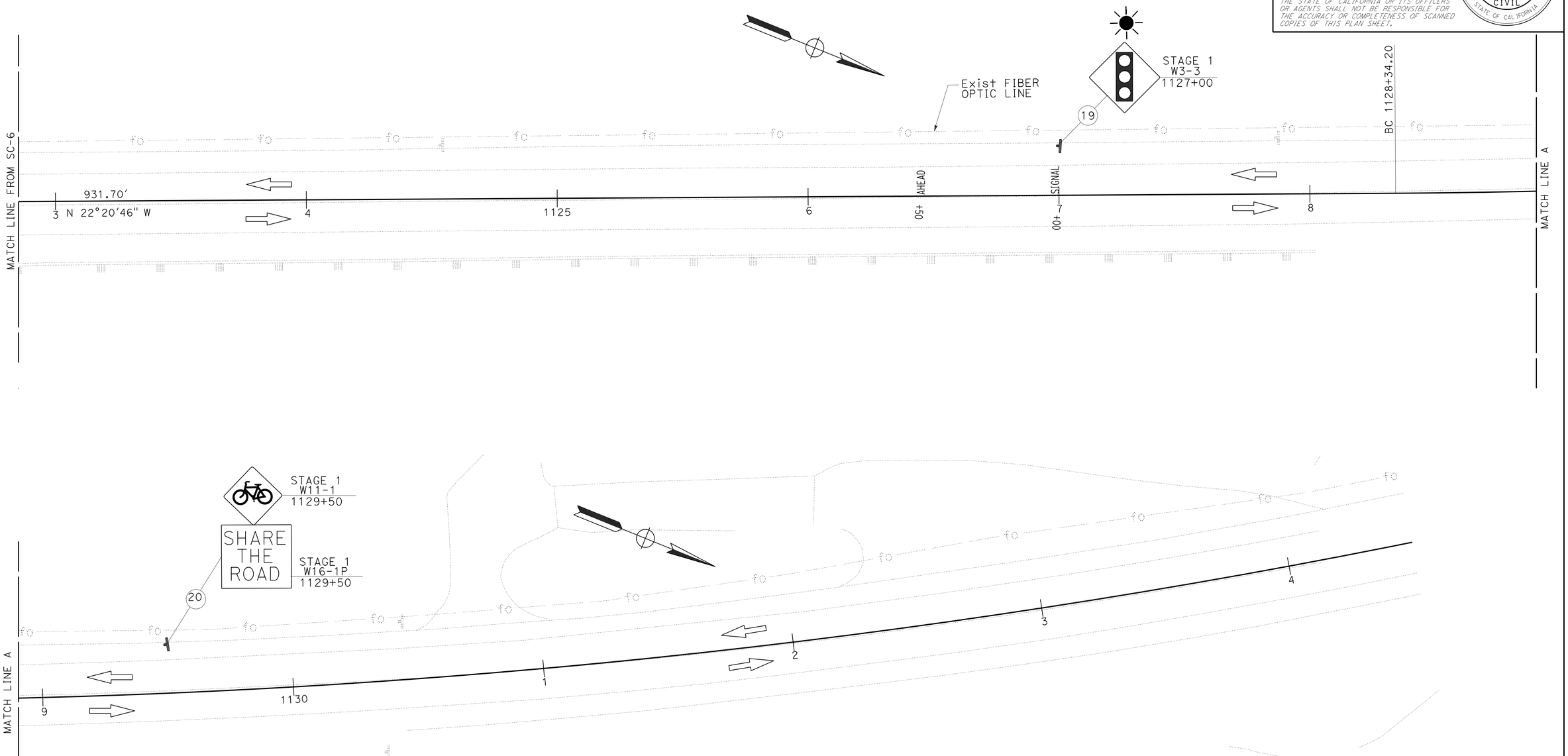

STAGE CONSTRUCTION AND TRAFFIC HANDLING PLAN (STAGE 1)

APPROVED FOR STAGE CONSTRUCTION TRAFFIC HANDLING WORK ONLY

SCALE: 1"=20'

SC-7

STATE OF CALIFORNIA - DEPARTMENT OF TRANSPORTATION
Caltrans®
DESIGN

FUNCTIONAL SUPERVISOR: BRIAN WESLING

CALCULATED-DESIGNED BY: JOE BLOMMER
CHECKED BY: CORY FREEMAN

REVISED BY
DATE REVISED

LAST REVISION 08-01-14
DATE PLOTTED => 05-NOV-2014
TIME PLOTTED => 08:34

Dist	COUNTY	ROUTE	POST MILES TOTAL PROJECT	SHEET No.	TOTAL SHEETS
09	Mno	395	52.3/R53.7	31	69

REGISTERED CIVIL ENGINEER 10-6-14 DATE

10-20-14
PLANS APPROVAL DATE

REGISTERED PROFESSIONAL ENGINEER CORY FREEMAN No. 62107 Exp 9-30-15 CIVIL STATE OF CALIFORNIA

THE STATE OF CALIFORNIA OR ITS OFFICERS OR AGENTS SHALL NOT BE RESPONSIBLE FOR THE ACCURACY OR COMPLETENESS OF SCANNED COPIES OF THIS PLAN SHEET.

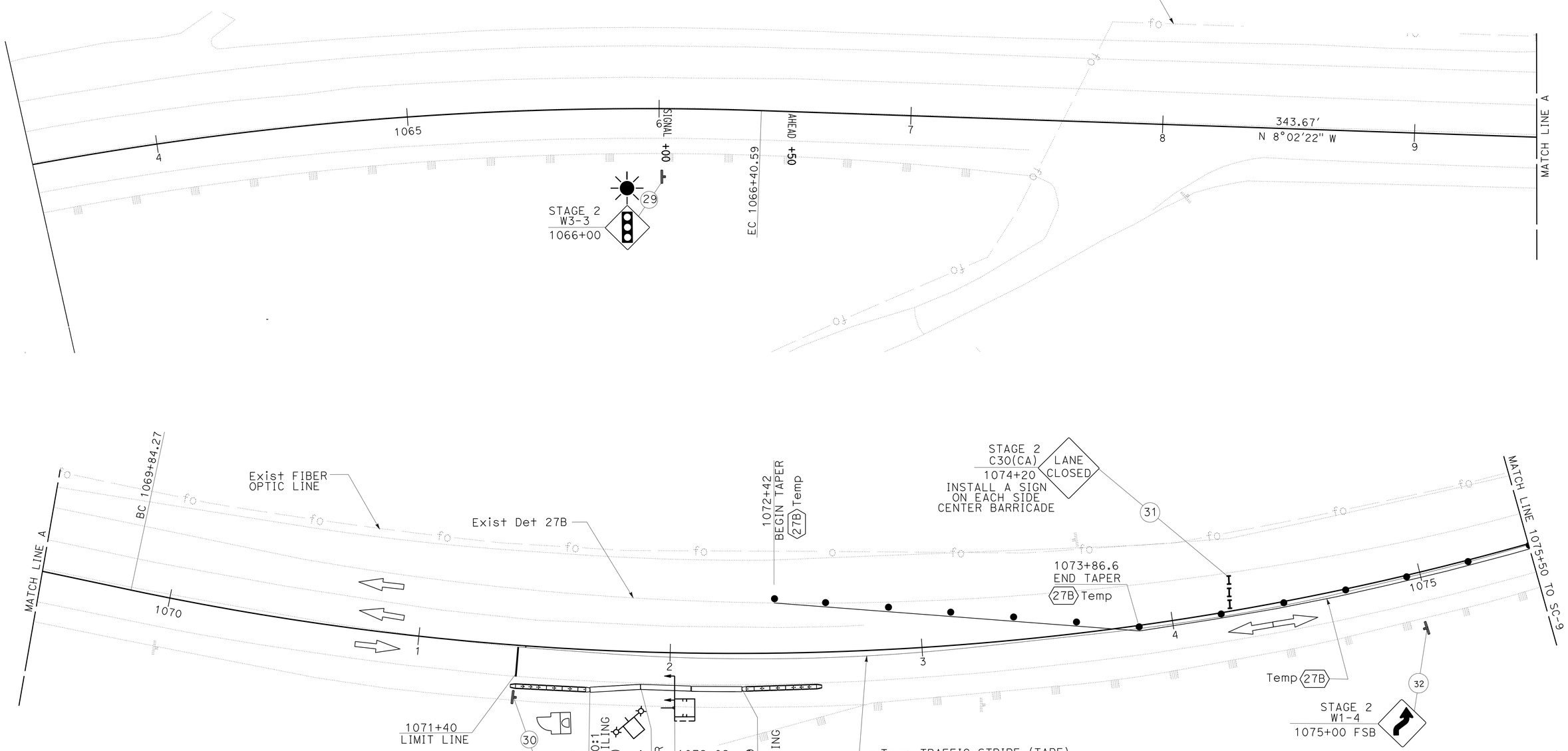

STAGE CONSTRUCTION AND TRAFFIC HANDLING PLAN (STAGE 2)

APPROVED FOR STAGE CONSTRUCTION TRAFFIC HANDLING WORK ONLY

SCALE: 1"=20'

SC-8

REVISED BY	DATE REVISED
JOE BLOMMER	CORY FREEMAN
CALCULATED-DESIGNED BY	CHECKED BY
FUNCTIONAL SUPERVISOR	BRIAN WESLING

STATE OF CALIFORNIA - DEPARTMENT OF TRANSPORTATION **DESIGN**

Caltrans

LAST REVISION 08-01-14 | DATE PLOTTED => 05-NOV-2014 | TIME PLOTTED => 08:34

Dist	COUNTY	ROUTE	POST MILES TOTAL PROJECT	SHEET No.	TOTAL SHEETS
09	Mno	395	52.3/R53.7	32	69

REGISTERED CIVIL ENGINEER 10-6-14 DATE

10-20-14
PLANS APPROVAL DATE

REGISTERED PROFESSIONAL ENGINEER CORY FREEMAN No. 62107 Exp 9-30-15 CIVIL STATE OF CALIFORNIA

THE STATE OF CALIFORNIA OR ITS OFFICERS OR AGENTS SHALL NOT BE RESPONSIBLE FOR THE ACCURACY OR COMPLETENESS OF SCANNED COPIES OF THIS PLAN SHEET.

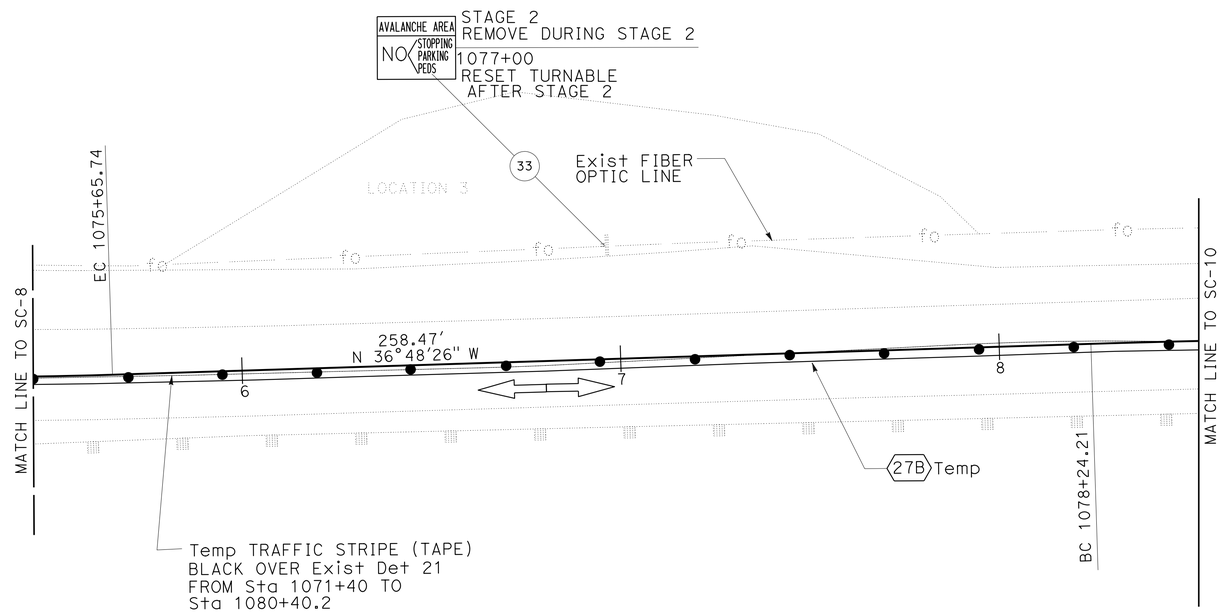

APPROVED FOR STAGE CONSTRUCTION TRAFFIC HANDLING WORK ONLY

STAGE CONSTRUCTION AND TRAFFIC HANDLING PLAN (STAGE 2)

SCALE: 1"=20'

SC-9

STATE OF CALIFORNIA - DEPARTMENT OF TRANSPORTATION
Caltrans® **DESIGN**

FUNCTIONAL SUPERVISOR: BRIAN WESLING

CALCULATED-DESIGNED BY: JOE BLOMMER
CHECKED BY: CORY FREEMAN

REVISED BY
DATE REVISED

LAST REVISION 08-01-14
DATE PLOTTED => 05-NOV-2014
TIME PLOTTED => 08:34

Dist	COUNTY	ROUTE	POST MILES TOTAL PROJECT	SHEET No.	TOTAL SHEETS
09	Mno	395	52.3/R53.7	33	69

REGISTERED CIVIL ENGINEER 10-6-14 DATE

10-20-14
PLANS APPROVAL DATE

REGISTERED PROFESSIONAL ENGINEER CORY FREEMAN No. 62107 Exp 9-30-15 CIVIL STATE OF CALIFORNIA

THE STATE OF CALIFORNIA OR ITS OFFICERS OR AGENTS SHALL NOT BE RESPONSIBLE FOR THE ACCURACY OR COMPLETENESS OF SCANNED COPIES OF THIS PLAN SHEET.

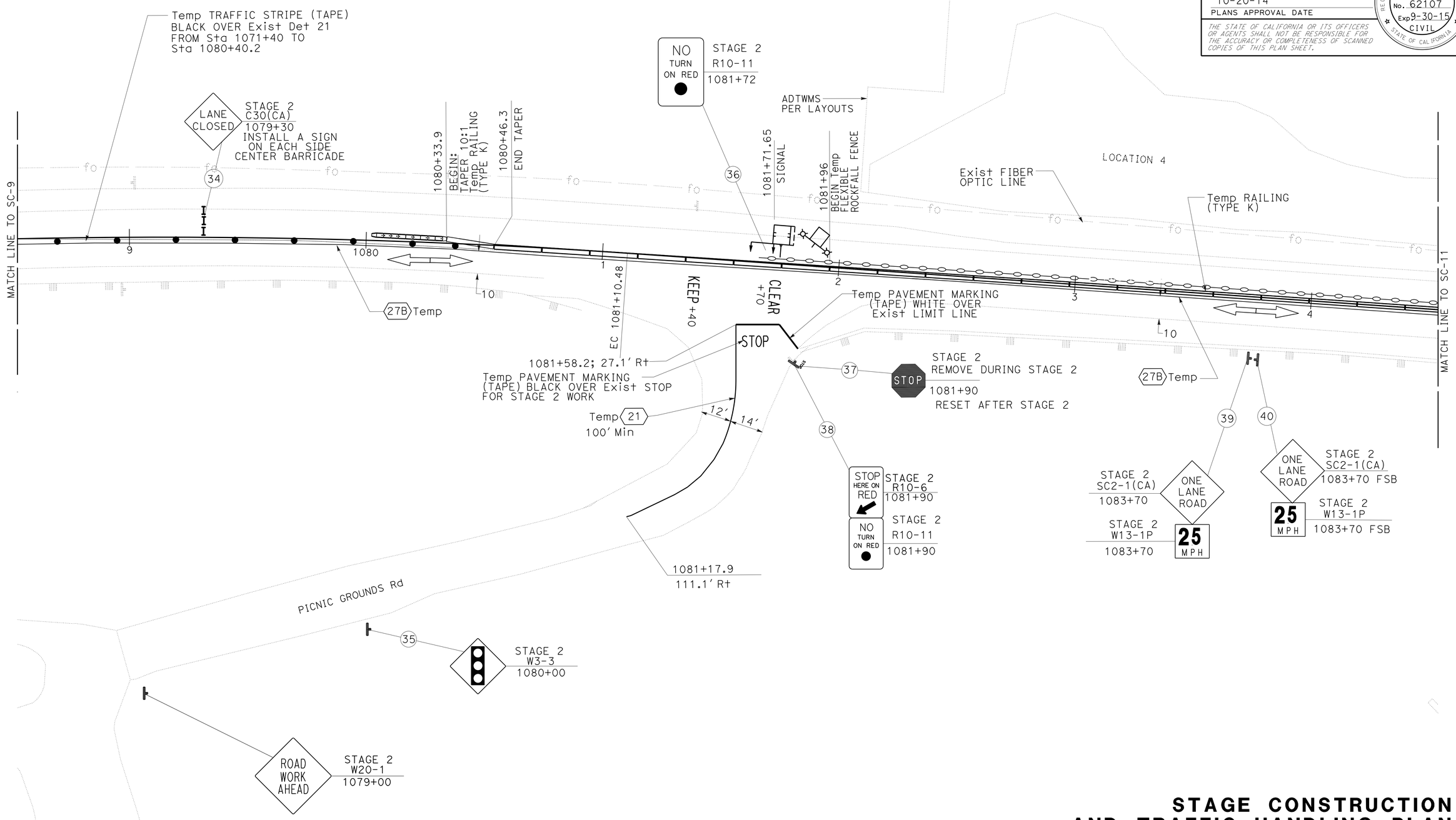

STAGE CONSTRUCTION AND TRAFFIC HANDLING PLAN (STAGE 2)

APPROVED FOR STAGE CONSTRUCTION TRAFFIC HANDLING WORK ONLY

SCALE: 1"=20'

SC-10

STATE OF CALIFORNIA - DEPARTMENT OF TRANSPORTATION
Caltrans
DESIGN

FUNCTIONAL SUPERVISOR: BRIAN WESLING
CALCULATED-DESIGNED BY: JOE BLOMMER
CHECKED BY: CORY FREEMAN
REVISED BY
DATE REVISED

LAST REVISION 08-01-14
DATE PLOTTED => 05-NOV-2014
TIME PLOTTED => 08:34

Dist	COUNTY	ROUTE	POST MILES TOTAL PROJECT	SHEET No.	TOTAL SHEETS
09	Mno	395	52.3/R53.7	34	69

REGISTERED CIVIL ENGINEER 10-6-14 DATE

10-20-14
PLANS APPROVAL DATE

REGISTERED PROFESSIONAL ENGINEER CORY FREEMAN No. 62107 Exp 9-30-15 CIVIL STATE OF CALIFORNIA

THE STATE OF CALIFORNIA OR ITS OFFICERS OR AGENTS SHALL NOT BE RESPONSIBLE FOR THE ACCURACY OR COMPLETENESS OF SCANNED COPIES OF THIS PLAN SHEET.

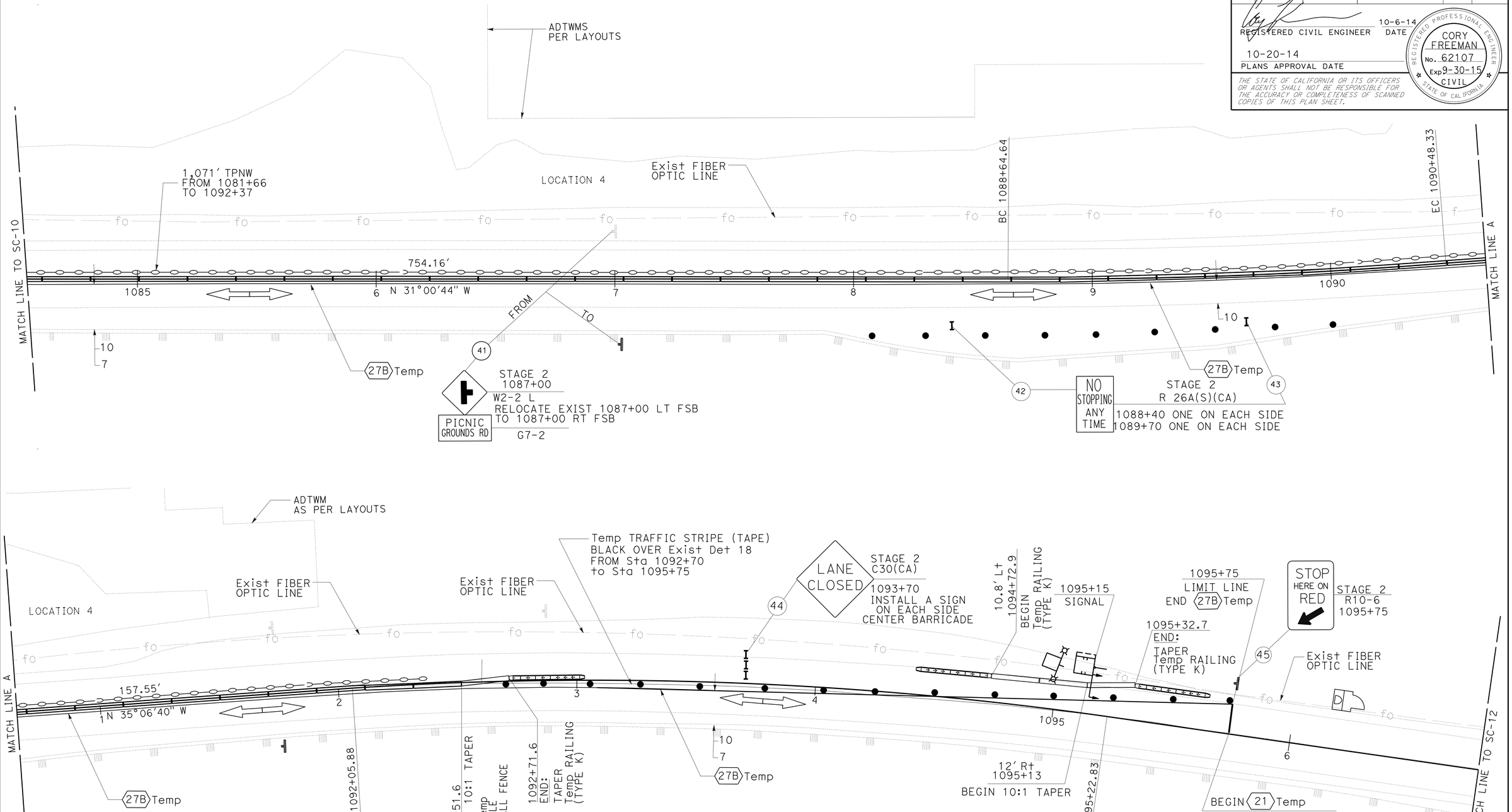

STAGE CONSTRUCTION AND TRAFFIC HANDLING PLAN (STAGE 2)

APPROVED FOR STAGE CONSTRUCTION TRAFFIC HANDLING WORK ONLY

SCALE: 1"=20'

SC-11

STATE OF CALIFORNIA - DEPARTMENT OF TRANSPORTATION
Caltrans
DESIGN

FUNCTIONAL SUPERVISOR: BRIAN WESLING
CALCULATED-DESIGNED BY: JOE BLOMMER
CHECKED BY: CORY FREEMAN
REVISED BY
DATE REVISED

LAST REVISION 08-01-14
DATE PLOTTED => 05-NOV-2014
TIME PLOTTED => 08:34

Dist	COUNTY	ROUTE	POST MILES TOTAL PROJECT	SHEET No.	TOTAL SHEETS
09	Mno	395	52.3/R53.7	35	69

REGISTERED CIVIL ENGINEER 10-6-14 DATE

10-20-14
PLANS APPROVAL DATE

REGISTERED PROFESSIONAL ENGINEER CORY FREEMAN No. 62107 Exp 9-30-15 CIVIL STATE OF CALIFORNIA

THE STATE OF CALIFORNIA OR ITS OFFICERS OR AGENTS SHALL NOT BE RESPONSIBLE FOR THE ACCURACY OR COMPLETENESS OF SCANNED COPIES OF THIS PLAN SHEET.

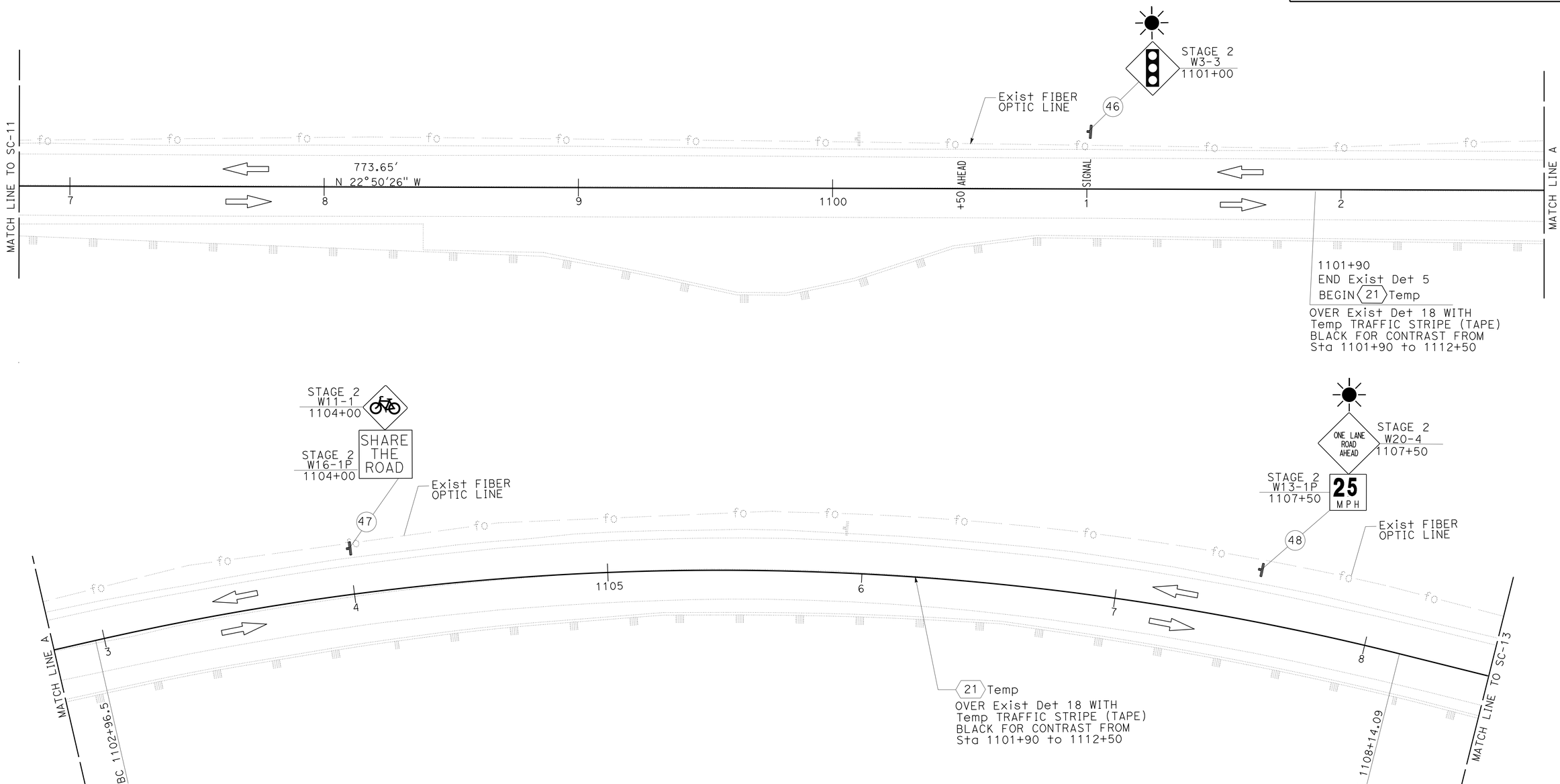

STAGE CONSTRUCTION AND TRAFFIC HANDLING PLAN (STAGE 2)

APPROVED FOR STAGE CONSTRUCTION TRAFFIC HANDLING WORK ONLY

SCALE: 1"=20'

SC-12

STATE OF CALIFORNIA - DEPARTMENT OF TRANSPORTATION
Caltrans
DESIGN

FUNCTIONAL SUPERVISOR: BRIAN WESLING
CALCULATED-DESIGNED BY: JOE BLOMMER
CHECKED BY: CORY FREEMAN
REVISED BY
DATE REVISED

LAST REVISION 08-01-14
DATE PLOTTED => 05-NOV-2014
TIME PLOTTED => 08:34

Dist	COUNTY	ROUTE	POST MILES TOTAL PROJECT	SHEET No.	TOTAL SHEETS
09	Mno	395	52.3/R53.7	36	69

REGISTERED CIVIL ENGINEER 10-6-14 DATE

10-20-14
PLANS APPROVAL DATE

REGISTERED PROFESSIONAL ENGINEER
CORY FREEMAN
No. 62107
Exp 9-30-15
CIVIL
STATE OF CALIFORNIA

THE STATE OF CALIFORNIA OR ITS OFFICERS OR AGENTS SHALL NOT BE RESPONSIBLE FOR THE ACCURACY OR COMPLETENESS OF SCANNED COPIES OF THIS PLAN SHEET.

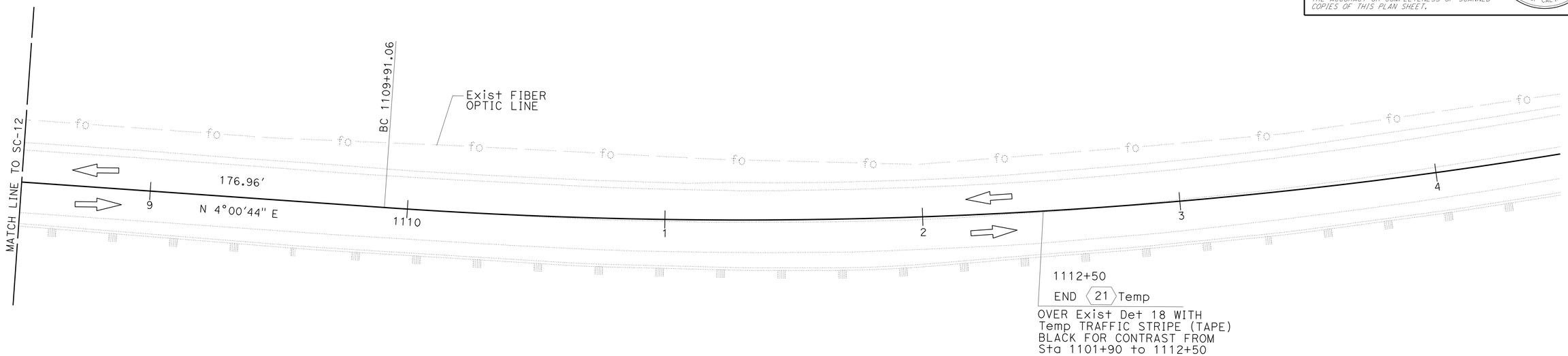

STAGE CONSTRUCTION AND TRAFFIC HANDLING PLAN (STAGE 2)

SCALE: 1"=20'

SC-13

APPROVED FOR STAGE CONSTRUCTION TRAFFIC HANDLING WORK ONLY

STATE OF CALIFORNIA - DEPARTMENT OF TRANSPORTATION
Caltrans® **DESIGN**

FUNCTIONAL SUPERVISOR: BRIAN WESLING

CALCULATED-DESIGNED BY: JOE BLOMMER
CHECKED BY: CORY FREEMAN

REVISED BY
DATE REVISED

LAST REVISION 08-01-14
DATE PLOTTED => 05-NOV-2014
TIME PLOTTED => 08:34

Dist	COUNTY	ROUTE	POST MILES TOTAL PROJECT	SHEET No.	TOTAL SHEETS
09	Mno	395	52.3/R53.7	37	69

REGISTERED CIVIL ENGINEER 10-6-14 DATE

10-20-14
PLANS APPROVAL DATE

REGISTERED PROFESSIONAL ENGINEER CORY FREEMAN No. 62107 Exp 9-30-15 CIVIL STATE OF CALIFORNIA

THE STATE OF CALIFORNIA OR ITS OFFICERS OR AGENTS SHALL NOT BE RESPONSIBLE FOR THE ACCURACY OR COMPLETENESS OF SCANNED COPIES OF THIS PLAN SHEET.

ABBREVIATIONS:

TPNW -TEMPORARY PINE NEEDLE WATTLE

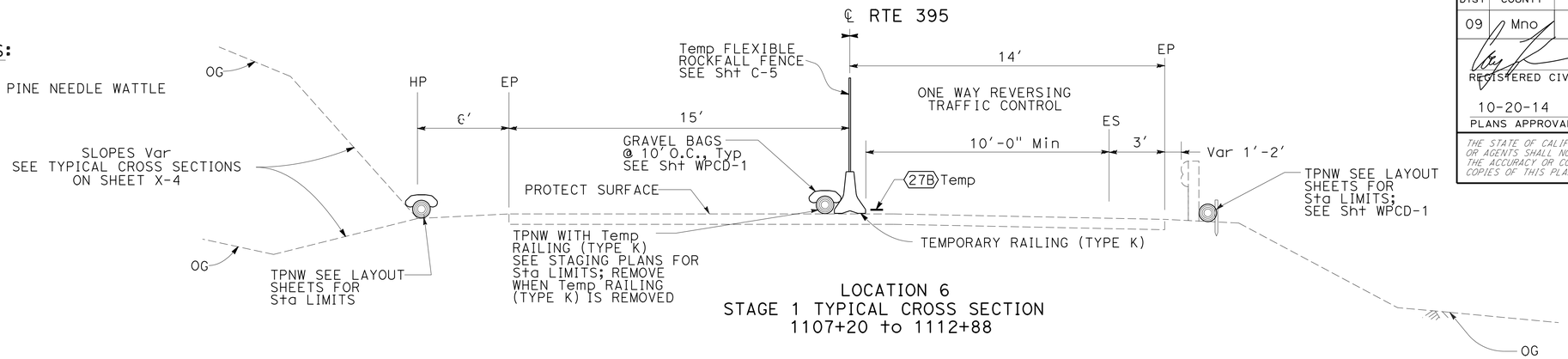

LOCATION 6
STAGE 1 TYPICAL CROSS SECTION
1107+20 to 1112+88

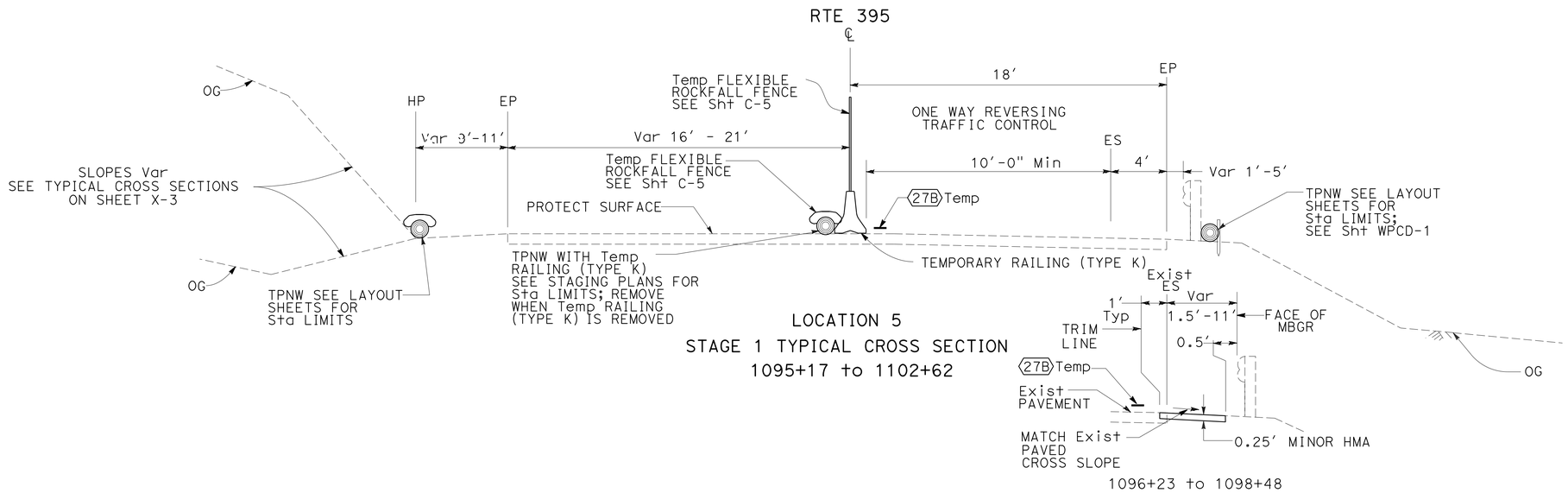

LOCATION 5
STAGE 1 TYPICAL CROSS SECTION
1095+17 to 1102+62

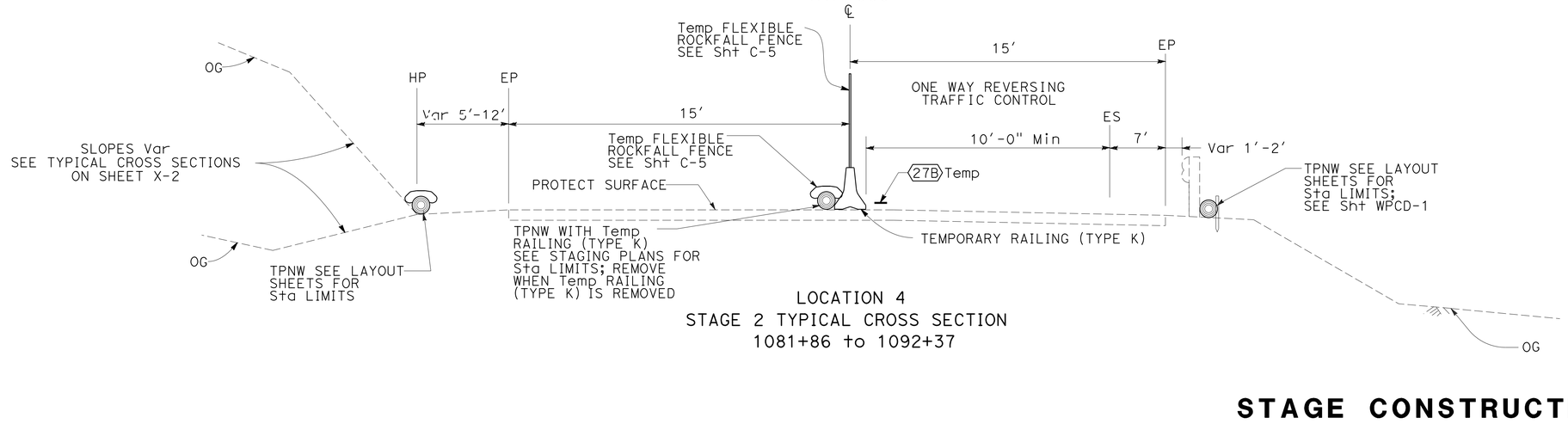

LOCATION 4
STAGE 2 TYPICAL CROSS SECTION
1081+86 to 1092+37

STAGE CONSTRUCTION DETAILS

NO SCALE

SCD-1

STATE OF CALIFORNIA - DEPARTMENT OF TRANSPORTATION
Caltrans® **DESIGN**

FUNCTIONAL SUPERVISOR: BRIAN WESLING
CALCULATED-DESIGNED BY: JOE BLOMMER
CHECKED BY: CORY FREEMAN
REVISED BY / DATE REVISED

LAST REVISION 08-01-14
DATE PLOTTED => 05-NOV-2014
TIME PLOTTED => 08:34

Dist	COUNTY	ROUTE	POST MILES TOTAL PROJECT	SHEET No.	TOTAL SHEETS
09	Mno	395	52.3/R53.7	38	69

REGISTERED CIVIL ENGINEER 10-6-14 DATE

10-20-14
PLANS APPROVAL DATE

REGISTERED PROFESSIONAL ENGINEER CORY FREEMAN No. 62107 Exp 9-30-15 CIVIL STATE OF CALIFORNIA

THE STATE OF CALIFORNIA OR ITS OFFICERS OR AGENTS SHALL NOT BE RESPONSIBLE FOR THE ACCURACY OR COMPLETENESS OF SCANNED COPIES OF THIS PLAN SHEET.

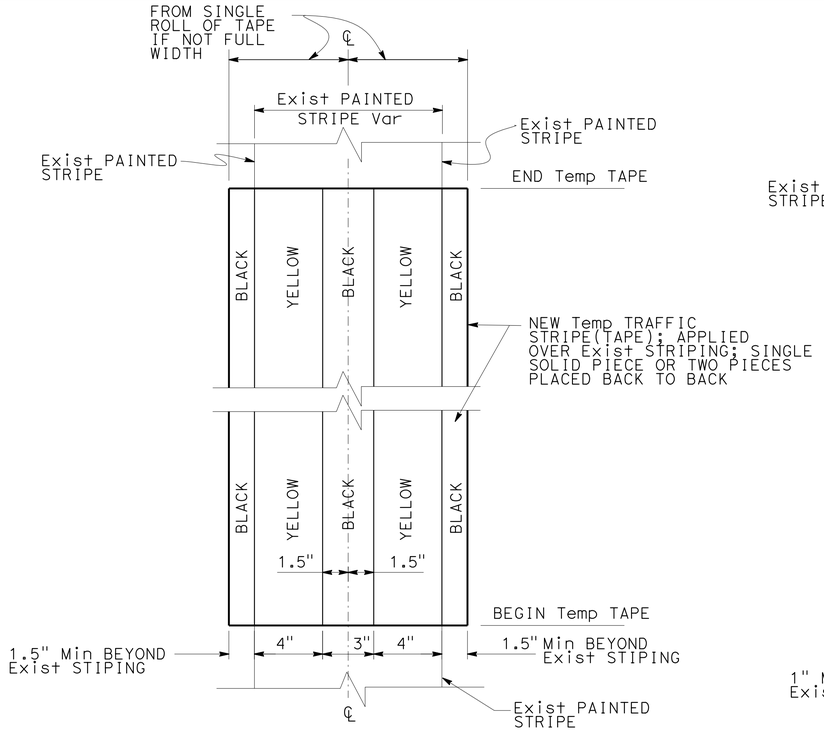

Temp TRAFFIC STRIPE(TAPE)
DETAIL 21

STAGE	STATIONS
1	1082+00 to 1088+75
2	1081+17.9 to 1081+58.2
2	1095+75 to 1112+50

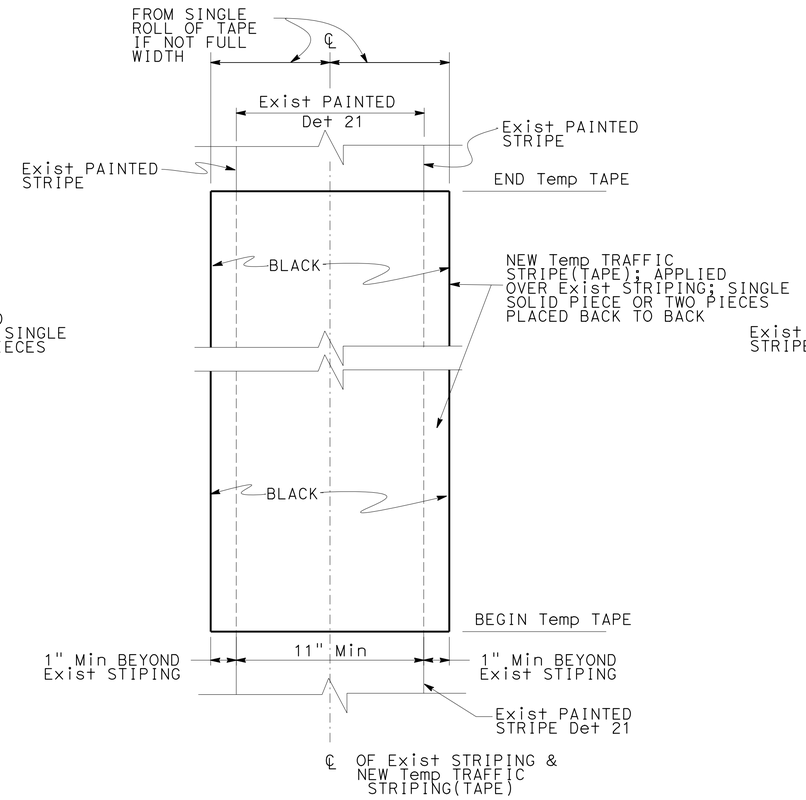

BLACK-OUT Exist DETAIL 21
WITH Temp TRAFFIC STRIPE(TAPE) BLACK

STAGE	STATIONS
1	1088+75 to 1090+65
	1103+15 to 1106+89.1
	1113+10 to 1119+98
	1120+44 to 1121+95
2	1071+40 to 1080+40.2
	1092+70 to 1095+75

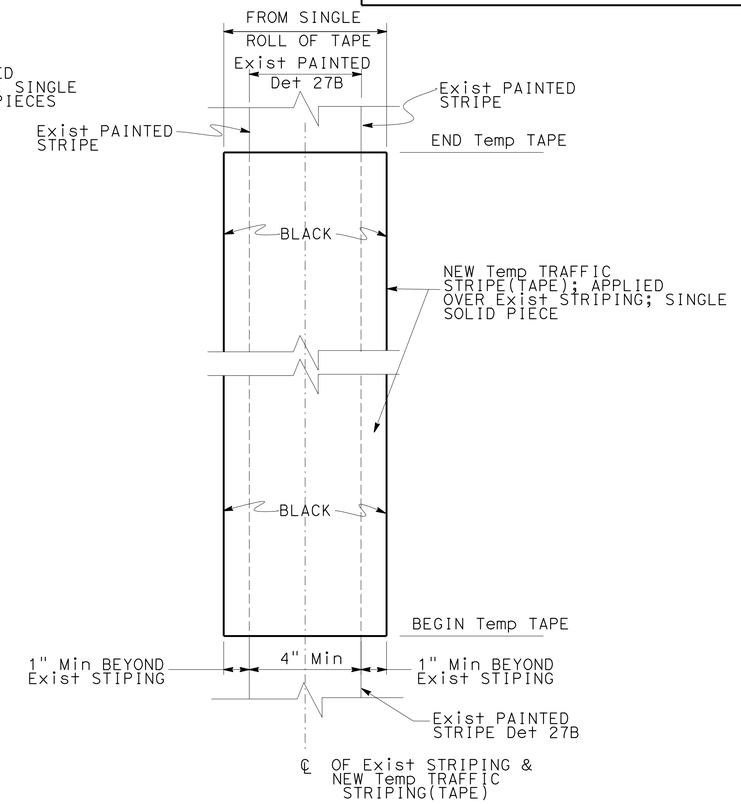

BLACK-OUT Exist DETAIL 27B
WITH Temp TRAFFIC STRIPE(TAPE) BLACK

STAGE	STATIONS
1	1094+71 to 1099+49

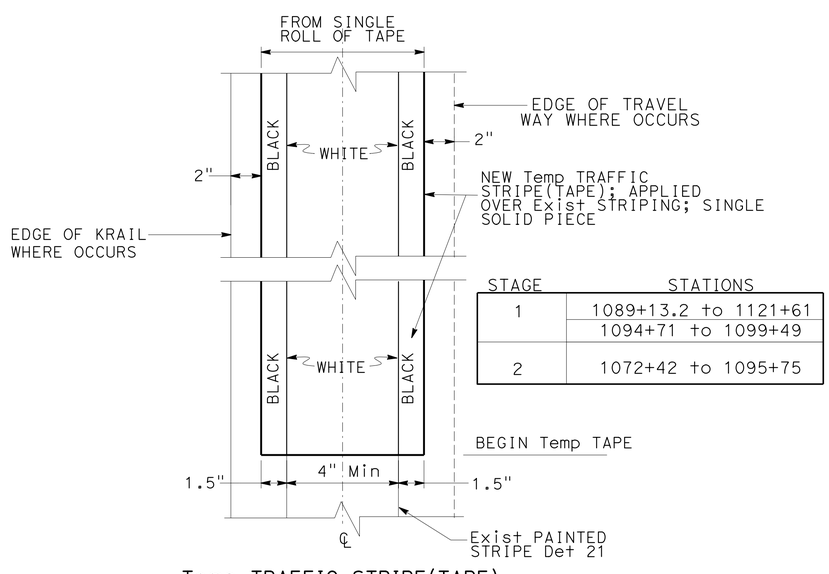

STAGE	STATIONS
1	1089+13.2 to 1121+61
	1094+71 to 1099+49
2	1072+42 to 1095+75

Temp TRAFFIC STRIPE(TAPE)
DETAIL 27B

STAGE CONSTRUCTION DETAILS
NO SCALE

SCD-2

STATE OF CALIFORNIA - DEPARTMENT OF TRANSPORTATION
Caltrans® **DESIGN**

FUNCTIONAL SUPERVISOR: BRIAN WESLING
CALCULATED-DESIGNED BY: JOE BLOMMER
CHECKED BY: CORY FREEMAN
REVISED BY
DATE REVISED

LAST REVISION 08-01-14
DATE PLOTTED => 05-NOV-2014
TIME PLOTTED => 08:34

Dist	COUNTY	ROUTE	POST MILES TOTAL PROJECT	SHEET No.	TOTAL SHEETS
09	Mno	395	52.3/R53.7	39	69

REGISTERED CIVIL ENGINEER 10-6-14 DATE

10-20-14
PLANS APPROVAL DATE

REGISTERED PROFESSIONAL ENGINEER CORY FREEMAN No. 62107 Exp 9-30-15 CIVIL STATE OF CALIFORNIA

THE STATE OF CALIFORNIA OR ITS OFFICERS OR AGENTS SHALL NOT BE RESPONSIBLE FOR THE ACCURACY OR COMPLETENESS OF SCANNED COPIES OF THIS PLAN SHEET.

(N) NOT A SEPARATE PAY ITEM, FOR INFORMATION ONLY

STAGE CONSTRUCTION & TRAFFIC HANDLING SIGN SUMMARY

STAGE	SIGN NUMBER	STATION	LEFT	RIGHT	SIGN PANEL CODE	SIGN PANEL MESSAGE	SIGN PANEL SIZE (L x D)	BACKGROUND SHEETING COLOR	LEGEND SHEETING COLOR	POSTS ONE POST	POSTS SIZE (L x D)	FNBT	FSBT	FWBT	TYPE III BARRICADE EA	FLASHING BEACON (PORTABLE) EA	COMMENTS
1	1	1057+00		X	SW60 (CA)	WATCH FOR STOPPED TRAFFIC	48"x48"	FLORESCENT ORANGE	BLACK	X	4"x6"	X					
	2	1065+00		X	W3-4	BE PREPARED TO STOP	48"x48"	FLORESCENT ORANGE	BLACK	X	4"x6"	X					
	3	1074+50		X	W20-4	ONE LANE ROAD AHEAD	48"x48"	FLORESCENT ORANGE	BLACK	X	4"x6"	X				1	
					W13-1P	25 MPH	24"x24"	FLORESCENT ORANGE	BLACK			X					
	4	1077+70		X	W11-1	BICYCLE SYMBOL	36"x36"	FLORESCENT ORANGE	BLACK	X	4"x6"	X					
					W16-1P	SHARE THE ROAD	24"x24"	FLORESCENT ORANGE	BLACK			X					
	5	1083+70		X	W3-3	SIGNAL SYMBOL	48"x48"	FLORESCENT ORANGE	BLACK	X	4"x6"	X				1	
	6	1088+75		X	R10-6	STOP HERE ON RED	24"x36"	WHITE	BLACK	X	4"x4"	X					REMOVE PORTION OF ASPHALT TO INSTALL; REPLACE ASPHALT AFTER REMOVAL
	7	1091+00		X	W1-4	S CURVE SYMBOL	48"x48"	FLORESCENT ORANGE	BLACK	X	4"x6"		X				SET SIGN ON RT FACING SOUTHBOUND TRAFFIC
	8	1091+75	X		W2-2L	TEE INTERSECTION LT	EXIST	Exist	Exist	X	4"x4"		X				RELOCATE EXIST SIGN FROM 1091+75 FSB LT TO
					G7-2	PICNIC GROUNDS RD	EXIST	Exist	Exist				X				1087+00 FSB LT FOR STAGE 1
	9	1099+50		X	R 26A(S)(CA)	NO STOPPING ANYTIME	24"x30"	WHITE	RED			X			1		ONE SIGN PANEL ON EACH SIDE OF BARRICADE
				X	R 26A(S)(CA)	NO STOPPING ANYTIME	24"x30"	WHITE	RED				X				
	10	1100+00		X	R 26A(S)(CA)	NO STOPPING ANYTIME	24"x30"	WHITE	RED			X			1		ONE SIGN PANEL ON EACH SIDE OF BARRICADE
				X	R 26A(S)(CA)	NO STOPPING ANYTIME	24"x30"	WHITE	RED				X				
	11	1100+10	X		R76	CHAINS REQUIRED	EXIST	Exist	Exist		TURNABLE		X				REMOVE STAGE 1, STORE TURNABLE POST AND SIGN
					R2-1	35 MPH	EXIST	Exist	Exist								PANEL, PRIOR TO WINTER SUSPENSION, RESET PER
					R79	AUTOS & PICKUPS SNOW TIRES OK	EXIST	Exist	Exist								TURNABLE SIGN 4 ON SQ-1 AT END OF STAGE 1
					R80-1	4-W DRIVE WITH SNOW TIRES OK	EXIST	Exist	Exist								
					R77	NO EXCEPTIONS	EXIST	Exist	Exist								
	12	1103+50	X		C30(CA)	LANE CLOSED	48"x48"	FLORESCENT ORANGE	BLACK			X			3		ONE SIGN PANEL ON EACH SIDE OF CENTER BARRICADE
					C30(CA)	LANE CLOSED	48"x48"	FLORESCENT ORANGE	BLACK				X				
	13	1104+50	X		SC2-1(CA)*	ONE LANE ROAD	36"x36"	FLORESCENT ORANGE	BLACK				X		1		SEE SCQ-3 FOR SIGN DESIGN
					W13-1P	25 MPH	24"x24"	FLORESCENT ORANGE	BLACK				X				
	14	1104+50		X	SC2-1(CA)*	ONE LANE ROAD	36"x36"	FLORESCENT ORANGE	BLACK	X	4"x6"	X					SEE SCQ-3 FOR SIGN DESIGN
					W13-1P	25 MPH	24"x24"	FLORESCENT ORANGE	BLACK			X					
	15	1105+50	X		C30(CA)	LANE CLOSED	48"x48"	FLORESCENT ORANGE	BLACK			X			3		ONE SIGN PANEL ON EACH SIDE OF CENTER BARRICADE
					C30(CA)	LANE CLOSED	48"x48"	FLORESCENT ORANGE	BLACK				X				
	16	1114+50	X		C30(CA)	LANE CLOSED	48"x48"	FLORESCENT ORANGE	BLACK			X			3		ONE SIGN PANEL ON EACH SIDE OF CENTER BARRICADE
					C30(CA)	LANE CLOSED	48"x48"	FLORESCENT ORANGE	BLACK				X				
	17	1118+50	X		C30(CA)	LANE CLOSED	48"x48"	FLORESCENT ORANGE	BLACK			X			3		ONE SIGN PANEL ON EACH SIDE OF CENTER BARRICADE
					C30(CA)	LANE CLOSED	48"x48"	FLORESCENT ORANGE	BLACK				X				
	18	1121+95	X		R10-6	STOP HERE ON RED	24"x36"	WHITE	BLACK	X	4"x4"		X				
	19	1127+00	X		W3-3	SIGNAL SYMBOL	48"x48"	FLORESCENT ORANGE	BLACK	X	4"x6"		X			1	
	20	1129+50	X		W11-1	BICYCLE SYMBOL	36"x36"	FLORESCENT ORANGE	BLACK	X	4"x6"		X				
					W16-1P	SHARE THE ROAD	24"x24"	FLORESCENT ORANGE	BLACK				X				
	21	1135+00	X		W20-4	ONE LANE ROAD AHEAD	48"x48"	FLORESCENT ORANGE	BLACK	X	4"x6"		X			1	
					W13-1P	25 MPH	24"x24"	FLORESCENT ORANGE	BLACK				X				
	22	1143+00	X		W3-4	BE PREPARED TO STOP	48"x48"	FLORESCENT ORANGE	BLACK	X	4"x6"		X				
	23	1154+00	X		SW60 (CA)	WATCH FOR STOPPED TRAFFIC	48"x48"	FLORESCENT ORANGE	BLACK	X	4"x6"		X				
	24	1166+00	X		SW60 (CA)	WATCH FOR STOPPED TRAFFIC	48"x48"	FLORESCENT ORANGE	BLACK	X	4"x6"		X				
	25	1095+24	X		C30(CA)	LANE CLOSED	48"x48"	FLORESCENT ORANGE	BLACK				X		1		
											SUB-TOTAL				16	4	

* SEE SCQ-3 FOR SIGN DESIGN

STAGE CONSTRUCTION QUANTITIES
SCQ-1

STATE OF CALIFORNIA - DEPARTMENT OF TRANSPORTATION
Caltrans
DESIGN

FUNCTIONAL SUPERVISOR: BRIAN WESLING

CALCULATED-DESIGNED BY | CHECKED BY

REVISED BY | DATE REVISED

LAST REVISION 08-01-14 | DATE PLOTTED => 05-NOV-2014 | TIME PLOTTED => 08:34

Dist	COUNTY	ROUTE	POST MILES TOTAL PROJECT	SHEET No.	TOTAL SHEETS
09	Mno	395	52.3/R53.7	40	69

REGISTERED CIVIL ENGINEER 10-6-14 DATE

10-20-14
PLANS APPROVAL DATE

REGISTERED PROFESSIONAL ENGINEER CORY FREEMAN No. 62107 Exp 9-30-15 CIVIL STATE OF CALIFORNIA

THE STATE OF CALIFORNIA OR ITS OFFICERS OR AGENTS SHALL NOT BE RESPONSIBLE FOR THE ACCURACY OR COMPLETENESS OF SCANNED COPIES OF THIS PLAN SHEET.

(N) NOT A SEPARATE PAY ITEM, FOR INFORMATION ONLY

STAGE CONSTRUCTION & TRAFFIC HANDLING SIGN SUMMARY

STAGE	SIGN NUMBER	STATION	LEFT	RIGHT	SIGN PANEL CODE	SIGN PANEL MESSAGE	SIGN PANEL SIZE (L x D)	SIGN PANEL BACKGROUND SHEETING COLOR	SIGN PANEL LEGEND SHEETING COLOR	POSTS ONE POST	POSTS SIZE (L x D)	FNBT	FSBT	FWBT	TYPE III BARRICADE EA	FLASHING BEACON (PORTABLE) EA	COMMENTS
2	25A	1042+00		X	SW60 (CA)	WATCH FOR STOPPED TRAFFIC	48"x48"	FLORESCENT ORANGE	BLACK	X	4"x6"	X					
	26	1050+00		X	W3-4	BE PREPARED TO STOP	48"x48"	FLORESCENT ORANGE	BLACK	X	4"x6"	X					
	27	1058+00		X	W20-4	ONE LANE ROAD AHEAD	48"x48"	FLORESCENT ORANGE	BLACK	X	4"x6"	X				1	
				X	W13-1P	25 MPH	24"x24"	FLORESCENT ORANGE	BLACK			X					
	28	1061+50		X	W11-1	BICYCLE SYMBOL	36"x36"	FLORESCENT ORANGE	BLACK	X	4"x6"	X					
				X	W16-1P	SHARE THE ROAD	24"x24"	FLORESCENT ORANGE	BLACK			X					
	29	1066+00		X	W3-3	SIGNAL SYMBOL	48"x48"	FLORESCENT ORANGE	BLACK	X	4"x6"	X				1	
	30	1071+40		X	R10-6	STOP HERE ON RED	24"x36"	WHITE	BLACK	X	4"x4"	X					REMOVE PORTION OF ASPHALT TO INSTALL; REPLACE ASPHALT AFTER REMOVAL
	31	1074+20	X		C30(CA)	LANE CLOSED	48"x48"	FLORESCENT ORANGE	BLACK			X			3		ONE SIGN PANEL ON EACH SIDE OF CENTER BARRICADE
					C30(CA)	LANE CLOSED	48"x48"	FLORESCENT ORANGE	BLACK				X				
	32	1075+00		X	W1-4	S CURVE SYMBOL	48"x48"	FLORESCENT ORANGE	BLACK	X	4"x6"		X				SET SIGN ON RT FACING SOUTHBOUND TRAFFIC
	33	1077+00	X		SR-CUSTOM	AVALANCHE AREA	30"x36"	Exist	Exist		TURNABLE		X				REMOVE STAGE 2/RESET PER TURNABLE SIGN 1 ON SQ-1
	34	1079+30	X		C30(CA)	LANE CLOSED	48"x48"	FLORESCENT ORANGE	BLACK			X			3		ONE SIGN PANEL ON EACH SIDE OF CENTER BARRICADE
					C30(CA)	LANE CLOSED	48"x48"	FLORESCENT ORANGE	BLACK				X				
	35	1080+00		X	W3-3	SIGNAL SYMBOL	48"x48"	FLORESCENT ORANGE	BLACK	X	4"x6"						ON PICNIC GROUNDS Rd
	36	1081+72		X	R10-11	NO TURN ON RED	24"x30"	WHITE	BLACK /RED					X			INSTALL ON SIGNAL MAST ARM
	37	1081+90		X	R1-1	STOP SIGN	EXIST	Exist	Exist	X	4"x4"			X			REMOVE BEGIN STAGE 2/RESET END STAGE 2
	38	1081+90		X	R10-6	STOP HERE ON RED	24"x36"	WHITE	BLACK	X	4"x6"			X			ON PICNIC GROUNDS RD
					R10-11	NO TURN ON RED	24"x30"	WHITE	BLACK /RED					X			
	39	1083+70	X		SC2-1(CA)*	ONE LANE ROAD	36"x36"	FLORESCENT ORANGE	BLACK	X	4"x6"	X					SEE SCQ-3 FOR SIGN DESIGN
					W13-1P	25 MPH	24"x24"	FLORESCENT ORANGE	BLACK			X					
	40	1083+70		X	SC2-1(CA)*	ONE LANE ROAD	36"x36"	FLORESCENT ORANGE	BLACK	X	4"x6"		X				SET SIGN ON RT FACING SOUTHBOUND TRAFFIC
					W13-1P	25 MPH	24"x24"	FLORESCENT ORANGE	BLACK				X				SEE SCQ-3 FOR SIGN DESIGN
	41	1087+00		X	W2-2 L	TEE INTERSECTION LT	EXIST	Exist	Exist	X	4"x4"		X				RELOCATE Exist STAGE 1 SIGN FROM 1087+00 LT FSB
					G7-2	PICNIC GROUNDS RD	EXIST	Exist	Exist				X				TO 1087+00 RT FSB, REMOVE END STAGE 2, SEE SQ-1
	42	1088+40		X	R 26A(S)(CA)	NO STOPPING ANYTIME	24"x30"	WHITE	RED			X			1		ONE SIGN PANEL ON EACH SIDE OF BARRICADE
				X	R 26A(S)(CA)	NO STOPPING ANYTIME	24"x30"	WHITE	RED				X				
	43	1089+70		X	R 26A(S)(CA)	NO STOPPING ANYTIME	24"x30"	WHITE	RED			X			1		ONE SIGN PANEL ON EACH SIDE OF BARRICADE
				X	R 26A(S)(CA)	NO STOPPING ANYTIME	24"x30"	WHITE	RED				X				
	44	1093+70	X		C30(CA)	LANE CLOSED	48"x48"	FLORESCENT ORANGE	BLACK			X			3		ONE SIGN PANEL ON EACH SIDE OF CENTER BARRICADE
					C30(CA)	LANE CLOSED	48"x48"	FLORESCENT ORANGE	BLACK				X				
	45	1095+75	X		R10-6	STOP HERE ON RED	24"x36"	WHITE	BLACK	X	4"x4"		X				
	46	1101+00	X		W3-3	SIGNAL SYMBOL	48"x48"	FLORESCENT ORANGE	BLACK	X	4"x6"		X			1	
	47	1104+00	X		W11-1	BICYCLE SYMBOL	36"x36"	FLORESCENT ORANGE	BLACK	X	4"x6"		X				
					W16-1P	SHARE THE ROAD	24"x24"	FLORESCENT ORANGE	BLACK				X				
	48	1107+50	X		W20-4	ONE LANE ROAD AHEAD	48"x48"	FLORESCENT ORANGE	BLACK	X	4"x6"		X			1	
					W13-1P	25 MPH	24"x24"	FLORESCENT ORANGE	BLACK				X				
	49	1117+00	X		W3-4	BE PREPARED TO STOP	48"x48"	FLORESCENT ORANGE	BLACK	X	4"x6"		X				
	50	1125+00	X		SW60 (CA)	WATCH FOR STOPPED TRAFFIC	48"x48"	FLORESCENT ORANGE	BLACK	X	4"x6"		X				
											SUB-TOTAL				11	4	
											SUB-TOTAL SHEET SCQ-1				16	4	
											SUB-TOTAL SHEET CS-2					4	
											TOTAL				27	12	

* SEE SCQ-3 FOR SIGN DESIGN

STAGE CONSTRUCTION QUANTITIES
SCQ-2

REVISED BY | DATE REVISED

CALCULATED-DESIGNED BY | CHECKED BY

FUNCTIONAL SUPERVISOR: BRIAN WESLING

STATE OF CALIFORNIA - DEPARTMENT OF TRANSPORTATION

Caltrans DESIGN

LAST REVISION 08-01-14 | DATE PLOTTED => 05-NOV-2014 | TIME PLOTTED => 08:34

Dist	COUNTY	ROUTE	POST MILES TOTAL PROJECT	SHEET No.	TOTAL SHEETS
09	Mno	395	52.3/R53.7	41	69

REGISTERED CIVIL ENGINEER 10-6-14 DATE

10-20-14
PLANS APPROVAL DATE

REGISTERED PROFESSIONAL ENGINEER CORY FREEMAN No. 62107 Exp 9-30-15 CIVIL STATE OF CALIFORNIA

THE STATE OF CALIFORNIA OR ITS OFFICERS OR AGENTS SHALL NOT BE RESPONSIBLE FOR THE ACCURACY OR COMPLETENESS OF SCANNED COPIES OF THIS PLAN SHEET.

(N) NOT A SEPARATE PAY ITEM, FOR INFORMATION ONLY

ABBREVIATIONS:

CL - CENTER LINE

TEMPORARY RAILING (TYPE K)

STAGE	STATION BEGIN	STATION END	TEMPORARY RAILING (TYPE K) LF	TEMPORARY RAILING (TYPE K) REFLECTORS, WHITE 2 SIDES (N) No.
1	1088+96	1089+75.4	80	4
	1090+61.3	1103+16.5	1260	63
	1106+79.6	1113+27.7	640	32
	1119+88.3	1122+10.2	220	11
2	1071+69	1072+28.9	60	3
	1080+33.9	1092+71.6	1240	62
	1094+72.9	1095+32.7	60	3
		TOTAL	3560	

PORTABLE DELINEATOR

STAGE	STATION BEGIN	STATION END	L†	R†	PORTABLE DELINEATOR EA	REMARK
1	1088+00	1090+70		X	10	NB TURNOUT
	1089+13	1090+40	X		5	
	1099+00	1100+80		X	7	NB TURNOUT
	1103+10	1106+79.6	X		16	
	1113+27	1119+90	X		28	
2	1072+41.5	1080+38	X		33	
	1088+00	1090+00		X	9	NB TURNOUT
	1092+70	1095+75	X		14	
TOTAL					122	

ALTERNATIVE TEMPORARY CRASH CUSHION

STAGE	STATION BEGIN	L†	R†	Alt Temp CRASH CUSHION EA
1	1088+96		X	1
	1089+75.4		X	1
	1090+61.3	X		1
	1103+16.5	X		1
	1106+79.6	X		1
	1113+27.7	X		1
	1119+88.3	X		1
	1122+10.2	X		1
2	1071+69		X	1
	1072+28.9		X	1
	1080+33.9	X		1
	1092+71.6	X		1
	1094+72.9	X		1
	1095+32.7	X		1
		TOTAL		14

TEMPORARY FLEXIBLE ROCKFALL FENCE

STAGE	STATION BEGIN	STATION END	LENGTH LF
1	1094+33	1102+96.5	860
	1106+99.6	1113+07.8	600
2	1081+96	1092+51.6	1060
TOTAL			2520

36.0" across sides 2.25" Radius, 0.875" Border, 0.625" Indent, Black on Fluorescent Orange; [ONE] D; [LANE] D; [ROAD] D;

SC2-1 CA

TEMPORARY TRAFFIC STRIPE (TAPE)

STAGE	STATION TO STATION		L†	R†	BLACK TAPE DETAIL CL LF	BLACK TAPE DETAIL 21 LF	BLACK TAPE DETAIL 27B LF	DETAIL 21 LF	DETAIL 27B LF	REMARK
1	1082+00	1088+75			675			675		COVERS EXIST Det 18 CL
	1089+13.2	1121+61	X						3,250	EDGE LINE Lt
	1088+75	1090+65				190				COVERS EXIST Det 18 CL
	1094+71	1099+49		X			478		478	@ WIDEN SHOULDER & BLACK TAPE OVER Exist 27B
	1103+15	1106+89.1				374				COVERS EXIST Det 18 CL
	1113+10	1119+98				688				COVERS EXIST Det 18 & 21
	1120+44	1121+95				151				COVERS EXIST Det 21 CL
2	1071+40	1080+40.2				901				COVERS EXIST Det 21 CL
	1072+42	1095+75							2,333	
	1081+17.9	1081+58.2						100		Rd CONNECTION AT PICNIC GROUNDS Rd
	1092+70	1095+75				305				COVERS EXIST Det 18
	1095+75	1112+50			1,675			1,675		COVERS EXIST Det 5 & 18
SUBTOTAL					2,350	2,609	478	2,450	6,061	
TOTAL								13,948		

TEMPORARY PAVEMENT MARKING (TAPE)

STAGE	STATION	L†	R†	PAVEMENT MARKING	DIRECTION	LENGTH FEET	QUANTITY SQFT	REMARK
1	1081+40		X	KEEP	NB		24	
	1081+70		X	CLEAR	NB		27	
	1083+70		X	SIGNAL	NB		32	
	1084+20		X	AHEAD	NB		31	
	1088+75		X	LIMIT LINE	NB	12	12	12" WHITE
	1121+95	X		LIMIT LINE	SB	12	12	12" WHITE
	1126+50	X		AHEAD	SB		31	
	1127+00	X		SIGNAL	SB		32	
2	1066+00		X	SIGNAL	NB		32	
	1066+50		X	AHEAD	NB		31	
	1071+40		X	LIMIT LINE	NB	12	12	12" WHITE
	1081+40		X	KEEP	NB		24	
	1081+70		X	CLEAR	NB		27	
	1081+58.2		X	LIMIT LINE	WB	31	31	12" WHITE, PICNIC GROUND Rd
	1081+58.2		X	STOP	WB		51	PICNIC GROUND Rd; BLACK TAPE OVER ENTIRE WORD
	1095+75	X		LIMIT LINE	SB	12	12	12" WHITE
	1100+50	X		AHEAD	SB		31	
	1101+00	X		SIGNAL	SB		32	
TOTAL					484			

STAGE CONSTRUCTION QUANTITIES
SCQ-3

REVISED BY | DATE REVISED
CALCULATED-DESIGNED BY | CHECKED BY
FUNCTIONAL SUPERVISOR: BRIAN WESLING

STATE OF CALIFORNIA - DEPARTMENT OF TRANSPORTATION
Caltrans
DESIGN

LAST REVISION 08-01-14 | DATE PLOTTED => 05-NOV-2014 | TIME PLOTTED => 08:34

Dist	COUNTY	ROUTE	POST MILES TOTAL PROJECT	SHEET No.	TOTAL SHEETS
09	Mno	395	52.3/R53.7	42	69

REGISTERED CIVIL ENGINEER 10-6-14 DATE

10-20-14
PLANS APPROVAL DATE

REGISTERED PROFESSIONAL ENGINEER CORY FREEMAN No. 62107 Exp. 9-30-15 CIVIL STATE OF CALIFORNIA

THE STATE OF CALIFORNIA OR ITS OFFICERS OR AGENTS SHALL NOT BE RESPONSIBLE FOR THE ACCURACY OR COMPLETENESS OF SCANNED COPIES OF THIS PLAN SHEET.

DELINEATOR (CLASS 2)

STATION	L†	R†	DELINEATOR TYPE E EA	DELINEATOR TYPE F EA	STATION	L†	R†	DELINEATOR TYPE E EA	DELINEATOR TYPE F EA
1043+56	X		1		1086+95	X		1	
1044+63	X		1		1088+65		X	1	
1045+00		X	1		1089+57		X	1	
1045+69	X		1		1089+95	X		1	
1047+82	X		1		1090+48		X	1	
1050+00		X	1		1092+06	X		1	
1050+82	X		1		1092+32		X	1	
1053+82	X		1		1093+12	X		1	
1055+00		X	1		1094+17	X		1	
1056+54	X		1		1095+08		X	1	
1059+50	X		1		1095+23	X		1	
1060+00		X	1		1097+34	X		1	
1061+47	X		1		1098+08		X	1	
1062+00		X	1		1098+64	X		1	
1062+46	X		1		1101+23	X		1	
1063+44	X		1		1101+31		X	1	
1064+43	X		1		1102+96	X		1	
1065+00		X	1		1103+82	X		1	
1065+41	X		1		1104+31		X	1	
1066+41	X		1		1104+69	X		1	
1066+70		X	1		1105+55	X		1	
1067+00		X		1	1106+41	X		1	
1067+30		X	1		1107+28	X		1	
1068+30		X		1	1107+31		X	1	
1068+38	X		1		1108+14	X		1	
1068+60		X		1	1109+87	X		1	
1069+84		X	1		1109+91		X	1	
1070+81		X	1		1111+21		X	1	
1071+34	X		1		1112+46	X		1	
1071+78		X	1		1112+51		X	1	
1072+75		X	1		1113+81		X	1	
1073+71		X	1		1115+12		X	1	
1074+34	X		1		1115+46	X		1	
1074+68		X	1		1116+42		X	1	
1075+38	X		1		SUBTOTAL Col 2			34	0
1075+66		X	1		SUBTOTAL Col 1			42	6
1077+60		X	1		SUBTOTAL			76	6
1078+24	X		1		TOTAL			82	
1079+67	X		1						
1080+50		X	1						
1080+80		X		1					
1081+10	X		1						
1081+10		X	1						
1082+00		X		1					
1082+30		X		1					
1083+50		X	1						
1083+95	X		1						
1086+81		X	1						
SUBTOTAL Col 1			42	6					

PAINT TRAFFIC STRIPE (2-COAT)

STATION TO STATION (LOCATION)	LENGTH	DETAIL NUMBER 5	11	18	21	27B	28	REMARKS
	LF	LF	LF	LF	LF	LF	LF	
1042+55 - 1044+56	201		402			402	402	
1044+56 - 1047+00	244		244			488	488	
1047+00 - 1067+64	2064		2064		2064	4128		
1067+64 - 1068+00	36		36		36	72		
1068+00 - 1072+40	440		440		440	880		
1072+40 - 1081+52	912				912	1824		
1081+52 - 1081+98	46					46		
1081+98 - 1087+91	593			593		1186		NB PASSING
1087+91 - 1101+87	1396	1396				2792		
1101+87 - 1111+87	1000			1000		2000		SB PASSING
1111+87 - 1122+00	1013				1013	2026		
SUBTOTALS		1396	3186	1593	4465	15844	890	
TOTAL	27374							

PAINT PAVEMENT MARKING (2-COAT)

STATION TO STATION	MARKING 12" WHITE LIMIT LINE SQFT
PICNIC GROUNDS Rd	31
TOTAL	31

REMOVE DELINEATOR

STATION TO STATION	REMOVE DELINEATOR TYPE E EA	TYPE F EA
1042+55 TO 1116+47	76	6
TOTAL	82	

APPROVED FOR PAVEMENT DELINEATION WORK ONLY

PAVEMENT DELINEATION QUANTITIES
NO SCALE

PDQ-1

STATE OF CALIFORNIA - DEPARTMENT OF TRANSPORTATION
Caltrans® TRAFFIC OPERATIONS

FUNCTIONAL SUPERVISOR: TERRY ERLWEIN
CALCULATED-DESIGNED BY: DONNA HOLLAND
CHECKED BY: TERRY ERLWEIN
REVISED BY / DATE REVISED

LAST REVISION 08-01-14 | DATE PLOTTED => 05-NOV-2014 | TIME PLOTTED => 08:34

Dist	COUNTY	ROUTE	POST MILES TOTAL PROJECT	SHEET No.	TOTAL SHEETS
09	Mno	395	52.3/R53.7	43	69

REGISTERED CIVIL ENGINEER 10-6-14 DATE

10-20-14
PLANS APPROVAL DATE

REGISTERED PROFESSIONAL ENGINEER CORY FREEMAN No. 62107 Exp. 9-30-15 CIVIL STATE OF CALIFORNIA

THE STATE OF CALIFORNIA OR ITS OFFICERS OR AGENTS SHALL NOT BE RESPONSIBLE FOR THE ACCURACY OR COMPLETENESS OF SCANNED COPIES OF THIS PLAN SHEET.

NOTES:

1. EXACT LOCATION OF ROADSIDE SIGNS TO BE DETERMINED BY THE ENGINEER.
2. DRILL 5/8" HOLE THROUGH PIPE, INSERT REBAR CENTERED ON PIPE, AND POUR CONCRETE FOUNDATION.

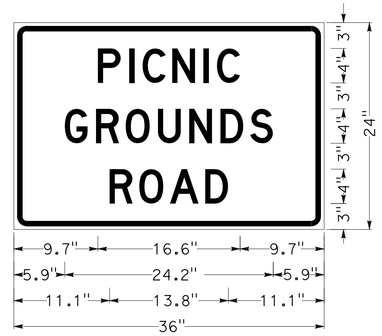

NOTES FOR W16-8 ModIFIED

BLACK ON ASTM TYPE III YELLOW
SINGLE SHEET ALUMINUM UNFRAMED 36" x 24" x 0.063"

LINE 1 - 4" UPPERCASE D FONT
LINE 2 - 4" UPPERCASE D FONT
LINE 3 - 4" UPPERCASE D FONT

BORDER - 0.625"
BORDER RADIUS - 1.5"
MARGIN OR INDENT - 0.375"

PANEL MUST HAVE 2 BRACES

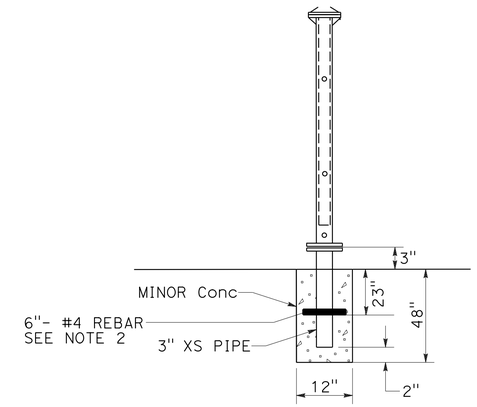

TYPICAL TURNABLE SIGN INSTALLATION CONCRETE FOUNDATION DETAIL

SIGN SUMMARY

SIGN NUMBER	STATION	LEFT	RIGHT	CODE	MESSAGE	SIZE (L x D) INCHES	REMOVE ROADSIDE SIGN (WOOD POST) EA	ROADSIDE SIGN (ONE POST) EA	RESET ROADSIDE SIGN EA	RESET ROADSIDE SIGN (TURNABLE METAL POST) EA	SIGN MATERIALS: FURNISH SINGLE SHEET ALUMINUM SIGN 0.063"-UNFRAMED SQFT	SINGLE FACED	BACKGROUND SHEETING COLOR	BACKGROUND RETROREFLECTIVE ASTM TYPE	LEGEND SHEETING COLOR	LEGEND RETROREFLECTIVE ASTM TYPE	GRAFFITI FILM STANDARD	GRAFFITI FILM PREMIUM	POSTS SIZE INCHES	FNBT	FSBT	FEBT	FWBT	REMARK
1	1077+15	X		SR-AVALANCHE	AVALANCHE SIGN	-				1									TURNABLE		X			SEE DETAIL THIS SHEET
2	1073+25	X		W2-2 R	TEE INTERSECTION Rt	36" x 36"	1	1			9.00	X	YELLOW	III	BLACK		X		4" x 6"	X				
				W16-8 Mod	PICNIC GROUNDS ROAD	36" x 24"					6.00	X	YELLOW	III	BLACK		X			X				SEE DETAIL THIS SHEET
3	1081+90		X	R1-1	STOP	-			1													X		SEE SHEET SC-10
4	1091+75	X		W2-2 L	TEE INTERSECTION LEFT	36" x 36"		1			9.00	X	YELLOW	III	BLACK		X		4" x 6"		X			
				W16-8 Mod	PICNIC GROUNDS ROAD	36" x 24"					6.00	X	YELLOW	III	BLACK		X				X			SEE DETAIL THIS SHEET
5	1100+10	X		R76	CHAINS REQUIRED	-				1									TURNABLE		X			SEE DETAIL THIS SHEET
				R2-1	35 MPH	-																		
				R79	AUTOS & PICKUPS SNOW TIRES OK	-																		
				R80-1	4-W DRIVE WITH SNOW TIRES OK	-																		
				R77	NO EXCEPTIONS	-																		
6	1105+60	X		W11-2	PEDESTRIAN SYMBOL	36" x 36"		1			9.00	X	YELLOW	III	BLACK		X		4" x 6"		X			
						TOTAL	1	3	1	2	39.00													

APPROVED FOR SIGN WORK ONLY

SIGN DETAILS AND QUANTITIES
NO SCALE
SQ-1

STATE OF CALIFORNIA - DEPARTMENT OF TRANSPORTATION
Caltrans® TRAFFIC OPERATIONS

FUNCTIONAL SUPERVISOR: TERRY ERLWEIN
CALCULATED-DESIGNED BY: DONNA HOLLAND
CHECKED BY: TERRY ERLWEIN
REVISED BY / DATE REVISED

LAST REVISION 08-01-14
DATE PLOTTED => 05-NOV-2014
TIME PLOTTED => 08:34

Dist	COUNTY	ROUTE	POST MILES TOTAL PROJECT	SHEET No.	TOTAL SHEETS
09	Mno	395	52.3/R53.7	44	69

REGISTERED CIVIL ENGINEER 10-6-14 DATE

10-20-14
PLANS APPROVAL DATE

REGISTERED PROFESSIONAL ENGINEER CORY FREEMAN No. 62107 Exp 9-30-15 CIVIL STATE OF CALIFORNIA

THE STATE OF CALIFORNIA OR ITS OFFICERS OR AGENTS SHALL NOT BE RESPONSIBLE FOR THE ACCURACY OR COMPLETENESS OF SCANNED COPIES OF THIS PLAN SHEET.

ABBREVIATIONS:

ACNS - ANCHORED CABLE NET SYSTEM
ADTWMS - ANCHORED DOUBLE TWISTED WIRE MESH SYSTEM
DBH - Dia OF TREE TRUNK AT BREAST HEIGHT
DI - DRAINAGE INLET
(N) - NOT A SEPARATE PAY ITEM; FOR INFORMATION ONLY
HRSS - HAND ROCK SLOPE SCALING
TPNW - Temp PINE NEEDLE WATTLE

ROADWAY QUANTITIES

STAGE	LOCATION	BEGIN Sta	END Sta	HAUL OFF (N)	ROADWAY EXCAVATION	MINOR HMA	TACK COAT (N)	HRSS	ADTWMS	ACNS	ROCK DOWELS	REMARKS
				CY	CY	TON	TON	Hr	SQFT	SQFT	EA	
1	1	1047+50.3	1050+46.3	4				4				
	2	1053+11.3	1056+00	2				2				
		1053+11.3	1055+89.8	145	145							
		1053+11.3	1055+89.8		75							SLOPE ROUNDING/ LOCAL TOPSOIL
	5	1095+28	1102+50	100				32		96,500	1160	AT Var LOCATIONS
		1095+87	1102+40	25	25							
		1096+23	1098+48			26	0.1					WIDEN SHOULDER
	6	1107+30.2	1112+75.2	100				32				
		1108+02.5	1111+78.6	15	15					43,300	520	AT Var LOCATIONS
2	3	1075+68.8	1078+05.6	15				8				
	4	1082+00	1092+50.5	100				32				
		1082+07	1091+93.9	115	115				114,200		1371	AT Var LOCATIONS
TOTALS					375	26		110	114,200	139,800	3051	

HAUL OFF MATERIAL CREATED FROM HRSS AND ROADWAY EXCAVATION.

TREE REMOVAL (N)

LOCATION	DBH	TYPE	No. OF TREES
	INCHES		No.
4	Var 1"-24"	PINION	80
5	Var 1"-24"	PINION	63
6	Var 1"-30"	PINION	53

(N) - NOT A SEPARATE PAY ITEM; FOR INFORMATION ONLY

TREATED WOOD WASTE

SIGN NUMBER	LOCATION	CODE	POST SIZE	TREATED WOOD WASTE	REMARK
			INCHES	LB	
3	1091+75	W2-2 L	4" x 6"	50	
	1097+73.3		24" x 48"	440	Exist UTILITY POLE
	1097+73.3		24" x 24"	220	Exist UTILITY POLE
TOTAL				710	

TEMPORARY PINE NEEDLE WATTLE

STAGE	BEGIN Sta	END Sta	OFFSET	LENGTH	REMARKS
				LF	
1	1045+13	-	48' Lt	10	Exist Culv INLET PROTECTION
	1047+30	1050+64		339	Loc 1 @ TOE OF SLOPE
	1053+11	1056+15		304	Loc 2 @ TOE OF SLOPE
	1064+30.8	-	47.3' Lt	30	@ Exist AC OVERSIDE DRAIN
	1067+11	-	55' Lt	10	Exist Culv INLET PROTECTION
	1095+17	1102+50		750	Loc 5 @ TOE OF SLOPE
	1095+17	1102+62		746	Loc 5 @ Temp RAILING (TYPE K)
	1095+00	1102+62		762	Loc 5 BEHIND MBGR POSTS
	1107+20	1112+88		580	Loc 6 @ TOE OF SLOPE
	1107+20	1112+88		568	Loc 6 @ Temp RAILING (TYPE K)
	1107+20	1113+12		580	Loc 6 BEHIND MBGR POSTS
2	1075+41	1078+19		278	Loc 3 @ TOE OF SLOPE
	1081+66	1092+37		1051	Loc 4 @ TOE OF SLOPE
	1081+66	1092+37		1071	Loc 4 @ Temp RAILING (TYPE K)
	1081+83	1093+00		1117	Loc 4 BEHIND MBGR POSTS
TOTAL				8196	

TEMPORARY CHECK DAM

STAGE	BEGIN Sta	END Sta	OFFSET	LENGTH	REMARKS
				LF	
1	1066+71	1066+91	60' Lt	20	PLACE TWO TPNW 10' LONG EA
					@ Sta SHOWN, PERPINDICULAR
					TO FL
2	1079+98.2	1081+55.2	40' Lt	160	
TOTAL				180	

TEMPORARY DI PROTECTION

STAGE	BEGIN Sta	OFFSET	QUANTITY	REMARKS
			EA	
1	1051+64	64.3' Lt	1	TYPE 4A
	1123+10	30' Lt	1	TYPE 4A
2	1080+97	40.1' Lt	1	TYPE 4A
	1089+90.1	22' Lt	1	TYPE 4A
TOTAL			4	

SUMMARY OF QUANTITIES
Q-1

REVISED BY | DATE REVISED
CALCULATED-DESIGNED BY | CHECKED BY
FUNCTIONAL SUPERVISOR: BRIAN WESLING
STATE OF CALIFORNIA - DEPARTMENT OF TRANSPORTATION
Caltrans
DESIGN

LAST REVISION 08-01-14 | DATE PLOTTED => 05-NOV-2014 | TIME PLOTTED => 08:34

Dist	COUNTY	ROUTE	POST MILES TOTAL PROJECT	SHEET No.	TOTAL SHEETS
09	Mno	395	52.3/R53.7	45	69

REGISTERED CIVIL ENGINEER 10-6-14 DATE

10-20-14
PLANS APPROVAL DATE

REGISTERED PROFESSIONAL ENGINEER CORY FREEMAN No. 62107 Exp 9-30-15 CIVIL STATE OF CALIFORNIA

THE STATE OF CALIFORNIA OR ITS OFFICERS OR AGENTS SHALL NOT BE RESPONSIBLE FOR THE ACCURACY OR COMPLETENESS OF SCANNED COPIES OF THIS PLAN SHEET.

EROSION CONTROL NOTES:

1. AT ALL LOCATIONS INCORPORATE MATERIALS IMMEDIATELY AFTER PLACEMENT.

EROSION CONTROL TYPE 1

SEQUENCE	ITEM	MATERIAL DESCRIPTION	MATERIAL TYPE	APPLICATION RATE	DEPTH
STEP 1	COMPOST	COMPOSTED WOOD CHIPS	MEDIUM	270 CY/ACRE	2"
STEP 2	INCORPORATE MATERIALS	COMPOST[1]			12"
STEP 3	ORGANIC FERTILIZER	FERTILIZER	ORGANIC	2000 LB/ACRE	
STEP 4	HYDROSEED	SEED	MIX 1	19 LB/ACRE	
		FIBER	WOOD	500 LB/ACRE	
STEP 5	MULCH	MULCH	PINE NEEDLE	135 CY/ACRE	1"
STEP 6	EROSION CONTROL (BONDED FIBER MATRIX)	BONDED FIBER MATRIX FIBER	PER SPECIFICATIONS	1200 LB/ACRE	
		BONDED FIBER MATRIX TACKIFIER			

EROSION CONTROL TYPE 2

SEQUENCE	ITEM	MATERIAL DESCRIPTION	MATERIAL TYPE	APPLICATION RATE	DEPTH
STEP 1	HYDROSEED	SEED	MIX 1	19 LB/ACRE	
		FIBER	WOOD	500 LB/ACRE	
STEP 2	MULCH	MULCH	PINE NEEDLE	135 CY/ACRE	1"
STEP 3	EROSION CONTROL (BONDED FIBER MATRIX)	BONDED FIBER MATRIX FIBER	PER SPECIFICATIONS	1200 LB/ACRE	
		BONDED FIBER MATRIX TACKIFIER			

EROSION CONTROL TYPE 3[2]

SEQUENCE	ITEM	MATERIAL DESCRIPTION	MATERIAL TYPE	APPLICATION RATE	DEPTH
STEP 1	HYDROSEED	SEED	MIX 1	19 LB/ACRE	
		FIBER	WOOD	500 LB/ACRE	
STEP 2	MULCH	MULCH	PINE NEEDLE	810 CY/ACRE	6"
STEP 3	EROSION CONTROL (BONDED FIBER MATRIX)	BONDED FIBER MATRIX FIBER	PER SPECIFICATIONS	1200 LB/ACRE	
		BONDED FIBER MATRIX TACKIFIER			

2. AT LOCATIONS 1-3 APPLY EC TYPE 3 BEFORE CLEARING AND GRUBING. AT LOCATIONS 4-6 EC TYPE 3 APPLIES A THICKENED LAYER OF MULCH ON THE SLOPE ABOVE & BELOW VERTICAL TO NEAR VERTICAL FACES. SEE EROSION CONTROL PLANS.

EROSION CONTROL TYPE 4

SEQUENCE	ITEM	MATERIAL DESCRIPTION	MATERIAL TYPE	APPLICATION RATE	DEPTH
STEP 1	DUFF				
STEP 2	INCORPORATE MATERIALS	DUFF & COMPOST			12"
STEP 3	HYDROSEED	SEED	MIX 1	19 LB/ACRE	
		FIBER	WOOD	500 LB/ACRE	
STEP 4	MULCH	MULCH	PINE NEEDLE	135 CY/ACRE	1"
STEP 5	EROSION CONTROL (BONDED FIBER MATRIX)	BONDED FIBER MATRIX FIBER	PER SPECIFICATIONS	1200 LB/ACRE	
		BONDED FIBER MATRIX TACKIFIER			

SEED MIX 1

SEED	BOTANICAL NAME (COMMON NAME)	PERCENT GERMINATION (MINIMUM)	POUNDS PURE LIVE SEED PER ACRE (SLOPE MEASUREMENT)
MIX 1	ELYMUS CINEREUS (Great Basin Wildrye)	80	31.3
	PURSHIA TRIDENTATA (bitterbrush)	70	15.6
	ARTEMISIA TRIDENTATA (Sagebrush)	70	6.3
	RIBES CEREUM (Wax Current)	70	6.3
	ELYMUS ELYMOIDES (Squirreltail)	70	15.6

EROSION CONTROL TYPE 5*

SEQUENCE	ITEM	MATERIAL DESCRIPTION	MATERIAL TYPE	APPLICATION RATE	DEPTH
STEP 1	MULCH	MULCH	PINE NEEDLE	810 CY/ACRE	6"
STEP 2	EROSION CONTROL (BONDED FIBER MATRIX)	BONDED FIBER MATRIX FIBER	PER SPECIFICATIONS	1200 LB/ACRE	
		BONDED FIBER MATRIX TACKIFIER			

* APPLY BEFORE CLEARING AND GRUBBING OPERATIONS. SEE EROSION CONTROL PLANS.

EROSION CONTROL LEGEND
ECL-1

REVISED BY | DATE REVISED
BRIAN WESLING | CORY FREEMAN
CALCULATED-DESIGNED BY | CHECKED BY
FUNCTIONAL SUPERVISOR
BRIAN WESLING

STATE OF CALIFORNIA - DEPARTMENT OF TRANSPORTATION
Caltrans
DESIGN

LAST REVISION 10-01-14 | DATE PLOTTED => 14-NOV-2014 | TIME PLOTTED => 07:29

Dist	COUNTY	ROUTE	POST MILES TOTAL PROJECT	SHEET No.	TOTAL SHEETS
09	Mno	395	52.3/R53.7	46	69

REGISTERED CIVIL ENGINEER 10-6-14 DATE

10-20-14
PLANS APPROVAL DATE

REGISTERED PROFESSIONAL ENGINEER CORY FREEMAN No. 62107 Exp 9-30-15 CIVIL STATE OF CALIFORNIA

THE STATE OF CALIFORNIA OR ITS OFFICERS OR AGENTS SHALL NOT BE RESPONSIBLE FOR THE ACCURACY OR COMPLETENESS OF SCANNED COPIES OF THIS PLAN SHEET.

NOTE:

1. FOR ACCURATE RIGHT OF WAY DATA, CONTACT RIGHT OF WAY ENGINEERING
2. WHEN APPLYING EC TYPES 3 & 5 WORK MULCH IN AND AROUND EXISTING VEGETATION SO NO BARE GROUND REMAINS.

LEGEND:

- EROSION CONTROL (TYPE 1)
- EROSION CONTROL (TYPE 2)
- EROSION CONTROL (TYPE 3)
- EROSION CONTROL (TYPE 4)
- EROSION CONTROL (TYPE 5)

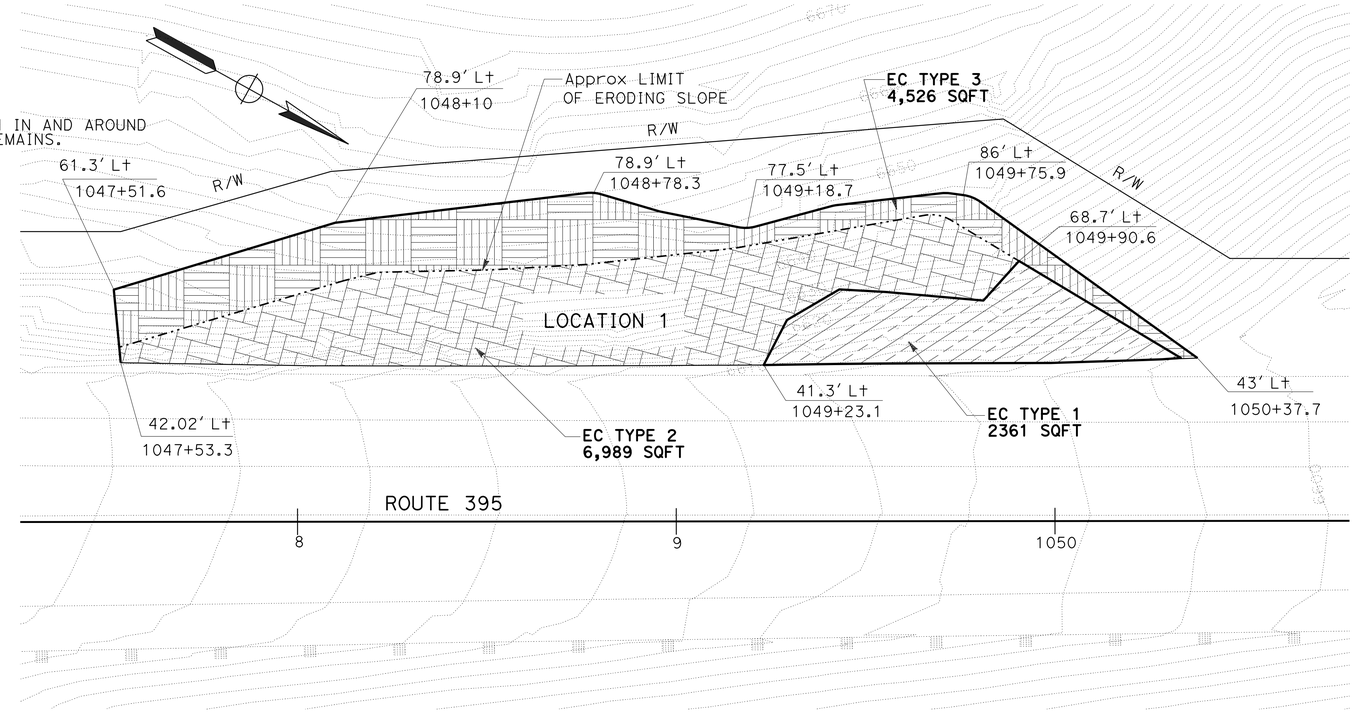

ABBREVIATIONS:

ADTWMS ANCHORED DOUBLE TWISTED WIRE MESH SYSTEM

ACNS ANCHORED CABLE NET SYSTEM

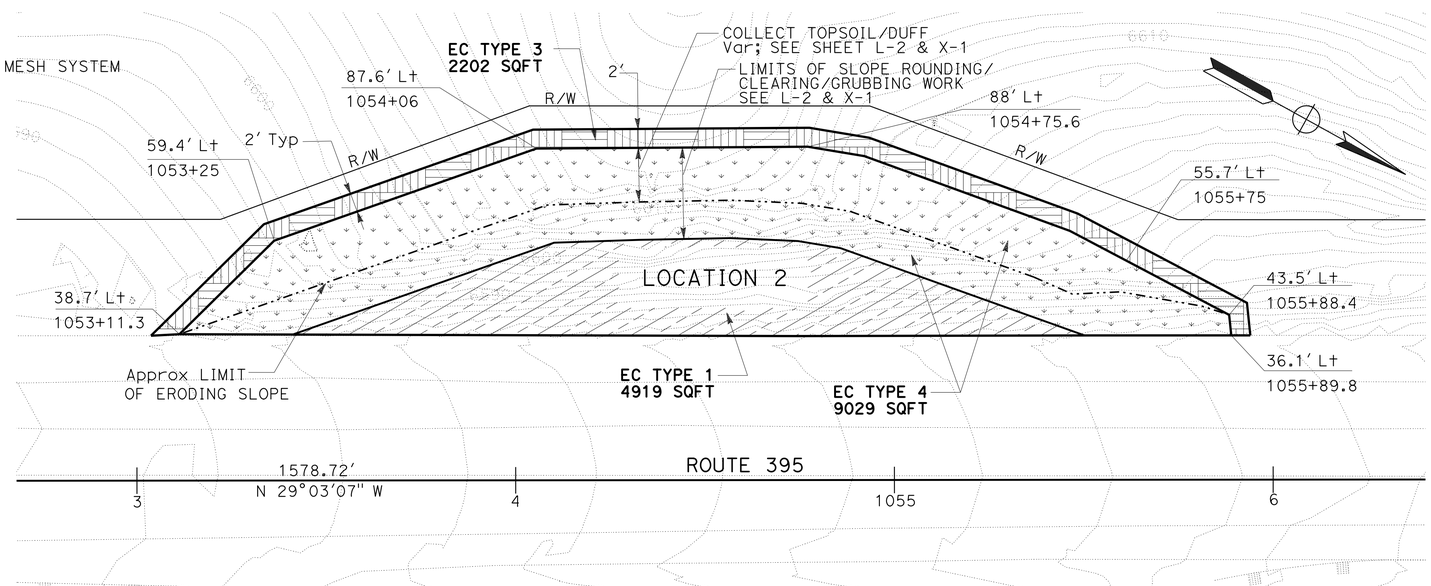

APPROVED FOR EROSION CONTROL WORK ONLY

EROSION CONTROL PLAN
SCALE: 1"=20'

EC-1

STATE OF CALIFORNIA - DEPARTMENT OF TRANSPORTATION
Caltrans® DESIGN

FUNCTIONAL SUPERVISOR: BRIAN WESLING
CALCULATED-DESIGNED BY: JOE BLOMMER
CHECKED BY: CORY FREEMAN
REVISED BY / DATE REVISED

LAST REVISION 05-01-14 | DATE PLOTTED => 05-NOV-2014 | TIME PLOTTED => 08:34

Dist	COUNTY	ROUTE	POST MILES TOTAL PROJECT	SHEET No.	TOTAL SHEETS
09	Mno	395	52.3/R53.7	47	69

REGISTERED CIVIL ENGINEER 10-6-14 DATE

10-20-14
PLANS APPROVAL DATE

REGISTERED PROFESSIONAL ENGINEER CORY FREEMAN No. 62107 Exp 9-30-15 CIVIL STATE OF CALIFORNIA

THE STATE OF CALIFORNIA OR ITS OFFICERS OR AGENTS SHALL NOT BE RESPONSIBLE FOR THE ACCURACY OR COMPLETENESS OF SCANNED COPIES OF THIS PLAN SHEET.

NOTE:

1. FOR ACCURATE RIGHT OF WAY DATA, CONTACT RIGHT OF WAY ENGINEERING

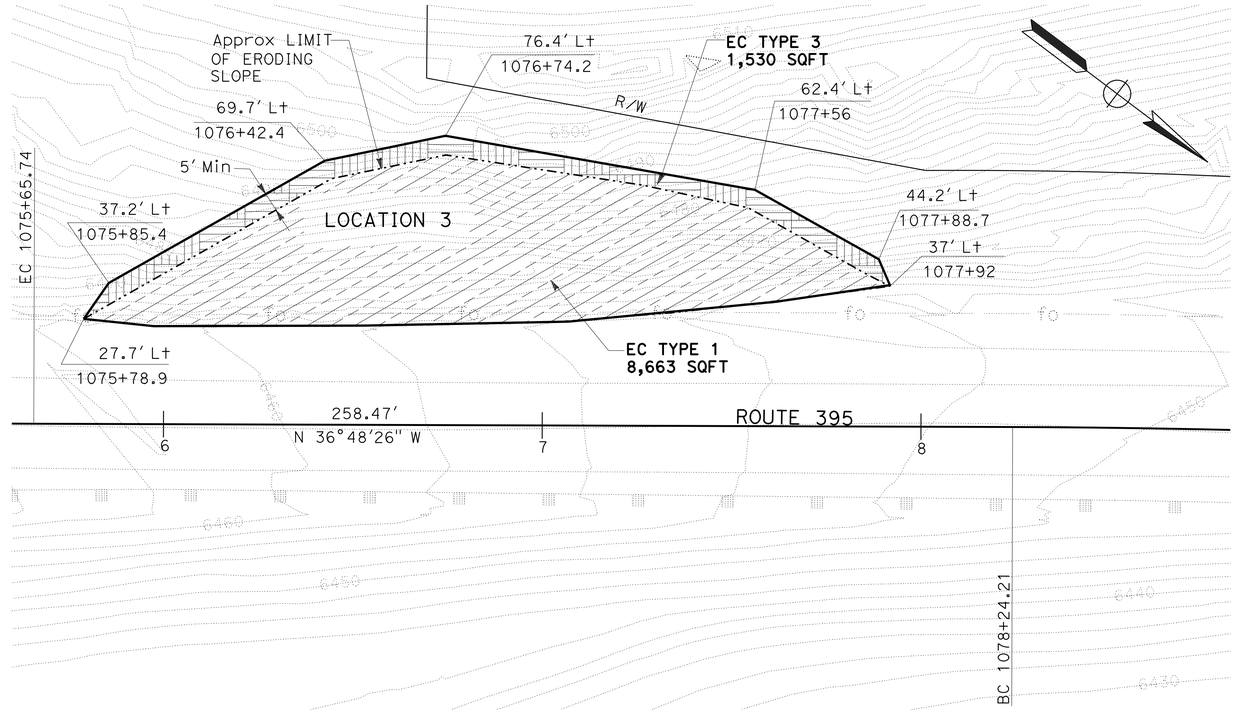

APPROVED FOR EROSION CONTROL WORK ONLY

EROSION CONTROL PLAN
SCALE: 1"=20'

EC-2

STATE OF CALIFORNIA - DEPARTMENT OF TRANSPORTATION
Caltrans
DESIGN

FUNCTIONAL SUPERVISOR: BRIAN WESLING
CALCULATED-DESIGNED BY: JOE BLOMMER
CHECKED BY: CORY FREEMAN
REVISED BY
DATE REVISED

LAST REVISION 08-01-14
DATE PLOTTED => 05-NOV-2014
TIME PLOTTED => 08:34

Dist	COUNTY	ROUTE	POST MILES TOTAL PROJECT	SHEET No.	TOTAL SHEETS
09	Mno	395	52.3/R53.7	48	69

REGISTERED CIVIL ENGINEER 10-6-14 DATE

10-20-14
PLANS APPROVAL DATE

REGISTERED PROFESSIONAL ENGINEER CORY FREEMAN No. 62107 Exp 9-30-15 CIVIL STATE OF CALIFORNIA

THE STATE OF CALIFORNIA OR ITS OFFICERS OR AGENTS SHALL NOT BE RESPONSIBLE FOR THE ACCURACY OR COMPLETENESS OF SCANNED COPIES OF THIS PLAN SHEET.

NOTE:

1. FOR ACCURATE RIGHT OF WAY DATA, CONTACT RIGHT OF WAY ENGINEERING

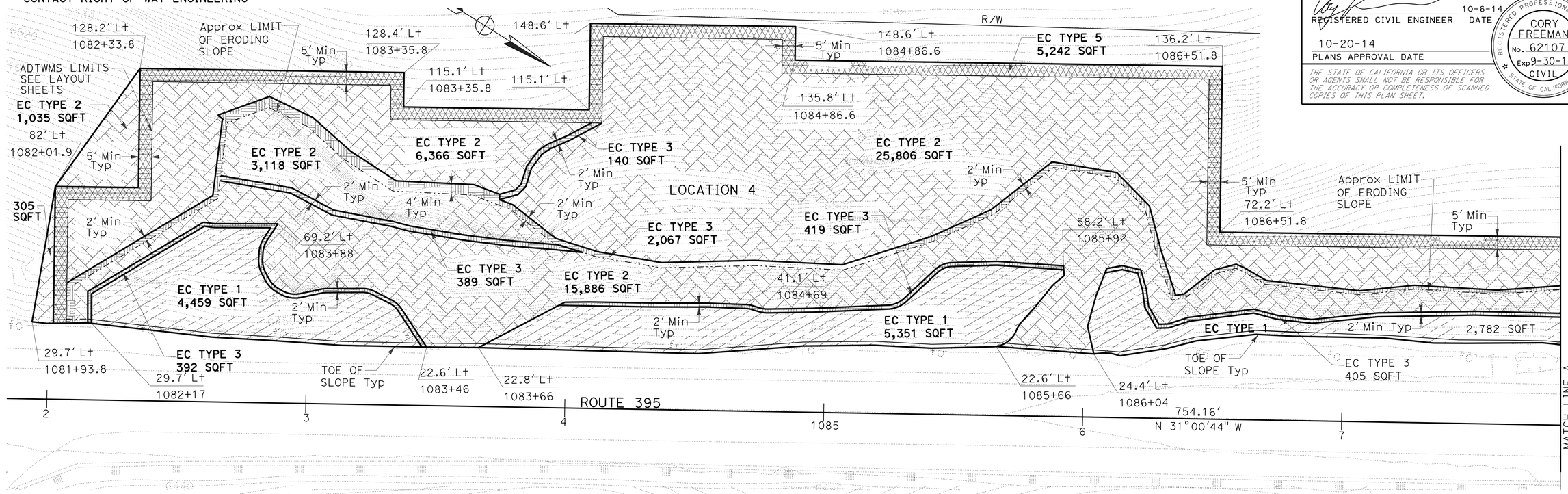

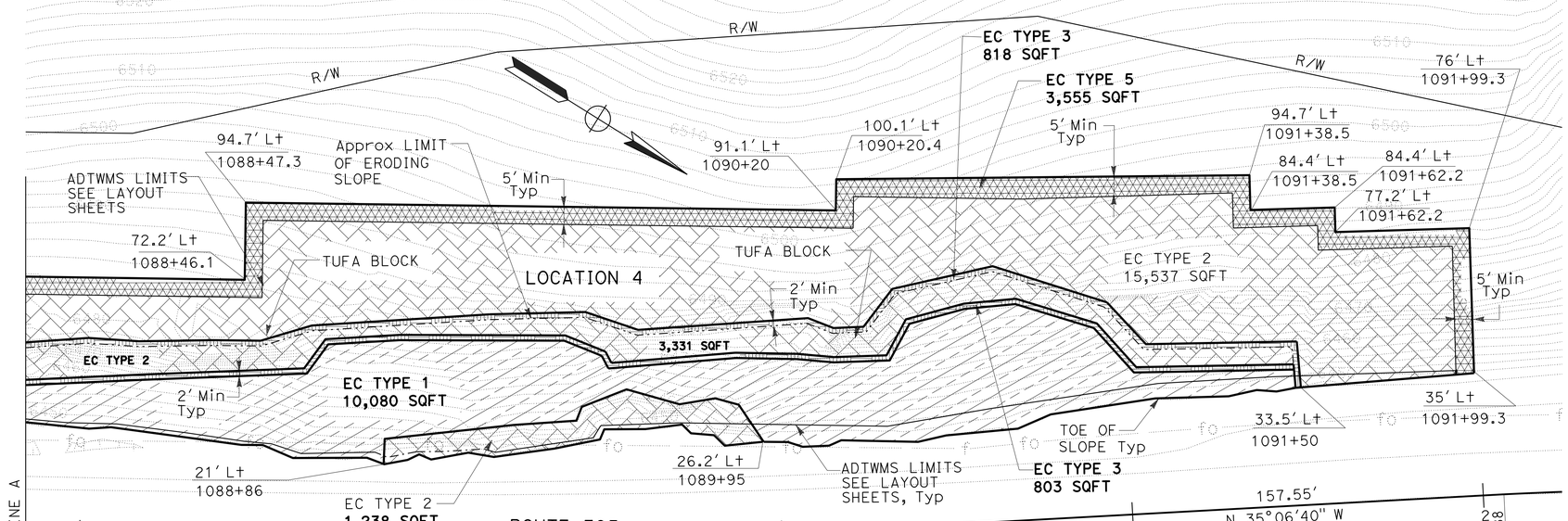

APPROVED FOR EROSION CONTROL WORK ONLY

EROSION CONTROL PLAN
SCALE: 1"=20'

EC-3

STATE OF CALIFORNIA - DEPARTMENT OF TRANSPORTATION
Caltrans® **DESIGN**

FUNCTIONAL SUPERVISOR: BRIAN WESLING
CALCULATED-DESIGNED BY: JOE BLOMMER
CHECKED BY: CORY FREEMAN
REVISED BY / DATE REVISED

LAST REVISION 08-01-14 DATE PLOTTED => 05-NOV-2014 TIME PLOTTED => 08:34

Dist	COUNTY	ROUTE	POST MILES TOTAL PROJECT	SHEET No.	TOTAL SHEETS
09	Mno	395	52.3/R53.7	49	69

REGISTERED CIVIL ENGINEER 10-6-14 DATE

10-20-14
PLANS APPROVAL DATE

REGISTERED PROFESSIONAL ENGINEER CORY FREEMAN No. 62107 Exp 9-30-15 CIVIL STATE OF CALIFORNIA

THE STATE OF CALIFORNIA OR ITS OFFICERS OR AGENTS SHALL NOT BE RESPONSIBLE FOR THE ACCURACY OR COMPLETENESS OF SCANNED COPIES OF THIS PLAN SHEET.

NOTE:

1. FOR ACCURATE RIGHT OF WAY DATA, CONTACT RIGHT OF WAY ENGINEERING

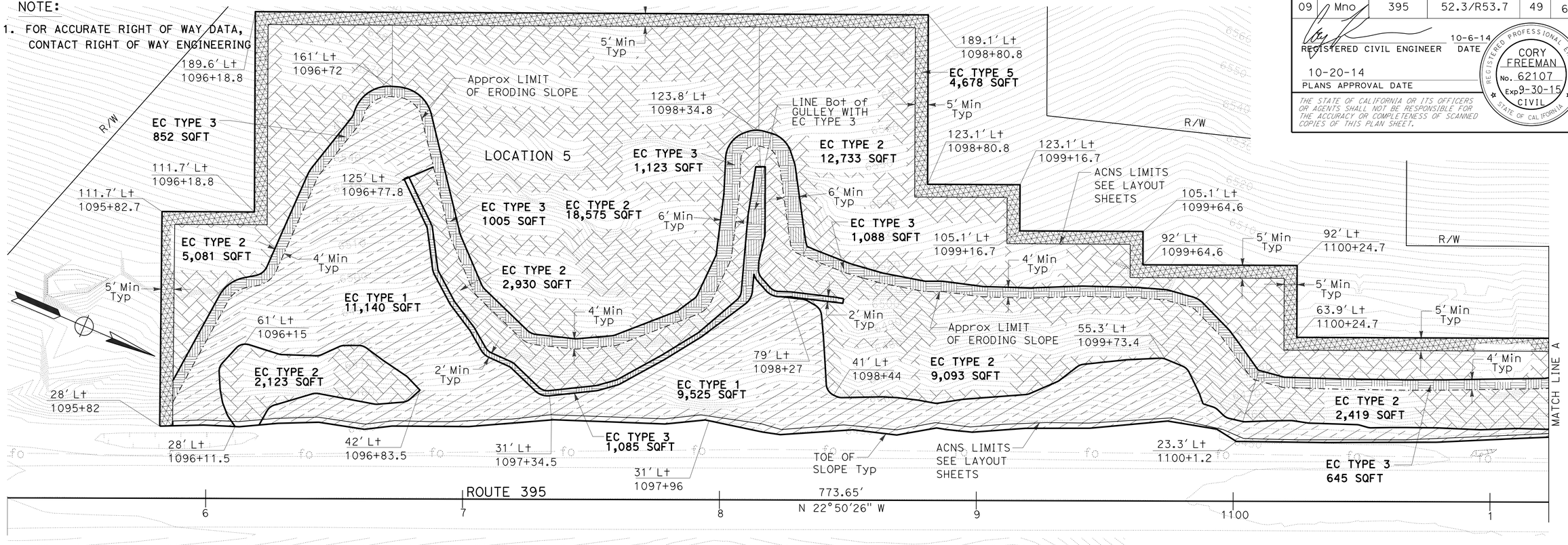

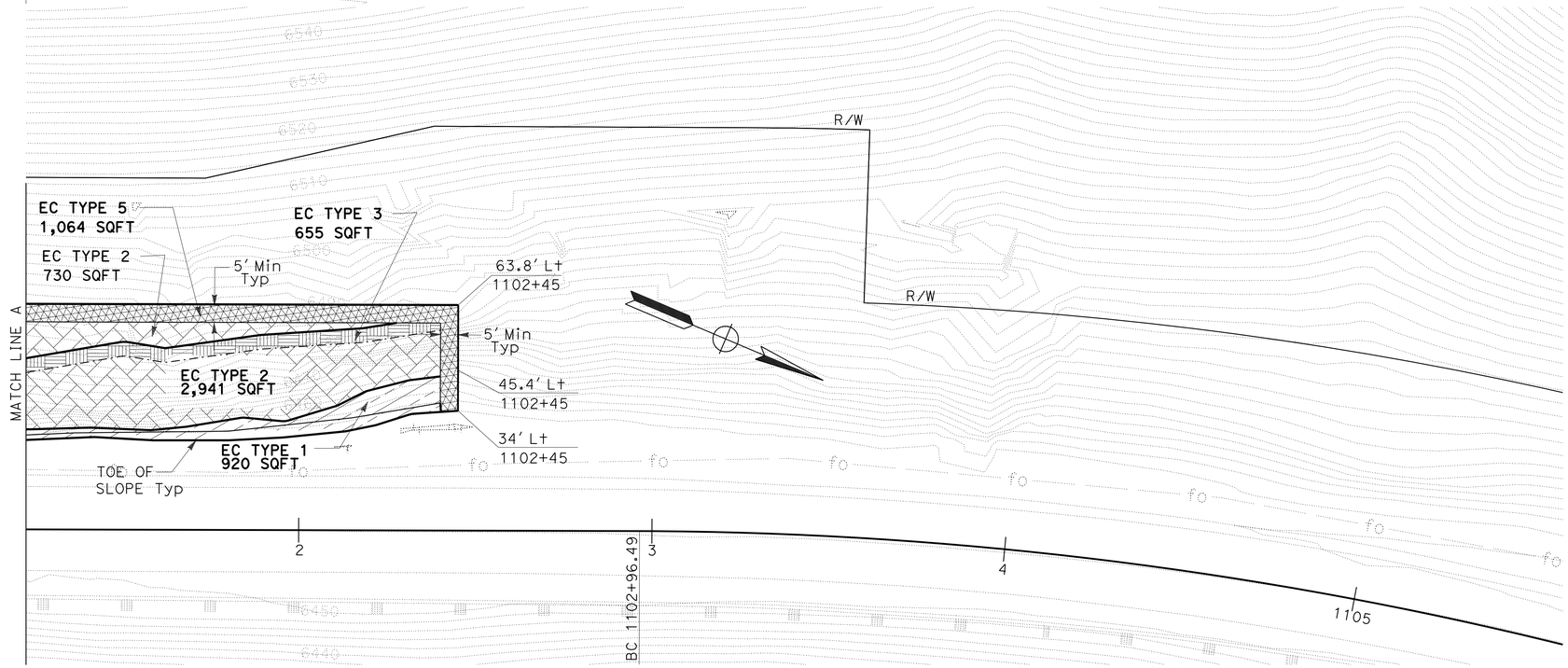

APPROVED FOR EROSION CONTROL WORK ONLY

EROSION CONTROL PLAN

SCALE: 1"=20'

EC-4

STATE OF CALIFORNIA - DEPARTMENT OF TRANSPORTATION

Caltrans

DESIGN

FUNCTIONAL SUPERVISOR: BRIAN WESLING

CALCULATED-DESIGNED BY: JOE BLOMMER

CHECKED BY: CORY FREEMAN

REVISED BY / DATE REVISED

LAST REVISION 08-01-14 | DATE PLOTTED => 05-NOV-2014 | TIME PLOTTED => 08:34

Dist	COUNTY	ROUTE	POST MILES TOTAL PROJECT	SHEET No.	TOTAL SHEETS
09	Mno	395	52.3/R53.7	50	69

REGISTERED CIVIL ENGINEER 10-6-14 DATE

10-20-14
PLANS APPROVAL DATE

REGISTERED PROFESSIONAL ENGINEER CORY FREEMAN No. 62107 Exp 9-30-15 CIVIL STATE OF CALIFORNIA

THE STATE OF CALIFORNIA OR ITS OFFICERS OR AGENTS SHALL NOT BE RESPONSIBLE FOR THE ACCURACY OR COMPLETENESS OF SCANNED COPIES OF THIS PLAN SHEET.

NOTE:

1. FOR ACCURATE RIGHT OF WAY DATA, CONTACT RIGHT OF WAY ENGINEERING

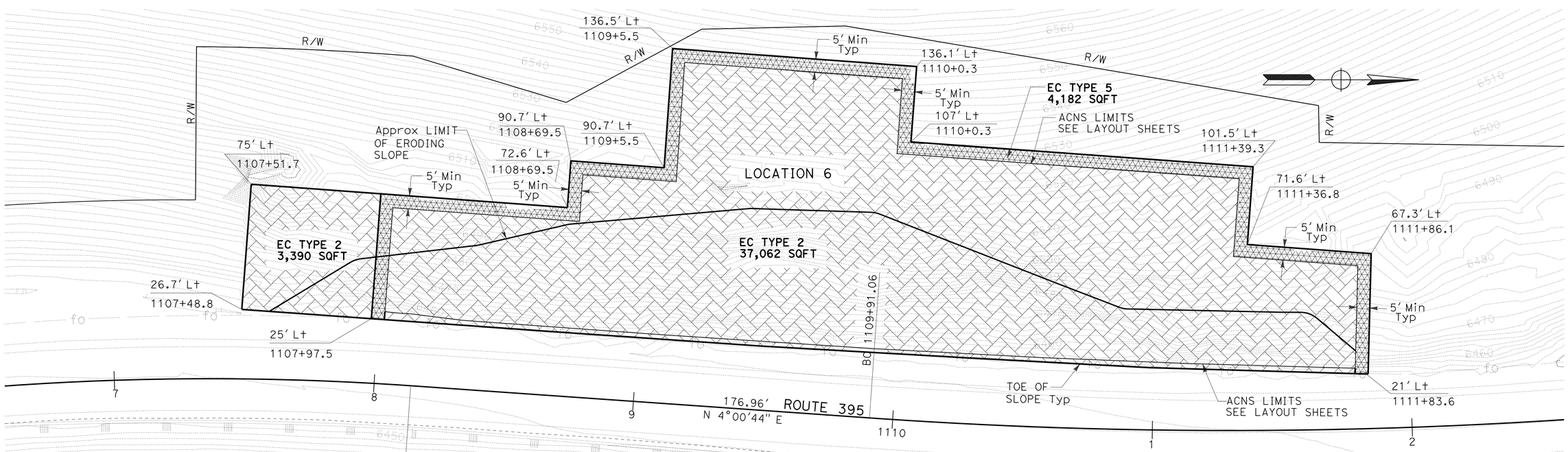

APPROVED FOR EROSION CONTROL WORK ONLY

EROSION CONTROL PLAN

SCALE: 1"=20'

EC-5

STATE OF CALIFORNIA - DEPARTMENT OF TRANSPORTATION

Caltrans DESIGN

FUNCTIONAL SUPERVISOR: BRIAN WESLING

CALCULATED-DESIGNED BY: JOE BLOMMER

CHECKED BY: CORY FREEMAN

REVISED BY

DATE REVISED

LAST REVISION 08-01-14

DATE PLOTTED => 05-NOV-2014

TIME PLOTTED => 08:35

Dist	COUNTY	ROUTE	POST MILES TOTAL PROJECT	SHEET No.	TOTAL SHEETS
09	Mno	395	52.3/R53.7	51	69

REGISTERED CIVIL ENGINEER 10-6-14 DATE

10-20-14
PLANS APPROVAL DATE

REGISTERED PROFESSIONAL ENGINEER CORY FREEMAN No. 62107 Exp 9-30-15 CIVIL STATE OF CALIFORNIA

THE STATE OF CALIFORNIA OR ITS OFFICERS OR AGENTS SHALL NOT BE RESPONSIBLE FOR THE ACCURACY OR COMPLETENESS OF SCANNED COPIES OF THIS PLAN SHEET.

NOTES:
1. EVENLY WORK EROSION CONTROL TYPE IN BETWEEN EXISTING VEGETATION, TO ENSURE EVEN COVERAGE OF EXISTING GROUND.

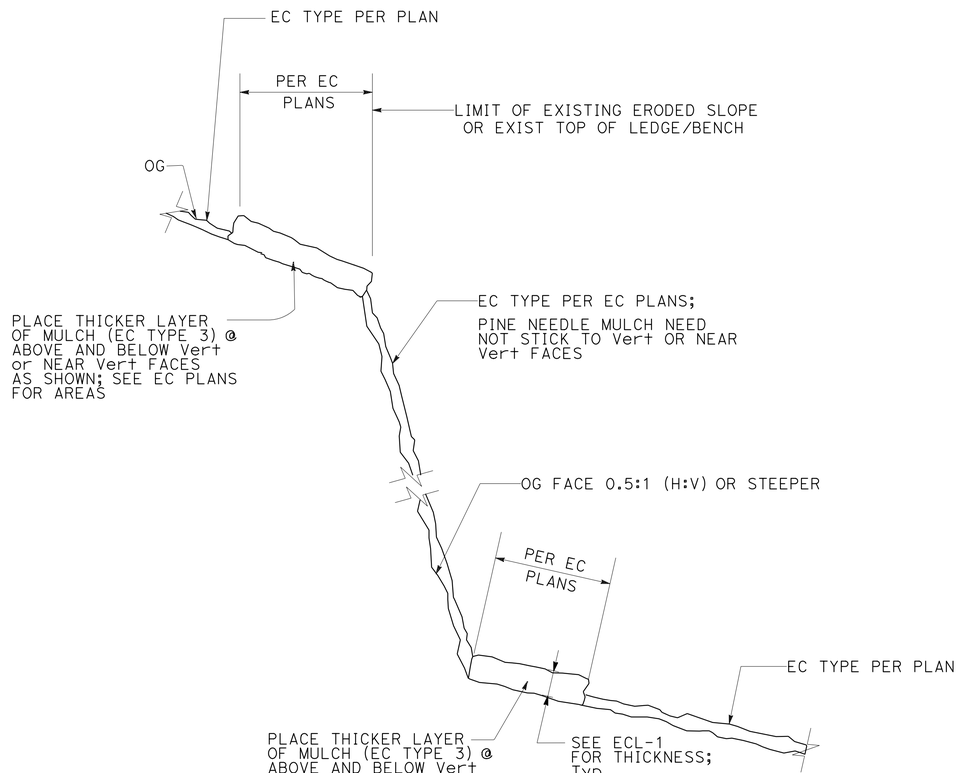

EC TYPE 3 DETAIL
AT STEEP FACES ON THE SLOPE
LOCATIONS 4-6

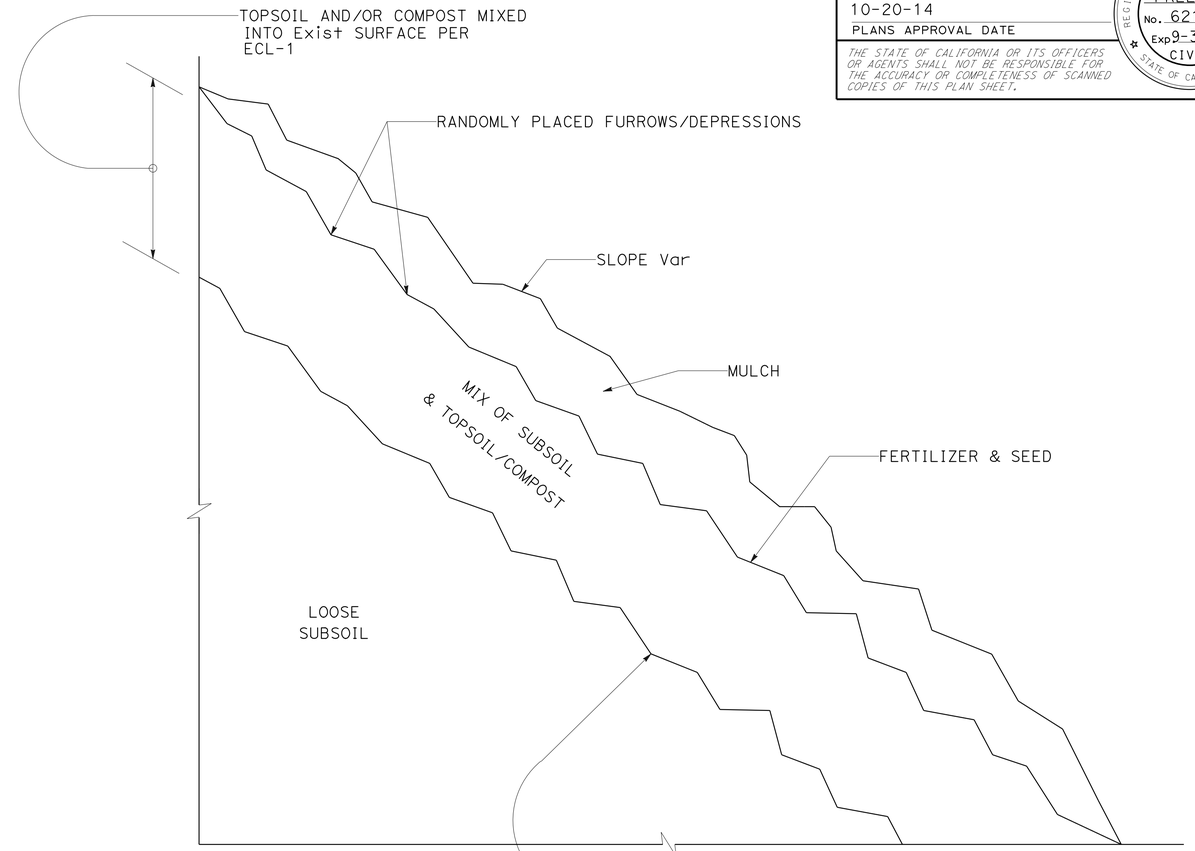

EC TYPE 1 DETAIL
(ADTWMS/ACNS NOT SHOWN)

1. EROSION CONTROL TYPE 1 IS APPLIED TO AREAS OF LOOSER SOIL COMPOSITION, AS SHOWN ON THE PLANS, TO ALLOW MIXING OF TOP/SOIL &/OR COMPOST INTO EXISTING SOIL.

APPROVED FOR EROSION CONTROL WORK ONLY

EROSION CONTROL DETAILS
NO SCALE **ECD-1**

REVISED BY	DATE REVISED
CORY FREEMAN	BRIAN WESLING
CALCULATED-DESIGNED BY	CHECKED BY
FUNCTIONAL SUPERVISOR	BRIAN WESLING

STATE OF CALIFORNIA - DEPARTMENT OF TRANSPORTATION
Caltrans® **DESIGN**

LAST REVISION 08-01-14 | DATE PLOTTED => 05-NOV-2014 | TIME PLOTTED => 08:35

Dist	COUNTY	ROUTE	POST MILES TOTAL PROJECT	SHEET No.	TOTAL SHEETS
09	Mno	395	52.3/R53.7	52	69

REGISTERED CIVIL ENGINEER 10-6-14 DATE

10-20-14
PLANS APPROVAL DATE

REGISTERED PROFESSIONAL ENGINEER CORY FREEMAN No. 62107 Exp 9-30-15 CIVIL STATE OF CALIFORNIA

THE STATE OF CALIFORNIA OR ITS OFFICERS OR AGENTS SHALL NOT BE RESPONSIBLE FOR THE ACCURACY OR COMPLETENESS OF SCANNED COPIES OF THIS PLAN SHEET.

EROSION CONTROL

STAGE	LOCATION	DESCRIPTION	BEGIN Sta	END Sta	PINE NEEDLE MULCH	COMPOST	INCORPORATE MATERIALS	ORGANIC FERTILIZER	HYDROSEED	EROSION CONTROL (BONDED FIBER MATRIX)	MOVE-IN/ MOVE-OUT (EROSION CONTROL)	DUFF
					CY	SQFT	SQFT	LB	SQFT	SQFT	EA	ACRE
1	1	EC TYPE 1	1049+23.1	1050+35	7	2361	2361	109	2361	2361	1	
		EC TYPE 2	1047+53.3	1049+90.6	22				6989	6989		
		EC TYPE 3	1047+51.6	1050+37.7	84				4526	4526		
	2	EC TYPE 1	1053+11.3	1055+89.8	15	4919	4919	226	4919	4919		
		EC TYPE 3	1047+51.6	1050+37.7	41				2202	2202		
		EC TYPE 4	1053+11.3	1055+89.8	28	9029	9029	415	9029	9029		0.10
	5	EC TYPE 1	1095+87	1102+45	67	21,585	21,585	993	21,585	21,585	1	
		EC TYPE 2	1095+87	1102+40	175				56,625	56,625		
		EC TYPE 3	1095+82	1102+45	99				5368	5368		
		EC TYPE 5	1095+82	1102+45	106					5742		
	6	EC TYPE 2	1107+48.8	1111+78.6	125				40,452	40,452	1	
		EC TYPE 5	1107+97.5	1111+83.6	77					4182		
2	3	EC TYPE 1	1075+78.9	1077+95.6	27	8663	8663	399	8663	8663		
		EC TYPE 3	1075+78.9	1077+95.6	28				1530	1530		
	4	EC TYPE 1	1082+17	1091+48	70	22,672	22,672	1043	22,672	22,672	1	
		EC TYPE 2	1081+93.8	1091+94.3	224				72,622	72,622		
		EC TYPE 3	1082+02	1091+99.3	98				5293	5293		
		EC TYPE 5	1082+02	1091+99.3	163							
				TOTALS	1456	69,229	69,229	3185	264,837	283,558	4	0.10

EROSION CONTROL QUANTITIES
ECQ-1

REVISED BY | DATE REVISED

BRIAN WESLING | CORY FREEMAN

CALCULATED-DESIGNED BY | CHECKED BY

FUNCTIONAL SUPERVISOR: BRIAN WESLING

STATE OF CALIFORNIA - DEPARTMENT OF TRANSPORTATION

Caltrans® DESIGN

LAST REVISION 08-01-14 | DATE PLOTTED => 05-NOV-2014 | TIME PLOTTED => 08:35

Dist	COUNTY	ROUTE	POST MILES TOTAL PROJECT	SHEET No.	TOTAL SHEETS
09	Mno	395	52.3/53.7	53	69

REGISTERED ELECTRICAL ENGINEER 10-6-14 DATE

10-20-14
PLANS APPROVAL DATE

REGISTERED PROFESSIONAL ENGINEER MITCHELL NGO No. 18920 Exp. 12/31/15 ELECTRICAL STATE OF CALIFORNIA

THE STATE OF CALIFORNIA OR ITS OFFICERS OR AGENTS SHALL NOT BE RESPONSIBLE FOR THE ACCURACY OR COMPLETENESS OF SCANNED COPIES OF THIS PLAN SHEET.

LEGEND:

- PORTABLE TEMPORARY TRAFFIC SIGNAL WITH CONTROLLER ASSEMBLY
- PORTABLE LIGHT TOWER WITH GENERATOR
- B - BPB ON TRAILER MOUNT POST
- DETECTION ZONE

NOTES:

1. ALL TRAFFIC CONTROL DEVICES AND CONSTRUCTION AREA SIGN LOCATIONS ARE APPROXIMATE, EXACT LOCATIONS WILL BE DETERMINED BY THE ENGINEER.
2. FOR ACCURATE RIGHT OF WAY DATA, CONTACT RIGHT OF WAY ENGINEERING AT THE DISTRICT OFFICE.
3. FOR SIGN PANELS, SEE SHEET CS-1 AND CS-2.
4. VERIFY LOCATION OF EXISTING FIBER OPTIC LINE BEFORE STARTING WORK.

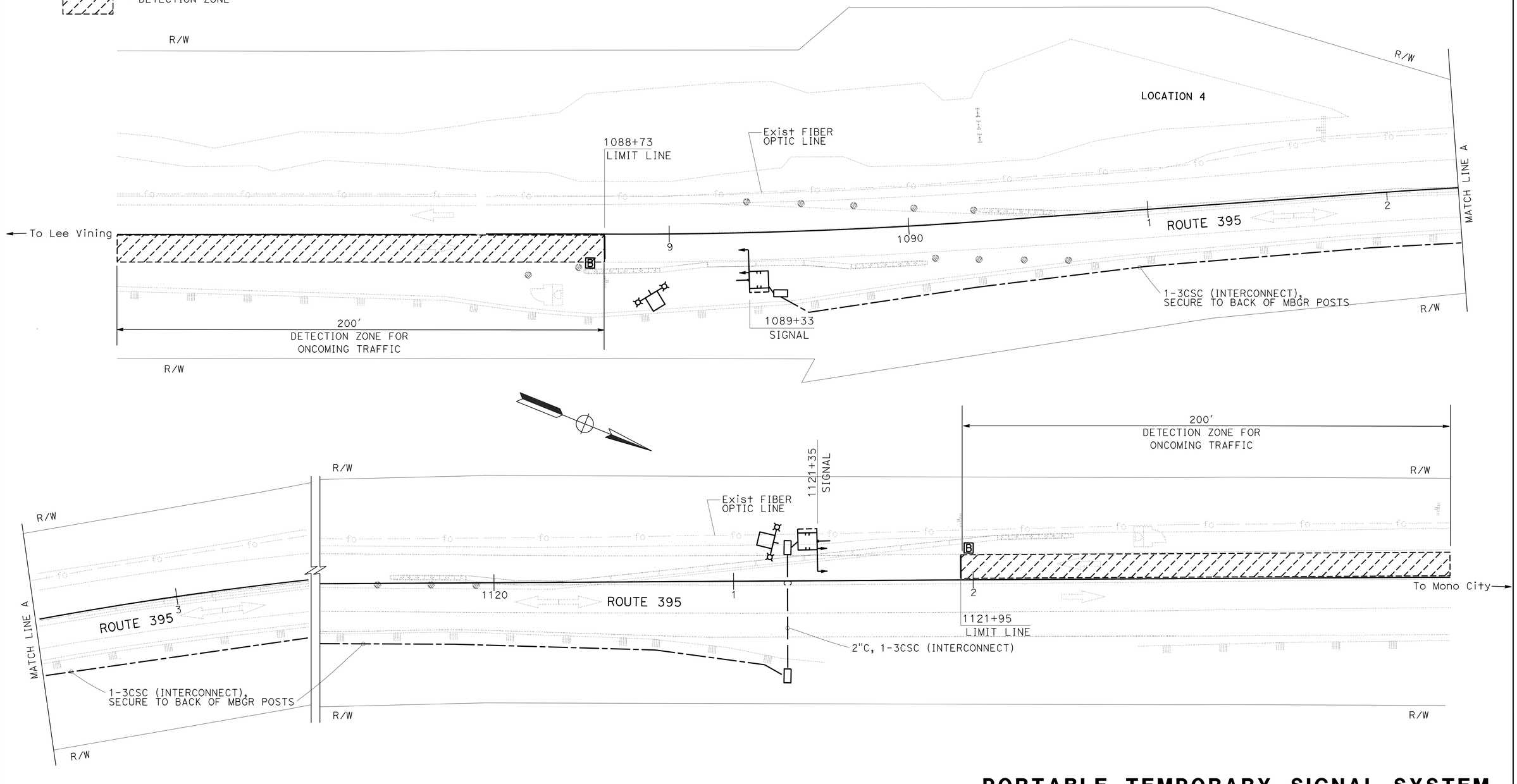

PORTABLE TEMPORARY SIGNAL SYSTEM STAGE 1

E-1

APPROVED FOR ELECTRICAL WORK ONLY

SCALE: 1" = 20'

STATE OF CALIFORNIA - DEPARTMENT OF TRANSPORTATION
Caltrans® TRAFFIC OPERATIONS

FUNCTIONAL SUPERVISOR: TERRY ERLWEIN
CALCULATED-DESIGNED BY: MITCHELL NGO
CHECKED BY: PHIL GRAHAM
REVISED BY / DATE REVISED

LAST REVISION 06-12-14
DATE PLOTTED => 05-NOV-2014
TIME PLOTTED => 08:35

Dist	COUNTY	ROUTE	POST MILES TOTAL PROJECT	SHEET No.	TOTAL SHEETS
09	Mno	395	52.3/53.7	54	69

REGISTERED ELECTRICAL ENGINEER 10-6-14 DATE

10-20-14
PLANS APPROVAL DATE

REGISTERED PROFESSIONAL ENGINEER MITCHELL NGO No. 18920 Exp. 12/31/15 ELECTRICAL STATE OF CALIFORNIA

THE STATE OF CALIFORNIA OR ITS OFFICERS OR AGENTS SHALL NOT BE RESPONSIBLE FOR THE ACCURACY OR COMPLETENESS OF SCANNED COPIES OF THIS PLAN SHEET.

NOTES:

1. ALL TRAFFIC CONTROL DEVICES AND CONSTRUCTION AREA SIGN LOCATIONS ARE APPROXIMATE, EXACT LOCATIONS WILL BE DETERMINED BY THE ENGINEER.
2. FOR ACCURATE RIGHT OF WAY DATA, CONTACT RIGHT OF WAY ENGINEERING AT THE DISTRICT OFFICE.
3. FOR SIGN PANELS, SEE SHEET CS-1 AND CS-2.
4. VERIFY LOCATION OF EXISTING FIBER OPTIC LINE BEFORE STARTING WORK.

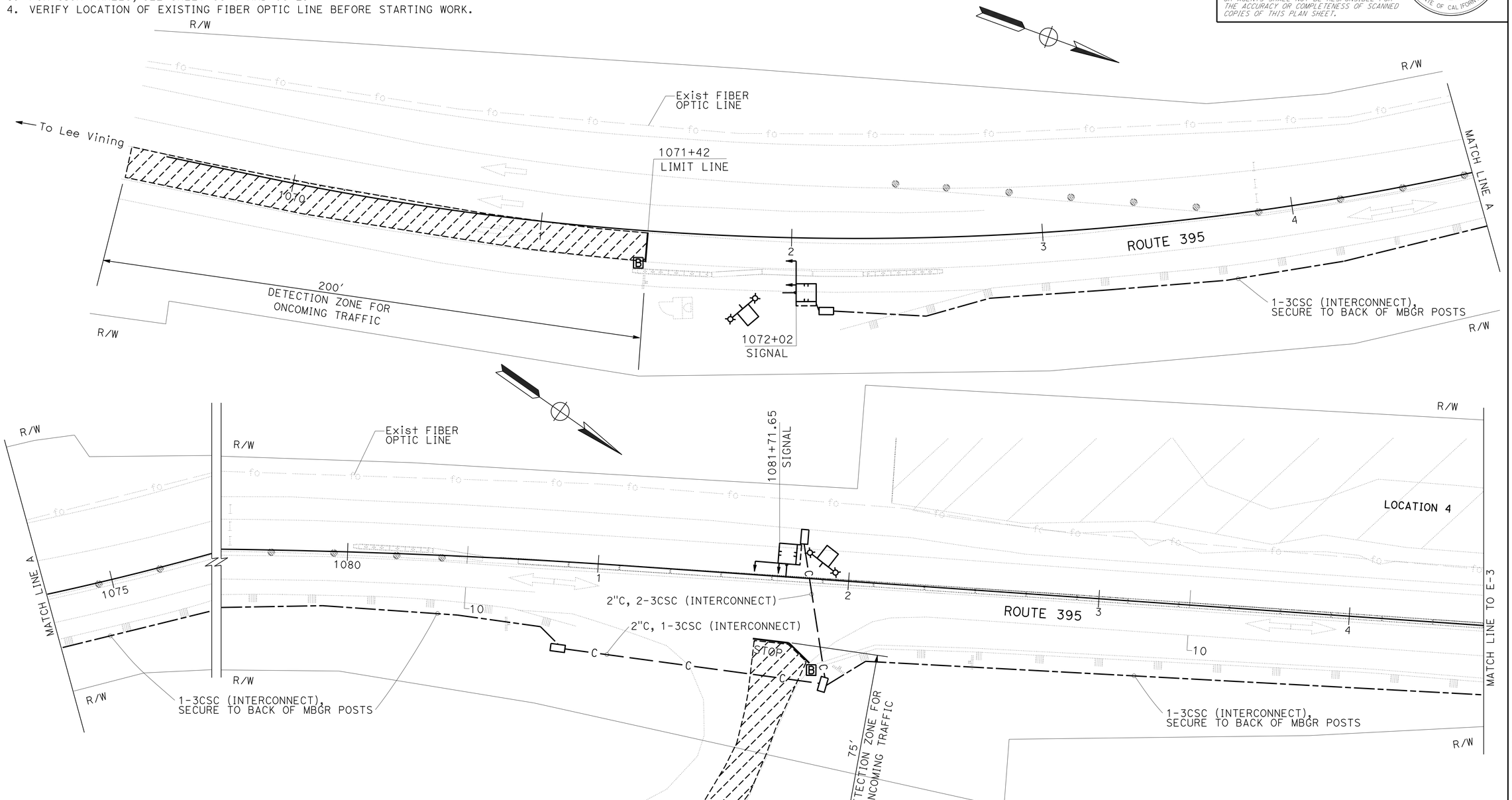

APPROVED FOR ELECTRICAL WORK ONLY

PORTABLE TEMPORARY SIGNAL SYSTEM STAGE 2

E-2

SCALE: 1" = 20'

STATE OF CALIFORNIA - DEPARTMENT OF TRANSPORTATION
Caltrans® TRAFFIC OPERATIONS

FUNCTIONAL SUPERVISOR: TERRY ERLWEIN
CALCULATED-DESIGNED BY: MITCHELL NGO
CHECKED BY: PHIL GRAHAM
REVISED BY
DATE REVISED

LAST REVISION 06-12-14
DATE PLOTTED => 05-NOV-2014
TIME PLOTTED => 08:35

Dist	COUNTY	ROUTE	POST MILES TOTAL PROJECT	SHEET No.	TOTAL SHEETS
09	Mno	395	52.3/53.7	55	69

REGISTERED ELECTRICAL ENGINEER 10-6-14 DATE

10-20-14
PLANS APPROVAL DATE

REGISTERED PROFESSIONAL ENGINEER MITCHELL NGO No. 18920 Exp. 12/31/15 ELECTRICAL STATE OF CALIFORNIA

THE STATE OF CALIFORNIA OR ITS OFFICERS OR AGENTS SHALL NOT BE RESPONSIBLE FOR THE ACCURACY OR COMPLETENESS OF SCANNED COPIES OF THIS PLAN SHEET.

NOTES:

1. ALL TRAFFIC CONTROL DEVICES AND CONSTRUCTION AREA SIGN LOCATIONS ARE APPROXIMATE, EXACT LOCATIONS WILL BE DETERMINED BY THE ENGINEER.
2. FOR ACCURATE RIGHT OF WAY DATA, CONTACT RIGHT OF WAY ENGINEERING AT THE DISTRICT OFFICE.
3. FOR SIGN PANELS, SEE SHEET CS-1 AND CS-2.
4. VERIFY LOCATION OF EXISTING FIBER OPTIC LINE BEFORE STARTING WORK.

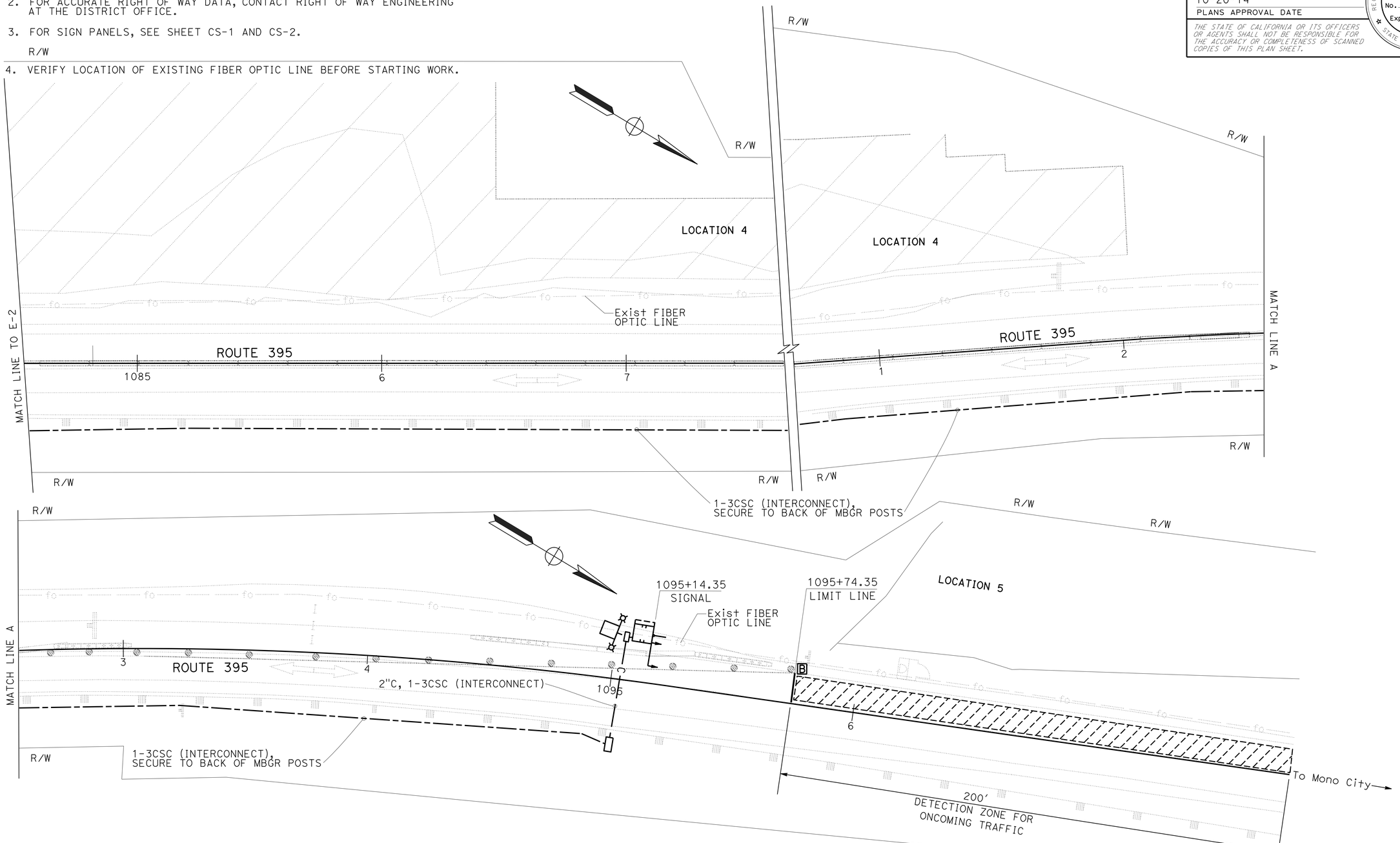

PORTABLE TEMPORARY SIGNAL SYSTEM STAGE 2

E-3

APPROVED FOR ELECTRICAL WORK ONLY

SCALE: 1" = 20'

STATE OF CALIFORNIA - DEPARTMENT OF TRANSPORTATION
Caltrans® TRAFFIC OPERATIONS

FUNCTIONAL SUPERVISOR: TERRY ERLWEIN
CALCULATED-DESIGNED BY: MITCHELL NGO
CHECKED BY: PHIL GRAHAM
REVISED BY
DATE REVISED

LAST REVISION 06-12-14
DATE PLOTTED => 05-NOV-2014
TIME PLOTTED => 08:35

Dist	COUNTY	ROUTE	POST MILES TOTAL PROJECT	SHEET No.	TOTAL SHEETS
09	Mno	395	52.3/53.7	56	69

REGISTERED ELECTRICAL ENGINEER 10-6-14 DATE

10-20-14
PLANS APPROVAL DATE

REGISTERED PROFESSIONAL ENGINEER MITCHELL NGO No. 18920 Exp. 12/31/15 ELECTRICAL STATE OF CALIFORNIA

THE STATE OF CALIFORNIA OR ITS OFFICERS OR AGENTS SHALL NOT BE RESPONSIBLE FOR THE ACCURACY OR COMPLETENESS OF SCANNED COPIES OF THIS PLAN SHEET.

NOTE:

ITEMS SHOWN IN TABLE ARE NOT A SEPERATE PAY ITEM, FOR INFORMATION ONLY.

PORTABLE TEMPORARY SIGNAL SYSTEM

SHEET No.	PORTABLE TEMPORARY TRAFFIC SIGNAL WITH CONTROLLER ASSEMBLY	PORTABLE LIGHT TOWER WITH GENERATOR	BPB ON TRAILER MOUNT POST	NO. 5 PULL BOX	3CSC (INTERCONNECT)	2"C, TYPE 3
	EA				LF	
E-1	2	2	2	3	3400	60
E-2	2	2	2	4	1400	160
E-3	1	1	1	2	1200	50

REVISED BY | DATE REVISED

MITCHELL NGO | PHIL GRAHAM

CALCULATED-DESIGNED BY | CHECKED BY

FUNCTIONAL SUPERVISOR

TERRY ERLWEIN

STATE OF CALIFORNIA - DEPARTMENT OF TRANSPORTATION

Caltrans® TRAFFIC OPERATIONS

ELECTRICAL QUANTITIES
E-4

LAST REVISION 06-12-14 | DATE PLOTTED => 05-NOV-2014 | TIME PLOTTED => 08:35

M

Maint	MAINTENANCE
Max	MAXIMUM
MB	METAL BEAM
MBB	METAL BEAM BARRIER
MBGR	METAL BEAM GUARD RAILING
Med	MEDIAN
MGS	MIDWEST GUARDRAIL SYSTEM
MH	MANHOLE
Min	MINIMUM
Misc	MISCELLANEOUS
Misc I & S	MISCELLANEOUS IRON AND STEEL
Mkr	MARKER
Mod	MODIFIED, MODIFY
Mon	MONUMENT
MP	METAL PLATE
MPGR	METAL PLATE GUARD RAILING
MR	MOVEMENT RATING
MSE	MECHANICALLY STABILIZED EMBANKMENT
Mt	MOUNTAIN, MOUNT
Mtl	MATERIAL
MVP	MAINTENANCE VEHICLE PULLOUT

N

N	NORTH
NB	NORTHBOUND
No.	NUMBER (MUST HAVE PERIOD)
Nos.	NUMBERS (MUST HAVE PERIOD)
NPS	NOMINAL PIPE SIZE
NS	NEAR SIDE
NSP	NEW STANDARD PLAN
NTS	NOT TO SCALE

O

Oblr	OBLITERATE
OC	OVERCROSSING
OD	OUTSIDE DIAMETER
OF	OUTSIDE FACE
OG	ORIGINAL GROUND
OGAC	OPEN GRADED ASPHALT CONCRETE
OGFC	OPEN GRADED FRICTION COURSE
OH	OVERHEAD
OHWM	ORDINARY HIGH WATER MARK
O-O	OUT TO OUT
Opp	OPPOSITE
OSD	OVERSIDE DRAIN

P

P	PAGE
PAP	PERFORATED ALUMINUM PIPE
PB	PULL BOX
PC	POINT OF CURVATURE, PRECAST
PCC	POINT OF COMPOUND CURVE, PORTLAND CEMENT CONCRETE
PCMS	PORTABLE CHANGEABLE MESSAGE SIGN
PCP	PERFORATED CONCRETE PIPE, PRESTRESSED CONCRETE PIPE
PCVC	POINT OF COMPOUND VERTICAL CURVE
PEC	PERMIT TO ENTER AND CONSTRUCT
Ped	PEDESTRIAN
Ped OC	PEDESTRIAN OVERCROSSING
Ped UC	PEDESTRIAN UNDERCROSSING
Perm Mtl	PERMEABLE MATERIAL

P continued

PG	PROFILE GRADE
PI	POINT OF INTERSECTION
PJP	PARTIAL JOINT PENETRATION
Pkwy	PARKWAY
ℙ,PL	PLATE
P/L	PROPERTY LINE
PM	POST MILE, TIME FROM NOON TO MIDNIGHT
PN	PAVING NOTCH
POC	POINT OF HORIZONTAL CURVE
POT	POINT OF TANGENT
POVC	POINT OF VERTICAL CURVE
PP	PIPE PILE, PLASTIC PIPE, POWER POLE
PPL	PREFORMED PERMEABLE LINER
PPP	PERFORATED PLASTIC PIPE
PRC	POINT OF REVERSE CURVE
PRF	PAVEMENT REINFORCING FABRIC
PRVC	POINT OF REVERSE VERTICAL CURVE
PS&E	PLANS, SPECIFICATIONS AND ESTIMATES
PS, P/S	PRESTRESSED
PSP	PERFORATED STEEL PIPE
PT	POINT OF TANGENCY
PVC	POLYVINYL CHLORIDE
Pvmt	PAVEMENT

Q

Qty	QUANTITY

R

R	RADIUS
R & D	REMOVE AND DISPOSE
R & S	REMOVE AND SALVAGE
R/C	RATE OF CHANGE
RCA	REINFORCED CONCRETE ARCH
RCB	REINFORCED CONCRETE BOX
RCP	REINFORCED CONCRETE PIPE
RCPA	REINFORCED CONCRETE PIPE ARCH
Rd	ROAD
Reinf	REINFORCED, REINFORCEMENT, REINFORCING
Rel	RELOCATE
Repl	REPLACEMENT
Ret	RETAINING
Rev	REVISED, REVISION
Rdwy	ROADWAY
RHMA	RUBBERIZED HOT MIX ASPHALT
Riv	RIVER
RM	ROAD-MIXED
RP	RADIUS POINT, REFERENCE POINT
RR	RAILROAD
RSP	ROCK SLOPE PROTECTION, REVISED STANDARD PLAN
Rt	RIGHT
Rte	ROUTE
RW	REDWOOD, RETAINING WALL
R/W	RIGHT OF WAY
Rwy	RAILWAY

S

S	SOUTH, SUPPLEMENT
SAE	STRUCTURE APPROACH EMBANKMENT
Salv	SALVAGE
SAPP	STRUCTURAL ALUMINUM PLATE PIPE
SB	SOUTHBOUND
SC	SAND CUSHION
SCSP	SLOTTED CORRUGATED STEEL PIPE
SD	STORM DRAIN
Sec	SECOND, SECTION
Sep	SEPARATION
SG	SUBGRADE
Shld	SHOULDER
Sht	SHEET
Sim	SIMILAR
℄	STATION LINE
SM	SELECTED MATERIAL
Spec	SPECIAL, SPECIFICATIONS
SPP	SLOTTED PLASTIC PIPE
SS	SLOPE STAKE
SSBM	STRAP AND SADDLE BRACKET METHOD
SSD	STRUCTURAL SECTION DRAIN
SSPA	STRUCTURAL STEEL PLATE ARCH
SSPP	STRUCTURAL STEEL PLATE PIPE
SSPPA	STRUCTURAL STEEL PLATE PIPE ARCH
SSRP	STEEL SPIRAL RIB PIPE
St	STREET
Sta	STATION
STBB	SINGLE THRIE BEAM BARRIER
Std	STANDARD
Str	STRUCTURE
Surf	SURFACING
SW	SIDEWALK, SOUND WALL
Swr	SEWER
Sym	SYMMETRICAL
S4S	SURFACE 4 SIDES

T

T	SEMI-TANGENT
Tan	TANGENT
TBB	THRIE BEAM BARRIER
Tbr	TIMBER
TC	TOP OF CURB
TCB	TRAFFIC CONTROL BOX
TCE	TEMPORARY CONSTRUCTION EASEMENT
Tel	TELEPHONE
Temp	TEMPORARY
TG	TOP OF GRADE
Tot	TOTAL
TP	TELEPHONE POLE
TPB	TREATED PERMEABLE BASE
TPM	TREATED PERMEABLE MATERIAL
Trans	TRANSITION

T continued

TS	TRANSVERSE, TRAFFIC SIGNAL, TUBULAR STEEL
Typ	TYPICAL

U

UC	UNDERCROSSING
UD	UNDERDRAIN
UG	UNDERGROUND
UON	UNLESS OTHERWISE NOTED
UP	UNDERPASS

V

V	VALVE, DESIGN SPEED
Var	VARIABLE, VARIES
VC	VERTICAL CURVE
VCP	VITRIFIED CLAY PIPE
Vert	VERTICAL
Via	VIADUCT
Vol	VOLUME

W

W	WEST, WIDTH
WB	WESTBOUND
WH	WEEP HOLE
WM	WIRE MESH
WS	WATER SURFACE
WSP	WELDED STEEL PIPE
Wt	WEIGHT
WV	WATER VALVE
WW	WINGWALL
WWLOL	WINGWALL LAYOUT LINE

X

X Sec	CROSS SECTION
Xing	CROSSING

Y

Yr	YEAR
Yrs	YEARS

Dist	COUNTY	ROUTE	POST MILES TOTAL PROJECT	SHEET No.	TOTAL SHEETS
09	Mno	395	52.3/R53.7	57	69

Grace M. Tsushima
REGISTERED CIVIL ENGINEER

July 19, 2013
PLANS APPROVAL DATE

REGISTERED PROFESSIONAL ENGINEER
Grace M. Tsushima
No. C49814
Exp. 9-30-14
CIVIL
STATE OF CALIFORNIA

THE STATE OF CALIFORNIA OR ITS OFFICERS OR AGENTS SHALL NOT BE RESPONSIBLE FOR THE ACCURACY OR COMPLETENESS OF SCANNED COPIES OF THIS PLAN SHEET.

TO ACCOMPANY PLANS DATED _____

UNIT OF MEASUREMENT SYMBOLS:

Some of the symbols used in the project plan quantity tables and in the Bid Item List are:

TABLE A

SYMBOL USED	DEFINITIONS
ACRE	ACRE
CF	CUBIC FOOT
CY	CUBIC YARD
EA	EACH
GAL	GALLON
LB	POUND
LF	LINEAR FOOT
SQFT	SQUARE FOOT
SQYD	SQUARE YARD
STA	100 FEET
TAB	TABLET
TON	2,000 POUNDS

Some of the symbols used in the plans other than in the project plan quantity tables are:

TABLE B

SYMBOL USED	DEFINITIONS
ksi	KIPS PER SQUARE INCH
ksf	KIPS PER SQUARE FOOT
psi	POUNDS PER SQUARE INCH
psf	POUNDS PER SQUARE FOOT
lb/ft^3, pcf	POUNDS PER CUBIC FOOT
tsf	TONS PER SQUARE FOOT
mph, MPH *	MILES PER HOUR
ø	NOMINAL DIAMETER
oz	OUNCE
lb	POUND
kip	1,000 POUNDS
cal	CALORIE
ft	FOOT OR FEET
gal	GALLON

* For use on a sign panel only

STATE OF CALIFORNIA
DEPARTMENT OF TRANSPORTATION

ABBREVIATIONS (SHEET 2 OF 2)

NO SCALE

RSP A10B DATED JULY 19, 2013 SUPERSEDES STANDARD PLAN A10B DATED MAY 20, 2011 - PAGE 2 OF THE STANDARD PLANS BOOK DATED 2010.

REVISED STANDARD PLAN RSP A10B

2010 REVISED STANDARD PLAN RSP A10B

6-7-13

Dist	COUNTY	ROUTE	POST MILES TOTAL PROJECT	SHEET No.	TOTAL SHEETS
09	Mno	395	52.3/R53.7	58	69

REGISTERED CIVIL ENGINEER

July 20, 2012
PLANS APPROVAL DATE

REGISTERED PROFESSIONAL ENGINEER
Roberta L. McLaughlin
No. C40375
Exp. 3-31-13
CIVIL
STATE OF CALIFORNIA

THE STATE OF CALIFORNIA OR ITS OFFICERS OR AGENTS SHALL NOT BE RESPONSIBLE FOR THE ACCURACY OR COMPLETENESS OF SCANNED COPIES OF THIS PLAN SHEET.

TO ACCOMPANY PLANS DATED _____

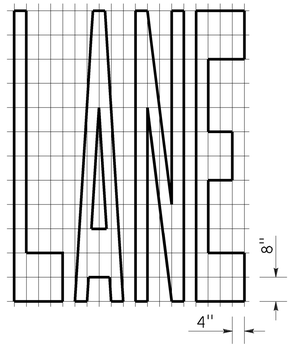

A=24 ft²

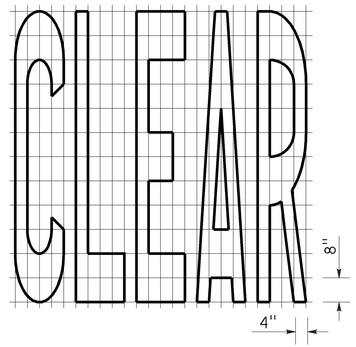

A=27 ft²

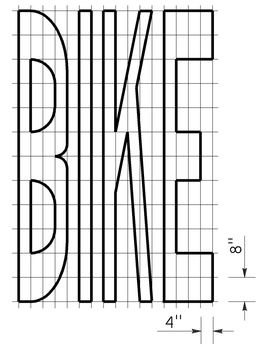

A=21 ft²

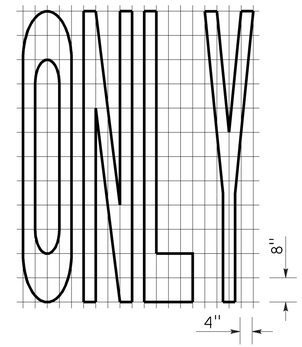

A=22 ft²

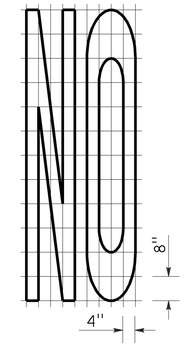

A=14 ft²

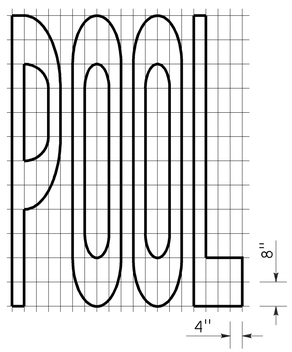

A=23 ft²

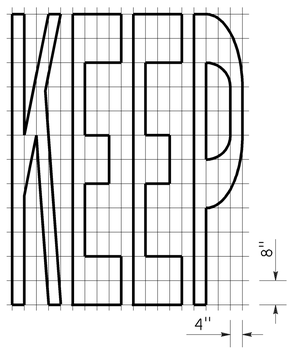

A=24 ft²

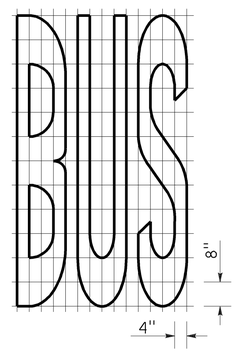

A=20 ft²

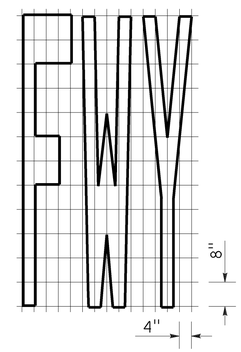

A=16 ft²

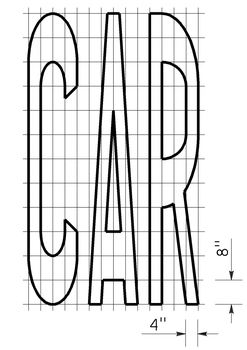

A=17 ft²

WORD MARKINGS			
ITEM	ft²	ITEM	ft²
LANE	24	NO	14
POOL	23	BIKE	21
CAR	17	BUS	20
CLEAR	27	ONLY	22
KEEP	24	FWY	16

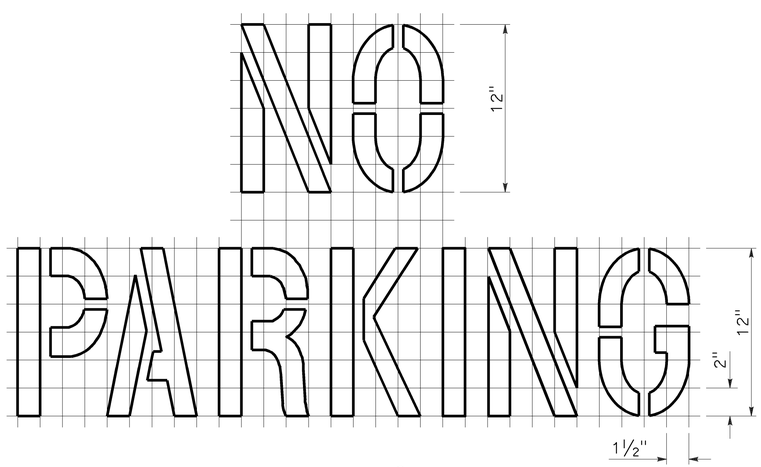

A=2 ft²
See Notes 6 and 7

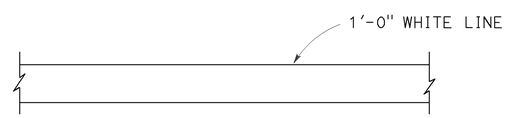

LIMIT LINE (STOP LINE)

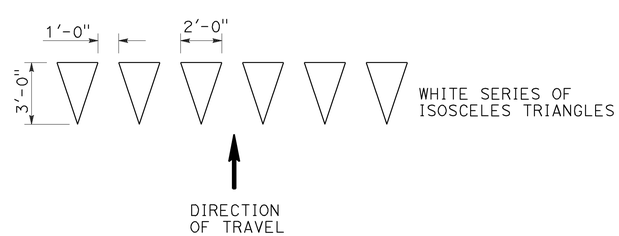

YIELD LINE

NOTES:

1. If a message consists of more than one word, it should read "UP", i.e., the first word should be nearest the driver.
2. The space between words should be at least four times the height of the characters for low speed roads, but not more than ten times the height of the characters. The space may be reduced appropriately where there is limited space because of local conditions.
3. Minor variations in dimensions may be accepted by the Engineer.
4. Portions of a letter, number or symbol may be separated by connecting segments not to exceed 2" in width.
5. The words "NO PARKING" pavement marking is to be used for parking facilities. For typical locations of markings, see Standard Plans A90A and A90B.
6. The words "NO PARKING", shall be painted in white letters no less than 1'-0" high on a contrasting background and located so that it is visible to traffic enforcement officials.

STATE OF CALIFORNIA
DEPARTMENT OF TRANSPORTATION

PAVEMENT MARKINGS WORDS, LIMIT AND YIELD LINES

NO SCALE

RSP A24E DATED JULY 20, 2012 SUPERSEDES STANDARD PLAN A24E
DATED MAY 20, 2011 - PAGE 17 OF THE STANDARD PLANS BOOK DATED 2010.

REVISED STANDARD PLAN RSP A24E

2010 REVISED STANDARD PLAN RSP A24E

6-12-12

Dist	COUNTY	ROUTE	POST MILES TOTAL PROJECT	SHEET No.	TOTAL SHEETS
09	Mno	395	52.3/R53.7	59	69

LICENSED LANDSCAPE ARCHITECT

July 19, 2013
PLANS APPROVAL DATE

THE STATE OF CALIFORNIA OR ITS OFFICERS OR AGENTS SHALL NOT BE RESPONSIBLE FOR THE ACCURACY OR COMPLETENESS OF SCANNED COPIES OF THIS PLAN SHEET.

Gregory A. Bolzer 2516 — 02-28-15 Renewal Date — 7-19-13 Date — STATE OF CALIFORNIA — LICENSED LANDSCAPE ARCHITECT

TO ACCOMPANY PLANS DATED _____

A

AB	AGGREGATE BASE
ABS	ACRYLONITRILE-BUTADIENE-STYRENE
AC	ASPHALT CONCRETE
ACC	ARMOR-CLAD CONDUCTORS
Adj	ADJACENT/ADJUSTABLE
AIC	AUXILIARY IRRIGATION CONTROLLER
Alt	ALTERNATIVE
AMEND	AMENDMENT
ARV	AIR RELEASE VALVE
AUTO	AUTOMATIC
AUX	AUXILIARY
AVB	ATMOSPHERIC VACUUM BREAKER

B

B&B	BALLED AND BURLAPPED
B/B	BRASS/BRONZE
B/B/PL	BRASS/BRONZE/PLASTIC
B/PL	BRASS/PLASTIC
BFM	BONDED FIBER MATRIX
Bit Ctd	BITUMINOUS COATED
BP	BOOSTER PUMP
BPA	BACKFLOW PREVENTER ASSEMBLY
BPE	BACKFLOW PREVENTER ENCLOSURE
BV	BALL VALVE

C

C	CONDUIT
CAP	CORRUGATED ALUMINUM PIPE
CARV	COMBINATION AIR RELEASE VALVE
CB	COUPLING BAND
CCA	CAM COUPLER ASSEMBLY
CEC	CONTROLLER ENCLOSURE CABINET
CHDPE	CORRUGATED HIGH DENSITY POLYETHYLENE
CL	CHAIN LINK
CNC	CONTROL AND NEUTRAL CONDUCTORS
Conc	CONCRETE
CP	COPPER PIPE
CS	COMPOST SOCK
CSP	CORRUGATED STEEL PIPE
CST	CENTER STRIP
CV	CHECK VALVE

D

Dia	DIAMETER
DIP	DUCTILE IRON PIPE
DIT	DRIP IRRIGATION TUBING
DG	DECOMPOSED GRANITE
DN	DIAMETER NOMINAL
DVA	DRIP VALVE ASSEMBLY

E

EC	EROSION CONTROL
ECTC	EROSION CONTROL TECHNOLOGY COUNCIL
Elect	ELECTRIC/ELECTRICAL
Elev	ELEVATION
ELL	ELBOW
ENCL	ENCLOSURE
EP	EDGE OF PAVEMENT
ES	EDGE OF SHOULDER
EST	END STRIP
ESTB	ESTABLISHMENT
ETW	EDGE OF TRAVELED WAY

F

F	FULL CIRCLE
F/P	FULL/PART CIRCLE
FCV	FLOW CONTROL VALVE
FERT	FERTILIZER
FG	FINISHED GRADE
FH	FLEXIBLE HOSE
FIPT	FEMALE IRON PIPE THREAD
FIS	FERTILIZER INJECTOR SYSTEM
FL	FLOW LINE
FR	FIBER ROLL
FS	FLOW SENSOR
FSC	FLOW SENSOR CABLE
FV	FLUSH VALVE

G

Galv	GALVANIZED
GARV	GARDEN VALVE
GARVA	GARDEN VALVE ASSEMBLY
GM	GRAVEL MULCH
GPH	GALLONS PER HOUR
GPM	GALLONS PER MINUTE
GSP	GALVANIZED STEEL PIPE
GV	GATE VALVE

H

H	HALF CIRCLE
HDPE	HIGH DENSITY POLYETHYLENE
HP	HORSEPOWER/HINGE POINT
HPL	HIGH PRESSURE LINE
Hwy	HIGHWAY

I

IC	IRRIGATION CONTROLLER
ICC	IRRIGATION CONTROLLER(S) IN CONTROLLER ENCLOSURE CABINET
ID	INSIDE DIAMETER
IFS	IRRIGATION FILTRATION SYSTEM
IPS	IRON PIPE SIZE
IPT	IRON PIPE THREAD
Irr	IRRIGATION

L

L	LENGTH

M

Max	MAXIMUM
MBGR	METAL BEAM GUARD RAILING
MCV	MANUAL CONTROL VALVE
MIC	MASTER IRRIGATION CONTROLLER
Min	MINIMUM
MIPT	MALE IRON PIPE THREAD
Misc	MISCELLANEOUS
Mtl	MATERIAL
MVP	MAINTENANCE VEHICLE PULLOUT

N

NCN	NO COMMON NAME
NL	NOZZLE LINE
No.	NUMBER
NPT	NATIONAL PIPE THREAD

O

O/C	ON CENTER
OD	OUTSIDE DIAMETER
OL	OVERLAP

P

P	PART CIRCLE
PB	PULL BOX
PCC	PORTLAND CEMENT CONCRETE
PE	POLYETHYLENE
Pkt	PACKET
PL	PLASTIC
PLS	PURE LIVE SEED
PLT	PLANT/PLANTING
PLT ESTB	PLANT ESTABLISHMENT
PM	POST MILE
PR	PRESSURE RATED
PRLV	PRESSURE RELIEF VALVE
PRV	PRESSURE REGULATING VALVE
PVC	POLYVINYL CHLORIDE
Pvmt	PAVEMENT

Q

Q	QUARTER CIRCLE
QCV	QUICK COUPLING VALVE

R

R	RADIUS
RCP	REINFORCED CONCRETE PIPE
RCV	REMOTE CONTROL VALVE
RCVM	REMOTE CONTROL VALVE (MASTER)
RCVMF	REMOTE CONTROL VALVE (MASTER) W/FLOW SENSOR
RCVP	REMOTE CONTROL VALVE W/PRESSURE REGULATOR
RCW	RECYCLED WATER
RECP	ROLLED EROSION CONTROL PRODUCT
REQ	REQUIRED
RICS	REMOTE IRRIGATION CONTROL SYSTEM
R/W	RIGHT OF WAY

S

S	SLIP
SCH	SCHEDULE
SF	STATE-FURNISHED
Shld	SHOULDER
Sq	SQUARE
SST	SIDE STRIP
Sta	STATION
Std	STANDARD
SW	SIDEWALK/SOUND WALL

T

T	THIRD CIRCLE/THREAD
TLS	TRUCK LOADING STANDPIPE
TQ	THREE QUARTER CIRCLE
TRM	TURF REINFORCEMENT MAT
TT	TWO-THIRDS CIRCLE
TWSA	TREE WELL SPRINKLER ASSEMBLY
Typ	TYPICAL

U

UG	UNDERGROUND

W

W	WIDTH
W/	WITH
WM	WATER METER
WS	WYE STRAINER
WSA	WYE STRAINER ASSEMBLY
WSP	WELDED STEEL PIPE
WWM	WELDED WIRE MESH

NOTE:

For additional abbreviations, see Standard Plans A10A and A10B.

STATE OF CALIFORNIA
DEPARTMENT OF TRANSPORTATION

LANDSCAPE AND EROSION CONTROL ABBREVIATIONS

NO SCALE

RSP H1 DATED JULY 19, 2013 SUPERSEDES STANDARD PLAN H1
DATED MAY 20, 2011 - PAGE 218 OF THE STANDARD PLANS BOOK DATED 2010.

REVISED STANDARD PLAN RSP H1

2010 REVISED STANDARD PLAN RSP H1

6-28-13

Dist	COUNTY	ROUTE	POST MILES TOTAL PROJECT	SHEET No.	TOTAL SHEETS
09	Mno	395	52.3/R53.7	60	69

REGISTERED CIVIL ENGINEER

July 19, 2013
PLANS APPROVAL DATE

REGISTERED PROFESSIONAL ENGINEER
Gurinderpal Bhullar
No. C48815
Exp. 9-30-14
CIVIL
STATE OF CALIFORNIA

THE STATE OF CALIFORNIA OR ITS OFFICERS OR AGENTS SHALL NOT BE RESPONSIBLE FOR THE ACCURACY OR COMPLETENESS OF SCANNED COPIES OF THIS PLAN SHEET.

TO ACCOMPANY PLANS DATED _____

TABLE 1

TAPER LENGTH CRITERIA AND CHANNELIZING DEVICE SPACING

SPEED (S)	MINIMUM TAPER LENGTH * FOR WIDTH OF OFFSET 12 FEET (W)				MAXIMUM CHANNELIZING DEVICE SPACING		
					X	Y	Z **
	TANGENT 2L	MERGING L	SHIFTING L/2	SHOULDER L/3	TAPER	TANGENT	CONFLICT
mph	ft	ft	ft	ft	ft	ft	ft
20	160	80	40	27	20	40	10
25	250	125	63	42	25	50	12
30	360	180	90	60	30	60	15
35	490	245	123	82	35	70	17
40	640	320	160	107	40	80	20
45	1080	540	270	180	45	90	22
50	1200	600	300	200	50	100	25
55	1320	660	330	220	55	110	27
60	1440	720	360	240	60	120	30
65	1560	780	390	260	65	130	32
70	1680	840	420	280	70	140	35

* - For other offsets, use the following merging taper length formula for L:
For speed of 40 mph or less, $L = WS^2/60$
For speed of 45 mph or more, $L = WS$

Where: L = Taper length in feet
W = Width of offset in feet
S = Posted speed limit, off-peak 85th-percentile speed prior to work starting, or the anticipated operating speed in mph

** - Use for taper and tangent sections where there are no pavement markings or where there is a conflict between existing pavement markings and channelizers (CA).

TABLE 2

LONGITUDINAL BUFFER SPACE AND FLAGGER STATION SPACING

SPEED *	Min D **	DOWNGRADE Min D ***		
		-3%	-6%	-9%
mph	ft	ft	ft	ft
20	115	116	120	126
25	155	158	165	173
30	200	205	215	227
35	250	257	271	287
40	305	315	333	354
45	360	378	400	427
50	425	446	474	507
55	495	520	553	593
60	570	598	638	686
65	645	682	728	785
70	730	771	825	891

* - Speed is posted speed limit, off-peak 85th-percentile speed prior to work starting, or the anticipated operating speed in mph

** - Longitudinal buffer space or flagger station spacing

*** - Use on sustained downgrade steeper than -3 percent and longer than 1 mile.

TABLE 3

ADVANCE WARNING SIGN SPACING

ROAD TYPE	DISTANCE BETWEEN SIGNS *		
	A	B	C
	ft	ft	ft
URBAN - 25 mph OR LESS	100	100	100
URBAN - MORE THAN 25 mph TO 40 mph	250	250	250
URBAN - MORE THAN 40 mph	350	350	350
RURAL	500	500	500
EXPRESSWAY / FREEWAY	1000	1500	2640

* - The distances are approximate, are intended for guidance purposes only, and should be applied with engineering judgment. These distances should be adjusted by the Engineer for field conditions, if necessary, by increasing or decreasing the recommmended distances.

STATE OF CALIFORNIA
DEPARTMENT OF TRANSPORTATION

TRAFFIC CONTROL SYSTEM TABLES FOR LANE AND RAMP CLOSURES

NO SCALE

RSP T9 DATED JULY 19, 2013 SUPERSEDES RSP T9 DATED APRIL 19, 2013 THAT SUPPLEMENTS THE STANDARD PLANS BOOK DATED 2010.

REVISED STANDARD PLAN RSP T9

2010 REVISED STANDARD PLAN RSP T9

4-30-13

Dist	COUNTY	ROUTE	POST MILES TOTAL PROJECT	SHEET No.	TOTAL SHEETS
09	Mno	395	52.3/R53.7	61	69

REGISTERED CIVIL ENGINEER

April 19, 2013
PLANS APPROVAL DATE

REGISTERED PROFESSIONAL ENGINEER
Gurinderpal Bhullar
No. C48815
Exp. 9-30-14
CIVIL
STATE OF CALIFORNIA

THE STATE OF CALIFORNIA OR ITS OFFICERS OR AGENTS SHALL NOT BE RESPONSIBLE FOR THE ACCURACY OR COMPLETENESS OF SCANNED COPIES OF THIS PLAN SHEET.

TO ACCOMPANY PLANS DATED _____

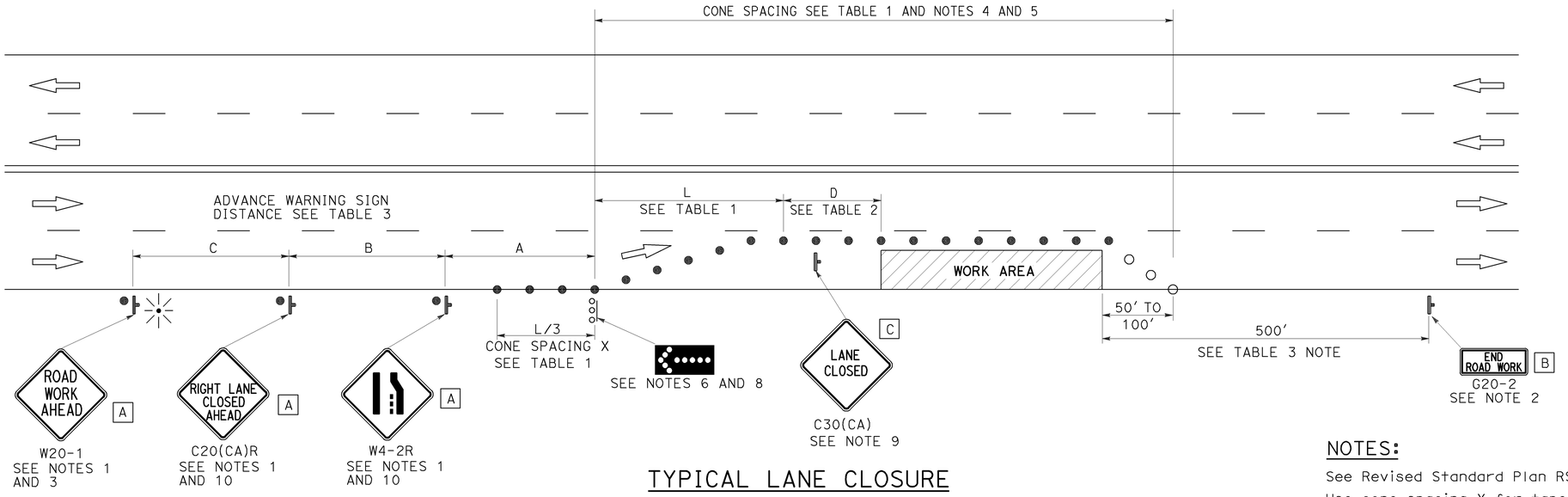

TYPICAL LANE CLOSURE

NOTES:

See Revised Standard Plan RSP T9 for tables.

Use cone spacing X for taper segment, Y for tangent segment or Z for conflict situations, as approriate, per Table 1, unless X, Y, or Z cone spacing is shown on this sheet.

Unless otherwise specified in the special provisions, all temporary warning signs shall have black legend on fluorescent orange background.

California codes are designated by (CA). Otherwise, Federal (MUTCD) codes are shown.

NOTES:

1. Each advance warning sign shall be equipped with at least two flags for daytime closure. Each flag shall be at least 16" x 16" in size and shall be orange or fluorescent red-orange in color. Flashing beacons shall be placed at the locations indicated for lane closure during hours of darkness.
2. A G20-2 "END ROAD WORK" sign, as appropriate, shall be placed at the end of the lane closure unless the end of work area is obvious, or ends within a larger project's limits.
3. If the W20-1 sign would follow within 2000' of a stationary W20-1 or G20-1 "ROAD WORK NEXT _____ MILES", use a C20(CA) sign for the first advance warning sign.
4. All cones used for lane closures during the hours of darkness shall be fitted with retroreflective bands (or sleeves) as specified in the specifications.
5. Portable delineators, placed at one-half the spacing indicated for traffic cones, may be used instead of cones for daytime closures only.
6. Flashing arrow sign shall be either Type I or Type II.
7. For approach speeds over 50 mph, use the "Traffic Control System for Lane Closure On Freeways And Expressways" plan for lane closure details and requirements.
8. A minimum 1500' of sight distance shall be provided where possible for vehicles approaching the first flashing arrow sign. Lane closures shall not begin at the top of crest vertical curve or on a horizontal curve.
9. Place a C30(CA) sign every 2000' throughout length of lane closure.
10. Median lane closures shall conform to the details as shown except that C20(CA)L and W4-2L signs shall be used.
11. At least one person shall be assigned to provide full time maintenance of traffic control devices for lane closure unless, otherwise directed by the Engineer.

LEGEND

- TRAFFIC CONE
- TRAFFIC CONE (OPTIONAL TAPER)
- TEMPORARY TRAFFIC CONTROL SIGN
- FLASHING ARROW SIGN (FAS)
- FAS SUPPORT OR TRAILER
- PORTABLE FLASHING BEACON

SIGN PANEL SIZE (Min)

A	48" x 48"
B	36" x 18"
C	30" x 30"

STATE OF CALIFORNIA
DEPARTMENT OF TRANSPORTATION

TRAFFIC CONTROL SYSTEM FOR LANE CLOSURE ON MULTILANE CONVENTIONAL HIGHWAYS

NO SCALE

RSP T11 DATED APRIL 19, 2013 SUPERSEDES STANDARD PLAN T11
DATED MAY 20, 2011 - PAGE 239 OF THE STANDARD PLANS BOOK DATED 2010.

REVISED STANDARD PLAN RSP T11

2010 REVISED STANDARD PLAN RSP T11

4-2-13

Dist	COUNTY	ROUTE	POST MILES TOTAL PROJECT	SHEET No.	TOTAL SHEETS
09	Mno	395	52.3/R53.7	62	69

Devinder Singh
REGISTERED CIVIL ENGINEER

October 17, 2014
PLANS APPROVAL DATE

REGISTERED PROFESSIONAL ENGINEER
Devinder Singh
No. C50470
Exp. 6-30-15
CIVIL
STATE OF CALIFORNIA

THE STATE OF CALIFORNIA OR ITS OFFICERS OR AGENTS SHALL NOT BE RESPONSIBLE FOR THE ACCURACY OR COMPLETENESS OF SCANNED COPIES OF THIS PLAN SHEET.

TO ACCOMPANY PLANS DATED _____

NOTES:

See Revised Standard Plan RSP T9 for tables.

Use cone spacing X for taper segment, Y for tangent segment or Z for conflict situations, as approriate, per Table 1, unless X, Y, or Z cone spacing is shown on this sheet.

Unless otherwise specified in the special provisions, all temporary warning signs shall have black legend on fluorescent orange background.

California codes are designated by (CA). Otherwise, Federal (MUTCD) codes are shown.

TYPICAL LANE CLOSURE WITH REVERSIBLE CONTROL

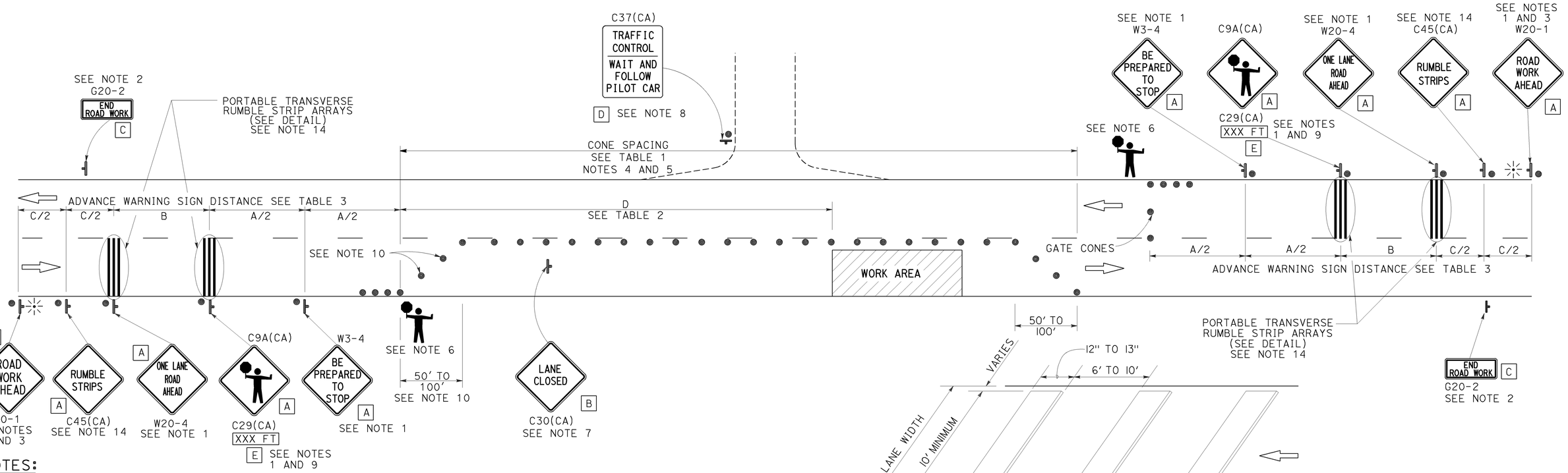

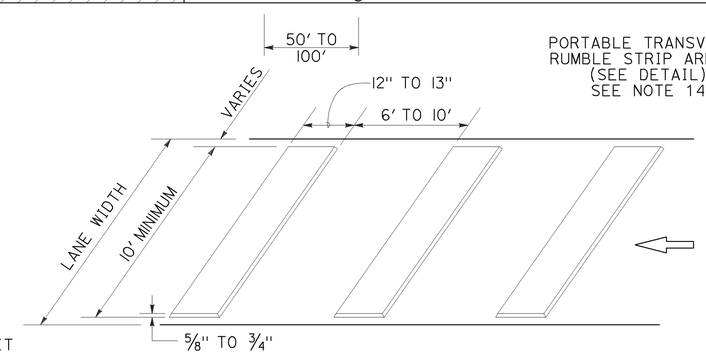

PORTABLE TRANSVERSE RUMBLE STRIP ARRAY DETAIL

NOTES:

1. Each advance warning sign in each direction of travel shall be equipped with at least two flags for daytime closure. Each flag shall be at least 16" x 16" in size and shall be orange or fluorescent red-orange in color. Flashing beacons shall be placed at the locations indicated for lane closure during hours of darkness.
2. A G20-2 "END ROAD WORK" sign, as appropriate, shall be placed at the end of the lane control unless the end of work area is obvious, or ends within a larger project's limits.
3. If the W20-1 sign would follow within 2000' of a stationary W20-1 or G20-1 "ROAD WORK NEXT _____ MILES", use a W20-4 sign for the first advance warning sign.
4. All cones used for lane closures during the hours of darkness shall be fitted with retroreflective bands (or sleeves) as specified in the specifications.
5. Portable delineators, placed at one-half the spacing indicated for traffic cones, may be used instead of cones for daytime closures only.
6. Additional advance flaggers may be required. Flagger should stand in a conspicuous place, be visible to approaching traffic as well as approaching vehicles after the first vehicle has stopped. During the hours of darkness, the flagging-station and flagger shall be illuminated and clearly visible to approaching traffic. The illumination footprint of the lighting on the ground shall be at least 20' in diameter. Place a minimum of four cones at 50' intervals in advance of flagger station as shown.
7. Place C30(CA) "LANE CLOSED" sign at 500' to 1000' intervals throughout extended work areas. They are optional if the work area is visible from the flagger station.
8. When a pilot car is used, place a C37(CA) "TRAFFIC CONTROL-WAIT AND FOLLOW PILOT CAR" sign with black legend on white background at all intersections, driveways and alleys without a flagger within traffic control area. Signs shall be clean and visible at all times. Where traffic can not be effectively self-regulated, at least one flagger shall be used at each intersection within traffic control area.
9. An optional C29(CA) sign may be placed below the C9A(CA) sign.
10. Either traffic cones or barricades shall be placed on the taper. Barricades shall be Type I, II, or III.
11. The color of the portable transverse rumble strips shall be black or orange. Use 2 arrays, each array shall consist of 3 rumble strips.
12. Portable transverse rumble strips shall not be placed on sharp horizontal or vertical curves nor shall they be placed through pedestrian crossings.
13. If the portable transverse rumble strips become out of alignment (skewed) by more than 6 inches, measured from one end to the other, they shall be readjusted to bring the placement back to the original location.
14. Portable transverse rumble strips are not required if any one of the following conditions is satisfied:
    A. Work duration occupies a location for four hours or less
    B. Posted speed limit is below 45 MPH
    C. Work is of emergency nature
    D. Work zone is in snow or icy weather conditions

LEGEND

- TRAFFIC CONE
- TEMPORARY TRAFFIC CONTROL SIGN
- PORTABLE FLASHING BEACON
- FLAGGER

SIGN PANEL SIZE (Min)

A	48" x 48"
B	30" x 30"
C	36" x 18"
D	36" x 42"
E	20" x 7"

STATE OF CALIFORNIA
DEPARTMENT OF TRANSPORTATION

TRAFFIC CONTROL SYSTEM FOR LANE CLOSURE ON TWO LANE CONVENTIONAL HIGHWAYS

NO SCALE

RSP T13 DATED OCTOBER 17, 2014 SUPERSEDES RSP T13 DATED JULY 18, 2014 AND RSP T13 DATED APRIL 19, 2013 AND STANDARD PLAN T13 DATED MAY 20, 2011 - PAGE 241 OF THE STANDARD PLANS BOOK DATED 2010.

REVISED STANDARD PLAN RSP T13

2010 REVISED STANDARD PLAN RSP T13

9-26-14

Dist	COUNTY	ROUTE	POST MILES TOTAL PROJECT	SHEET No.	TOTAL SHEETS
09	Mno	395	52.3/R53.7	63	69

Theresa Gabriel
REGISTERED ELECTRICAL ENGINEER

July 19, 2013
PLANS APPROVAL DATE

REGISTERED PROFESSIONAL ENGINEER Theresa Aziz Gabriel No. E15129 Exp. 6-30-14 ELECTRICAL STATE OF CALIFORNIA

THE STATE OF CALIFORNIA OR ITS OFFICERS OR AGENTS SHALL NOT BE RESPONSIBLE FOR THE ACCURACY OR COMPLETENESS OF SCANNED COPIES OF THIS PLAN SHEET.

TO ACCOMPANY PLANS DATED _____

LEGEND:

AB	ABANDON. IF APPLIED TO CONDUIT, REMOVE CONDUCTORS
BC	INSTALL PULL BOX IN EXISTING CONDUIT RUN
BP	PEDESTRIAN BARRICADE, TYPE AS INDICATED ON PLAN
CB	INSTALL CONDUIT INTO EXISTING PULL BOX
CC	CONNECT NEW AND EXISTING CONDUIT. REMOVE EXISTING CONDUCTORS AND INSTALL CONDUCTORS AS INDICATED
CF	CONDUIT TO REMAIN FOR FUTURE USE. REMOVE CONDUCTORS. INSTALL PULL TAPE
DH	DETECTOR HANDHOLE
FA	FOUNDATION TO BE ABANDONED
IS	INSTALL SIGN ON SIGNAL MAST ARM
NS	NO SLIP BASE ON STANDARD
PEC	PHOTOELECTRIC CONTROL
PEU	PHOTOELECTRIC UNIT
RC	EQUIPMENT OR MATERIAL TO BE REMOVED AND BECOME THE PROPERTY OF THE CONTRACTOR
RE	REMOVE ELECTROLIER, FUSES AND BALLAST. TAPE ENDS OF CONDUCTORS
RL	RELOCATE EQUIPMENT
RR	REMOVE AND REUSE EQUIPMENT
RS	REMOVE AND SALVAGE EQUIPMENT
SC	SPLICE NEW TO EXISTING CONDUCTORS
SD	SERVICE DISCONNECT
TSP	TELEPHONE SERVICE POINT

ABBREVIATIONS

APS	ACCESSIBLE PEDESTRIAN SIGNAL
BBS	BATTERY BACKUP SYSTEM
BC	BOLT CIRCLE
BPB	BICYCLE PUSH BUTTON
C	CONDUIT
CB	CIRCUIT BREAKER
CCTV	CLOSED CIRCUIT TELEVISION
Ckt	CIRCUIT
CMS	CHANGEABLE MESSAGE SIGN
Ctid	CALTRANS IDENTIFICATION
Comm	COMMUNICATION
DLC	LOOP DETECTOR LEAD-IN CABLE
EMS	EXTINGUISHABLE MESSAGE SIGN
EVUC	EMERGENCY VEHICLE UNIT CABLE
EVUD	EMERGENCY VEHICLE UNIT DETECTOR
FB	FLASHING BEACON
FBCA	FLASHING BEACON CONTROL ASSEMBLY
FBS	FLASHING BEACON WITH SLIP BASE
FO	FIBER OPTIC
G	EQUIPMENT GROUNDING CONDUCTOR
GB	GROUND BUS
GFCI	GROUND FAULT CIRCUIT INTERRUPTER
HAR	HIGHWAY ADVISORY RADIO
Hex	HEXAGONAL
HPS	HIGH PRESSURE SODIUM
IISNS	INTERNALLY ILLUMINATED STREET NAME SIGN
ISL	INDUCTION SIGN LIGHTING
LED	LIGHT EMITTING DIODE
LMA	LUMINAIRE MAST ARM
LPS	LOW PRESSURE SODIUM
Ltg	LIGHTING
Lum	LUMINAIRE
M	METERED
MAT	MAST ARM MOUNTING TOP ATTACHMENT
MAS	MAST ARM MOUNTING SIDE ATTACHMENT
M/M	MULTIPLE TO MULTIPLE TRANSFORMER
Mtg	MOUNTING
MV	MERCURY VAPOR LIGHTING FIXTURE
MVDS	MICROWAVE VEHICLE DETECTION SYSTEM
N	NEUTRAL (GROUNDED CONDUCTOR)
NB	NEUTRAL BUS
NC	NORMALLY CLOSE
NO	NORMALLY OPEN
P	CIRCUIT BREAKER'S POLE
PB	PULL BOX
PBA	PUSH BUTTON ASSEMBLY
PEC	PHOTOELECTRIC CONTROL
Ped	PEDESTRIAN
PEU	PHOTOELECTRIC UNIT
PT	CONDUIT WITH PULL TAPE
RE	RELOCATED EQUIPMENT
RM	RAMP METERING
RWIS	ROADSIDE WEATHER INFORMATION SYSTEM
SB	SLIP BASE
SIC	SIGNAL INTERCONNECT CABLE
Sig	SIGNAL
SMA	SIGNAL MAST ARM
SNS	STREET NAME SIGN
SP	SERVICE POINT
TDC	TELEPHONE DEMARCATION CABINET
TMS	TRAFFIC MONITORING STATION
TOS	TRAFFIC OPERATIONS SYSTEM
Veh	VEHICLE
VIVDS	VIDEO IMAGE VEHICLE DETECTION SYSTEM
WIM	WEIGH-IN-MOTION
Xfmr	TRANSFORMER

SOFFIT AND WALL MOUNTED LUMINAIRES

PENDANT, 70 W HPS UNLESS OTHERWISE SPECIFIED

FLUSH, 70 W HPS UNLESS OTHERWISE SPECIFIED

WALL SURFACE, 70 W HPS UNLESS OTHERWISE SPECIFIED

EXISTING SOFFIT OR WALL LUMINAIRE TO REMAIN UNMODIFIED

EXISTING SOFFIT OR WALL LUMINAIRE TO BE MODIFIED AS SPECIFIED

NOTE:

Arrow indicates "street side" of luminaire.

COMMONLY USED SYMBOLS FOR UNITED STATES CUSTOMARY UNITS OF MEASUREMENT:

SYMBOL USED	DEFINITIONS
Ω	OHMS
min	MINUTE
s	SECOND
bps	BITS PER SECOND
Bps	BYTES PER SECOND
A	AMPERE
V	VOLT
V(dc)	VOLT (DIRECT CURRENT)
V(ac)	VOLT (ALTERNATING CURRENT)
FC	FOOT - CANDLE
W	WATTS
VA	VOLT-AMPERE
M	MEGA
k	KILO
m	MILLI
μ	MICRO
P	PICO
Hz	HERTZ

MISCELLANEOUS ELECTROLIERS

NEW	EXISTING	
		LUMINAIRE ON WOOD POLE
		NON-STANDARD ELECTROLIER (SEE PROJECT NOTES OR PROJECT PLANS)
		CITY ELECTROLIER
		ELECTROLIER FOUNDATION (FUTURE INSTALLATION)

NOTES:

1. HPS luminaires shall be 310 W HPS when installed on Type 21, 21D, 30, 31 and 32 Standards, unless otherwise specified. HPS luminaires shall be 200 W when installed on other type standards or poles, unless otherwise specified.
2. LED luminaires shall be 235 W when installed on Type 21, 21D, 30, 31 and 32 Standards, unless otherwise specified. LED luminaires shall be 165 W when installed on other type standards or poles, unless otherwise specified.
3. Luminaires shall be the cutoff type, ANSI Type III medium cutoff lighting distribution, unless otherwise specified.

STANDARD ELECTROLIER

NEW	EXISTING	STANDARD TYPE
		15
		15D
		15 STRUCTURE
		15D STRUCTURE
		21
		21D
		21 STRUCTURE
		21D STRUCTURE
		30
		31
		32

STATE OF CALIFORNIA
DEPARTMENT OF TRANSPORTATION

ELECTRICAL SYSTEMS (LEGEND AND ABBREVIATIONS)

NO SCALE

RSP ES-1A DATED JULY 19, 2013 SUPERSEDES STANDARD PLAN ES-1A DATED MAY 20, 2011 - PAGE 425 OF THE STANDARD PLANS BOOK DATED 2010.

REVISED STANDARD PLAN RSP ES-1A

2010 REVISED STANDARD PLAN RSP ES-1A

7-15-13

Dist	COUNTY	ROUTE	POST MILES TOTAL PROJECT	SHEET No.	TOTAL SHEETS
09	Mno	395	52.3/R53.7	64	69

Theresa Gabriel
REGISTERED ELECTRICAL ENGINEER

July 19, 2013
PLANS APPROVAL DATE

REGISTERED PROFESSIONAL ENGINEER
Theresa Aziz Gabriel
No. E15129
Exp. 6-30-14
ELECTRICAL
STATE OF CALIFORNIA

THE STATE OF CALIFORNIA OR ITS OFFICERS OR AGENTS SHALL NOT BE RESPONSIBLE FOR THE ACCURACY OR COMPLETENESS OF SCANNED COPIES OF THIS PLAN SHEET.

TO ACCOMPANY PLANS DATED _____

CONDUIT

NEW	EXISTING	
		LIGHTING CONDUIT, UNLESS OTHERWISE INDICATED OR NOTED
		TRAFFIC SIGNAL CONDUIT
C	c	COMMUNICATION CONDUIT
T	t	TELEPHONE CONDUIT
F	f	FIRE ALARM CONDUIT
FO	fo	FIBER OPTIC CONDUIT
		CONDUIT TERMINATION
R	r	CONDUIT RISER ATTACHED TO THE STRUCTURE OR SERVICE POLE

SERVICE EQUIPMENT

NEW	EXISTING	
OH	oh	OVERHEAD LINES
U	U	WOOD POLE, "U" INDICATES UTILITY OWNED
		POLE GUY WITH ANCHOR
		UTILITY TRANSFORMER - GROUND MOUNTED
III	III	SERVICE EQUIPMENT ENCLOSURE TYPE. DOOR INDICATES FRONT OF ENCLOSURE
T	t	TELEPHONE DEMARCATION CABINET

POLE-MOUNTED SERVICE DESIGNATION

TYPE H SERVICE, 28'-10" — TYPE OF INSTALLATION AND POLE HEIGHT ABOVE GRADE

FLASHING BEACON

NEW	EXISTING	
R	R	FLASHING BEACON (ONE VEHICLE SIGNAL HEAD WITH BACKPLATE AND VISOR) "R" INDICATES RED INDICATION, "Y" INDICATES YELLOW INDICATION
Y Y	Y Y	FLASHING BEACON WITH TYPE 15-FBS STANDARD AND A SIGN.
R R	R R	FLASHING BEACON WITH TYPES 9, 9A OR 9B SIGN UNLESS OTHERWISE SPECIFIED OR INDICATED

SIGNAL EQUIPMENT

NEW	EXISTING	
C	C	PEDESTRIAN SIGNAL HEAD "C" INDICATES COUNTDOWN PEDESTRIAN HEAD
		PUSH BUTTON ASSEMBLY POST
		PEDESTRIAN BARRICADE
		VEHICLE SIGNAL HEAD (WITH BACKPLATE AND 3-SECTIONS: RED, YELLOW AND GREEN)
		VEHICLE SIGNAL HEAD WITH ANGLE VISOR
PV	PV	MODIFICATIONS OF BASIC SYMBOL: "L" INDICATES ALL NON-ARROW SECTIONS LOUVERED "LG" INDICATES LOUVERED GREEN SECTION ONLY "PV" INDICATES ALL 12" SECTIONS PROGRAMMED VISIBILITY "8" INDICATES ALL 8" SECTIONS (ONLY WHEN SPECIFIED)
		VEHICLE SIGNAL HEAD CONSISTING OF RED, YELLOW AND GREEN LEFT ARROW SECTIONS
		VEHICLE SIGNAL HEAD CONSISTING OF RED AND YELLOW SECTIONS WITH AN UP GREEN ARROW SECTION
		VEHICLE SIGNAL HEAD (5 SECTION) CONSISTING OF RED, YELLOW AND GREEN SECTIONS WITH YELLOW AND GREEN RIGHT ARROW SECTIONS
		TYPE 15TS STANDARD WITH VEHICLE SIGNAL HEAD AND LUMINAIRE
		TYPE 21TS STANDARD WITH VEHICLE SIGNAL HEAD AND LUMINAIRE
		STANDARD WITH LUMINAIRE AND SIGNAL MAST ARMS AND ATTACHED VEHICLE SIGNAL HEADS
		TYPE 1 STANDARD WITH ATTACHED VEHICLE SIGNAL HEADS
		STANDARD WITH A SIGNAL MAST ARM, ATTACHED VEHICLE SIGNAL HEADS AND INTERNALLY ILLUMINATED STREET NAME SIGN
		CONTROLLER ASSEMBLY. DOOR INDICATES FRONT OF CABINET

SIGNAL EQUIPMENT Cont

NEW	EXISTING	
		GUARD POST
		TYPE 1 STANDARD WITH RAMP METERING SIGN
		OPTICAL DETECTOR FOR THE EMERGENCY VEHICLE DETECTION SYSTEM

NOTES:

1. All signal sections shall be 12" unless shown otherwise.
2. Signal heads shall be provided with backplates unless shown otherwise.

ILLUMINATED OVERHEAD SIGN

NEW	EXISTING	
		SINGLE POST, SINGLE ILLUMINATED SIGN, BALANCED BUTTERFLY
		SINGLE POST, DOUBLE ILLUMINATED SIGN, BALANCED BUTTERFLY
		SINGLE POST, SINGLE ILLUMINATED SIGN, FULL CANTILEVER
		DOUBLE POST, SINGLE ILLUMINATED SIGN
		SINGLE ILLUMINATED SIGN MOUNTED ON STRUCTURE
		DOUBLE POST, SINGLE ILLUMINATED SIGN WITH ELECTROLIER

STATE OF CALIFORNIA
DEPARTMENT OF TRANSPORTATION

ELECTRICAL SYSTEMS (LEGEND AND ABBREVIATIONS)

NO SCALE

RSP ES-1B DATED JULY 19, 2013 SUPERSEDES STANDARD PLAN ES-1B DATED MAY 20, 2011 - PAGE 426 OF THE STANDARD PLANS BOOK DATED 2010.

REVISED STANDARD PLAN RSP ES-1B

2010 REVISED STANDARD PLAN RSP ES-1B

7-15-13

Dist	COUNTY	ROUTE	POST MILES TOTAL PROJECT	SHEET No.	TOTAL SHEETS
09	Mno	395	52.3/R53.7	65	69

Theresa Gabriel
REGISTERED ELECTRICAL ENGINEER

July 19, 2013
PLANS APPROVAL DATE

REGISTERED PROFESSIONAL ENGINEER
Theresa Aziz Gabriel
No. E15129
Exp. 6-30-14
ELECTRICAL
STATE OF CALIFORNIA

THE STATE OF CALIFORNIA OR ITS OFFICERS OR AGENTS SHALL NOT BE RESPONSIBLE FOR THE ACCURACY OR COMPLETENESS OF SCANNED COPIES OF THIS PLAN SHEET.

TO ACCOMPANY PLANS DATED _____

EQUIPMENT IDENTIFICATION

ILLUMINATED SIGN IDENTIFICATION NUMBER:

SIGN No. 12345
10 ISL SCI 1.0

- SIGN NUMBER - PLACE ON POST OR STRUCTURE
- TRANSFORMER RATING (kVA)
- LIGHTING CONTROL TYPE
- NUMBER AND TYPE OF FIXTURES

} DO NOT PLACE ON STANDARD OR STRUCTURE

ELECTROLIER OR EQUIPMENT IDENTIFICATION NUMBER:

12345 - 15'-0"

- MAST ARM LENGTH, IF SHOWN. DO NOT PLACE ON STANDARD OR STRUCTURE
- EQUIPMENT NUMBER - PLACE ON STANDARD OR STRUCTURE. EXISTING EQUIPMENT NUMBERS ARE SHOWN IN PARENTHESIS

CONDUIT AND CONDUCTOR IDENTIFICATION:

1½"C, 2#10, 15#14, 2 DLC, 12P#18 (PAIR)

- NUMBER AND SIZE OF CONDUCTORS AND CABLES
- SIZE OF CONDUIT IN INCHES

ø1, ø2, ø2P, etc.	TRAFFIC PHASE IDENTIFICATION FOR SIGNAL FACES, DETECTORS AND PHASE DIAGRAMS
1 2 3	LEGEND NUMBERS
A B C	EQUIPMENT, SIGNAL POLES, INSTALLATION OR ITEMS
1 2 3	CONDUIT RUN NUMBERS

SIGNAL AND LIGHTING STANDARD (TYPICAL DESIGNATION):

19A - 3 - 100

- WIND VELOCITY = 100 mph
- CASE 3 ARM LOADING
- STANDARD TYPE
- STANDARD PLAN SHEET NUMBER
- DETAIL, NUMBER, SECTION, TYPE OR ELEVATION

MISCELLANEOUS EQUIPMENT

NEW	EXISTING	
CMS	cms	CHANGEABLE MESSAGE SIGN
		CLOSED CIRCUIT TELEVISION CAMERA
		HIGHWAY ADVISORY RADIO POLE AND ANTENNA
EMS	ems	EXTINGUISHABLE MESSAGE SIGN
M V	m v	DETECTION DEVICE M = MICROWAVE SENSOR V = VIDEO IMAGE SENSOR

WIRING DIAGRAM LEGEND

- EXTERNAL CONDUCTOR
- CONDUCTOR OR BUS
- TIE POINT
- CONTACTOR COIL
- CONTACTOR, NO CONTACT
- TERMINAL BLOCKS
- CONTACTOR, NC CONTACT
- ENCLOSURE BOND
- GROUNDING ELECTRODE
- CIRCUIT BREAKER
- RECEPTACLE

PULL BOXES

NEW	EXISTING	
		PULL BOX, No. 5 UNLESS OTHERWISE INDICATED OR NOTED
3	9A(21)	PULL BOX, ADDITIONAL DESIGNATIONS OR DESCRIPTIONS

3 No. 3½ PULL BOX
5 No. 5 PULL BOX
6 No. 6 PULL BOX
7 No. 7 (CEILING PULL BOX)
8 No. 8 (PENDANT SOFFIT PULL BOX)
9 No. 9 PULL BOX
9A No. 9A PULL BOX

(C) COMMUNICATIONS PULL BOX
(E) PULL BOX WITH EXTENSION
(S) SPRINKLER CONTROL PULL BOX
(21) ANCHOR BOLTS AND CONDUIT FOR FUTURE INSTALLATION OF TYPE 21 STANDARD
(T) TRAFFIC PULL BOX

VEHICLE DETECTORS

5 J 9 U

- VEHICLE DETECTOR DESIGNATION
- U = UPPER
  L = LOWER
- SLOT NUMBER IN INPUT FILE
- INPUT FILE (I OR J)
- PHASE

NEW	EXISTING	
		TYPE A DETECTOR LOOP. OUTLINE OF SAWCUT SHOWN
		TYPE B DETECTOR LOOP. OUTLINE OF SAWCUT SHOWN
		TYPE C DETECTOR LOOP. OUTLINE OF SAWCUT SHOWN
		TYPE D DETECTOR LOOP. OUTLINE OF SAWCUT SHOWN
		TYPE E DETECTOR LOOP. OUTLINE OF SAWCUT SHOWN
		TYPE Q DETECTOR LOOP. OUTLINE OF SAWCUT SHOWN
		MAGNETIC DETECTOR
DH	dh	DETECTOR HANDHOLE
		MICROWAVE OR VIDEO DETECTION ZONE

STATE OF CALIFORNIA
DEPARTMENT OF TRANSPORTATION

ELECTRICAL SYSTEMS (LEGEND AND ABBREVIATIONS)

NO SCALE

RSP ES-1C DATED JULY 19, 2013 SUPERSEDES STANDARD PLAN ES-1C DATED MAY 20, 2011 - PAGE 427 OF THE STANDARD PLANS BOOK DATED 2010.

REVISED STANDARD PLAN RSP ES-1C

2010 REVISED STANDARD PLAN RSP ES-1C

7-11-13

Dist	COUNTY	ROUTE	POST MILES TOTAL PROJECT	SHEET No.	TOTAL SHEETS
09	Mno	395	52.3/R53.7	66	69

Theresa Gabriel
REGISTERED ELECTRICAL ENGINEER

July 19, 2013
PLANS APPROVAL DATE

REGISTERED PROFESSIONAL ENGINEER
Theresa Aziz Gabriel
No. E15129
Exp. 6-30-14
ELECTRICAL
STATE OF CALIFORNIA

THE STATE OF CALIFORNIA OR ITS OFFICERS OR AGENTS SHALL NOT BE RESPONSIBLE FOR THE ACCURACY OR COMPLETENESS OF SCANNED COPIES OF THIS PLAN SHEET.

TO ACCOMPANY PLANS DATED _____

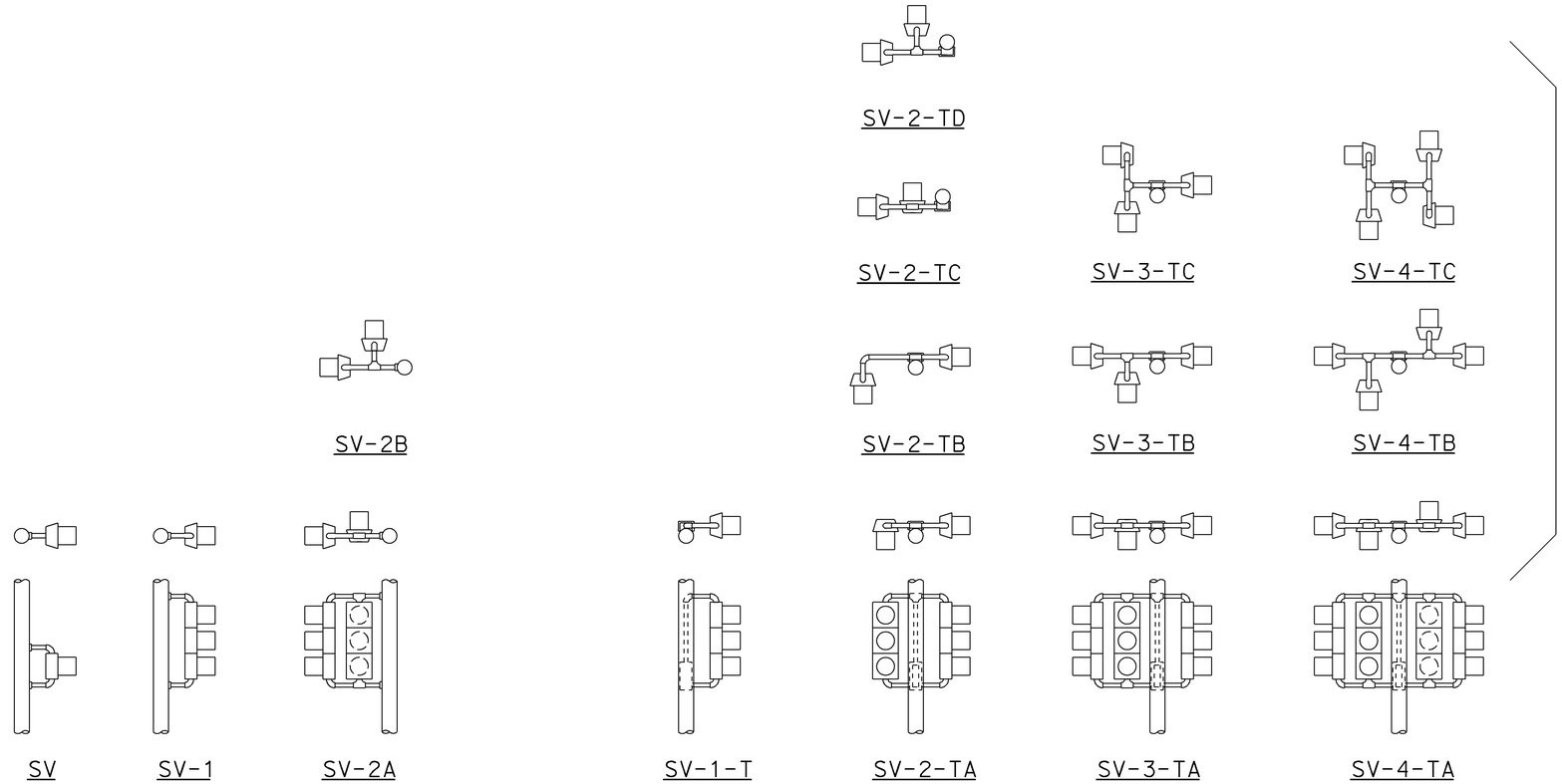

SIDE MOUNTINGS

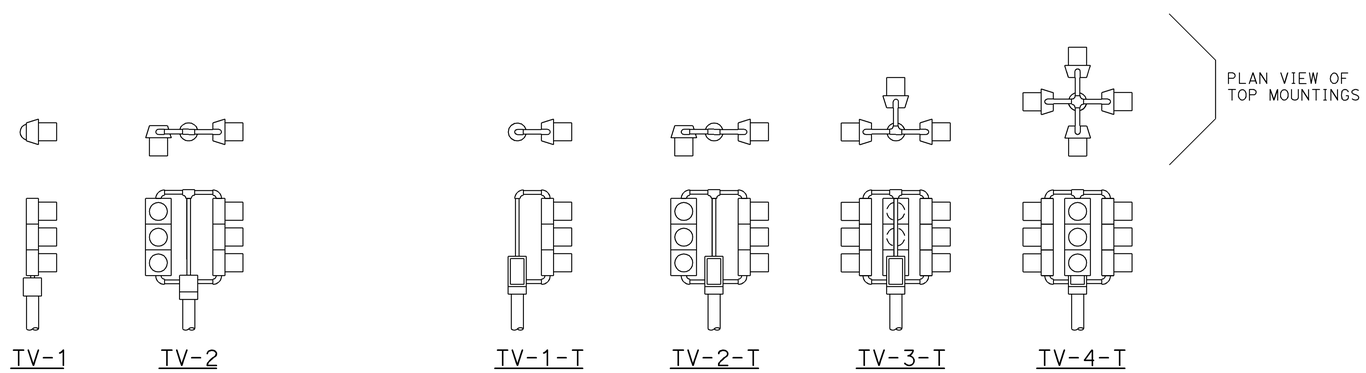

TOP MOUNTINGS

ABBREVIATIONS:

SV	SIDE MOUNTED VEHICLE SIGNALS
T	TERMINAL COMPARTMENT
TV	TOP MOUNTED VEHICLE SIGNALS
1, 2, 3, 4	NUMBER OF SIGNAL FACES (3 - SECTION, UNLESS OTHERWISE INDICATED)
A, B, C, D	CONFIGURATION OF SIGNALS

NOTES:

1. Mountings shall be oriented to provide maximum horizontal clearance to adjacent roadway.
2. Bracket arms shall be long enough to permit proper alignment of signals and backplate installation.
3. See Standard Plans ES-4D and ES-4E for attachment fitting details.

STATE OF CALIFORNIA
DEPARTMENT OF TRANSPORTATION

ELECTRICAL SYSTEMS (VEHICULAR SIGNAL HEADS AND MOUNTINGS)

NO SCALE

RSP ES-4A DATED JULY 19, 2013 SUPERSEDES STANDARD PLAN ES-4A DATED MAY 20, 2011 - PAGE 443 OF THE STANDARD PLANS BOOK DATED 2010.

REVISED STANDARD PLAN RSP ES-4A

2010 REVISED STANDARD PLAN RSP ES-4A

7-9-13

Dist	COUNTY	ROUTE	POST MILES TOTAL PROJECT	SHEET No.	TOTAL SHEETS
09	Mno	395	52.3/R53.7	67	69

Theresa Gabriel
REGISTERED ELECTRICAL ENGINEER

July 19, 2013
PLANS APPROVAL DATE

REGISTERED PROFESSIONAL ENGINEER
Theresa Aziz Gabriel
No. E15129
Exp. 6-30-14
ELECTRICAL
STATE OF CALIFORNIA

THE STATE OF CALIFORNIA OR ITS OFFICERS OR AGENTS SHALL NOT BE RESPONSIBLE FOR THE ACCURACY OR COMPLETENESS OF SCANNED COPIES OF THIS PLAN SHEET.

TO ACCOMPANY PLANS DATED _____

VISORS

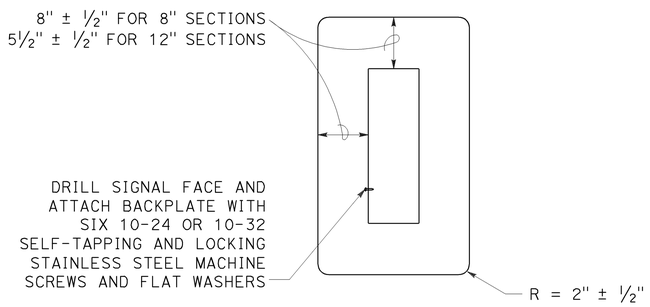

8" AND 12" SECTIONS

BACKPLATE

1/16" minimum thickness
3001-14 aluminum or plastic
when specified

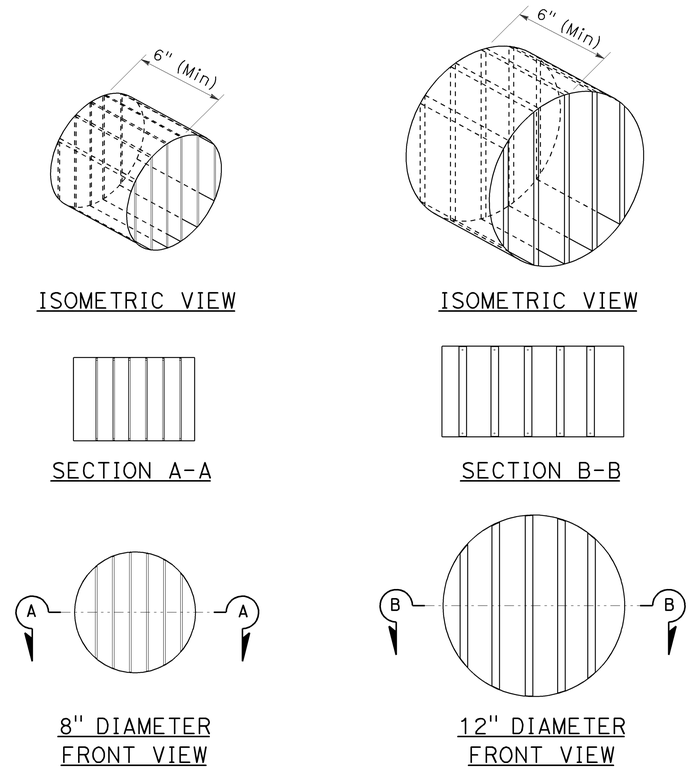

DIRECTIONAL LOUVER

Directional louvers shall be oriented as directed by the Engineer and secured in place with one plated brass machine screw and nut.

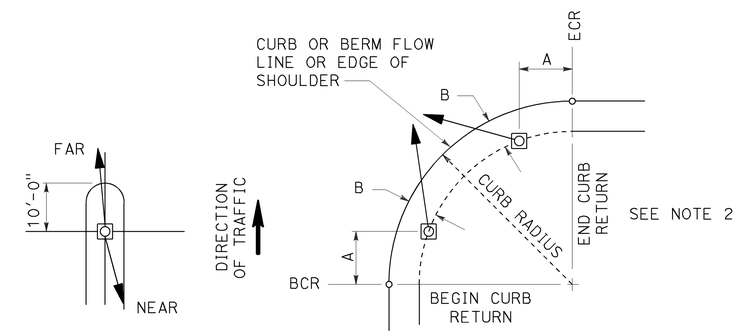

NOTES:

1. Typical signal pole placement unless dimensioned on plans.
2. For A and B dimensions, see Pole Schedule, or as directed by the Engineer.

SIGNAL STANDARD PLACEMENT DIMENSIONS AND EQUIPMENT LOCATIONS

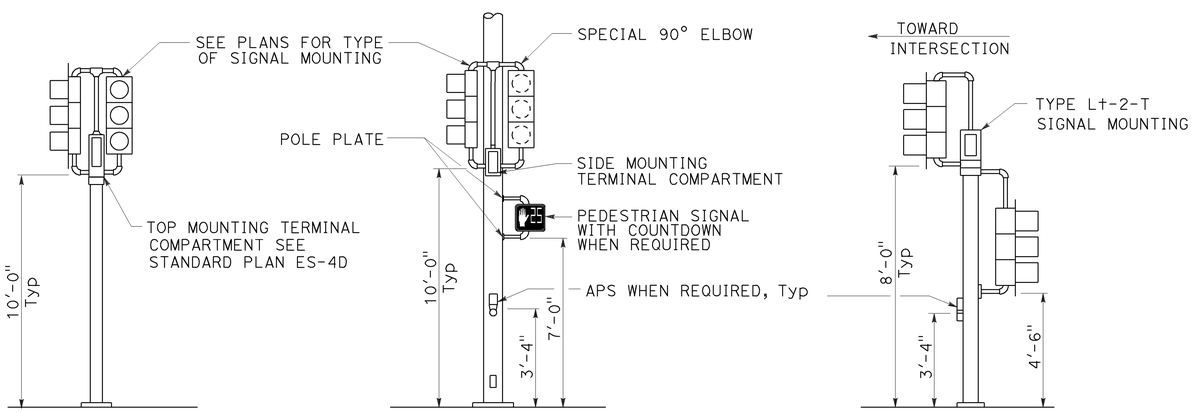

TOP MOUNTED SIGNALS (TV)
Type 1-A, 1-B, 1-C and 1-D standard as indicated on the plans

SIDE MOUNTED SIGNALS (SV AND SP)
Normally used on standards with luminaire or signal mast arm

LEFT TURN LANE SIGNAL
Type 1-A, 1-B, 1-C and 1-D standard as indicated on plans

TYPICAL SIGNAL INSTALLATIONS

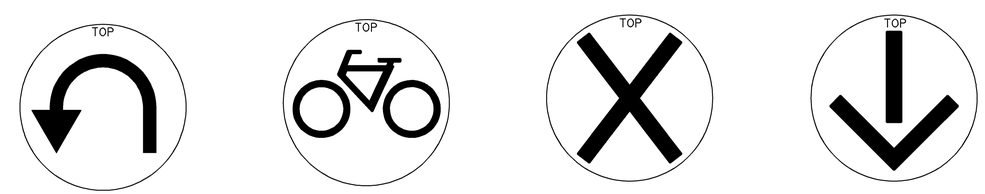

U-TURN | BICYCLE | LANE CONTROL | LANE CONTROL

SIGNAL FACES

STATE OF CALIFORNIA
DEPARTMENT OF TRANSPORTATION

ELECTRICAL SYSTEMS (VEHICULAR SIGNAL HEADS AND MOUNTINGS)

NO SCALE

RSP ES-4C DATED JULY 19, 2013 SUPERSEDES STANDARD PLAN ES-04C
DATED MAY 20, 2011 - PAGE 445 OF THE STANDARD PLANS BOOK DATED 2010.

REVISED STANDARD PLAN RSP ES-4C

2010 REVISED STANDARD PLAN RSP ES-4C

7-10-13

Dist	COUNTY	ROUTE	POST MILES TOTAL PROJECT	SHEET No.	TOTAL SHEETS
09	Mno	395	52.3/R53.7	68	69

Theresa Gabriel
REGISTERED ELECTRICAL ENGINEER

July 19, 2013
PLANS APPROVAL DATE

REGISTERED PROFESSIONAL ENGINEER
Theresa Aziz Gabriel
No. E15129
Exp. 6-30-14
ELECTRICAL
STATE OF CALIFORNIA

THE STATE OF CALIFORNIA OR ITS OFFICERS OR AGENTS SHALL NOT BE RESPONSIBLE FOR THE ACCURACY OR COMPLETENESS OF SCANNED COPIES OF THIS PLAN SHEET.

TO ACCOMPANY PLANS DATED _____

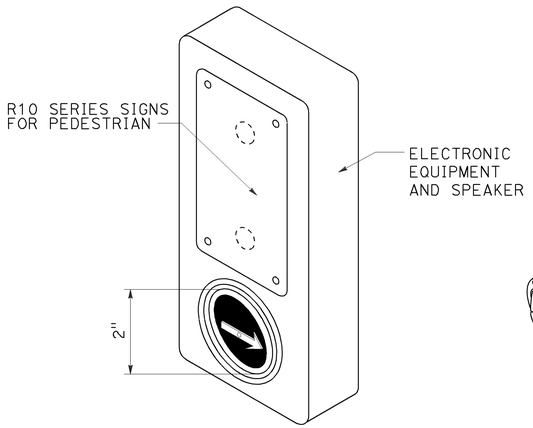

ACCESSIBLE PEDESTRIAN SIGNAL

DETAIL A
(See note 1 to 4)

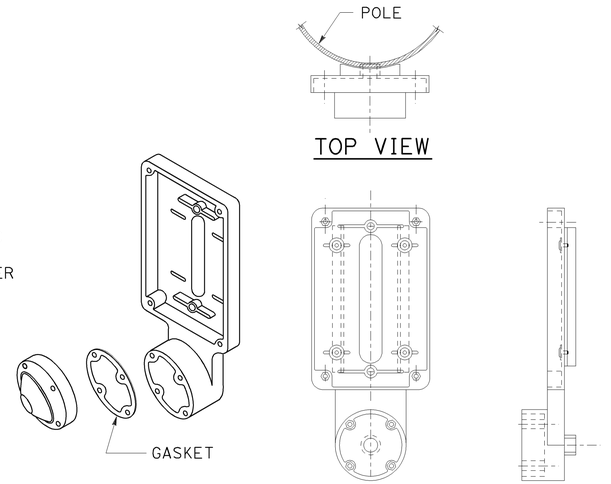

TYPE B PUSH BUTTON ASSEMBLY

DETAIL B
(See note 1 to 4)

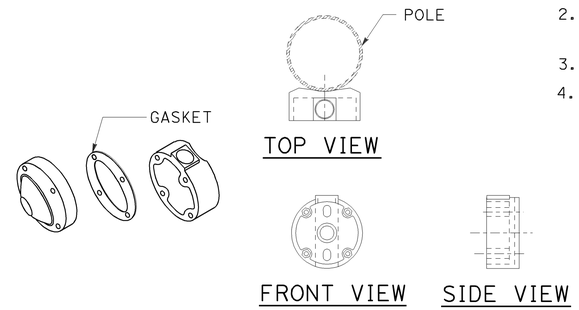

TYPE C PUSH BUTTON ASSEMBLY

DETAIL C
(See note 1 to 4)

NOTES:

1. Back casting shape to fit curvature of pole.
2. Provide cover fitting for top of post, when PBA is mounted on push button assembly post.
3. Install push button on crosswalk side of standard.
4. Use R10 series regulatory signs and plaques for pedestrian and bicycle facilities.

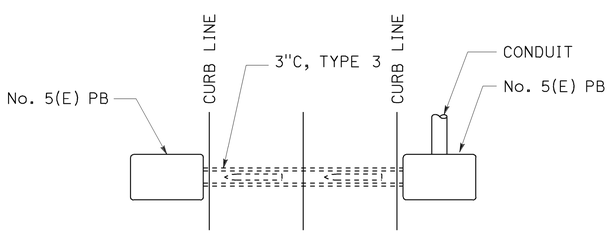

PLAN

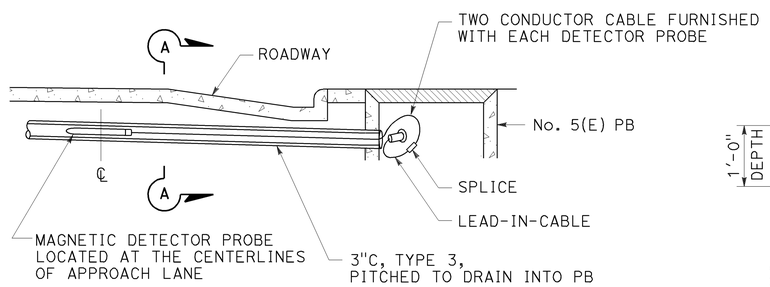

ELEVATION

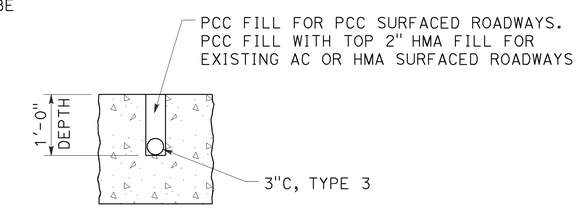

SECTION A-A

MAGNETIC VEHICLE DETECTOR INSTALLATION DETAILS

DETAIL D

STATE OF CALIFORNIA
DEPARTMENT OF TRANSPORTATION

ELECTRICAL SYSTEMS (ACCESSIBLE PEDESTRIAN SIGNAL, PUSH BUTTON ASSEMBLIES AND MAGNETIC VEHICLE DETECTOR)

NO SCALE

RSP ES-5C DATED JULY 19, 2013 SUPERSEDES STANDARD PLAN ES-5C
DATED MAY 20, 2011 - PAGE 450 OF THE STANDARD PLANS BOOK DATED 2010.

REVISED STANDARD PLAN RSP ES-5C

2010 REVISED STANDARD PLAN RSP ES-5C

7-9-13

DIST	COUNTY	ROUTE	POST MILES TOTAL PROJECT	SHEET NO.	TOTAL SHEETS
09	Mno	395	52.3/R53.7	69	69

Theresa Gabriel
REGISTERED ELECTRICAL ENGINEER

July 19, 2013
PLANS APPROVAL DATE

REGISTERED PROFESSIONAL ENGINEER Theresa Aziz Gabriel No. E15129 Exp. 6-30-14 ELECTRICAL STATE OF CALIFORNIA

THE STATE OF CALIFORNIA OR ITS OFFICERS OR AGENTS SHALL NOT BE RESPONSIBLE FOR THE ACCURACY OR COMPLETENESS OF SCANNED COPIES OF THIS PLAN SHEET.

TO ACCOMPANY PLANS DATED _____

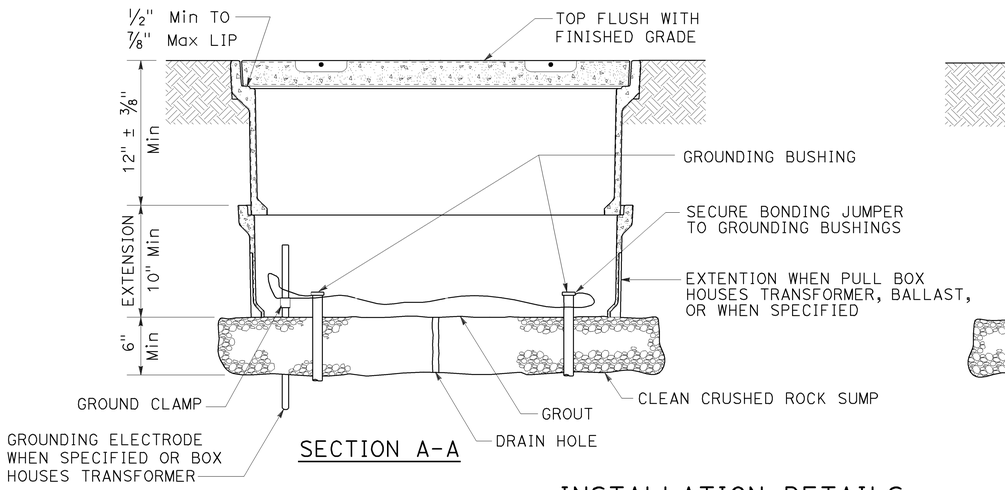

SECTION A-A

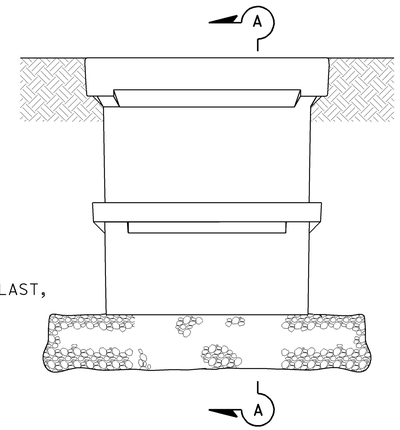

SIDE VIEW

INSTALLATION DETAILS

DETAIL A

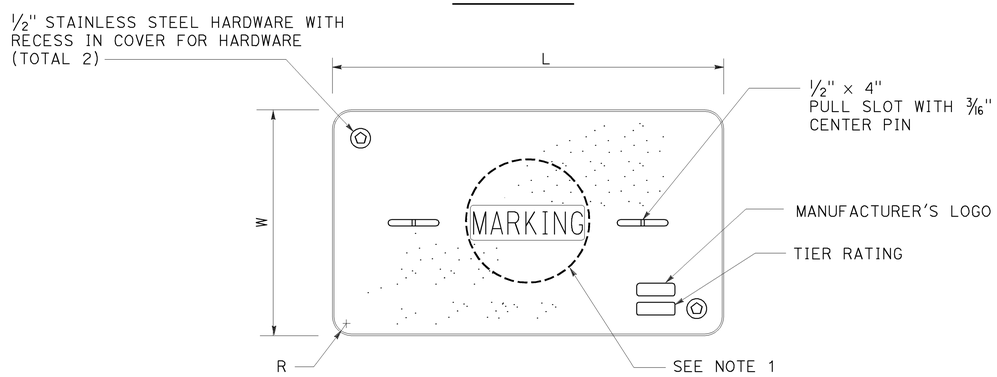

COVER TOP VIEW

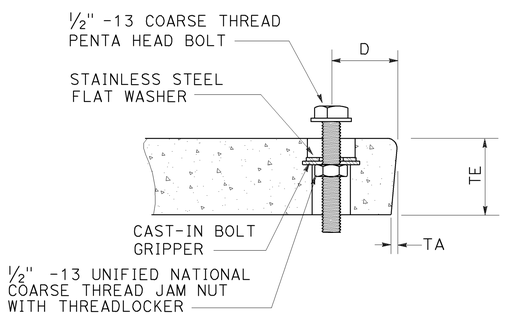

TYPICAL COVER CAPTIVE BOLT

OR SIMILAR

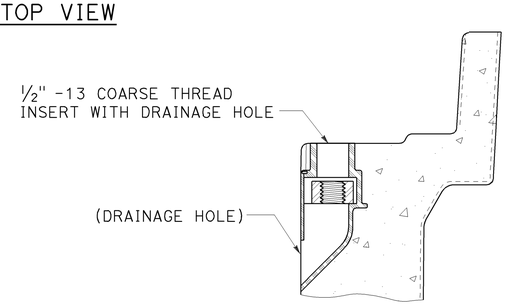

TYPICAL THREADED INSERT

OR SIMILAR

DIMENSION TABLE

PULL BOX	PULL BOX			COVER						
	MINIMUM DEPTH BOX	MINIMUM DEPTH EXTENSION	MAXIMUM WEIGHT	L	W	R	TE	TA	D	MAXIMUM WEIGHT
No. 3½	12"	N/A	40 lb	1′ - 3⅜"	10⅛"	1⅜"	2"	⅛"	1¾"	30 lb
No. 5	12"	10"	55 lb	1′ - 11¼"	1′ - 1¾"	1⅜"	2"	⅛"	1¾"	60 lb
No. 6	12"	10"	70 lb	2′ - 6½"	1′ - 5½"	1⅜"	2"	⅛"	2"	85 lb

NOTES:

1. Pull box covers shall be marked as follows: "SERVICE" Service circuits between service point and service disconnect; "SPRINKLER-CONTROL" sprinkler control circuits, 50 V or less; "CALTRANS" on all pull boxes, except pull boxes marked "SPRINKLER-CONTROL"; and "TELEPHONE" Telephone service;
   - A) No. 3½ pull box.
     - 1) "SIGNAL" - Traffic signal circuits with or without lighting or sign lighting circuits.
     - 2) "LIGHTING" - Lighting or sign lighting circuits where voltage is under 600 V.
   - B) No. 5, 6, 9 or 9A pull box.
     - 1) "TRAFFIC SIGNAL" - Traffic signal circuits with or without lighting or sign lighting circuits.
     - 2) "LIGHTING" - Lighting or sign lighting circuits where voltage is under 600 V.
     - 3) "LIGHTING-HIGH VOLTAGE" - Lighting or sign lighting circuits where voltage is above 600 V.
     - 4) "IRRIGATION" - Circuits to irrigation controller 120 V or more.
     - 5) "RAMP METER" - Ramp meter circuits.
     - 6) "COUNT STATION" - Count or speed monitor circuits.
     - 7) "COMMUNICATIONS" - Communication circuits.
     - 8) "TOS COMMUNICATIONS" - TOS communication line.
     - 9) "TOS POWER" - TOS power.
     - 10) "TDC POWER" - Telephone demarcation cabinet power.
     - 11) "CCTV" - Closed circuit television circuits.
     - 12) "TMS" - Traffic monitoring station circuits.
     - 13) "CMS" - Changeable message sign circuits.
     - 14) "HAR" - Highway advisory radio circuits.
     - 15) "BOOSTER PUMP" - Booster pump circuit.
2. The nominal dimensions of the opening in which the cover sets shall be the same as the cover dimensions except the length and width dimensions shall be ⅛" greater.
3. Covers and boxes shall be interchangeable with California standard male and female gages. When interchanged with a standard male or female gage, the top surfaces shall be flush within ⅛". Top outside radius of covers and pull boxes shall have a ⅛" radius.
4. Pull box extension may be another pull box as long as the bottom edge of the pull box can fit into the cover opening.
5. All dimensions for the cover for non-traffic pull box are nominal values.

STATE OF CALIFORNIA
DEPARTMENT OF TRANSPORTATION

ELECTRICAL SYSTEMS (NON-TRAFFIC PULL BOX)

NO SCALE

RSP ES-8A DATED JULY 19, 2013 SUPERSEDES RSP ES-8A DATED JANUARY 20, 2012 THAT SUPPLEMENTS THE STANDARD PLANS BOOK DATED 2010.

REVISED STANDARD PLAN RSP ES-8A

2010 REVISED STANDARD PLAN RSP ES-8A

7-15-13