Dist	COUNTY	ROUTE	POST MILES TOTAL PROJECT	SHEET No.	TOTAL SHEETS
09	Iny	190	47.4	1	25

SARRA-P190(013)E

STATE OF CALIFORNIA
DEPARTMENT OF TRANSPORTATION

PROJECT PLANS FOR CONSTRUCTION ON
STATE HIGHWAY

IN INYO COUNTY
IN DEATH VALLEY NATIONAL PARK
AT PADRE POINT ROAD

TO BE SUPPLEMENTED BY STANDARD PLANS DATED MAY 2006

INDEX OF PLANS

SHEET No.	DESCRIPTION
1	TITLE AND LOCATION MAP
2	TYPICAL CROSS SECTIONS
3	LAYOUT
4-5	PROFILES
6-8	CONSTRUCTION DETAILS
9	CONSTRUCTION AREA SIGNS
10-11	PAVEMENT DELINEATION PLAN AND DETAILS
12	SIGN QUANTITIES
13	SUMMARY OF QUANTITIES
14-25	REVISED AND NEW STANDARD PLANS

THE STANDARD PLANS LIST APPLICABLE TO THIS CONTRACT IS INCLUDED IN THE NOTICE TO BIDDERS AND SPECIAL PROVISIONS BOOK.

LOCATION MAP

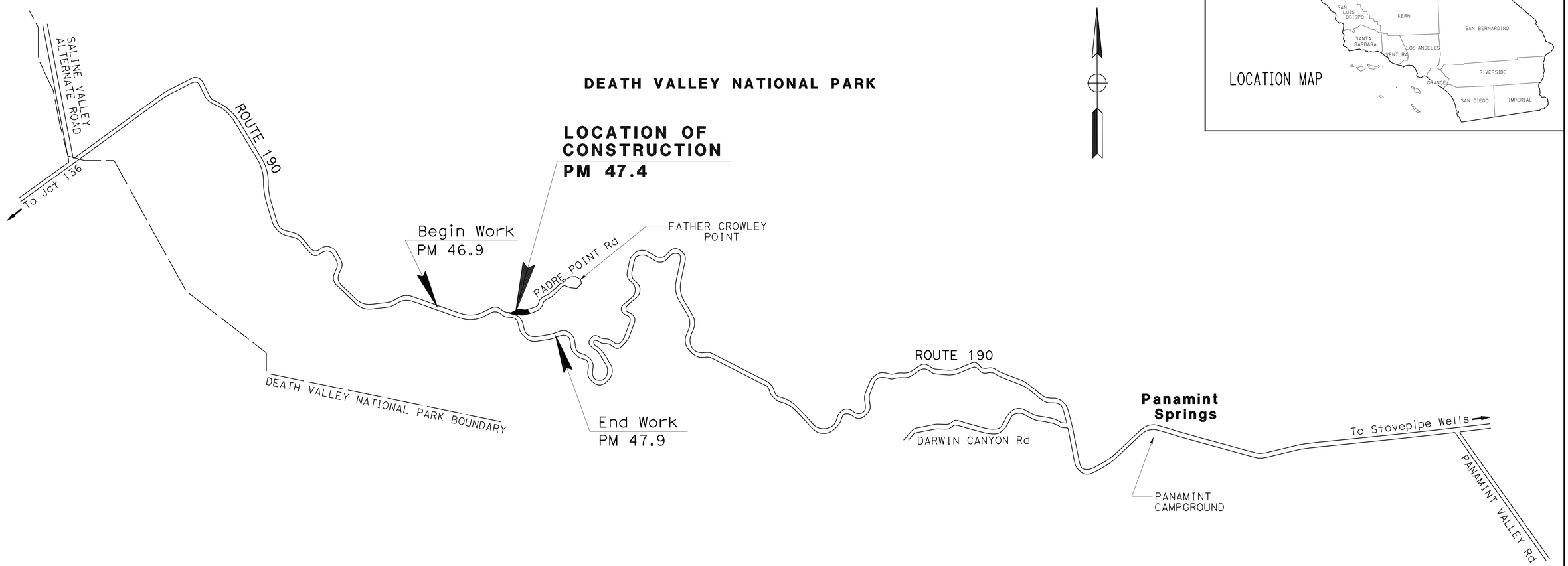

NO SCALE

THE CONTRACTOR SHALL POSSESS THE CLASS (OR CLASSES) OF LICENSE AS SPECIFIED IN THE "NOTICE TO BIDDERS."

PROJECT MANAGER: TOM MEYERS

DESIGN ENGINEER: TRUMAN DENIO

Truman R Denio 9-29-09
PROJECT ENGINEER DATE
REGISTERED CIVIL ENGINEER

November 23, 2009
PLANS APPROVAL DATE

REGISTERED PROFESSIONAL ENGINEER TRUMAN DENIO No. 34556 Exp. 9-30-11 CIVIL STATE OF CALIFORNIA

THE STATE OF CALIFORNIA OR ITS OFFICERS OR AGENTS SHALL NOT BE RESPONSIBLE FOR THE ACCURACY OR COMPLETENESS OF ELECTRONIC COPIES OF THIS PLAN SHEET.

CONTRACT No. **09-333804**

LAST REVISION 09-29-09 | DATE PLOTTED => 27-JAN-2010 | TIME PLOTTED => 14:10

Dist	COUNTY	ROUTE	POST MILES TOTAL PROJECT	SHEET No.	TOTAL SHEETS
09	Iny	190	47.4	2	25

REGISTERED CIVIL ENGINEER 9-29-09 DATE

11-23-09
PLANS APPROVAL DATE

REGISTERED PROFESSIONAL ENGINEER TRUMAN DENIO No. 34556 Exp. 9-30-11 CIVIL STATE OF CALIFORNIA

THE STATE OF CALIFORNIA OR ITS OFFICERS OR AGENTS SHALL NOT BE RESPONSIBLE FOR THE ACCURACY OR COMPLETENESS OF SCANNED COPIES OF THIS PLAN SHEET.

NOTES:

1. DIMENSIONS OF THE PAVEMENT STRUCTURES (STRUCTURAL SECTIONS) ARE SUBJECT TO TOLERANCES SPECIFIED IN THE STANDARD SPECIFICATIONS.
2. SUPERELEVATIONS AS SHOWN OR AS DIRECTED BY THE ENGINEER.

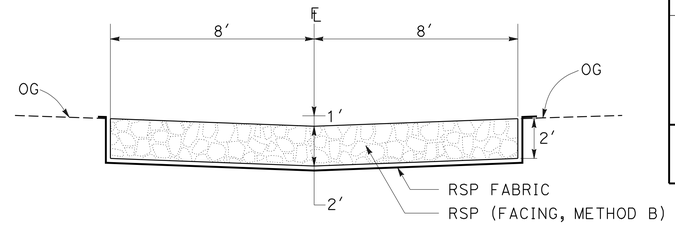

1 DRAINAGE SWALE
Sta 22+94

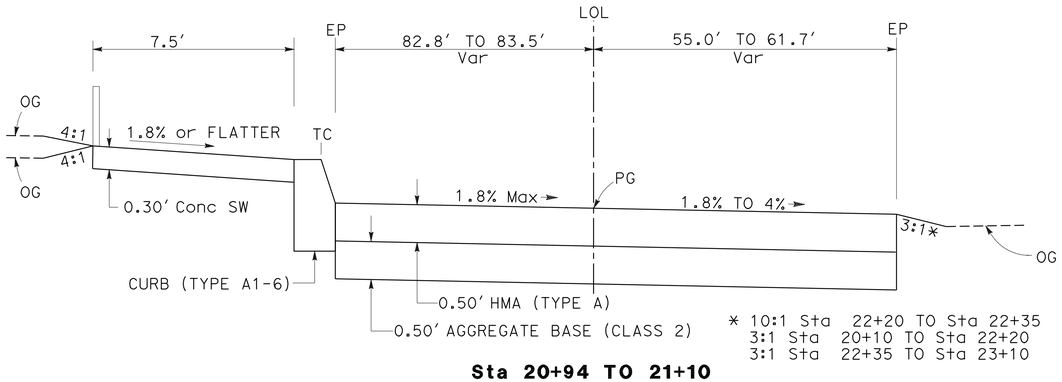

Sta 20+94 TO 21+10
PAVEMENT, CURB AND SIDEWALK

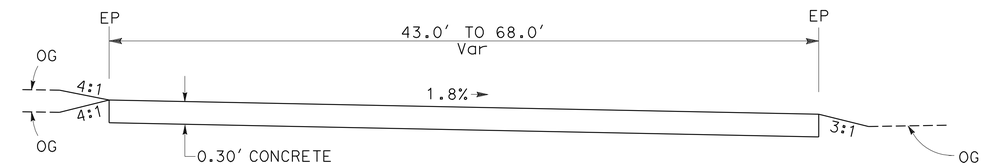

SECTION A-A
SIDEWALK

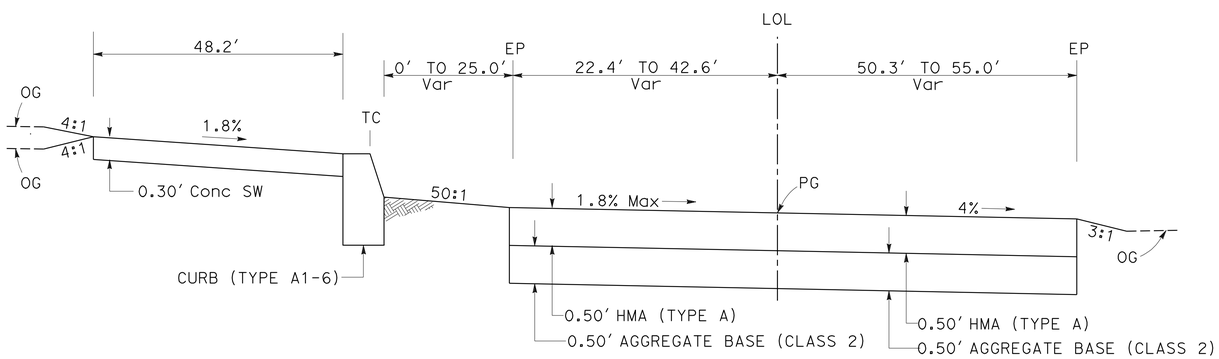

Sta 20+85 TO 20+94
PAVEMENT, CURB AND SIDEWALK

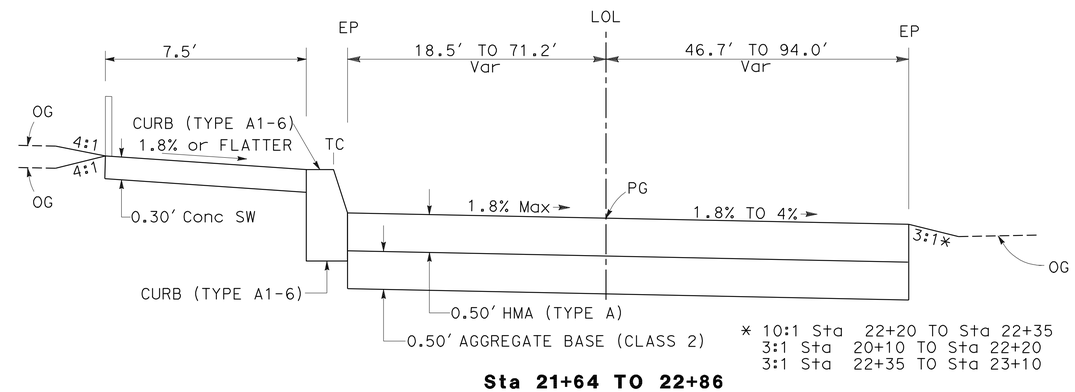

Sta 21+64 TO 22+86
PAVEMENT, CURB AND SIDEWALK

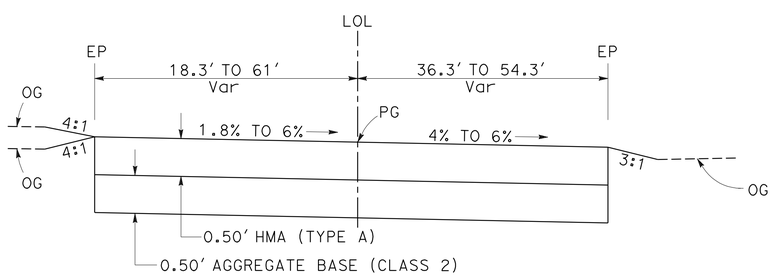

Sta 20+12 TO 20+85
PAVEMENT

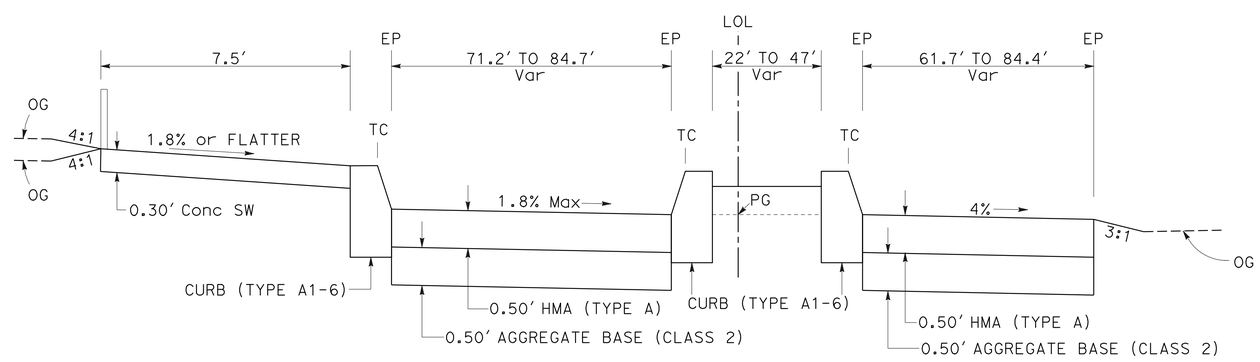

Sta 21+10 TO 21+64
PAVEMENT, CURB, ISLAND AND SIDEWALK

TYPICAL CROSS SECTIONS

NO SCALE

X-1

STATE OF CALIFORNIA - DEPARTMENT OF TRANSPORTATION
Caltrans® DESIGN

FUNCTIONAL SUPERVISOR: TRUMAN DENIO
CALCULATED-DESIGNED BY: KONSTANTIN GREKOV
CHECKED BY: TRUMAN DENIO
REVISED BY
DATE REVISED

LAST REVISION 09-24-09
DATE PLOTTED => 24-NOV-2009
TIME PLOTTED => 06:33

Dist	COUNTY	ROUTE	POST MILES TOTAL PROJECT	SHEET No.	TOTAL SHEETS
09	Iny	190	47.4	3	25

REGISTERED CIVIL ENGINEER 9-29-09 DATE

11-23-09
PLANS APPROVAL DATE

REGISTERED PROFESSIONAL ENGINEER TRUMAN DENIO No. 34556 Exp. 9-30-11 CIVIL STATE OF CALIFORNIA

THE STATE OF CALIFORNIA OR ITS OFFICERS OR AGENTS SHALL NOT BE RESPONSIBLE FOR THE ACCURACY OR COMPLETENESS OF SCANNED COPIES OF THIS PLAN SHEET.

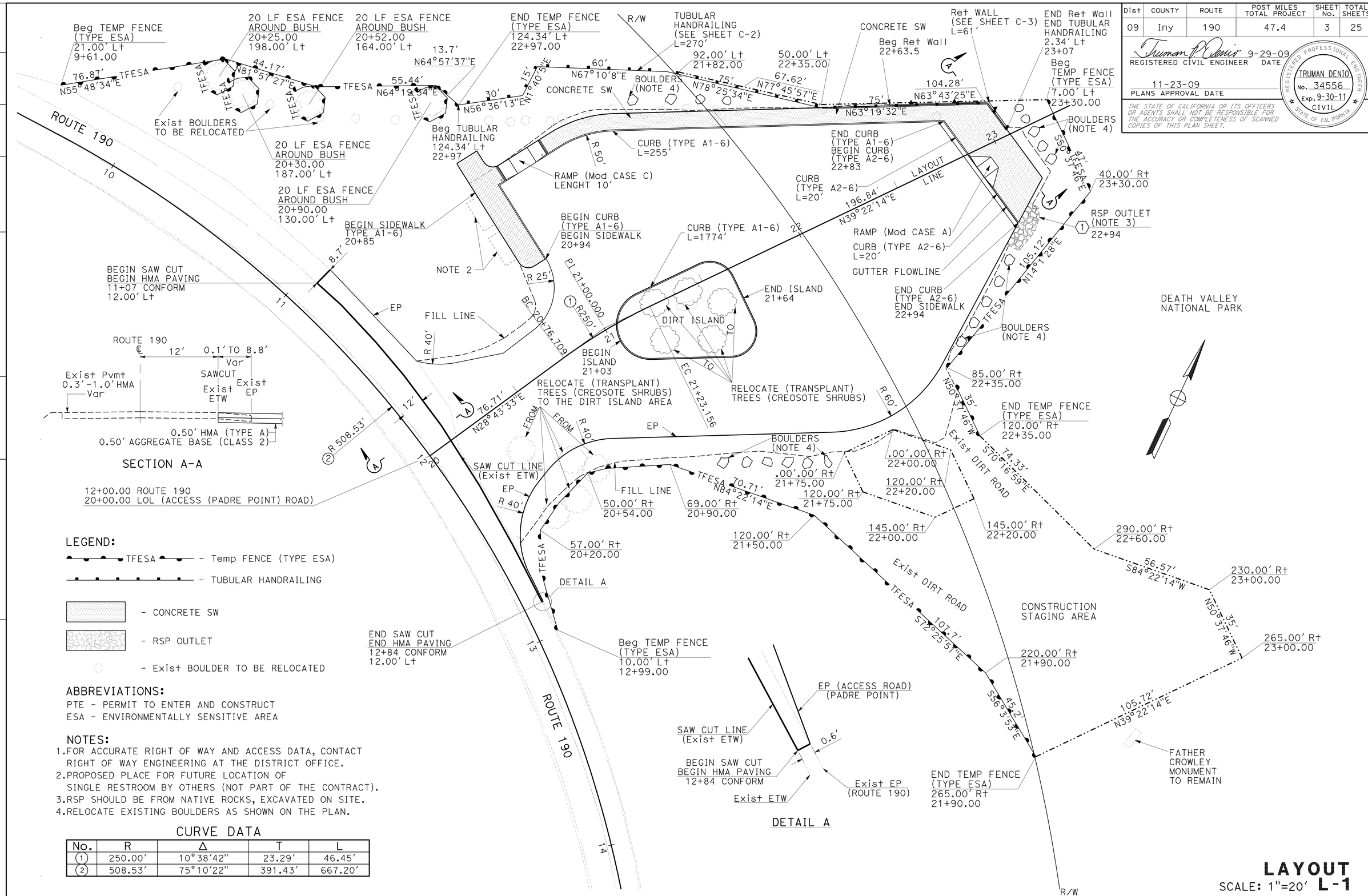

LEGEND:

- TFESA - Temp FENCE (TYPE ESA)
- TUBULAR HANDRAILING
- CONCRETE SW
- RSP OUTLET
- Exist BOULDER TO BE RELOCATED

ABBREVIATIONS:

PTE - PERMIT TO ENTER AND CONSTRUCT
ESA - ENVIRONMENTALLY SENSITIVE AREA

NOTES:

1. FOR ACCURATE RIGHT OF WAY AND ACCESS DATA, CONTACT RIGHT OF WAY ENGINEERING AT THE DISTRICT OFFICE.
2. PROPOSED PLACE FOR FUTURE LOCATION OF SINGLE RESTROOM BY OTHERS (NOT PART OF THE CONTRACT).
3. RSP SHOULD BE FROM NATIVE ROCKS, EXCAVATED ON SITE.
4. RELOCATE EXISTING BOULDERS AS SHOWN ON THE PLAN.

CURVE DATA

No.	R	Δ	T	L
1	250.00'	10°38'42"	23.29'	46.45'
2	508.53'	75°10'22"	391.43'	667.20'

LAYOUT L-1

SCALE: 1"=20'

STATE OF CALIFORNIA - DEPARTMENT OF TRANSPORTATION
Caltrans DESIGN

FUNCTIONAL SUPERVISOR: TRUMAN DENIO
CALCULATED-DESIGNED BY: KONSTANTIN GREKOV
CHECKED BY: TRUMAN DENIO
REVISED BY / DATE REVISED

LAST REVISION 09-29-09 | DATE PLOTTED => 24-NOV-2009 | TIME PLOTTED => 06:34

BORDER LAST REVISED 4/11/2008 | RELATIVE BORDER SCALE IS IN INCHES 0 1 2 3 | USERNAME => trmikesl | DGN FILE => 933380ea001.dgn | CU 09344 | EA 333801

Dist	COUNTY	ROUTE	POST MILES TOTAL PROJECT	SHEET No.	TOTAL SHEETS
09	Iny	190	47.4	4	25

Truman P. Denio 9-29-09
REGISTERED CIVIL ENGINEER DATE

11-23-09
PLANS APPROVAL DATE

REGISTERED PROFESSIONAL ENGINEER
TRUMAN DENIO
No. 34556
Exp. 9-30-11
CIVIL
STATE OF CALIFORNIA

THE STATE OF CALIFORNIA OR ITS OFFICERS OR AGENTS SHALL NOT BE RESPONSIBLE FOR THE ACCURACY OR COMPLETENESS OF SCANNED COPIES OF THIS PLAN SHEET.

ABBREVIATIONS:
VPI - VERTICAL POINTS OF INTERSECTION
VPOT - VERTICAL POINTS OF TANGENT

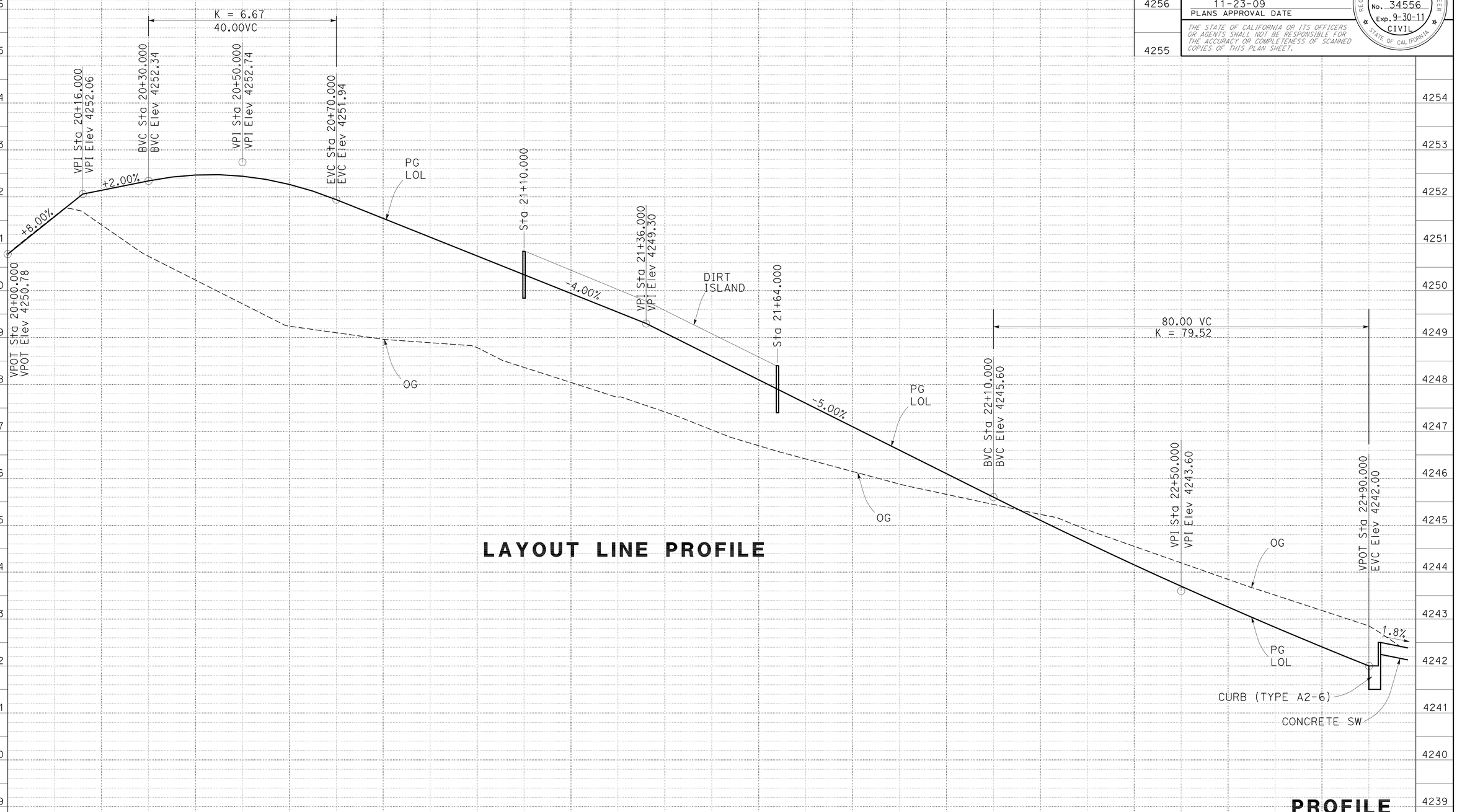

LAYOUT LINE PROFILE

PROFILE P-1

SCALE: Horiz 1"=10'
Vert 1"=1'

STATION		20				21				22				23	TOTAL
CY	Exc	50.0	4.0	0.0	0.0	11.0	21.0	16.0	19.0	28.0	39.0	72.0	83.0	66.0	70.0	28.0	507.0
	Emb	3.0	50.0	94.0	112.0	115.0	106.0	99.0	93.0	88.0	46.0	4.0	15.0	0.0	2.0	2.0	829.0

STATE OF CALIFORNIA - DEPARTMENT OF TRANSPORTATION
Caltrans DESIGN

FUNCTIONAL SUPERVISOR: TRUMAN DENIO
CALCULATED-DESIGNED BY: KONSTANTIN GREKOV
CHECKED BY: TRUMAN DENIO
REVISED BY
DATE REVISED

LAST REVISION 09-28-09
DATE PLOTTED => 24-NOV-2009
TIME PLOTTED => 06:34

Dist	COUNTY	ROUTE	POST MILES TOTAL PROJECT	SHEET No.	TOTAL SHEETS
09	Iny	190	47.4	5	25

Truman P. Denio 9-29-09
REGISTERED CIVIL ENGINEER DATE

11-23-09
PLANS APPROVAL DATE

REGISTERED PROFESSIONAL ENGINEER
TRUMAN DENIO
No. 34556
Exp. 9-30-11
CIVIL
STATE OF CALIFORNIA

THE STATE OF CALIFORNIA OR ITS OFFICERS OR AGENTS SHALL NOT BE RESPONSIBLE FOR THE ACCURACY OR COMPLETENESS OF SCANNED COPIES OF THIS PLAN SHEET.

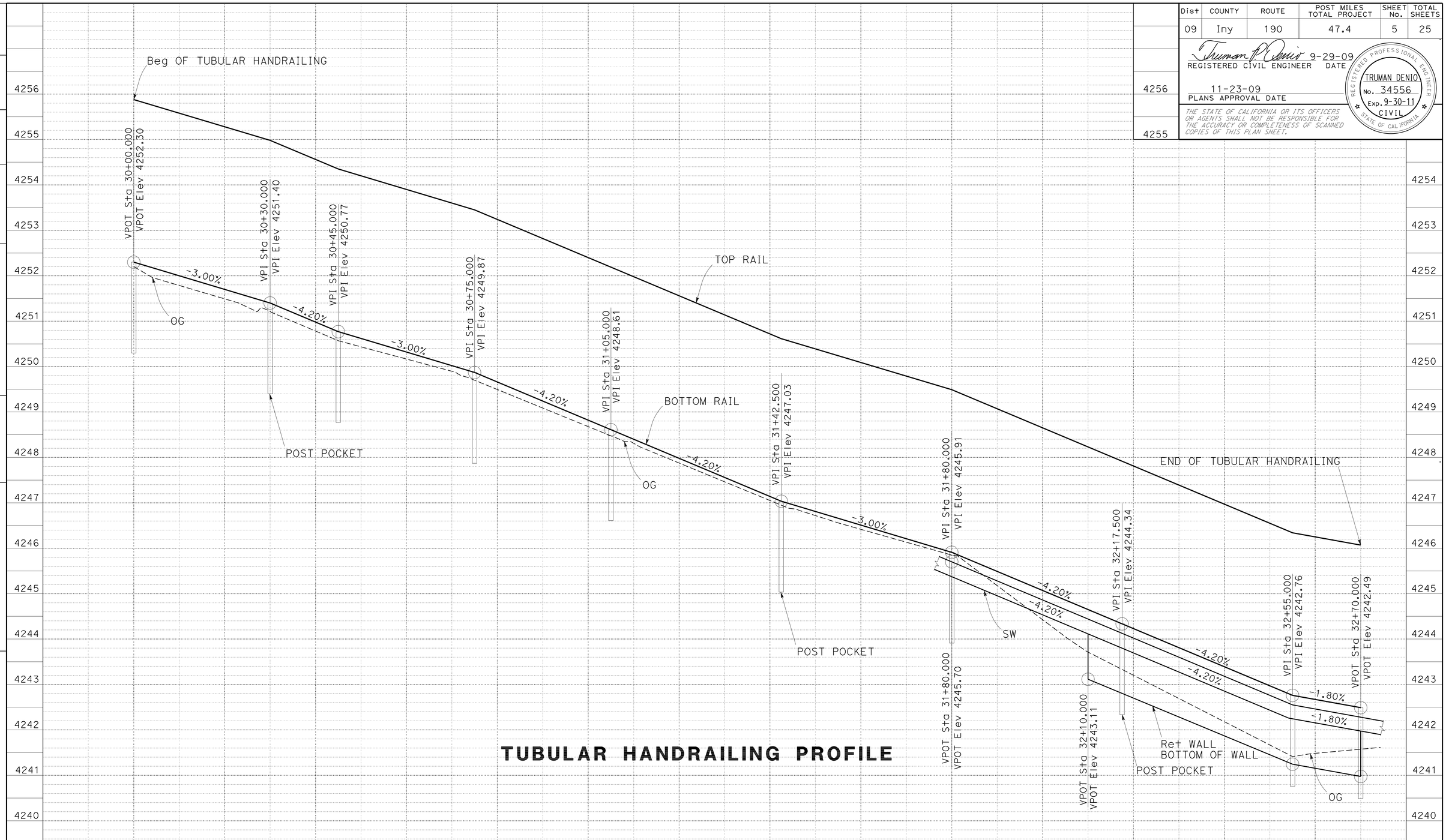

TUBULAR HANDRAILING PROFILE

PROFILE
SCALE: Horiz 1"=10'
Vert 1"=1'
P-2

STATE OF CALIFORNIA - DEPARTMENT OF TRANSPORTATION
Caltrans
DESIGN

FUNCTIONAL SUPERVISOR: TRUMAN DENIO
CALCULATED-DESIGNED BY: KONSTANTIN GREKOV
CHECKED BY: TRUMAN DENIO
REVISED BY
DATE REVISED

LAST REVISION 09-29-09
DATE PLOTTED => 24-NOV-2009
TIME PLOTTED => 06:34

Dist	COUNTY	ROUTE	POST MILES TOTAL PROJECT	SHEET No.	TOTAL SHEETS
09	Iny	190	47.4	6	25

Truman P. Denio 9-29-09
REGISTERED CIVIL ENGINEER DATE

11-23-09
PLANS APPROVAL DATE

REGISTERED PROFESSIONAL ENGINEER TRUMAN DENIO No. 34556 Exp. 9-30-11 CIVIL STATE OF CALIFORNIA

THE STATE OF CALIFORNIA OR ITS OFFICERS OR AGENTS SHALL NOT BE RESPONSIBLE FOR THE ACCURACY OR COMPLETENESS OF SCANNED COPIES OF THIS PLAN SHEET.

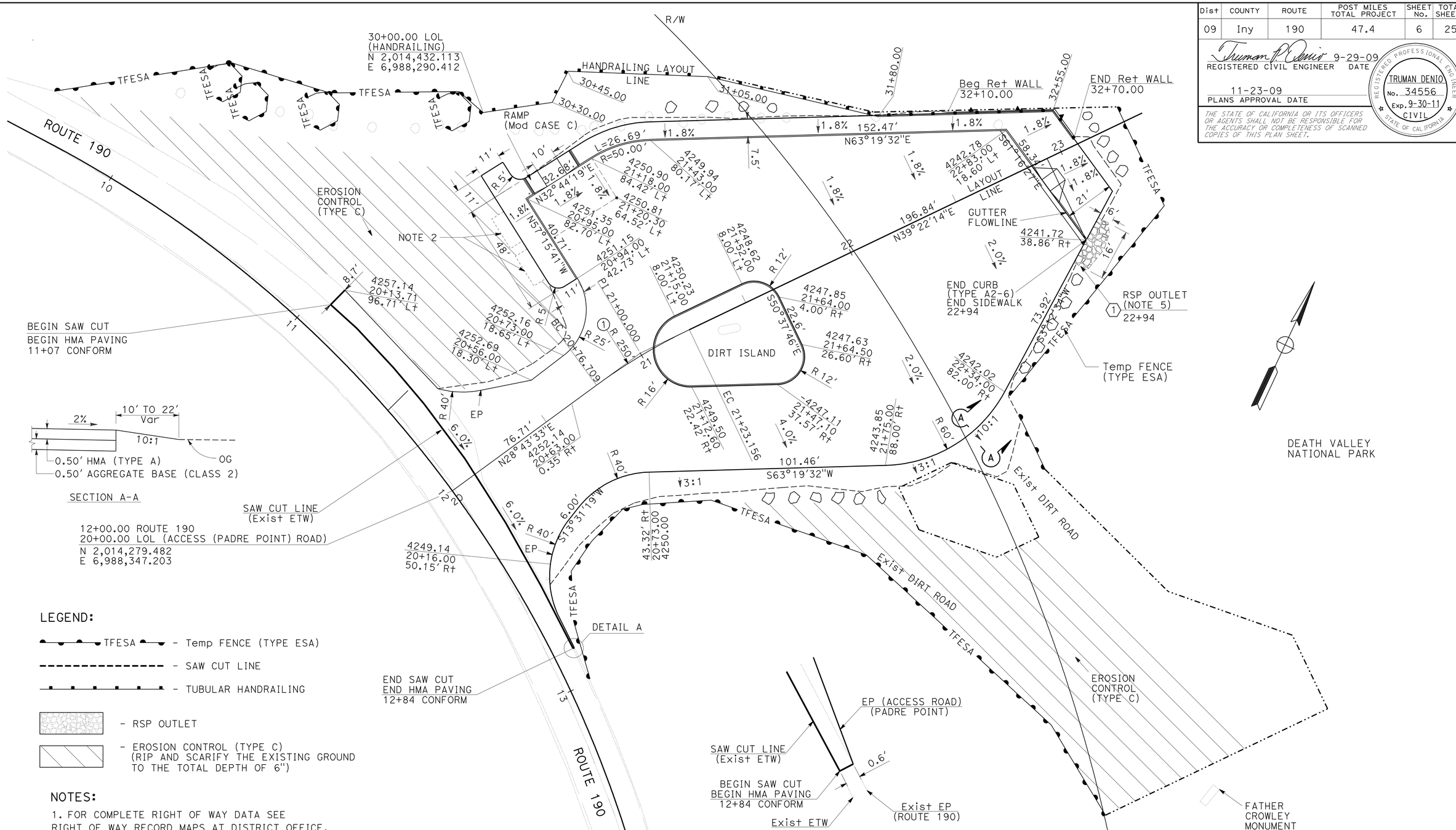

LEGEND:

- TFESA — Temp FENCE (TYPE ESA)
- SAW CUT LINE
- TUBULAR HANDRAILING
- RSP OUTLET
- EROSION CONTROL (TYPE C) (RIP AND SCARIFY THE EXISTING GROUND TO THE TOTAL DEPTH OF 6")

NOTES:

1. FOR COMPLETE RIGHT OF WAY DATA SEE RIGHT OF WAY RECORD MAPS AT DISTRICT OFFICE.
2. PROPOSED LOCATION FOR FUTURE TWO SINGLE RESTROOMS BY OTHERS (NOT PART OF THE CONTRACT).
3. DIMENSIONS ARE TO FACE OF CURB AND EDGE OF PAVEMENT.
4. SPOT ELEVATIONS SHOWN AT CURBS ARE TO FLOWLINE.
5. RSP SHOULD BE BUILT FROM NATIVE ROCKS AND SHOULD HAVE A NATURAL FREEFORM SHAPE.

CONSTRUCTION DETAILS

SCALE: 1"=20'

C-1

STATE OF CALIFORNIA - DEPARTMENT OF TRANSPORTATION
DESIGN
Caltrans

FUNCTIONAL SUPERVISOR: TRUMAN DENIO
CALCULATED-DESIGNED BY: KONSTANTIN GREKOV
CHECKED BY: TRUMAN DENIO
REVISED BY
DATE REVISED

LAST REVISION 09-29-09
DATE PLOTTED => 24-NOV-2009
TIME PLOTTED => 06:34

Dist	COUNTY	ROUTE	POST MILES TOTAL PROJECT	SHEET No.	TOTAL SHEETS
09	Iny	190	47.4	7	25

REGISTERED CIVIL ENGINEER Truman P. Denio 9-29-09 DATE

11-23-09
PLANS APPROVAL DATE

REGISTERED PROFESSIONAL ENGINEER TRUMAN DENIO No. 34556 Exp. 9-30-11 CIVIL STATE OF CALIFORNIA

THE STATE OF CALIFORNIA OR ITS OFFICERS OR AGENTS SHALL NOT BE RESPONSIBLE FOR THE ACCURACY OR COMPLETENESS OF SCANNED COPIES OF THIS PLAN SHEET.

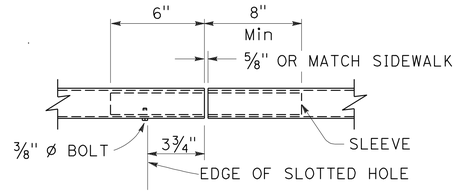

VIEW G-G

VIEW H-H

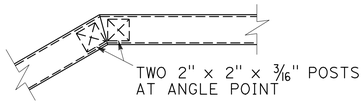

ANGLE POINT DETAIL

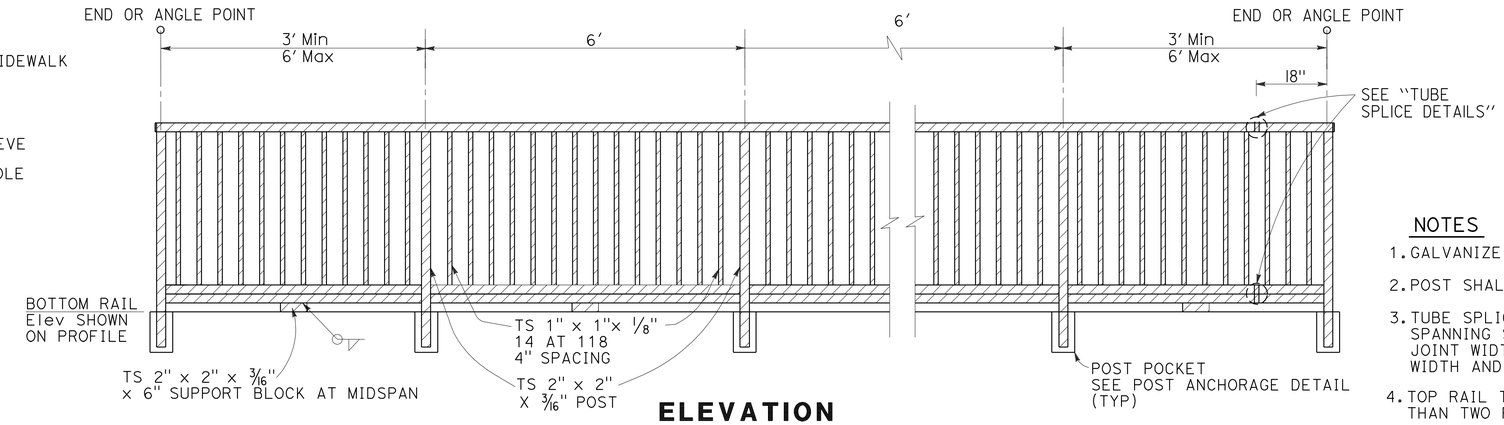

ELEVATION

NOTES

1. GALVANIZE RAIL ASSEMBLY AFTER FABRICATION.
2. POST SHALL BE NORMAL TO RAILING.
3. TUBE SPLICES SHALL BE LOCATED IN THE TUBES SPANNING SIDEWALK EXPANSION JOINTS. INCREASE JOINT WIDTH IN TUBES TO MATCH EXPANSION JOINT WIDTH AND INCREASE SLEEVE LENGTH CORRESPONDINGLY.
4. TOP RAIL TUBE SHALL BE CONTINUOUS OVER NOT LESS THAN TWO POSTS.
5. SEE PROJECT PLANS FOR LIMITS OF TUBULAR HAND RAILING.

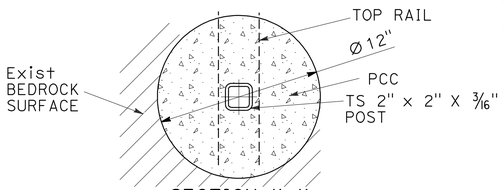

SECTION K-K

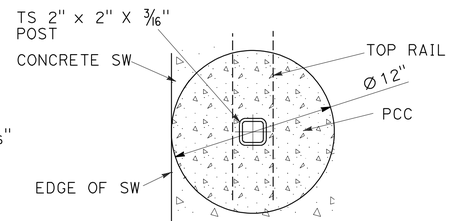

SECTION J-J

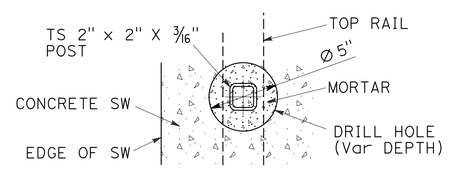

SECTION I-I

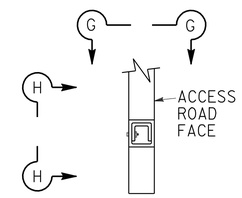

SECTION

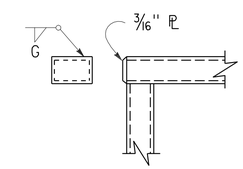

RAIL CAP

(TS 3" x 2" x 3/16")

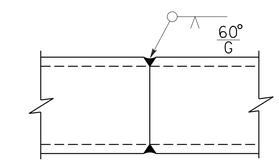

TUBE-WELDED SPLICE

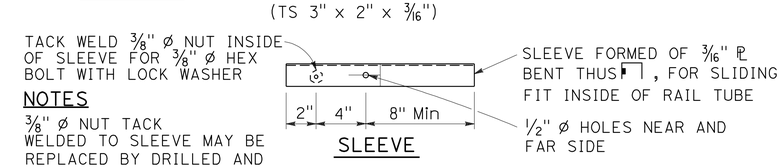

SLEEVE

NOTES

3/8" Ø NUT TACK WELDED TO SLEEVE MAY BE REPLACED BY DRILLED AND TAPPED HOLE IN SLEEVE.

TUBE SPLICE DETAILS

(TS 3" X 2" X 3/16" SIMILAR)

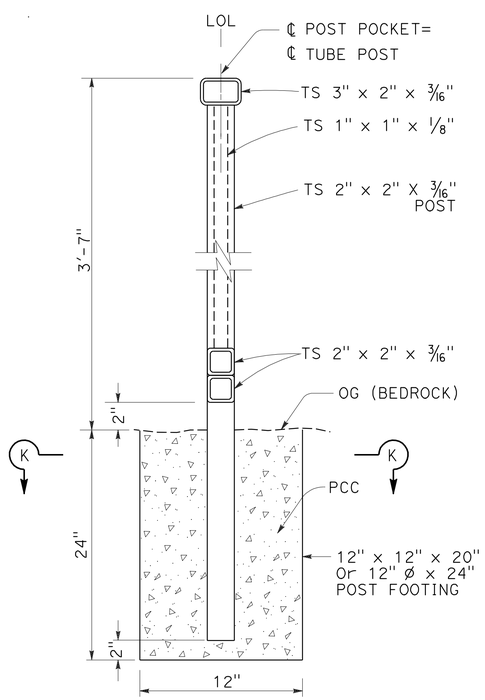

POST ANCHORAGE DETAILS

AT OG

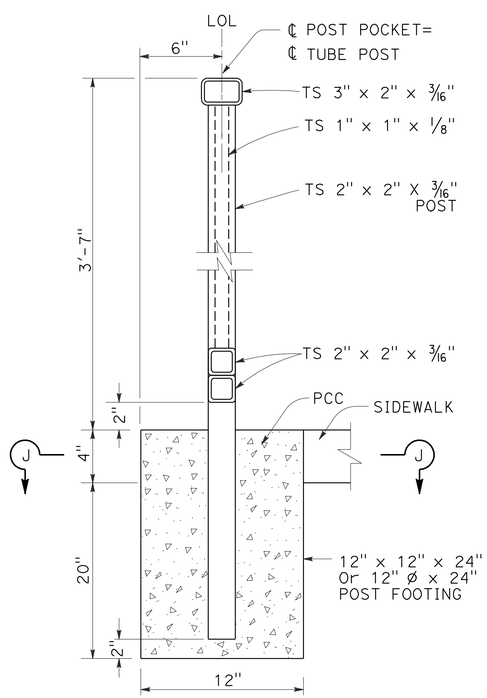

POST ANCHORAGE DETAIL

AT SIDEWALK

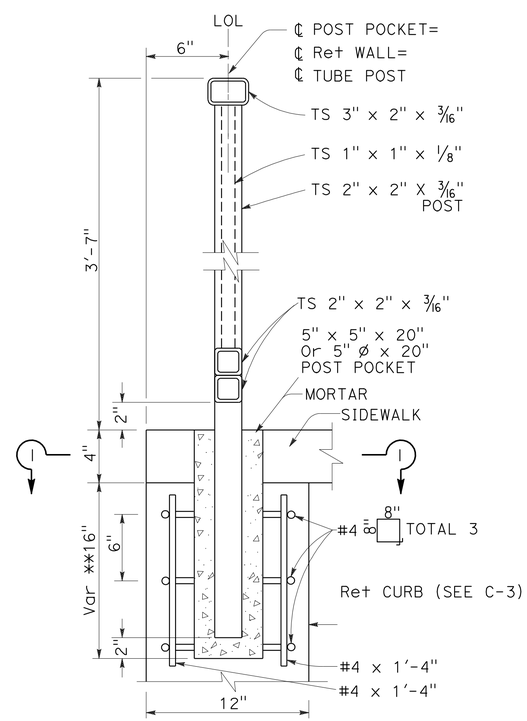

POST ANCHORAGE DETAIL

RET CURB

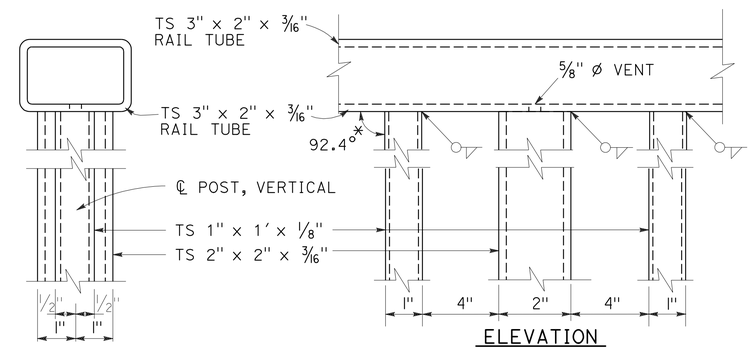

SECTION A-A

ELEVATION

*STA 30+00 TO STA 30+30 - 91.7°
*STA 30+45 TO STA 30+75 - 91.7°
*STA 31+42.5 TO STA 31+80 - 91.7°
*STA 32+55 TO STA 32+70 - 91.0°

RAIL CONNECTION DETAILS

TUBULAR HANDRAILING

CONSTRUCTION DETAILS

NO SCALE

C-2

STATE OF CALIFORNIA - DEPARTMENT OF TRANSPORTATION
Caltrans® DESIGN
FUNCTIONAL SUPERVISOR TRUMAN DENIO
CALCULATED-DESIGNED BY KONSTANTIN GREKOV
CHECKED BY TRUMAN DENIO
REVISED BY
DATE REVISED

LAST REVISION 09-29-09
DATE PLOTTED => 24-NOV-2009
TIME PLOTTED => 06:35

Dist	COUNTY	ROUTE	POST MILES TOTAL PROJECT	SHEET No.	TOTAL SHEETS
09	Iny	190	47.4	8	25

REGISTERED CIVIL ENGINEER DATE 9-29-09

11-23-09
PLANS APPROVAL DATE

REGISTERED PROFESSIONAL ENGINEER TRUMAN DENIO No. 34556 Exp. 9-30-11 CIVIL STATE OF CALIFORNIA

THE STATE OF CALIFORNIA OR ITS OFFICERS OR AGENTS SHALL NOT BE RESPONSIBLE FOR THE ACCURACY OR COMPLETENESS OF SCANNED COPIES OF THIS PLAN SHEET.

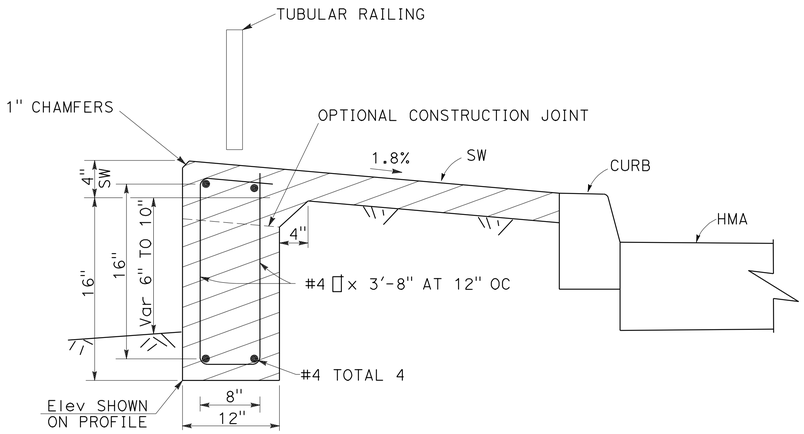

Ret CURB
Sta 32+19 to 32+54
Sta 31+56 to 32+69

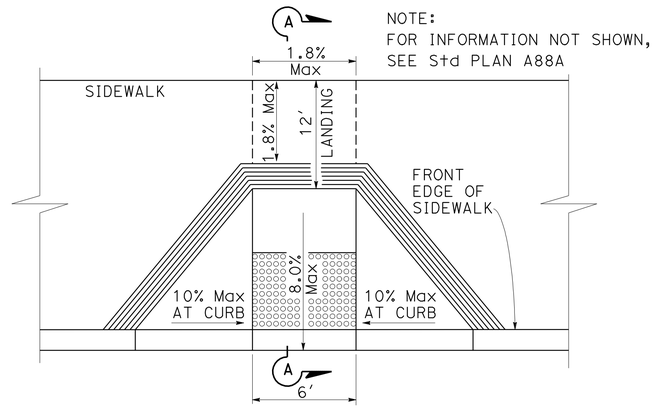

NOTE:
FOR INFORMATION NOT SHOWN, SEE Std PLAN A88A

MODIFIED CASE A
RAMP DETAIL (STA 22+88)

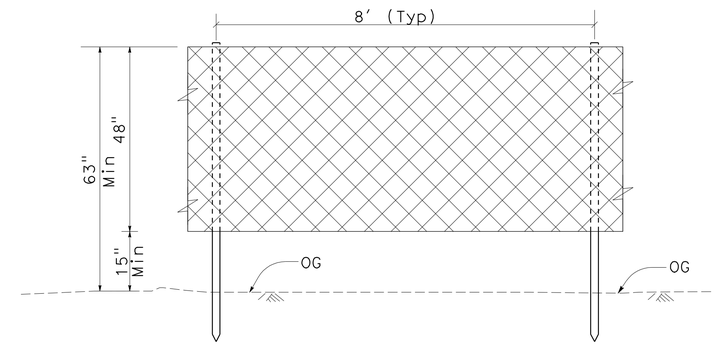

TEMPORARY FENCE (TYPE ESA)
DETAIL (TYPICAL)
(SELF SUPPORTING)

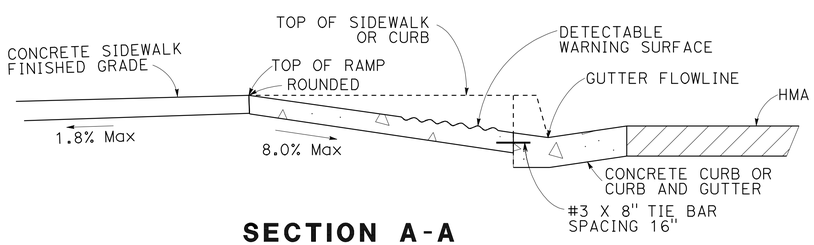

SECTION A-A

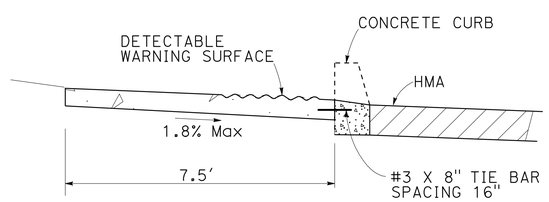

SECTION B-B

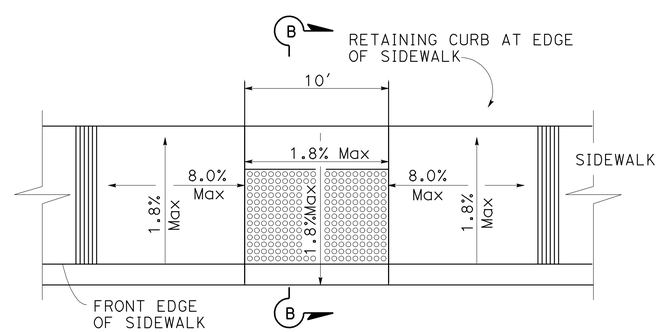

NOTE:
FOR INFORMATION NOT SHOWN, SEE Std PLAN A88A

MODIFIED CASE C
RAMP DETAIL (STA 21+05)

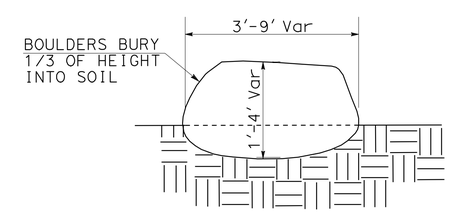

BOULDER RELOCATION DETAIL

CONSTRUCTION DETAILS
NO SCALE
C-3

STATE OF CALIFORNIA - DEPARTMENT OF TRANSPORTATION
Caltrans
DESIGN
FUNCTIONAL SUPERVISOR: TRUMAN DENIO
CALCULATED-DESIGNED BY: KONSTANTIN GREKOV
CHECKED BY: TRUMAN DENIO
REVISED BY
DATE REVISED

LAST REVISION 09-29-09
DATE PLOTTED => 24-NOV-2009
TIME PLOTTED => 06:35

Dist	COUNTY	ROUTE	POST MILES TOTAL PROJECT	SHEET No.	TOTAL SHEETS
09	Iny	190	47.4	9	25

Truman P. Denio 9-29-09
REGISTERED CIVIL ENGINEER DATE

11-23-09
PLANS APPROVAL DATE

REGISTERED PROFESSIONAL ENGINEER
TRUMAN DENIO
No. 34556
Exp. 9-30-11
CIVIL
STATE OF CALIFORNIA

THE STATE OF CALIFORNIA OR ITS OFFICERS OR AGENTS SHALL NOT BE RESPONSIBLE FOR THE ACCURACY OR COMPLETENESS OF SCANNED COPIES OF THIS PLAN SHEET.

NOTES:

1. LOCATIONS OF CONSTRUCTION AREA SIGNS SHOWN ARE APPROXIMATE,
2. THIS PLAN ACCURATE FOR CONSTRUCTION AREA SIGN WORK ONLY. EXACT LOCATIONS TO BE DETERMINED BY THE ENGINEER.

ROAD WORK AHEAD — W20-1, 48" x 48", ON 4" X 6" POST — PLACEMENT (A)

END ROAD WORK — G20-2, 36" X 18", ON 4" X 6" POST — PLACEMENT (B)

VISTA POINT CLOSED — G20-2, 36" X 18", ON 4" X 6" POST — PLACEMENT (C)

CLOSED — G20-2, 36" X 18", ON BARRICADE — PLACEMENT (D)

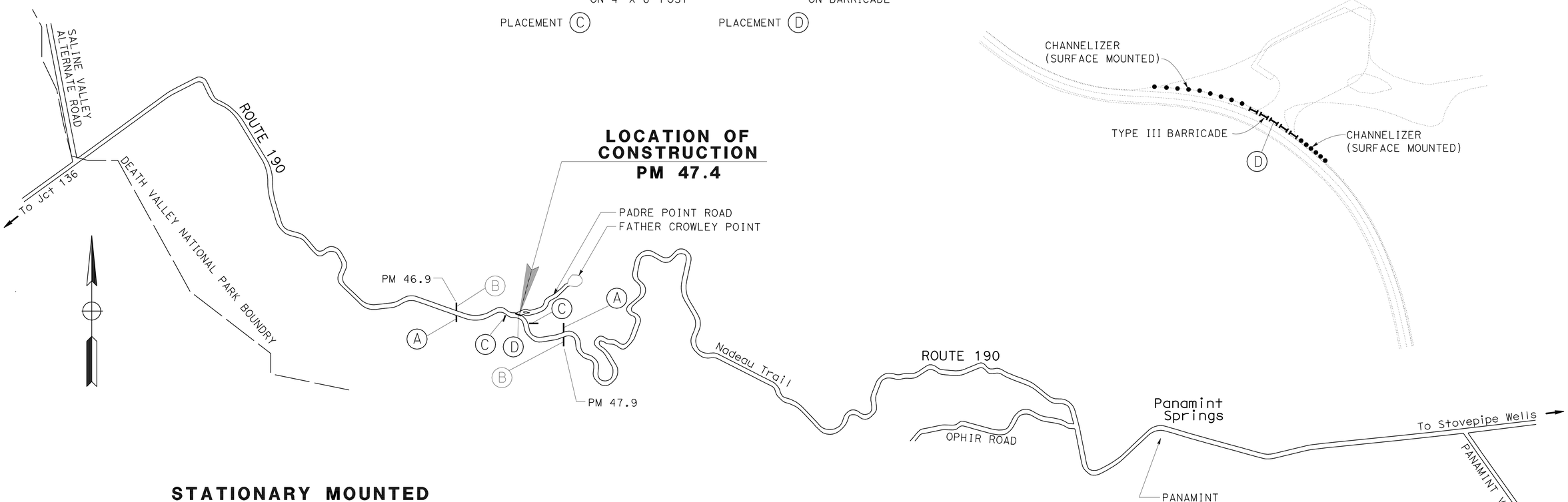

STATIONARY MOUNTED CONSTRUCTION AREA SIGN SUMMARY

PLACEMENT	LEFT	RIGHT	SIGN PANEL CODE	SIGN PANEL SIZE	SIGN PANEL MESSAGE	POSTS SIZE	POSTS SINGLE	POSTS DOUBLE
(A)		X	W20-1	48" x 48"	ROAD WORK AHEAD	4" X 6"	X	
		X	G20-2	36" x 18"	VISTA POINT CLOSED	4" X 6"	X	
(B)	X		G20-2	36" x 18"	END ROAD WORK	4" X 6"	X	
(C)		X	G20-2	36" x 18"	VISTA POINT CLOSED	4" X 6"	X	
(D)	X		G20-2	36" x 18"	CLOSED			
(C)	X		G20-2	36" x 18"	VISTA POINT CLOSED	4" X 6"	X	
(B)		X	G20-2	36" x 18"	END ROAD WORK	4" X 6"	X	
(A)	X		W20-1	48" X 48"	ROAD WORK AHEAD	4" X 6"	X	
	X		G20-2	36" x 18"	VISTA POINT CLOSED	4" X 6"	X	

CHANNELIZER (SURFACE MOUNTED)

LOCATION	EA
VISTA POINT ENTRANCE	15
TOTAL	15

TYPE III BARRICADE

LOCATION	EA
VISTA POINT ENTRANCE	5
TOTAL	5

CONSTRUCTION AREA SIGNS

NO SCALE

CS-1

STATE OF CALIFORNIA - DEPARTMENT OF TRANSPORTATION
Caltrans DESIGN

FUNCTIONAL SUPERVISOR: TRUMAN DENIO
CALCULATED-DESIGNED BY: KONSTANTIN GREKOV
CHECKED BY: TRUMAN DENIO
REVISED BY
DATE REVISED

LAST REVISION 09-29-09
DATE PLOTTED => 24-NOV-2009
TIME PLOTTED => 06:36

Dist	COUNTY	ROUTE	POST MILES TOTAL PROJECT	SHEET No.	TOTAL SHEETS
09	Iny	190	47.4	10	25

Truman P. Denio 9-29-09
REGISTERED CIVIL ENGINEER DATE

11-23-09
PLANS APPROVAL DATE

REGISTERED PROFESSIONAL ENGINEER TRUMAN DENIO No. 34556 Exp. 9-30-11 CIVIL STATE OF CALIFORNIA

THE STATE OF CALIFORNIA OR ITS OFFICERS OR AGENTS SHALL NOT BE RESPONSIBLE FOR THE ACCURACY OR COMPLETENESS OF SCANNED COPIES OF THIS PLAN SHEET.

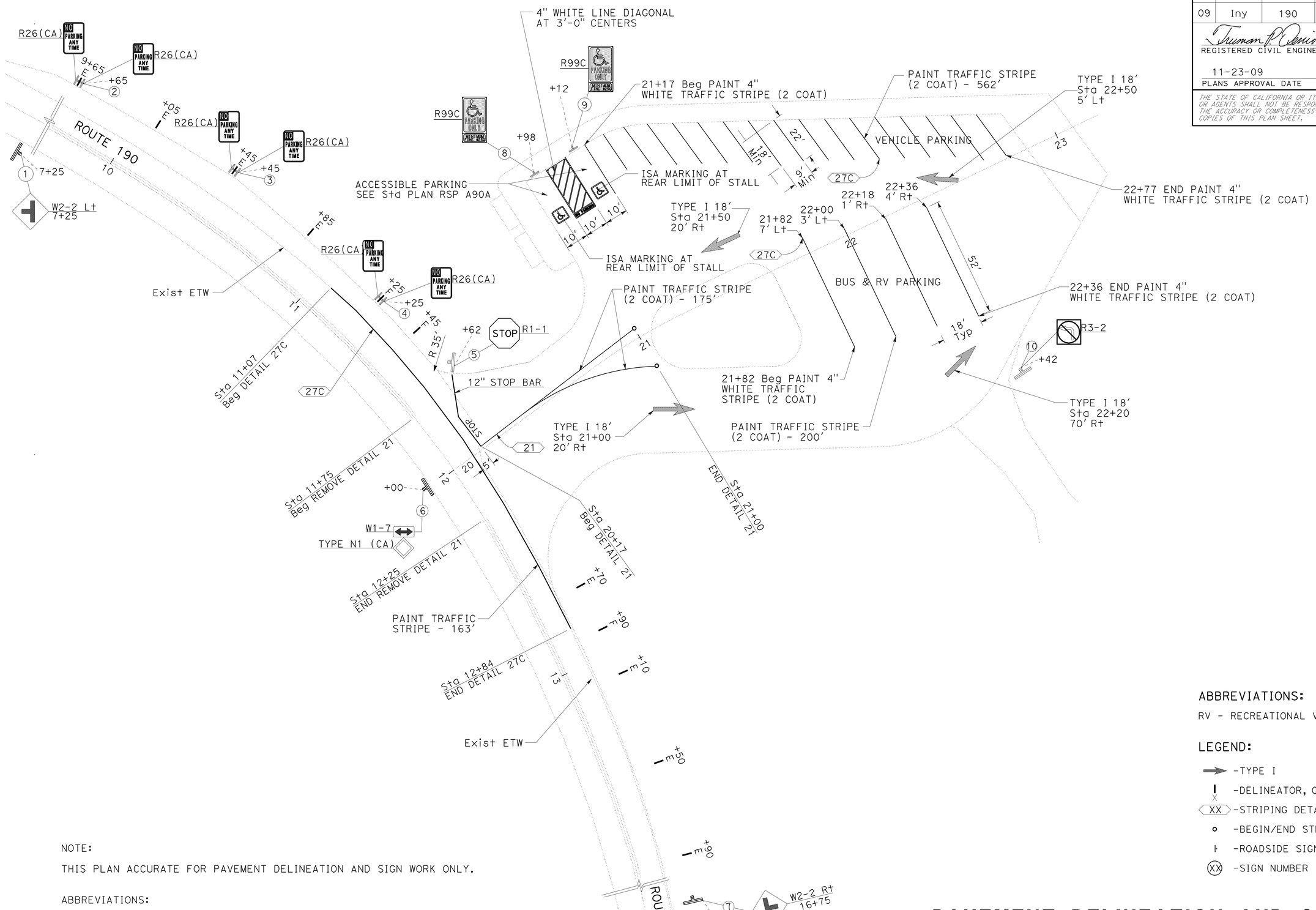

NOTE:

THIS PLAN ACCURATE FOR PAVEMENT DELINEATION AND SIGN WORK ONLY.

ABBREVIATIONS:

ISA - INTERNATIONAL SYMBOL OF ACCESSIBILITY.

ABBREVIATIONS:

RV - RECREATIONAL VEHICLE

LEGEND:

- -TYPE I
- -DELINEATOR, OBJECT MARKER
- XX -STRIPING DETAIL NUMBER
- -BEGIN/END STRIPING DETAIL
- -ROADSIDE SIGNS
- XX -SIGN NUMBER

PAVEMENT DELINEATION AND SIGN PLAN

SCALE: 1"=20'

PD-1

STATE OF CALIFORNIA - DEPARTMENT OF TRANSPORTATION

DESIGN

FUNCTIONAL SUPERVISOR: TRUMAN DENIO

CALCULATED-DESIGNED BY: KONSTANTIN GREKOV

CHECKED BY: TRUMAN DENIO

REVISED BY

DATE REVISED

LAST REVISION: DATE PLOTTED => 24-NOV-2009 TIME PLOTTED => 06:36

09-29-09

BORDER LAST REVISED 4/11/2008

RELATIVE BORDER SCALE IS IN INCHES 0 1 2 3

USERNAME => trmikesl
DGN FILE => 933380na001.dgn

CU 09344

EA 333801

Dist	COUNTY	ROUTE	POST MILES TOTAL PROJECT	SHEET No.	TOTAL SHEETS
09	Iny	190	47.4	11	25

Truman P. Denio 9-29-09
REGISTERED CIVIL ENGINEER DATE

11-23-09
PLANS APPROVAL DATE

REGISTERED PROFESSIONAL ENGINEER
TRUMAN DENIO
No. 34556
Exp. 9-30-11
CIVIL
STATE OF CALIFORNIA

THE STATE OF CALIFORNIA OR ITS OFFICERS OR AGENTS SHALL NOT BE RESPONSIBLE FOR THE ACCURACY OR COMPLETENESS OF SCANNED COPIES OF THIS PLAN SHEET.

NOTES:
1. FOR ADDITIONAL DELINEATOR DETAILS, SEE STD PLANS A73C.
2. HARDWARE FOR ATTACHING THE TARGET PLATES SHALL CONSIST OF 3/16" BLIND ALUMINUM RIVETS AND WASHERS.
3. METAL POSTS SHALL BE GALVANIZED IN THE SAME MANNER AS STANDARD CLASS 2 DELINEATOR POST.
4. EXACT LOCATION OF MARKERS AND DELINEATORS SHALL BE DETERMINED BY THE ENGINEER.

NOTE:
BORDER & LEGEND - RED TYPE III
BACKGROUND - WHITE TYPE III

ROAD SIGN R26 (CA)

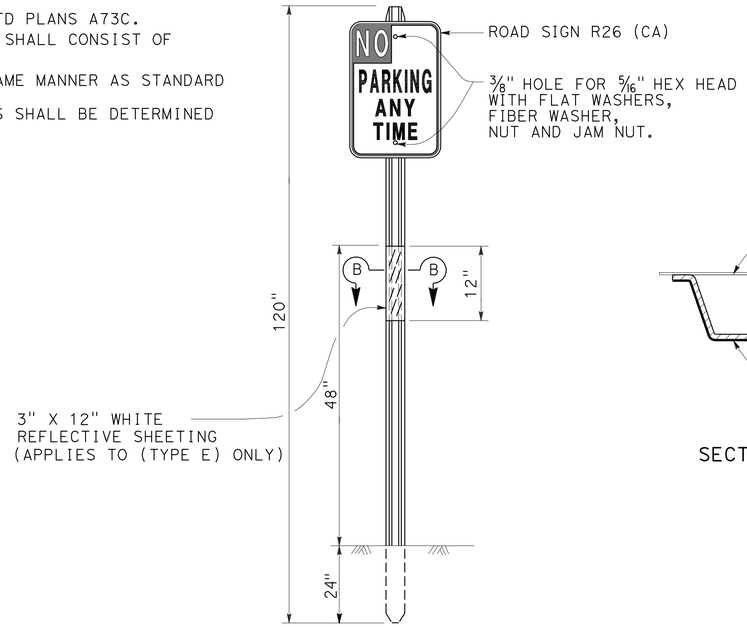

(BACK)

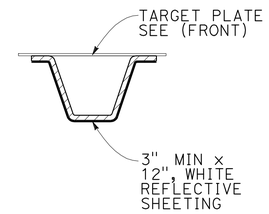

SECTION B-B

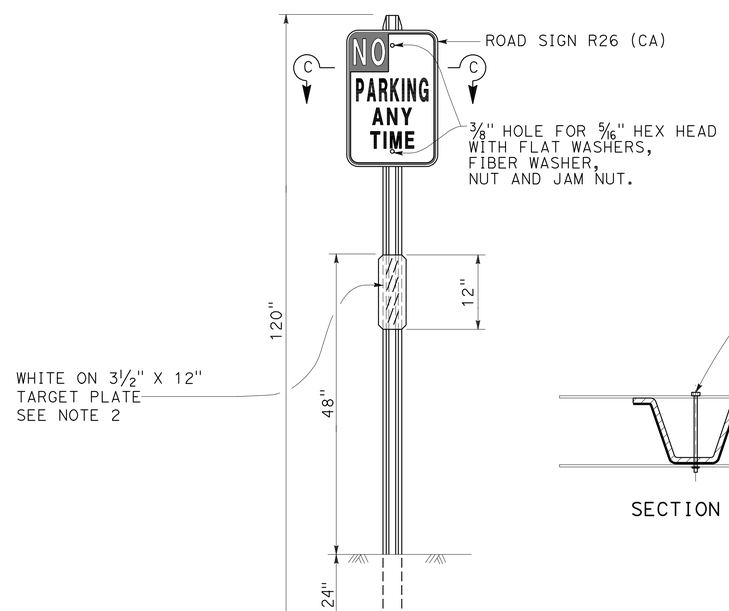

(FRONT)

DELINEATOR (SPECIAL) (TYPE E OR F)

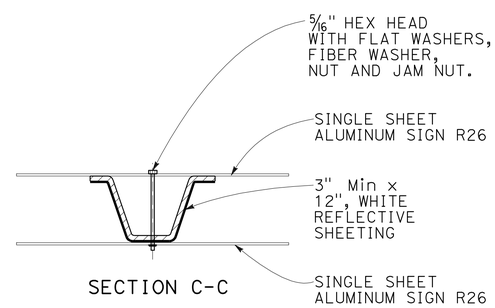

SECTION C-C

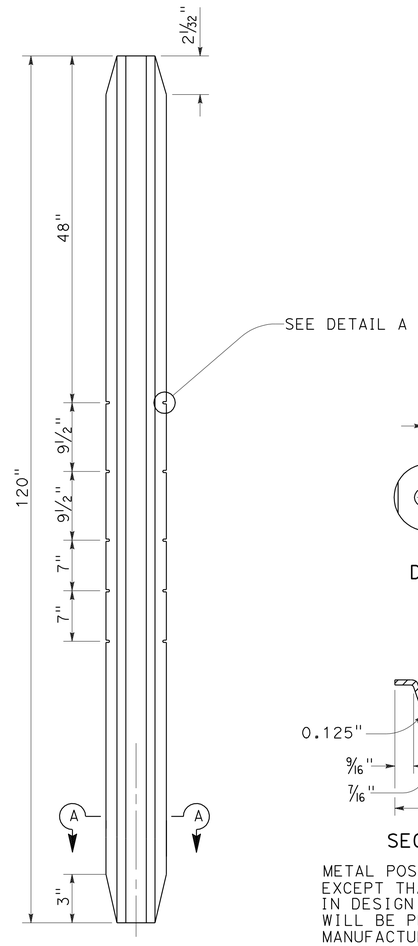

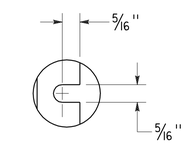

DETAIL A

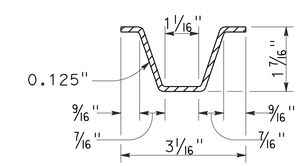

SECTION A-A

METAL POST TO BE AS SHOWN EXCEPT THAT MINOR VARIATIONS IN DESIGN AND DIMENSIONS WILL BE PERMITTED TO MEET MANUFACTURER'S STANDARDS

DELINEATOR (SPECIAL)
METAL POST DETAIL

PAVEMENT DELINEATION DETAILS

NO SCALE

PDD-1

STATE OF CALIFORNIA - DEPARTMENT OF TRANSPORTATION
Caltrans
DESIGN

FUNCTIONAL SUPERVISOR: TRUMAN DENIO
CALCULATED-DESIGNED BY: KONSTANTIN GREKOV
CHECKED BY: TRUMAN DENIO
REVISED BY
DATE REVISED

LAST REVISION 09-29-09
DATE PLOTTED => 24-NOV-2009
TIME PLOTTED => 06:36

Dist	COUNTY	ROUTE	POST MILES TOTAL PROJECT	SHEET No.	TOTAL SHEETS
09	Iny	190	47.4	12	25

Truman P. Denio 9-29-09
REGISTERED CIVIL ENGINEER DATE

11-23-09
PLANS APPROVAL DATE

REGISTERED PROFESSIONAL ENGINEER
TRUMAN DENIO
No. 34556
Exp. 9-30-11
CIVIL
STATE OF CALIFORNIA

THE STATE OF CALIFORNIA OR ITS OFFICERS OR AGENTS SHALL NOT BE RESPONSIBLE FOR THE ACCURACY OR COMPLETENESS OF SCANNED COPIES OF THIS PLAN SHEET.

L - LENGTH OF SIGN
D - DEPTH OF SIGN

SIGN SUMMARY

SIGN NUMBER	STATION	LEFT	RIGHT	CODE	MESSAGE	SIZE (L X D)	ROADSIDE SIGN - ONE POST EA	INSTALL ROADSIDE SIGN PANEL EA	FURNISH SINGLE SHEET ALUMINUM SIGN 0.063" - UNFRAMED SQFT	SIGN MATERIALS: SINGLE FACED	BACKGROUND: SHEETING COLOR	BACKGROUND: RETROREFLECTIVE ASTM TYPE	LEGEND: SHEETING COLOR	LEGEND: RETROREFLECTIVE ASTM TYPE	GRAFFITI FILM: STANDARD	GRAFFITI FILM: PREMIUM	POSTS SIZE	FSBT	FSBT	FEBT	FWBT	REMARK
1	7+25 ROUTE 190		X	W2-2 LT	INTERSECTION SYMBOL	36" X 36"	1		9.0	X	YELLOW	III	BLACK		X		4" X 6"			X		
2	9+65 ROUTE 190	X		R26 (CA)	NO PARKING ANY TIME	12" X 18"		1	1.5	X	RED	III	WHITE	III	X		CLASS II			X		INSTALLED ON SPECIAL DELINEATOR POST
	9+65 ROUTE 190			R26 (CA)	NO PARKING ANY TIME	12" X 18"		1	1.5	X	RED	III	WHITE	III	X						X	
3	10+45 ROUTE 190	X		R26 (CA)	NO PARKING ANY TIME	12" X 18"		1	1.5	X	RED	III	WHITE	III	X		CLASS II			X		INSTALLED ON SPECIAL DELINEATOR POST
	10+45 ROUTE 190			R26 (CA)	NO PARKING ANY TIME	12" X 18"		1	1.5	X	RED	III	WHITE	III	X						X	
4	11+25 ROUTE 190	X		R26 (CA)	NO PARKING ANY TIME	12" X 18"		1	1.5	X	RED	III	WHITE	III	X		CLASS II			X		INSTALLED ON SPECIAL DELINEATOR POST
	11+25 ROUTE 190			R26 (CA)	NO PARKING ANY TIME	12" X 18"		1	1.5	X	RED	III	WHITE	III	X						X	
5	11+62 ROUTE 190	X		R1-1	STOP	36" X 36"	1		9.0	X	RED	VII	WHITE	VII	X		4" X 6"		X			ACCESS ROAD
6	12+00 ROUTE 190		X	W1-7	DOUBLE HEAD ARROW	36" X 18"	1		4.5	X	YELLOW	III	BLACK		X		4" X 6"		X			
	12+00 ROUTE 190			TYPE N1 (CA)	DIAMOND SYMBOL	18" X 18"			2.25	X	YELLOW	III	BLACK		X				X			
7	16+75 ROUTE 190	X		W2-2 RT	INTERSECTION SYMBOL	36" X 36"	1		9.0	X	YELLOW	III	BLACK		X		4" X 6"				X	
8	20+98 ACCESS Rd	X		R99C	ADA PARKING ONLY	12" X 18"	1		1.5	X	BLUE	VII	WHITE		X		4" X 4"					
9	20+98 ACCESS Rd	X		R99A	VAN ACCESSIBLE	12" X 8"			1.5	X	BLUE	VII	WHITE		X		4" X 4"					
10	21+12 ACCESS Rd	X		R99C	ADA PARKING ONLY	12" X 18"	1		1.5	X	BLUE	VII	WHITE		X		4" X 4"					
11	22+42 ACCESS Rd	X		R3-2	NO LEFT TURN	24" X 24"	1		4.0	X	BLUE	VII	WHITE		X		4" X 4"					
	TOTAL						7	6	49.75													

SIGN QUANTITIES
SQ-1

STATE OF CALIFORNIA - DEPARTMENT OF TRANSPORTATION
Caltrans DESIGN

FUNCTIONAL SUPERVISOR: TRUMAN DENIO
CALCULATED-DESIGNED BY: KONSTANTIN GREKOV
CHECKED BY: TRUMAN DENIO
REVISED BY
DATE REVISED

LAST REVISION 09-29-09
DATE PLOTTED => 24-NOV-2009
TIME PLOTTED => 06:36

Dist	COUNTY	ROUTE	POST MILES TOTAL PROJECT	SHEET No.	TOTAL SHEETS
09	Iny	190	47.4	13	25

Truman P. Denio 9-29-09
REGISTERED CIVIL ENGINEER DATE

11-23-09
PLANS APPROVAL DATE

REGISTERED PROFESSIONAL ENGINEER
TRUMAN DENIO
No. 34556
Exp. 9-30-11
CIVIL
STATE OF CALIFORNIA

THE STATE OF CALIFORNIA OR ITS OFFICERS OR AGENTS SHALL NOT BE RESPONSIBLE FOR THE ACCURACY OR COMPLETENESS OF SCANNED COPIES OF THIS PLAN SHEET.

NOTE: (N): NOT A SEPARATE PAY ITEM, FOR INFORMATION ONLY.

Temp FENCE (TYPE ESA)

DESCRIPTION	LF	REMARKS
Temp FENCE (TYPE ESA)	850	SEE LAYOUT SHEET

ROADWAY MATERIALS

LOCATION DESCRIPTION	HOT MIX ASPHALT (TYPE A)	CLASS 2 AGGREGATE BASE	ROADWAY EXCAVATION	IMPORTED BORROW	EMBANKMENT(N)
	TON	CY	CY	CY	CY
PARKING AREA	1,000	550	510	420	830

ROCK SLOPE PROTECTION (FACING, METHOD B)

ITEM	SQYD	CY
RSP FACING, METHOD B	-	9
RSP FABRIC	23	-
TOTAL	23	9

BAR REINFORCING STEEL (RETAINING CURB) (N)

LOCATION DESCRIPTION	LB
Sta 22+63 - 23+07 (TYPE A1-6) (SEE SHEET C-1)	350
TOTAL	350

EROSION CONTROL

LOCATION	DUFF	EROSION CONTROL (TYPE C)
	SQYD	SQYD
SEE SHEET C-1	2,200	2,200
TOTAL	2,200	2,200

MINOR CONCRETE (Misc Const)

LOCATION DESCRIPTION	CY
SIDEWALK AND RAMPS (0.3') (STA 20+85 TO 23+12.6)	40.0
CURB (L=255') (TYPE A1-6) (SEE SHEET C-1)	6.6
CURB (L=174') (TYPE A1-6) (SEE SHEET C-1)	4.5
CURB (L=40') (TYPE A2-6) (SEE SHEET C-1)	2.4
Sta 22+63 - 23+07 (RETAINING CURB) (TYPE A1-6) (SEE SHEET C-1)	3.5
TOTAL	57.0

RELOCATE AND TRANSPLANT

ITEM	EA	EA	REMARKS
RELOCATE BOULDERS	20	-	SEE SHEET L-1
TRANSPLANT SHRUBS	-	5	SEE SHEET L-1
TOTAL	20	5	

TUBULAR HANDRAILING

DESCRIPTION	LF	REMARKS
TUBULAR HANDRAILING	265	SEE SHEET C-2
TOTAL	265	

DELINEATOR (CLASS 2)

Sta	L+	R+	DELINEATOR TYPE E	DELINEATOR TYPE F	DELINEATOR (SPECIAL) TYPE E	DELINEATOR (SPECIAL) TYPE F
			EA	EA	EA	EA
9+65	X				1	
10+05	X		1			
10+45	X				1	
10+85	X		1			
11+25	X					1
11+45	X			1		
12+70	X		1			
12+90	X			1		
13+10	X		1			
13+50	X		1			
13+90	X		1			
SUBTOTAL			6	2	2	1
TOTAL			11			

THERMOPLASTIC PAVEMENT MARKING

DESCRIPTION	SQFT	REMARKS
WHITE THERMOPLASTIC PAVEMENT MARKING	255	SEE SHEET PD-1
BLUE THERMOPLASTIC PAVEMENT MARKING	49	SEE SHEET PD-1
TOTAL	304	

PAINT TRAFFIC STRIPE

DESCRIPTION	DETAIL NUMBER 27B	DETAIL NUMBER 21	DETAIL NUMBER 27C	REMARKS
	LF	LF	LF	
PAINT TRAFFIC STRIPE (2 COAT)	562	175	163	SEE SHEET PD-1
TOTAL	900			

REMOVE PAINTED TRAFFIC STRIPE

STATION TO STATION (LOCATION)	YELLOW
	LF
11+75 - 12+25	50
TOTAL	50

SUMMARY OF QUANTITIES
Q-1

STATE OF CALIFORNIA - DEPARTMENT OF TRANSPORTATION
Caltrans® DESIGN

FUNCTIONAL SUPERVISOR: TRUMAN DENIO
CALCULATED-DESIGNED BY: KONSTANTIN GREKOV
CHECKED BY: TRUMAN DENIO
REVISED BY
DATE REVISED

LAST REVISION 09-29-09
DATE PLOTTED => 24-NOV-2009
TIME PLOTTED => 06:37

DIST	COUNTY	ROUTE	POST MILES TOTAL PROJECT	SHEET NO.	TOTAL SHEETS
09	Iny	190	47.4	14	25

REGISTERED CIVIL ENGINEER

June 6, 2008
PLANS APPROVAL DATE

REGISTERED PROFESSIONAL ENGINEER
Donald E. Howe
No. C46402
Exp. 3-31-09
CIVIL
STATE OF CALIFORNIA

The State of California or its officers or agents shall not be responsible for the accuracy or completeness of electronic copies of this plan sheet.

To accompany plans dated 11-23-09

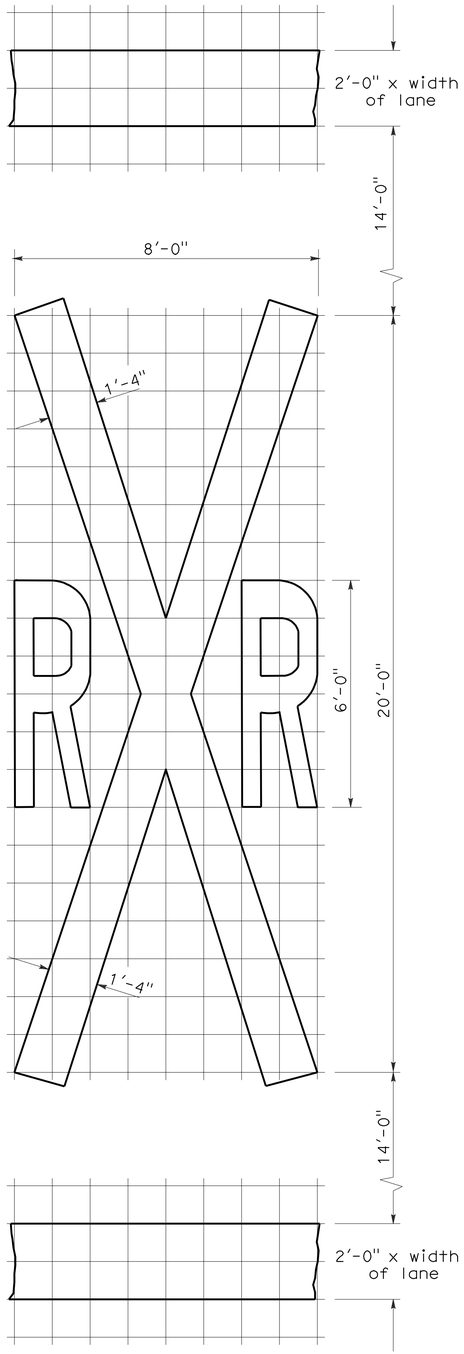

1'-0" GRID
A=70 sq ft ✳

RAILROAD CROSSING SYMBOL

✳70 sq ft DOES NOT INCLUDE THE 2'-0" x VARIABLE WIDTH TRANSVERSE LINES.

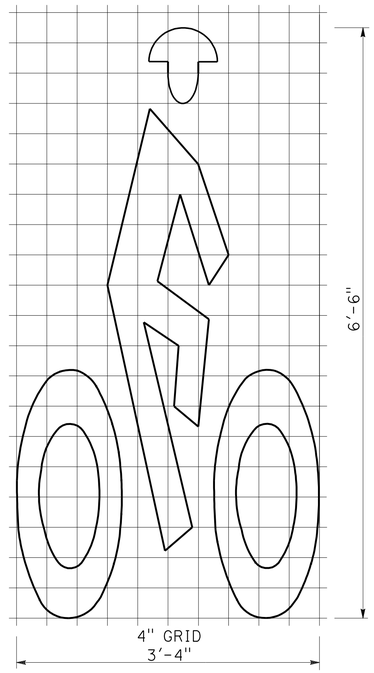

A=7 sq ft

BIKE LANE SYMBOL

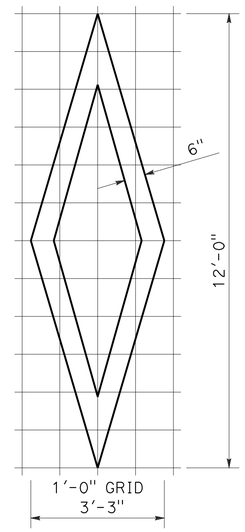

A=11 sq ft

DIAMOND SYMBOL

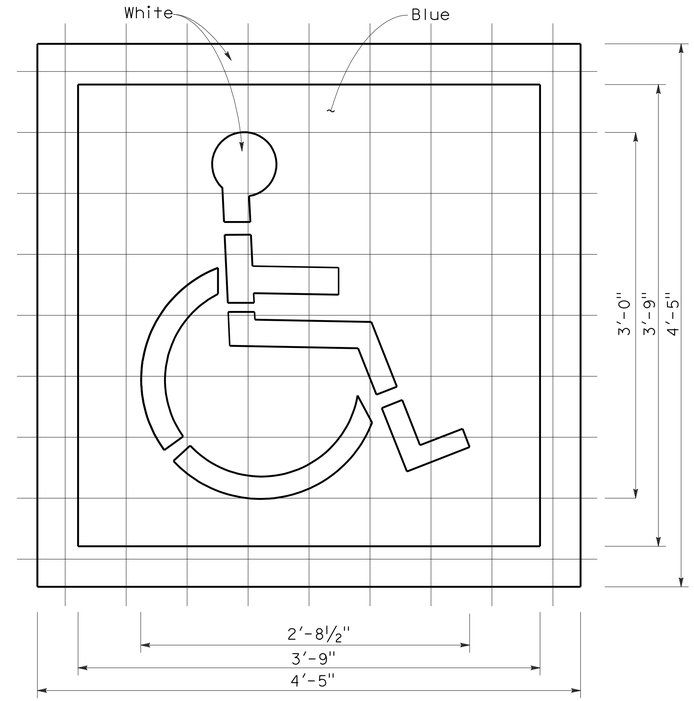

6" GRID
A (White) =9 sq ft
A (Blue) =14 sq ft

INTERNATIONAL SYMBOL OF ACCESSIBILITY MARKING

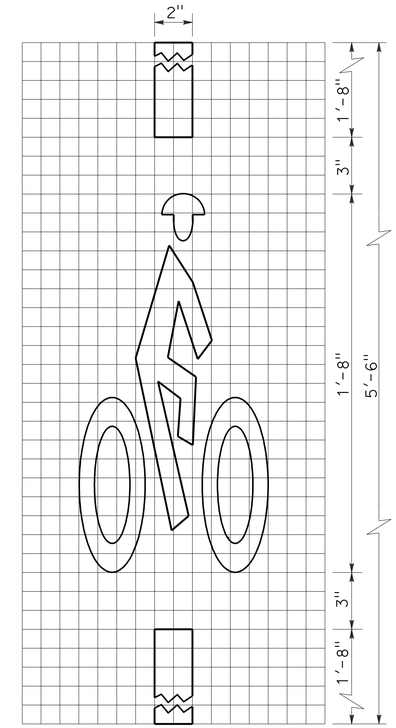

1" GRID
10"
A=2 sq ft

BICYCLE LOOP DETECTOR SYMBOL

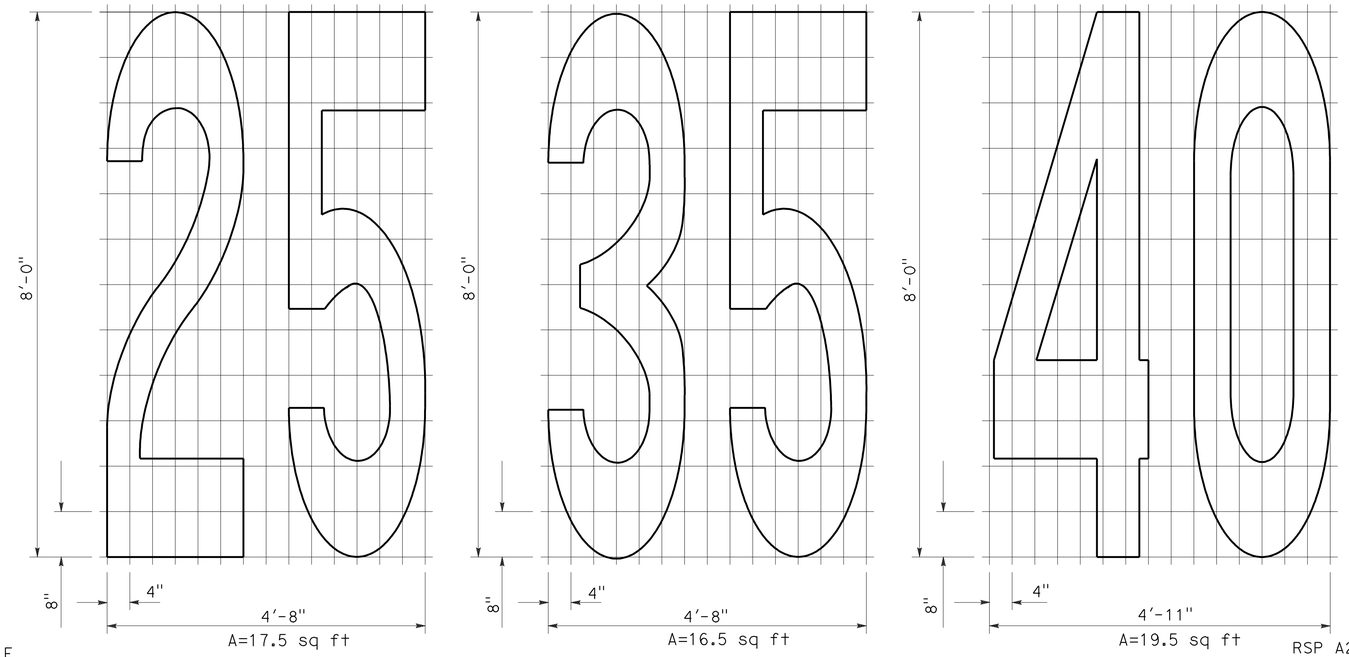

A=17.5 sq ft
A=16.5 sq ft
A=19.5 sq ft

NUMERALS

NOTE:

1. Minor variations in dimensions may be accepted by the Engineer.

STATE OF CALIFORNIA
DEPARTMENT OF TRANSPORTATION

PAVEMENT MARKINGS SYMBOLS AND NUMERALS

NO SCALE

RSP A24C DATED JUNE 6, 2008 SUPERSEDES STANDARD PLAN A24C DATED MAY 1, 2006 - PAGE 11 OF THE STANDARD PLANS BOOK DATED MAY 2006.

REVISED STANDARD PLAN RSP A24C

2006 REVISED STANDARD PLAN RSP A24C

5-27-08

DIST	COUNTY	ROUTE	POST MILES TOTAL PROJECT	SHEET NO.	TOTAL SHEETS
09	Iny	190	47.4	15	25

REGISTERED CIVIL ENGINEER

November 17, 2006
PLANS APPROVAL DATE

REGISTERED PROFESSIONAL ENGINEER Michael Janzen No. 44788 Exp. 03-31-08 CIVIL STATE OF CALIFORNIA

The State of California or its officers or agents shall not be responsible for the accuracy or completeness of electronic copies of this plan sheet.

To accompany plans dated 11-23-09

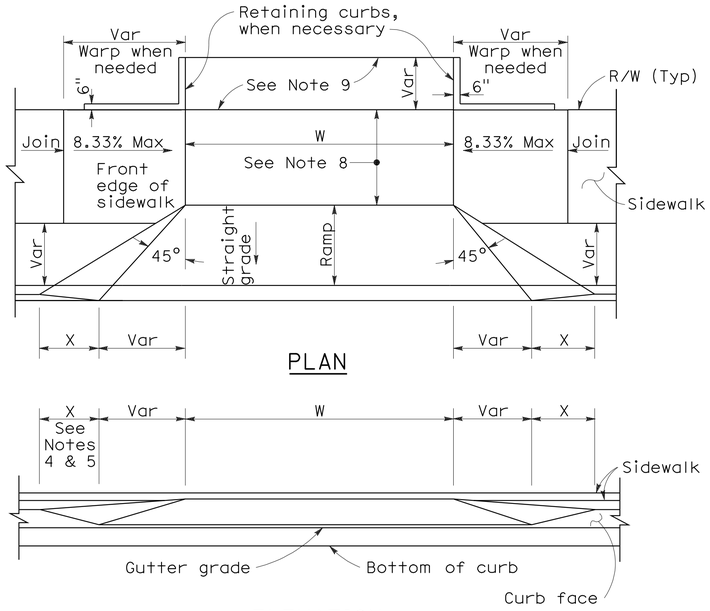

PLAN

ELEVATION

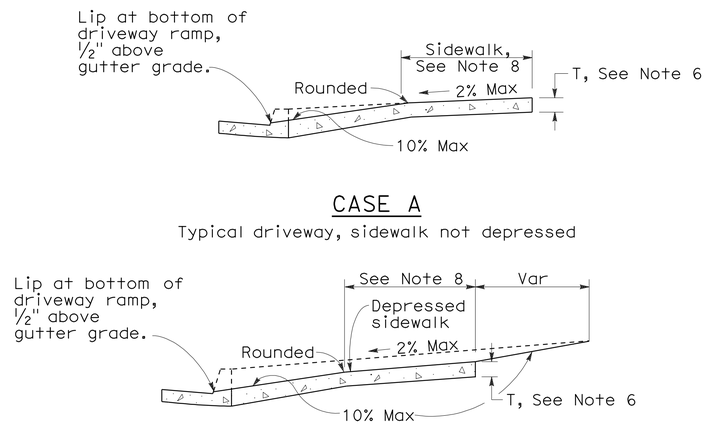

CASE A

Typical driveway, sidewalk not depressed

CASE B

Driveway with depressed sidewalk

SECTIONS

CURB QUANTITIES

TYPE	CUBIC YARDS PER LINEAR FOOT
A1-6	0.02585
A1-8	0.03084
A2-6	0.05903
A2-8	0.06379
A3-6	0.01036
A3-8	0.01435
B1-4	0.02185
B1-6	0.02930
B2-4	0.05515
B2-6	0.06171
B3-4	0.00641
B3-6	0.01074
B4	0.05709
D-4	0.04083
D-6	0.06804
E	0.06661

TABLE A

CURB TYPE	DIMENSIONS "H1"	"H2"	"W1"	"W2"
A1-6	1'-2"	6"	7½"	1½"
A1-8	1'-4"	8"	8"	2"
A2-6	1'-0"	6"	2'-7½"	1½"
A2-8	1'-2"	8"	2'-8"	2"
A3-6	6"	5"	7¼"	1¼"
A3-8	8"	7"	7¾"	1¾"
B1-4	1'-0"	4"	7½"	2½"
B1-6	1'-2"	6"	9"	4"
B2-4	10"	4"	2'-7½"	2½"
B2-6	1'-0"	6"	2'-9"	4"
B3-4	4"	3"	7"	2"
B3-6	6"	5"	8½"	3½"
D-4	10"	4"	1'-6"	1'-1"
D-6	1'-0"	6"	2'-2"	1'-8"

DRIVEWAYS

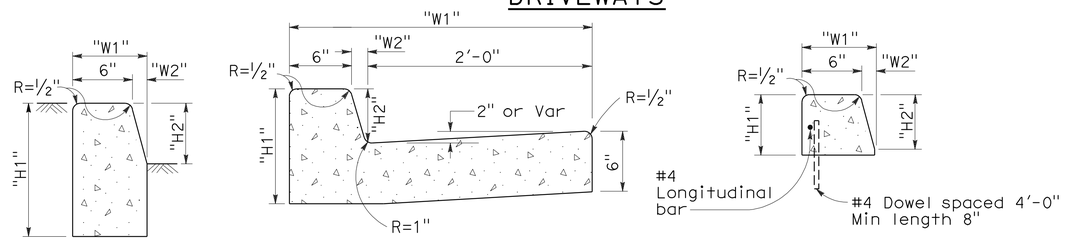

TYPE A1 CURBS
See Table A

TYPE A2 CURBS
See Table A

TYPE A3 CURBS
Superimposed on existing pavement
See Table A

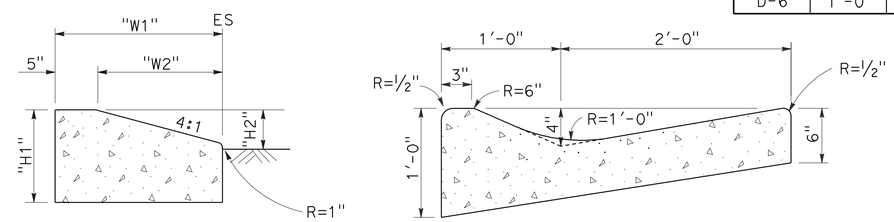

TYPE D CURBS
See Table A

TYPE E CURB

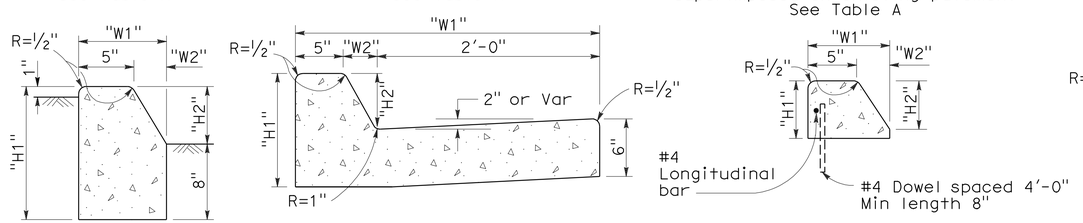

TYPE B1 CURBS
See Table A

TYPE B2 CURBS
See Table A

TYPE B3 CURBS
Superimposed on existing pavement
See Table A

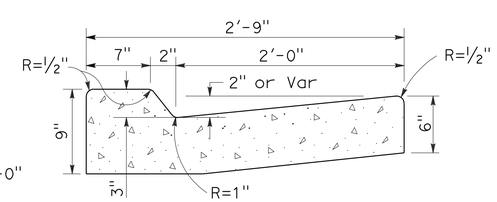

TYPE B4 CURBS

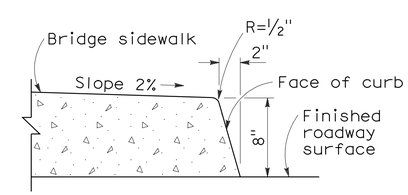

TYPE H CURB
On Bridges

CURBS

NOTES:

1. Case A driveway section typically applies.
2. Use Case B driveway section when ramp slopes would exceed 10% in Case A.
3. Use Case B driveway section when sidewalk cross slope would exceed 2% in Case A.
4. X=3'-0" except for curb heights over 10" where 4:1 slopes shall be used on curb slope.
5. X is a variable when sidewalk is located where wheelchairs may traverse the surface. Slopes shall not exceed 8.33%.
6. Sidewalk and ramp thickness "T" at driveway shall be 4" for residental and 6" for commercial.
7. Difference in slope of the driveway ramp and the slope of a line between the gutter and a point on the roadway 5'-0" from gutter line shall not exceed 15%. Reduce driveway ramp slope, not gutter slope, where required.
8. Minimum width of clear passageway for sidewalk shall be 4'-0".
9. Retaining curbs and acquisition of construction easement may be necessary for narrow sidewalks or curb heights in excess of 6".
10. Across the pedestrian route at curb ramp locations, the gutter pan slope shall not exceed 1" of depth for each 2'-0" of width.

STATE OF CALIFORNIA
DEPARTMENT OF TRANSPORTATION

CURBS AND DRIVEWAYS

NO SCALE

RSP A87A DATED NOVEMBER 17, 2006 SUPERSEDES STANDARD PLAN A87A DATED MAY 1, 2006 - PAGE 113 OF THE STANDARD PLANS BOOK DATED MAY 2006.

REVISED STANDARD PLAN RSP A87A

2006 REVISED STANDARD PLAN RSP A87A

10-25-06

DIST	COUNTY	ROUTE	POST MILES TOTAL PROJECT	SHEET NO.	TOTAL SHEETS
09	Iny	190	47.4	16	25

REGISTERED CIVIL ENGINEER

September 1, 2006
PLANS APPROVAL DATE

REGISTERED PROFESSIONAL ENGINEER — Hector David Cordova — No. C41957 — Exp. 3-31-08 — CIVIL — STATE OF CALIFORNIA

The State of California or its officers or agents shall not be responsible for the accuracy or completeness of electronic copies of this plan sheet.

To accompany plans dated 11-23-09

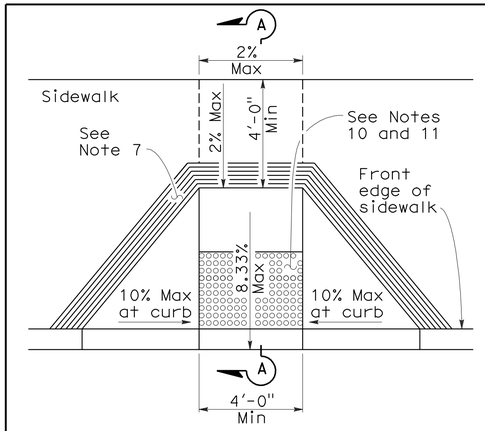

CASE A

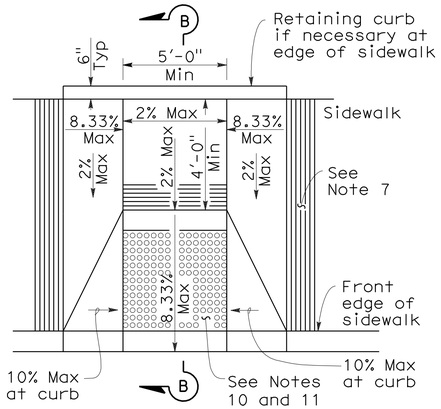

CASE B

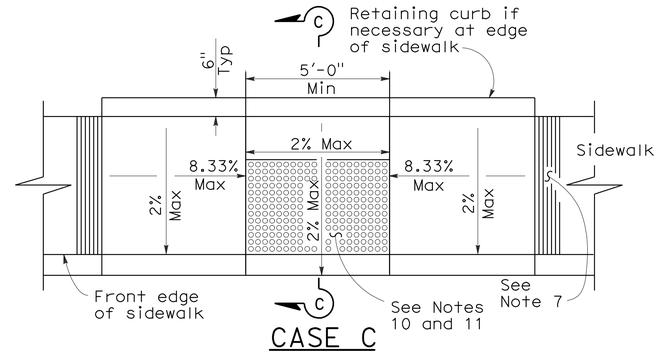

CASE C

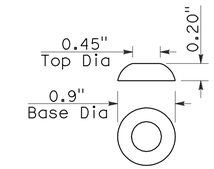

RAISED TRUNCATED DOME

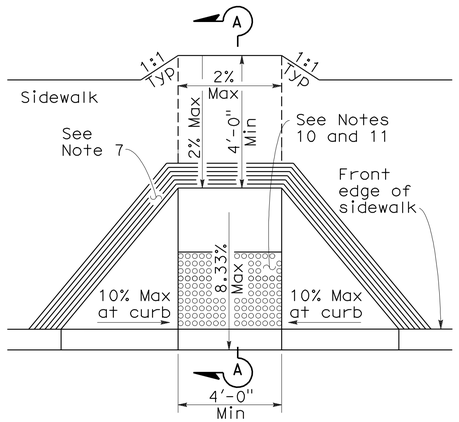

CASE D

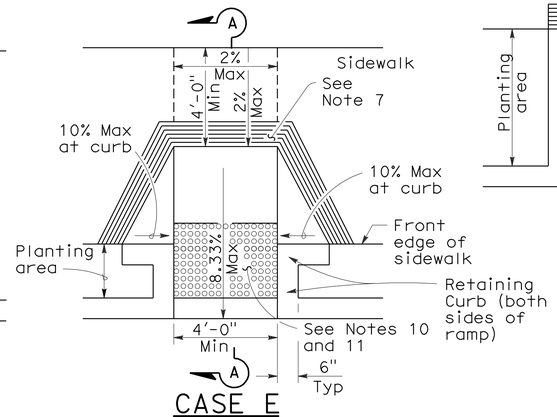

CASE E

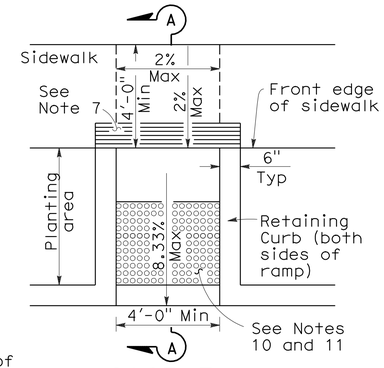

CASE F

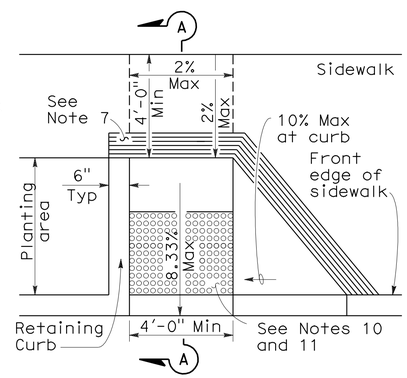

CASE G

See Note 4

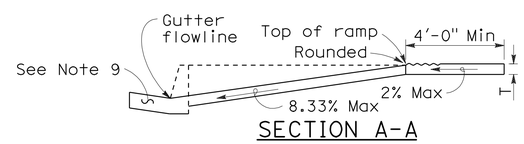

SECTION A-A

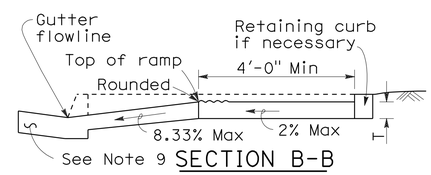

SECTION B-B

Depress entire sidewalk as required

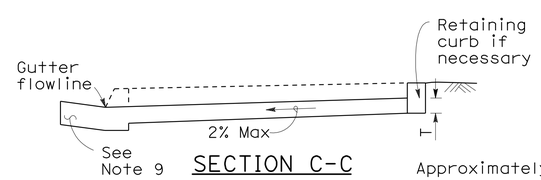

SECTION C-C

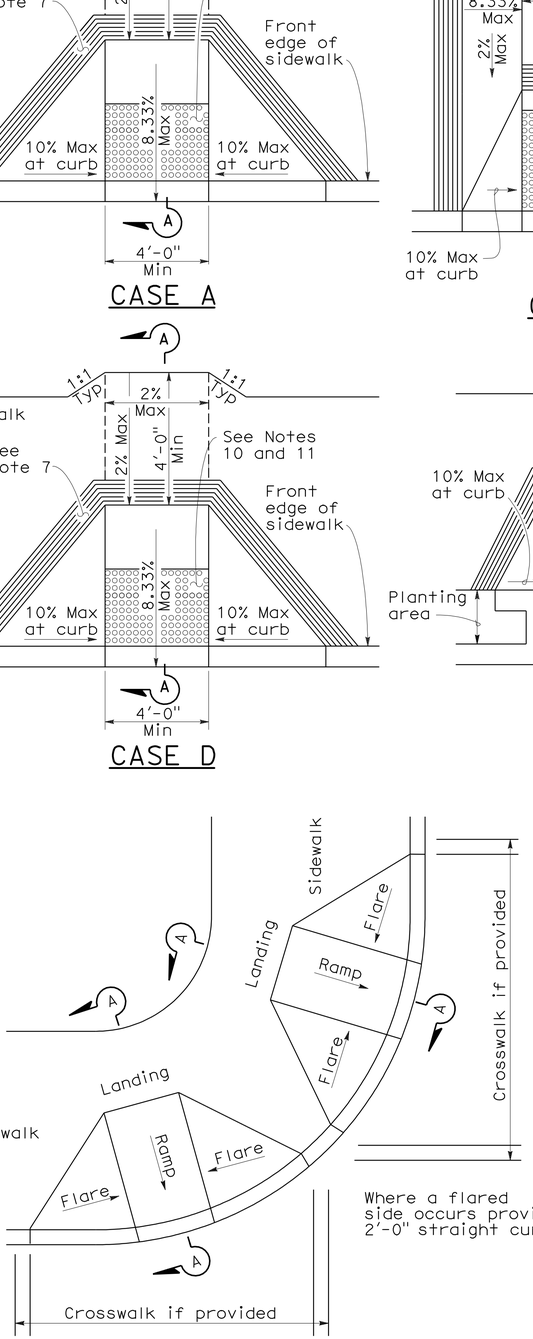

DETAIL A

TYPICAL TWO-RAMP CORNER INSTALLATION

See Note 1

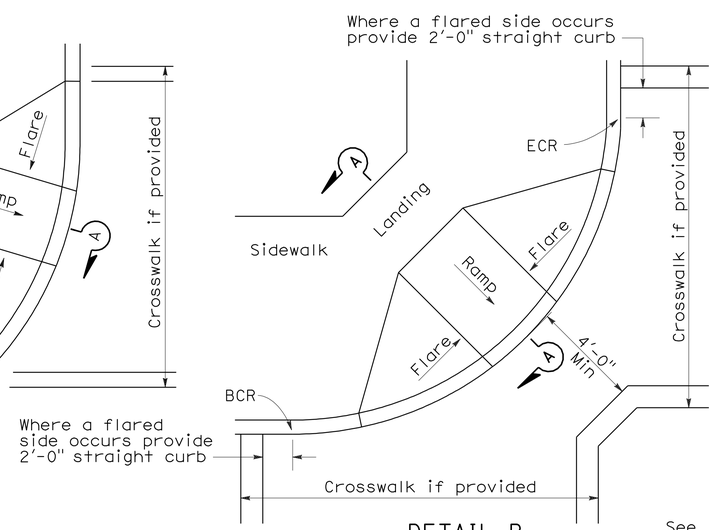

DETAIL B

TYPICAL ONE-RAMP CORNER INSTALLATION

See Notes 1 and 3

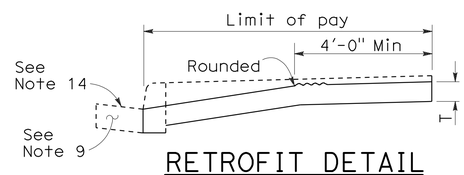

RETROFIT DETAIL

Existing curb and sidewalk

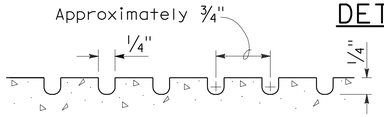

GROOVING DETAIL

NOTES:

1. As site conditions dictate, Case A through Case G curb ramps may be used for corner installations similar to those shown in Detail A and Detail B. The case of curb ramps used in Detail A do not have to be the same. Case A through Case G curb ramps also may be used at mid block locations, as site conditions dictate.
2. If distance from curb to back of sidewalk is too short to accommodate ramp and 4'-0" platform (landing) as shown in Case A, the sidewalk may be depressed longitudinally as in Case B, or C or may be widened as in Case D.
3. When ramp is located in center of curb return, crosswalk configuration must be similar to that shown for Detail B.
4. As site conditions dictate, the retaining curb side and the flared side of the Case G ramp shall be constructed in reversed position.
5. If located on a curve, the sides of the ramp need not be parallel, but the minimum width of the ramp shall be 4'-0".
6. Side slope of ramp flares vary uniformly from a maximum of 10% at curb to conform with longitudinal sidewalk slope adjacent to top of the ramp, except in Case C and Case F.
7. The curb ramp shall be outlined, as shown, with a 1'-0" wide border with 1/4" grooves approximately 3/4" on center. See grooving detail.
8. Transitions from ramps and landing to walks, gutters or streets shall be flush and free of abrupt changes.
9. Maximum slopes of adjoining gutters, the road surface immediately adjacent to the curb ramp or accessible route shall not exceed 5 percent within 4'-0" of the top and bottom of the curb ramp.
10. Curb ramps shall have a detectable warning surface that extends the full width and 3'-0" depth of the ramp. Detectable Warning Surfaces shall conform to the details on this plan and the requirements in the Special Provisions.
11. The edge of the detectable warning surface nearest the street shall be between 6" and 8" from the gutter flowline.
12. Sidewalk and ramp thickness, "T", shall be 3 1/2" minimum.
13. Utility pull boxes, manholes, vaults and all other utility facilities within the boundaries of the curb ramp will be relocated or adjusted to grade by the owner prior to, or in conjunction with, curb ramp construction.
14. For retrofit conditions, removal and replacement of curb apron will be at the Contractor's option, unless otherwise shown on project plans.

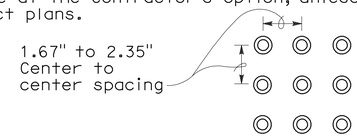

RAISED TRUNCATED DOME PATTERN (IN-LINE)

DETECTABLE WARNING SURFACE

See Note 10

STATE OF CALIFORNIA
DEPARTMENT OF TRANSPORTATION

CURB RAMP DETAILS

NO SCALE

RSP A88A DATED SEPTEMBER 1, 2006 SUPERSEDES STANDARD PLAN A88A DATED MAY 1, 2006 - PAGE 115 OF THE STANDARD PLANS BOOK DATED MAY 2006.

REVISED STANDARD PLAN RSP A88A

2006 REVISED STANDARD PLAN RSP A88A

8-3-06

DIST	COUNTY	ROUTE	POST MILES TOTAL PROJECT	SHEET NO.	TOTAL SHEETS
09	Iny	190	47.4	17	25

REGISTERED CIVIL ENGINEER

June 6, 2008
PLANS APPROVAL DATE

Hector David Cordova No. C41957 Exp. 3-31-10 CIVIL — REGISTERED PROFESSIONAL ENGINEER — STATE OF CALIFORNIA

The State of California or its officers or agents shall not be responsible for the accuracy or completeness of electronic copies of this plan sheet.

To accompany plans dated 11-23-09

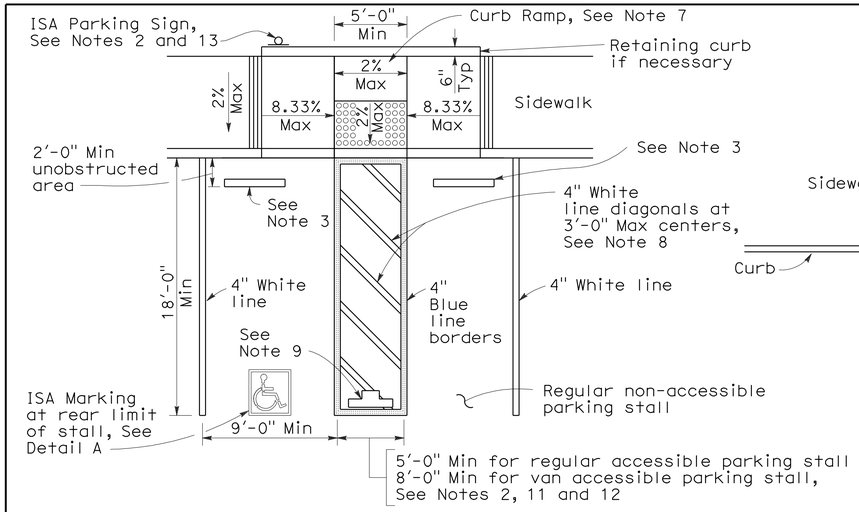

SINGLE PARKING STALL

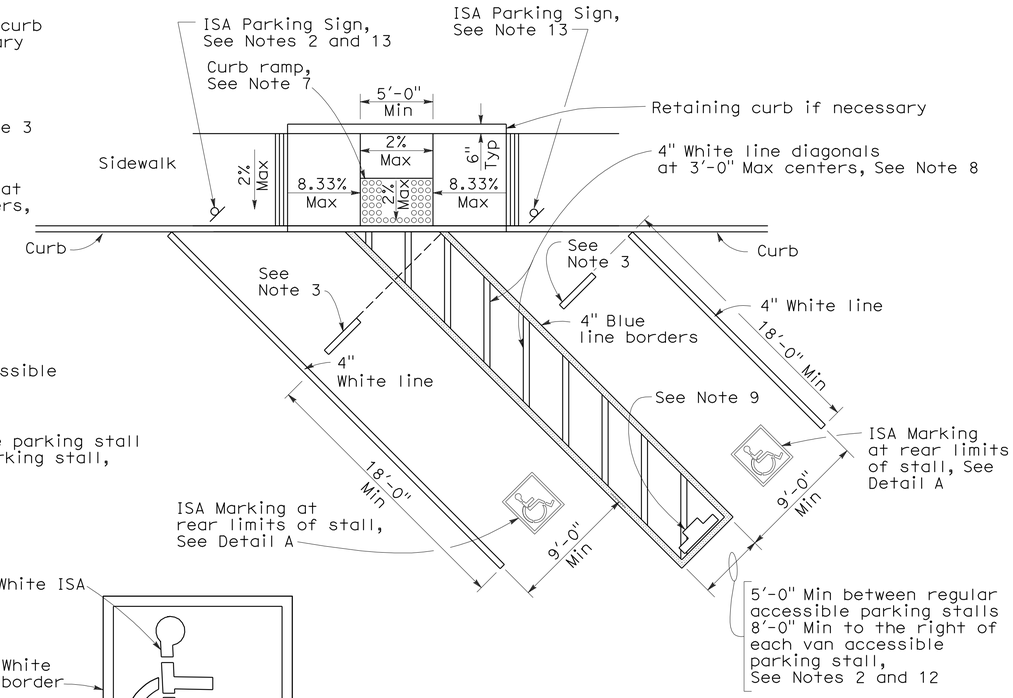

DIAGONAL DOUBLE PARKING STALLS

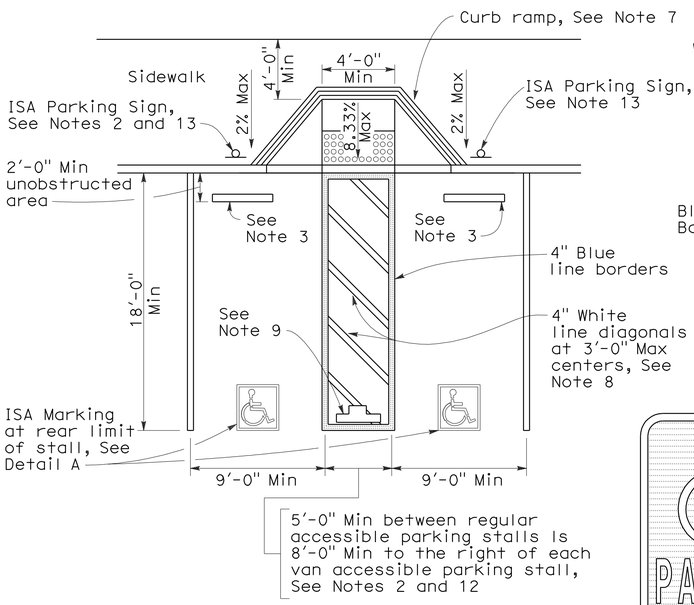

DOUBLE PARKING STALL

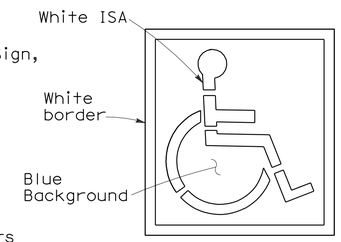

ISA MARKING
See Revised Std Plan RSP A24C

DETAIL A

TABLE A

Total Number of Parking Spaces or Stalls	Minimum Number of Disabled Accessible Parking Spaces or Stalls
1-25	1
26-50	2
51-75	3
76-100	4
101-150	5
151-200	6
201-300	7
301-400	8
401-500	9
501-1000	2 percent of total
Greater than 1001	20 plus 1 for each 100 or fraction thereof over 1001

SIGN R99 (CA)

PLAQUE R99B (CA)

SIGN R99 (CA) with PLAQUE R99B (CA)
See Note 6

SIGN R99C (CA)
See Note 6

UNAUTHORIZED VEHICLES PARKED IN DESIGNATED ACCESSIBLE SPACES NOT DISPLAYING DISTINGUISHING PLACARDS OR SPECIAL LICENSE PLATES ISSUED FOR PERSONS WITH DISABILITIES WILL BE TOWED AWAY AT THE OWNER'S EXPENSE

TOWED VEHICLES MAY BE RECLAIMED AT
(Insert Address)

OR BY TELEPHONING
(Insert Telephone Number)

SIGN R100B (CA)
See Note 10

SIGN R7-8b
See Notes 2 and 6

OFF-STREET PARKING SIGNS
(Parking lot or garage)
See Note 6

ISA = International Symbol of Accessibility

NOTES:

1. Accessible parking spaces serving a particular building shall be located on the shortest accessible route of travel from adjacent parking to an accessible entrance. In parking facilities that do not serve a particular building, accessible parking shall be located on the shortest accessible route of travel to an accessible pedestrian entrance of the parking facility.
2. One in every eight accessible off-street parking stalls, but not less than one, shall be served by an accessible aisle of 8'-0" minimum width and shall be signed van accessible. The R7-8b sign shall be mounted below the R99B (CA) plaque or the R99C (CA) sign.
3. In each parking stall, a curb or bumper shall be provided and located to prevent encroachment of vehicles over the required width of walkways. Parking stalls shall be so located that persons with disabilities are not compelled to wheel or walk behind parked cars other than their own.
4. Surface slopes of accessible off-street parking stalls shall be the minimum possible and shall not exceed 2 percent in any direction.
5. Table A shall be used to determine the required number of accessible parking stalls in each parking lot or garage.
6. Where Plaque R99B (CA), Sign R99C (CA) or Sign R7-8b are installed, the bottom of the sign or plaque panel shall be a minimum of 7'-0" above the surrounding surface.
7. Curb ramps shall conform to the details shown on Revised Standard Plan RSP A88A.
8. Blue paint, instead of white may be used for marking accessibility aisles in areas where snow may cause white markings to not be visible.
9. The words "NO PARKING", shall be painted in white letters no less than 1'-0" high and located so that it is visible to traffic enforcement officials. See Revised Standard Plan RSP A90B for details of the "NO PARKING" pavement marking.
10. A R100B (CA) sign shall be posted in a conspicuous place at each entrance to off-street parking facilities or immediately adjacent to and visible from each stall. The sign shall include the address where the towed vehicle may be reclaimed and the telephone number of the local traffic law enforcement agency.
11. Where a single (non-van) accessible parking space is provided, the loading and unloading access aisle shall be on the passenger side of the vehicle as the vehicle is going forward into the parking space.
12. Where a van accessible parking space is provided, the loading and unloading access aisle shall be 8'-0" wide minimum, and shall be on the passenger side of the vehicle as the vehicle is going forward into the parking space.
13. Accessible Parking Only Sign shall be Sign R99C (CA) or Sign R99 (CA) with Plaque R99B (CA).

STATE OF CALIFORNIA
DEPARTMENT OF TRANSPORTATION

ACCESSIBLE PARKING OFF-STREET

NO SCALE

RSP A90A DATED JUNE 6, 2008 SUPERSEDES STANDARD PLAN A90A
DATED MAY 1, 2006 - PAGE 117 OF THE STANDARD PLANS BOOK DATED MAY 2006.

REVISED STANDARD PLAN RSP A90A

2006 REVISED STANDARD PLAN RSP A90A

6-3-08

DIST	COUNTY	ROUTE	POST MILES TOTAL PROJECT	SHEET NO.	TOTAL SHEETS
09	Iny	190	47.4	18	25

Randell D. Hiatt
REGISTERED CIVIL ENGINEER

June 6, 2008
PLANS APPROVAL DATE

REGISTERED PROFESSIONAL ENGINEER
Randell D. Hiatt
No. C50200
Exp. 6-30-09
CIVIL
STATE OF CALIFORNIA

The State of California or its officers or agents shall not be responsible for the accuracy or completeness of electronic copies of this plan sheet.

To accompany plans dated 11-23-09

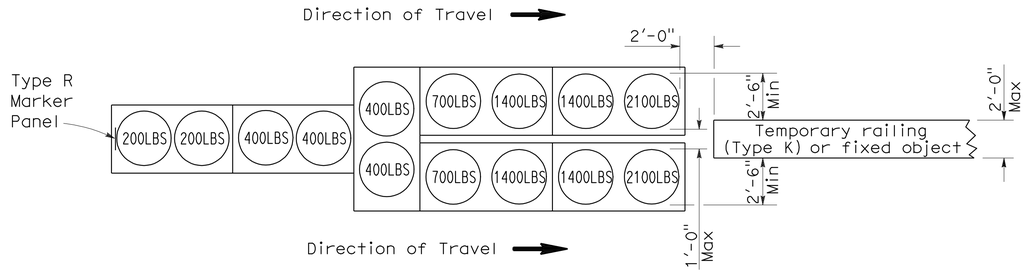

ARRAY 'TU14'

Approach speed 45 mph or more

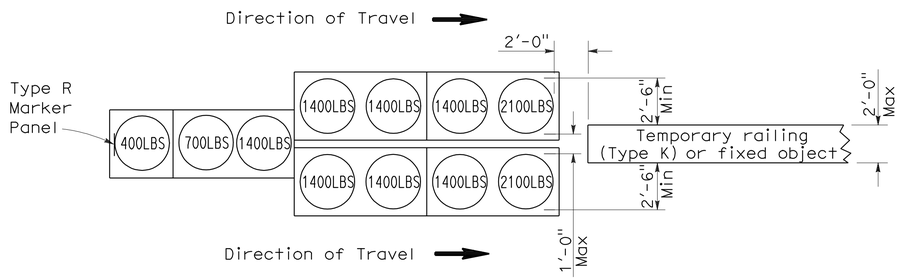

ARRAY 'TU11'

Approach speed less than 45 mph

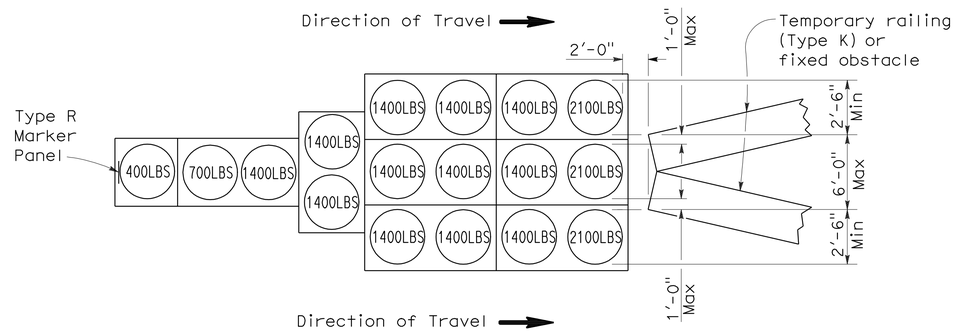

ARRAY 'TU17'

Approach speed less than 45 mph

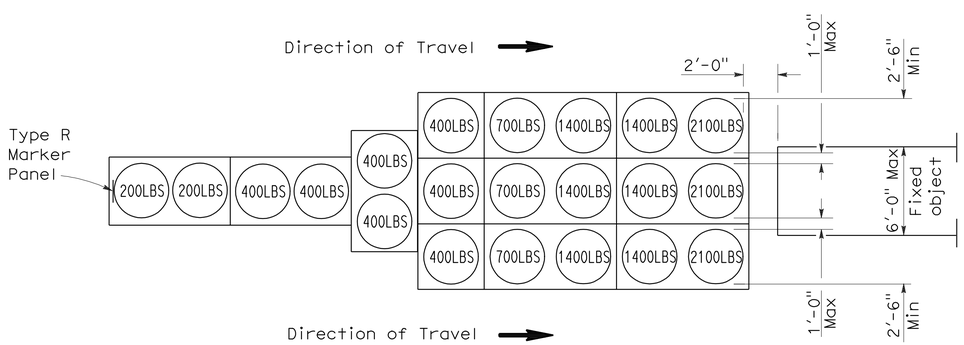

ARRAY 'TU21'

Approach speed 45 mph or more

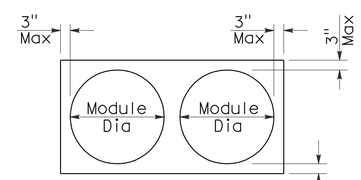

PLAN

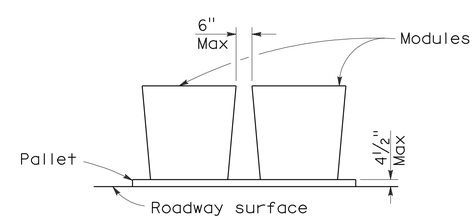

ELEVATION

CRASH CUSHION PALLET DETAIL

See Note 7

NOTES:

1. (XXX) Indicates sand filled module location and weight of sand in pounds for each module. Module spacing is based on the greater diameter of the module.
2. All sand weights are nominal.
3. Temporary crash cushion arrays shall not encroach on the traveled way.
4. Place the top of Type R marker panel 1" below the module lid.
5. Refer to Standard Plan A73B for marker details.
6. Approach speeds indicated conform to NCHRP 350 Report criteria.
7. Use of pallets is optional.

STATE OF CALIFORNIA
DEPARTMENT OF TRANSPORTATION

TEMPORARY CRASH CUSHION, SAND FILLED (UNIDIRECTIONAL)

NO SCALE

RSP T1A DATED JUNE 6, 2008 SUPERSEDES STANDARD PLAN T1A
DATED MAY 1, 2006 - PAGE 211 OF THE STANDARD PLANS BOOK DATED MAY 2006.

REVISED STANDARD PLAN RSP T1A

2006 REVISED STANDARD PLAN RSP T1A

5-15-08

DIST	COUNTY	ROUTE	POST MILES TOTAL PROJECT	SHEET NO.	TOTAL SHEETS
09	Iny	190	47.4	19	25

Randell D. Hiatt
REGISTERED CIVIL ENGINEER

June 6, 2008
PLANS APPROVAL DATE

REGISTERED PROFESSIONAL ENGINEER
Randell D. Hiatt
No. C50200
Exp. 6-30-09
CIVIL
STATE OF CALIFORNIA

The State of California or its officers or agents shall not be responsible for the accuracy or completeness of electronic copies of this plan sheet.

To accompany plans dated 11-23-09

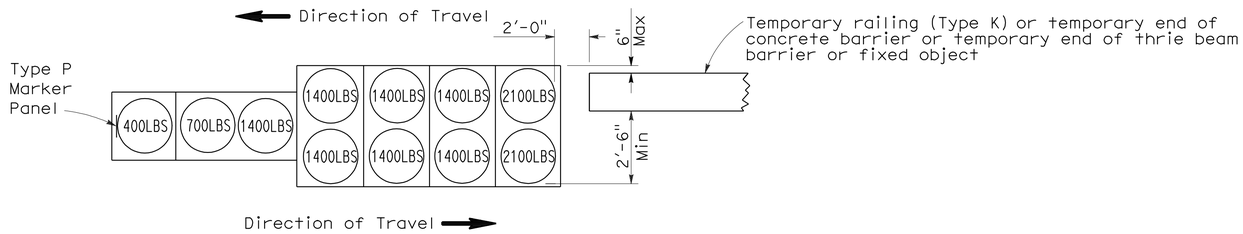

ARRAY 'TB11'

Approach speed less than 45 mph

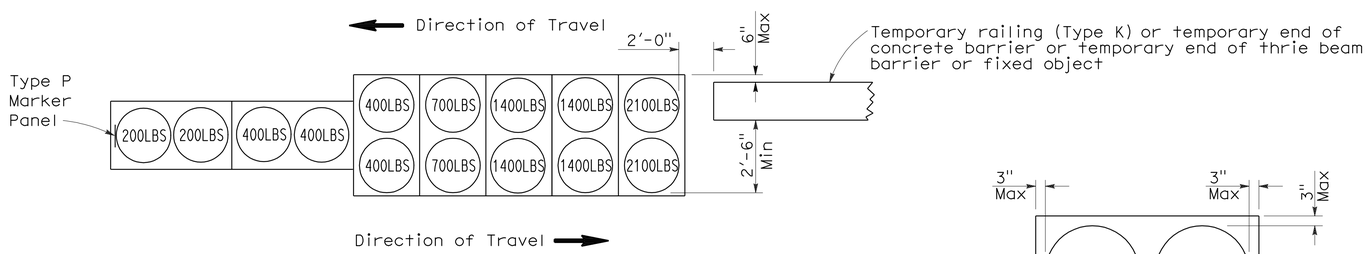

ARRAY 'TB14'

Approach speed 45 mph or more

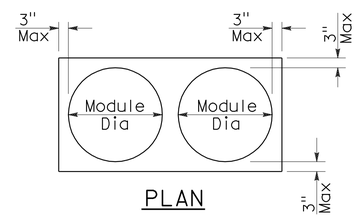

PLAN

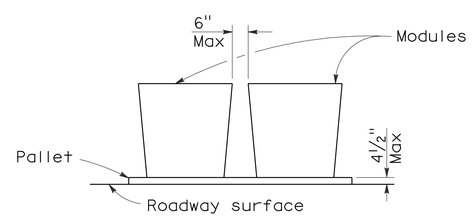

ELEVATION

CRASH CUSHION PALLET DETAIL

See Note 7

NOTES:

1. (XXX) Indicates sand filled module location and weight of sand in pounds for each module. Module spacing is based on the greater diameter of the module.
2. All sand weights are nominal.
3. Temporary crash cushion arrays shall not encroach on the traveled way.
4. Place the Type P marker panel so that the bottom of the panel rests upon the pallet.
5. Refer to Standard Plan A73B for marker details.
6. Approach speeds indicated conform to NCHRP 350 Report criteria.
7. Use of pallets is optional.

STATE OF CALIFORNIA
DEPARTMENT OF TRANSPORTATION

TEMPORARY CRASH CUSHION, SAND FILLED (BIDIRECTIONAL)

NO SCALE

RSP T1B DATED JUNE 6, 2008 SUPERSEDES STANDARD PLAN T1B
DATED MAY 1, 2006 - PAGE 212 OF THE STANDARD PLANS BOOK DATED MAY 2006.

REVISED STANDARD PLAN RSP T1B

2006 REVISED STANDARD PLAN RSP T1B

5-15-08

DIST	COUNTY	ROUTE	POST MILES TOTAL PROJECT	SHEET NO.	TOTAL SHEETS
09	Iny	190	47.4	20	25

Randell D. Hiatt
REGISTERED CIVIL ENGINEER

June 6, 2008
PLANS APPROVAL DATE

REGISTERED PROFESSIONAL ENGINEER
Randell D. Hiatt
No. C50200
Exp. 6-30-09
CIVIL
STATE OF CALIFORNIA

The State of California or its officers or agents shall not be responsible for the accuracy or completeness of electronic copies of this plan sheet.

To accompany plans dated 11-23-09

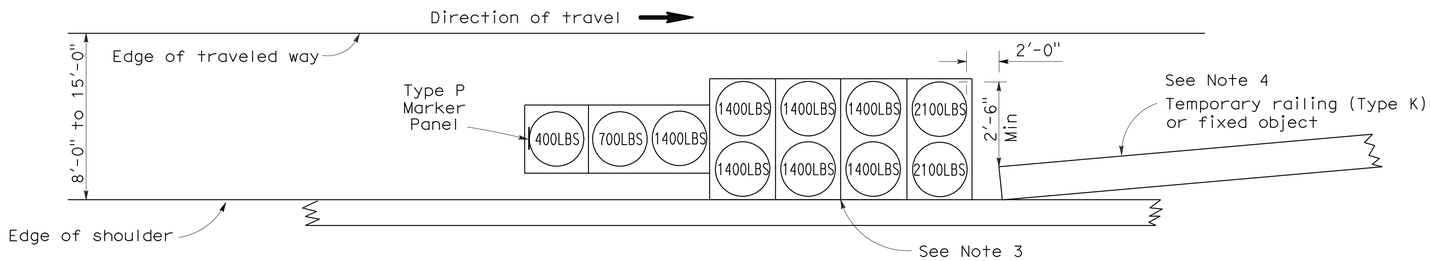

ARRAY 'TS11'

Approach speed less than 45 mph
See Note 9

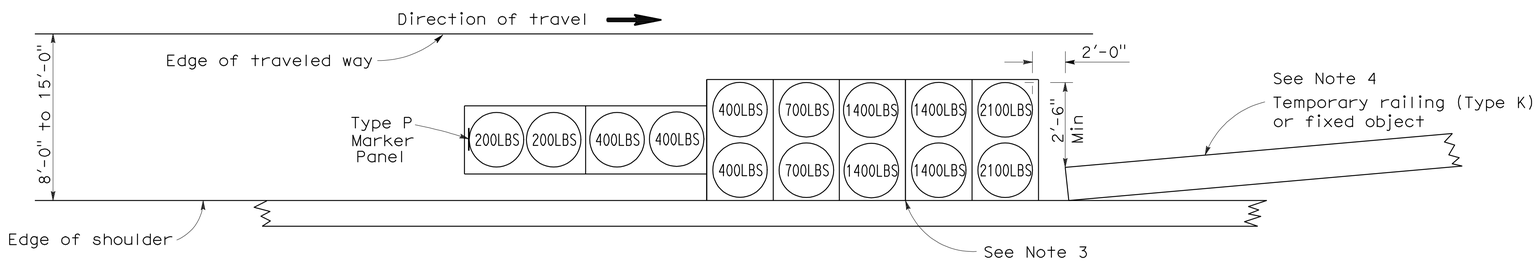

ARRAY 'TS14'

Approach speed 45 mph or more
See Note 9

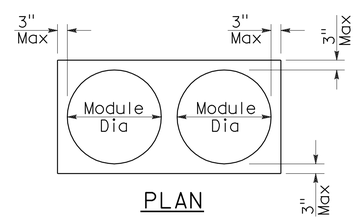

PLAN

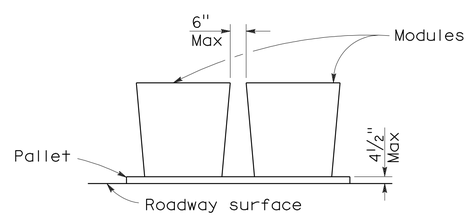

ELEVATION

CRASH CUSHION PALLET DETAIL

See Note 11

NOTES:

1. (XXX) Indicates sand filled module location and weight of sand in pounds for each module. Module spacing is based on the greater diameter of the module.
2. All sand weights are nominal.
3. The temporary crash cushion arrays shown on this plan shall be used only in locations where there will be traffic on one side of the temporary crash cushion array.
4. If the fixed object or approach end of the temporary railing is less than 15'-0" from the edge of traveled way, a temporary crash cushion is required in a construction or work zone.
5. Temporary crash cushion arrays shall not encroach on the traveled way.
6. Arrays for median shoulders shall conform to details shown on this plan for outside shoulders.
7. Place the Type P marker panel so that the bottom of the panel rests upon the pallet and faces traffic.
8. Refer to Standard Plan A73B for marker details.
9. For shoulder widths less than 8'-0", appropriate approved crash cushion protection, other than sand filled modules, shall be provided at fixed objects and at approach ends of temporary railing. The specific type of crash cushion shall be as shown on the project plans or as specified in the Special Provisions, or if not shown on the project plans or specified in the Special Provisions, shall be as approved by the Engineer.
10. Approach speeds indicated conform to NCHRP 350 Report criteria.
11. Use of pallets is optional.

STATE OF CALIFORNIA
DEPARTMENT OF TRANSPORTATION

TEMPORARY CRASH CUSHION, SAND FILLED (SHOULDER INSTALLATIONS)

NO SCALE

RSP T2 DATED JUNE 6, 2008 SUPERSEDES STANDARD PLAN T2
DATED MAY 1, 2006 - PAGE 213 OF THE STANDARD PLANS BOOK DATED MAY 2006.

REVISED STANDARD PLAN RSP T2

2006 REVISED STANDARD PLAN RSP T2

5-15-08

DIST	COUNTY	ROUTE	POST MILES TOTAL PROJECT	SHEET NO.	TOTAL SHEETS
09	Iny	190	47.4	21	25

Robert B Schott
LICENSED LANDSCAPE ARCHITECT

August 15, 2008
PLANS Approval DATE

LICENSED LANDSCAPE ARCHITECT
Robert B. Schott 3625
Robert B Schott
Signature
11-04-08
Renewal Date
08-11-08
Date
STATE OF CALIFORNIA

The State of California or its officers or agents shall not be responsible for the accuracy or completeness of electronic copies of this plan sheet.

To accompany plans dated 11-23-09

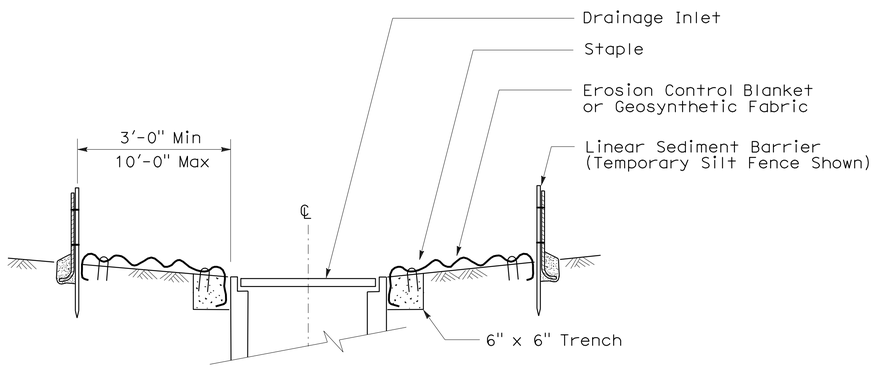

SECTION A-A

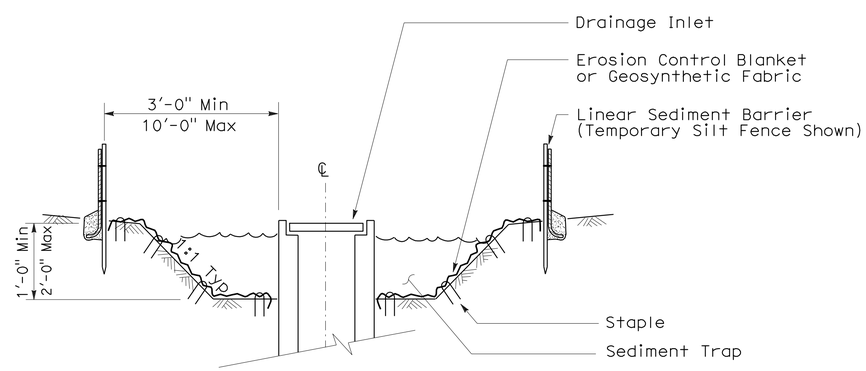

SECTION B-B

NOTES:

1. See Standard Plan T51 for Temporary Silt Fence.
2. Dimensions may vary to fit field conditions.

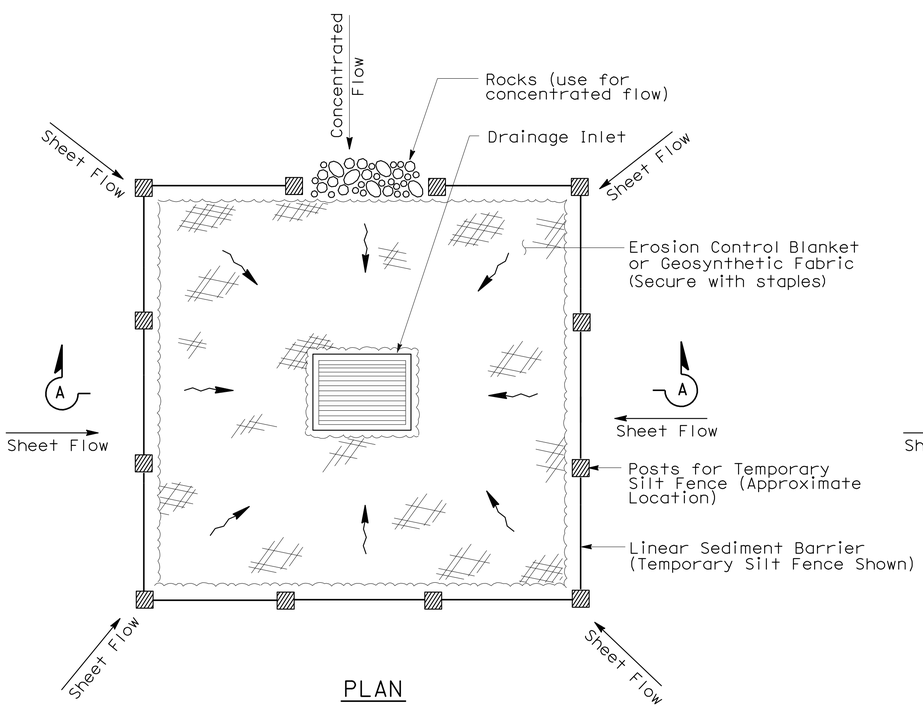

PLAN

TEMPORARY DRAINAGE
INLET PROTECTION (TYPE 1)

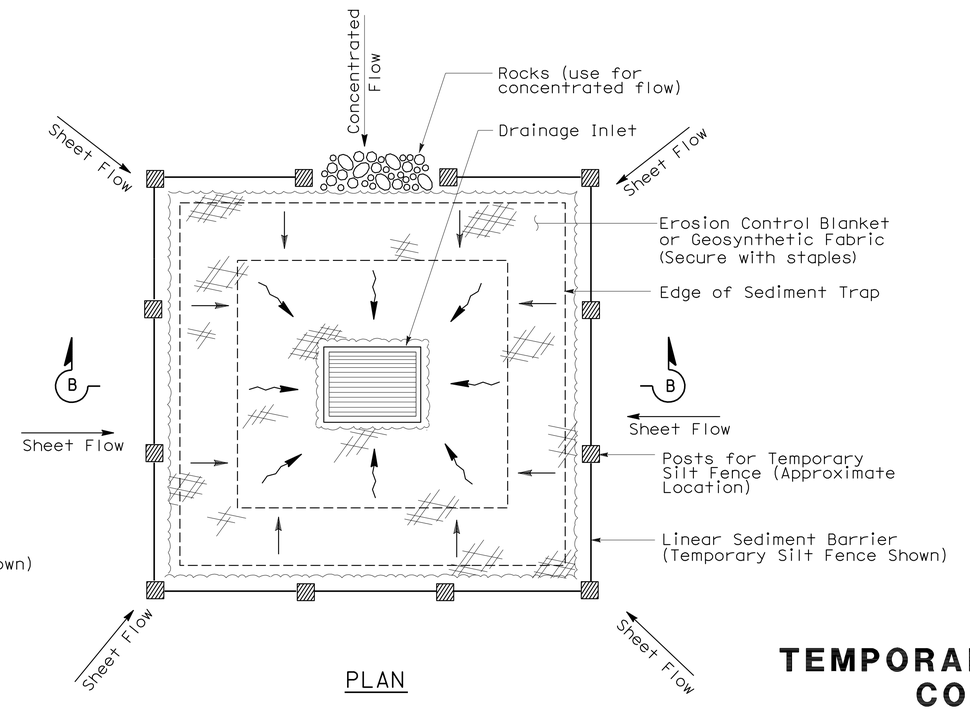

PLAN

TEMPORARY DRAINAGE
INLET PROTECTION (TYPE 2)
(EXCAVATED SEDIMENT TRAP)

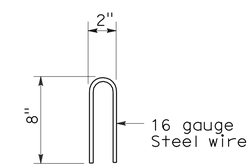

STAPLE DETAIL

STATE OF CALIFORNIA
DEPARTMENT OF TRANSPORTATION

TEMPORARY WATER POLLUTION CONTROL DETAILS (TEMPORARY DRAINAGE INLET PROTECTION)

NO SCALE

NSP T61 DATED AUGUST 15, 2008 SUPPLEMENTS
THE STANDARD PLANS BOOK DATED MAY 2006.

NEW STANDARD PLAN NSP T61

2006 NEW STANDARD PLAN NSP T61

7-11-08

DIST	COUNTY	ROUTE	POST MILES TOTAL PROJECT	SHEET NO.	TOTAL SHEETS
09	Iny	190	47.4	22	25

LICENSED LANDSCAPE ARCHITECT

August 15, 2008
PLANS APPROVAL DATE

LICENSED LANDSCAPE ARCHITECT Robert B. Schott 3625 Signature 11-04-08 Renewal Date 08-11-08 Date STATE OF CALIFORNIA

The State of California or its officers or agents shall not be responsible for the accuracy or completeness of electronic copies of this plan sheet.

To accompany plans dated 11-23-09

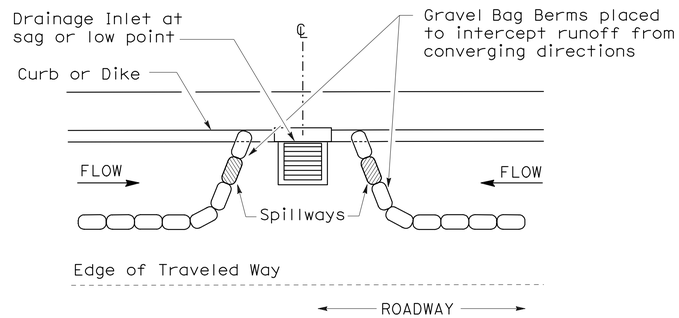

PLAN

CONFIGURATION FOR SAG POINT INLET (GRAVEL BAG BERM)

GRAVEL BAG BERM (TYPE 3A) SPACING TABLE

SLOPE OF ROADWAY (PERCENT)	1 to 3.9	4 to 5.9	6 to 7.9	8 to 10	10+
INTERVAL BETWEEN BERM	100′	75′	50′	25′	12′

For slope of less than 1%, install barriers only if erosion/sediment is prevalent

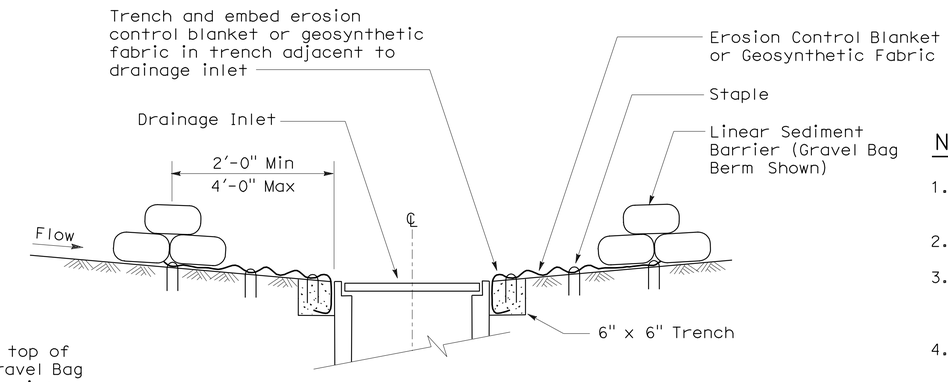

SECTION A-A

NOTES:

1. Place safety cones adjacent to drainage inlet protection.
2. Dimensions may vary to fit field conditions.
3. Install a minimum of 3 gravel bag berms upstream of each drainage inlet to be protected.
4. Position erosion control blanket or geosynthetic fabric at edge of concrete apron and secure in trench.
5. Erosion control blanket or geosynthetic fabric is not required if the area adjacent to the drainage inlet is vegetated or paved.

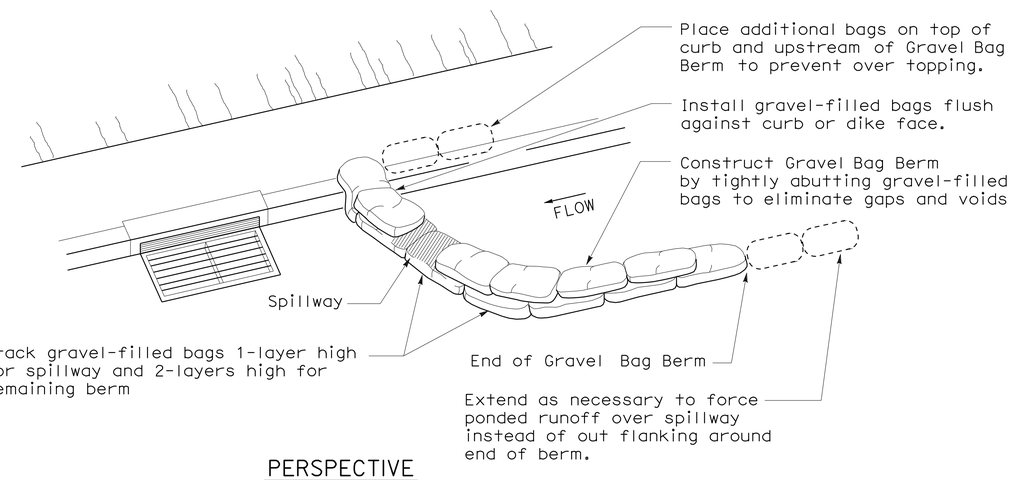

PERSPECTIVE

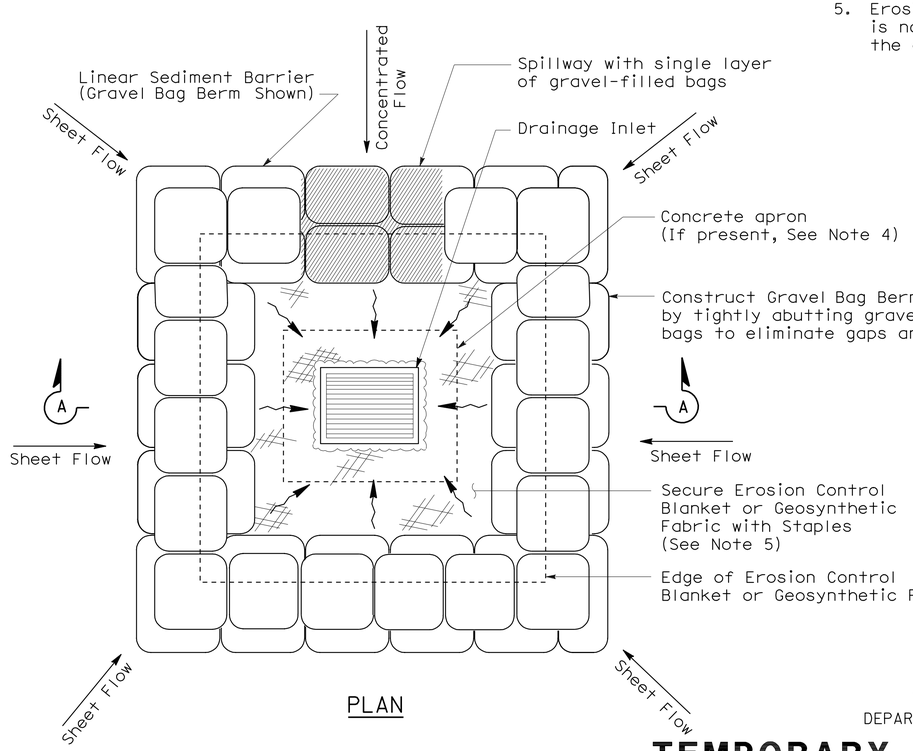

PLAN

TEMPORARY DRAINAGE INLET PROTECTION (TYPE 3B)

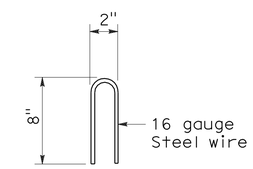

STAPLE DETAIL

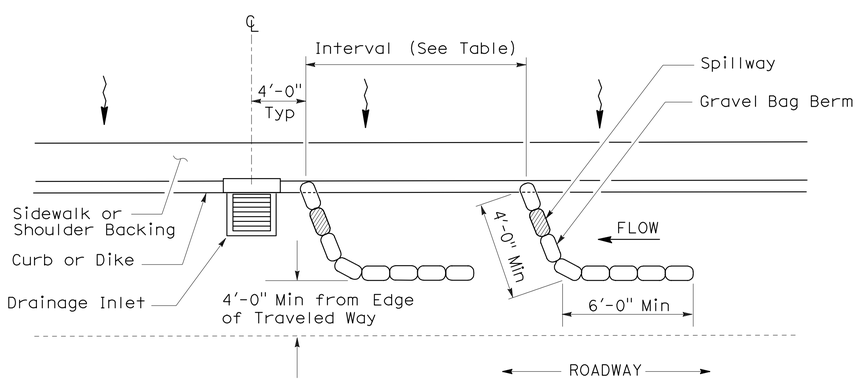

PLAN

TEMPORARY DRAINAGE INLET PROTECTION (TYPE 3A) (GRAVEL BAG BERM)

STATE OF CALIFORNIA
DEPARTMENT OF TRANSPORTATION

TEMPORARY WATER POLLUTION CONTROL DETAILS (TEMPORARY DRAINAGE INLET PROTECTION)

NO SCALE

NSP T62 DATED AUGUST 15, 2008 SUPPLEMENTS THE STANDARD PLANS BOOK DATED MAY 2006.

NEW STANDARD PLAN NSP T62

2006 NEW STANDARD PLAN NSP T62

7-11-08

DIST	COUNTY	ROUTE	POST MILES TOTAL PROJECT	SHEET NO.	TOTAL SHEETS
09	Iny	190	47.4	23	25

Robert B Schott
LICENSED LANDSCAPE ARCHITECT

August 15, 2008
PLANS APPROVAL DATE

LICENSED LANDSCAPE ARCHITECT Robert B. Schott 3625 Signature 11-04-08 Renewal Date 08-11-08 Date STATE OF CALIFORNIA

The State of California or its officers or agents shall not be responsible for the accuracy or completeness of electronic copies of this plan sheet.

To accompany plans dated 11-23-09

FLEXIBLE SEDIMENT BARRIER SPACING TABLE

SLOPE OF ROADWAY (PERCENT)	0 to 0.9	1 to 1.9	2 to 2.9	3 to 4	5+
INTERVAL BETWEEN BARRIERS	50′	35′	30′	25′	20′
ANGLE FROM FACE OF CURB	70°	70°	70°	45°	45°
SUGGESTED BARRIER LENGTH	6′	6′	6′	6′	6′

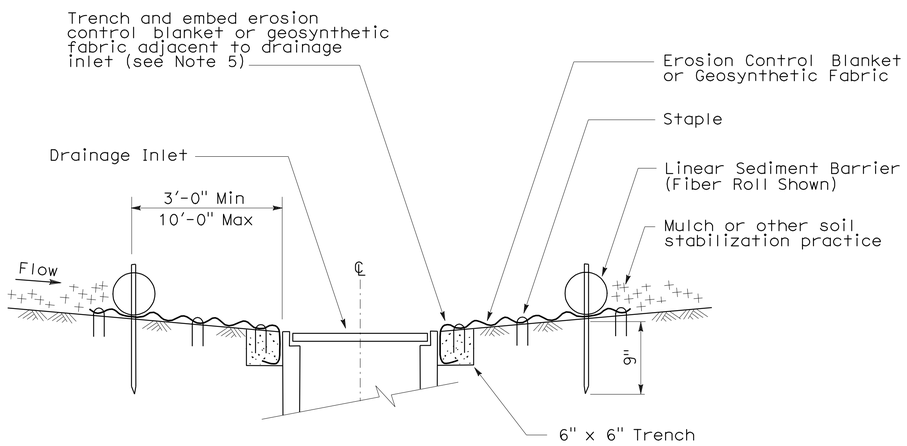

SECTION A-A

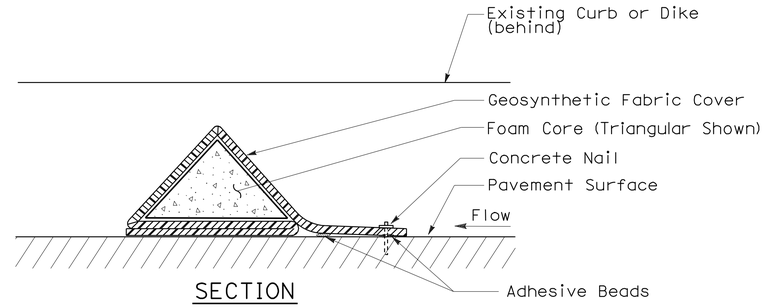

SECTION

FLEXIBLE SEDIMENT BARRIER DETAIL (FOAM BARRIER SHOWN)

NOTES:

1. See Standard Plan T51 for Temporary Silt Fence.
2. Dimensions may vary to fit field conditions.
3. Install a minimum of 3 flexible sediment barriers upstream of each drainage inlet to be protected.
4. Position erosion control blanket or geosynthetic fabric at edge of concrete apron and secure in trench.
5. Erosion control blanket or geosynthetic fabric is not required if the area adjacent to the drainage inlet is vegetated.

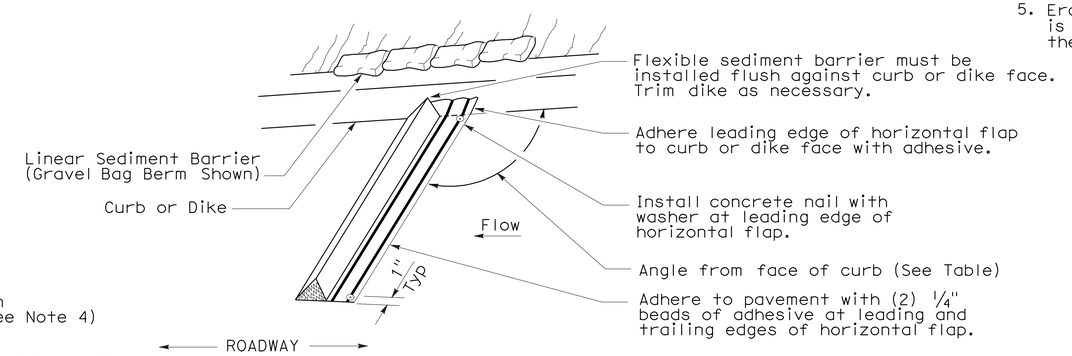

PERSPECTIVE

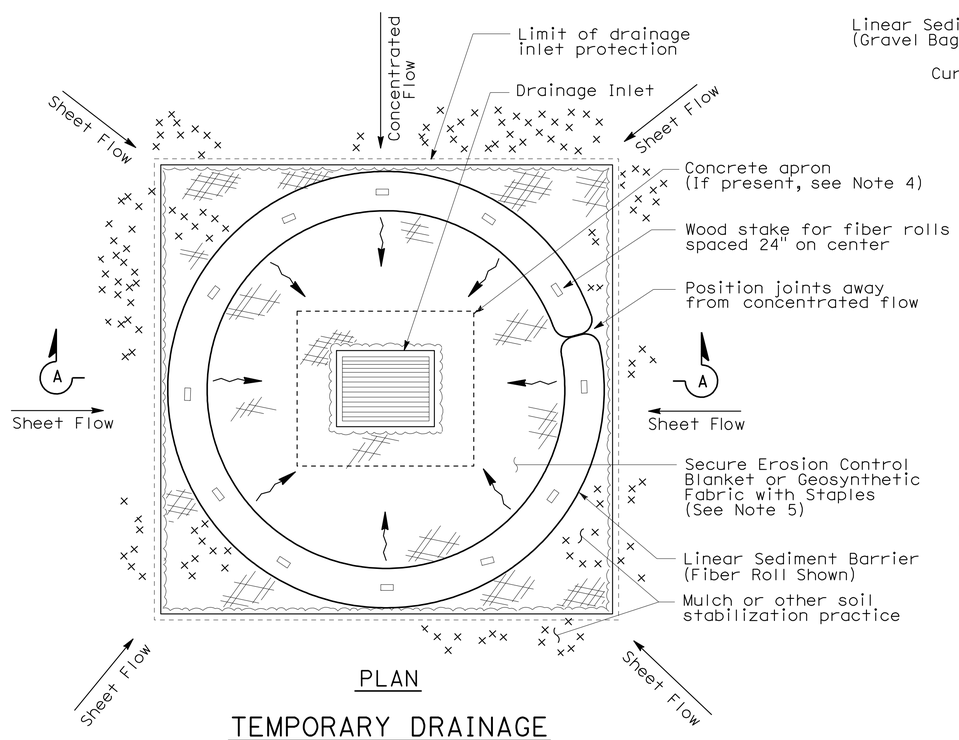

PLAN

TEMPORARY DRAINAGE INLET PROTECTION (TYPE 4A)

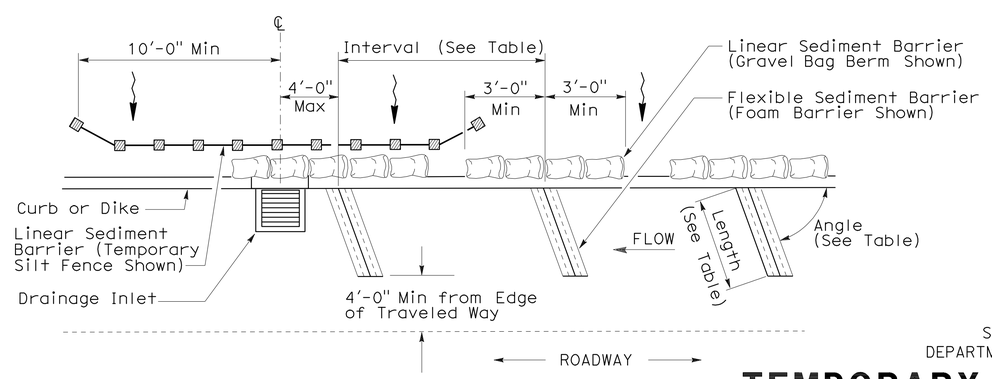

PLAN

TEMPORARY DRAINAGE INLET PROTECTION (TYPE 4B) FLEXIBLE SEDIMENT BARRIER

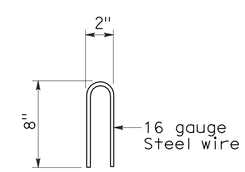

STAPLE DETAIL

STATE OF CALIFORNIA
DEPARTMENT OF TRANSPORTATION

TEMPORARY WATER POLLUTION CONTROL DETAILS (TEMPORARY DRAINAGE INLET PROTECTION)

NO SCALE

NSP T63 DATED AUGUST 15, 2008 SUPPLEMENTS THE STANDARD PLANS BOOK DATED MAY 2006.

NEW STANDARD PLAN NSP T63

2006 NEW STANDARD PLAN NSP T63

7-11-08

DIST	COUNTY	ROUTE	POST MILES TOTAL PROJECT	SHEET NO.	TOTAL SHEETS
09	Iny	190	47.4	24	25

LICENSED LANDSCAPE ARCHITECT

August 15, 2008
PLANS APPROVAL DATE

LICENSED LANDSCAPE ARCHITECT
Robert B. Schott 3625
Signature
11-04-08
Renewal Date
08-11-08
Date
STATE OF CALIFORNIA

The State of California or its officers or agents shall not be responsible for the accuracy or completeness of electronic copies of this plan sheet.

To accompany plans dated 11-23-09

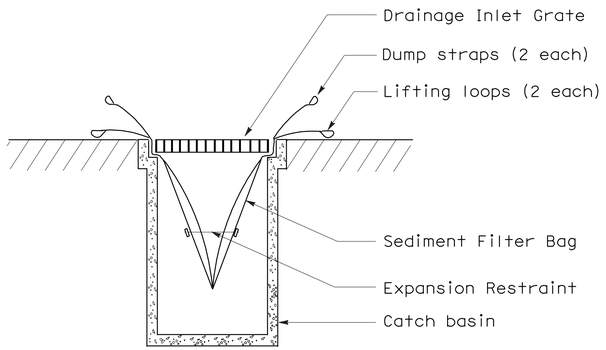

SECTION B-B

SEDIMENT FILTER BAG DETAIL

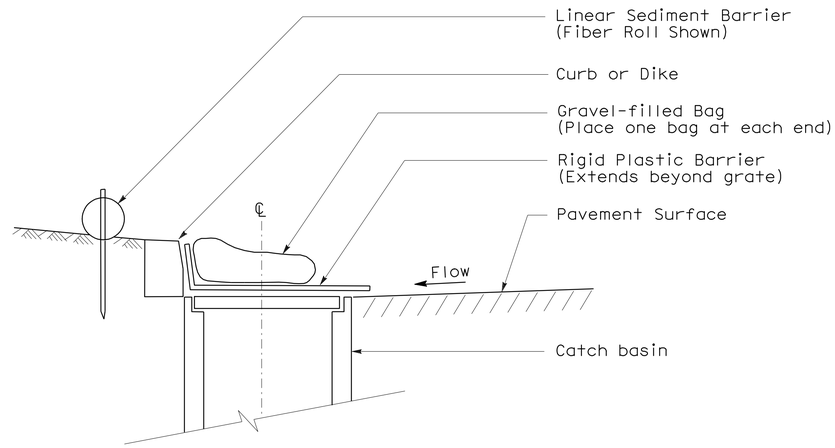

SECTION

TEMPORARY DRAINAGE INLET PROTECTION (TYPE 6A) (CATCH BASIN WITH GRATE)

NOTES:

1. See Standard Plan T51 for Temporary Silt Fence.
2. Dimensions may vary to fit field conditions.

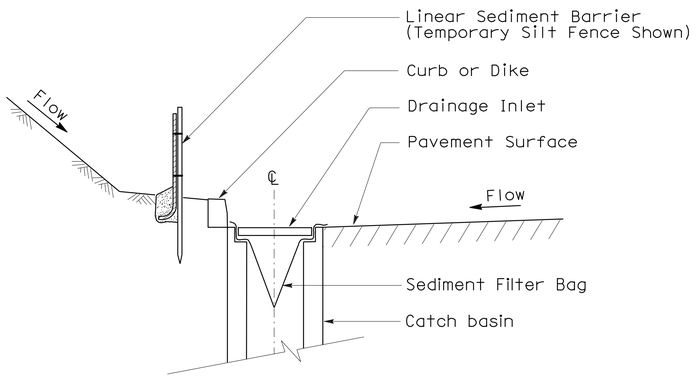

SECTION A-A

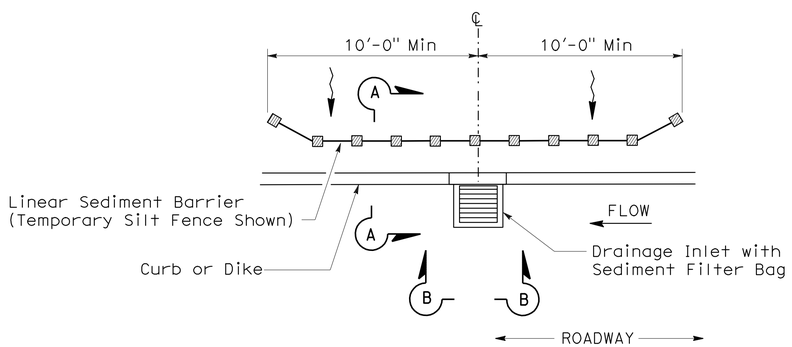

PLAN

TEMPORARY DRAINAGE INLET PROTECTION (TYPE 5) (SEDIMENT FILTER BAG)

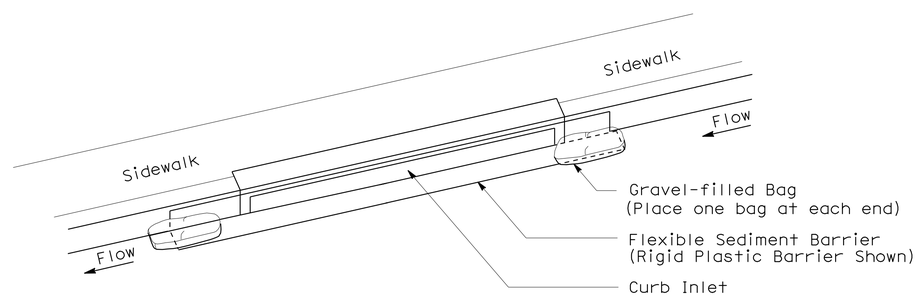

PERSPECTIVE

TEMPORARY DRAINAGE INLET PROTECTION (TYPE 6B) (CURB INLET WITHOUT GRATE)

STATE OF CALIFORNIA
DEPARTMENT OF TRANSPORTATION

TEMPORARY WATER POLLUTION CONTROL DETAILS (TEMPORARY DRAINAGE INLET PROTECTION)

NO SCALE

NSP T64 DATED AUGUST 15, 2008 SUPPLEMENTS
THE STANDARD PLANS BOOK DATED MAY 2006.

NEW STANDARD PLAN NSP T64

2006 NEW STANDARD PLAN NSP T64

7-11-08

DIST	COUNTY	ROUTE	POST MILES TOTAL PROJECT	SHEET NO.	TOTAL SHEETS
09	Iny	190	47.4	25	25

LICENSED LANDSCAPE ARCHITECT

April 3, 2009
PLANS APPROVAL DATE

LICENSED LANDSCAPE ARCHITECT Robert B. Schott 3625 Signature 11-30-10 Renewal Date 2-25-09 Date STATE OF CALIFORNIA

The State of California or its officers or agents shall not be responsible for the accuracy or completeness of electronic copies of this plan sheet.

To accompany plans dated 11-23-09

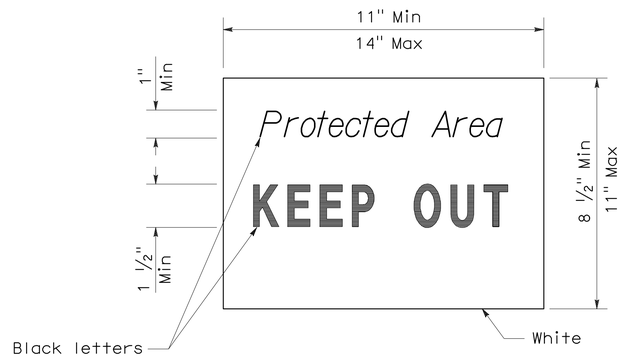

SIGN DETAIL

NOTE:

1. Temporary silt fence and temporary straw bale barrier shown for reference purposes only.

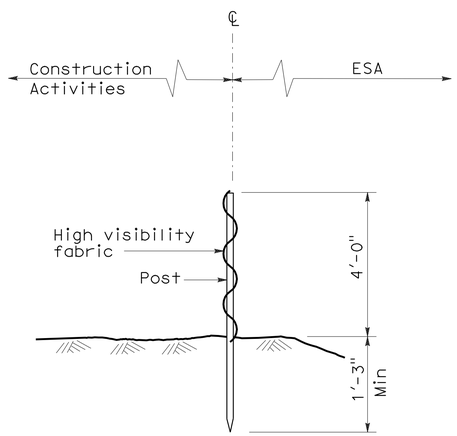

SECTION
TEMPORARY FENCE (TYPE ESA)

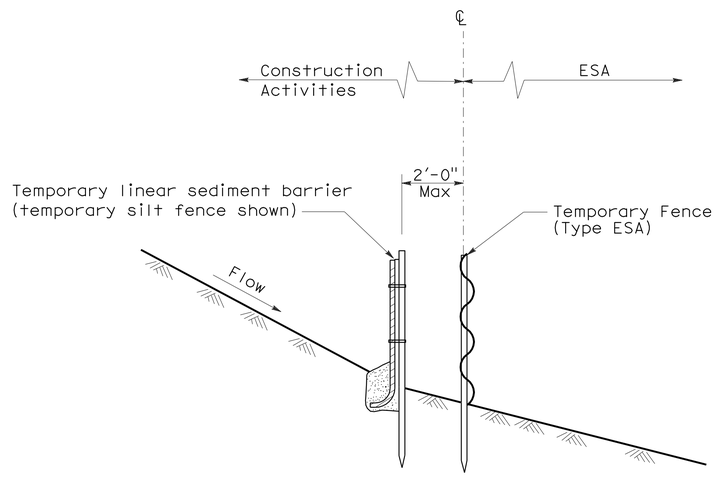

SECTION
PLACEMENT DETAIL
FOR TEMPORARY LINEAR SEDIMENT BARRIER
USED WITH TEMPORARY
FENCE (TYPE ESA)
(See Note 1)

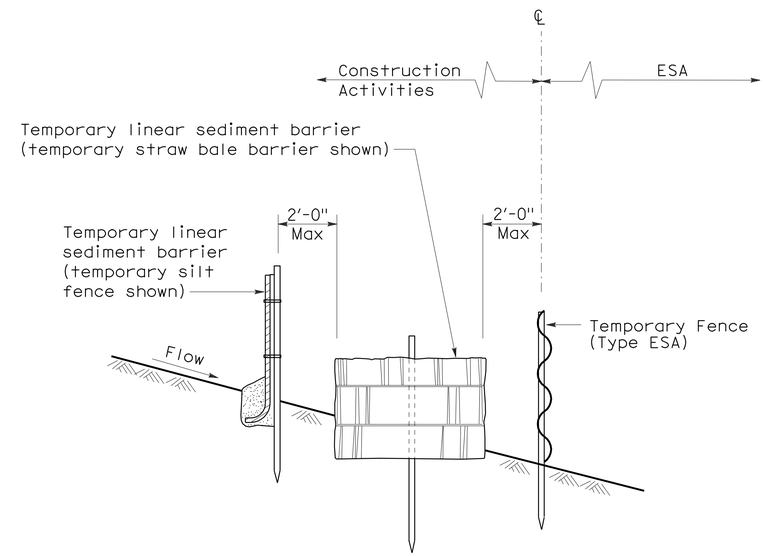

SECTION
PLACEMENT DETAIL
FOR TEMPORARY SILT FENCE
AND TEMPORARY STRAW BALE BARRIER
USED WITH TEMPORARY FENCE (TYPE ESA)
(See Note 1)

STATE OF CALIFORNIA
DEPARTMENT OF TRANSPORTATION

TEMPORARY WATER POLLUTION CONTROL DETAILS [TEMPORARY FENCE (TYPE ESA)]

NO SCALE

NSP T65 DATED APRIL 3, 2009 SUPPLEMENTS
THE STANDARD PLANS BOOK DATED MAY 2006.

NEW STANDARD PLAN NSP T65

2006 NEW STANDARD PLAN NSP T65