Dist	COUNTY	ROUTE	POST MILES TOTAL PROJECT	SHEET No.	TOTAL SHEETS
09	Iny	190	47.4	3	25

Truman P. Denio 9-29-09
REGISTERED CIVIL ENGINEER DATE

11-23-09
PLANS APPROVAL DATE

REGISTERED PROFESSIONAL ENGINEER TRUMAN DENIO No. 34556 Exp. 9-30-11 CIVIL STATE OF CALIFORNIA

THE STATE OF CALIFORNIA OR ITS OFFICERS OR AGENTS SHALL NOT BE RESPONSIBLE FOR THE ACCURACY OR COMPLETENESS OF SCANNED COPIES OF THIS PLAN SHEET.

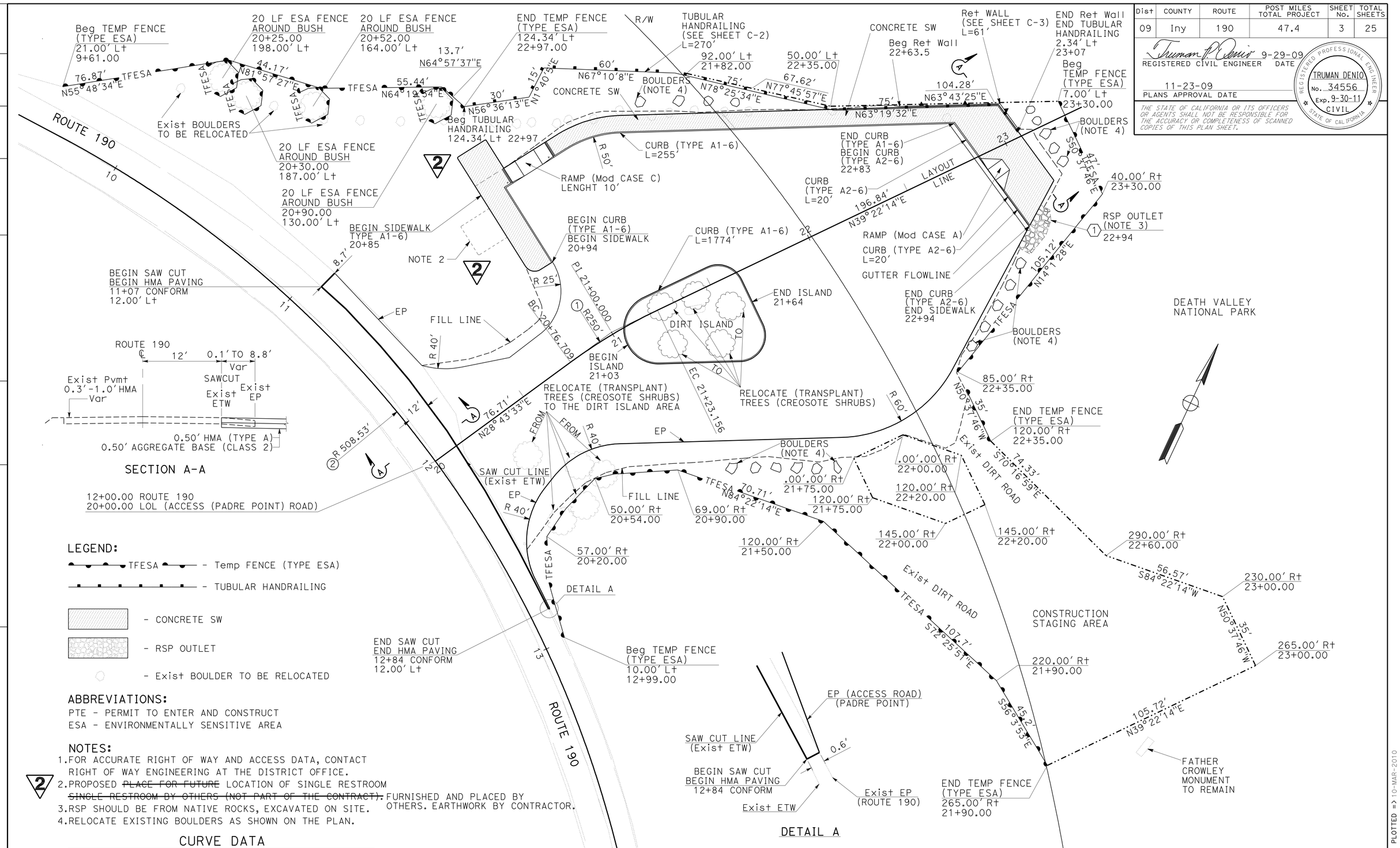

LEGEND:

- TFESA — Temp FENCE (TYPE ESA)
- TUBULAR HANDRAILING
- CONCRETE SW
- RSP OUTLET
- Exist BOULDER TO BE RELOCATED

ABBREVIATIONS:

PTE - PERMIT TO ENTER AND CONSTRUCT
ESA - ENVIRONMENTALLY SENSITIVE AREA

NOTES:

1. FOR ACCURATE RIGHT OF WAY AND ACCESS DATA, CONTACT RIGHT OF WAY ENGINEERING AT THE DISTRICT OFFICE.
2. PROPOSED ~~PLACE FOR FUTURE SINGLE RESTROOM BY OTHERS (NOT PART OF THE CONTRACT).~~ LOCATION OF SINGLE RESTROOM FURNISHED AND PLACED BY OTHERS. EARTHWORK BY CONTRACTOR.
3. RSP SHOULD BE FROM NATIVE ROCKS, EXCAVATED ON SITE.
4. RELOCATE EXISTING BOULDERS AS SHOWN ON THE PLAN.

CURVE DATA

No.	R	Δ	T	L
1	250.00'	10°38'42"	23.29'	46.45'
2	508.53'	75°10'22"	391.43'	667.20'

2 REVISED PER ADDENDUM No. 2 DATED MARCH 11, 2010

LAYOUT L-1
SCALE: 1"=20'

STATE OF CALIFORNIA - DEPARTMENT OF TRANSPORTATION
Caltrans® DESIGN
FUNCTIONAL SUPERVISOR: TRUMAN DENIO
CALCULATED-DESIGNED BY: KONSTANTIN GREKOV
CHECKED BY: TRUMAN DENIO
REVISED BY
DATE REVISED

LAST REVISION 09-29-09 | DATE PLOTTED => 10-MAR-2010 | TIME PLOTTED => 09:24

Dist	COUNTY	ROUTE	POST MILES TOTAL PROJECT	SHEET No.	TOTAL SHEETS
09	Iny	190	47.4	6	25

Truman P. Denio 9-29-09
REGISTERED CIVIL ENGINEER DATE

11-23-09
PLANS APPROVAL DATE

REGISTERED PROFESSIONAL ENGINEER TRUMAN DENIO No. 34556 Exp. 9-30-11 CIVIL STATE OF CALIFORNIA

THE STATE OF CALIFORNIA OR ITS OFFICERS OR AGENTS SHALL NOT BE RESPONSIBLE FOR THE ACCURACY OR COMPLETENESS OF SCANNED COPIES OF THIS PLAN SHEET.

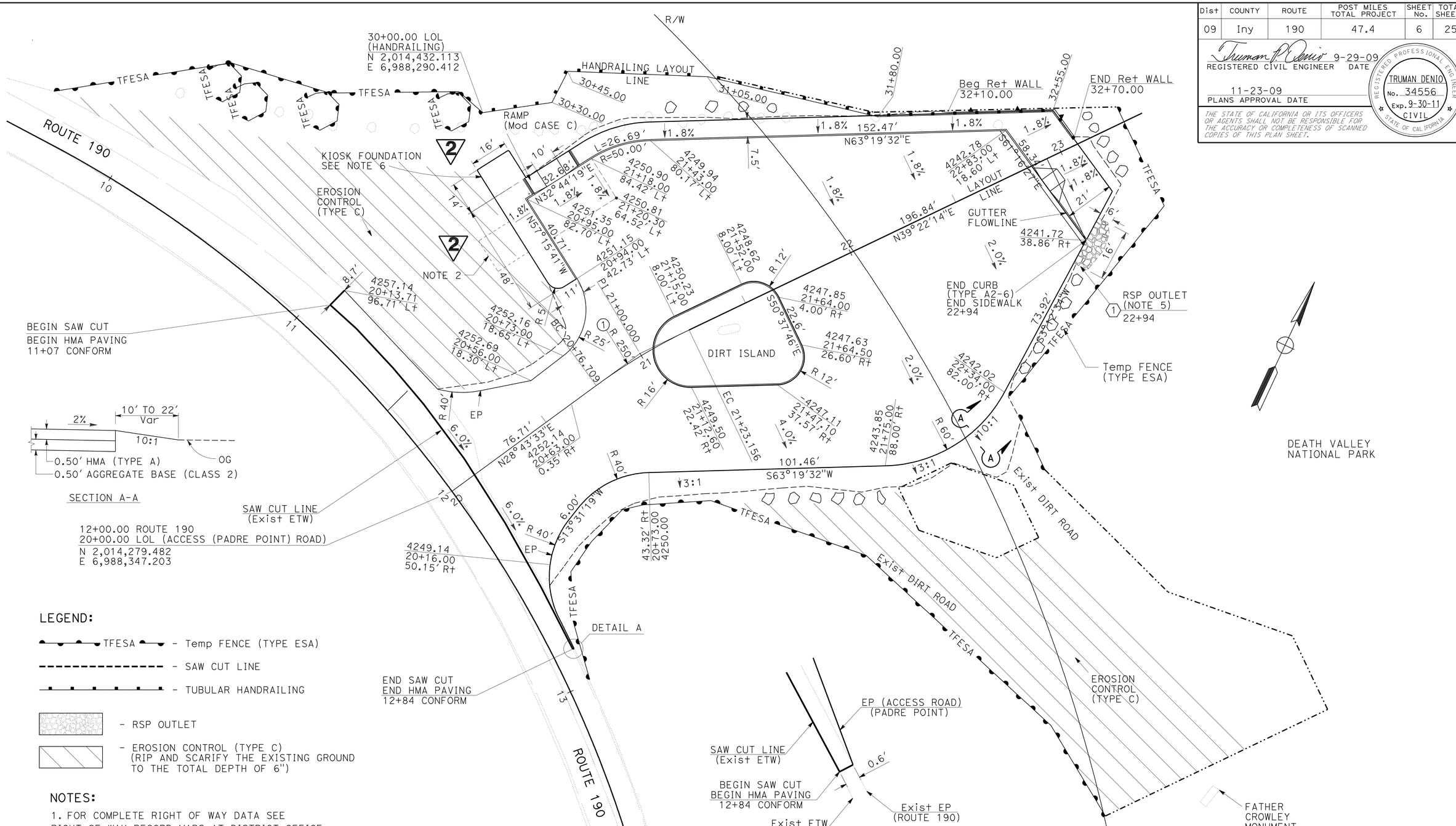

SECTION A-A

LEGEND:

- TFESA — Temp FENCE (TYPE ESA)
- SAW CUT LINE
- TUBULAR HANDRAILING
- RSP OUTLET
- EROSION CONTROL (TYPE C) (RIP AND SCARIFY THE EXISTING GROUND TO THE TOTAL DEPTH OF 6")

NOTES:

1. FOR COMPLETE RIGHT OF WAY DATA SEE RIGHT OF WAY RECORD MAPS AT DISTRICT OFFICE.
2. PROPOSED LOCATION FOR ~~FUTURE TWO SINGLE~~ RESTROOMS ~~BY OTHERS (NOT PART OF THE CONTRACT).~~ FURNISHED AND PLACED BY OTHERS. EARTHWORK BY CONTRACTOR.
3. DIMENSIONS ARE TO FACE OF CURB AND EDGE OF PAVEMENT.
4. SPOT ELEVATIONS SHOWN AT CURBS ARE TO FLOWLINE.
5. RSP SHOULD BE BUILT FROM NATIVE ROCKS AND SHOULD HAVE A NATURAL FREEFORM SHAPE.
6. KIOSK FOUNDATION, SEE ADDENDA CONSTRUCTION DETAILS.

REVISED PER ADDENDUM No. 2 DATED MARCH 11, 2010

CONSTRUCTION DETAILS

SCALE: 1"=20'

C-1

STATE OF CALIFORNIA - DEPARTMENT OF TRANSPORTATION
DESIGN
Caltrans
FUNCTIONAL SUPERVISOR: TRUMAN DENIO
CALCULATED-DESIGNED BY: KONSTANTIN GREKOV
CHECKED BY: TRUMAN DENIO
REVISED BY
DATE REVISED

LAST REVISION 09-29-09
DATE PLOTTED => 10-MAR-2010
TIME PLOTTED => 09:24

Dist	COUNTY	ROUTE	POST MILES TOTAL PROJECT	SHEET No.	TOTAL SHEETS
09	Iny	190	47.4	8A	25

REGISTERED CIVIL ENGINEER DATE

11-23-09
PLANS APPROVAL DATE

REGISTERED PROFESSIONAL ENGINEER TRUMAN DENIO No. 34556 Exp. 9-30-11 CIVIL STATE OF CALIFORNIA

THE STATE OF CALIFORNIA OR ITS OFFICERS OR AGENTS SHALL NOT BE RESPONSIBLE FOR THE ACCURACY OR COMPLETENESS OF SCANNED COPIES OF THIS PLAN SHEET.

2

NOTE:
1. Restroom Vaults Furnished and Set by National Park Service (NPS).
2. Sand Bedding Furnished and Placed by National Park Service (NPS).
3. Structure Excavation and Structure Backfill to subgrade by Contractor.
4. Subgrade Tolerance by Contractor to +/- 2".
5. Earthwork in Accordance to Caltrans Std. Specification Sect. 19

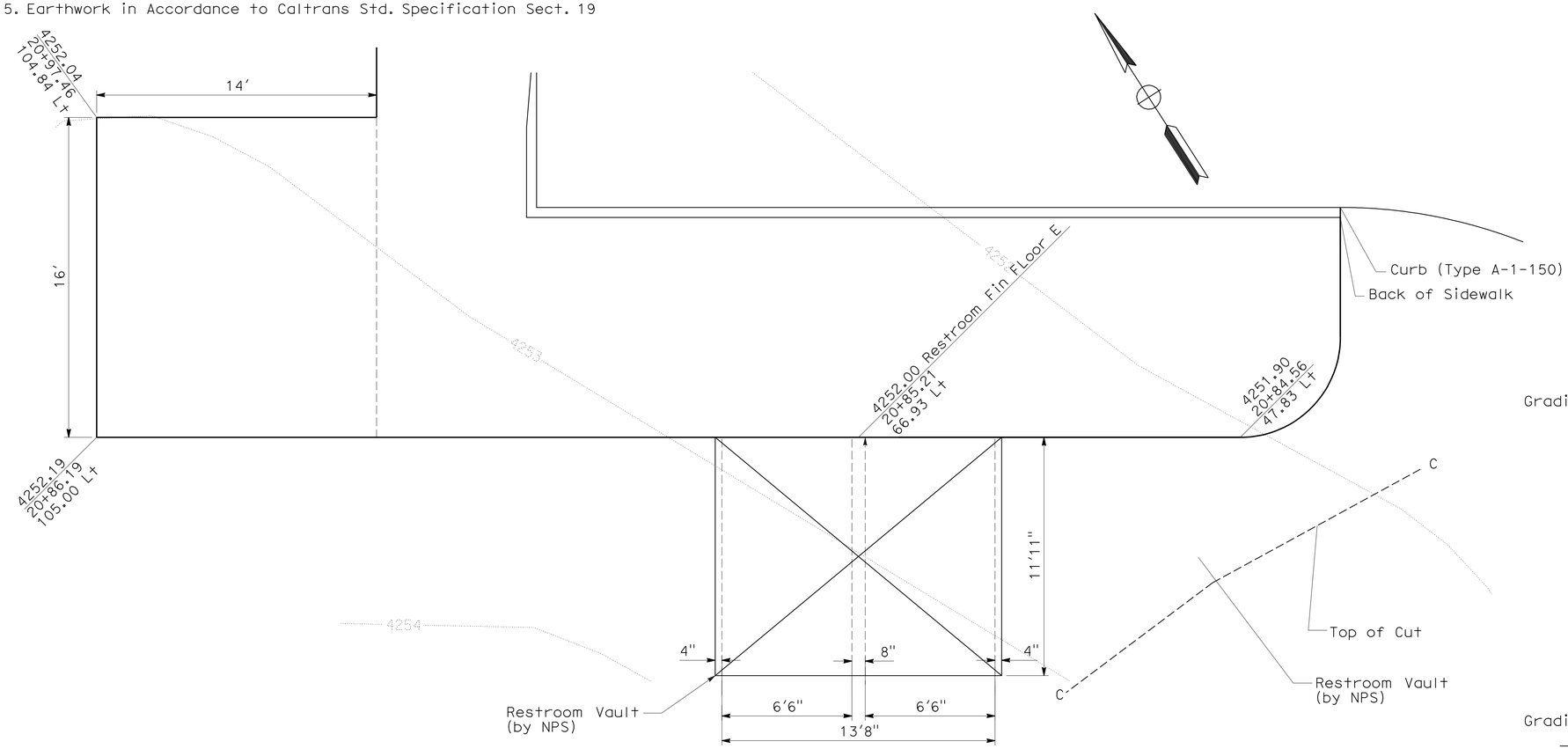

RESTROOM VAULT PLAN

Legend:

- Structure Excavation
- Structure Backfill

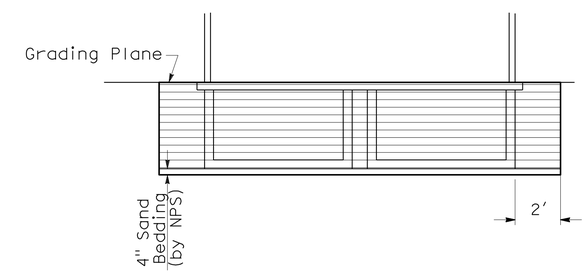

EXCAVATION RESTROOM VAULT

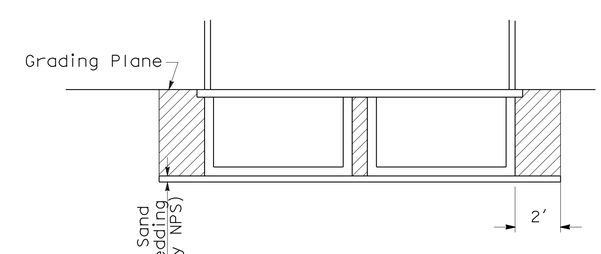

BACKFILL RESTROOM VAULT

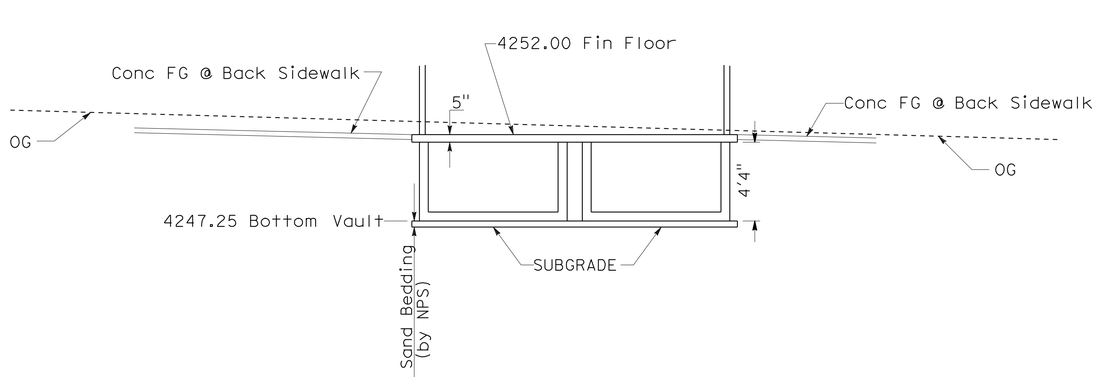

RESTROOM VAULT SECTION

2 **ADDED PER ADDENDUM No. 2 DATED MARCH 11, 2010**

CONSTRUCTION DETAILS

NO SCALE

C-4

STATE OF CALIFORNIA - DEPARTMENT OF TRANSPORTATION
Caltrans
DESIGN

FUNCTIONAL SUPERVISOR: TRUMAN DENIO
CALCULATED-DESIGNED BY: KONSTANTIN GREKOV
CHECKED BY: TRUMAN DENIO
REVISED BY
DATE REVISED

LAST REVISION 03-01-10
DATE PLOTTED => 10-MAR-2010
TIME PLOTTED => 09:24

Dist	COUNTY	ROUTE	POST MILES TOTAL PROJECT	SHEET No.	TOTAL SHEETS
09	Iny	190	47.4	8B	25

REGISTERED CIVIL ENGINEER DATE

11-23-09
PLANS APPROVAL DATE

REGISTERED PROFESSIONAL ENGINEER TRUMAN DENIO No. 34556 Exp. 9-30-11 CIVIL STATE OF CALIFORNIA

THE STATE OF CALIFORNIA OR ITS OFFICERS OR AGENTS SHALL NOT BE RESPONSIBLE FOR THE ACCURACY OR COMPLETENESS OF SCANNED COPIES OF THIS PLAN SHEET.

2

NOTES:

1. CONTRACTOR SHALL CONSTRUCT KIOSK FOOTING AND SET ANCHOR BOLTS.
2. NATIONAL PARK SERVICE (NPS) TO INSTALL KIOSK AFTER COMPLETION OF CONSTRUCTION.
3. VERIFY LAYOUT WITH NPS.
4. KIOSK FOUNDATION IS MINOR CONCRETE (MINOR STRUCTURE)

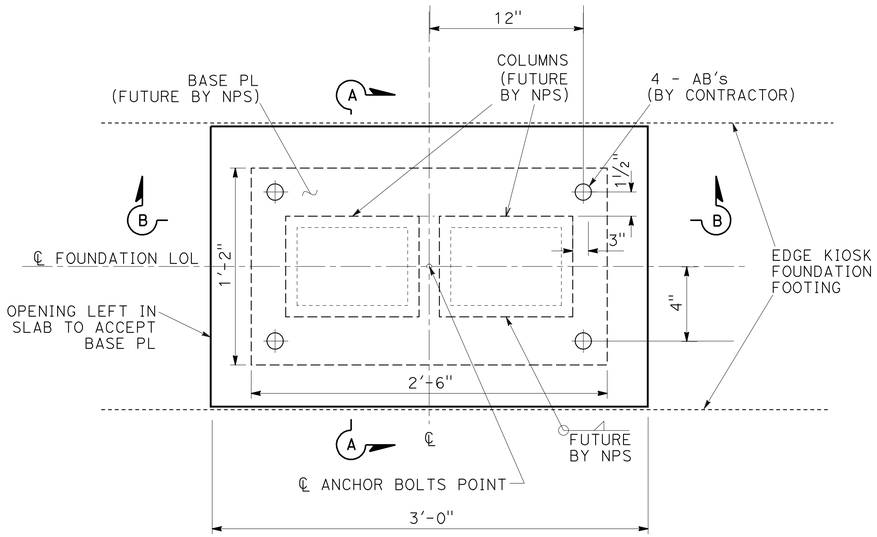

PLAN

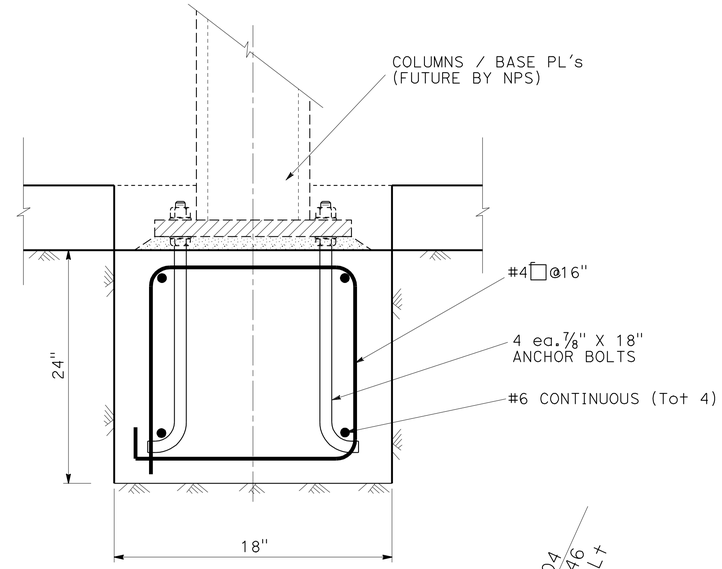

A - A

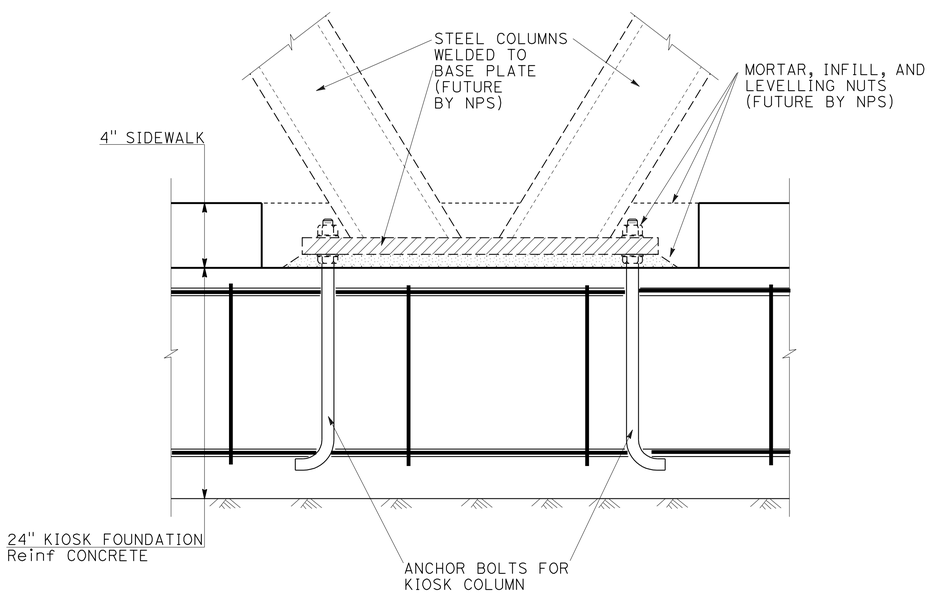

B - B

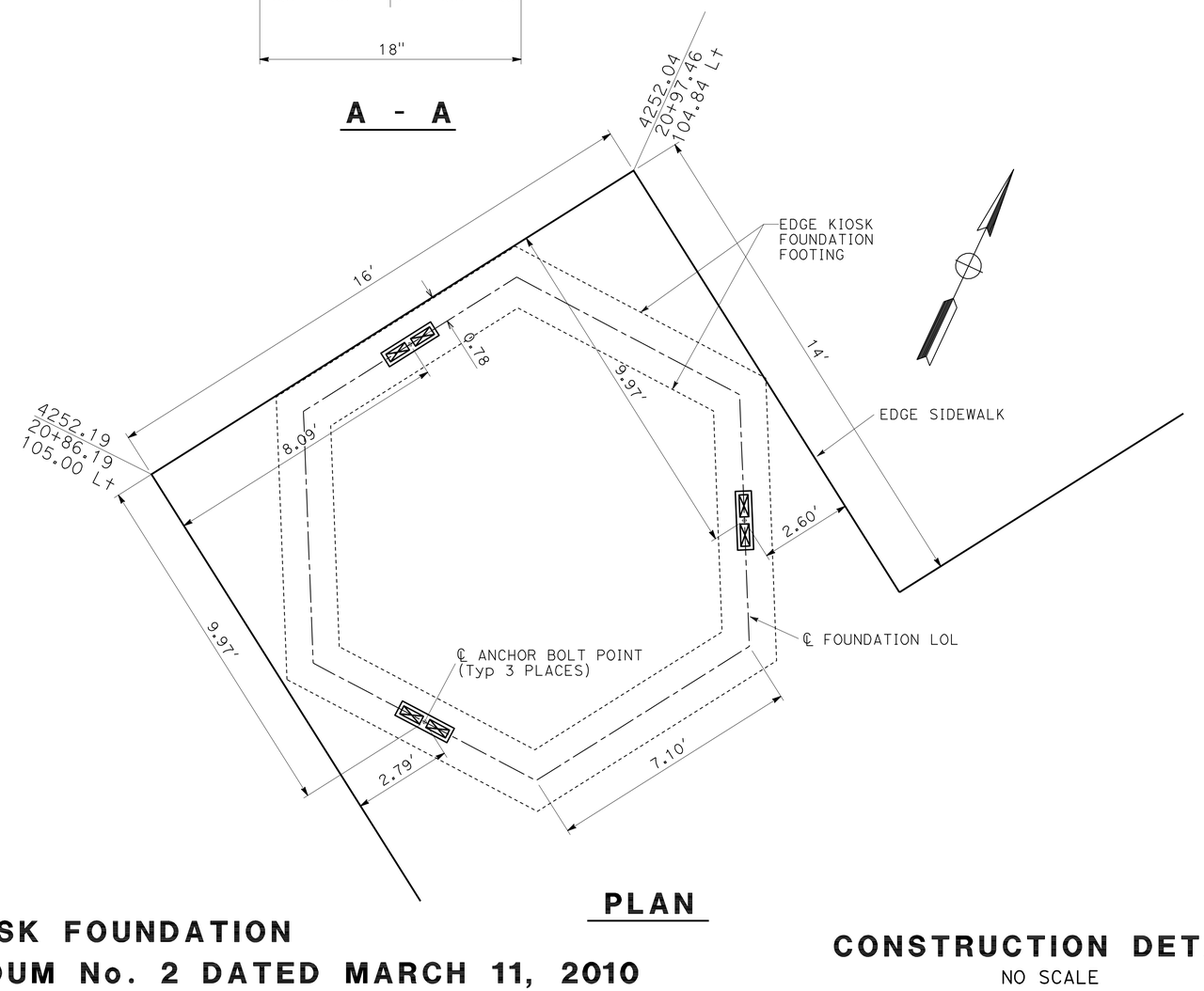

PLAN

KIOSK FOUNDATION

2 **ADDED PER ADDENDUM No. 2 DATED MARCH 11, 2010**

CONSTRUCTION DETAILS

NO SCALE

C-5

STATE OF CALIFORNIA - DEPARTMENT OF TRANSPORTATION
Caltrans DESIGN
FUNCTIONAL SUPERVISOR TRUMAN DENIO
CALCULATED-DESIGNED BY KONSTANTIN GREKOV
CHECKED BY TRUMAN DENIO
REVISED BY
DATE REVISED

LAST REVISION 02-17-10 DATE PLOTTED => 10-MAR-2010 TIME PLOTTED => 09:24

Dist	COUNTY	ROUTE	POST MILES TOTAL PROJECT	SHEET No.	TOTAL SHEETS
09	Iny	190	47.4	13	25

Truman P. Denio 9-29-09
REGISTERED CIVIL ENGINEER DATE

11-23-09
PLANS APPROVAL DATE

REGISTERED PROFESSIONAL ENGINEER
TRUMAN DENIO
No. 34556
Exp. 9-30-11
CIVIL
STATE OF CALIFORNIA

THE STATE OF CALIFORNIA OR ITS OFFICERS OR AGENTS SHALL NOT BE RESPONSIBLE FOR THE ACCURACY OR COMPLETENESS OF SCANNED COPIES OF THIS PLAN SHEET.

NOTE: (N): NOT A SEPARATE PAY ITEM, FOR INFORMATION ONLY.

STRUCTURE 2

LOCATION DESCRIPTION	STRUCTURE EXCAVATION	STRUCTURE BACKFILL	MINOR CONCRETE (MINOR STRUCTURE)
	CY	CY	CY
RESTROOMS	46	10	-
KIOSK FOUNDATION	-	-	5
TOTAL	46	10	5

Temp FENCE (TYPE ESA)

DESCRIPTION	LF	REMARKS
Temp FENCE (TYPE ESA)	850	SEE LAYOUT SHEET

ROADWAY MATERIALS

LOCATION DESCRIPTION	HOT MIX ASPHALT (TYPE A)	CLASS 2 AGGREGATE BASE	ROADWAY EXCAVATION	IMPORTED BORROW	EMBANKMENT(N)
	TON	CY	CY	CY	CY
PARKING AREA	1,000	550	510	420	830

ROCK SLOPE PROTECTION (FACING, METHOD B)

ITEM	SQYD	CY
RSP FACING, METHOD B	-	9
RSP FABRIC	23	-
TOTAL	23	9

BAR REINFORCING STEEL (RETAINING CURB) (N)

LOCATION DESCRIPTION	LB
Sta 22+63 - 23+07 (TYPE A1-6) (SEE SHEET C-1)	350
TOTAL	350

EROSION CONTROL

LOCATION	DUFF	EROSION CONTROL (TYPE C)
	SQYD	SQYD
SEE SHEET C-1	2,200	2,200
TOTAL	2,200	2,200

MINOR CONCRETE (Misc Const)

LOCATION DESCRIPTION	CY
SIDEWALK AND RAMPS (0.3') (STA 20+85 TO 23+12.6)	41.1 ~~40.0~~ 2
CURB (L=255') (TYPE A1-6) (SEE SHEET C-1)	6.6
CURB (L=174') (TYPE A1-6) (SEE SHEET C-1)	4.5
CURB (L=40') (TYPE A2-6) (SEE SHEET C-1)	2.4
Sta 22+63 - 23+07 (RETAINING CURB) (TYPE A1-6) (SEE SHEET C-1)	3.5
TOTAL	58.1 ~~57.0~~ 2

RELOCATE AND TRANSPLANT

ITEM	EA	EA	REMARKS
RELOCATE BOULDERS	20	-	SEE SHEET L-1
TRANSPLANT SHRUBS	-	5	SEE SHEET L-1
TOTAL	20	5	

TUBULAR HANDRAILING

DESCRIPTION	LF	REMARKS
TUBULAR HANDRAILING	265	SEE SHEET C-2
TOTAL	265	

DELINEATOR (CLASS 2)

Sta	Lt	Rt	DELINEATOR TYPE E	DELINEATOR TYPE F	DELINEATOR (SPECIAL) TYPE E	DELINEATOR (SPECIAL) TYPE F
			EA	EA	EA	EA
9+65	X				1	
10+05	X		1			
10+45	X				1	
10+85	X		1			
11+25	X					1
11+45	X			1		
12+70	X		1			
12+90	X			1		
13+10	X		1			
13+50	X		1			
13+90	X		1			
SUBTOTAL			6	2	2	1
TOTAL			11			

THERMOPLASTIC PAVEMENT MARKING

DESCRIPTION	SQFT	REMARKS
WHITE THERMOPLASTIC PAVEMENT MARKING	255	SEE SHEET PD-1
BLUE THERMOPLASTIC PAVEMENT MARKING	49	SEE SHEET PD-1
TOTAL	304	

PAINT TRAFFIC STRIPE

DESCRIPTION	DETAIL NUMBER 27B	DETAIL NUMBER 21	DETAIL NUMBER 27C	REMARKS
	LF	LF	LF	
PAINT TRAFFIC STRIPE (2 COAT)	562	175	163	SEE SHEET PD-1
TOTAL	900			

REMOVE PAINTED TRAFFIC STRIPE

STATION TO STATION (LOCATION)	YELLOW
	LF
11+75 - 12+25	50
TOTAL	50

2 REVISED PER ADDENDUM No. 2 DATED MARCH 11, 2010

SUMMARY OF QUANTITIES
Q-1

STATE OF CALIFORNIA - DEPARTMENT OF TRANSPORTATION
Caltrans DESIGN
FUNCTIONAL SUPERVISOR TRUMAN DENIO
CALCULATED-DESIGNED BY KONSTANTIN GREKOV
CHECKED BY TRUMAN DENIO
REVISED BY
DATE REVISED

LAST REVISION 09-29-09
DATE PLOTTED => 10-MAR-2010
TIME PLOTTED => 09:24