Dist	COUNTY	ROUTE	POST MILES TOTAL PROJECT	SHEET No.	TOTAL SHEETS
09	Iny	190	29.6/36.0	1	26

INDEX OF PLANS

SHEET No.	DESCRIPTION
1	TITLE AND LOCATION MAP
2-5	CONSTRUCTION DETAILS
6-16	DRAINAGE PLANS AND PROFILES
17-19	DRAINAGE QUANTITIES
20	CONSTRUCTION AREA SIGNS
21	SUMMARY OF QUANTITIES
22-26	REVISED AND NEW STANDARD PLANS

THE STANDARD PLANS LIST APPLICABLE TO THIS CONTRACT IS INCLUDED IN THE NOTICE TO BIDDERS AND SPECIAL PROVISIONS BOOK.

STATE OF CALIFORNIA **ACSTP-P190(015)E**

DEPARTMENT OF TRANSPORTATION

PROJECT PLANS FOR CONSTRUCTION ON STATE HIGHWAY

IN INYO COUNTY ABOUT 10 MILES EAST OF KEELER AT VARIOUS LOCATIONS FROM 5.0 MILES EAST OF ROUTE 136 TO 1.5 MILES WEST OF TALC CITY CUT-OFF ROAD

TO BE SUPPLEMENTED BY STANDARD PLANS DATED MAY 2006

LOCATION MAP

LOCATIONS OF CONSTRUCTION					
No.	PM	No.	PM	No.	PM
1	29.6	7	30.6	13	31.8
2	29.9	8	30.7	14	32.0
3	30.1	9	30.9	15	32.9
4	30.3	10	31.2	16	33.1
5	30.4	11	31.3	17	35.9
6	30.5	12	31.5	18	36.0

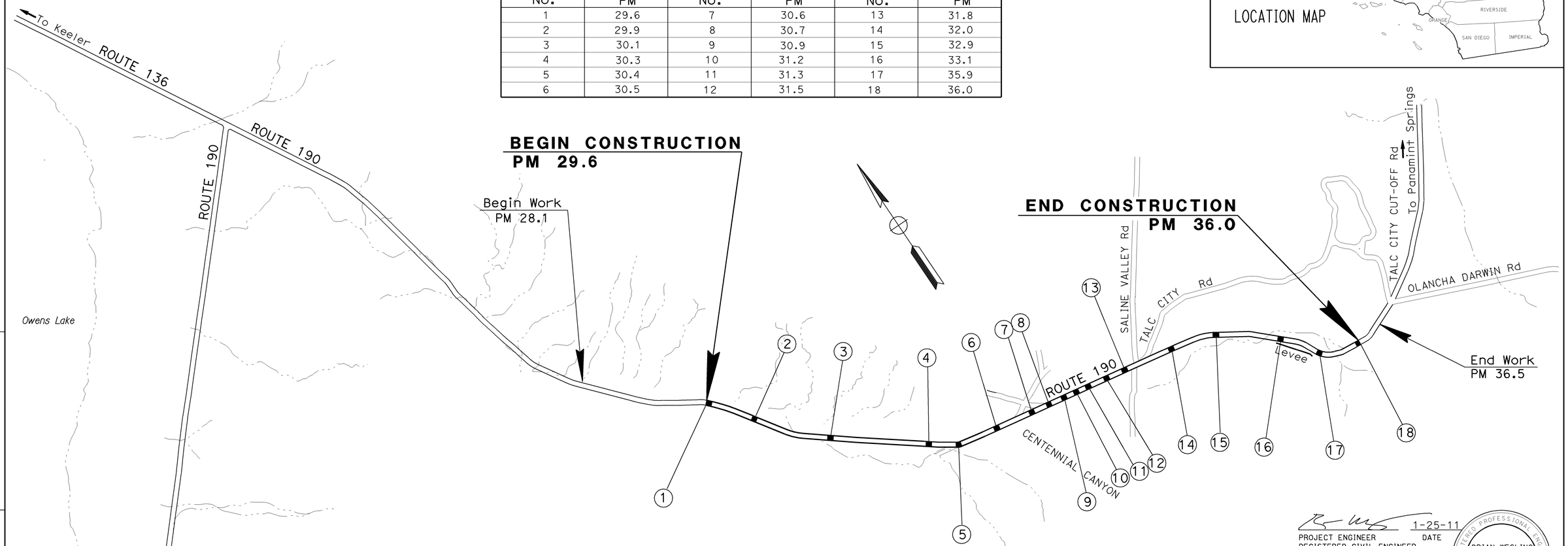

NO SCALE

THE CONTRACTOR SHALL POSSESS THE CLASS (OR CLASSES) OF LICENSE AS SPECIFIED IN THE "NOTICE TO BIDDERS."

PROJECT MANAGER: BRIAN MCELWAIN

DESIGN ENGINEER: BRIAN WESLING

1-25-11
PROJECT ENGINEER DATE
REGISTERED CIVIL ENGINEER

REGISTERED PROFESSIONAL ENGINEER
BRIAN WESLING
No. 62509
Exp. 9-30-11
CIVIL
STATE OF CALIFORNIA

January 31, 2011
PLANS APPROVAL DATE

THE STATE OF CALIFORNIA OR ITS OFFICERS OR AGENTS SHALL NOT BE RESPONSIBLE FOR THE ACCURACY OR COMPLETENESS OF SCANNED COPIES OF THIS PLAN SHEET.

CONTRACT No.	09-326304
PROJECT ID	0900000076

LAST REVISION: DATE PLOTTED => 04-MAR-2011
01-25-11 TIME PLOTTED => 14:07

Dist	COUNTY	ROUTE	POST MILES TOTAL PROJECT	SHEET No.	TOTAL SHEETS
09	Iny	190	29.6/36.0	2	26

1-25-11
REGISTERED CIVIL ENGINEER DATE

1-31-11
PLANS APPROVAL DATE

REGISTERED PROFESSIONAL ENGINEER
Brian Wesling
No. 62509
Exp. 9-30-11
CIVIL
STATE OF CALIFORNIA

THE STATE OF CALIFORNIA OR ITS OFFICERS OR AGENTS SHALL NOT BE RESPONSIBLE FOR THE ACCURACY OR COMPLETENESS OF SCANNED COPIES OF THIS PLAN SHEET.

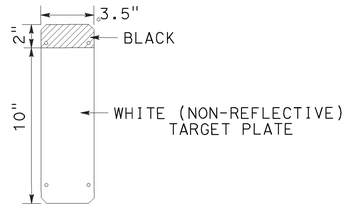

MARKER (CULVERT) PLATE

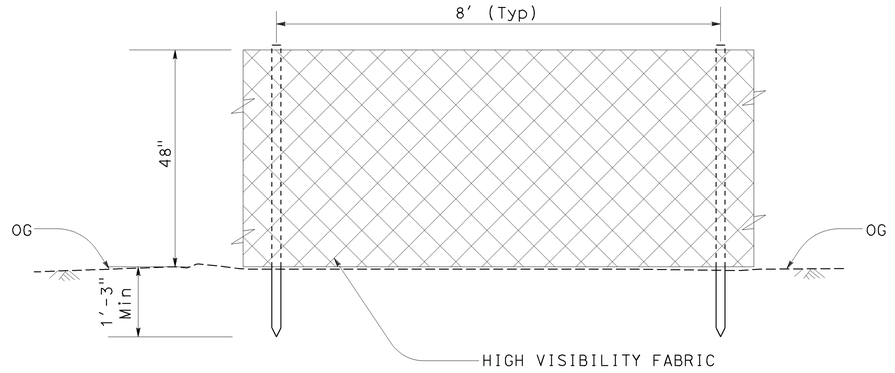

TEMPORARY FENCE (ESA)

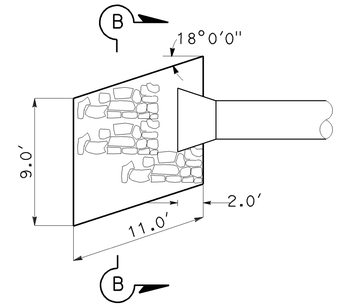

PLAN

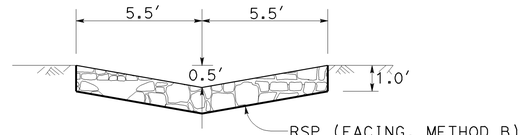

SECTION B-B

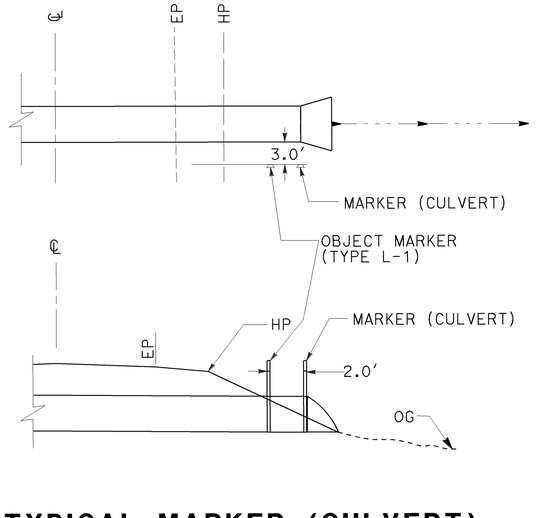

TYPICAL MARKER (CULVERT) AND OBJECT MARKER (TYPE L-1)

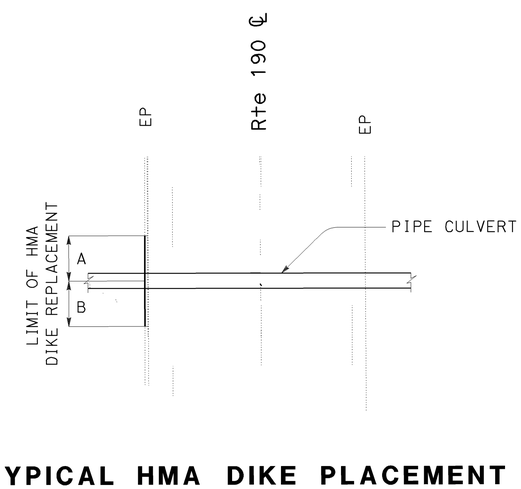

TYPICAL HMA DIKE PLACEMENT

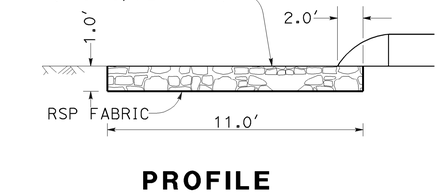

PROFILE
TYPICAL OUTLET ENERGY DISSIPATOR

CONSTRUCTION DETAILS
NO SCALE **C-1**

STATE OF CALIFORNIA - DEPARTMENT OF TRANSPORTATION
DESIGN
Caltrans

FUNCTIONAL SUPERVISOR: RORY QUINCE
CALCULATED-DESIGNED BY: ENRICO DE JESUS
CHECKED BY: BRIAN P WESLING
REVISED BY
DATE REVISED

LAST REVISION DATE PLOTTED => 01-FEB-2011
TIME PLOTTED => 15:53
01-31-11

BORDER LAST REVISED 7/2/2010
USERNAME => S123915
DGN FILE => 932630ga001.dgn
RELATIVE BORDER SCALE IS IN INCHES 0 1 2 3
UNIT 1444
PROJECT NUMBER & PHASE 09000000761

Dist	COUNTY	ROUTE	POST MILES TOTAL PROJECT	SHEET No.	TOTAL SHEETS
09	Iny	190	29.6/36.0	3	26

1-25-11
REGISTERED CIVIL ENGINEER DATE

Brian Wesling
No. 62509
Exp. 9-30-11
CIVIL

REGISTERED PROFESSIONAL ENGINEER
STATE OF CALIFORNIA

1-31-11
PLANS APPROVAL DATE

THE STATE OF CALIFORNIA OR ITS OFFICERS OR AGENTS SHALL NOT BE RESPONSIBLE FOR THE ACCURACY OR COMPLETENESS OF SCANNED COPIES OF THIS PLAN SHEET.

LEGEND:

DS - DRAINAGE SYSTEM

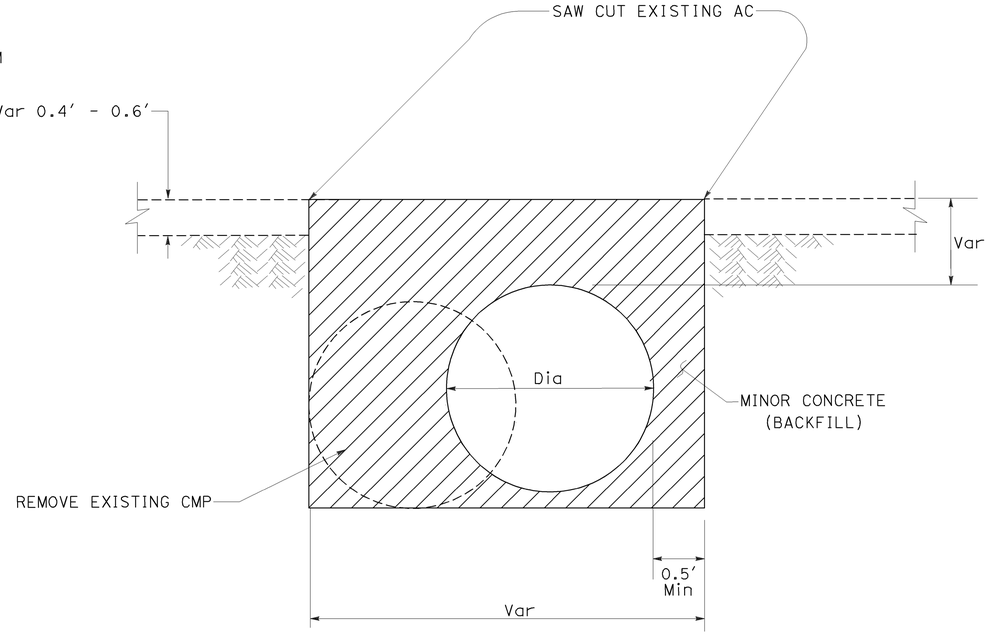

MINOR CONCRETE (BACKFILL)
DETAIL FOR DS-1, 4, 8, 12

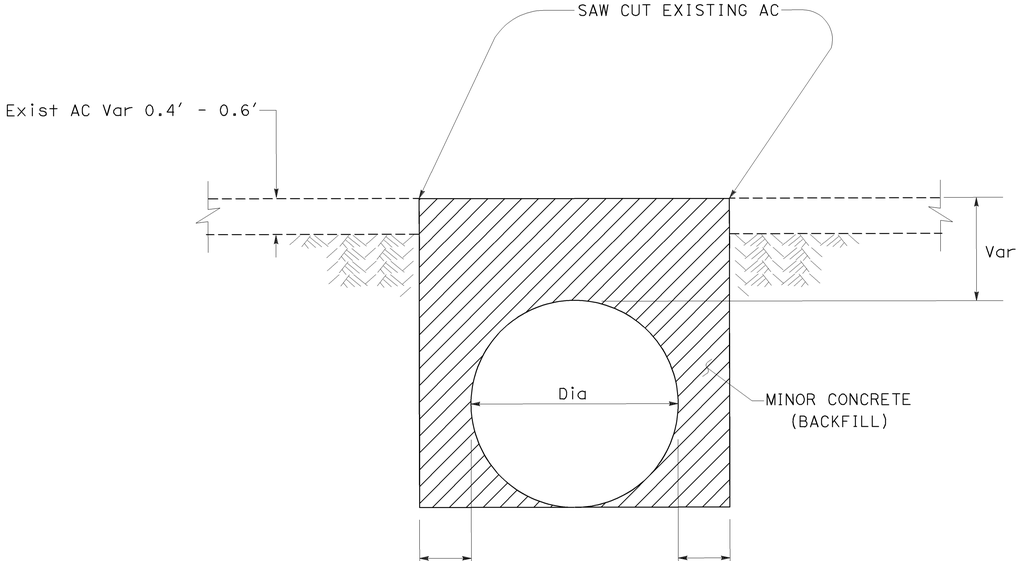

MINOR CONCRETE (BACKFILL)
DETAIL FOR DS-5, 7, 9, 10, 13, 14 & 18

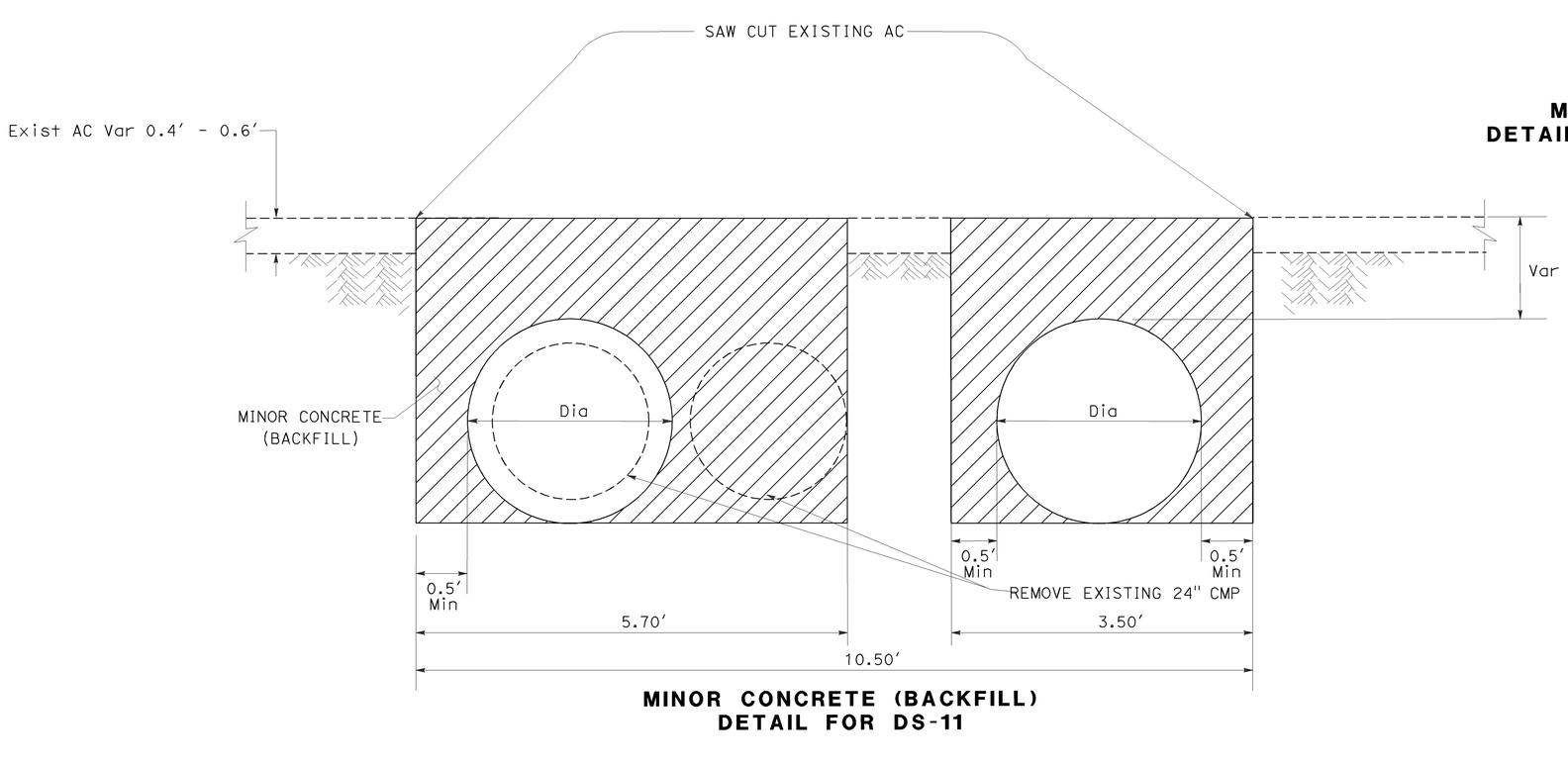

MINOR CONCRETE (BACKFILL)
DETAIL FOR DS-11

CONSTRUCTION DETAILS

NO SCALE **C-2**

STATE OF CALIFORNIA - DEPARTMENT OF TRANSPORTATION
DESIGN
FUNCTIONAL SUPERVISOR: RORY QUINCE
CALCULATED-DESIGNED BY: ENRICO DE JESUS
CHECKED BY: BRIAN P WESLING
REVISED BY
DATE REVISED

LAST REVISION DATE PLOTTED => 31-JAN-2011
TIME PLOTTED => 11:16

Dist	COUNTY	ROUTE	POST MILES TOTAL PROJECT	SHEET No.	TOTAL SHEETS
09	Iny	190	29.6/36.0	4	26

1-25-11
REGISTERED CIVIL ENGINEER DATE

1-31-11
PLANS APPROVAL DATE

REGISTERED PROFESSIONAL ENGINEER
Brian Wesling
No. 62509
Exp. 9-30-11
CIVIL
STATE OF CALIFORNIA

THE STATE OF CALIFORNIA OR ITS OFFICERS OR AGENTS SHALL NOT BE RESPONSIBLE FOR THE ACCURACY OR COMPLETENESS OF SCANNED COPIES OF THIS PLAN SHEET.

NOTES:

1. FOR ACCURATE RIGHT OF WAY CONTACT RIGHT OF WAY ENGINEERING AT THE DISTRICT OFFICE.
2. DISTURB NO VEGETATION. AVOID GRASSY AREAS.

LEGEND:

- AREA FOR CONTRACTOR'S STAGING

TFESA - TEMPORARY FENCE (ESA)

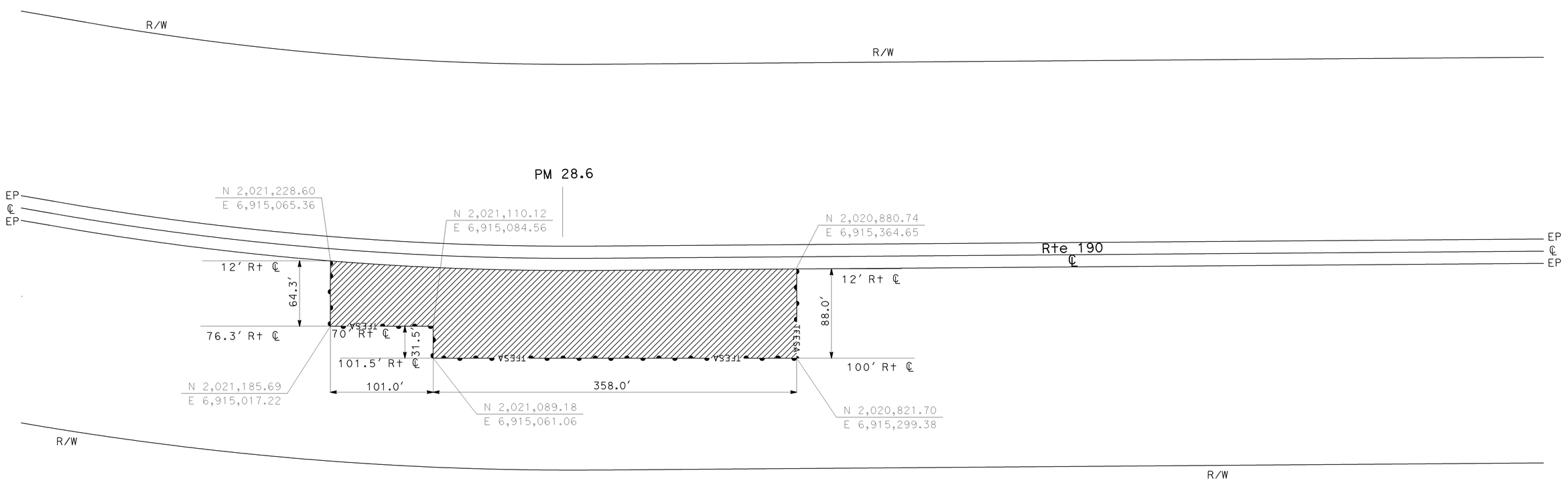

CONTRACTOR'S STAGING AREA

CONSTRUCTION DETAILS

NO SCALE **C-3**

REVISED BY | DATE REVISED
ENRICO DE JESUS | BRIAN P WESLING
CALCULATED-DESIGNED BY | CHECKED BY
FUNCTIONAL SUPERVISOR
RORY QUINCE
STATE OF CALIFORNIA - DEPARTMENT OF TRANSPORTATION
DESIGN

LAST REVISION | DATE PLOTTED => 25-JAN-2011
TIME PLOTTED => 11:12

BORDER LAST REVISED 7/2/2010 | USERNAME => S123915 | DGN FILE => 932630ga003.dgn | RELATIVE BORDER SCALE IS IN INCHES 0 1 2 3 | UNIT 1444 | PROJECT NUMBER & PHASE 09000000761

Dist	COUNTY	ROUTE	POST MILES TOTAL PROJECT	SHEET No.	TOTAL SHEETS
09	Iny	190	29.6/36.0	5	26

1-25-11
REGISTERED CIVIL ENGINEER DATE

Brian Wesling
No. 62509
Exp. 9-30-11
CIVIL
REGISTERED PROFESSIONAL ENGINEER
STATE OF CALIFORNIA

1-31-11
PLANS APPROVAL DATE

THE STATE OF CALIFORNIA OR ITS OFFICERS OR AGENTS SHALL NOT BE RESPONSIBLE FOR THE ACCURACY OR COMPLETENESS OF SCANNED COPIES OF THIS PLAN SHEET.

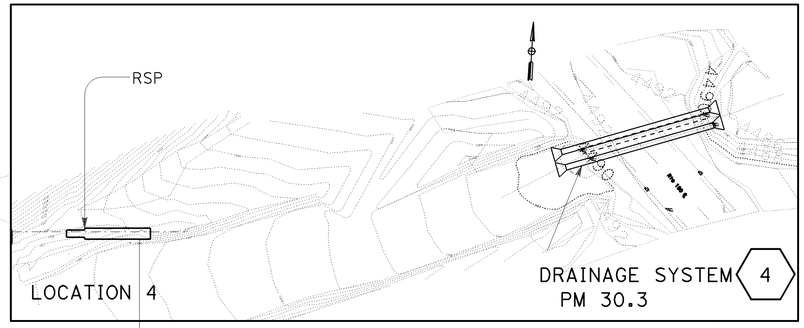

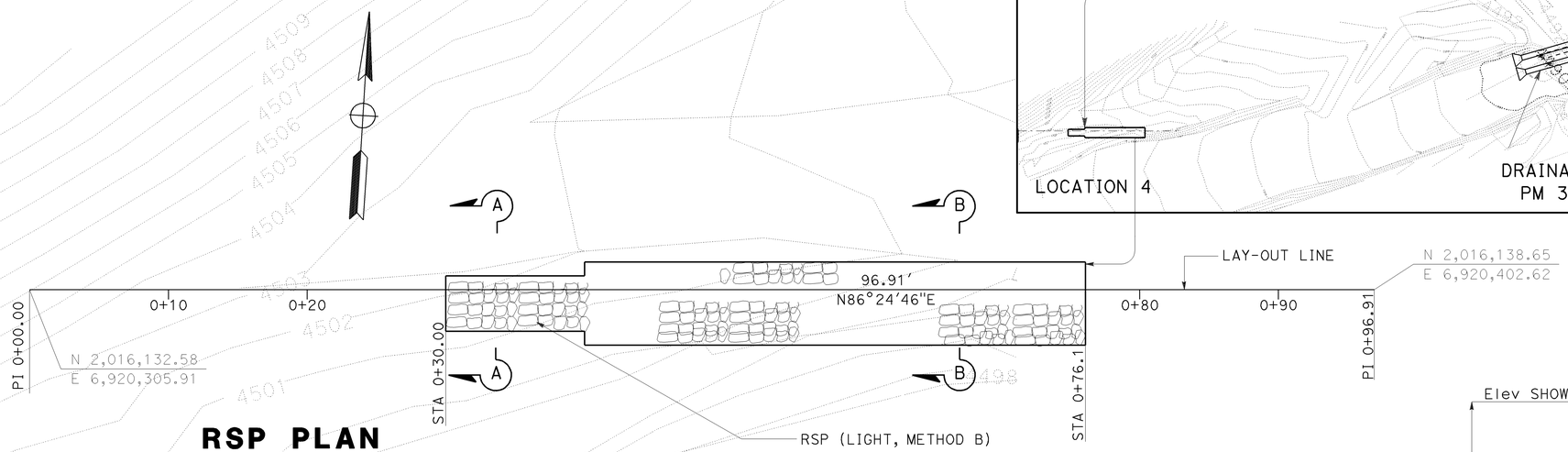

RSP PLAN
SCALE: 1"=5′

LOCATION 4

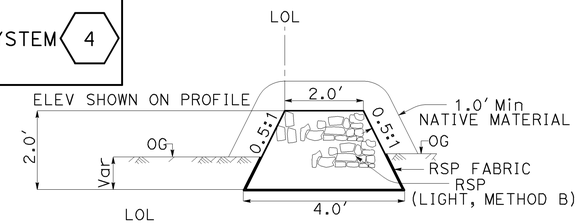

SECTION A-A

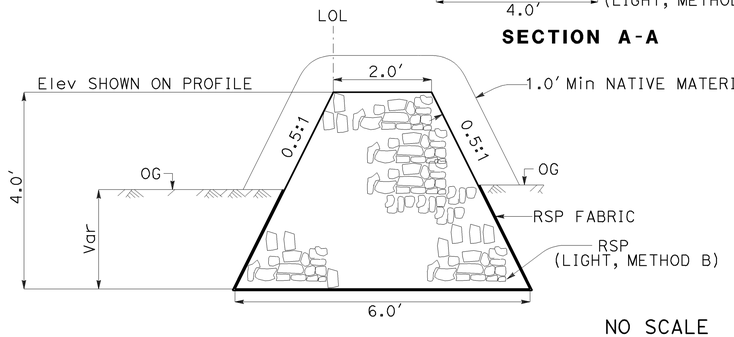

NO SCALE

SECTION B-B

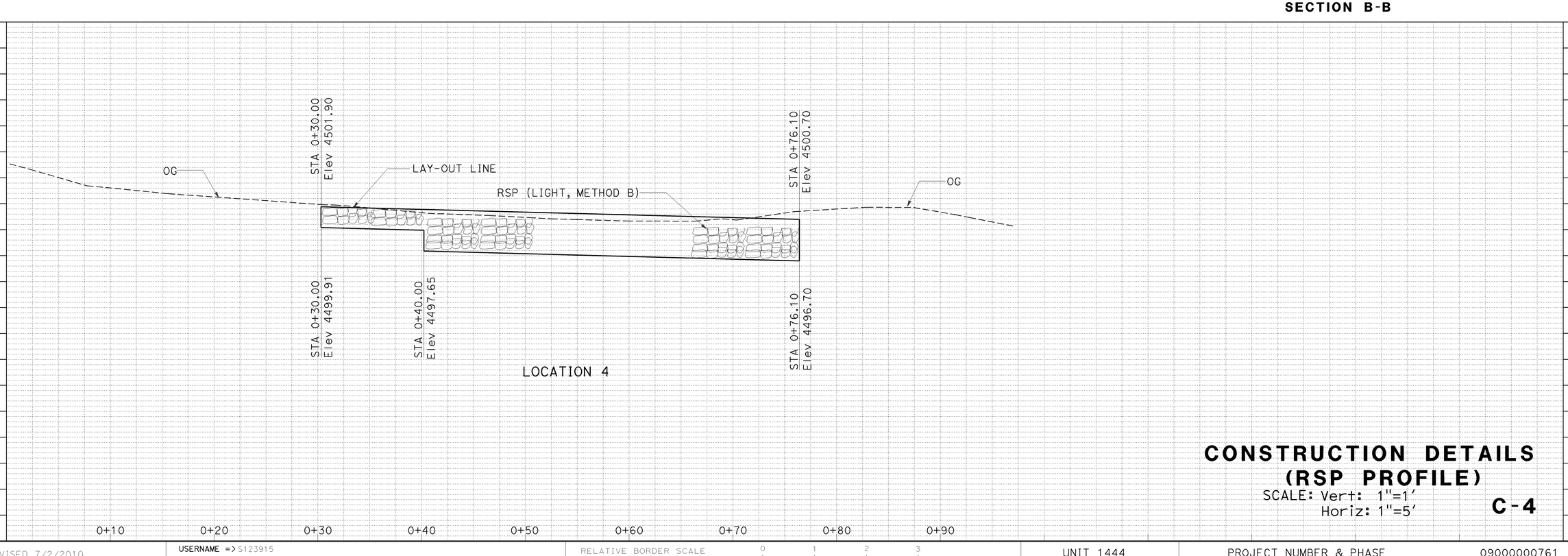

LOCATION 4

CONSTRUCTION DETAILS (RSP PROFILE)

SCALE: Vert: 1"=1′
Horiz: 1"=5′

C-4

STATE OF CALIFORNIA - DEPARTMENT OF TRANSPORTATION
DESIGN
FUNCTIONAL SUPERVISOR: RORY QUINCE
CALCULATED-DESIGNED BY: BRIAN P WESLING
CHECKED BY: ENRICO DE JESUS
REVISED BY
DATE REVISED
LAST REVISION | DATE PLOTTED => 31-JAN-2011 | TIME PLOTTED => 10:20 | 01-31-11

BORDER LAST REVISED 7/2/2010
USERNAME => S123915
DGN FILE => 932630ga004.dgn
RELATIVE BORDER SCALE IS IN INCHES 0 1 2 3
UNIT 1444
PROJECT NUMBER & PHASE 09000000761

Dist	COUNTY	ROUTE	POST MILES TOTAL PROJECT	SHEET No.	TOTAL SHEETS
09	Iny	190	29.6/36.0	6	26

1-25-11
REGISTERED CIVIL ENGINEER DATE

Brian Wesling
No. 62509
Exp. 9-30-11
CIVIL
REGISTERED PROFESSIONAL ENGINEER
STATE OF CALIFORNIA

1-31-11
PLANS APPROVAL DATE

THE STATE OF CALIFORNIA OR ITS OFFICERS OR AGENTS SHALL NOT BE RESPONSIBLE FOR THE ACCURACY OR COMPLETENESS OF SCANNED COPIES OF THIS PLAN SHEET.

NOTES:

1. FOR ACCURATE RIGHT OF WAY DATA, CONTACT RIGHT OF WAY ENGINEERING AT THE DISTRICT OFFICE.
2. COORDINATE SYSTEM IS STATE PLANE NAD 83 (1991.35) ZONE 4.

LEGEND:

- (X) - DRAINAGE SYSTEM No.
- (X) - DRAINAGE UNIT No.
- ▨ - MINOR CONCRETE (BACKFILL)
- HDPE - HIGH DENSITY POLYETHYLENE
- TFESA - TEMPORARY FENCE (ESA)

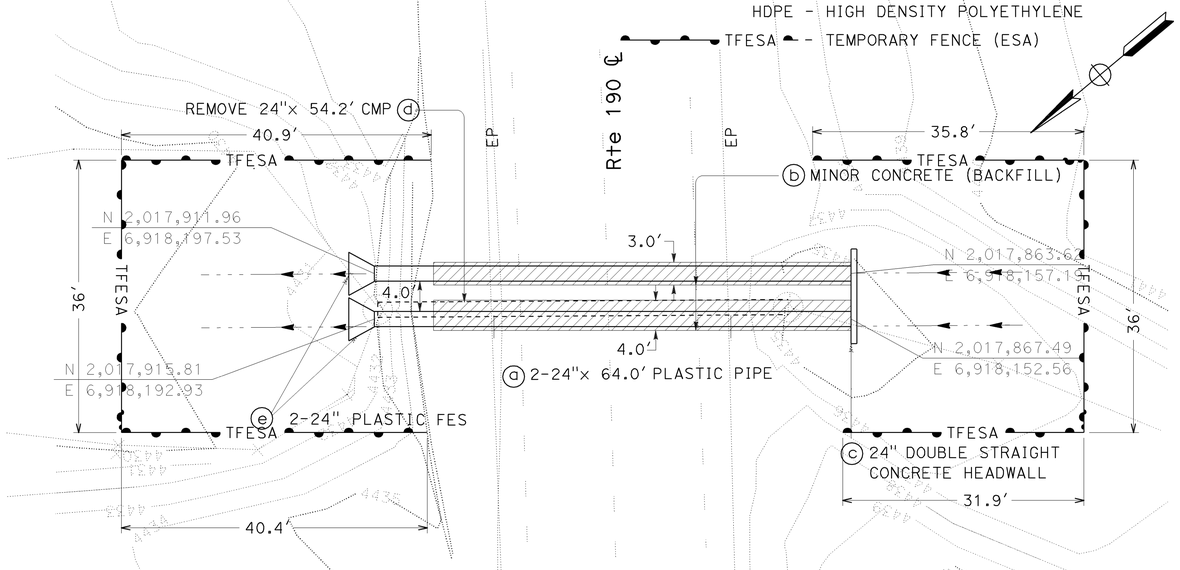

DRAINAGE SYSTEM 1

PM 29.6

SCALE: 1"=10'

THIS PLAN ACCURATE FOR DRAINAGE WORK ONLY

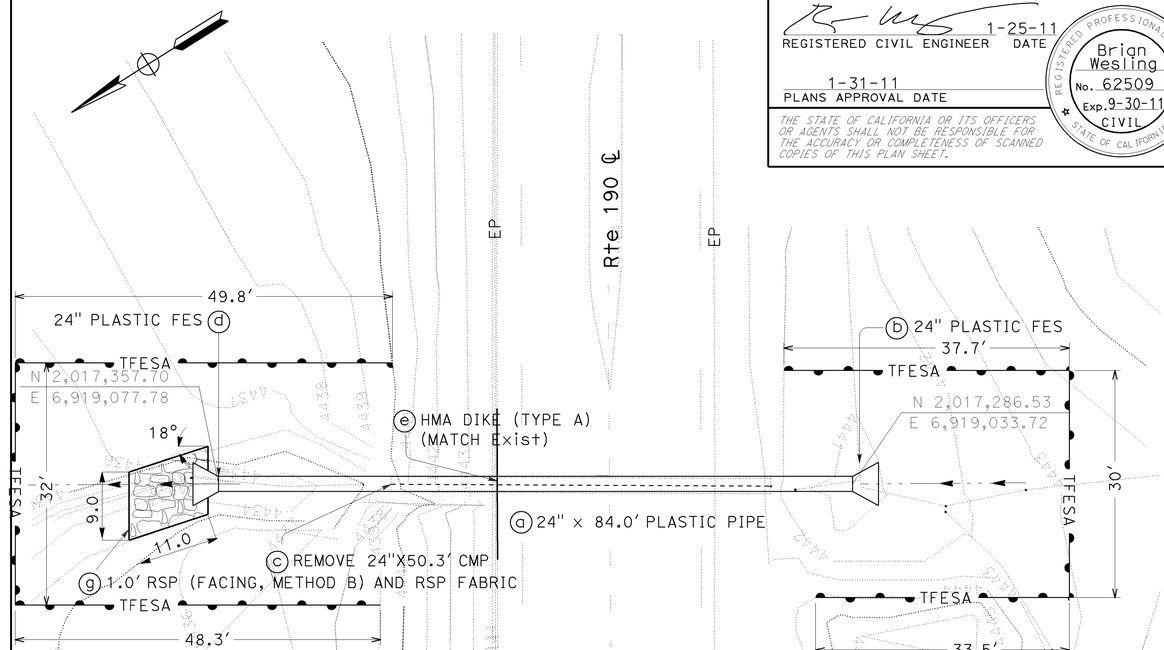

DRAINAGE SYSTEM 2

PM 29.9

SCALE: 1"=10'

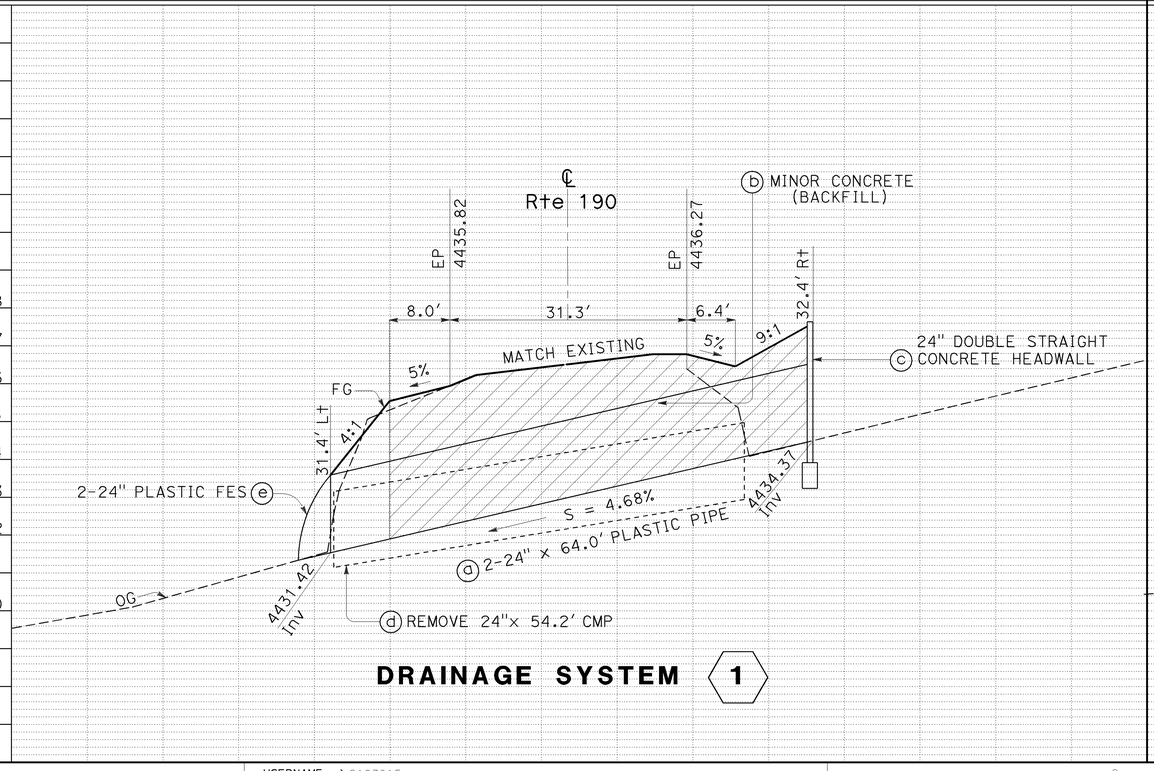

DRAINAGE SYSTEM 1

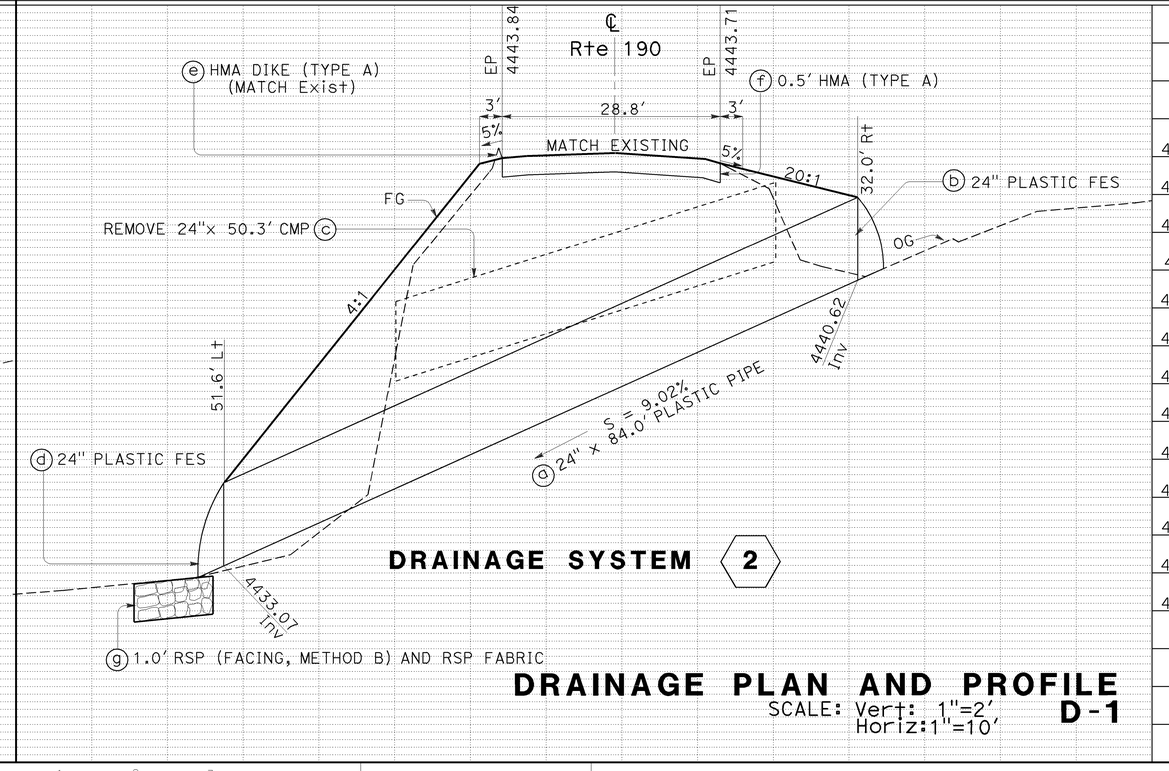

DRAINAGE SYSTEM 2

DRAINAGE PLAN AND PROFILE

SCALE: Vert: 1"=2'
Horiz: 1"=10'

D-1

STATE OF CALIFORNIA - DEPARTMENT OF TRANSPORTATION
DESIGN
Caltrans

FUNCTIONAL SUPERVISOR	RORY QUINCE
CALCULATED-DESIGNED BY	
CHECKED BY	
REVISED BY	
DATE REVISED	
ENRICO DE JESUS	
BRIAN P WESLING	

LAST REVISION DATE PLOTTED => 25-JAN-2011
TIME PLOTTED => 11:12

BORDER LAST REVISED 7/2/2010

USERNAME => S123915
DGN FILE => 932630ia001.dgn

RELATIVE BORDER SCALE IS IN INCHES 0 1 2 3

UNIT 1444

PROJECT NUMBER & PHASE 09000000761

Dist	COUNTY	ROUTE	POST MILES TOTAL PROJECT	SHEET No.	TOTAL SHEETS
09	Iny	190	29.6/36.0	7	26

REGISTERED CIVIL ENGINEER — 1-25-11 DATE

Brian Wesling No. 62509 Exp. 9-30-11 CIVIL — REGISTERED PROFESSIONAL ENGINEER — STATE OF CALIFORNIA

1-31-11
PLANS APPROVAL DATE

THE STATE OF CALIFORNIA OR ITS OFFICERS OR AGENTS SHALL NOT BE RESPONSIBLE FOR THE ACCURACY OR COMPLETENESS OF SCANNED COPIES OF THIS PLAN SHEET.

THIS PLAN ACCURATE FOR DRAINAGE WORK ONLY

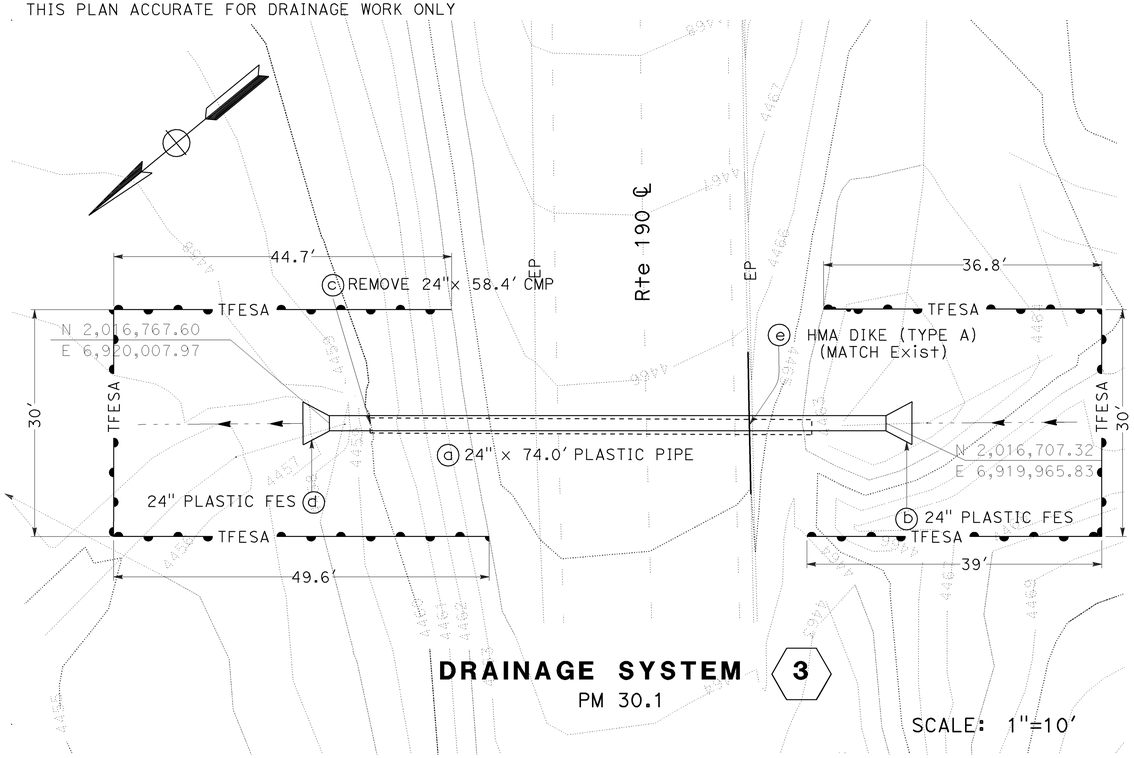

DRAINAGE SYSTEM 3
PM 30.1

SCALE: 1"=10′

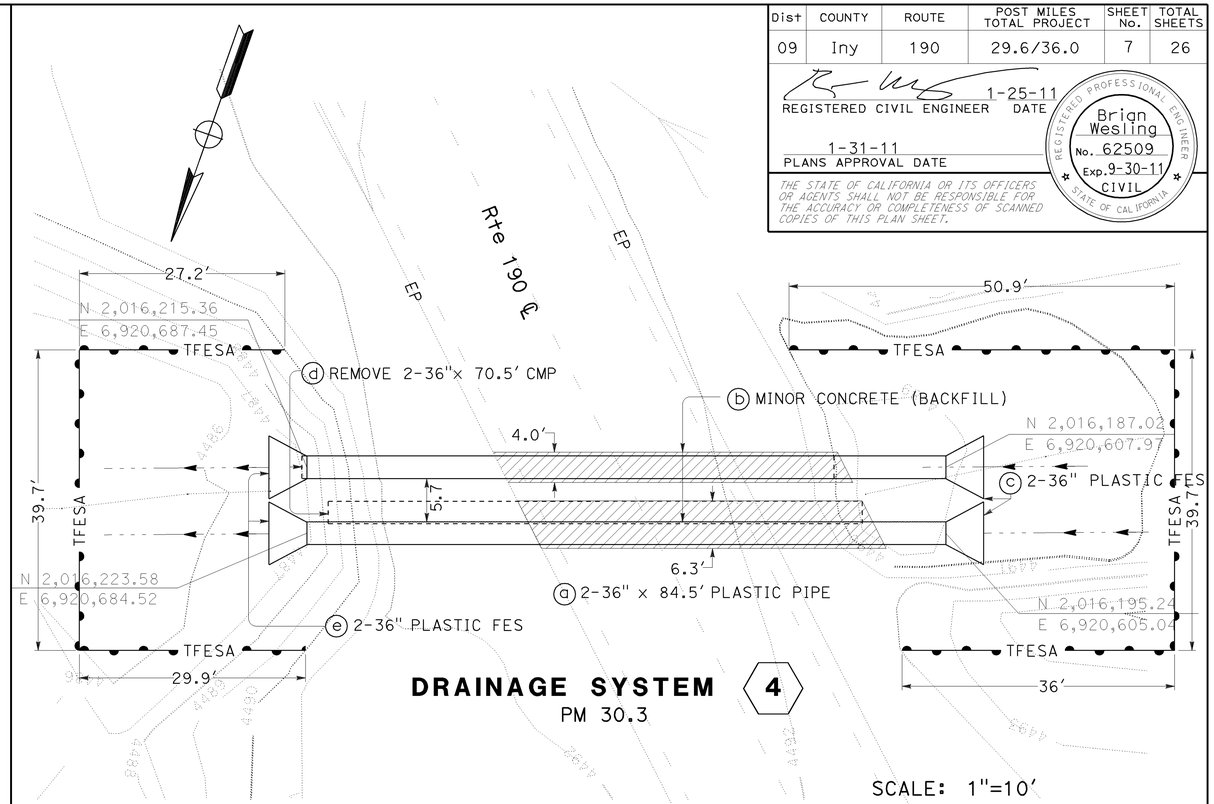

DRAINAGE SYSTEM 4
PM 30.3

SCALE: 1"=10′

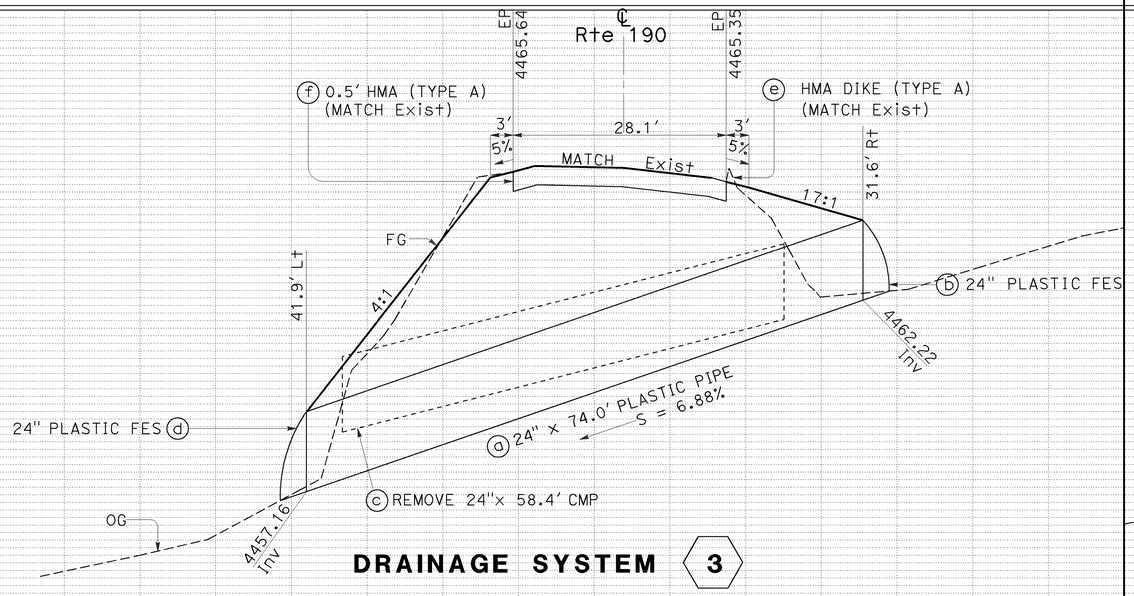

DRAINAGE SYSTEM 3

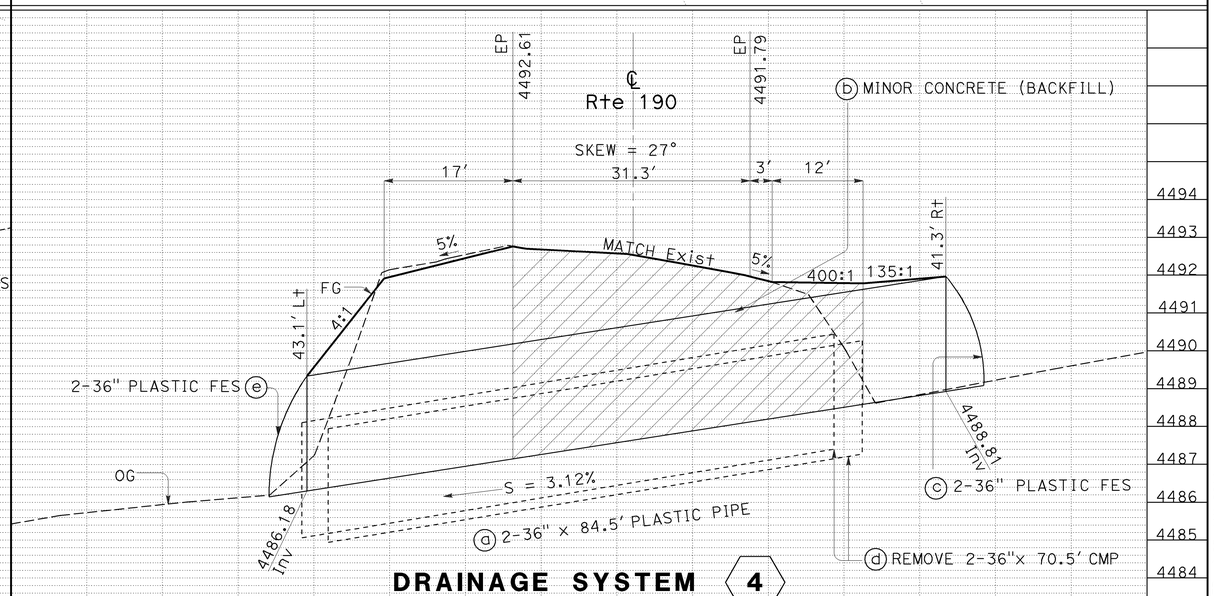

DRAINAGE SYSTEM 4

DRAINAGE PLAN AND PROFILE

SCALE: Vert 1"=2′
Horiz 1"=10′

D-2

STATE OF CALIFORNIA - DEPARTMENT OF TRANSPORTATION
Caltrans®
DESIGN

FUNCTIONAL SUPERVISOR: RORY QUINCE

CALCULATED-DESIGNED BY: ENRICO DE JESUS
CHECKED BY: BRIAN P WESLING

REVISED BY | DATE REVISED

LAST REVISION | DATE PLOTTED => 25-JAN-2011 | TIME PLOTTED => 11:12
01-25-11

BORDER LAST REVISED 7/2/2010

USERNAME => S123915
DGN FILE => 932630ia002.dgn

RELATIVE BORDER SCALE IS IN INCHES 0 1 2 3

UNIT 1444

PROJECT NUMBER & PHASE 09000000761

Dist	COUNTY	ROUTE	POST MILES TOTAL PROJECT	SHEET No.	TOTAL SHEETS
09	Iny	190	29.6/36.0	8	26

1-25-11
REGISTERED CIVIL ENGINEER DATE

Brian Wesling
No. 62509
Exp. 9-30-11
CIVIL
REGISTERED PROFESSIONAL ENGINEER
STATE OF CALIFORNIA

1-31-11
PLANS APPROVAL DATE

THE STATE OF CALIFORNIA OR ITS OFFICERS OR AGENTS SHALL NOT BE RESPONSIBLE FOR THE ACCURACY OR COMPLETENESS OF SCANNED COPIES OF THIS PLAN SHEET.

THIS PLAN ACCURATE FOR DRAINAGE WORK ONLY

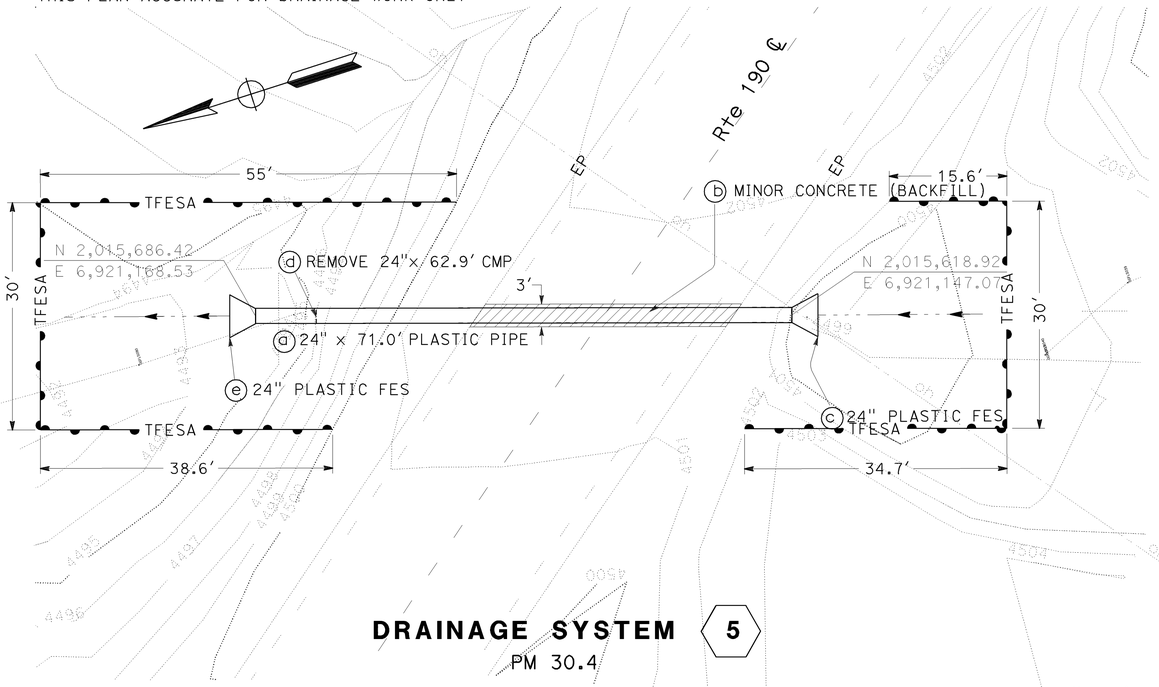

DRAINAGE SYSTEM 5

PM 30.4

SCALE: 1"=10′

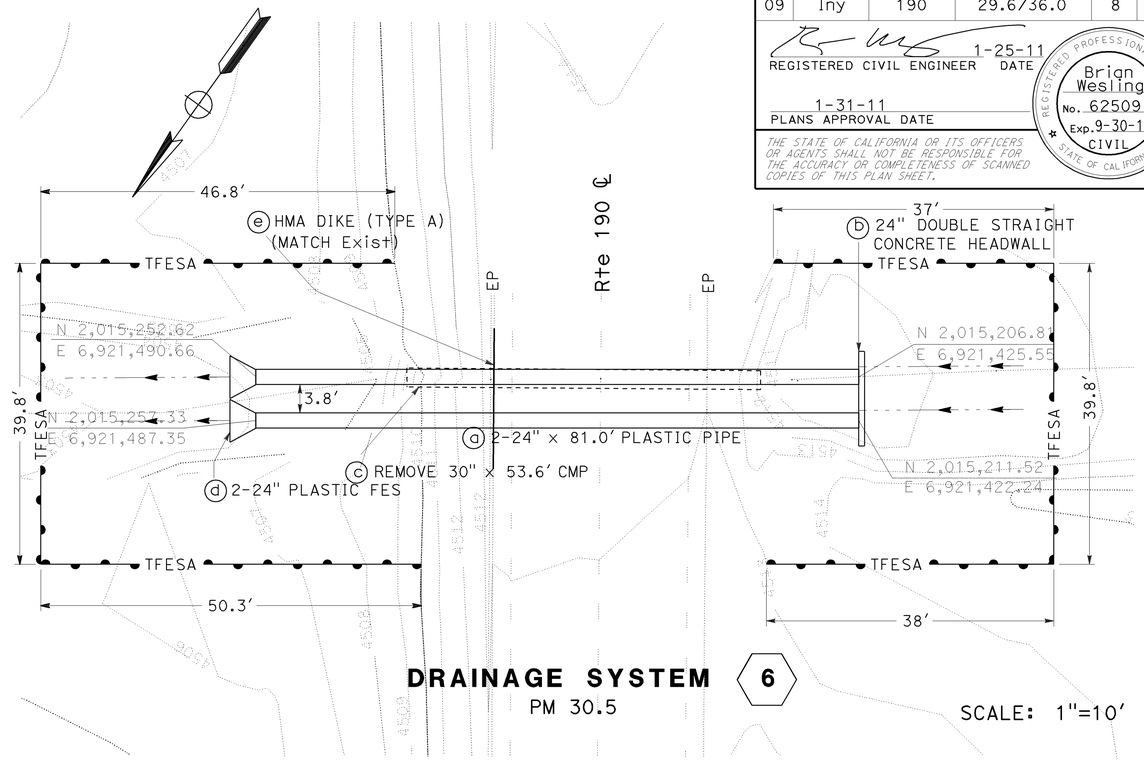

DRAINAGE SYSTEM 6

PM 30.5

SCALE: 1"=10′

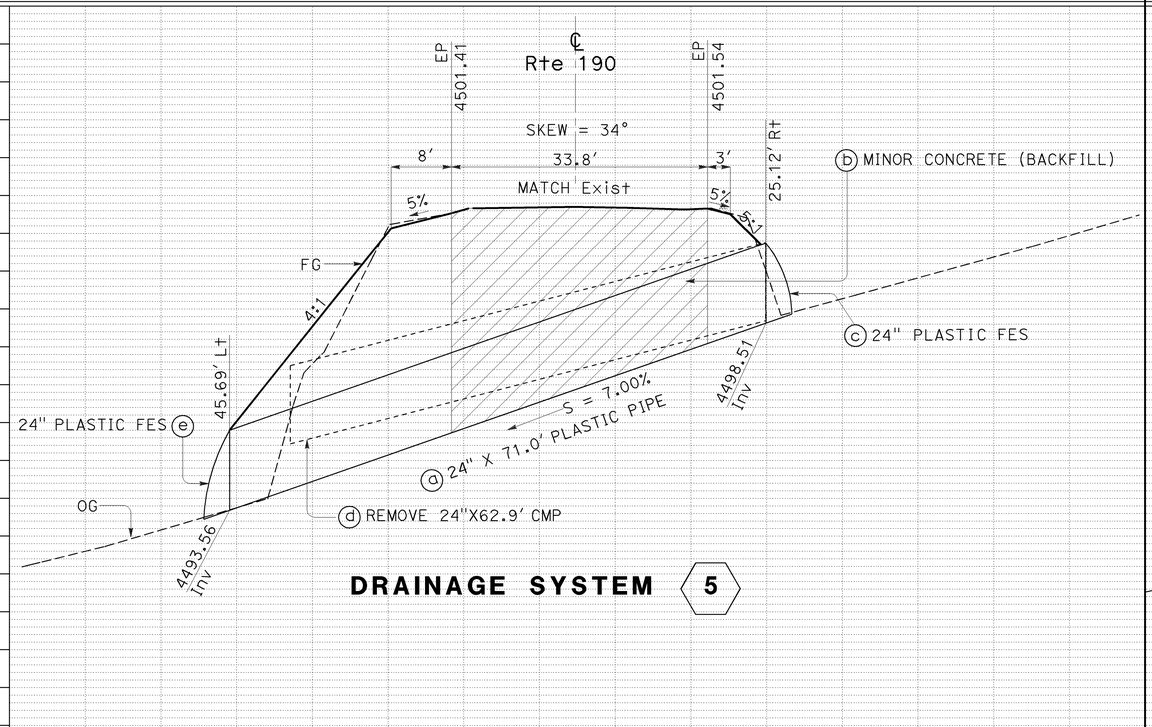

DRAINAGE SYSTEM 5

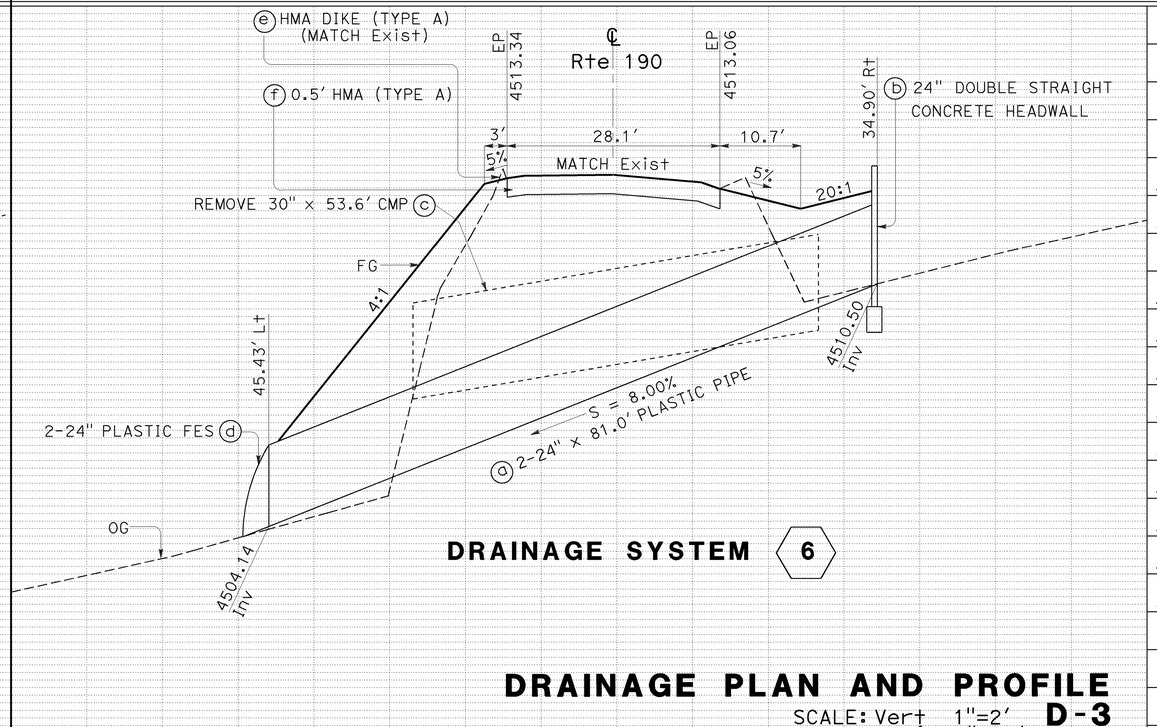

DRAINAGE SYSTEM 6

DRAINAGE PLAN AND PROFILE

SCALE: Vert 1"=2′ Horiz 1"=10′

D-3

STATE OF CALIFORNIA - DEPARTMENT OF TRANSPORTATION
DESIGN
FUNCTIONAL SUPERVISOR: RORY QUINCE
CALCULATED-DESIGNED BY: BRIAN P WESLING
CHECKED BY: ENRICO DE JESUS
REVISED BY | DATE REVISED

LAST REVISION DATE PLOTTED => 25-JAN-2011
TIME PLOTTED => 11:12

BORDER LAST REVISED 7/2/2010
USERNAME => S123915
DGN FILE => 932630ia003.dgn
RELATIVE BORDER SCALE IS IN INCHES 0 1 2 3
UNIT 1444
PROJECT NUMBER & PHASE 09000000761

Dist	COUNTY	ROUTE	POST MILES TOTAL PROJECT	SHEET No.	TOTAL SHEETS
09	Iny	190	29.6/36.0	9	26

1-25-11
REGISTERED CIVIL ENGINEER DATE

Brian Wesling
No. 62509
Exp. 9-30-11
CIVIL

1-31-11
PLANS APPROVAL DATE

THE STATE OF CALIFORNIA OR ITS OFFICERS OR AGENTS SHALL NOT BE RESPONSIBLE FOR THE ACCURACY OR COMPLETENESS OF SCANNED COPIES OF THIS PLAN SHEET.

THIS PLAN ACCURATE FOR DRAINAGE WORK ONLY

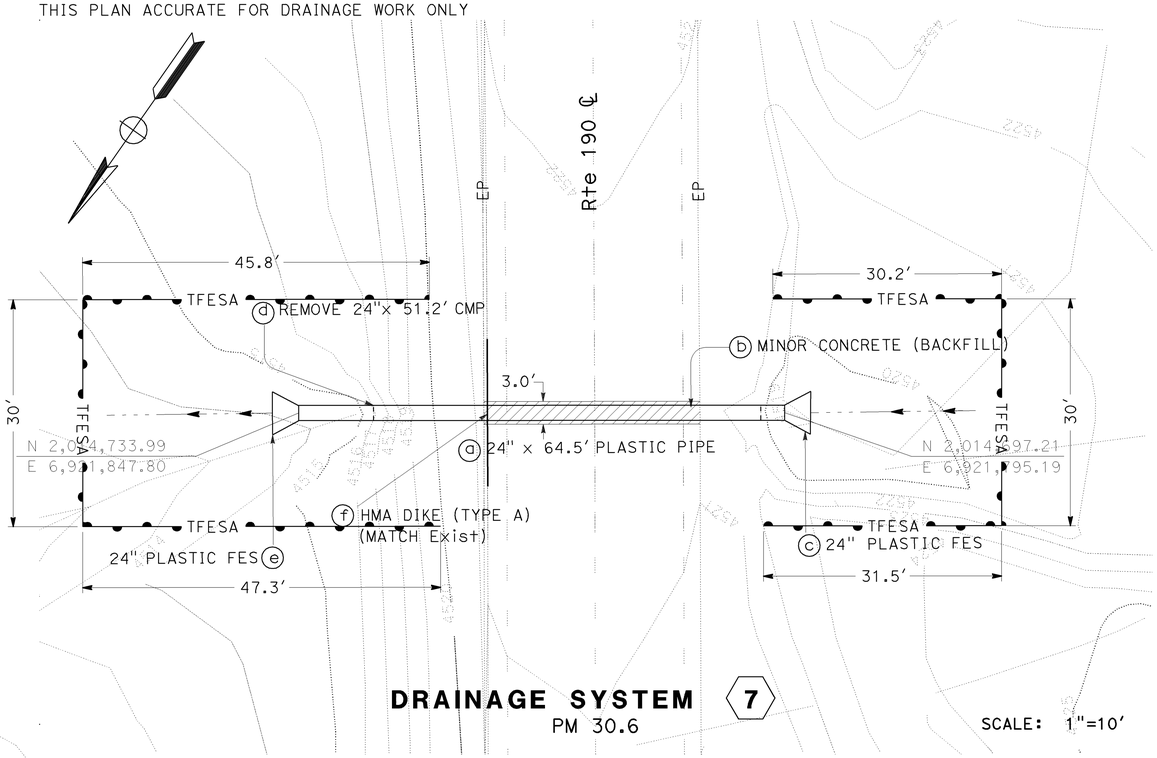

DRAINAGE SYSTEM 7
PM 30.6

SCALE: 1"=10′

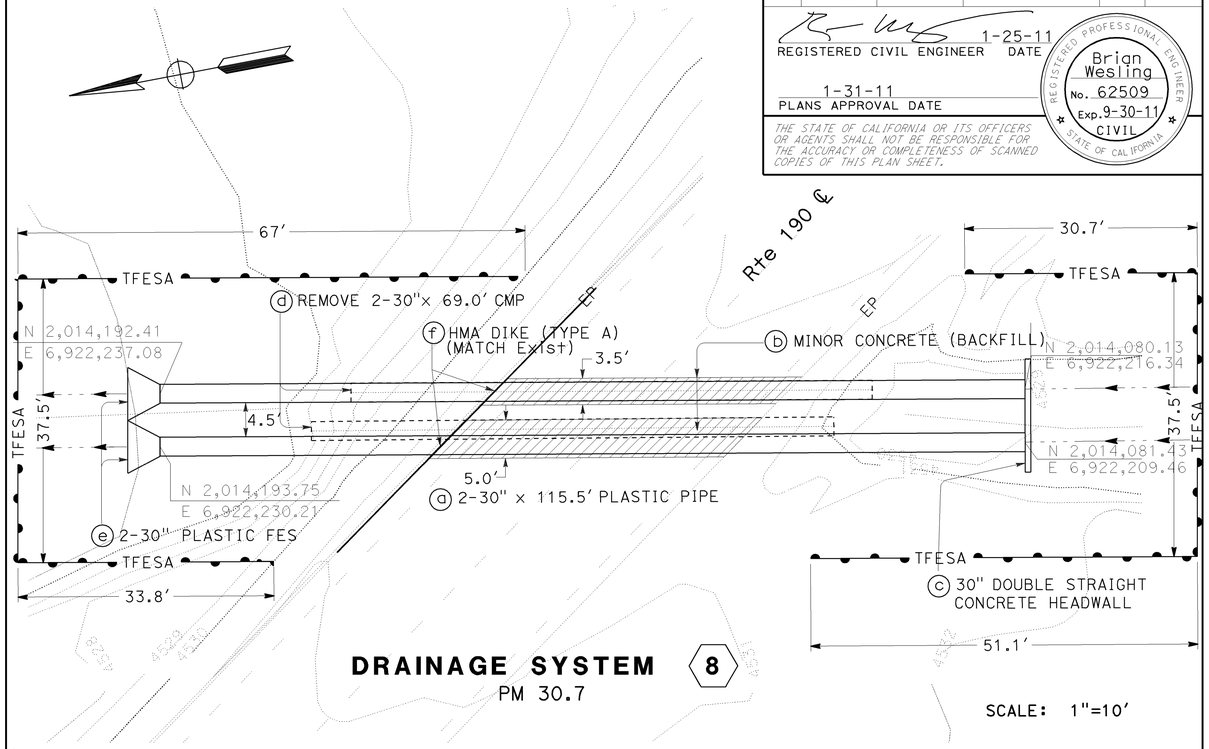

DRAINAGE SYSTEM 8
PM 30.7

SCALE: 1"=10′

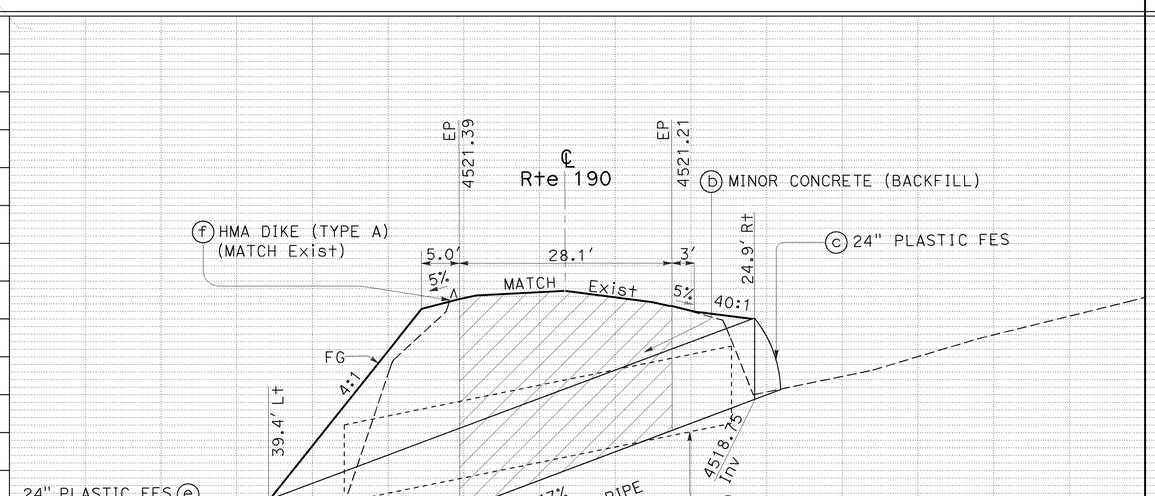

DRAINAGE SYSTEM 7

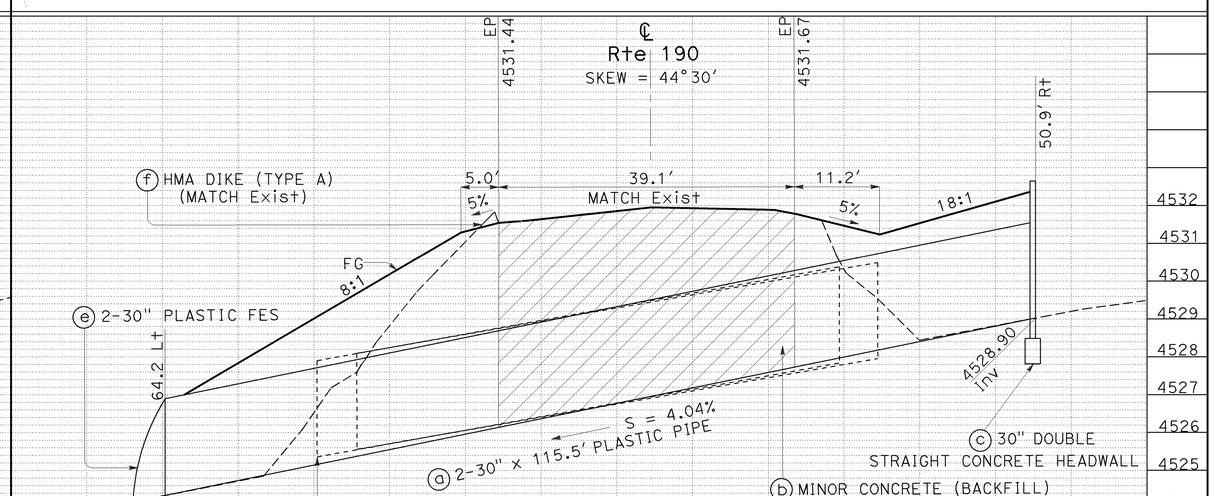

DRAINAGE SYSTEM 8

DRAINAGE PLAN AND PROFILE

SCALE: Vert 1"=2′
Horiz 1"=10′

D-4

STATE OF CALIFORNIA - DEPARTMENT OF TRANSPORTATION
DESIGN
FUNCTIONAL SUPERVISOR: RORY QUINCE
CALCULATED-DESIGNED BY: BRIAN P WESLING
CHECKED BY: ENRICO DE JESUS
REVISED BY
DATE REVISED

LAST REVISION DATE PLOTTED => 25-JAN-2011
TIME PLOTTED => 11:12

BORDER LAST REVISED 7/2/2010
USERNAME => S123915
DGN FILE => 932630ia004.dgn
RELATIVE BORDER SCALE IS IN INCHES 0 1 2 3
UNIT 1444
PROJECT NUMBER & PHASE 09000000761

Dist	COUNTY	ROUTE	POST MILES TOTAL PROJECT	SHEET No.	TOTAL SHEETS
09	Iny	190	29.6/36.0	10	26

1-25-11
REGISTERED CIVIL ENGINEER DATE

Brian Wesling
No. 62509
Exp. 9-30-11
CIVIL
REGISTERED PROFESSIONAL ENGINEER
STATE OF CALIFORNIA

1-31-11
PLANS APPROVAL DATE

THE STATE OF CALIFORNIA OR ITS OFFICERS OR AGENTS SHALL NOT BE RESPONSIBLE FOR THE ACCURACY OR COMPLETENESS OF SCANNED COPIES OF THIS PLAN SHEET.

THIS PLAN ACCURATE FOR DRAINAGE WORK ONLY

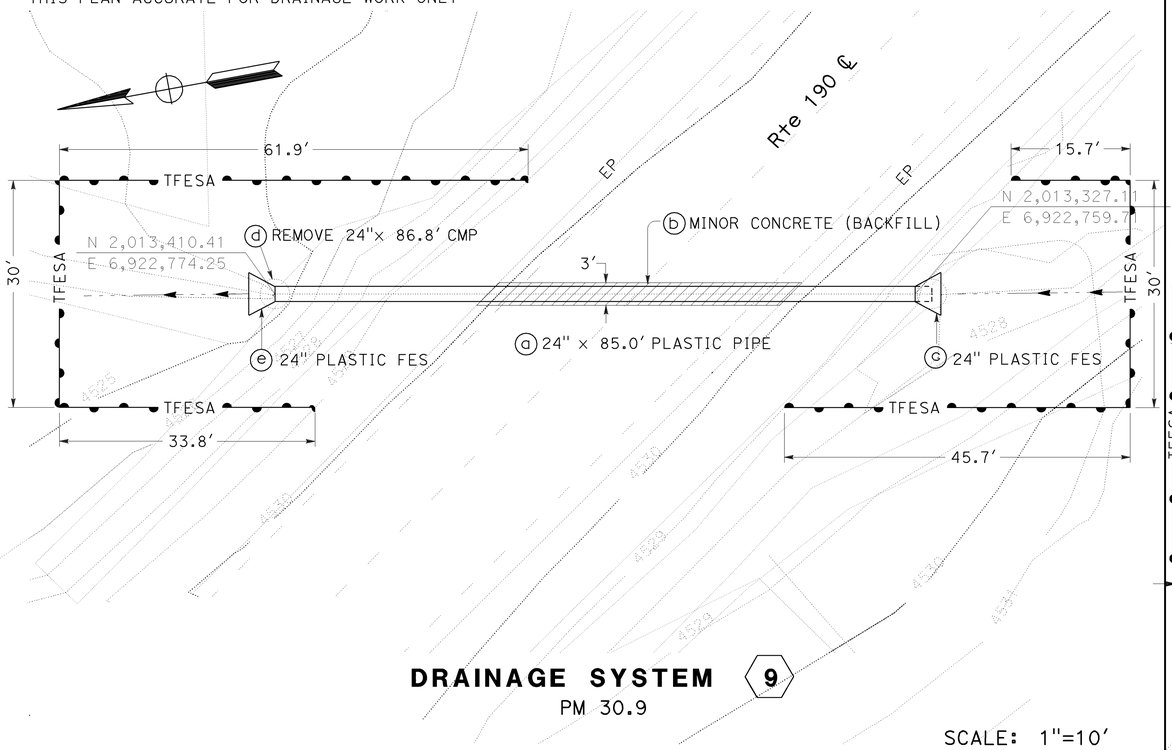

DRAINAGE SYSTEM 9

PM 30.9

SCALE: 1"=10'

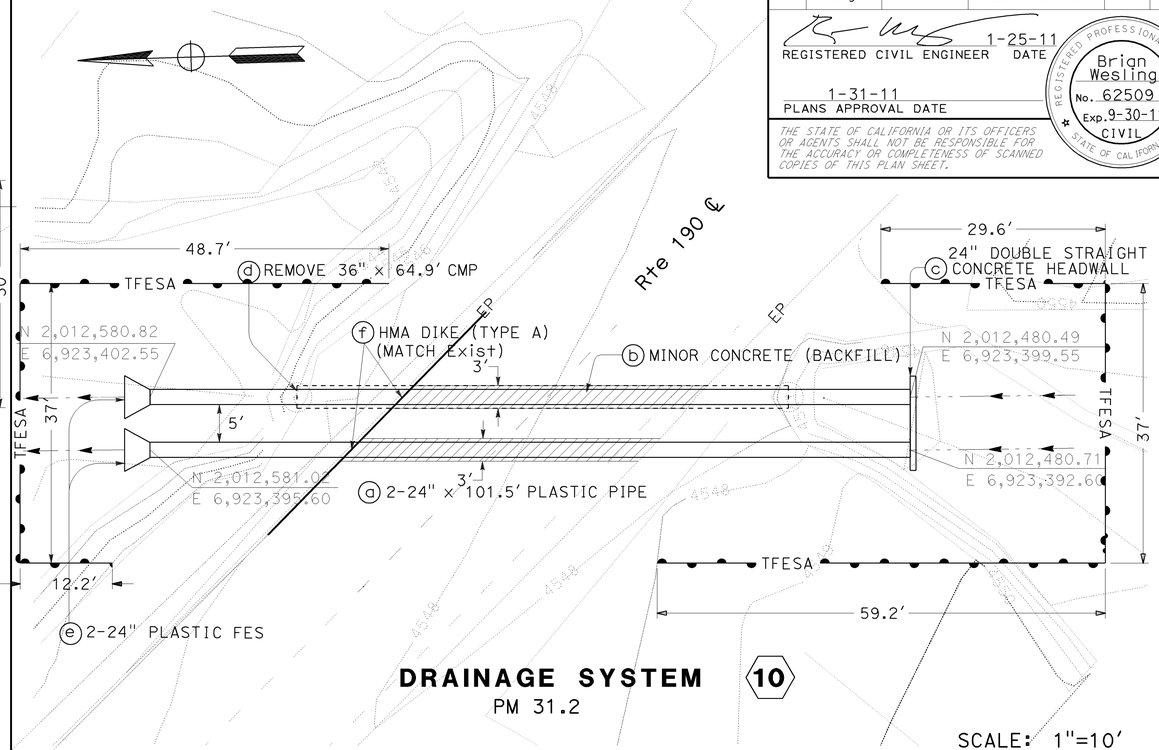

DRAINAGE SYSTEM 10

PM 31.2

SCALE: 1"=10'

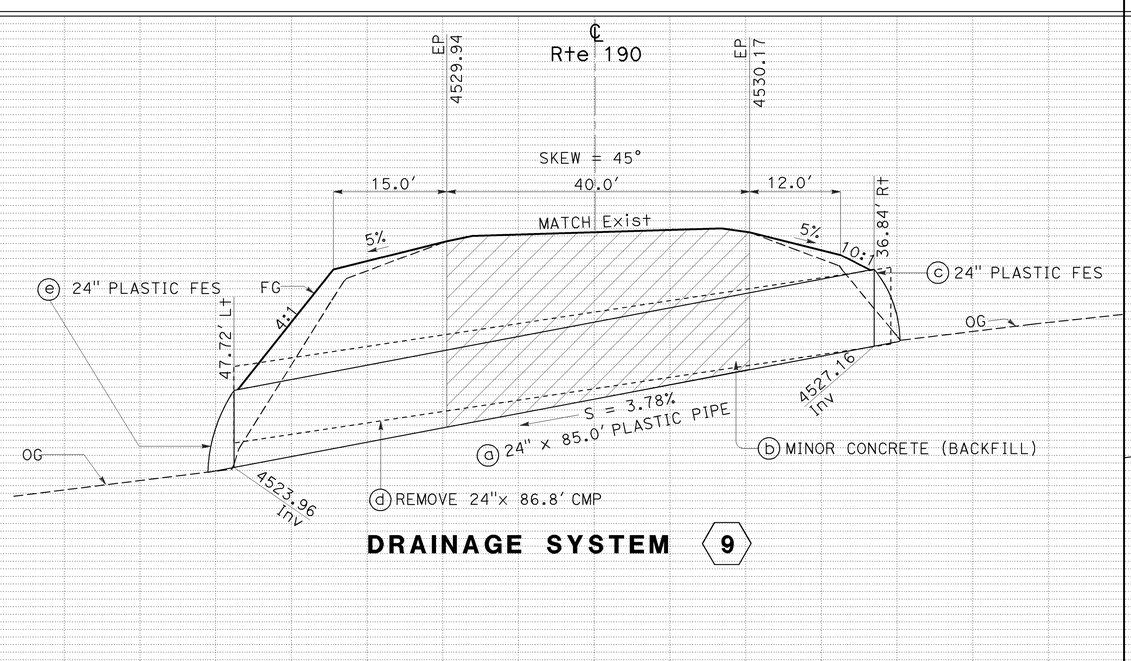

DRAINAGE SYSTEM 9

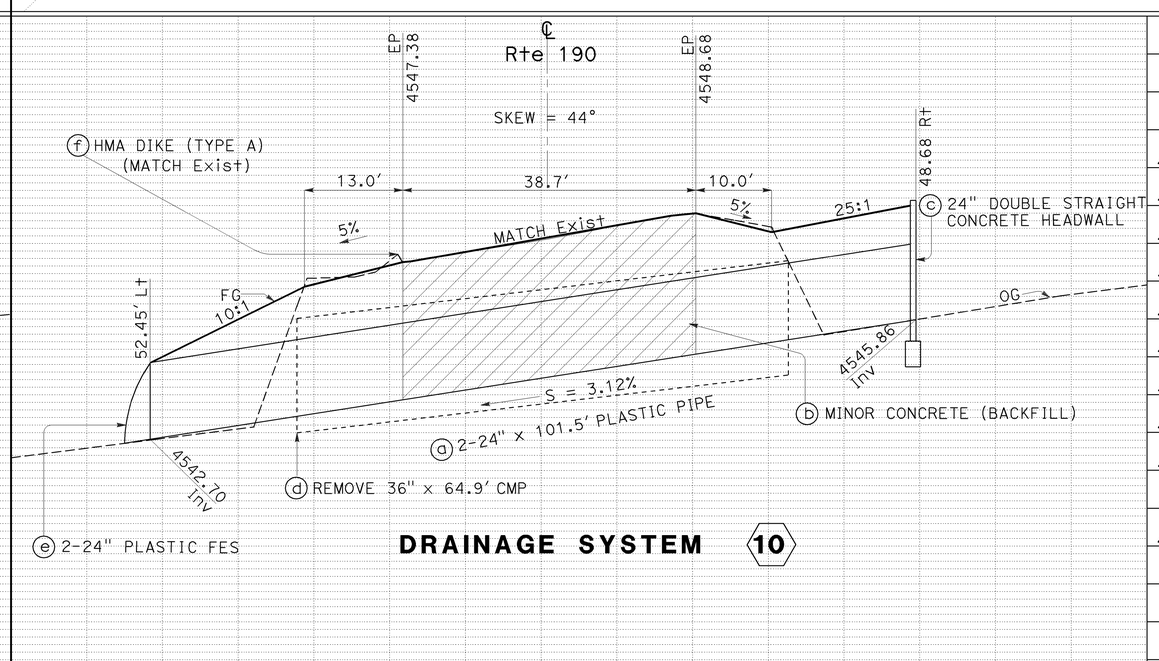

DRAINAGE SYSTEM 10

DRAINAGE PLAN AND PROFILE

SCALE: Vert 1"=2'
Horiz 1"=10'

D-5

REVISED BY | DATE REVISED
ENRICO DE JESUS | BRIAN P WESLING
CALCULATED-DESIGNED BY | CHECKED BY
FUNCTIONAL SUPERVISOR: RORY QUINCE

STATE OF CALIFORNIA - DEPARTMENT OF TRANSPORTATION
Caltrans® DESIGN

LAST REVISION | DATE PLOTTED => 25-JAN-2011 | TIME PLOTTED => 11:12
01-25-11

BORDER LAST REVISED 7/2/2010 | USERNAME => S123915 | DGN FILE => 932630ia005.dgn | RELATIVE BORDER SCALE IS IN INCHES 0 1 2 3 | UNIT 1444 | PROJECT NUMBER & PHASE 09000000761

Dist	COUNTY	ROUTE	POST MILES TOTAL PROJECT	SHEET No.	TOTAL SHEETS
09	Iny	190	29.6/36.0	11	26

1-25-11
REGISTERED CIVIL ENGINEER DATE

Brian Wesling
No. 62509
Exp. 9-30-11
CIVIL
REGISTERED PROFESSIONAL ENGINEER
STATE OF CALIFORNIA

1-31-11
PLANS APPROVAL DATE

THE STATE OF CALIFORNIA OR ITS OFFICERS OR AGENTS SHALL NOT BE RESPONSIBLE FOR THE ACCURACY OR COMPLETENESS OF SCANNED COPIES OF THIS PLAN SHEET.

THIS PLAN ACCURATE FOR DRAINAGE WORK ONLY

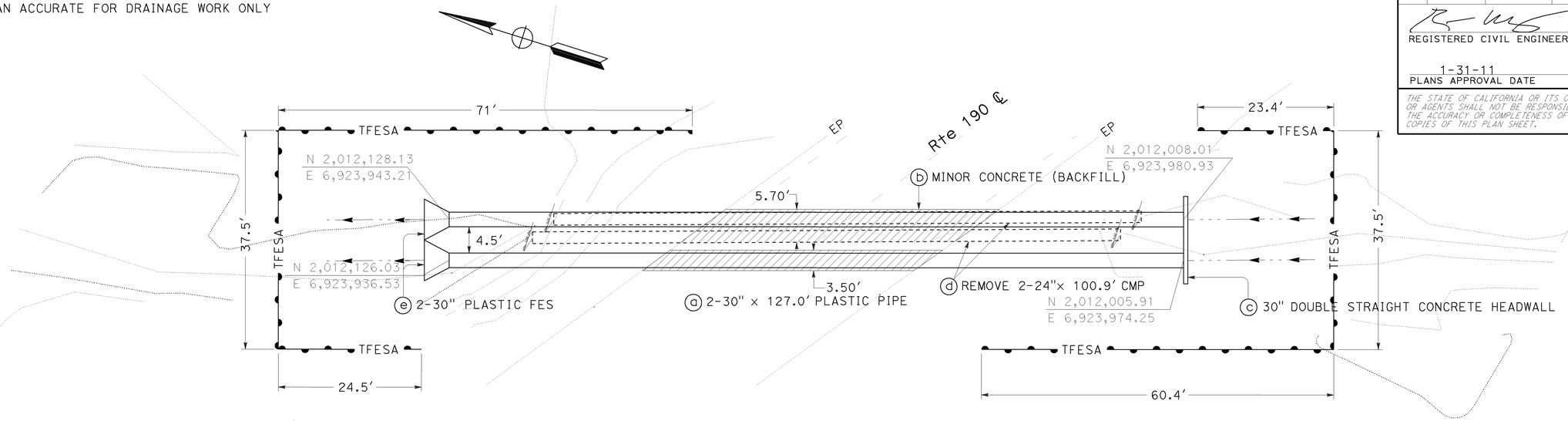

DRAINAGE SYSTEM (11)
PM 31.3

SCALE: 1"=10′

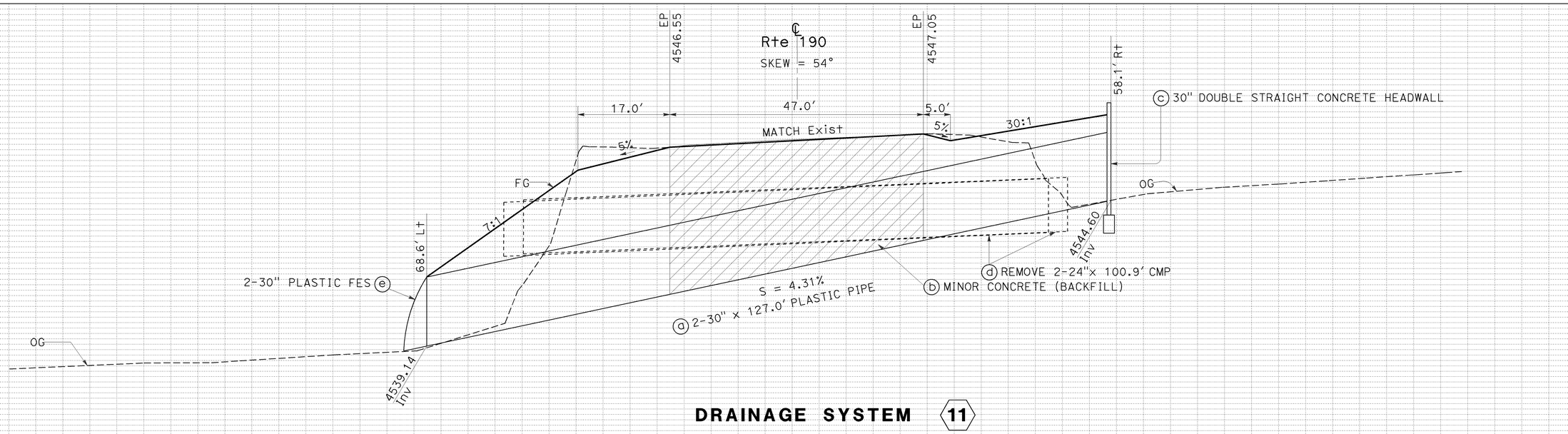

DRAINAGE SYSTEM (11)

DRAINAGE PLAN AND PROFILE
SCALE: Vert 1"=2′ **D-6**
Horiz 1"=10′

LAST REVISION | DATE PLOTTED => 25-JAN-2011
01-25-11 | TIME PLOTTED => 11:12

STATE OF CALIFORNIA - DEPARTMENT OF TRANSPORTATION
DESIGN
FUNCTIONAL SUPERVISOR: RORY QUINCE
CALCULATED-DESIGNED BY: ENRICO DE JESUS
CHECKED BY: BRIAN P WESLING
REVISED BY | DATE REVISED

BORDER LAST REVISED 7/2/2010
USERNAME => S123915
DGN FILE => 932630ia006.dgn
RELATIVE BORDER SCALE IS IN INCHES 0 1 2 3
UNIT 1444
PROJECT NUMBER & PHASE 09000000761

Dist	COUNTY	ROUTE	POST MILES TOTAL PROJECT	SHEET No.	TOTAL SHEETS
09	Iny	190	29.6/36.0	12	26

1-25-11
REGISTERED CIVIL ENGINEER DATE

Brian Wesling
No. 62509
Exp. 9-30-11
CIVIL
REGISTERED PROFESSIONAL ENGINEER
STATE OF CALIFORNIA

1-31-11
PLANS APPROVAL DATE

THE STATE OF CALIFORNIA OR ITS OFFICERS OR AGENTS SHALL NOT BE RESPONSIBLE FOR THE ACCURACY OR COMPLETENESS OF SCANNED COPIES OF THIS PLAN SHEET.

THIS PLAN ACCURATE FOR DRAINAGE WORK ONLY

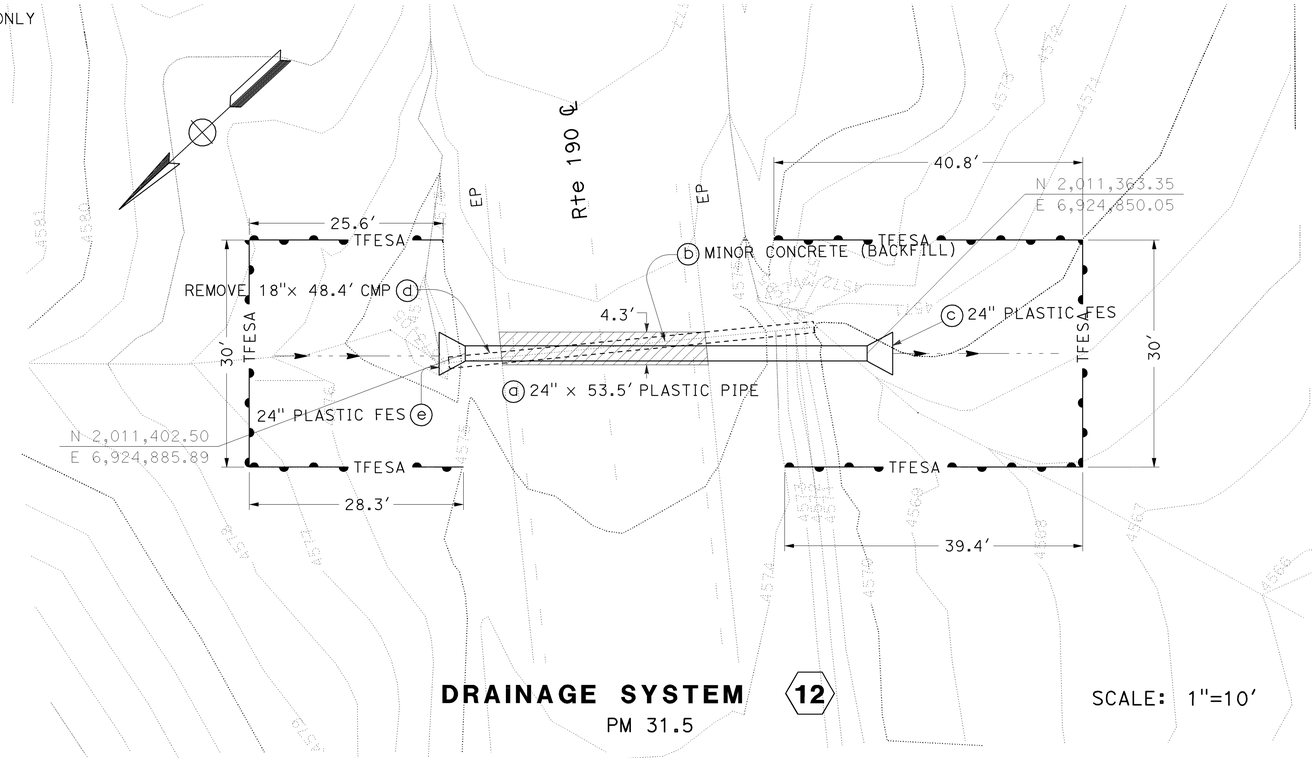

DRAINAGE SYSTEM (12)

PM 31.5

SCALE: 1"=10′

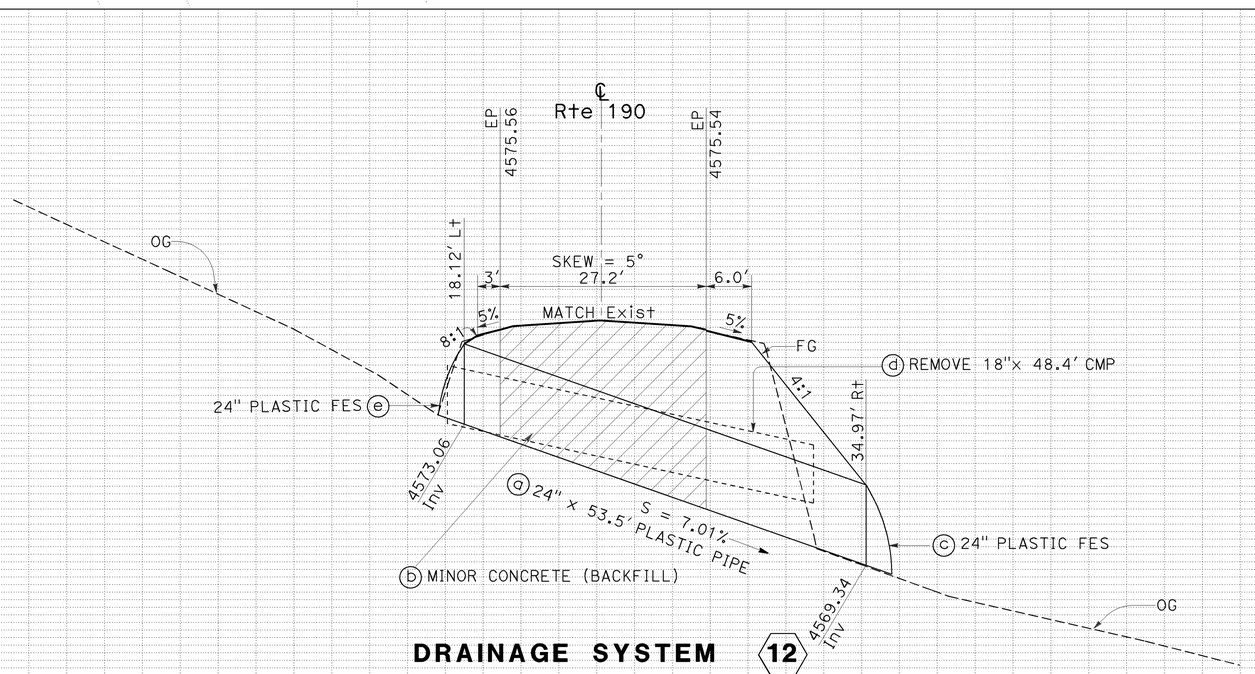

DRAINAGE SYSTEM (12)

DRAINAGE PLAN AND PROFILE

SCALE: Vert 1"=2′
Horiz 1"=10′

D-7

STATE OF CALIFORNIA - DEPARTMENT OF TRANSPORTATION
DESIGN
FUNCTIONAL SUPERVISOR: RORY QUINCE
CALCULATED-DESIGNED BY: ENRICO DE JESUS
CHECKED BY: BRIAN P WESLING
REVISED BY
DATE REVISED

LAST REVISION DATE PLOTTED => 25-JAN-2011
TIME PLOTTED => 11:12

BORDER LAST REVISED 7/2/2010
USERNAME => S123915
DGN FILE => 9326301a007.dgn
RELATIVE BORDER SCALE IS IN INCHES 0 1 2 3
UNIT 1444
PROJECT NUMBER & PHASE 09000000761

Dist	COUNTY	ROUTE	POST MILES TOTAL PROJECT	SHEET No.	TOTAL SHEETS
09	Iny	190	29.6/36.0	13	26

1-25-11
REGISTERED CIVIL ENGINEER DATE

Brian Wesling
No. 62509
Exp. 9-30-11
CIVIL
REGISTERED PROFESSIONAL ENGINEER
STATE OF CALIFORNIA

1-31-11
PLANS APPROVAL DATE

THE STATE OF CALIFORNIA OR ITS OFFICERS OR AGENTS SHALL NOT BE RESPONSIBLE FOR THE ACCURACY OR COMPLETENESS OF SCANNED COPIES OF THIS PLAN SHEET.

THIS PLAN ACCURATE FOR DRAINAGE WORK ONLY

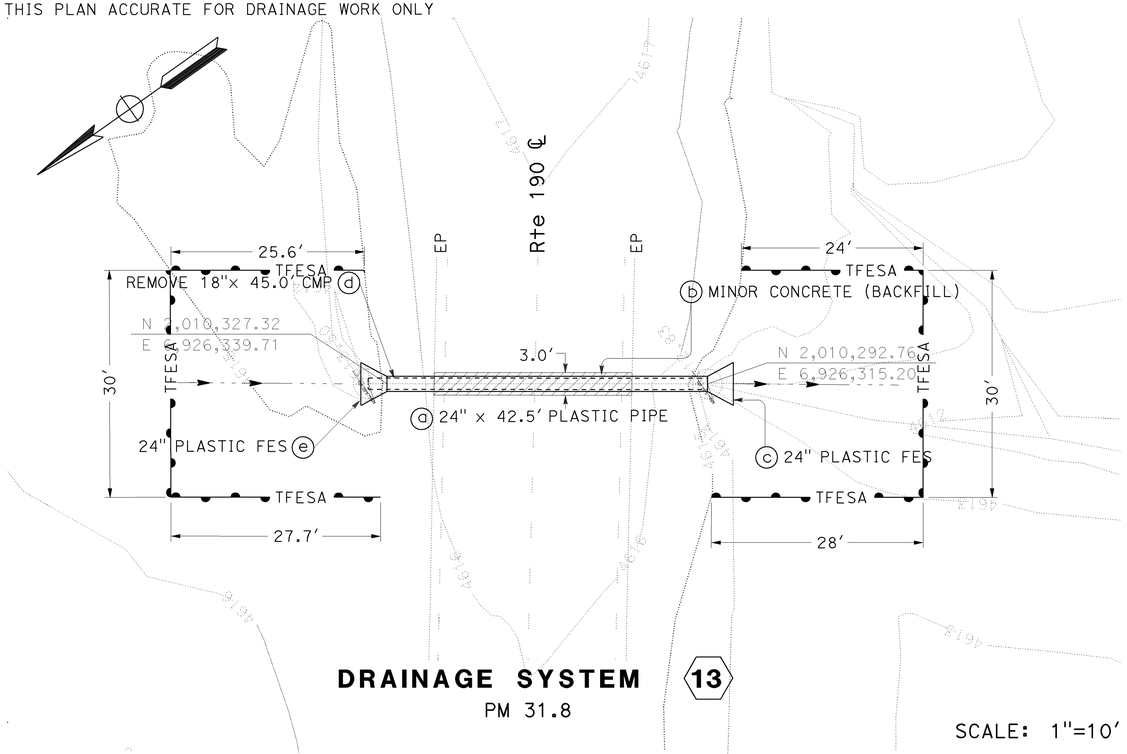

DRAINAGE SYSTEM 13

PM 31.8

SCALE: 1"=10′

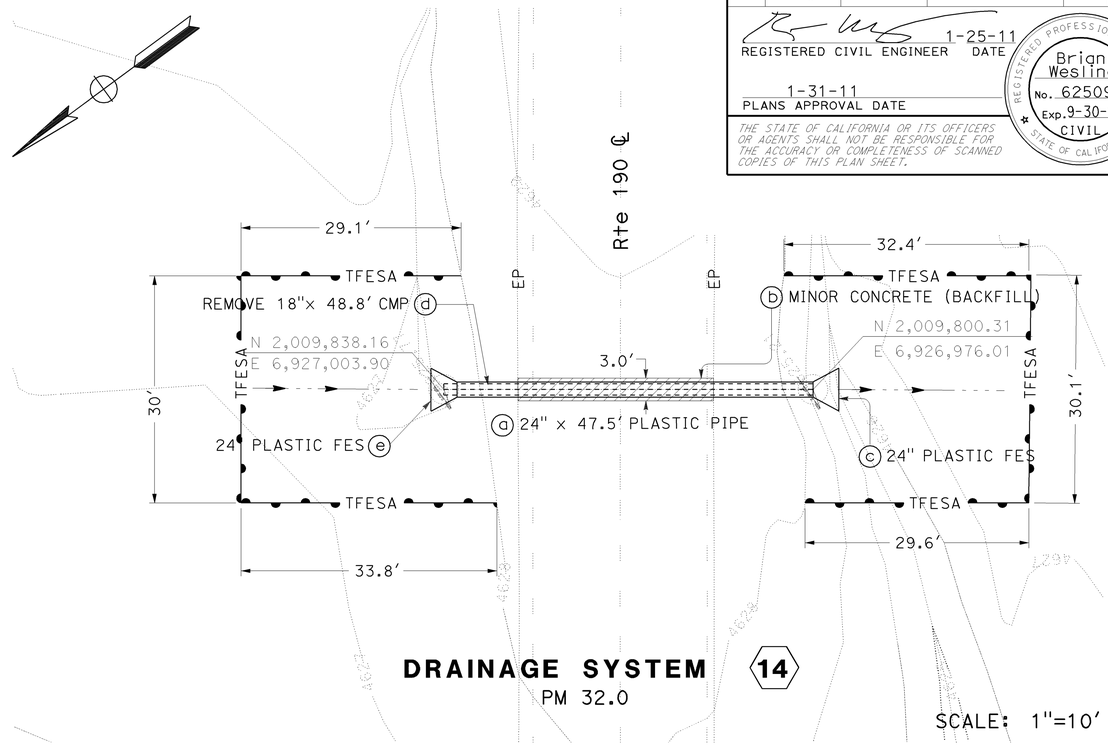

DRAINAGE SYSTEM 14

PM 32.0

SCALE: 1"=10′

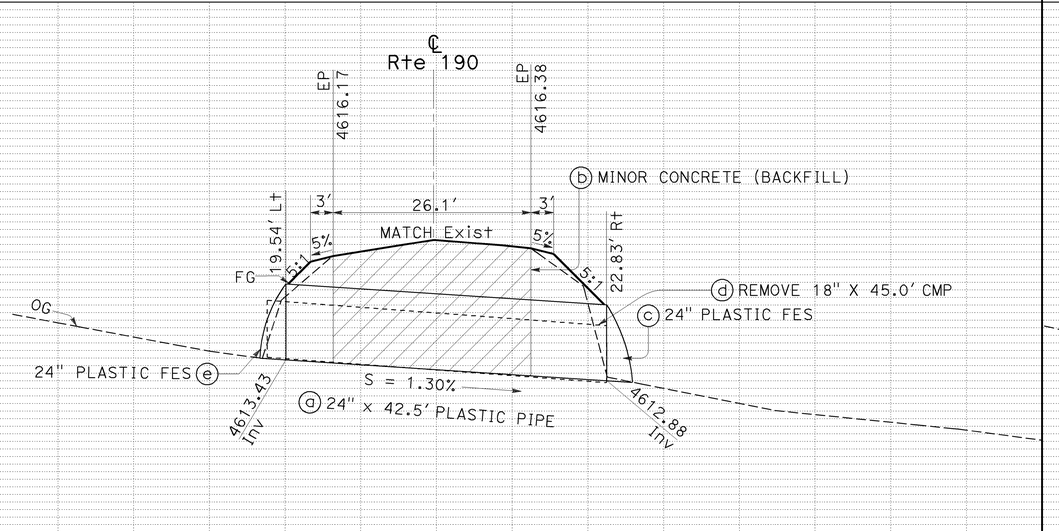

DRAINAGE SYSTEM 13

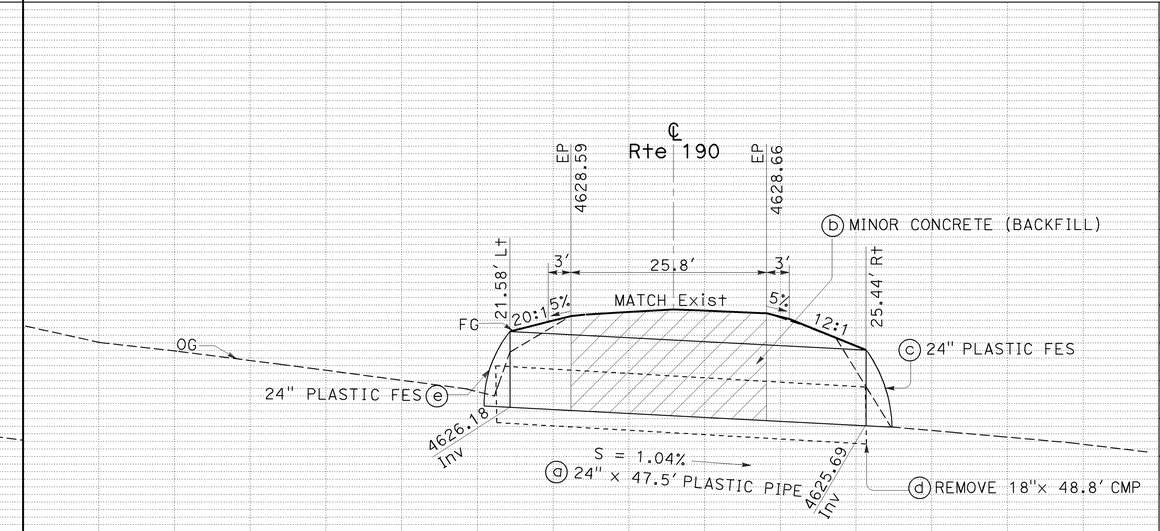

DRAINAGE SYSTEM 14

DRAINAGE PLAN AND PROFILE

SCALE: Vert 1"=2′ Horiz 1"=10′ **D-8**

STATE OF CALIFORNIA - DEPARTMENT OF TRANSPORTATION
DESIGN
FUNCTIONAL SUPERVISOR: RORY QUINCE
CALCULATED-DESIGNED BY: BRIAN P WESLING
CHECKED BY: ENRICO DE JESUS
REVISED BY | DATE REVISED

LAST REVISION DATE PLOTTED => 25-JAN-2011
TIME PLOTTED => 11:12
01-25-11

BORDER LAST REVISED 7/2/2010
USERNAME => S123915
DGN FILE => 932630ia008.dgn
RELATIVE BORDER SCALE IS IN INCHES 0 1 2 3
UNIT 1444
PROJECT NUMBER & PHASE 09000000761

THIS PLAN ACCURATE FOR DRAINAGE WORK ONLY

Dist	COUNTY	ROUTE	POST MILES TOTAL PROJECT	SHEET No.	TOTAL SHEETS
09	Iny	190	29.6/36.0	14	26

1-25-11
REGISTERED CIVIL ENGINEER DATE

Brian Wesling
No. 62509
Exp. 9-30-11
CIVIL
REGISTERED PROFESSIONAL ENGINEER
STATE OF CALIFORNIA

1-31-11
PLANS APPROVAL DATE

THE STATE OF CALIFORNIA OR ITS OFFICERS OR AGENTS SHALL NOT BE RESPONSIBLE FOR THE ACCURACY OR COMPLETENESS OF SCANNED COPIES OF THIS PLAN SHEET.

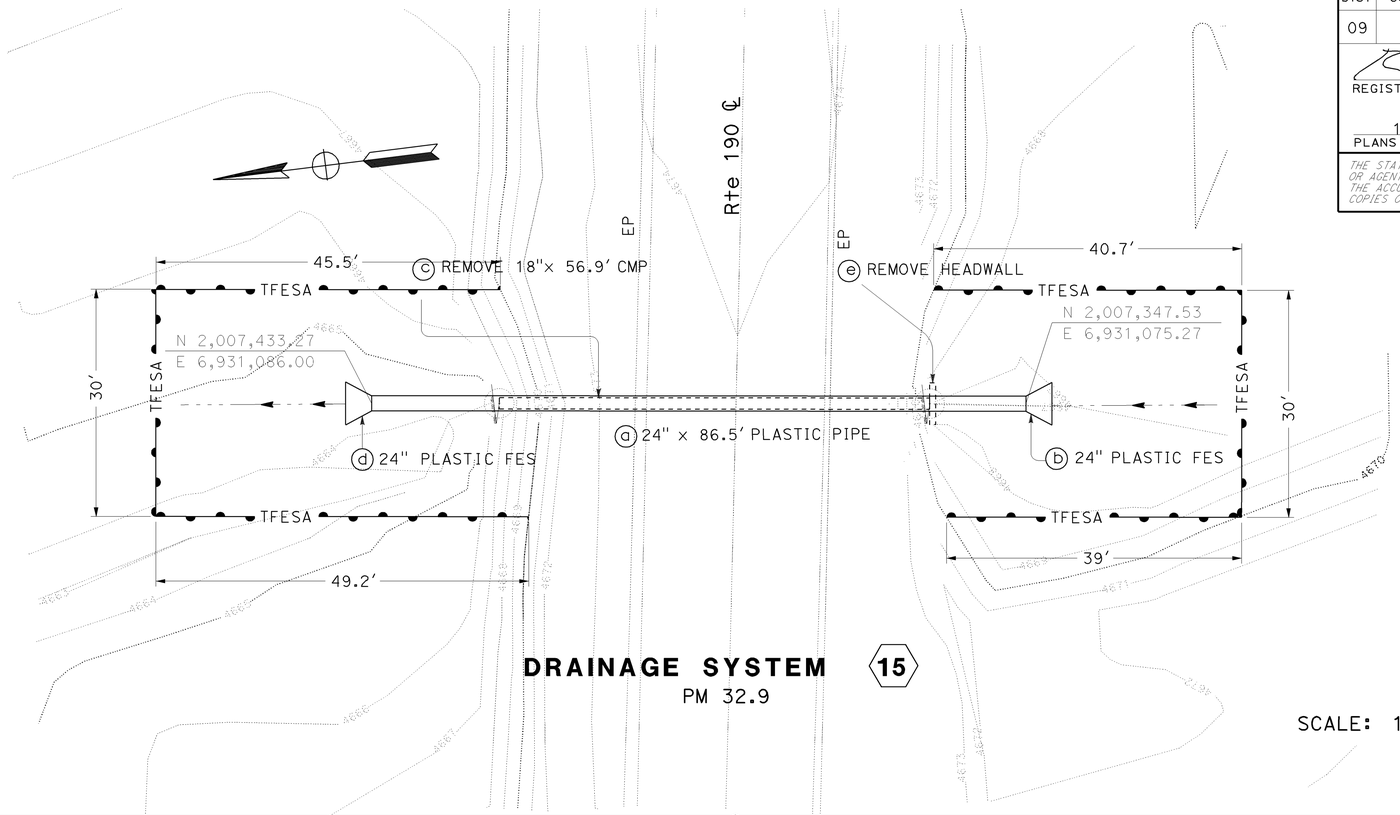

DRAINAGE SYSTEM 15
PM 32.9

SCALE: 1"=10′

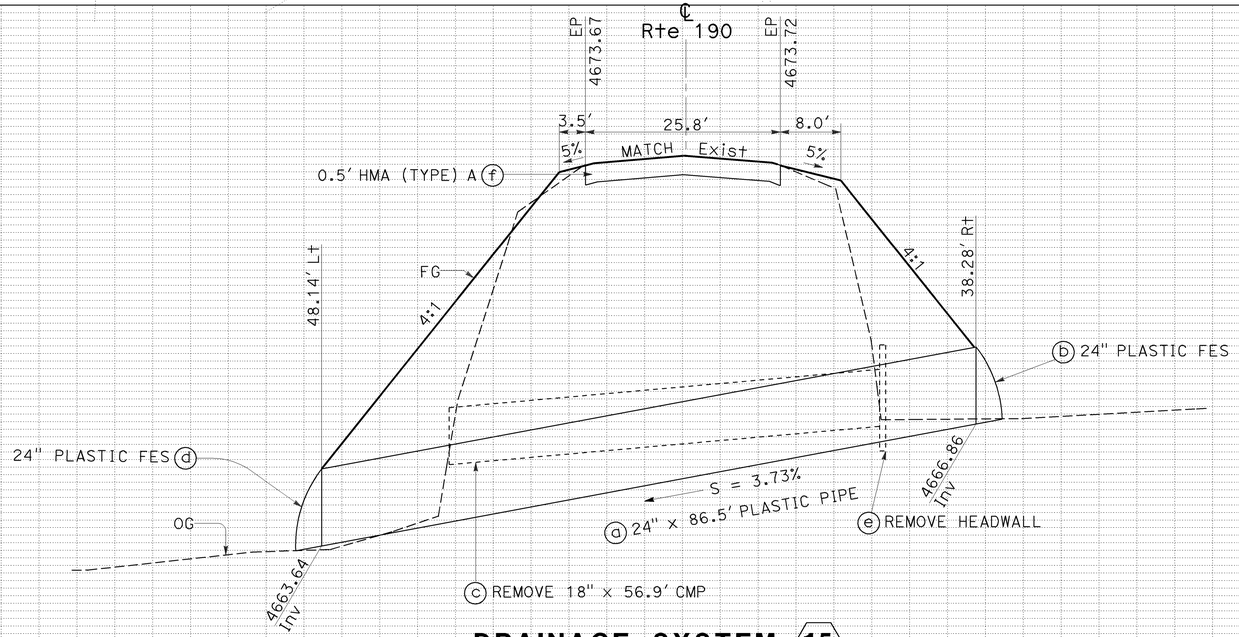

DRAINAGE SYSTEM 15

DRAINAGE PLAN AND PROFILE
SCALE: Vert 1"=2′ Horiz 1"=10′ **D-9**

STATE OF CALIFORNIA - DEPARTMENT OF TRANSPORTATION
Caltrans® **DESIGN**
FUNCTIONAL SUPERVISOR: RORY QUINCE
CALCULATED-DESIGNED BY: BRIAN P WESLING
CHECKED BY: ENRICO DE JESUS
REVISED BY / DATE REVISED

LAST REVISION DATE PLOTTED => 25-JAN-2011
01-25-11 TIME PLOTTED => 11:12

BORDER LAST REVISED 7/2/2010
USERNAME => S123915
DGN FILE => 932630ia009.dgn
RELATIVE BORDER SCALE IS IN INCHES 0 1 2 3
UNIT 1444
PROJECT NUMBER & PHASE 09000000761

THIS PLAN ACCURATE FOR DRAINAGE WORK ONLY

Dist	COUNTY	ROUTE	POST MILES TOTAL PROJECT	SHEET No.	TOTAL SHEETS
09	Iny	190	29.6/36.0	15	26

1-25-11
REGISTERED CIVIL ENGINEER DATE

Brian Wesling
No. 62509
Exp. 9-30-11
CIVIL
REGISTERED PROFESSIONAL ENGINEER
STATE OF CALIFORNIA

1-31-11
PLANS APPROVAL DATE

THE STATE OF CALIFORNIA OR ITS OFFICERS OR AGENTS SHALL NOT BE RESPONSIBLE FOR THE ACCURACY OR COMPLETENESS OF SCANNED COPIES OF THIS PLAN SHEET.

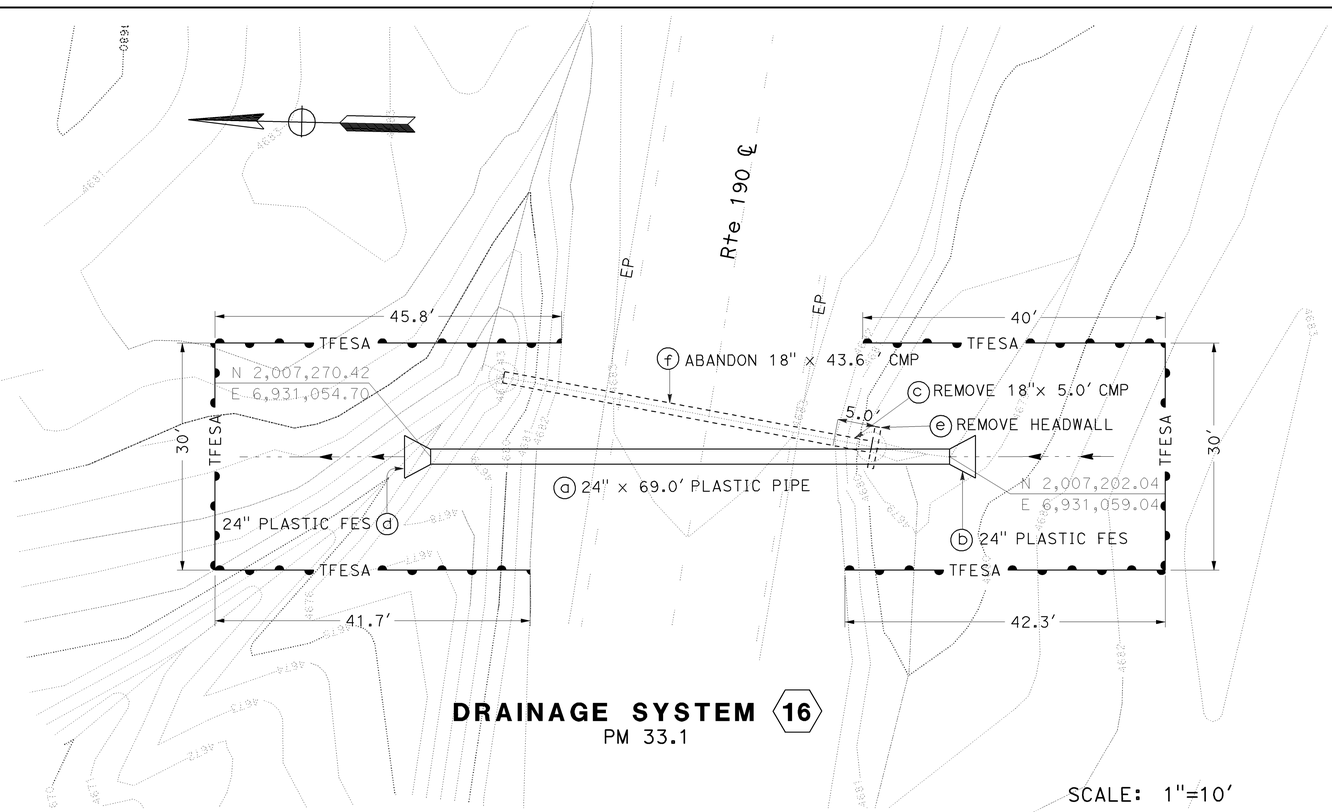

DRAINAGE SYSTEM (16)
PM 33.1

SCALE: 1"=10′

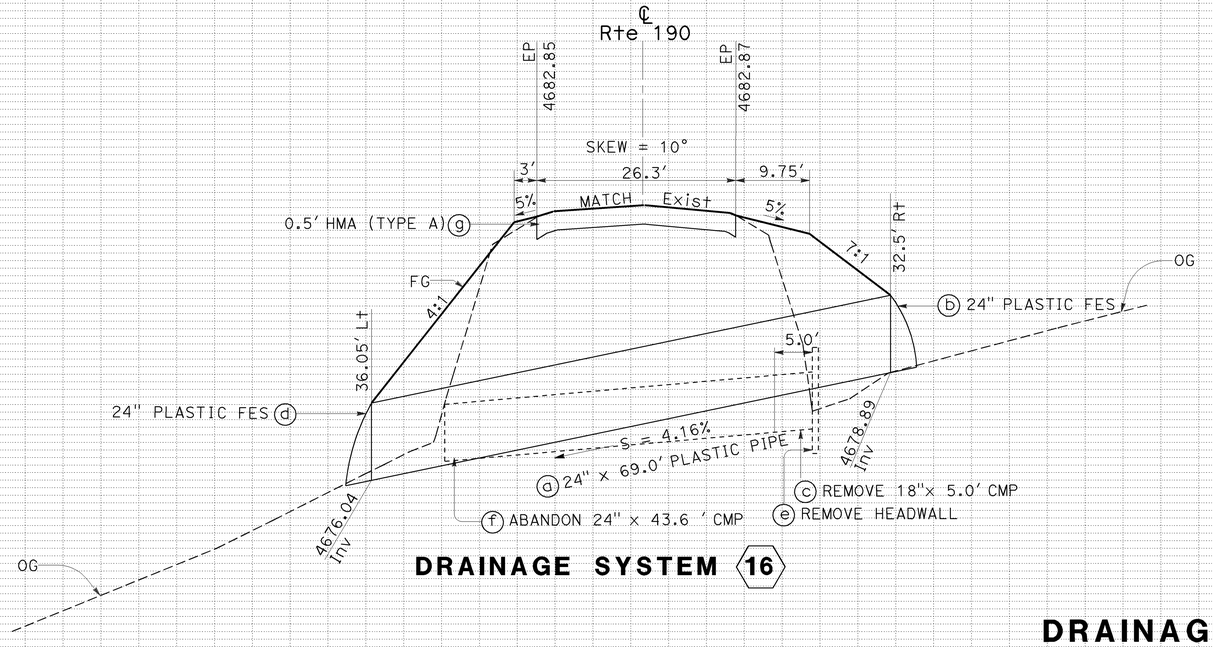

DRAINAGE SYSTEM (16)

DRAINAGE PLAN AND PROFILE
SCALE: Vert 1"=2′ Horiz 1"=10′ **D-10**

REVISED BY | DATE REVISED
ENRICO DE JESUS | BRIAN P WESLING
CALCULATED-DESIGNED BY | CHECKED BY
FUNCTIONAL SUPERVISOR: RORY QUINCE
STATE OF CALIFORNIA - DEPARTMENT OF TRANSPORTATION
Caltrans® DESIGN

LAST REVISION DATE PLOTTED => 25-JAN-2011
TIME PLOTTED => 11:12

BORDER LAST REVISED 7/2/2010 | USERNAME => S123915 | DGN FILE => 932630ia010.dgn | RELATIVE BORDER SCALE IS IN INCHES 0 1 2 3 | UNIT 1444 | PROJECT NUMBER & PHASE 09000000761

Dist	COUNTY	ROUTE	POST MILES TOTAL PROJECT	SHEET No.	TOTAL SHEETS
09	Iny	190	29.6/36.0	16	26

1-25-11
REGISTERED CIVIL ENGINEER DATE

Brian Wesling
No. 62509
Exp. 9-30-11
CIVIL
REGISTERED PROFESSIONAL ENGINEER
STATE OF CALIFORNIA

1-31-11
PLANS APPROVAL DATE

THE STATE OF CALIFORNIA OR ITS OFFICERS OR AGENTS SHALL NOT BE RESPONSIBLE FOR THE ACCURACY OR COMPLETENESS OF SCANNED COPIES OF THIS PLAN SHEET.

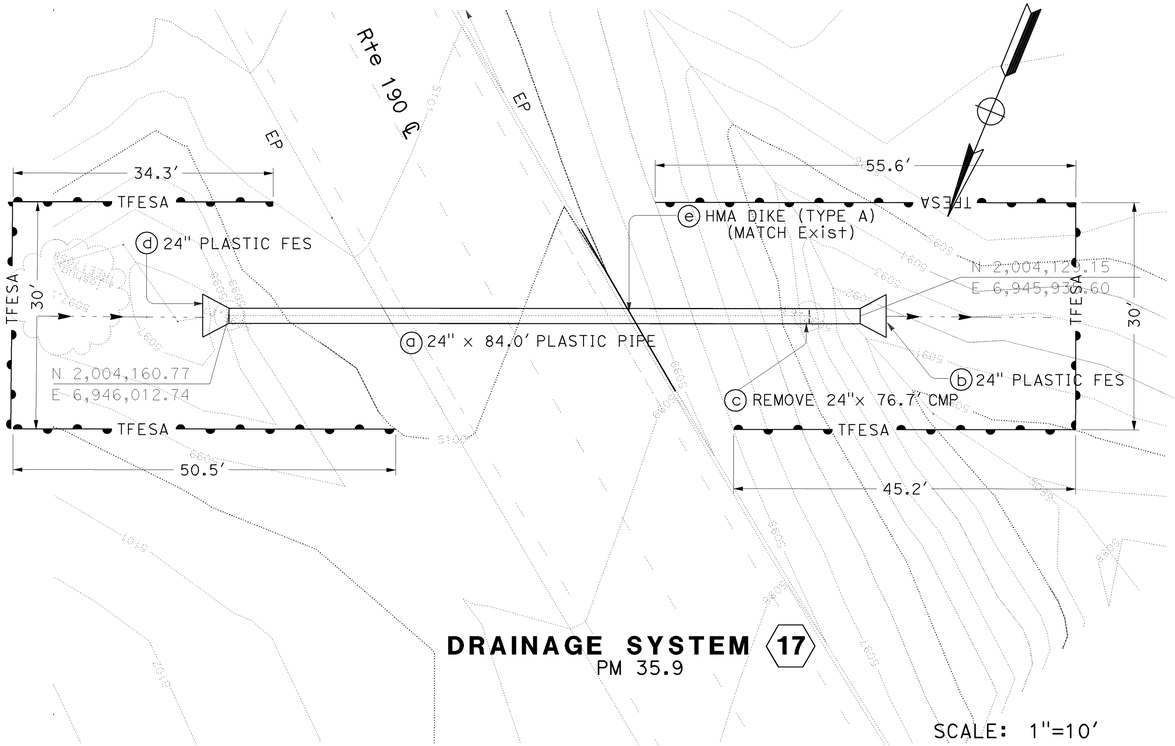

DRAINAGE SYSTEM 17
PM 35.9

SCALE: 1"=10′

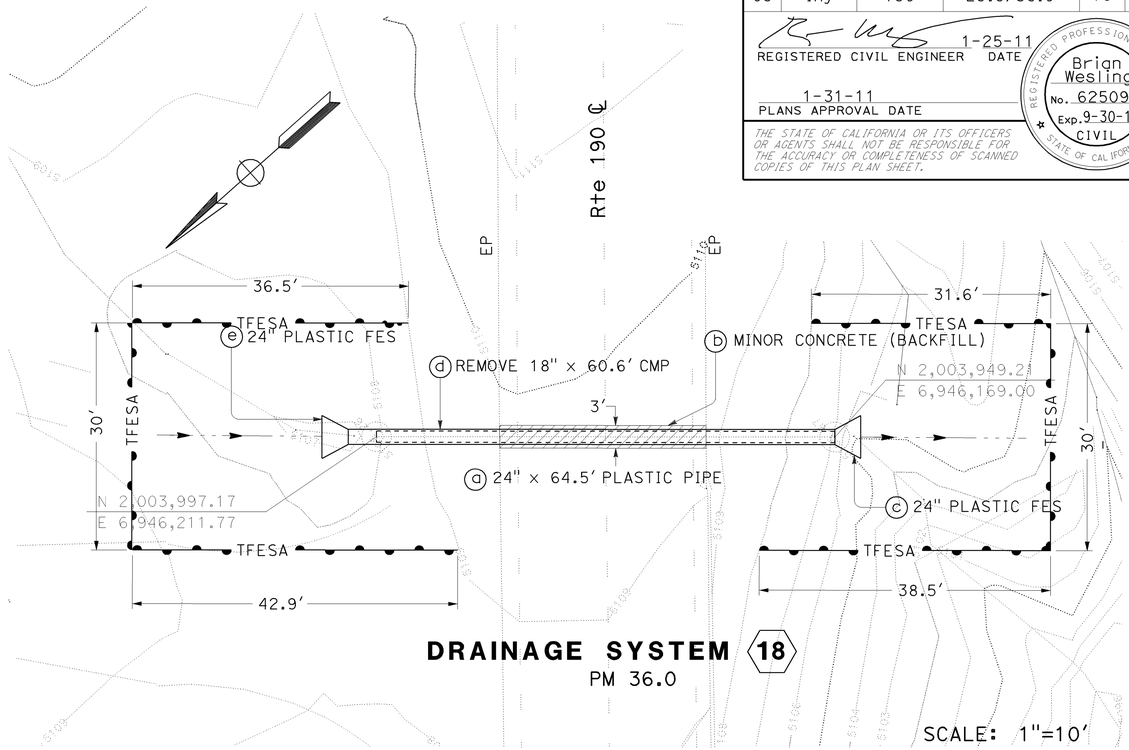

DRAINAGE SYSTEM 18
PM 36.0

SCALE: 1"=10′

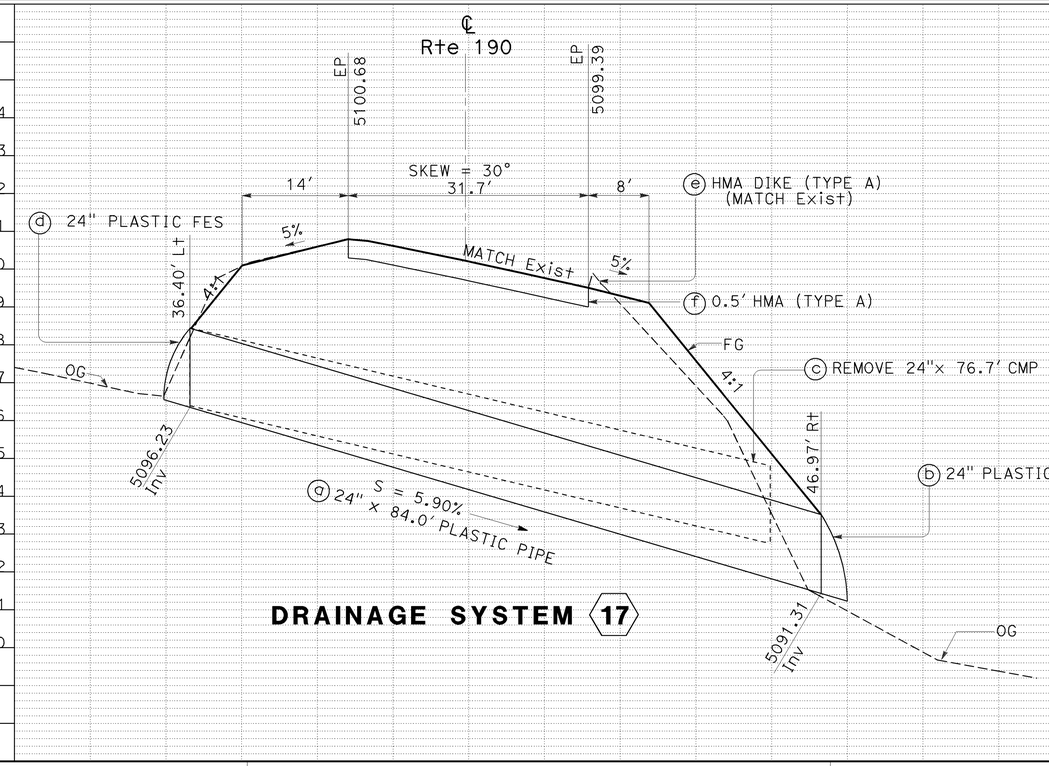

DRAINAGE SYSTEM 17

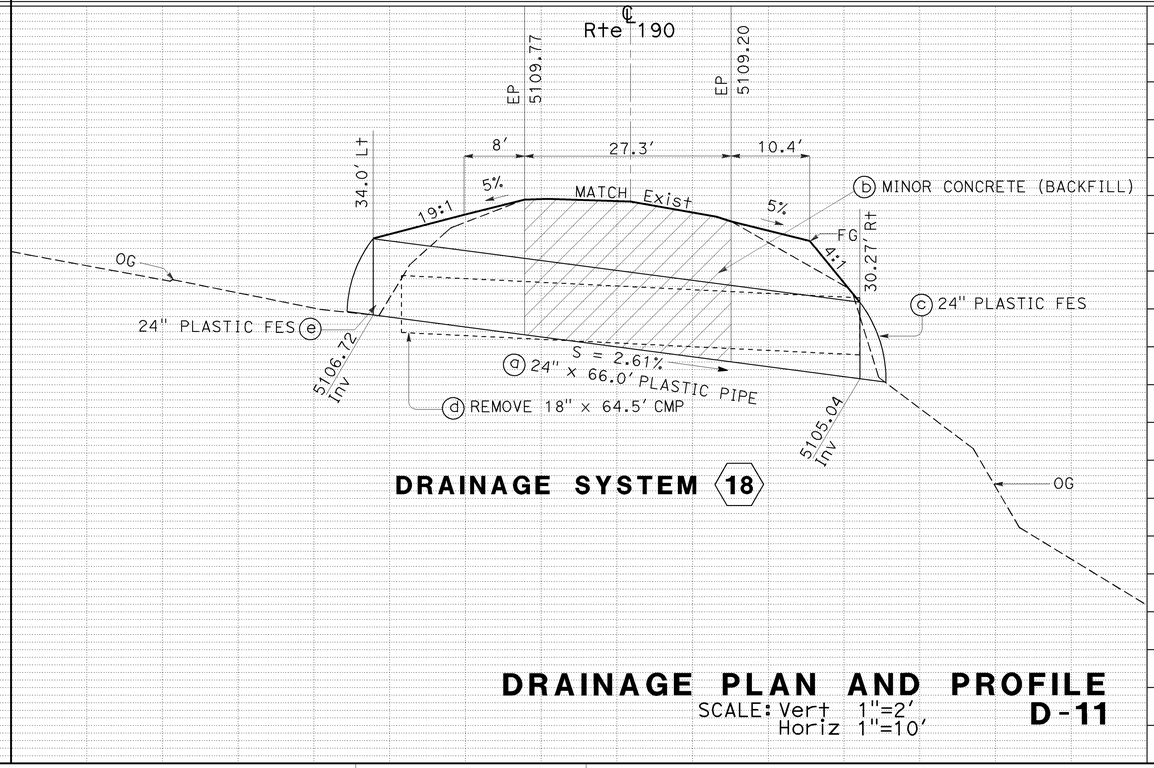

DRAINAGE SYSTEM 18

DRAINAGE PLAN AND PROFILE
SCALE: Vert 1"=2′
Horiz 1"=10′

D-11

LAST REVISION DATE PLOTTED => 25-JAN-2011
01-25-11 TIME PLOTTED => 11:12

STATE OF CALIFORNIA - DEPARTMENT OF TRANSPORTATION
DESIGN
FUNCTIONAL SUPERVISOR: RORY QUINCE
CALCULATED-DESIGNED BY: BRIAN P WESLING
CHECKED BY: ENRICO DE JESUS
REVISED BY
DATE REVISED

BORDER LAST REVISED 7/2/2010
USERNAME => S123915
DGN FILE => 932630ia011.dgn
RELATIVE BORDER SCALE IS IN INCHES 0 1 2 3
UNIT 1444
PROJECT NUMBER & PHASE 09000000761

LEGEND:
HDPE - HIGH DENSITY POLYETHYLENE

PLASTIC PIPE CULVERTS

ALLOWABLE PIPE MATERIALS AND PROTECTION

DESIGNATION	HDPE				PVC	
	TYPE C (CORRUGATED)		TYPE S (SMOOTH)			
	SIZE	Bit COAT	SIZE	Bit COAT	SIZE	Bit
24"	24"	NO	24"	NO	24"	NO
30"	30"	NO	30"	NO	30"	NO
36"	36"	NO	36"	NO	36"	NO

NOTE: ALL JOINTS ARE STANDARD JOINT TYPE

DRAINAGE QUANTITIES

⬡ DRAINAGE SYSTEM No.	◯ DRAINAGE UNIT	REMOVE CULVERT	24" PLASTIC PIPE	30" PLASTIC PIPE	36" PLASTIC PIPE	SKEW ANGLE	MINOR CONCRETE (BACKFILL)	MINOR CONCRETE (MINOR STRUCTURE)	24" PLASTIC FLARED END SECTION	30" PLASTIC FLARED END SECTION	36" PLASTIC FLARED END SECTION	REMOVE HEADWALL	RSP (FACING, METHOD B)	RSP FABRIC	PLACE HMA DIKE (TYPE A)	HMA (TYPE A)	ABANDON CULVERT	DESCRIPTION	LOCATION DRAINAGE PLAN SHEET No.	⬡ DRAINAGE SYSTEM No.	◯ DRAINAGE UNIT
		LF	LF	LF	LF	Deg	CY	CY	EA	EA	EA	CY	CY	SQYD	LF	TON	LF				
1	a		128.0															2-24" x 64.0' PLASTIC PIPE	PM 29.6	1	a
	b						21.0											MINOR CONCRETE (BACKFILL)			b
	c							1.72										24" DOUBLE STRAIGHT CONCRETE HEADWALL	D-1		c
	d	54.2																REMOVE 24" x 54.2' CMP			d
	e								2									2-24" PLASTIC FLARED END SECTION			e
2	a		84.0															24" x 84.0' PLASTIC PIPE	PM 29.9	2	a
	b								1									24" PLASTIC FLARED END SECTION			b
	c	50.3																REMOVE 24" x 50.3' CMP	D-1		c
	d								1									24" PLASTIC FLARED END SECTION			d
	e														20.0	0.5		HMA DIKE (TYPE A)			e
	f															21.8		0.5' HMA (TYPE A)			f
	g												3.7	22.0				RSP (FACING, METHOD B)	SEE DETAIL SHEET C-1		g
3	a		74.0															24" x 74.0' PLASTIC PIPE	PM 30.1	3	a
	b								1									24" PLASTIC FLARED END SECTION			b
	c	58.4																REMOVE 24" x 58.4' CMP	D-2		c
	d								1									24" PLASTIC FLARED END SECTION			d
	e														19.0	0.5		HMA DIKE (TYPE A)			e
	f															20.2		0.5' HMA (TYPE A)			f
4	a				169.0	27.0												2-36" x 84.5' PLASTIC PIPE	PM 30.3	4	a
	b						61.0											MINOR CONCRETE (BACKFILL)			b
	c										2							2-36" PLASTIC FLARED END SECTION	D-2		c
	d	141.0																REMOVE 2-36" x 70.5' CMP			d
	e										2							2-36" PLASTIC FLARED END SECTION			e
5	a		71.0			34.0												24" x 71.0' PLASTIC PIPE	PM 30.4	5	a
	b						14.0											MINOR CONCRETE (BACKFILL)			b
	c								1									24" PLASTIC FLARED END SECTION	D-3		c
	d	62.9																REMOVE 24" x 62.9' CMP			d
	e								1									24" PLASTIC FLARED END SECTION			e
6	a		162.0															2-24" x 81.0' PLASTIC PIPE	PM 30.5	6	a
	b							1.72										24" DOUBLE STRAIGHT CONCRETE HEADWALL			b
	c	53.6																REMOVE 30" x 53.6' CMP	D-3		c
	d								2									24" PLASTIC FLARED END SECTION			d
	e														19.0	0.5		HMA DIKE (TYPE A)			e
	f															19.9		0.5' HMA (TYPE A)			f
SUBTOTAL		420.4	519.0	-	169.0	-	96.0	3.44	10	-	4.0	-	3.7	22.0	58.0	63.4	-				

Dist	COUNTY	ROUTE	POST MILES TOTAL PROJECT	SHEET No.	TOTAL SHEETS
09	Iny	190	29.6/36.0	17	26

1-25-11
REGISTERED CIVIL ENGINEER DATE

REGISTERED PROFESSIONAL ENGINEER
Brian Wesling
No. 62509
Exp. 9-30-11
CIVIL
STATE OF CALIFORNIA

1-31-11
PLANS APPROVAL DATE

THE STATE OF CALIFORNIA OR ITS OFFICERS OR AGENTS SHALL NOT BE RESPONSIBLE FOR THE ACCURACY OR COMPLETENESS OF SCANNED COPIES OF THIS PLAN SHEET.

REVISED BY	DATE REVISED

CALCULATED-DESIGNED BY: ENRICO DE JESUS
CHECKED BY: BRIAN P WESLING
FUNCTIONAL SUPERVISOR: RORY QUINCE

STATE OF CALIFORNIA - DEPARTMENT OF TRANSPORTATION
Caltrans® DESIGN

DRAINAGE QUANTITIES
DQ-1

LAST REVISION 01-31-11
DATE PLOTTED => 31-JAN-2011
TIME PLOTTED => 10:20

Dist	COUNTY	ROUTE	POST MILES TOTAL PROJECT	SHEET No.	TOTAL SHEETS
09	Iny	190	29.6/36.0	18	26

1-25-11
REGISTERED CIVIL ENGINEER DATE

REGISTERED PROFESSIONAL ENGINEER
Brian Wesling
No. 62509
Exp. 9-30-11
CIVIL
STATE OF CALIFORNIA

1-31-11
PLANS APPROVAL DATE

THE STATE OF CALIFORNIA OR ITS OFFICERS OR AGENTS SHALL NOT BE RESPONSIBLE FOR THE ACCURACY OR COMPLETENESS OF SCANNED COPIES OF THIS PLAN SHEET.

DRAINAGE QUANTITIES

DRAINAGE SYSTEM No.	DRAINAGE UNIT	REMOVE CULVERT	24" PLASTIC PIPE	30" PLASTIC PIPE	36" PLASTIC PIPE	SKEW ANGLE	MINOR CONCRETE (BACKFILL)	MINOR CONCRETE (MINOR STRUCTURE)	24" PLASTIC FLARED END SECTION	30" PLASTIC FLARED END SECTION	36" PLASTIC FLARED END SECTION	REMOVE HEADWALL	RSP (FACING, METHOD B)	RSP FABRIC	PLACE HMA DIKE (TYPE A)	HMA (TYPE A)	ABANDON CULVERT	DESCRIPTION	LOCATION DRAINAGE PLAN SHEET No.	DRAINAGE SYSTEM No.	DRAINAGE UNIT
		LF	LF	LF	LF	Deg	CY	CY	EA	EA	EA	CY	CY	SQYD	LF	TONS	LF				
7	a		64.5															24" x 64.5' PLASTIC PIPE	PM 30.6	7	a
	b						11.0											MINOR CONCRETE (BACKFILL)			b
	c								1									24" PLASTIC FLARED END SECTION	D-4		c
	d	51.2																REMOVE 24" x 51.2' CMP			d
	e								1									24" PLASTIC FLARED END SECTION			e
	f														19.5	0.5		HMA DIKE (TYPE A)			f
8	a			231.0		44.5												2-30" x 115.5' PLASTIC PIPE	PM 30.7	8	a
	b						46.0											MINOR CONCRETE (BACKFILL)			b
	c							2.21										30" DOUBLE STRAIGHT CONCRETE HEADWALL	D-4		c
	d	138.0																REMOVE 2-30" x 69.0' CMP			d
	e									2								2-30" PLASTIC FLARED END SECTION			e
	f														35.0	1.0		HMA DIKE (TYPE A)			f
9	a		85.0			45.0												24" x 85.0' PLASTIC PIPE	PM 30.9	9	a
	b						15.0											MINOR CONCRETE (BACKFILL)			b
	c								1									24" PLASTIC FLARED END SECTION	D-5		c
	d	86.8																REMOVE 24" x 86.8' CMP			d
	e								1									24" PLASTIC FLARED END SECTION			e
10	a		203.0			44.0												2-24" x 101.5' PLASTIC PIPE	PM 31.2	10	a
	b						22.5											MINOR CONCRETE (BACKFILL)			b
	c							1.72										24" DOUBLE STRAIGHT CONCRETE HEADWALL	D-5		c
	d	64.9																REMOVE 36" x 64.9' CMP			d
	e								2									2-24" PLASTIC FLARED END SECTION			e
	f														29.5	0.8		HMA DIKE (TYPE A)			f
11	a			254.0		54.0												2-30" x 127.0' PLASTIC PIPE	PM 31.3	11	a
	b						58.0											MINOR CONCRETE (BACKFILL)			b
	c							2.21										30" DOUBLE STRAIGHT CONCRETE HEADWALL	D-6		c
	d	201.8																REMOVE 2-24" x 100.9' CMP			d
	e									2								2-30" PLASTIC FLARED END SECTION			e
12	a		53.5			5.0												24" x 53.5' PLASTIC PIPE	PM 31.5	12	a
	b						14.0											MINOR CONCRETE (BACKFILL)			b
	c								1									24" PLASTIC FLARED END SECTION	D-7		c
	d	48.4																REMOVE 18" x 48.4' CMP			d
	e								1									24" PLASTIC FLARED END SECTION			e
SUBTOTAL		591.1	406.0	485.0	-	-	166.5	6.14	8.0	4.0	-	-	-	-	84.0	2.3	-				

CALCULATED-DESIGNED BY: ENRICO DE JESUS
CHECKED BY: BRIAN P WESLING
REVISED BY
DATE REVISED
FUNCTIONAL SUPERVISOR: RORY QUINCE
STATE OF CALIFORNIA - DEPARTMENT OF TRANSPORTATION
DESIGN
Caltrans

DRAINAGE QUANTITIES
DQ-2

LAST REVISION | DATE PLOTTED => 31-JAN-2011
01-31-11 | TIME PLOTTED => 10:20

BORDER LAST REVISED 7/2/2010
USERNAME => S123915
DGN FILE => 9326301d002.dgn
RELATIVE BORDER SCALE IS IN INCHES 0 1 2 3
UNIT 1444
PROJECT NUMBER & PHASE 09000000761

Dist	COUNTY	ROUTE	POST MILES TOTAL PROJECT	SHEET No.	TOTAL SHEETS
09	Iny	190	29.6/36.0	19	26

1-25-11
REGISTERED CIVIL ENGINEER DATE

Brian Wesling
No. 62509
Exp. 9-30-11
CIVIL
REGISTERED PROFESSIONAL ENGINEER
STATE OF CALIFORNIA

1-31-11
PLANS APPROVAL DATE

THE STATE OF CALIFORNIA OR ITS OFFICERS OR AGENTS SHALL NOT BE RESPONSIBLE FOR THE ACCURACY OR COMPLETENESS OF SCANNED COPIES OF THIS PLAN SHEET.

DRAINAGE QUANTITIES

DRAINAGE SYSTEM No. ⬡	DRAINAGE UNIT ○	REMOVE CULVERT	24" PLASTIC PIPE	30" PLASTIC PIPE	36" PLASTIC PIPE	SKEW ANGLE	MINOR CONCRETE (BACKFILL)	MINOR CONCRETE (MINOR STRUCTURE)	24" PLASTIC FLARED END SECTION	30" PLASTIC FLARED END SECTION	36" PLASTIC FLARED END SECTION	REMOVE HEADWALL	RSP (FACING, METHOD B)	RSP FABRIC	PLACE HMA DIKE (TYPE A)	HMA (TYPE A)	ABANDON CULVERT	DESCRIPTION	LOCATION DRAINAGE PLAN SHEET No.	DRAINAGE SYSTEM No. ⬡	DRAINAGE UNIT ○
		LF	LF	LF	LF	Deg	CY	CY	EA	EA	EA	CF	CY	SQYD	LF	TON	LF				
13	a		42.5															24" x 42.5' PLASTIC PIPE	PM 31.8	13	a
	b						6.4											MINOR CONCRETE (BACKFILL)			b
	c								1									24" PLASTIC FLARED END SECTION	D-8		c
	d	45.0																REMOVE 18" x 45.0' CMP			d
	e								1									24" PLASTIC FLARED END SECTION			e
14	a		47.5															24" x 47.5' PLASTIC PIPE	PM 32.0	14	a
	b						4.8											MINOR CONCRETE (BACKFILL)			b
	c								1									24" PLASTIC FLARED END SECTION	D-8		c
	d	48.8																REMOVE 18" x 48.8' CMP			d
	e								1									24" PLASTIC FLARED END SECTION			e
15	a		86.5															24" x 86.5' PLASTIC PIPE	PM 32.9	15	a
	b								1									24" PLASTIC FLARED END SECTION			b
	c	57.0																REMOVE 18" x 57.0' CMP	D-9		c
	d								1									24" PLASTIC FLARED END SECTION			d
	e											12.3						REMOVE EXIST CONCRETE HEADWALL			e
	f															26.3		0.5' HMA TYPE A			f
16	a		69.0			10												24" x 69.0' PLASTIC PIPE	PM 33.1	16	a
	b								1									24" PLASTIC FLARED END SECTION			b
	c	5.0																REMOVE 18" x 5.0' CMP	D-10		c
	d								1									24" PLASTIC FLARED END SECTION			d
	e											12.3						REMOVE EXIST CONCRETE HEADWALL			e
	f																44	ABANDON CULVERT			f
	g															18.5		0.5' HMA TYPE A			g
17	a		84.0			30.0												24" x 84.0' PLASTIC PIPE	PM 35.9	17	a
	b								1									24" PLASTIC FLARED END SECTION			b
	c	76.7																REMOVE 24" x 76.79' CMP	D-11		c
	d								1									24" PLASTIC FLARED END SECTION			d
	e														23	1.2		HMA DIKE (TYPE A)			e
	f															27.7		0.5' HMA TYPE A			f
18	a		64.5															24" x 64.5' PLASTIC PIPE	PM 36.0	18	a
	b						8.2											MINOR CONCRETE (BACKFILL)			b
	c								1									24" PLASTIC FLARED END SECTION	D-11		c
	d	60.6																REMOVE 18" x 60.6' CMP			d
	e								1									24" PLASTIC FLARED END SECTION			e
TOTAL DQ-3		293.1	394	-	-	-	19.4	-	12	-	-	24.6	-	-	23	73.7	44				
TOTAL DQ-1		420.4	519	-	169	-	96.0	3.44	10	-	4	-	3.7	22	58	63.4	-				
TOTAL DQ-2		591.0	406	485	-	-	166.5	6.14	8	4	-	-	-	-	84	2.3	-				
TOTAL		1304.5	1319	485	169	-	281.9	9.58	30	4	4	24.6	3.7	22	165	139.4	44				

CALCULATED-DESIGNED BY
CHECKED BY
REVISED BY
DATE REVISED
ENRICO DE JESUS
BRIAN P WESLING
FUNCTIONAL SUPERVISOR
RORY QUINCE
STATE OF CALIFORNIA - DEPARTMENT OF TRANSPORTATION
Caltrans
DESIGN

DRAINAGE QUANTITIES
DQ-3

LAST REVISION | DATE PLOTTED => 04-FEB-2011
01-31-11 | TIME PLOTTED => 10:05

Dist	COUNTY	ROUTE	POST MILES TOTAL PROJECT	SHEET No.	TOTAL SHEETS
09	Iny	190	29.6/36.0	20	26

REGISTERED CIVIL ENGINEER 1-25-11 DATE

1-31-11
PLANS APPROVAL DATE

REGISTERED PROFESSIONAL ENGINEER Brian Wesling No. 62509 Exp. 9-30-11 CIVIL STATE OF CALIFORNIA

THE STATE OF CALIFORNIA OR ITS OFFICERS OR AGENTS SHALL NOT BE RESPONSIBLE FOR THE ACCURACY OR COMPLETENESS OF SCANNED COPIES OF THIS PLAN SHEET.

NOTES:

1. FOR SIGN INSTALLATION DETAILS AND DIMENSIONS NOT SHOWN SEE Std PLANS.
2. EXACT SIGN LOCATIONS TO BE DETERMINED BY THE ENGINEER.
3. ALTERNATE MESSAGES MUST BE APPROVED BY THE ENGINEER.
4. MESSAGE MAY BE ALTERED BY THE ENGINEER.
5. WHEN CONSTRUCTION OPERATIONS ARE NOT ACTIVELY IN PROGRESS, PORTABLE CHANGEABLE MESSAGE SIGNS SHALL NOT DISPLAY A MESSAGE UNLESS DIRECTED BY THE ENGINEER.

LEGEND:

- PORTABLE CHANGEABLE MESSAGE SIGN (PCMS)

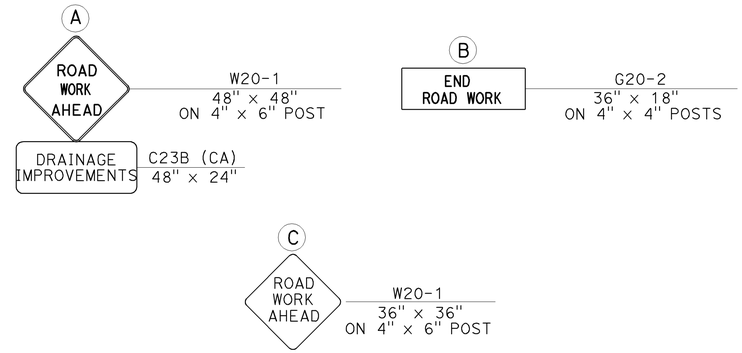

TYPICAL SIGN LAYOUT

PORTABLE CHANGEABLE MESSAGE SIGNS
No. OF SIGNS
2

PORTABLE CHANGEABLE MESSAGE SIGNS		
MESSAGE		
FIRST FLASH	SECOND FLASH	THIRD FLASH
USE CAUTION	PREPARE TO STOP	EXPECT 20 MIN DELAYS

STATIONARY MOUNTED CONSTRUCTION AREA SIGNS	
TYPE	No. OF SIGNS
(A) W20-1,C23B (CA)	2
(B) G20-2	4
(C) W20-1	2

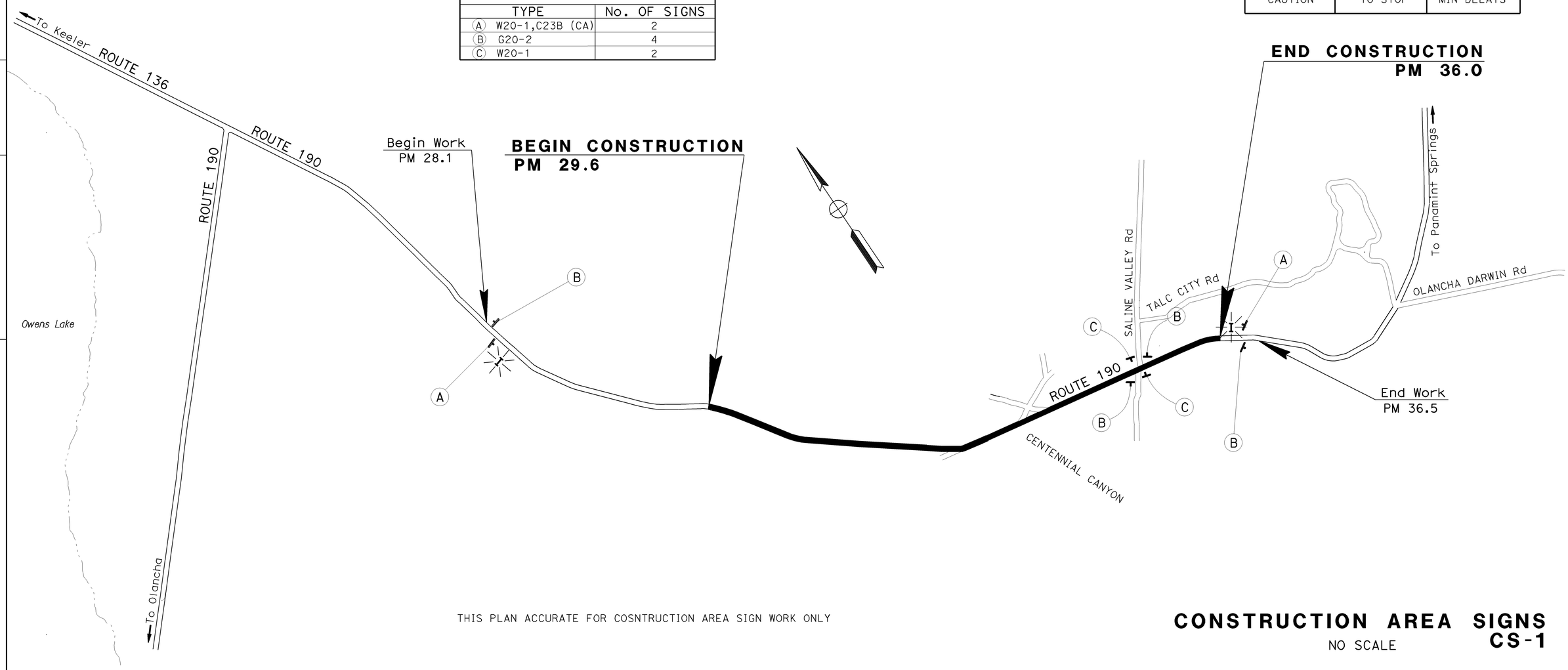

THIS PLAN ACCURATE FOR COSNTRUCTION AREA SIGN WORK ONLY

CONSTRUCTION AREA SIGNS
CS-1

NO SCALE

STATE OF CALIFORNIA - DEPARTMENT OF TRANSPORTATION
Caltrans
DESIGN

FUNCTIONAL SUPERVISOR: RORY QUINCE
CALCULATED-DESIGNED BY: ENRICO DE JESUS
CHECKED BY: BRIAN P WESLING
REVISED BY
DATE REVISED

LAST REVISION 01-25-11
DATE PLOTTED => 01-FEB-2011
TIME PLOTTED => 15:53

Dist	COUNTY	ROUTE	POST MILES TOTAL PROJECT	SHEET No.	TOTAL SHEETS
09	Iny	190	29.6/36.0	21	26

1-25-11
REGISTERED CIVIL ENGINEER DATE

Brian Wesling
No. 62509
Exp. 9-30-11
CIVIL
REGISTERED PROFESSIONAL ENGINEER
STATE OF CALIFORNIA

1-31-11
PLANS APPROVAL DATE

THE STATE OF CALIFORNIA OR ITS OFFICERS OR AGENTS SHALL NOT BE RESPONSIBLE FOR THE ACCURACY OR COMPLETENESS OF SCANNED COPIES OF THIS PLAN SHEET.

ROADWAY QUANTITIES

DRAINAGE SYSTEM No.	IMPORTED BORROW	TACK COAT
	CY	TON
1	17.2	0.5
2	132.1	
3	12.0	
4	12.7	
5	32.5	
6	124.9	
7	19.6	
8	188.7	
9	32.1	
10	282.5	
11	84.0	
12	15.8	
13	1.8	
14	1.3	
15	182.8	
16	48.2	
17	41.4	
18	10.1	
TOTAL	1,239.7	0.5

PAINT TRAFFIC STRIPE (2-COAT)

DRAINAGE SYSTEM No.	LOCATION	DETAIL 5	DETAIL 18	DETAIL 21	DETAIL 27B
		LF	LF	LF	LF
1	PM 29.6			31.0	62.0
2	PM 29.9		20.0		40.0
3	PM 30.1			19.0	38.0
4	PM 30.3			33.0	66.0
5	PM 30.4			21.0	42.0
6	PM 30.5			19.0	38.0
7	PM 30.6		19.5		39.0
8	PM 30.7		35.0		70.0
9	PM 30.9			22.5	45.0
10	PM 31.2		29.5		59.0
11	PM 31.3		42.0		84.0
12	PM 31.5	15.0			30.0
13	PM 31.8	13.0			26.0
14	PM 32.0	8.5			17.0
15	PM 32.9		27.0		54.0
16	PM 33.1	19.0			38.0
17	PM 35.9		23.0		46.0
18	PM 36.0			14.0	28.0
SUB-TOTAL		55.5	196.0	159.5	822.0
TOTAL		1233.0			

TEMPORARY FENCE (ESA)

DRAINAGE SYSTEM No.	L†	R†
	LF	LF
1	118.0	104.0
2	131.0	102.0
3	125.0	106.0
4	97.0	127.0
5	124.0	81.0
6	138.0	115.0
7	123.0	92.0
8	139.0	120.0
9	126.0	92.0
10	99.0	126.0
11	133.0	122.0
12	84.0	111.0
13	84.0	82.0
14	93.0	93.0
15	125.0	110.0
16	118.0	113.0
17	115.0	131.0
18	110.0	101.0
STAGING AREA	-	643.0
SUB-TOTAL	2082.0	2571.0
TOTAL	4653.0	

MARKER

DRAINAGE SYSTEM No.	LOCATION	MARKER (CULVERT)	REMOVE MARKER	REMARKS
		EA	EA	
1	PM 29.6	2	2	USE CLASS 2 METAL POST
2	PM 29.9	2	2	USE CLASS 2 METAL POST
3	PM 30.1	2	1	USE CLASS 2 METAL POST
4	PM 30.3	2	-	USE CLASS 2 METAL POST
5	PM 30.4	2	-	USE CLASS 2 METAL POST
6	PM 30.5	2	2	USE CLASS 2 METAL POST
7	PM 30.6	2	2	USE CLASS 2 METAL POST
8	PM 30.7	2	2	USE CLASS 2 METAL POST
9	PM 30.9	2	2	USE CLASS 2 METAL POST
10	PM 31.2	2	2	USE CLASS 2 METAL POST
11	PM 31.3	2	2	USE CLASS 2 METAL POST
12	PM 31.5	2	2	USE CLASS 2 METAL POST
13	PM 31.8	2	2	USE CLASS 2 METAL POST
14	PM 32.0	2	2	USE CLASS 2 METAL POST
15	PM 32.9	2	2	USE CLASS 2 METAL POST
16	PM 33.1	2	2	USE CLASS 2 METAL POST
17	PM 35.9	2	2	USE CLASS 2 METAL POST
18	PM 36.0	2	2	USE CLASS 2 METAL POST
TOTAL		36	31	

HMA DIKE (TYPE A)

DRAINAGE SYSTEM No.	HMA DIKE (TYPE A)			
	A	B	TOTAL	SIDE
2	10.0′	10.0′	20.0 LF	L†
3	9.5′	9.5′	19.0 LF	R†
6	9.5′	9.5′	19.0 LF	L†
7	9.75′	9.75′	19.5 LF	L†
8	17.5′	17.5′	35.0 LF	L†
10	14.75′	14.75′	29.5 LF	L†
17	11.5′	11.5′	23.0 LF	R†
TOTAL			165.0 LF	

OBJECT MARKER (TYPE L-1)

DRAINAGE SYSTEM No.	LOCATION	SIDE	EA	REMARKS
5	PM 30.4	R†	1	USE CLASS 2 METAL POST
7	PM 30.6	R†	1	USE CLASS 2 METAL POST
9	PM 30.9	R†	1	USE CLASS 2 METAL POST
12	PM 31.5	L†	1	USE CLASS 2 METAL POST
13	PM 31.8	R† & L†	2	USE CLASS 2 METAL POST
14	PM 32.0	L†	1	USE CLASS 2 METAL POST
TOTAL			7	

RSP (LIGHT, METHOD B)

LOCATION	CY
4	34.3

RSP FABRIC

LOCATION	SQYD
4	70.0
SHEET DQ-3	22.0
TOTAL	92.0

SUMMARY OF QUANTITIES
Q-1

CALCULATED-DESIGNED BY	CHECKED BY
ENRICO DE JESUS	BRIAN P WESLING

REVISED BY	DATE REVISED

FUNCTIONAL SUPERVISOR: RORY QUINCE

STATE OF CALIFORNIA - DEPARTMENT OF TRANSPORTATION
DESIGN
Caltrans

LAST REVISION DATE PLOTTED => 01-FEB-2011
01-31-11 TIME PLOTTED => 15:53

DIST	COUNTY	ROUTE	POST MILES TOTAL PROJECT	SHEET NO.	TOTAL SHEETS
09	Iny	190	29.6/36.0	22	26

Raymond Don Tsztoo
REGISTERED CIVIL ENGINEER

March 7, 2008
PLANS APPROVAL DATE

REGISTERED PROFESSIONAL ENGINEER
Raymond Don Tsztoo
No. C37332
Exp. 6-30-08
CIVIL
STATE OF CALIFORNIA

The State of California or its officers or agents shall not be responsible for the accuracy or completeness of electronic copies of this plan sheet.

To accompany plans dated 1-31-11

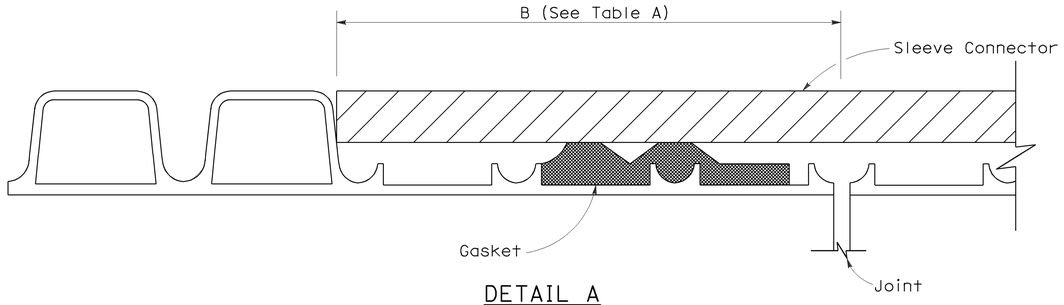

DETAIL A

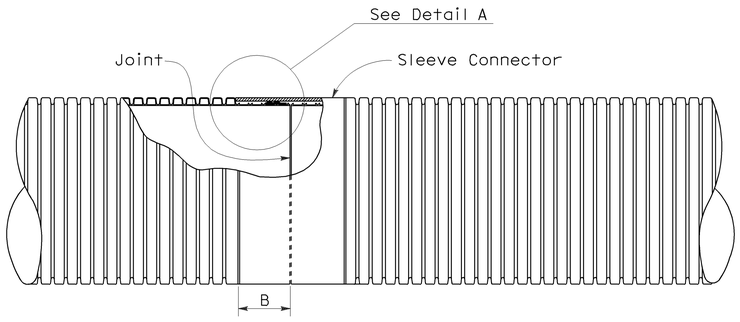

PLAN VIEW
Liner Insert
See Note 4

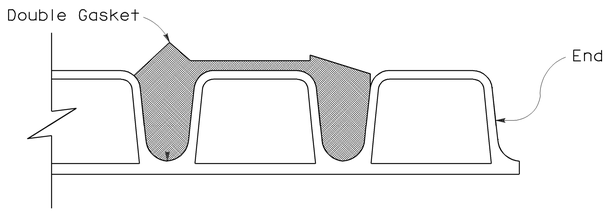

Double Gasket

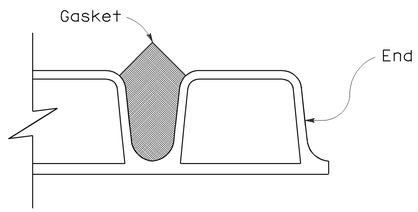

Single Gasket

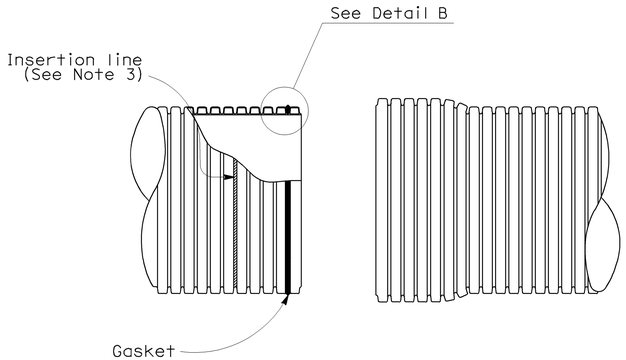

SPIGOT

BELL

DETAIL B

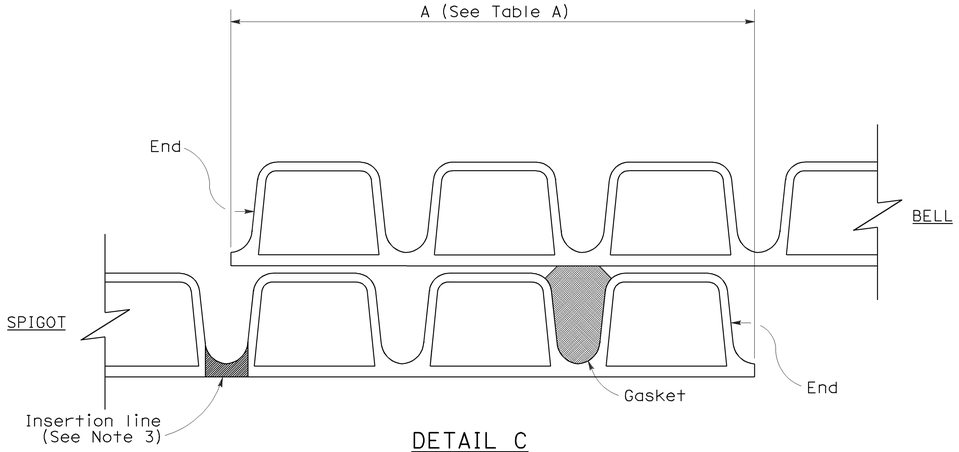

DETAIL C
(Single gasket shown)

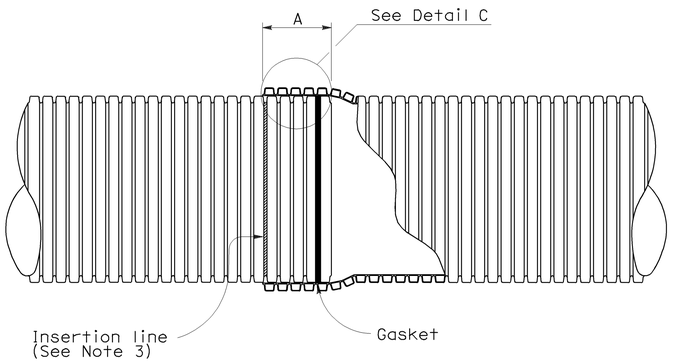

BELL AND SPIGOT JOINT

NOTES:

1. For pipe sections installed on straight alignment, the pipe sections shall be joined to achieve maxium joint overlap at all points on the periphery as indicated in Table A where the plans call for positive or watertight joints. Maxium joint overlap is recommended where the plans call for standard joints, but in no case shall the joint overlap be less than 3½".
2. For pipe sections installed on curved alignment, the maxium angle of deflection from straight alignment at any joint shall not exceed two degrees. Where the plans call for watertightness, field testing for compliance is required. Where plans call for positive joints, the pipe sections shall be joined to achieve Table A Dimensions on one side of the joint. Joints classified as standard shall have no less than 3½" joint overlap at any point on the periphery.
3. Factory applied insertion line limit shall be placed on spigot.
4. Liner insert to be used inside of existing pipe.

TABLE A

JOINT OVERLAP DIMENSIONS		
PIPE Dia (NOMINAL)	A	B
12"	5¾"	4¼"
15"	6¾"	5⅝"
18"	6¾"	5⅝"
21"	8½"	5⅝"
24"	8½"	6⅛"
30"	8½"	7⅛"
36"	8½"	8⅛"

STATE OF CALIFORNIA
DEPARTMENT OF TRANSPORTATION

CORRUGATED POLYVINYL CHLORIDE PIPE WITH SMOOTH INTERIOR STANDARD AND POSITIVE JOINTS

NO SCALE

NSP D97I DATED MARCH 7, 2008 SUPPLEMENTS THE STANDARD PLANS BOOK DATED MAY 2006.

NEW STANDARD PLAN NSP D97I

190A

2006 NEW STANDARD PLAN NSP D97I

2-13-08

DIST	COUNTY	ROUTE	POST MILES TOTAL PROJECT	SHEET NO.	TOTAL SHEETS
09	Iny	190	29.6/36.0	23	26

LICENSED LANDSCAPE ARCHITECT

April 3, 2009
PLANS APPROVAL DATE

LICENSED LANDSCAPE ARCHITECT
Robert B. Schott 3695
Signature
11-30-10
Renewal Date
2-25-09
Date
STATE OF CALIFORNIA

The State of California or its officers or agents shall not be responsible for the accuracy or completeness of electronic copies of this plan sheet.

To accompany plans dated 1-31-11

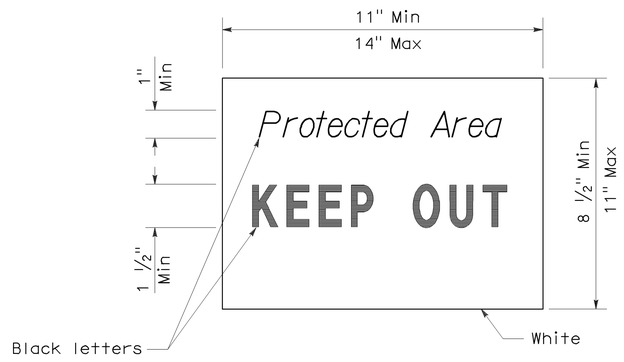

SIGN DETAIL

NOTE:

1. Temporary silt fence and temporary straw bale barrier shown for reference purposes only.

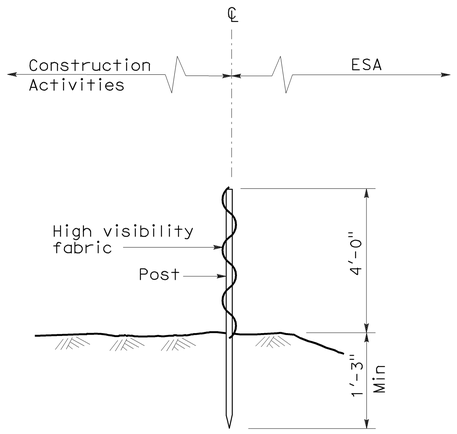

SECTION
TEMPORARY FENCE (TYPE ESA)

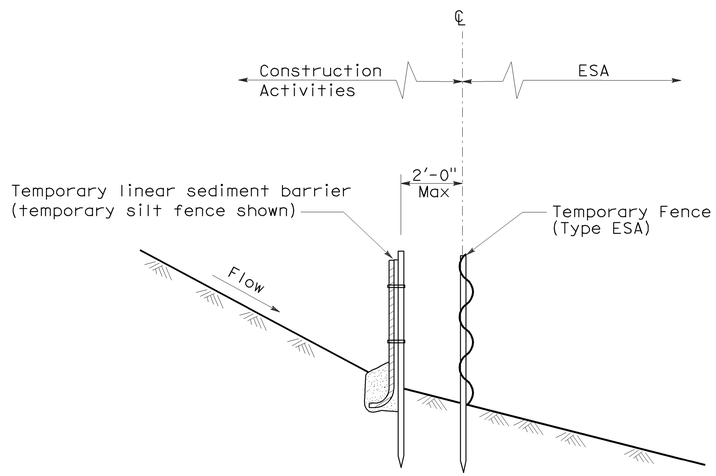

SECTION
PLACEMENT DETAIL
FOR TEMPORARY LINEAR SEDIMENT BARRIER
USED WITH TEMPORARY
FENCE (TYPE ESA)
(See Note 1)

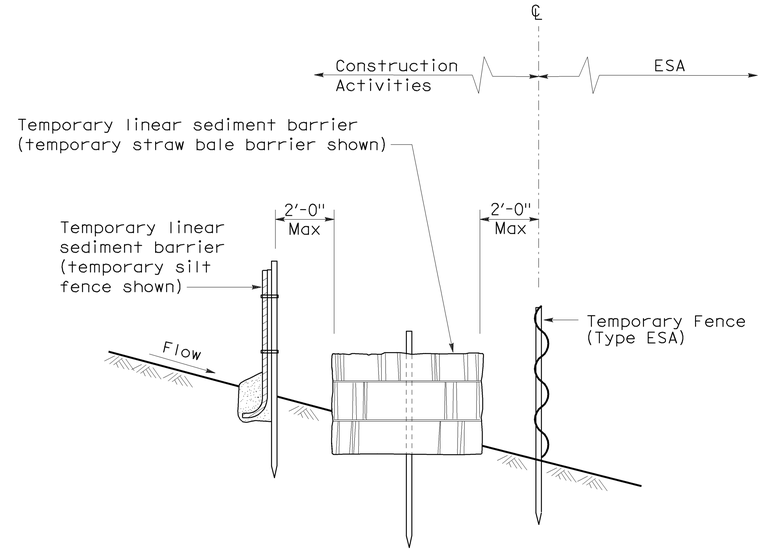

SECTION
PLACEMENT DETAIL
FOR TEMPORARY SILT FENCE
AND TEMPORARY STRAW BALE BARRIER
USED WITH TEMPORARY FENCE (TYPE ESA)
(See Note 1)

STATE OF CALIFORNIA
DEPARTMENT OF TRANSPORTATION

TEMPORARY WATER POLLUTION CONTROL DETAILS [TEMPORARY FENCE (TYPE ESA)]

NO SCALE

NSP T65 DATED APRIL 3, 2009 SUPPLEMENTS
THE STANDARD PLANS BOOK DATED MAY 2006.

NEW STANDARD PLAN NSP T65

2006 NEW STANDARD PLAN NSP T65

1-7-09

DIST	COUNTY	ROUTE	POST MILES TOTAL PROJECT	SHEET NO.	TOTAL SHEETS
09	Iny	190	29.6/36.0	24	26

Randell D. Hiatt
REGISTERED CIVIL ENGINEER

June 6, 2008
PLANS APPROVAL DATE

REGISTERED PROFESSIONAL ENGINEER — Randell D. Hiatt — No. C50200 — Exp. 6-30-09 — CIVIL — STATE OF CALIFORNIA

The State of California or its officers or agents shall not be responsible for the accuracy or completeness of electronic copies of this plan sheet.

To accompany plans dated 1-31-11

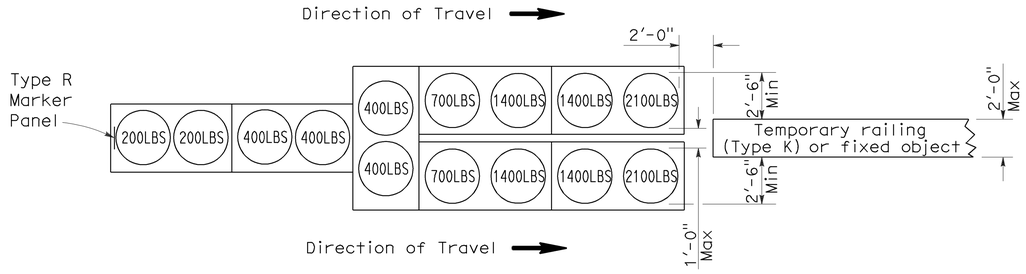

ARRAY 'TU14'

Approach speed 45 mph or more

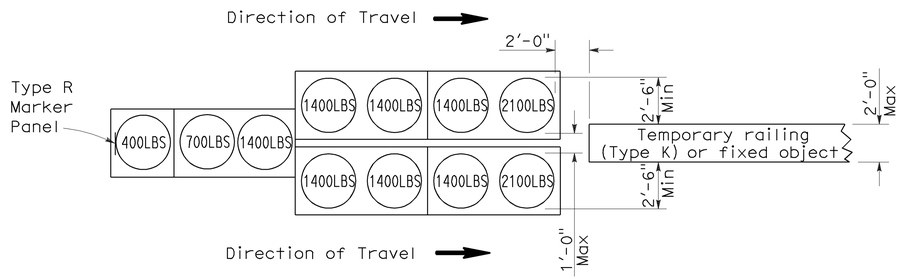

ARRAY 'TU11'

Approach speed less than 45 mph

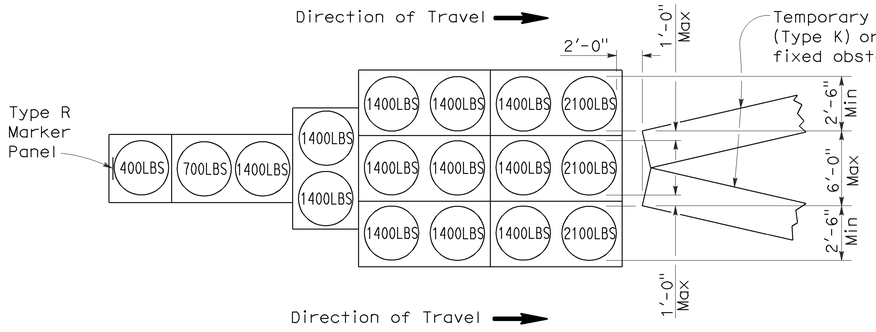

ARRAY 'TU17'

Approach speed less than 45 mph

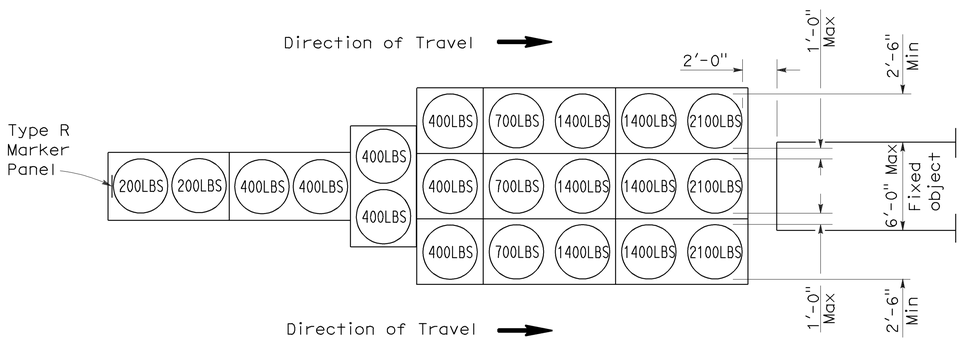

ARRAY 'TU21'

Approach speed 45 mph or more

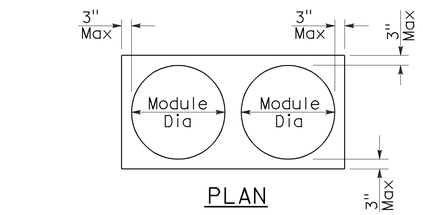

PLAN

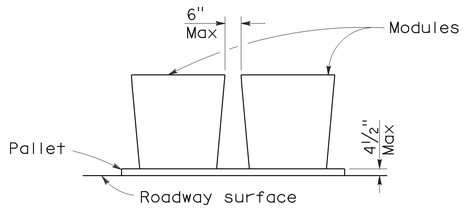

ELEVATION

CRASH CUSHION PALLET DETAIL

See Note 7

NOTES:

1. (XXX) Indicates sand filled module location and weight of sand in pounds for each module. Module spacing is based on the greater diameter of the module.
2. All sand weights are nominal.
3. Temporary crash cushion arrays shall not encroach on the traveled way.
4. Place the top of Type R marker panel 1" below the module lid.
5. Refer to Standard Plan A73B for marker details.
6. Approach speeds indicated conform to NCHRP 350 Report criteria.
7. Use of pallets is optional.

STATE OF CALIFORNIA
DEPARTMENT OF TRANSPORTATION

TEMPORARY CRASH CUSHION, SAND FILLED (UNIDIRECTIONAL)

NO SCALE

RSP T1A DATED JUNE 6, 2008 SUPERSEDES STANDARD PLAN T1A
DATED MAY 1, 2006 - PAGE 211 OF THE STANDARD PLANS BOOK DATED MAY 2006.

REVISED STANDARD PLAN RSP T1A

2006 REVISED STANDARD PLAN RSP T1A

5-15-08

DIST	COUNTY	ROUTE	POST MILES TOTAL PROJECT	SHEET NO.	TOTAL SHEETS
09	Iny	190	29.6/36.0	25	26

Randell D. Hiatt
REGISTERED CIVIL ENGINEER

June 6, 2008
PLANS APPROVAL DATE

REGISTERED PROFESSIONAL ENGINEER
Randell D. Hiatt
No. C50200
Exp. 6-30-09
CIVIL
STATE OF CALIFORNIA

The State of California or its officers or agents shall not be responsible for the accuracy or completeness of electronic copies of this plan sheet.

To accompany plans dated 1-31-11

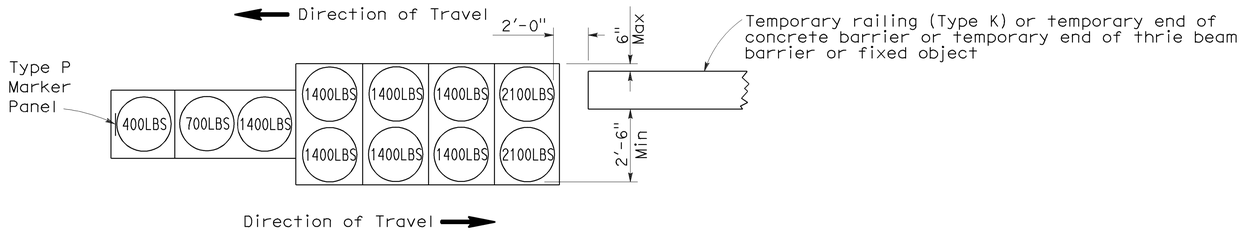

ARRAY 'TB11'

Approach speed less than 45 mph

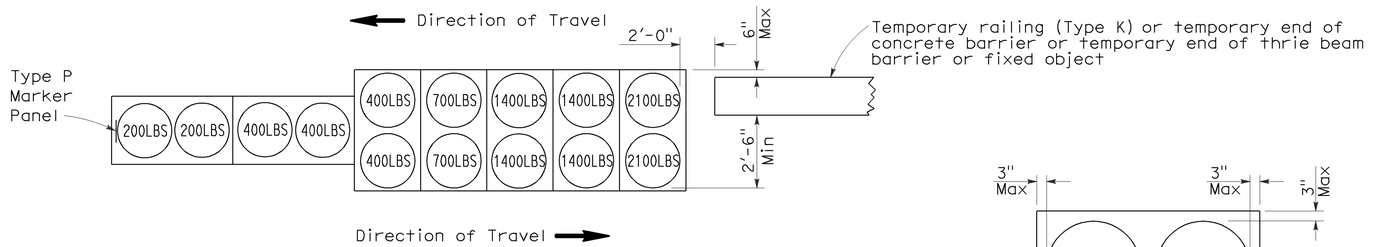

ARRAY 'TB14'

Approach speed 45 mph or more

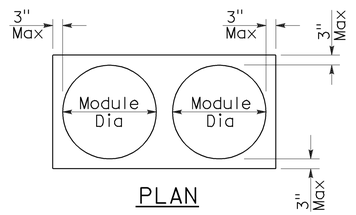

PLAN

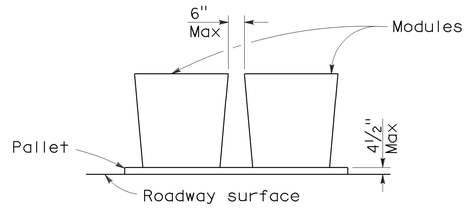

ELEVATION

CRASH CUSHION PALLET DETAIL

See Note 7

NOTES:

1. (XXX) Indicates sand filled module location and weight of sand in pounds for each module. Module spacing is based on the greater diameter of the module.
2. All sand weights are nominal.
3. Temporary crash cushion arrays shall not encroach on the traveled way.
4. Place the Type P marker panel so that the bottom of the panel rests upon the pallet.
5. Refer to Standard Plan A73B for marker details.
6. Approach speeds indicated conform to NCHRP 350 Report criteria.
7. Use of pallets is optional.

STATE OF CALIFORNIA
DEPARTMENT OF TRANSPORTATION

TEMPORARY CRASH CUSHION, SAND FILLED (BIDIRECTIONAL)

NO SCALE

RSP T1B DATED JUNE 6, 2008 SUPERSEDES STANDARD PLAN T1B
DATED MAY 1, 2006 - PAGE 212 OF THE STANDARD PLANS BOOK DATED MAY 2006.

REVISED STANDARD PLAN RSP T1B

2006 REVISED STANDARD PLAN RSP T1B

5-15-08

DIST	COUNTY	ROUTE	POST MILES TOTAL PROJECT	SHEET NO.	TOTAL SHEETS
09	Iny	190	29.6/36.0	26	26

Randell D. Hiatt
REGISTERED CIVIL ENGINEER

June 6, 2008
PLANS APPROVAL DATE

REGISTERED PROFESSIONAL ENGINEER
Randell D. Hiatt
No. C50200
Exp. 6-30-09
CIVIL
STATE OF CALIFORNIA

The State of California or its officers or agents shall not be responsible for the accuracy or completeness of electronic copies of this plan sheet.

To accompany plans dated 1-31-11

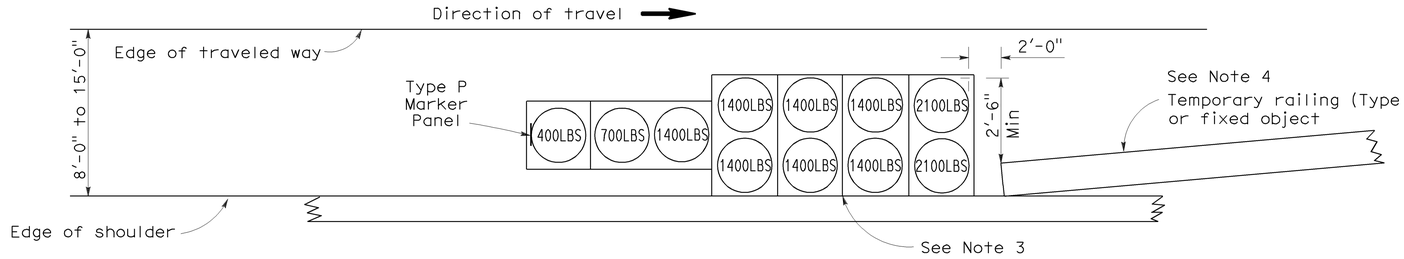

ARRAY 'TS11'

Approach speed less than 45 mph
See Note 9

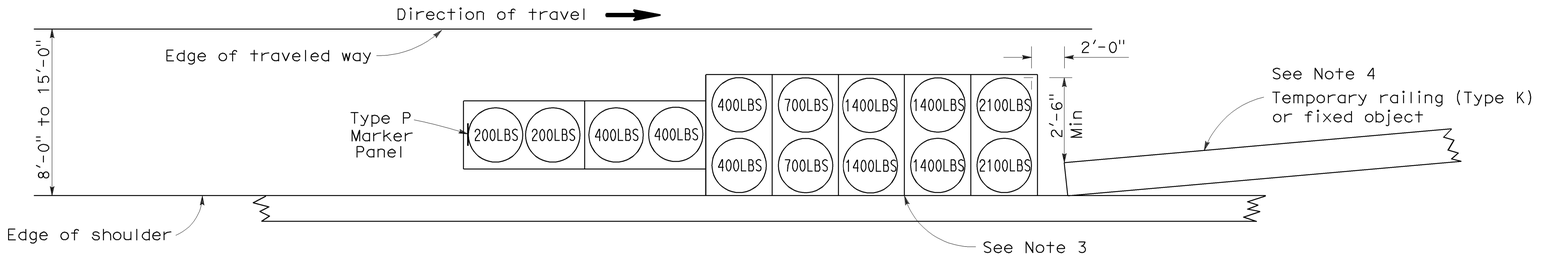

ARRAY 'TS14'

Approach speed 45 mph or more
See Note 9

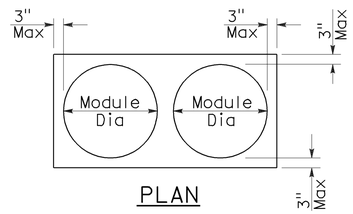

PLAN

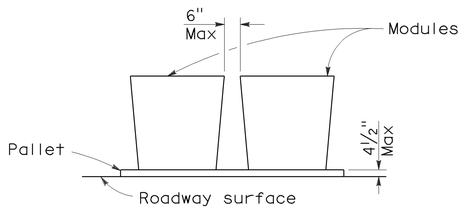

ELEVATION

CRASH CUSHION PALLET DETAIL

See Note 11

NOTES:

1. (XXX) Indicates sand filled module location and weight of sand in pounds for each module. Module spacing is based on the greater diameter of the module.
2. All sand weights are nominal.
3. The temporary crash cushion arrays shown on this plan shall be used only in locations where there will be traffic on one side of the temporary crash cushion array.
4. If the fixed object or approach end of the temporary railing is less than 15'-0" from the edge of traveled way, a temporary crash cushion is required in a construction or work zone.
5. Temporary crash cushion arrays shall not encroach on the traveled way.
6. Arrays for median shoulders shall conform to details shown on this plan for outside shoulders.
7. Place the Type P marker panel so that the bottom of the panel rests upon the pallet and faces traffic.
8. Refer to Standard Plan A73B for marker details.
9. For shoulder widths less than 8'-0", appropriate approved crash cushion protection, other than sand filled modules, shall be provided at fixed objects and at approach ends of temporary railing. The specific type of crash cushion shall be as shown on the project plans or as specified in the Special Provisions, or if not shown on the project plans or specified in the Special Provisions, shall be as approved by the Engineer.
10. Approach speeds indicated conform to NCHRP 350 Report criteria.
11. Use of pallets is optional.

STATE OF CALIFORNIA
DEPARTMENT OF TRANSPORTATION

TEMPORARY CRASH CUSHION, SAND FILLED (SHOULDER INSTALLATIONS)

NO SCALE

RSP T2 DATED JUNE 6, 2008 SUPERSEDES STANDARD PLAN T2
DATED MAY 1, 2006 - PAGE 213 OF THE STANDARD PLANS BOOK DATED MAY 2006.

REVISED STANDARD PLAN RSP T2

2006 REVISED STANDARD PLAN RSP T2

5-15-08