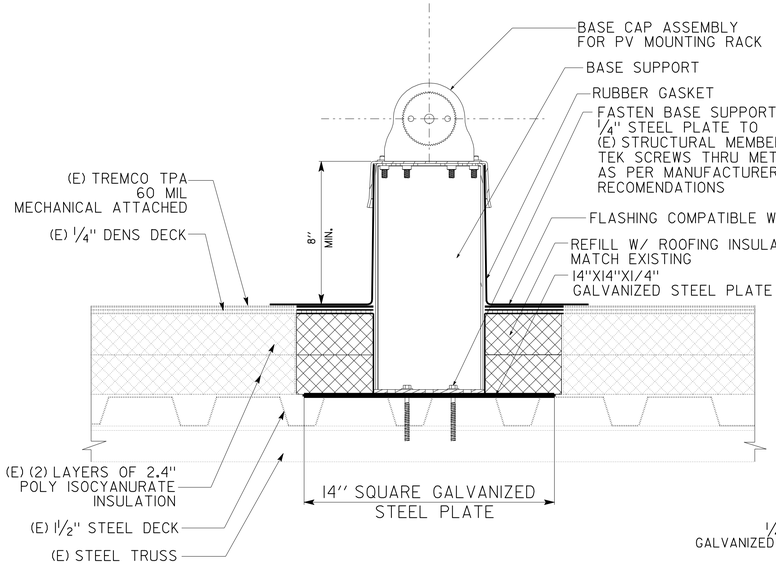

1 **1 OFFICE BUILDING ATTACHMENT DETAIL**

NO SCALE

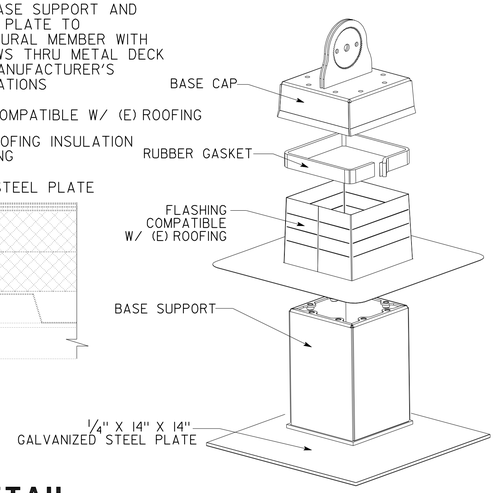

1 **2 ISOMETRIC**

NO SCALE

General notes:

A. *Provide and install approved conduit support on top of the roof to support conduit system and junction boxes. Conduit support shall be one-piece and non metallic type. For conduit support details, see Detail 3 on sheet EE-4.*

B. *All exposed conduits shall be galvanized rigid steel, with minimum size 3/4".*

C. *Size conduits to allow for 50% future capacity.*

D. *No DC wiring except at the module connector shall be exposed.*

E. *Use type CGB connectors at conduit terminations to exposed conductors.*

F. *DC conduit/conductors between photovoltaic modules and photovoltaic Array Circuit Combiner Boxes are not shown.*

G. *Existing Office building and Building C roofs minimum height is approximately 9'-6".*

H. *For graphic symbols and abbreviations, see GP.*

I. *For photovoltaic rack mounting, see roof attachment Details 1 and 2 on sheet EE-4.*

J. *Provide and install all necessary warning labels/markings per Article 690 of California Electrical Code (CEC) and the State Fire Marshal's guideline for solar photovoltaic installation.*

DIST.	COUNTY	LOCATION CODE	POST MILES TOTAL PROJECT	SHEET NO.	TOTAL SHEETS
09	Iny	5506		6	7

Tommy F. Lee 1-19-10
REGISTERED ELECTRICAL ENGINEER DATE

REGISTERED PROFESSIONAL ENGINEER TOMMY F. LEE No. 18534 Exp. 12-31-10 ELEC STATE OF CALIFORNIA

12-09-2009
PLANS APPROVAL DATE

The State of California or its officers or agents shall not be responsible for the accuracy or completeness of electronic copies of this plan sheet.

CALIFORNIA STATE FIRE MARSHAL APPROVED
Approval of this plan does not authorize or approve any omission or deviation from applicable regulations. Final approval is subject to field inspection. One set of approved plans shall be available on the project site at all times.
Reviewed by: MIKE TANAKA
Approval date: 12-09-09

Note:

(1) *2"C, MC, with DC conductors and equipment grounding conductor to Utility Interactive Inverter Cabinet. For continuation, see sheet EE-1.*

1 REVISED PER ADDENDUM NO. 1 DATED 02-17-10

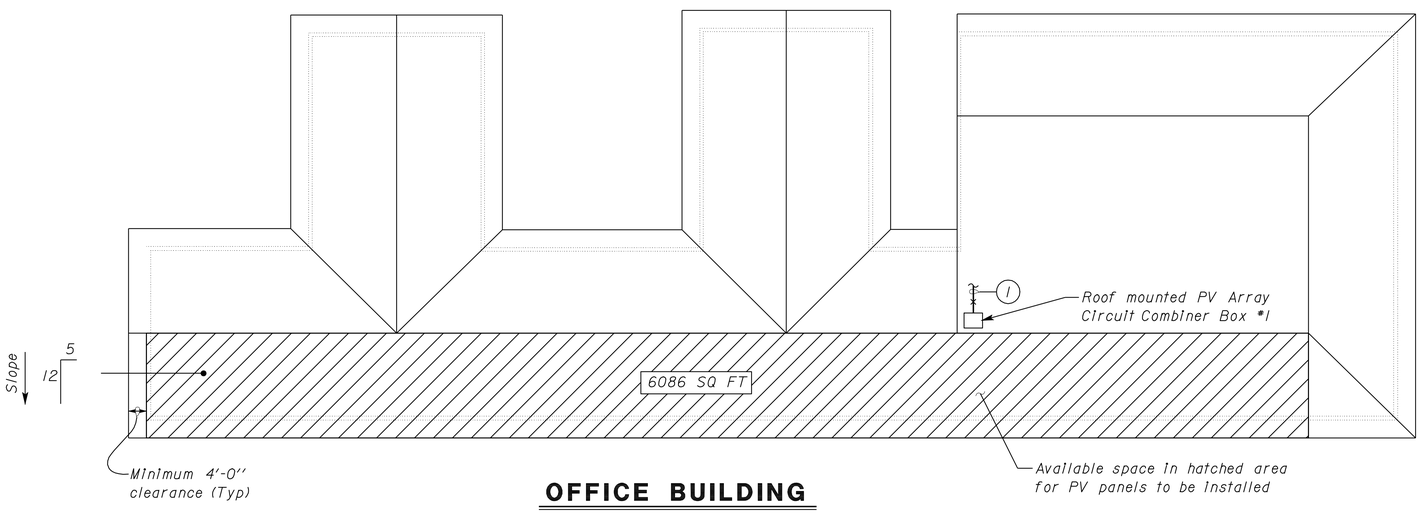

OFFICE BUILDING

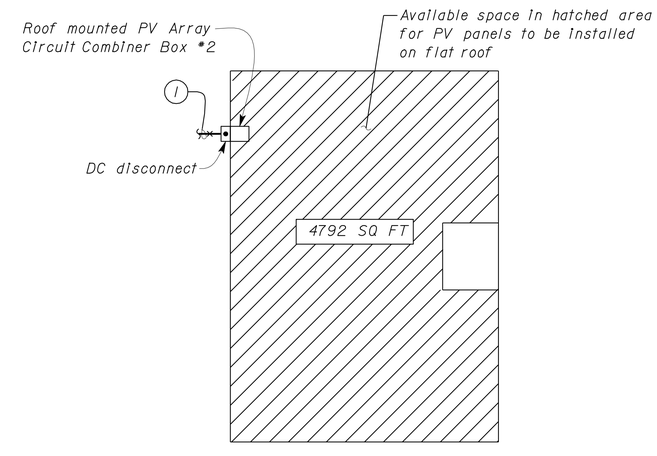

BUILDING C

ROOF PLAN

SCALE 1/16" = 1'-0"

THIS DRAWING ACCURATE FOR ELECTRICAL WORK ONLY

DESIGN	BY Tommy F.Lee	CHECKED Jesse Sandhu	
DETAILS	BY Dall Zhou	CHECKED Tommy F.Lee	
QUANTITIES	BY Tommy F.Lee	CHECKED Jesse Sandhu	

STATE OF CALIFORNIA DEPARTMENT OF TRANSPORTATION

DIVISION OF ENGINEERING SERVICES ELECTRICAL-MECHANICAL-WATER AND WASTEWATER DESIGN

BRIDGE NO. 48M5506
POST MILE

BISHOP OFFICE BUILDING PHOTOVOLTAIC SYSTEM

ROOF PLAN

SHEET **EE-3**

DOES SD Imperial Rev. 1/07

ORIGINAL SCALE IN INCHES FOR REDUCED PLANS 0 1 2 3

CU 09124
EA 0AA011

DISREGARD PRINTS BEARING EARLIER REVISION DATES → 9/30/09 1/19/10

REVISION DATES (PRELIMINARY STAGE ONLY) SHEET OF

11-FEB-2010 08:48

ee_3.dgn

DIST.	COUNTY	LOCATION CODE	POST MILES TOTAL PROJECT	SHEET NO.	TOTAL SHEETS
09	Iny	5506		7	7

Tommy F. Lee 1-19-10
REGISTERED ELECTRICAL ENGINEER DATE

REGISTERED PROFESSIONAL ENGINEER TOMMY F. LEE No. 18534 Exp. 12-31-10 ELEC STATE OF CALIFORNIA

12-09-2009
PLANS APPROVAL DATE

The State of California or its officers or agents shall not be responsible for the accuracy or completeness of electronic copies of this plan sheet.

CALIFORNIA STATE FIRE MARSHAL APPROVED
Approval of this plan does not authorize or approve any omission or deviation from applicable regulations. Final approval is subject to field inspection. One set of approved plans shall be available on the project site at all times.
Reviewed by: MIKE TANAKA
Approval date: 12-09-09

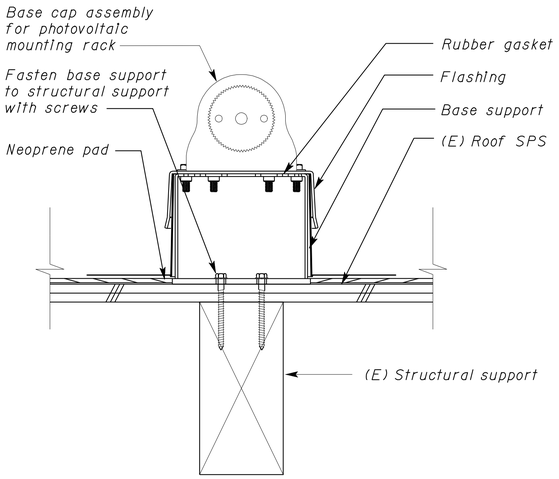

1 WOOD-NO INSULATION AT BUILDING C
NO SCALE

▽1

Notes:

1. 3"C, RSC, five conductors; three phase, one neutral and one equipment grounding conductor.
2. 2"C, RSC, with DC conductors and equipment grounding conductor from photovoltaic Array Circuit Combiner Box on the roof.
3. 1/2"C, RSC, one RS485 modbus cable.
4. 1/2"C, RSC, 2*12, 1*12G.
5. 1/2"C, RSC, Category 6 cable to existing TTB inside the Telephone Cabinet.
6. 2"C, RSC, conductors as required.
7. 3/4"C, shielded data conductors/cable to cell temperature sensor at photovoltaic module.

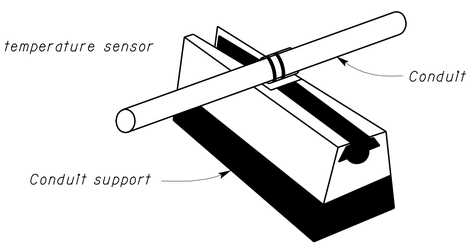

3 ROOF MOUNTED CONDUIT SUPPORT
NO SCALE

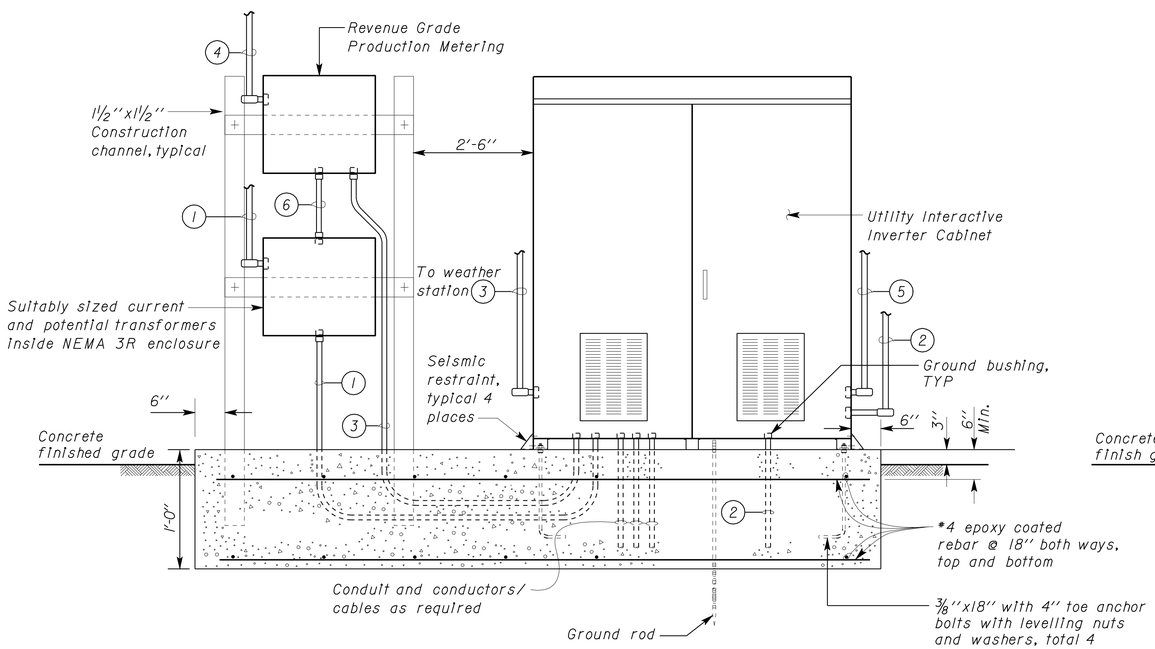

A ELEVATION
NO SCALE

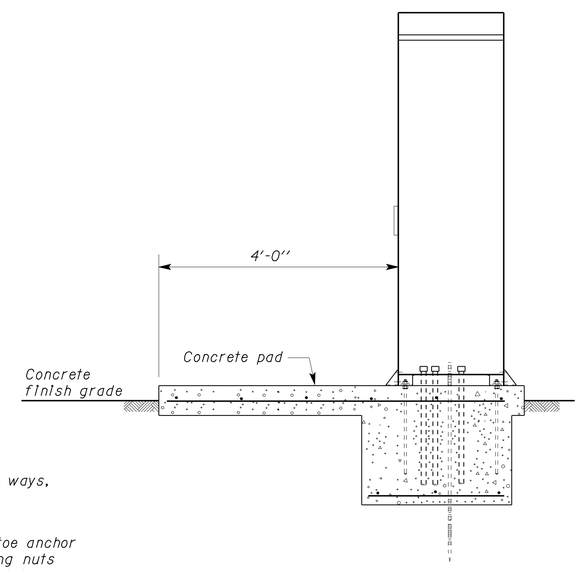

SIDE VIEW

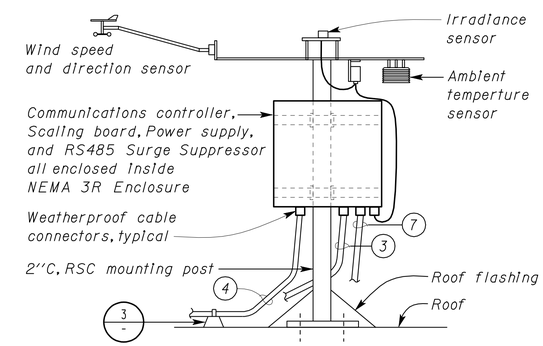

4 WEATHER STATION
NO SCALE

▽1 REVISED PER ADDENDUM NO. 1 DATED 02-17-10

	BY	CHECKED
DESIGN	Tommy F. Lee	Jesse Sandhu
DETAILS	Dali Zhou	Tommy F. Lee
QUANTITIES	Tommy F. Lee	Jesse Sandhu

STATE OF CALIFORNIA DEPARTMENT OF TRANSPORTATION

DIVISION OF ENGINEERING SERVICES
ELECTRICAL-MECHANICAL-WATER AND WASTEWATER DESIGN

BRIDGE NO. 48M5506
POST MILE

BISHOP OFFICE BUILDING PHOTOVOLTAIC SYSTEM
ELEVATION AND DETAILS

SHEET **EE-4**

DOES SD Imperial Rev. 1/07

ORIGINAL SCALE IN INCHES FOR REDUCED PLANS 0 1 2 3

CU 09124
EA 0AA011

DISREGARD PRINTS BEARING EARLIER REVISION DATES → 8/31/09 1/19/10

REVISION DATES (PRELIMINARY STAGE ONLY) SHEET OF

11-FEB-2010 08:48

ee_4.dgn