ACHSSTP-P074(052)E

Dist	COUNTY	ROUTE	POST MILES TOTAL PROJECT	SHEET No.	TOTAL SHEETS
08	Riv	74	64.7/69.0	1	61

STATE OF CALIFORNIA
DEPARTMENT OF TRANSPORTATION

PROJECT PLANS FOR CONSTRUCTION ON
STATE HIGHWAY
IN RIVERSIDE COUNTY
AT AND NEAR PINE MEADOW
AT VARIOUS LOCATIONS
FROM THOMAS MOUNTAIN ROAD
TO TOOL BOX SPRING ROAD

TO BE SUPPLEMENTED BY STANDARD PLANS DATED MAY 2006

INDEX OF PLANS

SHEET No.	DESCRIPTION
1	TITLE AND LOCATION MAP
2	TYPICAL CROSS SECTION
3-9	LAYOUTS
10-12	CONSTRUCTION DETAILS
13-21	DRAINAGE PROFILES, DETAILS AND QUANTITIES
22-28	UTILITY PLAN
29	CONSTRUCTION AREA SIGNS
30	STAGE CONSTRUCTION
31-45	TRAFFIC HANDLING PLANS AND QUANTITIES
46	PAVEMENT DELINEATION QUANTITIES
47	SUMMARY OF QUANTITIES
48-61	REVISED AND NEW STANDARD PLANS

THE STANDARD PLANS LIST APPLICABLE TO THIS CONTRACT IS INCLUDED IN THE NOTICE TO BIDDERS AND SPECIAL PROVISIONS BOOK.

LOCATION MAP

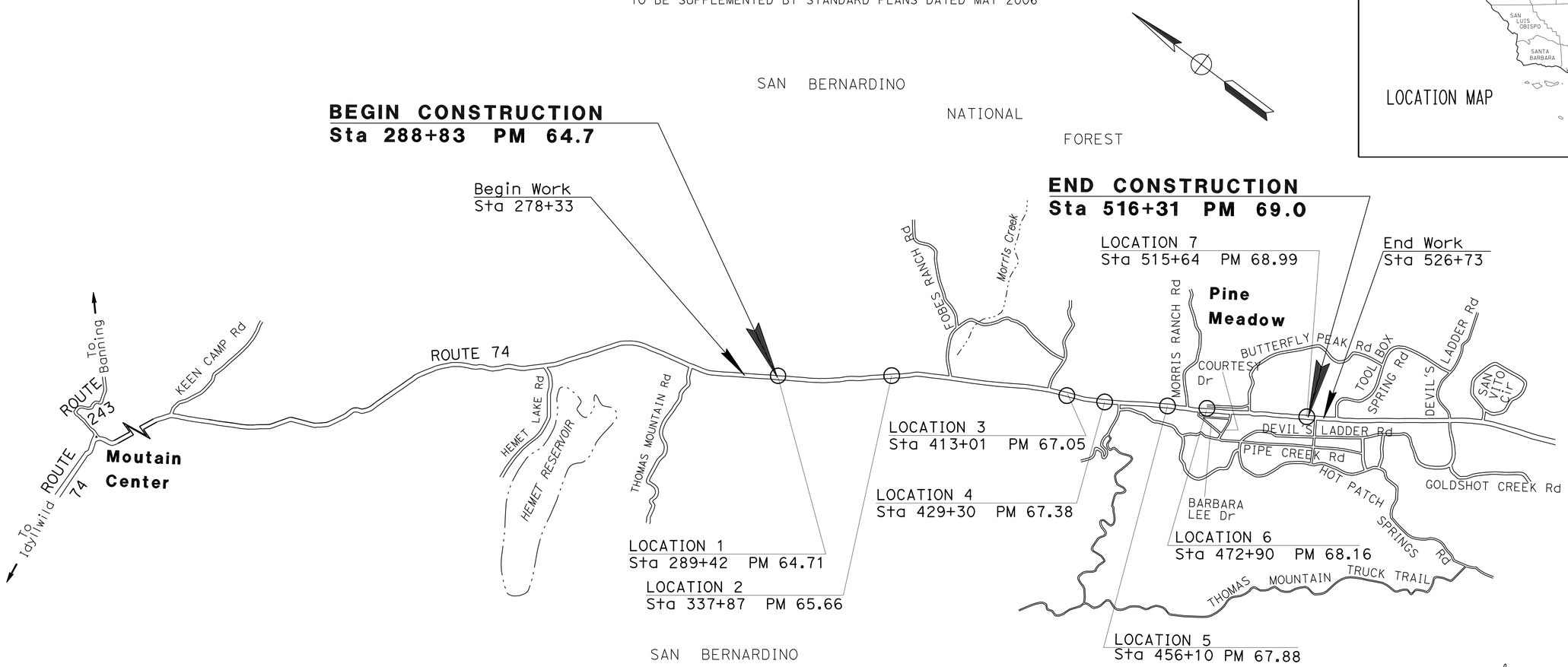

NO SCALE

THE CONTRACTOR SHALL POSSESS THE CLASS (OR CLASSES) OF LICENSE AS SPECIFIED IN THE "NOTICE TO BIDDERS."

PROJECT MANAGER: MUSTAPHA IAALI

DESIGN ENGINEER: VIDA DELROOZ

PROJECT ENGINEER REGISTERED CIVIL ENGINEER — DATE: 10-28-10

REGISTERED PROFESSIONAL ENGINEER — SERGIO EDUARDO-AVILA — No. 60951 — Exp. 12/31/10 — CIVIL — STATE OF CALIFORNIA

February 14, 2011
PLANS APPROVAL DATE

THE STATE OF CALIFORNIA OR ITS OFFICERS OR AGENTS SHALL NOT BE RESPONSIBLE FOR THE ACCURACY OR COMPLETENESS OF SCANNED COPIES OF THIS PLAN SHEET.

CONTRACT No.	08-459004
PROJECT ID	0800000733

LAST REVISION 10-13-10 — DATE PLOTTED => 30-MAR-2011 — TIME PLOTTED => 08:22

Dist	COUNTY	ROUTE	POST MILES TOTAL PROJECT	SHEET No.	TOTAL SHEETS
08	Riv	74	64.7/69.0	2	61

REGISTERED CIVIL ENGINEER 10-28-10 DATE

2-14-11
PLANS APPROVAL DATE

REGISTERED PROFESSIONAL ENGINEER SERGIO EDUARDO-AVILA No. 60951 Exp. 12/31/10 CIVIL STATE OF CALIFORNIA

THE STATE OF CALIFORNIA OR ITS OFFICERS OR AGENTS SHALL NOT BE RESPONSIBLE FOR THE ACCURACY OR COMPLETENESS OF SCANNED COPIES OF THIS PLAN SHEET.

LEGEND:

REMOVE Conc

Conc-RSP

DESIGN DESIGNATION

ADT(2008)	3,700	D	58%
ADT(2028)	6,600	T	3%
DHV	630	V	60 mph

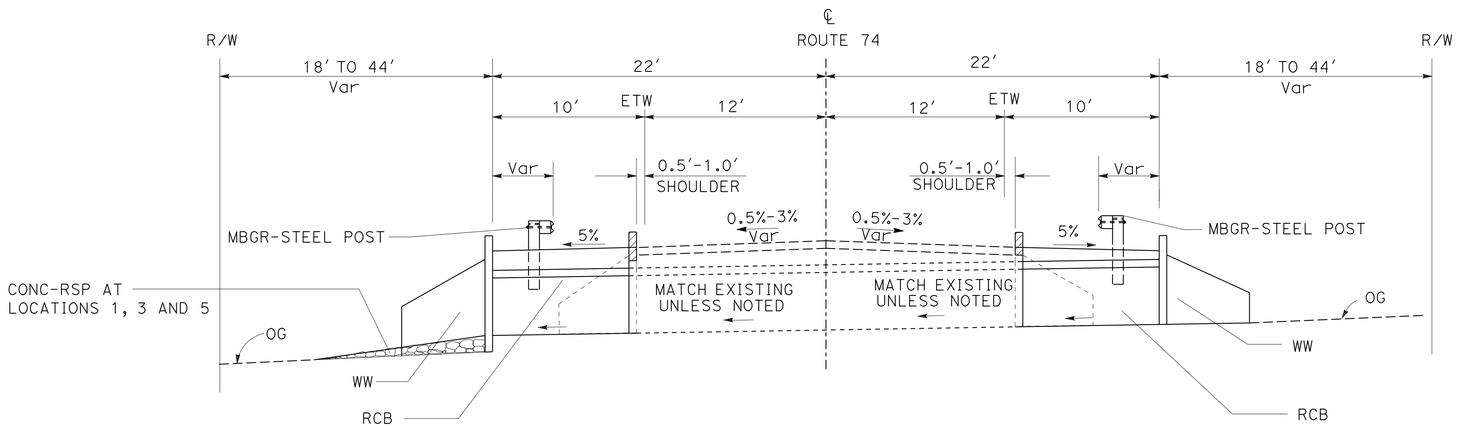

ROUTE 74

STA 289+42.33, STA 337+87.03, STA 413+01.43
STA 429+30.58, STA 456+10.49, STA 472+90.18
STA 515+64.74

TYPICAL CROSS SECTION

NO SCALE

X-1

REVISED BY | DATE REVISED
VIDA DELROOZ | SERGIO E AVILA
CALCULATED-DESIGNED BY | CHECKED BY
FUNCTIONAL SUPERVISOR
SERGIO E AVILA

STATE OF CALIFORNIA - DEPARTMENT OF TRANSPORTATION
Caltrans DESIGN DEVELOPMENT

LAST REVISION 10-13-10 | DATE PLOTTED => 18-FEB-2011 | TIME PLOTTED => 13:53

Dist	COUNTY	ROUTE	POST MILES TOTAL PROJECT	SHEET No.	TOTAL SHEETS
08	Riv	74	64.7/69.0	3	61

REGISTERED CIVIL ENGINEER 10-28-10 DATE

2-14-11
PLANS APPROVAL DATE

REGISTERED PROFESSIONAL ENGINEER SERGIO EDUARDO-AVILA No. 60951 Exp. 12/31/10 CIVIL STATE OF CALIFORNIA

THE STATE OF CALIFORNIA OR ITS OFFICERS OR AGENTS SHALL NOT BE RESPONSIBLE FOR THE ACCURACY OR COMPLETENESS OF SCANNED COPIES OF THIS PLAN SHEET.

NOTE:

FOR ACCURATE RIGHT OF WAY DATA, CONTACT RIGHT OF WAY ENGINEERING AT THE DISTRICT OFFICE.

LEGEND

- CONC-RSP
- DRAINAGE UNIT NO.
- DRAINAGE SYSTEM NO.
- REMOVE CONC
- TREE
- BW FENCE
- DIRECTION OF TRAVEL

ABBREVIATIONS

AFTS	ALTERNATIVE FLARED TERMINAL SYSTEM
TRWB	MBGR TRANSITION RAILING (TYPE WB)
EAA	END ANCHOR ASSEMBLY (TYPE SFT)

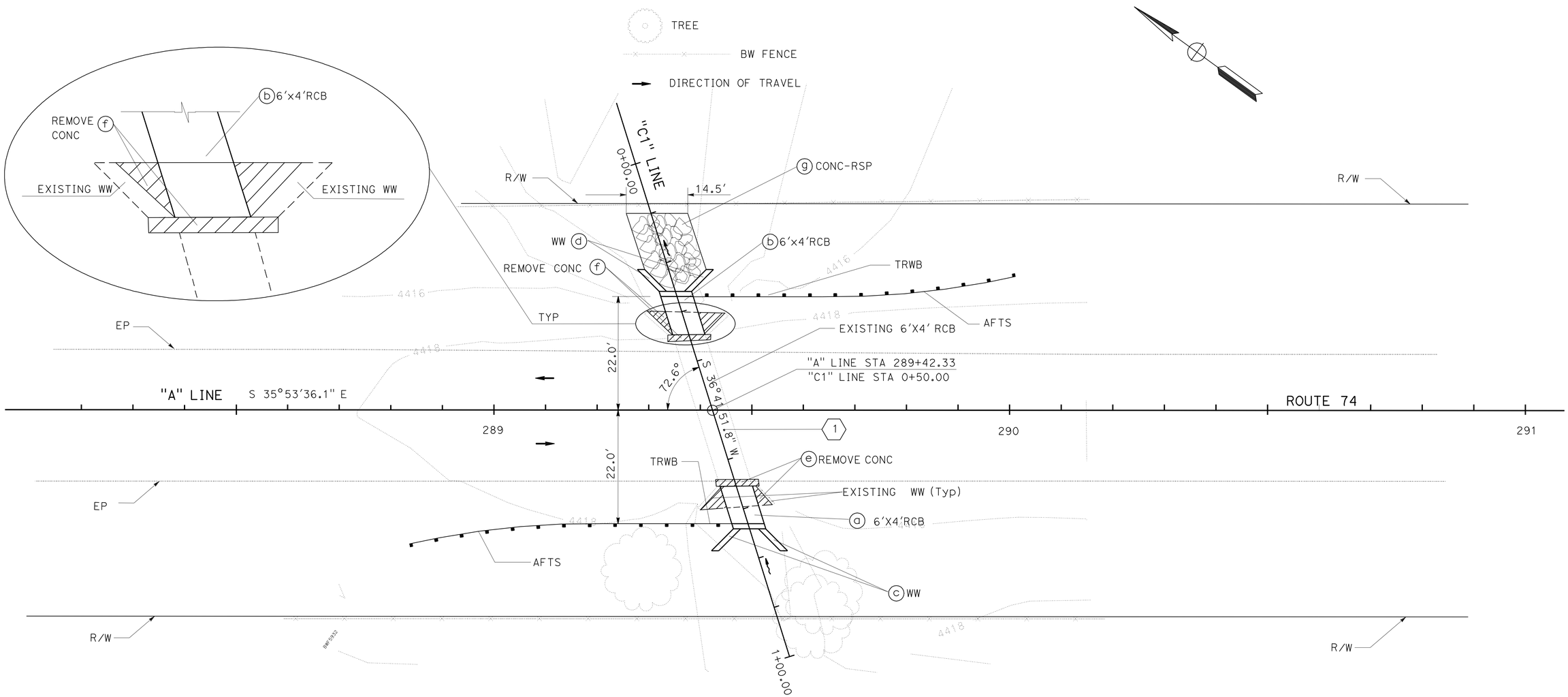

LOCATION 1

LAYOUT

SCALE 1" = 10'

L-1

STATE OF CALIFORNIA - DEPARTMENT OF TRANSPORTATION

Caltrans® **DESIGN DEVELOPMENT**

FUNCTIONAL SUPERVISOR: SERGIO E AVILA

CALCULATED-DESIGNED BY: VIDA DELROOZ

CHECKED BY: SERGIO E AVILA

REVISED BY

DATE REVISED

LAST REVISION 10-13-10

DATE PLOTTED => 18-FEB-2011
TIME PLOTTED => 13:53

Dist	COUNTY	ROUTE	POST MILES TOTAL PROJECT	SHEET No.	TOTAL SHEETS
08	Riv	74	64.7/69.0	4	61

REGISTERED CIVIL ENGINEER 10-28-10 DATE

2-14-11
PLANS APPROVAL DATE

REGISTERED PROFESSIONAL ENGINEER SERGIO EDUARDO-AVILA No. 60951 Exp. 12/31/10 CIVIL STATE OF CALIFORNIA

THE STATE OF CALIFORNIA OR ITS OFFICERS OR AGENTS SHALL NOT BE RESPONSIBLE FOR THE ACCURACY OR COMPLETENESS OF SCANNED COPIES OF THIS PLAN SHEET.

NOTE:

FOR ACCURATE RIGHT OF WAY DATA, CONTACT RIGHT OF WAY ENGINEERING AT THE DISTRICT OFFICE.

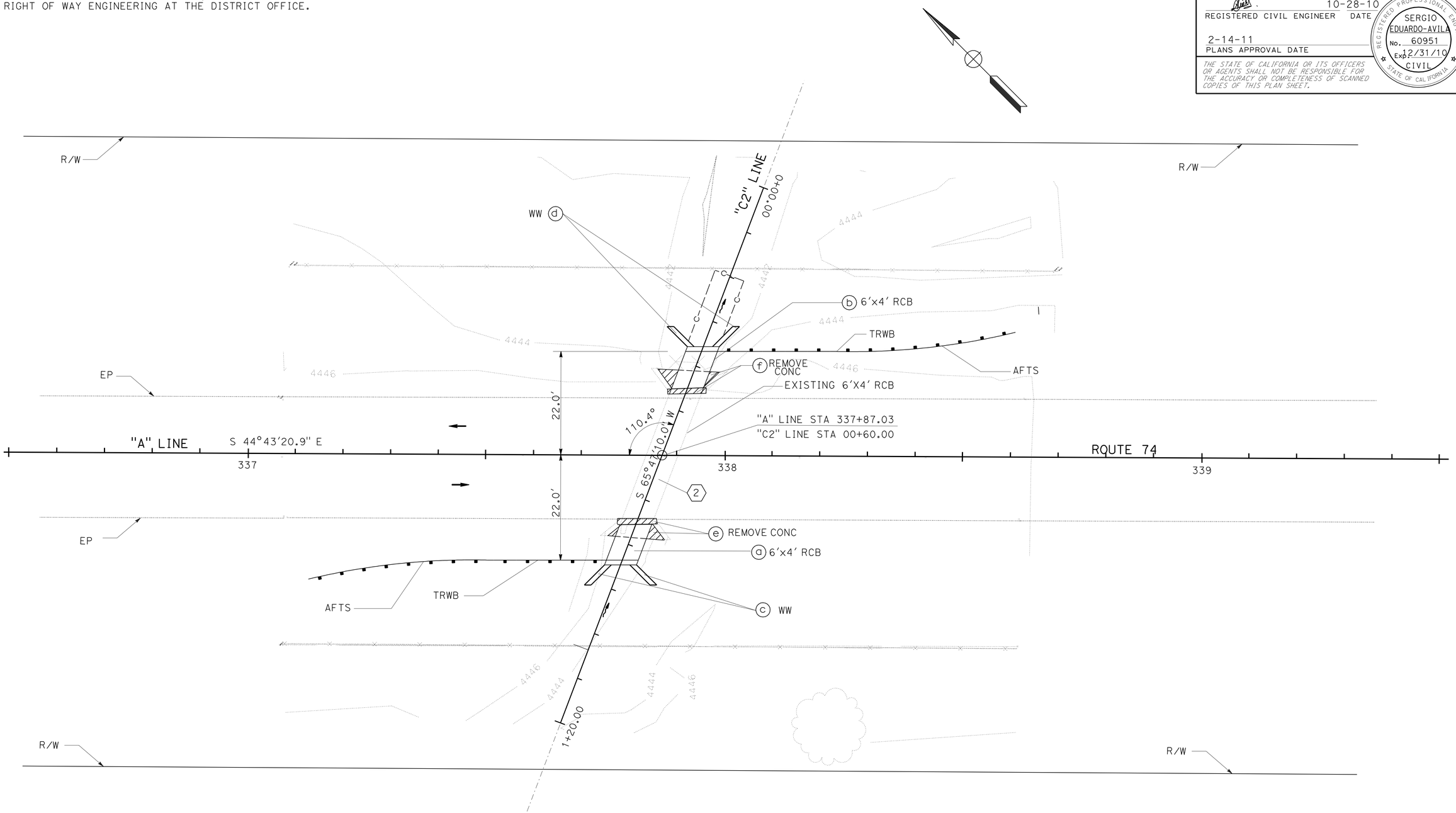

LOCATION 2

LAYOUT

SCALE 1" = 10'

L-2

STATE OF CALIFORNIA - DEPARTMENT OF TRANSPORTATION
Caltrans® DESIGN DEVELOPMENT

FUNCTIONAL SUPERVISOR: SERGIO E AVILA

CALCULATED-DESIGNED BY: VIDA DELROOZ
CHECKED BY:
REVISED BY: SERGIO E AVILA
DATE REVISED:

LAST REVISION 10-13-10 | DATE PLOTTED => 18-FEB-2011 | TIME PLOTTED => 13:53

Dist	COUNTY	ROUTE	POST MILES TOTAL PROJECT	SHEET No.	TOTAL SHEETS
08	Riv	74	64.7/69.0	5	61

REGISTERED CIVIL ENGINEER 10-28-10 DATE

2-14-11
PLANS APPROVAL DATE

REGISTERED PROFESSIONAL ENGINEER SERGIO EDUARDO-AVILA No. 60951 Exp. 12/31/10 CIVIL STATE OF CALIFORNIA

THE STATE OF CALIFORNIA OR ITS OFFICERS OR AGENTS SHALL NOT BE RESPONSIBLE FOR THE ACCURACY OR COMPLETENESS OF SCANNED COPIES OF THIS PLAN SHEET.

NOTE:

FOR ACCURATE RIGHT OF WAY DATA, CONTACT RIGHT OF WAY ENGINEERING AT THE DISTRICT OFFICE.

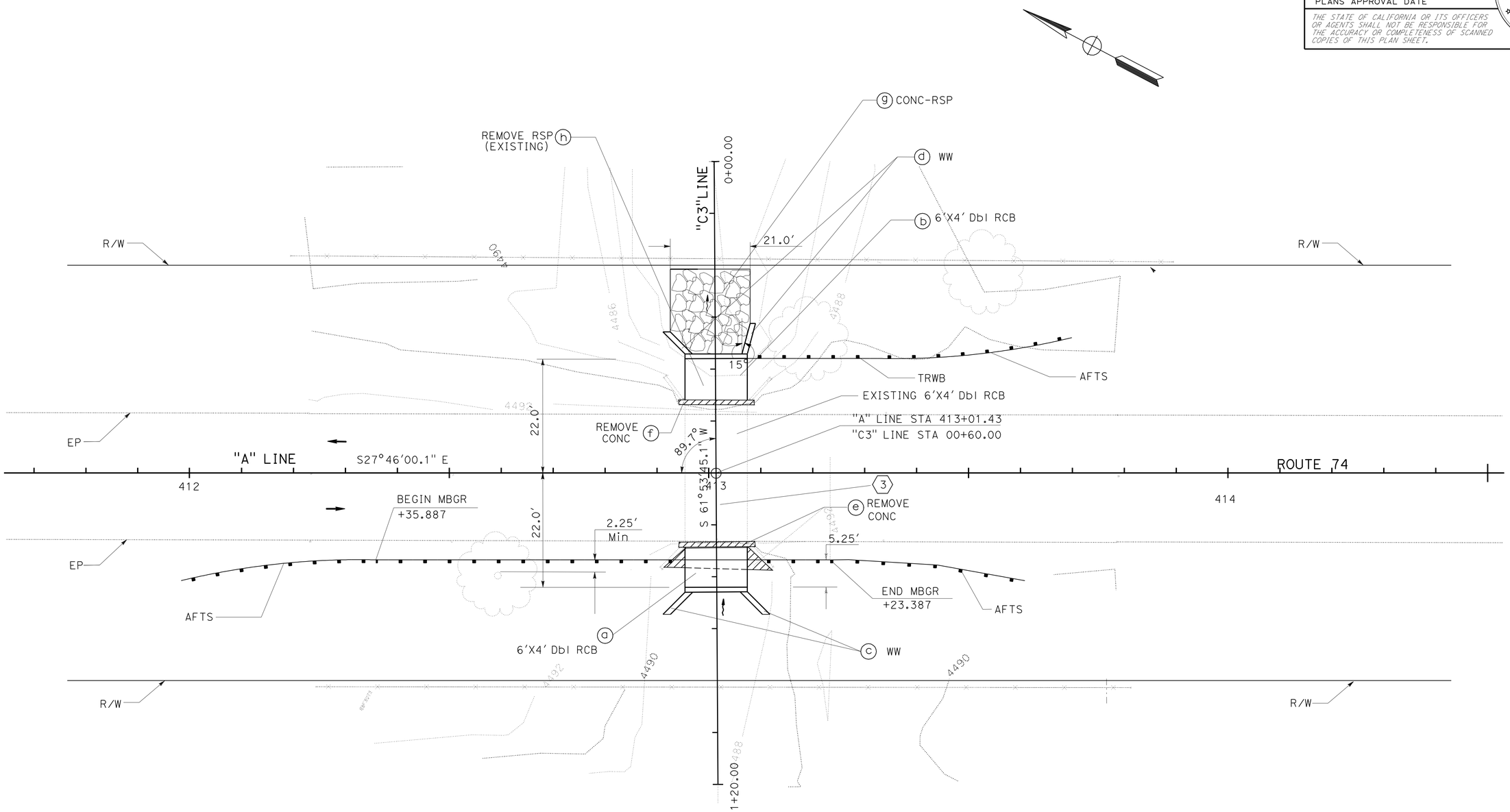

LOCATION 3

LAYOUT

SCALE 1" = 10'

L-3

STATE OF CALIFORNIA - DEPARTMENT OF TRANSPORTATION
Caltrans DESIGN DEVELOPMENT

FUNCTIONAL SUPERVISOR: SERGIO E AVILA

CALCULATED-DESIGNED BY: VIDA DELROOZ
CHECKED BY: SERGIO E AVILA

REVISED BY
DATE REVISED

LAST REVISION 10-13-10
DATE PLOTTED => 18-FEB-2011
TIME PLOTTED => 13:54

Dist	COUNTY	ROUTE	POST MILES TOTAL PROJECT	SHEET No.	TOTAL SHEETS
08	Riv	74	64.7/69.0	6	61

REGISTERED CIVIL ENGINEER 10-28-10 DATE

2-14-11
PLANS APPROVAL DATE

REGISTERED PROFESSIONAL ENGINEER SERGIO EDUARDO-AVILA No. 60951 Exp. 12/31/10 CIVIL STATE OF CALIFORNIA

THE STATE OF CALIFORNIA OR ITS OFFICERS OR AGENTS SHALL NOT BE RESPONSIBLE FOR THE ACCURACY OR COMPLETENESS OF SCANNED COPIES OF THIS PLAN SHEET.

NOTE:

FOR ACCURATE RIGHT OF WAY DATA, CONTACT RIGHT OF WAY ENGINEERING AT THE DISTRICT OFFICE.

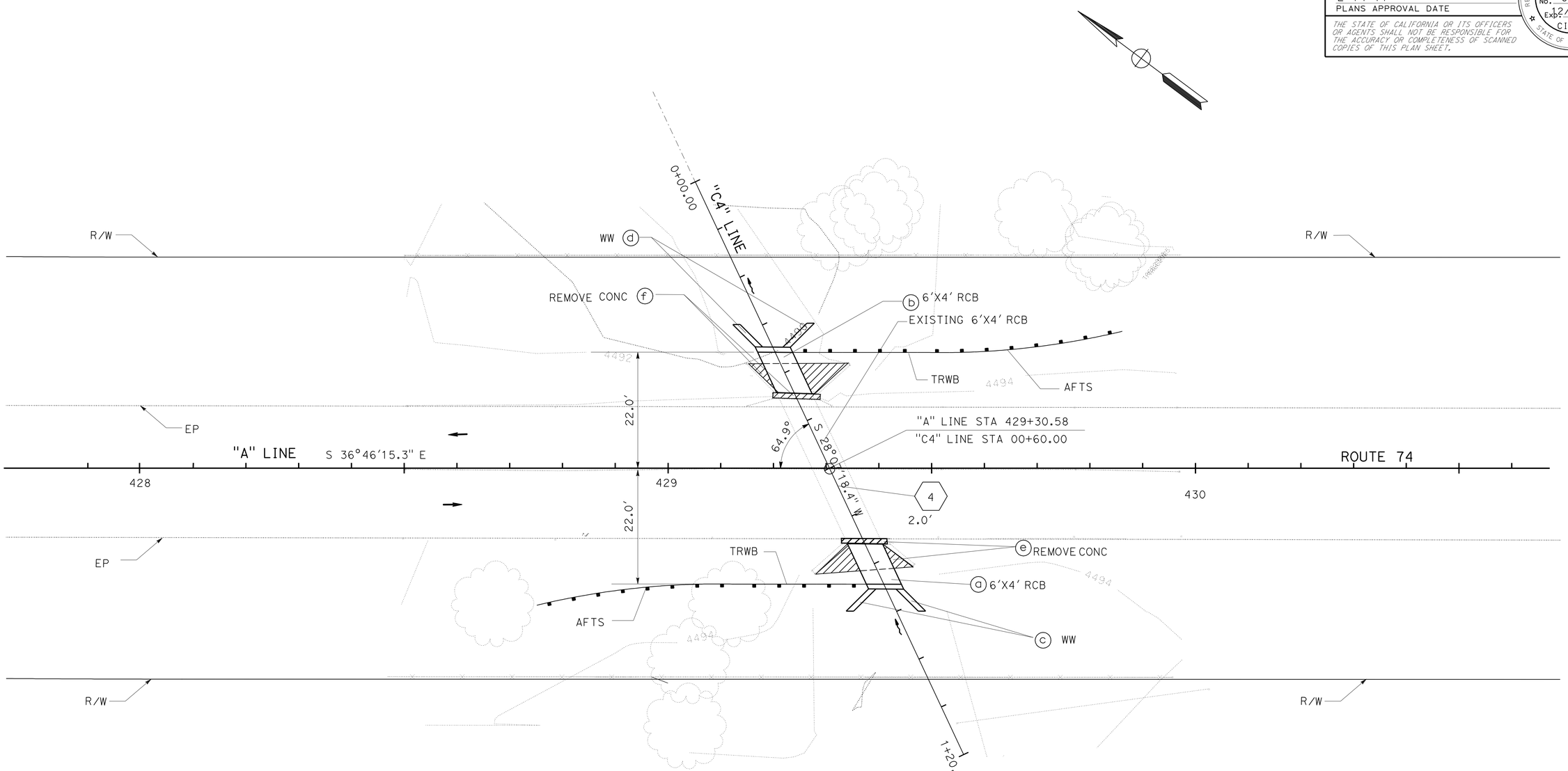

LOCATION 4

LAYOUT
SCALE 1" = 10'

L-4

STATE OF CALIFORNIA - DEPARTMENT OF TRANSPORTATION
Caltrans® DESIGN DEVELOPMENT

FUNCTIONAL SUPERVISOR: SERGIO E AVILA

CALCULATED-DESIGNED BY: VIDA DELROOZ
CHECKED BY: SERGIO E AVILA

REVISED BY
DATE REVISED

LAST REVISION 10-13-10 | DATE PLOTTED => 18-FEB-2011 | TIME PLOTTED => 13:54

Dist	COUNTY	ROUTE	POST MILES TOTAL PROJECT	SHEET No.	TOTAL SHEETS
08	Riv	74	64.7/69.0	7	61

REGISTERED CIVIL ENGINEER 10-28-10 DATE

2-14-11
PLANS APPROVAL DATE

REGISTERED PROFESSIONAL ENGINEER SERGIO EDUARDO-AVILA No. 60951 Exp. 12/31/10 CIVIL STATE OF CALIFORNIA

THE STATE OF CALIFORNIA OR ITS OFFICERS OR AGENTS SHALL NOT BE RESPONSIBLE FOR THE ACCURACY OR COMPLETENESS OF SCANNED COPIES OF THIS PLAN SHEET.

NOTE:

FOR ACCURATE RIGHT OF WAY DATA, CONTACT RIGHT OF WAY ENGINEERING AT THE DISTRICT OFFICE.

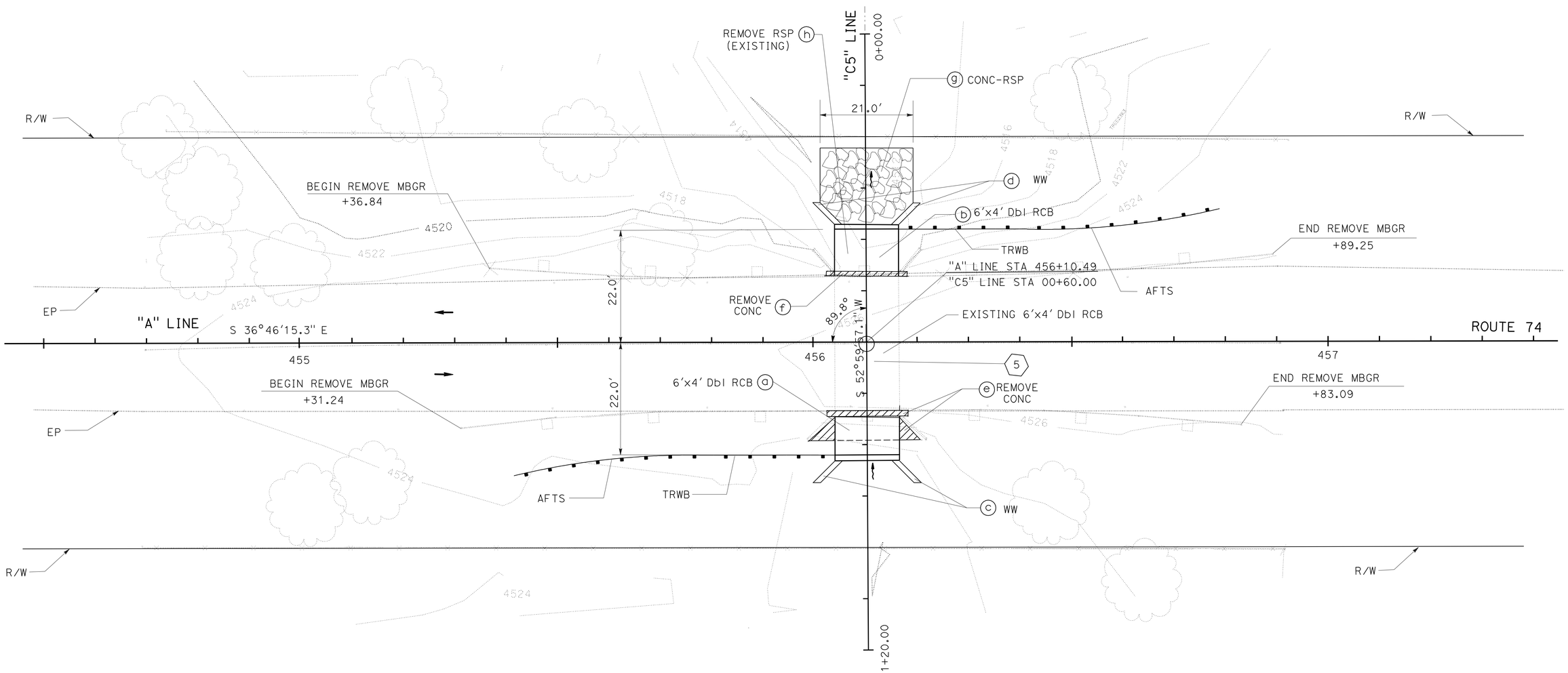

LOCATION 5

LAYOUT
SCALE 1" = 10'

L-5

STATE OF CALIFORNIA - DEPARTMENT OF TRANSPORTATION
Caltrans® DESIGN DEVELOPMENT

FUNCTIONAL SUPERVISOR: SERGIO E AVILA
CALCULATED-DESIGNED BY: VIDA DELROOZ
CHECKED BY: SERGIO E AVILA
REVISED BY
DATE REVISED

LAST REVISION 10-13-10
DATE PLOTTED => 18-FEB-2011
TIME PLOTTED => 13:54

Dist	COUNTY	ROUTE	POST MILES TOTAL PROJECT	SHEET No.	TOTAL SHEETS
08	Riv	74	64.7/69.0	8	61

REGISTERED CIVIL ENGINEER 10-28-10 DATE

2-14-11
PLANS APPROVAL DATE

REGISTERED PROFESSIONAL ENGINEER SERGIO EDUARDO-AVILA No. 60951 Exp. 12/31/10 CIVIL STATE OF CALIFORNIA

THE STATE OF CALIFORNIA OR ITS OFFICERS OR AGENTS SHALL NOT BE RESPONSIBLE FOR THE ACCURACY OR COMPLETENESS OF SCANNED COPIES OF THIS PLAN SHEET.

NOTE:

FOR ACCURATE RIGHT OF WAY DATA, CONTACT
RIGHT OF WAY ENGINEERING AT THE DISTRICT OFFICE.

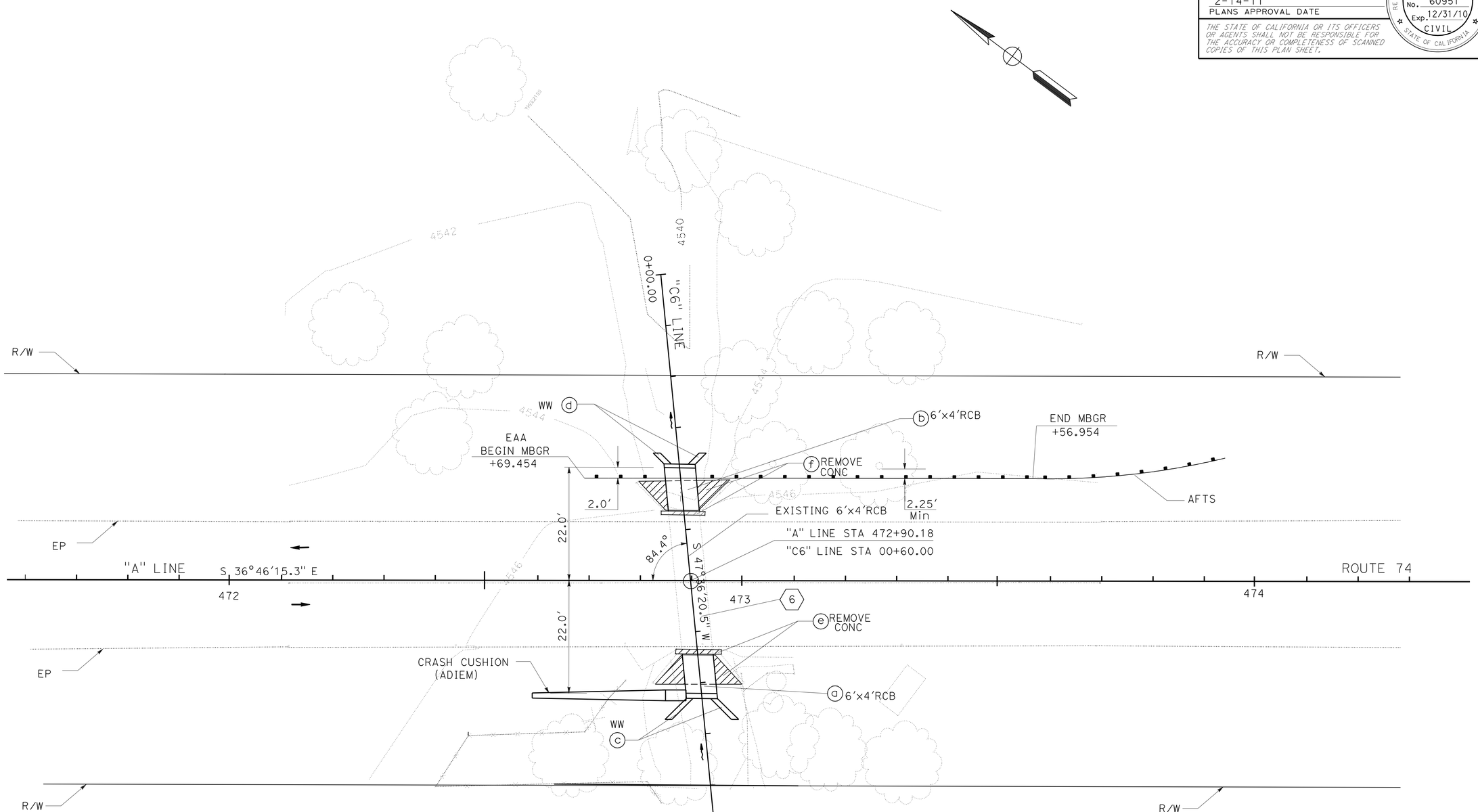

LOCATION 6

LAYOUT
SCALE 1" = 10'

L-6

STATE OF CALIFORNIA - DEPARTMENT OF TRANSPORTATION
Caltrans® **DESIGN DEVELOPMENT**

FUNCTIONAL SUPERVISOR: SERGIO E AVILA

CALCULATED-DESIGNED BY: VIDA DELROOZ
CHECKED BY: SERGIO E AVILA

REVISED BY
DATE REVISED

LAST REVISION 10-13-10 | DATE PLOTTED => 18-FEB-2011 | TIME PLOTTED => 13:54

Dist	COUNTY	ROUTE	POST MILES TOTAL PROJECT	SHEET No.	TOTAL SHEETS
08	Riv	74	64.7/69.0	9	61

REGISTERED CIVIL ENGINEER 10-28-10 DATE

2-14-11
PLANS APPROVAL DATE

REGISTERED PROFESSIONAL ENGINEER SERGIO EDUARDO-AVILA No. 60951 Exp. 12/31/10 CIVIL STATE OF CALIFORNIA

THE STATE OF CALIFORNIA OR ITS OFFICERS OR AGENTS SHALL NOT BE RESPONSIBLE FOR THE ACCURACY OR COMPLETENESS OF SCANNED COPIES OF THIS PLAN SHEET.

NOTE:

FOR ACCURATE RIGHT OF WAY DATA, CONTACT RIGHT OF WAY ENGINEERING AT THE DISTRICT OFFICE.

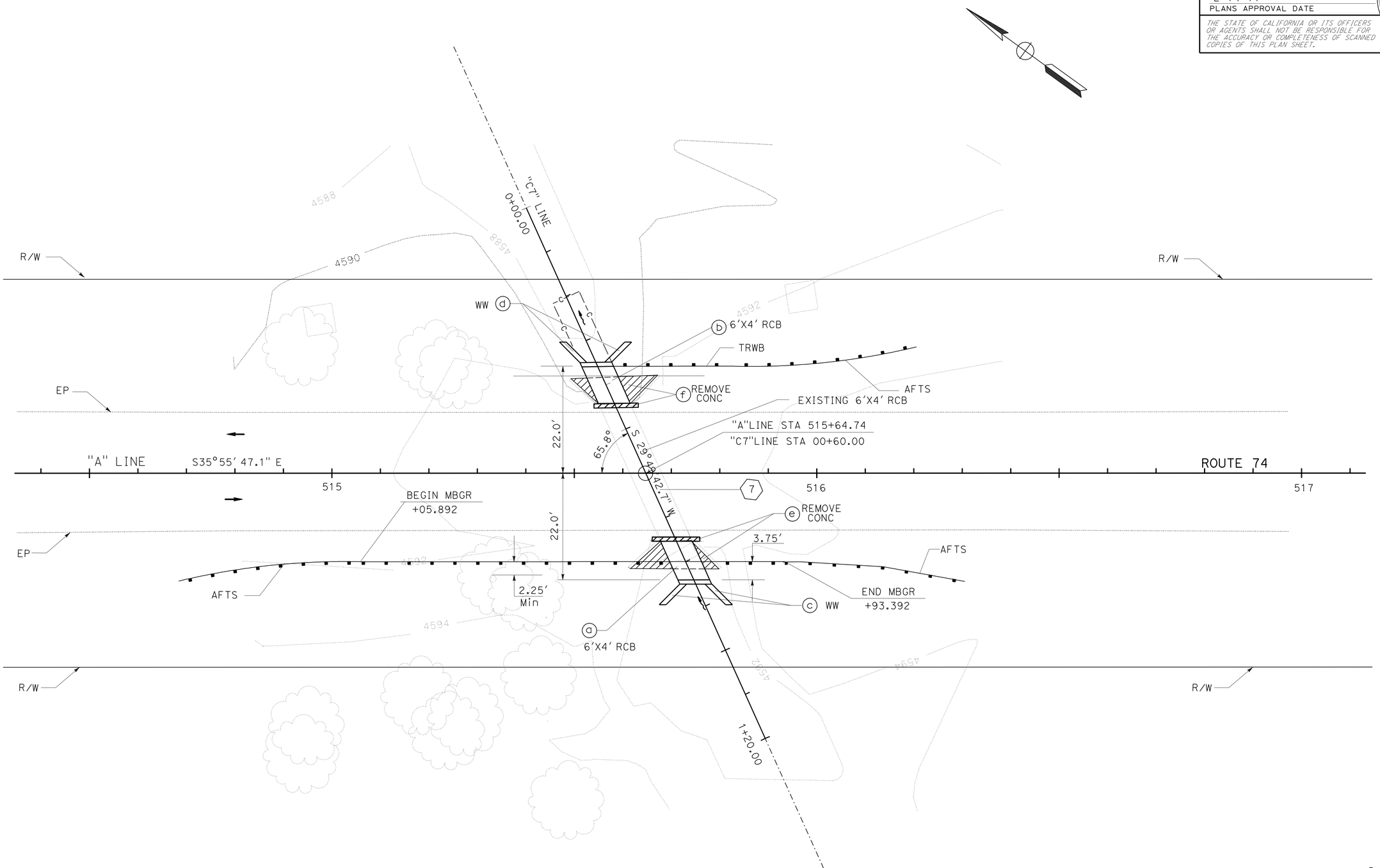

LOCATION 7

LAYOUT

SCALE 1"=10' **L-7**

STATE OF CALIFORNIA - DEPARTMENT OF TRANSPORTATION
Caltrans DESIGN DEVELOPMENT

FUNCTIONAL SUPERVISOR: SERGIO E AVILA
CALCULATED-DESIGNED BY: VIDA DELROOZ
CHECKED BY: SERGIO E AVILA
REVISED BY
DATE REVISED

LAST REVISION 10-13-10
DATE PLOTTED => 18-FEB-2011
TIME PLOTTED => 13:54

Dist	COUNTY	ROUTE	POST MILES TOTAL PROJECT	SHEET No.	TOTAL SHEETS
08	Riv	74	64.7/69.0	10	61

REGISTERED CIVIL ENGINEER 10-28-10 DATE

2-14-11
PLANS APPROVAL DATE

REGISTERED PROFESSIONAL ENGINEER SERGIO EDUARDO-AVILA No. 60951 Exp. 12/31/10 CIVIL STATE OF CALIFORNIA

THE STATE OF CALIFORNIA OR ITS OFFICERS OR AGENTS SHALL NOT BE RESPONSIBLE FOR THE ACCURACY OR COMPLETENESS OF SCANNED COPIES OF THIS PLAN SHEET.

NOTES:

USE WHEN AVOIDING DRAINAGE FACILITIES

1. USE CASE 1 ON 6'x4' RCB
2. USE CASE 2 ON DOUBLE 6'X4' RCB
3. FOR OTHER DETAILS, SEE STANDARD PLANS

LEGEND:

DIRECTION OF TRAFFIC

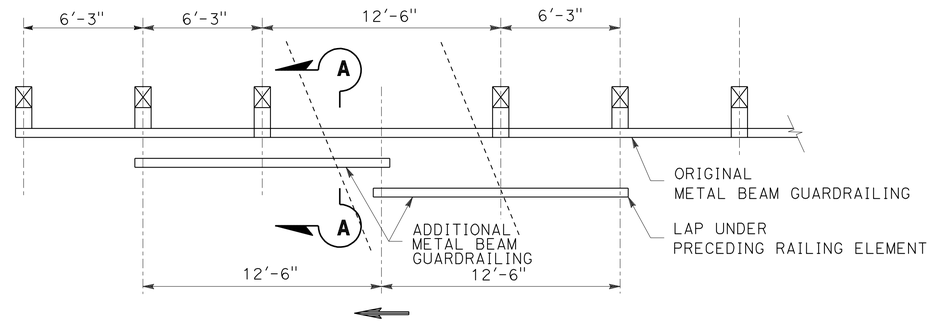

CASE 1
ONE POST OMITTED
AT LOCATION 6 OUTLET
AND LOCATION 7 INLET

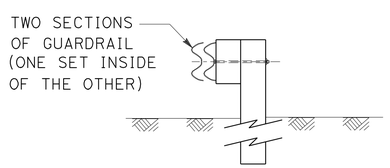

SECTION A-A

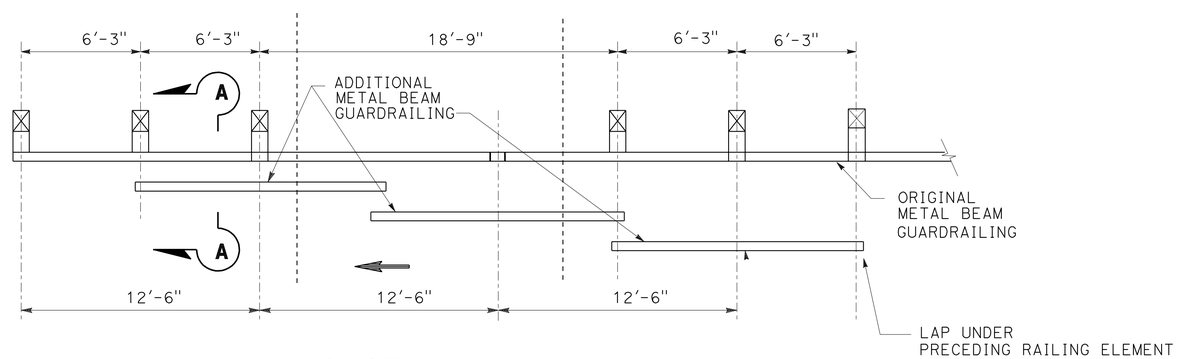

CASE 2
TWO POSTS OMITTED
LONG SPAN NESTED GUARDRAIL
AT LOCATION 3 INLET

CONSTRUCTION DETAILS

NO SCALE

C-1

STATE OF CALIFORNIA - DEPARTMENT OF TRANSPORTATION
Caltrans® DESIGN DEVELOPMENT

FUNCTIONAL SUPERVISOR: SERGIO E AVILA
CALCULATED-DESIGNED BY: VIDA DELROOZ
CHECKED BY: SERGIO E AVILA
REVISED BY
DATE REVISED

LAST REVISION 10-13-10
DATE PLOTTED => 18-FEB-2011
TIME PLOTTED => 13:54

Dist	COUNTY	ROUTE	POST MILES TOTAL PROJECT	SHEET No.	TOTAL SHEETS
08	Riv	74	64.7/69.0	11	61

REGISTERED CIVIL ENGINEER 10-28-10 DATE

2-14-11
PLANS APPROVAL DATE

REGISTERED PROFESSIONAL ENGINEER SERGIO EDUARDO-AVILA No. 60951 Exp. 12/31/10 CIVIL STATE OF CALIFORNIA

THE STATE OF CALIFORNIA OR ITS OFFICERS OR AGENTS SHALL NOT BE RESPONSIBLE FOR THE ACCURACY OR COMPLETENESS OF SCANNED COPIES OF THIS PLAN SHEET.

NOTE:

1. FOR PLATE "A", STRAIGHT METAL BOX SPACER AND TRANSITION RAILING (TYPE WB) SEE STANDARD PLAN A77J4

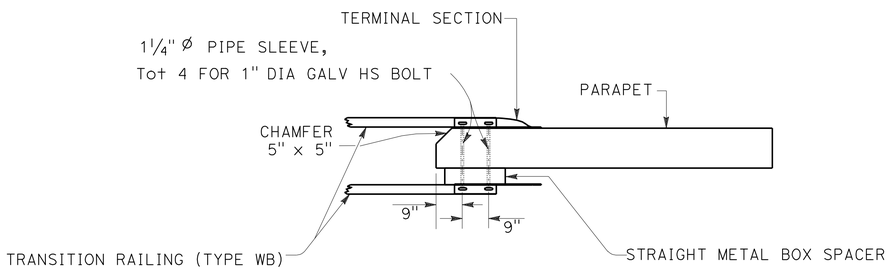

PLAN

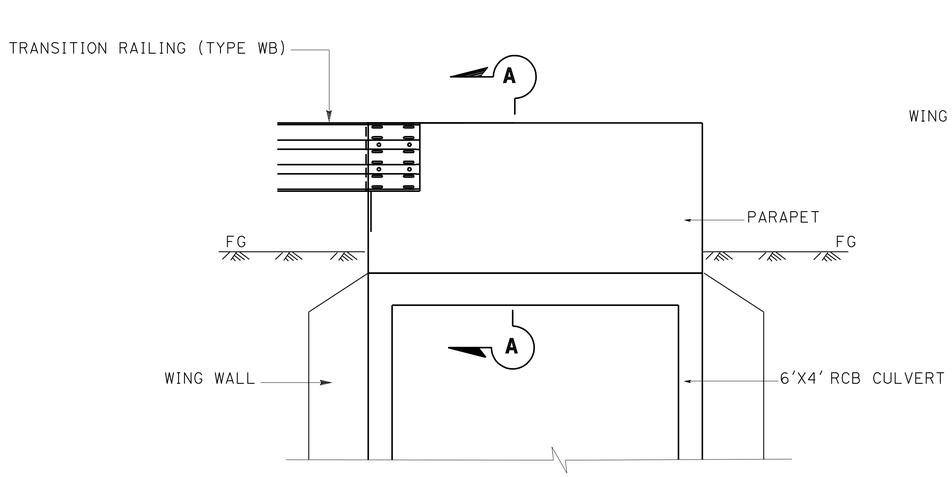

ELEVATION

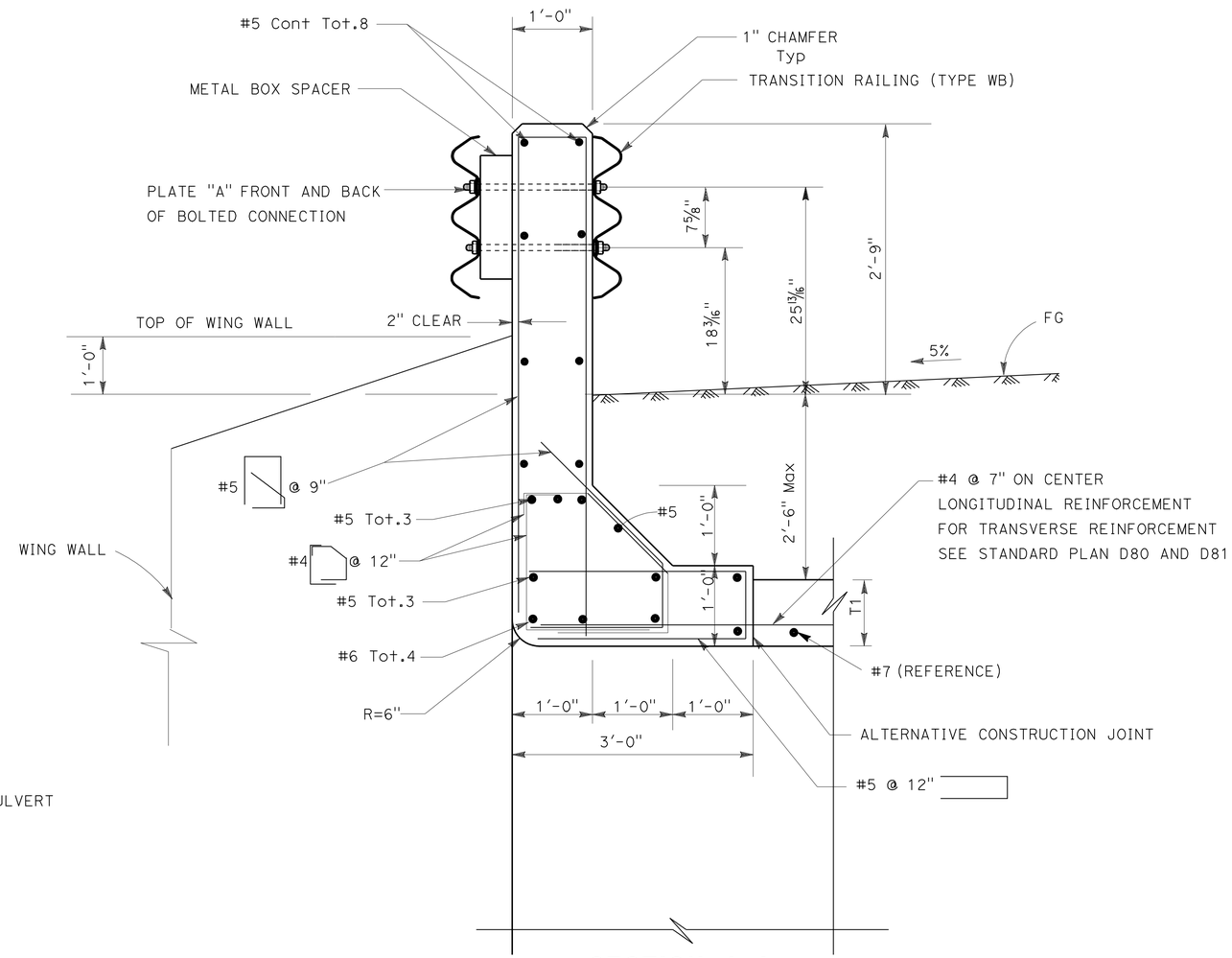

SECTION A-A

EXTENDED PARAPET WALL

USE AT CULVERTS:
LOCATIONS 1, 2, 4 AND 5 INLET AND OUTLET
LOCATIONS 3 AND 7 OUTLET
LOCATION 6 INLET

CONSTRUCTION DETAILS

NO SCALE

C-2

STATE OF CALIFORNIA - DEPARTMENT OF TRANSPORTATION
Caltrans DESIGN DEVELOPMENT

FUNCTIONAL SUPERVISOR: SERGIO E AVILA
CALCULATED-DESIGNED BY: MICHELLE TAVAKOLI
CHECKED BY: SERGIO E AVILA
REVISED BY
DATE REVISED

LAST REVISION 10-13-10
DATE PLOTTED => 18-FEB-2011
TIME PLOTTED => 14:53

Dist	COUNTY	ROUTE	POST MILES TOTAL PROJECT	SHEET No.	TOTAL SHEETS
08	Riv	74	64.7/69.0	12	61

REGISTERED CIVIL ENGINEER 02-10-11 DATE

2-14-11
PLANS APPROVAL DATE

REGISTERED PROFESSIONAL ENGINEER SERGIO EDUARDO-AVILA No. 60951 Exp. 12/31/12 CIVIL STATE OF CALIFORNIA

THE STATE OF CALIFORNIA OR ITS OFFICERS OR AGENTS SHALL NOT BE RESPONSIBLE FOR THE ACCURACY OR COMPLETENESS OF SCANNED COPIES OF THIS PLAN SHEET.

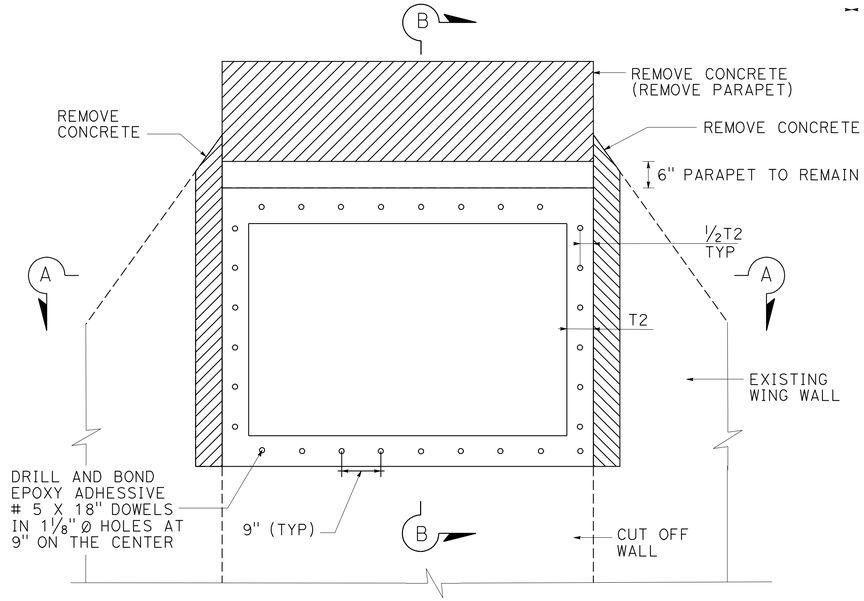

ELEVATION

SIMILAR @ DBL 6' X 4' RCB CULVERT
CONCRETE ON THE DITCH (APRON) NOT SHOWN FOR CLARITY

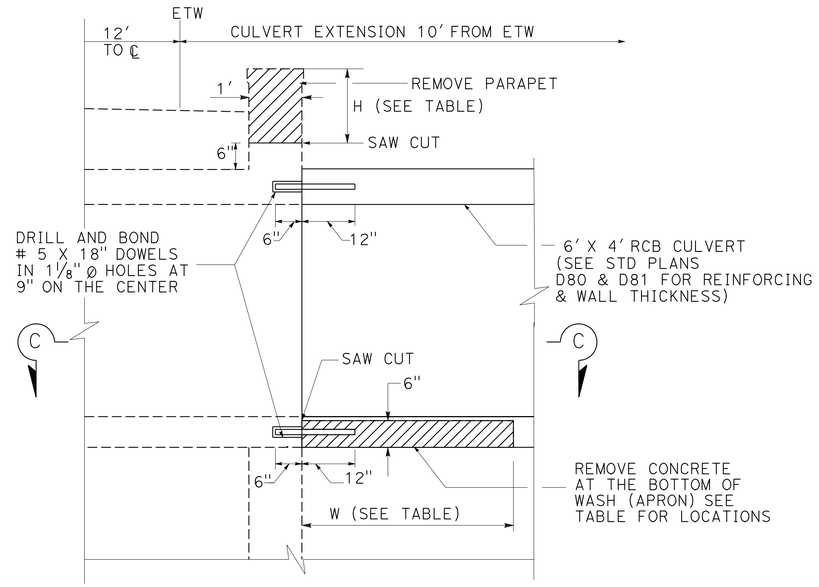

SECTION B-B

DIMENSIONS FOR REMOVE CONCRETE PARAPET HEIGHT

DRAINAGE SYSTEM No	INLET	OUTLET
	H	H
1	1.83	1.83
2	1.83	1.83
3	1.92	1.92
4	1.83	1.83
5	1.92	1.92
6	1.83	1.83
7	1.83	1.83

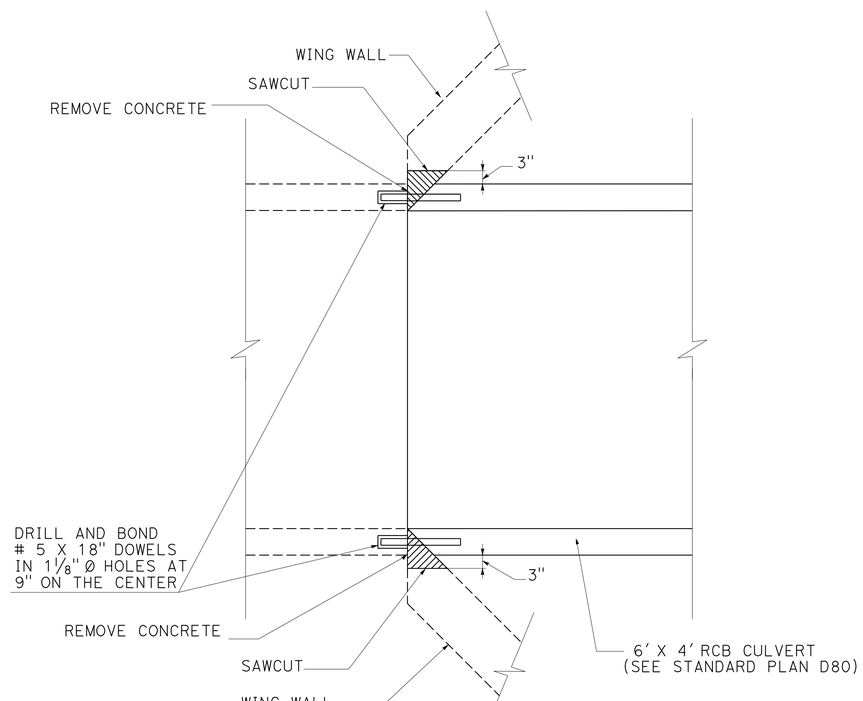

SECTION A-A

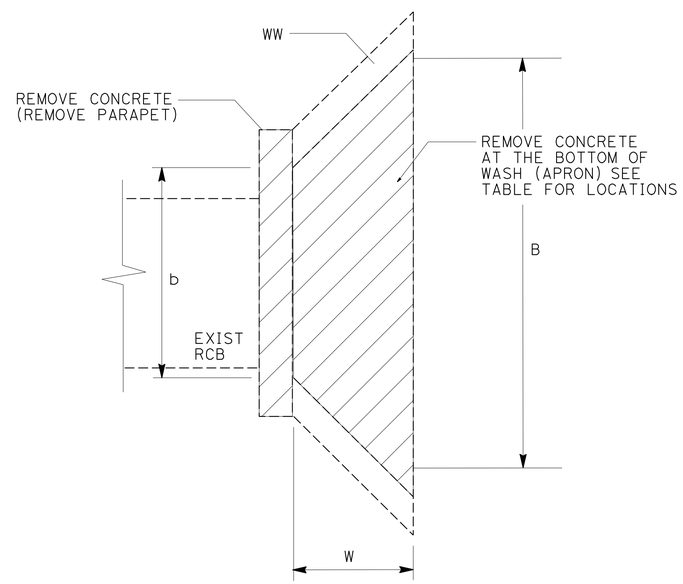

SECTION C-C

NEW RCB NOT SHOWN FOR CLARITY

DIMENSIONS FOR REMOVE CONCRETE AT THE BOTTOM OF THE WASH (APRON)

DRAINAGE SYSTEM No	INLET			OUTLET		
	B	b	W	B	b	W
1	13.99	6.57	4.02	15.06	6.23	4.35
2	11.78	6.54	2.83	12.92	6.48	3.71
3	20.88	12.17	4.02			
4	18.42	6.75	4.97	18.84	7.16	5.60
5	21.86	12.57	4.50			
6	16.90	6.50	5.70	17.76	6.37	5.80
7	18.28	6.45	5.66	17.86	7.01	5.41

CULVERT EXTENSION DETAIL

(SEE STD PLAN D80 & D81 FOR DETAILS NOT SHOWN)

CONSTRUCTION DETAIL

NO SCALE

C-3

STATE OF CALIFORNIA - DEPARTMENT OF TRANSPORTATION
Caltrans® DESIGN DEVELOPMENT

FUNCTIONAL SUPERVISOR: SERGIO E. AVILA
CALCULATED-DESIGNED BY: MICHELLE TAVAKOLI
CHECKED BY: SERGIO E. AVILA
REVISED BY
DATE REVISED

LAST REVISION 02-10-11
DATE PLOTTED => 18-FEB-2011
TIME PLOTTED => 14:53

Dist	COUNTY	ROUTE	POST MILES TOTAL PROJECT	SHEET No.	TOTAL SHEETS
08	Riv	74	64.7/69.0	13	61

REGISTERED CIVIL ENGINEER 10-28-10 DATE

2-14-11
PLANS APPROVAL DATE

REGISTERED PROFESSIONAL ENGINEER SERGIO EDUARDO-AVILA No. 60951 Exp. 12/31/10 CIVIL STATE OF CALIFORNIA

THE STATE OF CALIFORNIA OR ITS OFFICERS OR AGENTS SHALL NOT BE RESPONSIBLE FOR THE ACCURACY OR COMPLETENESS OF SCANNED COPIES OF THIS PLAN SHEET.

NOTES:

1. MATCH EXISTING SLOPE UNLESS NOTED.
2. FOR RSP DETAILS, SEE DRAINAGE DETAIL SHEET.

LEGEND:

- (x) DRAINAGE UNIT No.
- (x) DRAINAGE SYSTEM No.
- Conc-RSP
- REMOVE Conc

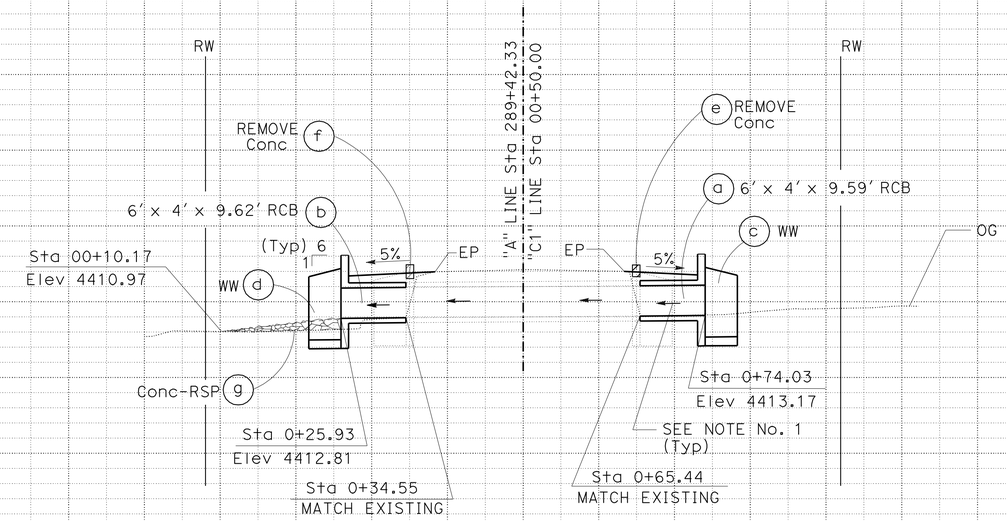

DRAINAGE SYSTEM No. (1)
"C1" LINE
Sta 289+42

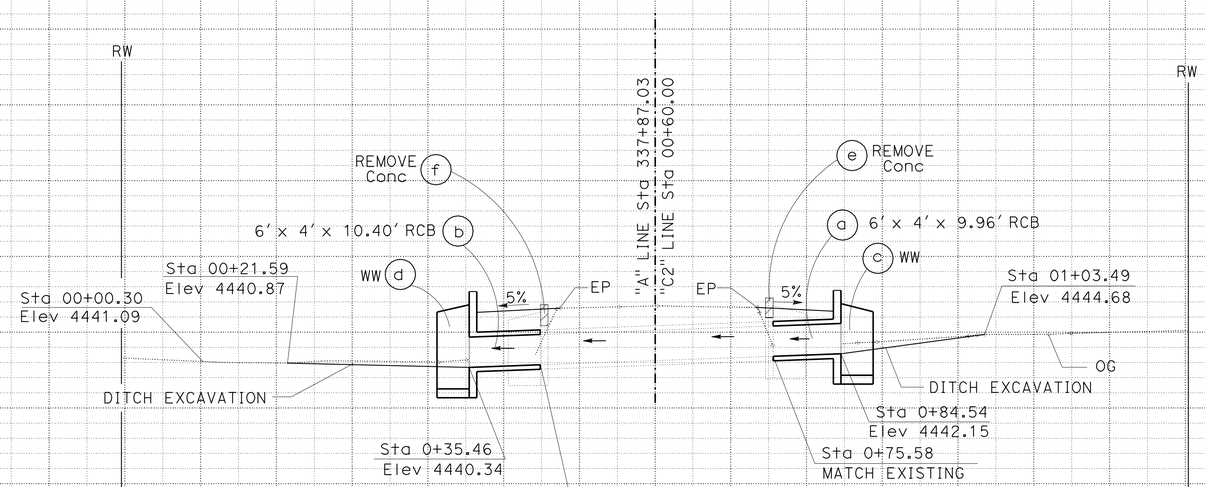

DRAINAGE SYSTEM No. (2)
"C2" LINE

4425
4415
4405
4395
4470
4460
4450
4440
4430

DRAINAGE PROFILE

SCALE: Horiz 1" = 10'
Vert 1" = 10'

DP-1

STATE OF CALIFORNIA - DEPARTMENT OF TRANSPORTATION
Caltrans® DESIGN DEVELOPMENT

FUNCTIONAL SUPERVISOR: SERGIO E AVILA
CALCULATED-DESIGNED BY: VIDA DELROOZ
CHECKED BY: SERGIO E AVILA
REVISED BY
DATE REVISED

STATION
CY Exc
Emb
TOTAL

LAST REVISION 10-27-10
DATE PLOTTED => 18-FEB-2011
TIME PLOTTED => 16:43

Dist	COUNTY	ROUTE	POST MILES TOTAL PROJECT	SHEET No.	TOTAL SHEETS
08	Riv	74	64.7/69.0	14	61

REGISTERED CIVIL ENGINEER 10-28-10 DATE

2-14-11
PLANS APPROVAL DATE

REGISTERED PROFESSIONAL ENGINEER SERGIO EDUARDO-AVILA No. 60951 Exp. 12/31/10 CIVIL STATE OF CALIFORNIA

THE STATE OF CALIFORNIA OR ITS OFFICERS OR AGENTS SHALL NOT BE RESPONSIBLE FOR THE ACCURACY OR COMPLETENESS OF SCANNED COPIES OF THIS PLAN SHEET.

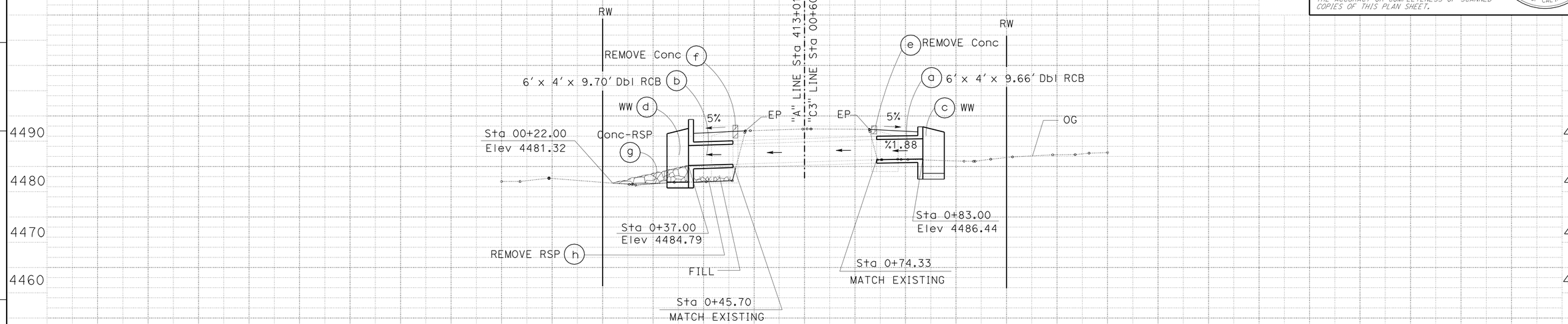

DRAINAGE SYSTEM No. 3

"C3" LINE

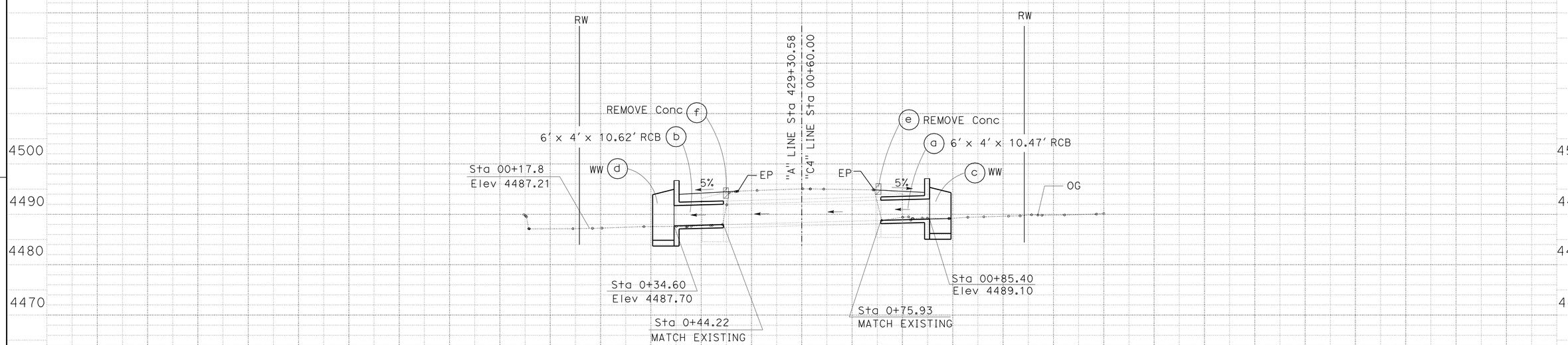

DRAINAGE SYSTEM No. 4

"C4" LINE

DRAINAGE PROFILE

SCALE: Horiz 1" = 10'
Vert 1" = 10'

DP-2

STATE OF CALIFORNIA - DEPARTMENT OF TRANSPORTATION
Caltrans® DESIGN DEVELOPMENT

FUNCTIONAL SUPERVISOR: SERGIO E AVILA
CALCULATED-DESIGNED BY: VIDA DELROOZ
CHECKED BY: SERGIO E AVILA
REVISED BY
DATE REVISED

STATION
CY Exc
Emb
TOTAL

LAST REVISION 10-27-10 | DATE PLOTTED => 18-FEB-2011 | TIME PLOTTED => 16:43

Dist	COUNTY	ROUTE	POST MILES TOTAL PROJECT	SHEET No.	TOTAL SHEETS
08	Riv	74	64.7/69.0	15	61

REGISTERED CIVIL ENGINEER 10-28-10 DATE

2-14-11
PLANS APPROVAL DATE

REGISTERED PROFESSIONAL ENGINEER SERGIO EDUARDO-AVILA No. 60951 Exp. 12/31/10 CIVIL STATE OF CALIFORNIA

THE STATE OF CALIFORNIA OR ITS OFFICERS OR AGENTS SHALL NOT BE RESPONSIBLE FOR THE ACCURACY OR COMPLETENESS OF SCANNED COPIES OF THIS PLAN SHEET.

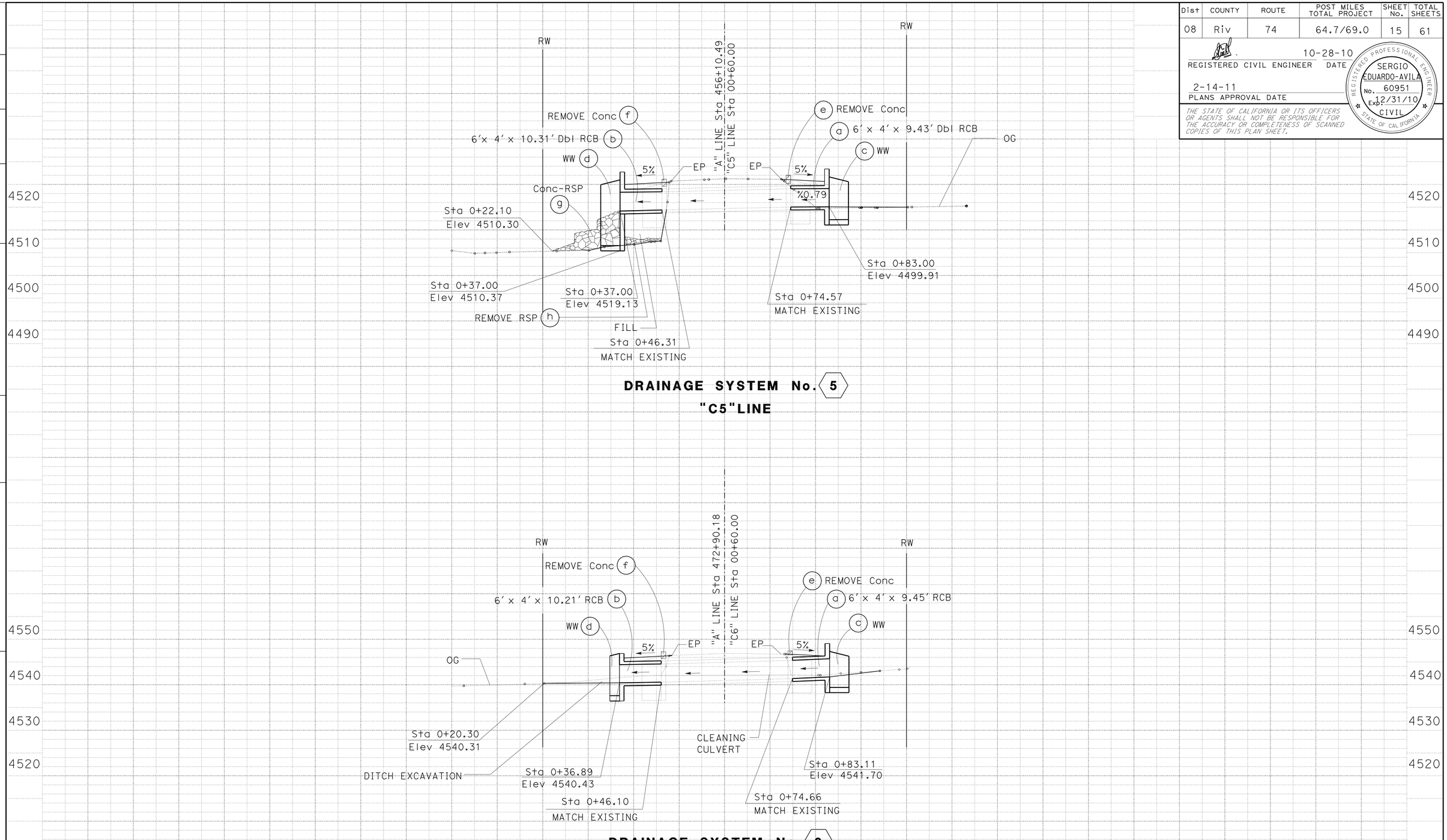

DRAINAGE PROFILE

SCALE: Horiz 1" = 10'
Vert 1" = 10'

DP-3

STATE OF CALIFORNIA - DEPARTMENT OF TRANSPORTATION
Caltrans DESIGN DEVELOPMENT

FUNCTIONAL SUPERVISOR: SERGIO E AVILA
CALCULATED-DESIGNED BY: VIDA DELROOZ
CHECKED BY: SERGIO E AVILA
REVISED BY
DATE REVISED

STATION
CY Exc
Emb
TOTAL

LAST REVISION 09-27-10
DATE PLOTTED => 18-FEB-2011
TIME PLOTTED => 16:44

Dist	COUNTY	ROUTE	POST MILES TOTAL PROJECT	SHEET No.	TOTAL SHEETS
08	Riv	74	64.7/69.0	16	61

REGISTERED CIVIL ENGINEER 10-28-10 DATE

2-14-11
PLANS APPROVAL DATE

REGISTERED PROFESSIONAL ENGINEER SERGIO EDUARDO AVILA No. 60951 Exp. 12/31/10 CIVIL STATE OF CALIFORNIA

THE STATE OF CALIFORNIA OR ITS OFFICERS OR AGENTS SHALL NOT BE RESPONSIBLE FOR THE ACCURACY OR COMPLETENESS OF SCANNED COPIES OF THIS PLAN SHEET.

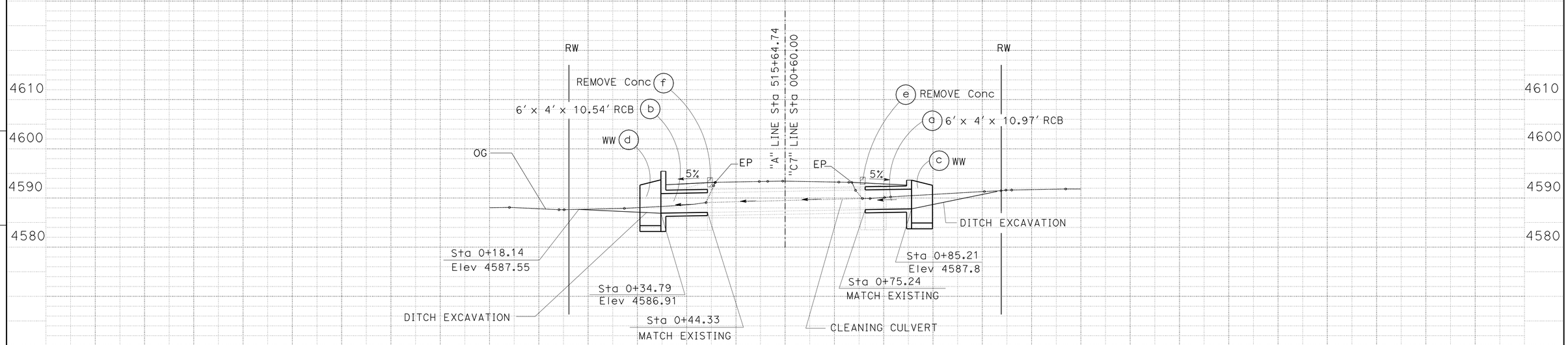

DRAINAGE SYSTEM No. 7
"C7"LINE

DRAINAGE PROFILE

SCALE: Horiz 1" = 10'
Vert 1" = 10'

DP-4

VIDA DELROOZ — REVISED BY
SERGIO E AVILA — DATE REVISED
CALCULATED-DESIGNED BY
CHECKED BY
FUNCTIONAL SUPERVISOR
SERGIO E AVILA

STATE OF CALIFORNIA - DEPARTMENT OF TRANSPORTATION
Caltrans® DESIGN DEVELOPMENT

STATION
CY Exc
Emb
TOTAL

LAST REVISION DATE PLOTTED => 18-FEB-2011
10-27-10 TIME PLOTTED => 16:44

Dist	COUNTY	ROUTE	POST MILES TOTAL PROJECT	SHEET No.	TOTAL SHEETS
08	Riv	74	64.7/69.0	17	61

REGISTERED CIVIL ENGINEER 10-28-10 DATE

2-14-11
PLANS APPROVAL DATE

REGISTERED PROFESSIONAL ENGINEER SERGIO EDUARDO-AVILA No. 60951 Exp. 12/31/10 CIVIL STATE OF CALIFORNIA

THE STATE OF CALIFORNIA OR ITS OFFICERS OR AGENTS SHALL NOT BE RESPONSIBLE FOR THE ACCURACY OR COMPLETENESS OF SCANNED COPIES OF THIS PLAN SHEET.

NOTES:

1. SEE LAYOUT SHEET FOR "δ" ANGLE.
2. SLOPE AT TOP OF WINGWALLS IS 6 HORIZONTAL TO 1 VERTICAL.
3. DESIGN H DIMENSION IS THE HIGHEST DIMENSION OF THE WINGWALL MEASURED NEXT TO THE PARAPET WALL (SEE STANDARD PLAN D84).

LEGEND:

- (X) DRAINAGE UNIT No.
- ⟨X⟩ DRAINAGE SYSTEM No.
- REMOVE Conc
- DIRECTION OF TRAVEL

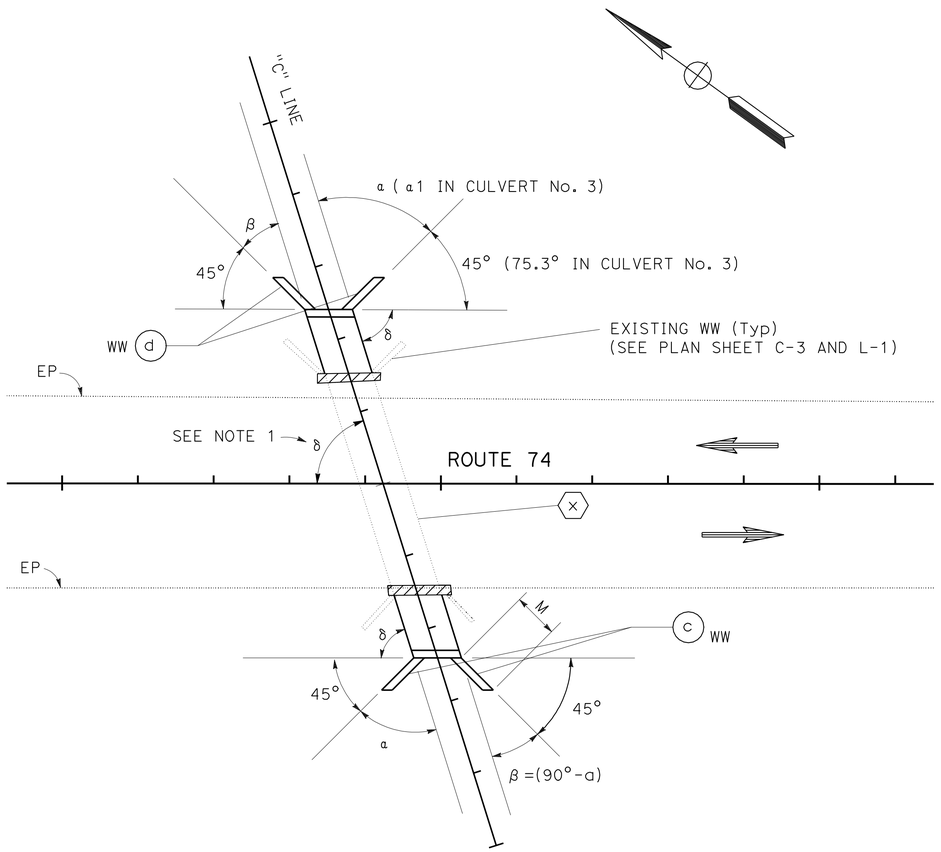

TYPICAL LAYOUT

WINGWALLS DESIGN DEMENSIONS (SEE Std PLAN D84)

DRAINAGE SYSTEM No. ⟨X⟩	ANGLE OF FLARE (DEGREE)			DESIGN "H" (Ft)		LENGHT "M" (Ft)	
	α	β	α1	(c)	(d)	(c) & (d)	
⟨1⟩	62.4	27.6		8.16	8.66	6.0	
⟨2⟩	24.6	65.4		8.50	10.16	6.0	
⟨3⟩	45.3	44.7	15	8.33	9.58	6.0	
⟨4⟩	70.1	19.9		8.16	9.16	6.0	
⟨5⟩	45.2	44.8		8.41	13.41	6.0	
⟨6⟩	50.6	39.4		6.91	8.5	c: 6.0	d: 3.0
⟨7⟩	69.2	20.8		7.75	8.33	6.0	

DRAINAGE DETAIL

NO SCALE **DD-1**

STATE OF CALIFORNIA - DEPARTMENT OF TRANSPORTATION
Caltrans DESIGN DEVELOPMENT

FUNCTIONAL SUPERVISOR: SERGIO E AVILA
CALCULATED-DESIGNED BY: VIDA DELROOZ
CHECKED BY: SERGIO E AVILA
REVISED BY
DATE REVISED

LAST REVISION 10-13-10 | DATE PLOTTED => 18-FEB-2011 | TIME PLOTTED => 16:19

Dist	COUNTY	ROUTE	POST MILES TOTAL PROJECT	SHEET No.	TOTAL SHEETS
08	Riv	74	64.7/69.0	18	61

10-28-10
REGISTERED CIVIL ENGINEER DATE

2-14-11
PLANS APPROVAL DATE

REGISTERED PROFESSIONAL ENGINEER
SERGIO EDUARDO AVILA
No. 60951
Exp. 12/31/10
CIVIL
STATE OF CALIFORNIA

THE STATE OF CALIFORNIA OR ITS OFFICERS OR AGENTS SHALL NOT BE RESPONSIBLE FOR THE ACCURACY OR COMPLETENESS OF SCANNED COPIES OF THIS PLAN SHEET.

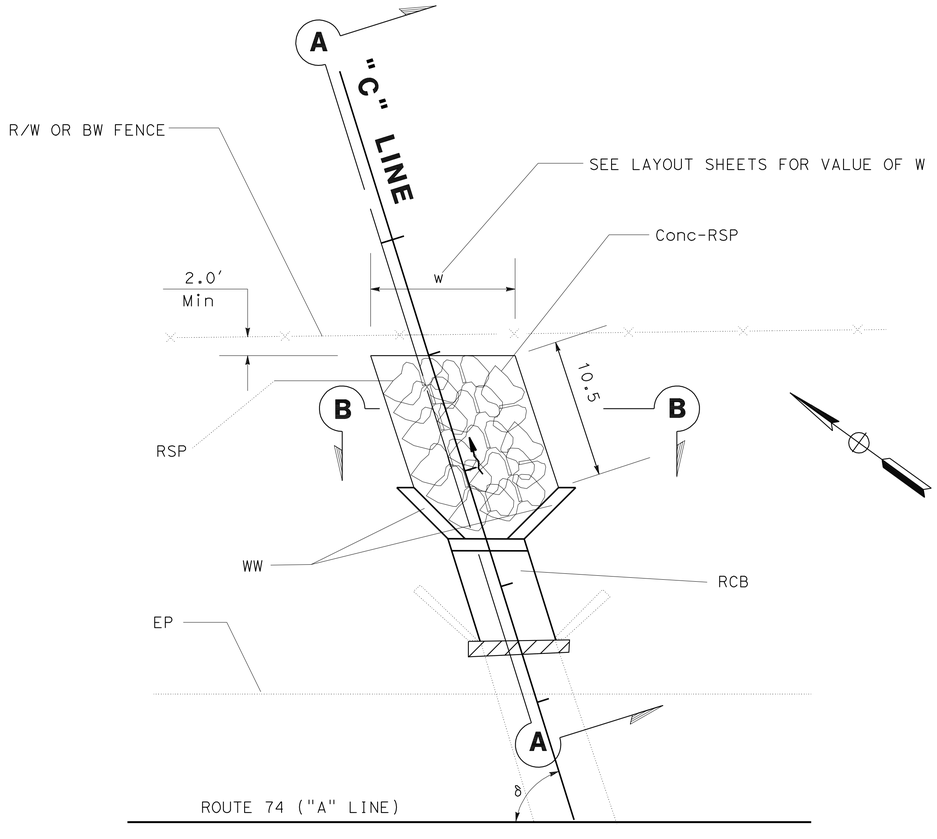

PLAN
Conc-RSP

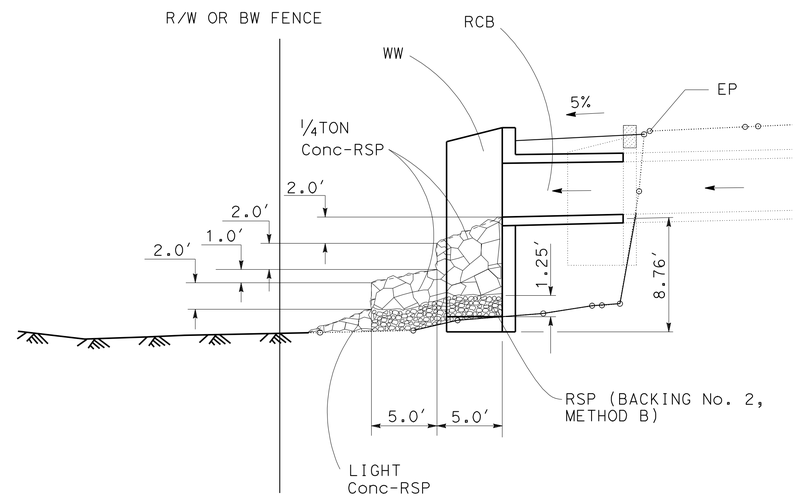

SECTION A-A
(AT LOCATION 5)

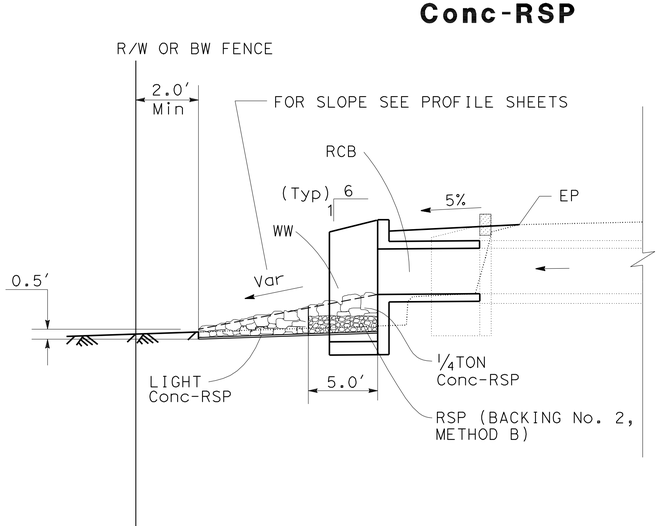

SECTION A-A
(AT LOCATION 1 AND 3)

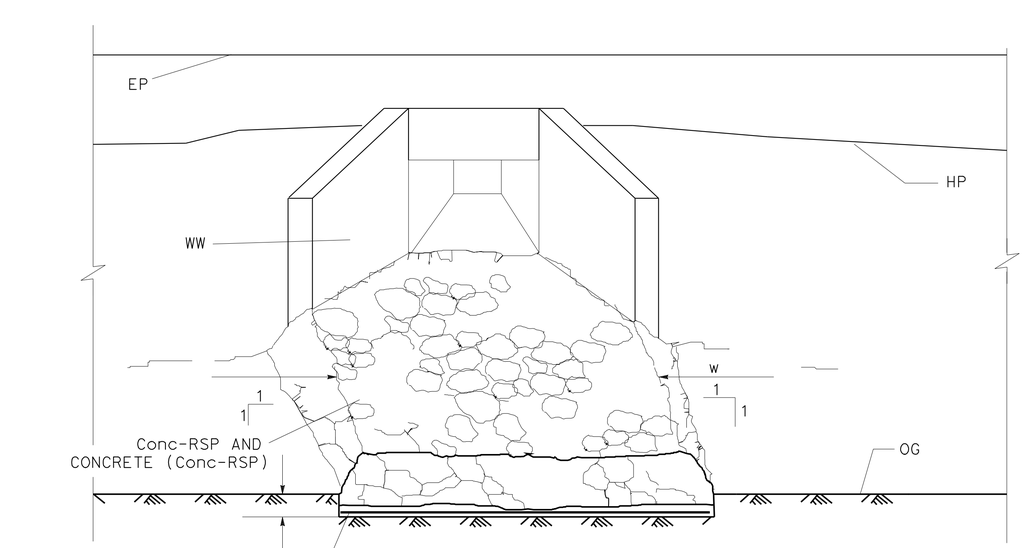

SECTION B-B

DRAINAGE DETAIL

NO SCALE **DD-2**

STATE OF CALIFORNIA - DEPARTMENT OF TRANSPORTATION
Caltrans DESIGN DEVELOPMENT

FUNCTIONAL SUPERVISOR: SERGIO E AVILA
CALCULATED-DESIGNED BY: VIDA DELROOZ
CHECKED BY: SERGIO E AVILA
REVISED BY
DATE REVISED

LAST REVISION 10-14-10
DATE PLOTTED => 18-FEB-2011
TIME PLOTTED => 16:20

Dist	COUNTY	ROUTE	POST MILES TOTAL PROJECT	SHEET No.	TOTAL SHEETS
08	Riv	74	64.7/69.0	19	61

REGISTERED CIVIL ENGINEER 10-28-10 DATE

2-14-11
PLANS APPROVAL DATE

REGISTERED PROFESSIONAL ENGINEER SERGIO EDUARDO-AVILA No. 60951 Exp. 12/31/10 CIVIL STATE OF CALIFORNIA

THE STATE OF CALIFORNIA OR ITS OFFICERS OR AGENTS SHALL NOT BE RESPONSIBLE FOR THE ACCURACY OR COMPLETENESS OF SCANNED COPIES OF THIS PLAN SHEET.

NOTES:

1. THIS DRAWING INDICATES THE WORK TO BE DONE FOR:
   IMPORTED BORROW
   DITCH EXCAVATION
   STRUCTURE EXCAVATION
2. SLOPES AND DIMENSIONS MAY VARY TO FIT FIELD CONDITIONS.
3. TOP LIMIT OF STRUCTURE EXCAVATION IS ORIGINAL GROUND IF DITCH IS NOT EXCAVATED.

LEGEND:

- STRUCTURE EXCAVATION
- STRUCTURE BACKFILL
- IMPORTED BORROW
- DITCH EXCAVATION
- ORIGINAL GROUND

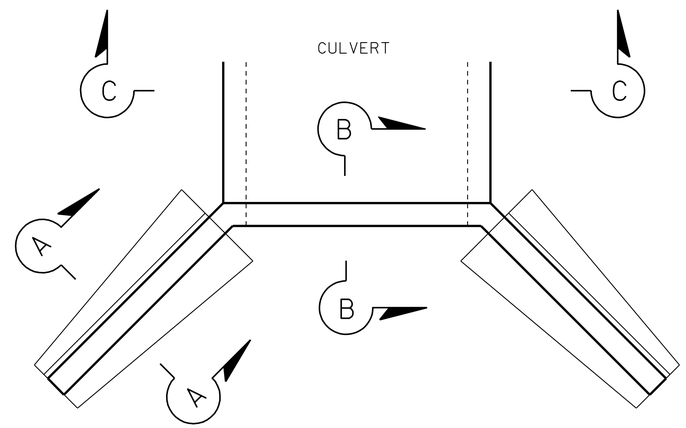

PLAN

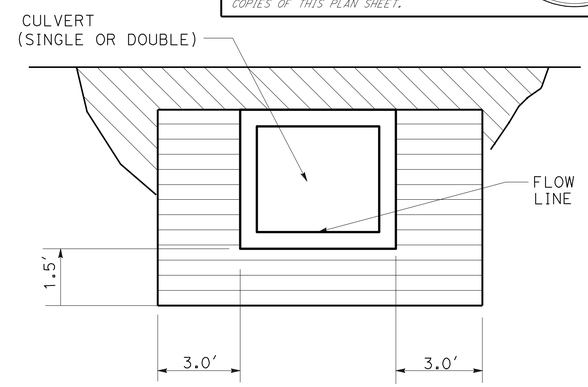

BACKFILL

SECTION C-C

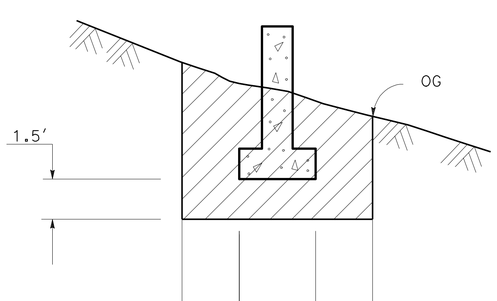

EXCAVATION

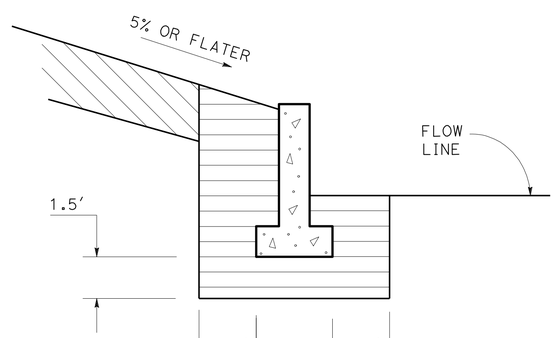

BACKFILL

SECTION A-A

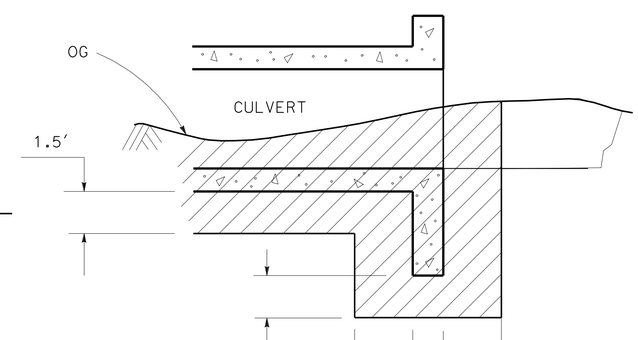

EXCAVATION

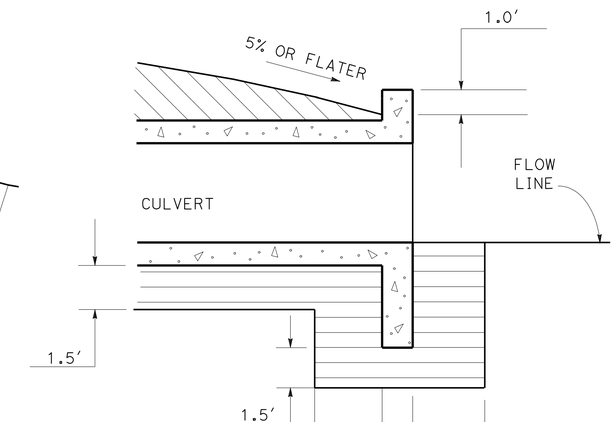

BACKFILL

SECTION B-B

DRAINAGE DETAIL

NO SCALE **DD-3**

STATE OF CALIFORNIA - DEPARTMENT OF TRANSPORTATION
Caltrans® DESIGN DEVELOPMENT

FUNCTIONAL SUPERVISOR: SERGIO E AVILA
CALCULATED-DESIGNED BY: VIDA DELROOZ
CHECKED BY: SERGIO E AVILA
REVISED BY
DATE REVISED

LAST REVISION 10-14-10 | DATE PLOTTED => 18-FEB-2011 | TIME PLOTTED => 16:20

Dist	COUNTY	ROUTE	POST MILES TOTAL PROJECT	SHEET No.	TOTAL SHEETS
08	Riv	74	64.7/69.0	20	61

REGISTERED CIVIL ENGINEER 10-28-10 DATE

2-14-11
PLANS APPROVAL DATE

REGISTERED PROFESSIONAL ENGINEER SERGIO EDUARDO-AVILA No. 60951 Exp. 12/31/10 CIVIL STATE OF CALIFORNIA

THE STATE OF CALIFORNIA OR ITS OFFICERS OR AGENTS SHALL NOT BE RESPONSIBLE FOR THE ACCURACY OR COMPLETENESS OF SCANNED COPIES OF THIS PLAN SHEET.

DRAINAGE QUANTITIES

PLAN SHEET No.	DRAINAGE SYSTEM No. ⟨X⟩	DRAINAGE UNIT No. ⊗	REMOVE RSP	RSP FABRIC (TYPE B)	RSP (BACKING No. 2 METHOD B)	CONCRETE (CONCRETED-ROCK SLOPE PROTECTION)	CONCRETED-RSP (1/4T, METHOD B)	CONCRETED-RSP (LIGHT, METHOD B)	REMOVE CONCRETE	STRUCTURAL CONCRETE BOX CULVERT	BAR REINFORCING STEEL: BOX CULVERT	BAR REINFORCING STEEL: WING WALL	STRUCTURAL CONCRETE WING WALL	*PORTLAND CEMENT CONCRETE (PATCH)	*EPOXY ADHESIVE (BOND COAT)	DITCH EXCAVATION	CLEANING CULVERT	*INJECT CRACK (EPOXY)	DESCRIPTION	STATION (LINE "A")	PLAN SHEET No.	DRAINAGE SYSTEM No. ⟨X⟩	DRAINAGE UNIT No. ⊗
			CY	SQYD	CY	CY	CY	CY	CY	CY	LB	LB	CY	CF	GAL	CY	CY	LF					
L-1	1													2.24	0.33			8	PATCHING, EPOXY / INJECT CRACK (EPOXY), EXCAVATION	289+42.33	L-1	1	
		a								6.03	1154.51								6′ x 4′ RCB (INLET)				a
		b								6.10	1159.56								6′ x 4′ RCB (OUTLET)				b
		c										444	7.02						WW CONCRETE / REINFORCING STEEL (INLET)				c
		d										444	7.11						WW CONCRETE / REINFORCING STEEL (OUTLET)				d
		e							1.34										REMOVE CONCRETE (INLET)				e
		f							1.43										REMOVE CONCRETE (OUTLET)				f
		g		26.09	3.36	2	7.14	7.2											RSP FABRIC TYPE B, Conc-RSP				g
L-2	2													4.73	0.69	12.9	14.67	62	PATCHING, EPOXY / INJECT CRACK (EPOXY), EXCAVATION	337+87.03	L-2	2	
		a								6.30	1191.24								6′ x 4′ RCB (INLET)				a
		b								6.91	1264.40								6′ x 4′ RCB (OUTLET)				b
		c										444	7.43						WW CONCRETE / REINFORCING STEEL (INLET)				c
		d										744	8.39						WW CONCRETE / REINFORCING STEEL (OUTLET)				d
		e							1.05										REMOVE CONCRETE (INLET)				e
		f							1.23										REMOVE CONCRETE (OUTLET)				f
L-3	3													3.65	0.53			16	PATCHING, EPOXY / INJECT CRACK (EPOXY), EXCAVATION	413+01.43	L-3	3	
		a								10.65	1984.03								6′ x 4′ Dbl RCB (INLET)				a
		b								13.13	2549.11								6′ x 4′ Dbl RCB (OUTLET)				b
		c										444	7.02						WW CONCRETE / REINFORCING STEEL (INLET)				c
		d										1080	10.50						WW CONCRETE / REINFORCING STEEL (OUTLET)				d
		e							2.25										REMOVE CONCRETE (INLET)				e
		f							1.03										REMOVE CONCRETE (OUTLET)				f
		g		32.12	4.86	2.6	12	14.7											RSP FABRIC TYPE B, Conc-RSP				g
		h	4.5																REMOVE RSP (5′ W x 8′ L x 3′ D)				h
L-4	4													1.49	0.22			18	PATCHING, EPOXY / INJECT CRACK (EPOXY), EXCAVATION	429+30.58	L-4	4	
		a								6.44	1243.43								6′ x 4′ RCB (INLET)				a
		b								6.74	1275.33								6′ x 4′ RCB (OUTLET)				b
		c										444	7.00						WW CONCRETE / REINFORCING STEEL (INLET)				c
		d										588	7.66						WW CONCRETE / REINFORCING STEEL (OUTLET)				d
		e							1.71										REMOVE CONCRETE (INLET)				e
		f							1.9										REMOVE CONCRETE (OUTLET)				f
L-5	5													3.15	0.46				PATCHING, EPOXY / EXCAVATION	456+10.49	L-5	5	
		a								10.53	2446.75								6′ x 4′ Dbl RCB (INLET)				a
		b								14.55	2601.75								6′ x 4′ Dbl RCB (OUTLET)				b
		c										444	7.08						WW CONCRETE / REINFORCING STEEL (INLET)				c
		d										1500	11.84						WW CONCRETE / REINFORCING STEEL (OUTLET)				d
		e							2.5										REMOVE CONCRETE (INLET)				e
		f							1.02										REMOVE CONCRETE (OUTLET)				f
		g		41.38	9.72	7.64	52.41	4.62											RSP FABRIC TYPE B, Conc-RSP				g
		h	41.7																REMOVE RSP (25′ W x 10′ L x 4.5′ D)				h
SUBTOTAL			46.2	99.59	17.94	12.24	71.55	26.52	15.44	87.4	16870.02	6576	81.05	15.26	2.23	12.9	14.67	104					

* PATCHING AREAS AND INJECT CRACK LENGTHS ARE MAINLY LOCATED ON CULVERT WALLS AND CLOSE TO THE INLET AND/OR OUTLET.

DRAINAGE QUANTITIES

DQ-1

STATE OF CALIFORNIA - DEPARTMENT OF TRANSPORTATION
Caltrans® DESIGN DEVELOPMENT

FUNCTIONAL SUPERVISOR: SERGIO E. AVILA
CALCULATED-DESIGNED BY: MICHELL TAVAKOLI
CHECKED BY: SERGIO E. AVILA
REVISED BY
DATE REVISED

LAST REVISION 10-14-10
DATE PLOTTED => 18-FEB-2011
TIME PLOTTED => 16:20

Dist	COUNTY	ROUTE	POST MILES TOTAL PROJECT	SHEET No.	TOTAL SHEETS
08	Riv	74	64.7/69.0	21	61

REGISTERED CIVIL ENGINEER 10-28-10 DATE

2-14-11
PLANS APPROVAL DATE

REGISTERED PROFESSIONAL ENGINEER SERGIO EDUARDO-AVILA No. 60951 Exp. 12/31/10 CIVIL STATE OF CALIFORNIA

THE STATE OF CALIFORNIA OR ITS OFFICERS OR AGENTS SHALL NOT BE RESPONSIBLE FOR THE ACCURACY OR COMPLETENESS OF SCANNED COPIES OF THIS PLAN SHEET.

DRAINAGE QUANTITIES

PLAN SHEET No.	DRAINAGE SYSTEM No. ⟨X⟩	DRAINAGE UNIT No. ⟨⊗⟩	REMOVE RSP	RSP FABRIC TYPE B	RSP (BACKING No. 2 METHOD B)	CONCRETE (CONCRETED-ROCK SLOPE PROTECTION)	CONCRETED-RSP (1/4T, METHOD B)	CONCRETED-RSP (LIGHT, METHOD B)	REMOVE CONCRETE	STRUCTURAL CONCRETE BOX CULVERT	BAR REINFORCING STEEL		STRUCTURAL CONCRETE WINGWALL	*PORTLAND CEMENT CONCRETE (PATCH)	*EPOXY ADHESIVE (BOND COAT)	DITCH EXCAVATION	CLEANING CULVERT	*INJECT CRACK (EPOXY)	DESCRIPTION	STATION (LINE "A")	PLAN SHEET No.	DRAINAGE SYSTEM No. ⟨X⟩	DRAINAGE UNIT No. ⟨⊗⟩
											BOX CULVERT	WING WALL											
			CY	SQYD	CY	CY	CY	CY	CY	CY	LB	LB	CY	CF	GAL	CY	CY	LF					
L-6	6													9.96	1.45	10	10.3		PATCHING, EPOXY / EXCAVATION	472+90.18	L-6	6	
		a								5.98	1105.88								6′ x 4′ RCB (INLET)				a
		b								6.41	874.75								6′ x 4′ RCB (OUTLET)				b
		c										444	7.05						WW CONCRETE / REINFORCING (INLET)				c
		d										444	7.43						WW CONCRETE / REINFORCING (OUTLET)				d
		e							1.8										REMOVE CONCRETE (INLET)				e
		f							1.86										REMOVE CONCRETE (OUTLET)				f
L-7	7													5.31	0.78	19.9	17.4		PATCHING, EPOXY / EXCAVATION	515+64.74	L-7	7	
		a								6.55	884.32								6′ x 4′ RCB (INLET)				a
		b								6.58	1232.80								6′ x 4′ RCB (OUTLET)				b
		c										360	6.78						WW CONCRETE / REINFORCING (INLET)				c
		d										444	7.45						WW CONCRETE / REINFORCING (OUTLET)				d
		e							1.89										REMOVE CONCRETE (INLET)				e
		f							1.8										REMOVE CONCRETE (OUTLET)				f
SUBTOTAL									7.36	25.5	4097.76	1692	28.71	15.27	2.23	29.9	27.7						
TOTAL			46.2	99.59	17.94	12.24	71.55	26.52	22.8	112.9	29235.78		109.76	30.54	4.46	42.8	42.37	104					

* PATCHING AREAS AND INJECT CRACK LENGTHS ARE MAINLY LOCATED ON CULVERT WALLS AND CLOSE TO THE INLET AND/OR OUTLET.

CALCULATED-DESIGNED BY MICHELLE TAVAKOLI
CHECKED BY SERGIO E AVILA
REVISED BY
DATE REVISED
FUNCTIONAL SUPERVISOR SERGIO E AVILA

STATE OF CALIFORNIA - DEPARTMENT OF TRANSPORTATION
Caltrans DESIGN DEVELOPMENT

DRAINAGE QUANTITIES

DQ-2

LAST REVISION 10-14-10 DATE PLOTTED => 18-FEB-2011 TIME PLOTTED => 16:20

Dist	COUNTY	LOCATION CODE	POST MILES TOTAL PROJECT	SHEET No.	TOTAL SHEETS
08	Riv	74	64.7/69.0	22	61

10-28-10
REGISTERED CIVIL ENGINEER DATE

2-14-11
PLANS APPROVAL DATE

REGISTERED PROFESSIONAL ENGINEER SERGIO EDUARDO-AVILA No. 60951 Exp. 12/31/10 CIVIL STATE OF CALIFORNIA

THE STATE OF CALIFORNIA OR ITS OFFICERS OR AGENTS SHALL NOT BE RESPONSIBLE FOR THE ACCURACY OR COMPLETENESS OF SCANNED COPIES OF THIS PLAN SHEET.

NOTES:

1. FOR ACCURATE RIGHT OF WAY DATA, CONTACT RIGHT OF WAY ENGINEERING AT THE DISTRICT OFFICE.
2. UTILITY OWNERSHIP ON THIS PROJECT:
   CONCRETE ENCASEMENT - VERIZON
   CONDUIT - VERIZON
   FIBER OPTIC - VERIZON
3. ALL ELEVATIONS SHOWN REFER TO THE TOP OF UTILITY UNLESS OTHERWISE INDICATED.
4. CALIFORNIA COORDINATE SYSTEM:
   NAD 83, ZONE 6, DESIGN PLANE 5.

LEGEND:

(X) POTHOLE LOCATION No.

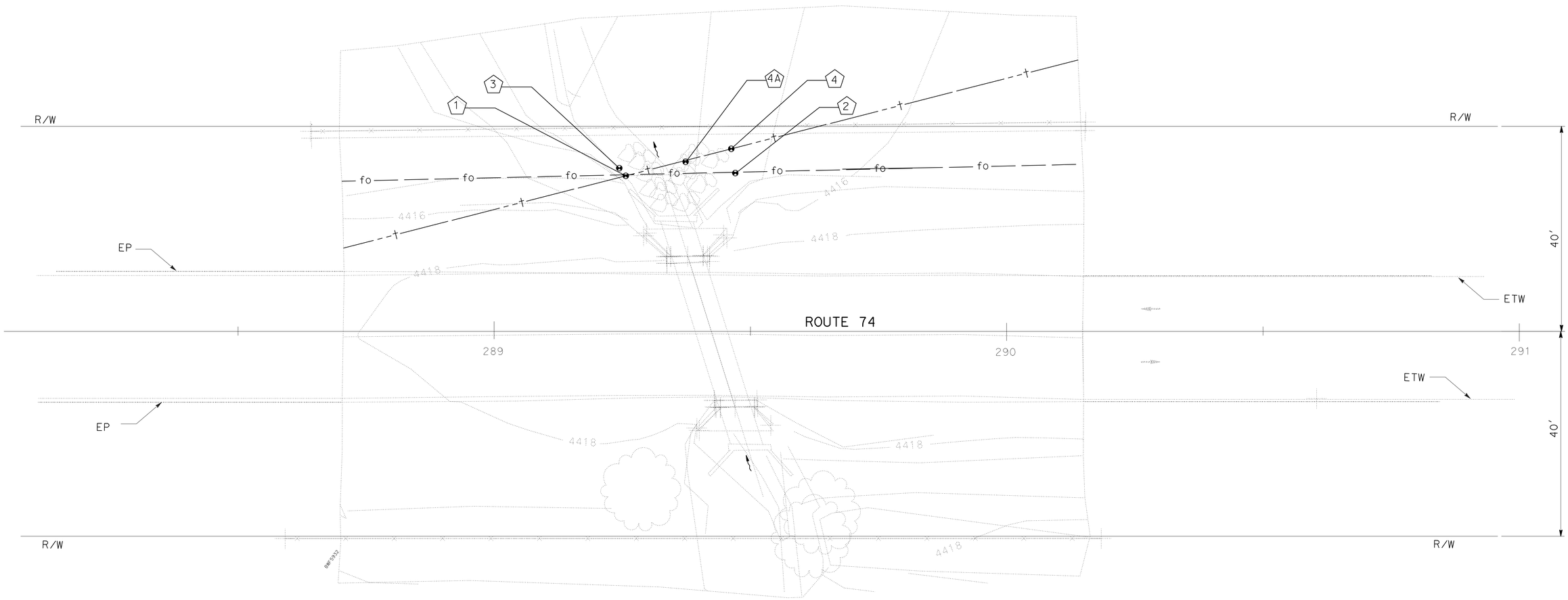

UTILITY POTHOLE LOCATION TABLE

(X)	UTILITY	NORTHING	EASTING	UTILITY ELEVATION	DEPTH (FEET)
1	FIBER OPTIC	2181438.720	6436622.813	4408.25	3.4
2	FIBER OPTIC	2181421.726	6436635.295	4408.41	5.1
4A	1½" CONDUIT	2181430.866	6436631.407	4407.86	4.41
4	1½" CONDUIT	2181425.206	6436638.678	4409.16	4.07
3	CONC - ENCASEMENT	2181440.688	6436622.813	4407.55	4.15

THIS PLAN FOR UTILITY INFORMATION ONLY.

UTILITY PLAN
(LOCATION No. 1 PM 64.71)
SCALE: 1" = 10'

U-1

STATE OF CALIFORNIA - DEPARTMENT OF TRANSPORTATION
Caltrans® DESIGN DEVELOPMENT
FUNCTIONAL SUPERVISOR: SERGIO E AVILA
CALCULATED-DESIGNED BY: MICHELLE TAVAKOLI
CHECKED BY: SERGIO E AVILA
REVISED BY
DATE REVISED

LAST REVISION 10-14-10
DATE PLOTTED => 18-FEB-2011
TIME PLOTTED => 16:20

Dist	COUNTY	ROUTE	POST MILES TOTAL PROJECT	SHEET No.	TOTAL SHEETS
08	Riv	74	64.7/69.0	23	61

REGISTERED CIVIL ENGINEER 10-28-10 DATE

2-14-11
PLANS APPROVAL DATE

REGISTERED PROFESSIONAL ENGINEER SERGIO EDUARDO-AVILA No. 60951 Exp. 12/31/10 CIVIL STATE OF CALIFORNIA

THE STATE OF CALIFORNIA OR ITS OFFICERS OR AGENTS SHALL NOT BE RESPONSIBLE FOR THE ACCURACY OR COMPLETENESS OF SCANNED COPIES OF THIS PLAN SHEET.

NOTE:

FOR ACCURATE RIGHT OF WAY DATA, CONTACT
RIGHT OF WAY ENGINEERING AT THE DISTRICT OFFICE.

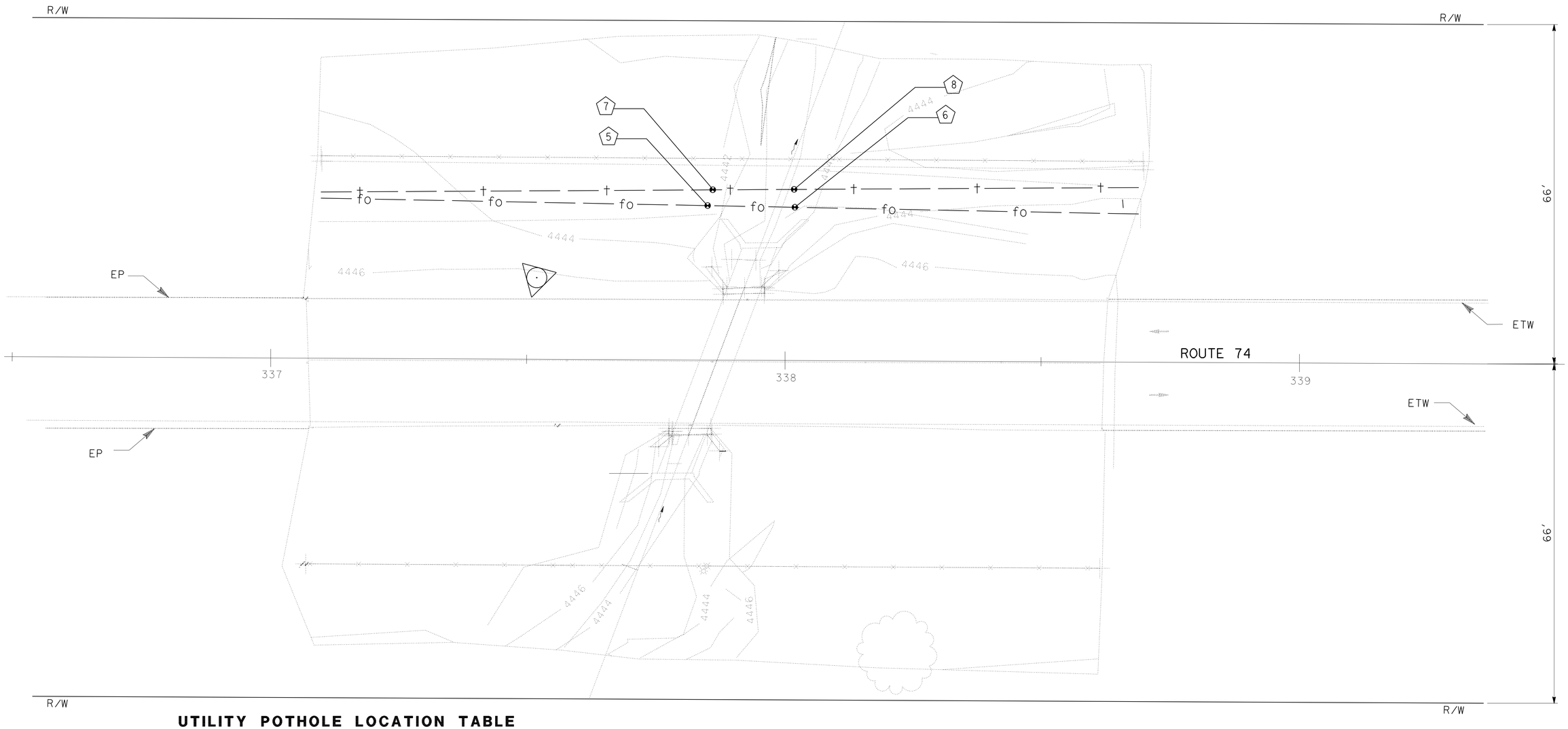

UTILITY POTHOLE LOCATION TABLE

⊗	UTILITY	NORTHING	EASTING	UTILITY ELEVATION	DEPTH (FEET)
5	FIBER OPTIC	2177758.827	6439769.333	4436.95	4.72
6	FIBER OPTIC	2177746.603	6439781.090	4436.98	4.68
7	1½" CONDUIT	2177760.302	6439772.302	4438.59	2.88
8	1½" CONDUIT	2177749.169	6439783.446	4436.35	4.88

THIS PLAN FOR UTILITY INFORMATION ONLY.

UTILITY PLAN
(LOCATION No. 2 PM 65.66)
SCALE: 1" = 10'

U-2

STATE OF CALIFORNIA - DEPARTMENT OF TRANSPORTATION
Caltrans® DESIGN DEVELOPMENT

FUNCTIONAL SUPERVISOR: SERGIO E AVILA
CALCULATED-DESIGNED BY: MICHELLE TAVAKOLI
CHECKED BY: SERGIO E AVILA
REVISED BY
DATE REVISED

LAST REVISION 10-14-10 | DATE PLOTTED => 18-FEB-2011 | TIME PLOTTED => 16:20

Dist	COUNTY	LOCATION CODE	POST MILES TOTAL PROJECT	SHEET No.	TOTAL SHEETS
08	Riv	74	64.7/69.0	24	61

10-28-10
REGISTERED CIVIL ENGINEER DATE

2-14-11
PLANS APPROVAL DATE

REGISTERED PROFESSIONAL ENGINEER SERGIO EDUARDO-AVILA No. 60951 Exp. 12/31/10 CIVIL STATE OF CALIFORNIA

THE STATE OF CALIFORNIA OR ITS OFFICERS OR AGENTS SHALL NOT BE RESPONSIBLE FOR THE ACCURACY OR COMPLETENESS OF SCANNED COPIES OF THIS PLAN SHEET.

NOTE:

FOR ACCURATE RIGHT OF WAY DATA, CONTACT
RIGHT OF WAY ENGINEERING AT THE DISTRICT OFFICE.

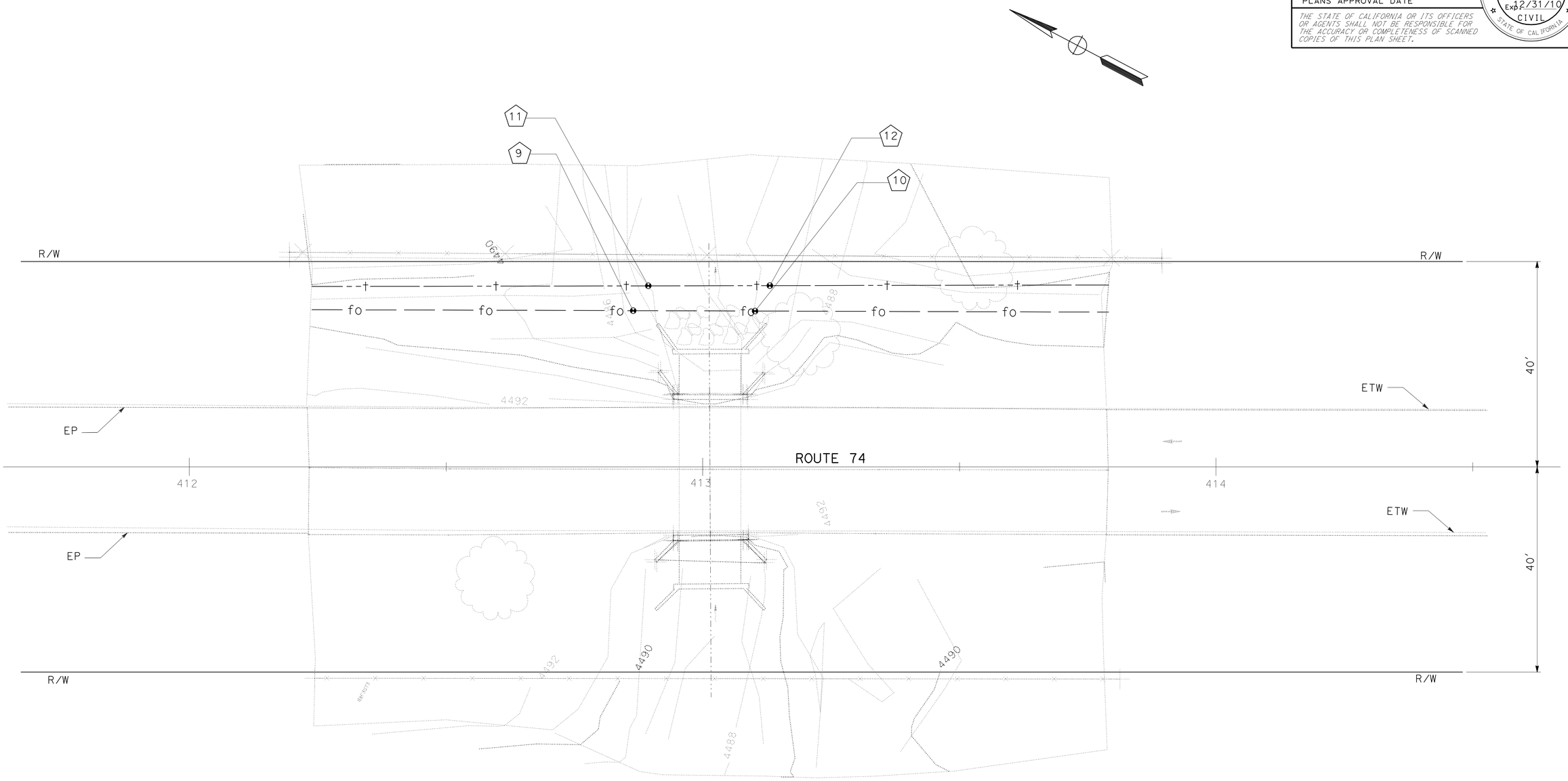

UTILITY POTHOLE LOCATION TABLE

⊗	UTILITY	NORTHING	EASTING	UTILITY ELEVATION	DEPTH (FEET)
9	FIBER OPTIC	2171547.730	6443949.304	4480.41	3.71
10	FIBER OPTIC	2171526.686	6443960.303	4479.34	4.40
11	1½" CONDUIT	2171547.366	6443954.963	4479.06	3.11
12	1½" CONDUIT	2171526.440	6443966.029	4476.74	9.12

THIS PLAN FOR UTILITY INFORMATION ONLY.

UTILITY PLAN
(LOCATION No. 3 PM 67.05)
SCALE: 1" = 10'

U-3

STATE OF CALIFORNIA - DEPARTMENT OF TRANSPORTATION
Caltrans DESIGN DIVISION

FUNCTIONAL SUPERVISOR: SERGIO E AVILA

CALCULATED-DESIGNED BY: MICHELLE TAVAKOLI
CHECKED BY: SERGIO E. AVILA

REVISED BY | DATE REVISED

LAST REVISION 10-14-10 | DATE PLOTTED => 18-FEB-2011 | TIME PLOTTED => 16:20

Dist	COUNTY	ROUTE	POST MILES TOTAL PROJECT	SHEET No.	TOTAL SHEETS
08	Riv	74	64.7/69.0	25	61

REGISTERED CIVIL ENGINEER 10-28-10 DATE

2-14-11
PLANS APPROVAL DATE

REGISTERED PROFESSIONAL ENGINEER SERGIO EDUARDO-AVILA No. 60951 Exp. 12/31/10 CIVIL STATE OF CALIFORNIA

THE STATE OF CALIFORNIA OR ITS OFFICERS OR AGENTS SHALL NOT BE RESPONSIBLE FOR THE ACCURACY OR COMPLETENESS OF SCANNED COPIES OF THIS PLAN SHEET.

NOTE:

FOR ACCURATE RIGHT OF WAY DATA, CONTACT
RIGHT OF WAY ENGINEERING AT THE DISTRICT OFFICE.

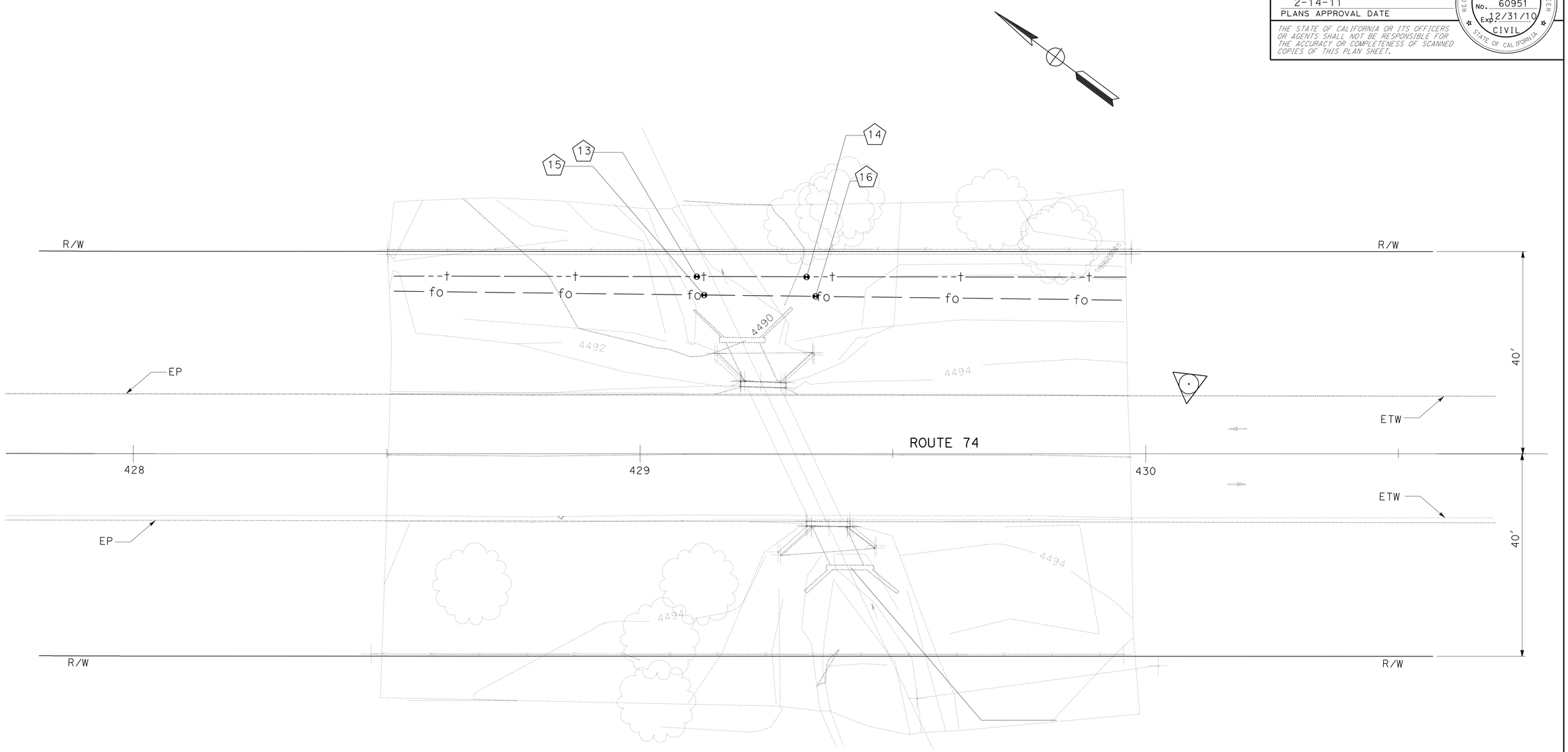

UTILITY POTHOLE LOCATION TABLE

⬠	UTILITY	NORTHING	EASTING	UTILITY ELEVATION	DEPTH (FEET)
13	FIBER OPTIC	2170153.686	644772.063	4483.17	4.97
14	FIBER OPTIC	2170135.847	6444785.061	4485.90	4.44
15	1½" CONDUIT	2170157.026	6444774.117	4484.45	3.10
16	1½" CONDUIT	2170139.564	6444787.130	4484.13	6.32

THIS PLAN FOR UTILITY INFORMATION ONLY.

UTILITY PLAN
(LOCATION No. 4 PM 67.38)
SCALE: 1" = 10'

U-4

STATE OF CALIFORNIA - DEPARTMENT OF TRANSPORTATION
Caltrans® DESIGN DIVISION

FUNCTIONAL SUPERVISOR: SERGIO E AVILA
CALCULATED-DESIGNED BY: MICHELLE TAVAKOLI
CHECKED BY: SERGIO E. AVILA
REVISED BY
DATE REVISED

LAST REVISION 10-15-10
DATE PLOTTED => 18-FEB-2011
TIME PLOTTED => 16:20

Dist	COUNTY	ROUTE	POST MILES TOTAL PROJECT	SHEET No.	TOTAL SHEETS
08	Riv	74	64.7/69.0	26	61

REGISTERED CIVIL ENGINEER 10-28-10 DATE

2-14-11
PLANS APPROVAL DATE

REGISTERED PROFESSIONAL ENGINEER SERGIO EDUARDO-AVILA No. 60951 Exp. 12/31/10 CIVIL STATE OF CALIFORNIA

THE STATE OF CALIFORNIA OR ITS OFFICERS OR AGENTS SHALL NOT BE RESPONSIBLE FOR THE ACCURACY OR COMPLETENESS OF SCANNED COPIES OF THIS PLAN SHEET.

NOTE:

FOR ACCURATE RIGHT OF WAY DATA, CONTACT
RIGHT OF WAY ENGINEERING AT THE DISTRICT OFFICE.

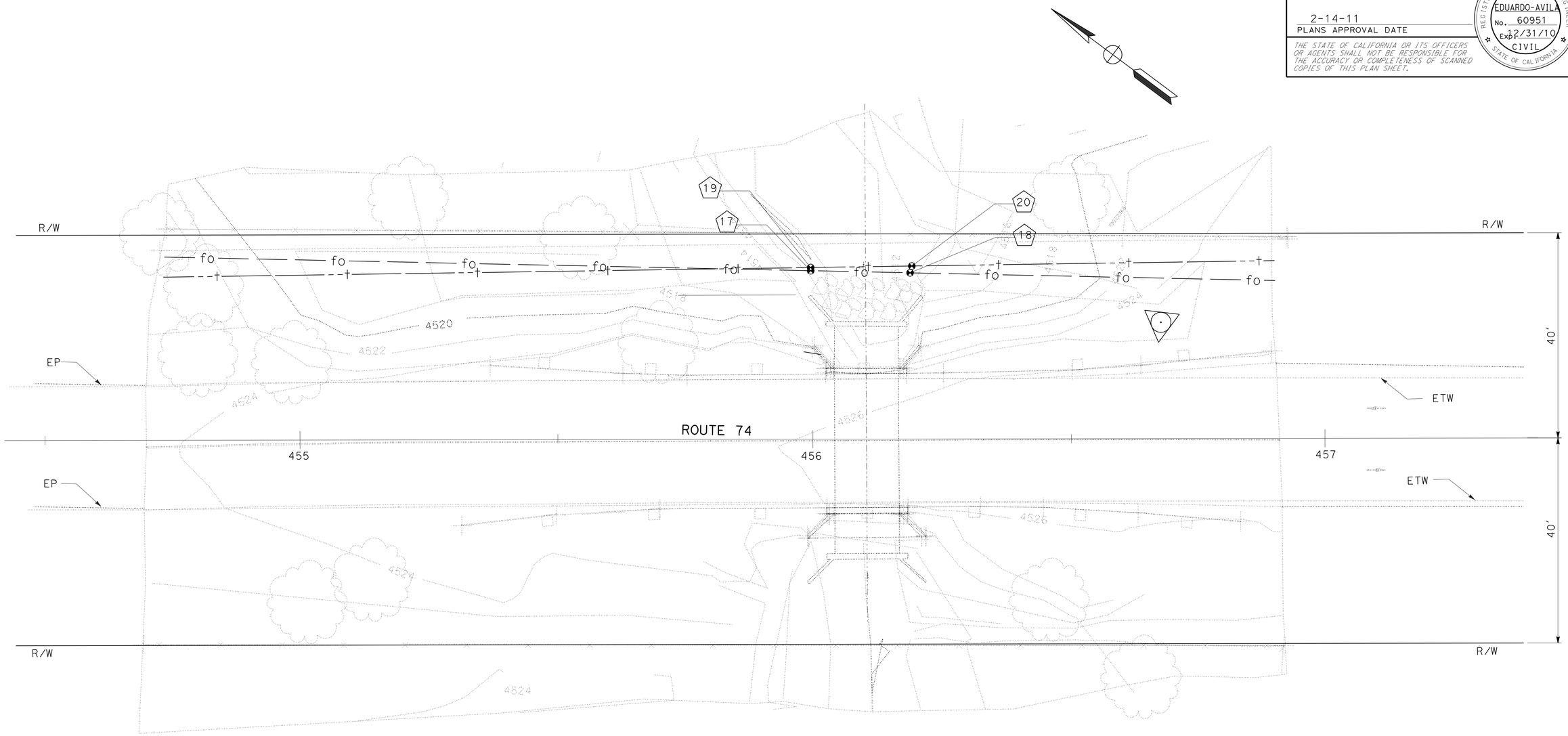

UTILITY POTHOLE LOCATION TABLE

(X)	UTILITY	NORTHING	EASTING	UTILITY ELEVATION	DEPTH (FEET)
17	FIBER OPTIC	2168002.431	6446381.527	4508.58	2.67
18	FIBER OPTIC	2167986.645	6446392.769	4507.69	4.59
19	1½" CONDUIT	2168002.811	6446382.018	4509.53	1.37
20	1½" CONDUIT	2167987.164	6446394.035	4509.22	3.62

THIS PLAN FOR UTILITY INFORMATION ONLY.

UTILITY PLAN
(LOCATION No. 5 PM 67.82)
SCALE: 1" = 10'

U-5

REVISED BY | DATE REVISED
MICHELLE TAVAKOLI | SERGIO E. AVILA
CALCULATED-DESIGNED BY | CHECKED BY
FUNCTIONAL SUPERVISOR
SERGIO E AVILA
STATE OF CALIFORNIA - DEPARTMENT OF TRANSPORTATION
Caltrans® DESIGN DIVISION

LAST REVISION 10-14-10
DATE PLOTTED => 18-FEB-2011
TIME PLOTTED => 16:20

Dist	COUNTY	ROUTE	POST MILES TOTAL PROJECT	SHEET No.	TOTAL SHEETS
08	Riv	74	64.7/69.0	27	61

REGISTERED CIVIL ENGINEER 10-28-10 DATE

2-14-11
PLANS APPROVAL DATE

REGISTERED PROFESSIONAL ENGINEER SERGIO EDUARDO-AVILA No. 60951 Exp. 12/31/10 CIVIL STATE OF CALIFORNIA

THE STATE OF CALIFORNIA OR ITS OFFICERS OR AGENTS SHALL NOT BE RESPONSIBLE FOR THE ACCURACY OR COMPLETENESS OF SCANNED COPIES OF THIS PLAN SHEET.

NOTE:

FOR ACCURATE RIGHT OF WAY DATA, CONTACT RIGHT OF WAY ENGINEERING AT THE DISTRICT OFFICE.

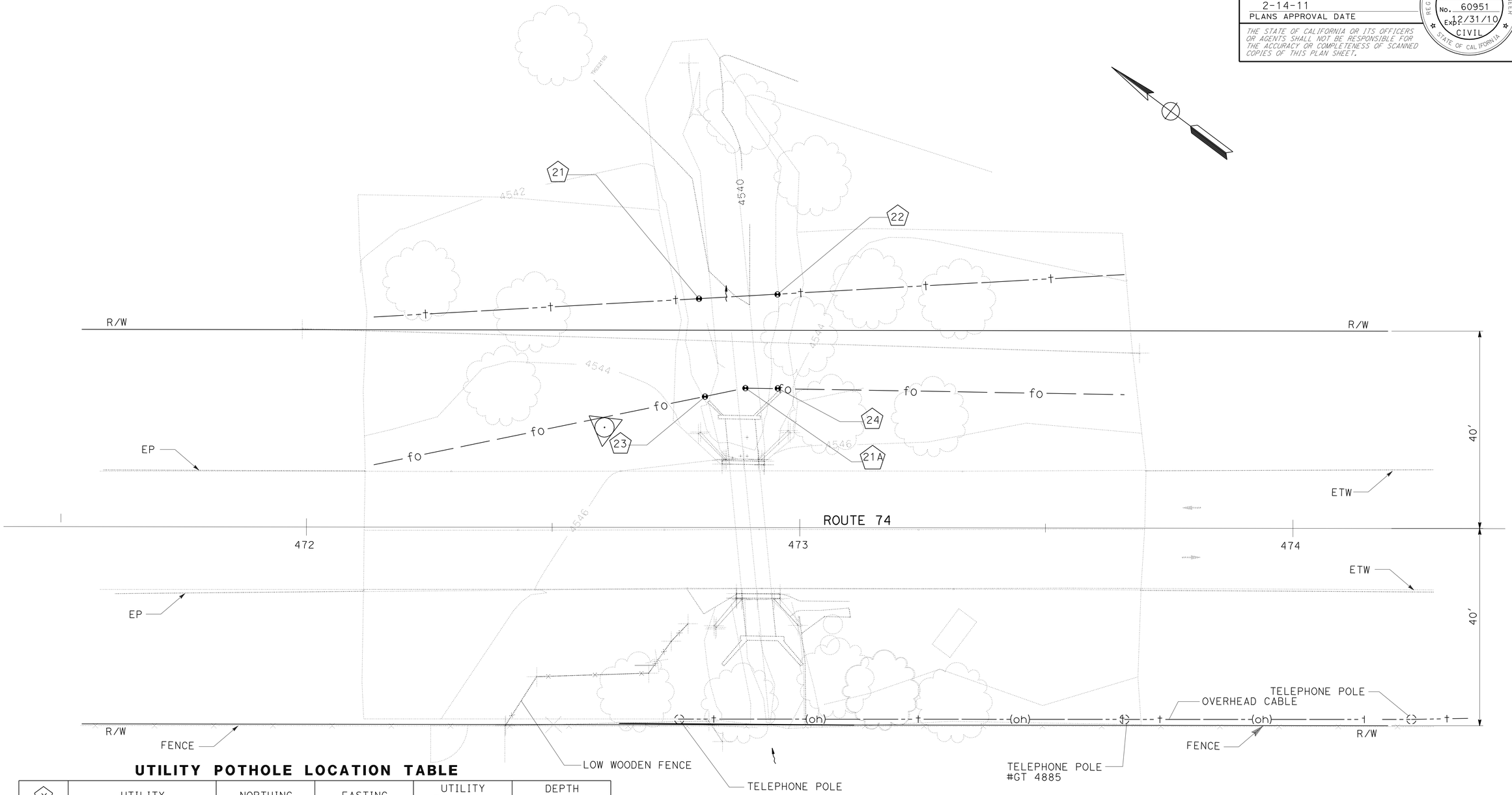

UTILITY POTHOLE LOCATION TABLE

(X)	UTILITY	NORTHING	EASTING	UTILITY ELEVATION	DEPTH (FEET)
21	CONCRETE ENCASEMENT	2166664.946	6447397.963	4536.24	5.5
21A	CONCRETE ENCASEMENT	2166646.464	6447389.464	4537.92	1.7
22	CONCRETE ENCASEMENT	2166652.660	6447408.304	4536.73	5.71
23	CONCRETE ENCASEMENT	2166652.005	6447382.878	4537.45	5.6
24	CONCRETE ENCASEMENT	2166641.134	6447392.995	4538.02	5.33

THIS PLAN FOR UTILITY INFORMATION ONLY.

UTILITY PLAN
(LOCATION No. 6 PM 68.18)

SCALE: 1" = 10'

U-6

STATE OF CALIFORNIA - DEPARTMENT OF TRANSPORTATION
Caltrans DESIGN DIVISION

FUNCTIONAL SUPERVISOR: SERGIO E AVILA
CALCULATED-DESIGNED BY: MICHELLE TAVAKOLI
CHECKED BY: SERGIO E. AVILA
REVISED BY
DATE REVISED

LAST REVISION 10-14-10 | DATE PLOTTED => 18-FEB-2011 | TIME PLOTTED => 16:20

Dist	COUNTY	ROUTE	POST MILES TOTAL PROJECT	SHEET No.	TOTAL SHEETS
08	Riv	74	64.7/69.0	28	61

REGISTERED CIVIL ENGINEER DATE 10-28-10

2-14-11
PLANS APPROVAL DATE

REGISTERED PROFESSIONAL ENGINEER SERGIO EDUARDO-AVILA No. 60951 Exp. 12/31/10 CIVIL STATE OF CALIFORNIA

THE STATE OF CALIFORNIA OR ITS OFFICERS OR AGENTS SHALL NOT BE RESPONSIBLE FOR THE ACCURACY OR COMPLETENESS OF SCANNED COPIES OF THIS PLAN SHEET.

NOTE:

FOR ACCURATE RIGHT OF WAY DATA, CONTACT RIGHT OF WAY ENGINEERING AT THE DISTRICT OFFICE.

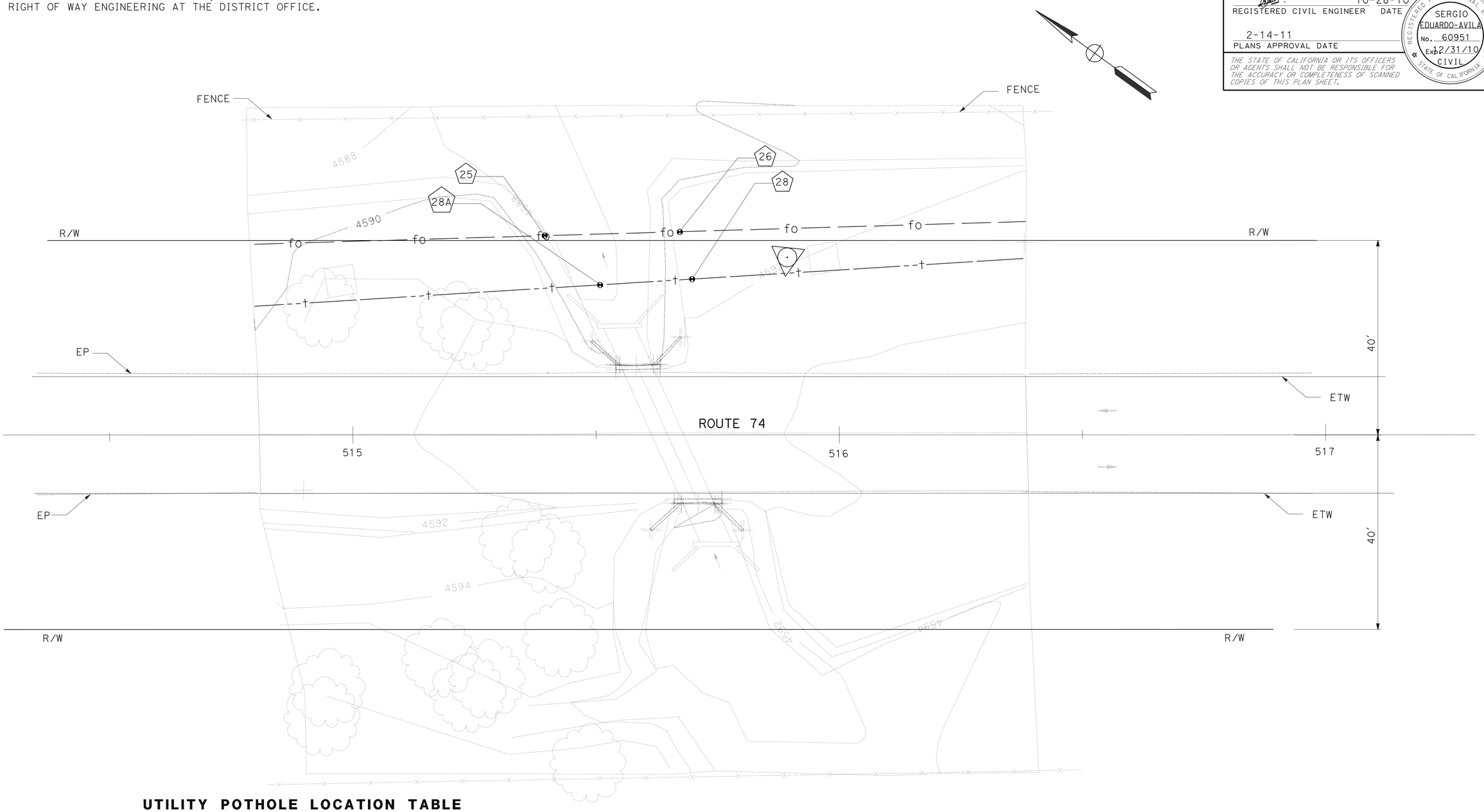

UTILITY POTHOLE LOCATION TABLE

⊗	UTILITY	NORTHING	EASTING	UTILITY ELEVATION	DEPTH (FEET)
25	1½" CONDUIT	2163233.372	6449923.557	4584.27	3.09
26	1½" CONDUIT	2163211.403	6449940.481	4584.32	6.66
28	FIBER OPTIC	2163203.597	6449934.107	4584.97	6.93
28A	FIBER OPTIC	2163218.187	6449922.089	4583.72	3.15

THIS PLAN FOR UTILITY INFORMATION ONLY.

UTILITY PLAN
(LOCATION No. 7 PM 68.99)
SCALE: 1" = 10'

U-7

REVISED BY | DATE REVISED
MICHELLE TAVAKOLI
CALCULATED-DESIGNED BY: SERGIO E. AVILA
CHECKED BY
FUNCTIONAL SUPERVISOR: SERGIO E AVILA

STATE OF CALIFORNIA - DEPARTMENT OF TRANSPORTATION
Caltrans® DESIGN DIVISION

LAST REVISION 10-14-10 | DATE PLOTTED => 18-FEB-2011 | TIME PLOTTED => 16:48

Dist	COUNTY	ROUTE	POST MILES TOTAL PROJECT	SHEET No.	TOTAL SHEETS
08	Riv	74	64.7/69.0	29	61

Thanh Trinh 10-28-10
REGISTERED CIVIL ENGINEER DATE

2-14-11
PLANS APPROVAL DATE

REGISTERED PROFESSIONAL ENGINEER T. TRINH No. C41189 Exp. 3-31-11 CIVIL STATE OF CALIFORNIA

THE STATE OF CALIFORNIA OR ITS OFFICERS OR AGENTS SHALL NOT BE RESPONSIBLE FOR THE ACCURACY OR COMPLETENESS OF SCANNED COPIES OF THIS PLAN SHEET.

NOTES:

1. SIGN LOCATIONS ARE APPROXIMATE. EXACT LOCATIONS WILL BE DETERMINED BY THE ENGINEER.
2. LOCATIONS OF PORTABLE CMS TO BE DETERMINED BY THE ENGINEER.

LEGEND:

(X) CONSTRUCTION AREA SIGN SYMBOL

ONE POST SIGN

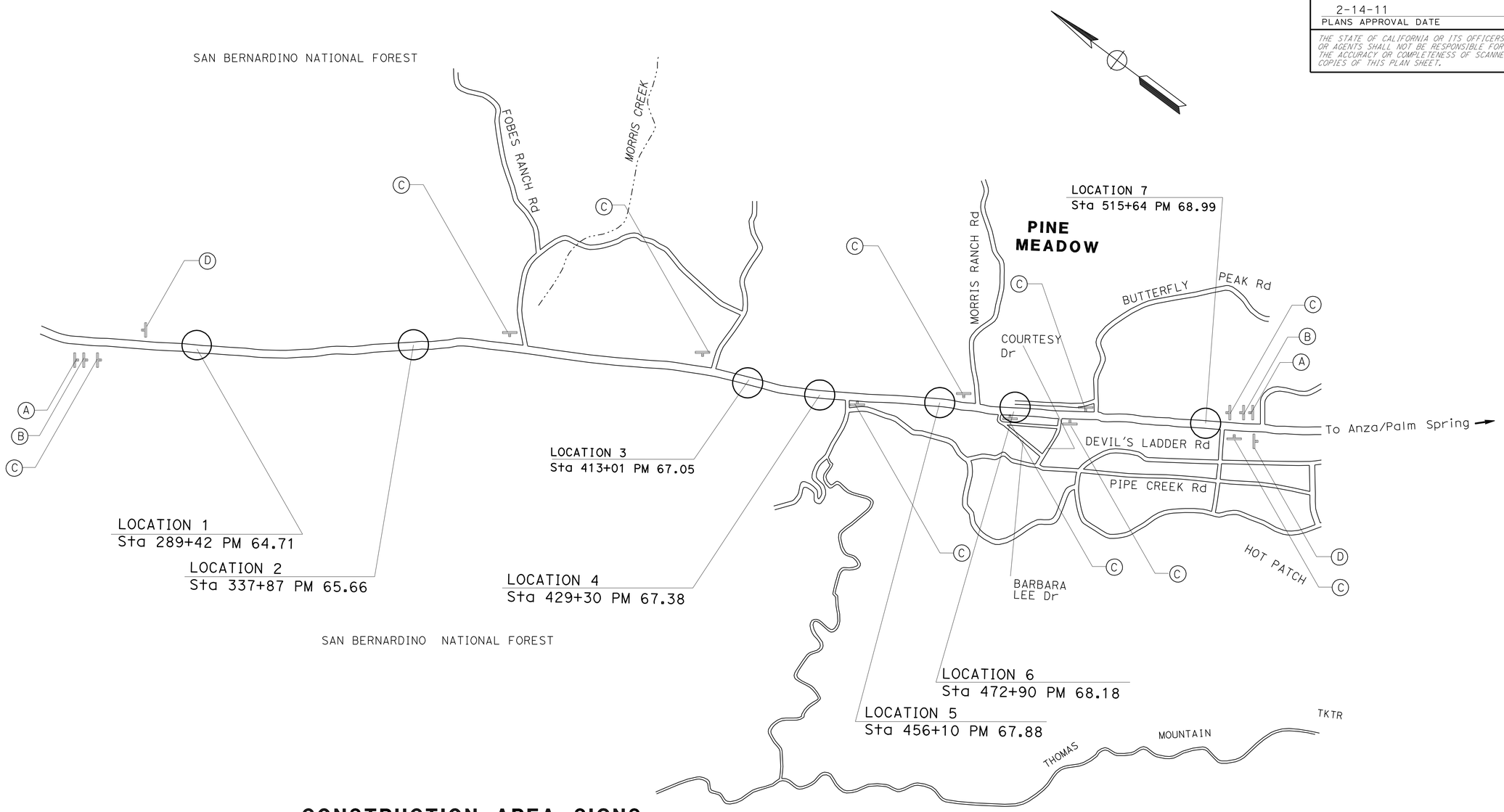

CONSTRUCTION AREA SIGNS

SIGN SYMBOL	SIGN CODE	SIGN MESSAGE	PANEL SIZE	No. OF POST AND SIZE	STATIONARY MOUNTED SIGN (EA)	REMARKS
(A)	C40A(CA)	TRAFFIC FINES DOUBLED IN WORK ZONES	48" x 48"	1 - 6" x 6"	2	
(B)	G20-1	ROAD WORK NEXT 5 MILES	36" x 18"	1 - 4" x 4"	2	
(C)	W20-1	ROAD WORK AHEAD	48" x 48"	1 - 6" x 6"	10	
(D)	G20-2	END ROAD WORK	48" x 18"	1 - 4" x 4"	2	
(E)	W5-1	ROAD NARROWS	48" x 48"	1 - 6" x 6"	14	W5-1 SIGNS (BLACK IN ORANGE) IN TRAFFIC HANDLING PLAN SHEETS

PORTABLE CMS

QUANTITY (EA)
2

THIS PLAN IS ACCURATE FOR CONSTRUCTION AREA SIGN WORK ONLY.

CONSTRUCTION AREA SIGN

NO SCALE

CS-1

STATE OF CALIFORNIA - DEPARTMENT OF TRANSPORTATION
Caltrans® DESIGN DIVISION

FUNCTIONAL SUPERVISOR: BILL WASSER
CALCULATED-DESIGNED BY: KEVIN NGUYEN
CHECKED BY: THANH TRINH
REVISED BY
DATE REVISED

LAST REVISION 10-15-10
DATE PLOTTED => 18-FEB-2011
TIME PLOTTED => 16:21

Dist	COUNTY	ROUTE	POST MILES TOTAL PROJECT	SHEET No.	TOTAL SHEETS
08	Riv	74	64.7/69.0	30	61

REGISTERED CIVIL ENGINEER 10-28-10 DATE

2-14-11
PLANS APPROVAL DATE

REGISTERED PROFESSIONAL ENGINEER
SERGIO EDUARDO-AVILA
No. 60951
Exp. 12/31/10
CIVIL
STATE OF CALIFORNIA

THE STATE OF CALIFORNIA OR ITS OFFICERS OR AGENTS SHALL NOT BE RESPONSIBLE FOR THE ACCURACY OR COMPLETENESS OF SCANNED COPIES OF THIS PLAN SHEET.

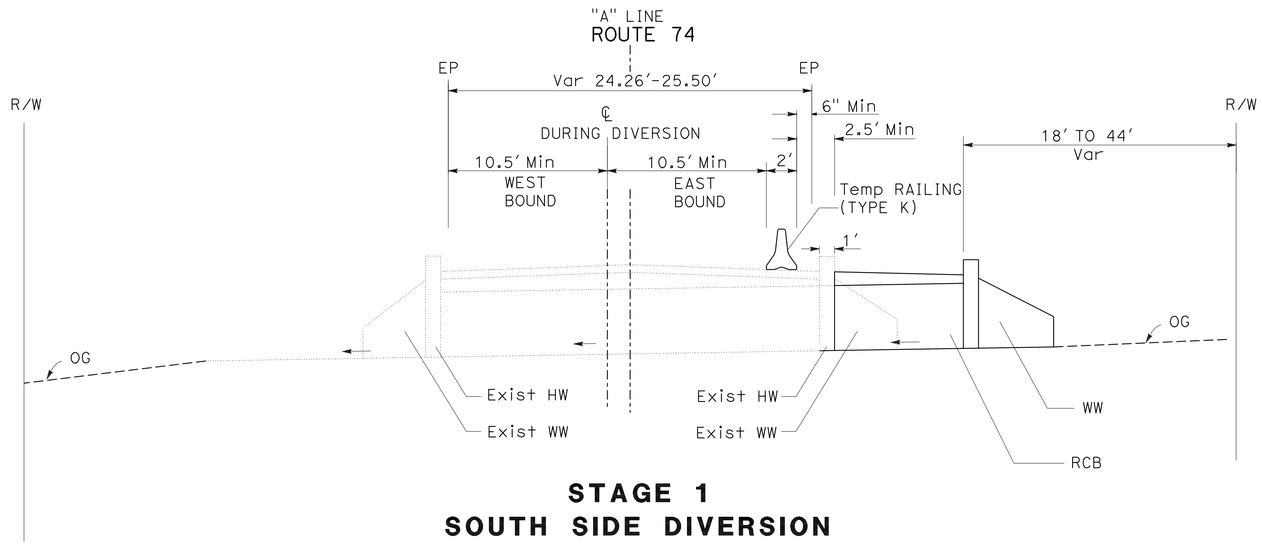

STAGE 1
SOUTH SIDE DIVERSION
DURING SOUTH END CULVERT CONSTRUCTION

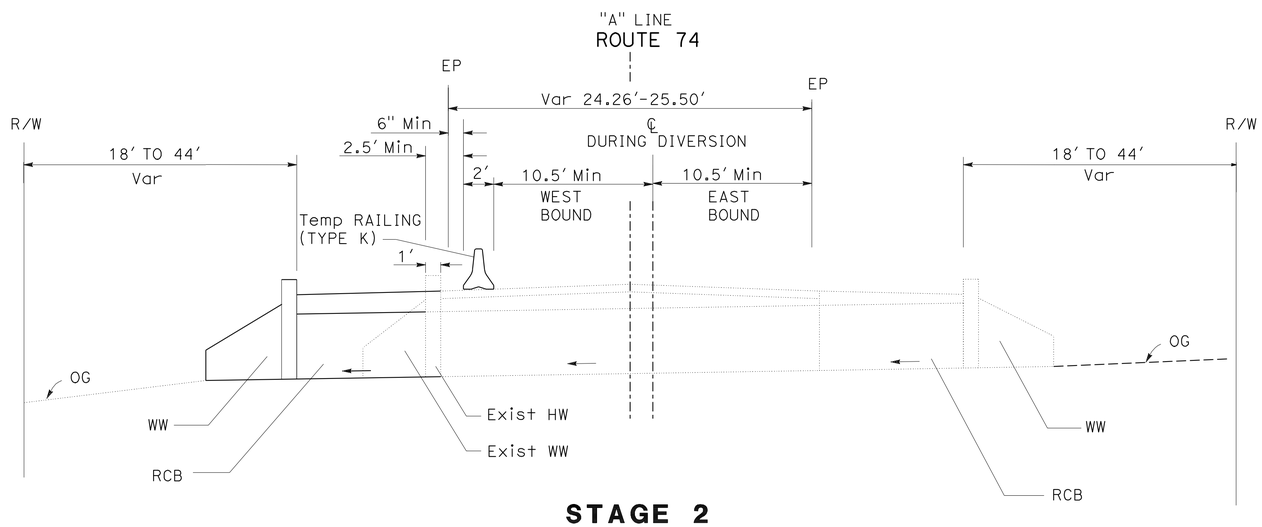

STAGE 2
NORTH SIDE DIVERSION
DURING NORTH END CULVERT CONSTRUCTION

ROUTE 74

Sta 289+42.33, Sta 337+87.03, Sta 413+01.43
Sta 429+30.58, Sta 456+10.49, Sta 472+90.18
Sta 515+64.74

THIS PLAN IS ACCURATE FOR STAGE CONSTRUCTION ONLY.

STAGE CONSTRUCTION

NO SCALE **SC-1**

STATE OF CALIFORNIA - DEPARTMENT OF TRANSPORTATION
Caltrans DESIGN DEVELOPMENT

FUNCTIONAL SUPERVISOR: SERGIO E AVILA
CALCULATED-DESIGNED BY: MICHELLE TAVAKOLI
CHECKED BY: SERGIO E. AVILA
REVISED BY
DATE REVISED

LAST REVISION 10-20-10
DATE PLOTTED => 18-FEB-2011
TIME PLOTTED => 16:21

Dist	COUNTY	ROUTE	POST MILES TOTAL PROJECT	SHEET No.	TOTAL SHEETS
08	Riv	74	64.7/69.0	31	61

Thanh Trinh 09-28-10
REGISTERED CIVIL ENGINEER DATE

2-14-11
PLANS APPROVAL DATE

REGISTERED PROFESSIONAL ENGINEER
T. TRINH
No. C41189
Exp. 3-31-11
CIVIL
STATE OF CALIFORNIA

THE STATE OF CALIFORNIA OR ITS OFFICERS OR AGENTS SHALL NOT BE RESPONSIBLE FOR THE ACCURACY OR COMPLETENESS OF SCANNED COPIES OF THIS PLAN SHEET.

LEGEND:

T (XX) TEMPORARY TRAFFIC STRIPE (PAINT)

BEGIN/END STRIPING DETAIL

(XX) TRAFFIC HANDLING SIGN

ONE POST SIGN

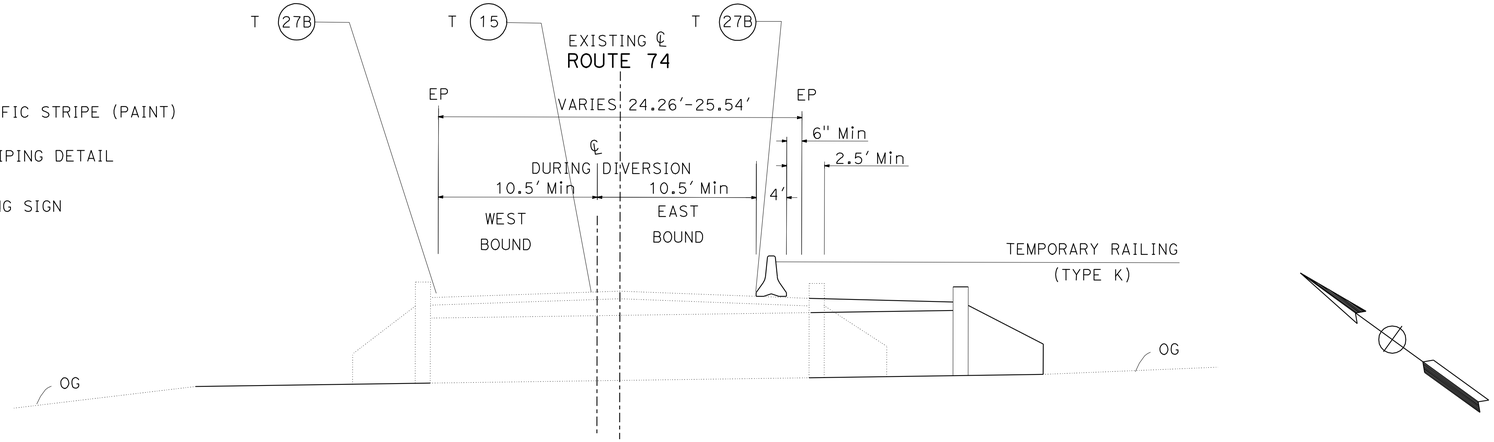

STAGE 1
SOUTH SIDE DIVERSION
LOCATION 1

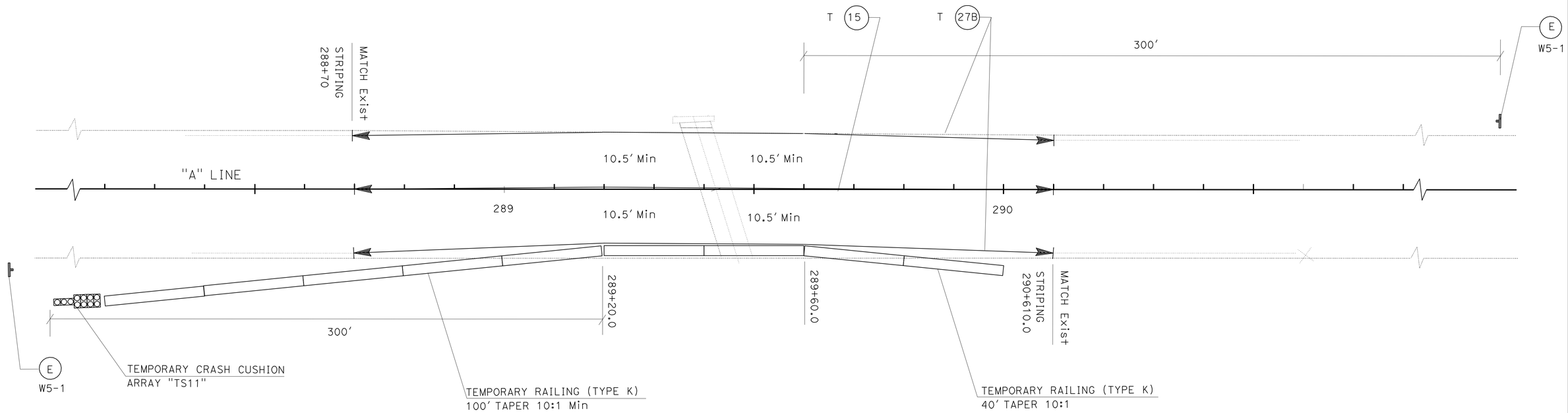

THIS PLAN IS ACCURATE FOR TRAFFIC HANDLING WORK ONLY.

TRAFFIC HANDLING PLAN

SCALE: 1" = 10'

TH-1

REVISED BY | DATE REVISED
KEVIN NGUYEN | THANH TRINH
CALCULATED-DESIGNED BY | CHECKED BY
FUNCTIONAL SUPERVISOR
BILL WASSER

STATE OF CALIFORNIA - DEPARTMENT OF TRANSPORTATION
Caltrans® **DESIGN DIVISION**

LAST REVISION 09-15-10 | DATE PLOTTED => 18-FEB-2011 | TIME PLOTTED => 14:31

Dist	COUNTY	ROUTE	POST MILES TOTAL PROJECT	SHEET No.	TOTAL SHEETS
08	Riv	74	64.7/69.0	32	61

Thanh Trinh 10-28-10
REGISTERED CIVIL ENGINEER DATE

2-14-11
PLANS APPROVAL DATE

REGISTERED PROFESSIONAL ENGINEER
T. TRINH
No. C41189
Exp. 3-31-11
CIVIL
STATE OF CALIFORNIA

THE STATE OF CALIFORNIA OR ITS OFFICERS OR AGENTS SHALL NOT BE RESPONSIBLE FOR THE ACCURACY OR COMPLETENESS OF SCANNED COPIES OF THIS PLAN SHEET.

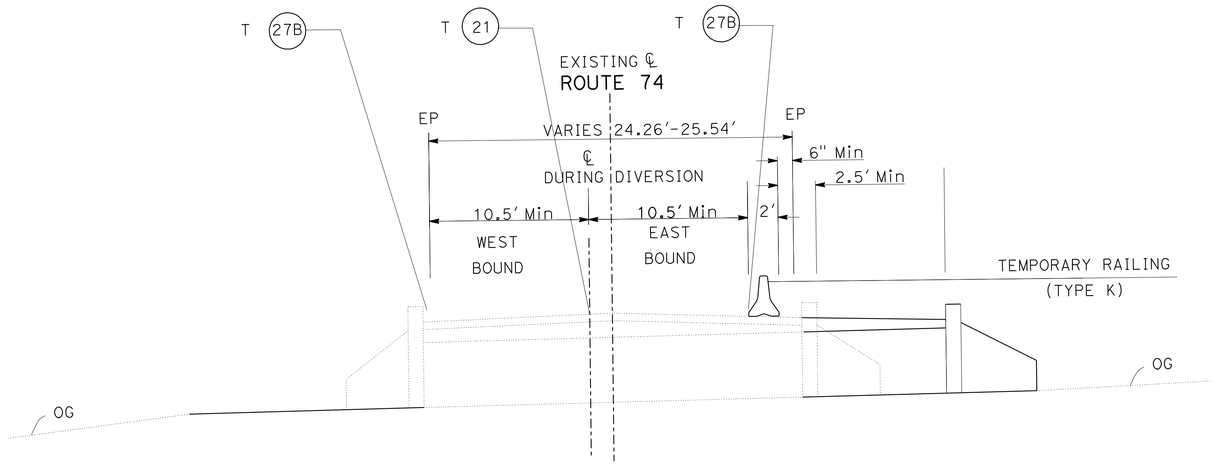

STAGE 1
SOUTH SIDE DIVERSION
LOCATION 2

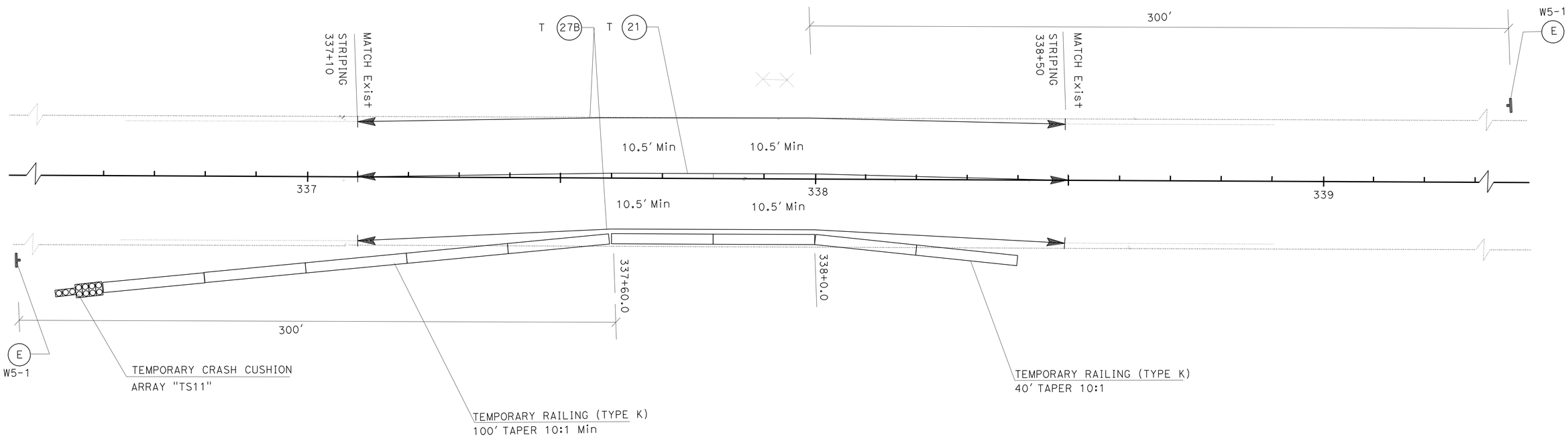

THIS PLAN IS ACCURATE FOR TRAFFIC HANDLING WORK ONLY.

TRAFFIC HANDLING PLAN

SCALE: 1" = 10'

TH-2

STATE OF CALIFORNIA - DEPARTMENT OF TRANSPORTATION
Caltrans® **DESIGN DIVISION**

FUNCTIONAL SUPERVISOR: BILL WASSER
CALCULATED-DESIGNED BY: KEVIN NGUYEN
CHECKED BY: THANH TRINH
REVISED BY
DATE REVISED

LAST REVISION | DATE PLOTTED => 18-FEB-2011
10-15-10 | TIME PLOTTED => 14:31

Dist	COUNTY	ROUTE	POST MILES TOTAL PROJECT	SHEET No.	TOTAL SHEETS
08	Riv	74	64.7/69.0	33	61

Thanh Trinh 10-28-10
REGISTERED CIVIL ENGINEER DATE

2-14-11
PLANS APPROVAL DATE

REGISTERED PROFESSIONAL ENGINEER
T. TRINH
No. C41189
Exp. 3-31-11
CIVIL
STATE OF CALIFORNIA

THE STATE OF CALIFORNIA OR ITS OFFICERS OR AGENTS SHALL NOT BE RESPONSIBLE FOR THE ACCURACY OR COMPLETENESS OF SCANNED COPIES OF THIS PLAN SHEET.

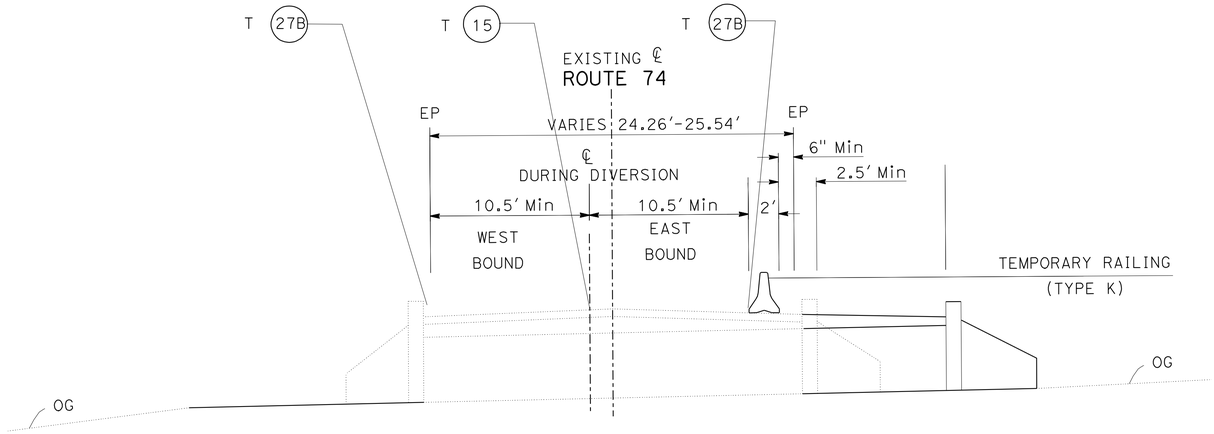

STAGE 1
SOUTH SIDE DIVERSION
LOCATION 3

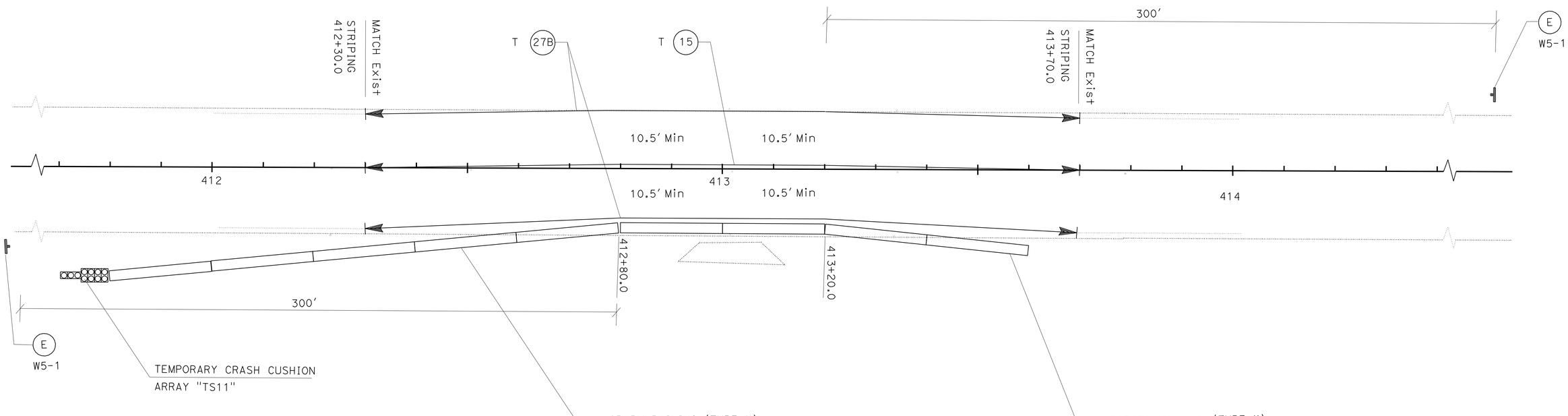

THIS PLAN IS ACCURATE FOR TRAFFIC HANDLING WORK ONLY.

TRAFFIC HANDLING PLAN

SCALE: 1" = 10'

TH-3

REVISED BY | DATE REVISED
KEVIN NGUYEN | THANH TRINH
CALCULATED-DESIGNED BY | CHECKED BY
FUNCTIONAL SUPERVISOR
W. E. WASSER

STATE OF CALIFORNIA - DEPARTMENT OF TRANSPORTATION
Caltrans
TRAFFIC DESIGN A

LAST REVISION 10-20-10 | DATE PLOTTED => 18-FEB-2011 | TIME PLOTTED => 14:31

Dist	COUNTY	LOCATION CODE	POST MILES TOTAL PROJECT	SHEET No.	TOTAL SHEETS
08	Riv	74	64.7/69.0	34	61

Thanh Trinh 10-28-10
REGISTERED CIVIL ENGINEER DATE

2-14-11
PLANS APPROVAL DATE

REGISTERED PROFESSIONAL ENGINEER
T. TRINH
No. C41189
Exp. 3-31-11
CIVIL
STATE OF CALIFORNIA

THE STATE OF CALIFORNIA OR ITS OFFICERS OR AGENTS SHALL NOT BE RESPONSIBLE FOR THE ACCURACY OR COMPLETENESS OF SCANNED COPIES OF THIS PLAN SHEET.

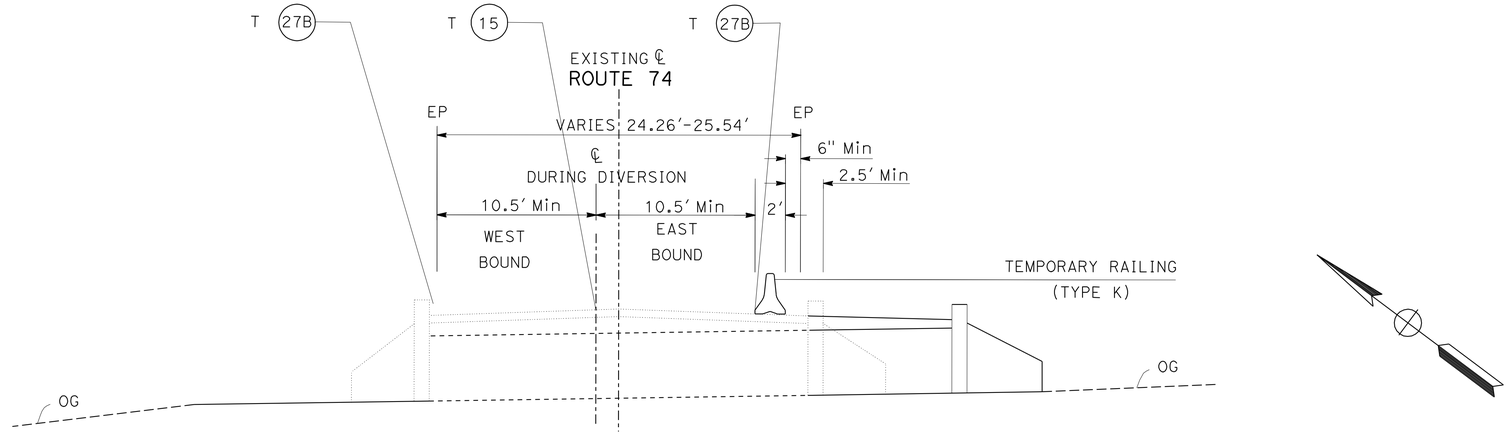

STAGE 1
SOUTH SIDE DIVERSION
LOCATION 4

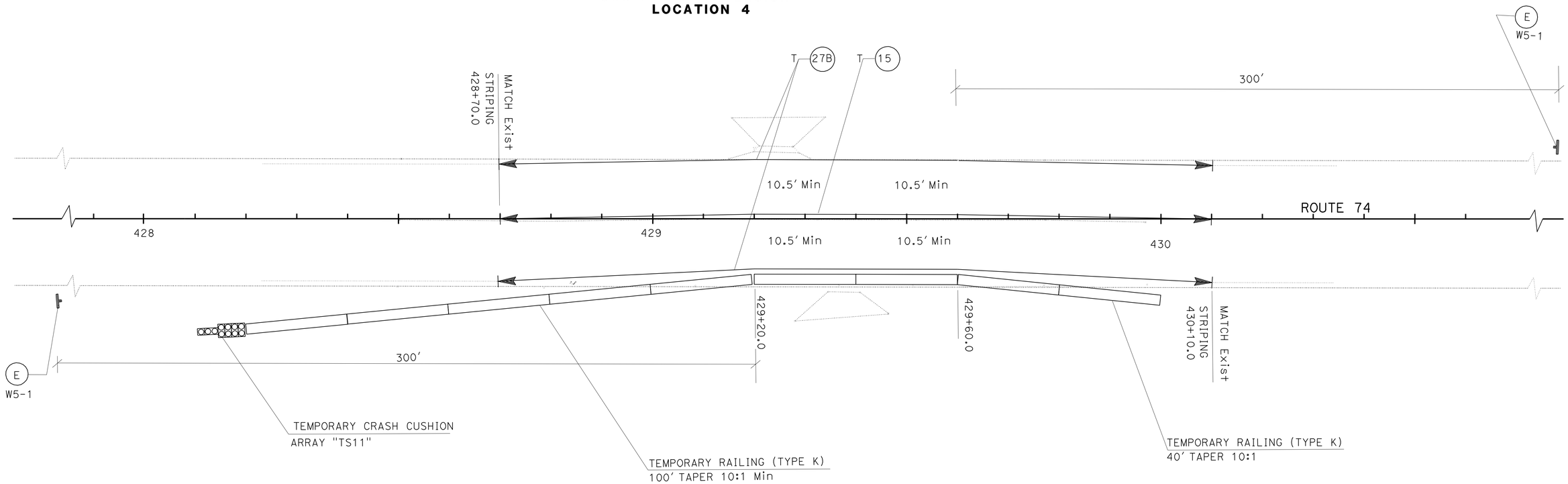

THIS PLAN IS ACCURATE FOR TRAFFIC HANDLING WORK ONLY.

TRAFFIC HANDLING PLAN

SCALE 1"=10'

TH-4

REVISED BY | DATE REVISED
KEVIN NGUYEN | THANH TRINH
CALCULATED-DESIGNED BY | CHECKED BY
FUNCTIONAL SUPERVISOR
W. E. WASSER

STATE OF CALIFORNIA - DEPARTMENT OF TRANSPORTATION
Caltrans
TRAFFIC DESIGN A

LAST REVISION 10-20-10 | DATE PLOTTED => 18-FEB-2011 | TIME PLOTTED => 14:31

Dist	COUNTY	LOCATION CODE	POST MILES TOTAL PROJECT	SHEET No.	TOTAL SHEETS
08	Riv	74	64.7/69.0	35	61

Thanh Trinh 10-28-10
REGISTERED CIVIL ENGINEER DATE

2-14-11
PLANS APPROVAL DATE

REGISTERED PROFESSIONAL ENGINEER
T. TRINH
No. C41189
Exp. 3-31-11
CIVIL
STATE OF CALIFORNIA

THE STATE OF CALIFORNIA OR ITS OFFICERS OR AGENTS SHALL NOT BE RESPONSIBLE FOR THE ACCURACY OR COMPLETENESS OF SCANNED COPIES OF THIS PLAN SHEET.

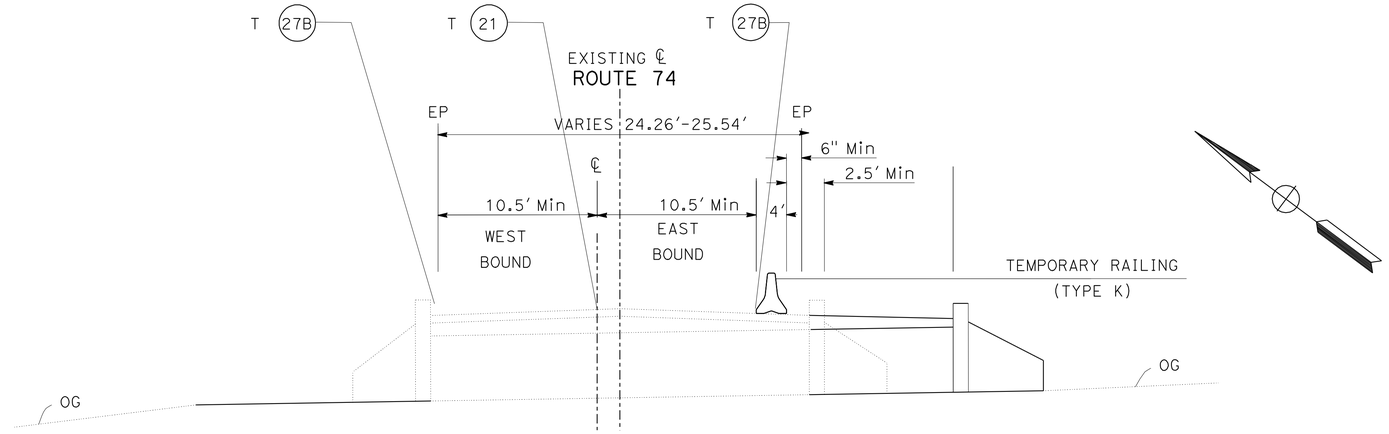

STAGE 1
SOUTH SIDE DIVERSION
LOCATION 5

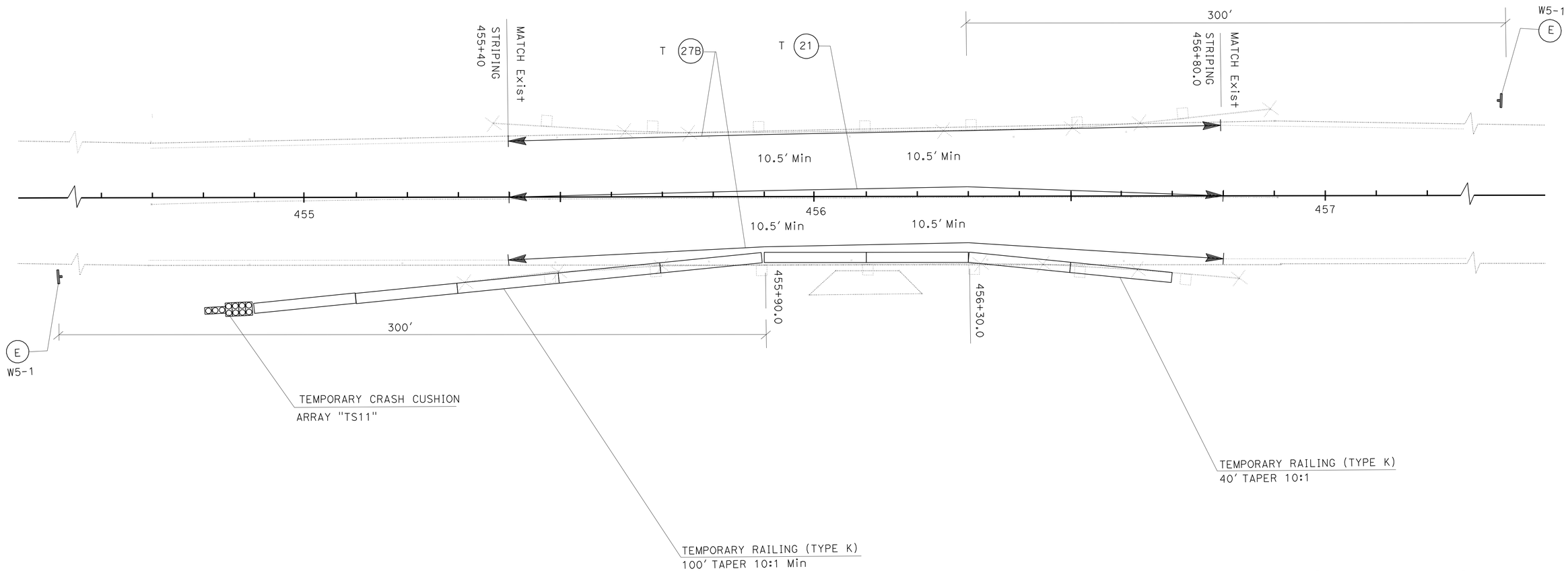

TRAFFIC HANDLING PLAN

SCALE: 1" = 10'

TH-5

THIS PLAN IS ACCURATE FOR TRAFFIC HANDLING WORK ONLY.

REVISED BY	DATE REVISED

CALCULATED-DESIGNED BY	CHECKED BY
KEVIN NGUYEN	THANH TRINH

FUNCTIONAL SUPERVISOR: W. E. WASSER

STATE OF CALIFORNIA - DEPARTMENT OF TRANSPORTATION
Caltrans
TRAFFIC DESIGN A

LAST REVISION 10-20-10 | DATE PLOTTED => 18-FEB-2011 | TIME PLOTTED => 14:31

Dist	COUNTY	LOCATION CODE	POST MILES TOTAL PROJECT	SHEET No.	TOTAL SHEETS
08	Riv	74	64.7/69.0	36	61

Thanh Trinh 10-28-10
REGISTERED CIVIL ENGINEER DATE

2-14-11
PLANS APPROVAL DATE

REGISTERED PROFESSIONAL ENGINEER
T. TRINH
No. C41189
Exp. 3-31-11
CIVIL
STATE OF CALIFORNIA

THE STATE OF CALIFORNIA OR ITS OFFICERS OR AGENTS SHALL NOT BE RESPONSIBLE FOR THE ACCURACY OR COMPLETENESS OF SCANNED COPIES OF THIS PLAN SHEET.

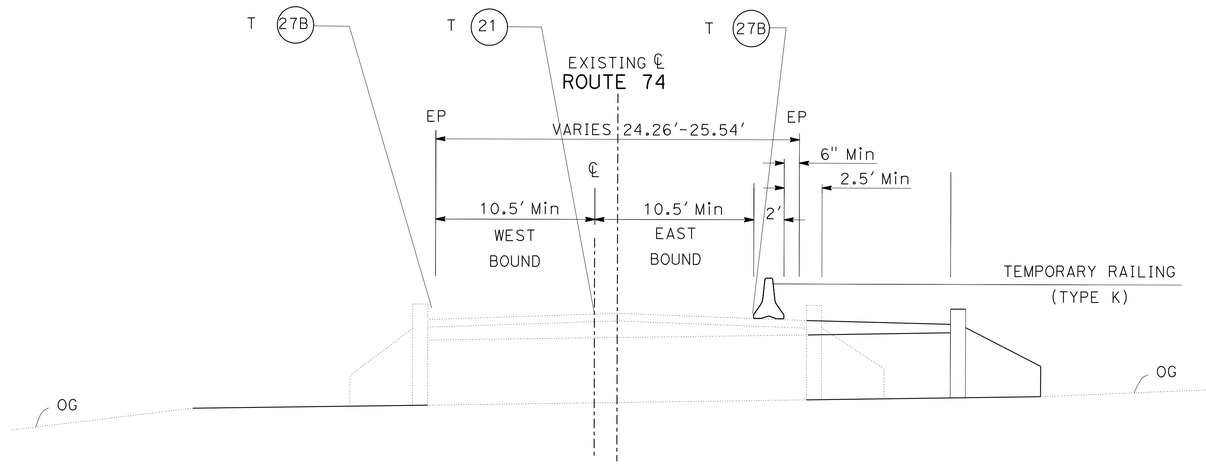

STAGE 1
SOUTH SIDE DIVERSION
LOCATION 6

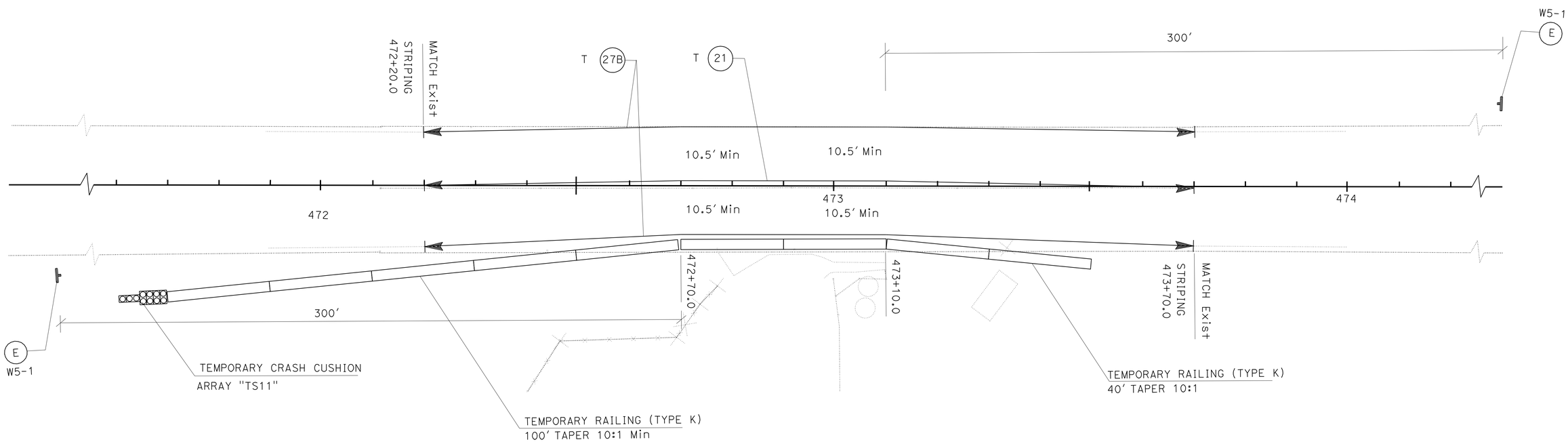

TRAFFIC HANDLING PLAN

SCALE: 1" = 10'

TH-6

THIS PLAN IS ACCURATE FOR TRAFFIC HANDLING WORK ONLY.

STATE OF CALIFORNIA - DEPARTMENT OF TRANSPORTATION
Caltrans
TRAFFIC DESIGN A

FUNCTIONAL SUPERVISOR: W. E. WASSER
CALCULATED-DESIGNED BY: KEVIN NGUYEN
CHECKED BY: THANH TRINH
REVISED BY
DATE REVISED

LAST REVISION 10-20-10
DATE PLOTTED => 18-FEB-2011
TIME PLOTTED => 14:31

Dist	COUNTY	ROUTE	POST MILES TOTAL PROJECT	SHEET No.	TOTAL SHEETS
08	Riv	74	64.7/69.0	37	61

Thanh Trinh 10-28-10
REGISTERED CIVIL ENGINEER DATE

2-14-11
PLANS APPROVAL DATE

REGISTERED PROFESSIONAL ENGINEER
T. TRINH
No. C41189
Exp. 3-31-11
CIVIL
STATE OF CALIFORNIA

THE STATE OF CALIFORNIA OR ITS OFFICERS OR AGENTS SHALL NOT BE RESPONSIBLE FOR THE ACCURACY OR COMPLETENESS OF SCANNED COPIES OF THIS PLAN SHEET.

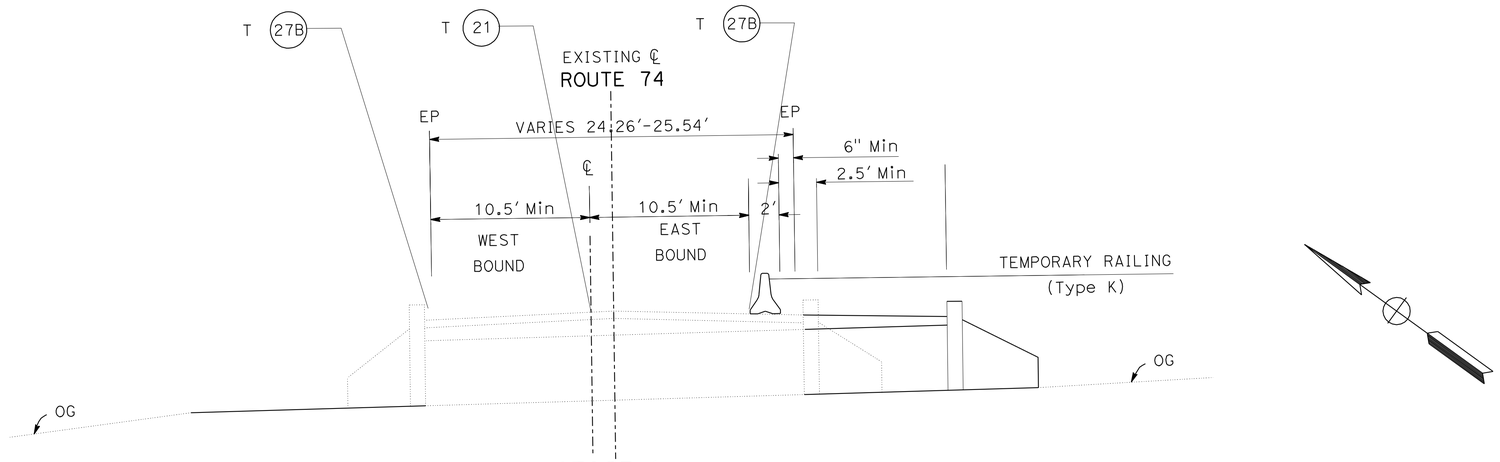

STAGE 1
SOUTH SIDE DIVERSION
LOCATION 7

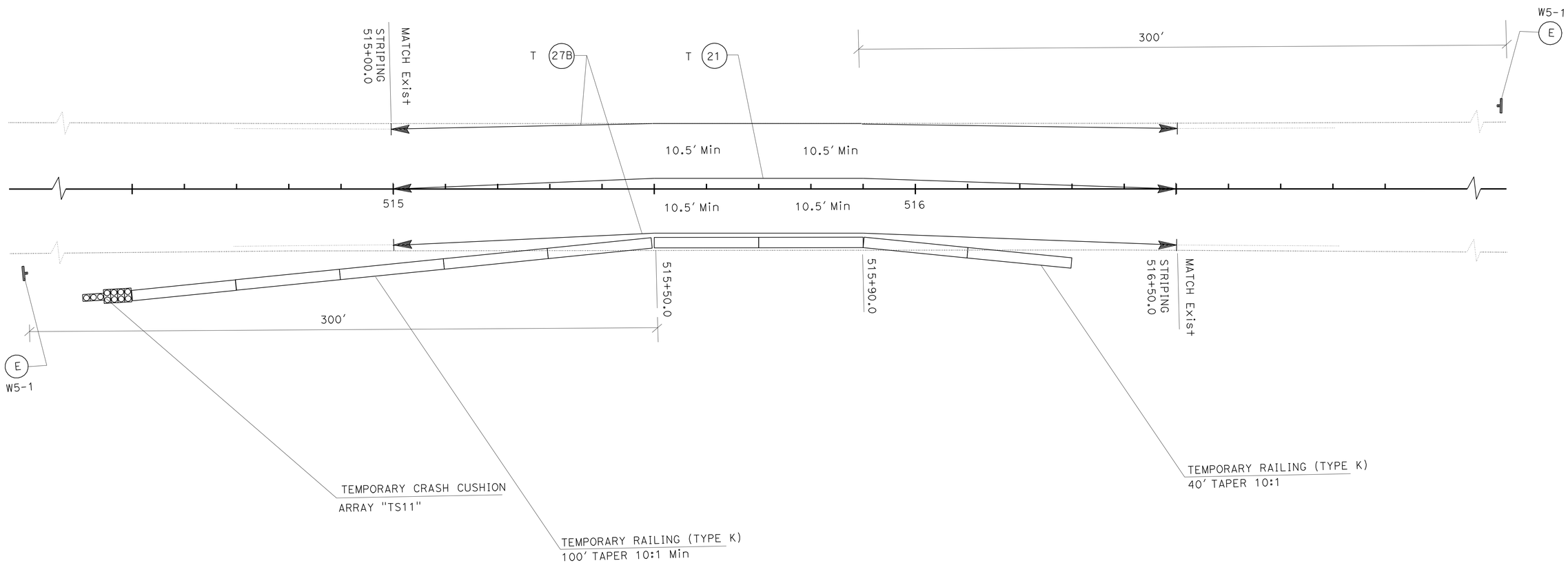

TRAFFIC HANDLING PLAN

SCALE: 1" = 10'

TH-7

THIS PLAN IS ACCURATE FOR TRAFFIC HANDLING WORK ONLY.

REVISED BY	DATE REVISED

CALCULATED-DESIGNED BY: KEVIN NGUYEN
CHECKED BY: THANH TRINH
FUNCTIONAL SUPERVISOR: W. E. WASSER

STATE OF CALIFORNIA - DEPARTMENT OF TRANSPORTATION
Caltrans
TRAFFIC DESIGN A

LAST REVISION 10-20-10
DATE PLOTTED => 18-FEB-2011
TIME PLOTTED => 14:47

Dist	COUNTY	ROUTE	POST MILES TOTAL PROJECT	SHEET No.	TOTAL SHEETS
08	Riv	74	64.7/69.0	38	61

Thanh Trinh 09-28-10
REGISTERED CIVIL ENGINEER DATE

2-14-11
PLANS APPROVAL DATE

REGISTERED PROFESSIONAL ENGINEER
T. TRINH
No. C41189
Exp. 3-31-11
CIVIL
STATE OF CALIFORNIA

THE STATE OF CALIFORNIA OR ITS OFFICERS OR AGENTS SHALL NOT BE RESPONSIBLE FOR THE ACCURACY OR COMPLETENESS OF SCANNED COPIES OF THIS PLAN SHEET.

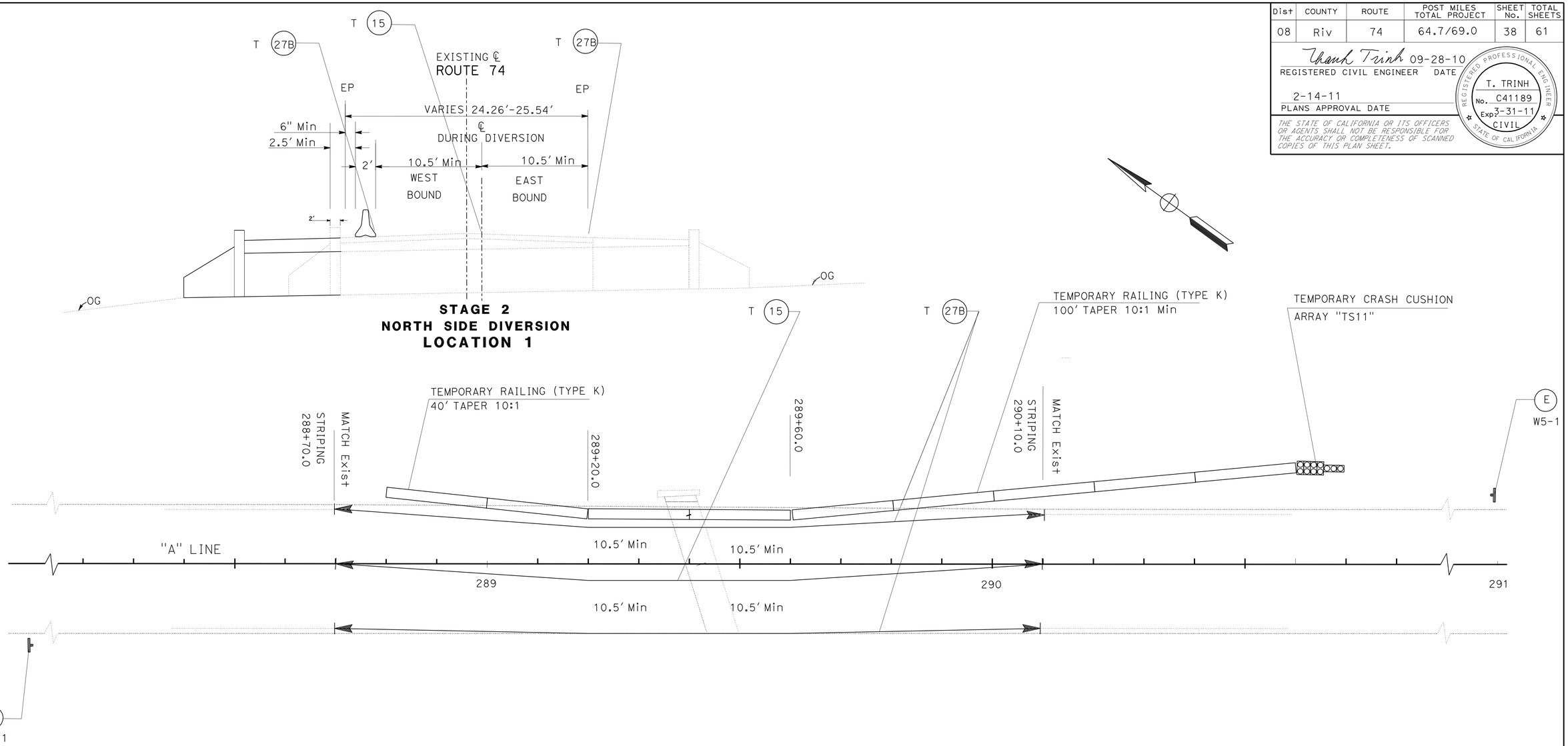

THIS PLAN IS ACCURATE FOR TRAFFIC HANDLING WORK ONLY.

TRAFFIC HANDLING PLAN

SCALE: 1" = 10'

TH-8

STATE OF CALIFORNIA - DEPARTMENT OF TRANSPORTATION
Caltrans®
TRAFFIC DESIGN A

FUNCTIONAL SUPERVISOR: W. E. WASSER

CALCULATED-DESIGNED BY: KEVIN NGUYEN
CHECKED BY: THANH TRINH

REVISED BY
DATE REVISED

LAST REVISION 09-20-10
DATE PLOTTED => 18-FEB-2011
TIME PLOTTED => 14:47

Dist	COUNTY	ROUTE	POST MILES TOTAL PROJECT	SHEET No.	TOTAL SHEETS
08	Riv	74	64.7/69.0	39	61

Thanh Trinh 10-28-10
REGISTERED CIVIL ENGINEER DATE

2-14-11
PLANS APPROVAL DATE

REGISTERED PROFESSIONAL ENGINEER
T. TRINH
No. C41189
Exp. 3-31-11
CIVIL
STATE OF CALIFORNIA

THE STATE OF CALIFORNIA OR ITS OFFICERS OR AGENTS SHALL NOT BE RESPONSIBLE FOR THE ACCURACY OR COMPLETENESS OF SCANNED COPIES OF THIS PLAN SHEET.

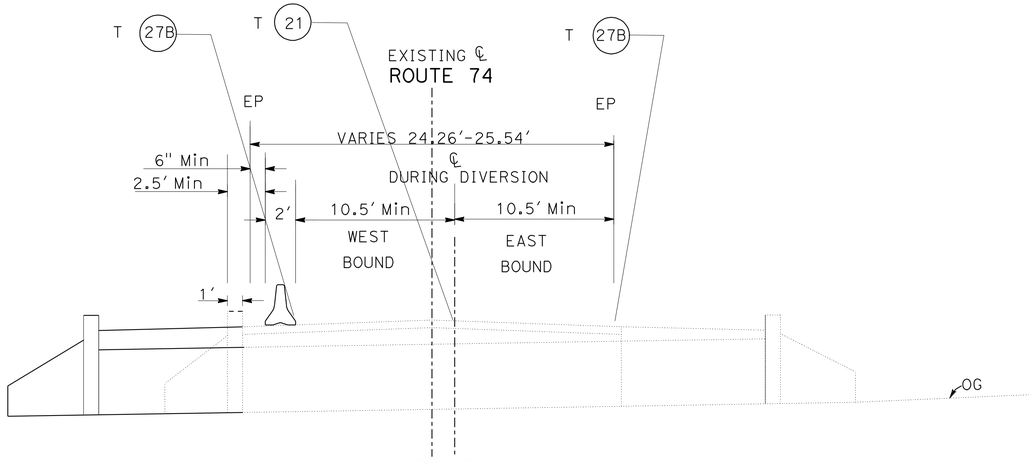

STAGE 2
NORTH SIDE DIVERSION
LOCATION 2

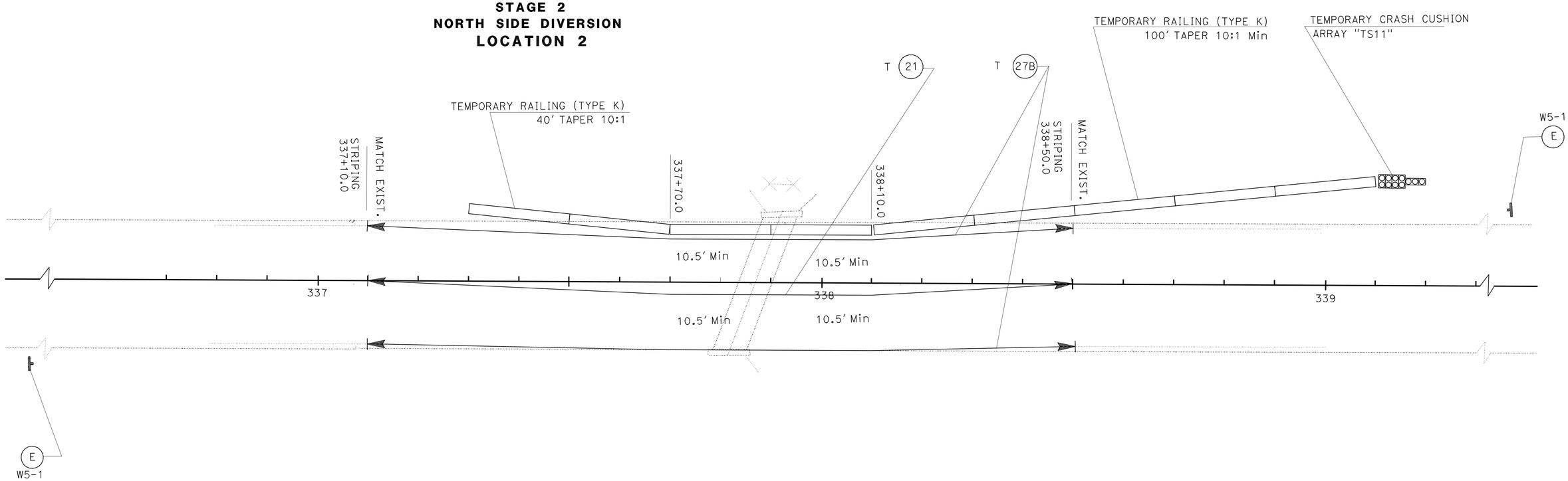

TRAFFIC HANDLING PLAN

SCALE: 1" = 10'

TH-9

THIS PLAN IS ACCURATE FOR TRAFFIC HANDLING WORK ONLY.

STATE OF CALIFORNIA - DEPARTMENT OF TRANSPORTATION
Caltrans
TRAFFIC DESIGN A

FUNCTIONAL SUPERVISOR: W. E. WASSER
CALCULATED-DESIGNED BY: KEVIN NGUYEN
CHECKED BY: THANH TRINH
REVISED BY
DATE REVISED

LAST REVISION DATE PLOTTED => 18-FEB-2011
10-20-10 TIME PLOTTED => 14:47

Dist	COUNTY	ROUTE	POST MILES TOTAL PROJECT	SHEET No.	TOTAL SHEETS
08	Riv	74	64.7/69.0	40	61

Thanh Trinh 10-28-10
REGISTERED CIVIL ENGINEER DATE

2-14-11
PLANS APPROVAL DATE

REGISTERED PROFESSIONAL ENGINEER
T. TRINH
No. C41189
Exp. 3-31-11
CIVIL
STATE OF CALIFORNIA

THE STATE OF CALIFORNIA OR ITS OFFICERS OR AGENTS SHALL NOT BE RESPONSIBLE FOR THE ACCURACY OR COMPLETENESS OF SCANNED COPIES OF THIS PLAN SHEET.

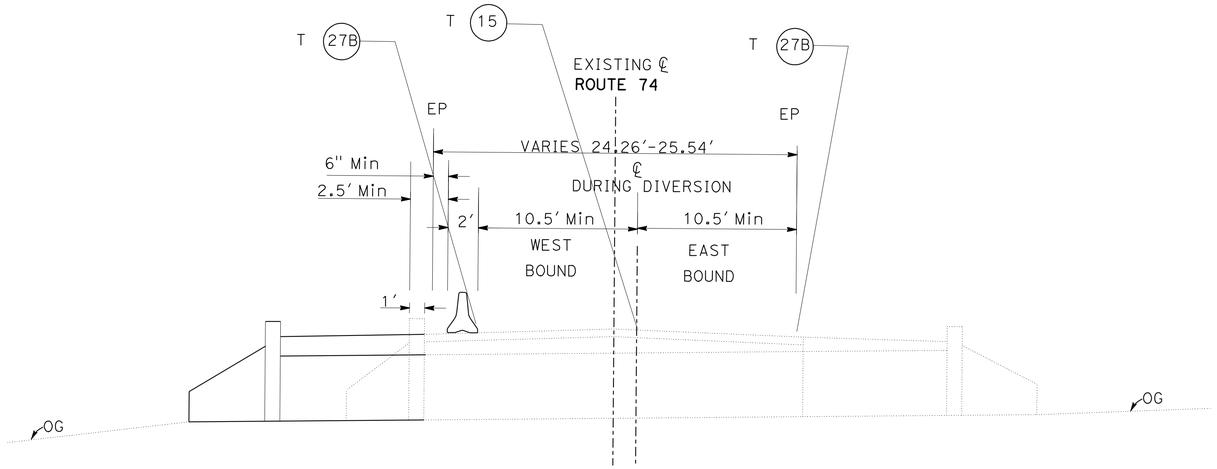

STAGE 2
NORTH SIDE DIVERSION
LOCATION 3

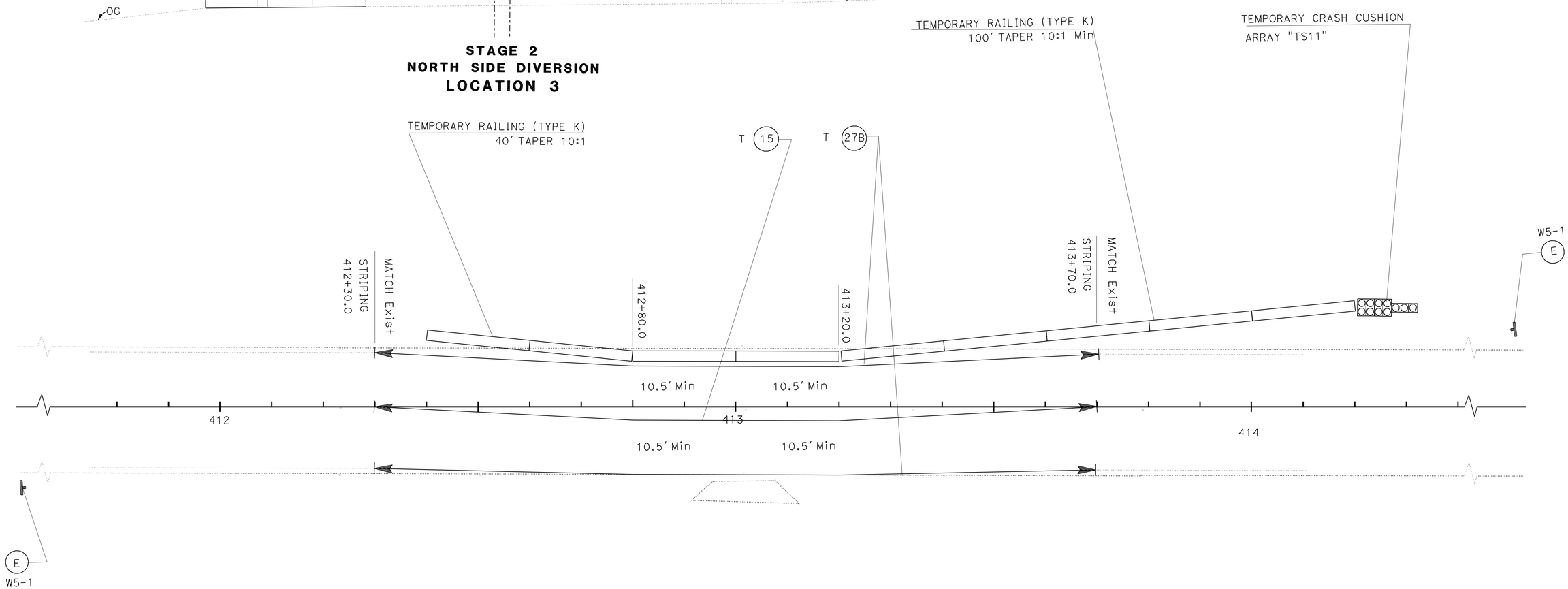

TRAFFIC HANDLING PLAN

SCALE: 1" = 10'

TH-10

THIS PLAN IS ACCURATE FOR TRAFFIC HANDLING WORK ONLY.

REVISED BY	DATE REVISED
KEVIN NGUYEN	THANH TRINH
CALCULATED-DESIGNED BY	CHECKED BY
FUNCTIONAL SUPERVISOR	W. E. WASSER

STATE OF CALIFORNIA - DEPARTMENT OF TRANSPORTATION
Caltrans
TRAFFIC DESIGN A

LAST REVISION 10-20-10
DATE PLOTTED => 18-FEB-2011
TIME PLOTTED => 14:47

Dist	COUNTY	ROUTE	POST MILES TOTAL PROJECT	SHEET No.	TOTAL SHEETS
08	Riv	74	64.7/69.0	41	61

Thanh Trinh 10-28-10
REGISTERED CIVIL ENGINEER DATE

2-14-11
PLANS APPROVAL DATE

REGISTERED PROFESSIONAL ENGINEER
T. TRINH
No. C41189
Exp. 3-31-11
CIVIL
STATE OF CALIFORNIA

THE STATE OF CALIFORNIA OR ITS OFFICERS OR AGENTS SHALL NOT BE RESPONSIBLE FOR THE ACCURACY OR COMPLETENESS OF SCANNED COPIES OF THIS PLAN SHEET.

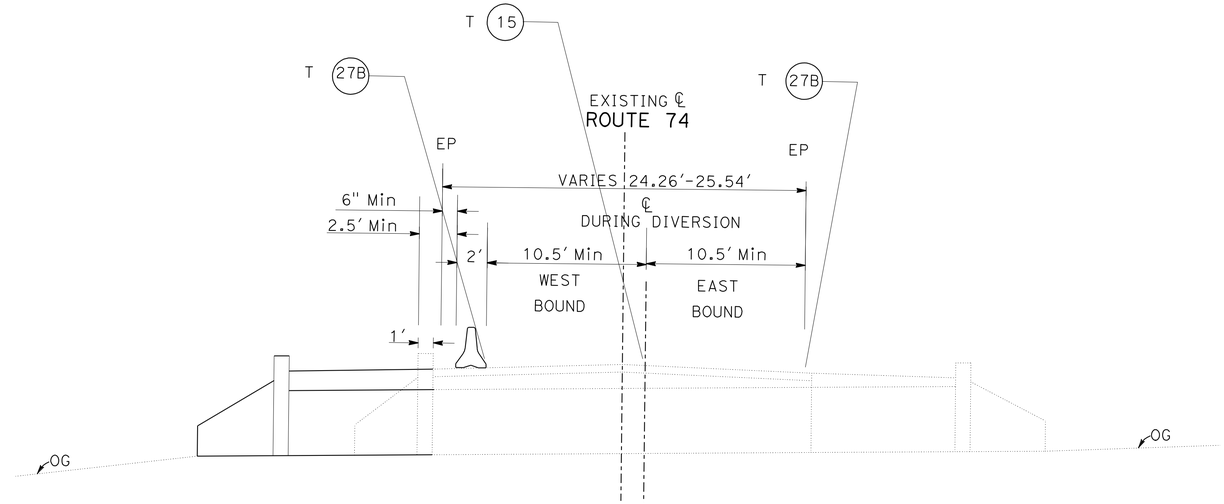

STAGE 2
NORTH SIDE DIVERSION
LOCATION 4

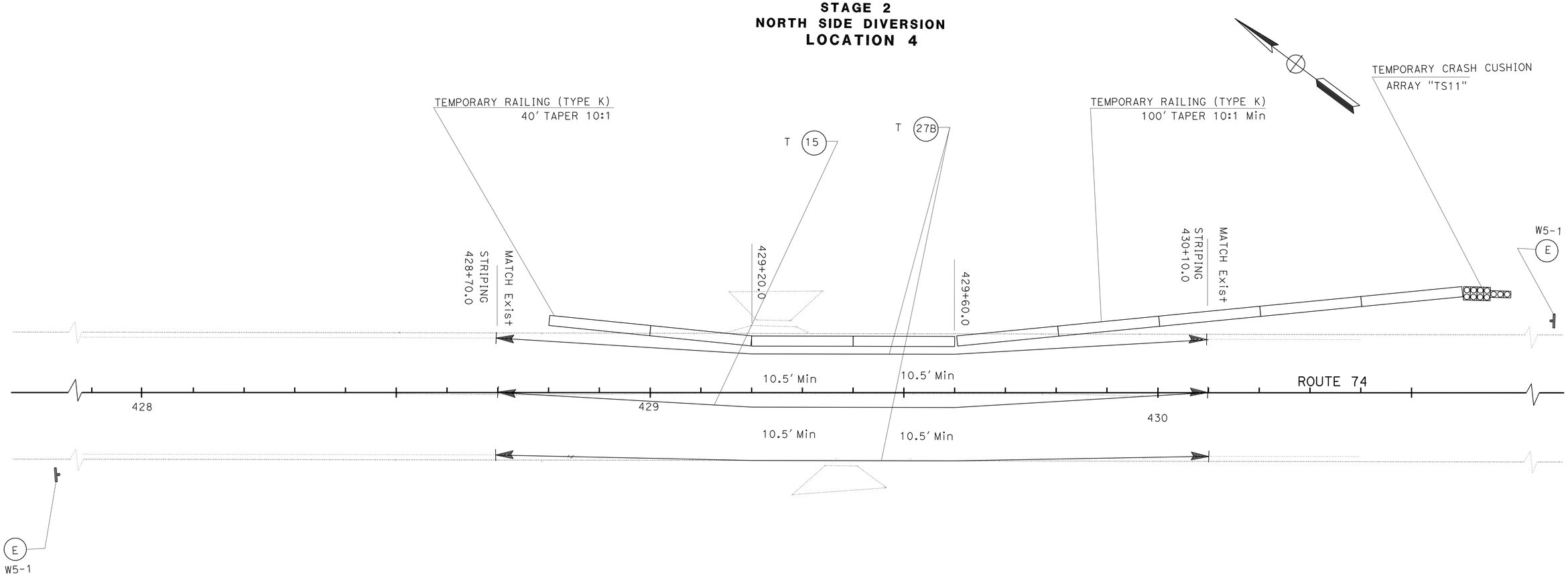

THIS PLAN IS ACCURATE FOR TRAFFIC HANDLING WORK ONLY.

TRAFFIC HANDLING PLAN

SCALE: 1" = 10'

TH-11

STATE OF CALIFORNIA - DEPARTMENT OF TRANSPORTATION
Caltrans®
TRAFFIC DESIGN A

FUNCTIONAL SUPERVISOR: W. E. WASSER
CALCULATED-DESIGNED BY: KEVIN NGUYEN
CHECKED BY: THANH TRINH
REVISED BY
DATE REVISED

LAST REVISION 10-20-10
DATE PLOTTED => 18-FEB-2011
TIME PLOTTED => 14:47

Dist	COUNTY	ROUTE	POST MILES TOTAL PROJECT	SHEET No.	TOTAL SHEETS
08	Riv	74	64.7/69.0	42	61

Thanh Trinh 10-28-10
REGISTERED CIVIL ENGINEER DATE

2-14-11
PLANS APPROVAL DATE

REGISTERED PROFESSIONAL ENGINEER
T. TRINH
No. C41189
Exp. 3-31-11
CIVIL
STATE OF CALIFORNIA

THE STATE OF CALIFORNIA OR ITS OFFICERS OR AGENTS SHALL NOT BE RESPONSIBLE FOR THE ACCURACY OR COMPLETENESS OF SCANNED COPIES OF THIS PLAN SHEET.

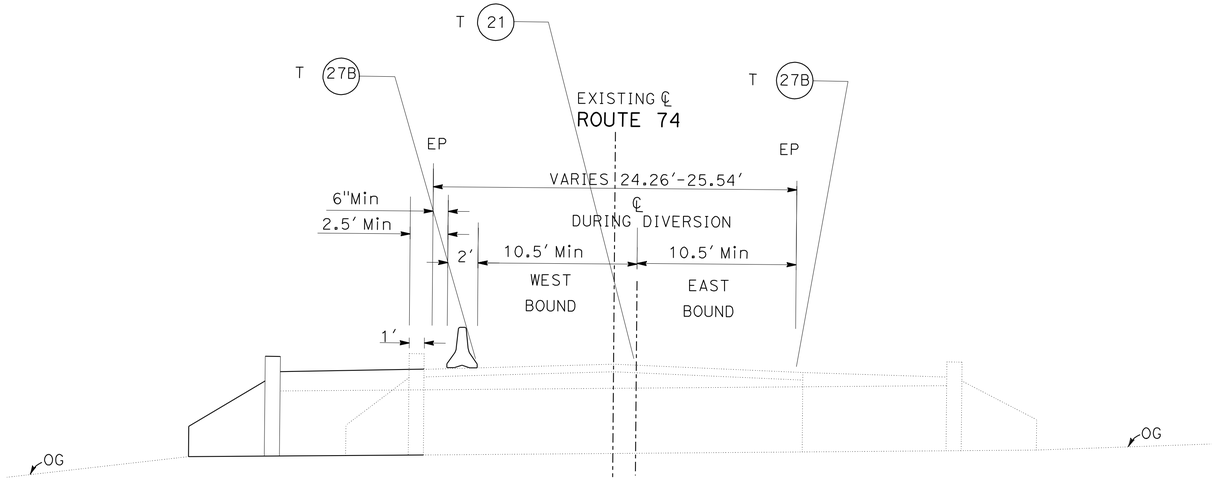

STAGE 2
NORTH SIDE DIVERSION
LOCATION 5

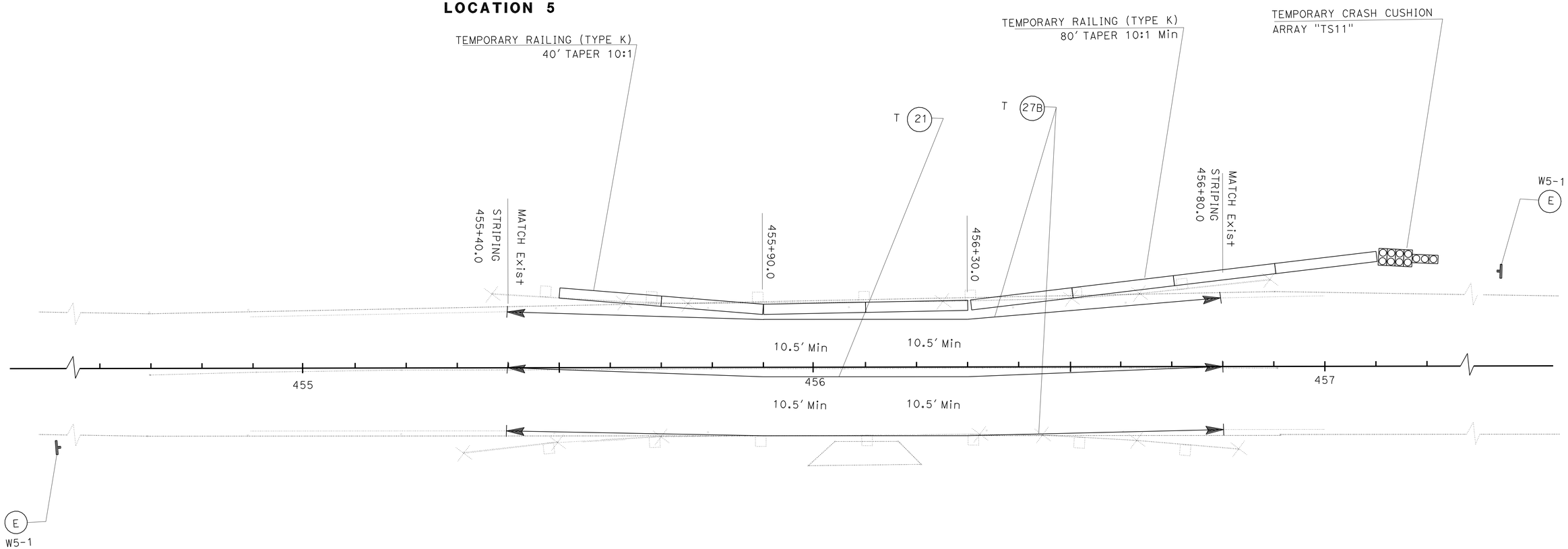

TRAFFIC HANDLING PLAN

SCALE: 1" = 10'

TH-12

THIS PLAN IS ACCURATE FOR TRAFFIC HANDLING WORK ONLY.

REVISED BY | DATE REVISED
KEVIN NGUYEN | THANH TRINH
CALCULATED-DESIGNED BY | CHECKED BY
FUNCTIONAL SUPERVISOR
W. E. WASSER

STATE OF CALIFORNIA - DEPARTMENT OF TRANSPORTATION
Caltrans
TRAFFIC DESIGN A

LAST REVISION 10-20-10 | DATE PLOTTED => 18-FEB-2011 | TIME PLOTTED => 14:48

Dist	COUNTY	ROUTE	POST MILES TOTAL PROJECT	SHEET No.	TOTAL SHEETS
08	Riv	74	64.7/69.0	43	61

Thanh Trinh 10-28-10
REGISTERED CIVIL ENGINEER DATE

2-14-11
PLANS APPROVAL DATE

REGISTERED PROFESSIONAL ENGINEER
T. TRINH
No. C41189
Exp. 3-31-11
CIVIL
STATE OF CALIFORNIA

THE STATE OF CALIFORNIA OR ITS OFFICERS OR AGENTS SHALL NOT BE RESPONSIBLE FOR THE ACCURACY OR COMPLETENESS OF SCANNED COPIES OF THIS PLAN SHEET.

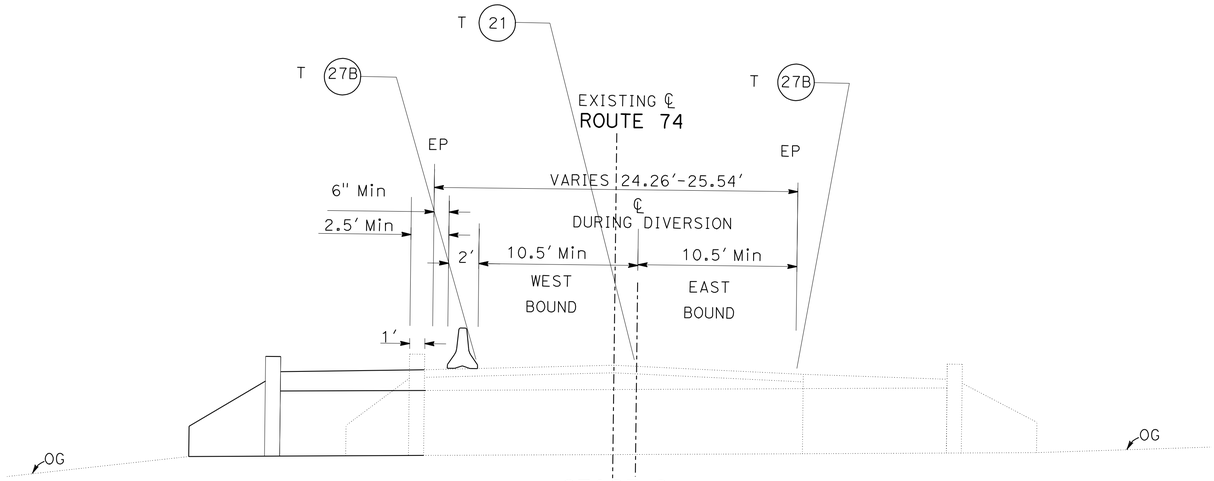

STAGE 2
NORTH SIDE DIVERSION
LOCATION 6

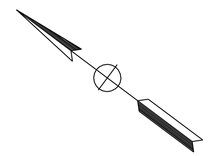

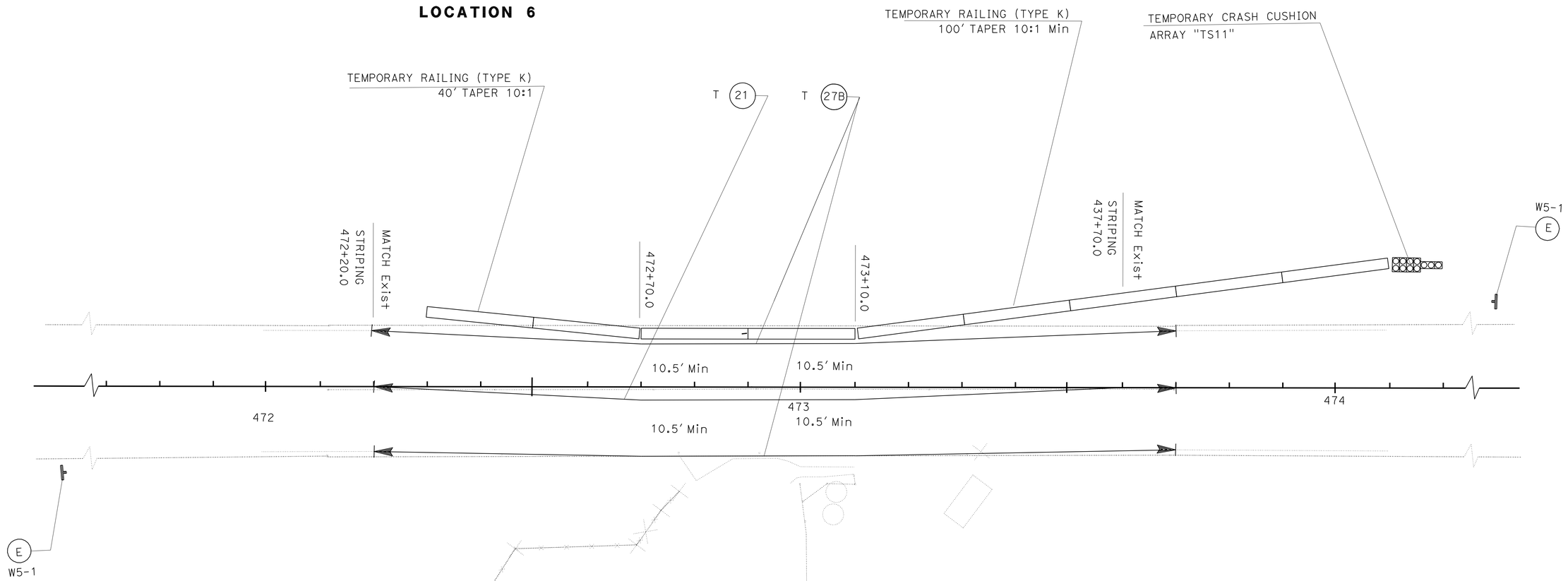

TRAFFIC HANDLING PLAN

SCALE: 1" = 10'

TH-13

THIS PLAN IS ACCURATE FOR TRAFFIC HANDLING WORK ONLY.

REVISED BY | DATE REVISED
KEVIN NGUYEN | THANH TRINH
CALCULATED-DESIGNED BY | CHECKED BY
FUNCTIONAL SUPERVISOR
W. E. WASSER

STATE OF CALIFORNIA - DEPARTMENT OF TRANSPORTATION
Caltrans
TRAFFIC DESIGN A

LAST REVISION 10-20-10 | DATE PLOTTED => 18-FEB-2011 | TIME PLOTTED => 14:48

Dist	COUNTY	ROUTE	POST MILES TOTAL PROJECT	SHEET No.	TOTAL SHEETS
08	Riv	74	64.7/69.0	44	61

Thanh Trinh 10-28-10
REGISTERED CIVIL ENGINEER DATE

2-14-11
PLANS APPROVAL DATE

REGISTERED PROFESSIONAL ENGINEER
T. TRINH
No. C41189
Exp. 3-31-11
CIVIL
STATE OF CALIFORNIA

THE STATE OF CALIFORNIA OR ITS OFFICERS OR AGENTS SHALL NOT BE RESPONSIBLE FOR THE ACCURACY OR COMPLETENESS OF SCANNED COPIES OF THIS PLAN SHEET.

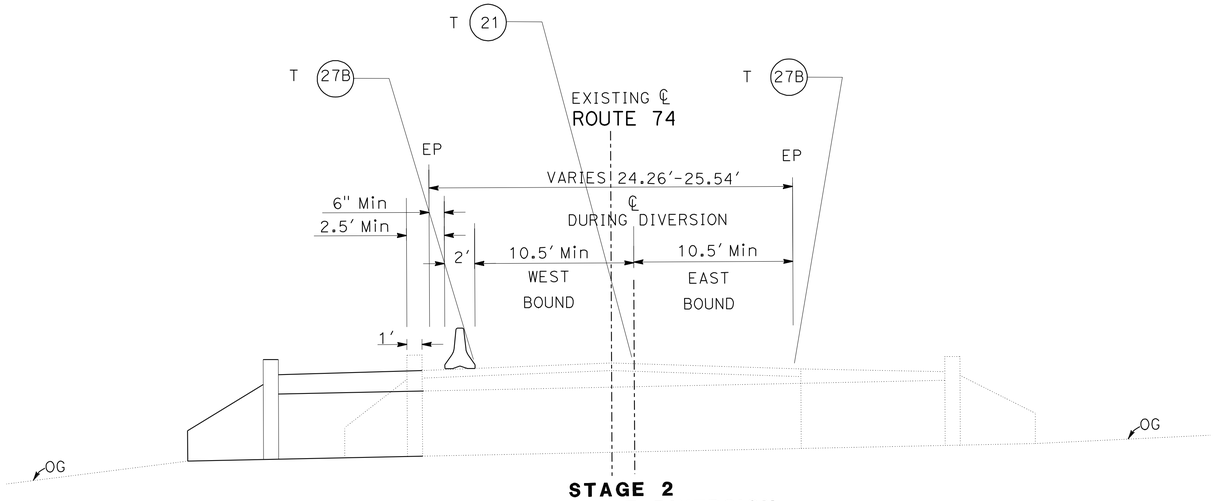

STAGE 2
NORTH SIDE DIVERSION
LOCATION 7

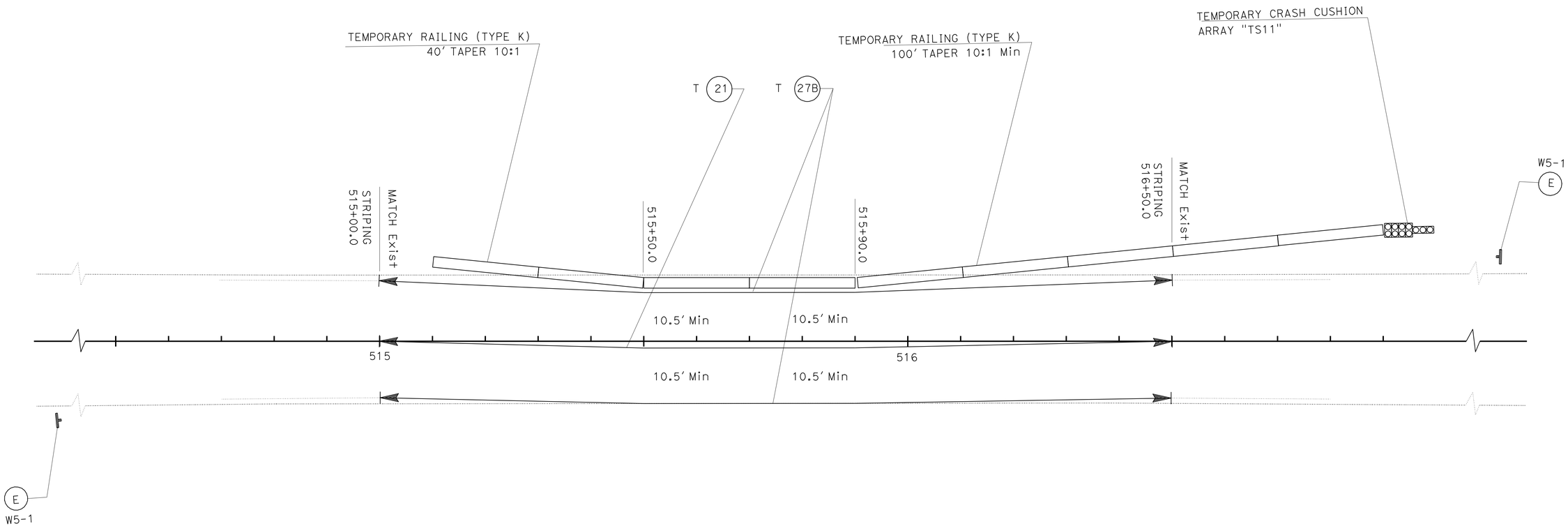

TRAFFIC HANDLING PLAN

SCALE: 1" = 10'

TH-14

THIS PLAN IS ACCURATE FOR TRAFFIC HANDLING WORK ONLY.

REVISED BY | DATE REVISED
KEVIN NGUYEN | THANH TRINH
CALCULATED-DESIGNED BY | CHECKED BY
FUNCTIONAL SUPERVISOR
W. E. WASSER

STATE OF CALIFORNIA - DEPARTMENT OF TRANSPORTATION
Caltrans
TRAFFIC DESIGN A

LAST REVISION 10-20-10
DATE PLOTTED => 18-FEB-2011
TIME PLOTTED => 14:48

Dist	COUNTY	ROUTE	POST MILES TOTAL PROJECT	SHEET No.	TOTAL SHEETS
08	Riv	74	64.7/69.0	45	61

Thanh Trinh 10-28-10
REGISTERED CIVIL ENGINEER DATE

2-14-11
PLANS APPROVAL DATE

REGISTERED PROFESSIONAL ENGINEER
T. TRINH
No. C41189
Exp. 3-31-11
CIVIL
STATE OF CALIFORNIA

THE STATE OF CALIFORNIA OR ITS OFFICERS OR AGENTS SHALL NOT BE RESPONSIBLE FOR THE ACCURACY OR COMPLETENESS OF SCANNED COPIES OF THIS PLAN SHEET.

TRAFFIC HANDLING QUANTITIES

SHEET No	TEMPORARY TRAFFIC STRIPE (PAINT) (LF)	REMOVE THERMOPLASTIC TRAFFIC STRIPE (LF)	REMOVE YELLOW THERMOPLASTIC TRAFFIC STRIPE (LF)	TEMPORARY RAILING (TYPE K) (LF)	TEMPORARY CRASH CUSHION MODULE (EA)
TH-1	420	280	180	180	11
TH-2	420	280	280	180	11
TH-3	420	280	180	180	11
TH-4	420	280	180	180	11
TH-5	420	280	280	180	11
TH-6	420	280	280	180	11
TH-7	480	300	300	180	11
TH-8	420			180	11
TH-9	420			180	11
TH-10	420			180	11
TH-11	420			180	11
TH-12	420			180	11
TH-13	420			180	11
TH-14	480			180	11
TOTAL	6000	1980	1680	2520	154

REVISED BY | DATE REVISED
KEVIN NGUYEN | THANH TRINH
CALCULATED-DESIGNED BY | CHECKED BY
FUNCTIONAL SUPERVISOR
W. E. WASSER

STATE OF CALIFORNIA - DEPARTMENT OF TRANSPORTATION
Caltrans TRAFFIC DESIGN A

TRAFFIC HANDLING QUANTITIES

THQ-1

LAST REVISION 10-20-10 | DATE PLOTTED => 18-FEB-2011 | TIME PLOTTED => 14:33

Dist	COUNTY	ROUTE	POST MILES TOTAL PROJECT	SHEET No.	TOTAL SHEETS
08	Riv	74	64.7/69.0	46	61

Thanh Trinh 10-28-10
REGISTERED CIVIL ENGINEER DATE

2-14-11
PLANS APPROVAL DATE

REGISTERED PROFESSIONAL ENGINEER
T. TRINH
No. C41189
Exp. 3-31-11
CIVIL
STATE OF CALIFORNIA

THE STATE OF CALIFORNIA OR ITS OFFICERS OR AGENTS SHALL NOT BE RESPONSIBLE FOR THE ACCURACY OR COMPLETENESS OF SCANNED COPIES OF THIS PLAN SHEET.

PAVEMENT DELINEATION QUANTITIES

LOCATION	THERMOPLASTIC TRAFFIC STRIPE (SPRAYABLE)		
	DETAIL 27B	DETAIL 15	DETAIL 21
	4" WHITE	4" YELLOW	
	LF		
1	280	140	
2	280		140
3	280	140	
4	280	140	
5	280		140
6	280		140
7	300		150
TOTAL	2970		

PAVEMENT DELINEATION QUANTITIES

PDQ-1

REVISED BY | DATE REVISED
KEVIN NGUYEN | THANH TRINH
CALCULATED-DESIGNED BY | CHECKED BY
FUNCTIONAL SUPERVISOR
BILL WASSER

STATE OF CALIFORNIA - DEPARTMENT OF TRANSPORTATION
Caltrans
TRAFFIC DESIGN A

LAST REVISION 10-20-10
DATE PLOTTED => 18-FEB-2011
TIME PLOTTED => 14:33

Dist	COUNTY	ROUTE	POST MILES TOTAL PROJECT	SHEET No.	TOTAL SHEETS
08	Riv	74	64.7/69.0	47	61

REGISTERED CIVIL ENGINEER 10-28-10 DATE

2-14-11
PLANS APPROVAL DATE

REGISTERED PROFESSIONAL ENGINEER SERGIO EDUARDO-AVILA No. 60951 Exp. 12/31/10 CIVIL STATE OF CALIFORNIA

THE STATE OF CALIFORNIA OR ITS OFFICERS OR AGENTS SHALL NOT BE RESPONSIBLE FOR THE ACCURACY OR COMPLETENESS OF SCANNED COPIES OF THIS PLAN SHEET.

WATER POLLUTION CONTROL

ITEM	UNIT	QUANTITIES
TEMPORARY CONCRETE WASHOUT (PORTABLE)	EA	1
TEMPORARY COVER	SQYD	970
TEMPORARY GRAVEL BAG BERM	LF	625
TEMPORARY DRAINAGE INLET PROTECTION	EA	7

METAL BEAM GUARD RAILING

LOCATION	DIRECTION OF TRAFFIC	STATION (LINE "A")	RIGHT /LEFT	MBGR STEEL POST	REMOVE MBGR	ALTERNATIVE FLARED TERMINAL SYSTEM	TRANSITION RAILING (TYPE WB)	END ANCHOR ASSEMBLY TYPE SFT	CRASHED CUSHION (ADIEM)
				LF	LF	EA	EA	EA	EA
1	EB	289+42.33	RIGHT			1	1		
	WB	289+42.33	LEFT			1	1		
2	EB	337+87.03	RIGHT			1	1		
	WB	337+87.03	LEFT			1	1		
3	EB	412+35.887 TO 413+23.387	RIGHT	87.5		2			
	WB	413+01.43	LEFT			1	1		
4	EB	429+30.58	RIGHT			1	1		
	WB	429+30.58	LEFT			1	1		
5	EB	455+31.24 TO 456+83.09	RIGHT		151.85	1	1		
	WB	455+36.84 TO 456+89.25	LEFT		152.41	1	1		
6	EB	472+90.18	RIGHT						1
	WB	472+69.454 TO 473+56.954	LEFT	87.5		1		1	
7	EB	515+05.892 TO 515+93.392	RIGHT	87.5		2			
	WB	515+64.74	LEFT			1	1		
TOTAL				262.5	304.26	15	10	1	1

ROADWAY

LOCATION	DIRECTION OF TRAFFIC	STATION	IMPORTED BORROW
			CY
1	EB	289+42.33	19.2
	WB	289+42.33	20.22
2	EB	337+87.03	22.87
	WB	337+87.03	30.85
3	EB	413+01.43	23.36
	WB	413+01.43	46.5
4	EB	429+30.58	22.07
	WB	429+30.58	26.66
5	EB	456+10.49	22.03
	WB	456+10.49	77.85
6	EB	472+90.18	15.36
	WB	472+90.18	9.75
7	EB	515+64.74	18.89
	WB	515+64.74	22.58
TOTAL			378.17

ERROSION CONTROL

LOCATION	STATION	DIRECTION	EC (ERROSION CONTROL) ACRES	DUFF SQYD
1	289+00 TO 290+00	NB	0.165	800
2	337+50 TO 338+50	NB	0.165	800
3	412+50 TO 413+50	NB	0.165	800
4	428+70 TO 429+70	NB	0.165	800
5	455+50 TO 456+50	NB	0.165	800
6	472+50 TO 473+50	NB	0.165	800
7	515+00 TO 516+00	NB	0.165	800
8	289+00 TO 290+00	SB	0.165	800
9	337+50 TO 338+50	SB	0.165	800
10	412+50 TO 413+50	SB	0.165	800
11	428+70 TO 429+70	SB	0.165	800
12	455+50 TO 456+50	SB	0.165	800
13	472+50 TO 473+50	SB	0.165	800
14	515+00 TO 516+00	SB	0.165	800
TOTAL			2.31	11,200

SUMMARY OF QUANTITIES

Q-1

REVISED BY | DATE REVISED
MICHELLE TAVAKOLI | SERGIO E. AVILA
CALCULATED-DESIGNED BY | CHECKED BY
FUNCTIONAL SUPERVISOR: SERGIO E. AVILA

STATE OF CALIFORNIA - DEPARTMENT OF TRANSPORTATION
Caltrans DESIGN DEVELOPMENT

LAST REVISION 10-20-10 | DATE PLOTTED => 18-FEB-2011 | TIME PLOTTED => 14:36

DIST	COUNTY	ROUTE	POST MILES TOTAL PROJECT	SHEET NO.	TOTAL SHEETS
08	Riv	74	64.7/69.0	48	61

Randell D. Hiatt
REGISTERED CIVIL ENGINEER

June 6, 2008
PLANS APPROVAL DATE

REGISTERED PROFESSIONAL ENGINEER
Randell D. Hiatt
No. C50200
Exp. 6-30-09
CIVIL
STATE OF CALIFORNIA

The State of California or its officers or agents shall not be responsible for the accuracy or completeness of electronic copies of this plan sheet.

To accompany plans dated 2-14-11

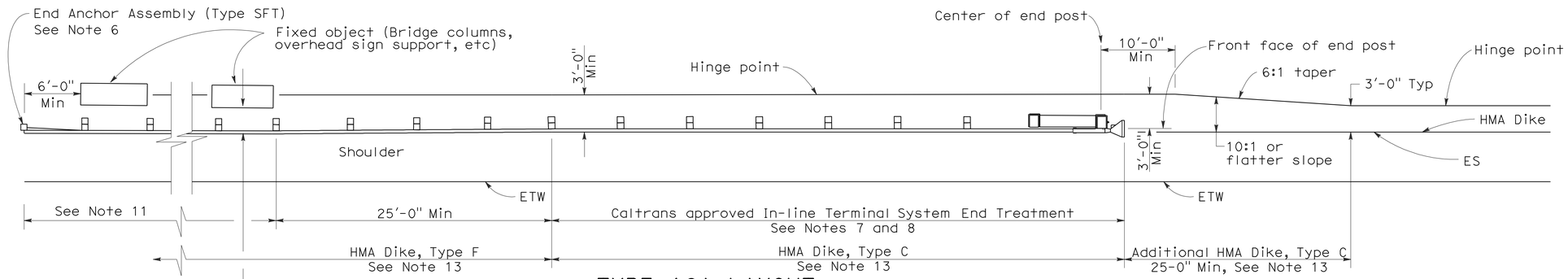

TYPE 16A LAYOUT

(GUARD RAILING INSTALLATION AT ROADSIDE FIXED OBJECT OR OBJECTS WITH AN IN-LINE END TREATMENT AT TRAFFIC APPROACH END OF RAILING)
See Notes 12 and 13

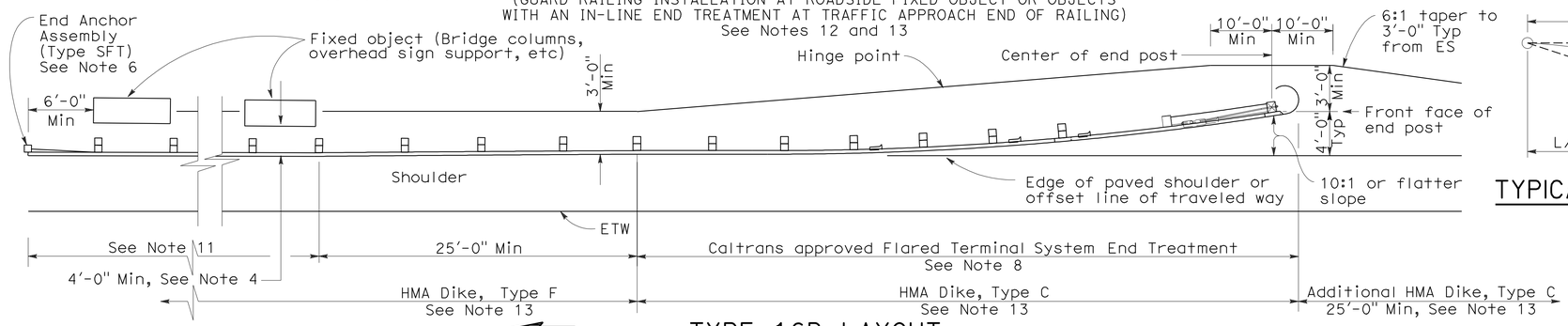

TYPE 16B LAYOUT

(GUARD RAILING INSTALLATION AT ROADSIDE FIXED OBJECT OR OBJECTS WITH A FLARED END TREATMENT AT TRAFFIC APPROACH END OF RAILING)
See Notes 12 and 13

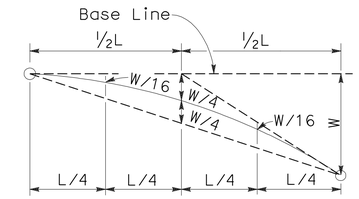

TYPICAL PARABOLIC LAYOUT

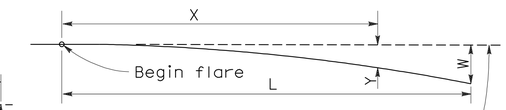

Base Line (Edge of paved shoulder or offset line of edge of traveled way)

$$Y = \frac{WX^2}{L^2}$$

Y = Offset from base line
W = Maximum offset
X = Distance along base line
L = Length of flare

PARABOLIC FLARE OFFSETS

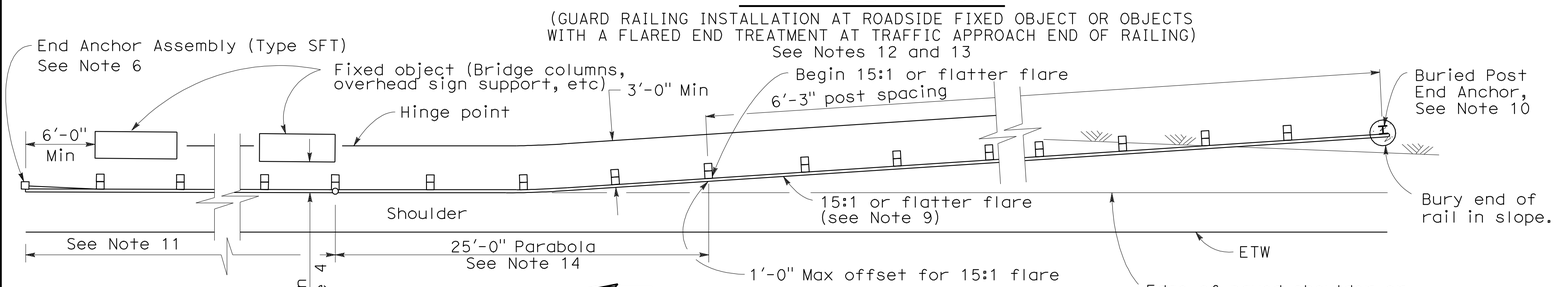

TYPE 16C LAYOUT

(GUARD RAILING INSTALLATION AT ROADSIDE FIXED OBJECT OR OBJECTS WITH A BURIED END ANCHOR TREATMENT AT TRAFFIC APPROACH END OF RAILING)
See Notes 12 and 13

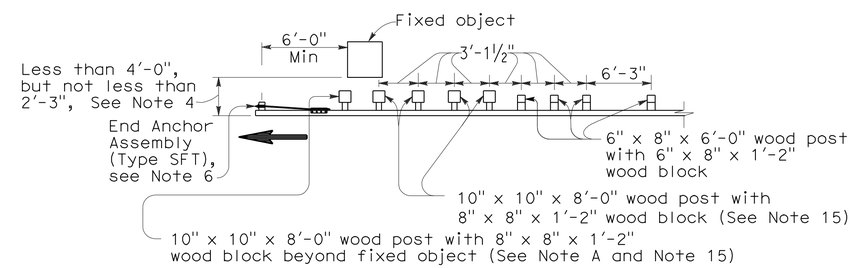

NOTE A: For a series of fixed objects (bridge columns, overhead sign supports, etc.) additional 10" x 10" x 8'-0" wood post with 8" x 8" x 1'-2" wood blocks at 3'-1½" center to center spacing are to be used between fixed objects.

STRENGTHENED RAILING SECTIONS FOR FIXED OBJECT

Use strengthened railing sections with Types 16A, 16B or 16C Layouts where minimum clearance between the face of the guard railing and fixed object(s) is less than 4'-0", but not less than 2'-3". See Note 4

NOTES:

1. Line post, blocks and hardware to be used are shown on Revised Standard Plans A77A1, A77A2, A77B1, A77C1 and A77C2.
2. Guard railing post spacing to be 6'-3" center to center, except as otherwise noted.
3. Except as noted, line posts are 6" x 8" x 6'-0" wood with 6" x 8" x 1'-2" wood blocks. W6 x 9 steel posts, 6'-0" in length, with 6" x 8" x 1'-2" notched wood blocks or notched recycled plastic blocks may be used for 6" x 8" x 6'-0" wood line posts with 6" x 8" x 1'-2" wood blocks where applicable and when specified.
4. A 4'-0" minimum clearance is required between the face of the railing and the face of a fixed object located directly behind standard guard railing sections with post spacing of 6'-3". Construct guard railing as shown in the detail "Strengthened Railing Sections for Fixed Objects" on this plan, where the clearance between the face of the railing and the face of a fixed object is less than 4'-0", but not less than 2'-3". Where the clearance is less than 2'-3", a concrete wall or barrier should be constructed to shield the fixed object(s).
5. Direction of adjacent traffic indicated by ⟶.
6. For End Anchor Assembly (Type SFT) details, see Standard Plan A77H1.
7. In-line Terminal System End Treatments are used where site conditions will not accommodate a flared end treatment.
8. The type of terminal system to be used will be shown on the Project Plans.
9. The 15:1 or flatter flare used with Type 16C Layout is based on the edge of the paved shoulder or offset line of edge of the traveled way. The length of guard railing within the 15:1 or flatter flare is based on site conditions and should be a length equal to multiples of 12'-6".
10. For details of the Buried Post End Anchor used with Type 16C Layout, see Standard Plan A77I2.
11. As site conditions dictate, construct additional guard railing to shield fixed object(s). Additional guard railing length equal to multiples of 12'-6". Post spacing at 6'-3" except as specified in Note 4.
12. Layout Types 16A, 16B or 16C are typically used where guard railing is recommended to shield roadside fixed object(s) and a crashworthy end treatment is required for only one direction of traffic.
13. Where placement of dike is required with guard railing, see Revised Standard Plan RSP A77C4 for dike positioning details.
14. For typical flare offsets for 25'-0" length parabola with maximum offset of 1'-0", see Revised Standard Plan RSP A77E1.
15. W6 x 15 steel post, 8'-0" in length, with 8" x 8" x 1'-2" notched wood block or notched recycled plastic blocks may be used in place of the 10" x 10" x 8'-0" wood post with 8" x 8" x 1'-2" wood block shown in the "Strengthened Railing Sections Detail".

STATE OF CALIFORNIA
DEPARTMENT OF TRANSPORTATION

METAL BEAM GUARD RAILING TYPICAL LAYOUTS FOR ROADSIDE FIXED OBJECTS

NO SCALE

RSP A77G3 DATED JUNE 6, 2008 SUPERSEDES STANDARD PLAN A77G3 DATED MAY 1, 2006 - PAGE 61 OF THE STANDARD PLANS BOOK DATED MAY 2006.

REVISED STANDARD PLAN RSP A77G3

2006 REVISED STANDARD PLAN RSP A77G3

12-10-07

DIST	COUNTY	ROUTE	POST MILES TOTAL PROJECT	SHEET NO.	TOTAL SHEETS
08	Riv	74	64.7/69.0	49	61

Randell D. Hiatt
REGISTERED CIVIL ENGINEER

June 6, 2008
PLANS APPROVAL DATE

REGISTERED PROFESSIONAL ENGINEER
Randell D. Hiatt
No. C50200
Exp. 6-30-09
CIVIL
STATE OF CALIFORNIA

The State of California or its officers or agents shall not be responsible for the accuracy or completeness of electronic copies of this plan sheet.

To accompany plans dated 2-14-11

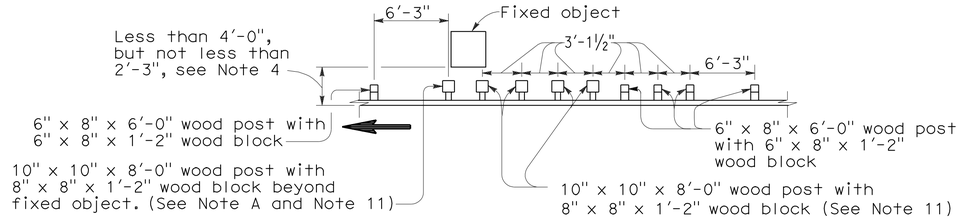

NOTE A: For a series of fixed objects (bridge columns, overhead sign supports, etc.) additional 10" x 10" x 8'-0" wood post with 8" x 8" x 1'-2" wood blocks at 3'-1½" center to center spacing are to be used between fixed object(s).

STRENGTHENED RAILING SECTIONS FOR FIXED OBJECT

Use strengthened railing sections with Layout Types 16D or 16E where minimum clearance between the guard railing and fixed object(s) is less than 4'-0", but not less than 2'-3". See Note 4.

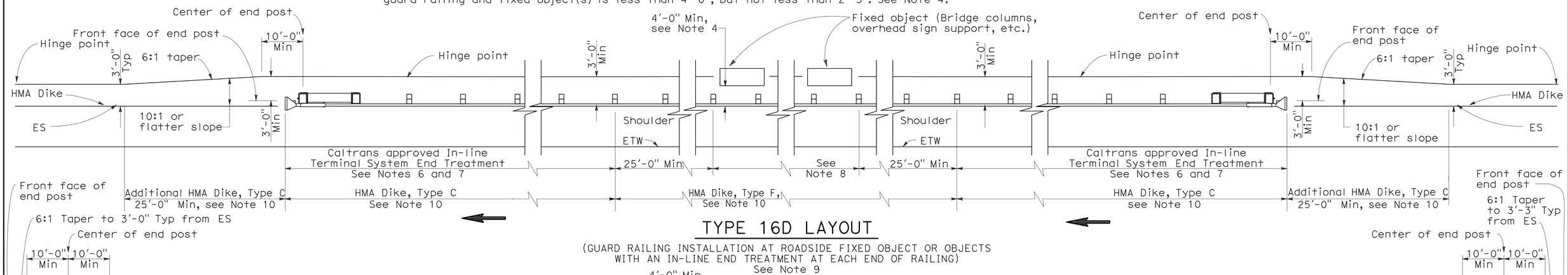

TYPE 16D LAYOUT

(GUARD RAILING INSTALLATION AT ROADSIDE FIXED OBJECT OR OBJECTS WITH AN IN-LINE END TREATMENT AT EACH END OF RAILING)
See Note 9

TYPE 16E LAYOUT

(GUARD RAILING INSTALLATION AT ROADSIDE FIXED OBJECT OR OBJECTS WITH A FLARED END TREATMENT AT EACH END OF RAILING)
See Note 9

NOTES:

1. Line post, blocks and hardware to be used are shown on Standard Plans A77A1, A77A2, A77B1, A77C1 and A77C2.
2. Guard railing post spacing to be 6'-3" center to center, except as otherwise noted.
3. Except as noted, line posts are 6" x 8" x 6'-0" wood with 6" x 8" x 1'-2" wood blocks. W6 x 9 steel posts, 6'-0" in length, with 6" x 8" x 1'-2" notched wood blocks or notched recycled plastic blocks may be used for 6" x 8" x 6'-0" wood line posts with 6" x 8" x 1'-2" wood blocks where applicable and when specified.
4. A 4'-0" minimum clearance is required between the face of the railing and the face of a fixed object located directly behind standard guard railing sections with post spacing at 6'-3". Construct guard railing as shown in the detail "Strengthened Railing Sections for Fixed Objects" on this plan, where the clearance between the face of the railing and the face of a fixed object is less than 4'-0", but not less than 2'-3". Where the clearance is less than 2'-3", a concrete wall or barrier should be constructed to shield the fixed object(s).
5. Direction of adjacent traffic indicated by ⟶ .
6. In-line Terminal System End Treatments are used where site conditions will not accommodate a flared end treatment.
7. The type of terminal system to be used will be shown on the Project Plans.
8. As site conditions dictate, construct additional guard railing to shield fixed object(s). Additional guard railing length equal to multiples of 12'-6". Post spacing at 6'-3", except as specified in Note 4.
9. Layout Types 16D through 16L, shown on the A77G Series of Revised Standard Plans, are typically used where guard railing is recommended to shield roadside fixed object(s) and a crashworthy end treatment is required for both directions of traffic.
10. Where placement of dike is required with guard railing, see Revised Standard Plan RSP A77C4 for dike positioning details.
11. W6 x 15 steel post, 8'-0" in length, with 8" x 8" x 1'-2" notched wood block or notched recycled plastic block may be used in place of the 10" x 10" x 8'-0" wood post with 8" x 8" x 1'-2" wood block shown in the "Strengthened Railing Sections Detail."

STATE OF CALIFORNIA
DEPARTMENT OF TRANSPORTATION

METAL BEAM GUARD RAILING TYPICAL LAYOUTS FOR ROADSIDE FIXED OBJECTS

NO SCALE

RSP A77G4 DATED JUNE 6, 2008 SUPERSEDES STANDARD PLAN A77G4
DATED MAY 1, 2006 - PAGE 62 OF THE STANDARD PLANS BOOK DATED MAY 2006.

REVISED STANDARD PLAN RSP A77G4

2006 REVISED STANDARD PLAN RSP A77G4

12-10-07

DIST	COUNTY	ROUTE	POST MILES TOTAL PROJECT	SHEET NO.	TOTAL SHEETS
08	Riv	74	64.7/69.0	50	61

Randell D. Hiatt
REGISTERED CIVIL ENGINEER

June 6, 2008
PLANS APPROVAL DATE

REGISTERED PROFESSIONAL ENGINEER
Randell D. Hiatt
No. C50200
Exp. 6-30-09
CIVIL
STATE OF CALIFORNIA

The State of California or its officers or agents shall not be responsible for the accuracy or completeness of electronic copies of this plan sheet.

To accompany plans dated 2-14-11

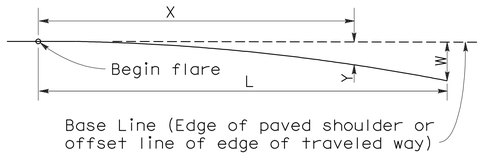

$$Y = \frac{WX^2}{L^2}$$

Y = Offset from base line
W = Maximum offset
X = Distance along base line
L = Length of flare

PARABOLIC FLARE OFFSETS

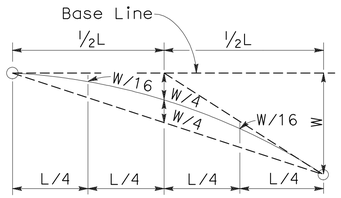

TYPICAL PARABOLIC LAYOUT

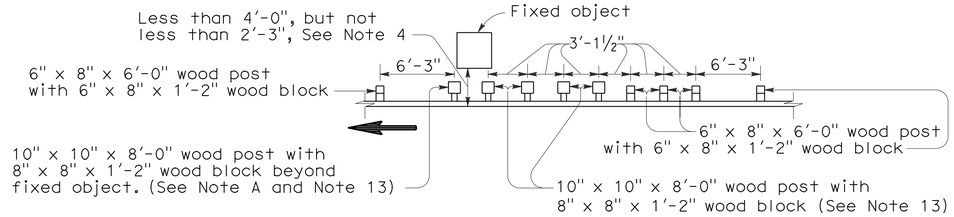

NOTE A: For a series of fixed objects (bridge columns, overhead sign supports, etc.) additional 10" x 10" x 8'-0" wood post with 8" x 8" x 1'-2" wood blocks at 3'-1½" center to center spacing are to be used between fixed object(s).

STRENGTHENED RAILING SECTIONS FOR FIXED OBJECT

Use strengthened railing sections with Layout Types 16F or 16G where minimum clearance between the face of the guard railing and fixed object(s) is less than 4'-0", but not less than 2'-3". See Note 4.

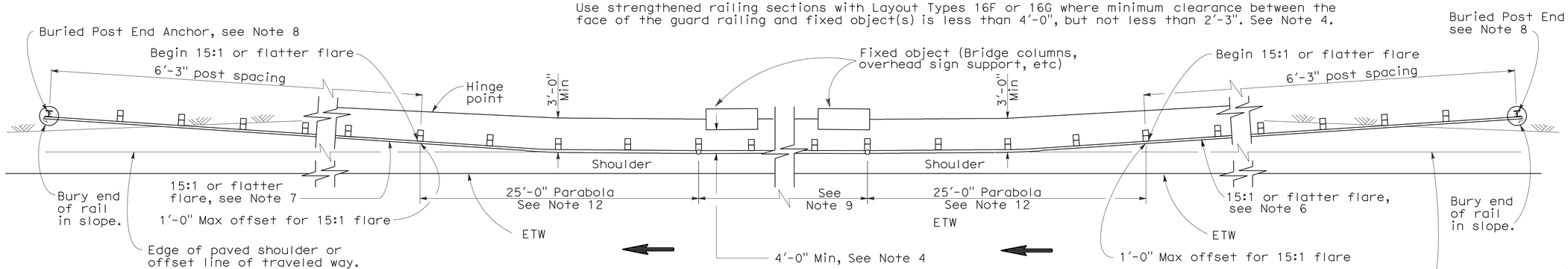

TYPE 16F LAYOUT

(GUARD RAILING INSTALLATION AT ROADSIDE FIXED OBJECT OR OBJECTS WITH A BURIED END ANCHOR TREATMENT AT EACH END OF RAILING)
See Notes 10 and 11

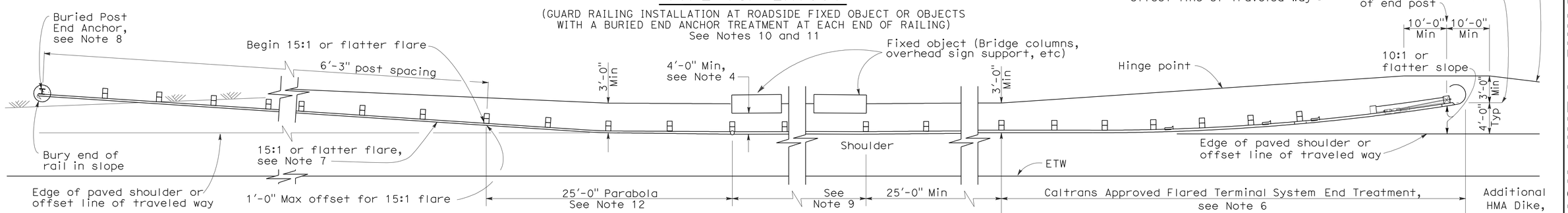

TYPE 16G LAYOUT

(GUARD RAILING INSTALLATION AT ROADSIDE FIXED OBJECT OR OBJECTS WITH A FLARED END TREATMENT AND A BURIED END ANCHOR TREATMENT AT THE ENDS OF RAILING)
See Notes 10 and 11

NOTES:

1. Line post, blocks and hardware to be used are shown on Standard Plans A77A1, A77A2, A77B1, A77C1 and A77C2.
2. Guard railing post spacing to be 6'-3" center to center, except as otherwise noted.
3. Except as noted, line posts are 6" x 8" x 6'-0" wood with 6" x 8" x 1'-2" wood blocks. W6 x 9 steel posts, 6'-0" in length, with 8" x 8" x 1'-2" notched wood blocks or notched recycled plastic blocks may be used for 6" x 8" x 6'-0" wood posts with 6" x 8" x 1'-2" wood blocks where applicable and when specified.
4. A 4'-0" minimum clearance is required between the face of the railing and the face of a fixed object located directly behind standard guard railing sections with post spacing at 6'-3". Construct guard railing as shown in the detail "Strengthened Railing Sections for Fixed Objects" on this plan, where the clearance between the face of the railing and the face of a fixed object is less than 4'-0", but not less than 2'-3". Where the clearance is less than 2'-3", a concrete wall or barrier should be constructed to shield the fixed object(s).
5. Direction of adjacent traffic indicated by ⟶.
6. The type of terminal system to be used will be shown on the Project Plans.
7. The 15:1 or flatter flare for the buried post anchor is based on the edge of the paved shoulder or offset line of edge of the traveled way. The length of guard railing within the 15:1 or flatter flare is based on site conditions and should be a length equal to multiples of 12'-6".
8. For details of the Buried Post End Anchor details, see Standard Plan A77I2.
9. As site conditions dictate, construct additional guard railing to shield fixed object(s). Additional guard railing length equal to multiples of 12'-6". Post spacing at 6'-3", except as specified in Note 4.
10. Layout Types 16D through 16L, shown on the A77G Series of Revised Standard Plans, are typically used on highways where guard railing is recommended to shield roadside fixed object(s) and a crashworthy end treatment is required for both directions of traffic.
11. Where placement of dike is required with guard railing, see Revised Standard Plan RSP A77C4 for dike positioning details.
12. For typical flare offsets for 25'-0" length parabola with maximum offset of 1'-0", see Revised Standard Plan RSP A77E1.
13. W6 x 15 steel post, 8'-0" in length, with 8" x 8" x 1'-2" notched wood block or notched recycled plastic blocks may be used in place of the 10" x 10" x 8'-0" wood post with 8" x 8" x 1'-2" wood block shown in the "Strengthened Railing Sections Detail".

STATE OF CALIFORNIA
DEPARTMENT OF TRANSPORTATION

METAL BEAM GUARD RAILING TYPICAL LAYOUTS FOR ROADSIDE FIXED OBJECTS

NO SCALE

RSP A77G5 DATED JUNE 6, 2008 SUPERSEDES STANDARD PLAN A77G5 DATED MAY 1, 2006 - PAGE 63 OF THE STANDARD PLANS BOOK DATED MAY 2006.

REVISED STANDARD PLAN RSP A77G5

2006 REVISED STANDARD PLAN RSP A77G5

12-10-07

DIST	COUNTY	ROUTE	POST MILES TOTAL PROJECT	SHEET NO.	TOTAL SHEETS
08	Riv	74	64.7/69.0	51	61

Randell D. Hiatt
REGISTERED CIVIL ENGINEER

June 6, 2008
PLANS APPROVAL DATE

REGISTERED PROFESSIONAL ENGINEER
Randell D. Hiatt
No. C50200
Exp. 6-30-09
CIVIL
STATE OF CALIFORNIA

The State of California or its officers or agents shall not be responsible for the accuracy or completeness of electronic copies of this plan sheet.

To accompany plans dated 2-14-11

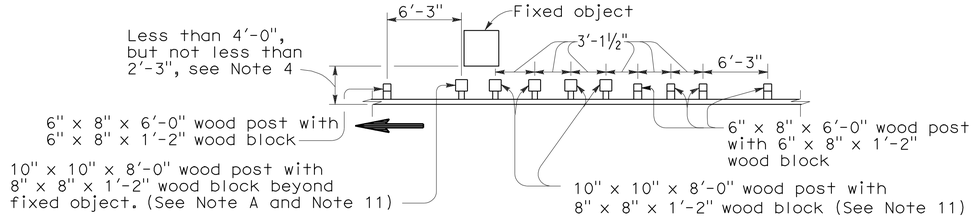

Note A. For a series of fixed objects (bridge columns, overhead sign supports, etc.) additional 10" x 10" x 8'-0" wood post with 8" x 8" x 1'-2" wood blocks at 3'-1½" center to center spacing are to be used between fixed object(s).

STRENGTHENED RAILING SECTIONS FOR FIXED OBJECT

Use strengthened railing sections with Layout Type 16H where minimum clearance between the face of the guard railing and fixed object(s) is less than 4'-0", but not less than 2'-3". See Note 4.

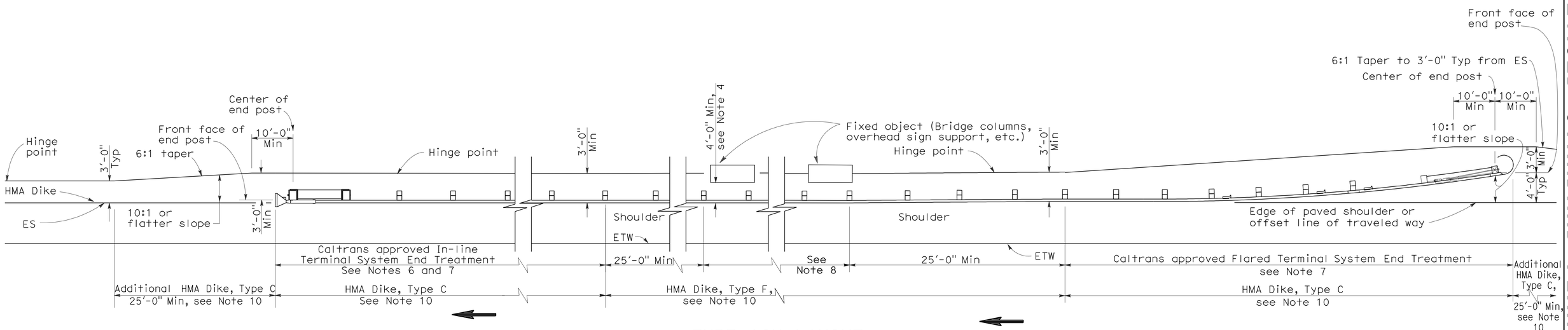

TYPE 16H LAYOUT

(GUARD RAILING INSTALLATION AT ROADSIDE FIXED OBJECT OR OBJECTS WITH A FLARED END TREATMENT AND AN IN-LINE TREATMENT AT THE ENDS OF RAILING)
See Note 9

NOTES:

1. Line post, blocks and hardware to be used are shown on Standard Plans A77A1, A77A2, A77B1, A77C1 and A77C2.
2. Guard railing post spacing to be 6'-3" center to center, except as otherwise noted.
3. Except as noted, line posts are 6" x 8" x 6'-0" wood with 6" x 8" x 1'-2" wood blocks. W6 x 9 steel posts, 6'-0" in length, with 6" x 8" x 1'-2" notched wood blocks or notched recycled plastic blocks may be used for 6" x 8" x 6'-0" wood posts with 6" x 8" x 1'-2" wood blocks where applicable and when specified.
4. A 4'-0" minimum clearance is required between the face of the railing and the face of a fixed object located directly behind standard guard railing sections with post spacing at 6'-3". Construct guard railing as shown in the detail "Strengthened Railing Sections for Fixed Objects" on this plan, where the clearance between the face of the railing and the face of a fixed object is less than 4'-0", but not less than 2'-3". Where the clearance is less than 2'-3", a concrete wall or barrier should be constructed to shield the fixed object(s).
5. Direction of adjacent traffic indicated by ⟶ .
6. In-line Terminal System End Treatments are used where site conditions will not accommodate a flared end treatment.
7. The type of terminal system to be used will be shown on the Project Plans.
8. As site conditions dictate, construct additional guard railing to shield fixed object(s). Additional guard railing length equal to multiples of 12'-6". Post spacing at 6'-3", except as specified in Note 4.
9. Layout Types 16D through 16L, shown on the A77G Series of Revised Standard PLans, typically used where guard railing is recommended to shield roadside fixed object(s) and a crashworthy end treatment is required for both directions of traffic.
10. Where placement of dike is required with guard railing, see Revised Standard Plan RSP A77C4 for dike positioning details.
11. W6 x 15 steel post, 8'-0" in length, with 8" x 8" x 1'-2" notched wood block or notched recycled plastic blocks may be used in place of the 10" x 10" x 8'-0" wood post with 8" x 8" x 1'-2" wood block shown in the "Strengthened Railing Sections Detail".

STATE OF CALIFORNIA
DEPARTMENT OF TRANSPORTATION

METAL BEAM GUARD RAILING TYPICAL LAYOUTS FOR ROADSIDE FIXED OBJECTS

NO SCALE

RSP A77G6 DATED JUNE 6, 2008 SUPERSEDES STANDARD PLAN A77G6 DATED MAY 1, 2006 - PAGE 64 OF THE STANDARD PLANS BOOK DATED MAY 2006.

REVISED STANDARD PLAN RSP A77G6

2006 REVISED STANDARD PLAN RSP A77G6

12-10-07

DIST	COUNTY	ROUTE	POST MILES TOTAL PROJECT	SHEET NO.	TOTAL SHEETS
08	Riv	74	64.7/69.0	52	61

Randell D. Hiatt
REGISTERED CIVIL ENGINEER

June 6, 2008
PLANS APPROVAL DATE

REGISTERED PROFESSIONAL ENGINEER
Randell D. Hiatt
No. C50200
Exp. 6-30-09
CIVIL
STATE OF CALIFORNIA

The State of California or its officers or agents shall not be responsible for the accuracy or completeness of electronic copies of this plan sheet.

To accompany plans dated 2-14-11

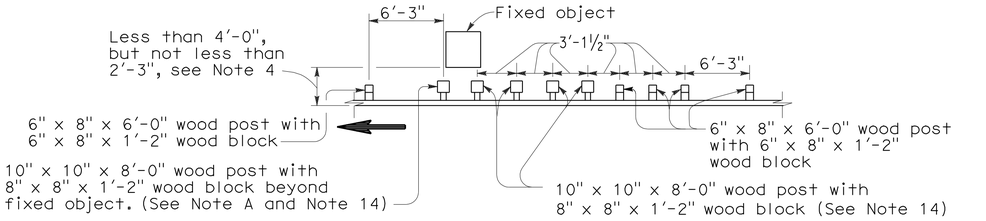

Note A. For a series of fixed objects (bridge columns, overhead sign supports, etc.) additional 10" x 10" x 8'-0" wood post with 8" x 8" x 1'-2" wood blocks at 3'-1½" center to center spacing are to be used between fixed object(s).

STRENGTHENED RAILING SECTIONS FOR FIXED OBJECT

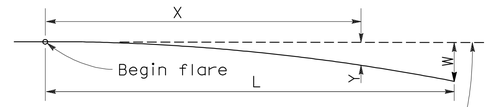

Base Line (Edge of paved shoulder or offset line of edge of traveled way)

$$Y = \frac{WX^2}{L^2}$$

Y = Offset from base line
W = Maximum offset
X = Distance along base line
L = Length of flare

PARABOLIC FLARE OFFSETS

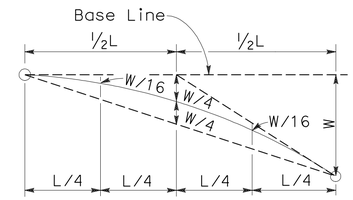

TYPICAL PARABOLIC LAYOUT

Use strengthened railing sections with Layout Types 16I or 16J Layouts where minimum clearance between the face of the guard railing and fixed object(s) is less than 4'-0", but not less than 2'-3". See Note 4.

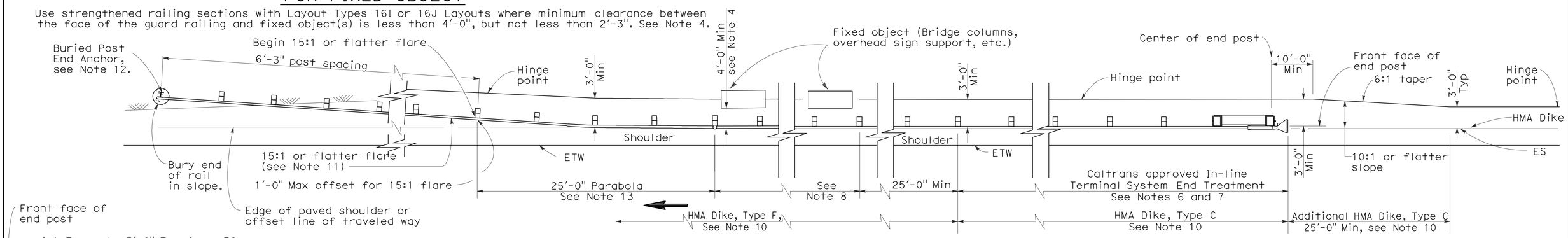

TYPE 16I LAYOUT

(GUARD RAILING INSTALLATION AT ROADSIDE FIXED OBJECT OR OBJECTS WITH AN IN-LINE END TREATMENT AND A BURIED END ANCHOR TREATMENT AT THE ENDS OF RAILING) See Note 9

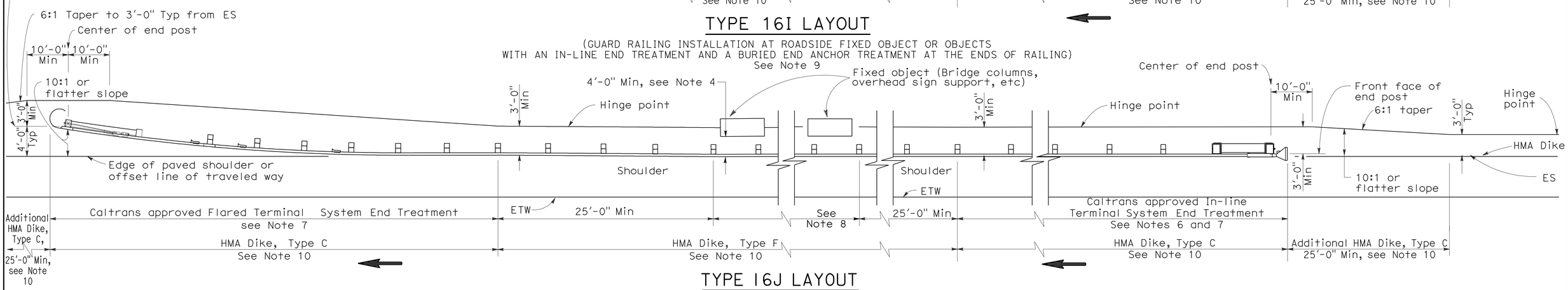

TYPE 16J LAYOUT

(GUARD RAILING INSTALLATION AT ROADSIDE FIXED OBJECT OR OBJECTS WITH AN IN-LINE END TREATMENT AND A FLARED END TREATMENT AT THE ENDS OF RAILING) See Note 9

NOTES:

1. Line post, blocks and hardware to be used are shown on Standard Plans A77A1, A77A2, A77B1, A77C1 and A77C2.
2. Guard railing post spacing to be 6'-3" center to center, except as otherwise noted.
3. Except as noted, line posts are 6" x 8" x 6'-0" wood with 6" x 8" x 1'-2" wood blocks. W6 x 9 steel posts, 6'-0" in length, with 6" x 8" x 1'-2" notched wood blocks or notched recycled plastic blocks may be used for 6" x 8" x 6'-0" wood posts with 6" x 8" x 1'-2" wood blocks where applicable and when specified.
4. A 4'-0" minimum clearance is required between the face of the railing and the face of a fixed object located directly behind standard guard railing sections with post spacing at 6'-3". Construct guard railing as shown in the detail "Strengthened Railing Sections for Fixed Objects" on this plan, where the clearance between the face of the railing and the face of a fixed object is less than 4'-0", but not less than 2'-3". Where the clearance is less than 2'-3", a concrete wall or barrier should be constructed to shield the fixed object(s).
5. Direction of adjacent traffic indicated by ➡.
6. In-line Terminal System End Treatments are used where site conditions will not accommodate a flared end treatment.
7. The type of terminal system to be used will be shown on the Project Plans.
8. As site conditions dictate, construct additional guard railing to shield fixed object(s). Additional guard railing length equal to multiples of 12'-6". Post spacing at 6'-3", except as specified in Note 4.
9. Layout Types 16D through 16L, shown on the A77G Series of Revised Standard Plans, are typically used where guard railing is recommended to shield roadside fixed object(s) and a crashworthy end treatment is required for both directions of traffic.
10. Where placement of dike is required with guard railing, see Revised Standard Plan RSP A77C4 for dike positioning details.
11. The 15:1 or flatter flare for the buried post anchor is based on the edge of the paved shoulder or offset line of edge of the traveled way. The length of guard railing within the 15:1 or flatter flare is based on site conditions and should be a length equal to multiples of 12'-6".
12. For details of Buried Post End Anchor details, see Standard Plan A77I2.
13. For typical flare offsets for 25'-0" length parabola with maximum offset of 1'-0", see Revised Standard RSP Plan A77E1.
14. W6 x 15 steel post, 8'-0" in length, with 8" x 8" x 1'-2" notched wood block or notched recycled plastic blocks may be used in place of the 10" x 10" x 8'-0" wood post with 8" x 8" x 1'-2" wood block shown in the "Strengthened Railing Sections Detail".

STATE OF CALIFORNIA
DEPARTMENT OF TRANSPORTATION

METAL BEAM GUARD RAILING TYPICAL LAYOUTS FOR ROADSIDE FIXED OBJECTS

NO SCALE

RSP A77G7 DATED JUNE 6, 2008 SUPERSEDES STANDARD PLAN A77G7 DATED MAY 1, 2006 - PAGE 65 OF THE STANDARD PLANS BOOK DATED MAY 2006.

REVISED STANDARD PLAN RSP A77G7

2006 REVISED STANDARD PLAN RSP A77G7

12-10-07

DIST	COUNTY	ROUTE	POST MILES TOTAL PROJECT	SHEET NO.	TOTAL SHEETS
08	Riv	74	64.7/69.0	53	61

Randell D. Hiatt
REGISTERED CIVIL ENGINEER

June 6, 2008
PLANS APPROVAL DATE

REGISTERED PROFESSIONAL ENGINEER Randell D. Hiatt No. C50200 Exp. 6-30-09 CIVIL STATE OF CALIFORNIA

The State of California or its officers or agents shall not be responsible for the accuracy or completeness of electronic copies of this plan sheet.

To accompany plans dated 2-14-11

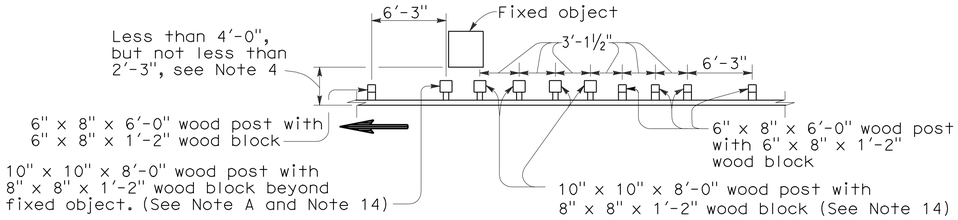

Note A. For a series of fixed objects (bridge columns, overhead sign supports, etc.) additional 10" x 10" x 8'-0" wood post with 8" x 8" x 1'-2" wood blocks at 3'-1½" center to center spacing are to be used between fixed object(s).

STRENGTHENED RAILING SECTIONS FOR FIXED OBJECT

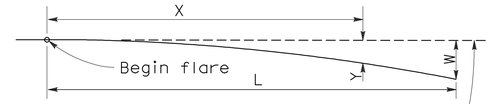

Base Line (Edge of paved shoulder or offset line of edge of traveled way)

$$Y = \frac{WX^2}{L^2}$$

Y = Offset from base line
W = Maximum offset
X = Distance along base line
L = Length of flare

PARABOLIC FLARE OFFSETS

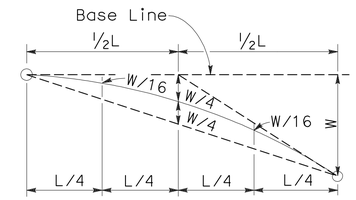

TYPICAL PARABOLIC LAYOUT

Use strengthened railing sections with Layout Types 16K or 16L Layouts where minimum clearance between the face of the guard railing and fixed object(s) is less than 4'-0", but not less than 2'-3". See Note 4.

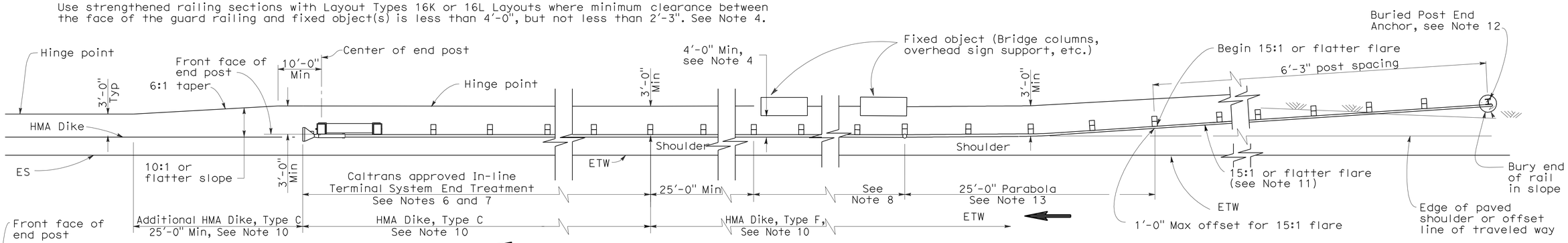

TYPE 16K LAYOUT

(GUARD RAILING INSTALLATION AT ROADSIDE FIXED OBJECT OR OBJECTS WITH A BURIED END ANCHOR TREATMENT AND AN IN-LINE END TREATMENT AT THE ENDS OF RAILING)
See Note 9

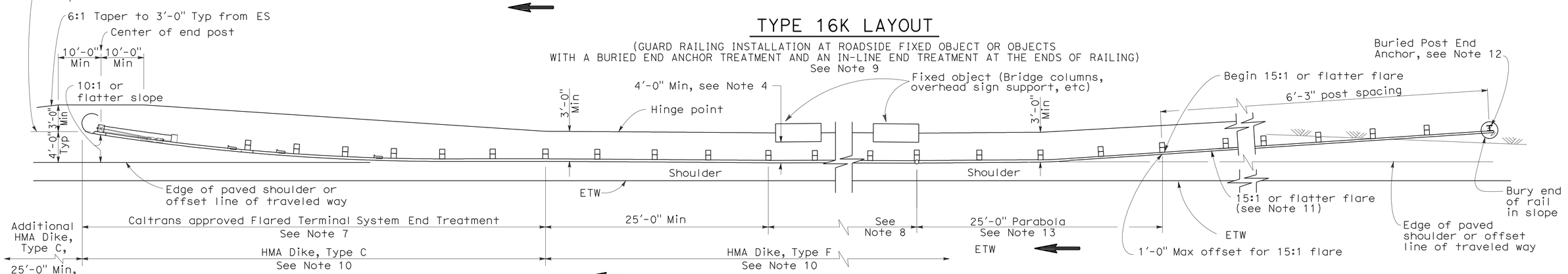

TYPE 16L LAYOUT

(GUARD RAILING INSTALLATION AT ROADSIDE FIXED OBJECT OR OBJECTS WITH A BURIED END ANCHOR TREATMENT AND A FLARED END TREATMENT AT THE ENDS OF RAILING)
See Note 9

NOTES:

1. Line post, blocks and hardware to be used are shown on Standard Plans A77A1, A77A2, A77B1, A77C1 and A77C2.
2. Guard railing post spacing to be 6'-3" center to center, except as otherwise noted.
3. Except as noted, line posts are 6" x 8" x 6'-0" wood with 6" x 8" x 1'-2" wood blocks. W6 x 9 steel posts, 6'-0" in length, with 6" x 8" x 1'-2" notched wood blocks or notched recycled plastic blocks may be used for 6" x 8" x 6'-0" wood posts with 6" x 8" x 1'-2" wood blocks where applicable and when specified.
4. A 4'-0" minimum clearance is required between the face of the railing and the face of a fixed object located directly behind standard guard railing sections with post spacing at 6'-3". Construct guard railing as shown in the detail "Strengthened Railing Sections for Fixed Objects" on this plan, where the clearance between the face of the railing and the face of a fixed object is less than 4'-0", but not less than 2'-3". Where the clearance is less than 2'-3", a concrete wall or barrier should be constructed to shield the fixed object(s).
5. Direction of adjacent traffic indicated by ⟶.
6. In-line Terminal System End Treatments are used where site conditions will not accommodate a flared end treatment.
7. The type of terminal system to be used will be shown on the Project Plans.
8. As site conditions dictate, construct additional guard railing to shield fixed object(s). Additional guard railing length equal to multiples of 12'-6". Post spacing at 6'-3", except as specified in Note 4.
9. Layout Types 16D through 16L, shown on the A77G Series of Revised Standard Plans are typically used where guard railing is recommended to shield roadside fixed object(s) and a crashworthy end treatment is required for both directions of traffic.
10. Where placement of dike is required with guard railing, see Revised Standard Plan RSP A77C4 for dike positioning details.
11. The 15:1 or flatter flare for the buried post anchor is based on the edge of the paved shoulder or offset line of edge of the traveled way. The length of guard railing within the 15:1 or flatter flare is based on site conditions and should be a length equal to multiples of 12'-6".
12. For details of Buried Post End Anchor details, see Standard Plan A77I2.
13. For typical flare offsets for 25'-0" length parabola with maximum offset of 1'-0", see Revised Standard RSP Plan A77E1.
14. W6 x 15 steel post, 8'-0" in length, with 8" x 8" x 1'-2" notched wood block or notched recycled plastic blocks may be used in place of the 10" x 10" x 8'-0" wood post with 8" x 8" x 1'-2" wood block shown in the "Strengthened Railing Sections Detail".

STATE OF CALIFORNIA
DEPARTMENT OF TRANSPORTATION

METAL BEAM GUARD RAILING TYPICAL LAYOUTS FOR ROADSIDE FIXED OBJECTS

NO SCALE

RSP A77G8 DATED JUNE 6, 2008 SUPERSEDES STANDARD PLAN A77G8 DATED MAY 1, 2006 - PAGE 66 OF THE STANDARD PLANS BOOK DATED MAY 2006.

REVISED STANDARD PLAN RSP A77G8

2006 REVISED STANDARD PLAN RSP A77G8

12-10-07

DIST	COUNTY	ROUTE	POST MILES TOTAL PROJECT	SHEET NO.	TOTAL SHEETS
08	Riv	74	64.7/69.0	54	61

Randell D. Hiatt
REGISTERED CIVIL ENGINEER

June 5, 2009
PLANS APPROVAL DATE

REGISTERED PROFESSIONAL ENGINEER
Randell D. Hiatt
No. C50200
Exp. 6-30-09
CIVIL
STATE OF CALIFORNIA

The State of California or its officers or agents shall not be responsible for the accuracy or completeness of electronic copies of this plan sheet.

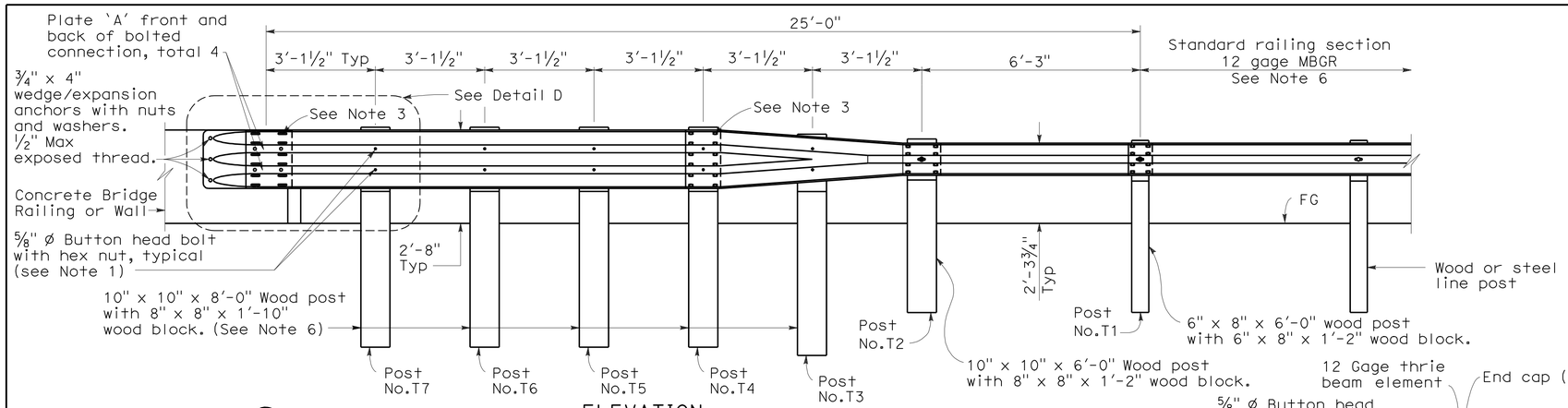

ELEVATION

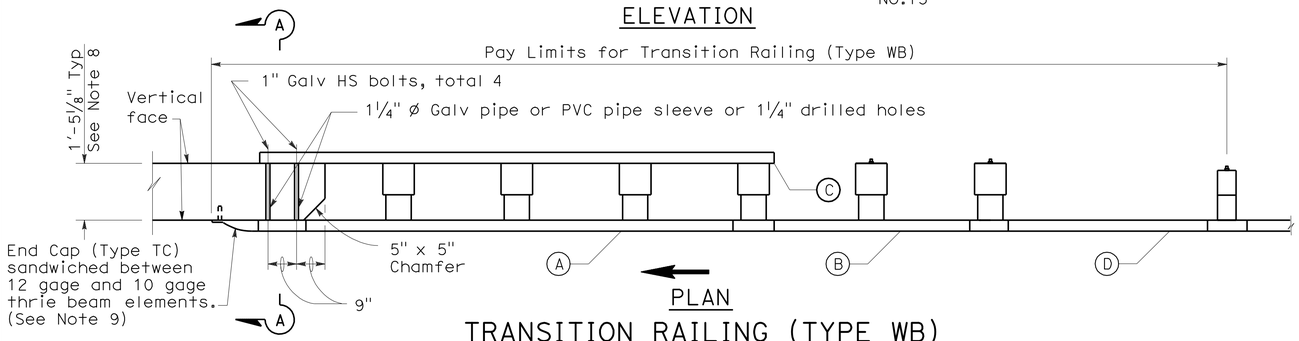

PLAN

TRANSITION RAILING (TYPE WB)

(No Blockout Attachment)

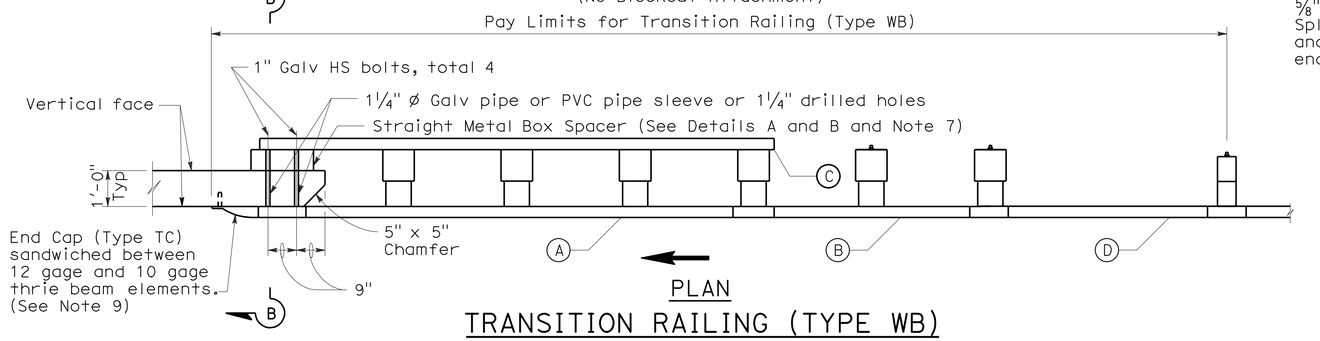

PLAN

TRANSITION RAILING (TYPE WB)

(Blockout Attachment)

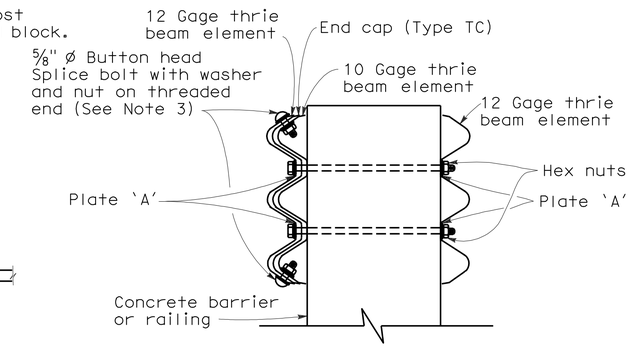

SECTION A-A

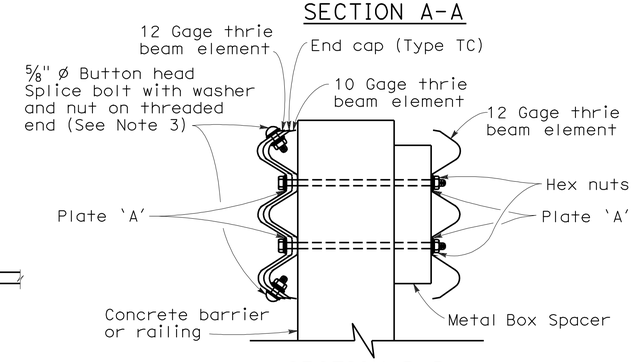

SECTION B-B

NOTES:

To accompany plans dated 2-14-11

1. Use 5/8 " ø Button head bolts and hex nuts for connections to posts. No washer on rail face for bolted connections to post.
2. The nested rail elements, end cap, and 'W' beam to thrie beam element may be spliced together prior to bolting the elements to the wood post and concrete barrier or railing.
3. Exterior splice bolt holes for rail element splices at Post No.T4 and the connection to the concrete barrier or railing shall be the standard 29/32 " x 1 1/8 " slot size. Interior splice bolt holes at these locations may be increased up to 1 1/4 " ø. Only the top 2 and the bottom 2 splice bolts with washers and nuts are required for rail splices at Post No.T4 and the connection to the concrete barrier or railing.
4. Direction of adjacent traffic indicated by →.
5. The top elevation of Post Nos.T2 through T7 shall not project more than 1" above the top elevation of the rail element.
6. Typically, the railing connected to Transition Railing (Type WB) will be either standard railing section of metal beam guard railing or an approved Caltrans end treatment attached to Post No.T1.
7. The depth of the metal box spacer varies from the 5 1/8 " to 1 1/2 " and is dependent on the width of the concrete railing or wall. The combined dimension for the depth of the metal box spacer plus the width of railing or wall is typically 17 1/8 ". Where the space between the backside of the concrete railing or wall and the rear thrie beam element is less than 1 1/2 ", metal plates similar to Plate 'A' are to be used as spacers.
8. Where the width of the concrete railing or wall is greater than 17 1/8 ", wood blocks are to be used to fill the space created between the backside of Posts No.4 through No.7 and the rear thrie beam element. These wood blocks shall be 8" in width and 1'-2" in length. The dimension between the front thrie beam element and the rear thrie beam element is to match the width of the concrete railing or wall.
9. End cap may be installed over 12 gage and 10 gage thrie beam elements where transition railing is installed on the departure end of bridge railing.

LEGEND

(A) Nested thrie beam elements (one 12 gage element nested over one 10 gage element).

(B) One 10 gage "W" beam to thrie beam element.

(C) One 12 gage thrie beam element.

(D) One 10 gage "W" beam rail element (7'-3½" length)

10 gage = 0.135" thick

12 gage = 0.108" thick

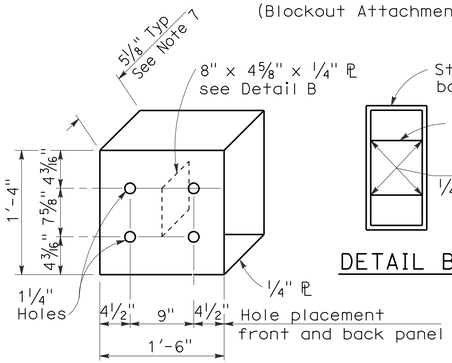

DETAIL A

STRAIGHT METAL BOX SPACER

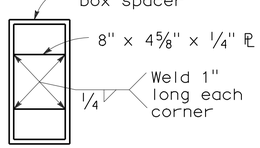

DETAIL B

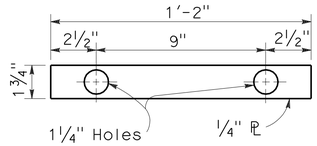

DETAIL C

PLATE 'A'

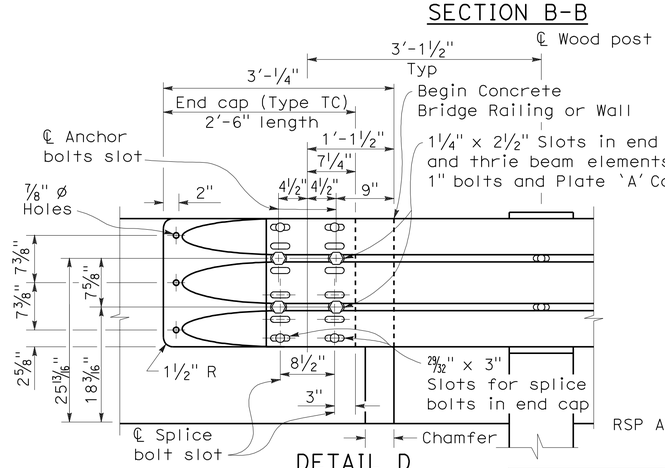

DETAIL D

STATE OF CALIFORNIA
DEPARTMENT OF TRANSPORTATION

METAL BEAM GUARD RAILING TRANSITION RAILING (TYPE WB)

NO SCALE

RSP A77J4 DATED JUNE 5, 2009 SUPERSEDES RSP A77J4 DATED JUNE 6, 2008 AND STANDARD PLAN A77J4 DATED MAY 1, 2006 - PAGE 75 OF THE STANDARD PLANS BOOK DATED MAY 2006.

REVISED STANDARD PLAN RSP A77J4

2006 REVISED STANDARD PLAN RSP A77J4

5-14-09

DIST	COUNTY	ROUTE	POST MILES TOTAL PROJECT	SHEET NO.	TOTAL SHEETS
08	Riv	74	64.7/69.0	55	61

Randell D. Hiatt
REGISTERED CIVIL ENGINEER

June 6, 2008
PLANS APPROVAL DATE

REGISTERED PROFESSIONAL ENGINEER
Randell D. Hiatt
No. C50200
Exp. 6-30-09
CIVIL
STATE OF CALIFORNIA

The State of California or its officers or agents shall not be responsible for the accuracy or completeness of electronic copies of this plan sheet.

To accompany plans dated 2-14-11

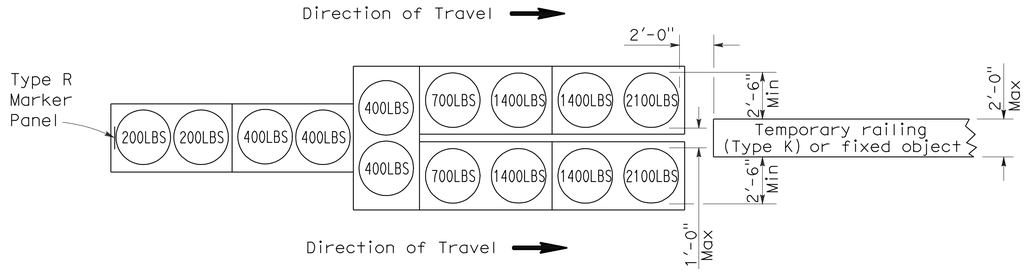

ARRAY 'TU14'

Approach speed 45 mph or more

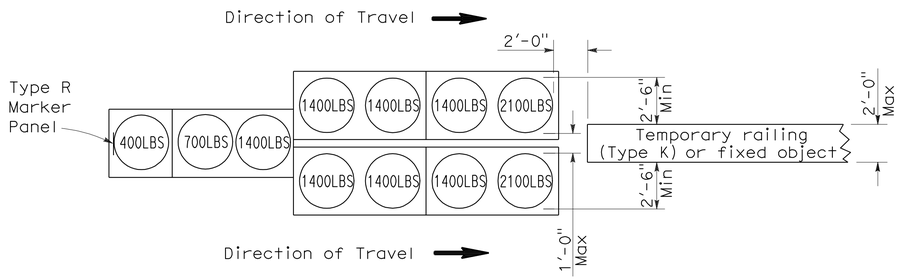

ARRAY 'TU11'

Approach speed less than 45 mph

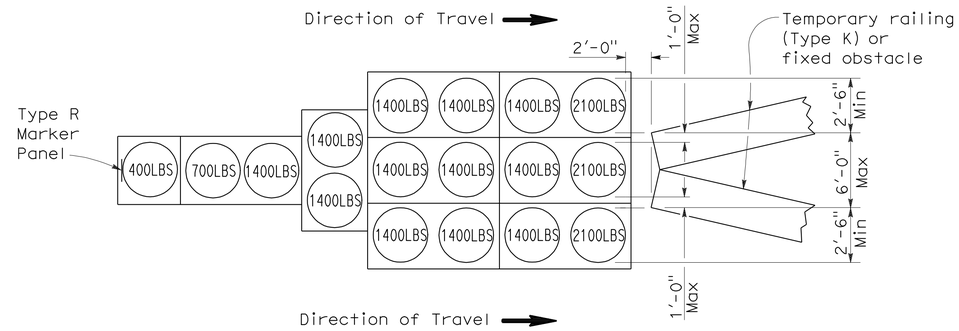

ARRAY 'TU17'

Approach speed less than 45 mph

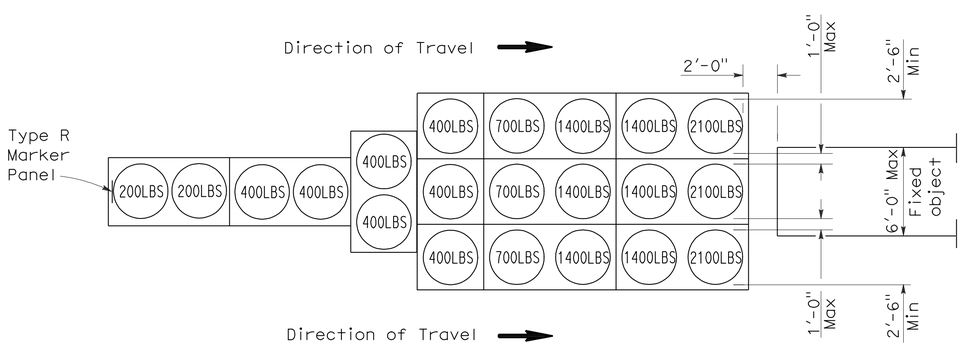

ARRAY 'TU21'

Approach speed 45 mph or more

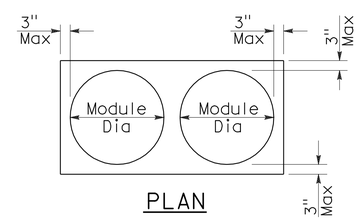

PLAN

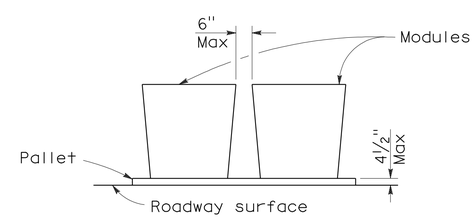

ELEVATION

CRASH CUSHION PALLET DETAIL

See Note 7

NOTES:

1. (XXX) Indicates sand filled module location and weight of sand in pounds for each module. Module spacing is based on the greater diameter of the module.
2. All sand weights are nominal.
3. Temporary crash cushion arrays shall not encroach on the traveled way.
4. Place the top of Type R marker panel 1" below the module lid.
5. Refer to Standard Plan A73B for marker details.
6. Approach speeds indicated conform to NCHRP 350 Report criteria.
7. Use of pallets is optional.

STATE OF CALIFORNIA
DEPARTMENT OF TRANSPORTATION

TEMPORARY CRASH CUSHION, SAND FILLED (UNIDIRECTIONAL)

NO SCALE

RSP T1A DATED JUNE 6, 2008 SUPERSEDES STANDARD PLAN T1A
DATED MAY 1, 2006 - PAGE 211 OF THE STANDARD PLANS BOOK DATED MAY 2006.

REVISED STANDARD PLAN RSP T1A

2006 REVISED STANDARD PLAN RSP T1A

DIST	COUNTY	ROUTE	POST MILES TOTAL PROJECT	SHEET NO.	TOTAL SHEETS
08	Riv	74	64.7/69.0	56	61

Randell D. Hiatt
REGISTERED CIVIL ENGINEER

June 6, 2008
PLANS APPROVAL DATE

REGISTERED PROFESSIONAL ENGINEER
Randell D. Hiatt
No. C50200
Exp. 6-30-09
CIVIL
STATE OF CALIFORNIA

The State of California or its officers or agents shall not be responsible for the accuracy or completeness of electronic copies of this plan sheet.

To accompany plans dated 2-14-11

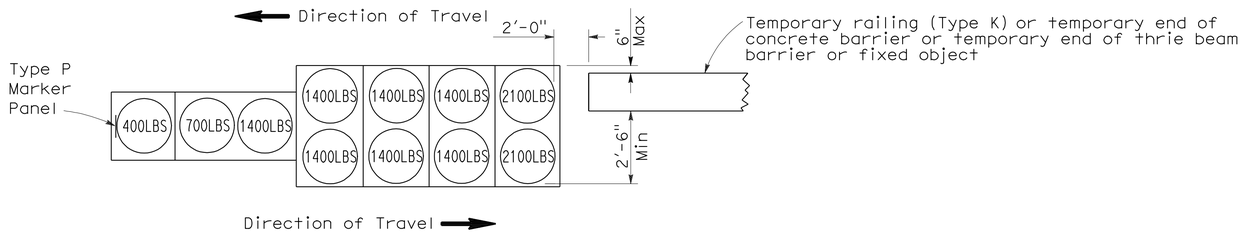

ARRAY 'TB11'

Approach speed less than 45 mph

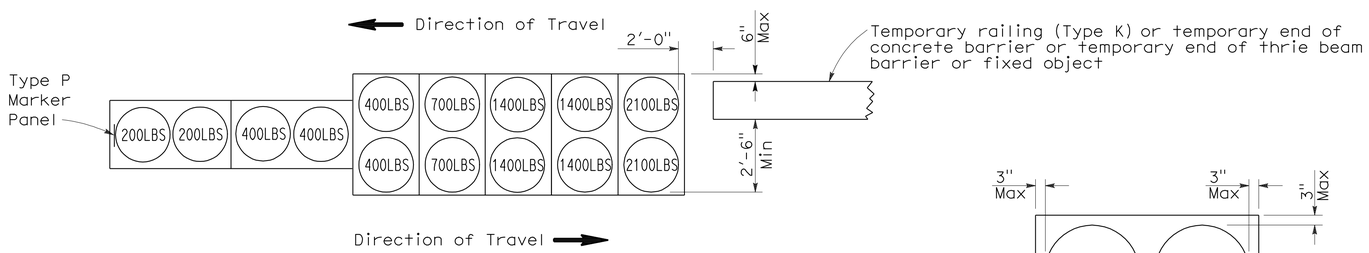

ARRAY 'TB14'

Approach speed 45 mph or more

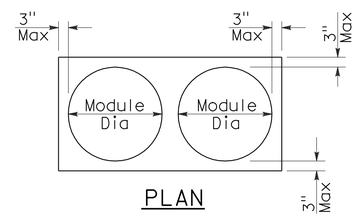

PLAN

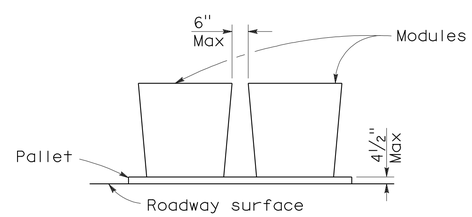

ELEVATION

CRASH CUSHION PALLET DETAIL

See Note 7

NOTES:

1. (XXX) Indicates sand filled module location and weight of sand in pounds for each module. Module spacing is based on the greater diameter of the module.
2. All sand weights are nominal.
3. Temporary crash cushion arrays shall not encroach on the traveled way.
4. Place the Type P marker panel so that the bottom of the panel rests upon the pallet.
5. Refer to Standard Plan A73B for marker details.
6. Approach speeds indicated conform to NCHRP 350 Report criteria.
7. Use of pallets is optional.

STATE OF CALIFORNIA
DEPARTMENT OF TRANSPORTATION

TEMPORARY CRASH CUSHION, SAND FILLED (BIDIRECTIONAL)

NO SCALE

RSP T1B DATED JUNE 6, 2008 SUPERSEDES STANDARD PLAN T1B
DATED MAY 1, 2006 - PAGE 212 OF THE STANDARD PLANS BOOK DATED MAY 2006.

REVISED STANDARD PLAN RSP T1B

2006 REVISED STANDARD PLAN RSP T1B

5-15-08

DIST	COUNTY	ROUTE	POST MILES TOTAL PROJECT	SHEET NO.	TOTAL SHEETS
08	Riv	74	64.7/69.0	57	61

Randell D. Hiatt
REGISTERED CIVIL ENGINEER

June 6, 2008
PLANS APPROVAL DATE

REGISTERED PROFESSIONAL ENGINEER
Randell D. Hiatt
No. C50200
Exp. 6-30-09
CIVIL
STATE OF CALIFORNIA

The State of California or its officers or agents shall not be responsible for the accuracy or completeness of electronic copies of this plan sheet.

To accompany plans dated 2-14-11

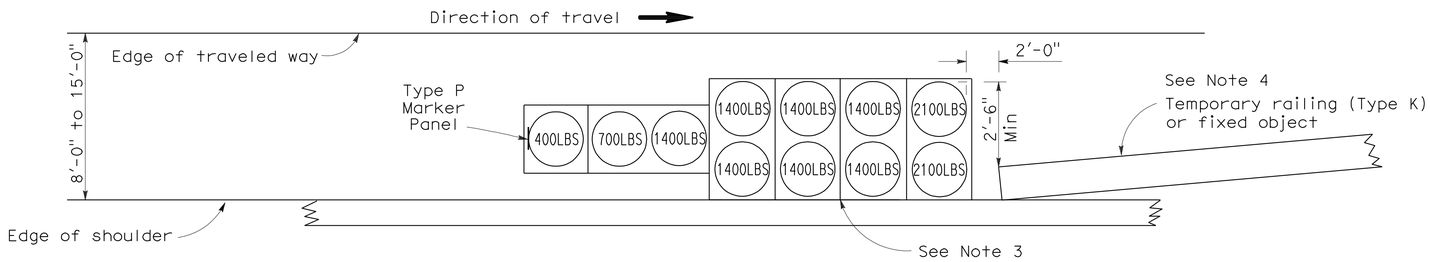

ARRAY 'TS11'

Approach speed less than 45 mph
See Note 9

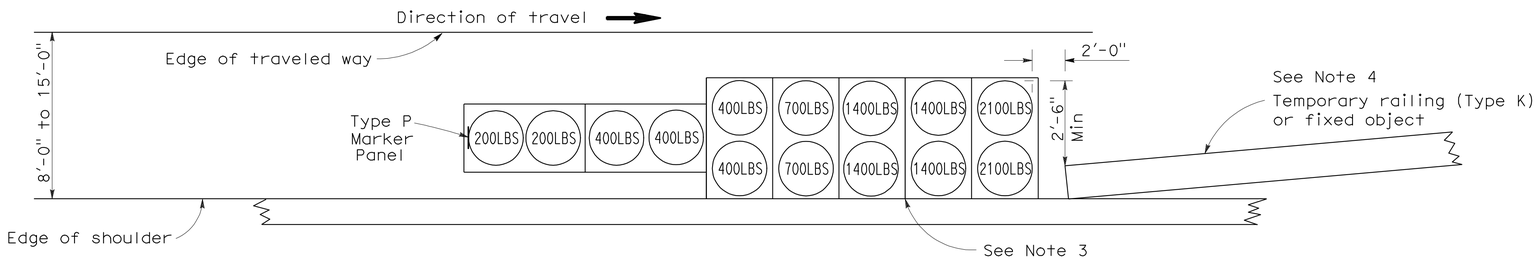

ARRAY 'TS14'

Approach speed 45 mph or more
See Note 9

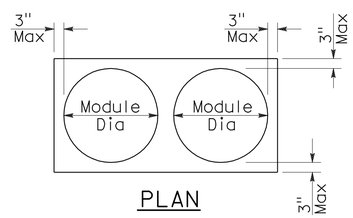

PLAN

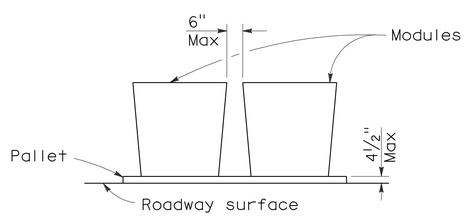

ELEVATION

CRASH CUSHION PALLET DETAIL

See Note 11

NOTES:

1. (XXX) Indicates sand filled module location and weight of sand in pounds for each module. Module spacing is based on the greater diameter of the module.
2. All sand weights are nominal.
3. The temporary crash cushion arrays shown on this plan shall be used only in locations where there will be traffic on one side of the temporary crash cushion array.
4. If the fixed object or approach end of the temporary railing is less than 15'-0" from the edge of traveled way, a temporary crash cushion is required in a construction or work zone.
5. Temporary crash cushion arrays shall not encroach on the traveled way.
6. Arrays for median shoulders shall conform to details shown on this plan for outside shoulders.
7. Place the Type P marker panel so that the bottom of the panel rests upon the pallet and faces traffic.
8. Refer to Standard Plan A73B for marker details.
9. For shoulder widths less than 8'-0", appropriate approved crash cushion protection, other than sand filled modules, shall be provided at fixed objects and at approach ends of temporary railing. The specific type of crash cushion shall be as shown on the project plans or as specified in the Special Provisions, or if not shown on the project plans or specified in the Special Provisions, shall be as approved by the Engineer.
10. Approach speeds indicated conform to NCHRP 350 Report criteria.
11. Use of pallets is optional.

STATE OF CALIFORNIA
DEPARTMENT OF TRANSPORTATION

TEMPORARY CRASH CUSHION, SAND FILLED (SHOULDER INSTALLATIONS)

NO SCALE

RSP T2 DATED JUNE 6, 2008 SUPERSEDES STANDARD PLAN T2
DATED MAY 1, 2006 - PAGE 213 OF THE STANDARD PLANS BOOK DATED MAY 2006.

REVISED STANDARD PLAN RSP T2

2006 REVISED STANDARD PLAN RSP T2

5-15-08

DIST	COUNTY	ROUTE	POST MILES TOTAL PROJECT	SHEET NO.	TOTAL SHEETS
08	Riv	74	64.7/69.0	58	61

LICENSED LANDSCAPE ARCHITECT

August 15, 2008
PLANS Approval DATE

LICENSED LANDSCAPE ARCHITECT
Robert B. Schott 3625
Signature
11-04-08
Renewal Date
08-11-08
Date
STATE OF CALIFORNIA

The State of California or its officers or agents shall not be responsible for the accuracy or completeness of electronic copies of this plan sheet.

To accompany plans dated 2-14-11

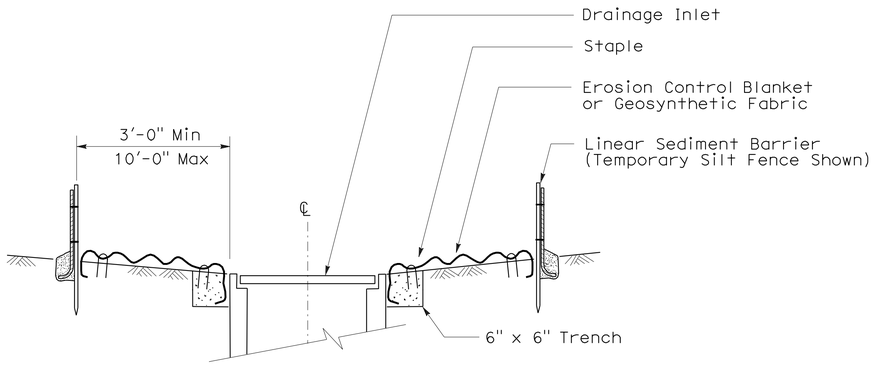

SECTION A-A

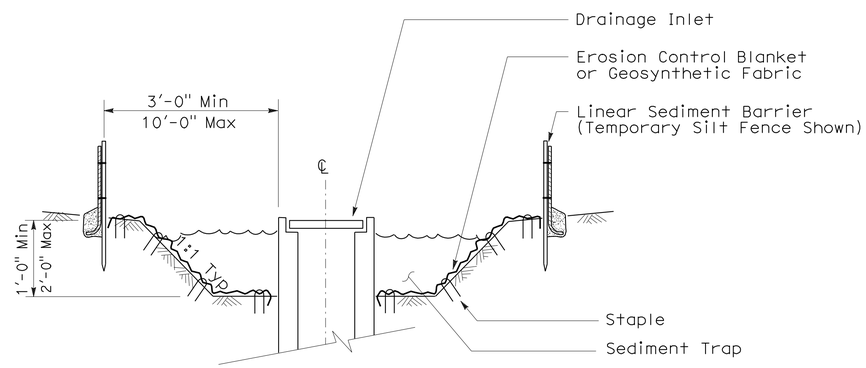

SECTION B-B

NOTES:

1. See Standard Plan T51 for Temporary Silt Fence.
2. Dimensions may vary to fit field conditions.

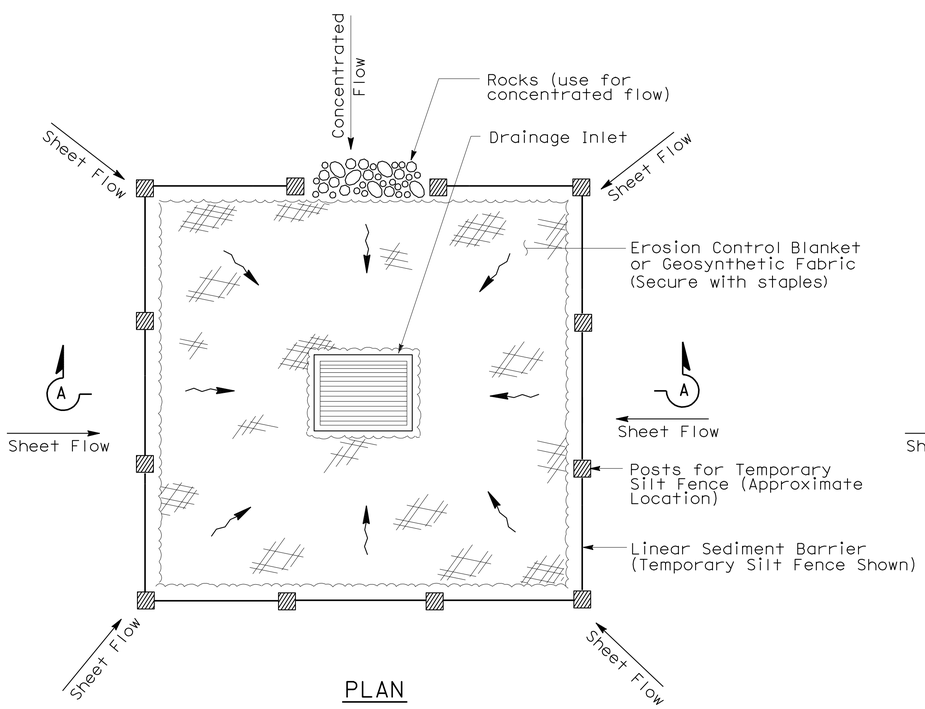

PLAN

TEMPORARY DRAINAGE INLET PROTECTION (TYPE 1)

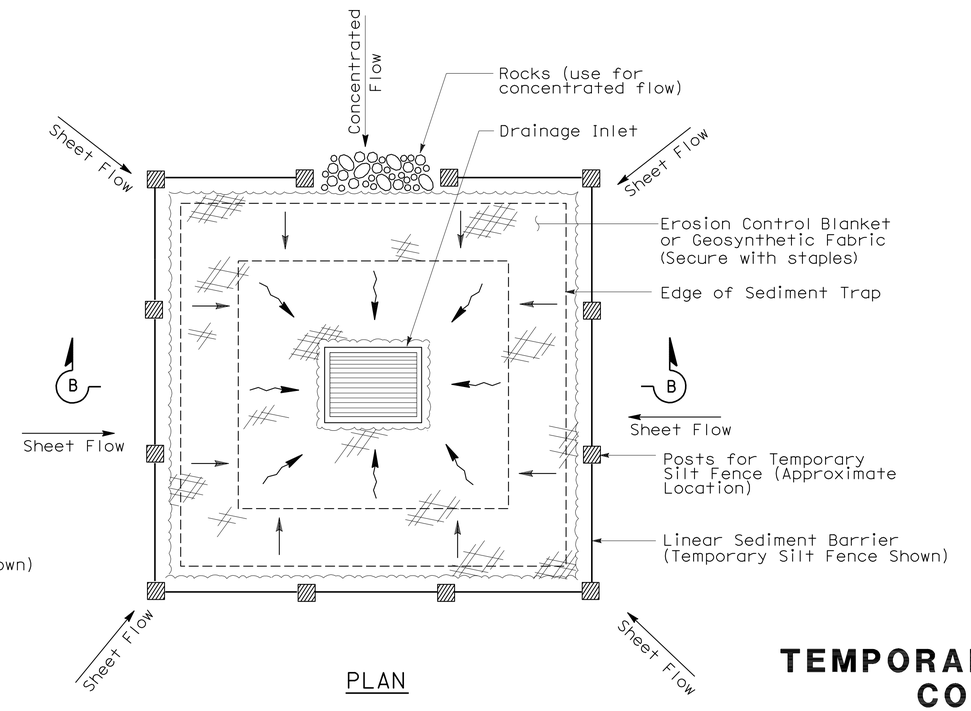

PLAN

TEMPORARY DRAINAGE INLET PROTECTION (TYPE 2) (EXCAVATED SEDIMENT TRAP)

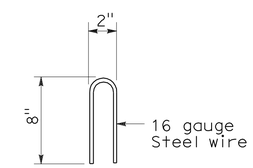

STAPLE DETAIL

STATE OF CALIFORNIA
DEPARTMENT OF TRANSPORTATION

TEMPORARY WATER POLLUTION CONTROL DETAILS (TEMPORARY DRAINAGE INLET PROTECTION)

NO SCALE

NSP T61 DATED AUGUST 15, 2008 SUPPLEMENTS THE STANDARD PLANS BOOK DATED MAY 2006.

NEW STANDARD PLAN NSP T61

2006 NEW STANDARD PLAN NSP T61

7-11-08

DIST	COUNTY	ROUTE	POST MILES TOTAL PROJECT	SHEET NO.	TOTAL SHEETS
08	Riv	74	64.7/69.0	59	61

LICENSED LANDSCAPE ARCHITECT

August 15, 2008
PLANS APPROVAL DATE

LICENSED LANDSCAPE ARCHITECT Robert B. Schott 3895 Signature 11-04-08 Renewal Date 08-11-08 Date STATE OF CALIFORNIA

The State of California or its officers or agents shall not be responsible for the accuracy or completeness of electronic copies of this plan sheet.

To accompany plans dated 2-14-11

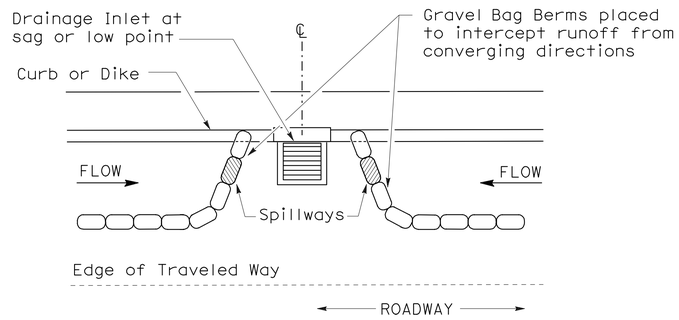

PLAN

CONFIGURATION FOR SAG POINT INLET (GRAVEL BAG BERM)

GRAVEL BAG BERM (TYPE 3A) SPACING TABLE

SLOPE OF ROADWAY (PERCENT)	1 to 3.9	4 to 5.9	6 to 7.9	8 to 10	10+
INTERVAL BETWEEN BERM	100′	75′	50′	25′	12′

For slope of less than 1%, install barriers only if erosion/sediment is prevalent

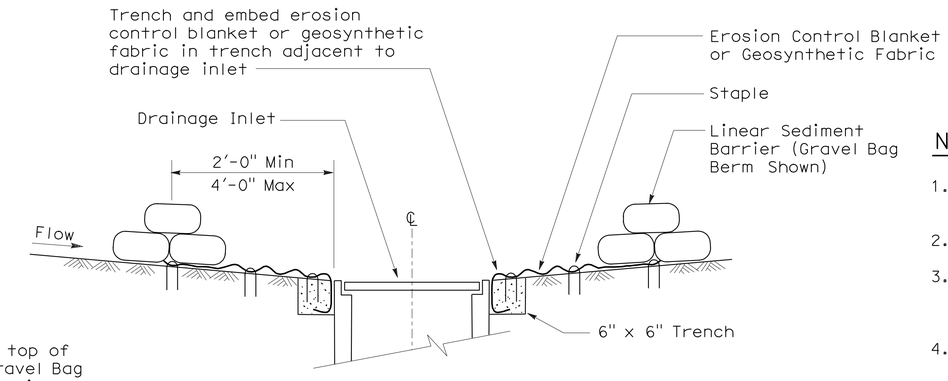

SECTION A-A

NOTES:

1. Place safety cones adjacent to drainage inlet protection.
2. Dimensions may vary to fit field conditions.
3. Install a minimum of 3 gravel bag berms upstream of each drainage inlet to be protected.
4. Position erosion control blanket or geosynthetic fabric at edge of concrete apron and secure in trench.
5. Erosion control blanket or geosynthetic fabric is not required if the area adjacent to the drainage inlet is vegetated or paved.

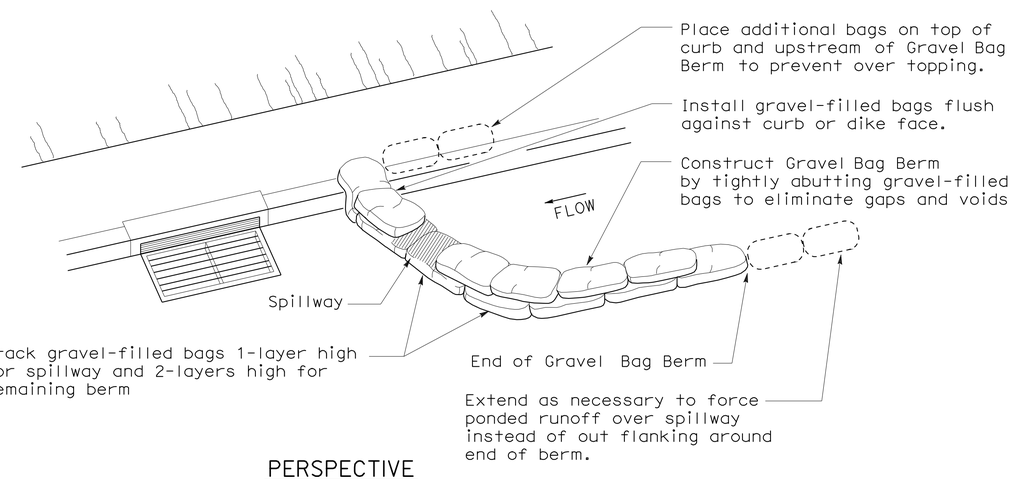

PERSPECTIVE

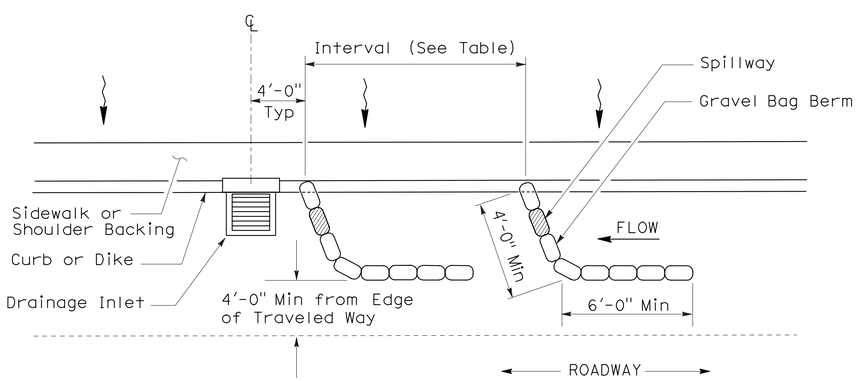

PLAN

TEMPORARY DRAINAGE INLET PROTECTION (TYPE 3A) (GRAVEL BAG BERM)

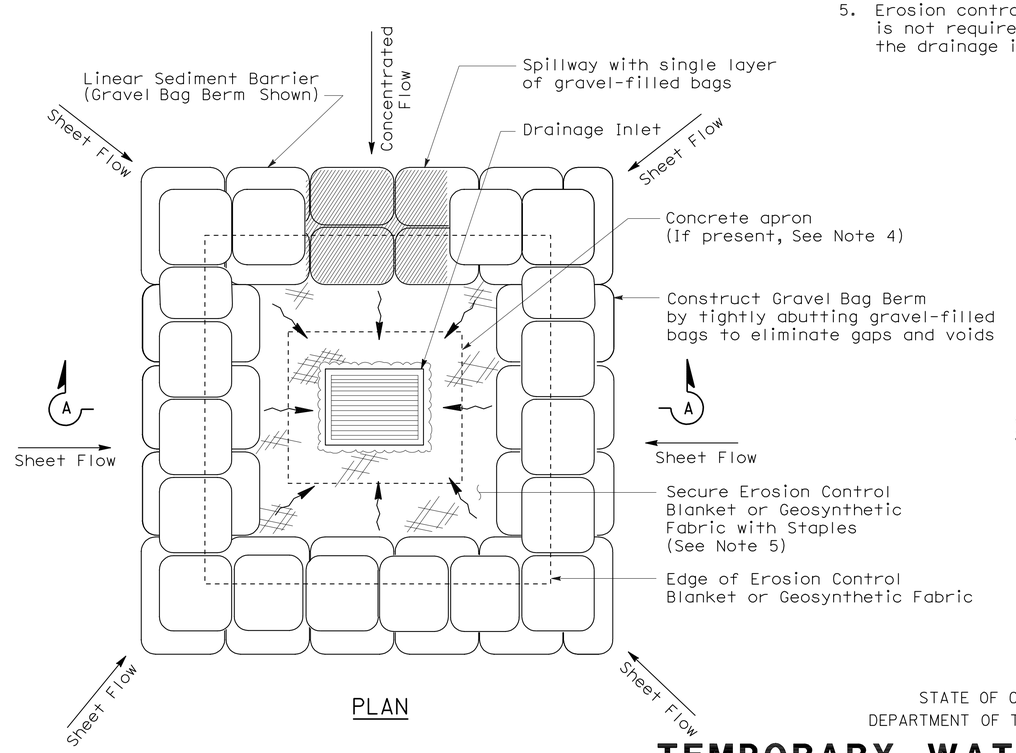

PLAN

TEMPORARY DRAINAGE INLET PROTECTION (TYPE 3B)

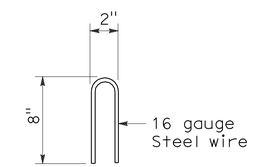

STAPLE DETAIL

STATE OF CALIFORNIA
DEPARTMENT OF TRANSPORTATION

TEMPORARY WATER POLLUTION CONTROL DETAILS (TEMPORARY DRAINAGE INLET PROTECTION)

NO SCALE

NSP T62 DATED AUGUST 15, 2008 SUPPLEMENTS THE STANDARD PLANS BOOK DATED MAY 2006.

NEW STANDARD PLAN NSP T62

2006 NEW STANDARD PLAN NSP T62

7-11-08

DIST	COUNTY	ROUTE	POST MILES TOTAL PROJECT	SHEET NO.	TOTAL SHEETS
08	Riv	74	64.7/69.0	60	61

Robert B Schott
LICENSED LANDSCAPE ARCHITECT

August 15, 2008
PLANS APPROVAL DATE

LICENSED LANDSCAPE ARCHITECT Robert B. Schott 3625 Signature 11-04-08 Renewal Date 08-11-08 Date STATE OF CALIFORNIA

The State of California or its officers or agents shall not be responsible for the accuracy or completeness of electronic copies of this plan sheet.

To accompany plans dated 2-14-11

FLEXIBLE SEDIMENT BARRIER SPACING TABLE

SLOPE OF ROADWAY (PERCENT)	0 to 0.9	1 to 1.9	2 to 2.9	3 to 4	5+
INTERVAL BETWEEN BARRIERS	50′	35′	30′	25′	20′
ANGLE FROM FACE OF CURB	70°	70°	70°	45°	45°
SUGGESTED BARRIER LENGTH	6′	6′	6′	6′	6′

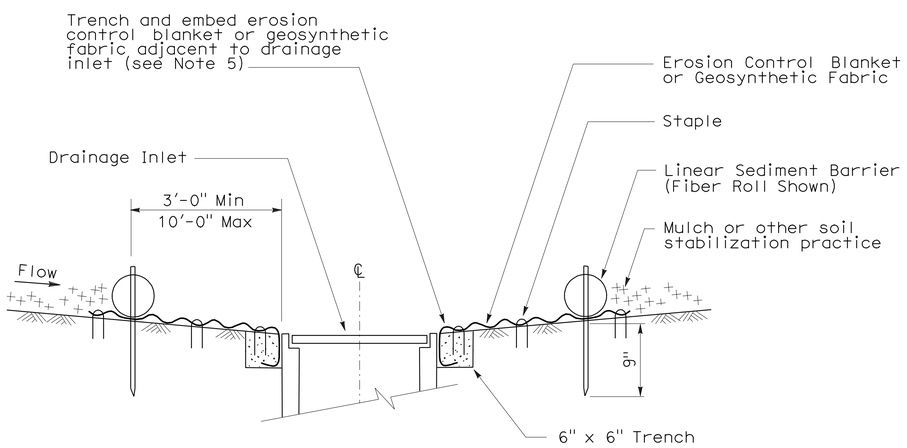

SECTION A-A

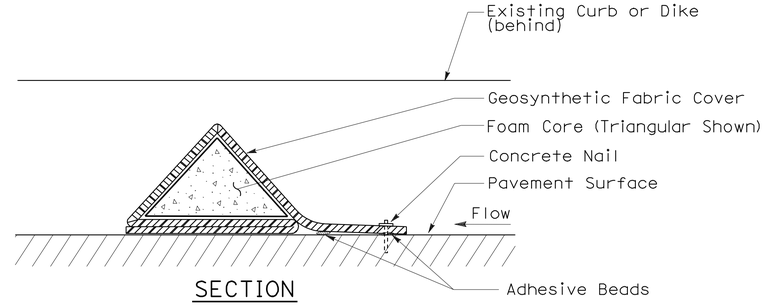

SECTION

FLEXIBLE SEDIMENT BARRIER DETAIL (FOAM BARRIER SHOWN)

NOTES:

1. See Standard Plan T51 for Temporary Silt Fence.
2. Dimensions may vary to fit field conditions.
3. Install a minimum of 3 flexible sediment barriers upstream of each drainage inlet to be protected.
4. Position erosion control blanket or geosynthetic fabric at edge of concrete apron and secure in trench.
5. Erosion control blanket or geosynthetic fabric is not required if the area adjacent to the drainage inlet is vegetated.

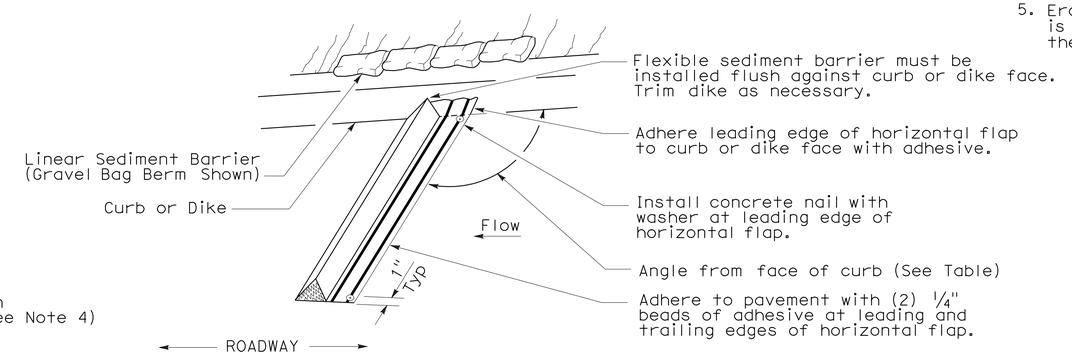

PERSPECTIVE

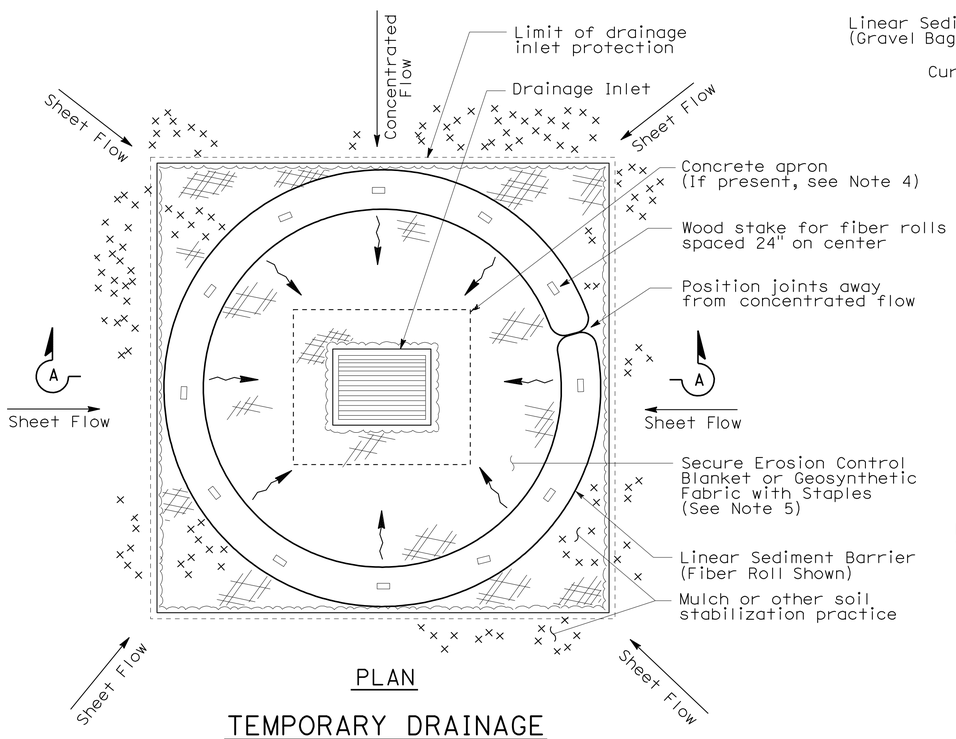

PLAN

TEMPORARY DRAINAGE INLET PROTECTION (TYPE 4A)

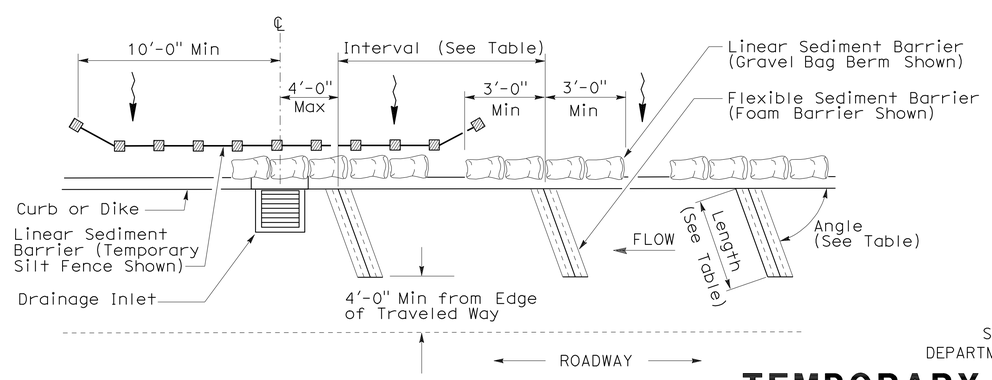

PLAN

TEMPORARY DRAINAGE INLET PROTECTION (TYPE 4B) FLEXIBLE SEDIMENT BARRIER

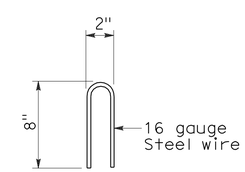

STAPLE DETAIL

STATE OF CALIFORNIA
DEPARTMENT OF TRANSPORTATION

TEMPORARY WATER POLLUTION CONTROL DETAILS (TEMPORARY DRAINAGE INLET PROTECTION)

NO SCALE

NSP T63 DATED AUGUST 15, 2008 SUPPLEMENTS THE STANDARD PLANS BOOK DATED MAY 2006.

NEW STANDARD PLAN NSP T63

2006 NEW STANDARD PLAN NSP T63

7-11-08

DIST	COUNTY	ROUTE	POST MILES TOTAL PROJECT	SHEET NO.	TOTAL SHEETS
08	Riv	74	64.7/69.0	61	61

LICENSED LANDSCAPE ARCHITECT

August 15, 2008
PLANS APPROVAL DATE

The State of California or its officers or agents shall not be responsible for the accuracy or completeness of electronic copies of this plan sheet.

LICENSED LANDSCAPE ARCHITECT — Robert B. Schott — Signature — 11-04-08 Renewal Date — 08-11-08 Date — STATE OF CALIFORNIA

To accompany plans dated 2-14-11

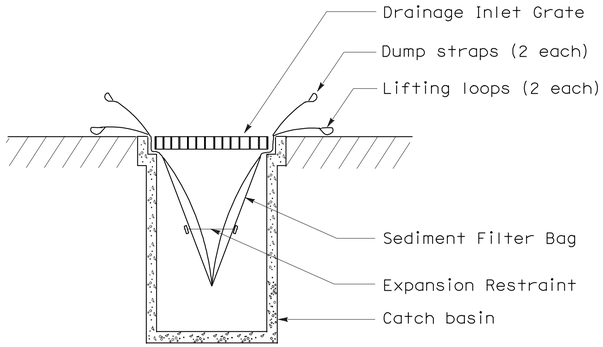

SECTION B-B

SEDIMENT FILTER BAG DETAIL

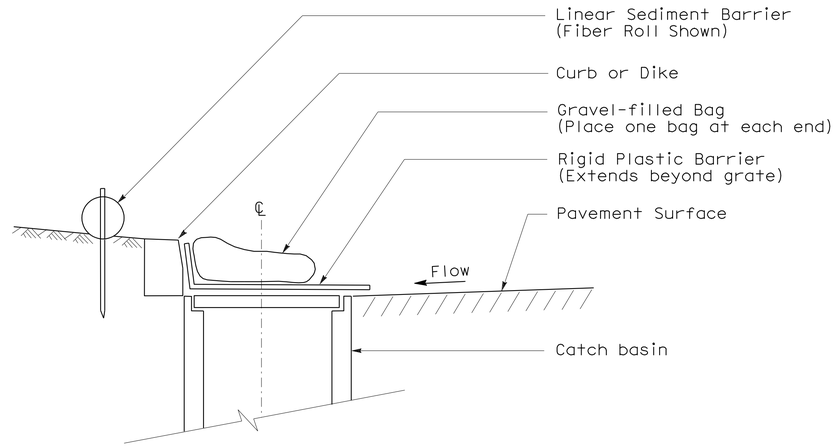

SECTION

TEMPORARY DRAINAGE INLET PROTECTION (TYPE 6A) (CATCH BASIN WITH GRATE)

NOTES:

1. See Standard Plan T51 for Temporary Silt Fence.
2. Dimensions may vary to fit field conditions.

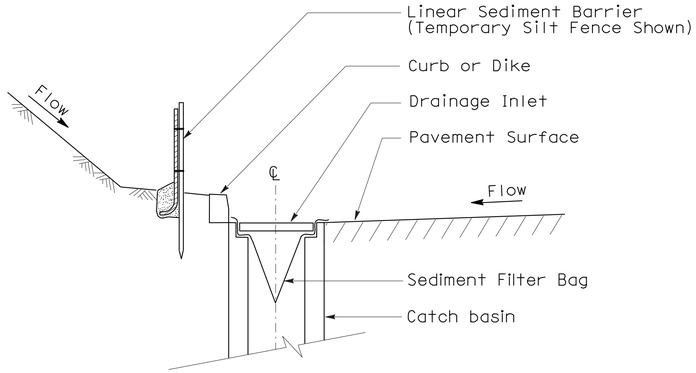

SECTION A-A

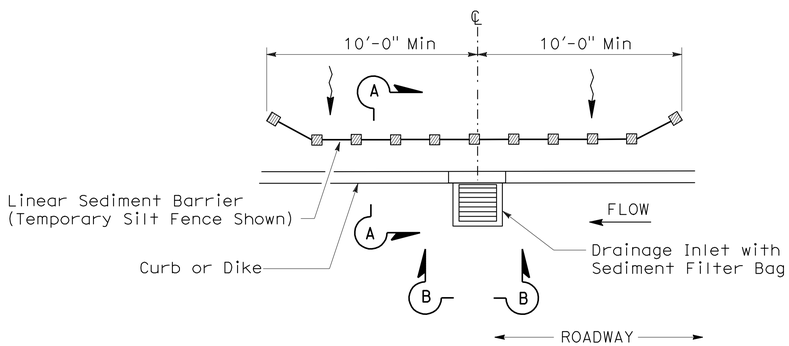

PLAN

TEMPORARY DRAINAGE INLET PROTECTION (TYPE 5) (SEDIMENT FILTER BAG)

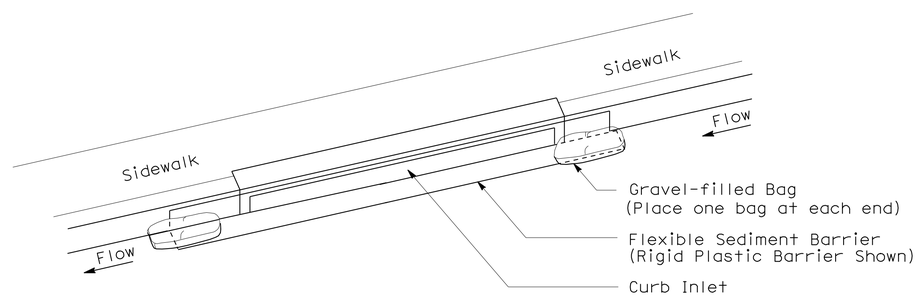

PERSPECTIVE

TEMPORARY DRAINAGE INLET PROTECTION (TYPE 6B) (CURB INLET WITHOUT GRATE)

STATE OF CALIFORNIA
DEPARTMENT OF TRANSPORTATION

TEMPORARY WATER POLLUTION CONTROL DETAILS (TEMPORARY DRAINAGE INLET PROTECTION)

NO SCALE

NSP T64 DATED AUGUST 15, 2008 SUPPLEMENTS
THE STANDARD PLANS BOOK DATED MAY 2006.

NEW STANDARD PLAN NSP T64

2006 NEW STANDARD PLAN NSP T64

7-11-08