Dist	COUNTY	ROUTE	POST MILES TOTAL PROJECT	SHEET No.	TOTAL SHEETS
08	Riv	111	1.5	1	82

NH-P111(070)E

STATE OF CALIFORNIA
DEPARTMENT OF TRANSPORTATION

PROJECT PLANS FOR CONSTRUCTION ON
STATE HIGHWAY

IN RIVERSIDE COUNTY
1.5 MILES NORTH OF IMPERIAL COUNTY
AT SALTON CREEK BRIDGE

TO BE SUPPLEMENTED BY STANDARD PLANS DATED MAY 2010

INDEX OF PLANS

SHEET No.	DESCRIPTION
1	TITLE AND LOCATION MAP
2	TYPICAL CROSS SECTIONS
3-4	LAYOUTS
5	PROFILES AND SUPERELEVATION DIAGRAM
6	TEMPORARY WATER POLLUTION CONTROL QUANTITIES
7-8	EROSION CONTROL PLANS
9-10	CONTOUR GRADING
11-17	DRAINAGE PLANS, PROFILES, DETAILS AND QUANTITIES
18-19	UTILITY PLANS
20-21	CONSTRUCTION AREA SIGNS
22-25	STAGE CONSTRUCTION PLANS
26-28	TRAFFIC HANDLING PLANS AND QUANTITIES
29-30	PAVEMENT DELINEATION PLANS AND QUANTITIES
31-32	SUMMARY OF QUANTITIES
33-41	ELECTRICAL PLANS
42-43	SPECIAL ELECTRICAL STRUCTURES
44-55	REVISED STANDARD PLANS

STRUCTURE PLANS

56-82	SALT CREEK BRIDGE (REPLACE) Br No. 56-0854

THE STANDARD PLANS LIST APPLICABLE TO THIS CONTRACT IS INCLUDED IN THE NOTICE TO BIDDERS AND SPECIAL PROVISIONS BOOK.

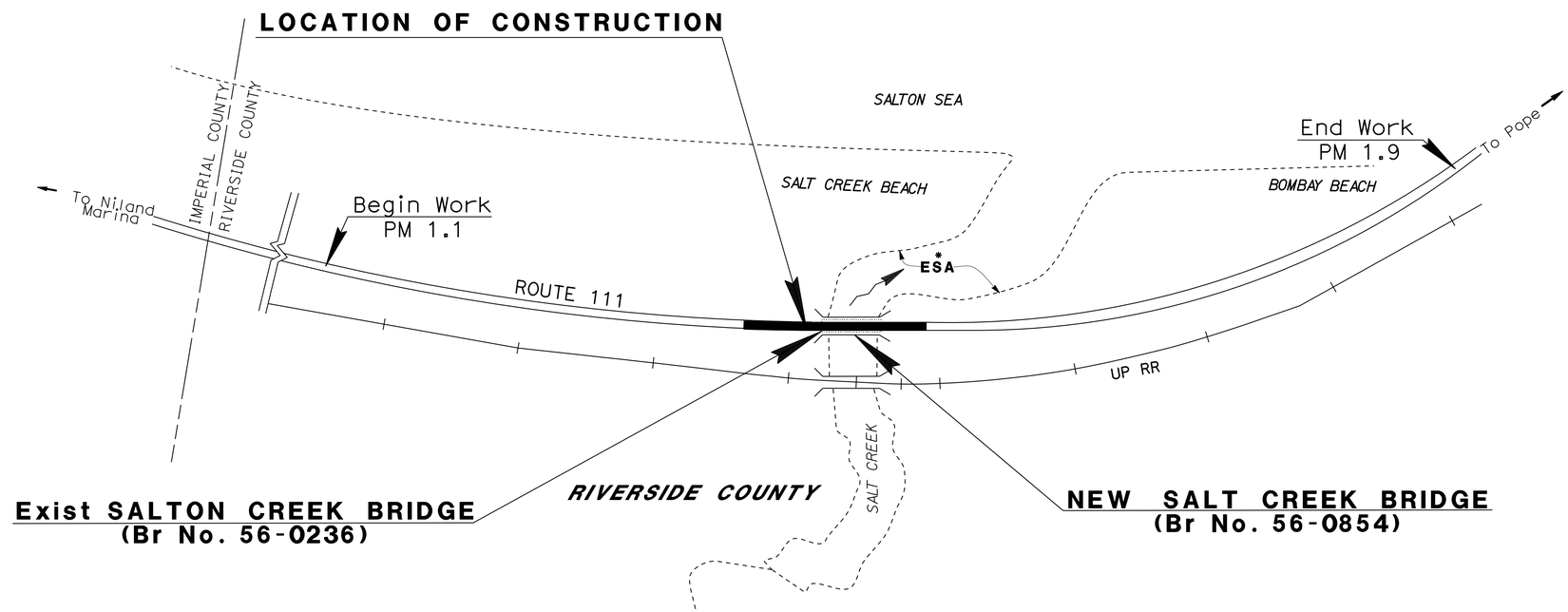

*ESA: ENVIRONMENTALLY SENSITIVE AREA

NO SCALE

THE CONTRACTOR SHALL POSSESS THE CLASS (OR CLASSES) OF LICENSE AS SPECIFIED IN THE "NOTICE TO BIDDERS."

PROJECT MANAGER: MUSTAPHA IAALI

DESIGN ENGINEER: JIAN (JAMES) LAN

PROJECT ENGINEER REGISTERED CIVIL ENGINEER — DATE: 03/15/13

REGISTERED PROFESSIONAL ENGINEER — JIAN LAN — No. C63981 — Exp. 09/30/14 — CIVIL — STATE OF CALIFORNIA

June 17, 2013
PLANS APPROVAL DATE

THE STATE OF CALIFORNIA OR ITS OFFICERS OR AGENTS SHALL NOT BE RESPONSIBLE FOR THE ACCURACY OR COMPLETENESS OF SCANNED COPIES OF THIS PLAN SHEET.

CONTRACT No.	08-449104
PROJECT ID	0800000714

LAST REVISION 03-12-13 — DATE PLOTTED => 14-AUG-2013 — TIME PLOTTED => 05:27

Dist	COUNTY	ROUTE	POST MILES TOTAL PROJECT	SHEET No.	TOTAL SHEETS
08	Riv	111	1.5	2	82

REGISTERED CIVIL ENGINEER 03/15/13 DATE

6-17-13
PLANS APPROVAL DATE

REGISTERED PROFESSIONAL ENGINEER JIAN LAN No. C63981 Exp. 09/30/14 CIVIL STATE OF CALIFORNIA

THE STATE OF CALIFORNIA OR ITS OFFICERS OR AGENTS SHALL NOT BE RESPONSIBLE FOR THE ACCURACY OR COMPLETENESS OF SCANNED COPIES OF THIS PLAN SHEET.

NOTES:

1. SUPERELEVATIONS ARE SHOWN ON THE SUPERELEVATION DIAGRAMS.
2. EXACT LOCATION AND TYPE OF DIKE AND RAIL ARE SHOWN ON THE LAYOUT AND SUMMARY OF QUANTITIES SHEETS
3. DIMENSIONS OF THE PAVEMENT STRUCTURE (STRUCTURE SECTIONS) ARE SUBJECT TO TOLERANCES SPECIFIED IN STANDARD SPECIFICATIONS.
4. SEE DRAINAGE SHEETS FOR RSP LOCATIONS AND DIMENSIONS.
5. PRIME COAT SHALL BE APPLIED BETWEEN THE HMA AND AB, AND OTHER AREA AS DIRECTED BY THE RESIDENT ENGINEER.

DESIGN DESIGNATION (ROUTE 111)

2015 ADT = 2,200 T = 21 % IN ADT

2035 ADT = 6,600 T = 15 % IN ADT

2015 DHV = 310 V = 55 MPH

TI_{20} = 9.50 (MAINLINE LANE)

ABBREVIATION:

SC - SAW CUT

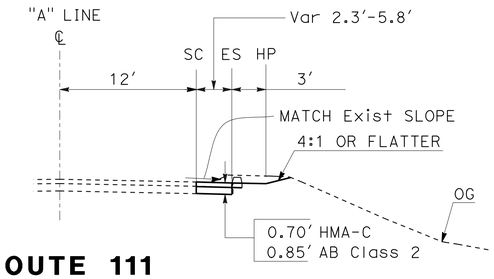

ROUTE 111

Sta 131+25 to Sta 132+50

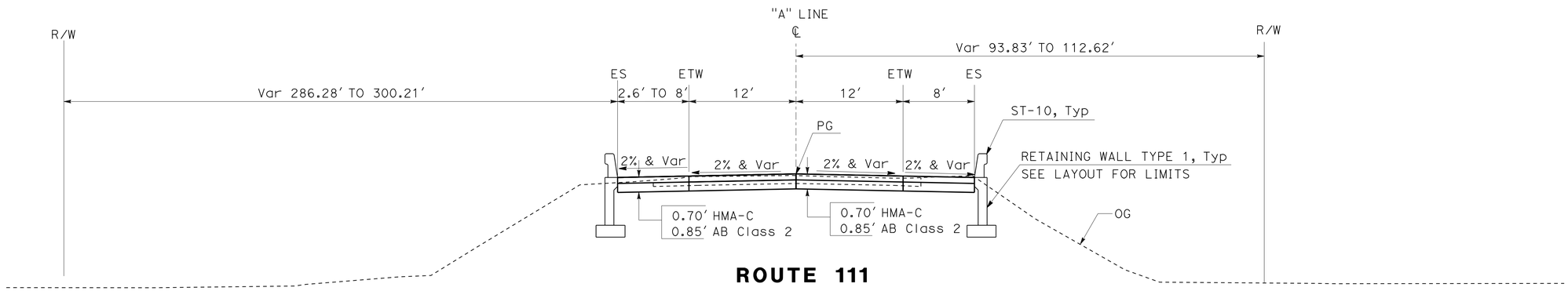

ROUTE 111

Sta 129+90.5 to Sta 130+50

Sta 126+20 to Sta 127+15.5

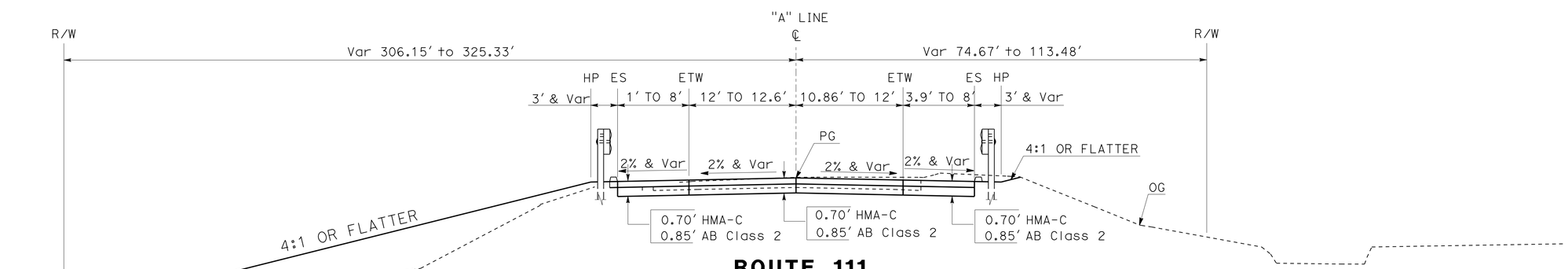

ROUTE 111

Sta 130+50 to Sta 131+25

Sta 124+50 to Sta 126+20

TYPICAL CROSS SECTIONS

NO SCALE

X-1

STATE OF CALIFORNIA - DEPARTMENT OF TRANSPORTATION

Caltrans® DESIGN C

FUNCTIONAL SUPERVISOR GEORGE MORRIS

CALCULATED-DESIGNED BY JIAN (JAMES) LAN GEORGE MORRIS

CHECKED BY

REVISED BY

DATE REVISED

LAST REVISION 03-12-13 DATE PLOTTED => 14-AUG-2013 TIME PLOTTED => 05:27

Dist	COUNTY	ROUTE	POST MILES TOTAL PROJECT	SHEET No.	TOTAL SHEETS
08	Riv	111	1.5	3	82

REGISTERED CIVIL ENGINEER 03/15/13 DATE

6-17-13
PLANS APPROVAL DATE

REGISTERED PROFESSIONAL ENGINEER JIAN LAN No. C63981 Exp. 09/30/14 CIVIL STATE OF CALIFORNIA

THE STATE OF CALIFORNIA OR ITS OFFICERS OR AGENTS SHALL NOT BE RESPONSIBLE FOR THE ACCURACY OR COMPLETENESS OF SCANNED COPIES OF THIS PLAN SHEET.

NOTES:

1. FOR COMPLETE RIGHT OF WAY, SEE RIGHT OF WAY RECORD MAPS AT DISTRICT OFFICE.
2. SEE DRAINAGE SHEETS FOR DIMENSIONS & LOCATIONS OF ROCK SLOPE PROTECTION.
3. VEGETATION CONTROL SHALL BE PLACED PER STANDRARD PLAN A78C3.

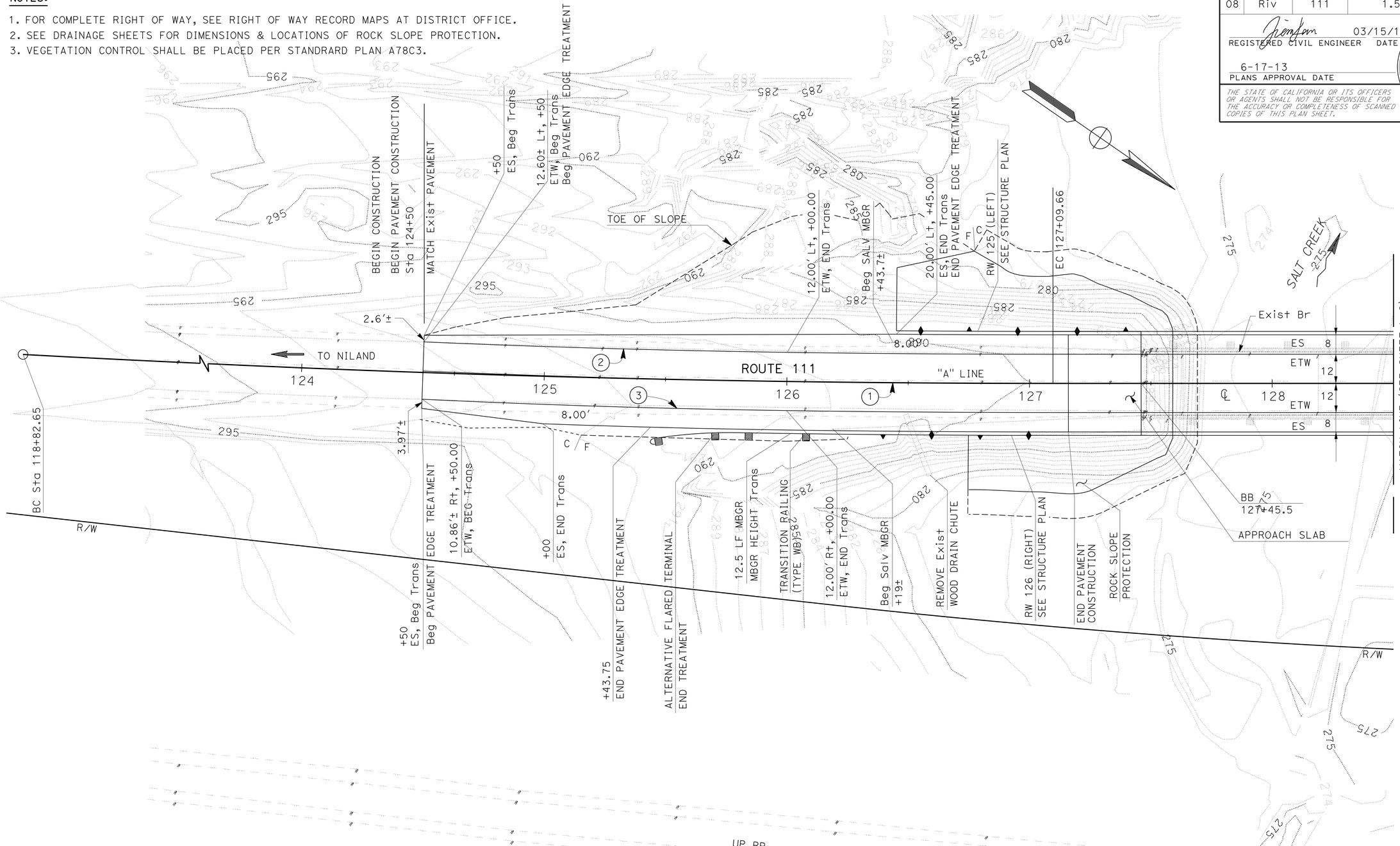

CURVE DATA

No. ⊕	R	Δ	T	L
①	7468.45'	6°20'41"	413.93'	827.02'
②	5334.94'	1°04'26"	74.88'	149.75'
③	4544.04'	1°15'39"	75.12	284.66'

LAYOUT

SCALE: 1" = 20'

L-1

STATE OF CALIFORNIA - DEPARTMENT OF TRANSPORTATION
Caltrans DESIGN C
FUNCTIONAL SUPERVISOR GEORGE MORHIG
CALCULATED-DESIGNED BY JIAN (JAMES) LAN
CHECKED BY GEORGE MORHIG
REVISED BY
DATE REVISED

LAST REVISION 03-12-13 | DATE PLOTTED => 14-AUG-2013 | TIME PLOTTED => 05:27

Dist	COUNTY	ROUTE	POST MILES TOTAL PROJECT	SHEET No.	TOTAL SHEETS
08	Riv	111	1.5	4	82

REGISTERED CIVIL ENGINEER 03/15/13 DATE

6-17-13
PLANS APPROVAL DATE

REGISTERED PROFESSIONAL ENGINEER JIAN LAN No. C63981 Exp. 09/30/14 CIVIL STATE OF CALIFORNIA

THE STATE OF CALIFORNIA OR ITS OFFICERS OR AGENTS SHALL NOT BE RESPONSIBLE FOR THE ACCURACY OR COMPLETENESS OF SCANNED COPIES OF THIS PLAN SHEET.

NOTE:

1. FOR COMPLETE RIGHT OF WAY, SEE RIGHT OF WAY RECORD MAPS AT DISTRICT OFFICE.

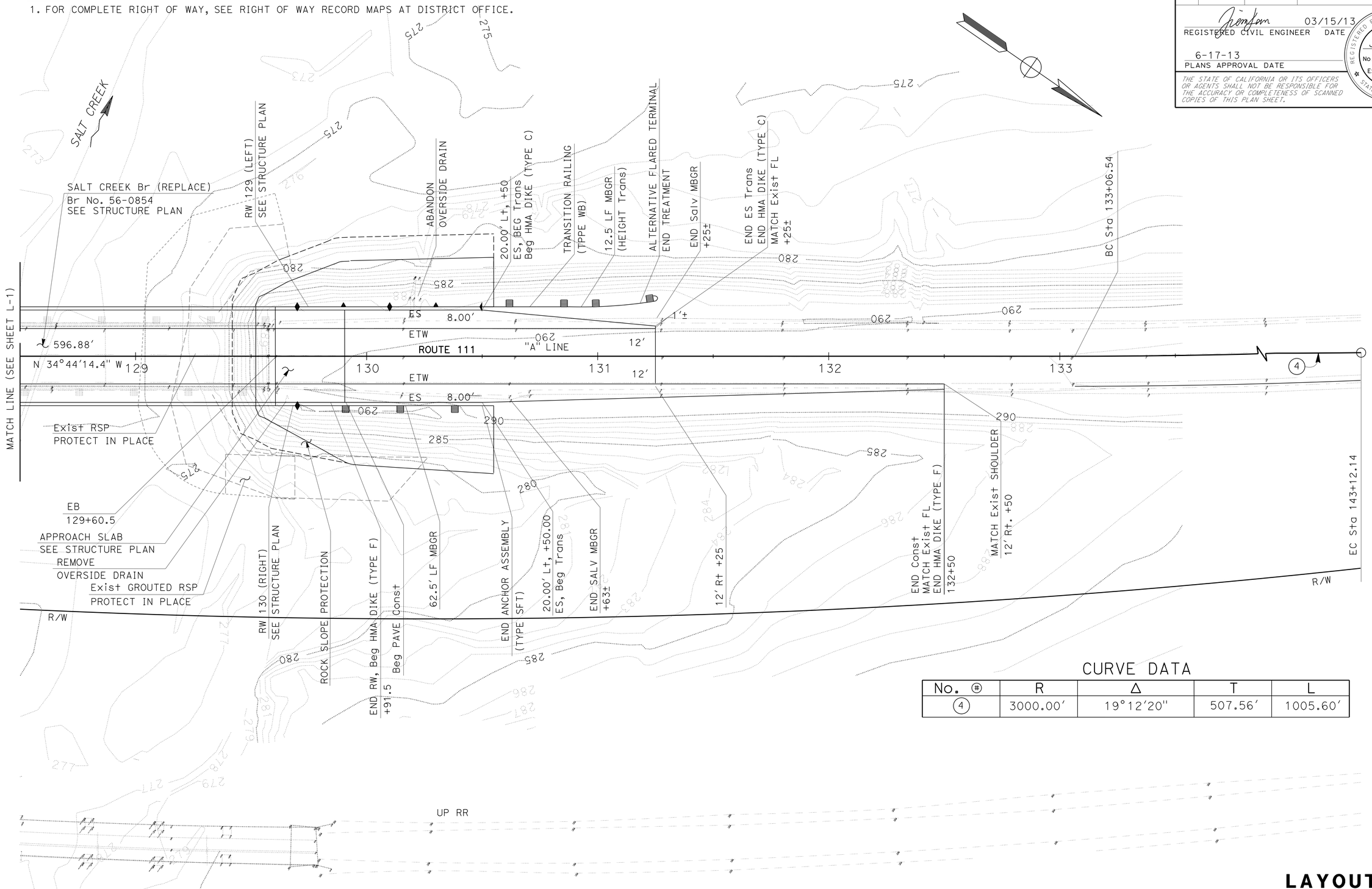

CURVE DATA

No. ⊕	R	Δ	T	L
4	3000.00'	19°12'20"	507.56'	1005.60'

LAYOUT
SCALE: 1" = 20'

L-2

STATE OF CALIFORNIA - DEPARTMENT OF TRANSPORTATION
Caltrans
DESIGN C
FUNCTIONAL SUPERVISOR GEORGE MORHIG
CALCULATED-DESIGNED BY JIAN (JAMES) LAN
CHECKED BY GEORGE MORHIG
REVISED BY
DATE REVISED

LAST REVISION 03-12-13
DATE PLOTTED => 14-AUG-2013
TIME PLOTTED => 05:27

Dist	COUNTY	ROUTE	POST MILES TOTAL PROJECT	SHEET No.	TOTAL SHEETS
08	Riv	111	1.5	5	82

REGISTERED CIVIL ENGINEER 03/15/13 DATE

6-17-13
PLANS APPROVAL DATE

REGISTERED PROFESSIONAL ENGINEER JIAN LAN No. C63981 Exp. 09/30/14 CIVIL STATE OF CALIFORNIA

THE STATE OF CALIFORNIA OR ITS OFFICERS OR AGENTS SHALL NOT BE RESPONSIBLE FOR THE ACCURACY OR COMPLETENESS OF SCANNED COPIES OF THIS PLAN SHEET.

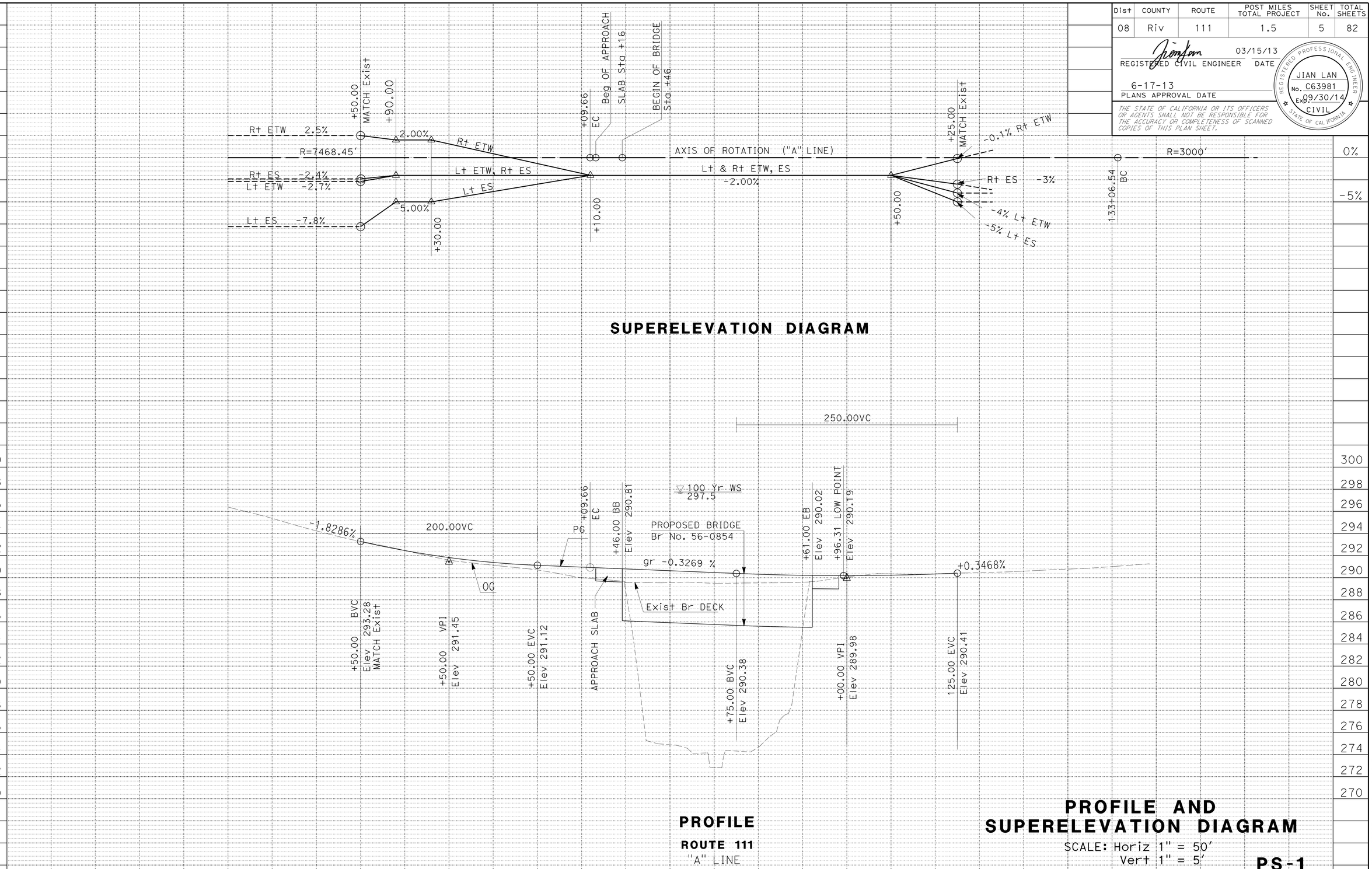

STATION	122	123	124	125	126	127	128	129	130	131	132	133	134	135	TOTAL
CY Exc															
CY Emb															

STATE OF CALIFORNIA - DEPARTMENT OF TRANSPORTATION
Caltrans DESIGN C
FUNCTIONAL SUPERVISOR GEORGE MORHIG
CALCULATED-DESIGNED BY JIAN (JAMES) LAN
CHECKED BY GEORGE MORHIG
REVISED BY
DATE REVISED

LAST REVISION 03-12-13
DATE PLOTTED => 14-AUG-2013
TIME PLOTTED => 05:28

Dist	COUNTY	ROUTE	POST MILES TOTAL PROJECT	SHEET No.	TOTAL SHEETS
08	Riv	111	1.5	6	82

N. Nguyen 03/15/13
REGISTERED CIVIL ENGINEER DATE

6-17-13
PLANS APPROVAL DATE

REGISTERED PROFESSIONAL ENGINEER
N. NGUYEN
No. 42692
Exp. 3-31-14
CIVIL
STATE OF CALIFORNIA

THE STATE OF CALIFORNIA OR ITS OFFICERS OR AGENTS SHALL NOT BE RESPONSIBLE FOR THE ACCURACY OR COMPLETENESS OF SCANNED COPIES OF THIS PLAN SHEET.

TEMPORARY WATER POLLUTION CONTROL

Approx ROUTE 111 STATION	TEMPORARY CONSTRUCTION ENTRANCE	TEMPORARY CONSTRUCTION ROADWAY	TEMPORARY SILT FENCE	TEMPORARY FIBER ROLLS	REMARKS
	EA	CY	LF	LF	
124+00	1				ONE PER DIRECTION
131+20	1				ONE PER DIRECTION
124+50 to 128+00		260			130 CY PER DIRECTION
129+00 to 131+20		260			130 CY PER DIRECTION
124+00 to 131+20			800	3,200	
TOTAL	2	520	800	3,200	

TEMPORARY WATER POLLUTION CONTROL QUANTITIES

WPCQ-1

STATE OF CALIFORNIA - DEPARTMENT OF TRANSPORTATION
Caltrans PROJECT DEVELOPMENT

FUNCTIONAL SUPERVISOR: GEORGE MORHIG
CALCULATED-DESIGNED BY: H. PHAM
CHECKED BY: GEORGE MORHIG
REVISED BY
DATE REVISED

LAST REVISION 03-12-13 | DATE PLOTTED => 14-AUG-2013 | TIME PLOTTED => 05:28

Dist	COUNTY	ROUTE	POST MILES TOTAL PROJECT	SHEET No.	TOTAL SHEETS
08	Riv	111	1.5	7	82

LICENSED LANDSCAPE ARCHITECT

6-17-13
PLANS APPROVAL DATE

LICENSED LANDSCAPE ARCHITECT
Matthew Harry Hall No. 5000
Signature
10/31/2013
Renewal Date
05/31/13
Date
STATE OF CALIFORNIA

THE STATE OF CALIFORNIA OR ITS OFFICERS OR AGENTS SHALL NOT BE RESPONSIBLE FOR THE ACCURACY OR COMPLETENESS OF SCANNED COPIES OF THIS PLAN SHEET.

NOTES:

1. FOR COMPLETE RIGHT OF WAY AND ACCURATE ACCESS DATA, SEE RIGHT OF WAY RECORD MAPS AT DISTRICT OFFICE.
2. GRAVEL MULCH AND EROSION CONTROL (TYPE 1) IS FOR DISTURBED SOIL AREAS FROM CONTRACTORS OPERATIONS.

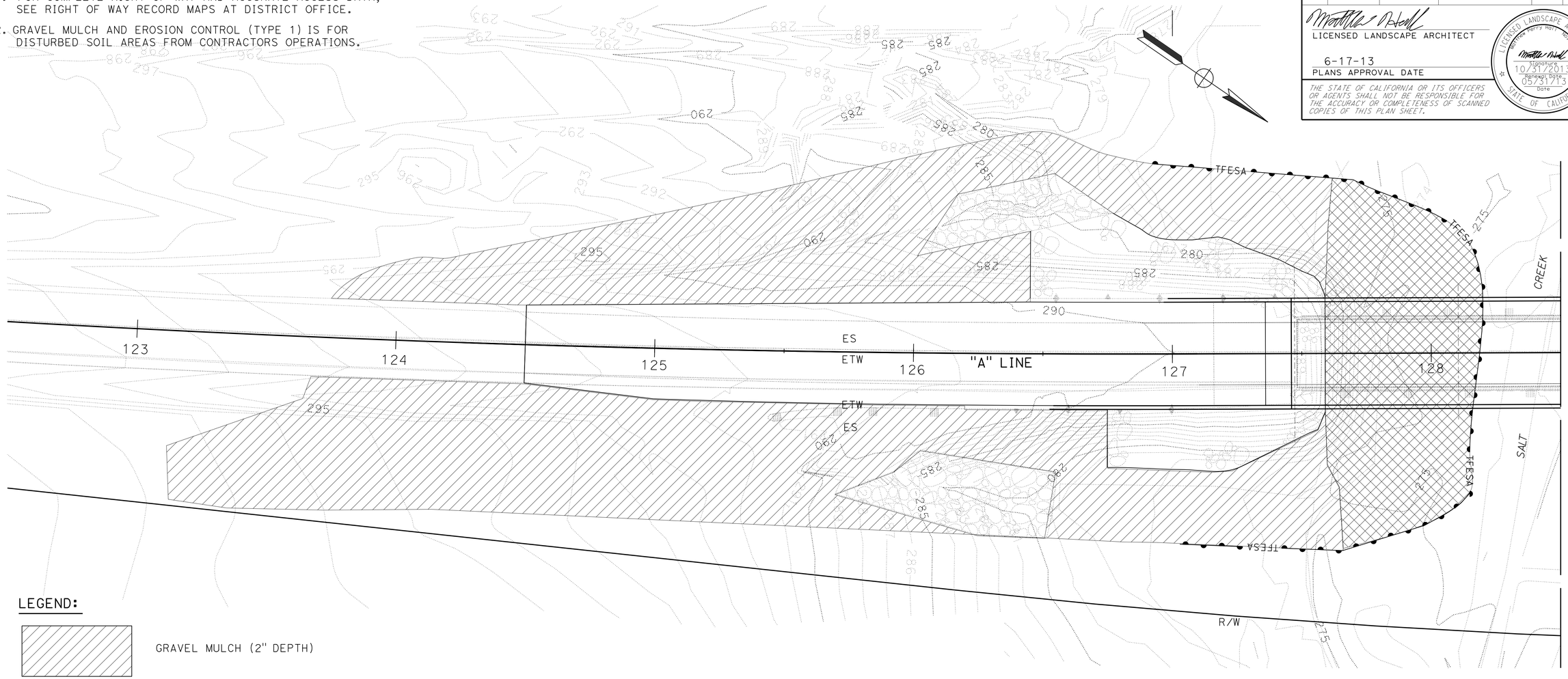

LEGEND:

GRAVEL MULCH (2" DEPTH)

EROSION CONTROL (TYPE 1)

EROSION CONTROL (TYPE 1)

SEQUENCE	ITEM	MATERIAL		APPLICATION RATE
		DESCRIPTION	TYPE	
STEP 1	DRY SEED	DRY APPLIED SEED	SEED MIX	4 LB/ACRE
STEP 2	HYDROMULCH	BFM FIBER	WOOD	3,500 LB/ACRE
		BFM TACKIFIER	PLANT BASED	

SEED MIX

BOTANICAL NAME (COMMON NAME)	PERCENT GERMINATION (MINIMUM)	PURE LIVE SEED (POUNDS PER ACRE)
ALLENROLFEA OCCIDENTALIS (IODINE BUSH)	50	1
DISTICHLIS SPICATA (SALTGRASS)	40	3
	TOTAL	4

EROSION CONTROL PLAN

SCALE: 1" = 20'

EC-1

APPROVED FOR EROSION CONTROL WORK ONLY

STATE OF CALIFORNIA - DEPARTMENT OF TRANSPORTATION
Caltrans® LANDSCAPE ARCHITECTURE

SENIOR LANDSCAPE ARCHITECT: RAY DESSELLE
CALCULATED-DESIGNED BY: LORENA SALVADOR
CHECKED BY: MATTHEW HALL
REVISED BY
DATE REVISED

LAST REVISION 05-30-13
DATE PLOTTED => 14-AUG-2013
TIME PLOTTED => 05:28

Dist	COUNTY	ROUTE	POST MILES TOTAL PROJECT	SHEET No.	TOTAL SHEETS
08	Riv	111	1.5	8	82

LICENSED LANDSCAPE ARCHITECT

6-17-13
PLANS APPROVAL DATE

LICENSED LANDSCAPE ARCHITECT
Matthew Harry Hall No. 5000
Signature
10/31/2013
Renewal Date
05/31/13
Date
STATE OF CALIFORNIA

THE STATE OF CALIFORNIA OR ITS OFFICERS OR AGENTS SHALL NOT BE RESPONSIBLE FOR THE ACCURACY OR COMPLETENESS OF SCANNED COPIES OF THIS PLAN SHEET.

NOTE:

1. FOR COMPLETE RIGHT OF WAY AND ACCURATE ACCESS DATA, SEE RIGHT OF WAY RECORD MAPS AT DISTRICT OFFICE.

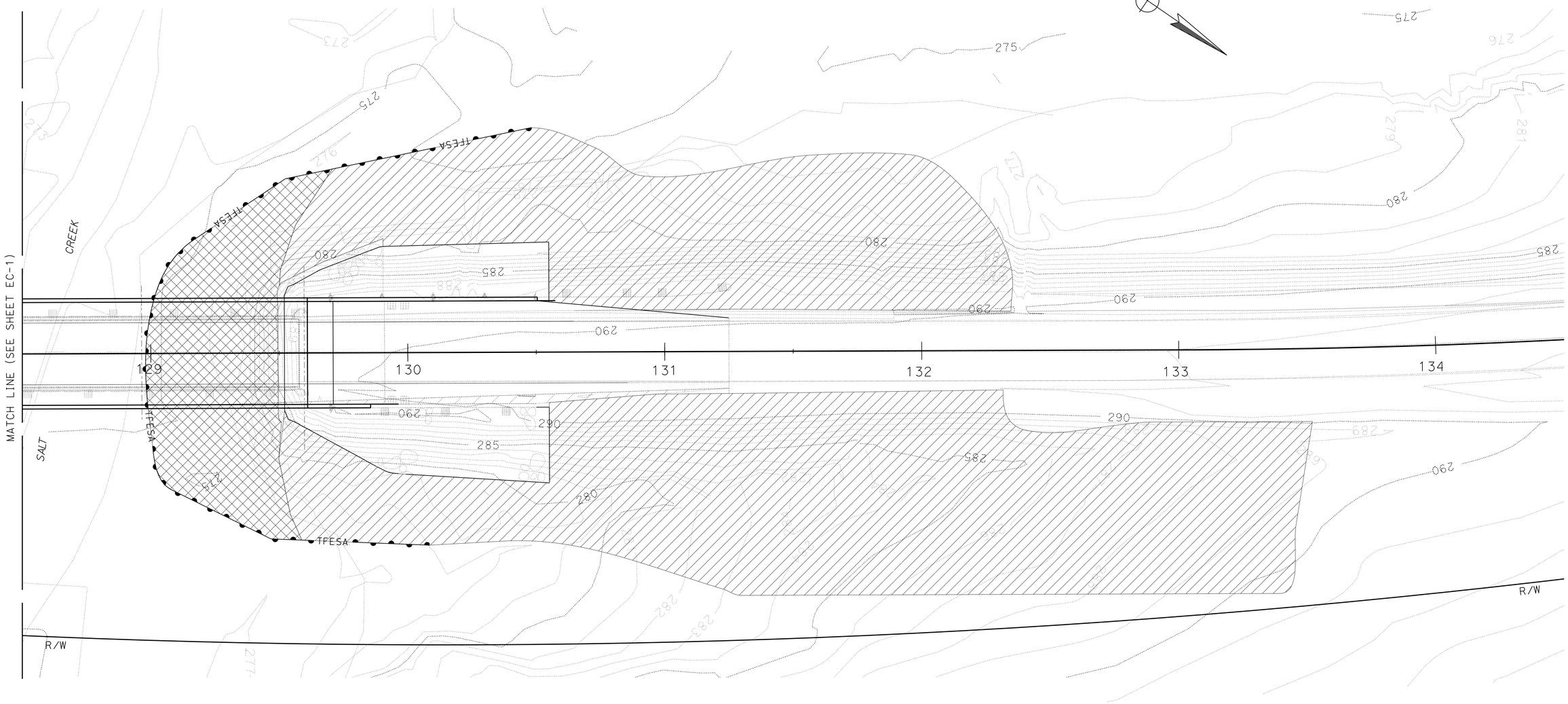

EROSION CONTROL QUANTITIES

SHEETS	DRY SEED	HYDROMULCH	GRAVEL MULCH
	SQFT	SQFT	SQFT
EC-1	5,907	5,907	34,991
EC-2	7,131	7,131	37,331
TOTAL	13,038	13,038	72,322

APPROVED FOR EROSION CONTROL WORK ONLY

EROSION CONTROL PLAN

SCALE: 1" = 20'

EC-2

STATE OF CALIFORNIA - DEPARTMENT OF TRANSPORTATION
Caltrans® LANDSCAPE ARCHITECTURE

SENIOR LANDSCAPE ARCHITECT: RAY DESSELLE

CALCULATED-DESIGNED BY: LORENA SALVADOR
CHECKED BY: MATTHEW HALL

REVISED BY
DATE REVISED

LAST REVISION 05-30-13
DATE PLOTTED => 14-AUG-2013
TIME PLOTTED => 05:28

Dist	COUNTY	ROUTE	POST MILES TOTAL PROJECT	SHEET No.	TOTAL SHEETS
08	Riv	111	1.5	9	82

REGISTERED CIVIL ENGINEER 03/15/13 DATE

6-17-13
PLANS APPROVAL DATE

REGISTERED PROFESSIONAL ENGINEER JIAN LAN No. C63981 Exp. 09/30/14 CIVIL STATE OF CALIFORNIA

THE STATE OF CALIFORNIA OR ITS OFFICERS OR AGENTS SHALL NOT BE RESPONSIBLE FOR THE ACCURACY OR COMPLETENESS OF SCANNED COPIES OF THIS PLAN SHEET.

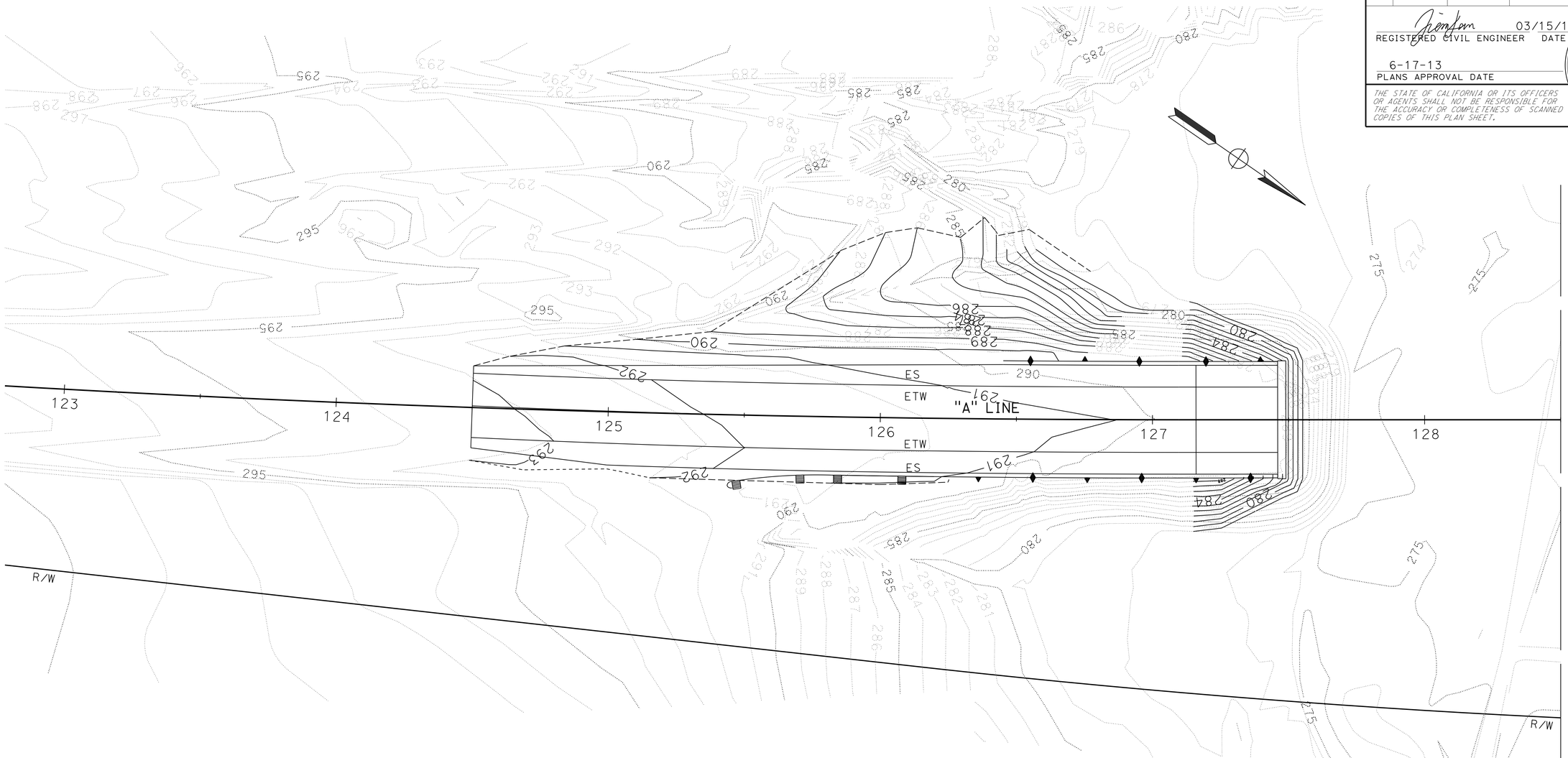

NOTES:

1. FOR COMPLETE RIGHT OF WAY, SEE RIGHT OF WAY RECORD MAPS AT DISTRICT OFFICE.
2. THIS PLAN ACCURATE FOR CONTOUR GRADING WORK ONLY.
3. THE CONTOUR GRADING SHOWN IS BEFORE PLACING RSP.
4. BRIDGE DECK NOT SHOWN FOR CLARITY.

CONTOUR GRADING

SCALE: 1" = 20'

G-1

STATE OF CALIFORNIA - DEPARTMENT OF TRANSPORTATION
Caltrans
DESIGN C
FUNCTIONAL SUPERVISOR: GEORGE MORHIG
CALCULATED-DESIGNED BY: JIAN (JAMES) LAN
CHECKED BY: GEORGE MORHIG
REVISED BY
DATE REVISED

LAST REVISION 03-12-13
DATE PLOTTED => 14-AUG-2013
TIME PLOTTED => 05:28

Dist	COUNTY	ROUTE	POST MILES TOTAL PROJECT	SHEET No.	TOTAL SHEETS
08	Riv	111	1.5	10	82

REGISTERED CIVIL ENGINEER 03/15/13 DATE

6-17-13
PLANS APPROVAL DATE

REGISTERED PROFESSIONAL ENGINEER
JIAN LAN
No. C63981
Exp. 09/30/14
CIVIL
STATE OF CALIFORNIA

THE STATE OF CALIFORNIA OR ITS OFFICERS OR AGENTS SHALL NOT BE RESPONSIBLE FOR THE ACCURACY OR COMPLETENESS OF SCANNED COPIES OF THIS PLAN SHEET.

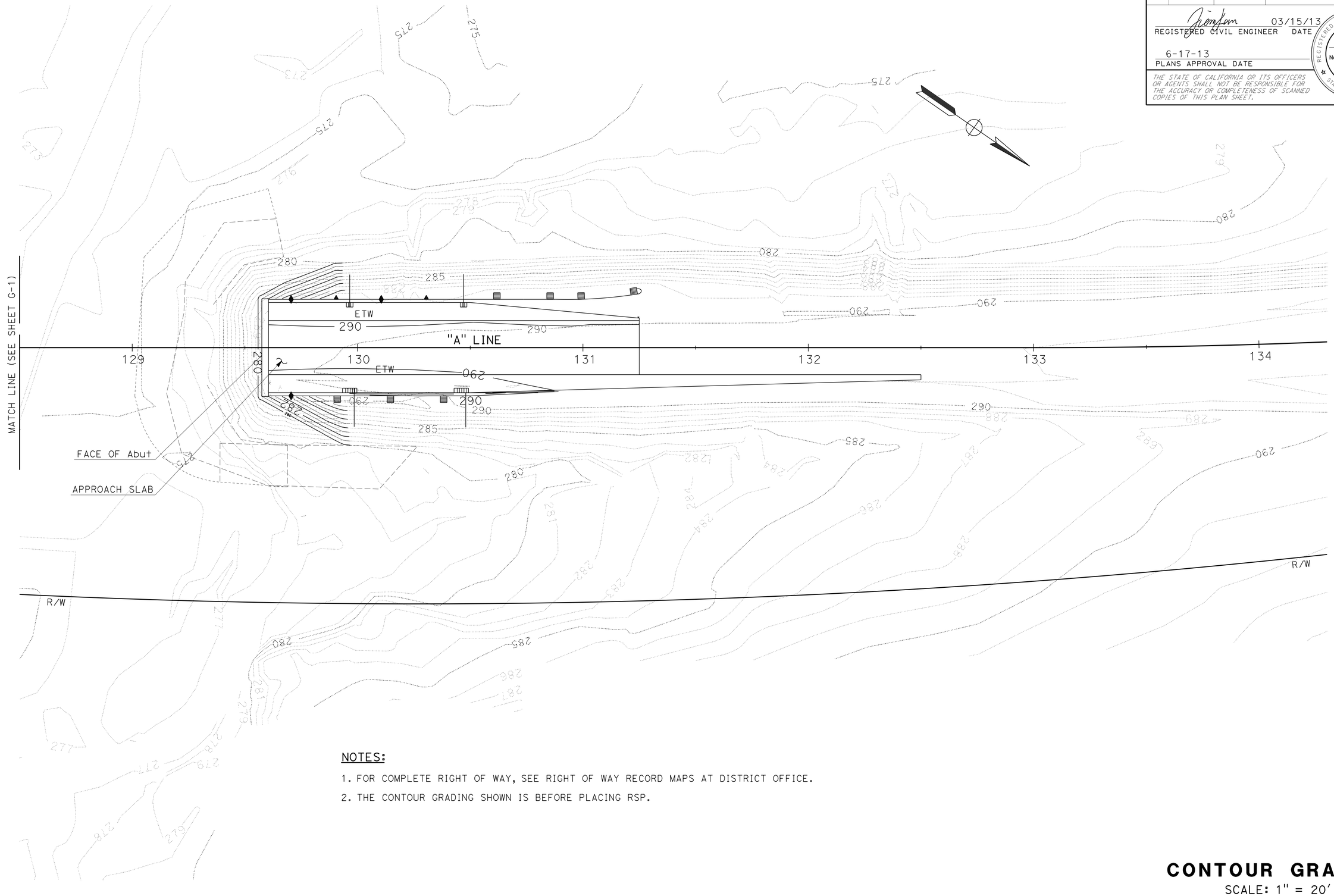

NOTES:

1. FOR COMPLETE RIGHT OF WAY, SEE RIGHT OF WAY RECORD MAPS AT DISTRICT OFFICE.
2. THE CONTOUR GRADING SHOWN IS BEFORE PLACING RSP.

CONTOUR GRADING

SCALE: 1" = 20'

G-2

APPROVED FOR CONTOUR GRADING WORK ONLY

STATE OF CALIFORNIA - DEPARTMENT OF TRANSPORTATION
Caltrans
DESIGN C

FUNCTIONAL SUPERVISOR: GEORGE MORHIG
CALCULATED-DESIGNED BY: JIAN (JAMES) LAN
CHECKED BY: GEORGE MORHIG
REVISED BY
DATE REVISED

LAST REVISION 03-12-13
DATE PLOTTED => 14-AUG-2013
TIME PLOTTED => 05:28

Dist	COUNTY	ROUTE	POST MILES TOTAL PROJECT	SHEET No.	TOTAL SHEETS
08	Riv	111	1.5	11	82

REGISTERED CIVIL ENGINEER 05/31/13 DATE

6-17-13
PLANS APPROVAL DATE

REGISTERED PROFESSIONAL ENGINEER JIAN LAN No. C63981 Exp. 09/30/14 CIVIL STATE OF CALIFORNIA

THE STATE OF CALIFORNIA OR ITS OFFICERS OR AGENTS SHALL NOT BE RESPONSIBLE FOR THE ACCURACY OR COMPLETENESS OF SCANNED COPIES OF THIS PLAN SHEET.

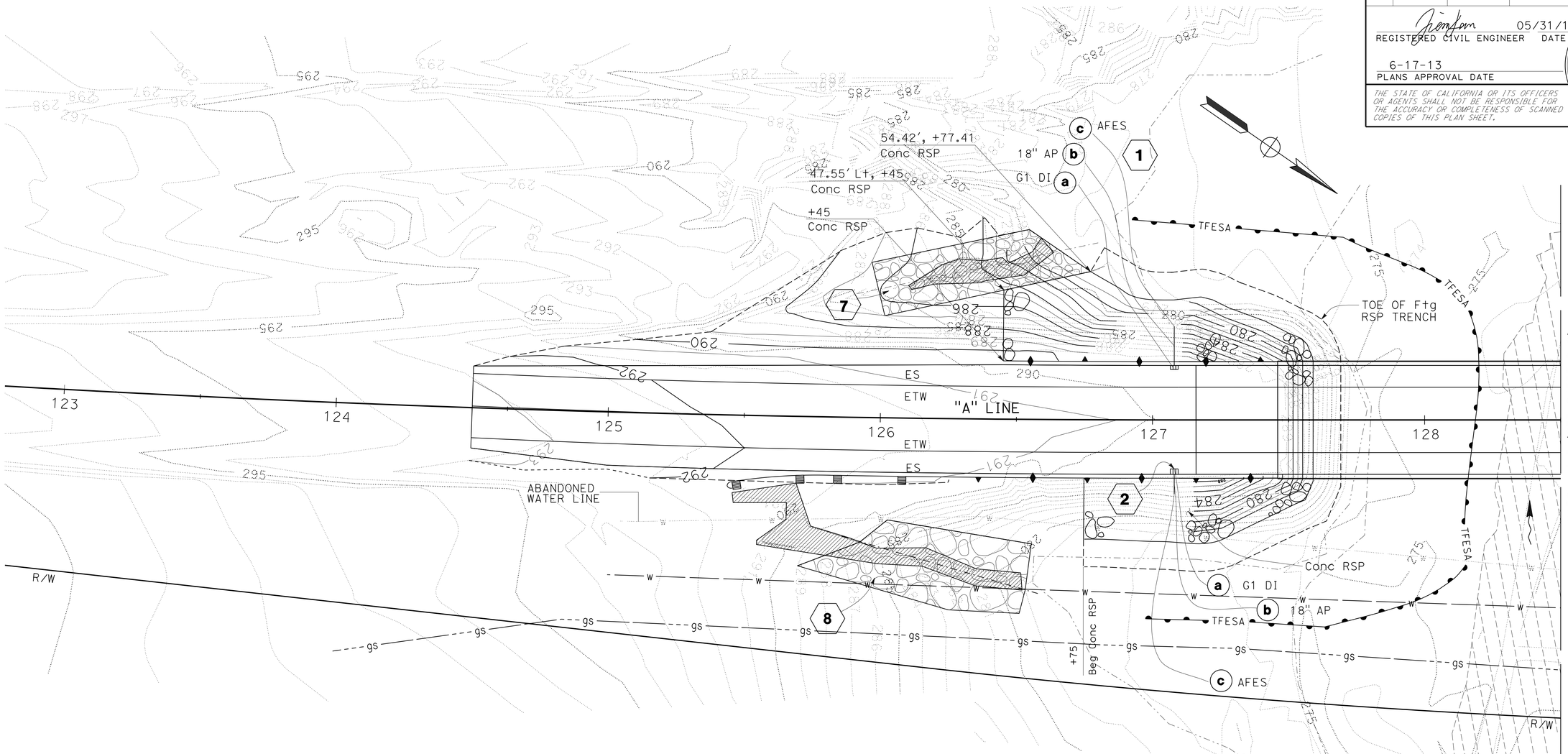

NOTES:

1. THE CONTOUR GRADING SHOWN IS BEFORE PLACING RSP.
2. THE CONTRACTOR SHALL LIMIT CONSTRUCTION ACTIVITIES AT ESA AREA. ESA FENCES SHOWN ARE FOR INFO ONLY. ESA FENCE SHALL BE PLACED AT DIFFERENT Const STAGES PER RESIDENT ENGINEER'S INSTRUCTIONS.
3. THE CONTRACTOR SHALL LIMIT DISTURBULANCE TO THE AREA WITHIN FEDERAL AND STATE NON-WETLAND WATERS.
4. SEE DRAINAGE DETAIL SHEET FOR RSP DETAILS.
5. RSP 3' AROUND THE DRAINAGE PIPE SHALL BE PLACED BY METHOD A. THE OTHER AREA SHALL BE PLACED BY METHOD B.
6. FOR COMPLETE RIGHT OF WAY, SEE RIGHT OF WAY RECORD MAPS AT DISTRICT OFFICE.

ABBREVIATION:

Conc RSP - CONCRETED RSP (LIGHT CLASS)

LEGEND:

- No. DRAINAGE SYSTEM NUMBER
- x DRAINAGE UNIT
- ROCK SLOPE PROTECTION
- ENVIRONMENTALLY SENSITIVE AREA (ESA)
- FEDERAL AND STATE WETLAND WATERS LIMIT
- FEDERAL NON-WETLAND LAND WATERS
- STATE NON-WETLAND WATERS
- TFESA - Temp FENCE (TYPE ESA)

UTILITIES:

- w 18" WATERLINE
- gs REFINED PETROLEUM PRODUCT LINE
- fo FIBER OPTIC CABLE

DRAINAGE PLAN

SCALE: 1" = 20'

D-1

APPROVED FOR DRAINAGE WORK ONLY

REVISED BY | DATE REVISED
JIAN (JAMES) LAN | GEORGE MORHIG
CALCULATED-DESIGNED BY | CHECKED BY
FUNCTIONAL SUPERVISOR | GEORGE MORHIG
STATE OF CALIFORNIA - DEPARTMENT OF TRANSPORTATION
Caltrans
DESIGN C

LAST REVISION 05-30-13 | DATE PLOTTED => 14-AUG-2013 | TIME PLOTTED => 05:28

Dist	COUNTY	ROUTE	POST MILES TOTAL PROJECT	SHEET No.	TOTAL SHEETS
08	Riv	111	1.5	12	82

REGISTERED CIVIL ENGINEER DATE 03/15/13

6-17-13
PLANS APPROVAL DATE

REGISTERED PROFESSIONAL ENGINEER JIAN LAN No. C63981 Exp. 09/30/14 CIVIL STATE OF CALIFORNIA

THE STATE OF CALIFORNIA OR ITS OFFICERS OR AGENTS SHALL NOT BE RESPONSIBLE FOR THE ACCURACY OR COMPLETENESS OF SCANNED COPIES OF THIS PLAN SHEET.

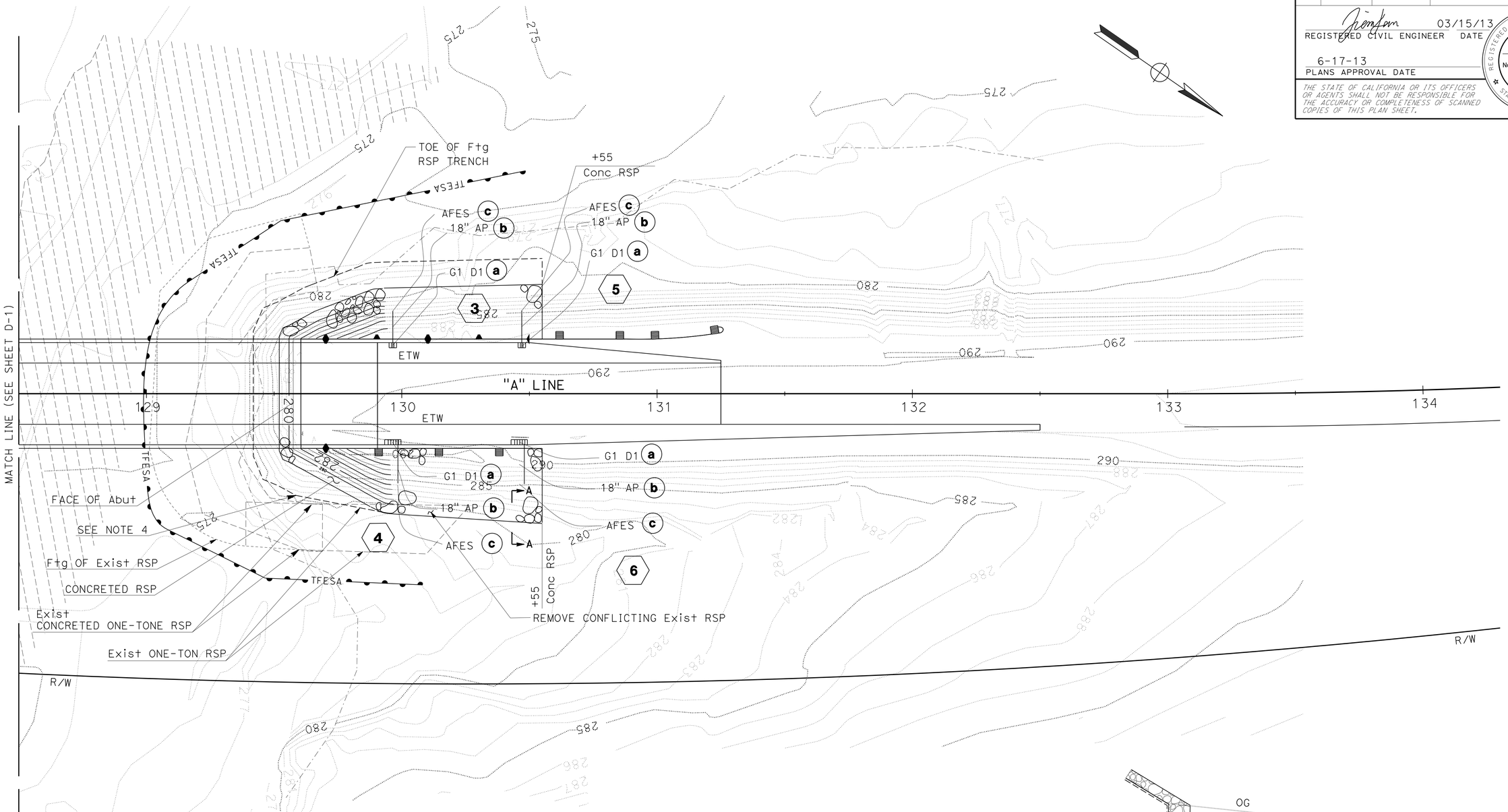

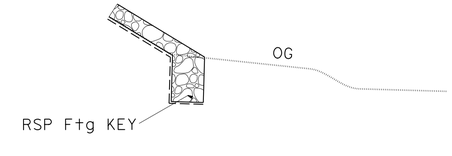

SECTION A-A

NOTES:

1. REMOVE Exist RSP WHERE NECESSARY TO RESHAPE BRIDGE CONE.THE PAYMENT IS DEEMED TO BE INCLUDED IN EARTHWORK, NO SEPARATE PAYMENT WILL BE MADE.
2. THE SIZE AND LOCATION OF Exist RSP DEPICTED ON THE PLAN IS APPROXIMATE. IT IS THE CONTRACTOR'S RESPONSIBILITY TO DETERMINE DURING EXCAVATION THE EXACT LOCATION OF Exist RSP.
3. TRANSIT TRENCH FTG FROM SLOPED TO VERTICAL TO AVOID CONFLICT WITH Exist CONCRETED RSP. THE TRANSITION LENGTH IS ABOUT 30'.
4. REMOVE THE Exist UN-GROUTED RSP IF IT CONFLICTS WITH PROPOSED RSP.
5. FOR COMPLETE RIGHT OF WAY, SEE RIGHT OF WAY RECORD MAPS AT DISTRICT OFFICE.

DRAINAGE PLAN

SCALE: 1" = 20'

D-2

REVISED BY | DATE REVISED
JIAN (JAMES) LAN | GEORGE MORHIG
CALCULATED-DESIGNED BY | CHECKED BY
FUNCTIONAL SUPERVISOR | GEORGE MORHIG

STATE OF CALIFORNIA - DEPARTMENT OF TRANSPORTATION
Caltrans
DESIGN C

LAST REVISION 03-12-13 | DATE PLOTTED => 14-AUG-2013 | TIME PLOTTED => 05:28

Dist	COUNTY	ROUTE	POST MILES TOTAL PROJECT	SHEET No.	TOTAL SHEETS
08	Riv	111	1.5	13	82

REGISTERED CIVIL ENGINEER 03/15/13 DATE

6-17-13
PLANS APPROVAL DATE

REGISTERED PROFESSIONAL ENGINEER JIAN LAN No. C63981 Exp. 09/30/14 CIVIL STATE OF CALIFORNIA

THE STATE OF CALIFORNIA OR ITS OFFICERS OR AGENTS SHALL NOT BE RESPONSIBLE FOR THE ACCURACY OR COMPLETENESS OF SCANNED COPIES OF THIS PLAN SHEET.

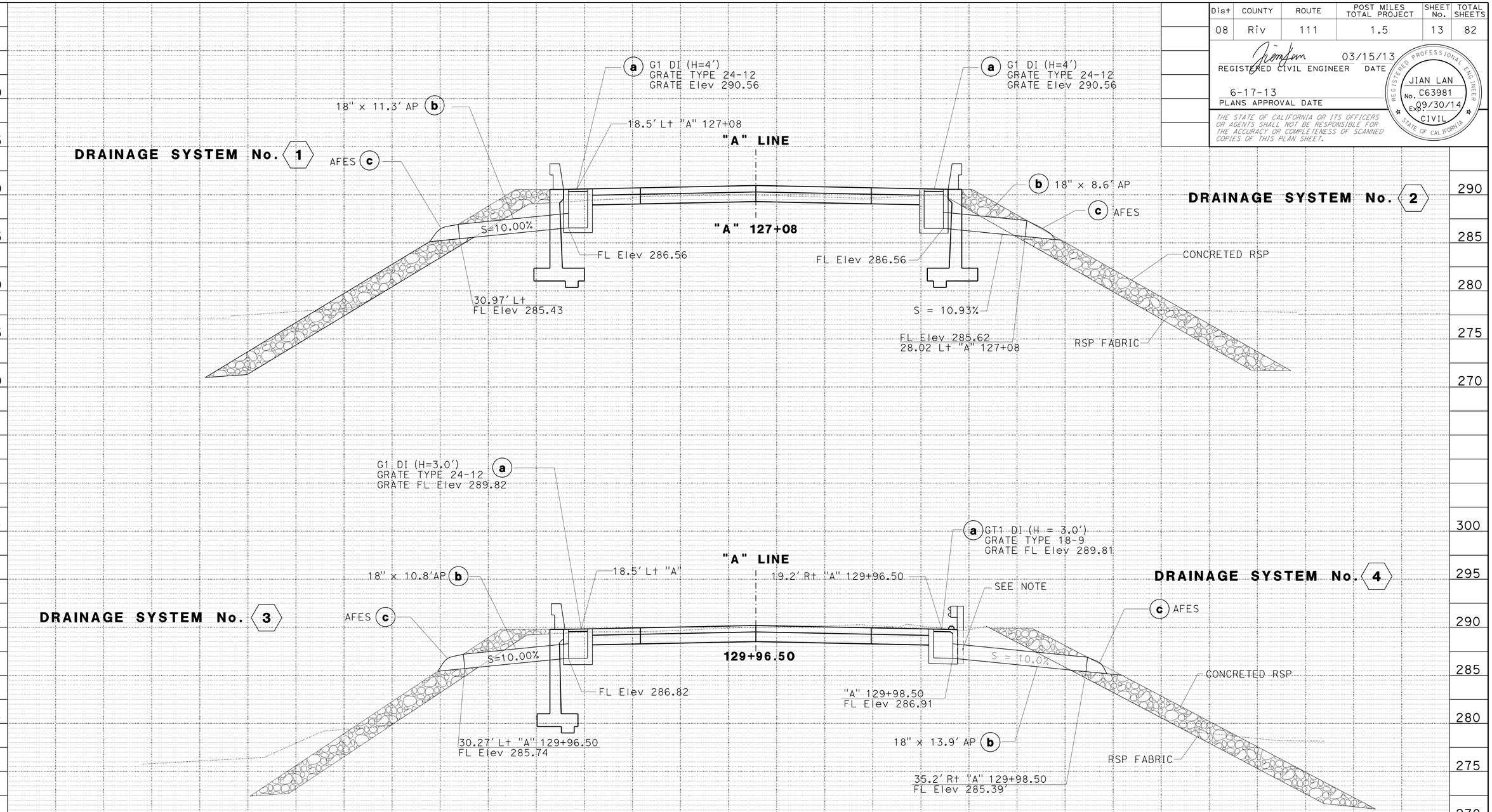

NOTES:

1. SEE DRAINAGE DETAILS SHEET FOR RSP DIMENSIONS.

2. ADJUST THE LOCACTIONS OF DRAINAGE PIPES AND MBGR POSTS IF NECESSARY, TO AVOID CONFLICTION PER THE INSTRUCTIONS OF RESIDENT ENGINEER.

DRAINAGE PROFILES

SCALE: Horiz 1" = 5'
Vert 1" = 5'

DP-1

REVISED BY | DATE REVISED
JIAN (JAMES) LAN | GEORGE MORHIG
CALCULATED-DESIGNED BY | CHECKED BY
FUNCTIONAL SUPERVISOR | GEORGE MORHIG
STATE OF CALIFORNIA - DEPARTMENT OF TRANSPORTATION
Caltrans
DESIGN C

LAST REVISION 03-12-13 | DATE PLOTTED => 14-AUG-2013 | TIME PLOTTED => 05:28

Dist	COUNTY	ROUTE	POST MILES TOTAL PROJECT	SHEET No.	TOTAL SHEETS
08	Riv	111	1.5	14	82

REGISTERED CIVIL ENGINEER 03/15/13 DATE

6-17-13
PLANS APPROVAL DATE

REGISTERED PROFESSIONAL ENGINEER
JIAN LAN
No. C63981
Exp. 09/30/14
CIVIL
STATE OF CALIFORNIA

THE STATE OF CALIFORNIA OR ITS OFFICERS OR AGENTS SHALL NOT BE RESPONSIBLE FOR THE ACCURACY OR COMPLETENESS OF SCANNED COPIES OF THIS PLAN SHEET.

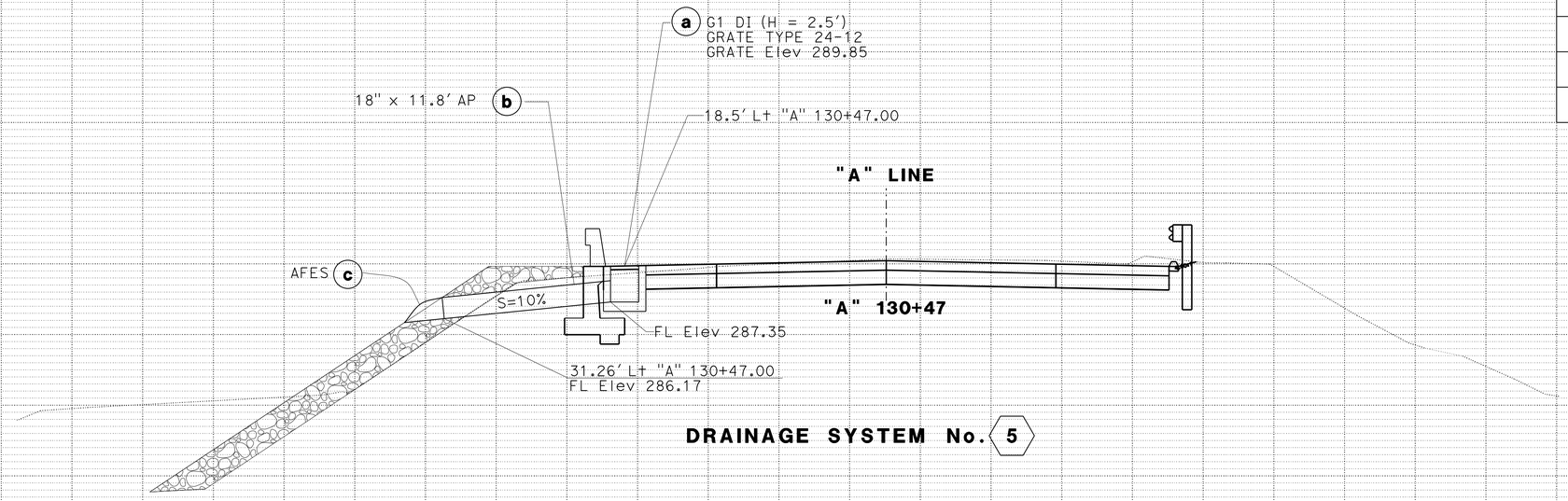

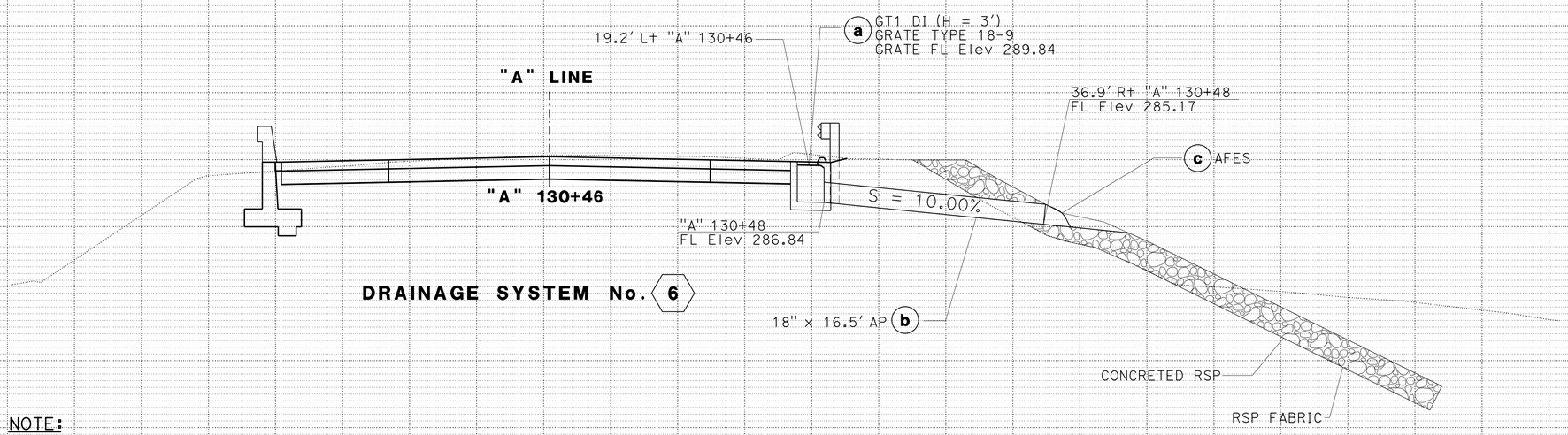

NOTE:
SEE DRAINAGE DETAILS SHEET FOR RSP DIMENSIONS.

DRAINAGE PROFILES

SCALE: Horiz 1" = 5'
Vert 1" = 5'

DP-2

REVISED BY | DATE REVISED
JIAN (JAMES) LAN | GEORGE MORHIG
CALCULATED-DESIGNED BY | CHECKED BY
FUNCTIONAL SUPERVISOR | GEORGE MORHIG
STATE OF CALIFORNIA - DEPARTMENT OF TRANSPORTATION
Caltrans
DESIGN C

LAST REVISION 03-12-13 | DATE PLOTTED => 14-AUG-2013 | TIME PLOTTED => 05:28

Dist	COUNTY	ROUTE	POST MILES TOTAL PROJECT	SHEET No.	TOTAL SHEETS
08	Riv	111	1.5	15	82

REGISTERED CIVIL ENGINEER 05/31/13 DATE

6-17-13
PLANS APPROVAL DATE

REGISTERED PROFESSIONAL ENGINEER JIAN LAN No. C63981 Exp. 09/30/14 CIVIL STATE OF CALIFORNIA

THE STATE OF CALIFORNIA OR ITS OFFICERS OR AGENTS SHALL NOT BE RESPONSIBLE FOR THE ACCURACY OR COMPLETENESS OF SCANNED COPIES OF THIS PLAN SHEET.

NOTES:

1. THE PAYMENT FOR RSP INCLUDES EXCAVATION AND BACKFILLING FOOTING TRENCH.
2. AT THE EMBANKMENT SLOPE WHERE THERE IS NO RETAINING WALL, THE TOP OF RSP SHALL MATCH THE TOP OF THE SLOPE IN ELEVATION.
3. THE CONTRACTOR SHALL VERIFY THE LIMIT OF EXISTING RSP BEFORE ORDERING ANY MATERIAL.
4. NOT ALL WEEP TUBES ARE SHOWN FOR CLARITY.
5. THE TOE OF Ftg RSP TRENCH SHALL BE BELOW OG OR FG BY 6.2 FEET.
6. THE Exist RSP SHOWN IS FOR INFORMATION ONLY. IT IS THE CONTRACTOR'S RESPONSIBILITY TO DETERMINE THE EXACT LOCATION DURING CONSTRUCTION.

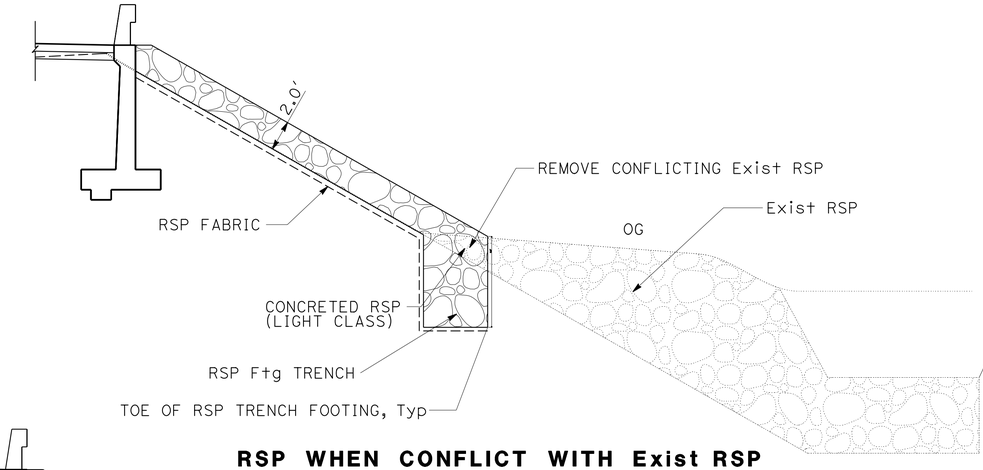

RSP WHEN CONFLICT WITH Exist RSP

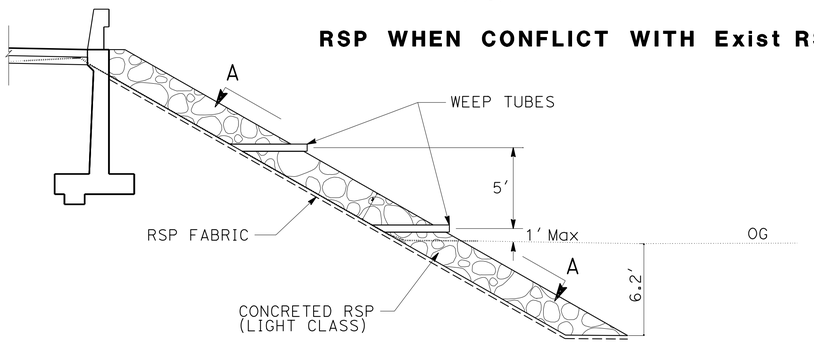

RSP AT RETAINING WALL

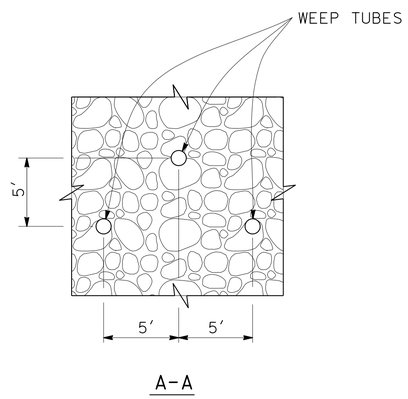

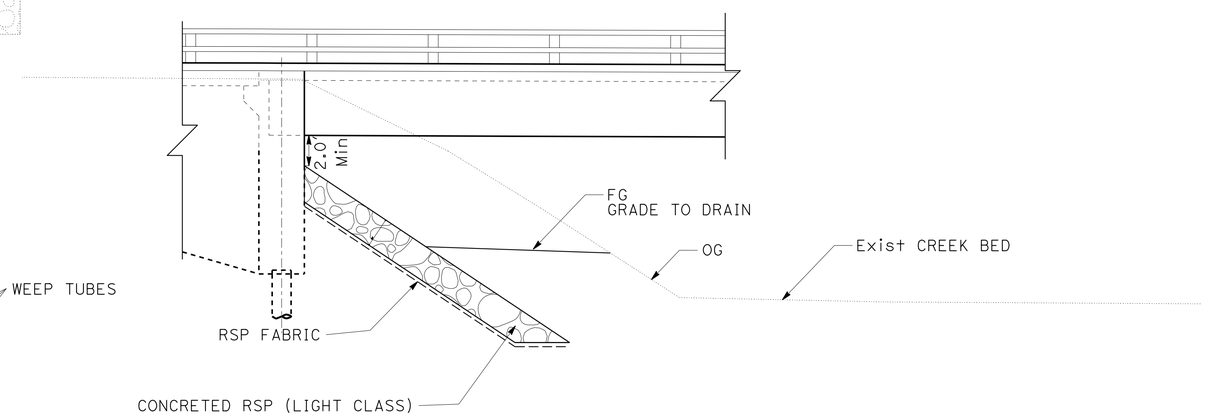

RSP AT Br Abut 1

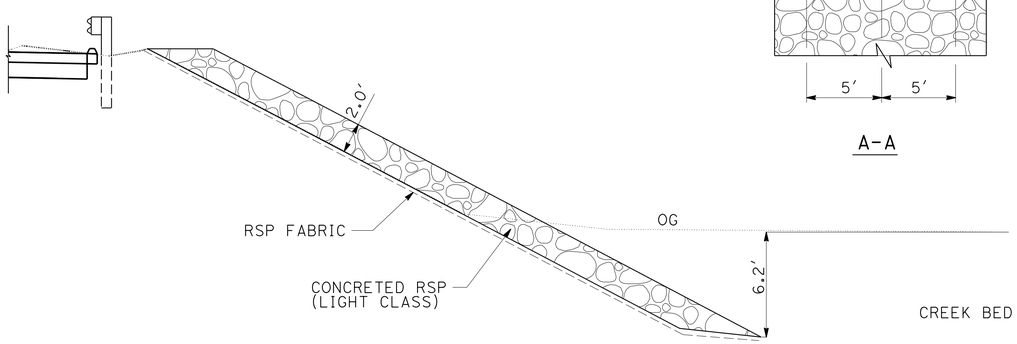

RSP AT SLOPE

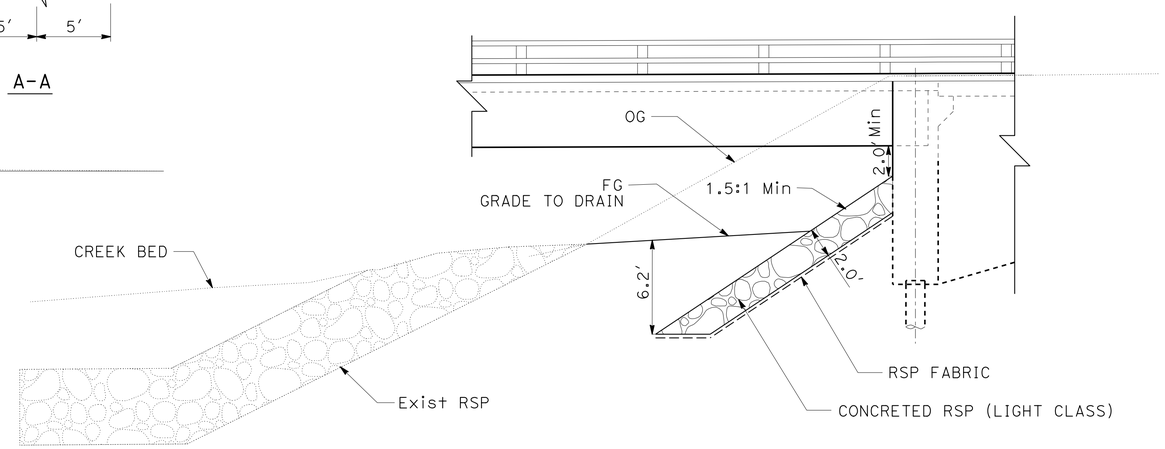

RSP AT Br Abut 2

DRAINAGE DETAILS

NO SCALE

DD-1

STATE OF CALIFORNIA - DEPARTMENT OF TRANSPORTATION
Caltrans®
DESIGN C
FUNCTIONAL SUPERVISOR: GEORGE MORHIG
CALCULATED-DESIGNED BY: JIAN (JAMES) LAN
CHECKED BY: GEORGE MORHIG
REVISED BY
DATE REVISED

LAST REVISION 05-30-13
DATE PLOTTED => 14-AUG-2013
TIME PLOTTED => 05:28

Dist	COUNTY	ROUTE	POST MILES TOTAL PROJECT	SHEET No.	TOTAL SHEETS
08	Riv	111	1.5	16	82

REGISTERED CIVIL ENGINEER 05-31-13 DATE

6-17-13
PLANS APPROVAL DATE

REGISTERED PROFESSIONAL ENGINEER
JIAN LAM
No. C 63981
Exp. 09/30/14
CIVIL
STATE OF CALIFORNIA

THE STATE OF CALIFORNIA OR ITS OFFICERS OR AGENTS SHALL NOT BE RESPONSIBLE FOR THE ACCURACY OR COMPLETENESS OF SCANNED COPIES OF THIS PLAN SHEET.

NOTES:

1. ALL CONSTRUCTION DIMENSIONS ARE APPROXIMATE.
2. ACTUAL DIMENSIONS ARE TO BE DETERMINED BY THE ENGINEER.
3. UTILITIES SHOWN ON THIS PLAN ARE FOR INFORMATION ONLY. SEE UTILITY PLANS FOR POTHOLING INFO.
4. FOR COMPLETE RIGHT OF WAY SEE RIGHT OF WAY RECORD MAPS AT DISTRICT OFFICE.

LEGEND:

RSP (FACING, METHOD B)

BACKFILL

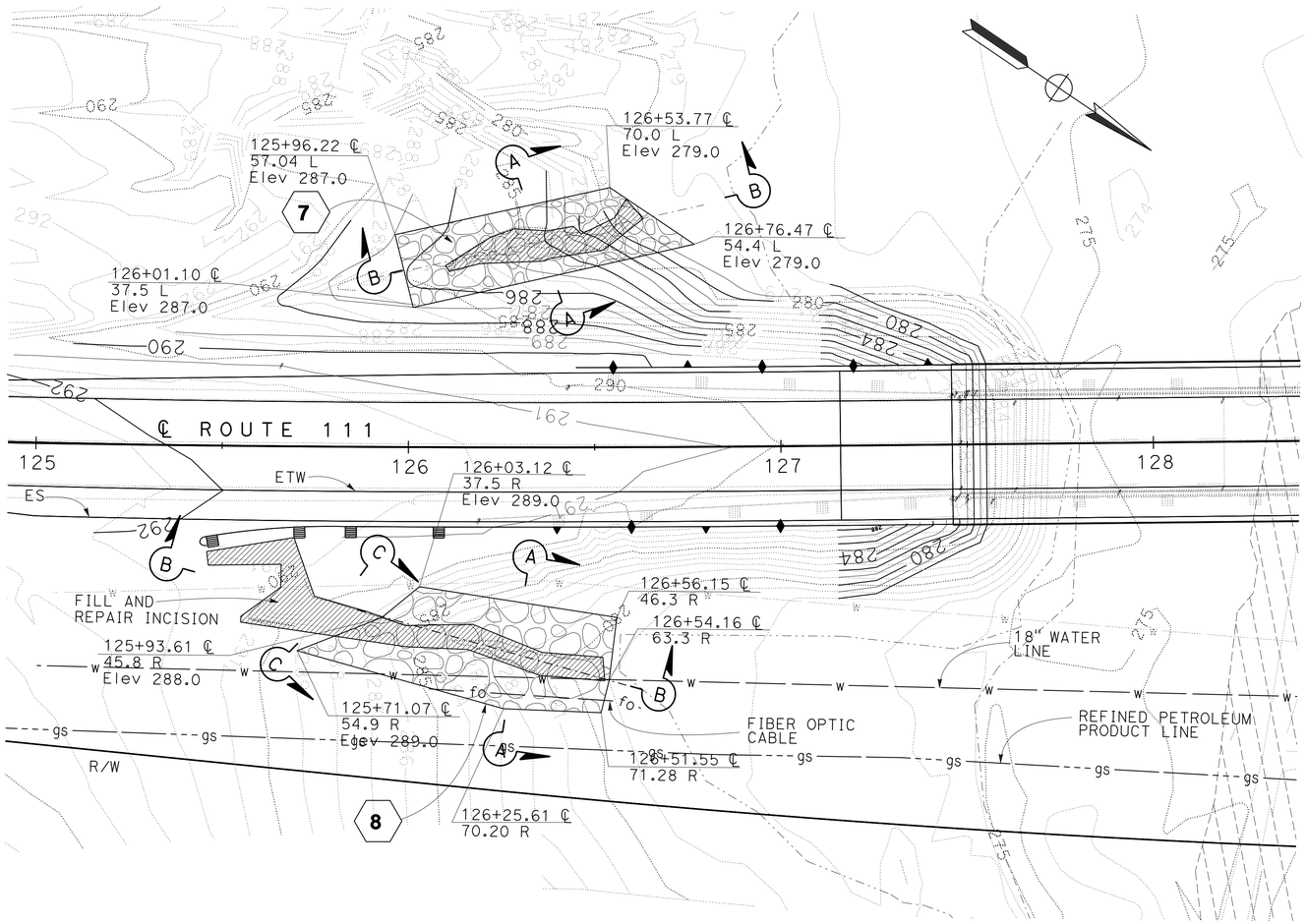

LAYOUT

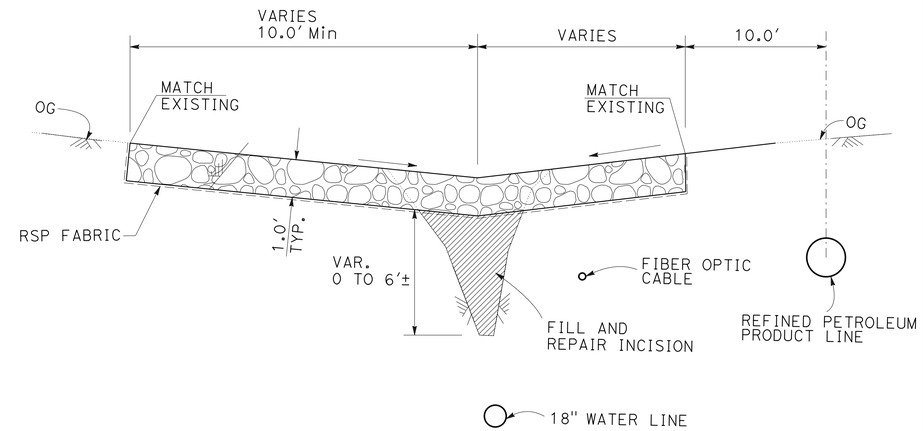

SECTION A-A Typ

NO SCALE

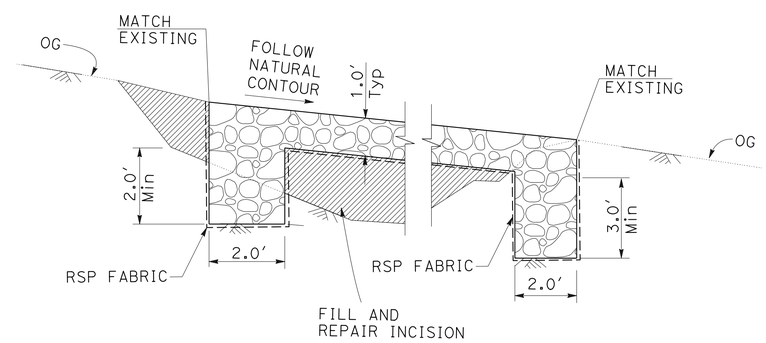

SECTION B-B Typ

NO SCALE

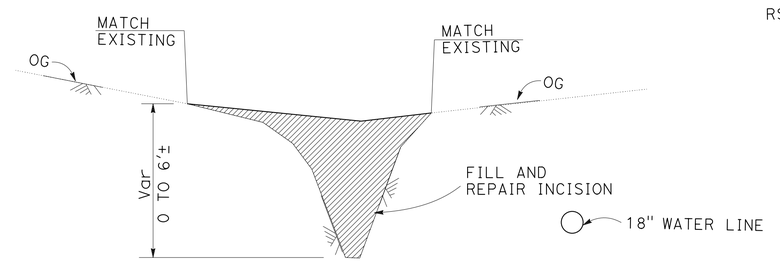

SECTION C-C

NO SCALE

DRAINAGE DETAILS
ROCK SLOPE PROTECTION

SCALE: 1" = 20'

DD-2

STATE OF CALIFORNIA - DEPARTMENT OF TRANSPORTATION
Caltrans®
DESIGN C
FUNCTIONAL SUPERVISOR: GEORGE MORHIG
CALCULATED-DESIGNED BY / CHECKED BY
JIAN (JAMES) LAN / GEORGE MORHIG
REVISED BY / DATE REVISED

LAST REVISION 05-30-13 | DATE PLOTTED => 14-AUG-2013 | TIME PLOTTED => 05:28

Dist	COUNTY	ROUTE	POST MILES TOTAL PROJECT	SHEET No.	TOTAL SHEETS
08	Riv	111	1.5	17	82

REGISTERED CIVIL ENGINEER 03/15/13 DATE

6-17-13
PLANS APPROVAL DATE

REGISTERED PROFESSIONAL ENGINEER JIAN LAN No. C63981 Exp. 09/30/14 CIVIL STATE OF CALIFORNIA

THE STATE OF CALIFORNIA OR ITS OFFICERS OR AGENTS SHALL NOT BE RESPONSIBLE FOR THE ACCURACY OR COMPLETENESS OF SCANNED COPIES OF THIS PLAN SHEET.

NOTE:

1. ALLOWABLE ALTERNATIVES FOR AP ARE RCP, HDPE, AND PVC.

DRAINAGE QUANTITIES

DRAINAGE SHEET No.	DRAINAGE SYSTEM No. ⬡	DRAINAGE UNIT ○	MINOR CONCRETE (MINOR STRUCTURE) CY	Misc IRON & STEEL LB	HEIGHT OF INLET (N) (H) LF	RSP FACING, METHOD B CY	RSP FABRIC SY	GRATE (N) 24-12 EA	GRATE (N) 18-9 EA	AFES EA	18" AP LF	PIPE JOINT CLASSIFICATION (N)	(N) Max COVER LF	DESCRIPTION	STATION	DRAINAGE SYSTEM No. ⬡	DRAINAGE UNIT ○
D-1	1	a	1.17	326	4.0			1						G1 DI	"A" 127+08	1	a
		b									11.3	S	2.14	18" X 11.3' AP			b
		c								1				AFES			c
D-1	2	a	1.17	326	4.0			1						G1 DI	"A" 127+08	2	a
		b									8.6	S	2.70	18" X 8.6'			b
		c								1				AFES			c
D-2	3	a	0.95	326	3.0			1						G1 DI	"A" 129+96.50	3	a
		b									10.8	S	2.43	18" X 10.8' AP			b
		c								1				AFES			c
D-2	4	a	1.74	498	3.0				2					GT1 DI	"A" 129+96.50	4	a
		b									13.9	S	2.20	18" X 13.9' AP			b
		c								1				AFES			c
D-2	5	a	0.79	326	2.5			1						G1 DI	"A" 130+47.00	5	a
		b									11.82	S	1.00	18" X 11.82 AP			b
		c								1				AFES			c
D-2	6	a	1.74	498	3.0				2					GT1 DI	"A" 130+46.00	6	a
		b									13.9	S	2.79	18" X 16.5' AP			b
		c								1				AFES			c
DD-3	7	a				65	57							RSP (FACING, METHOD B)	L+ "A" 126+50.0	7	a
DD-3	8	a				75	70							RSP (FACING, METHOD B)	R+ "A" 126+00	8	a
			7.56	2300		140	127*	4	4	6	70.3			TOTAL			

(N) - NOT A SEPARATE PAY ITEM, FOR INFORMATION ONLY
* - A SUBTOTAL, SEE Q-1 FOR TOTAL QUANTITIES.

DRAINAGE QUANTITIES
DQ-1

STATE OF CALIFORNIA - DEPARTMENT OF TRANSPORTATION
Caltrans
DESIGN C
FUNCTIONAL SUPERVISOR GEORGE MORHIG
CALCULATED-DESIGNED BY JIAN LAN
CHECKED BY GEORGE MORHIG
REVISED BY
DATE REVISED

LAST REVISION 03-12-13
DATE PLOTTED => 14-AUG-2013
TIME PLOTTED => 05:29

Dist	COUNTY	ROUTE	POST MILES TOTAL PROJECT	SHEET No.	TOTAL SHEETS
08	Riv	111	1.5	18	82

REGISTERED CIVIL ENGINEER 03/15/13 DATE

6-17-13
PLANS APPROVAL DATE

REGISTERED PROFESSIONAL ENGINEER JIAN LAN No. C63981 Exp. 09/30/14 CIVIL STATE OF CALIFORNIA

THE STATE OF CALIFORNIA OR ITS OFFICERS OR AGENTS SHALL NOT BE RESPONSIBLE FOR THE ACCURACY OR COMPLETENESS OF SCANNED COPIES OF THIS PLAN SHEET.

NOTES:

1. FOR COMPLETE RIGHT OF WAY, SEE RIGHT OF WAY RECORD MAPS AT DISTRICT OFFICE.
2. UTILITY OWNERSHIP OF THIS PROJECT:
   18" WATER - COACHELLA VALLEY WATER DISTRICT
   20" HIGH-PRESSURE REFINED PETROLEUM PRODUCTION PIPELINE - KINDER MORGAN.
   FIBER OPTIC CABLE - OWNED BY KINDER MORGAN; LEASED BY LEVEL 3 COMMUNICATIONS INC.

LEGEND:

— w — — 18" WATERLINE
-- gs — — REFINED PETROLEUM PRODUCT LINE
— fo — — FIBER OPTIC CABLE
(XX) POTHOLE LOCATION

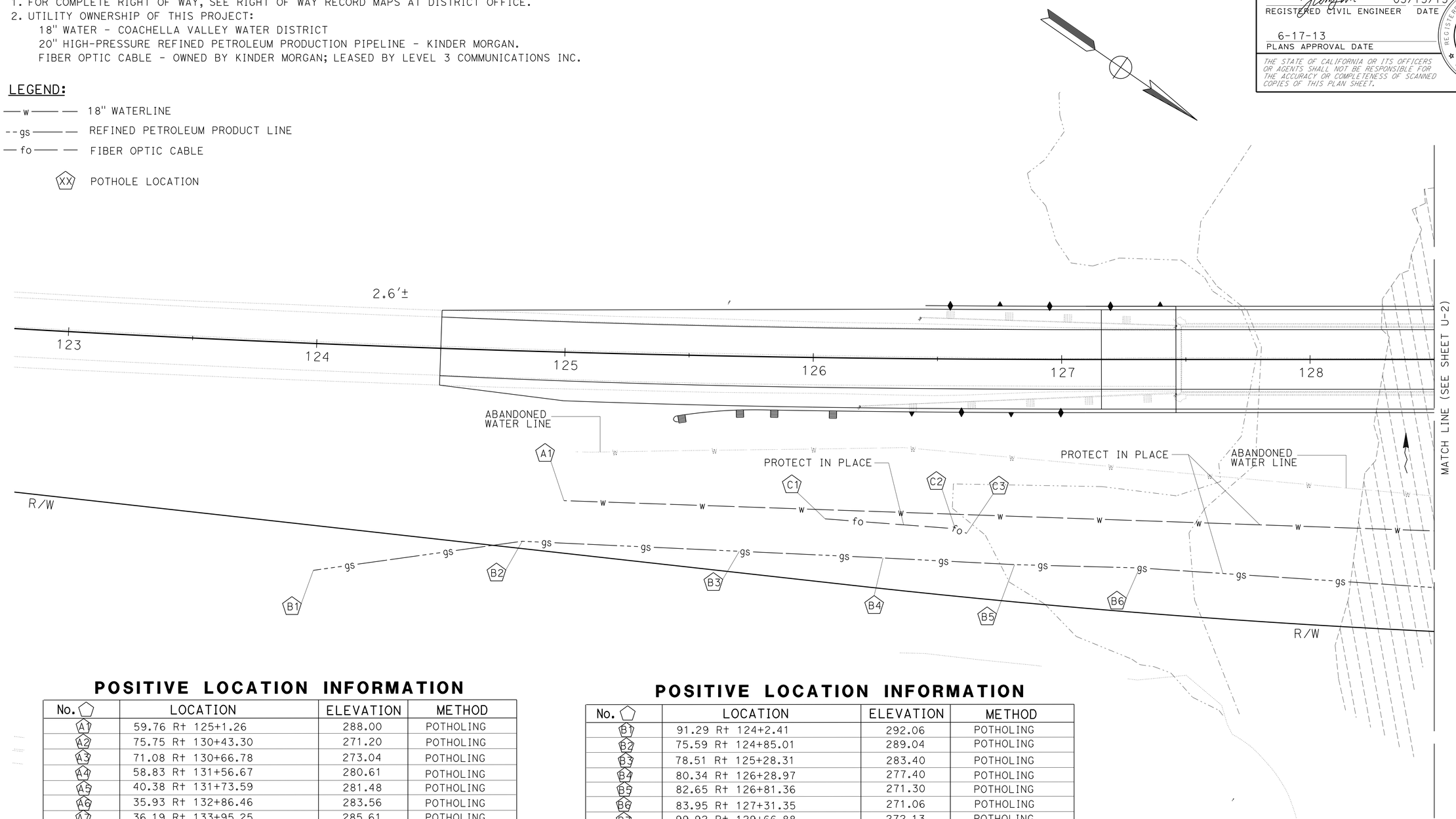

POSITIVE LOCATION INFORMATION

No.	LOCATION	ELEVATION	METHOD
A1	59.76 R+ 125+1.26	288.00	POTHOLING
A2	75.75 R+ 130+43.30	271.20	POTHOLING
A3	71.08 R+ 130+66.78	273.04	POTHOLING
A4	58.83 R+ 131+56.67	280.61	POTHOLING
A5	40.38 R+ 131+73.59	281.48	POTHOLING
A6	35.93 R+ 132+86.46	283.56	POTHOLING
A7	36.19 R+ 133+95.25	285.61	POTHOLING

POSITIVE LOCATION INFORMATION

No.	LOCATION	ELEVATION	METHOD
B1	91.29 R+ 124+2.41	292.06	POTHOLING
B2	75.59 R+ 124+85.01	289.04	POTHOLING
B3	78.51 R+ 125+28.31	283.40	POTHOLING
B4	80.34 R+ 126+28.97	277.40	POTHOLING
B5	82.65 R+ 126+81.36	271.30	POTHOLING
B6	83.95 R+ 127+31.35	271.06	POTHOLING
B7	99.92 R+ 129+66.88	272.13	POTHOLING
B8	104.83 R+ 130+17.08	273.07	POTHOLING
C1	64.90 R+ 126+5.69	280.11	POTHOLING
C2	68.33 R+ 126+57.61	274.78	POTHOLING
C3	70.14 R+ 126+62.16	274.94	POTHOLING

UTILITY PLAN

SCALE: 1" = 20'

U-1

APPROVED FOR UTILITY INFORMATION ONLY

STATE OF CALIFORNIA - DEPARTMENT OF TRANSPORTATION
Caltrans
DESIGN C
FUNCTIONAL SUPERVISOR: GEORGE MORHIG
CALCULATED-DESIGNED BY: JIAN (JAMES) LAN
CHECKED BY: GEORGE MORHIG
REVISED BY
DATE REVISED

LAST REVISION 03-12-13
DATE PLOTTED => 14-AUG-2013
TIME PLOTTED => 05:29

Dist	COUNTY	ROUTE	POST MILES TOTAL PROJECT	SHEET No.	TOTAL SHEETS
08	Riv	111	1.5	19	82

REGISTERED CIVIL ENGINEER 03/15/13 DATE

6-17-13
PLANS APPROVAL DATE

REGISTERED PROFESSIONAL ENGINEER JIAN LAN No. C63981 Exp. 09/30/14 CIVIL STATE OF CALIFORNIA

THE STATE OF CALIFORNIA OR ITS OFFICERS OR AGENTS SHALL NOT BE RESPONSIBLE FOR THE ACCURACY OR COMPLETENESS OF SCANNED COPIES OF THIS PLAN SHEET.

NOTE:

FOR COMPLETE RIGHT OF WAY, SEE RIGHT OF WAY RECORD MAPS AT DISTRICT OFFICE.

LEGEND:

- —w— 18" WATERLINE
- --gs— REFINED PETROLEUM PRODUCT LINE
- —fo— FIBER OPTIC CABLE
- —e— OVERHEAD TRANSMISSION LINE
- (XX) POTHOLE LOCATION

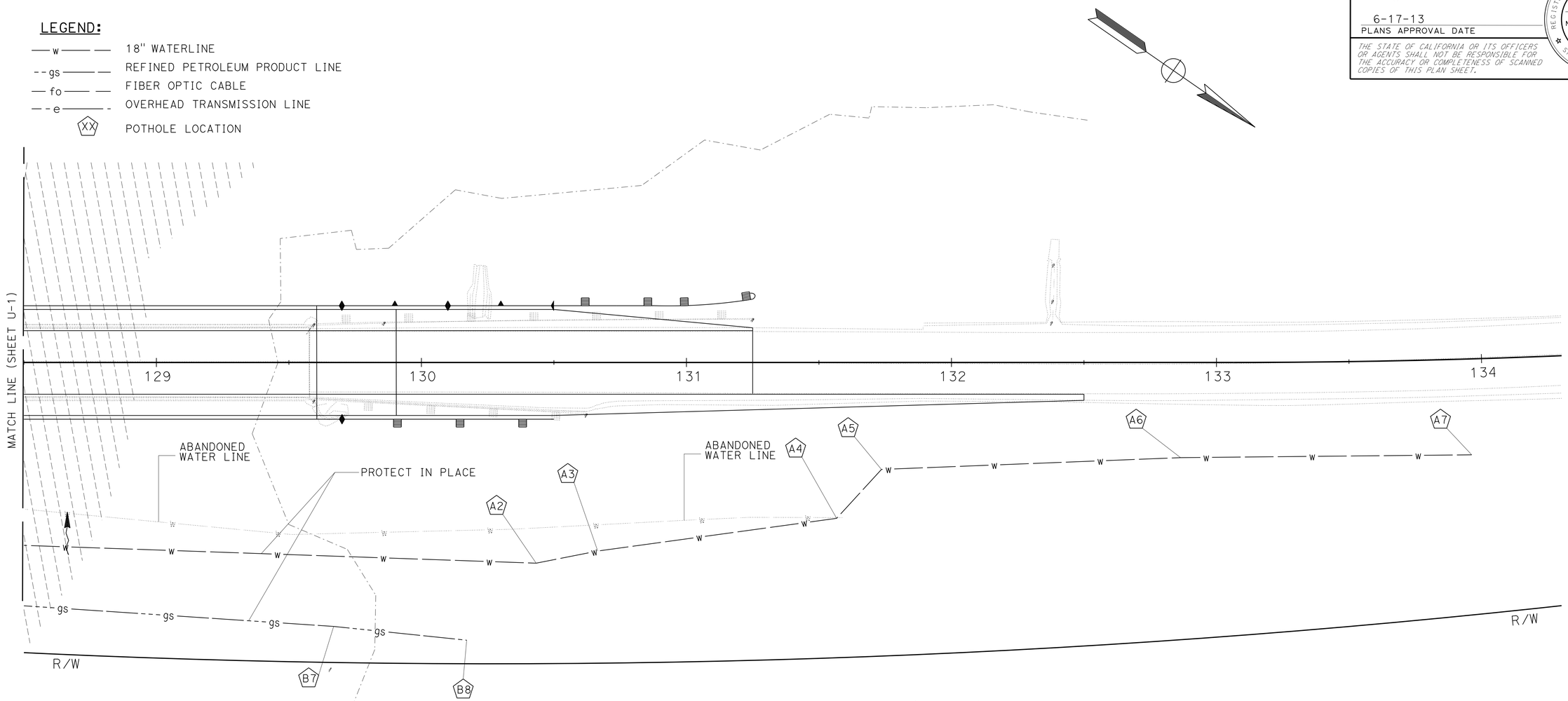

POSITIVE LOCATION INFORMATION

No.	LOCATION	ELEVATION	METHOD
A1	59.76 R+ 125+1.26	288.00	POTHOLING
A2	75.75 R+ 130+43.30	271.20	POTHOLING
A3	71.08 R+ 130+66.78	273.04	POTHOLING
A4	58.83 R+ 131+56.67	280.61	POTHOLING
A5	40.38 R+ 131+73.59	281.48	POTHOLING
A6	35.93 R+ 132+86.46	283.56	POTHOLING
A7	36.19 R+ 133+95.25	285.61	POTHOLING

POSITIVE LOCATION INFORMATION

No.	LOCATION	ELEVATION	METHOD
B1	91.29 R+ 124+2.41	292.06	POTHOLING
B2	75.59 R+ 124+85.01	289.04	POTHOLING
B3	78.51 R+ 125+28.31	283.40	POTHOLING
B4	80.34 R+ 126+28.97	277.40	POTHOLING
B5	82.65 R+ 126+81.36	271.30	POTHOLING
B6	83.95 R+ 127+31.35	271.06	POTHOLING
B7	99.92 R+ 129+66.88	272.13	POTHOLING
B8	104.83 R+ 130+17.08	273.07	POTHOLING

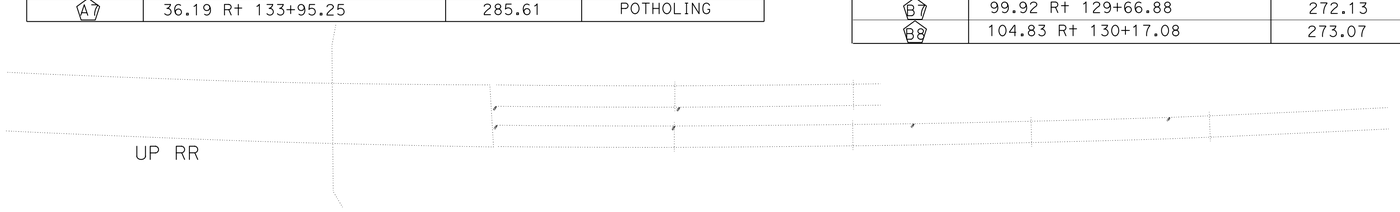

UTILITY PLAN

SCALE: 1" = 20'

U-2

APPROVED FOR UTILITY INFORMATION ONLY

REVISED BY | DATE REVISED

JIAN (JAMES) LAN | GEORGE MORHIG

CALCULATED-DESIGNED BY | CHECKED BY

FUNCTIONAL SUPERVISOR: GEORGE MORHIG

STATE OF CALIFORNIA - DEPARTMENT OF TRANSPORTATION

Caltrans® DESIGN C

LAST REVISION 03-12-13 | DATE PLOTTED => 14-AUG-2013 | TIME PLOTTED => 05:29

Dist	COUNTY	ROUTE	POST MILES TOTAL PROJECT	SHEET No.	TOTAL SHEETS
08	Riv	111	1.5	20	82

Thanh Trinh 03-15-13
REGISTERED CIVIL ENGINEER DATE

6-17-13
PLANS APPROVAL DATE

REGISTERED PROFESSIONAL ENGINEER
T. TRINH
No. C41189
Exp. 3-31-13
CIVIL
STATE OF CALIFORNIA

THE STATE OF CALIFORNIA OR ITS OFFICERS OR AGENTS SHALL NOT BE RESPONSIBLE FOR THE ACCURACY OR COMPLETENESS OF SCANNED COPIES OF THIS PLAN SHEET.

LEGEND:

- (X) CONSTRUCTION AREA SIGN SYMBOL
- ONE POST SIGN
- FLASHING BEACON (PORTABLE)
- WORK AREA
- PORTABLE CHANGEABLE MESSAGE SIGN (PCMS)

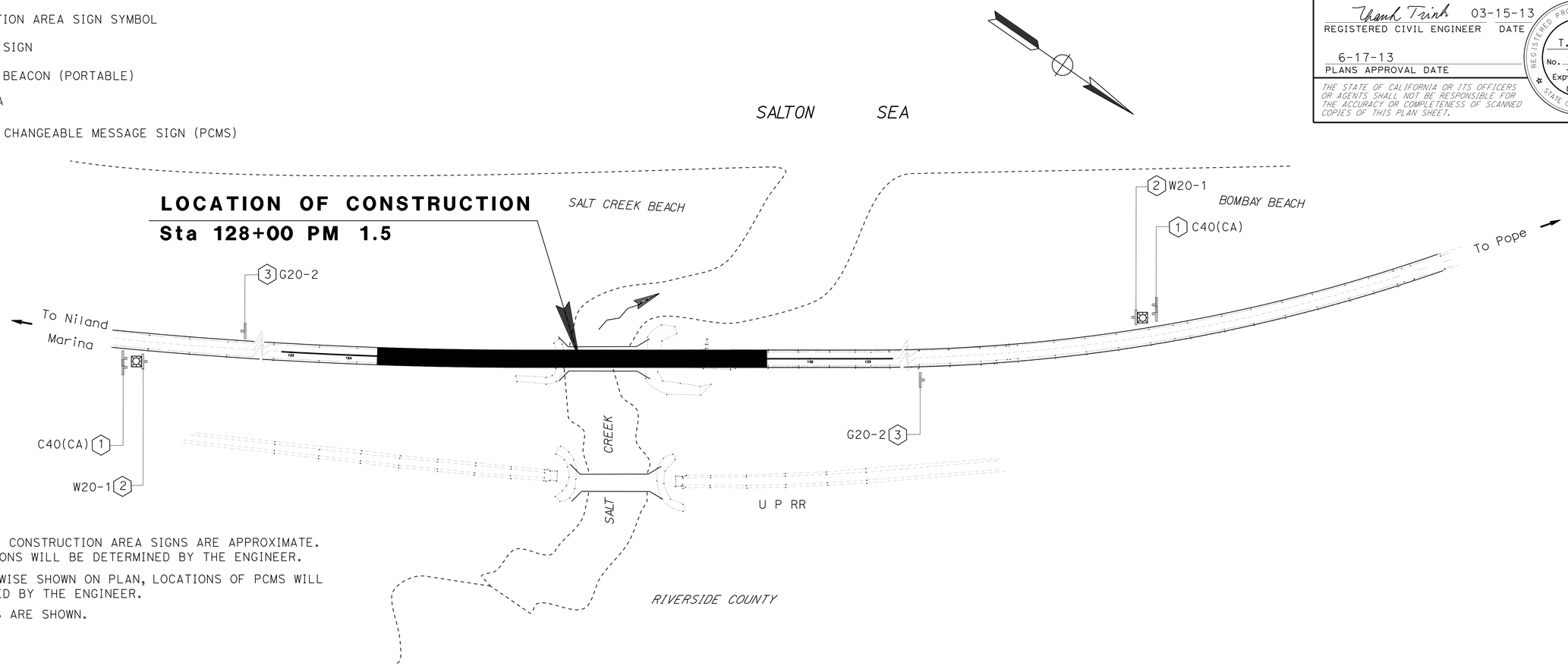

NOTES:

1. LOCATIONS OF CONSTRUCTION AREA SIGNS ARE APPROXIMATE. EXACT LOCATIONS WILL BE DETERMINED BY THE ENGINEER.
2. UNLESS OTHERWISE SHOWN ON PLAN, LOCATIONS OF PCMS WILL BE DETERMINED BY THE ENGINEER.
3. NOT ALL PCMS ARE SHOWN.

STATIONARY CONSTRUCTION AREA SIGNS

SHEET No.	SIGN No.	SIGN CODE FEDERAL	SIGN CODE CALIFORNIA	PANEL SIZE	No. OF POST AND SIZE	No. OF SIGN EA	SIGN MESSAGE
CS-1	1		C40(CA)	108" x 42"	2-6" x 6"	2	TRAFFIC FINES DOUBLED IN WORK ZONES
	2	W20-1		48" x 48"	1-6" x 6"	2	ROAD WORK AHEAD
	3	G20-2		36" x 18"	1-4" x 4"	2	END ROAD WORK
TH-1	4	W20-4		48' x 48"	1-6" x 6"	2	ONE LANE ROAD AHEAD
	5	W3-3		48" x 48"	SEE ELECTRICAL PLAN	2	SIGNAL AHEAD SYMBOL
	6	R10-6		24" x 36"	1-4" x 6"	2	STOP HERE ON RED
TH-1, & TH-2	7	W1-4R		48" x 48"	1-6" x 6"	2	REVERSE CURVE (R) SYMBOL
TH-1	8	W5-2		48" x 48"	1-6" x 6"	2	NARROW BRIDGE

PORTABLE CHANGEABLE MESSAGE SIGN (PCMS)	QUANTITIES
	EA
TOTAL	4

FLASHING BEACON (PORTABLE)	QUANTITIES
	EA
TOTAL	2

APPROVED FOR CONSTRUCTION AREA SIGN WORK ONLY

CONSTRUCTION AREA SIGNS

NO SCALE

CS-1

REVISED BY | DATE REVISED
KEVIN NGUYEN | THANH TRINH
CALCULATED-DESIGNED BY | CHECKED BY
FUNCTIONAL SUPERVISOR
BILL WASSER

STATE OF CALIFORNIA - DEPARTMENT OF TRANSPORTATION
Caltrans® TRAFFIC DESIGN

LAST REVISION 03-12-13 | DATE PLOTTED => 14-AUG-2013 | TIME PLOTTED => 05:29

Dist	COUNTY	ROUTE	POST MILES TOTAL PROJECT	SHEET No.	TOTAL SHEETS
08	Riv	111	1.5	21	82

Thanh Trinh 03/15/13
REGISTERED CIVIL ENGINEER DATE

6-17-13
PLANS APPROVAL DATE

REGISTERED PROFESSIONAL ENGINEER
T. TRINH
No. C41189
Exp. 3-31-13
CIVIL
STATE OF CALIFORNIA

THE STATE OF CALIFORNIA OR ITS OFFICERS OR AGENTS SHALL NOT BE RESPONSIBLE FOR THE ACCURACY OR COMPLETENESS OF SCANNED COPIES OF THIS PLAN SHEET.

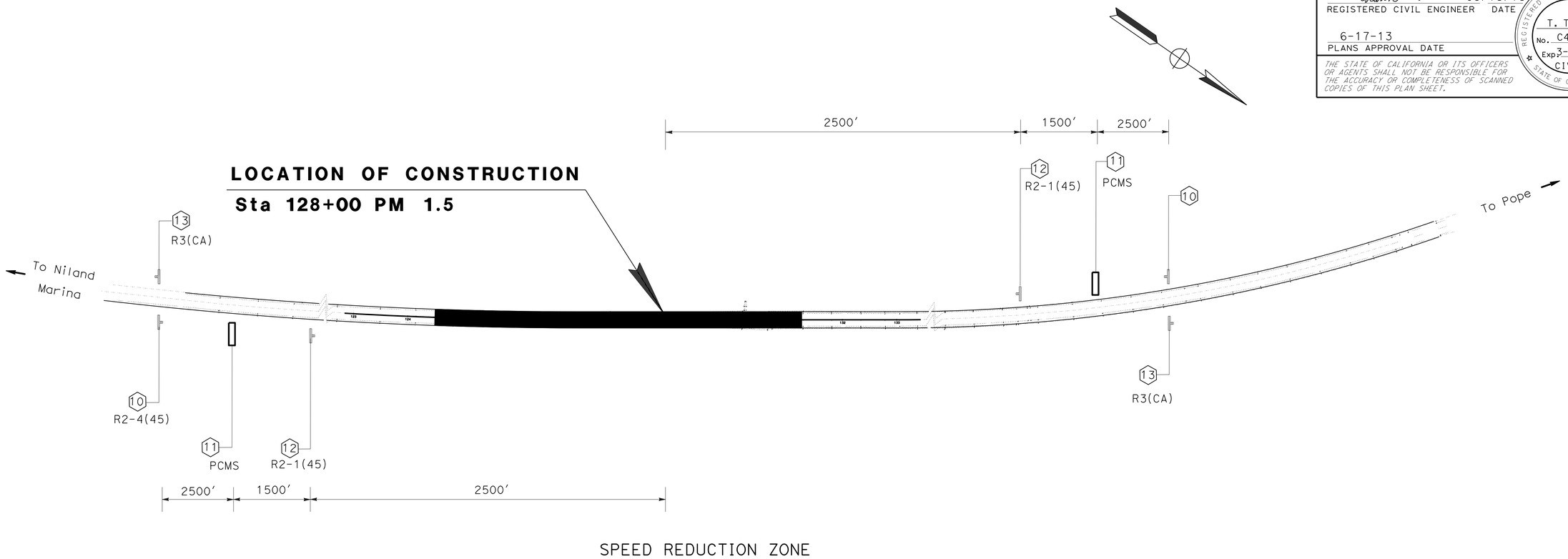

STATIONARY CONSTRUCTION AREA SIGNS

SHEET No.	SIGN No.	SIGN CODE FEDERAL	SIGN CODE CALIFORNIA	PANEL SIZE	No. OF POST AND SIZE	No. OF SIGN EA	SIGN MESSAGE
CS-2	10	R2-4(45)		48" x 60"	1-6" x 6"	2	45 ZONE AHEAD
	11			PCMS		2	45 ZONE AHEAD STRICT ENFORCEMENT
	12	R2-1(45)		48" x 60"	1-6" x 6"	2	SPEED LIMIT 45
	13		R3(CA)	48" x 60"	1-6" x 6"	2	END 45 SPEED LIMIT

APPROVED FOR CONSTRUCTION AREA SIGN WORK ONLY

CONSTRUCTION AREA SIGNS

NO SCALE

CS-2

REVISED BY	DATE REVISED
KEVIN NGUYEN	THANH TRINH
CALCULATED-DESIGNED BY	CHECKED BY
FUNCTIONAL SUPERVISOR	BILL WASSER

STATE OF CALIFORNIA - DEPARTMENT OF TRANSPORTATION
Caltrans® TRAFFIC DESIGN

LAST REVISION 03-12-13 | DATE PLOTTED => 14-AUG-2013 | TIME PLOTTED => 05:29

Dist	COUNTY	ROUTE	POST MILES TOTAL PROJECT	SHEET No.	TOTAL SHEETS
08	Riv	111	1.5	22	82

REGISTERED CIVIL ENGINEER 03/15/13 DATE

6-17-13
PLANS APPROVAL DATE

REGISTERED PROFESSIONAL ENGINEER JIAN LAN No. C63981 Exp. 09/30/14 CIVIL STATE OF CALIFORNIA

THE STATE OF CALIFORNIA OR ITS OFFICERS OR AGENTS SHALL NOT BE RESPONSIBLE FOR THE ACCURACY OR COMPLETENESS OF SCANNED COPIES OF THIS PLAN SHEET.

NOTES:

1. SEE ELECTRICAL PLANS FOR TEMPORARY TRAFFIC SIGNAL & LIGHTING SYSTEM.
2. SEE TRAFFIC HANDLING PLANS FOR TRAFFIC HANDLING.
3. FOR COMPLETE RIGHT OF WAY SEE RIGHT OF WAY RECORD MAPS AT DISTRICT OFFICE.

LEGEND:

- CONSTRUCTION AREA FOR THIS STAGE
- DIRECTION OF TRAFFIC
- TEMPORARY RAILING (TYPE K)
- TEMPORARY PAVEMENT

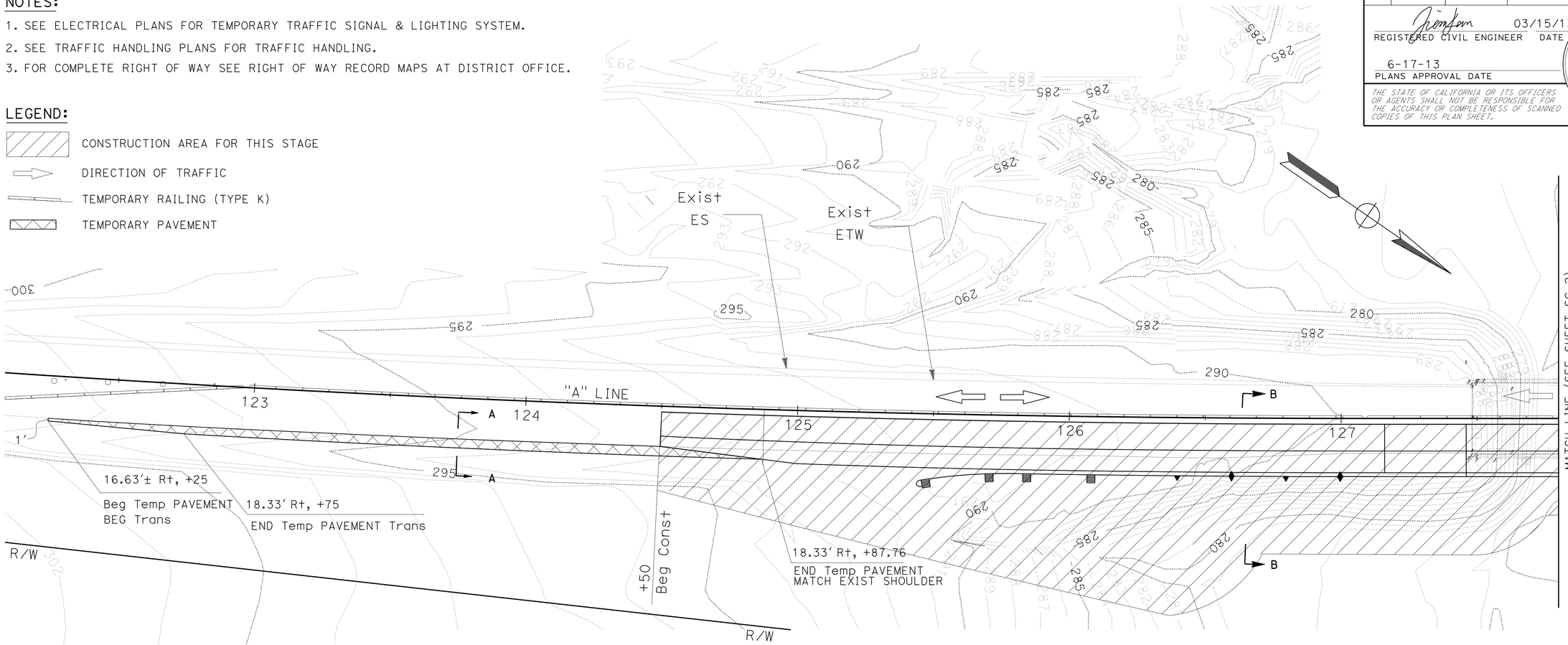

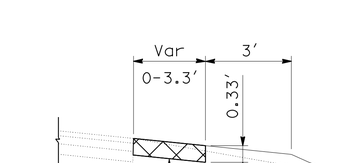

SECTION A - A

Temp PAVEMENT DETAIL

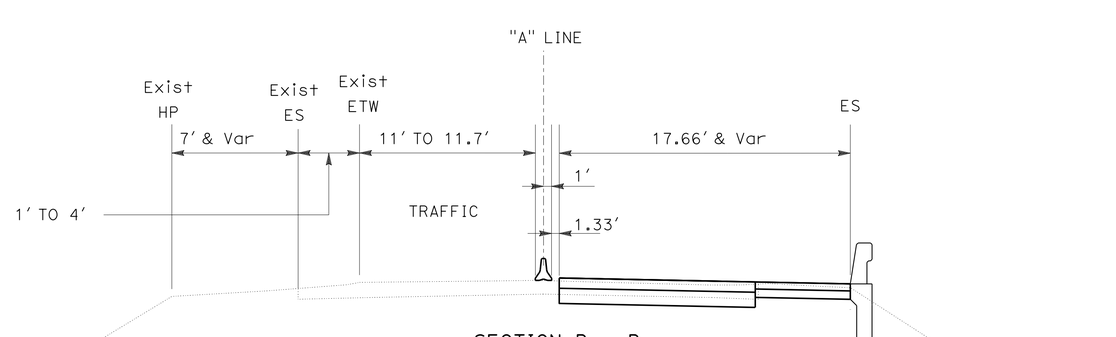

SECTION B - B

Sta 124+50 TO 127+11

Sta 129+90 TO 131+25

STAGE CONSTRUCTION PLAN
STAGE 1

SCALE: 1" = 20'

SC-1

STATE OF CALIFORNIA - DEPARTMENT OF TRANSPORTATION

Caltrans

DESIGN C

FUNCTIONAL SUPERVISOR: GEORGE MORHIG

CALCULATED-DESIGNED BY: JIAN (JAMES) LAN

CHECKED BY: GEORGE MORHIG

REVISED BY

DATE REVISED

LAST REVISION 03-12-13 | DATE PLOTTED => 14-AUG-2013 | TIME PLOTTED => 05:29

Dist	COUNTY	ROUTE	POST MILES TOTAL PROJECT	SHEET No.	TOTAL SHEETS
08	Riv	111	1.5	23	82

REGISTERED CIVIL ENGINEER 03/15/13 DATE

6-17-13
PLANS APPROVAL DATE

REGISTERED PROFESSIONAL ENGINEER
JIAN LAN
No. C63981
Exp. 09/30/14
CIVIL
STATE OF CALIFORNIA

THE STATE OF CALIFORNIA OR ITS OFFICERS OR AGENTS SHALL NOT BE RESPONSIBLE FOR THE ACCURACY OR COMPLETENESS OF SCANNED COPIES OF THIS PLAN SHEET.

NOTES:

1. SEE ELECTRICAL PLANS FOR TEMPORARY TRAFFIC SIGNAL & LIGHTING SYSTEM.
2. SEE TRAFFIC HANDLING PLANS FOR TRAFFIC HANDLING.
3. FOR COMPLETE RIGHT OF WAY, SEE RIGHT OF WAY RECORD MAPS AT DISTRICT OFFICE.

LEGEND:

CONSTRUCTION AREA FOR THIS STAGE

DIRECTION OF TRAFFIC

TEMPORARY RAILING (TYPE K)

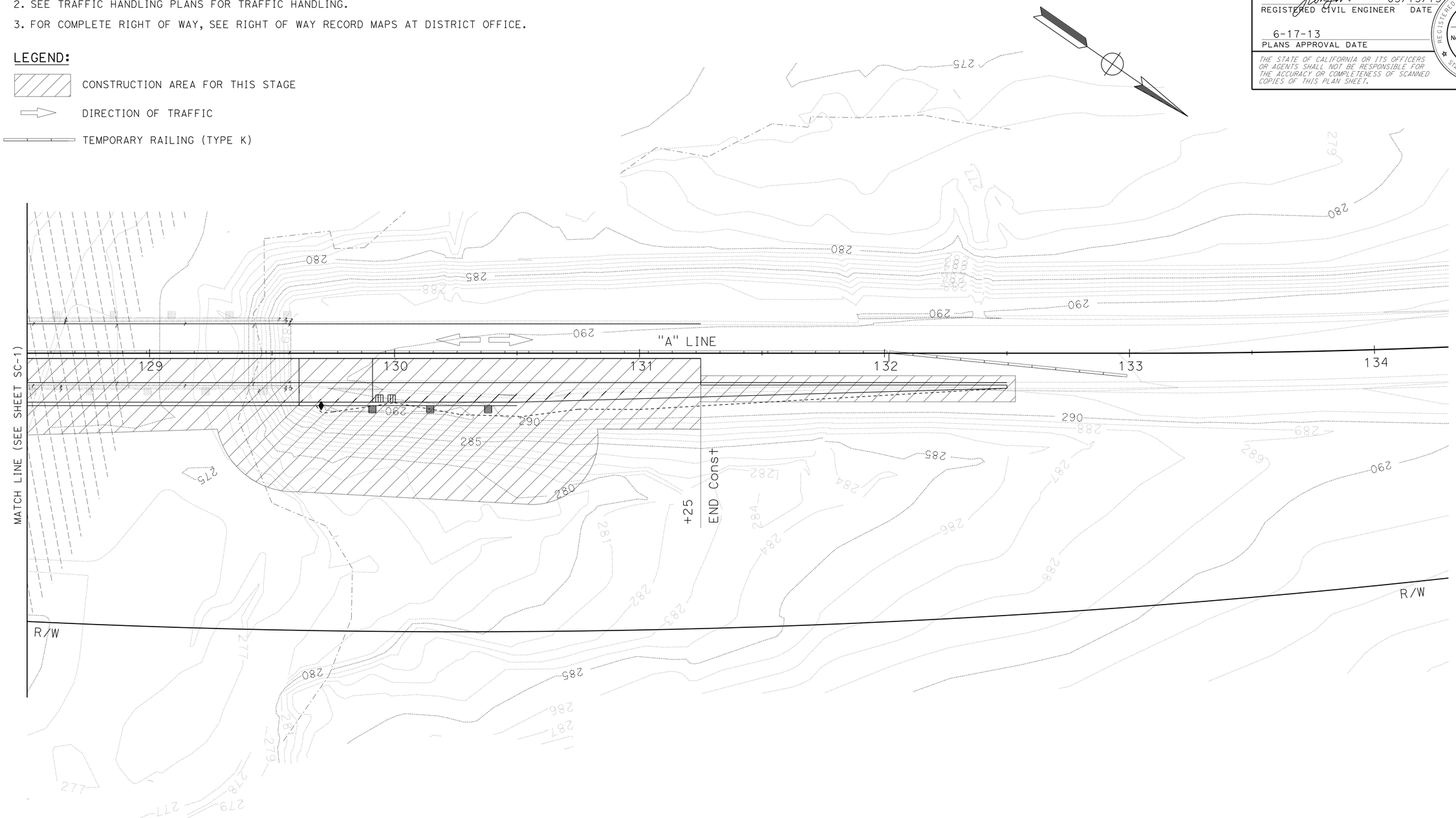

STAGE CONSTRUCTION PLAN
STAGE 1
SCALE: 1" = 20'

SC-2

REVISED BY | DATE REVISED

JIAN (JAMES) LAN | GEORGE MORHIG

CALCULATED-DESIGNED BY | CHECKED BY

FUNCTIONAL SUPERVISOR: GEORGE MORHIG

STATE OF CALIFORNIA - DEPARTMENT OF TRANSPORTATION

Caltrans

DESIGN C

LAST REVISION 03-12-13 | DATE PLOTTED => 14-AUG-2013 | TIME PLOTTED => 95:29

Dist	COUNTY	ROUTE	POST MILES TOTAL PROJECT	SHEET No.	TOTAL SHEETS
08	Riv	111	1.5	24	82

REGISTERED CIVIL ENGINEER 03/15/13 DATE

6-17-13
PLANS APPROVAL DATE

REGISTERED PROFESSIONAL ENGINEER JIAN LAN No. C63981 Exp. 09/30/14 CIVIL STATE OF CALIFORNIA

THE STATE OF CALIFORNIA OR ITS OFFICERS OR AGENTS SHALL NOT BE RESPONSIBLE FOR THE ACCURACY OR COMPLETENESS OF SCANNED COPIES OF THIS PLAN SHEET.

NOTES:

1. SEE ELECTRICAL PLANS FOR TEMPORARY TRAFFIC SIGNAL & LIGHTING SYSTEM.
2. SEE TRAFFIC HANDLING PLANS FOR TRAFFIC HANDLING.

LEGEND:

CONSTRUCTION AREA FOR THIS STAGE

DIRECTION OF TRAFFIC

TEMPORARY RAILING (TYPE K)

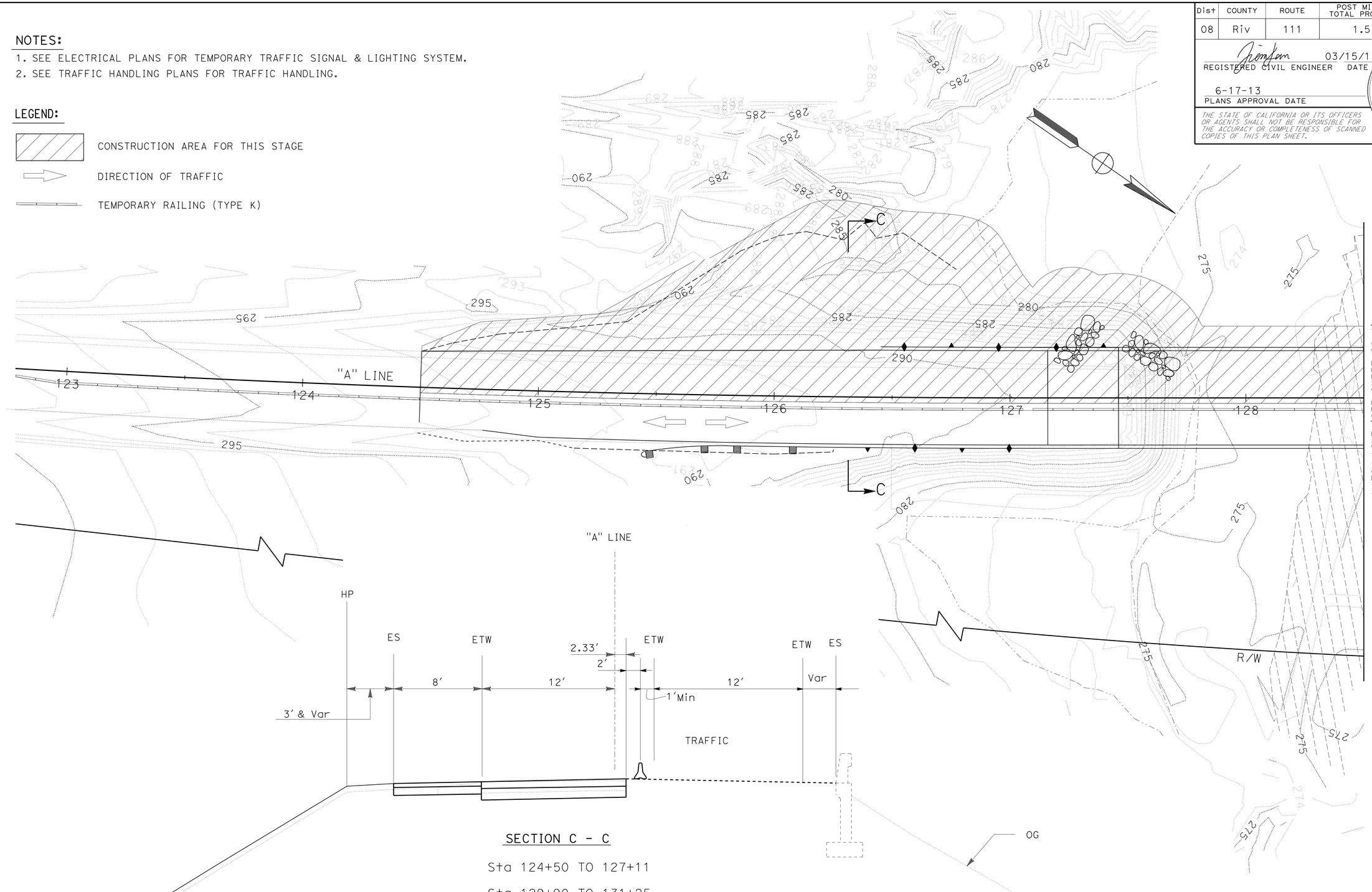

SECTION C - C

Sta 124+50 TO 127+11

Sta 129+90 TO 131+25

STAGE CONSTRUCTION PLAN
STAGE 2

SCALE: 1" = 20'

SC-3

STATE OF CALIFORNIA - DEPARTMENT OF TRANSPORTATION

Caltrans

DESIGN C

FUNCTIONAL SUPERVISOR: GEORGE MORHIG

CALCULATED-DESIGNED BY: JIAN (JAMES) LAN

CHECKED BY: GEORGE MORHIG

REVISED BY | DATE REVISED

LAST REVISION 03-12-13 | DATE PLOTTED => 14-AUG-2013 | TIME PLOTTED => 05:29

Dist	COUNTY	ROUTE	POST MILES TOTAL PROJECT	SHEET No.	TOTAL SHEETS
08	Riv	111	1.5	25	82

REGISTERED CIVIL ENGINEER 03/15/13 DATE

6-17-13
PLANS APPROVAL DATE

REGISTERED PROFESSIONAL ENGINEER
JIAN LAN
No. C63981
Exp. 09/30/14
CIVIL
STATE OF CALIFORNIA

THE STATE OF CALIFORNIA OR ITS OFFICERS OR AGENTS SHALL NOT BE RESPONSIBLE FOR THE ACCURACY OR COMPLETENESS OF SCANNED COPIES OF THIS PLAN SHEET.

NOTES:

1. SEE ELECTRICAL PLANS FOR TEMPORARY TRAFFIC SIGNAL & LIGHTING SYSTEM.
2. SEE TRAFFIC HANDLING PLANS FOR TRAFFIC HANDLING.
3. FOR COMPLETE RIGHT OF WAY, SEE RIGHT OF WAY RECORD MAPS AT DISTRICT OFFICE.

LEGEND:

CONSTRUCTION AREA FOR THIS STAGE

DIRECTION OF TRAFFIC

TEMPORARY RAILING (TYPE K)

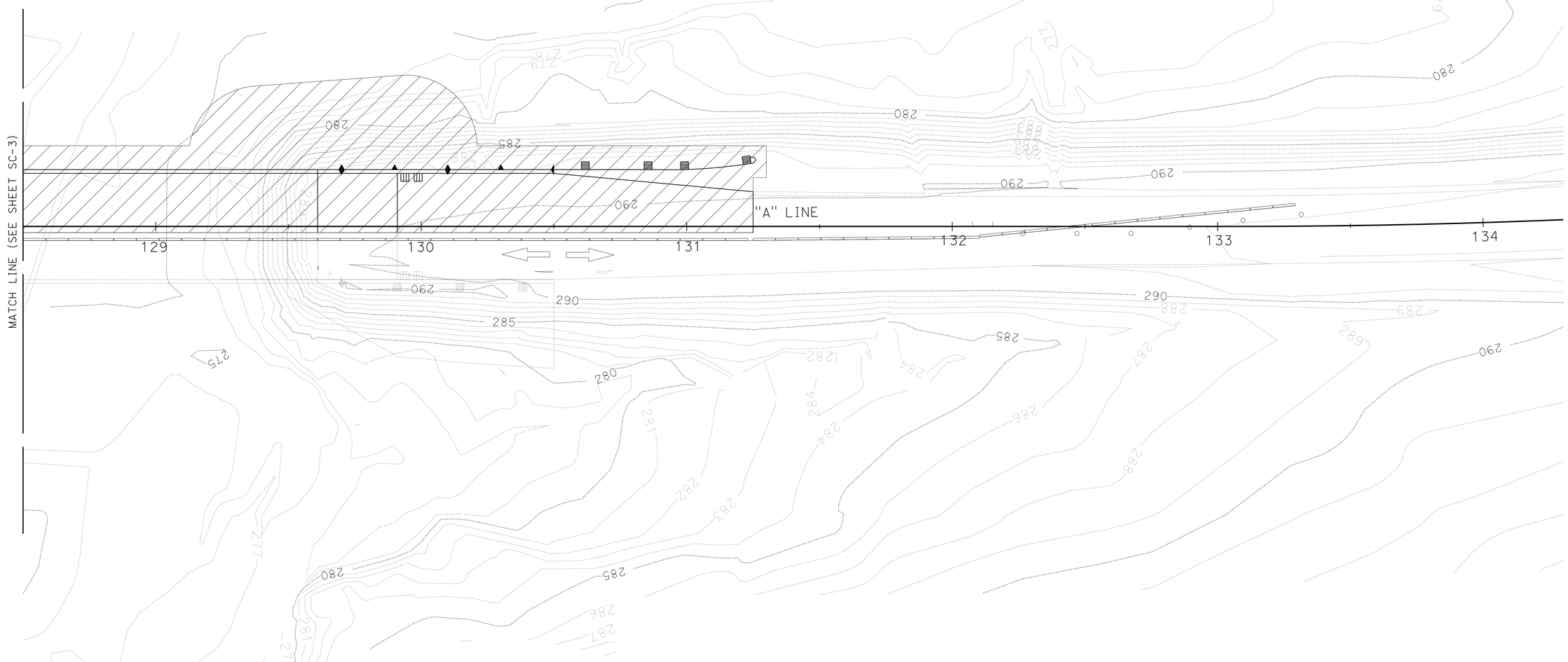

STAGE CONSTRUCTION PLAN
STAGE 2
SCALE: 1" = 20'

SC-4

STATE OF CALIFORNIA - DEPARTMENT OF TRANSPORTATION
Caltrans
DESIGN C

FUNCTIONAL SUPERVISOR: GEORGE MORHIG

CALCULATED-DESIGNED BY: JIAN (JAMES) LAN
CHECKED BY: GEORGE MORHIG

REVISED BY
DATE REVISED

LAST REVISION 03-12-13
DATE PLOTTED => 14-AUG-2013
TIME PLOTTED => 05:29

Dist	COUNTY	ROUTE	POST MILES TOTAL PROJECT	SHEET No.	TOTAL SHEETS
08	Riv	111	1.5	26	82

Thanh Trinh 03/15/13
REGISTERED CIVIL ENGINEER DATE

6-17-13
PLANS APPROVAL DATE

REGISTERED PROFESSIONAL ENGINEER
T. TRINH
No. C41189
Exp. 3-31-13
CIVIL
STATE OF CALIFORNIA

THE STATE OF CALIFORNIA OR ITS OFFICERS OR AGENTS SHALL NOT BE RESPONSIBLE FOR THE ACCURACY OR COMPLETENESS OF SCANNED COPIES OF THIS PLAN SHEET.

LEGEND:

- T (XX) TEMPORARY TRAFFIC STRIPE (PAINT) DETAIL No.
- BEGIN/END OF PAVEMENT DELINEATION
- DIRECTION OF TRAVEL
- TRAFFIC HANDLING SIGN
- ONE POST SIGN
- TEMPORARY CRASH CUSHION (ARRAY TS14)
- WORK AREA

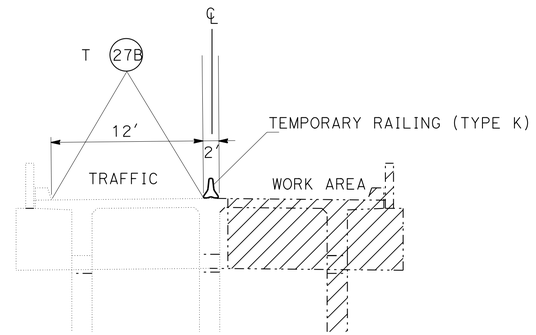

SECTION A-A

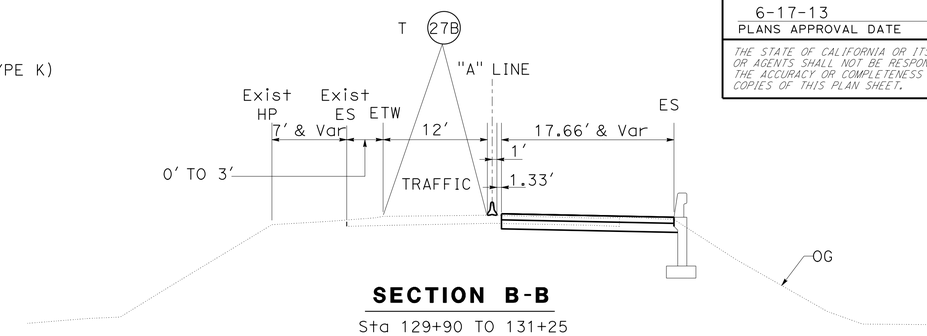

SECTION B-B

Sta 129+90 TO 131+25
Sta 124+25 TO 127+11

NOTES:

1. DISTANCES ARE REFERENCED FROM THE LIMITS OF EXISTING BRIDGE DECKS
2. TEMPORARY RAILING (TYPE K) ARE PINNED INTO BRIDGE DECK.

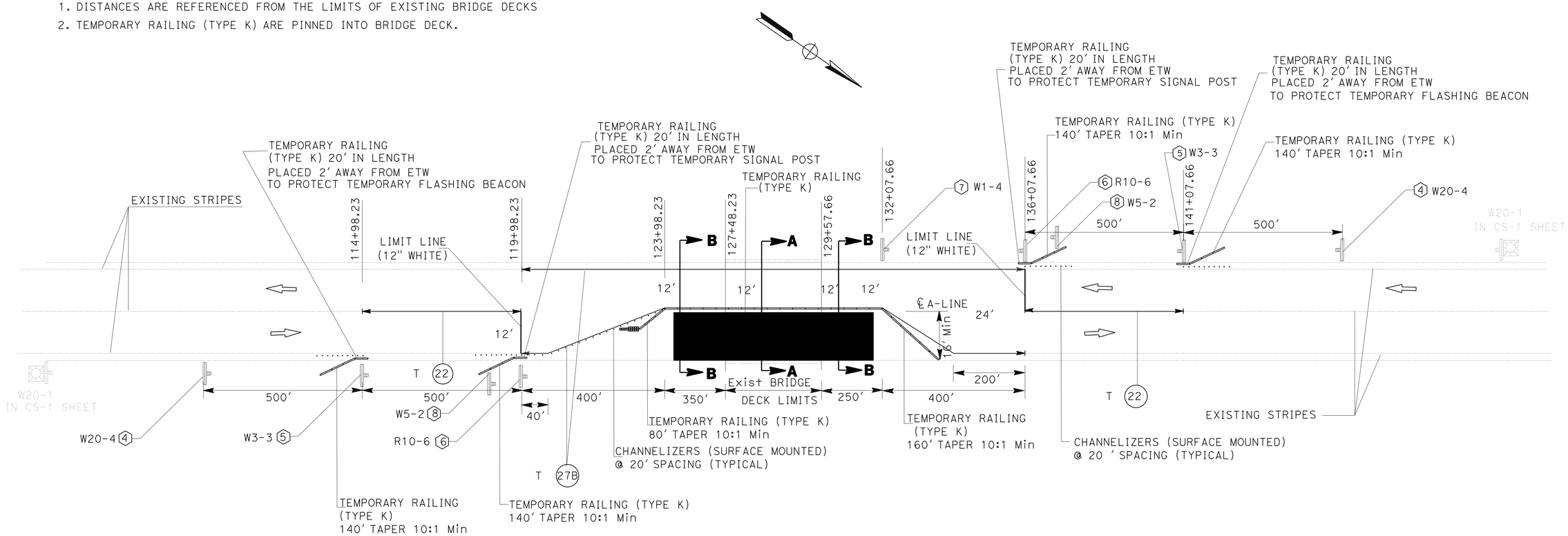

STAGE 1

TRAFFIC HANDLING PLAN

NO SCALE

TH-1

APPROVED FOR TRAFFIC HANDLING WORK ONLY

STATE OF CALIFORNIA - DEPARTMENT OF TRANSPORTATION
Caltrans® **TRAFFIC DESIGN**

FUNCTIONAL SUPERVISOR: BILL WASSER
CALCULATED-DESIGNED BY: KEVIN NGUYEN
CHECKED BY: THANH TRINH
REVISED BY / DATE REVISED

LAST REVISION 03-12-13 | DATE PLOTTED => 14-AUG-2013 | TIME PLOTTED => 05:29

Dist	COUNTY	ROUTE	POST MILES TOTAL PROJECT	SHEET No.	TOTAL SHEETS
08	Riv	111	1.5	27	82

Thanh Trinh 03/15/13
REGISTERED CIVIL ENGINEER DATE

6-17-13
PLANS APPROVAL DATE

REGISTERED PROFESSIONAL ENGINEER
T. TRINH
No. C41189
Exp. 3-31-13
CIVIL
STATE OF CALIFORNIA

THE STATE OF CALIFORNIA OR ITS OFFICERS OR AGENTS SHALL NOT BE RESPONSIBLE FOR THE ACCURACY OR COMPLETENESS OF SCANNED COPIES OF THIS PLAN SHEET.

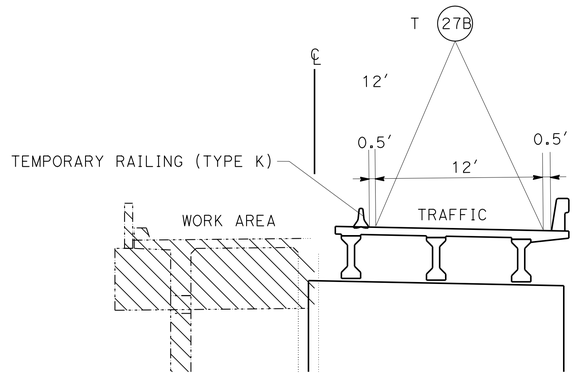

SECTION B-B

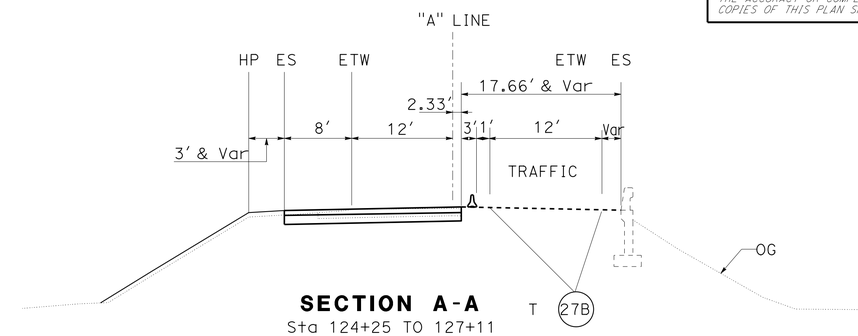

SECTION A-A
Sta 124+25 TO 127+11
Sta 129+90 TO 131+25

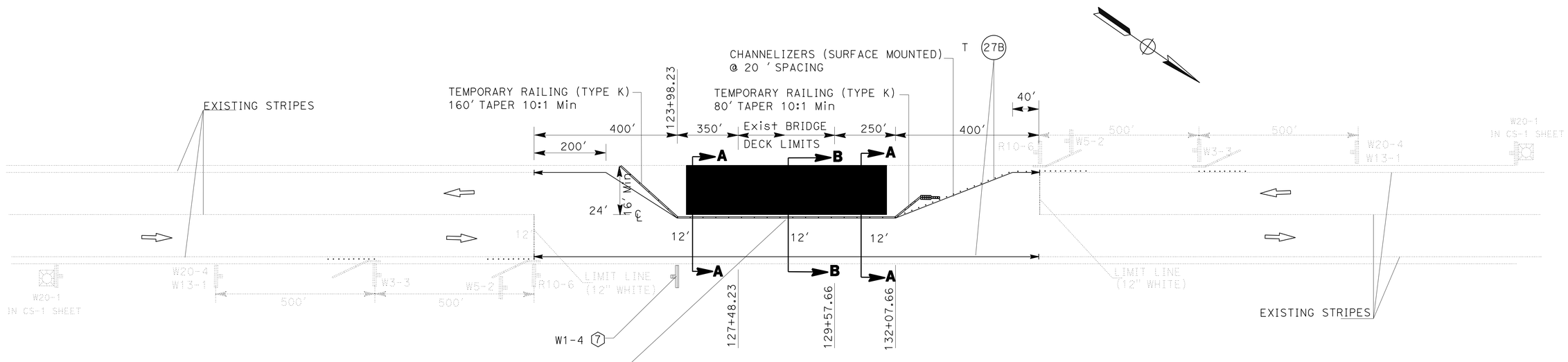

STAGE 2

TRAFFIC HANDLING PLAN

NO SCALE

TH-2

APPROVED FOR TRAFFIC HANDLING WORK ONLY

STATE OF CALIFORNIA - DEPARTMENT OF TRANSPORTATION
Caltrans® **TRAFFIC DESIGN**

FUNCTIONAL SUPERVISOR: BILL WASSER
CALCULATED-DESIGNED BY: KEVIN NGUYEN
CHECKED BY: THANH TRINH
REVISED BY
DATE REVISED

LAST REVISION 03-12-13 | DATE PLOTTED => 14-AUG-2013 | TIME PLOTTED => 05:29

Dist	COUNTY	ROUTE	POST MILES TOTAL PROJECT	SHEET No.	TOTAL SHEETS
08	Riv	111	1.5	28	82

Thanh Trinh 03/15/13
REGISTERED CIVIL ENGINEER DATE

6-17-13
PLANS APPROVAL DATE

REGISTERED PROFESSIONAL ENGINEER
THANH TRINH
No. C41189
Exp. 3-31-13
CIVIL
STATE OF CALIFORNIA

THE STATE OF CALIFORNIA OR ITS OFFICERS OR AGENTS SHALL NOT BE RESPONSIBLE FOR THE ACCURACY OR COMPLETENESS OF SCANNED COPIES OF THIS PLAN SHEET.

TRAFFIC HANDLING QUANTITIES

SHEET No.	TEMPORARY TRAFFIC STRIPE (TAPE) (LF)		TEMPORARY PAVEMENT MARKING (TAPE) (SQFT)	TEMPORARY PAVEMENT MARKER (EA)	REMOVE YELLOW THERMOPLASTIC TRAFFIC STRIPE (HAZARDOUS WASTE) (LF)	REMOVE THERMOPLASTIC TRAFFIC STRIPE (LF)	REMOVE PAVEMENT MARKER (EA)
	DETAIL 22	DETAIL 27B	LIMIT LINE	TYPE D	DETAIL 6	DETAIL 27B	TYPE D
TH-1	1000	3220	24	86	2620	3220	56
TH-2		3220					
SUBTOTAL	1000	6440	24	86	2620	3220	56
TOTAL	7440		24	86	655*	3220	56

*ADJUSTED QUANTITY FOR GAPS IN STRIPING DETAIL

TEMPORARY RAILING (TYPE K)

SHEET No.	QUANTITY
	LF
TH-1	1690
TH-2	1050
TOTAL	2740

TEMPORARY CRASH CUSHION MODULE

SHEET No.	QUANTITY
	EA
TH-1	14
TH-2	14
TOTAL	28

CHANNELIZER (SURFACE MOUNTED)

SHEET No.	QUANTITY
	EA
TH-1	60
TH-2	20
TOTAL	80

TRAFFIC HANDLING QUANTITIES
THQ-1

REVISED BY | DATE REVISED
KEVIN NGUYEN | THANH TRINH
CALCULATED-DESIGNED BY | CHECKED BY
FUNCTIONAL SUPERVISOR | BILL WASSER
STATE OF CALIFORNIA - DEPARTMENT OF TRANSPORTATION
Caltrans TRAFFIC DESIGN A

LAST REVISION 03-12-13 | DATE PLOTTED => 14-AUG-2013 | TIME PLOTTED => 09:30

Dist	COUNTY	ROUTE	POST MILES TOTAL PROJECT	SHEET No.	TOTAL SHEETS
08	Riv	111	1.5	29	82

Thanh Trinh 03/15/13
REGISTERED CIVIL ENGINEER DATE

6-17-13
PLANS APPROVAL DATE

REGISTERED PROFESSIONAL ENGINEER
T. TRINH
No. C41189
Exp. 3-31-13
CIVIL
STATE OF CALIFORNIA

THE STATE OF CALIFORNIA OR ITS OFFICERS OR AGENTS SHALL NOT BE RESPONSIBLE FOR THE ACCURACY OR COMPLETENESS OF SCANNED COPIES OF THIS PLAN SHEET.

LEGEND:

- DIRECTION OF TRAVEL
- STRIPING TERMINATION
- (XXX) STRIPING DETAIL
- OBJECT MARKER
- DELINEATOR CLASS 1

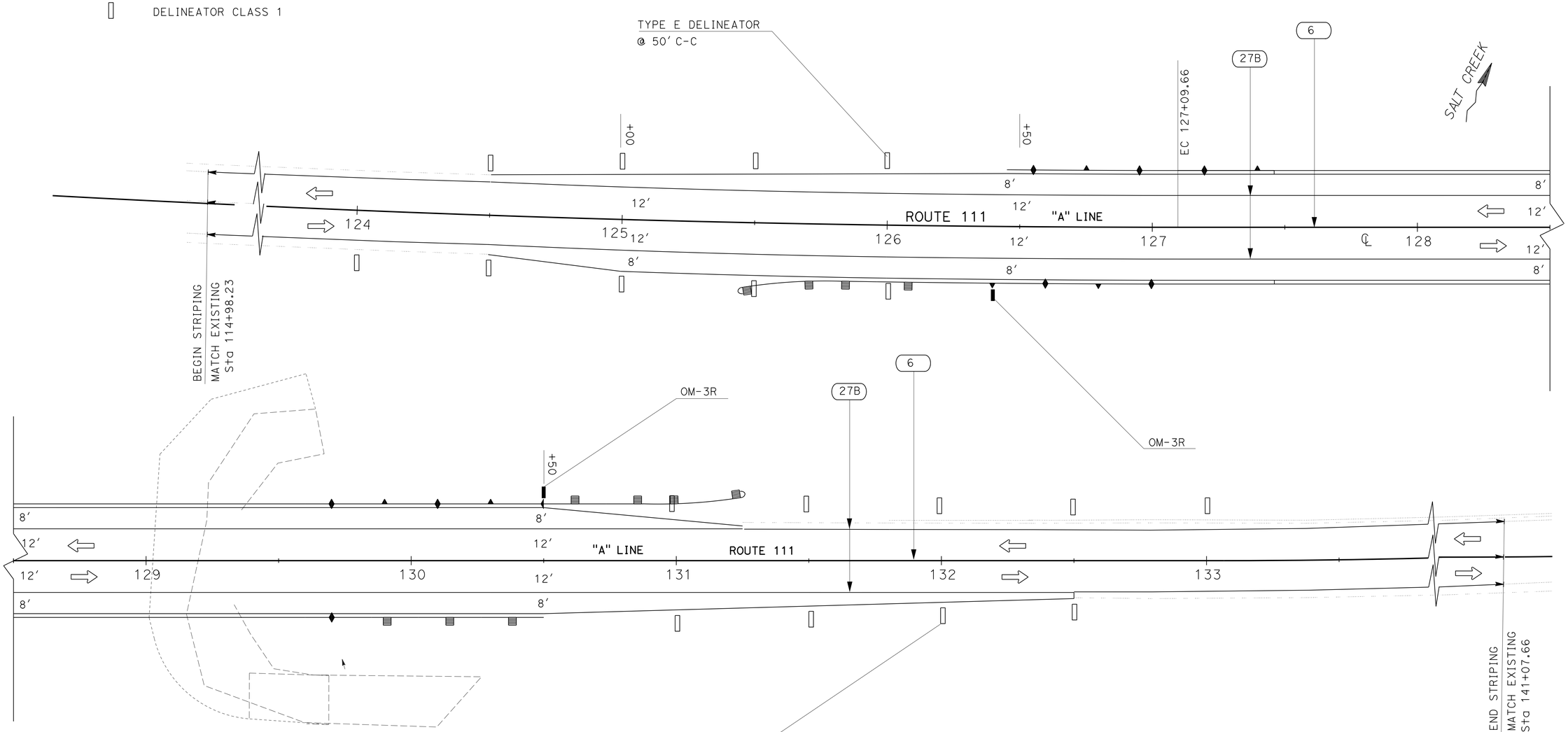

PAVEMENT DELINEATION PLAN

SCALE: 1" = 20'

PD-1

APPROVED FOR PAVEMENT DELINEATION WORK ONLY

STATE OF CALIFORNIA - DEPARTMENT OF TRANSPORTATION
Caltrans
TRAFFIC DESIGN

FUNCTIONAL SUPERVISOR: W. E. WASSER
CALCULATED-DESIGNED BY: KEVIN NGUYEN
CHECKED BY: THANH TRINH
REVISED BY
DATE REVISED

LAST REVISION 03-12-13
DATE PLOTTED => 14-AUG-2013
TIME PLOTTED => 05:30

Dist	COUNTY	ROUTE	POST MILES TOTAL PROJECT	SHEET No.	TOTAL SHEETS
08	Riv	111	1.5	30	82

Thanh Trinh 03/15/13
REGISTERED CIVIL ENGINEER DATE

6-17-13
PLANS APPROVAL DATE

REGISTERED PROFESSIONAL ENGINEER
T. TRINH
No. C41189
Exp. 3-31-13
CIVIL
STATE OF CALIFORNIA

THE STATE OF CALIFORNIA OR ITS OFFICERS OR AGENTS SHALL NOT BE RESPONSIBLE FOR THE ACCURACY OR COMPLETENESS OF SCANNED COPIES OF THIS PLAN SHEET.

PAVEMENT DELINEATION QUANTITIES

LOCATION	STATION LIMIT	DETAIL No.	THERMOPLASTIC TRAFFIC STRIPE (SPRAYABLE)		PAVEMENT MARKER (RETROREFLECTIVE)	DELINEATOR (CLASS 1)	OBJECT MARKER
			4" YELLOW	4" WHITE	TYPE D	TYPE E	TYPE OM-3R
			LF		EA		
ROUTE 111	Sta 114+98.23 TO Sta 141+07.66	6	2610		56		
		27B		3220			
						18	2
SUBTOTAL			2610	3220		18	2
TOTAL			5830		56	18	2

STATE OF CALIFORNIA - DEPARTMENT OF TRANSPORTATION
Caltrans® TRAFFIC DESIGN

FUNCTIONAL SUPERVISOR: BILL WASSER
CALCULATED-DESIGNED BY: KN
CHECKED BY: TT
REVISED BY
DATE REVISED

PAVEMENT DELINEATION QUANTITIES
PDQ-1

LAST REVISION 03-12-13
DATE PLOTTED => 14-AUG-2013
TIME PLOTTED => 05:30

Dist	COUNTY	ROUTE	POST MILES TOTAL PROJECT	SHEET No.	TOTAL SHEETS
08	Riv	111	1.5	31	82

REGISTERED CIVIL ENGINEER 03/15/13 DATE

6-17-13
PLANS APPROVAL DATE

REGISTERED PROFESSIONAL ENGINEER
JIAN LAN
No. C63981
Exp. 09/30/14
CIVIL
STATE OF CALIFORNIA

THE STATE OF CALIFORNIA OR ITS OFFICERS OR AGENTS SHALL NOT BE RESPONSIBLE FOR THE ACCURACY OR COMPLETENESS OF SCANNED COPIES OF THIS PLAN SHEET.

EARTHWORK QUANTITIES

ROUTE 111 STATION	LOCATION	ROADWAY EXCAVATION	(N) EMBANKMENT	LOCATION
		CY	CY	
L-1 Sta 124+50 to 127+45.5		479	249	ROADWAY
L-2 Sta 129+60.5 to 131+25		420	2	ROADWAY
G-1 Sta 127+15 to 127+50		323		Br ABUT
G-2 Sta 129+50 to 129+95		255		Br ABUT
DD-2 Sta 125+71 TO 126+56			66	SCOURED INCISION
-				
TOTAL		1477	317	

PAVEMENT STRUCTURE QUANTITIES

ROUTE 111 STATION	DIRECTION	HOT MIX ASPHALT (TYPE C)	CLASS 2 AGGREGATE BASE	TACK COAT
		TON	CY	TON
L-1 & L-2 Sta 124+50 THRU 127+16	NB/SB	824	501	0.04
SC-1 Sta 122+25 THRU 125+87		18		
TOTAL		842	501	0.04

PLACE HOT MIX ASPHALT DIKE

ROUTE 111 STATION	DIRECTION	TYPE C	TYPE F	HOT MIX ASPHALT (TYPE A)
		LF	LF	TON
Sta 129+90 THRU 132+50	NB		260	0.08
Sta 130+50 THRU 131+25	SB	75		0.04
TOTAL		75	260	0.12

RSP QUANTITIES

ROUTE 111 STATION	DIRECTION	CONCRETED RSP (LIGHT CLASS, METHOD B)	CONCRETED RSP (LIGHT CLASS, METHOD A)	RSP FABRIC
		CY	CY	SQYD
D-1 Sta 126+45 to 127+70	NB/SB	640	7	1046
D-2 Sta 129+50 to 130+00	NB/SB	553	33	952
SUBTOTAL FROM DQ-1				127
TOTAL		1193	40	2125

SUMMARY OF QUANTITIES

Q-1

STATE OF CALIFORNIA - DEPARTMENT OF TRANSPORTATION
Caltrans
DESIGN C
FUNCTIONAL SUPERVISOR: GEORGE MORHIG
CALCULATED-DESIGNED BY: JIAN LAN
CHECKED BY: GEORGE MORHIG
REVISED BY
DATE REVISED

LAST REVISION 03-12-13
DATE PLOTTED => 14-AUG-2013
TIME PLOTTED => 05:30

Dist	COUNTY	ROUTE	POST MILES TOTAL PROJECT	SHEET No.	TOTAL SHEETS
08	Riv	111	1.5	32	82

REGISTERED CIVIL ENGINEER 03/15/13 DATE

6-17-13
PLANS APPROVAL DATE

REGISTERED PROFESSIONAL ENGINEER
JIAN LAN
No. C63981
Exp. 09/30/14
CIVIL
STATE OF CALIFORNIA

THE STATE OF CALIFORNIA OR ITS OFFICERS OR AGENTS SHALL NOT BE RESPONSIBLE FOR THE ACCURACY OR COMPLETENESS OF SCANNED COPIES OF THIS PLAN SHEET.

TEMPORARY FENCE (TYPE ESA)

LOCATION	TYPE ESA
	LF
SHEET D-1	429
SHEET D-2	342
TOTAL	771

RAILINGS AND BARRIERS

ROUTE 111 STATION	DIRECTION	REMOVE METAL BEAM GUARD RAILING	METAL BEAM GUARD RAILING (WOOD POST)	TRANSITION RAILING (TYPE WB)	ALTERNATIVE FLARED TERMINAL SYSTEM	END CAP (TYPE TC)	END CAP (TYPE A)	END ANCHOR ASSEMBLY (TYPE SRT)	VEGETATION CONTROL (MINOR Conc)
		LF	LF	EA	EA	EA	EA	EA	SQYD
126+19 THRU 130+63	NB	444							9
126+43 THRU 131+25	SB	482							4
130+17 THRU 130+50	NB		63						9
130+93 THRU 131+06	SB		12.5						
126+07	NB		12.5	1		1			
130+50	SB			1		1			
125+20	NB				1				
131+18	SB				1				
129+90	NB						1		
130+50	NB							1	
TOTAL		926	88	2	2	2	1	1	22

SUMMARY OF QUANTITIES
Q-2

STATE OF CALIFORNIA - DEPARTMENT OF TRANSPORTATION
Caltrans
DESIGN C
FUNCTIONAL SUPERVISOR GEORGE MORHIG
CALCULATED-DESIGNED BY JIAN LAN
CHECKED BY GEORGE MORHIG
REVISED BY
DATE REVISED

LAST REVISION 03-12-13
DATE PLOTTED => 14-AUG-2013
TIME PLOTTED => 05:30

Dist	COUNTY	ROUTE	POST MILES TOTAL PROJECT	SHEET No.	TOTAL SHEETS
08	Riv	111	1.5	33	82

Dilara Zaman. 05/31/13
REGISTERED ELECTRICAL ENGINEER DATE

6-17-13
PLANS APPROVAL DATE

REGISTERED PROFESSIONAL ENGINEER
DILARA H. ZAMAN
No. E 18356
Exp. 6-30-14
ELECTRICAL
STATE OF CALIFORNIA

THE STATE OF CALIFORNIA OR ITS OFFICERS OR AGENTS SHALL NOT BE RESPONSIBLE FOR THE ACCURACY OR COMPLETENESS OF SCANNED COPIES OF THIS PLAN SHEET.

NOTES: (E-1 AND E-2)

1. VEHICLE DETECTION ZONES SHALL BE ESTABLISHED IN THE FIELD BY THE ENGINEER.
2. FOR COMPLETE RIGHT OF WAY AND ACCURATE ACCESS DATA, SEE RIGHT OF WAY RECORD MAPS AT DISTRICT OFFICE.

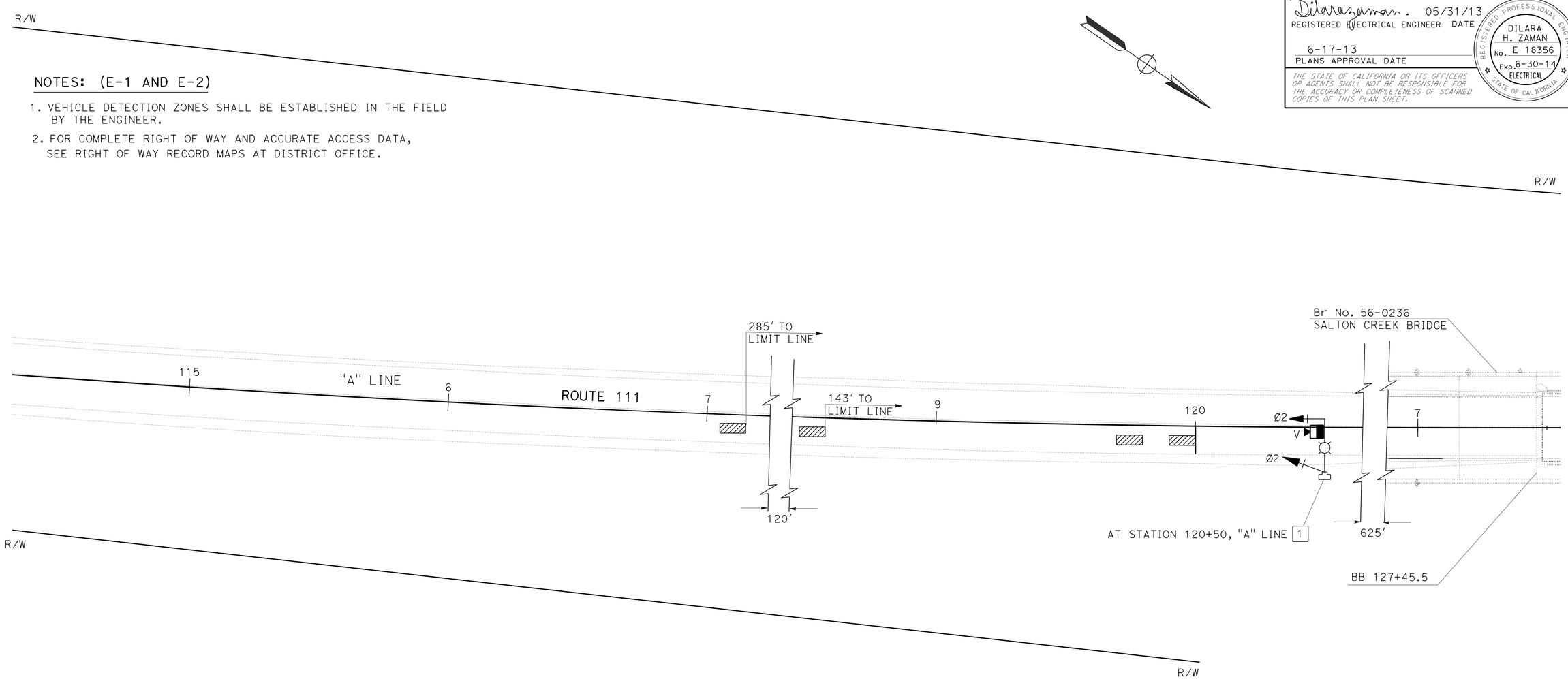

LEGEND: (E-1 AND E-2)

1 INSTALL TEMPORARY SIGNAL AND LIGHTING SYSTEM.

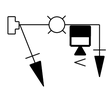

TEMPORARY SIGNAL AND LIGHTING

APPROVED FOR ELECTRICAL WORK ONLY

TEMPORARY SIGNAL SYSTEM

SCALE: 1" = 20'

E-1

REVISED BY	DATE REVISED
DZ	01/2013

CALCULATED-DESIGNED BY: NASIMA HYDER
CHECKED BY: DILARA ZAMAN
FUNCTIONAL SUPERVISOR: DAVID A. GONZALEZ

STATE OF CALIFORNIA - DEPARTMENT OF TRANSPORTATION
Caltrans® ELECTRICAL DESIGN A

LAST REVISION 05-30-13
DATE PLOTTED => 14-AUG-2013
TIME PLOTTED => 05:30

Dist	COUNTY	ROUTE	POST MILES TOTAL PROJECT	SHEET No.	TOTAL SHEETS
08	Riv	111	1.5	34	82

Dilarazaman. 05/31/13
REGISTERED ELECTRICAL ENGINEER DATE

6-17-13
PLANS APPROVAL DATE

REGISTERED PROFESSIONAL ENGINEER
DILARA H. ZAMAN
No. E 18356
Exp. 6-30-14
ELECTRICAL
STATE OF CALIFORNIA

THE STATE OF CALIFORNIA OR ITS OFFICERS OR AGENTS SHALL NOT BE RESPONSIBLE FOR THE ACCURACY OR COMPLETENESS OF SCANNED COPIES OF THIS PLAN SHEET.

NOTE:

FOR COMPLETE RIGHT OF WAY AND ACCURATE ACCESS DATA, SEE RIGHT OF WAY RECORD MAPS AT DISTRICT OFFICE.

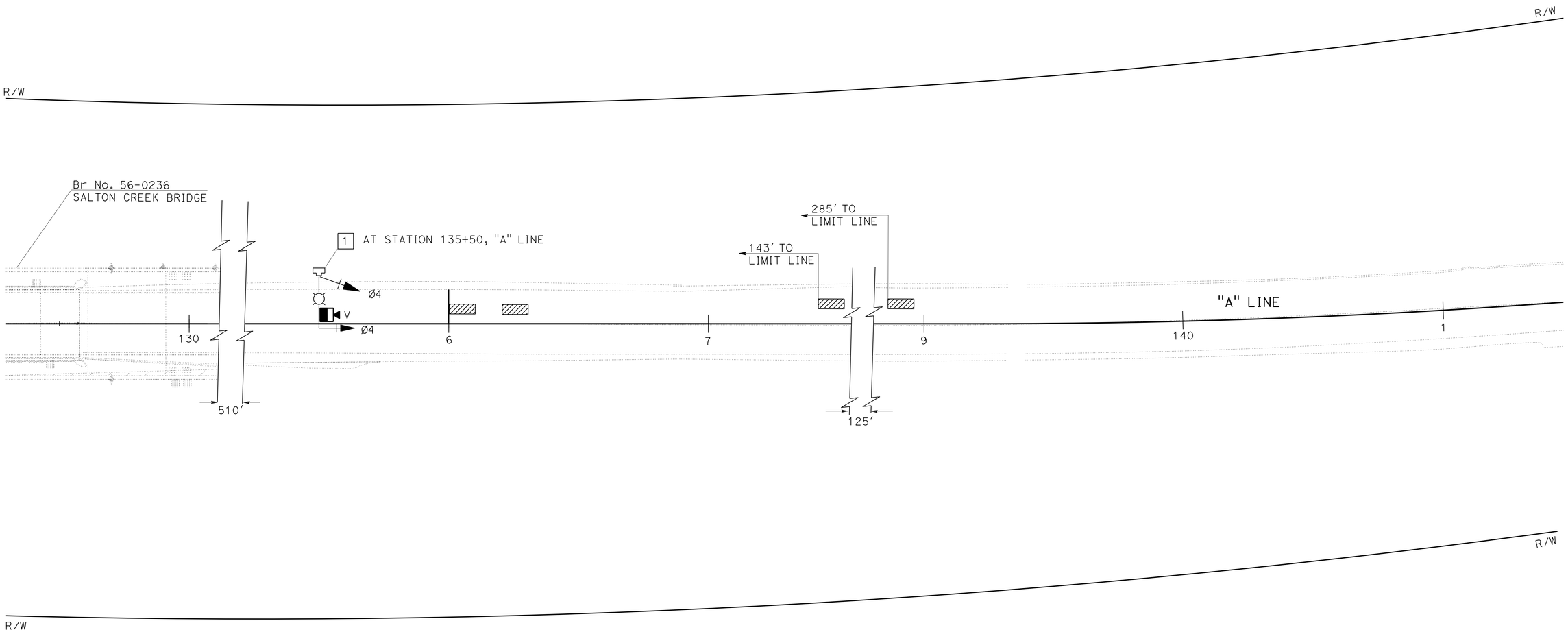

TEMPORARY SIGNAL SYSTEM

APPROVED FOR ELECTRICAL WORK ONLY

SCALE: 1" = 20'

E-2

STATE OF CALIFORNIA - DEPARTMENT OF TRANSPORTATION
Caltrans® **ELECTRICAL DESIGN A**

FUNCTIONAL SUPERVISOR: DAVID A. GONZALEZ
CALCULATED-DESIGNED BY: NASIMA HYDER
CHECKED BY: DILARA ZAMAN
REVISED BY: DZ
DATE REVISED: 01/2013

LAST REVISION 05-30-13
DATE PLOTTED => 14-AUG-2013
TIME PLOTTED => 05:30

Dist	COUNTY	ROUTE	POST MILES TOTAL PROJECT	SHEET No.	TOTAL SHEETS
08	Riv	111	1.5	35	82

Dilara Zaman. 03/15/13
REGISTERED ELECTRICAL ENGINEER DATE

6-17-13
PLANS APPROVAL DATE

REGISTERED PROFESSIONAL ENGINEER
DILARA H. ZAMAN
No. E 18356
Exp. 6-30-14
ELECTRICAL
STATE OF CALIFORNIA

THE STATE OF CALIFORNIA OR ITS OFFICERS OR AGENTS SHALL NOT BE RESPONSIBLE FOR THE ACCURACY OR COMPLETENESS OF SCANNED COPIES OF THIS PLAN SHEET.

NOTE:

FOR COMPLETE RIGHT OF WAY AND ACCURATE ACCESS DATA, SEE RIGHT OF WAY RECORD MAPS AT DISTRICT OFFICE.

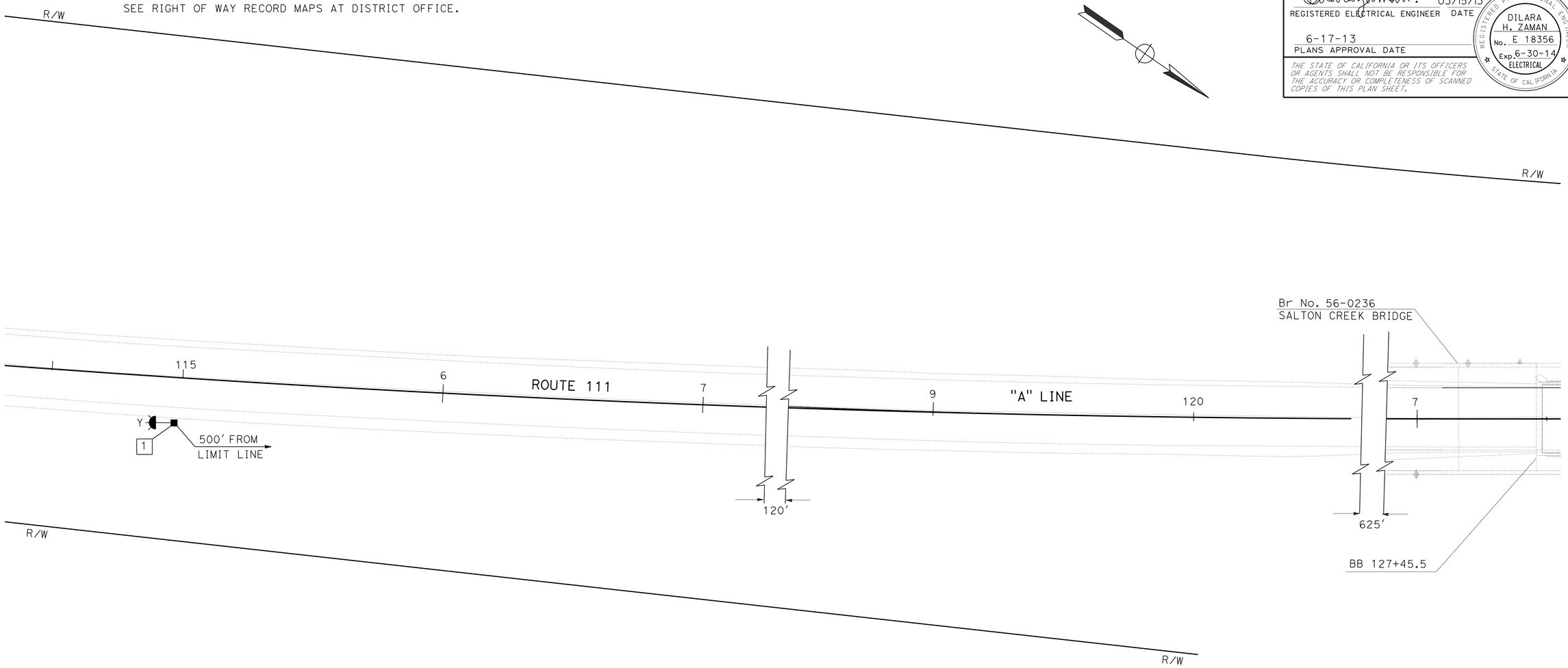

LEGEND: (E-3 AND E-4)

1 INSTALL TEMPORARY FLASHING BEACON ON WOOD POLE. SEE SHEET E-5 TO E-8 FOR DETAILS.

Y TEMPORARY FLASHING BEACON SYSTEM

TEMPORARY FLASHING BEACON

SCALE: 1" = 20'

E-3

APPROVED FOR ELECTRICAL WORK ONLY

REVISED BY	DZ
DATE REVISED	01/2013
NASIMA HYDER	
DILARA ZAMAN	
CALCULATED-DESIGNED BY	
CHECKED BY	
FUNCTIONAL SUPERVISOR	
DAVID A. GONZALEZ	

STATE OF CALIFORNIA - DEPARTMENT OF TRANSPORTATION
Caltrans® ELECTRICAL DESIGN A

LAST REVISION 03-12-13
DATE PLOTTED => 14-AUG-2013
TIME PLOTTED => 05:30

Dist	COUNTY	ROUTE	POST MILES TOTAL PROJECT	SHEET No.	TOTAL SHEETS
08	Riv	111	1.5	36	82

Dilarazaman. 03/15/13
REGISTERED ELECTRICAL ENGINEER DATE

6-17-13
PLANS APPROVAL DATE

REGISTERED PROFESSIONAL ENGINEER
DILARA H. ZAMAN
No. E 18356
Exp. 6-30-14
ELECTRICAL
STATE OF CALIFORNIA

THE STATE OF CALIFORNIA OR ITS OFFICERS OR AGENTS SHALL NOT BE RESPONSIBLE FOR THE ACCURACY OR COMPLETENESS OF SCANNED COPIES OF THIS PLAN SHEET.

NOTE:

FOR COMPLETE RIGHT OF WAY AND ACCURATE ACCESS DATA, SEE RIGHT OF WAY RECORD MAPS AT DISTRICT OFFICE.

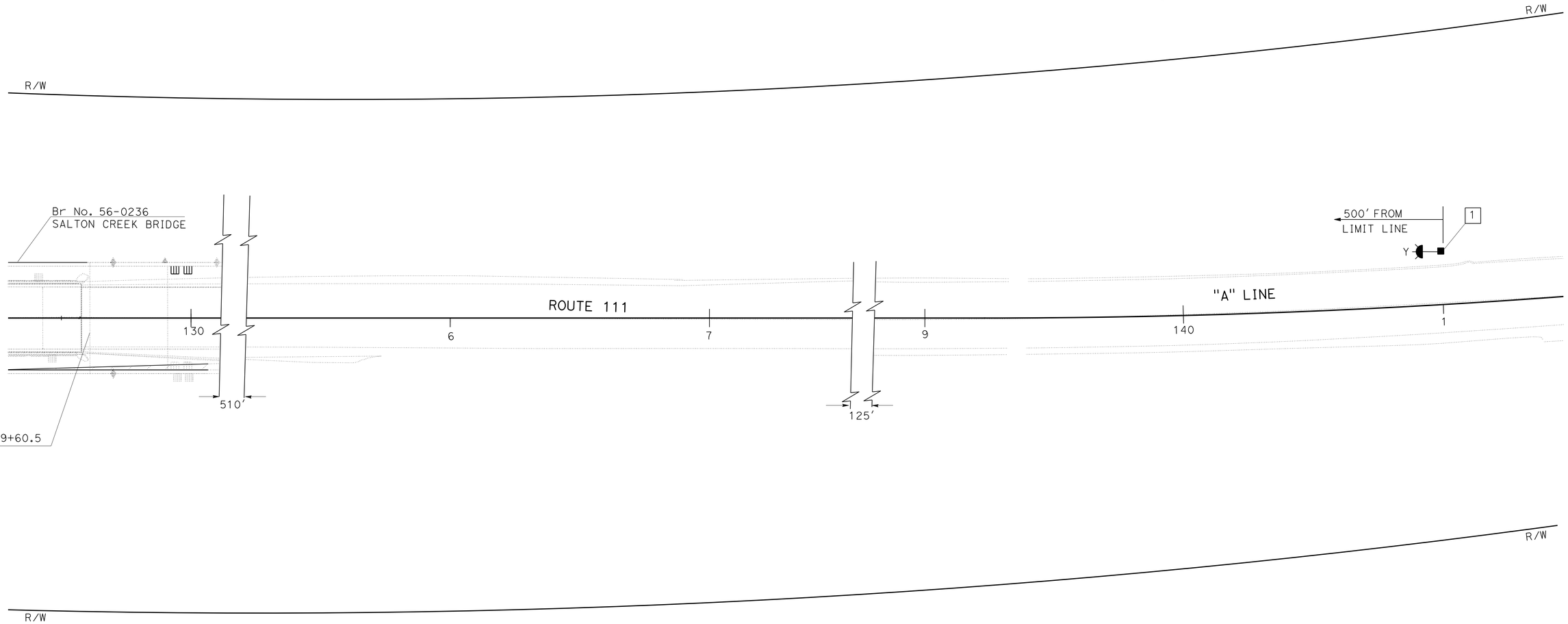

TEMPORARY FLASHING BEACON

SCALE: 1" = 20'

E-4

APPROVED FOR ELECTRICAL WORK ONLY

REVISED BY	DATE REVISED
DZ	01/2013

CALCULATED-DESIGNED BY: NASIMA HYDER
CHECKED BY: DILARA ZAMAN
FUNCTIONAL SUPERVISOR: DAVID A. GONZALEZ

STATE OF CALIFORNIA - DEPARTMENT OF TRANSPORTATION
Caltrans ELECTRICAL DESIGN A

LAST REVISION 03-12-13 | DATE PLOTTED => 14-AUG-2013 | TIME PLOTTED => 05:30

Dist	COUNTY	ROUTE	POST MILES TOTAL PROJECT	SHEET No.	TOTAL SHEETS
08	Riv	111	1.5	37	82

Dilara Zaman 03/15/13
REGISTERED ELECTRICAL ENGINEER DATE

6-17-13
PLANS APPROVAL DATE

REGISTERED PROFESSIONAL ENGINEER
DILARA H. ZAMAN
No. E 18356
Exp. 6-30-14
ELECTRICAL
STATE OF CALIFORNIA

THE STATE OF CALIFORNIA OR ITS OFFICERS OR AGENTS SHALL NOT BE RESPONSIBLE FOR THE ACCURACY OR COMPLETENESS OF SCANNED COPIES OF THIS PLAN SHEET.

LEGEND:

1. 1½"C, STANDARD MOUNTING FLANGE WITH 4 THRU BOLTS.
2. FASTEN CONDUIT TO WOOD POLE WITH 1" CONDUIT CLAMP AT 5 FEET SPACING.
3. SEE SHEET CS-1 SIGN No. 5 FOR SIGN PANELS DETAILS AND DIMENSIONS.
4. INSTALL TEMPORARY WOOD POLE WITH THE ATTACHMENTS. SEE SHEET SES-1 AND SES-2 CASE 5N FOR POLE FOUNDATION AND DETAILS.
5. PROTECT THE POLE FROM TRAFFIC. SEE SHEET TH-1 FOR DETAILS.

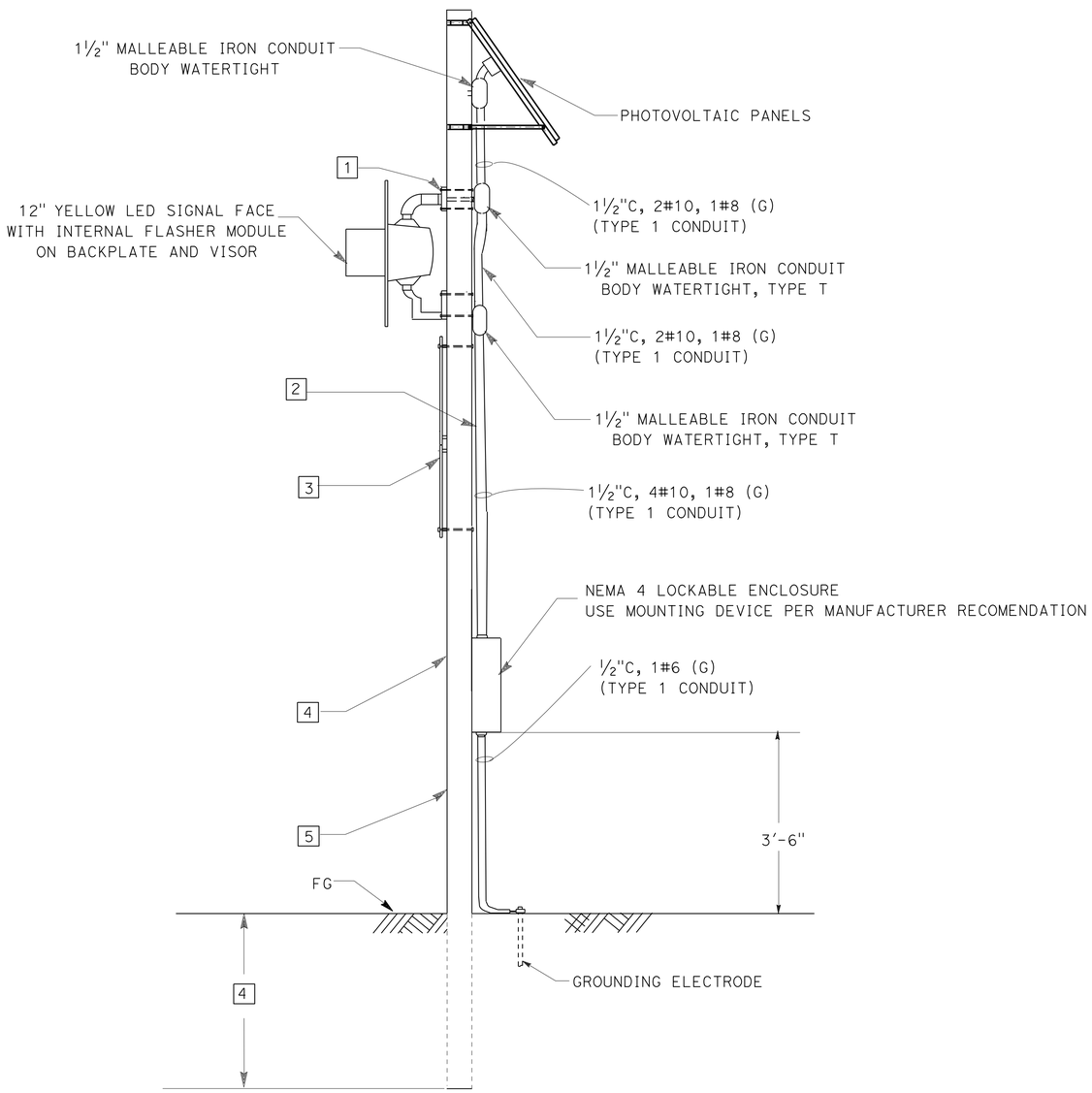

DETAIL A

TEMPORARY FLASHING BEACON WITH SIGN

(SIDE VIEW)

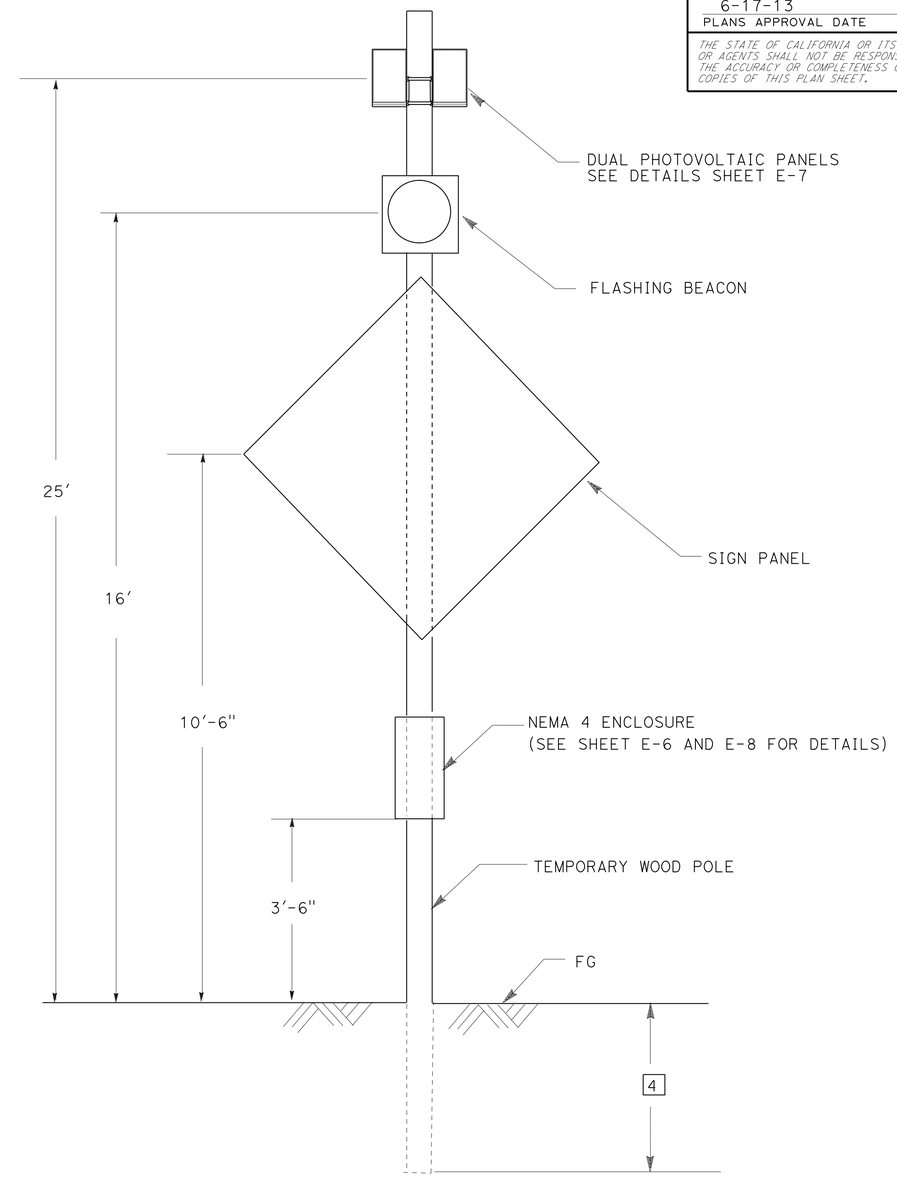

DETAIL B

TEMPORARY FLASHING BEACON WITH SIGN

(FRONT VIEW)

ELECTRICAL DETAILS

NO SCALE

E-5

STATE OF CALIFORNIA - DEPARTMENT OF TRANSPORTATION
Caltrans® ELECTRICAL DESIGN A

FUNCTIONAL SUPERVISOR: DAVID A GONZALEZ
CALCULATED-DESIGNED BY: DILARA ZAMAN
CHECKED BY: DAVID A GONZALEZ
REVISED BY
DATE REVISED

LAST REVISION 03-12-13
DATE PLOTTED => 14-AUG-2013
TIME PLOTTED => 05:30

Dist	COUNTY	ROUTE	POST MILES TOTAL PROJECT	SHEET No.	TOTAL SHEETS
08	Riv	111	1.5	38	82

Dilara Zaman. 03/15/13
REGISTERED ELECTRICAL ENGINEER DATE

6-17-13
PLANS APPROVAL DATE

REGISTERED PROFESSIONAL ENGINEER
DILARA H. ZAMAN
No. E 18356
Exp. 6-30-14
ELECTRICAL
STATE OF CALIFORNIA

THE STATE OF CALIFORNIA OR ITS OFFICERS OR AGENTS SHALL NOT BE RESPONSIBLE FOR THE ACCURACY OR COMPLETENESS OF SCANNED COPIES OF THIS PLAN SHEET.

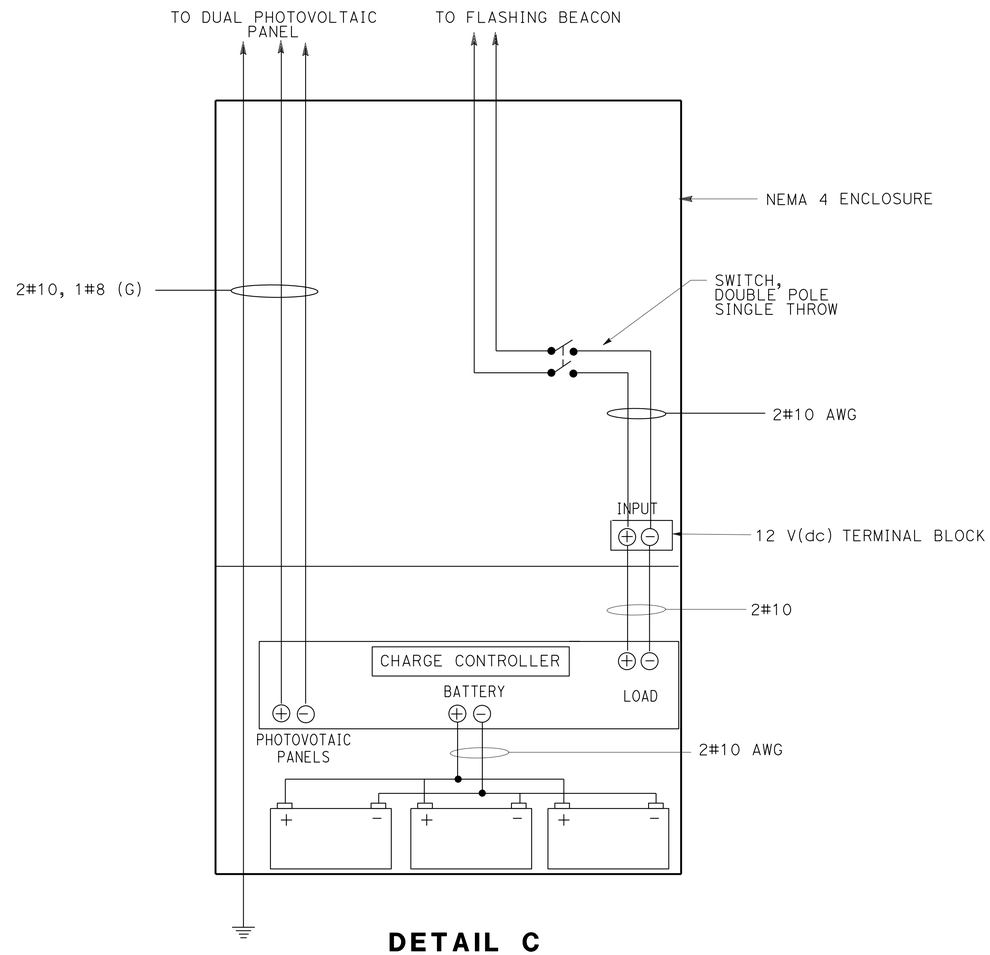

DETAIL C
TYPICAL ENCLOSURE LAYOUT

ELECTRICAL DETAIL
NO SCALE

E-6

STATE OF CALIFORNIA - DEPARTMENT OF TRANSPORTATION
Caltrans® ELECTRICAL DESIGN A

FUNCTIONAL SUPERVISOR: DAVID A GONZALEZ
CALCULATED-DESIGNED BY: DILARA ZAMAN
CHECKED BY: DAVID A GONZALEZ
REVISED BY
DATE REVISED

LAST REVISION 03-12-13
DATE PLOTTED => 14-AUG-2013
TIME PLOTTED => 05:30

Dist	COUNTY	ROUTE	POST MILES TOTAL PROJECT	SHEET No.	TOTAL SHEETS
08	Riv	111	1.5	39	82

Dilara Zaman 03/15/13
REGISTERED ELECTRICAL ENGINEER DATE

6-17-13
PLANS APPROVAL DATE

REGISTERED PROFESSIONAL ENGINEER DILARA H. ZAMAN No. E 18356 Exp. 6-30-14 ELECTRICAL STATE OF CALIFORNIA

THE STATE OF CALIFORNIA OR ITS OFFICERS OR AGENTS SHALL NOT BE RESPONSIBLE FOR THE ACCURACY OR COMPLETENESS OF SCANNED COPIES OF THIS PLAN SHEET.

NOTE:

1. ALL DIMENSIONS ARE APPROXIMATE.
2. INSTALL ANTI-THEFT MOUNTING NUTS AND BOLTS FOR BOTH PANEL AND POLE MOUNTING.

LEGEND

1. ATTACH "L" BRACE TO PHOTOVOLTAIC PANEL FRAME PER MANUFACTURER'S INSTRUCTION.
2. JUNCTION BOX.
3. ½" TYPE 4 CONDUIT.
4. ATTACH PHOTOVOLTAIC PANEL TO WOOD POLE PER MANUFACTURER'S INSTRUCTION.
5. PHOTOVOLTAIC PANEL WEIGHT MUST NOT EXCEED 27 lb.

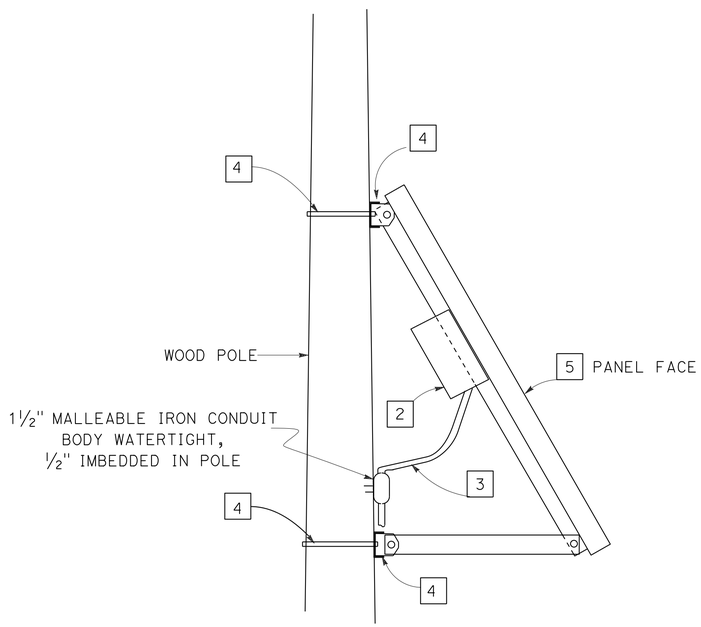

DETAIL D

ELEVATION

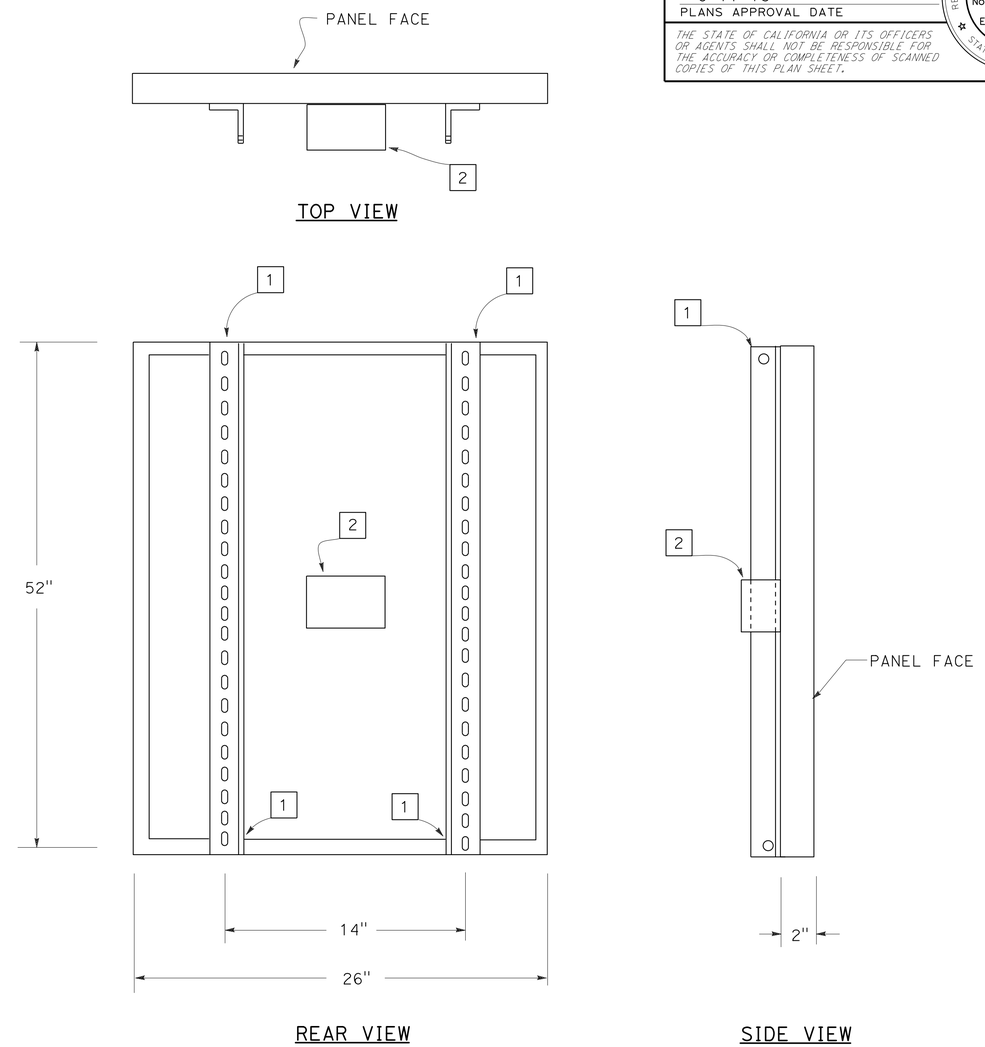

DETAIL E

PHOTOVOLTAIC PANEL

ELECTRICAL DETAILS

NO SCALE

E-7

STATE OF CALIFORNIA - DEPARTMENT OF TRANSPORTATION
Caltrans ELECTRICAL DESIGN A

FUNCTIONAL SUPERVISOR: DAVID A GONZALEZ
CALCULATED-DESIGNED BY: DILARA ZAMAN
CHECKED BY: DAVID A GONZALEZ
REVISED BY / DATE REVISED

LAST REVISION 03-12-13 | DATE PLOTTED => 14-AUG-2013 | TIME PLOTTED => 05:30

Dist	COUNTY	ROUTE	POST MILES TOTAL PROJECT	SHEET No.	TOTAL SHEETS
08	Riv	111	1.5	40	82

REGISTERED ELECTRICAL ENGINEER — DATE 03/15/13

6-17-13
PLANS APPROVAL DATE

REGISTERED PROFESSIONAL ENGINEER — DILARA H. ZAMAN — No. E 18356 — Exp. 6-30-14 — ELECTRICAL — STATE OF CALIFORNIA

THE STATE OF CALIFORNIA OR ITS OFFICERS OR AGENTS SHALL NOT BE RESPONSIBLE FOR THE ACCURACY OR COMPLETENESS OF SCANNED COPIES OF THIS PLAN SHEET.

NOTES:

1. THE CONTRACTOR MUST VERIFY ALL CONTROLLING FIELD DIMENSIONS BEFORE ORDERING OR FABRICATING MATERIAL.
2. MOUNTING HARDWARE TO WOOD POLE PER MANUFACTURER'S INSTRUCTION.

LEGEND:

[1] SHELF FOR EQUIPMENT

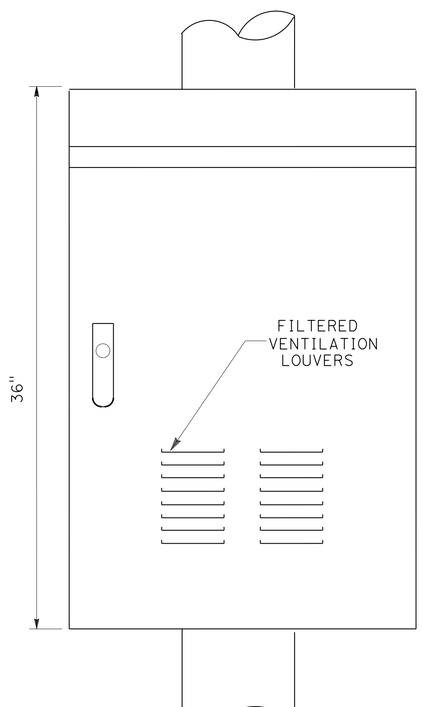

FRONT

DETAIL F

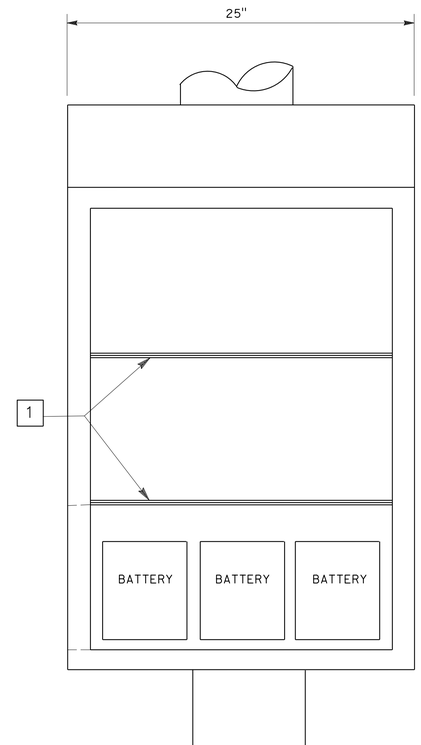

FRONT
(INTERIOR)

DETAIL G

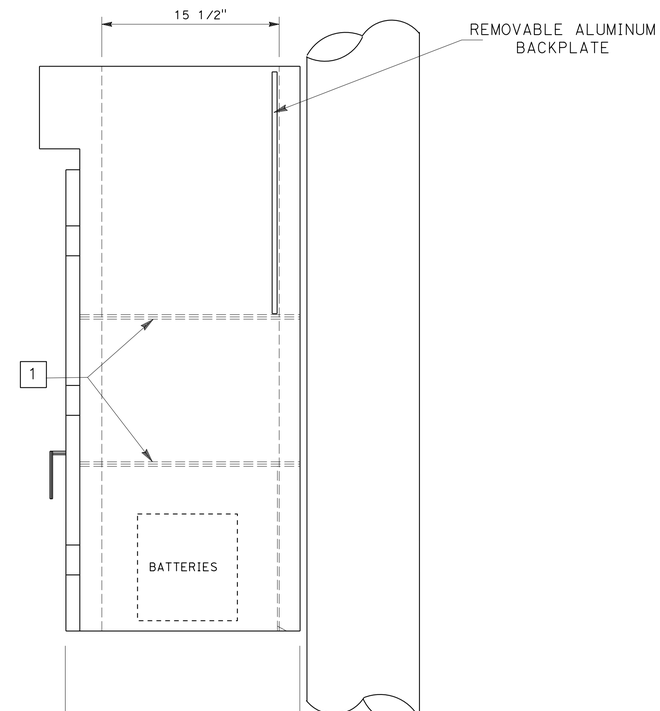

SIDE

DETAIL H

ELECTRICAL DETAILS

NO SCALE

E-8

STATE OF CALIFORNIA - DEPARTMENT OF TRANSPORTATION
Caltrans® ELECTRICAL DESIGN A

FUNCTIONAL SUPERVISOR: DAVID A GONZALEZ
CALCULATED-DESIGNED BY: DILARA ZAMAN
CHECKED BY: DAVID A GONZALEZ
REVISED BY
DATE REVISED

LAST REVISION 03-12-13 | DATE PLOTTED => 14-AUG-2013 | TIME PLOTTED => 05:30

Dist	COUNTY	ROUTE	POST MILES TOTAL PROJECT	SHEET No.	TOTAL SHEETS
08	Riv	111	1.5	41	82

Dilarazaman. 03/15/13
REGISTERED ELECTRICAL ENGINEER DATE

6-17-13
PLANS APPROVAL DATE

REGISTERED PROFESSIONAL ENGINEER
DILARA H. ZAMAN
No. E 18356
Exp. 6-30-14
ELECTRICAL
STATE OF CALIFORNIA

THE STATE OF CALIFORNIA OR ITS OFFICERS OR AGENTS SHALL NOT BE RESPONSIBLE FOR THE ACCURACY OR COMPLETENESS OF SCANNED COPIES OF THIS PLAN SHEET.

TEMPORARY SIGNAL SYSTEM

SHEET No.	(N) TEMPORARY SIGNAL SYSTEM
E-1	1
E-2	1

(N) NOT A SEPARATE PAY ITEM, FOR INFORMATION ONLY.

TEMPORARY FLASHING BEACON

SHEET No.	(N) 1½"C	(N) No. 8 CONDUCTOR	(N) No. 10 CONDUCTOR
	LF	LF	LF
E-3	50	80	160
E-4	50	80	160

(N) NOT A SEPARATE PAY ITEM, FOR INFORMATION ONLY.

ELECTRICAL QUANTITIES
E-9

STATE OF CALIFORNIA - DEPARTMENT OF TRANSPORTATION
Caltrans ELECTRICAL DESIGN A

FUNCTIONAL SUPERVISOR: DAVID A. GONZALEZ
CALCULATED-DESIGNED BY: NASIMA HYDER
CHECKED BY: DILARA ZAMAN
REVISED BY: DZ
DATE REVISED: 01/2013

LAST REVISION 03-12-13
DATE PLOTTED => 14-AUG-2013
TIME PLOTTED => 05:31

DIST	COUNTY	ROUTE	POST MILES TOTAL PROJECT	SHEET No.	TOTAL SHEETS
08	Riv	111	1.5	42	82

REGISTERED CIVIL ENGINEER 2/20/13 DATE

6-17-13
PLANS APPROVAL DATE

REGISTERED PROFESSIONAL ENGINEER VICTOR O. LOPEZ No. C61373 Exp. 6-30-13 CIVIL STATE OF CALIFORNIA

The State of California or its officers or agents shall not be responsible for the accuracy or completeness of electronic copies of this plan sheet.

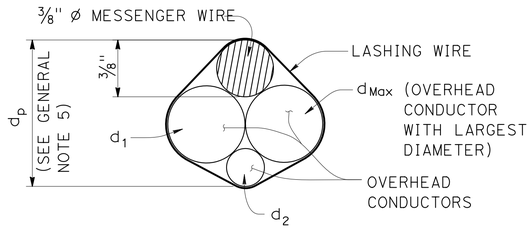

$d_p = 3/8" + d_{Max} + 0.30 * (d_1 + d_2 + ... d_n)$

PROJECTED DEPTH OF OVERHEAD BUNDLE, (d_p)

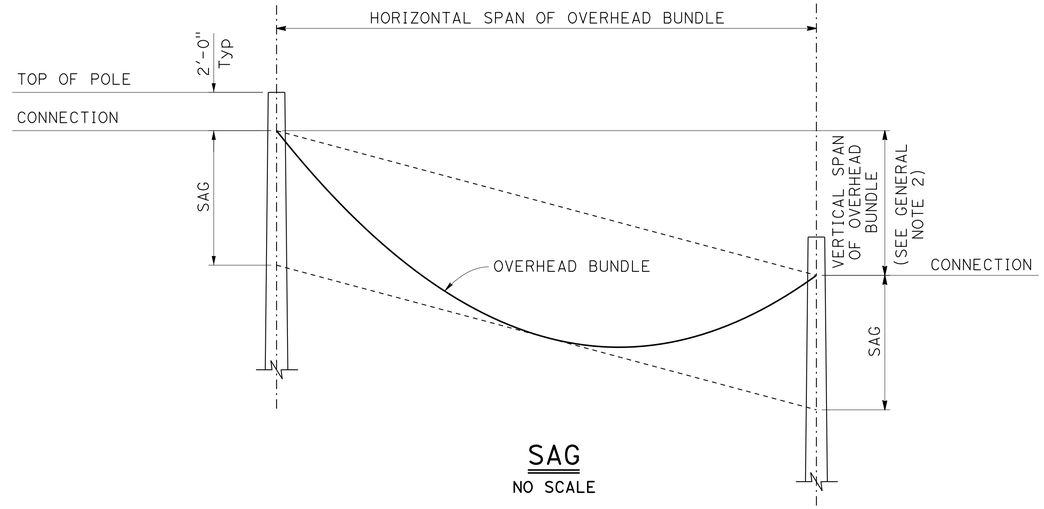

SAG

NO SCALE

Design: AASHTO Standard Specifications for Structural Supports for Highway Signs, Luminaires and Traffic Signals, Fifth Edition (LTS-5).

GROUP LOAD COMBINATIONS:

I Dead Load
II Dead Load + Wind Load
III Dead Load + 0.5 (Wind Load) + Ice Load
IV Fatigue: Not used

LOADING:

Wind Loading: 100 mph (3-second gust)
Wind Recurrence Interval: 10 years
Combined height, exposure, and elevated terrain factor = 1.05 (Exposure C, structure is not located on or over the top half of a ridge, hill, or escarpment)

Ice Loading: 3.0 psf on surfaces, 0.60 in radial thickness of ice at a unit weight of 60 pcf on overhead bundles

BASIC DESIGN VALUES:

Timber Poles: Fb = 1850 psi
Fv = 110 psi
Fcp = 230 psi
Fc = 950 psi
E = 1500 x 10^3 psi

DESIGN WIRE BREAKING STRENGTHS:

ASTM A475, Utilities Grade, 7 strand modified by termination efficiency factor of 0.8

FOUNDATION DESIGN NOTES:

1. Pole embedment depth design is based on Broms' approximate procedure as described in Article 13.6 of AASHTO LTS-5.

2. Embedment depth is calculated based on following soil parameters,
Cohesive Soil:
Shear strength of soil c = 1500 psf.
Cohesionless Soil:
Ø = 30 deg, γ = 120 pcf.
Soil assumed to be unsaturated.

3. An overload factor of 2.0 and an undercapacity factor of 0.7 were used for safety factor of 2.86.

4. Allowable vertical bearing pressure at the end bearing of poles is 3000 psf at 6 feet or more embedment.

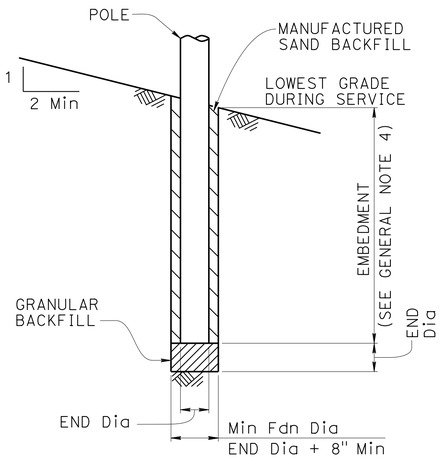

POLE FOUNDATION

GENERAL NOTES:

1. The messenger wire and any combination of overhead conductors must not exceed either a self weight of 3.0 lb/ft or the maximun d_p.

2. The maximum vertical span is 10% of the horizontal span.

3. For poles with adjacent unbalanced horizontal spans, the shortest horizontal span must be at least 50% of the largest horizontal span.

4. Add 2'-0" for slopes above 1V:4H.

5. For a pole supporting multiple spans, calculate d_p for each span and use the largest value.

6. Do not exceed the attachments shown.

DIAMETERS AND SELF WEIGHT OF OVERHEAD CONDUCTORS

CONDUCTOR OR CABLE TYPE	DIAMETER d (in)	WEIGHT w (plf)
3 CONDUCTOR SIGNAL CABLE (3CSC)	0.400	0.0980
5 CONDUCTOR SIGNAL CABLE (5CSC)	0.500	0.1560
9 CONDUCTOR SIGNAL CABLE (9CSC)	0.650	0.2760
12 CONDUCTOR SIGNAL CABLE (12CSC)	0.800	0.3970
28 CONDUCTOR SIGNAL CABLE (28CSC)	0.900	0.6490
1-#14	0.166	0.0235
1-#12	0.185	0.0330
1-#10	0.210	0.0476
1-#8	0.271	0.0774
1-#6	0.310	0.1130
1-#4	0.359	0.1690
1-#3	0.388	0.2080
1-#2	0.420	0.2560
1-#1	0.498	0.3340
6-CONDUCTOR SIGNAL INTERCONNECT CABLE (SIC)	0.350	0.0860
12-CONDUCTOR SIGNAL INTERCONNECT CABLE (SIC)	0.500	0.1440
DETECTOR LEAD-IN CABLE (DLC)	0.310	0.0440
12 to 48-STRAND FIBER OPTIC CABLE (48FOC)	0.424	0.0600
72-STRAND FIBER OPTIC CABLE (72FOC)	0.484	0.0770
96-STRAND FIBER OPTIC CABLE (96FOC)	0.535	0.1050
144-STRAND FIBER OPTIC CABLE (144FOC)	0.670	0.1890
3/8" Ø MESSENGER WIRE	0.375	0.2730

NO SCALE

BRANCH CHIEF DAVID A. NEUMANN

	BY	CHECKED
DESIGN	VICTOR LOPEZ	JOEL MAGANA
DETAILS	SHUMEI JIANG	JOEL MAGANA
QUANTITIES	X	X

STATE OF CALIFORNIA DEPARTMENT OF TRANSPORTATION

DIVISION OF ENGINEERING SERVICES STRUCTURE DESIGN SPECIAL DESIGN BRANCH

BRIDGE NO. N/A
POST MILE 1.1/1.9

TEMPORARY WOOD POLES GENERAL NOTES

SES-1

STRUCTURES DESIGN SPECIAL DESIGN SHEET (ENGLISH) (REV. 09-01-10)

ORIGINAL SCALE IN INCHES FOR REDUCED PLANS 0 1 2 3

UNIT: 3619
PROJECT NUMBER & PHASE: 0800000714
CONTRACT NO.: 08-449101

DISREGARD PRINTS BEARING EARLIER REVISION DATES

REVISION DATES 2-14-13 2-20-13

SHEET 1 OF 2

FILE => ea-08-449101_ses-sheet01.dgn

USERNAME => s124496 DATE PLOTTED => 14-AUG-2013 TIME PLOTTED => 05:33

DIST	COUNTY	ROUTE	POST MILES TOTAL PROJECT	SHEET No.	TOTAL SHEETS
08	Riv	111	1.5	43	82

REGISTERED CIVIL ENGINEER 2/20/13 DATE

6-17-13
PLANS APPROVAL DATE

The State of California or its officers or agents shall not be responsible for the accuracy or completeness of electronic copies of this plan sheet.

REGISTERED PROFESSIONAL ENGINEER VICTOR O. LOPEZ No. C61373 Exp. 6-30-13 CIVIL STATE OF CALIFORNIA

LEGEND

Wood Pole No Attachments

A Wood Pole with Attachments

—OH— Overhead Bundle

POLE SELECTION TABLE

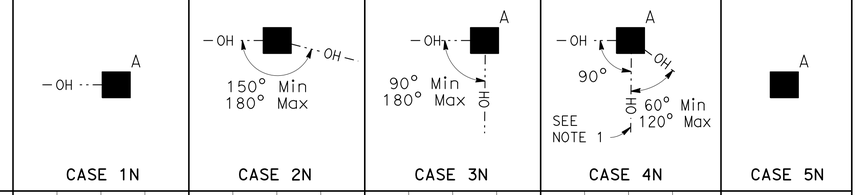

			CASE 1N				CASE 2N				CASE 3N				CASE 4N				CASE 5N
		MAXIMUM d_p	1"	1.5"	2.0"	2.5"	1"	1.5"	2.0"	2.5"	1.0"	1.5"	2.0"	2.5"	1"	1.5"	2.0"	2.5"	N/A
OVERHEAD BUNDLE HORIZONTAL SPAN Max	50'	MINIMUM POLE CLASS	H-1	H-2	H-2	H-2	4	3	2	1	H-2	H-2	H-3	H-3	H-4	H-4	H-4	H-5	CLASS 1 E = 10'
		POLE EMBEDMENT (E)	11'				10'				11'				12'				
	100'	MINIMUM POLE CLASS	H-2	H-3	H-4	H-5	1	H-1	H-2	H-3	H-4	H-5	H-5	H-6	H-5	H-5	H-6		
		POLE EMBEDMENT (E)	12'				11'				12'				12'				
	150'	MINIMUM POLE CLASS	H-4	H-5	H-6		H-1	H-2	H-3	H-5	H-6				H-6				
		POLE EMBEDMENT (E)	12'				12'				12'				12'				
	200'	MINIMUM POLE CLASS	H-5	H-6			H-2	H-3	H-5										
		POLE EMBEDMENT (E)	12'				12'												

1. CCTV camera assembly or vehicle detection system
2. Overhead bundle consisting of a 3/8" ø messenger wire and overhead conductors and lashing wire.
3. Luminaire with mast arm
4. Pedestrian pushbutton
5. Signal face with 3 indications or single sheet sign panel (10 SQFT Max)
6. Riser with weather head as required
7. Pull box as required
8. Grounding as required
9. Single section flashing beacon or single sheet sign panel (4 SQFT Max)
10. Single sheet sign panel (4' x 4' Max) or signal face with 3 indications
11. Flashing beacon control assembly
12. NEMA 3R enclosure, 26"(W) x 56"(H) x 12"(D) Max dimensions. Max weight including batteries, 450 lbs
13. 25' SQFT Max total photovoltaic panels mounted as shown as required
14. 2-section 12" flashing beacon

NOTES:

1. In addition to other restrictions on maximum horizontal span, this horizontal span must not exceed 100'.
2. Cases 1N, 3N and 4N may substitute the attachments shown in Case 5N if the photovoltaic panel is not included.

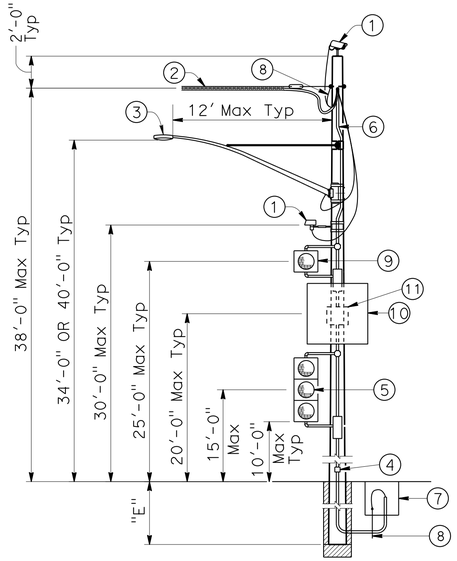

CASE 1N
POLE AT DEAD END
WITH ATTACHMENTS
SEE NOTE 2

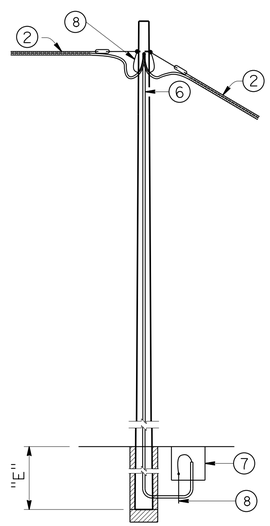

CASE 2N
POLE AT TANGENT
WITHOUT ATTACHMENTS

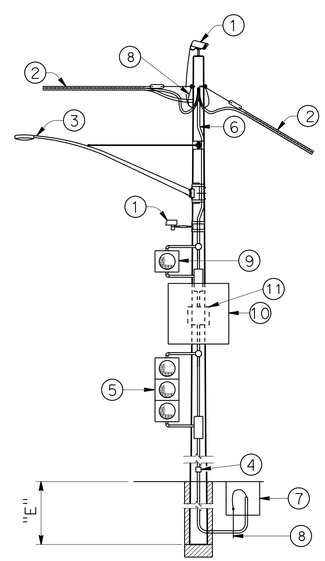

CASE 3N
POLE AT TANGENT OR CORNER
WITH ATTACHMENTS
SEE NOTE 2

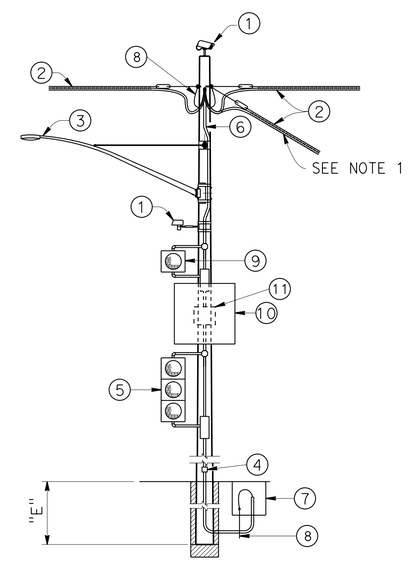

CASE 4N
POLE AT JUNCTION
WITH ATTACHMENTS
SEE NOTE 2

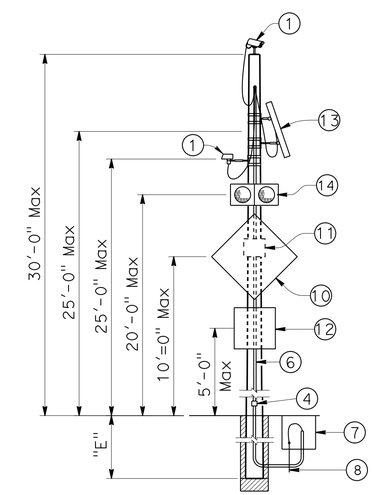

CASE 5N
POLE WITHOUT OVERHEAD BUNDLE
WITH ATTACHMENTS

NO SCALE

BRANCH CHIEF	DAVID A. NEUMANN		
DESIGN	BY VICTOR LOPEZ	CHECKED JOEL MAGANA	
DETAILS	BY SHUMEI JIANG	CHECKED JOEL MAGANA	
QUANTITIES	BY X	CHECKED X	

STATE OF CALIFORNIA
DEPARTMENT OF TRANSPORTATION

DIVISION OF ENGINEERING SERVICES
STRUCTURE DESIGN
SPECIAL DESIGN BRANCH

BRIDGE NO. N/A
POST MILE 1.1/1.9

TEMPORARY WOOD POLES
NON-GUYED-NO SIGNALS ON SPANS

SES-2

STRUCTURES DESIGN SPECIAL DESIGN SHEET (ENGLISH) (REV. 09-01-10)

ORIGINAL SCALE IN INCHES FOR REDUCED PLANS 0 1 2 3

UNIT: 3619
PROJECT NUMBER & PHASE: 0800000714
CONTRACT NO.: 08-449101

DISREGARD PRINTS BEARING EARLIER REVISION DATES

REVISION DATES 2-14-13 2-20-13

SHEET 2 OF 2

FILE => ea-08-449101_ses-sheet02.dgn

USERNAME => s124496 DATE PLOTTED => 14-AUG-2013 TIME PLOTTED => 08:33

Dist	COUNTY	ROUTE	POST MILES TOTAL PROJECT	SHEET No.	TOTAL SHEETS
08	Riv	111	1.5	44	82

REGISTERED CIVIL ENGINEER

July 20, 2012
PLANS APPROVAL DATE

REGISTERED PROFESSIONAL ENGINEER
Roberta L. McLaughlin
No. C40375
Exp. 3-31-13
CIVIL
STATE OF CALIFORNIA

THE STATE OF CALIFORNIA OR ITS OFFICERS OR AGENTS SHALL NOT BE RESPONSIBLE FOR THE ACCURACY OR COMPLETENESS OF SCANNED COPIES OF THIS PLAN SHEET.

TO ACCOMPANY PLANS DATED 6-17-13

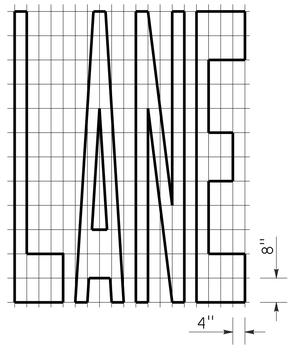

A=24 ft²

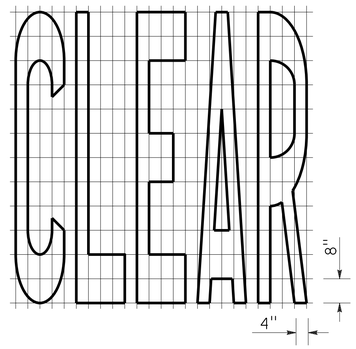

A=27 ft²

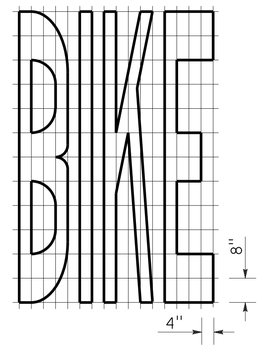

A=21 ft²

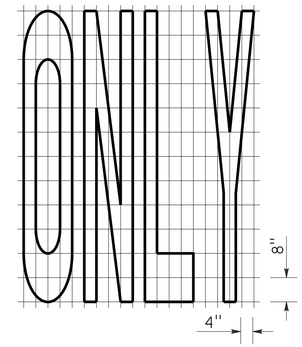

A=22 ft²

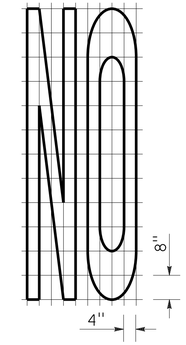

A=14 ft²

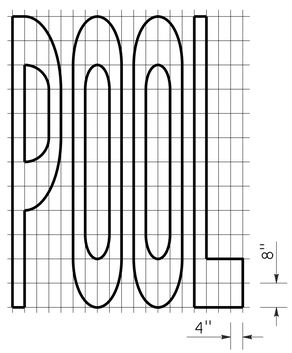

A=23 ft²

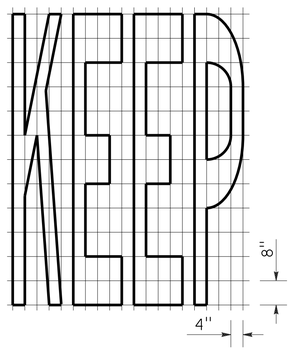

A=24 ft²

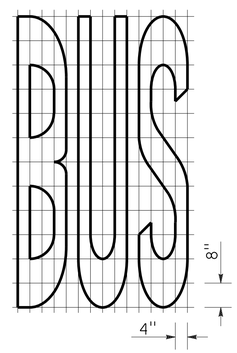

A=20 ft²

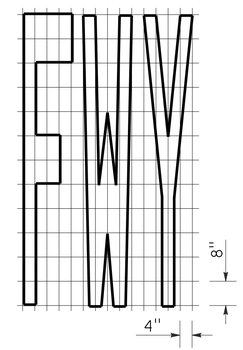

A=16 ft²

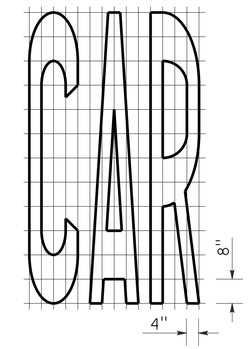

A=17 ft²

WORD MARKINGS			
ITEM	ft²	ITEM	ft²
LANE	24	NO	14
POOL	23	BIKE	21
CAR	17	BUS	20
CLEAR	27	ONLY	22
KEEP	24	FWY	16

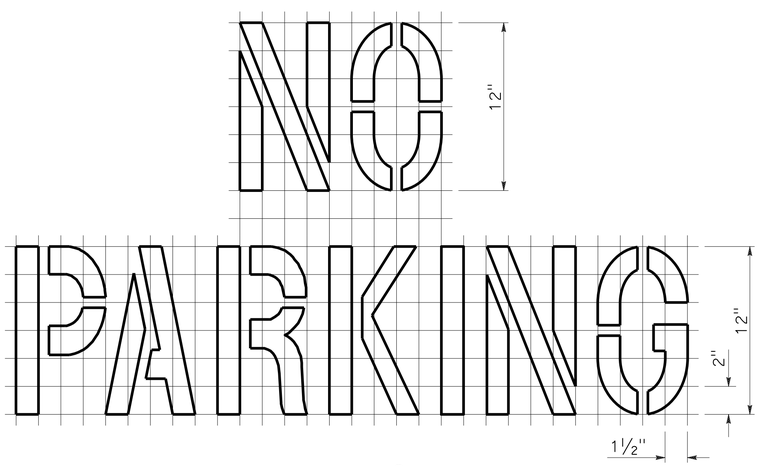

A=2 ft²

See Notes 6 and 7

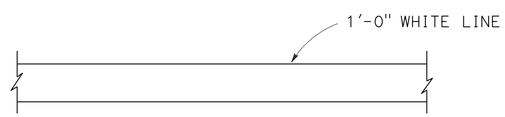

LIMIT LINE (STOP LINE)

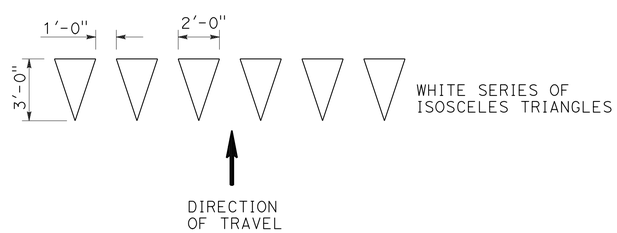

YIELD LINE

NOTES:

1. If a message consists of more than one word, it should read "UP", i.e., the first word should be nearest the driver.
2. The space between words should be at least four times the height of the characters for low speed roads, but not more than ten times the height of the characters. The space may be reduced appropriately where there is limited space because of local conditions.
3. Minor variations in dimensions may be accepted by the Engineer.
4. Portions of a letter, number or symbol may be separated by connecting segments not to exceed 2" in width.
5. The words "NO PARKING" pavement marking is to be used for parking facilities. For typical locations of markings, see Standard Plans A90A and A90B.
6. The words "NO PARKING", shall be painted in white letters no less than 1'-0" high on a contrasting background and located so that it is visible to traffic enforcement officials.

STATE OF CALIFORNIA
DEPARTMENT OF TRANSPORTATION

PAVEMENT MARKINGS WORDS, LIMIT AND YIELD LINES

NO SCALE

RSP A24E DATED JULY 20, 2012 SUPERSEDES STANDARD PLAN A24E
DATED MAY 20, 2011 - PAGE 17 OF THE STANDARD PLANS BOOK DATED 2010.

REVISED STANDARD PLAN RSP A24E

2010 REVISED STANDARD PLAN RSP A24E

6-12-12

Dist	COUNTY	ROUTE	POST MILES TOTAL PROJECT	SHEET No.	TOTAL SHEETS
08	Riv	111	1.5	45	82

Randell D. Hiatt
REGISTERED CIVIL ENGINEER

October 19, 2012
PLANS APPROVAL DATE

REGISTERED PROFESSIONAL ENGINEER
Randell D. Hiatt
No. C50200
Exp. 6-30-13
CIVIL
STATE OF CALIFORNIA

THE STATE OF CALIFORNIA OR ITS OFFICERS OR AGENTS SHALL NOT BE RESPONSIBLE FOR THE ACCURACY OR COMPLETENESS OF SCANNED COPIES OF THIS PLAN SHEET.

TO ACCOMPANY PLANS DATED 6-17-13

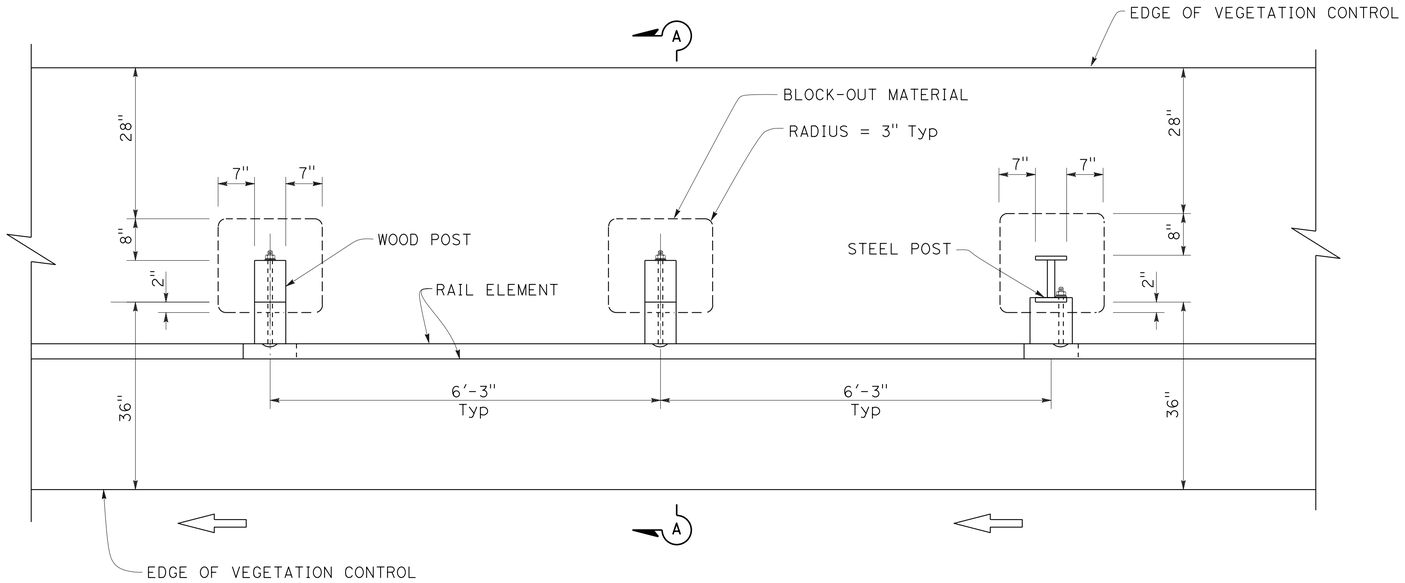

PLAN

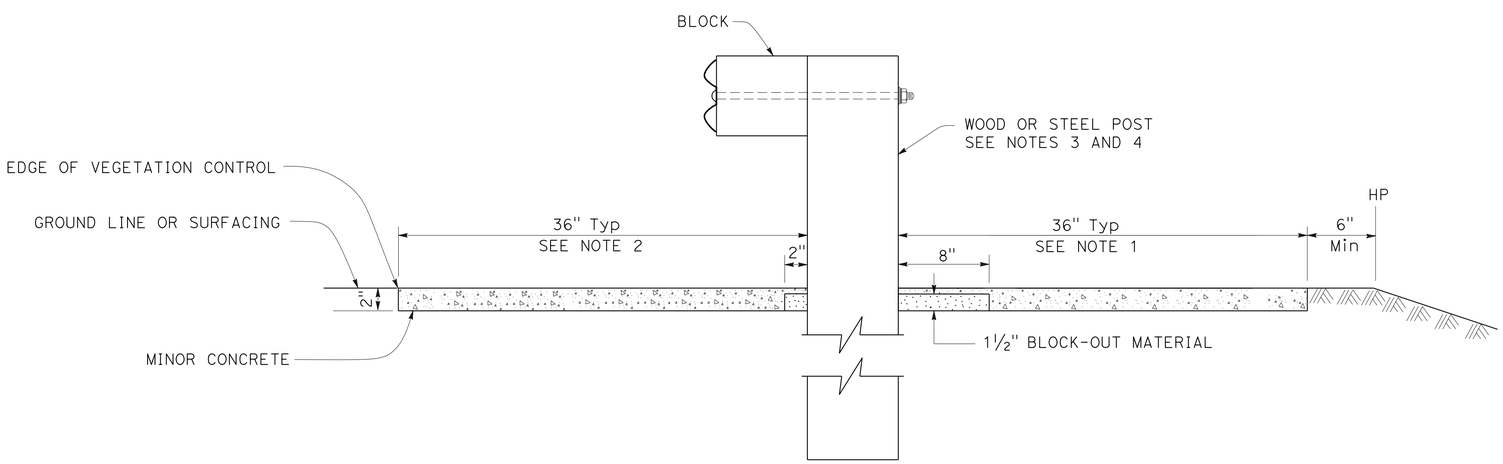

SECTION A-A

NOTES:

1. Where the distance between back of post and hinge point is less than 42", construct vegetation control to 6" from hinge point while maintaining the 8" block-out at back of post. If the 8" block-out at back of post can not be maintained, construct vegetation control flush with the back edge of post.
2. Where dike is constructed under railing, construct vegetation control to back edge of dike. Where paved shoulder is constructed within 36" in front of the post, construct vegetation control to the edge of paved shoulder.
3. For wood post sizes, see Standard Plan A77C1.
4. For steel post sizes, see Standard Plan A77C2.
5. For details not shown, see Standard Plans A77A1 and A77A2.

STATE OF CALIFORNIA
DEPARTMENT OF TRANSPORTATION

METAL BEAM GUARD RAILING TYPICAL VEGETATION CONTROL STANDARD RAILING SECTION

NO SCALE

RSP A77C5 DATED OCTOBER 19, 2012 SUPERSEDES STANDARD PLAN A77C5 DATED MAY 20, 2011 - PAGE 53 OF THE STANDARD PLANS BOOK DATED 2010.

REVISED STANDARD PLAN RSP A77C5

2010 REVISED STANDARD PLAN RSP A77C5

9-26-12

Dist	COUNTY	ROUTE	POST MILES TOTAL PROJECT	SHEET No.	TOTAL SHEETS
08	Riv	111	1.5	46	82

Randell D. Hiatt
REGISTERED CIVIL ENGINEER

October 19, 2012
PLANS APPROVAL DATE

REGISTERED PROFESSIONAL ENGINEER
Randell D. Hiatt
No. C50200
Exp. 6-30-13
CIVIL
STATE OF CALIFORNIA

THE STATE OF CALIFORNIA OR ITS OFFICERS OR AGENTS SHALL NOT BE RESPONSIBLE FOR THE ACCURACY OR COMPLETENESS OF SCANNED COPIES OF THIS PLAN SHEET.

TO ACCOMPANY PLANS DATED 6-17-13

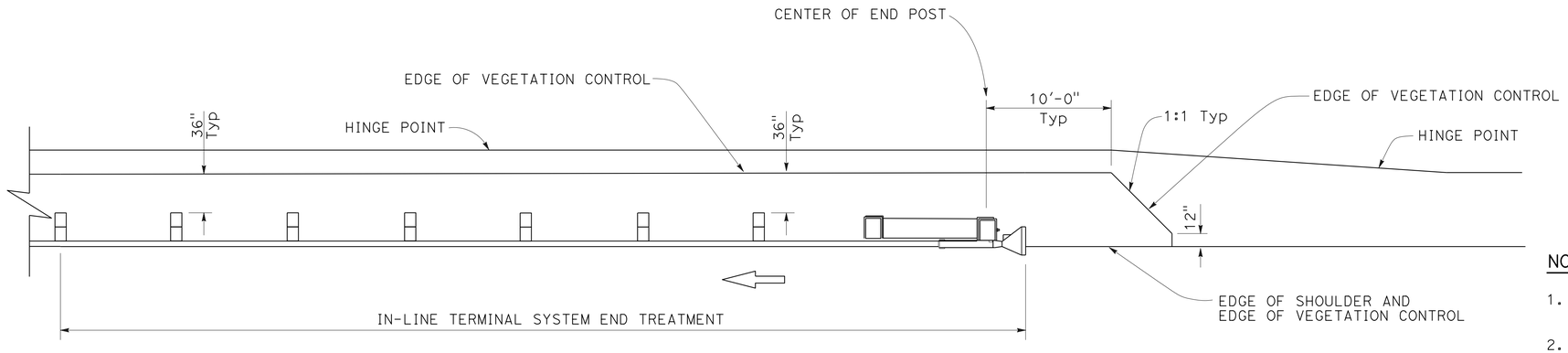

PLAN

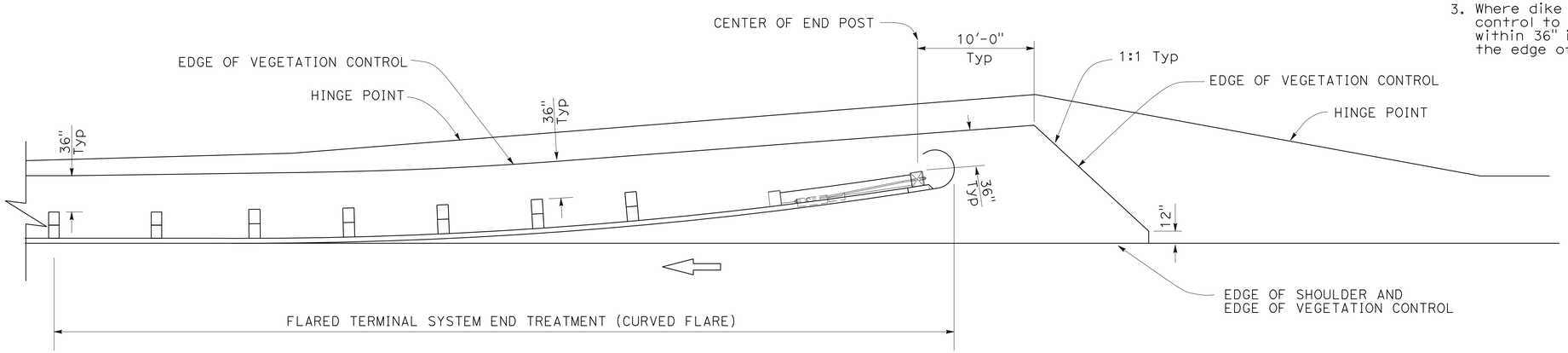

PLAN

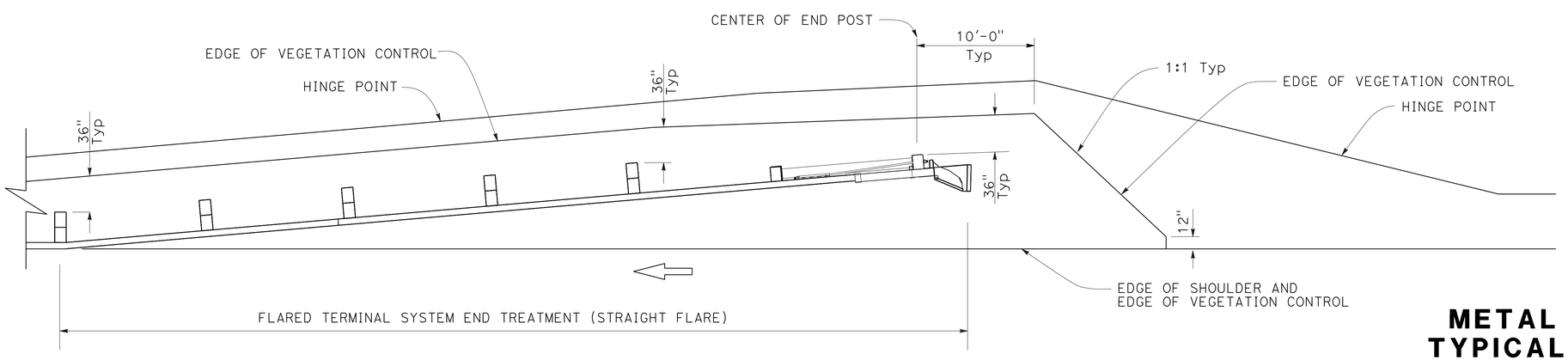

PLAN

NOTES:

1. See Revised Standard Plan RSP A77C5 for additional vegetation control details.
2. Where the distance between back of post and hinge point is less than 42", construct vegetation control to 6" from hinge point while maintaining the 8" block-out at back of post. If the 8" block-out at back of post can not be maintained, construct vegetation control flush with the back edge of post.
3. Where dike is constructed under railing, construct vegetation control to back edge of dike. Where paved shoulder is constructed within 36" in front of the post, construct vegetation control to the edge of paved shoulder.

STATE OF CALIFORNIA
DEPARTMENT OF TRANSPORTATION

METAL BEAM GUARD RAILING TYPICAL VEGETATION CONTROL FOR TERMINAL SYSTEM END TREATMENTS

NO SCALE

RSP A77C6 DATED OCTOBER 19, 2012 SUPERSEDES STANDARD PLAN A77C6 DATED MAY 20, 2011 - PAGE 54 OF THE STANDARD PLANS BOOK DATED 2010.

REVISED STANDARD PLAN RSP A77C6

2010 REVISED STANDARD PLAN RSP A77C6

9-26-12

Dist	COUNTY	ROUTE	POST MILES TOTAL PROJECT	SHEET No.	TOTAL SHEETS
08	Riv	111	1.5	47	82

Randell D. Hiatt
REGISTERED CIVIL ENGINEER

October 19, 2012
PLANS APPROVAL DATE

REGISTERED PROFESSIONAL ENGINEER
Randell D. Hiatt
No. C50200
Exp. 6-30-13
CIVIL
STATE OF CALIFORNIA

THE STATE OF CALIFORNIA OR ITS OFFICERS OR AGENTS SHALL NOT BE RESPONSIBLE FOR THE ACCURACY OR COMPLETENESS OF SCANNED COPIES OF THIS PLAN SHEET.

TO ACCOMPANY PLANS DATED 6-17-13

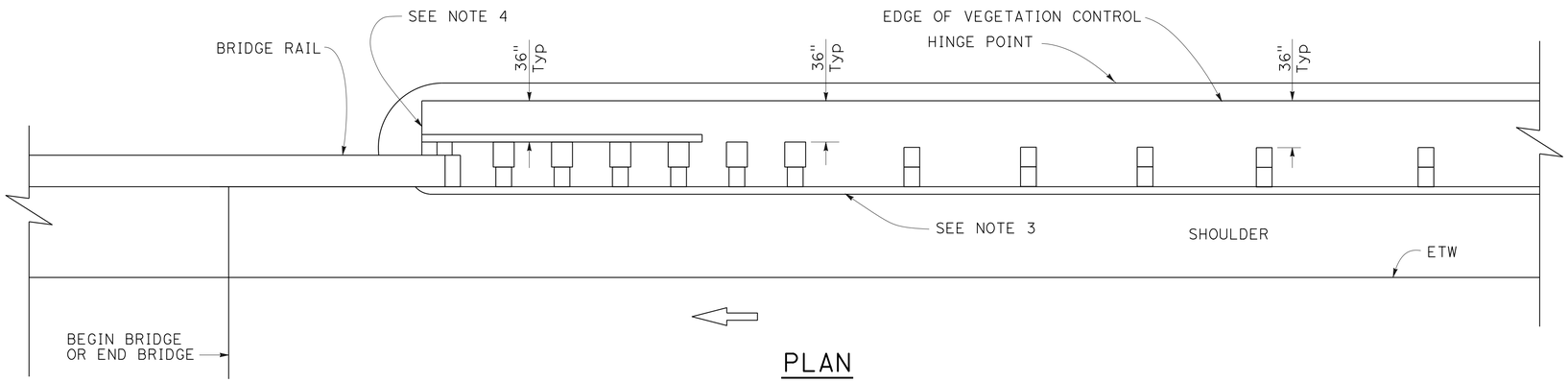

PLAN

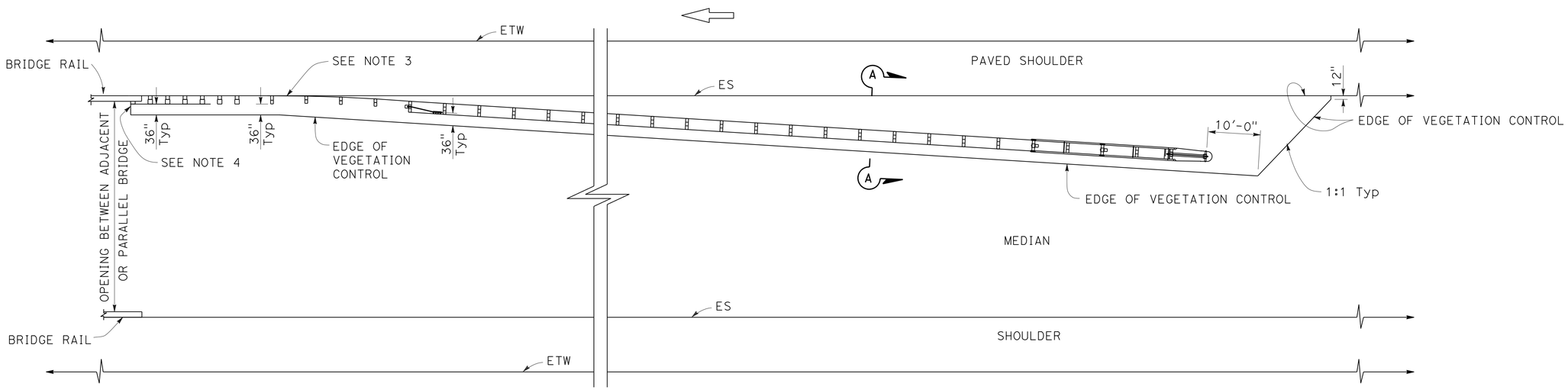

PLAN

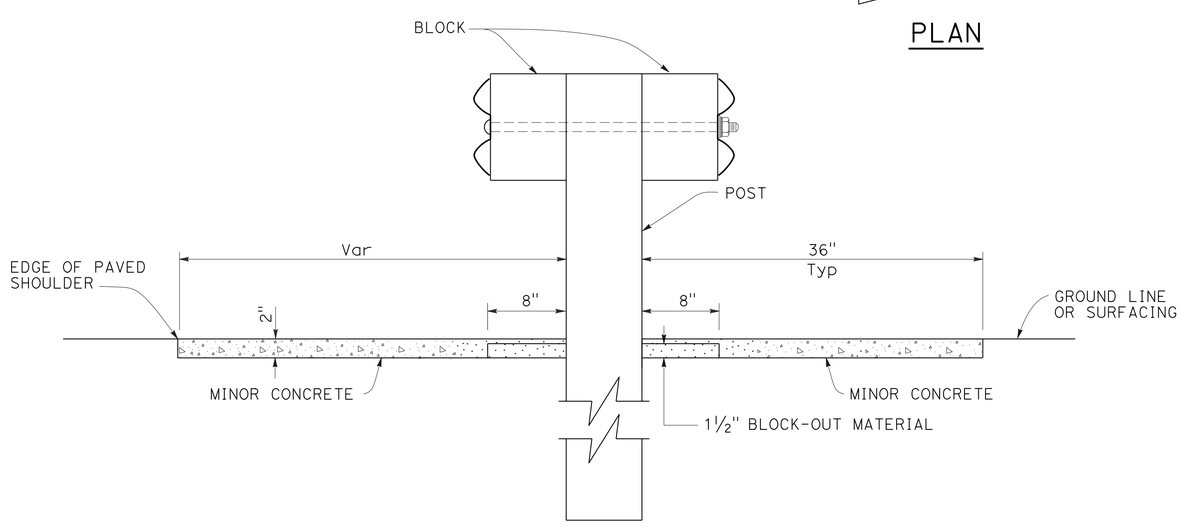

SECTION A-A

NOTES:

1. See Revised Standard Plan RSP A77C5 for additional vegetation control details.
2. Where the distance between back of post and hinge point is less than 42", construct vegetation control to 6" from hinge point while maintaining the 8" block-out at back of post. If the 8" block-out at back of post can not be maintained, construct vegetation control flush with the back edge of post.
3. Where dike is constructed under railing, construct vegetation control to back edge of dike. Where paved shoulder is constructed within 36" in front of the post, construct vegetation control to the edge of paved shoulder.
4. End vegetation control at end of backside rail element.

STATE OF CALIFORNIA
DEPARTMENT OF TRANSPORTATION

METAL BEAM GUARD RAILING TYPICAL VEGETATION CONTROL AT STRUCTURE APPROACH

NO SCALE

RSP A77C7 DATED OCTOBER 19, 2012 SUPERSEDES STANDARD PLAN A77C7 DATED MAY 20, 2011 - PAGE 55 OF THE STANDARD PLANS BOOK DATED 2010.

REVISED STANDARD PLAN RSP A77C7

2010 REVISED STANDARD PLAN RSP A77C7

9-26-12

Dist	COUNTY	ROUTE	POST MILES TOTAL PROJECT	SHEET No.	TOTAL SHEETS
08	Riv	111	1.5	48	82

Randell D. Hiatt
REGISTERED CIVIL ENGINEER

October 19, 2012
PLANS APPROVAL DATE

REGISTERED PROFESSIONAL ENGINEER
Randell D. Hiatt
No. C50200
Exp. 6-30-13
CIVIL
STATE OF CALIFORNIA

THE STATE OF CALIFORNIA OR ITS OFFICERS OR AGENTS SHALL NOT BE RESPONSIBLE FOR THE ACCURACY OR COMPLETENESS OF SCANNED COPIES OF THIS PLAN SHEET.

TO ACCOMPANY PLANS DATED 6-17-13

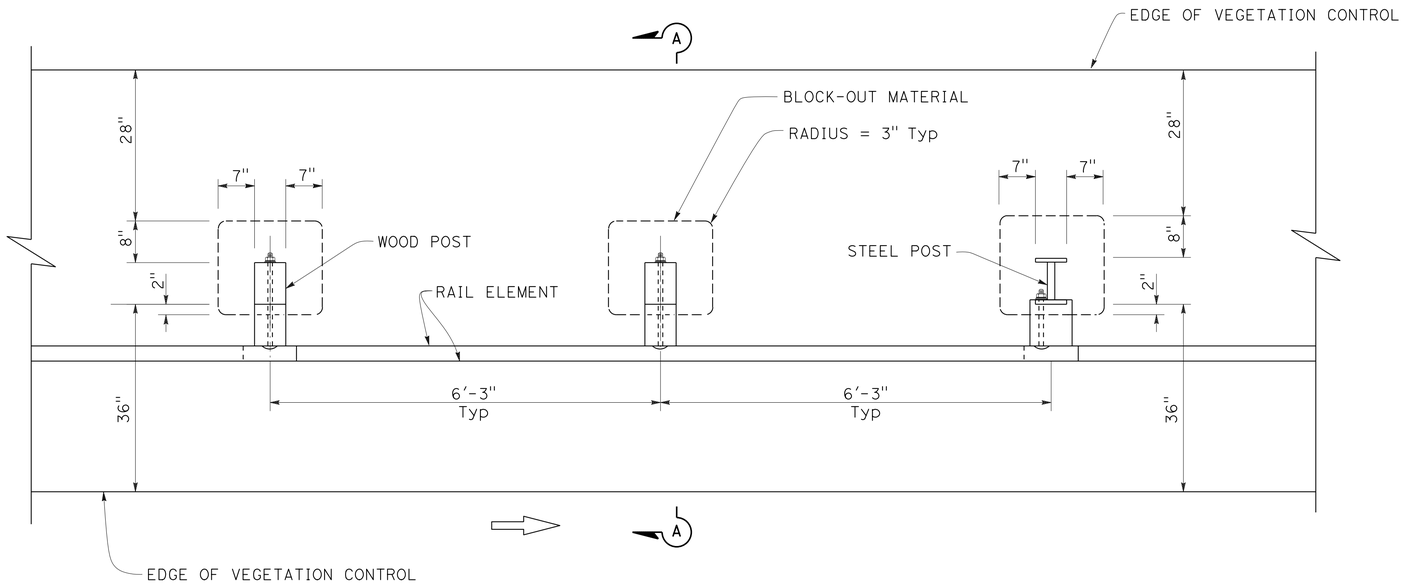

PLAN

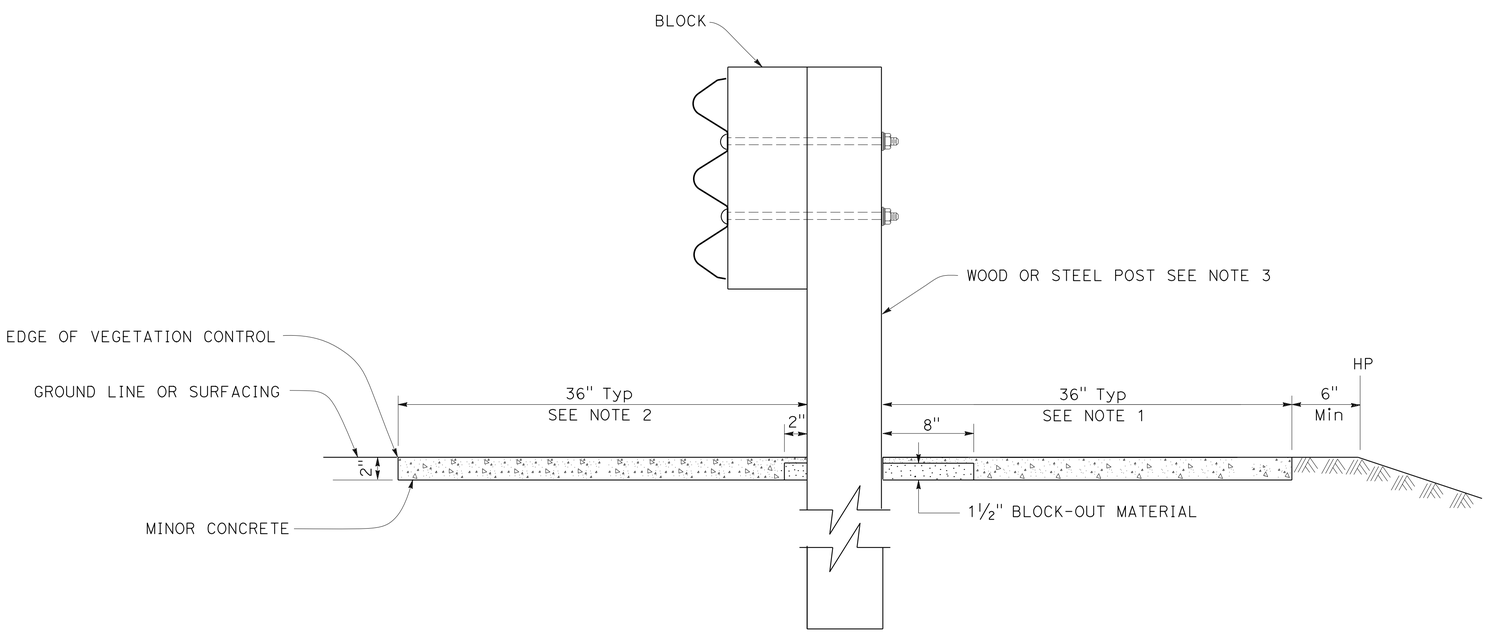

SECTION A-A

NOTES:

1. Where the distance between back of post and hinge point is less than 42", construct vegetation control to 6" from hinge point while maintaining the 8" block-out at back of post. If the 8" block-out at back of post can not be maintained, construct vegetation control flush with the back edge of post.
2. Where dike is constructed under barrier, construct vegetation control to back edge of dike. Where paved shoulder is constructed within 36" in front of the post, construct vegetation control to the edge of paved shoulder.
3. For wood and steel post sizes, see Standard Plan A77C2.
4. For details not shown, see Standard Plans A78A and A78B.

STATE OF CALIFORNIA
DEPARTMENT OF TRANSPORTATION

SINGLE THRIE BEAM BARRIER TYPICAL VEGETATION CONTROL STANDARD BARRIER RAILING SECTION

NO SCALE

RSP A78C3 DATED OCTOBER 19, 2012 SUPERSEDES STANDARD PLAN A78C3 DATED MAY 20, 2011 - PAGE 93 OF THE STANDARD PLANS BOOK DATED 2010.

REVISED STANDARD PLAN RSP A78C3

2010 REVISED STANDARD PLAN RSP A78C3

9-26-12

DIST	COUNTY	ROUTE	POST MILES TOTAL PROJECT	SHEET No.	TOTAL SHEETS
08	Riv	111	1.5	49	82

REGISTERED CIVIL ENGINEER

January 20, 2012
PLANS APPROVAL DATE

REGISTERED PROFESSIONAL ENGINEER
Cornelis M. Hakim
No. C55610
Exp. 12-31-12
CIVIL
STATE OF CALIFORNIA

THE STATE OF CALIFORNIA OR ITS OFFICERS OR AGENTS SHALL NOT BE RESPONSIBLE FOR THE ACCURACY OR COMPLETENESS OF SCANNED COPIES OF THIS PLAN SHEET.

TO ACCOMPANY PLANS DATED 6-17-13

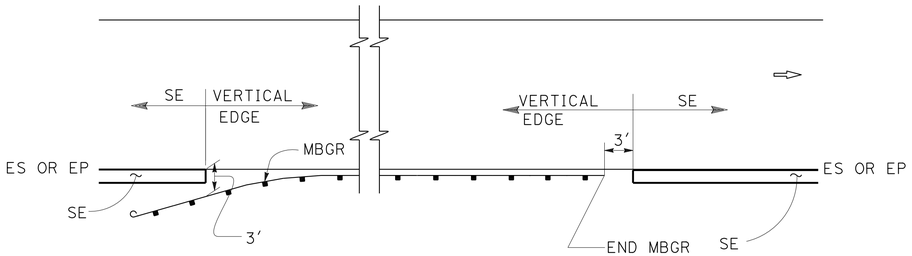

MBGR

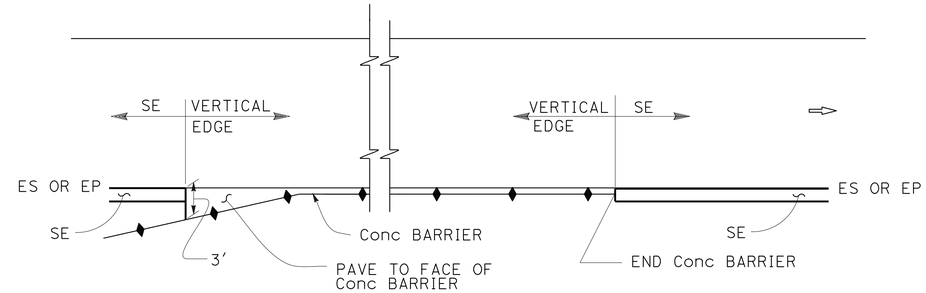

CONCRETE BARRIER

ABBREVIATIONS:

SE SAFETY EDGE

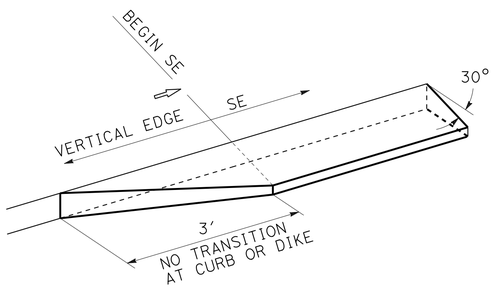

TRANSITION DETAIL
FOR CONCRETE ONLY

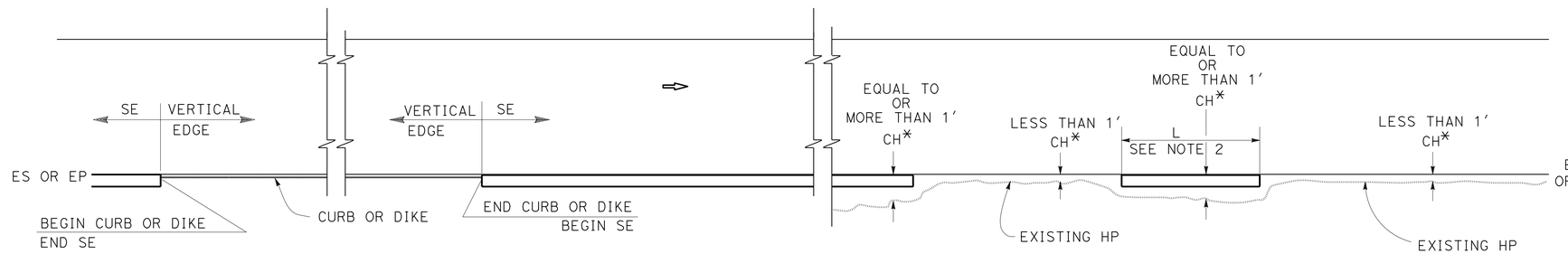

CURB OR DIKE

NARROW SIDE SLOPE

* CH = Distance from ES or EP to existing HP.

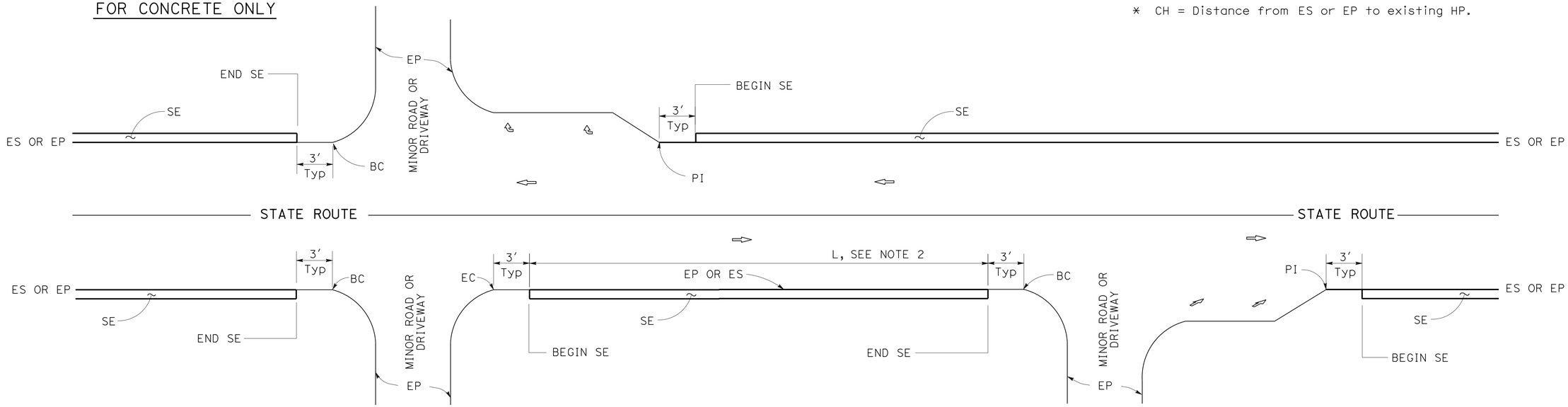

INTERSECTION

MINOR ROADWAY OR DRIVEWAY

DRIVEWAY AND INTERSECTION

NOTES:

1. For details not shown, see Revised Standard Plans RSP P75 and RSP P76.
2. Safety edge is optional when L is less than 30′.

STATE OF CALIFORNIA
DEPARTMENT OF TRANSPORTATION

PAVEMENT EDGE TREATMENTS

NO SCALE

RSP P74 DATED JANUARY 20, 2012 SUPPLEMENTS THE STANDARD PLANS BOOK DATED 2010.

REVISED STANDARD PLAN RSP P74

2010 REVISED STANDARD PLAN RSP P74

01-05-12

DIST	COUNTY	ROUTE	POST MILES TOTAL PROJECT	SHEET No.	TOTAL SHEETS
08	Riv	111	1.5	50	82

REGISTERED CIVIL ENGINEER

January 20, 2012
PLANS APPROVAL DATE

REGISTERED PROFESSIONAL ENGINEER
Cornelis M. Hakim
No. C55610
Exp. 12-31-12
CIVIL
STATE OF CALIFORNIA

THE STATE OF CALIFORNIA OR ITS OFFICERS OR AGENTS SHALL NOT BE RESPONSIBLE FOR THE ACCURACY OR COMPLETENESS OF SCANNED COPIES OF THIS PLAN SHEET.

TO ACCOMPANY PLANS DATED 6-17-13

LEGEND:

- HMA PAVEMENT
- HMA OR CONCRETE PAVEMENT
- CONCRETE PAVEMENT

ABBREVIATIONS:

SE SAFETY EDGE

TT TOTAL THICKNESS OF SE

HW HINGE WIDTH, DISTANCE FROM ES OR EP TO HP

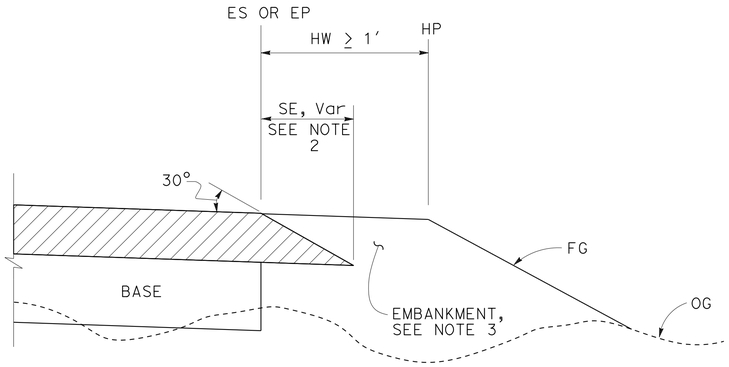

CASE K
Safety Edge - Fill Section, HW ≥ 1′

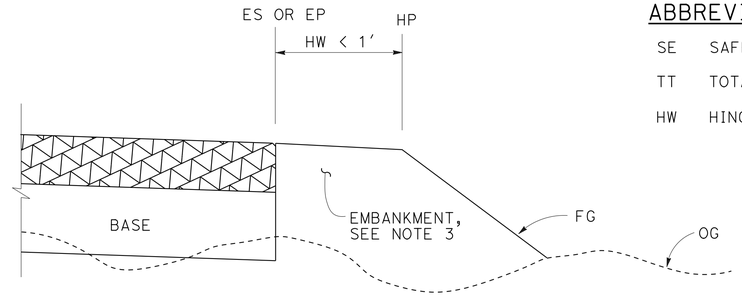

CASE L
Vertical Edge - Fill Section, HW < 1′

FILL SECTION

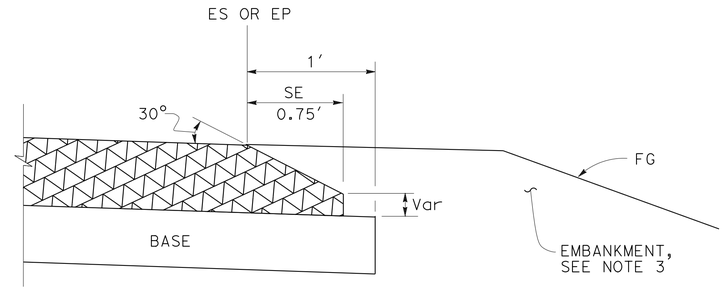

DETAIL "B"
For HMA pavement thickness more than 0.43′ or concrete pavement

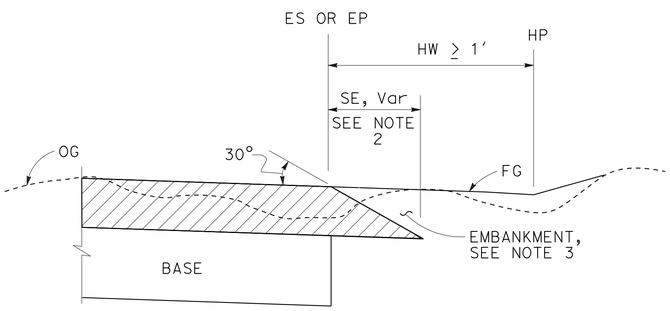

CASE M
Safety Edge - Cut Section, HW ≥ 1′

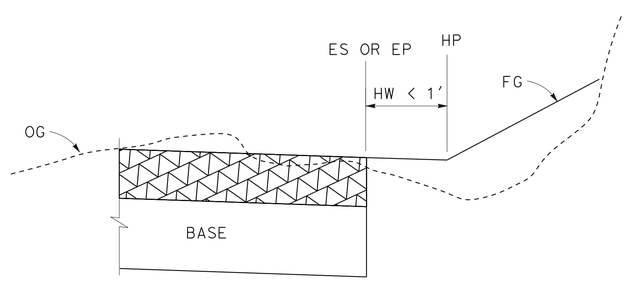

CASE N
Vertical Edge - Cut Section, HW < 1′

CUT SECTION

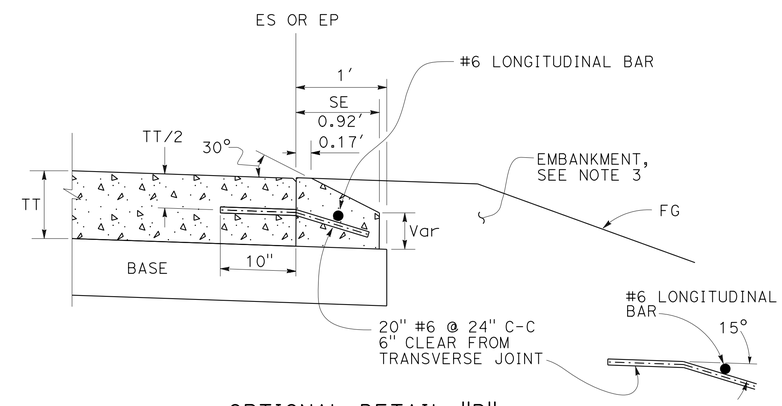

OPTIONAL DETAIL "B"
For concrete pavement
See Note 4

NOTES:

1. For limits of safety edge and vertical edge treatments, see Revised Standard Plan RSP P74
2. Details shown for HMA pavement thickness less than 0.43′. See Detail "B" for HMA pavement thickness more than 0.43′ or concrete pavement.
3. For locations and limits of embankment see project plans.
4. Safety edge transverse joint must match pavement transverse joint. End of #6 longitudinal bar must be 2" ±½" clear from transverse joint.
5. Safety edge is not needed in the area of MBGR, barrier, right turn lane and acceleration lane. See Revised Standard Plan RSP P74.

STATE OF CALIFORNIA
DEPARTMENT OF TRANSPORTATION

PAVEMENT EDGE TREATMENTS-NEW CONSTRUCTION

NO SCALE

RSP P76 DATED JANUARY 20, 2012 SUPPLEMENTS THE STANDARD PLANS BOOK DATED 2010.

REVISED STANDARD PLAN RSP P76

2010 REVISED STANDARD PLAN RSP P76

TO ACCOMPANY PLANS DATED 6-17-13

Dist	COUNTY	ROUTE	POST MILES TOTAL PROJECT	SHEET No.	TOTAL SHEETS
08	Riv	111	1.5	51	82

REGISTERED CIVIL ENGINEER

October 19, 2012
PLANS APPROVAL DATE

REGISTERED PROFESSIONAL ENGINEER Glenn DeCou No. C34547 Exp. 9-30-13 CIVIL STATE OF CALIFORNIA

THE STATE OF CALIFORNIA OR ITS OFFICERS OR AGENTS SHALL NOT BE RESPONSIBLE FOR THE ACCURACY OR COMPLETENESS OF SCANNED COPIES OF THIS PLAN SHEET.

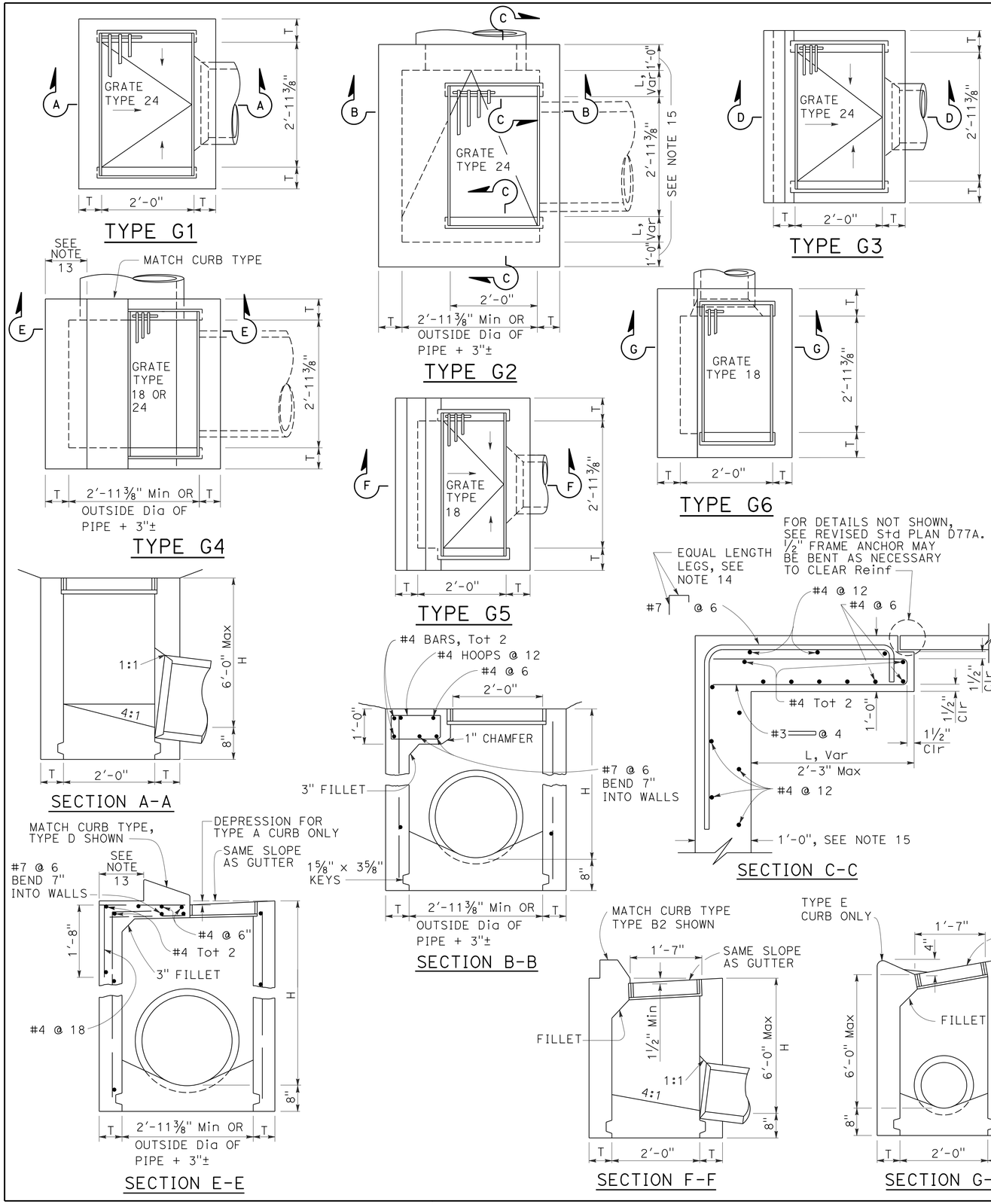

NOTES:

1. "H" is the difference in elevation between the outlet pipe flow line and the normal gutter grade line undepressed.
2. For "T" wall thickness, see Table A below.
3. Wall reinforcing not required when "H" is 8'-0" or less and the unsupported width or length is 7'-0" or less. Walls exceeding these limits shall be reinforced with #4 bars @ 1'-6" ± centers placed 1½" clear to inside of box unless otherwise shown.
4. Inlet bottom reinforcing not required. See Standard Plan D74C for alternative reinforced bottom and alternative half round bottom.
5. Steps-None required where "H" is less than 2'-6". Where "H" is 2'-6" or more, install steps with lowest rung 1'-0" above the floor and highest rung not more than 6" below top of inlet. The distance between steps shall not exceed 1'-0" and shall be uniform throughout the length of the wall. Place steps in the wall without an opening. Steps inserts may be substituted for the bar steps. Step inserts shall comply with State Industrial Safety requirements. See Standard Plan D74C for step details.
6. Details shown apply to both metal and concrete pipe.
7. Pipe(s) can be placed in any wall.
8. Curb section shall match adjacent curb.
9. Basin floors shall have wood trowel finish and a minimum slope of 12:3 from all directions toward outlet pipe.
10. Set inlet so that grate bars are parallel to direction of principal surface flow.
11. See Revised Standard Plans D77A and D77B for grate and frame details and weights of miscellaneous iron and steel.
12. See Standard Plan D78A for gutter depression details.
13. This dimenison will vary with different grates, curbs types, box width and wall thickness.
14. Bar may be rotated as necessary to clear opening. Where "L" is 6" or less, bar may be omitted.
15. Where "L" is 6" or less, wall thickness shall be as shown in Table A.
16. Cast-in-place inlets to be formed around all pipes/stubs intersecting the inlet, and concrete poured in one continuous operation. Precast inlets shall have mortared connections conforming to details for Type GCP Inlet shown on Standard Plan D75B. See Standard Specifications for mortar composition.

TABLE A

CONCRETE QUANTITIES				
TYPE	H=3'-0" TO 8'-0" (T=6")		H=8'-1" TO 20'-0" (T=8")	
	H=3'-0" (CY)	ADDITIONAL PCC PER FOOT (CY)	H=8'-1" (CY)	ADDITIONAL PCC PER FOOT (CY)
G-1	0.95	0.220	See Note A	SEE NOTE A
G-2*	1.31	0.255	3.50	0.357
G-3	1.03	0.220	See Note A	SEE NOTE A
G-4* (TYPE 24)	1.27	0.255	3.48	0.357
G-4* (TYPE 18)	1.30	0.255	3.50	0.357
G-5	1.02	0.220	SEE NOTE A	SEE NOTE A
G-6	1.04	0.220	SEE NOTE A	SEE NOTE A

TABLE BASED ON 8" FLOOR SLAB. NO DEDUCTIONS ARE TO BE MADE TO THESE QUANTITIES BECAUSE OF PIPE OPENINGS, DIFFERENT FLOOR ALTERNATIVES OR DIFFERENT CURB TYPES. * QUANTITIES FOR TYPE G-2 AND G-4 INLETS BASED ON THE MINIMUM INTERIOR DIMENSIONS.

NOTE A:

Maximum allowable height 6'-0".

STATE OF CALIFORNIA
DEPARTMENT OF TRANSPORTATION

DRAINAGE INLETS

NO SCALE

RSP D73 DATED OCTOBER 19, 2012 SUPERSEDES STANDARD PLAN D73 DATED MAY 20, 2011 - PAGE 156 OF THE STANDARD PLANS BOOK DATED 2010.

REVISED STANDARD PLAN RSP D73

2010 REVISED STANDARD PLAN RSP D73

7-19-12

Dist	COUNTY	ROUTE	POST MILES TOTAL PROJECT	SHEET No.	TOTAL SHEETS
08	Riv	111	1.5	52	82

Raymond Don Tsztoo
REGISTERED CIVIL ENGINEER

April 19, 2013
PLANS APPROVAL DATE

REGISTERED PROFESSIONAL ENGINEER Raymond Don Tsztoo No. C37332 Exp. 6-30-14 CIVIL STATE OF CALIFORNIA

THE STATE OF CALIFORNIA OR ITS OFFICERS OR AGENTS SHALL NOT BE RESPONSIBLE FOR THE ACCURACY OR COMPLETENESS OF SCANNED COPIES OF THIS PLAN SHEET.

TO ACCOMPANY PLANS DATED 6-17-13

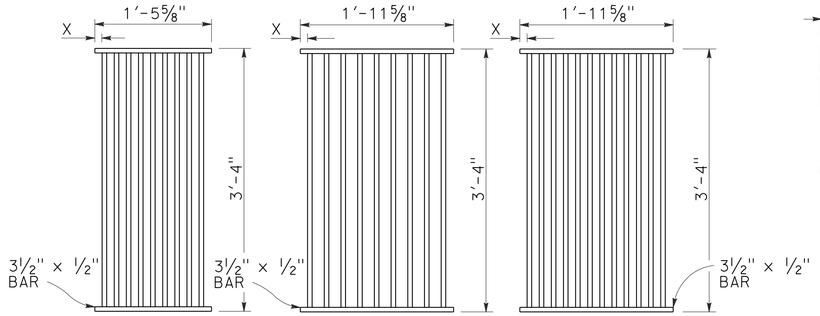

TYPE 18-9

1⅜" Clear spacing. Use within the roadbed on highways where bicycles and pedestrians are excluded.

TYPE 24-9

2" Clear spacing. Use in locations off the roadbed on all types of highways.

TYPE 24-12

1⅜" Clear spacing. Use within the roadbed on highways where bicycles and pedestrians are excluded.

RECTANGULAR GRATE DETAILS

(See table below)

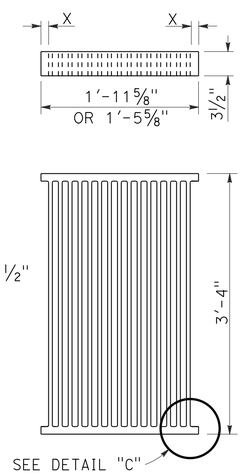

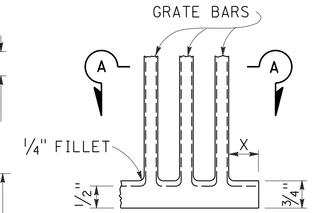

DETAIL "C"

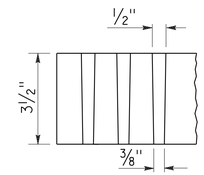

SECTION A-A

ALTERNATIVE CAST DUCTILE IRON GRATE OR CAST CARBON STEEL GRATE

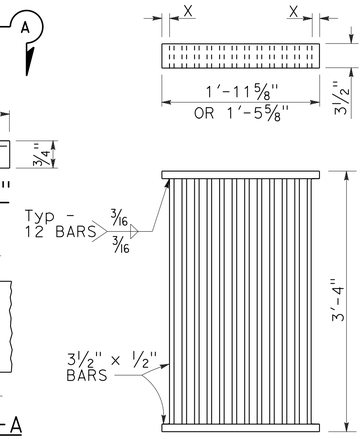

ALTERNATIVE WELDED GRATE

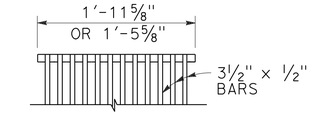

CAST END BLOCK

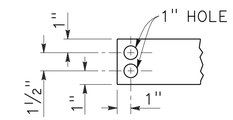

END OF BAR

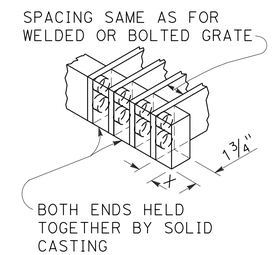

ALTERNATIVE CAST DUCTILE IRON OR CAST CARBON STEEL END BLOCK GRATE

NOTES:

1. Grate type numbers refer to approximate width of grate in inches and number of bars, respectively.
2. Contractor has the option of using cast ductile iron, cast carbon steel, welded, bolted, or cast end block grate.
3. Rounded top of bars optional on all grates.
4. Pipe inlets with a grate shall be placed so that bars parallel direction of principle surface flow.
5. Complete joint penetration butt welds may be substituted for the fillet welds on all anchors.
6. Standard square, hexagon, round or equivalent headed anchors may be substituted for the right angle hooks on the anchors shown on this plan.
7. Grate and frame weights are based on welded grates (weights of face angles, steps, protection bars, etc. are not included).
8. Connect chain to grate and frame only at locations shown on the plans. When chain is required, do not use cast ductile iron grates.

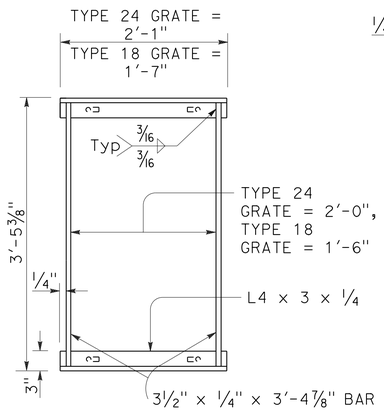

TYPICAL FRAME

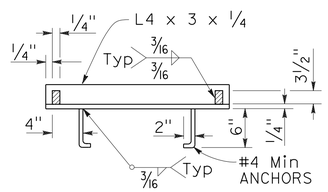

CROSS SECTION

(Thru frame)

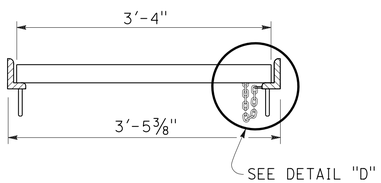

LONGITUDINAL SECTION

(Thru frame and grate)

RECTANGULAR FRAME DETAILS

(For all rectangular grates)

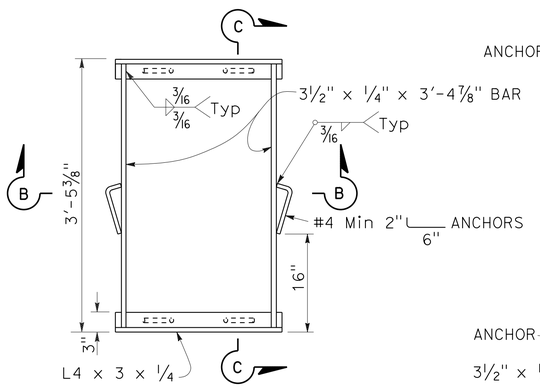

TYPICAL FRAME

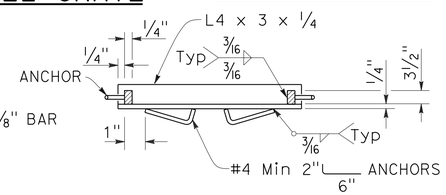

SECTION B-B

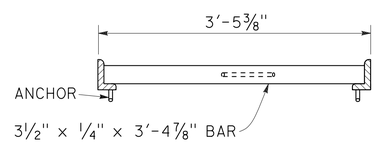

SECTION C-C

ALTERNATIVE ANCHOR FOR RECTANGULAR FRAME

(For details not shown, See Rectangular Frame Details)

INLET TYPE	GRATE TYPE	No. OF GRATES	WEIGHT LB
GDO	24-12	2	634
GOL-7	24-12	1	326
GOL-10	24-12	1	326
GO,G1,G2,G3,G4 (TYPE 24)	24-9	1	263
	24-12	1	326
G4 (TYPE 18),G5,G6	18-9	1	249
GT1	18-9	2	498
GT2	18-9	2	498
GT3	24-12	2	652
GT4	24-12	2	652
TRASH RACK			22
GRATE CHAIN			3

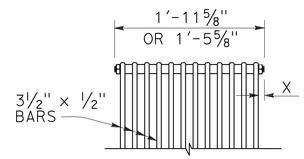

BOLTED END BLOCK

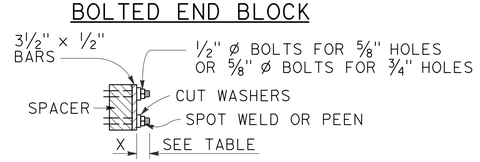

BOLTING DETAIL

ALTERNATIVE BOLTED GRATE

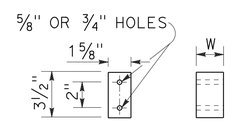

BAR SPACER

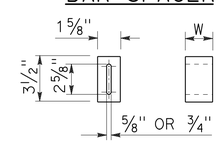

ALTERNATIVE SPACER

W = 1⅜" or 2"

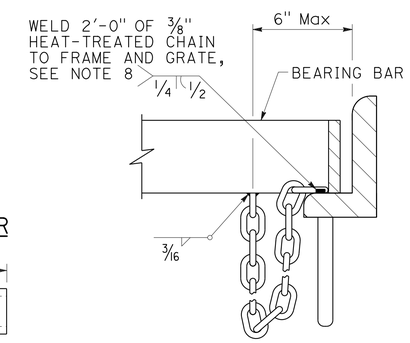

DETAIL "D"

(Steel grates only)

GRATE BAR SPACING TABLE

TYPE	No. OF BARS	CLEAR BAR SPACING	X
18-9	9	1⅜"	1 1/16"
24-9	9	2"	1 9/16"
24-12	12	1⅜"	1¼"

INLET TYPE	COVER TYPE	WEIGHT LB
OS	PLATE	174
OL-7	PLATE	170
OL-10	PLATE	170
OL-14	PLATE	170
OL-21	PLATE	170
OCP	PLATE	112
OCPI	PLATE	112
OCPI	REDWOOD	42
OMP	PLATE	177
OMPI	PLATE	177

BASIS FOR Misc IRON & STEEL FINAL PAY WEIGHTS FOR DRAINAGE INLETS

(See Note 7)

STATE OF CALIFORNIA
DEPARTMENT OF TRANSPORTATION

GRATE DETAILS No. 1

NO SCALE

RSP D77A DATED APRIL 19, 2013 SUPERSEDES RSP D77A DATED JULY 20, 2012 AND STANDARD PLAN D77A DATED MAY 20, 2011 - PAGE 164 OF THE STANDARD PLANS BOOK DATED 2010.

REVISED STANDARD PLAN RSP D77A

2010 REVISED STANDARD PLAN RSP D77A

4-4-13

Dist	COUNTY	ROUTE	POST MILES TOTAL PROJECT	SHEET No.	TOTAL SHEETS
08	Riv	111	1.5	53	82

REGISTERED CIVIL ENGINEER

April 20, 2012
PLANS APPROVAL DATE

REGISTERED PROFESSIONAL ENGINEER Gary Wang No. C58298 Exp. 6-30-12 CIVIL STATE OF CALIFORNIA

THE STATE OF CALIFORNIA OR ITS OFFICERS OR AGENTS SHALL NOT BE RESPONSIBLE FOR THE ACCURACY OR COMPLETENESS OF SCANNED COPIES OF THIS PLAN SHEET.

TO ACCOMPANY PLANS DATED 6-17-13

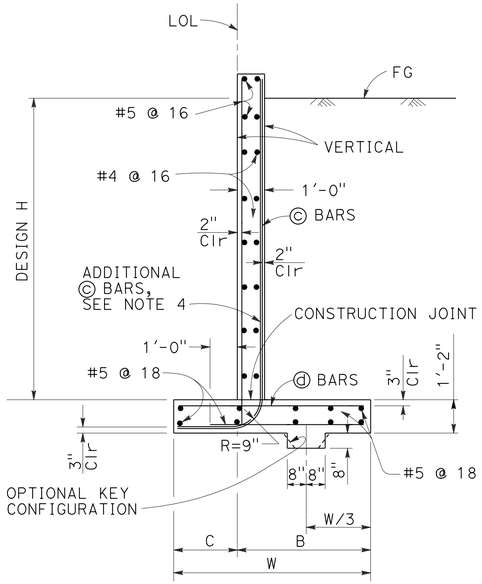

SPREAD FOOTING SECTION

Place concrete in toe against undisturbed material, except as permitted by the Engineer.

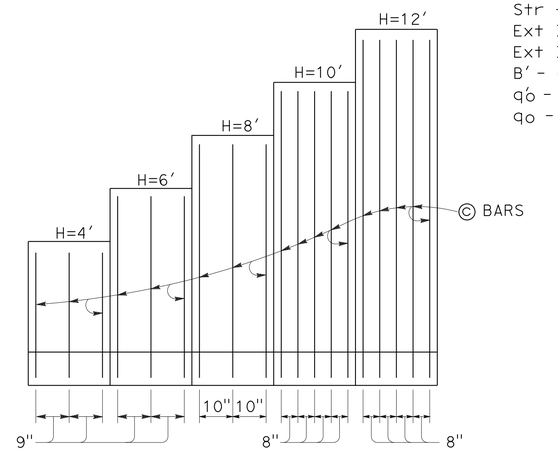

ELEVATION

SYMBOLS:

Ser - service limit state I
Str - strength limit state I
Ext I - extreme event limit state I
Ext II - extreme event limit state II
B' - effective footing width (ft)
q_o' - net bearing stress (ksf), OG assumed to be FG at toe
q_o - gross uniform bearing stress (ksf)

DESIGN CONDITIONS:

Design H may be exceeded by 6" before going to the next size. Special footing design is required where foundation material is incapable of supporting bearing stress listed in the table.

DESIGN NOTES:

DESIGN: AASHTO LRFD Bridge Design Specifications, 4th Edition with California Amendments

LS: Varied surcharge on level ground surface

DC: Stem Architectural Treatment of thickness up to 6" of concrete (75 psf) considered

CT: 54 kip transverse force applied at He = 32", distributed over 10 feet at the top of wall and 1 : 1 distribution down and outward. Distribution below footing taken no less than 40'.

SEISMIC: $k_h = 0.2$
$k_v = 0.0$

SOIL: $\phi = 34°$
$\gamma = 120$ pcf

REINFORCED CONCRETE: f'c = 3,600 psi
fy = 60,000 psi

LOAD COMBINATIONS AND LIMIT STATES:

Service I	Q = 1.00DC+1.00EV+1.00EH+1.00LS
Strength I	Q = αDC+βEV+ηEH+1.75LS
Extreme I	Q = 1.00DC+1.00EV+1.00EH+1.00EQD+1.00EQE
Extreme II	Q = 1.00DC+1.00EV+1.00EH+1.00CT

Where:

Q:	Force Effects
α:	1.25 or 0.90, Whichever Controls Design
β:	1.35 or 1.00, Whichever Controls Design
η:	1.50 or 0.90, Whichever Controls Design
DC:	Dead Load of Structure Components
EH:	Horizontal Earth Fill Pressure
EV:	Vertical Earth Pressure from Earth Fill Weight
LS:	Live Load Surcharge
EQE:	Seismic Earth Pressure
EQD:	Soil and Structural and Nonstructural Components Inertia
CT:	Vehicular Collision Force

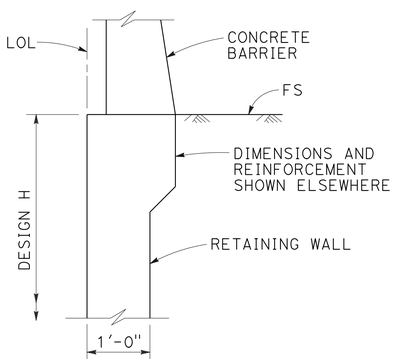

STEM HAUNCH DETAIL

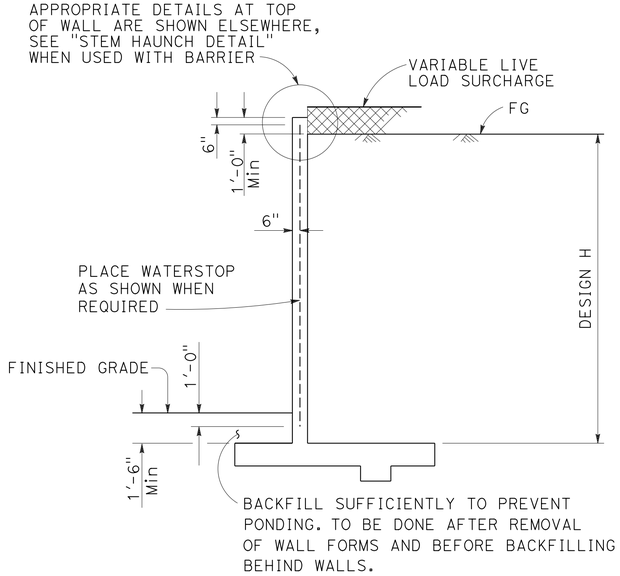

DESIGN SECTION

TABLE OF REINFORCING STEEL, DIMENSIONS AND DATA					
DESIGN H	4'	6'	8'	10'	12'
W	7'-0"	7'-0"	7'-3"	7'-5"	8'-2"
C	2'-3"	2'-3"	2'-3"	2'-5"	2'-7"
B	4'-9"	4'-9"	5'-0"	5'-0"	5'-7"
© BARS	#6 @ 9	#6 @ 9	#7 @ 10	#7 @ 8	#7 @ 8
ⓓ BARS	#5 @ 9	#5 @ 9	#6 @ 10	#7 @ 8	#7 @ 8
Ser: B', q_o'	6.7, 0.8	6.7, 1.0	6.3, 1.3	5.8, 1.6	6.2, 1.9
Str: B', q_o	6.6, 1.6	5.2, 1.7	3.7, 2.2	2.8, 3.3	3.0, 3.9
Ext I: B', q_o	5.6, 0.9	4.8, 1.4	4.1, 2.0	3.1, 3.2	2.7, 4.5
Ext II: B', q_o	2.8, 1.9	2.7, 2.5	2.8, 3.0	2.6, 3.7	3.4, 3.6

NOTES:

1. For details not shown and drainage notes see RSP B3-5
2. For wall stem joint details see B0-3 3-3 and B0-3 3-4
3. At © bars:
   H ≤ 6', no splices are allowed within 1'-8" above the top of footing.
   H > 6', no splices are allowed within H/4 above the top of footing.
4. Provide #6 @ 8" © bars in addition to tabulated © bars over a distance of 8'-0" measured from all expansion joints, begin wall and end wall location.

STATE OF CALIFORNIA
DEPARTMENT OF TRANSPORTATION

RETAINING WALL TYPE 1A (CASE 1)

NO SCALE

RSP B3-3A DATED APRIL 20, 2012 SUPPLEMENTS THE STANDARD PLANS BOOK DATED 2010.

REVISED STANDARD PLAN RSP B3-3A

2010 REVISED STANDARD PLAN RSP B3-3A

Dist	COUNTY	ROUTE	POST MILES TOTAL PROJECT	SHEET No.	TOTAL SHEETS
08	Riv	111	1.5	54	82

Gary Wang
REGISTERED CIVIL ENGINEER

April 20, 2012
PLANS APPROVAL DATE

REGISTERED PROFESSIONAL ENGINEER
Gary Wang
No. C58298
Exp. 6-30-12
CIVIL
STATE OF CALIFORNIA

THE STATE OF CALIFORNIA OR ITS OFFICERS OR AGENTS SHALL NOT BE RESPONSIBLE FOR THE ACCURACY OR COMPLETENESS OF SCANNED COPIES OF THIS PLAN SHEET.

TO ACCOMPANY PLANS DATED 6-17-13

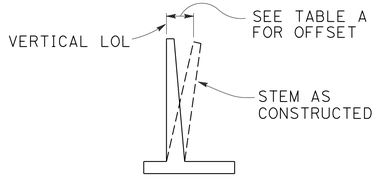

APPROXIMATE WALL OFFSET VALUES

Values for offseting forms to be determined by the Engineer.

TABLE A

H	OFFSET
4'-12'	H/200
14'-16'	H/160
18'-20'	H/140
22'-24'	H/130
26'-36'	2½"

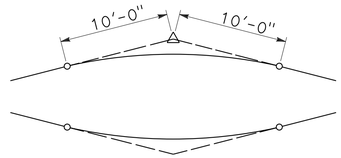

20'-0" VC AT TOP OF WALL SLOPE CHANGE

Where shown on the plans

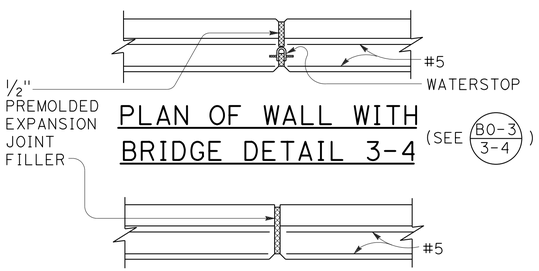

PLAN OF WALL WITH BRIDGE DETAIL 3-4

(SEE B0-3 / 3-4)

PLAN OF WALL WITH EXPANSION JOINT ONLY

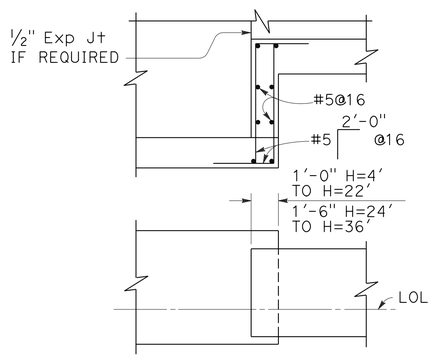

FOOTING STEP

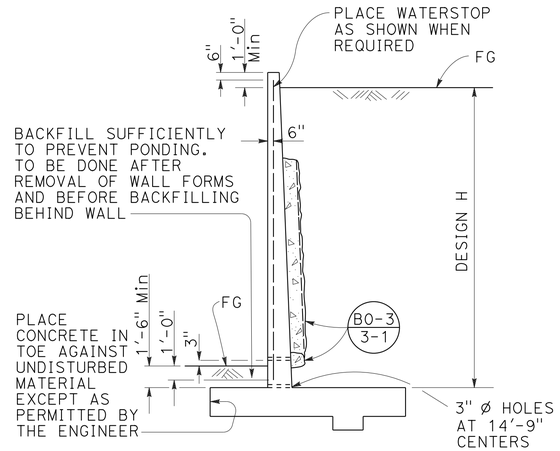

DESIGN AND DRAINAGE

DESIGN CONDITIONS:

Design "H" may be exceeded by 6" before going to the next size. Special footing design is required where foundation material is incapable of supporting bearing stress listed in table

Return wall not required unless shown elsewhere

DESIGN NOTES:

DESIGN: AASHTO LRFD Bridge Design Specifications, 4th edition with California Amendments

LIVE LOAD: Surcharge on level ground surface

SOIL: ϕ = 34°
γ = 120 pcf

REINFORCED CONCRETE: fy = 60,000 psi
fc' = 3,600 psi

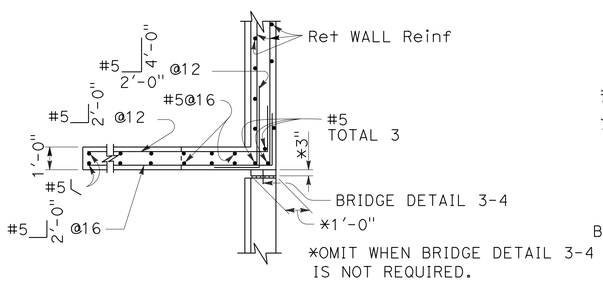

PLAN

(For return wall Type "A")

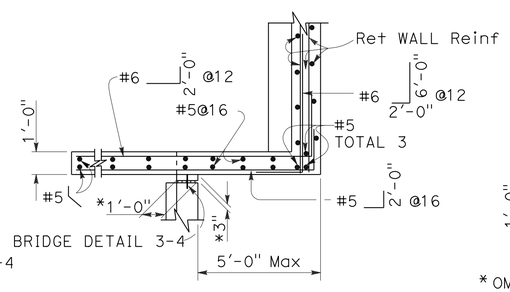

PLAN

(For return wall Type "B")

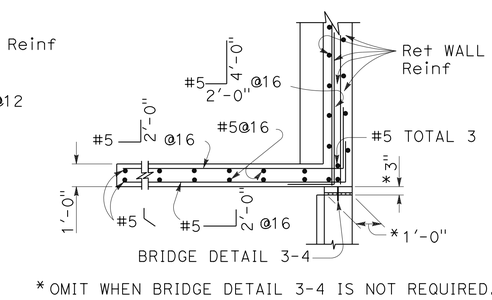

PLAN

(For return wall Type "C")

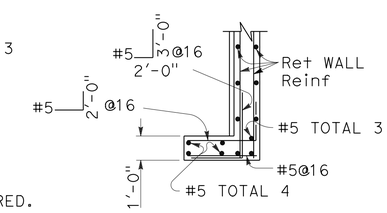

PLAN

(For return wall Type "D")

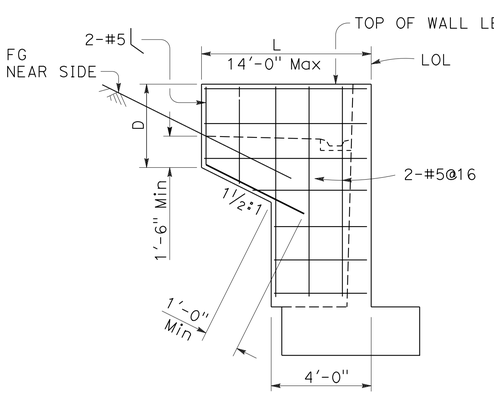

ELEVATION

RETURN WALL TYPE "A"

Use where H=8' or less

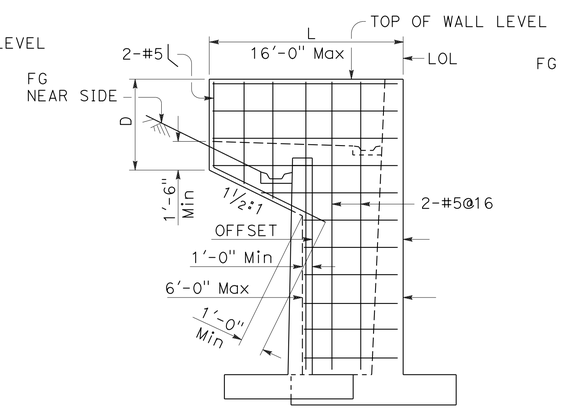

ELEVATION

RETURN WALL TYPE "B"

Use where H=10' or more on offset walls

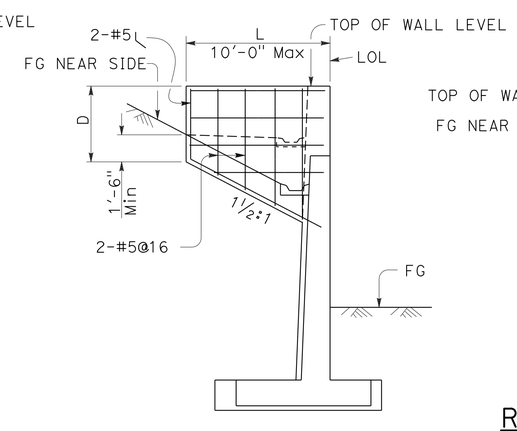

ELEVATION

RETURN WALL TYPE "C"

Use where H=10' or more on straight walls

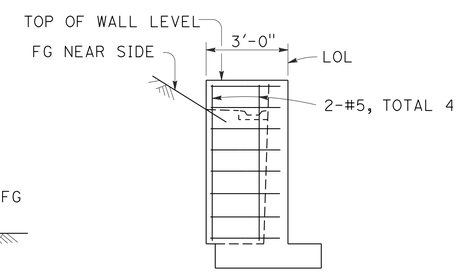

ELEVATION

RETURN WALL TYPE "D"

Use where H=6' or less

STATE OF CALIFORNIA
DEPARTMENT OF TRANSPORTATION

RETAINING WALL DETAILS No. 1

NO SCALE

RSP B3-5 DATED APRIL 20, 2012 SUPERSEDES STANDARD PLAN B3-5
DATED MAY 20, 2011 - PAGE 277 OF THE STANDARD PLANS BOOK DATED 2010.

REVISED STANDARD PLAN RSP B3-5

2010 REVISED STANDARD PLAN RSP B3-5

2-22-12

Dist	COUNTY	ROUTE	POST MILES TOTAL PROJECT	SHEET No.	TOTAL SHEETS
08	Riv	111	1.5	55	82

REGISTERED CIVIL ENGINEER

April 20, 2012
PLANS APPROVAL DATE

REGISTERED PROFESSIONAL ENGINEER
Tillat Satter
No. C42892
Exp. 3-31-14
CIVIL
STATE OF CALIFORNIA

THE STATE OF CALIFORNIA OR ITS OFFICERS OR AGENTS SHALL NOT BE RESPONSIBLE FOR THE ACCURACY OR COMPLETENESS OF SCANNED COPIES OF THIS PLAN SHEET.

TO ACCOMPANY PLANS DATED 6-17-13

2010 REVISED STANDARD PLAN RSP B11-68

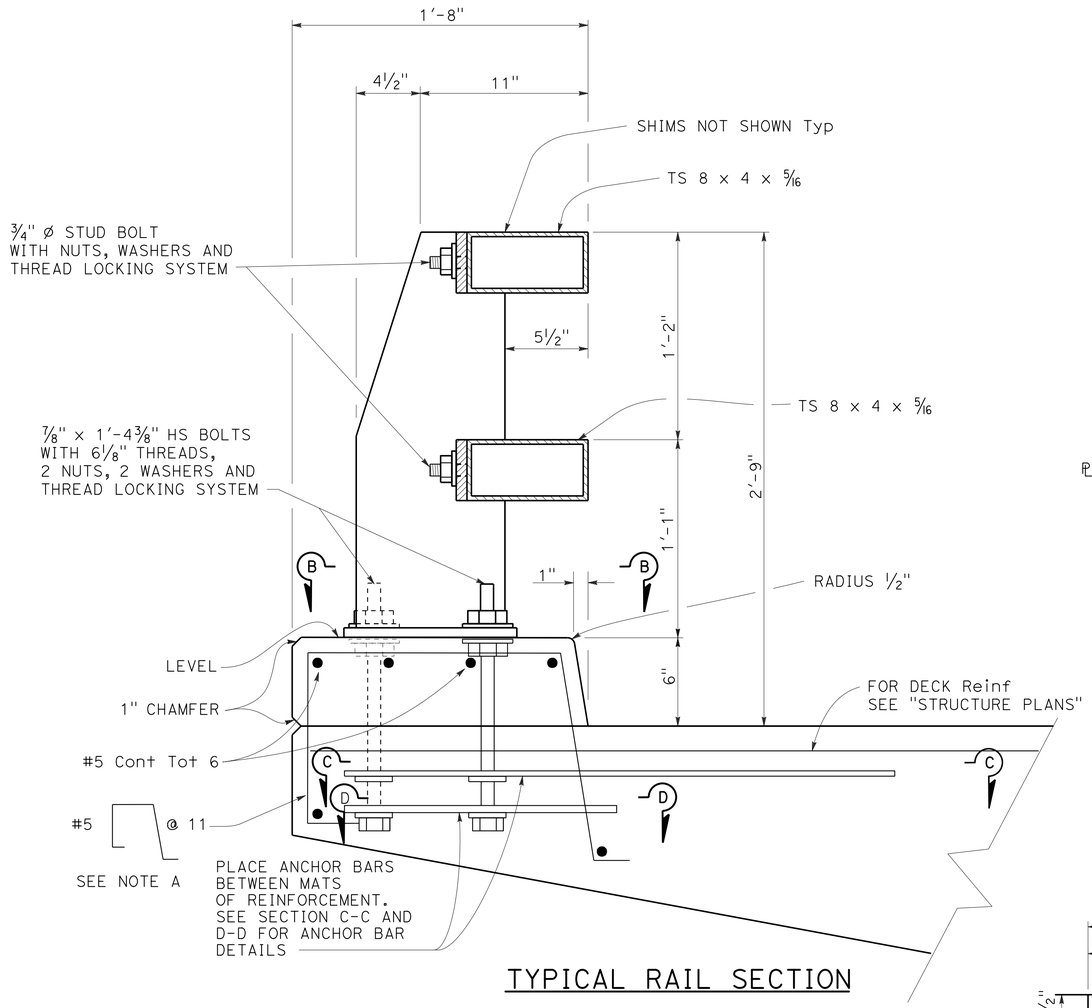

TYPICAL RAIL SECTION

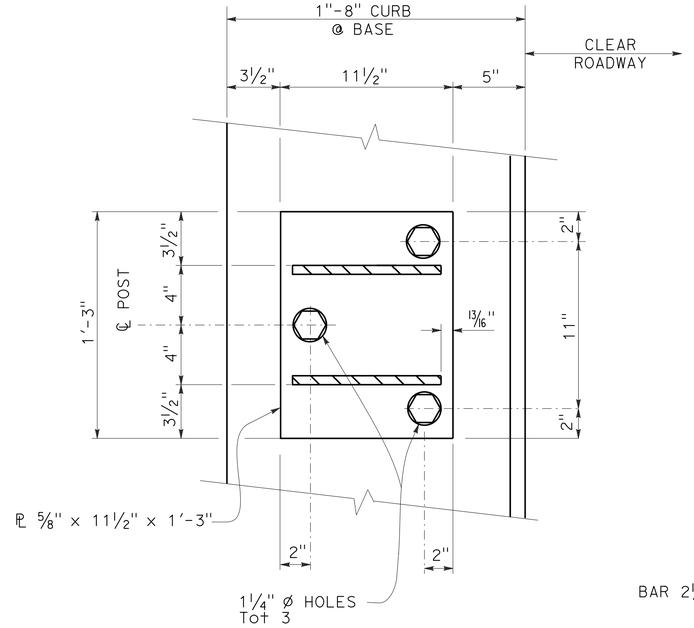

SECTION B-B

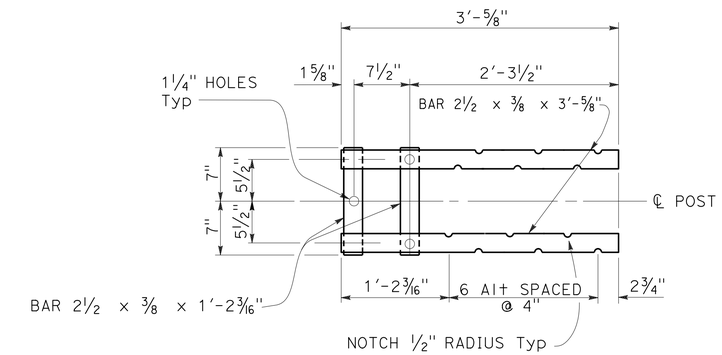

SECTION C-C
Top Anchorage

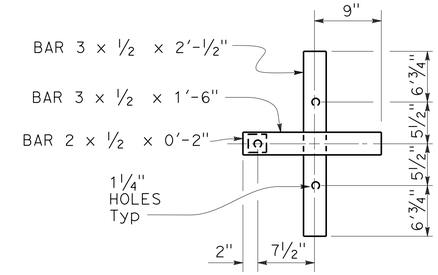

SECTION D-D
Lower Anchorage

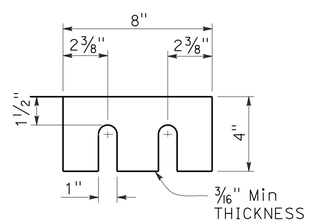

SHIMS REQUIRED FOR TOP AND BOTTOM RAIL

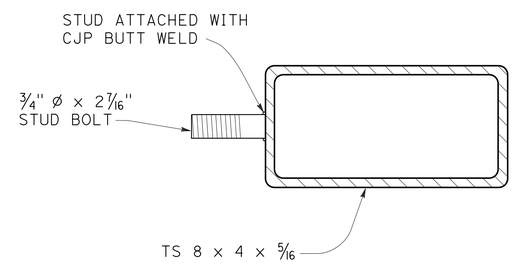

SECTION AT POST

STUD BOLT DETAIL

NOTE A

Adjust spacing to clear scupper opening by 2" if applicable.

STATE OF CALIFORNIA
DEPARTMENT OF TRANSPORTATION

CALIFORNIA ST-10 BRIDGE RAIL (SHEET 1 OF 3)

NO SCALE

RSP B11-68 DATED APRIL 20, 2012 SUPERSEDES STANDARD PLAN B11-68 DATED MAY 20, 2011 - PAGE 308 OF THE STANDARD PLANS BOOK DATED 2010.

REVISED STANDARD PLAN RSP B11-68

3-23-12

DIST	COUNTY	ROUTE	POST MILES TOTAL PROJECT	SHEET No.	TOTAL SHEETS
08	Riv	111	1.5	56	82

REGISTERED CIVIL ENGINEER 2-15-13 DATE

6-17-13
PLANS APPROVAL DATE

REGISTERED PROFESSIONAL ENGINEER JONATHAN SZABO No. C78563 Exp. 9-30-13 CIVIL STATE OF CALIFORNIA

The State of California or its officers or agents shall not be responsible for the accuracy or completeness of electronic copies of this plan sheet.

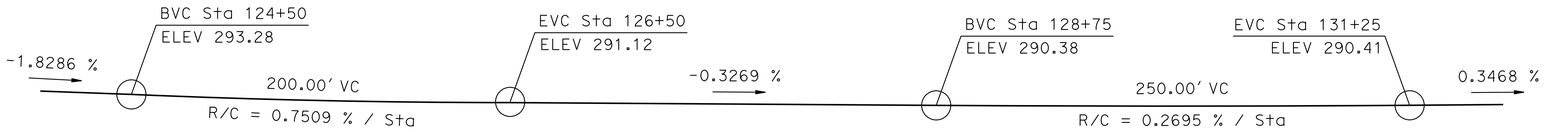

PROFILE

No Scale

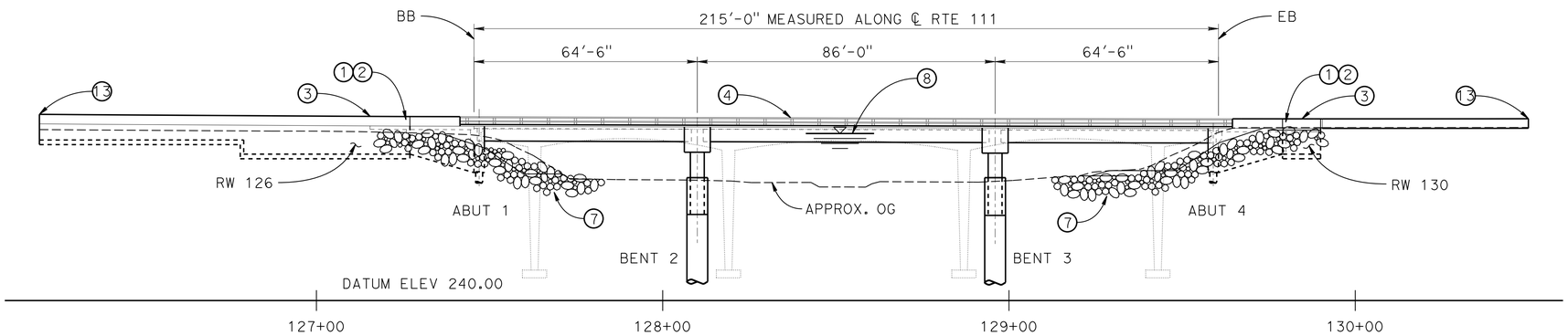

ELEVATION

1" = 20'-0"

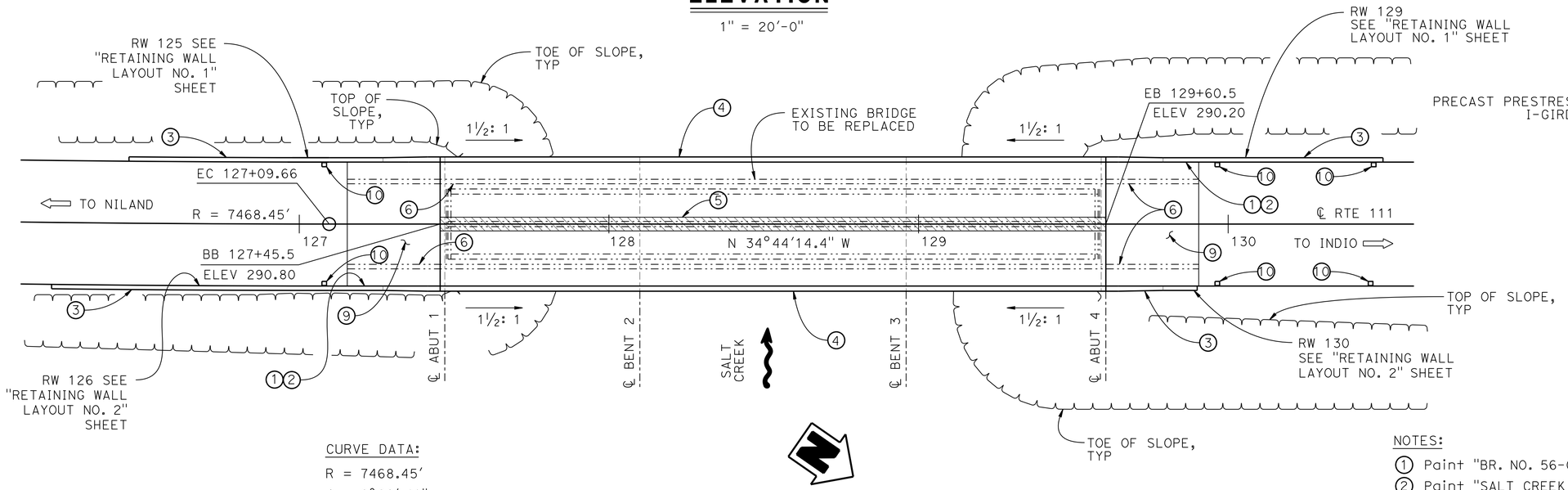

CURVE DATA:

R = 7468.45'
Δ = 6°20' 41"
T = 413.93'
L = 827.02'

PLAN

1" = 20'-0"

Note: for General Notes, Index to Plans, Pile Data Table, see "INDEX TO PLANS" sheet

LEGEND:

- Indicates closure pour
- Indicates new construction
- Indicates existing structure
- Indicates existing bridge in elevation and section views

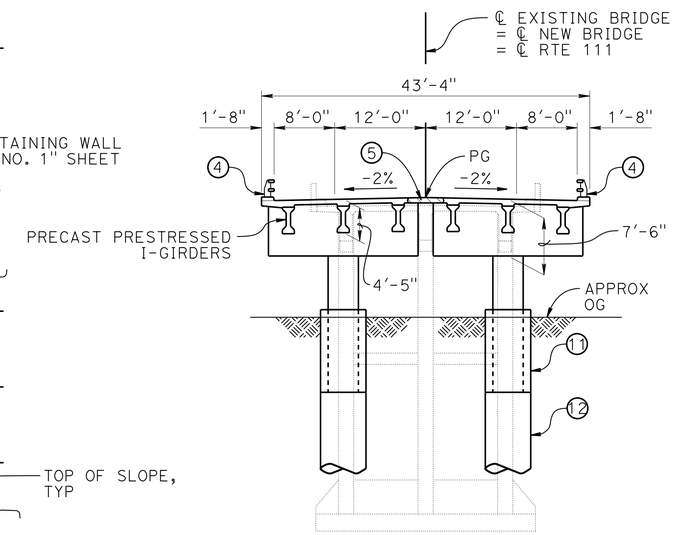

TYPICAL SECTION

1" = 10'-0"

NOTES:

1. Paint "BR. NO. 56-0854"
2. Paint "SALT CREEK BRIDGE"
3. Conc Barrier, Type 732A(MOD) (for modified portion of standard concrete barrier, see "ABUTMENT DETAL NO. 4" sheet)
4. Bridge Rail, Type ST-10 (MOD) (Painted)
5. Closure Pour
6. Remove existing MBGR, see "ROADWAY PLANS"
7. Rock Slope Protection, see "ROADWAY PLANS"
8. For Hydrologic Summary, see "FOUNDATION PLANS"
9. Approach Slab, Type N(30D)
10. Drainage Inlet, see "ROADWAY PLANS"
11. Isolation Casing
12. 6'-0" ø CIDH Concrete Shaft
13. MBGR continuing from end of Conc. Barrier not shown, see "ROADWAY PLANS"

NOTE:
THE CONTRACTOR SHALL VERIFY ALL CONTROLLING FIELD DIMENSIONS BEFORE ORDERING OR FABRICATING ANY MATERIAL.

DANIEL T. ADAMS
DESIGN ENGINEER

	BY	CHECKED			
DESIGN	J. Szabo	L. Wu	LOAD & RESISTANCE FACTOR DESIGN	LIVE LOADING: HL93 W/"LOW-BOY": PERMIT DESIGN VEHICLE	
DETAILS	D. Wooten/ J. Szabo	J. Szabo	LAYOUT	D. Wooten/ J. Szabo	J. Szabo
QUANTITIES	J. Szabo	A. McPhee/M. Vo	SPECIFICATIONS	M. Pan	PLANS AND SPECS COMPARED J. Szabo

ORIGINAL SCALE IN INCHES FOR REDUCED PLANS 0 1 2 3

STATE OF CALIFORNIA
DEPARTMENT OF TRANSPORTATION

DIVISION OF ENGINEERING SERVICES
STRUCTURE DESIGN
DESIGN BRANCH 10

BRIDGE NO. 56-0854
POST MILE 1.51

SALT CREEK BRIDGE (REPLACE)
GENERAL PLAN

UNIT: 3589
PROJECT NUMBER & PHASE: 0800000714
CONTRACT NO.:08-449101

DISREGARD PRINTS BEARING EARLIER REVISION DATES

REVISION DATES: 9-24-12 11-02-12 1-09-13 2-14-13

SHEET 1 OF 27

STRUCTURES DESIGN GENERAL PLAN SHEET (ENGLISH) (REV.09-01-10)

FILE => 560854agp01.dgn

USERNAME => s124496 DATE PLOTTED => 14-AUG-2013 TIME PLOTTED => 05:33

DIST	COUNTY	ROUTE	POST MILES TOTAL PROJECT	SHEET No.	TOTAL SHEETS
08	Riv	111	1.5	57	82

Jonathan Szabo 2-15-13
REGISTERED CIVIL ENGINEER DATE

6-17-13
PLANS APPROVAL DATE

REGISTERED PROFESSIONAL ENGINEER
JONATHAN SZABO
No. C78563
Exp. 9-30-13
CIVIL
STATE OF CALIFORNIA

The State of California or its officers or agents shall not be responsible for the accuracy or completeness of electronic copies of this plan sheet.

INDEX TO PLANS

SHEET NO.	TITLE
1	GENERAL PLAN
2	INDEX TO PLANS
3	STAGE CONSTRUCTION DETAILS
4	DECK CONTOURS
5	FOUNDATION PLAN
6	ABUTMENT LAYOUT
7	ABUTMENT DETAILS NO. 1
8	ABUTMENT DETAILS NO. 2
9	ABUTMENT DETAILS NO. 3
10	ABUTMENT DETAILS NO. 4
11	RETAINING WALL LAYOUT NO. 1
12	RETAINING WALL LAYOUT NO. 2
13	BENT LAYOUT
14	BENT DETAILS NO. 1
15	BENT DETAILS NO. 2
16	BENT DETAILS NO. 3
17	ISOLATION CASING DETAIL
18	TYPICAL SECTION
19	GIRDER LAYOUT
20	GIRDER DETAILS
21	GIRDER REINFORCEMENT
22	PRECAST PRESTRESSED I GIRDER
23	BEARING DETAILS
24	STRUCTURE APPROACH TYPE N(30D)
25	STRUCTURE APPROACH DRAINAGE DETAILS
26	LOG OF TEST BORINGS 1 OF 2
27	LOG OF TEST BORINGS 2 OF 2

QUANTITIES

BRIDGE REMOVAL	LUMP	SUM
STRUCTURE EXCAVATION (BRIDGE)	220	CY
STRUCTURE EXCAVATION (TYPE D)	43	CY
STRUCTURE EXCAVATION (RETAINING WALL)	605	CY
STRUCTURE BACKFILL (BRIDGE)	130	CY
STRUCTURE BACKFILL (RETAINING WALL)	460	CY
24" CAST-IN-DRILLED-HOLE CONCRETE PILING	960	LF
72" CAST-IN-DRILLED-HOLE CONCRETE PILING	360	LF
STRUCTURAL CONCRETE, BRIDGE	612	CY
STRUCTURAL CONCRETE, RETAINING WALL	155	CY
STRUCTURAL CONCRETE, APPROACH SLAB (TYPE N)	89	CY
MINOR CONCRETE	2	CY
FURNISH PRECAST PRESTRESSED CONCRETE GIRDER (60'-70')	12	EA
FURNISH PRECAST PRESTRESSED CONCRETE GIRDER (80'-90')	6	EA
ERECT PRECAST PRESTRESSED CONCRETE GIRDER	18	EA
JOINT SEAL (MR 1")	87	LF
BAR REINFORCING STEEL (BRIDGE)	327,700	LB
BAR REINFORCING STEEL (RETAINING WALL)	18,100	LB
ASPHALT MEMBRANE WATERPROOFING	377	SQFT
ISOLATION CASING	34,200	LB
CONCRETE BARRIER (TYPE 732A)	329	LF
CALIFORNIA ST-10 BRIDGE RAIL (MODIFIED)	446	LF

STANDARD PLANS DATED 2010

PLAN NO.	TITLE
A10A	ABBREVIATIONS (SHEET 1 OF 2)
A10B	ABBREVIATIONS (SHEET 2 OF 2)
A10C	LINES AND SYMBOLS (SHEET 1 OF 3)
A10D	LINES AND SYMBOLS (SHEET 2 OF 3)
A10E	LINES AND SYMBOLS (SHEET 3 OF 3)
A10F	LEGEND - SOIL (SHEET 1 OF 2)
A10G	LEGEND - SOIL (SHEET 2 OF 2)
A62B	LIMITS OF PAYMENT FOR EXCAVATION AND BACKFILL BRIDGE SURCHARGE AND WALL
A62C	LIMITS OF PAYMENT FOR EXCAVATION AND BACKFILL BRIDGE
BO-1	BRIDGE DETAILS
BO-3	BRIDGE DETAILS
BO-5	BRIDGE DETAILS
BO-13	BRIDGE DETAILS
B2-3	16" AND 24" CAST-IN-DRILLED-HOLE CONCRETE PILE
RSP B3-3A	RETAINING WALL TYPE 1A (CASE 1)
RSP B3-5	RETAINING WALL DETAILS NO. 1
B3-6	RETAINING WALL DETAILS NO. 2
B6-21	JOINT SEALS (MAXIMUM MOVEMENT RATING = 2")
B11-55	CONCRETE BARRIER TYPE 732
B11-68	CALIFORNIA ST-10 BRIDGE RAIL (SHEET 1 OF 3)
B11-69	CALIFORNIA ST-10 BRIDGE RAIL (SHEET 2 OF 3)
B11-70	CALIFORNIA ST-10 BRIDGE RAIL (SHEET 3 OF 3)
T3A	TEMPORARY RAILING (TYPE K)
T3B	TEMPORARY RAILING (TYPE K)

STANDARD PLAN SHEET NO.

DETAIL NO.

GENERAL NOTES
LOAD AND RESISTANCE FACTOR DESIGN

DESIGN:	AASHTO LRFD BRIDGE DESIGN SPECIFICATIONS, 4th Edition with California Amendments, preface dated November 2011
SEISMIC DESIGN:	Caltrans Seismic Design Criteria (SDC) Version 1.6, November 2010
DEAD LOADING:	Includes 35 psf for future wearing surfaces.
LIVE LOADING:	HL93 and permit design load
SEISMIC LOADING:	Soil Profile: Vs30 = 886 ft/s, Moment Magnitude: Mmax = 6.5 Peak Ground Acceleration: 0.9 g
REINFORCED CONCRETE:	f_y = 60 ksi f'_c = 4,000 psi @ 28 Days n = 9
PRESTRESSED CONCRETE:	See "PRESTRESSING NOTES" on "PRECAST PRESTRESSED I GIRDER" sheet

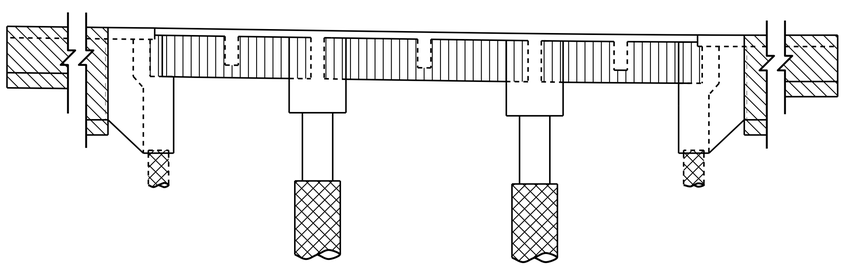

Structural Concrete, Bridge

Structure Concrete, Retaining Wall (3,600 psi @ 28 days)

Precast Prestressed I Girder Concrete, see "PRECAST PRESTRESSED I GIRDER" sheet

CIDH Concrete

CONCRETE STRENGTH AND TYPE LIMITS

No Scale

NOTE:
THE CONTRACTOR SHALL VERIFY ALL CONTROLLING FIELD DIMENSIONS BEFORE ORDERING OR FABRICATING ANY MATERIAL.

PILE DATA TABLE

Location	Pile Type	Nominal Resistance (kips)		Design Tip Elevation (feet)	Specified Tip Elevation (feet)
		Compression	Tension		
Abutment 1	24" CIDH Concrete Pile	300	0	217.25	217.25
Bent 2	72" CIDH Concrete Pile	1360	0	174.90	174.90
Bent 3	72" CIDH Concrete Pile	1360	0	174.60	174.60
Abutment 4	24" CIDH Concrete Pile	300	0	217.25	217.25

Note: Design tip elevations are controlled by (a) Compression, (b) Tension

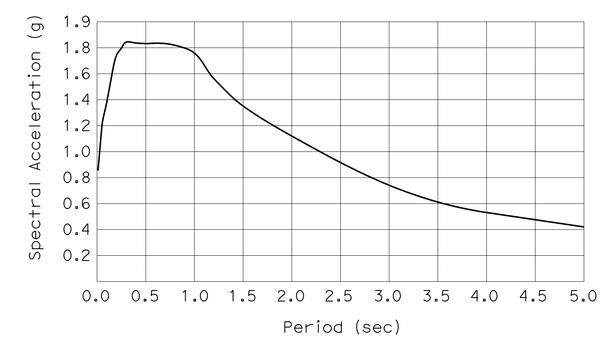

ACCELERATION RESPONSE SPECTRUM

DESIGN	BY J. Szabo	CHECKED L. Wu	
DETAILS	BY D. Wooten/J. Szabo	CHECKED J. Szabo	
QUANTITIES	BY J. Szabo	CHECKED A. McPhee/M. Vo	

STATE OF CALIFORNIA
DEPARTMENT OF TRANSPORTATION

DIVISION OF ENGINEERING SERVICES
STRUCTURE DESIGN
DESIGN BRANCH 10

BRIDGE NO. 56-0854
POST MILE 1.51

SALT CREEK BRIDGE (REPLACE)
INDEX TO PLANS

STRUCTURES DESIGN DETAIL SHEET (ENGLISH) (REV. 09-01-10)

ORIGINAL SCALE IN INCHES FOR REDUCED PLANS 0 1 2 3

UNIT: 3589
PROJECT NUMBER & PHASE: 0800000714
CONTRACT NO.: 08-449101

DISREGARD PRINTS BEARING EARLIER REVISION DATES

REVISION DATES 9-24-12 11-02-12 1-09-13 2-14-13

SHEET 2 OF 27

FILE => 560854aitp02.dgn

USERNAME => s124496 DATE PLOTTED => 14-AUG-2013 TIME PLOTTED => 05:33

DIST	COUNTY	ROUTE	POST MILES TOTAL PROJECT	SHEET No.	TOTAL SHEETS
08	Riv	111	1.5	58	82

Jonathan Szabo 2-15-13
REGISTERED CIVIL ENGINEER DATE

6-17-13
PLANS APPROVAL DATE

REGISTERED PROFESSIONAL ENGINEER JONATHAN SZABO No. C78563 Exp. 9-30-13 CIVIL STATE OF CALIFORNIA

The State of California or its officers or agents shall not be responsible for the accuracy or completeness of electronic copies of this plan sheet.

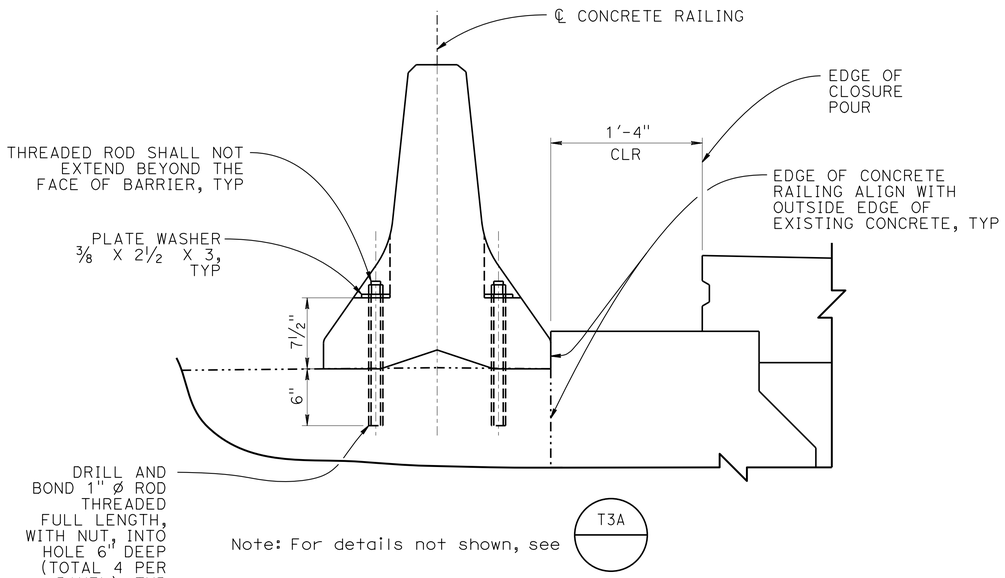

Note: For details not shown, see T3A

TYPE K RAILING DRILL AND BOND DETAIL FOR STAGE 1 CONSTRUCTION

1-1/2" = 1'-0"

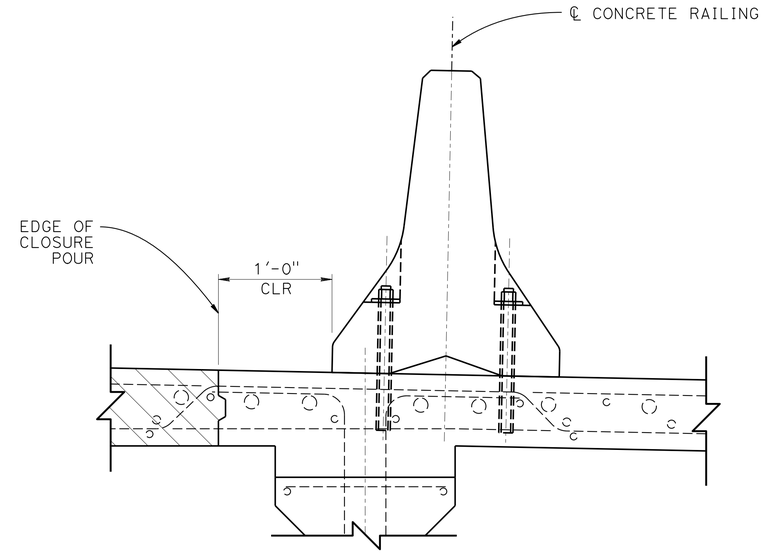

Note: for details not shown, see "TYPE K RAILING DRILL AND BOND DETAIL FOR STAGE 1 CONSTRUCTION"

TYPE K RAILING DRILL AND BOND DETAIL FOR STAGE 2 CONSTRUCTION

1-1/2" = 1'-0"

LEGEND:

- Indicates bridge removal
- Indicates closure pour (See Note 2)
- Indicates new construction
- Indicates existing structure

NOTES:

1. For location and quantities of Type K Railing segments and quantities of drill and bond bolts, see "ROADWAY PLANS"
2. For Stage 2 construction, place Closure Pour after 15 days (mimimum) of Deck Pour

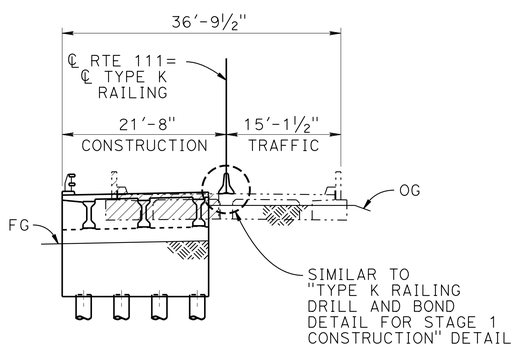

Note: Abutment 1 shown, Abutment 4 similar

ABUTMENT 1 ELEVATION AT STAGE 1 CONSTRUCTION

1" = 10'-0"

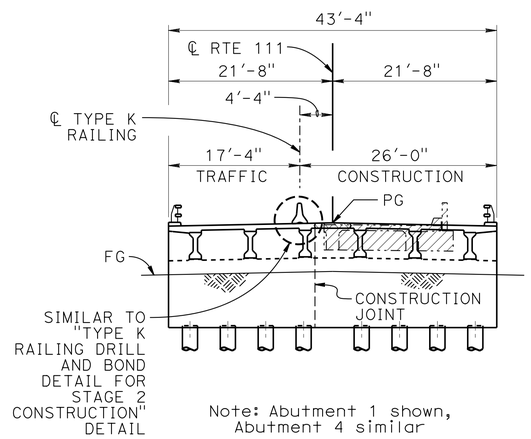

Note: Abutment 1 shown, Abutment 4 similar

ABUTMENT 1 ELEVATION AT STAGE 2 CONSTRUCTION

1" = 10'-0"

Note: Abutment Elevations shown facing BB, Bent Elevations shown facing EB

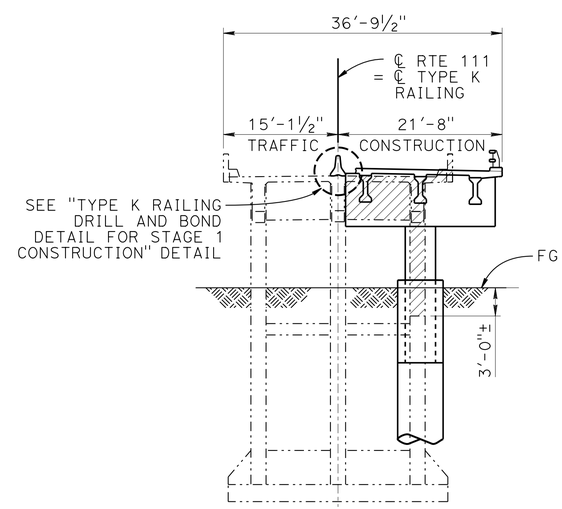

BENT ELEVATION AT STAGE 1 CONSTRUCTION

1" = 10'-0"

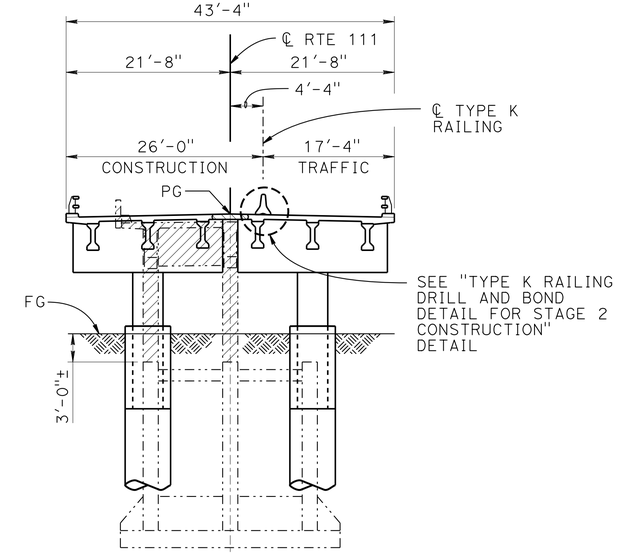

BENT ELEVATION AT STAGE 2 CONSTRUCTION

1" = 10'-0"

NOTE:
THE CONTRACTOR SHALL VERIFY ALL CONTROLLING FIELD DIMENSIONS BEFORE ORDERING OR FABRICATING ANY MATERIAL.

DESIGN	BY J. Szabo	CHECKED L. Wu	
DETAILS	BY D. Wooten/J. Szabo	CHECKED J. Szabo	
QUANTITIES	BY J. Szabo	CHECKED A. McPhee/M. Vo	

STATE OF CALIFORNIA
DEPARTMENT OF TRANSPORTATION

DIVISION OF ENGINEERING SERVICES
STRUCTURE DESIGN
DESIGN BRANCH 10

BRIDGE NO. 56-0854
POST MILE 1.51

SALT CREEK BRIDGE (REPLACE)
STAGE CONSTRUCTION DETAILS

STRUCTURES DESIGN DETAIL SHEET (ENGLISH) (REV. 09-01-10)

ORIGINAL SCALE IN INCHES FOR REDUCED PLANS 0 1 2 3

UNIT: 3589
PROJECT NUMBER & PHASE: 0800000714
CONTRACT NO.: 08-449101

DISREGARD PRINTS BEARING EARLIER REVISION DATES

REVISION DATES: 9-24-12 11-06-12 1-08-13 2-14-13

SHEET 3 OF 27

FILE => 560854csondt03.dgn

USERNAME => s124496 DATE PLOTTED => 14-AUG-2013 TIME PLOTTED => 05:33

DIST	COUNTY	ROUTE	POST MILES TOTAL PROJECT	SHEET No.	TOTAL SHEETS
08	Riv	111	1.5	59	82

Jonathan Szabo 2-15-13
REGISTERED CIVIL ENGINEER DATE

6-17-13
PLANS APPROVAL DATE

REGISTERED PROFESSIONAL ENGINEER
JONATHAN SZABO
No. C78563
Exp. 9-30-13
CIVIL
STATE OF CALIFORNIA

The State of California or its officers or agents shall not be responsible for the accuracy or completeness of electronic copies of this plan sheet.

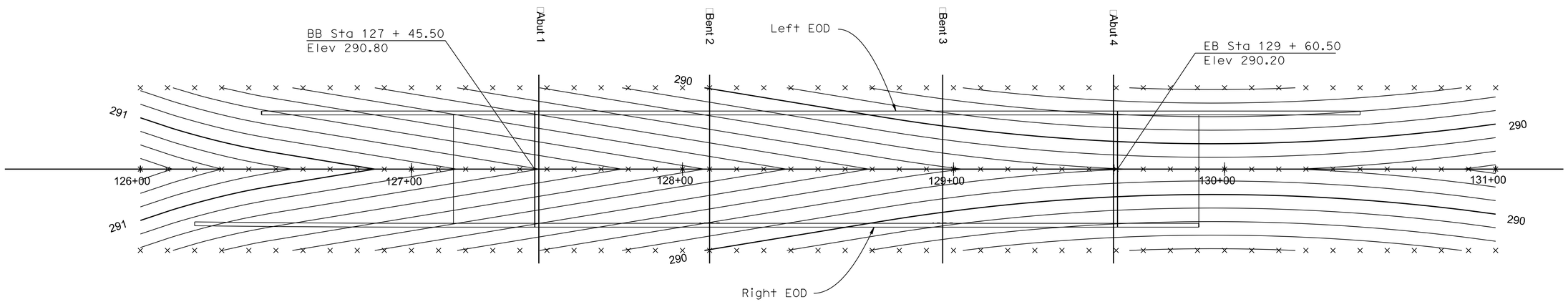

DECK CONTOURS

1"=20'-0"

NOTES:

1. X - 10' intervals along station line.
2. Contour interval = 0.1'.
3. Contours do not include camber.

NOTE:
THE CONTRACTOR SHALL VERIFY ALL CONTROLLING FIELD DIMENSIONS BEFORE ORDERING OR FABRICATING ANY MATERIAL.

	BY	CHECKED
DESIGN	J. Szabo	L. Wu
DETAILS	D. Wooten/J. Szabo	J. Szabo
QUANTITIES	J. Szabo	A. McPhee/M. Vo

STATE OF CALIFORNIA
DEPARTMENT OF TRANSPORTATION

DIVISION OF ENGINEERING SERVICES
STRUCTURE DESIGN
DESIGN BRANCH 10

BRIDGE NO. 56-0854
POST MILE 1.51

SALT CREEK BRIDGE (REPLACE)
DECK CONTOURS

STRUCTURES DESIGN DETAIL SHEET (ENGLISH) (REV. 09-01-10)

ORIGINAL SCALE IN INCHES FOR REDUCED PLANS 0 1 2 3

UNIT: 3589
PROJECT NUMBER & PHASE: 0800000714
CONTRACT NO.: 08-449101

DISREGARD PRINTS BEARING EARLIER REVISION DATES

REVISION DATES: 9-24-12 11-08-12 1-08-13 2-14-13

SHEET 4 OF 27

FILE => 560854ddc04.dgn

USERNAME => s124436 DATE PLOTTED => 14-AUG-2013 TIME PLOTTED => 05:34

DIST	COUNTY	ROUTE	POST MILES TOTAL PROJECT	SHEET No.	TOTAL SHEETS
08	Riv	111	1.5	60	82

Jonathan Szabo 2-15-13
REGISTERED CIVIL ENGINEER DATE

6-17-13
PLANS APPROVAL DATE

REGISTERED PROFESSIONAL ENGINEER JONATHAN SZABO No. C57035 Exp. 6-30-13 CIVIL STATE OF CALIFORNIA

The State of California or its officers or agents shall not be responsible for the accuracy or completeness of electronic copies of this plan sheet.

CURVE DATA

No.	R	Δ	T	L
①	7468.45′	6°20′41"	413.93′	827.02′

Bridge Location

Ⓐ - 13.056 Lt ℄ Sta 127+48.20 Elev=289.583 ±
Ⓑ - 13.036 Lt ℄ Sta 129+57.73 Elev=289.520 ±
Ⓒ - 13.039 Rt ℄ Sta 129+57.71 Elev=289.530 ±
Ⓓ - 12.977 Rt ℄ Sta 127+48.27 Elev=289.478 ±

Note:
Indicates bottom of footing elevation

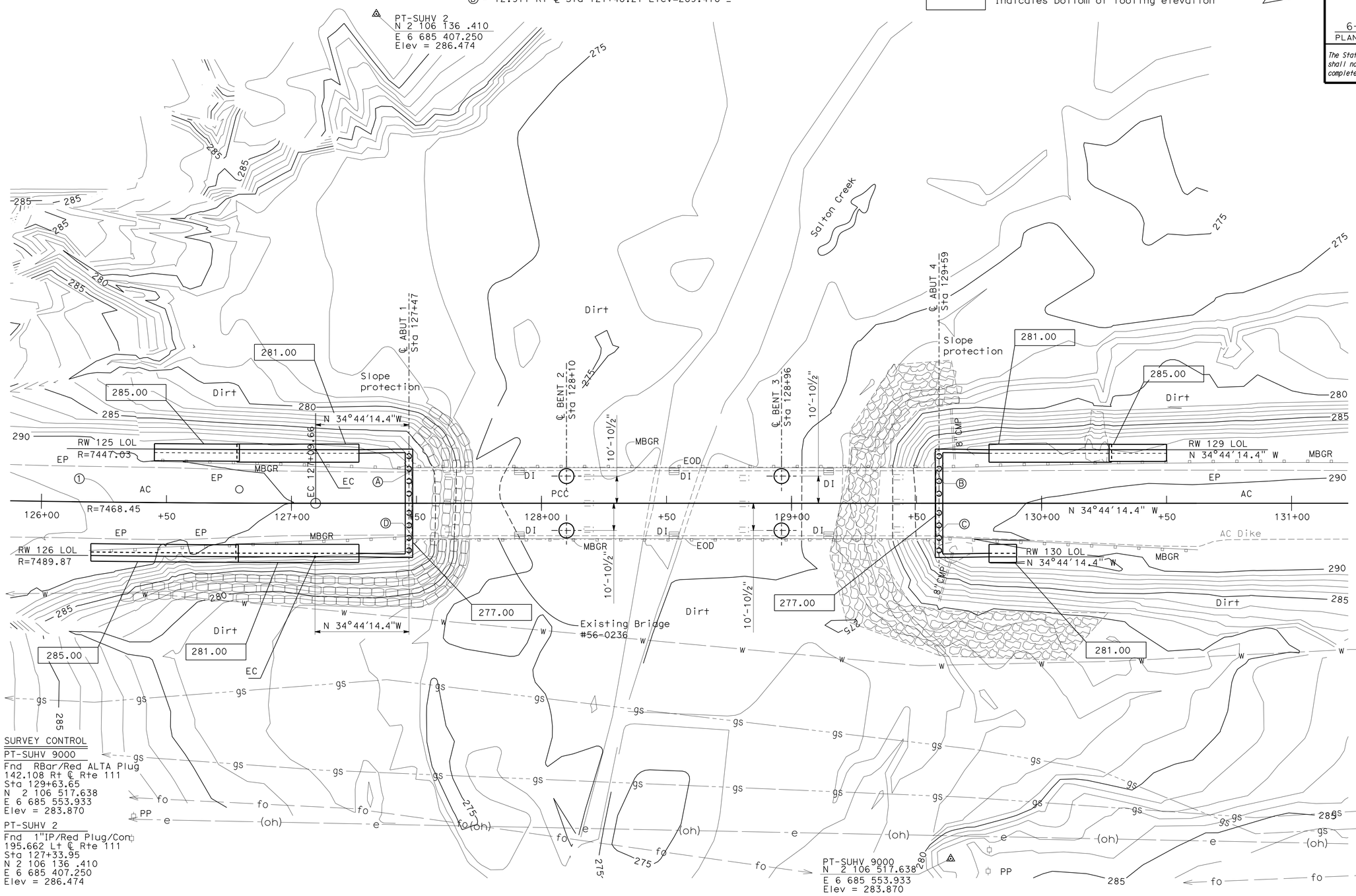

HYDROLOGICAL SUMMARY SALT CREEK BRIDGE, 56-0854			
Drainage Area: 270 Square Miles			
	Design Flood	Base Flood	Channel Capacity
Frequency	50-Year	100-Year	N/A
Discharge*	55,000 CFS	74,000 CFS	48,000 CFS
Water Elev at Bridge	294.7 ft	297.5 ft	288.3 ft

Flood plain data are based upon information available when the plans were prepared and are shown to meet federal requirements. The accuracy of said information is not warranted by the State and interested or affected parties should make their own investigation.

* Note: CFS = Cubic Feet per Second

SURVEY CONTROL

PT-SUHV 9000
Fnd RBar/Red ALTA Plug
142.108 Rt ℄ Rte 111
Sta 129+63.65
N 2 106 517.638
E 6 685 553.933
Elev = 283.870

PT-SUHV 2
Fnd 1"IP/Red Plug/Con
195.662 Lt ℄ Rte 111
Sta 127+33.95
N 2 106 136 .410
E 6 685 407.250
Elev = 286.474

PRELIMINARY INVESTIGATION SECTION

SCALE	VERT.DATUM NGVD 29	PHOTOGRAMMETRY AS OF: X		
1"=20′	HORZ.DATUM NAD 83	SURVEYED	BY District	CHECKED BY C. Stewart
ALIGNMENT TIES Dist. Traverse Sheet		DRAFTED	BY M. Sadaghiani 5-12	CHECKED BY E. Vigjar 5-12

	BY	CHECKED
DESIGN	J.Szabo	L.Wu
DETAILS	D.Wooten / J. Szabo	J.Szabo
QUANTITIES	J.Szabo	A.McPhee/M.Vo

STATE OF CALIFORNIA
DEPARTMENT OF TRANSPORTATION

DIVISION OF ENGINEERING SERVICES
STRUCTURE DESIGN
DESIGN BRANCH 10

BRIDGE NO. 56-0854
POST MILE 1.51-1.54

SALT CREEK BRIDGE (REPLACE)
FOUNDATION PLAN

STRUCTURES FOUNDATION PLAN SHEET (ENGLISH) (REV. 09-01-10)

ORIGINAL SCALE IN INCHES FOR REDUCED PLANS 0 1 2 3

UNIT: 3647
PROJECT NUMBER & PHASE: 0800000714
CONTRACT NO.: 08-449101

DISREGARD PRINTS BEARING EARLIER REVISION DATES

REVISION DATES 5/30/12

SHEET 5 OF 27

FILE => 560854efdp105.dgn

DIST	COUNTY	ROUTE	POST MILES TOTAL PROJECT	SHEET No.	TOTAL SHEETS
08	Riv	111	1.5	61	82

Jonathan Szabo 2-15-13
REGISTERED CIVIL ENGINEER DATE

6-17-13
PLANS APPROVAL DATE

REGISTERED PROFESSIONAL ENGINEER JONATHAN SZABO No. C78563 Exp. 9-30-13 CIVIL STATE OF CALIFORNIA

The State of California or its officers or agents shall not be responsible for the accuracy or completeness of electronic copies of this plan sheet.

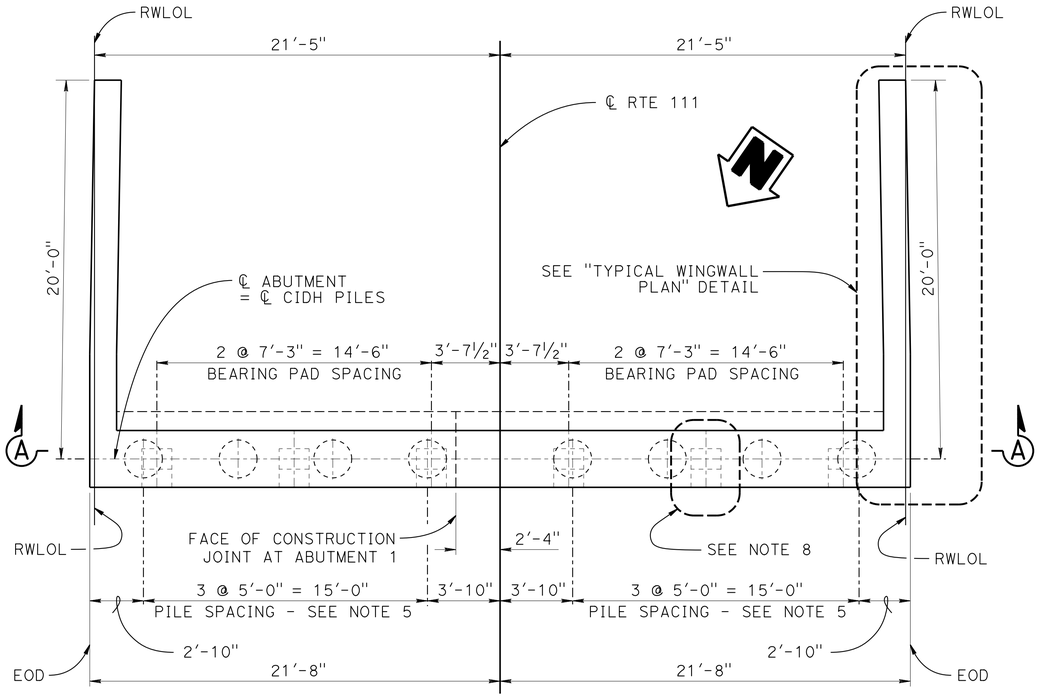

Note: Abutment 1 shown, Abutment 4 similar

ABUTMENT PLAN

¼" = 1'-0"

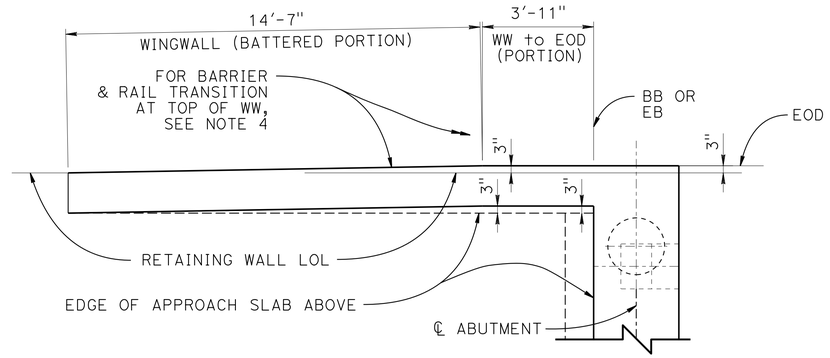

TYPICAL WINGWALL PLAN

⅜" = 1'-0"

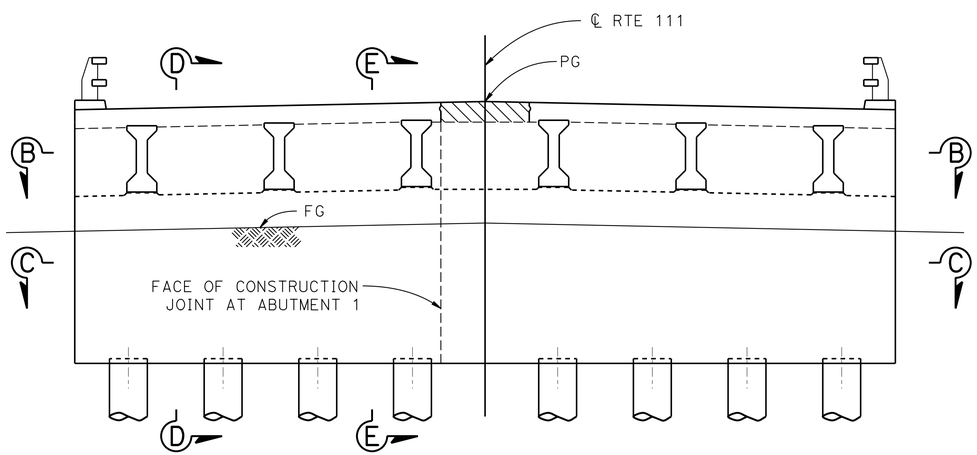

Note: Abutment 1 shown, Abutment 4 similar

ABUTMENT ELEVATION

¼" = 1'-0"

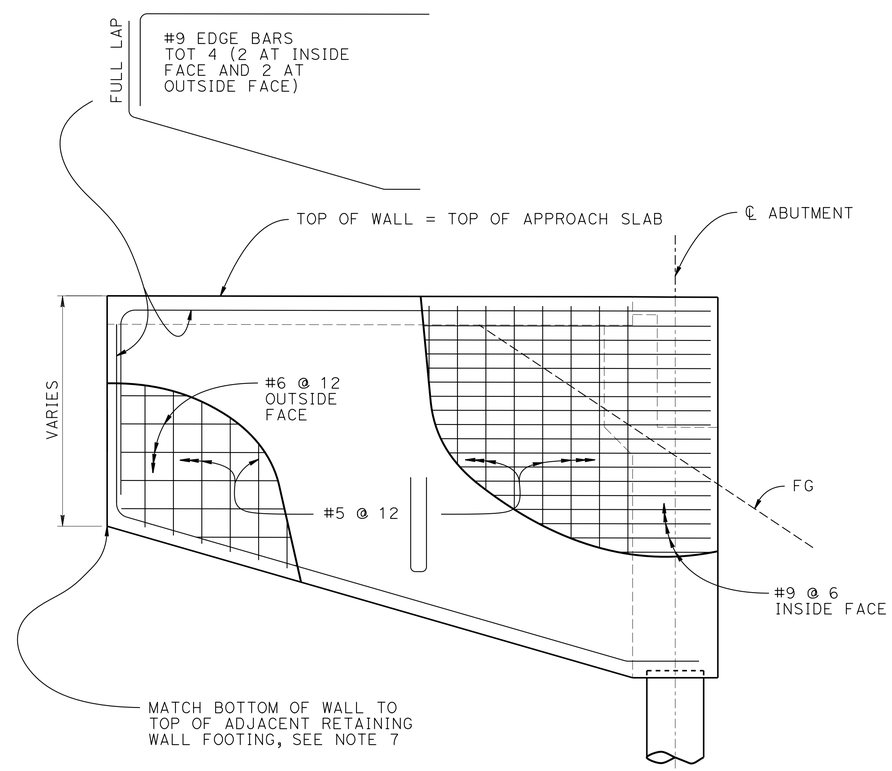

TYPICAL WINGWALL ELEVATION

⅜" = 1'-0"

LEGEND:

Indicates closure pour

NOTES:

1. For "SECTION A-A", see "ABUTMENT DETAILS NO. 1" sheet.
2. For "SECTION B-B" & "C-C" see "ABUTMENT DETAILS NO. 2" sheet.
3. For "SECTION D-D" & "E-E", see "ABUTMENT DETAILS NO. 3" sheet.
4. For Concrete Barrier (732A) to ST-10 Rail transition, see "BARRIER TRANSITION PLAN" on "ABUTMENT DETAILS NO. 4" sheet.
5. No two adjacent piles may be excavated or installed simultaneously.
6. For Approach Slab dimensions and details, see "GENERAL PLAN" & "STRUCTURE APPROACH TYPE N(30D)" sheets.
7. For Retaining Wall & Barrier transition at Wingwalls, see "RETAINING WALL LAYOUT NO. 1" & "NO. 2" sheets.
8. For Bearing Pad Detail, see "BEARING DETAILS" sheet.

NOTE:
THE CONTRACTOR SHALL VERIFY ALL CONTROLLING FIELD DIMENSIONS BEFORE ORDERING OR FABRICATING ANY MATERIAL.

	BY	CHECKED
DESIGN	J. Szabo	L. Wu
DETAILS	D. Wooten/J. Szabo	J. Szabo
QUANTITIES	J. Szabo	A. McPhee/M. Vo

STATE OF CALIFORNIA
DEPARTMENT OF TRANSPORTATION

DIVISION OF ENGINEERING SERVICES
STRUCTURE DESIGN
DESIGN BRANCH 10

BRIDGE NO. 56-0854
POST MILE 1.51

SALT CREEK BRIDGE (REPLACE)
ABUTMENT LAYOUT

STRUCTURES DESIGN DETAIL SHEET (ENGLISH) (REV. 09-01-10)

ORIGINAL SCALE IN INCHES FOR REDUCED PLANS 0 1 2 3

UNIT: 3589
PROJECT NUMBER & PHASE: 0800000714
CONTRACT NO.: 08-449101

DISREGARD PRINTS BEARING EARLIER REVISION DATES

REVISION DATES: 9-24-12 11-09-12 1-09-13 2-14-13

SHEET 6 OF 27

FILE => 560854fa_lo06.dgn

USERNAME => s124496 DATE PLOTTED => 14-AUG-2013 TIME PLOTTED => 05:34

DIST	COUNTY	ROUTE	POST MILES TOTAL PROJECT	SHEET No.	TOTAL SHEETS
08	Riv	111	1.5	62	82

Jonathan Szabo 2-15-13
REGISTERED CIVIL ENGINEER DATE

6-17-13
PLANS APPROVAL DATE

REGISTERED PROFESSIONAL ENGINEER
JONATHAN SZABO
No. C78563
Exp. 9-30-13
CIVIL
STATE OF CALIFORNIA

The State of California or its officers or agents shall not be responsible for the accuracy or completeness of electronic copies of this plan sheet.

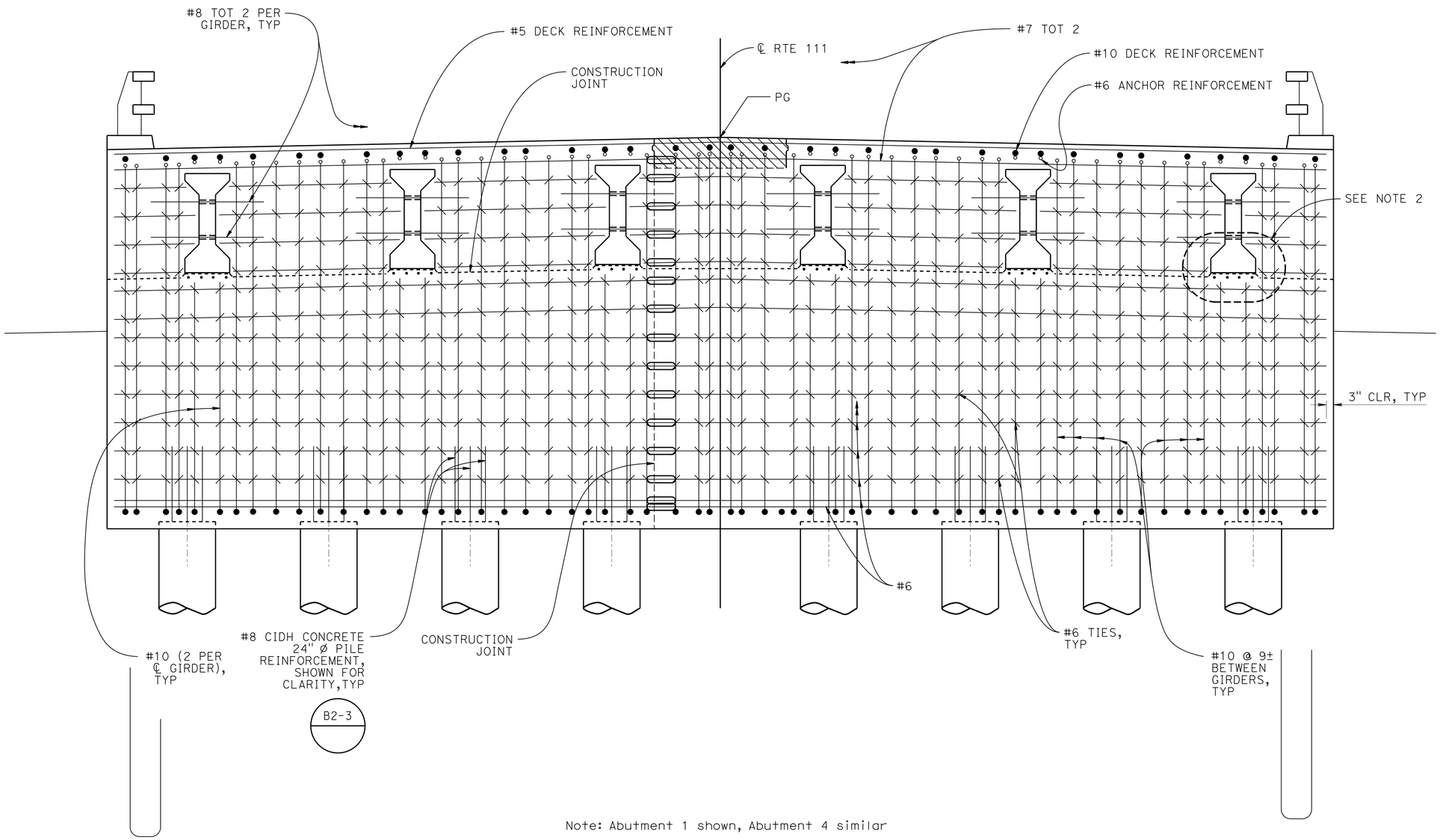

Note: Abutment 1 shown, Abutment 4 similar

SECTION A-A

½" = 1'-0"

LEGEND:

Indicates closure pour

Indicates mechanical coupler

NOTES:

1. For location of Section A-A, see "ABUTMENT LAYOUT" sheet.
2. For Concrete Bearing Pad Reinforcement, see "BEARING DETAILS" sheet.

NOTE:
THE CONTRACTOR SHALL VERIFY ALL CONTROLLING FIELD DIMENSIONS BEFORE ORDERING OR FABRICATING ANY MATERIAL.

	BY	CHECKED
DESIGN	J. Szabo	L. Wu
DETAILS	D. Wooten/J. Szabo	J. Szabo
QUANTITIES	J. Szabo	A. McPhee/M. Vo

STATE OF CALIFORNIA
DEPARTMENT OF TRANSPORTATION

DIVISION OF ENGINEERING SERVICES
STRUCTURE DESIGN
DESIGN BRANCH 10

BRIDGE NO. 56-0854
POST MILE 1.51

SALT CREEK BRIDGE (REPLACE)
ABUTMENT DETAILS NO. 1

STRUCTURES DESIGN DETAIL SHEET (ENGLISH) (REV. 09-01-10)

ORIGINAL SCALE IN INCHES FOR REDUCED PLANS 0 1 2 3

UNIT: 3589
PROJECT NUMBER & PHASE: 0800000714
CONTRACT NO.: 08-449101

DISREGARD PRINTS BEARING EARLIER REVISION DATES

REVISION DATES: 9-24-12 11-02-12 1-09-13 2-14-13

SHEET 7 OF 27

FILE => 560854fadt107.dgn

USERNAME => s124496 DATE PLOTTED => 14-AUG-2013 TIME PLOTTED => 09:34

DIST	COUNTY	ROUTE	POST MILES TOTAL PROJECT	SHEET No.	TOTAL SHEETS
08	Riv	111	1.5	63	82

Jonathan Szabo 2-15-13
REGISTERED CIVIL ENGINEER DATE

6-17-13
PLANS APPROVAL DATE

REGISTERED PROFESSIONAL ENGINEER
JONATHAN SZABO
No. C78563
Exp. 9-30-13
CIVIL
STATE OF CALIFORNIA

The State of California or its officers or agents shall not be responsible for the accuracy or completeness of electronic copies of this plan sheet.

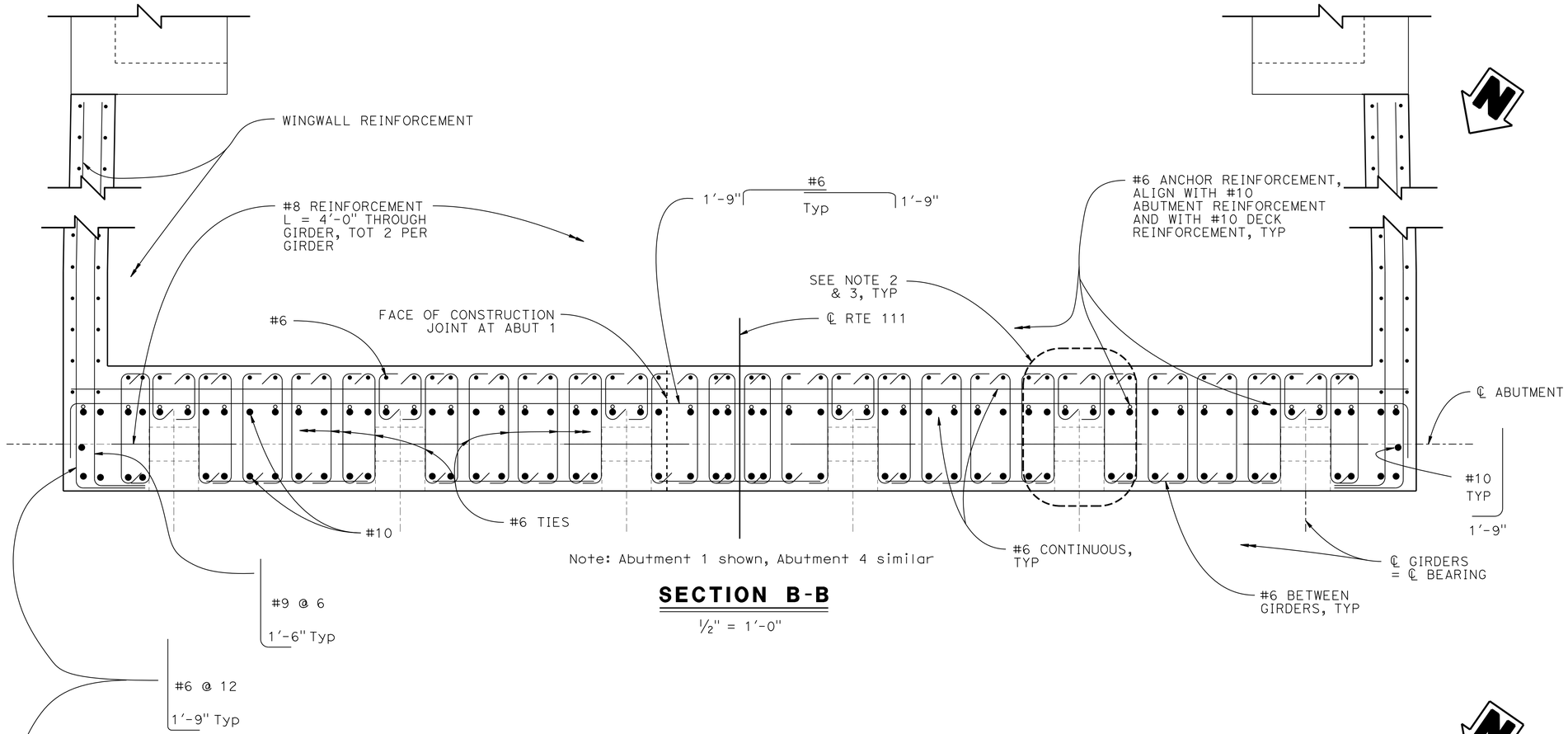

Note: Abutment 1 shown, Abutment 4 similar

SECTION B-B

½" = 1'-0"

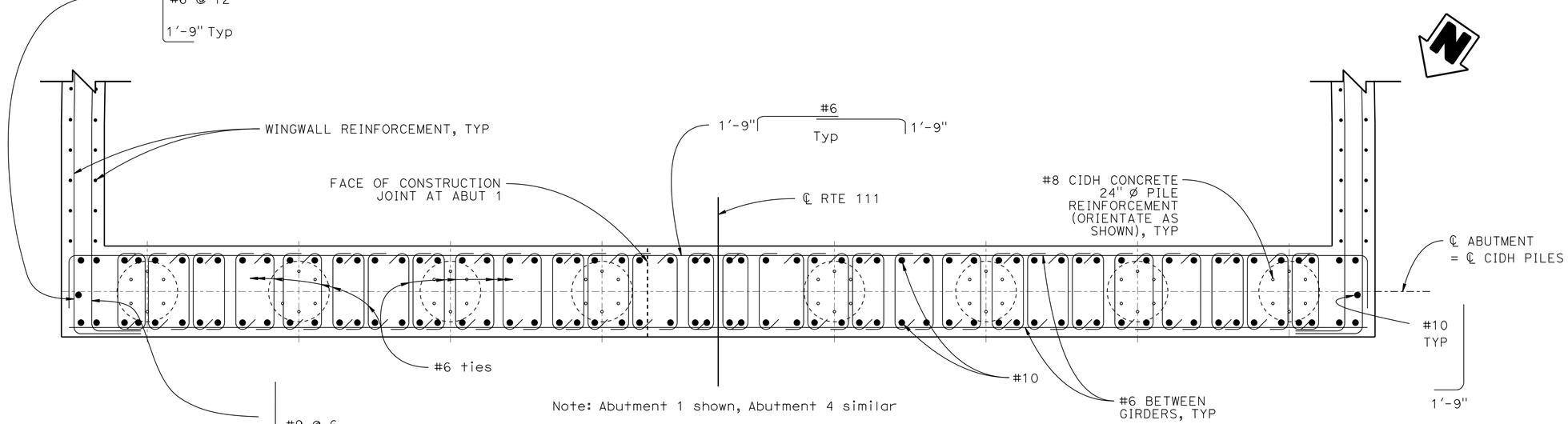

Note: Abutment 1 shown, Abutment 4 similar

SECTION C-C

½" = 1'-0"

NOTES:

1. For locations of Section B-B & C-C, see "ABUTMENT LAYOUT" sheet.
2. For Bearing Pad Detail, see "BEARING PAD DETAILS" sheet.
3. For Extending Girder Strands into Abutment concrete, see "GIRDER DETAILS" sheet.

NOTE:
THE CONTRACTOR SHALL VERIFY ALL CONTROLLING FIELD DIMENSIONS BEFORE ORDERING OR FABRICATING ANY MATERIAL.

	BY	CHECKED
DESIGN	J. Szabo	L. Wu
DETAILS	D. Wooten/J. Szabo	J. Szabo
QUANTITIES	J. Szabo	A. McPhee/M. Vo

STATE OF CALIFORNIA
DEPARTMENT OF TRANSPORTATION

DIVISION OF ENGINEERING SERVICES
STRUCTURE DESIGN
DESIGN BRANCH 10

BRIDGE NO. 56-0854
POST MILE 1.51

SALT CREEK BRIDGE (REPLACE)
ABUTMENT DETAILS NO. 2

STRUCTURES DESIGN DETAIL SHEET (ENGLISH) (REV. 09-01-10)

ORIGINAL SCALE IN INCHES FOR REDUCED PLANS 0 1 2 3

UNIT: 3589
PROJECT NUMBER & PHASE: 0800000714
CONTRACT NO.: 08-449101

DISREGARD PRINTS BEARING EARLIER REVISION DATES

REVISION DATES: 9-24-12 11-02-12 1-09-13 2-14-13

SHEET 8 OF 27

FILE => 560854fdd1208.dgn

USERNAME => s124496 DATE PLOTTED => 14-AUG-2013 TIME PLOTTED => 08:34

DIST	COUNTY	ROUTE	POST MILES TOTAL PROJECT	SHEET No.	TOTAL SHEETS
08	Riv	111	1.5	64	82

Jonathan Szabo 2-15-13
REGISTERED CIVIL ENGINEER DATE

6-17-13
PLANS APPROVAL DATE

REGISTERED PROFESSIONAL ENGINEER JONATHAN SZABO No. C78563 Exp. 9-30-13 CIVIL STATE OF CALIFORNIA

The State of California or its officers or agents shall not be responsible for the accuracy or completeness of electronic copies of this plan sheet.

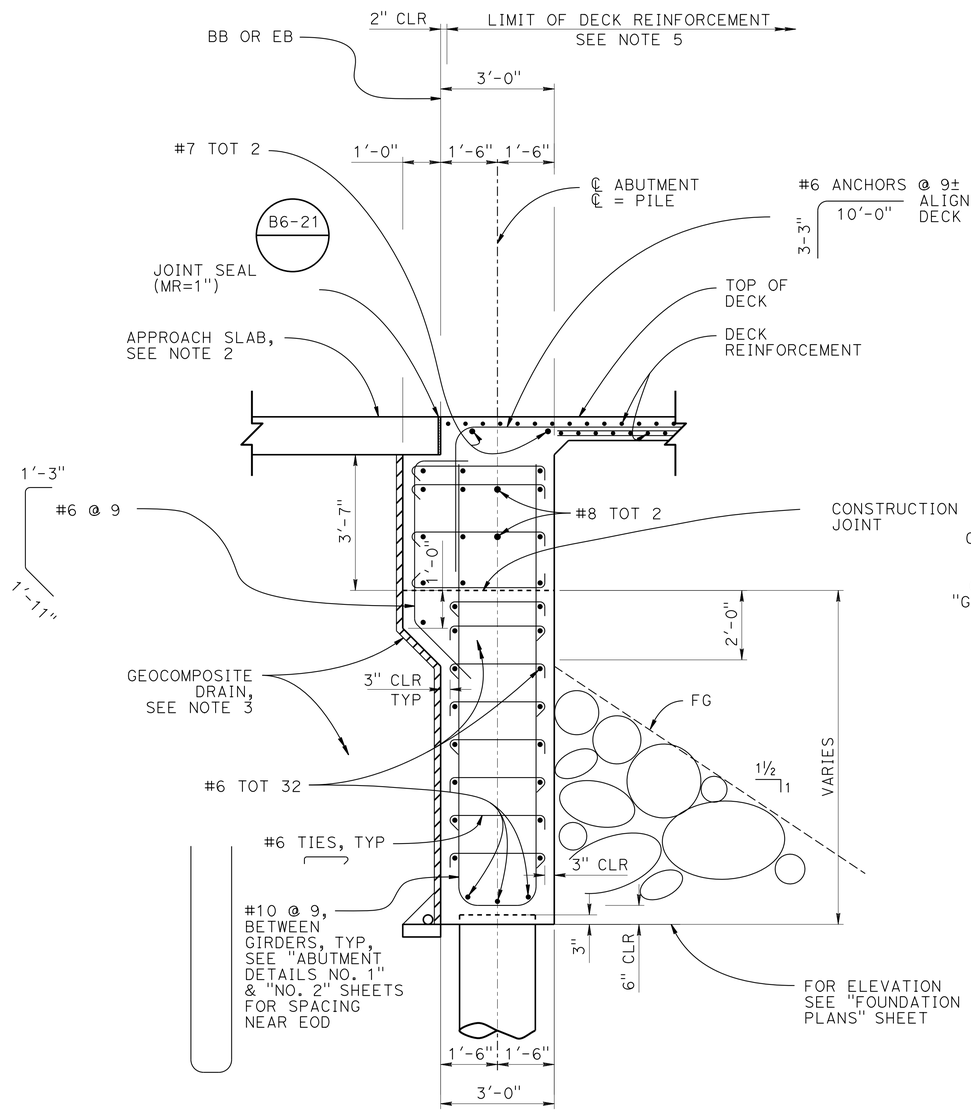

SECTION D-D

½" = 1'-0"

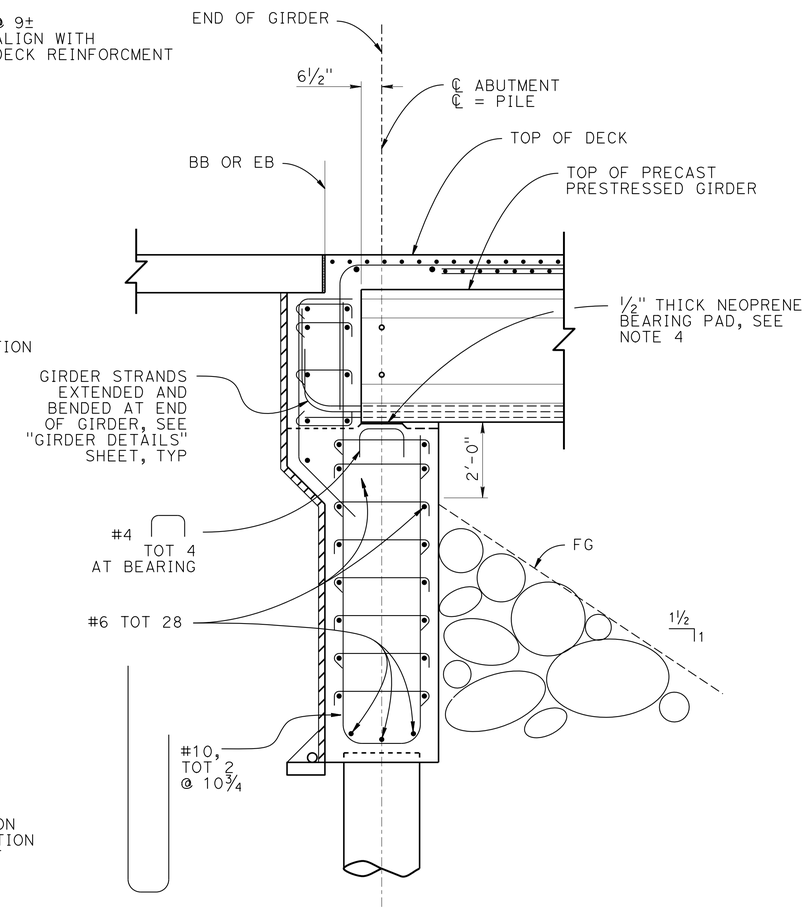

NOTE: For details not shown, see Section D-D

SECTION E-E

½" = 1'-0"

NOTES:

1. For locations of "SECTION D-D" and "SECTION E-E", see "ABUTMENT LAYOUT" sheet.
2. For Approach Slab details, see "GENERAL PLAN" &"STRUCTURE APPROACH TYPE N(30D)" sheet.
3. For Geocomposite Drain at Abutment and Wingwalls, see "STRUCTURE APPROACH DRAINAGE DETAILS" sheet.
4. For Bearing Details at Abutment, see "BEARING DETAILS" sheet.
5. Omit lower mat deck reinforcement as required to accommodate #7 and #6 anchorage reinforcement at top of Abutment.

NOTE:
THE CONTRACTOR SHALL VERIFY ALL CONTROLLING FIELD DIMENSIONS BEFORE ORDERING OR FABRICATING ANY MATERIAL.

DESIGN	BY J. Szabo	CHECKED L. Wu	
DETAILS	BY D. Wooten/J. Szabo	CHECKED J. Szabo	
QUANTITIES	BY J. Szabo	CHECKED A. McPhee/M. Vo	

STATE OF CALIFORNIA
DEPARTMENT OF TRANSPORTATION

DIVISION OF ENGINEERING SERVICES
STRUCTURE DESIGN
DESIGN BRANCH 10

BRIDGE NO. 56-0854
POST MILE 1.51

SALT CREEK BRIDGE (REPLACE)
ABUTMENT DETAILS NO. 3

STRUCTURES DESIGN DETAIL SHEET (ENGLISH) (REV. 09-01-10)

ORIGINAL SCALE IN INCHES FOR REDUCED PLANS 0 1 2 3

UNIT: 3589
PROJECT NUMBER & PHASE: 0800000714
CONTRACT NO.: 08-449101

DISREGARD PRINTS BEARING EARLIER REVISION DATES

REVISION DATES: 9-24-12 11-02-12 1-09-13 2-14-13

SHEET 9 OF 27

FILE => 560854fad309.dgn

USERNAME => s124496 DATE PLOTTED => 14-AUG-2013 TIME PLOTTED => 05:34

DIST	COUNTY	ROUTE	POST MILES TOTAL PROJECT	SHEET No.	TOTAL SHEETS
08	Riv	111	1.5	65	82

REGISTERED CIVIL ENGINEER — DATE 2-15-13

6-17-13
PLANS APPROVAL DATE

REGISTERED PROFESSIONAL ENGINEER — JONATHAN SZABO — No. C78563 — Exp. 9-30-13 — CIVIL — STATE OF CALIFORNIA

The State of California or its officers or agents shall not be responsible for the accuracy or completeness of electronic copies of this plan sheet.

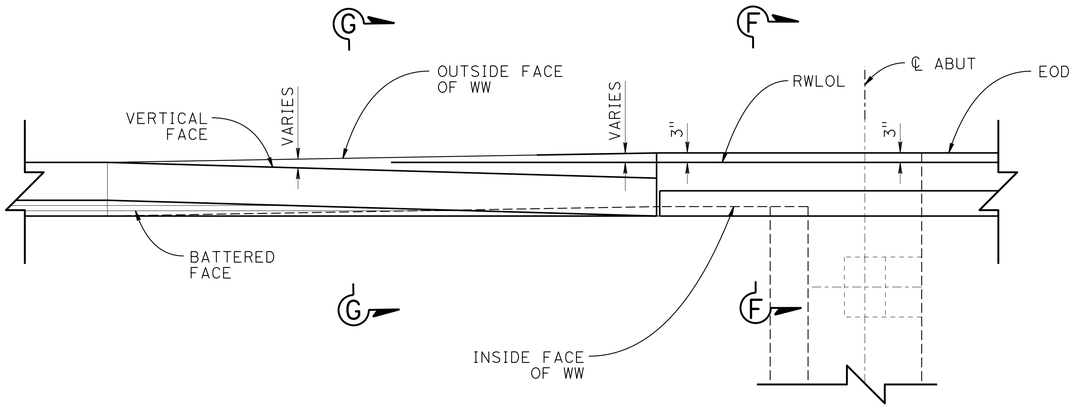

BARRIER TRANSITION PLAN

1/2" = 1'-0"

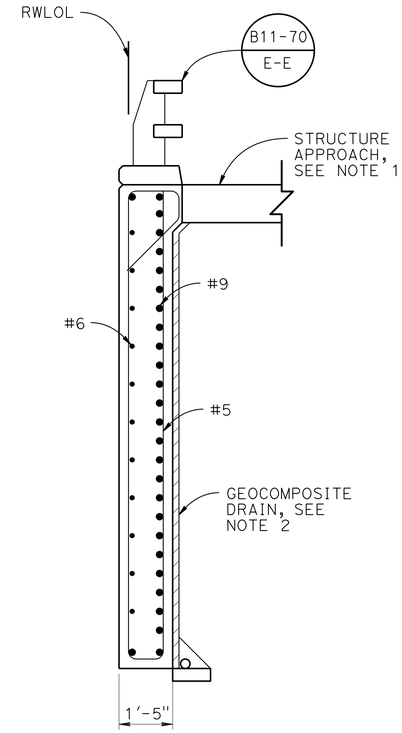

SECTION F-F

1/2" = 1'-0"

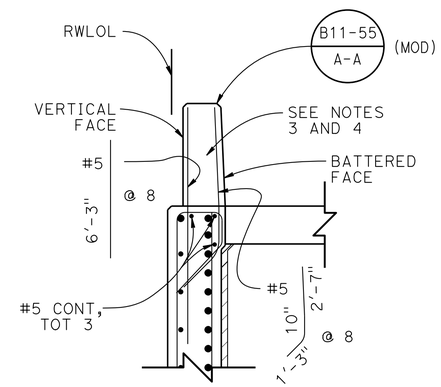

Note: For details not shown, see Section F-F

SECTION G-G

1/2" = 1'-0"

NOTES:

1. For Approach Slab details, see "STRUCTURE APPROACH TYPE N(30D)" sheet.
2. For Geocomposite Drain at Abutment and Wingwalls, see "STRUCTURE APPROACH DRAINAGE DETAILS" sheet.
3. For barrier reinforcement details not shown, see reinforcement of referenced Standard Plans detail.
4. Typical metal railing connection and anchor bolt holes of Standard Plans A77J1 and A77J2 not included.

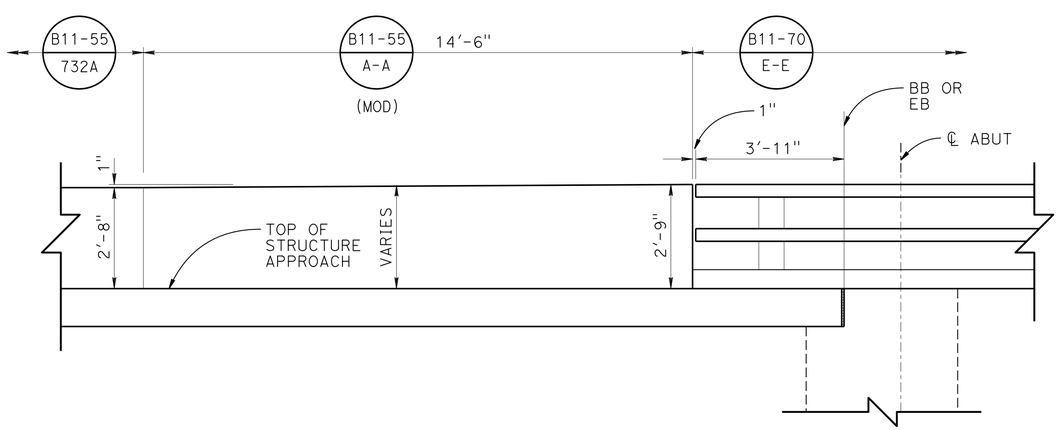

BARRIER TRANSITION ELEVATION

1/2" = 1'-0"

NOTE:
THE CONTRACTOR SHALL VERIFY ALL CONTROLLING FIELD DIMENSIONS BEFORE ORDERING OR FABRICATING ANY MATERIAL.

	BY	CHECKED
DESIGN	J. Szabo	L. Wu
DETAILS	D. Wooten/J. Szabo	J. Szabo
QUANTITIES	J. Szabo	A. McPhee/M. Vo

STATE OF CALIFORNIA
DEPARTMENT OF TRANSPORTATION

DIVISION OF ENGINEERING SERVICES
STRUCTURE DESIGN
DESIGN BRANCH 10

BRIDGE NO. 56-0854
POST MILE 1.51

SALT CREEK BRIDGE (REPLACE)
ABUTMENT DETAILS NO. 4

STRUCTURES DESIGN DETAIL SHEET (ENGLISH) (REV. 09-01-10)

ORIGINAL SCALE IN INCHES FOR REDUCED PLANS 0 1 2 3

UNIT: 3589
PROJECT NUMBER & PHASE: 0800000714
CONTRACT NO.: 08-449101

DISREGARD PRINTS BEARING EARLIER REVISION DATES

REVISION DATES: 9-24-12 11-02-12 1-09-13 2-14-13

SHEET 10 OF 27

FILE => 560854fadt410.dgn

USERNAME => s124496 DATE PLOTTED => 14-AUG-2013 TIME PLOTTED => 09:34

DIST	COUNTY	ROUTE	POST MILES TOTAL PROJECT	SHEET No.	TOTAL SHEETS
08	Riv	111	1.5	66	82

Jonathan Szabo 2-15-13
REGISTERED CIVIL ENGINEER DATE

6-17-13
PLANS APPROVAL DATE

REGISTERED PROFESSIONAL ENGINEER
JONATHAN SZABO
No. C78563
Exp. 9-30-13
CIVIL
STATE OF CALIFORNIA

The State of California or its officers or agents shall not be responsible for the accuracy or completeness of electronic copies of this plan sheet.

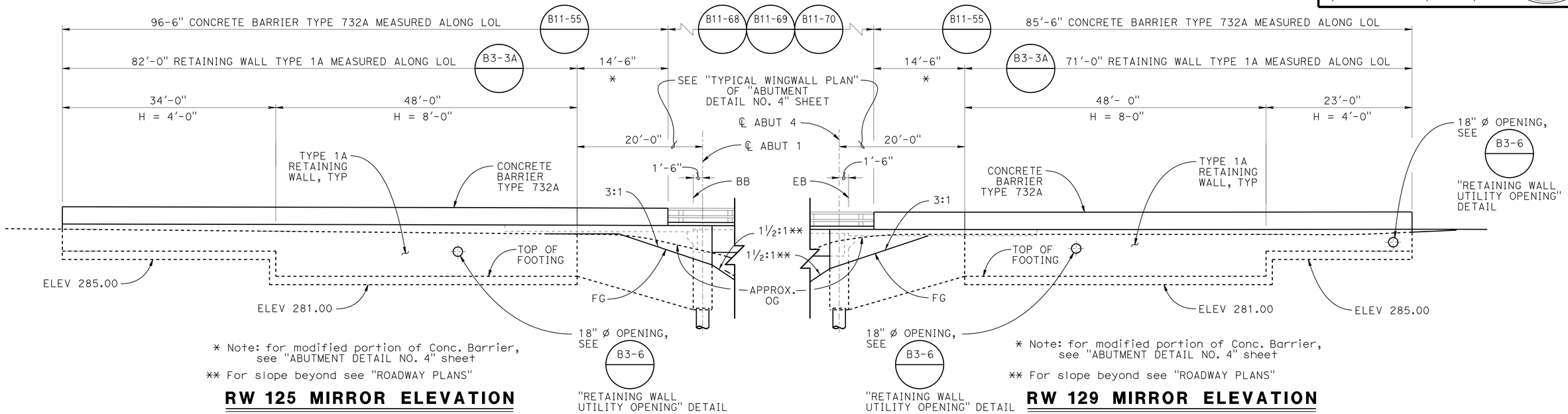

* Note: for modified portion of Conc. Barrier, see "ABUTMENT DETAIL NO. 4" sheet

** For slope beyond see "ROADWAY PLANS"

RW 125 MIRROR ELEVATION

1/8" = 1'-0"

* Note: for modified portion of Conc. Barrier, see "ABUTMENT DETAIL NO. 4" sheet

** For slope beyond see "ROADWAY PLANS"

RW 129 MIRROR ELEVATION

1/8" = 1'-0"

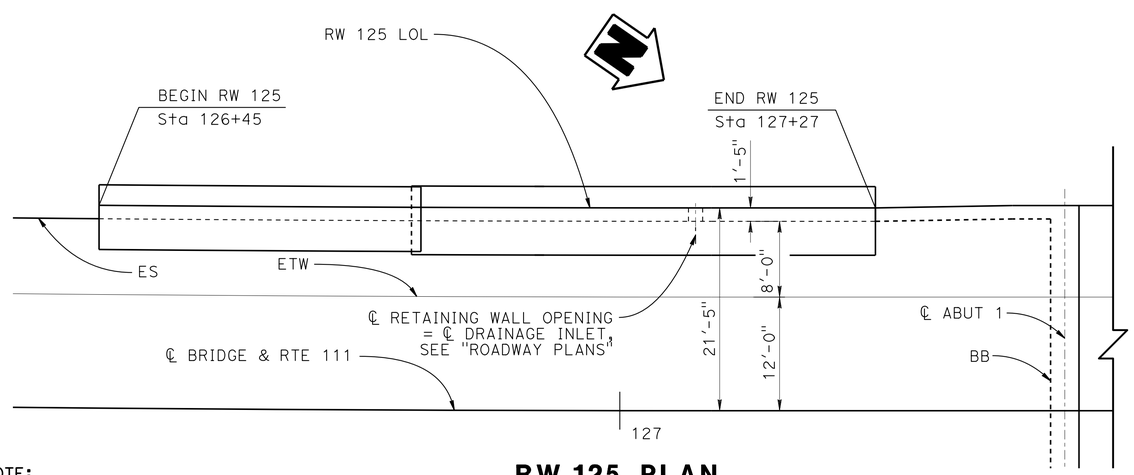

RW 125 PLAN

1/8" = 1'-0"

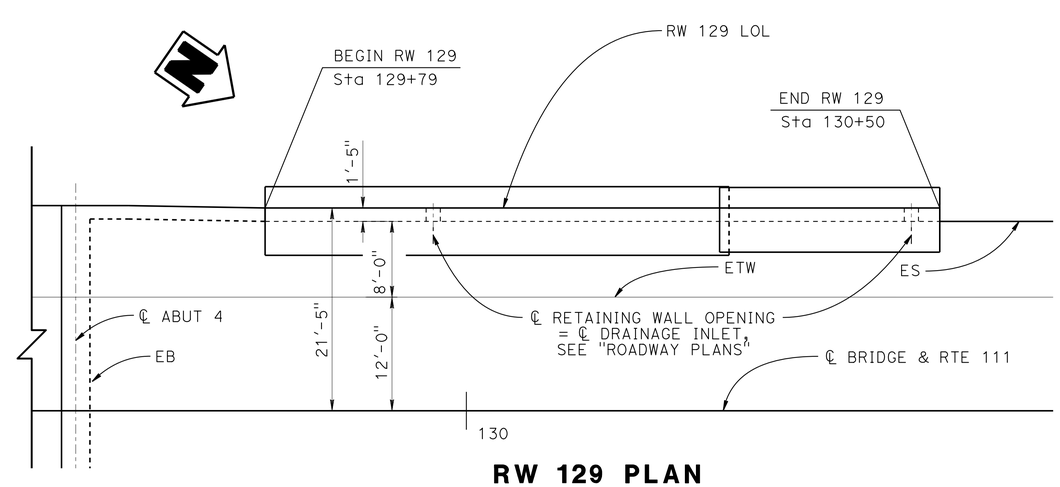

RW 129 PLAN

1/8" = 1'-0"

NOTE:
THE CONTRACTOR SHALL VERIFY ALL CONTROLLING FIELD DIMENSIONS BEFORE ORDERING OR FABRICATING ANY MATERIAL.

DESIGN	BY J. Szabo	CHECKED L. Wu	
DETAILS	BY D. Wooten/J. Szabo	CHECKED J. Szabo	
QUANTITIES	BY J. Szabo	CHECKED A. McPhee/M. Vo	

STATE OF CALIFORNIA
DEPARTMENT OF TRANSPORTATION

DIVISION OF ENGINEERING SERVICES
STRUCTURE DESIGN
DESIGN BRANCH 10

BRIDGE NO. 56-0854
POST MILE 1.51

SALT CREEK BRIDGE (REPLACE)
RETAINING WALL LAYOUT NO. 1

STRUCTURES DESIGN DETAIL SHEET (ENGLISH) (REV. 09-01-10)

ORIGINAL SCALE IN INCHES FOR REDUCED PLANS 0 1 2 3

UNIT: 3589
PROJECT NUMBER & PHASE: 0800000714
CONTRACT NO.: 08-449101

DISREGARD PRINTS BEARING EARLIER REVISION DATES

REVISION DATES: 9-24-12 11-02-12 1-09-13 2-14-13

SHEET 11 OF 27

FILE => 560854grw1_lo11.dgn

USERNAME => s124496 DATE PLOTTED => 14-AUG-2013 TIME PLOTTED => 05:34

DIST	COUNTY	ROUTE	POST MILES TOTAL PROJECT	SHEET No.	TOTAL SHEETS
08	Riv	111	1.5	67	82

Jonathan Szabo 2-15-13
REGISTERED CIVIL ENGINEER DATE

6-17-13
PLANS APPROVAL DATE

REGISTERED PROFESSIONAL ENGINEER
JONATHAN SZABO
No. C78563
Exp. 9-30-13
CIVIL
STATE OF CALIFORNIA

The State of California or its officers or agents shall not be responsible for the accuracy or completeness of electronic copies of this plan sheet.

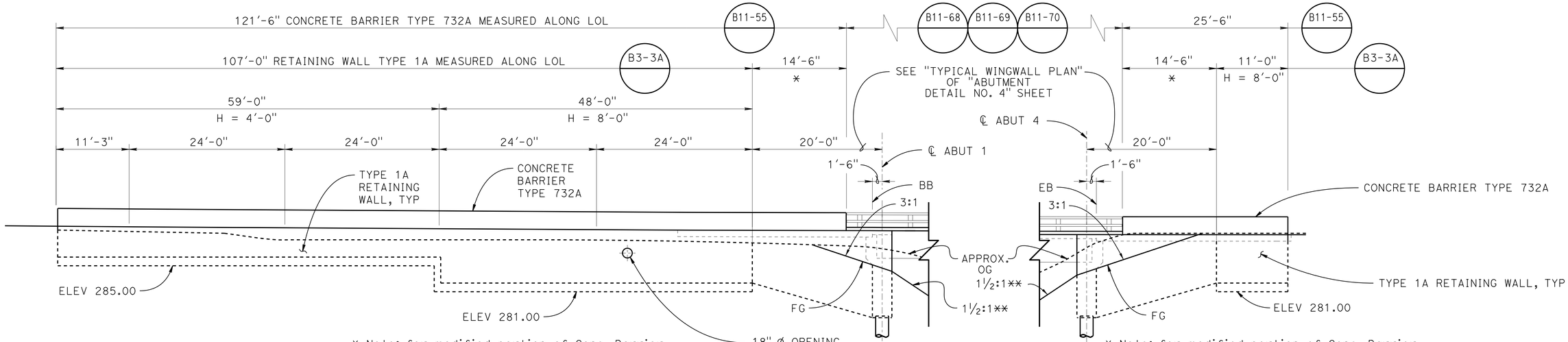

* Note: for modified portion of Conc. Barrier, see "ABUTMENT DETAIL NO. 4" sheet
** For slope beyond see "ROADWAY PLANS"

RW 126 ELEVATION

⅛" = 1'-0"

* Note: for modified portion of Conc. Barrier, see "ABUTMENT DETAIL NO. 4" sheet
** For slope beyond see "ROADWAY PLANS"

RW 130 ELEVATION

⅛" = 1'-0"

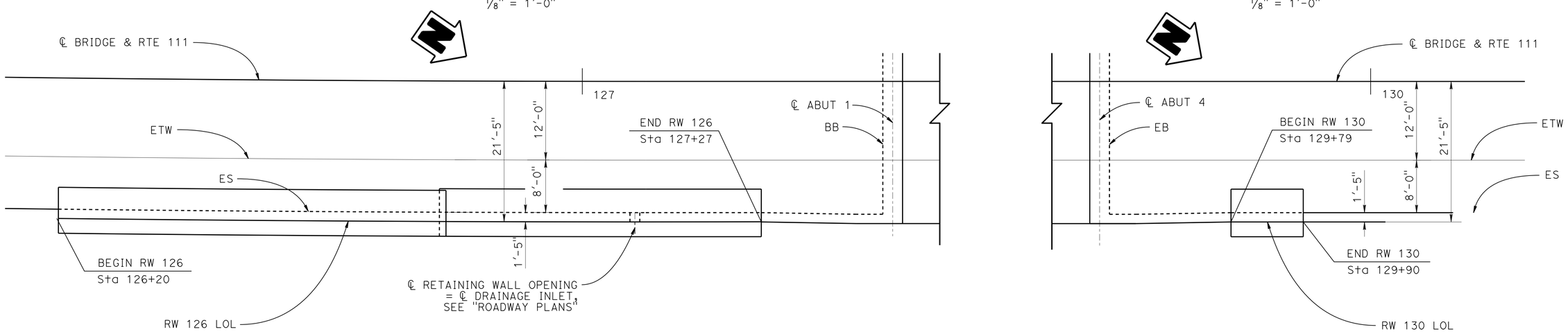

RW 126 PLAN

⅛" = 1'-0"

RW 130 PLAN

⅛" = 1'-0"

NOTE:
THE CONTRACTOR SHALL VERIFY ALL CONTROLLING FIELD DIMENSIONS BEFORE ORDERING OR FABRICATING ANY MATERIAL.

	BY	CHECKED
DESIGN	J. Szabo	L. Wu
DETAILS	D. Wooten/J. Szabo	J. Szabo
QUANTITIES	J. Szabo	A. McPhee/M. Vo

STATE OF CALIFORNIA
DEPARTMENT OF TRANSPORTATION

DIVISION OF ENGINEERING SERVICES
STRUCTURE DESIGN
DESIGN BRANCH 10

BRIDGE NO. 56-0854
POST MILE 1.51

SALT CREEK BRIDGE (REPLACE)
RETAINING WALL LAYOUT NO. 2

STRUCTURES DESIGN DETAIL SHEET (ENGLISH) (REV. 09-01-10)

ORIGINAL SCALE IN INCHES FOR REDUCED PLANS 0 1 2 3

UNIT: 3589
PROJECT NUMBER & PHASE: 0800000714
CONTRACT NO.: 08-449101

DISREGARD PRINTS BEARING EARLIER REVISION DATES

REVISION DATES: 9-24-12 11-02-12 1-08-13 2-14-13

SHEET 12 OF 27

FILE => 560854grw2_lo12.dgn

USERNAME => s124496 DATE PLOTTED => 14-AUG-2013 TIME PLOTTED => 05:34

DIST	COUNTY	ROUTE	POST MILES TOTAL PROJECT	SHEET No.	TOTAL SHEETS
08	Riv	111	1.5	68	82

REGISTERED CIVIL ENGINEER — DATE 2-15-13

6-17-13
PLANS APPROVAL DATE

REGISTERED PROFESSIONAL ENGINEER — JONATHAN SZABO — No. C78563 — Exp. 9-30-13 — CIVIL — STATE OF CALIFORNIA

The State of California or its officers or agents shall not be responsible for the accuracy or completeness of electronic copies of this plan sheet.

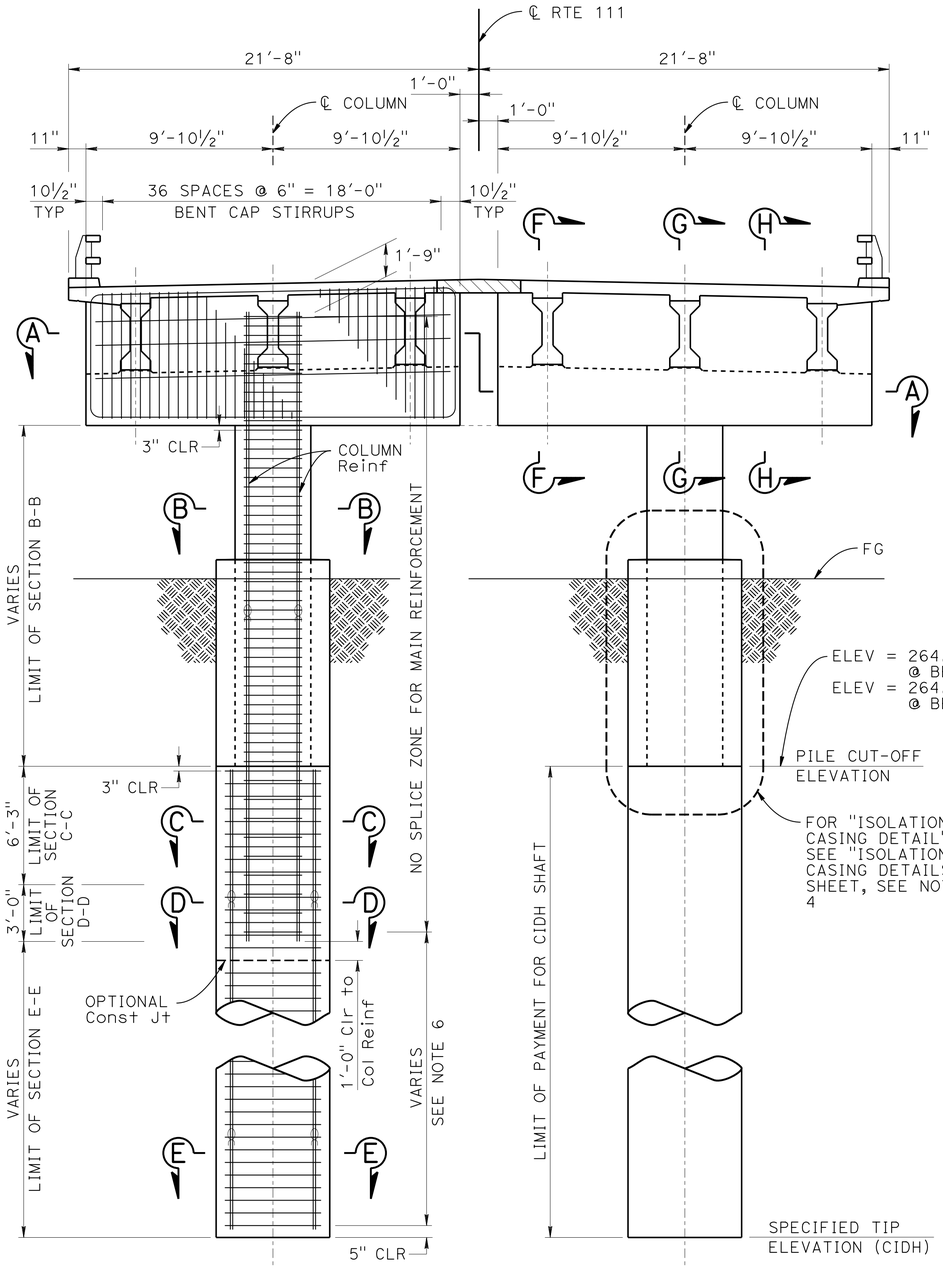

Note: Bent 2 shown, Bent 3 similar

BENT ELEVATION

¼" = 1'-0"

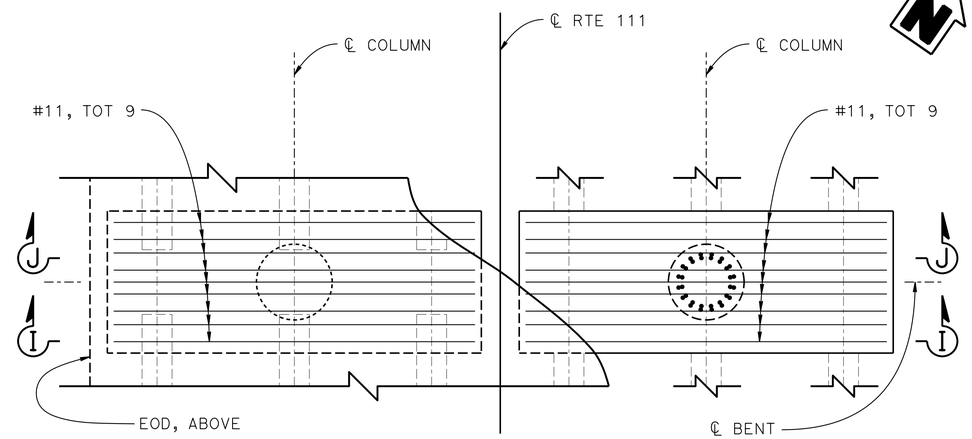

TOP OF BENT CAP

BOTTOM OF BENT CAP

BENT PLAN

¼" = 1'-0"

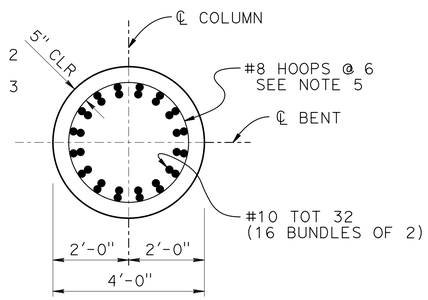

SECTION B-B

½" = 1'-0"

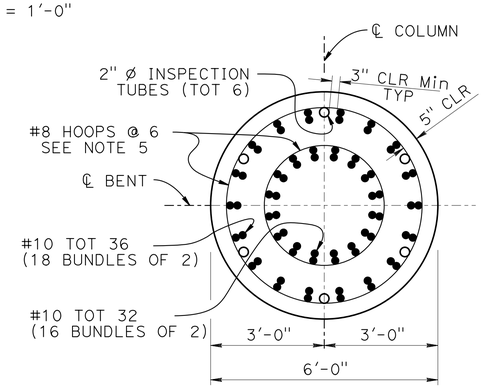

SECTION C-C

½" = 1'-0"

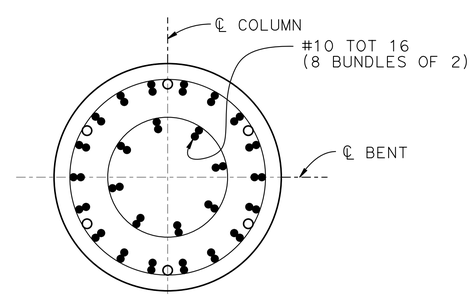

FOR DETAILS NOT SHOWN, SEE "SECTION C-C"

SECTION D-D

½" = 1'-0"

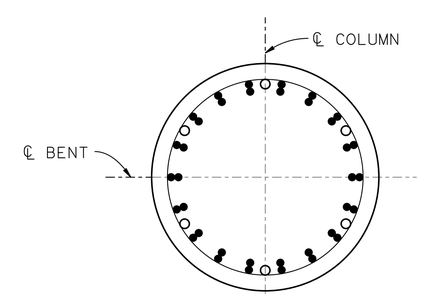

FOR DETAILS NOT SHOWN, SEE "SECTION C-C"

SECTION E-E

½" = 1'-0"

LEGEND:

Indicates closure pour

Indicates bundle bar

NOTES:

1. For SECTION A-A, see "BENT DETAILS NO. 1" sheet.
2. For SECTION F-F, G-G and H-H see "BENT DETAILS NO. 2" sheet.
3. For SECTION I-I & J-J, see "BENT DETAILS NO. 3" sheet.
4. For Isolation Casing, see "ISOLATION CASING DETAILS" sheet.
5. All hoops are "Ultimate" butt spliced continous.
6. Only staggered "Ultimate" butt spliced allowed in shaft main reinforcement

NOTE:
THE CONTRACTOR SHALL VERIFY ALL CONTROLLING FIELD DIMENSIONS BEFORE ORDERING OR FABRICATING ANY MATERIAL.

	BY	CHECKED
DESIGN	J. Szabo	L. Wu
DETAILS	D. Wooten/J. Szabo	J. Szabo
QUANTITIES	J. Szabo	A. McPhee/M. Vo

STATE OF CALIFORNIA
DEPARTMENT OF TRANSPORTATION

DIVISION OF ENGINEERING SERVICES
STRUCTURE DESIGN
DESIGN BRANCH 10

BRIDGE NO. 56-0854
POST MILE 1.51

SALT CREEK BRIDGE (REPLACE)
BENT LAYOUT

STRUCTURES DESIGN DETAIL SHEET (ENGLISH) (REV. 09-01-10)

ORIGINAL SCALE IN INCHES FOR REDUCED PLANS 0 1 2 3

UNIT: 3589
PROJECT NUMBER & PHASE: 0800000714
CONTRACT NO.: 08-449101

DISREGARD PRINTS BEARING EARLIER REVISION DATES

REVISION DATES: 9-24-12 11-02-12 1-09-13 2-14-13

SHEET 13 OF 27

FILE => 560854hb_lo13.dgn

USERNAME => s124496 DATE PLOTTED => 14-AUG-2013 TIME PLOTTED => 05:34

DIST	COUNTY	ROUTE	POST MILES TOTAL PROJECT	SHEET No.	TOTAL SHEETS
08	Riv	111	1.5	69	82

Jonathan Szabo 2-15-13
REGISTERED CIVIL ENGINEER DATE

6-17-13
PLANS APPROVAL DATE

REGISTERED PROFESSIONAL ENGINEER JONATHAN SZABO No. C78563 Exp. 9-30-13 CIVIL STATE OF CALIFORNIA

The State of California or its officers or agents shall not be responsible for the accuracy or completeness of electronic copies of this plan sheet.

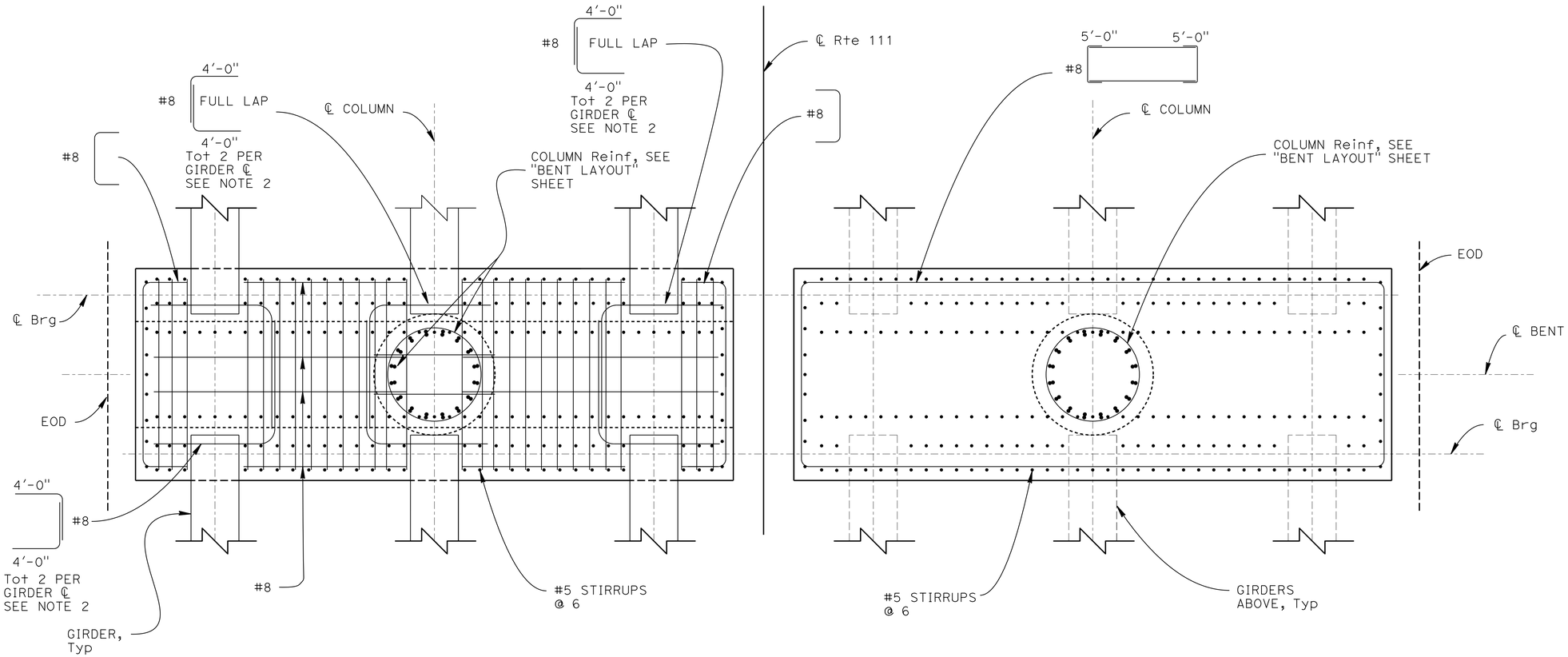

UPPER SECTION VIEW

LOWER SECTION VIEW

SECTION A-A

½" = 1'-0"

LEGEND:

Indicates closure pour

Indicates bundle bar

NOTES:

1. For location of Section A-A, see "BENT LAYOUT"sheet.
2. 4'-0" bend #8 bar through precast girder holes, see "Sections F-F" and "G-G" on "BENT DETAILS NO.2" sheet

NOTE:
THE CONTRACTOR SHALL VERIFY ALL CONTROLLING FIELD DIMENSIONS BEFORE ORDERING OR FABRICATING ANY MATERIAL.

DESIGN	BY J. Szabo	CHECKED L. Wu	
DETAILS	BY D. Wooten/J. Szabo	CHECKED J. Szabo	
QUANTITIES	BY J. Szabo	CHECKED A. McPhee/M. Vo	

STATE OF CALIFORNIA
DEPARTMENT OF TRANSPORTATION

DIVISION OF ENGINEERING SERVICES
STRUCTURE DESIGN
DESIGN BRANCH 10

BRIDGE NO. 56-0854
POST MILE 1.51

SALT CREEK BRIDGE (REPLACE)
BENT DETAILS NO. 1

STRUCTURES DESIGN DETAIL SHEET (ENGLISH) (REV. 09-01-10)

ORIGINAL SCALE IN INCHES FOR REDUCED PLANS 0 1 2 3

UNIT: 3589
PROJECT NUMBER & PHASE: 0800000714
CONTRACT NO.: 08-449101

DISREGARD PRINTS BEARING EARLIER REVISION DATES

REVISION DATES: 9-24-12 11-06-12 1-08-13 2-14-13

SHEET 14 OF 27

FILE => 560854hbdt114.dgn

USERNAME => s124496 DATE PLOTTED => 14-AUG-2013 TIME PLOTTED => 05:34

DIST	COUNTY	ROUTE	POST MILES TOTAL PROJECT	SHEET No.	TOTAL SHEETS
08	Riv	111	1.5	70	82

Jonathan Szabo 2-15-13
REGISTERED CIVIL ENGINEER DATE

6-17-13
PLANS APPROVAL DATE

REGISTERED PROFESSIONAL ENGINEER JONATHAN SZABO No. C78563 Exp. 9-30-13 CIVIL STATE OF CALIFORNIA

The State of California or its officers or agents shall not be responsible for the accuracy or completeness of electronic copies of this plan sheet.

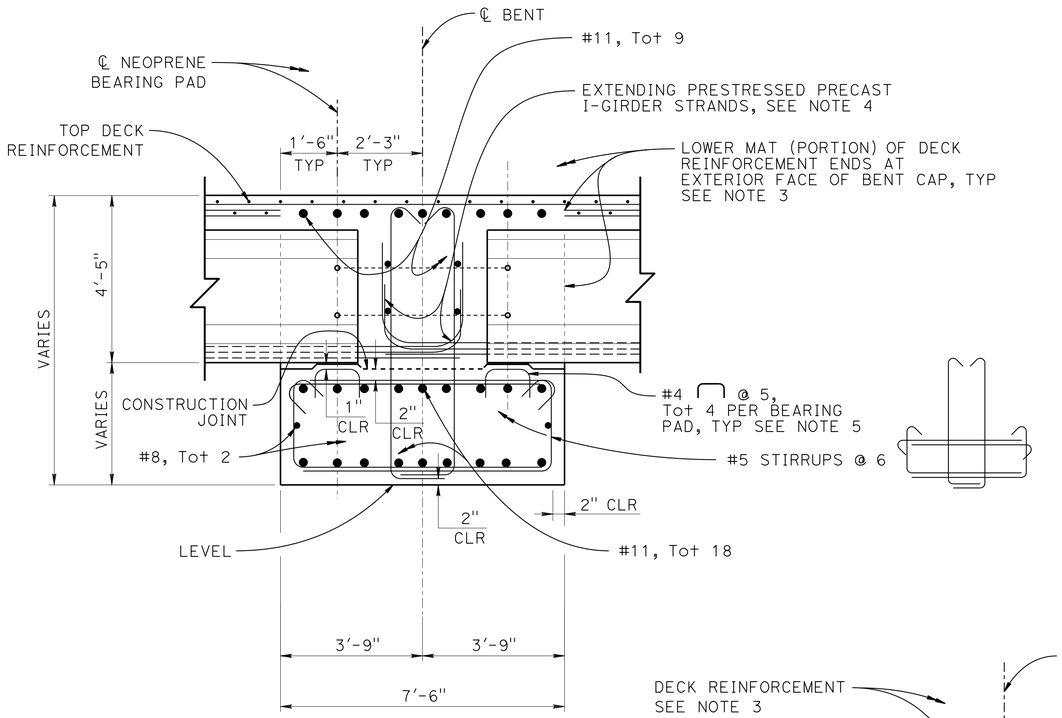

SECTION F-F

½" = 1'-0"

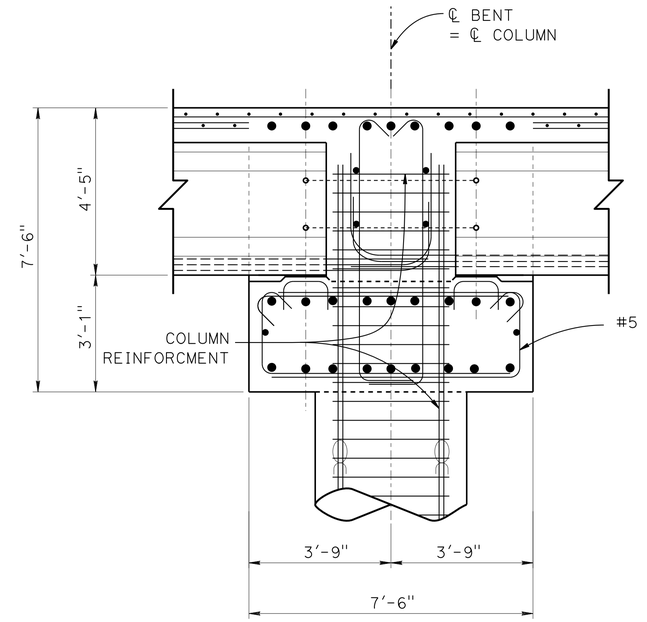

SECTION G-G

½" = 1'-0"

Note: For details not shown see "SECTION F-F"

LEGEND:

Indicates bundle bar

NOTES:

1. Bent 2 shown, Bent 3 similar.
2. For location of SECTIONS F-F, G-G & H-H, see "BENT LAYOUT" sheet.
3. For deck section, see "TYPICAL SECTION" sheet.
4. For Extending Precast Prestressed I Girder Strands, see "GIRDER DETAILS" sheet.
5. For Bearing Pad, see "BEARING DETAILS" sheet.

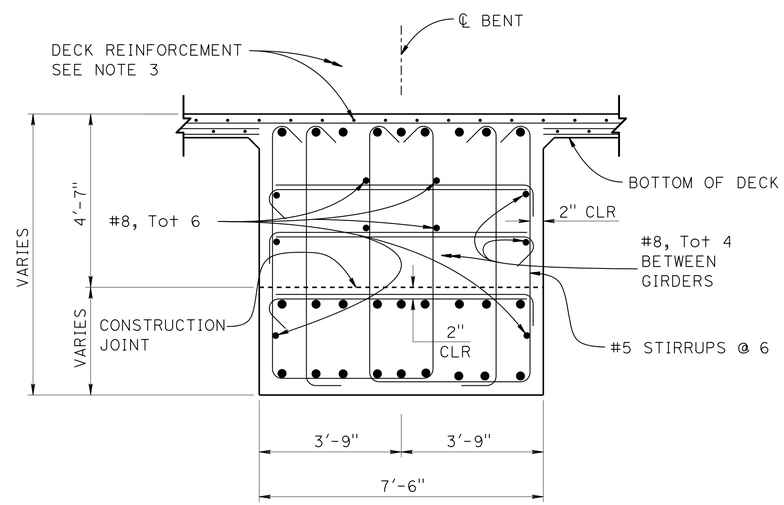

SECTION H-H

½" = 1'-0"

Note: For details not shown see "SECTION F-F"

NOTE:
THE CONTRACTOR SHALL VERIFY ALL CONTROLLING FIELD DIMENSIONS BEFORE ORDERING OR FABRICATING ANY MATERIAL.

DESIGN	BY J. Szabo	CHECKED L. Wu	
DETAILS	BY D. Wooten/J. Szabo	CHECKED J. Szabo	
QUANTITIES	BY J. Szabo	CHECKED A. McPhee/M. Vo	

STATE OF CALIFORNIA
DEPARTMENT OF TRANSPORTATION

DIVISION OF ENGINEERING SERVICES
STRUCTURE DESIGN
DESIGN BRANCH 10

BRIDGE NO. 56-0854
POST MILE 1.51

SALT CREEK BRIDGE (REPLACE)
BENT DETAILS NO. 2

STRUCTURES DESIGN DETAIL SHEET (ENGLISH) (REV. 09-01-10)

ORIGINAL SCALE IN INCHES FOR REDUCED PLANS 0 1 2 3

UNIT: 3589
PROJECT NUMBER & PHASE: 0800000714
CONTRACT NO.: 08-449101

DISREGARD PRINTS BEARING EARLIER REVISION DATES

REVISION DATES: 9-24-12 11-02-12 1-09-13 2-14-13

SHEET 15 OF 27

FILE => 560854hbdt215.dgn

USERNAME => s124496 DATE PLOTTED => 14-AUG-2013 TIME PLOTTED => 09:35

DIST	COUNTY	ROUTE	POST MILES TOTAL PROJECT	SHEET No.	TOTAL SHEETS
08	Riv	111	1.5	71	82

REGISTERED CIVIL ENGINEER — DATE 2-15-13

6-17-13
PLANS APPROVAL DATE

REGISTERED PROFESSIONAL ENGINEER — JONATHAN SZABO — No. C78563 — Exp. 9-30-13 — CIVIL — STATE OF CALIFORNIA

The State of California or its officers or agents shall not be responsible for the accuracy or completeness of electronic copies of this plan sheet.

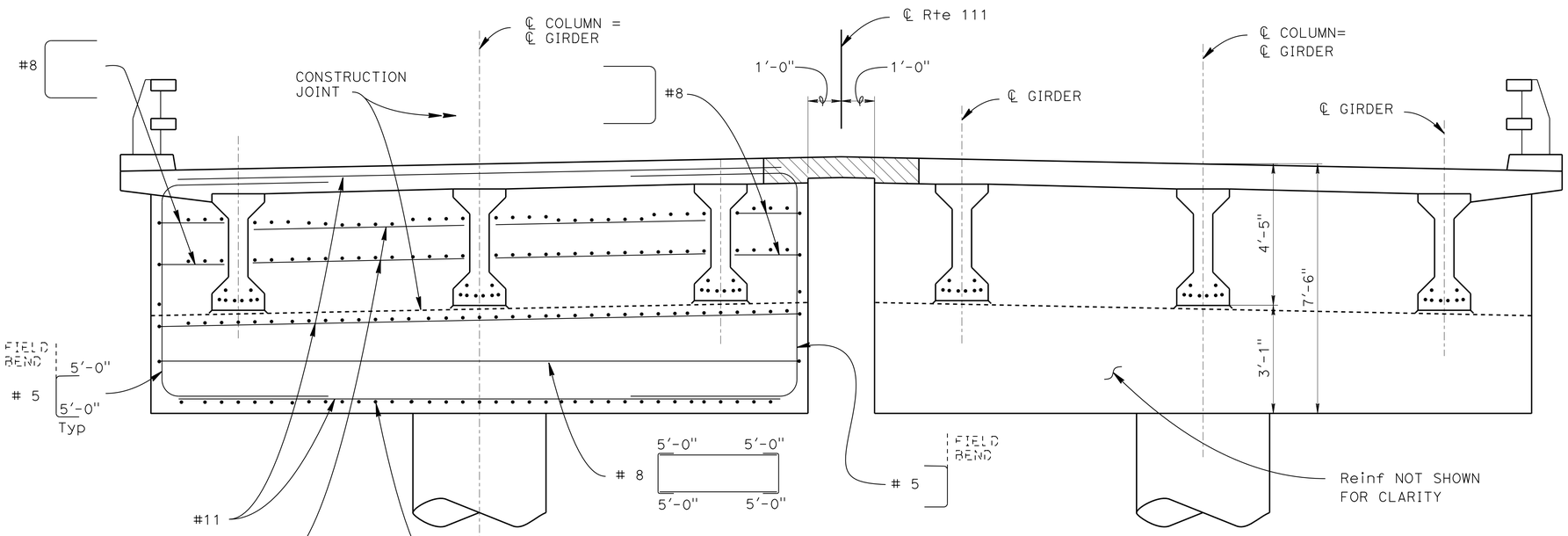

SECTION I-I

½" = 1'-0"

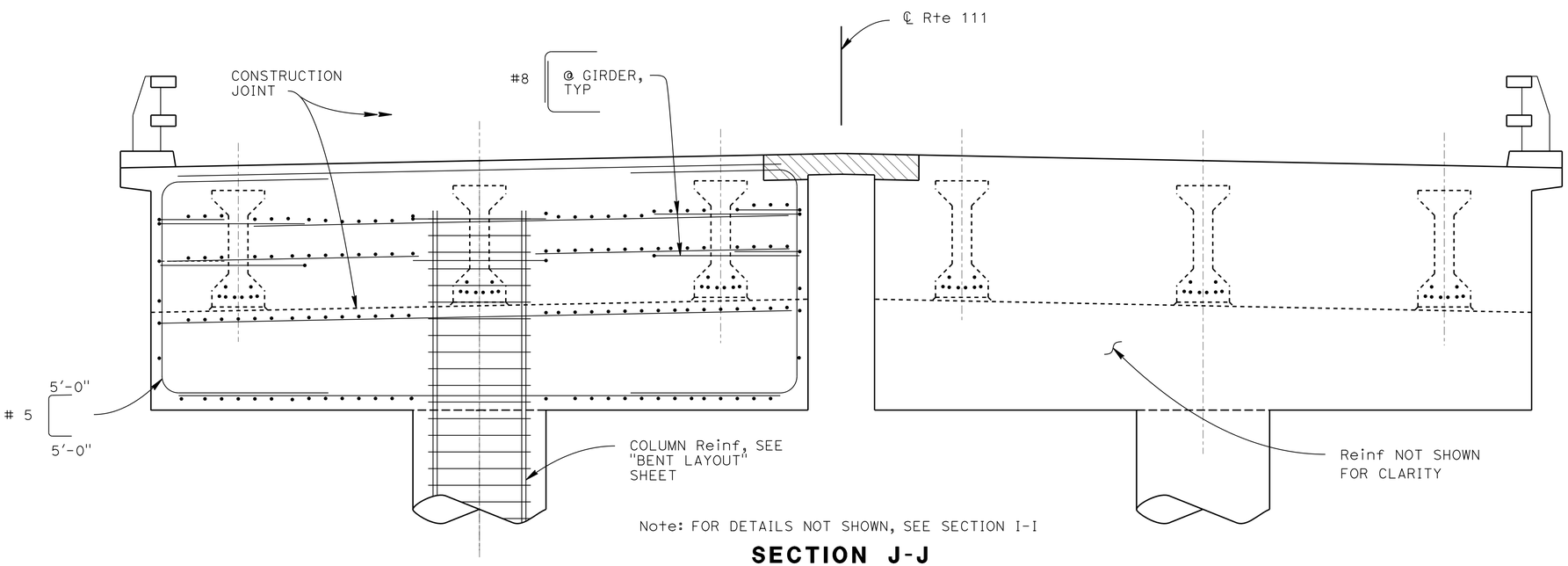

Note: FOR DETAILS NOT SHOWN, SEE SECTION I-I

SECTION J-J

½" = 1'-0"

LEGEND:

Indicates closure pour

Indicates bundle bar

NOTES:

1. Bent 2 shown, Bent 3 sections similar.
2. For location of "SECTION I-I" & "J-J", see "BENT LAYOUT" sheet.

NOTE:
THE CONTRACTOR SHALL VERIFY ALL CONTROLLING FIELD DIMENSIONS BEFORE ORDERING OR FABRICATING ANY MATERIAL.

	BY	CHECKED
DESIGN	J. Szabo	L. Wu
DETAILS	D. Wooten/J. Szabo	J. Szabo
QUANTITIES	J. Szabo	A. McPhee/M. Vo

STATE OF CALIFORNIA
DEPARTMENT OF TRANSPORTATION

DIVISION OF ENGINEERING SERVICES
STRUCTURE DESIGN
DESIGN BRANCH 10

BRIDGE NO. 56-0854
POST MILE 1.51

SALT CREEK BRIDGE (REPLACE)
BENT DETAILS NO. 3

STRUCTURES DESIGN DETAIL SHEET (ENGLISH) (REV. 09-01-10)

ORIGINAL SCALE IN INCHES FOR REDUCED PLANS 0 1 2 3

UNIT: 3589
PROJECT NUMBER & PHASE: 0800000714
CONTRACT NO.: 08-449101

DISREGARD PRINTS BEARING EARLIER REVISION DATES

REVISION DATES: 9-24-12 11-02-12 1-09-13 2-14-13

SHEET 16 OF 27

FILE => 560854hbdt316.dgn

USERNAME => s124496 DATE PLOTTED => 14-AUG-2013 TIME PLOTTED => 09:35

DIST	COUNTY	ROUTE	POST MILES TOTAL PROJECT	SHEET No.	TOTAL SHEETS
08	Riv	111	1.5	72	82

Jonathan Szabo 2-15-13
REGISTERED CIVIL ENGINEER DATE

6-17-13
PLANS APPROVAL DATE

REGISTERED PROFESSIONAL ENGINEER JONATHAN SZABO No. C78563 Exp. 9-30-13 CIVIL STATE OF CALIFORNIA

The State of California or its officers or agents shall not be responsible for the accuracy or completeness of electronic copies of this plan sheet.

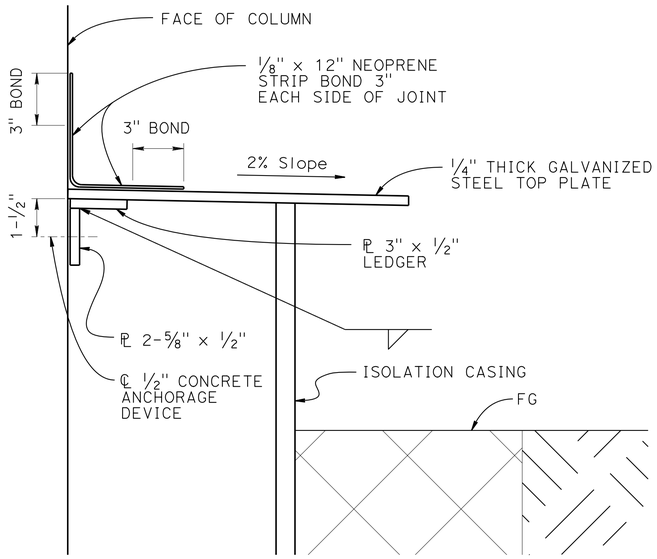

DETAIL A

3" = 1'-0"

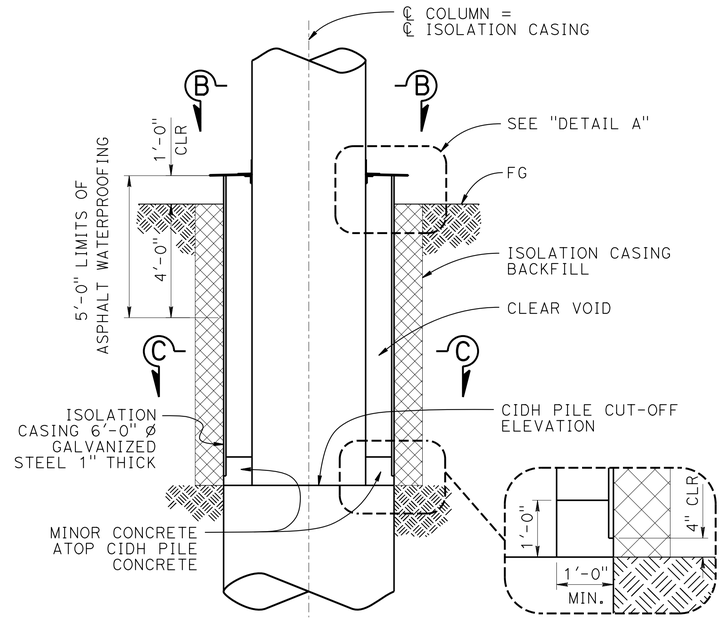

ISOLATION CASING DETAIL

3/8" = 1'-0"

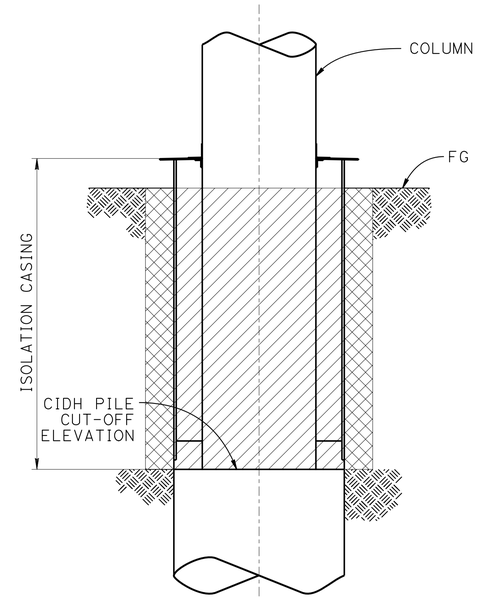

PAY LIMITS - ISOLATION CASING

3/8" = 1'-0"

LEGEND:

Indicates Structure Type "D" Excavation

Indicates Structure Backfill

NOTES:

1. For Bent Elevation and Column details, see "BENT LAYOUT" sheet.

ISOLATION CASING	
LOCATION	LENGTH
BENT 2, LEFT	10'-10" (±)
BENT 2, RIGHT	10'-10" (±)
BENT 3, LEFT	11'-1" (±)
BENT 3, RIGHT	11'-1" (±)

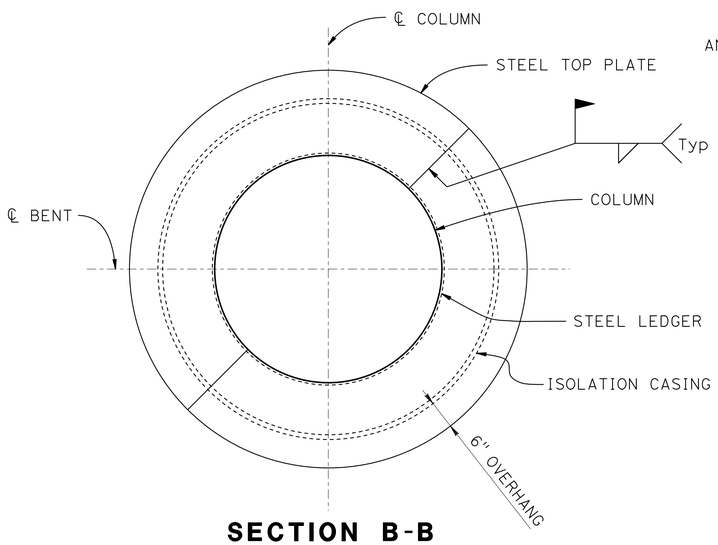

SECTION B-B

3/4" = 1'-0"

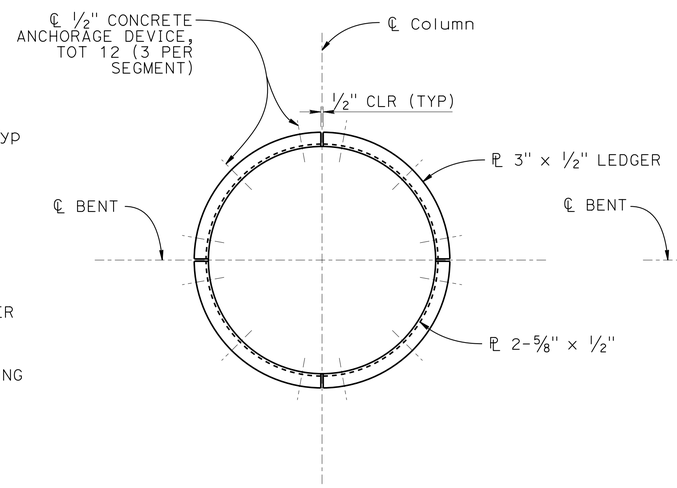

LEDGER PLAN

3/4" = 1'-0"

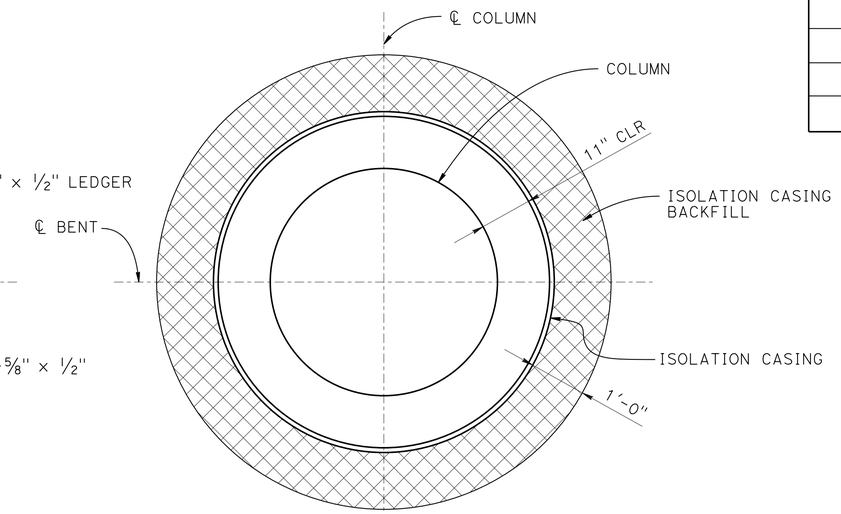

SECTION C-C

3/4" = 1'-0"

NOTE:
THE CONTRACTOR SHALL VERIFY ALL CONTROLLING FIELD DIMENSIONS BEFORE ORDERING OR FABRICATING ANY MATERIAL.

	BY	CHECKED
DESIGN	J. Szabo	L. Wu
DETAILS	D. Wooten/J. Szabo	J. Szabo
QUANTITIES	J. Szabo	A. McPhee/M. Vo

STATE OF CALIFORNIA DEPARTMENT OF TRANSPORTATION

DIVISION OF ENGINEERING SERVICES STRUCTURE DESIGN DESIGN BRANCH 10

BRIDGE NO. 56-0854
POST MILE 1.51

SALT CREEK BRIDGE (REPLACE)
ISOLATION CASING DETAILS

STRUCTURES DESIGN DETAIL SHEET (ENGLISH) (REV. 09-01-10)

ORIGINAL SCALE IN INCHES FOR REDUCED PLANS 0 1 2 3

UNIT: 3589
PROJECT NUMBER & PHASE: 0800000714
CONTRACT NO.: 08-449101

DISREGARD PRINTS BEARING EARLIER REVISION DATES

REVISION DATES 9-24-12 11-02-12 1-09-13 2-14-13

SHEET 17 OF 27

FILE => 560854jcls017.dgn

USERNAME => s124496 DATE PLOTTED => 14-AUG-2013 TIME PLOTTED => 05:35

DIST	COUNTY	ROUTE	POST MILES TOTAL PROJECT	SHEET No.	TOTAL SHEETS
08	Riv	111	1.5	73	82

Jonathan Szabo 2-15-13
REGISTERED CIVIL ENGINEER DATE

6-17-13
PLANS APPROVAL DATE

REGISTERED PROFESSIONAL ENGINEER
JONATHAN SZABO
No. C78563
Exp. 9-30-13
CIVIL
STATE OF CALIFORNIA

The State of California or its officers or agents shall not be responsible for the accuracy or completeness of electronic copies of this plan sheet.

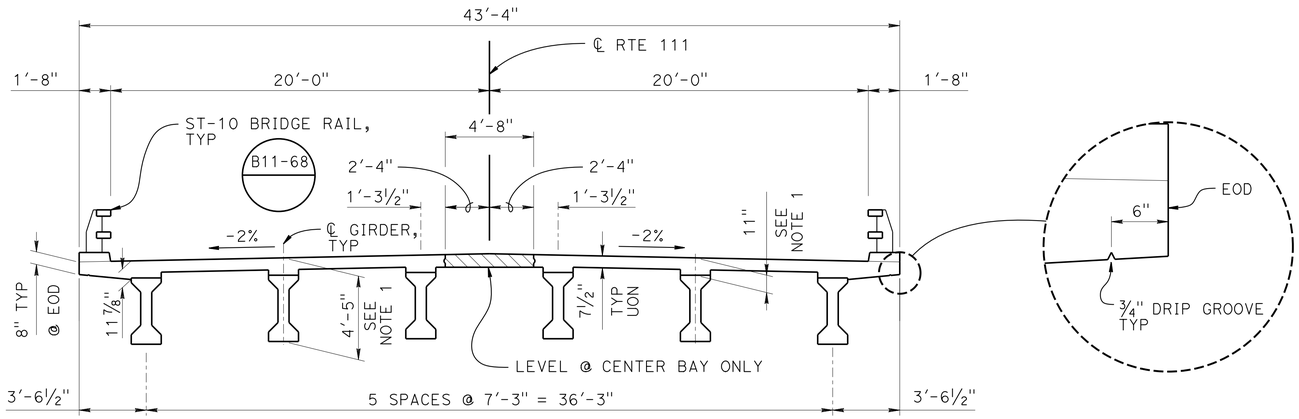

TYPICAL SECTION

¼" = 1'-0"

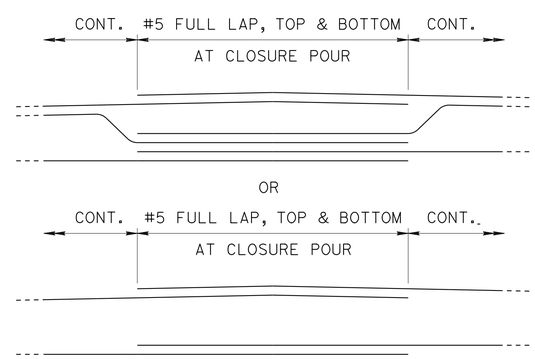

LEGEND:

Indicates closure pour

○ Indicates Additional Deck Reinforcement at ℄ Bent

NOTES:

1. Maximum depths at ℄ Bearing shown, depths beyond bearing varies with Haunch thickness and Deck countours.
2. For Additional Deck Reinforcement, see "GIRDER REINFORCEMENT" sheet.

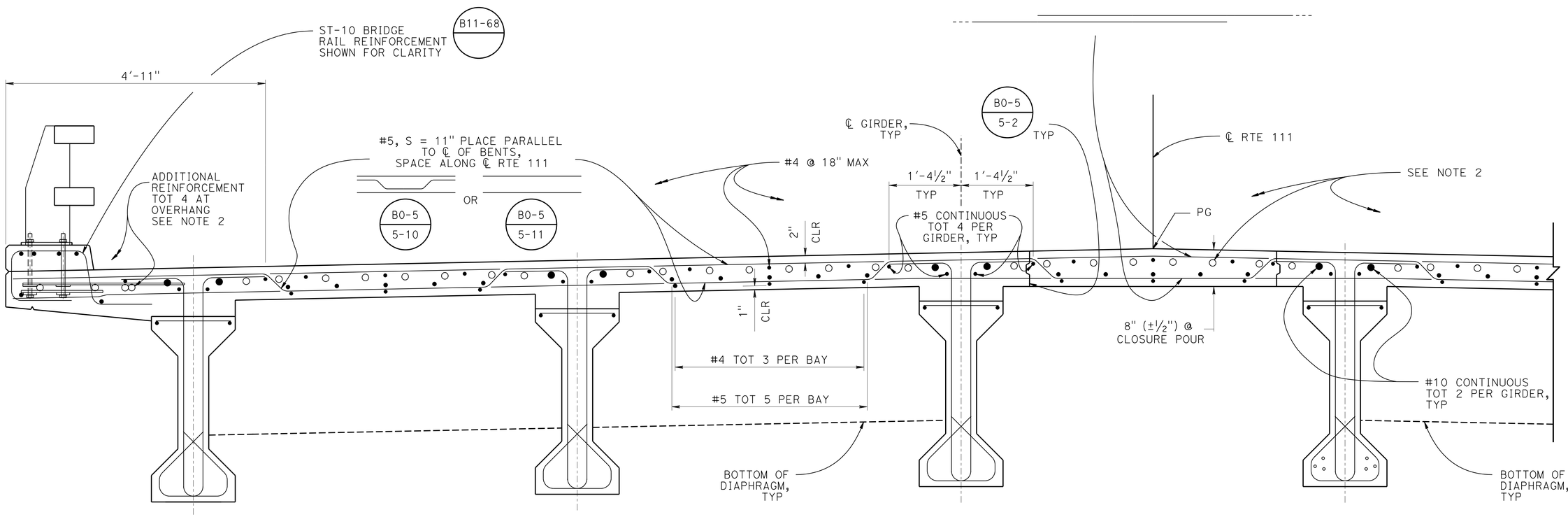

PART TYPICAL SECTION

1" = 1'-0"

NOTE:
THE CONTRACTOR SHALL VERIFY ALL CONTROLLING FIELD DIMENSIONS BEFORE ORDERING OR FABRICATING ANY MATERIAL.

	BY	CHECKED
DESIGN	J. Szabo	L. Wu
DETAILS	D. Wooten/J. Szabo	J. Szabo
QUANTITIES	J. Szabo	A. McPhee/M. Vo

STATE OF CALIFORNIA
DEPARTMENT OF TRANSPORTATION

DIVISION OF ENGINEERING SERVICES
STRUCTURE DESIGN
DESIGN BRANCH 10

BRIDGE NO. 56-0854
POST MILE 1.51

SALT CREEK BRIDGE (REPLACE)
TYPICAL SECTION

STRUCTURES DESIGN DETAIL SHEET (ENGLISH) (REV. 09-01-10)

ORIGINAL SCALE IN INCHES FOR REDUCED PLANS 0 1 2 3

UNIT: 3589
PROJECT NUMBER & PHASE: 0800000714
CONTRACT NO.: 08-449101

DISREGARD PRINTS BEARING EARLIER REVISION DATES

REVISION DATES: 9-24-12 11-09-12 1-09-13 2-14-13

SHEET 18 OF 27

FILE => 560854kts18.dgn

USERNAME => s124296 DATE PLOTTED => 14-AUG-2013 TIME PLOTTED => 05:35

DIST	COUNTY	ROUTE	POST MILES TOTAL PROJECT	SHEET No.	TOTAL SHEETS
08	Riv	111	1.5	74	82

Jonathan Szabo 2-15-13
REGISTERED CIVIL ENGINEER DATE

6-17-13
PLANS APPROVAL DATE

REGISTERED PROFESSIONAL ENGINEER
JONATHAN SZABO
No. C78563
Exp. 9-30-13
CIVIL
STATE OF CALIFORNIA

The State of California or its officers or agents shall not be responsible for the accuracy or completeness of electronic copies of this plan sheet.

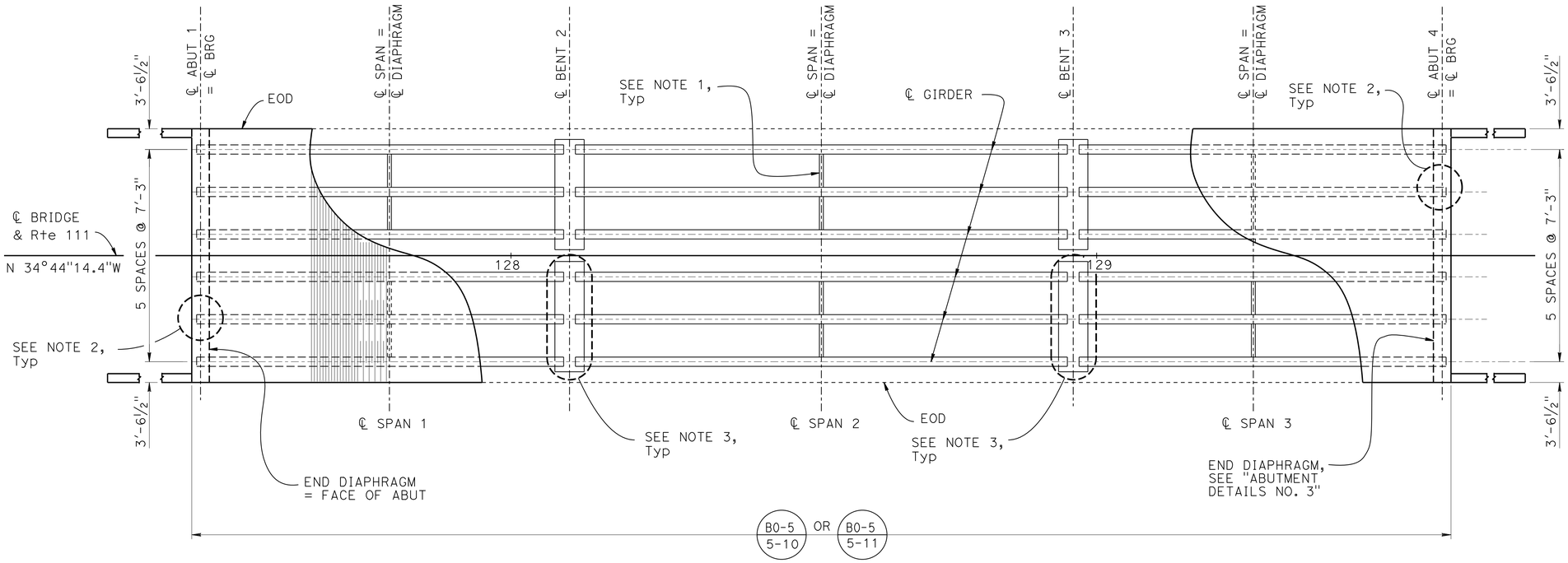

GIRDER LAYOUT

3/32"=1'-0"

NOTES:

1. For Details of intermediate diaphragm, see "PRECAST PRESTRESSED I GIRDER (LRFD)" sheet
2. See "GIRDER STRANDS AT ABUTMENT PLAN VIEW" on "GIRDER DETAILS" sheet
3. See "GIRDER STRANDS AT BENT CAP PLAN VIEW" on "GIRDER DETAILS" sheet

NOTE:
THE CONTRACTOR SHALL VERIFY ALL CONTROLLING FIELD DIMENSIONS BEFORE ORDERING OR FABRICATING ANY MATERIAL.

	BY	CHECKED
DESIGN	J. Szabo	L. Wu
DETAILS	D. Wooten/J. Szabo	J. Szabo
QUANTITIES	J. Szabo	A. McPhee/M. Vo

STATE OF CALIFORNIA
DEPARTMENT OF TRANSPORTATION

DIVISION OF ENGINEERING SERVICES
STRUCTURE DESIGN
DESIGN BRANCH 10

BRIDGE NO. 56-0854
POST MILE 1.51

SALT CREEK BRIDGE (REPLACE)
GIRDER LAYOUT

STRUCTURES DESIGN DETAIL SHEET (ENGLISH) (REV. 09-01-10)

ORIGINAL SCALE IN INCHES FOR REDUCED PLANS 0 1 2 3

UNIT: 3589
PROJECT NUMBER & PHASE: 0800000714
CONTRACT NO.: 08-449101

DISREGARD PRINTS BEARING EARLIER REVISION DATES

REVISION DATES: 9-24-12 11-02-12 1-09-13 2-14-13

SHEET 19 OF 27

FILE => 5608541g_lo19.dgn

USERNAME => s124496 DATE PLOTTED => 14-AUG-2013 TIME PLOTTED => 05:35

DIST	COUNTY	ROUTE	POST MILES TOTAL PROJECT	SHEET No.	TOTAL SHEETS
08	Riv	111	1.5	75	82

Jonathan Szabo 2-15-13
REGISTERED CIVIL ENGINEER DATE

6-17-13
PLANS APPROVAL DATE

REGISTERED PROFESSIONAL ENGINEER JONATHAN SZABO No. C78563 Exp. 9-30-13 CIVIL STATE OF CALIFORNIA

The State of California or its officers or agents shall not be responsible for the accuracy or completeness of electronic copies of this plan sheet.

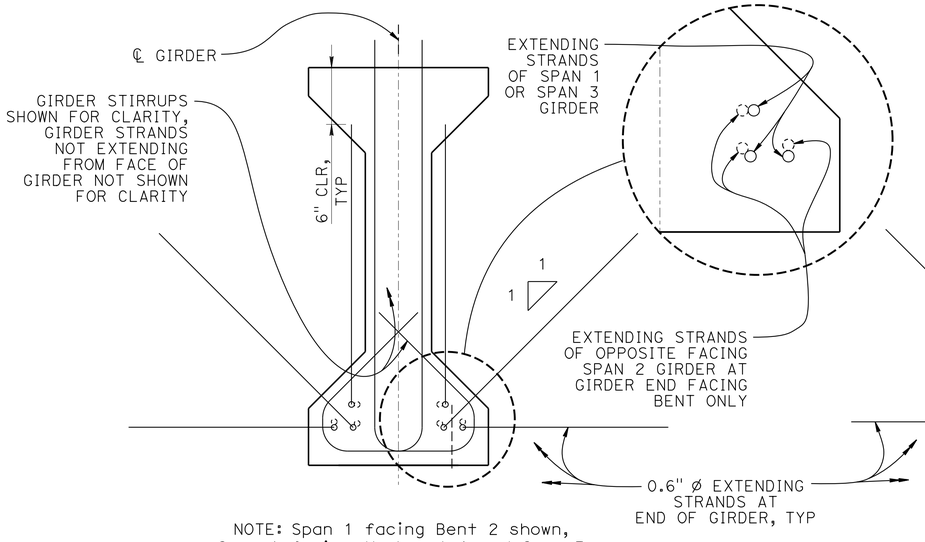

NOTE: Span 1 facing Bent 2 shown, Span 1 facing Abutment 1 and Span 3 ends of girder similar

SECTION A-A

1-½" = 1'-0"

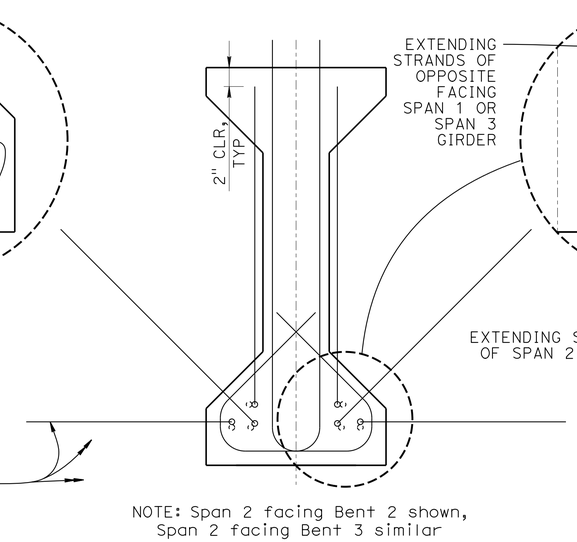

NOTE: Span 2 facing Bent 2 shown, Span 2 facing Bent 3 similar

NOTE: Similar to "SECTION A-A" unless shown otherwise

SECTION B-B

1-½" = 1'-0"

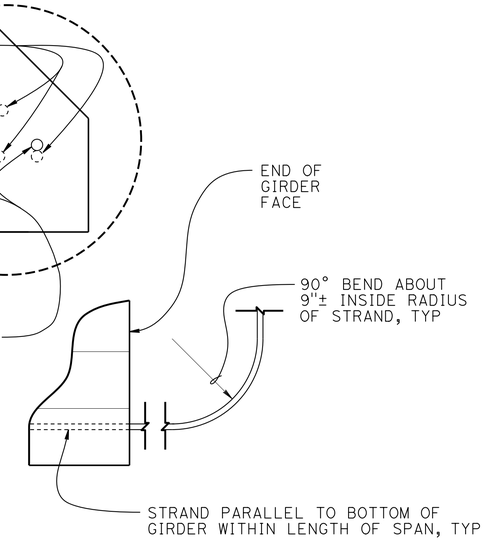

EXTENDING GIRDER STRANDS BEND DETAIL

1-½" = 1'-0"

NOTES:

1. Extending portion of strands not lapped to maintain 2" cover.
2. For location of "SECTION A-A" and "B-B" see "GIRDER LAYOUT" sheet.
3. For Precast I Girder dimensions and Reinforcement, see "PRECAST PRESTRESSED I GIRDER" sheet.
4. For Strand connection to Abutments see "ABUTMENT DETAILS NO. 1" "NO. 2" and "NO. 3" sheets.
5. For Strand connection to Bents see "BENT DETAILS NO. 1", "NO. 2" and "NO. 3" sheets.

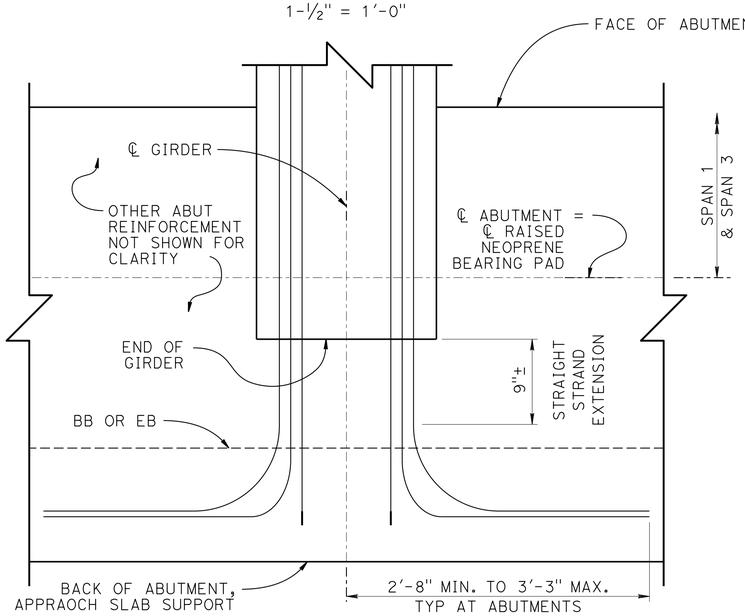

GIRDER STRANDS AT ABUTMENT PLAN VIEW

1-½" = 1'-0"

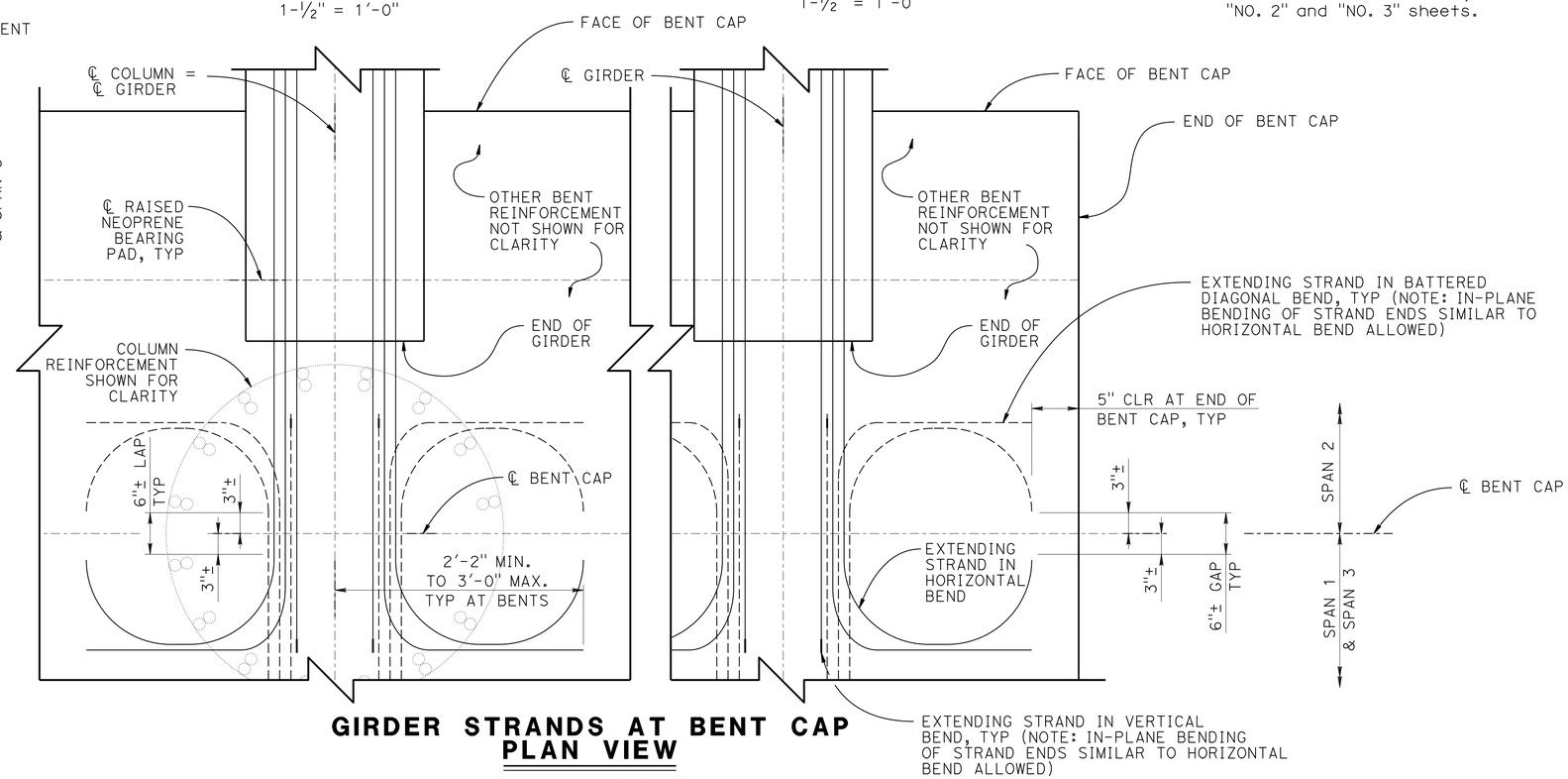

GIRDER STRANDS AT BENT CAP PLAN VIEW

1-½" = 1'-0"

NOTE:
THE CONTRACTOR SHALL VERIFY ALL CONTROLLING FIELD DIMENSIONS BEFORE ORDERING OR FABRICATING ANY MATERIAL.

DESIGN	BY J. Szabo	CHECKED L. Wu	
DETAILS	BY D. Wooten/J. Szabo	CHECKED J. Szabo	
QUANTITIES	BY J. Szabo	CHECKED A. McPhee/M. Vo	

STATE OF CALIFORNIA
DEPARTMENT OF TRANSPORTATION

DIVISION OF ENGINEERING SERVICES
STRUCTURE DESIGN
DESIGN BRANCH 10

BRIDGE NO. 56-0854
POST MILE 1.51

SALT CREEK BRIDGE (REPLACE)
GIRDER DETAILS

STRUCTURES DESIGN DETAIL SHEET (ENGLISH) (REV. 09-01-10)

ORIGINAL SCALE IN INCHES FOR REDUCED PLANS 0 1 2 3

UNIT: 3589
PROJECT NUMBER & PHASE: 0800000714
CONTRACT NO.: 08-449101

DISREGARD PRINTS BEARING EARLIER REVISION DATES

REVISION DATES: 9-24-12 11-02-12 1-09-13 2-14-13

SHEET 20 OF 27

FILE => 560854lgdt20.dgn

USERNAME => s124496 DATE PLOTTED => 14-AUG-2013 TIME PLOTTED => 05:35

DIST	COUNTY	ROUTE	POST MILES TOTAL PROJECT	SHEET No.	TOTAL SHEETS
08	Riv	111	1.5	76	82

Jonathan Szabo 2-15-13
REGISTERED CIVIL ENGINEER DATE

6-17-13
PLANS APPROVAL DATE

REGISTERED PROFESSIONAL ENGINEER JONATHAN SZABO No. C78563 Exp. 9-30-13 CIVIL STATE OF CALIFORNIA

The State of California or its officers or agents shall not be responsible for the accuracy or completeness of electronic copies of this plan sheet.

NOTES:

1. For Additional Deck Reinforcement with other Deck Reinforcement, see "PART TYPICAL SECTION" on "TYPICAL SECTION" sheet.
2. For Anchor Reinforcement at Abutments, see "SECTION D-D" and "E-E" of "ABUTMENT DETAILS NO. 3" sheet.

LEGEND:

Indicates closure pour

Indicates bundled reinforcement

Indicates other Reinforcement (not Additional Deck Reinf) shown for clarity

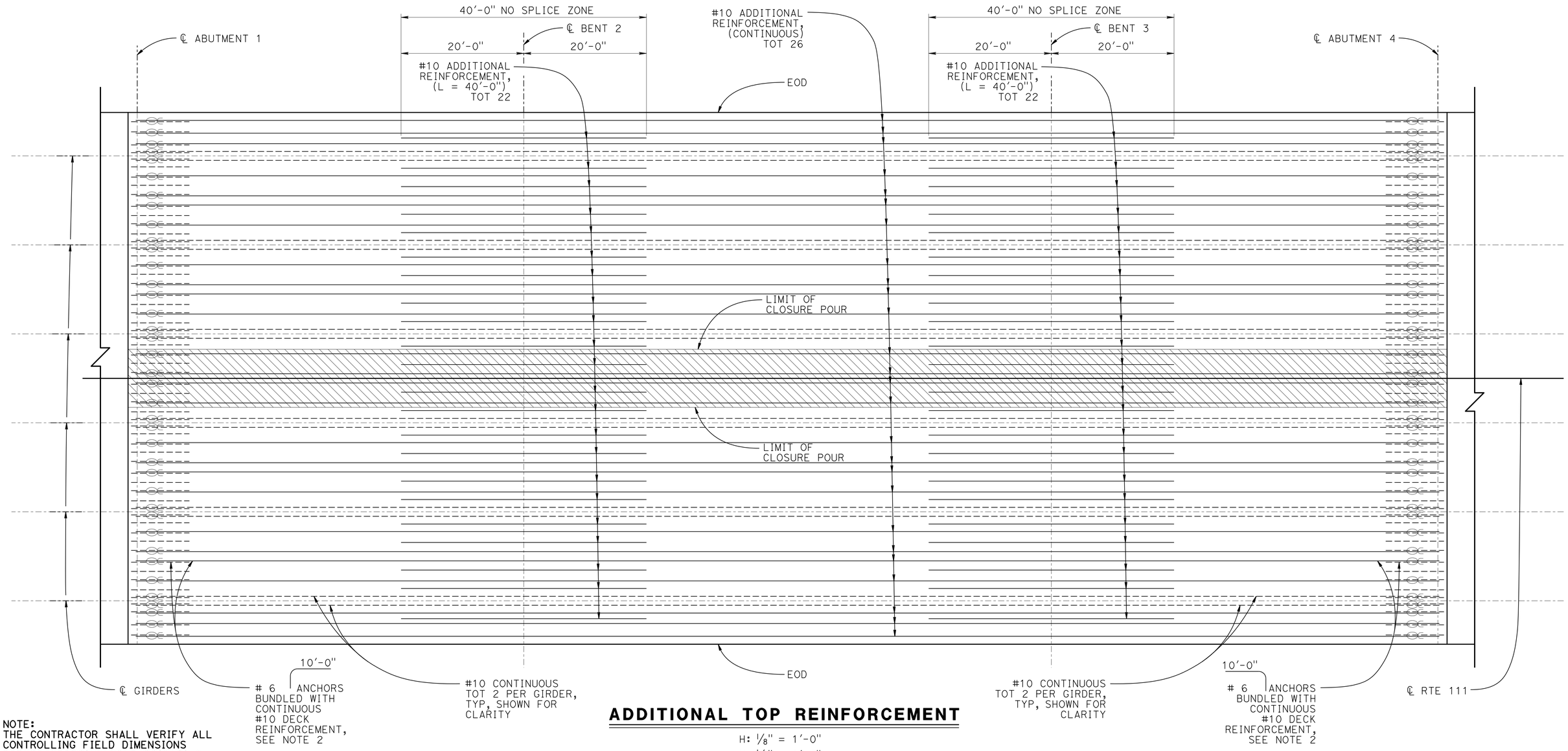

ADDITIONAL TOP REINFORCEMENT

H: 1/8" = 1'-0"
V: 1/4" = 1'-0"

NOTE:
THE CONTRACTOR SHALL VERIFY ALL CONTROLLING FIELD DIMENSIONS BEFORE ORDERING OR FABRICATING ANY MATERIAL.

DESIGN	BY J. Szabo	CHECKED L. Wu	
DETAILS	BY D. Wooten/J. Szabo	CHECKED J. Szabo	
QUANTITIES	BY J. Szabo	CHECKED A. McPhee/M. Vo	

STATE OF CALIFORNIA
DEPARTMENT OF TRANSPORTATION

DIVISION OF ENGINEERING SERVICES
STRUCTURE DESIGN
DESIGN BRANCH 10

BRIDGE NO. 56-0854
POST MILE 1.51

SALT CREEK BRIDGE (REPLACE)
GIRDER REINFORCEMENT

STRUCTURES DESIGN DETAIL SHEET (ENGLISH) (REV. 09-01-10)

ORIGINAL SCALE IN INCHES FOR REDUCED PLANS 0 1 2 3

UNIT: 3589
PROJECT NUMBER & PHASE: 0800000714
CONTRACT NO.: 08-449101

DISREGARD PRINTS BEARING EARLIER REVISION DATES

REVISION DATES: 9-24-12 11-02-12 1-09-13 2-14-13

SHEET 21 OF 27

FILE => 560854ogir_rf21.dgn

USERNAME => s124496 DATE PLOTTED => 14-AUG-2013 TIME PLOTTED => 05:35

DIST	COUNTY	ROUTE	POST MILES TOTAL PROJECT	SHEET No.	TOTAL SHEETS
08	Riv	111	1.5	77	82

REGISTERED CIVIL ENGINEER — DATE 2-15-13

6-17-13
PLANS APPROVAL DATE

REGISTERED PROFESSIONAL ENGINEER — JONATHAN SZABO — No. C57035 — Exp. 6-30-13 — CIVIL — STATE OF CALIFORNIA

The State of California or its officers or agents shall not be responsible for the accuracy or completeness of electronic copies of this plan sheet.

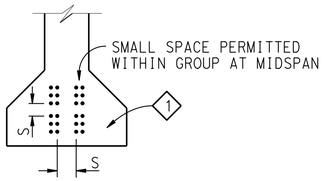

CLEARANCES FOR PRETENSIONED STRANDS

1. Strands may be bundled in groups consisting of 3 vertically, 2 horizontally and separated at the ends
2. The Min distance "S" between groups or individual strands is 1½" for ⅜" ø strands, 1¾" for ½" ø strands, 2" for 0.6" ø strands
3. "S" is measured between centers of adjacent strands
4. Approval by the Engineer is required for deviation

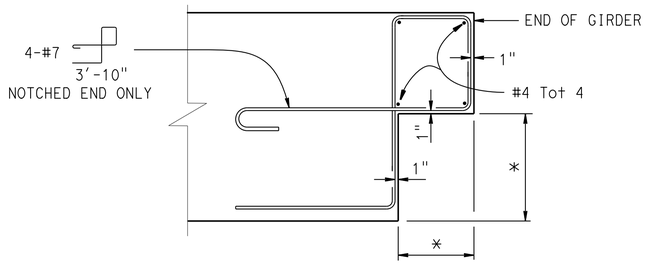

DETAIL B

FOR OPTIONAL NOTCHED END DETAIL ONLY

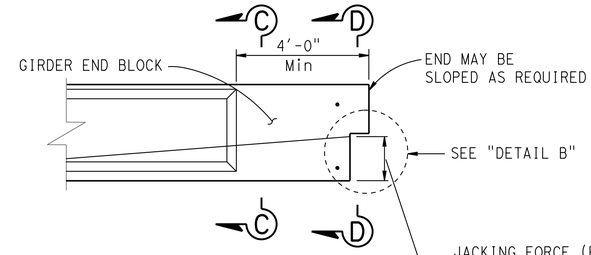

OPTIONAL NOTCHED END DETAIL

GENERAL NOTES

JACKING FORCE (P): The jacking force required at the point of control along the span. The jacking force does not include any fabrication specific losses.

The maximum tensile stress in the prestressing steel upon release shall not exceed 75% of the specified minimum ultimate tensile strength of the prestressing steel.

The maximum temporary tensile stress (jacking stress) in the prestressing steel shall not exceed 80% of the specified minimum ultimate tensile strength of the prestressing steel.

CONCRETE STRENGTH: f'ci is at time of initial stressing
f'c is at 28 days

DEFLECTION COMPONENTS: Informational - to be used in setting screed line elevations

Screed line elevations for deck concrete will be determined by the Engineer.

Contractor may interpolate "P" and "X" values between limits shown, as approved by the Engineer.

Girder location or designation and length	Jacking Force (P) (Kips) "X"		"Y" (in)	Concrete Strength (ksi) f'ci	Concrete Strength (ksi) f'c	Midspan Dead Load Deflection (inches) Deck	Midspan Dead Load Deflection (inches) Rail
Span 1 & 3 Girders	4"	615	15	5.5	6.0	0.5	0.1
	6"	615					
Span 2 Girders	4"	790	17	5.5	6.0	1.7	0.1
	6"	790					

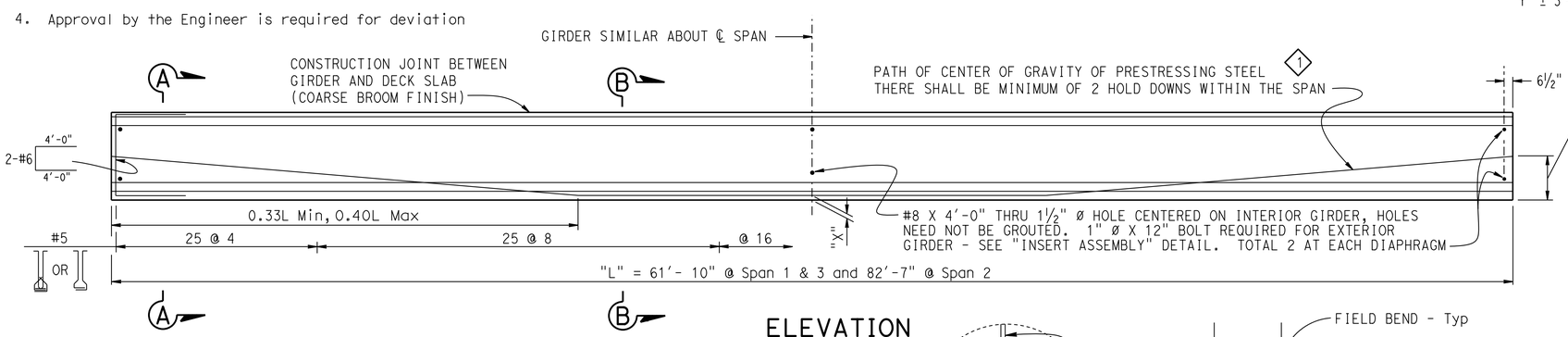

ELEVATION

1 Note: For Non-Harped Girder Strands not shown, see "GIRDER DETAIL SHEET"

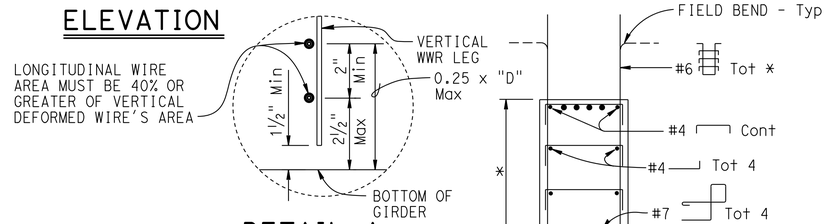

DETAIL A

SECTION D-D

#8 X 4'-0" DOWELS PLACED THROUGH 1½" ø HOLES FORMED IN GIRDER, WHEN DIAPHRAGM IS CONTINUOUS HOLES NEED NOT BE GROUTED

1" ø x 12" BOLTS WITH INSERT ASSEMBLIES WHEN DIAPHRAGMS ARE DISCONTINUOUS. BOLTS REQUIRED FOR EXTERIOR GIRDERS

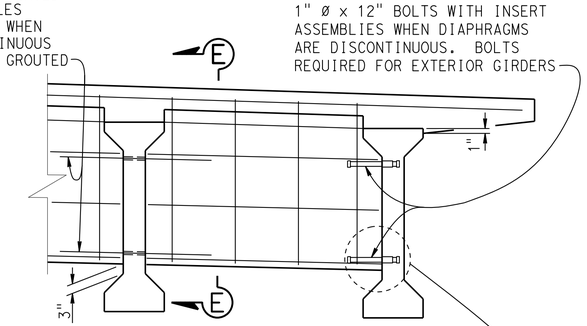

INTERMEDIATE DIAPHRAGM

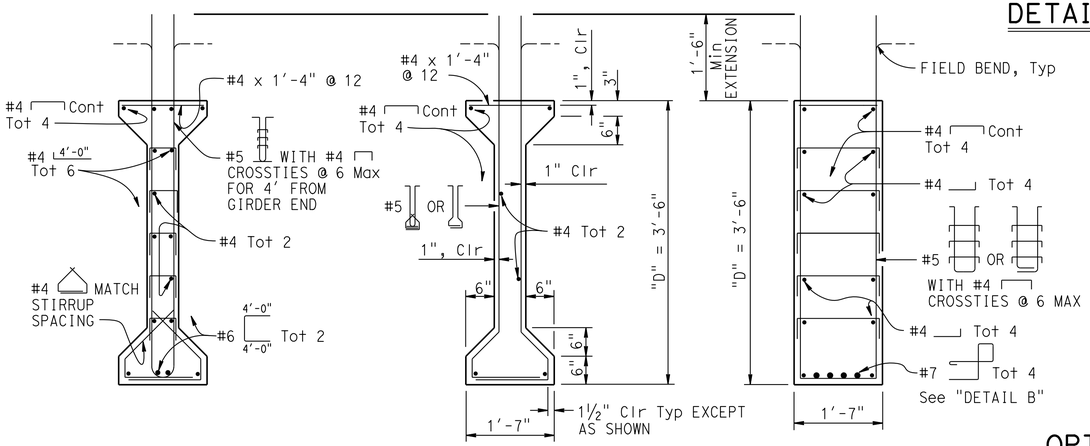

SECTION A-A

SECTION B-B

SECTION C-C

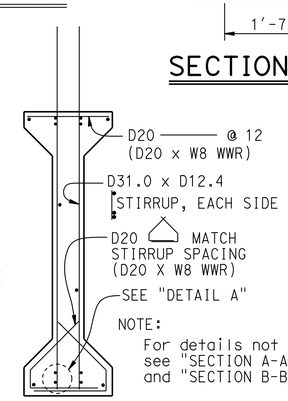

NOTE:
For details not shown, see "SECTION A-A" and "SECTION B-B"

OPTIONAL WELDED WIRE REINFORCEMENT (WWR) DETAIL

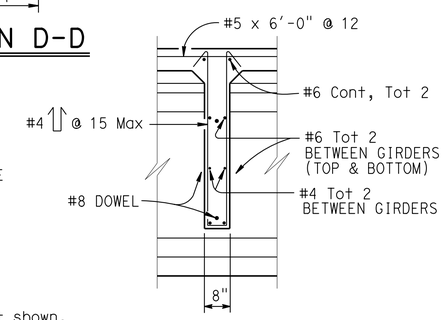

SECTION E-E

WWR NOTE: MANUFACTURER'S SHOP DRAWING SHALL CONFORM TO THE REINFORCEMENT SHOWN ON THIS SHEET AS NOTED AND THE SPECIAL PROVISIONS

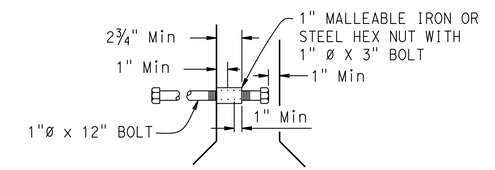

INSERT ASSEMBLY

NO SCALE

REVISED STANDARD DRAWING

FILE NO. XS1-120

APPROVAL DATE July 2011

1 Added note

STATE OF CALIFORNIA DEPARTMENT OF TRANSPORTATION

DIVISION OF ENGINEERING SERVICES

BRIDGE NO. 56-0854

POST MILE 1.51

SALT CREEK BRIDGE (REPLACE)

PRECAST PRESTRESSED I GIRDER

DS OSD 2147A (ENGLISH STANDARD DRAWING "XS" BORDER REV. (02-02-11)

ORIGINAL SCALE IN INCHES FOR REDUCED PLANS 0 1 2 3

UNIT: 3589
PROJECT NUMBER & PHASE: 0800000714

CONTRACT NO.: 08-449101

DISREGARD PRINTS BEARING EARLIER REVISION DATES

REVISION DATES

SHEET 22 OF 27

FILE => 560854ogrdt22.dgn

USERNAME => s124496 DATE PLOTTED => 14-AUG-2013 TIME PLOTTED => 05:35

DIST	COUNTY	ROUTE	POST MILES TOTAL PROJECT	SHEET No.	TOTAL SHEETS
08	Riv	111	1.5	78	82

REGISTERED CIVIL ENGINEER 2-15-13 DATE

6-17-13
PLANS APPROVAL DATE

REGISTERED PROFESSIONAL ENGINEER JONATHAN SZABO No. C78563 Exp. 9-30-13 CIVIL STATE OF CALIFORNIA

The State of California or its officers or agents shall not be responsible for the accuracy or completeness of electronic copies of this plan sheet.

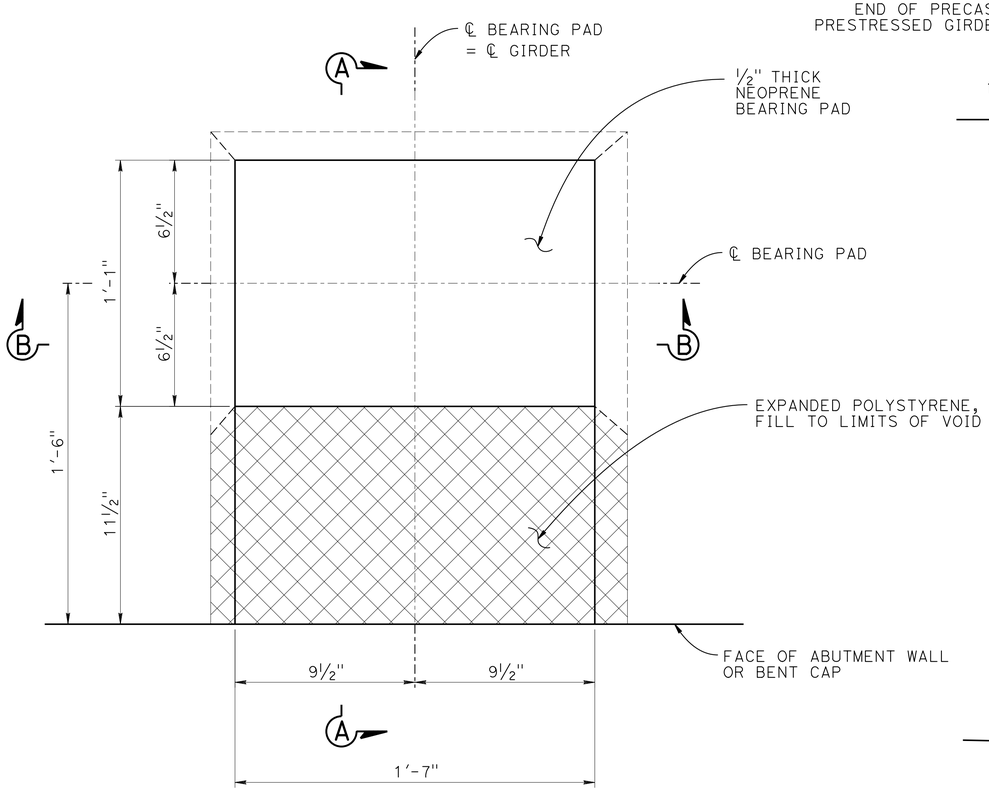

PLAN

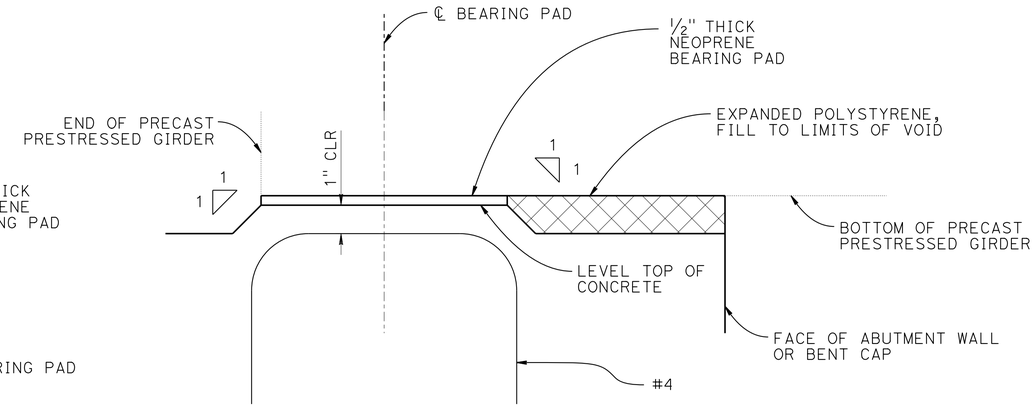

SECTION A-A

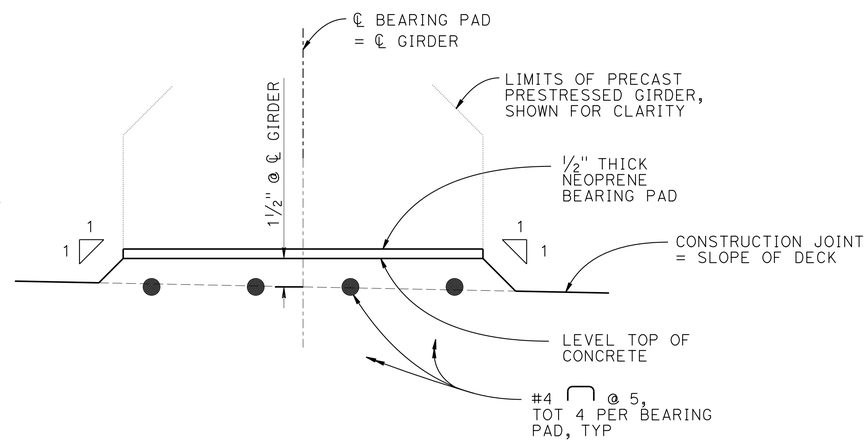

SECTION B-B

TYPICAL BEARING PAD DETAIL

3" = 1'-0"

NOTE:
THE CONTRACTOR SHALL VERIFY ALL CONTROLLING FIELD DIMENSIONS BEFORE ORDERING OR FABRICATING ANY MATERIAL.

	BY	CHECKED
DESIGN	J. Szabo	L. Wu
DETAILS	D. Wooten/J. Szabo	J. Szabo
QUANTITIES	J. Szabo	A. McPhee/M. Vo

STATE OF CALIFORNIA
DEPARTMENT OF TRANSPORTATION

DIVISION OF ENGINEERING SERVICES
STRUCTURE DESIGN
DESIGN BRANCH 10

BRIDGE NO. 56-0854
POST MILE 1.51

SALT CREEK BRIDGE (REPLACE)
BEARING DETAILS

STRUCTURES DESIGN DETAIL SHEET (ENGLISH) (REV. 09-01-10)

ORIGINAL SCALE IN INCHES FOR REDUCED PLANS 0 1 2 3

UNIT: 3589
PROJECT NUMBER & PHASE: 0800000714
CONTRACT NO.: 08-449101

DISREGARD PRINTS BEARING EARLIER REVISION DATES

REVISION DATES: 9-24-12 11-02-12 1-09-13 2-14-13

SHEET 23 OF 27

FILE => 560854qbrgdt23.dgn

USERNAME => s124496 DATE PLOTTED => 14-AUG-2013 TIME PLOTTED => 05:35

DIST	COUNTY	ROUTE	POST MILES TOTAL PROJECT	SHEET No.	TOTAL SHEETS
08	Riv	111	1.5	79	82

Jonathan Szabo 2-15-13
REGISTERED CIVIL ENGINEER DATE

6-17-13
PLANS APPROVAL DATE

REGISTERED PROFESSIONAL ENGINEER JONATHAN SZABO No. C57035 Exp. 6-30-13 CIVIL STATE OF CALIFORNIA

The State of California or its officers or agents shall not be responsible for the accuracy or completeness of electronic copies of this plan sheet.

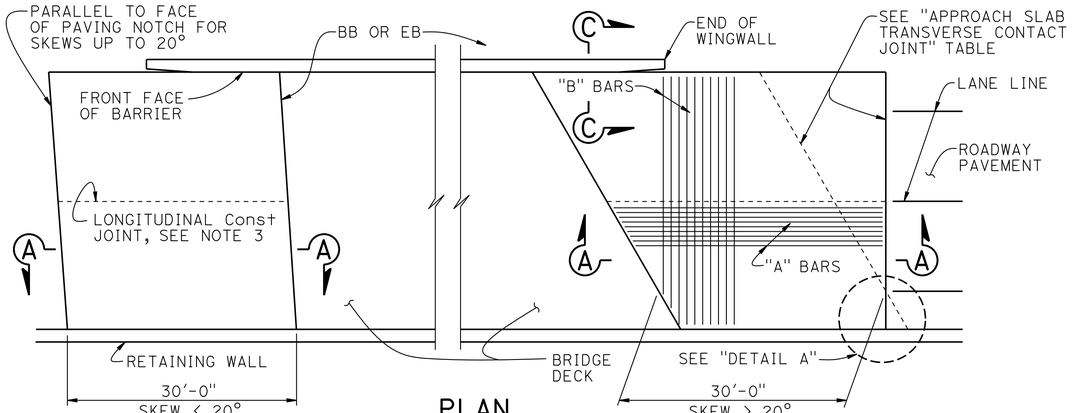

PLAN
1" = 10'

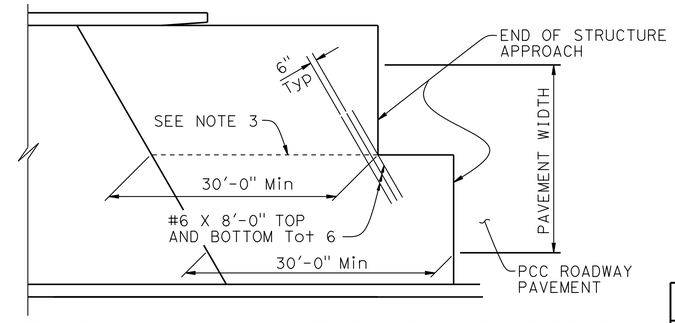

STRUCTURE APPROACH - END STAGGER DETAIL
NO SCALE

APPROACH SLAB TRANSVERSE CONTACT JOINT		
APPROACH SKEW	WITH AC ROADWAY PAVEMENT	WITH PCC ROADWAY PAVEMENT
< 20°	PARALLEL TO FACE OF PN	PARALLEL TO FACE OF PN
20° - 45°	PARALLEL TO FACE OF PN USE "DETAIL A"	STAGGER LINES 24' TO 36' APART
> 45°	PARALLEL TO FACE OF PN USE "DETAIL A"	STAGGER AT EACH LANE LINE

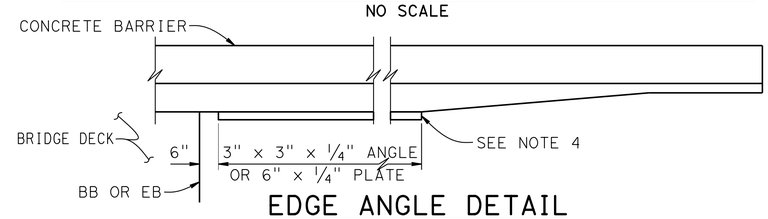

EDGE ANGLE DETAIL
1/2" = 1'-0"

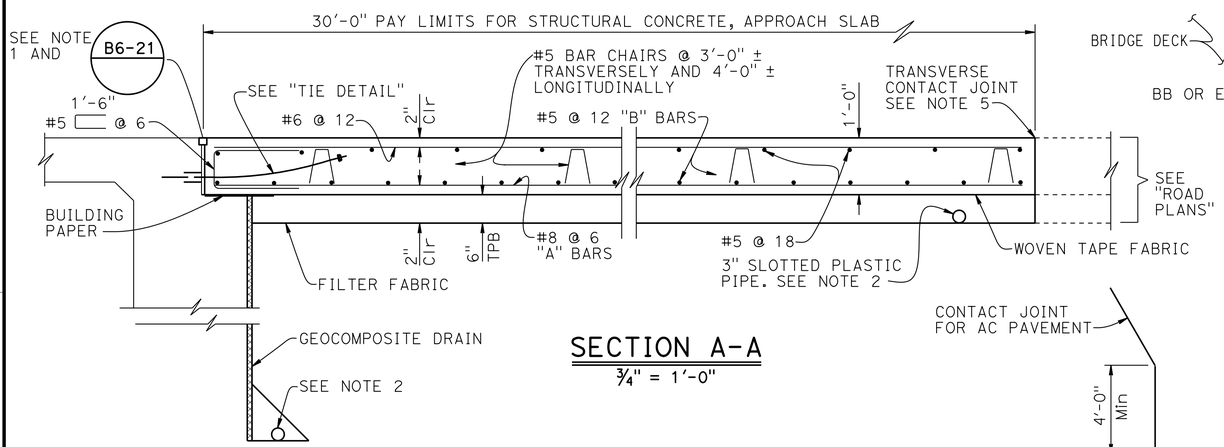

SECTION A-A
3/4" = 1'-0"

DETAIL A
NO SCALE

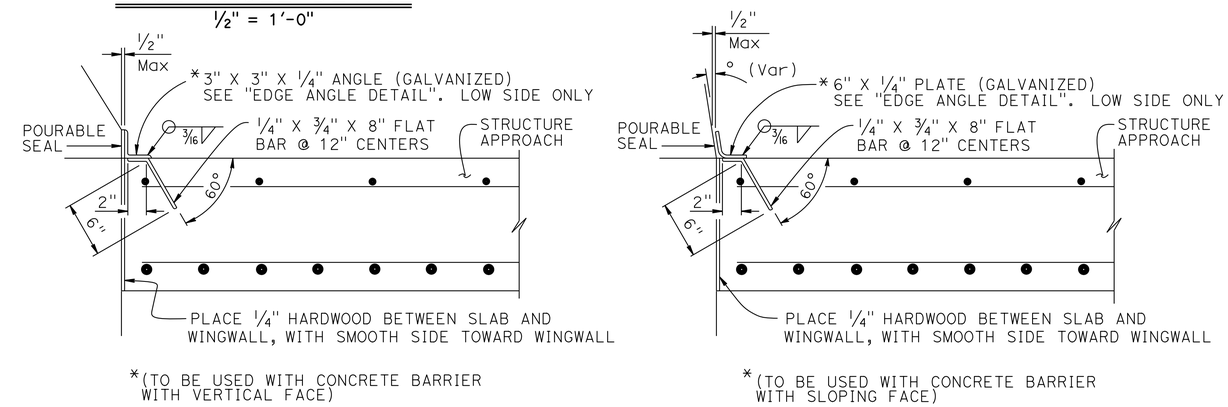

*(TO BE USED WITH CONCRETE BARRIER WITH VERTICAL FACE)

*(TO BE USED WITH CONCRETE BARRIER WITH SLOPING FACE)

DETAIL B
1 1/2" = 1'-0"

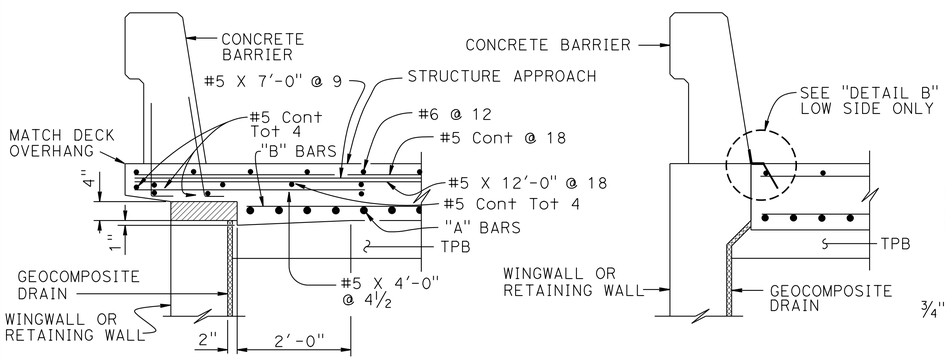

SECTION C-C
3/4" = 1'-0"
(Type E-1 to be used, unless otherwise shown on plans)

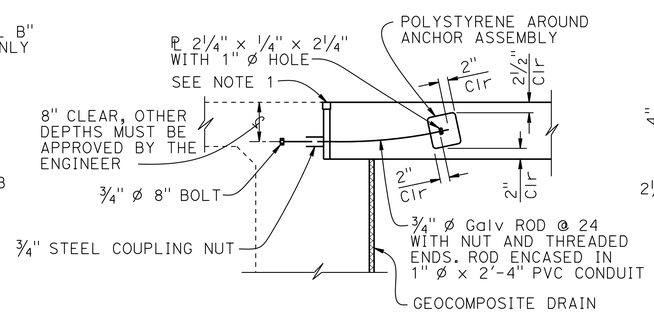

TIE DETAIL
3/4" = 1'-0"

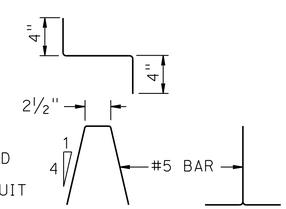

BAR CHAIR DETAIL
1 1/2" = 1'-0"

NOTES:
1. For details not noted or shown, see Structure Plans
2. For drainage details, see "STRUCTURE APPROACH DRAINAGE DETAILS" sheet
3. Longitudinal construction joints, when permitted by the Engineer, shall be located on lane lines
4. End angle or plate at beginning of barrier transition, end of wingwall or end of structure approach, as applicable
5. For transverse contact joint with new PCC paving, refer to Standard Plan P10
6. At the contractor's option, approach slab transverse reinforcement may be placed parallel to paving notch. Spacing of transverse reinforcement is measured along ℄ roadway

STANDARD DRAWING
FILE NO. xs3-140
APPROVAL DATE July 2011

STATE OF CALIFORNIA
DEPARTMENT OF TRANSPORTATION

DIVISION OF ENGINEERING SERVICES

BRIDGE NO. 56-0854
POST MILE 1.51

SALT CREEK BRIDGE (REPLACE)
STRUCTURE APPROACH TYPE N(30D)

DS OSD 2147A (ENGLISH STANDARD DRAWING "XS" BORDER REV. (02-02-11))

ORIGINAL SCALE IN INCHES FOR REDUCED PLANS 0 1 2 3

UNIT: 3589
PROJECT NUMBER & PHASE: 0800000714
CONTRACT NO.: 08-449101

DISREGARD PRINTS BEARING EARLIER REVISION DATES

REVISION DATES

SHEET 24 OF 27

FILE => 560854ssa24.dgn

USERNAME => s124496 DATE PLOTTED => 14-AUG-2013 TIME PLOTTED => 05:35

DIST	COUNTY	ROUTE	POST MILES TOTAL PROJECT	SHEET No.	TOTAL SHEETS
08	Riv	111	1.5	80	82

Jonathan Szabo 2-15-13
REGISTERED CIVIL ENGINEER DATE

6-17-13
PLANS APPROVAL DATE

REGISTERED PROFESSIONAL ENGINEER JONATHAN SZABO No. C57035 Exp. 6-30-13 CIVIL STATE OF CALIFORNIA

The State of California or its officers or agents shall not be responsible for the accuracy or completeness of electronic copies of this plan sheet.

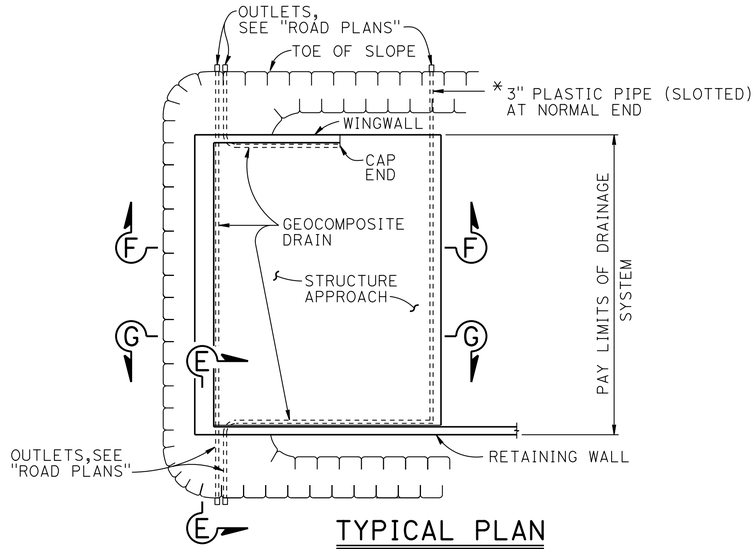

TYPICAL PLAN

1" = 10'

* FOR PIPE LAYOUT AT STAGGERED END, SEE "DETAIL B"

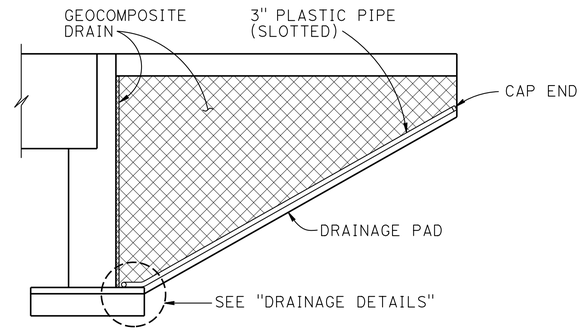

CANTILEVER WINGWALL

SECTION F-F

1/4" = 1'-0"

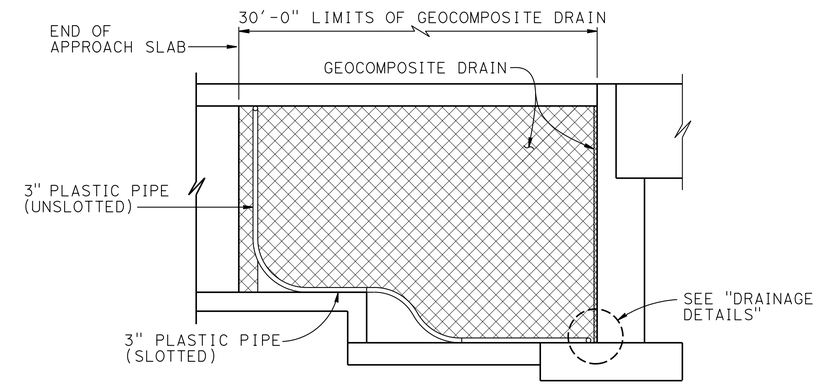

RETAINING WALL WINGWALL DRAINAGE DETAILS

SECTION G-G

1/4" = 1'-0"

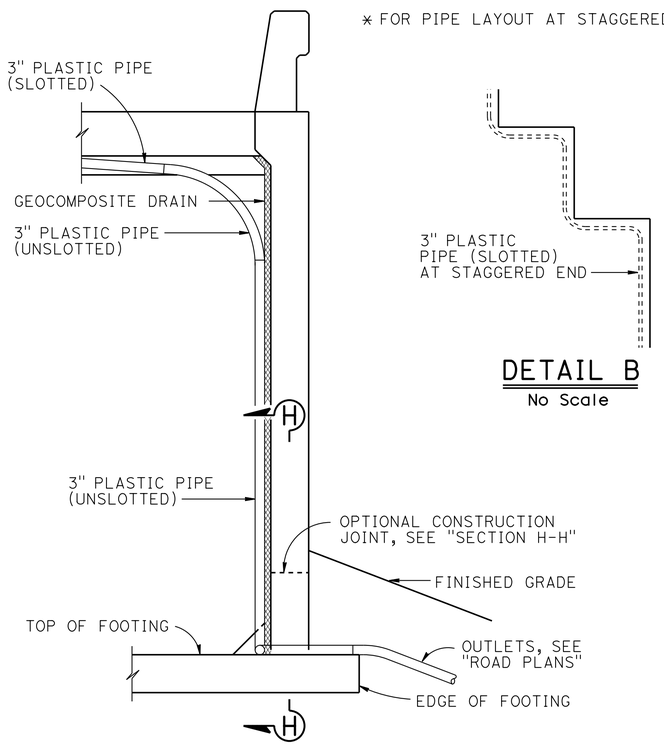

DETAIL B

No Scale

SECTION E-E

1/2" = 1'-0"

NOTE: Bends and junctions in 3" plastic pipe are 30" radius Min

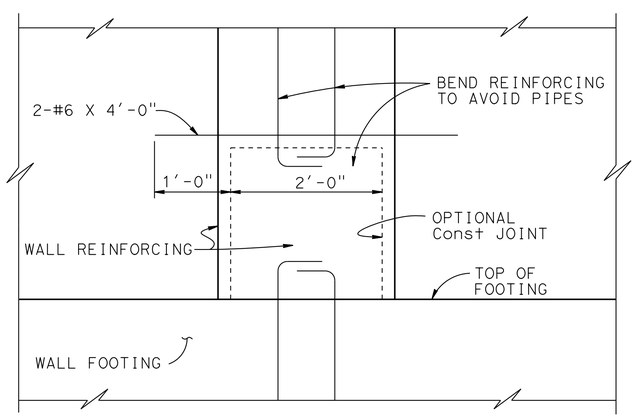

SECTION H-H

1" = 1'-0"

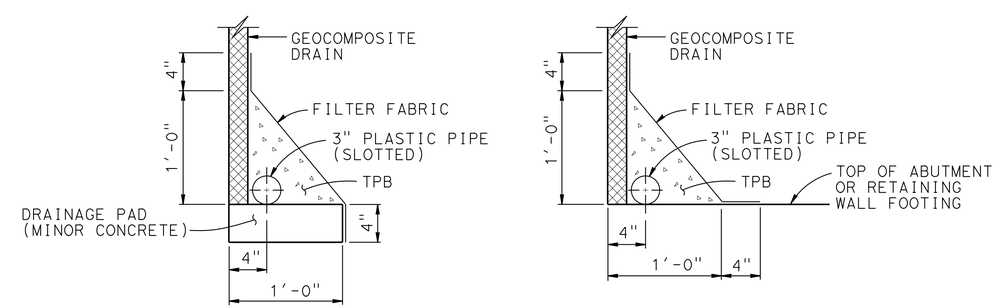

WITHOUT FOOTING

WITH FOOTING

DRAINAGE DETAILS

1 1/2" = 1'-0"

STANDARD DRAWING					
FILE NO. xs3-110	APPROVAL DATE July 2011	STATE OF CALIFORNIA DEPARTMENT OF TRANSPORTATION	DIVISION OF ENGINEERING SERVICES	BRIDGE NO. 56-0854 / POST MILE 1.51	SALT CREEK BRIDGE (REPLACE) / STRUCTURE APPROACH DRAINAGE DETAILS

DS OSD 2147A (ENGLISH STANDARD DRAWING "XS" BORDER REV. (02-02-11)

ORIGINAL SCALE IN INCHES FOR REDUCED PLANS 0 1 2 3

UNIT: 3589
PROJECT NUMBER & PHASE: 0800000714
CONTRACT NO.: 08-4 449101

DISREGARD PRINTS BEARING EARLIER REVISION DATES

REVISION DATES

SHEET 25 OF 27

FILE => 560854ssadd25.dgn

USERNAME => s124496 DATE PLOTTED => 14-AUG-2013 TIME PLOTTED => 05:35

DIST	COUNTY	ROUTE	POST MILES TOTAL PROJECT	SHEET No	TOTAL SHEETS
08	Riv	111	1.5	81	82

K. Douglas Cook 01-09-13
CERTIFIED ENGINEERING GEOLOGIST

6-17-13
PLANS APPROVAL DATE

PROFESSIONAL GEOLOGIST K. Douglas Cook No. 1391 Exp. 12-31-13 CERTIFIED ENGINEERING GEOLOGIST STATE OF CALIFORNIA

The State of California or its officers or agents shall not be responsible for the accuracy or completeness of electronic copies of this plan sheet.

This LOTB sheet was prepared in accordance with the Caltrans Soil & Rock Logging, Classification, & Presentation Manual (2010 Edition).

See 2010 Standard Plans A10F and A10G for Soil Legend, and A10H for Rock Legend.

BENCH MARK

PT-SUHV 2

Fnd 1"IP/Red Plug/Con
195.662 Lt ℄ Rte 111
Sta 127+33.95
N 2 106 136 .410
E 6 685 407.250
Elev = 286.474
NGVD1929 + 500.0 ft.

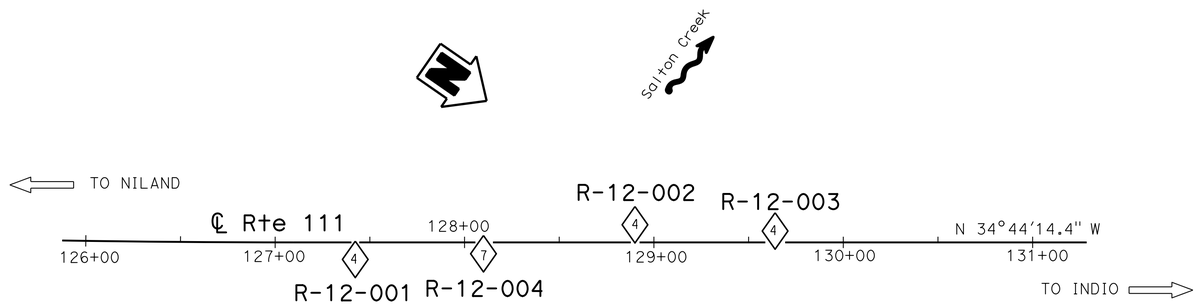

PLAN

1" = 40'

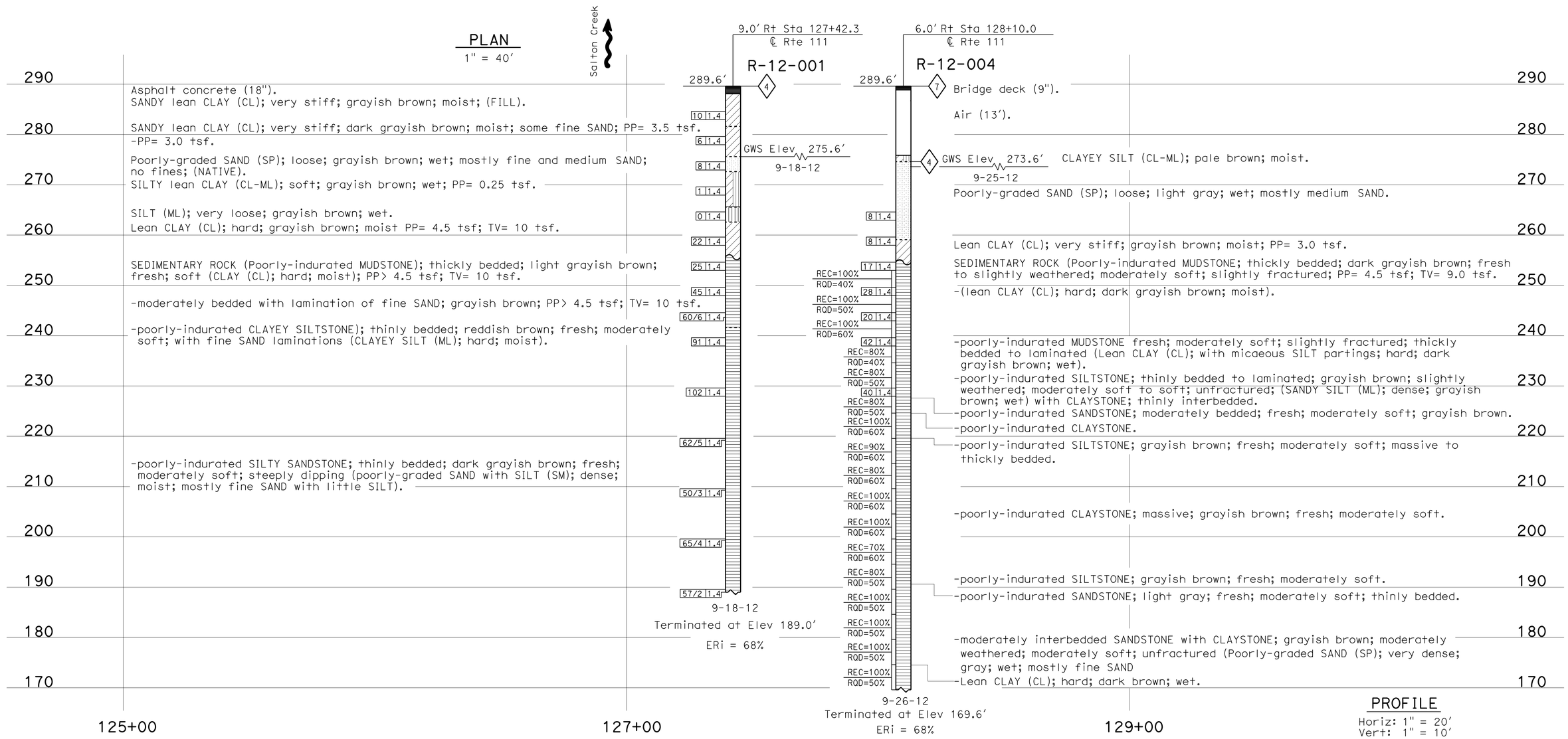

PROFILE

Horiz: 1" = 20'
Vert: 1" = 10'

ENGINEERING SERVICES	MATERIALS AND GEOTECHNICAL SERVICES	STATE OF CALIFORNIA DEPARTMENT OF TRANSPORTATION	DIVISION OF ENGINEERING SERVICES STRUCTURE DESIGN DESIGN BRANCH 10	BRIDGE NO. 56-0854 POST MILE 1.50	SALT CREEK BRIDGE (REPLACE) LOG OF TEST BORINGS 1 OF 2
FUNCTIONAL SUPERVISOR NAME: A. Perez-Cobo	DRAWN BY: F. Nguyen CHECKED BY: S. Logeswaran	FIELD INVESTIGATION BY: D. Cook			

OGS CIVIL LOG OF TEST BORINGS SHEET

ORIGINAL SCALE IN INCHES FOR REDUCED PLANS 0 1 2 3

UNIT: 3643
PROJECT NUMBER & PHASE: 08000007141 CONTRACT NO.: 08-449101

DISREGARD PRINTS BEARING EARLIER REVISION DATES → REVISION DATES 01-05-13 01-08-13 01-09-13 SHEET 26 OF 27

FILE => 560854zltb126.dgn

USERNAME => s124496 DATE PLOTTED => 14-AUG-2013 TIME PLOTTED => 05:36

DIST	COUNTY	ROUTE	POST MILES TOTAL PROJECT	SHEET No	TOTAL SHEETS
08	Riv	111	1.5	82	82

K. Douglas Cook 01-09-13
CERTIFIED ENGINEERING GEOLOGIST

6-17-13
PLANS APPROVAL DATE

PROFESSIONAL GEOLOGIST K. Douglas Cook No. 1391 Exp. 12-31-13 CERTIFIED ENGINEERING GEOLOGIST STATE OF CALIFORNIA

The State of California or its officers or agents shall not be responsible for the accuracy or completeness of electronic copies of this plan sheet.

This LOTB sheet was prepared in accordance with the Caltrans Soil & Rock Logging, Classification, & Presentation Manual (2010 Edition).

See 2010 Standard Plans A10F and A10G for Soil Legend, and A10H for Rock Legend.

FOR PLAN VIEW, SEE
"LOG OF TEST BORINGS 1 OF 2"

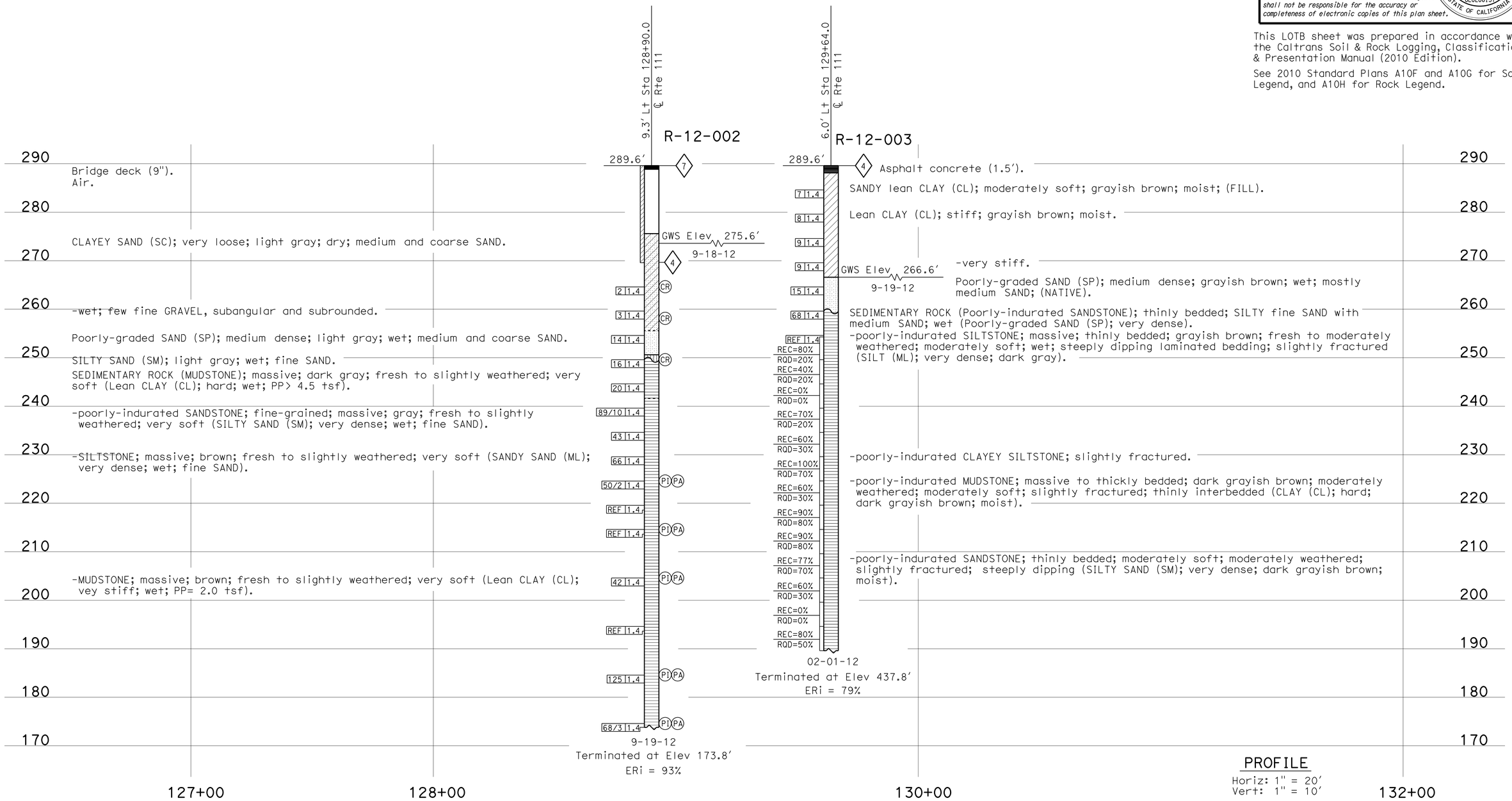

PROFILE
Horiz: 1" = 20'
Vert: 1" = 10'

ENGINEERING SERVICES	MATERIALS AND GEOTECHNICAL SERVICES	STATE OF CALIFORNIA DEPARTMENT OF TRANSPORTATION	DIVISION OF ENGINEERING SERVICES STRUCTURE DESIGN DESIGN BRANCH 10	BRIDGE NO. 56-0854 POST MILE 1.50	SALT CREEK BRIDGE (REPLACE) LOG OF TEST BORINGS 2 OF 2
FUNCTIONAL SUPERVISOR NAME: A. Perez-Cobo	DRAWN BY: F. Nguyen CHECKED BY: S. Logeswaran	FIELD INVESTIGATION BY: D. Cook			

OGS CIVIL LOG OF TEST BORINGS SHEET

ORIGINAL SCALE IN INCHES FOR REDUCED PLANS 0 1 2 3

UNIT: 3643
PROJECT NUMBER & PHASE: 08000007141 CONTRACT NO.: 08-449101

DISREGARD PRINTS BEARING EARLIER REVISION DATES → REVISION DATES 01-05-13 01-08-13 01-09-13 SHEET 27 OF 27

FILE => 560854z1tb227.dgn

USERNAME => s124436 DATE PLOTTED => 14-AUG-2013 TIME PLOTTED => 05:36