DIST	COUNTY	ROUTE	POST MILES TOTAL PROJECT	SHEET No	TOTAL SHEETS
08	Riv	91	15.6/21.6	1601	2028

REGISTERED CIVIL ENGINEER 11/12/10 DATE

4-25-11
PLANS APPROVAL DATE

REGISTERED PROFESSIONAL ENGINEER MINH THUONG VO No. C59297 Exp. 06-30-11 CIVIL STATE OF CALIFORNIA

The State of California or its officers or agents shall not be responsible for the accuracy or completeness of electronic copies of this plan sheet.

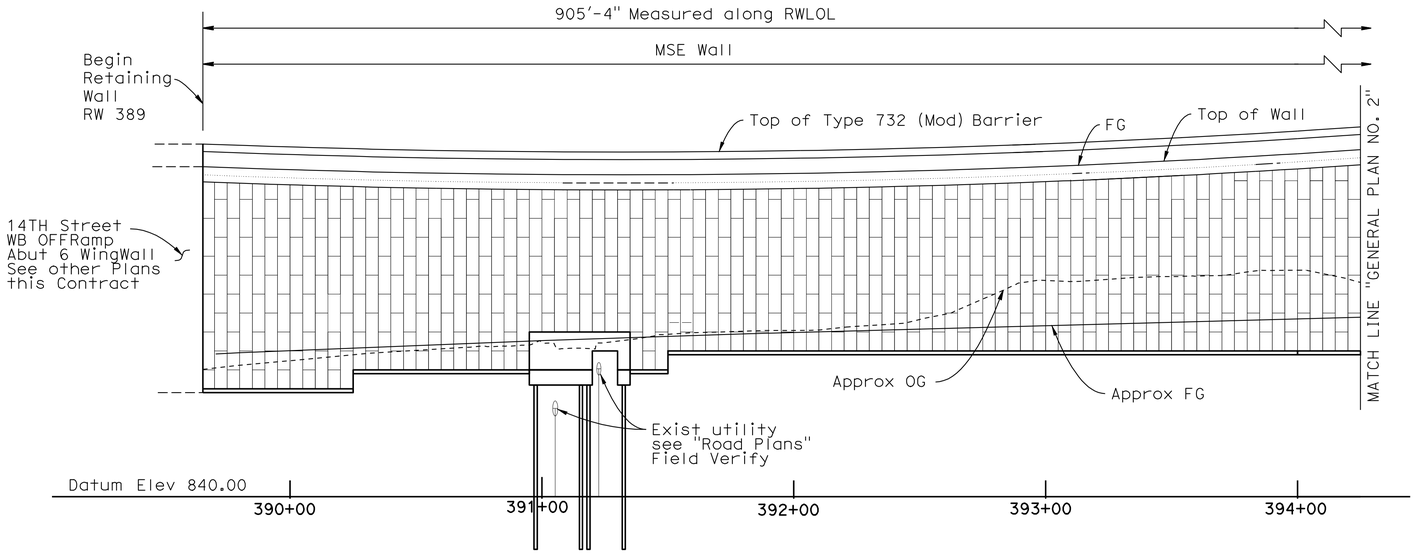

DEVELOPED MIRROR ELEVATION

Horiz. 1" = 30'
Vert. 1" = 10'

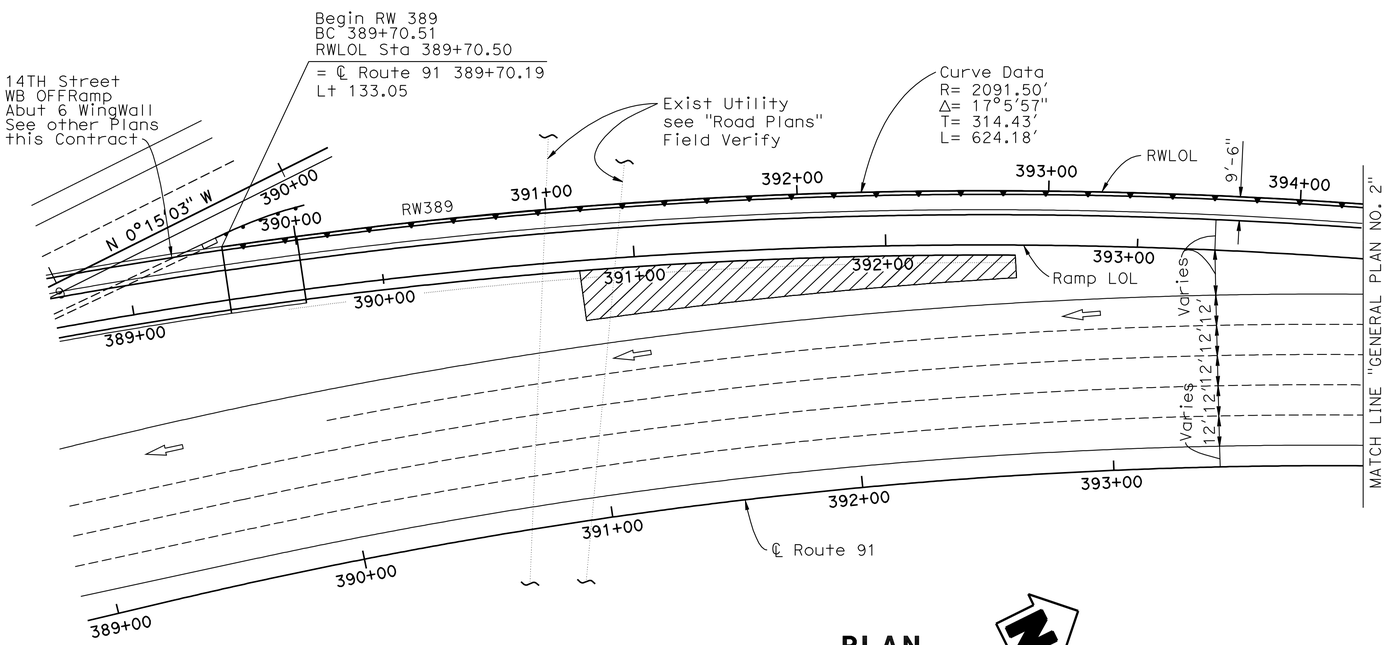

PLAN

1" = 30'

NOTES:

1 For Top of Wall and Leveling Pad Elevations see "STRUCTURE PLAN NO. 1 and 2" sheets.

2 For General Notes see "MECHANICALLY STABILIZED EMBANKMENT DETAILS NO. 2" sheet.

3 For Details see "MECHANICALLY STABILIZED EMBANKMENT DETAILS NO. 1 and 2" sheets.

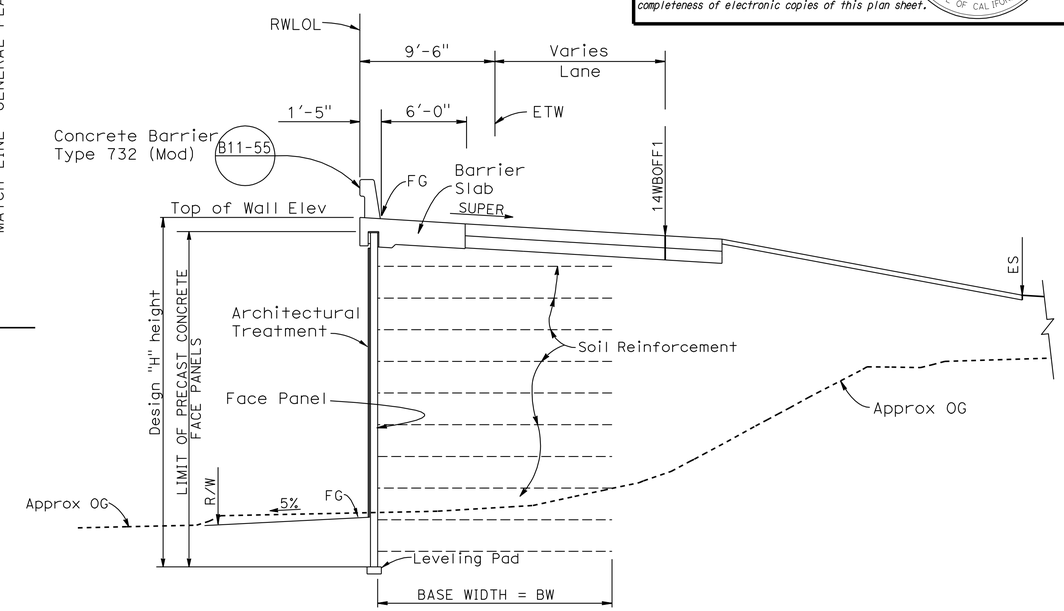

TYPICAL SECTION

3/16" = 1'-0"

INDEX TO PLANS

SHEET NO.	TITLE
1	GENERAL PLAN NO. 1
2	GENERAL PLAN NO. 2
3	STRUCTURE PLAN NO. 1
4	STRUCTURE PLAN NO. 2
5	PILE CAP DETAILS NO. 1
6	PILE CAP DETAILS NO. 2
7	DETAILS NO. 1
8	MECHANICALLY STABILIZED EMBANKMENT DETAILS NO. 1
9	MECHANICALLY STABILIZED EMBANKMENT DETAILS NO. 2
10	MECHANICALLY STABILIZED EMBANKMENT DETAILS NO. 3
11	MECHANICALLY STABILIZED EMBANKMENT DETAILS NO. 4
12	MECHANICALLY STABILIZED EMBANKMENT DETAILS NO. 5
13	MECHANICALLY STABILIZED EMBANKMENT DETAILS NO. 6
14	ARCHITECTURAL SURFACE NO. 1
15	ARCHITECTURAL SURFACE NO. 2
16	ARCHITECTURAL SURFACE NO. 3
17	ARCHITECTURAL DETAILS NO. 1
18	ARCHITECTURAL DETAILS NO. 2
19	ARCHITECTURAL DETAILS NO. 3
20	LOG OF TEST BORINGS 1 OF 6
21	LOG OF TEST BORINGS 2 OF 6
22	LOG OF TEST BORINGS 3 OF 6
23	LOG OF TEST BORINGS 4 OF 6
24	LOG OF TEST BORINGS 5 OF 6
25	LOG OF TEST BORINGS 6 OF 6

NOTE:
THE CONTRACTOR SHALL VERIFY ALL CONTROLLING FIELD DIMENSIONS BEFORE ORDERING OR FABRICATING ANY MATERIAL.

X Daniel T Adams
DESIGN ENGINEER

	BY	CHECKED
DESIGN	M. Vo	A. McPhee
DETAILS	Y. Tang	A. McPhee
QUANTITIES	A. McPhee	M.Vo

LOAD & RESISTANCE FACTOR DESIGN — LIVE LOADING: HL93 W/"LOW-BOY"; PERMIT DESIGN VEHICLE

	BY	CHECKED
LAYOUT	M.Vo	A. McPhee
SPECIFICATIONS	Dave Klein	PLANS AND SPECS COMPARED Dave Klein

STATE OF CALIFORNIA
DEPARTMENT OF TRANSPORTATION

DIVISION OF ENGINEERING SERVICES
STRUCTURE DESIGN
DESIGN BRANCH 10

BRIDGE NO. 56E0077
POST MILE 20.3

RETAINING WALL NO. 389
GENERAL PLAN NO. 1

ORIGINAL SCALE IN INCHES FOR REDUCED PLANS 0 1 2 3

CU 08
EA 448401

DISREGARD PRINTS BEARING EARLIER REVISION DATES

REVISION DATES: 2-01-10 2-26-10 4-23-10 7-08-10 8-18-10 9-09-10

SHEET 1 OF 25

USERNAME => trmartin DATE PLOTTED => 30-APR-2011 TIME PLOTTED => 12:22

STRUCTURES DESIGN GENERAL PLAN SHEET (ENGLISH) (REV.07-24-06)

FILE => 56e0077agp01.dgn

DIST	COUNTY	ROUTE	POST MILES TOTAL PROJECT	SHEET No	TOTAL SHEETS
08	Riv	91	15.6/21.6	1602	2028

REGISTERED CIVIL ENGINEER 11/12/10 DATE

4-25-11
PLANS APPROVAL DATE

REGISTERED PROFESSIONAL ENGINEER MINH THUONG VO No. C59297 Exp. 06-30-11 CIVIL STATE OF CALIFORNIA

The State of California or its officers or agents shall not be responsible for the accuracy or completeness of electronic copies of this plan sheet.

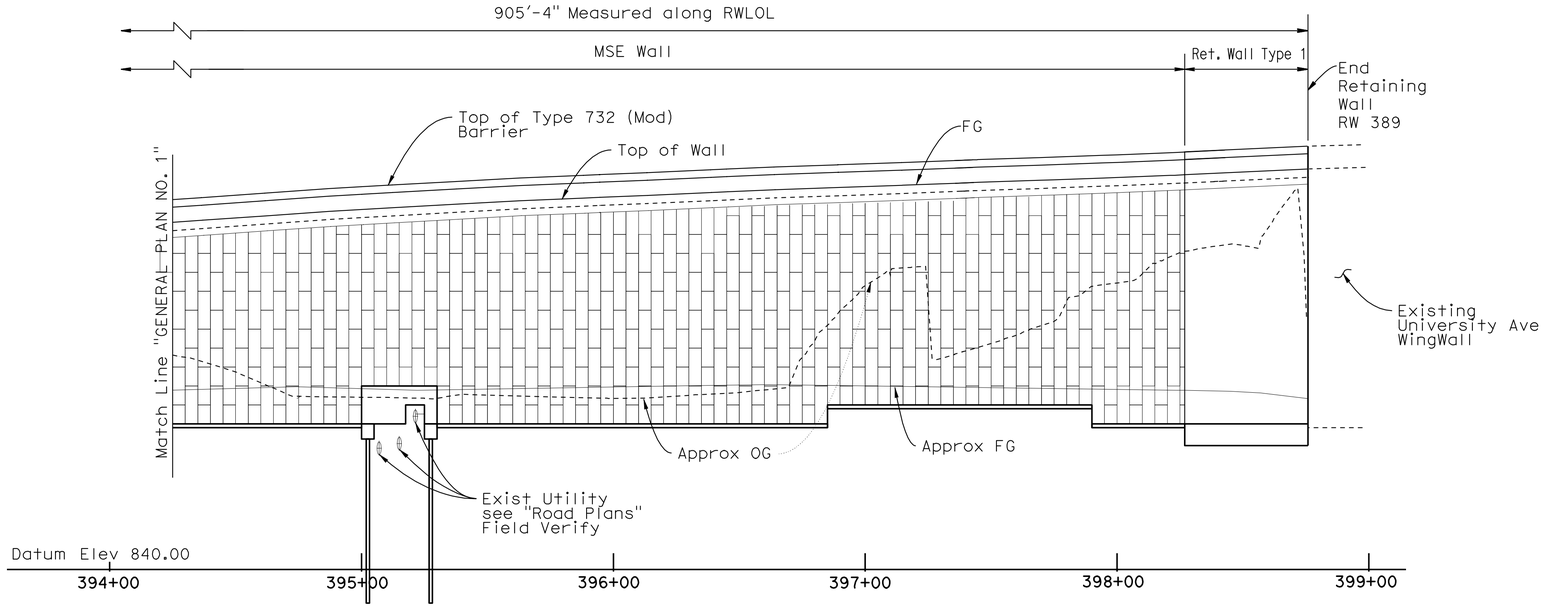

DEVELOPED MIRROR ELEVATION

Horiz. 1" = 30'
Vert. 1" = 10'

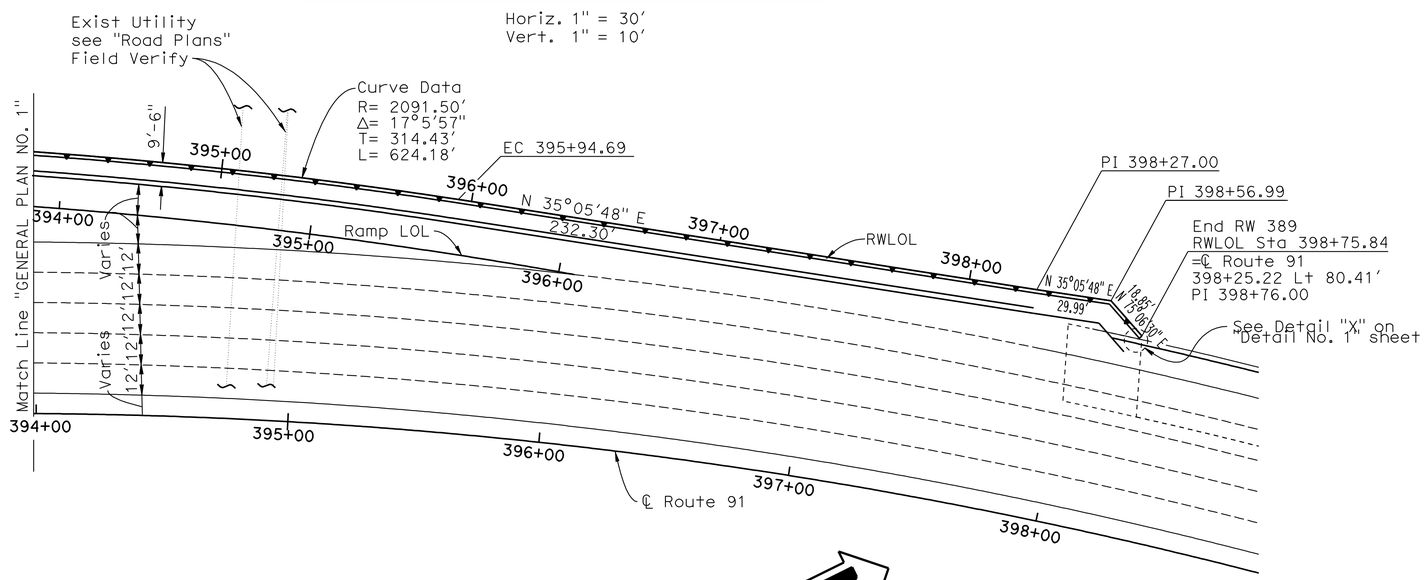

PLAN

1" = 30'

STANDARD PLANS DATED MAY 2006

A10A	ACRONYMS AND ABBREVIATIONS (SHEET 1 OF 2)
A10B	ACRONYMS AND ABBREVIATIONS (SHEET 2 OF 2)
A10C	SYMBOLS (SHEET 1 OF 2)
A10D	SYMBOLS (SHEET 2 OF 2)
B0-3	BRIDGE DETAILS
B2-5	PILE DETAILS CLASS 90 AND CLASS 140
B3-2	RETAINING WALL TYPE 1 H=32' THROUGH 36'
B3-8	RETAINING WALL DETAILS NO. 1
B3-9	RETAINING WALL DETAILS NO. 2
B11-55	CONCRETE BARRIER TYPE 732
D102	UNDERDRAINS

STANDARD PLAN SHEET No.

DETAIL No.

QUANTITIES:

STRUCTURE EXCAVATION (RETAINING WALL)	1,099	CY
STRUCTURE BACKFILL (RETAINING WALL)	765	CY
EARTH RETAINING STRUCTURE	23,678	SQFT
FURNISH PILING (CLASS 90) (ALTERNATIVE X)	343	LF
DRIVE PILE (CLASS 90) (ALTERNATIVE X)	12	EA
STRUCTURAL CONCRETE, RETAINING WALL	272	CY
STRUCTURAL CONCRETE, BARRIER SLAB	411	CY
STRUCTURAL CONCRETE, PILE CAP	52	CY
ARCHITECTURAL SURFACE (TEXTURED CONCRETE)	1,464	SQFT
SPLIT SLATE TEXTURE		
DRILL AND BOND DOWEL	2	LF
BAR REINFORCING STEEL (RETAINING WALL)	37,455	LB
BAR REINFORCING STEEL (BARRIER SLAB)	40,716	LB
BAR REINFORCING STEEL (BRIDGE)	11	LB
CONCRETE BARRIER (TYPE 732 MODIFIED)	906	LF

NOTE:
THE CONTRACTOR SHALL VERIFY ALL CONTROLLING FIELD DIMENSIONS BEFORE ORDERING OR FABRICATING ANY MATERIAL.

x Daniel T Adams
DESIGN ENGINEER

	BY	CHECKED			
DESIGN	M. Vo	A. McPhee	LOAD & RESISTANCE FACTOR DESIGN	LIVE LOADING: HL93 W/"LOW-BOY"; PERMIT DESIGN VEHICLE	
DETAILS	Y. Tang	A. McPhee	LAYOUT	M. Vo	A. McPhee
QUANTITIES	A. McPhee	M. Vo	SPECIFICATIONS	Dave Klein	PLANS AND SPECS COMPARED Dave Klein

STATE OF CALIFORNIA
DEPARTMENT OF TRANSPORTATION

DIVISION OF ENGINEERING SERVICES
STRUCTURE DESIGN
DESIGN BRANCH 10

BRIDGE NO. 56E0077
POST MILE 20.3

RETAINING WALL NO. 389
GENERAL PLAN NO. 2

ORIGINAL SCALE IN INCHES FOR REDUCED PLANS 0 1 2 3

CU 08
EA 448401

DISREGARD PRINTS BEARING EARLIER REVISION DATES
REVISION DATES: 2-04-10 2-26-10 4-23-10 7-08-10 11-03-10

SHEET 2 OF 25

STRUCTURES DESIGN GENERAL PLAN SHEET (ENGLISH) (REV.07-24-06)

FILE => 56e0077agp02.dgn

USERNAME => trmart in DATE PLOTTED => 30-APR-2011 TIME PLOTTED => 12:13

DIST	COUNTY	ROUTE	POST MILES TOTAL PROJECT	SHEET No	TOTAL SHEETS
08	Riv	91	15.6/21.6	1603	2028

REGISTERED CIVIL ENGINEER 11/12/10 DATE

4-25-11
PLANS APPROVAL DATE

REGISTERED PROFESSIONAL ENGINEER MINH THUONG VO No. C59297 Exp. 06-30-11 CIVIL STATE OF CALIFORNIA

The State of California or its officers or agents shall not be responsible for the accuracy or completeness of electronic copies of this plan sheet.

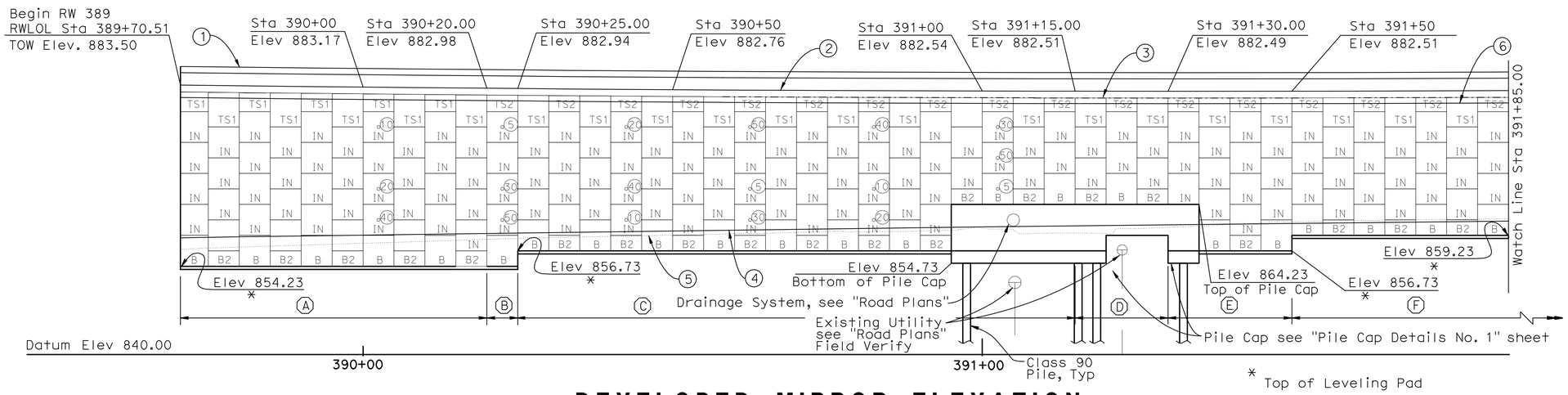

DEVELOPED MIRROR ELEVATION

1" = 10'

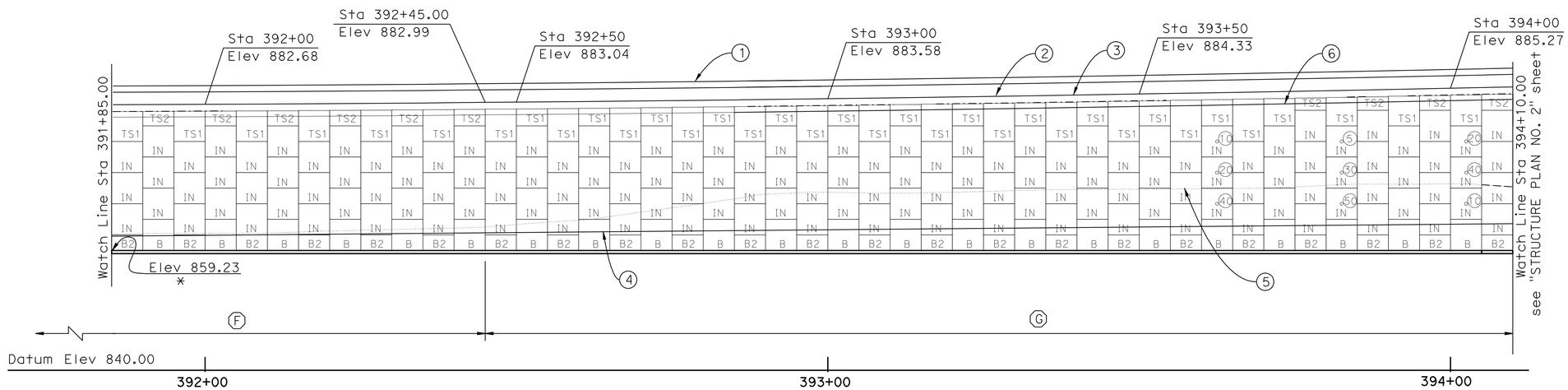

DEVELOPED MIRROR ELEVATION

1" = 10'

LEGEND:

1. Top of Concrete Barrier Type 732(Mod)
2. Top of Wall
3. Top of Precast Concrete Panel
4. Approximate FG
5. Approximate OG
6. Bottom of Barrier Slab

50 — Indicates interval in years from time of construction to time of removal of inspection wire

IN — Indicates location of inspection wire replacement, see "MECHANICALLY STABILIZED EMBANKMENT DETAILS NO. 3" sheet

Panel type designation, see "MECHANICALLY STABILIZED EMBANKMENT DETAILS NO. 1" sheet

NOTES:

1. Contractor to field verify all utility locations prior to retaining wall construction.
2. For Typical Sections, see "General Plan No. 1" sheet.
3. For Architectural Treatment, see "Architectural Treatment Details" sheet.
4. For utility information, see "Utility Plans".

SOIL REINFORCEMENT TABLE

	Ⓐ	Ⓑ	Ⓒ	Ⓓ	Ⓔ	Ⓕ	Ⓖ
Design "H"	H=28.20' Max	H=27.63' Max	H=25.09' Max	H=19.60' Max	H=24.69' Max	H=22.68' Max	H=25.06' Max
Base Width (BW)	BW = 21' Min	BW = 19' Min	BW = 18' Min	BW = 14' Min	BW = 18' Min	BW = 16' Min	BW = 18' Min
Top level of Mesh: Levels Below:	10 @ W11 x W11 + 6" x 24" 2 @ W15 x W11 + 6" x 30"	5 @ W11 x W11 + 6" x 18" 5 @ W11 x W11 + 6" x 24" 1 @ W15 x W11 + 6" x 30"	5 @ W11 x W11 + 6" x 18" 5 @ W11 x W11 + 6" x 24"	2 @ W11 x W11 + 6" x 9" 3 @ W11 x W11 + 6" x 18" 3 @ W11 x W11 + 6" x 24"	5 @ W11 x W11 + 6" x 18" 5 @ W11 x W11 + 6" x 24"	5 @ W11 x W11 + 6" x 18" 4 @ W11 x W11 + 6" x 24"	5 @ W11 x W11 + 6" x 18" 5 @ W11 x W11 + 6" x 24"

MSE NOTES:

1. Mesh is indicated sequentially from top level of mesh to bottom level of mesh.
2. For limits of excavation & backfill, see "Mechanically Stabilized Embankment Details No. 6" sheet.
3. For Barrier Slab details, see "Mechanically Stabilized Embankment Details No. 4" sheet.
4. For panel details, see "Mechanically Stabilized Embankment Details No. 1" sheet.
5. For General Notes and wire mat details, see "Mechanically Stabilized Embankment Details No. 2" sheet.
6. For inspection wire details, see "Mechanically Stabilized Embankment Details No. 3" sheet.

LEGEND:

2 @ W11 x W11 + 6" x 9"

- Longitudinal wire spacing x Transverse wire spacing
- Longitudinal wire size x Transverse wire size
- Number of welded wire mats.

NOTE:
THE CONTRACTOR SHALL VERIFY ALL CONTROLLING FIELD DIMENSIONS BEFORE ORDERING OR FABRICATING ANY MATERIAL.

	BY	CHECKED
DESIGN	M. Vo	A. McPhee
DETAILS	Y. Tang	A. McPhee
QUANTITIES	A. McPhee	M. Vo

STATE OF CALIFORNIA
DEPARTMENT OF TRANSPORTATION

DIVISION OF ENGINEERING SERVICES
STRUCTURE DESIGN
DESIGN BRANCH 10

BRIDGE NO. 56E0077
POST MILE 20.3

RETAINING WALL NO. 389
STRUCTURE PLAN NO. 1

STRUCTURES DESIGN DETAIL SHEET (ENGLISH) (REV. 10/25/05)

ORIGINAL SCALE IN INCHES FOR REDUCED PLANS 0 1 2 3

CU 08
EA 448401

DISREGARD PRINTS BEARING EARLIER REVISION DATES

REVISION DATES: 2-08-10 2-16-10 9-09-10

SHEET 3 OF 25

FILE => 56e0077csp03.dgn

USERNAME => trmartin DATE PLOTTED => 30-APR-2011 TIME PLOTTED => 12:13

DIST	COUNTY	ROUTE	POST MILES TOTAL PROJECT	SHEET No	TOTAL SHEETS
08	Riv	91	15.6/21.6	1604	2028

REGISTERED CIVIL ENGINEER 11/12/10 DATE

4-25-11
PLANS APPROVAL DATE

REGISTERED PROFESSIONAL ENGINEER MINH THUONG VO No. C59297 Exp. 06-30-11 CIVIL STATE OF CALIFORNIA

The State of California or its officers or agents shall not be responsible for the accuracy or completeness of electronic copies of this plan sheet.

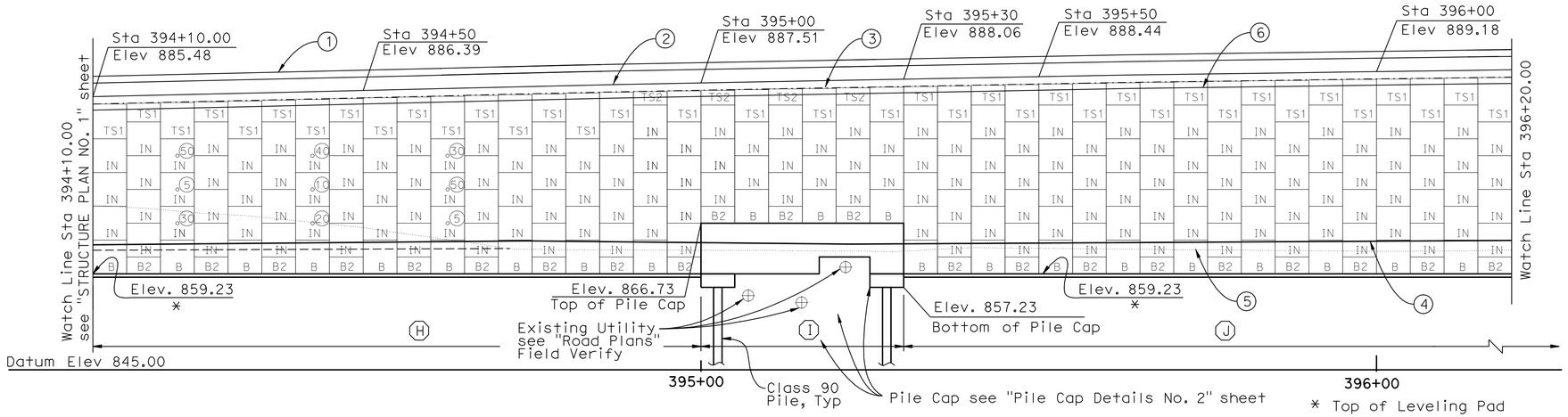

DEVELOPED MIRROR ELEVATION

1" = 10'

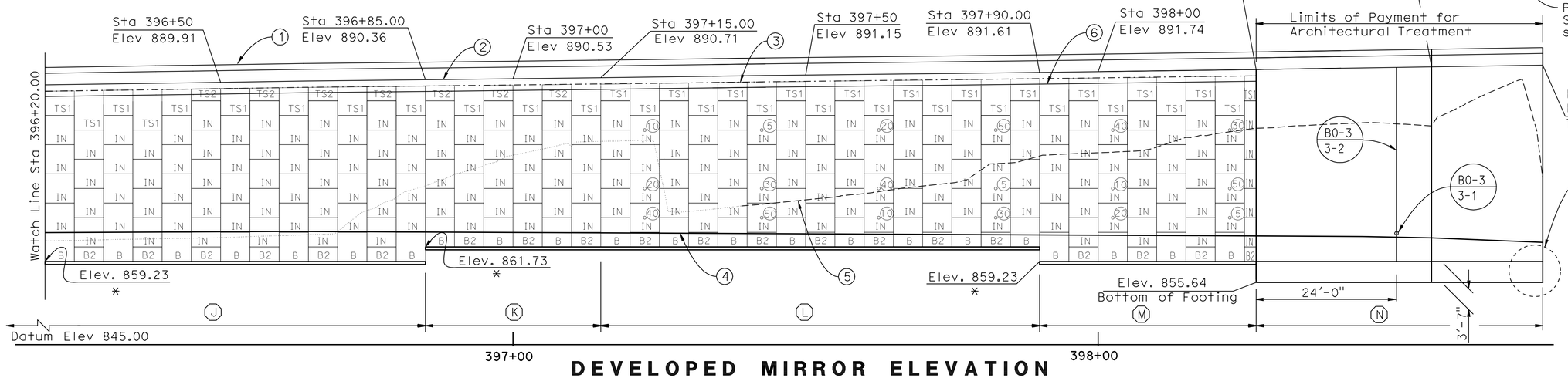

DEVELOPED MIRROR ELEVATION

1" = 10'

LEGEND:

1. Top of Concrete Barrier Type 732(Mod)
2. Top of Wall
3. Top of Precast Concrete Panel
4. Approximate FG
5. Approximate OG
6. Bottom of Barrier Slab

50 — Indicates interval in years from time of construction to time of removal of inspection wire

IN — Indicates location of inspection wire replacement, see "MECHANICALLY STABILIZED EMBANKMENT DETAILS NO. 3" sheet

Panel type designation, see "MECHANICALLY STABILIZED EMBANKMENT DETAILS NO. 1" sheet

End RW 389
RWLOL Sta 398+75.84
TOW Elev. 892.86

B0-3 / 3-2

B0-3 / 3-1

See Detail "X" on "Details No. 1" sheet

NOTES:

1. Contractor to field verify all utility locations prior to retaining wall construction.
2. For Typical Sections, see "General Plan No. 1" sheet.
3. For Architectural Treatment, see "Architectural Treatment Details" sheet
4. For utility information, see "Utility Plans".

SOIL REINFORCEMENT TABLE

	H	I	J	K	L	M	N
Design "H"	H=27.10' Max	H=20.16' Max	H=29.89' Max	H=27.65' Max	H=30.77' Max	H=31.29' Max	H=34' Max
Base Width (BW)	BW = 19' Min	BW = 16' Min	BW = 21' Min	BW = 19' Min	BW = 21' Min	BW = 23' Min	Retaining Wall Type 1
Top level of Mesh: Levels Below:	5 @ W11 x W11 + 6" x 18" 5 @ W11 x W11 + 6" x 24" 1 @ W15 x W11 + 6" x 30"	5 @ W11 x W11 + 6" x 18" 3 @ W11 x W11 + 6" x 24"	10 @ W11 x W11 + 6" x 24" 2 @ W15 x W11 + 6" x 30"	5 @ W11 x W11 + 6" x 18" 5 @ W11 x W11 + 6" x 24" 1 @ W15 x W11 + 6" x 20"	10 @ W11 x W11 + 6" x 24" 2 @ W11 x W11 + 6" x 30"	10 @ W11 x W11 + 6" x 24" 3 @ W15 x W11 + 6" x 30"	B3-2 / B3-8 / B3-9

MSE NOTES:

1. Mesh is indicated sequentially from top level of mesh to bottom level of mesh.
2. For limits of excavation & backfill, see "Mechanically Stabilized Embankment Details No. 6" sheet.
3. For Barrier Slab details, see "Mechanically Stabilized Embankment Details No. 4" sheet.
4. For panel details, see "Mechanically Stabilized Embankment Details No. 1" sheet.
5. For General Notes and wire mat details, see "Mechanically Stabilized Embankment Details No. 2" sheet.
6. For inspection wire details, see "Mechanically Stabilized Embankment Details No. 3" sheet.

LEGEND:

2 @ W11 x W11 + 6" x 9"

- Longitudinal wire spacing x Transverse wire spacing
- Longitudinal wire size x Transverse wire size
- Number of welded wire mats.

NOTE:
THE CONTRACTOR SHALL VERIFY ALL CONTROLLING FIELD DIMENSIONS BEFORE ORDERING OR FABRICATING ANY MATERIAL.

	BY	CHECKED
DESIGN	M. Vo	A. McPhee
DETAILS	Y. Tang	A. McPhee
QUANTITIES	A. McPhee	M. Vo

STATE OF CALIFORNIA
DEPARTMENT OF TRANSPORTATION

DIVISION OF ENGINEERING SERVICES
STRUCTURE DESIGN
DESIGN BRANCH 10

BRIDGE NO. 56E0077
POST MILE 20.3

RETAINING WALL NO. 389
STRUCTURE PLAN NO. 2

STRUCTURES DESIGN DETAIL SHEET (ENGLISH) (REV. 10/25/05)

ORIGINAL SCALE IN INCHES FOR REDUCED PLANS 0 1 2 3

CU 08
EA 448401

DISREGARD PRINTS BEARING EARLIER REVISION DATES

REVISION DATES: 2-08-10 2-25-10 4-24-10 7-16-10 9-09-10

SHEET 4 OF 25

FILE => 56e0077csp04.dgn

USERNAME => trmartin DATE PLOTTED => 30-APR-2011 TIME PLOTTED => 12:13

DIST	COUNTY	ROUTE	POST MILES TOTAL PROJECT	SHEET No	TOTAL SHEETS
08	Riv	91	15.6/21.6	1605	2028

REGISTERED CIVIL ENGINEER 11/12/10 DATE

4-25-11
PLANS APPROVAL DATE

REGISTERED PROFESSIONAL ENGINEER MINH THUONG VO No. C59297 Exp. 06-30-11 CIVIL STATE OF CALIFORNIA

The State of California or its officers or agents shall not be responsible for the accuracy or completeness of electronic copies of this plan sheet.

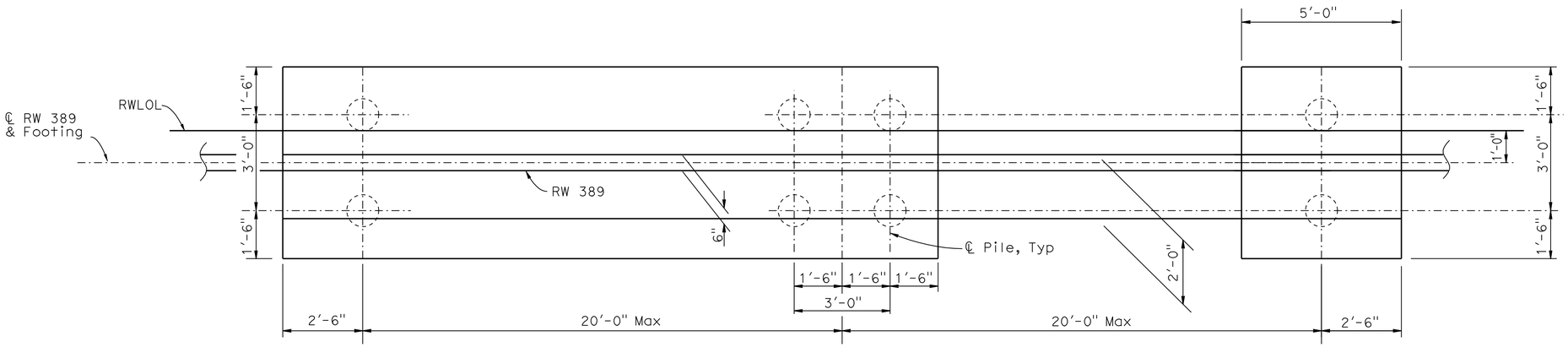

PILE CAP PLAN

1/2" = 1'-0"

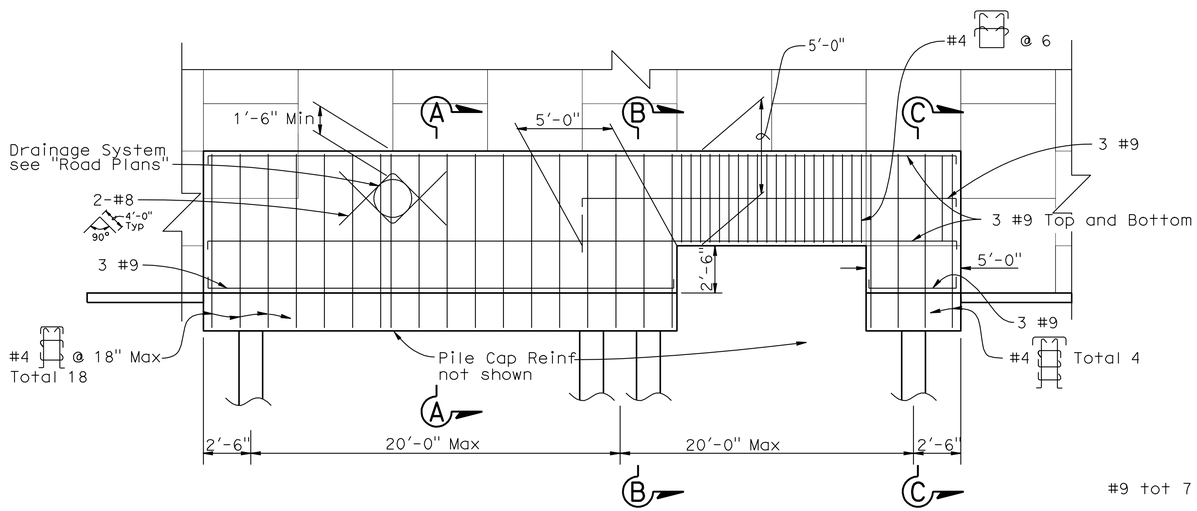

ELEVATION

1/4" = 1'-0"

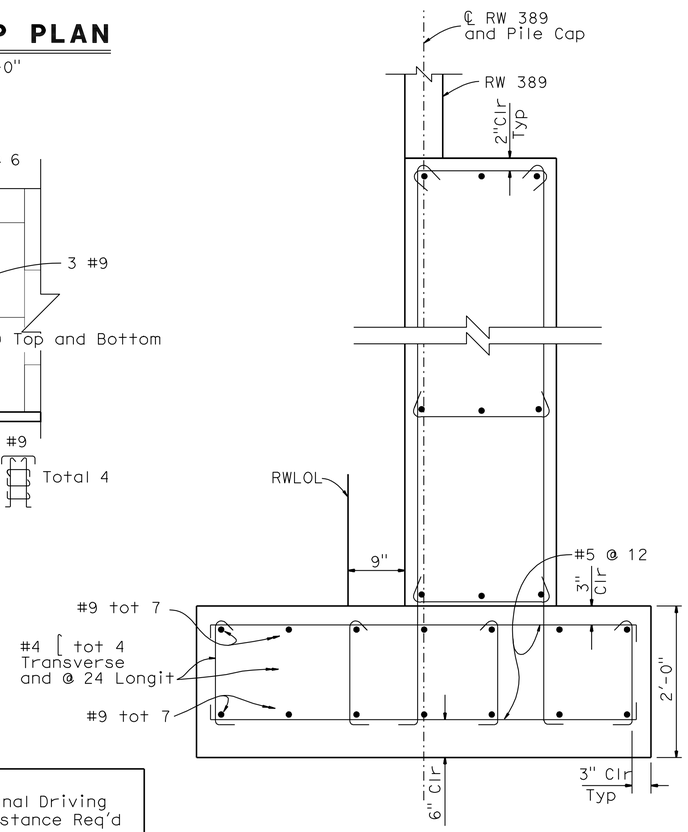

SECTION A-A

1" = 1'-0"

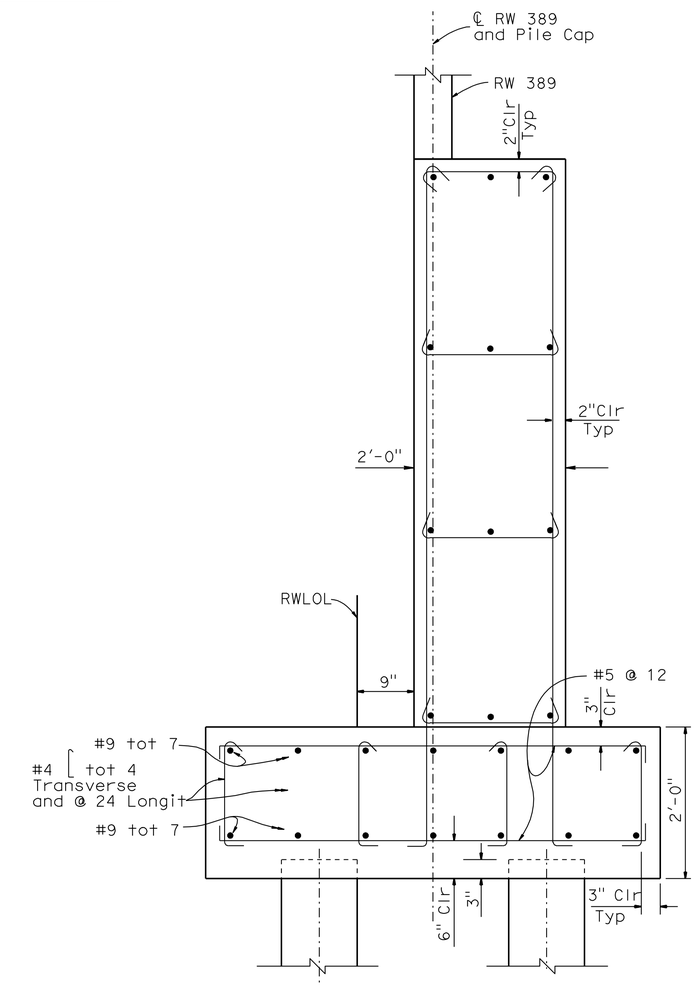

SECTION B-B

1" = 1'-0"

PILE DATA TABLE

B2-5

Pile Type	Nominal Resistance		Design Tip Elevations (Ft)	Specified Tip Elevations (Ft)	Nominal Driving Resistance Req'd
	Compression	Tension			
Class 90 Alternate X	180 kips	0	827 (1)	827	180 kips

Note: Design tip elevation controlled by (1) compression.

NOTE:
THE CONTRACTOR SHALL VERIFY ALL CONTROLLING FIELD DIMENSIONS BEFORE ORDERING OR FABRICATING ANY MATERIAL.

DESIGN	BY M. Vo	CHECKED A. McPhee	
DETAILS	BY Y. Tang	CHECKED A. McPhee	
QUANTITIES	BY A. McPhee	CHECKED M. Vo	

STATE OF CALIFORNIA
DEPARTMENT OF TRANSPORTATION

DIVISION OF ENGINEERING SERVICES
STRUCTURE DESIGN
DESIGN BRANCH 10

BRIDGE NO. 56E0077
POST MILE 20.3

RETAINING WALL NO. 389
PILE CAP DETAILS NO. 1

STRUCTURES DESIGN DETAIL SHEET (ENGLISH) (REV. 10/25/05)

ORIGINAL SCALE IN INCHES FOR REDUCED PLANS 0 1 2 3

CU 08
EA 448401

DISREGARD PRINTS BEARING EARLIER REVISION DATES

REVISION DATES: 2-09-10 2-26-10 4-23-10 7-13-10 9-09-10

SHEET 5 OF 25

FILE => 56e0077ppdt05.dgn

USERNAME => trmartin DATE PLOTTED => 30-APR-2011 TIME PLOTTED => 12:13

DIST	COUNTY	ROUTE	POST MILES TOTAL PROJECT	SHEET No	TOTAL SHEETS
08	Riv	91	15.6/21.6	1606	2028

REGISTERED CIVIL ENGINEER 11/12/10 DATE

4-25-11
PLANS APPROVAL DATE

REGISTERED PROFESSIONAL ENGINEER MINH THUONG VO No. C59297 Exp. 06-30-11 CIVIL STATE OF CALIFORNIA

The State of California or its officers or agents shall not be responsible for the accuracy or completeness of electronic copies of this plan sheet.

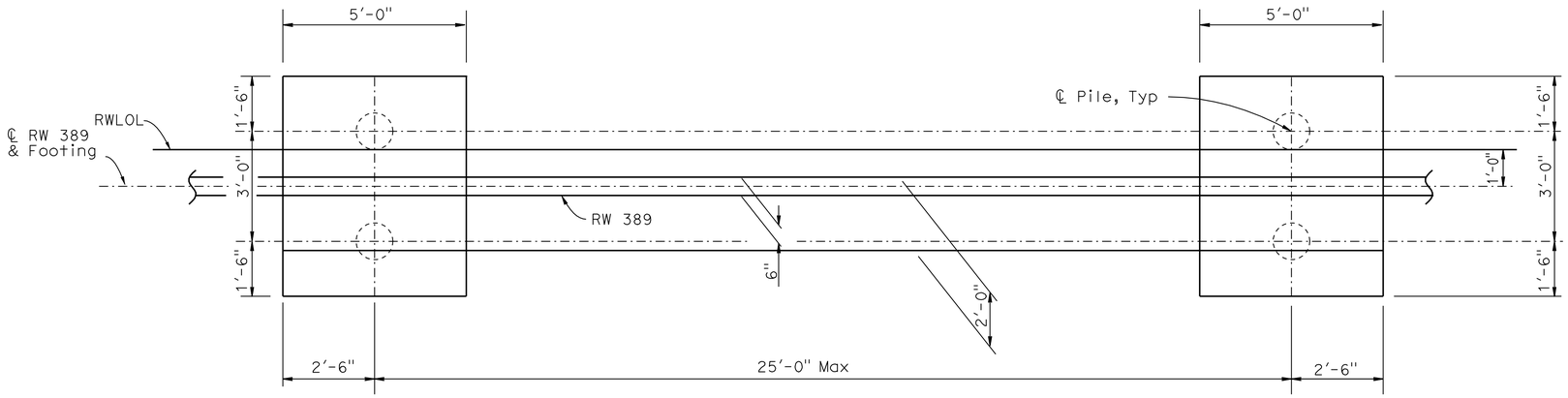

PILE CAP PLAN

1/2" = 1'-0"

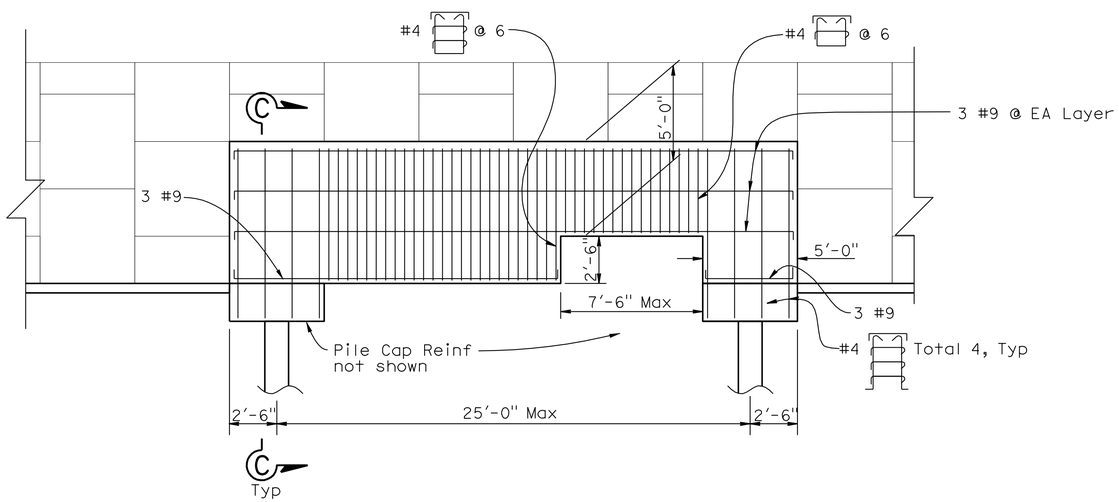

ELEVATION

1/4" = 1'-0"

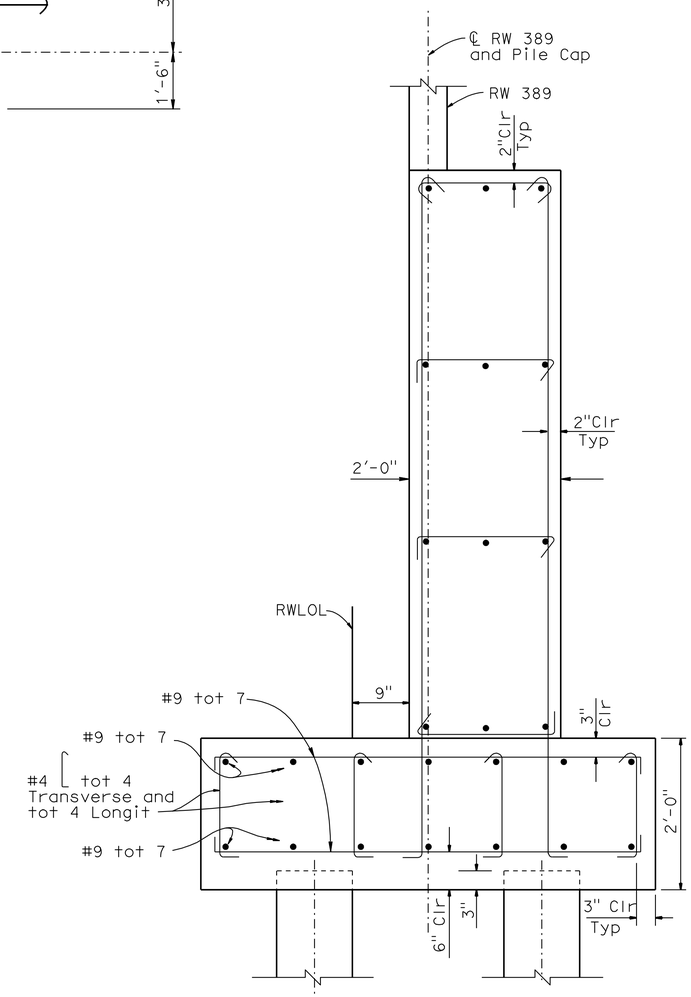

SECTION C-C

1" = 1'-0"

NOTE:
THE CONTRACTOR SHALL VERIFY ALL CONTROLLING FIELD DIMENSIONS BEFORE ORDERING OR FABRICATING ANY MATERIAL.

	BY	CHECKED
DESIGN	M. Vo	A. McPhee
DETAILS	Y. Tang	A. McPhee
QUANTITIES	A. McPhee	M. Vo

STATE OF CALIFORNIA
DEPARTMENT OF TRANSPORTATION

DIVISION OF ENGINEERING SERVICES
STRUCTURE DESIGN
DESIGN BRANCH 10

BRIDGE NO. 56E0077
POST MILE 20.3

RETAINING WALL NO. 389
PILE CAP DETAILS NO. 2

STRUCTURES DESIGN DETAIL SHEET (ENGLISH) (REV. 10/25/05)

ORIGINAL SCALE IN INCHES FOR REDUCED PLANS 0 1 2 3

CU 08
EA 448401

DISREGARD PRINTS BEARING EARLIER REVISION DATES

REVISION DATES: 2-25-10 4-27-10

SHEET 6 OF 25

FILE => 56e0077ppdt06.dgn

USERNAME => trmartin DATE PLOTTED => 30-APR-2011 TIME PLOTTED => 12:14

DIST	COUNTY	ROUTE	POST MILES TOTAL PROJECT	SHEET No	TOTAL SHEETS
08	Riv	91	15.6/21.6	1607	2028

REGISTERED CIVIL ENGINEER 11/12/10 DATE

4-25-11
PLANS APPROVAL DATE

REGISTERED PROFESSIONAL ENGINEER MINH THUONG VO No. C59297 Exp. 06-30-11 CIVIL STATE OF CALIFORNIA

The State of California or its officers or agents shall not be responsible for the accuracy or completeness of electronic copies of this plan sheet.

LEGEND

Indicates New Construction

Indicates Existing Structure

Indicates Limits of Removal

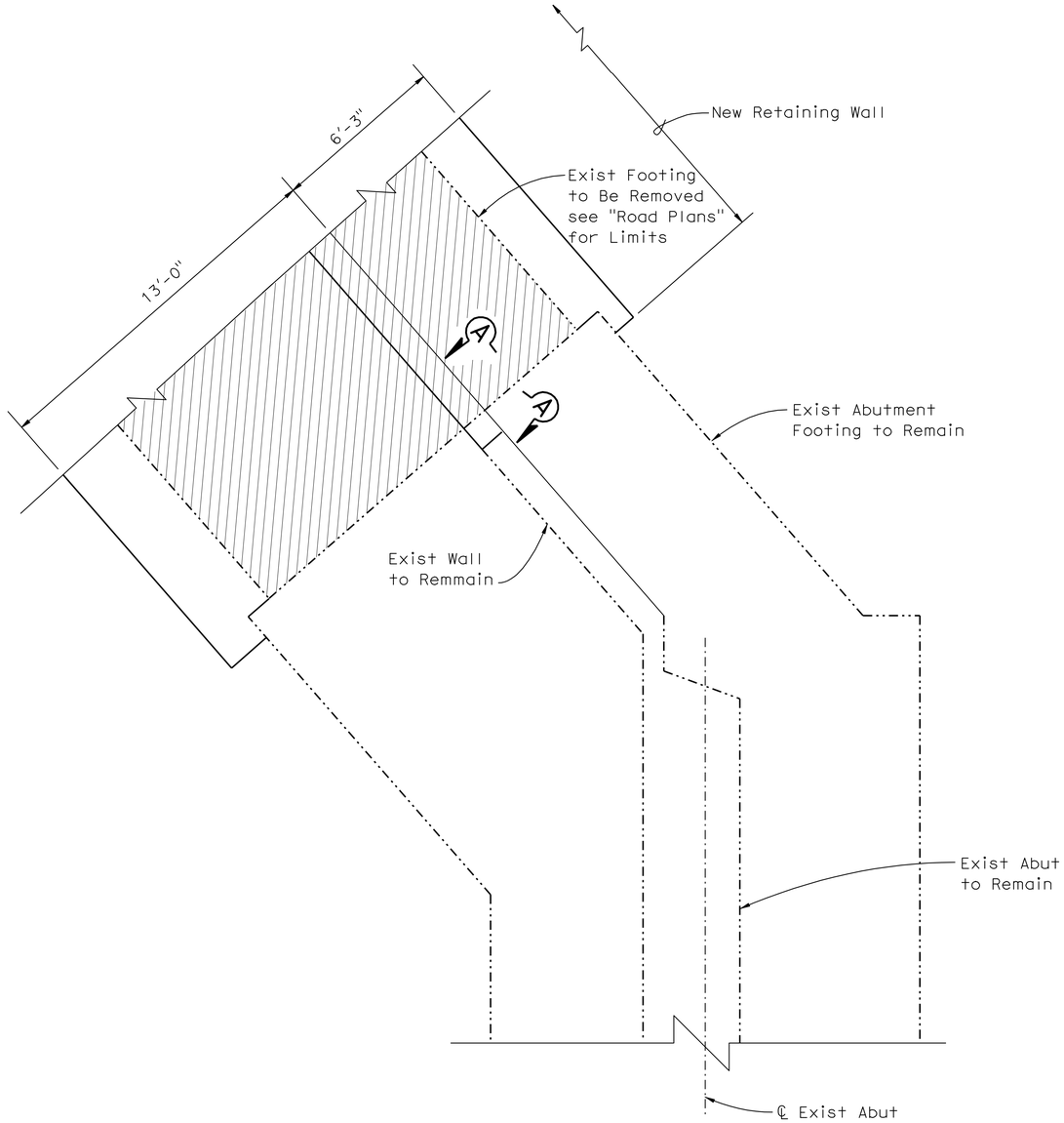

DETAIL "X"

3/8" = 1'-0"

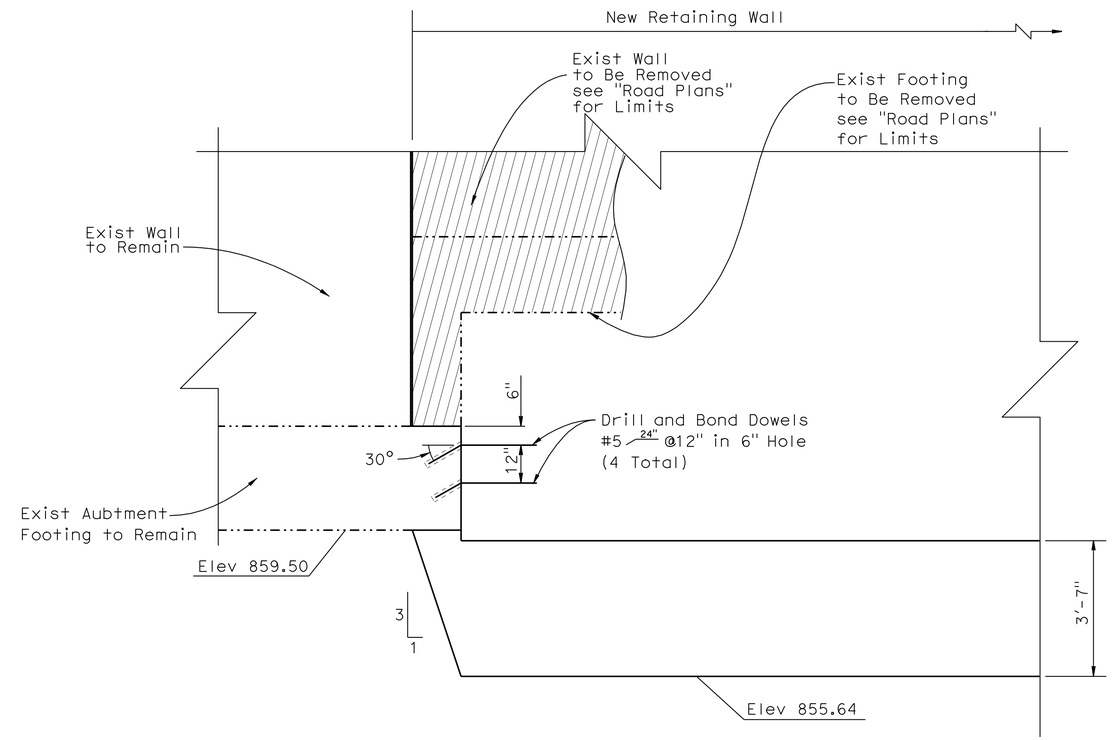

SECTION A-A

1/2" = 1'-0"

DESIGN	BY M. Vo	CHECKED A. McPhee	
DETAILS	BY Y. Tang	CHECKED A. McPhee	
QUANTITIES	BY A. McPhee	CHECKED M. Vo	

STATE OF CALIFORNIA
DEPARTMENT OF TRANSPORTATION

DIVISION OF ENGINEERING SERVICES
STRUCTURE DESIGN
DESIGN BRANCH 10

BRIDGE NO. 56E0077
POST MILE 20.3

RETAINING WALL NO. 389
DETAILS NO. 1

STRUCTURES DESIGN DETAIL SHEET (ENGLISH) (REV. 10/25/05)

ORIGINAL SCALE IN INCHES FOR REDUCED PLANS 0 1 2 3

CU 08
EA 448401

DISREGARD PRINTS BEARING EARLIER REVISION DATES

REVISION DATES: 5-05-10 7-13-10

SHEET 7 OF 25

FILE => 56e0077ppdt07.dgn

USERNAME => trmartin DATE PLOTTED => 30-APR-2011 TIME PLOTTED => 12:14

DIST	COUNTY	ROUTE	POST MILES TOTAL PROJECT	SHEET No	TOTAL SHEETS
08	Riv	91	15.6/21.6	1608	2028

REGISTERED CIVIL ENGINEER 11/12/10 DATE

4-25-11
PLANS APPROVAL DATE

REGISTERED PROFESSIONAL ENGINEER MINH THUONG VO No. C59297 Exp. 06-30-11 CIVIL STATE OF CALIFORNIA

The State of California or its officers or agents shall not be responsible for the accuracy or completeness of electronic copies of this plan sheet.

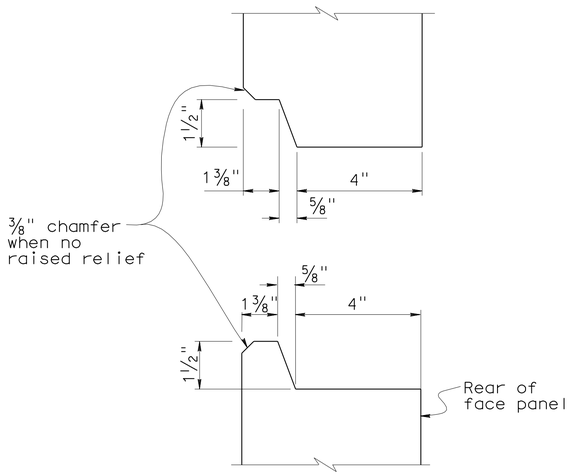

HORIZONTAL JOINT DETAIL
No Scale

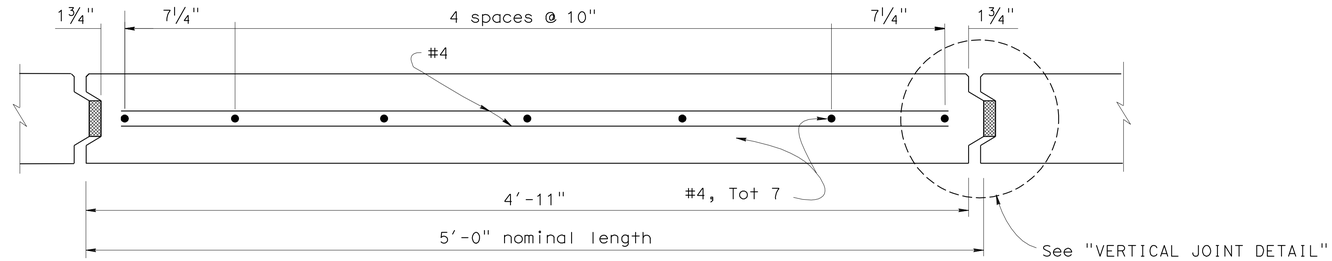

PLAN - FACE PANEL
No Scale

NOTES:

1. Architectural treatment not shown. Architectural surface extends beyond face of panel. See "Architectural Treatment Details" sheet.
2. Place reinforced elastomeric bearing pads in all of the panel joints between the panels. Place one in each vertical joint where the horizontal joint intersects it. Place two per panel in each horizontal joint.
   3/4" x 2 3/8" x 6" for vertical joints
   3/4" x 4" x 6" for horizontal joints.
3. Bond a strip of filter fabric, 1' - 0" wide, over the full length of all panel joints.

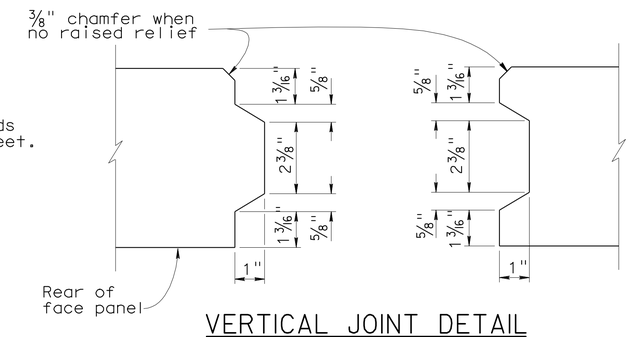

VERTICAL JOINT DETAIL
No Scale

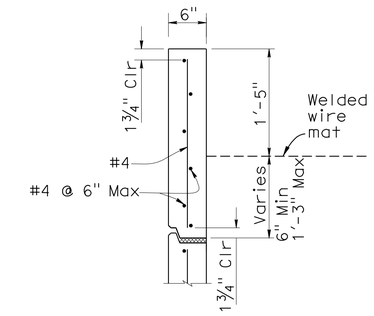

TOP PANEL (TYPE "TS2")
1" =1'-0"

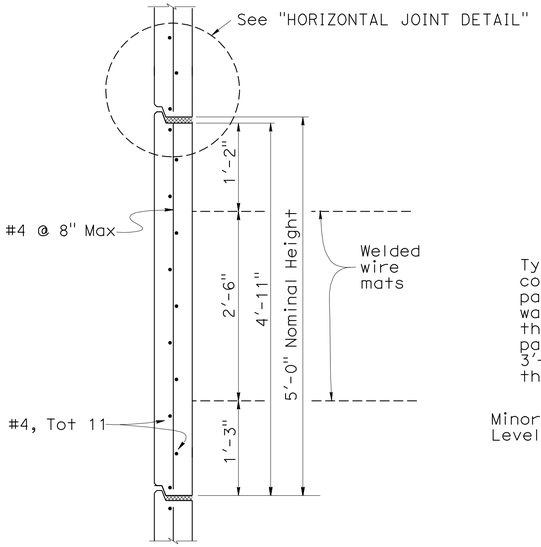

INTERMEDIATE PANEL (TYPE "IN")
1" = 1'-0"

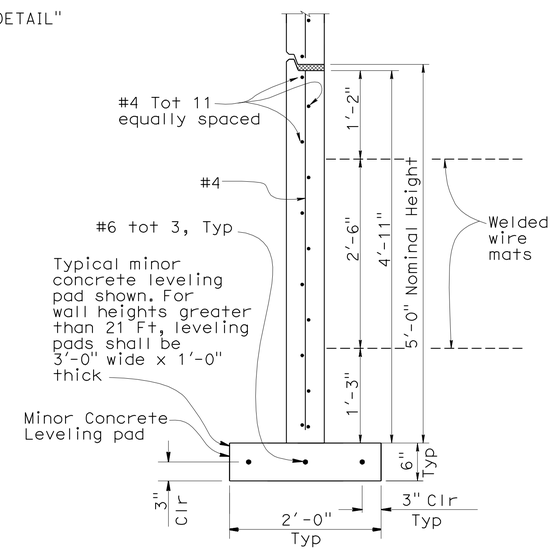

BOTTOM PANEL (TYPE "B")
1" = 1'-0"

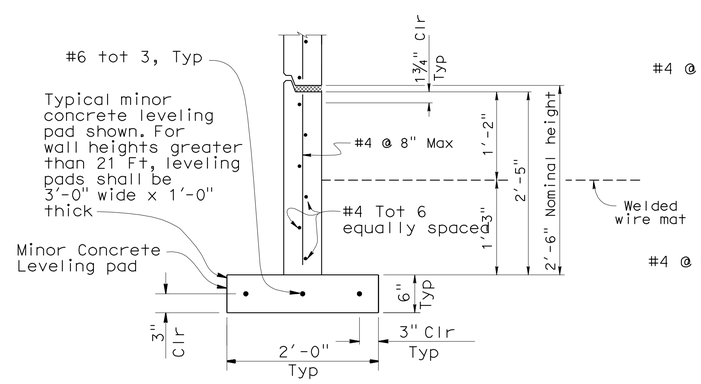

BOTTOM HALF PANEL (TYPE "B2")
1" = 1'-0"

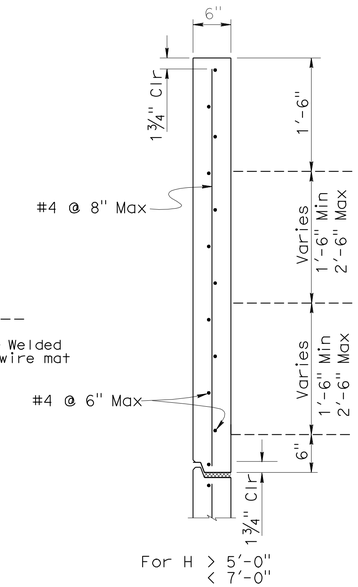

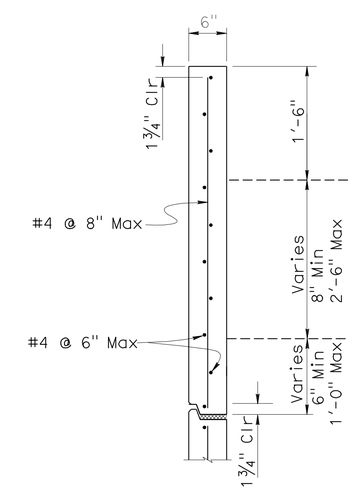

TOP PANEL (TYPE "TSI")
1" = 1'-0"

DESIGN	BY M. Vo	CHECKED A. McPhee	
DETAILS	BY Y. Tang	CHECKED A. McPhee	
QUANTITIES	BY A. McPhee	CHECKED M. Vo	

STATE OF CALIFORNIA
DEPARTMENT OF TRANSPORTATION

DIVISION OF ENGINEERING SERVICES
STRUCTURE DESIGN
DESIGN BRANCH 10

BRIDGE NO. 56E0077
POST MILE 20.3

RETAINING WALL NO. 389
MECHANICALLY STABILIZED EMBANKMENT
DETAILS NO. 1

STRUCTURES DESIGN DETAIL SHEET (ENGLISH) (REV. 10/25/05)

ORIGINAL SCALE IN INCHES FOR REDUCED PLANS 0 1 2 3

CU 08
EA 448401

DISREGARD PRINTS BEARING EARLIER REVISION DATES 2-09-10 7-16-10

REVISION DATES

SHEET 8 OF 25

FILE => 56e0077s_msedt08.dgn

USERNAME => trmartin DATE PLOTTED => 30-APR-2011 TIME PLOTTED => 12:14

DIST.	COUNTY	ROUTE	POST MILES TOTAL PROJECT	SHEET NO.	TOTAL SHEETS
08	Riv	91	15.6/21.6	1609	2028

11-12-10
REGISTERED ENGINEER - CIVIL

4-25-11
PLANS APPROVAL DATE

REGISTERED PROFESSIONAL ENGINEER
MINH THUONG VO
No. C59297
Exp. 06-30-11
CIVIL
STATE OF CALIFORNIA

The State of California or its officers or agents shall not be responsible for the accuracy or completeness of electronic copies of this plan sheet.

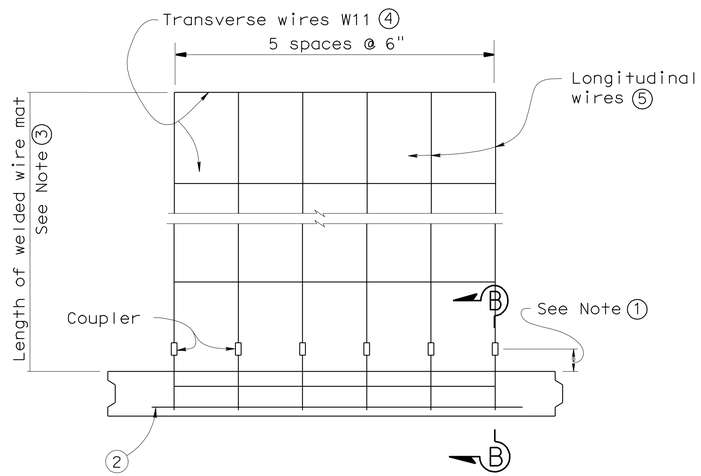

PLAN OF PANEL WITH WELDED WIRE MAT
No scale

GENERAL NOTES (MSE WALLS)

Live loading: Surcharge = 240 lb/ft^2

Soil parameters:

Internal design ϕ = 34°, γ = 120 lb/ft^3
External design ϕ(Backfill) = 34°, γ = 120 lb/ft^3
ϕ(Foundation) = 30°

Precast concrete panels:

f′c = 4,000 psi (Concrete compressive strength at 28 days)
fy = 60,000 psi (Yield strength of reinforcement)

Soil reinforcement:

Welded wire mats: fy = 65,000 psi (Yield strength)
Coupler: fy = 36,000 psi (Yield strength)
Corrosion rate = 1.1 mils/year

Reinforced concrete:

f′c = 3,600 psi, except as noted
(Concrete compressive strength at 28 days)

fy = 60,000 psi (Yield strength of reinforcement)

MSE = Mechanically stabilized embankment

Notes:

① Distance as required to permit coupler to be swaged.

② Place #4 bar, 3′ - 2" long, centered on connector mat, but not welded to it.

③ Length equals "Base width" of wall, except it shall not be less than 16′ for the top 2 levels of mats at the top of the wall.

④ All Transverse Wires size W11 at various spacings as shown elsewhere in plans.

⑤ All Longitudinal Wires at 6" spacing, of various sizes, as shown elsewhere in plans.

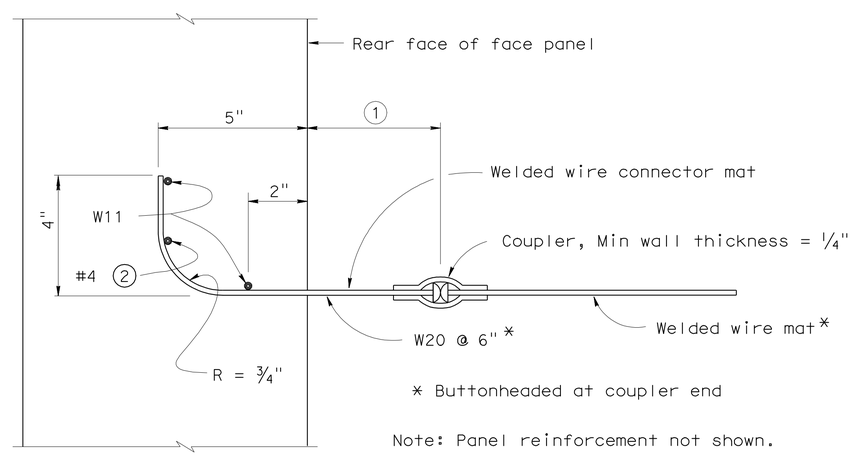

SECTION B-B
No scale

STANDARD DRAWING

FILE NO. xs13-020-2e

APPROVED BY K. GRISWELL
RESPONSIBLE TECHNICAL SPECIALIST
APPROVAL DATE 5-6-08

RELEASED BY ROBERTO LACALLE
RESPONSIBLE OFFICE CHIEF
RELEASE DATE 5-6-08

STATE OF CALIFORNIA
DEPARTMENT OF TRANSPORTATION

DIVISION OF ENGINEERING SERVICES

BRIDGE NO. 56E0077
POST MILE 20.3

RETAINING WALL NO. 389
MECHANICALLY STABILIZED EMBANKMENT
DETAILS NO. 2

DS OSD 2147A (ENGLISH STANDARD DRAWING "XS" BORDER REV. 01/11/08)

ORIGINAL SCALE IN INCHES FOR REDUCED PLANS 0 1 2 3

CU 08
EA 448401

DISREGARD PRINTS BEARING EARLIER REVISION DATES 2-09-10

REVISION DATES (PRELIMINARY STAGE ONLY)

SHEET 9 OF 25

USERNAME => trmartin

56e0077s_msedt09.dgn

DATE PLOTTED => 30-APR-2011 TIME PLOTTED => 12:14

DIST.	COUNTY	ROUTE	POST MILES TOTAL PROJECT	SHEET NO.	TOTAL SHEETS
08	Riv	91	15.6/21.6	1610	2028

11-12-10
REGISTERED ENGINEER - CIVIL

4-25-11
PLANS APPROVAL DATE

REGISTERED PROFESSIONAL ENGINEER MINH THUONG VO No. C59297 Exp. 06-30-11 CIVIL STATE OF CALIFORNIA

The State of California or its officers or agents shall not be responsible for the accuracy or completeness of electronic copies of this plan sheet.

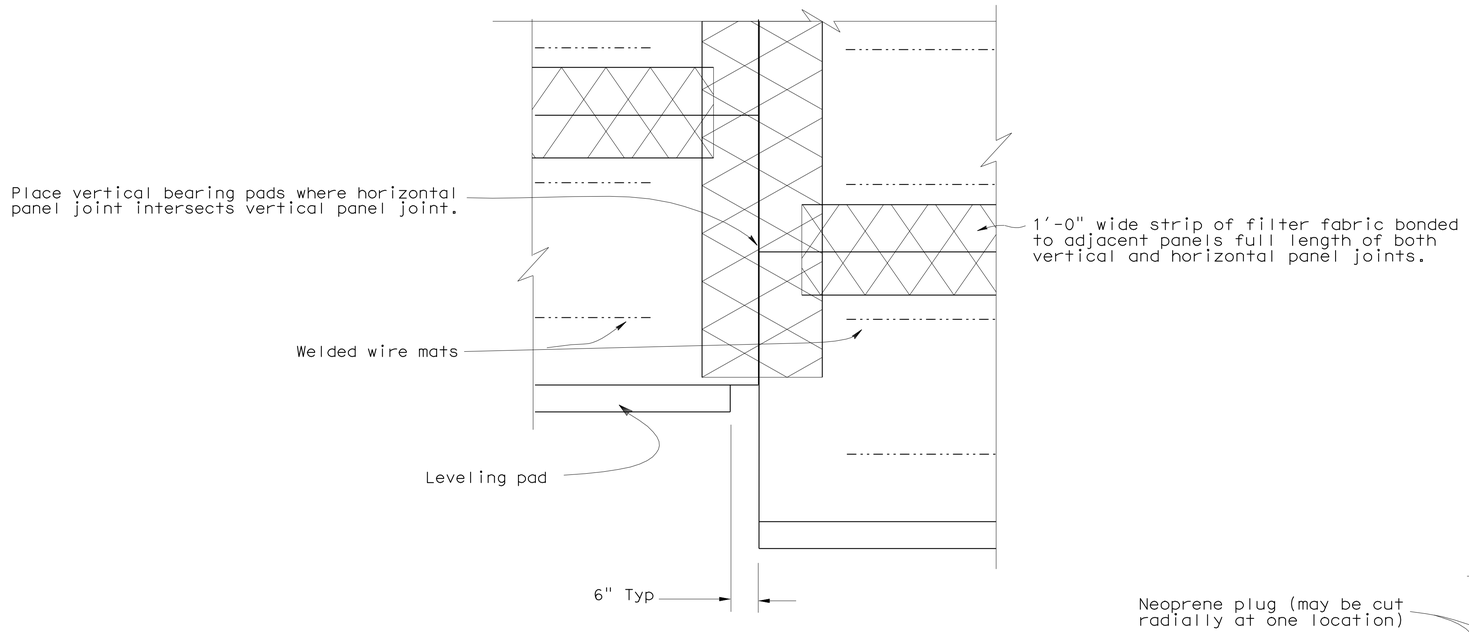

REAR ELEVATION

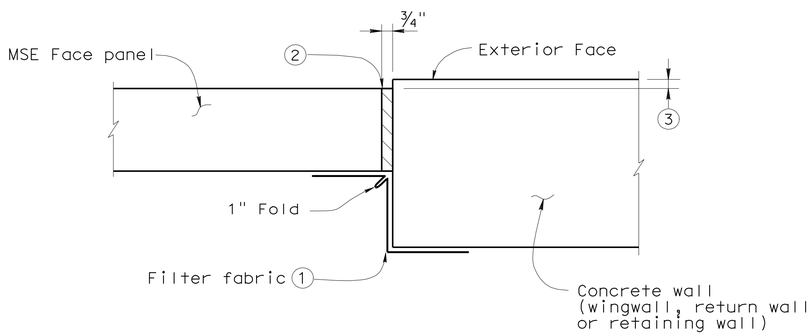

MSE FACE PANEL-TO-CONCRETE WALL JOINT DETAIL

LEGEND:

1. Bond a strip of filter fabric, 1'-6" wide, to back of MSE panels and the adjacent concrete wall for entire length of vertical joint.
2. Bond expansion joint material to the concrete wall.
3. Offset between face of MSE face panel and face of the concrete wall as dictated by location of layout lines shown elsewhere in Project Plans.

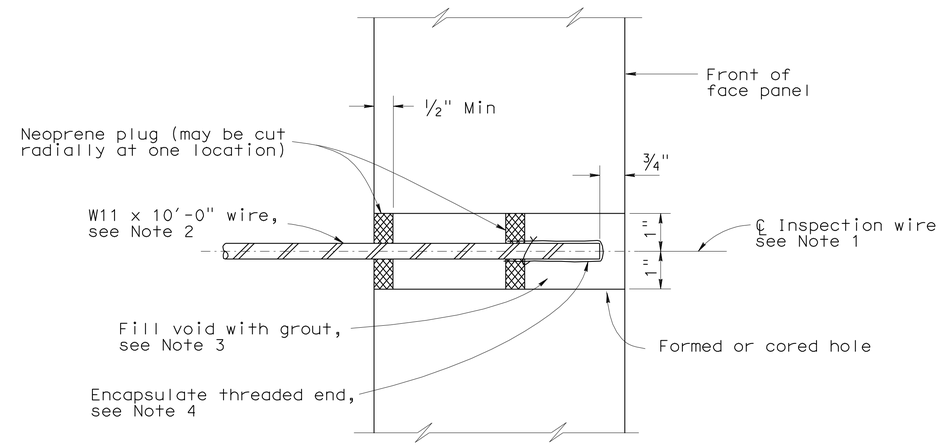

SECTION THRU INSPECTION WIRE

NOTES:

1. Center inspection wire in face panel.
2. Fabricate inspection wires from W11 wire representative of the welded wire mats, with 3/8" dia - 16 UNC threads for at least 1 1/2" of one end.
3. Place inspection wire horizontal and perpendicular to the wall panel prior to backfilling. After backfill placement to a level at least 2'-0" above the inspection wire, dry pack opening with 1000 to 1500 psi mortar. Trowel mortar smooth and flush with face of panel.
4. Encapsulate threaded end with corrosion inhibiting mastic, and secure round vinyl cover with nylon tie.

UNC = Unified coarse threads

RETAINING WALL NO. 389

MECHANICALLY STABILIZED EMBANKMENT DETAILS NO. 3

STANDARD DRAWING

FILE NO. xs13-020-3e

APPROVED BY K. GRISWELL, RESPONSIBLE TECHNICAL SPECIALIST
APPROVAL DATE 5-6-08

RELEASED BY ROBERTO LACALLE, RESPONSIBLE OFFICE CHIEF
RELEASE DATE 5-6-08

STATE OF CALIFORNIA DEPARTMENT OF TRANSPORTATION

DIVISION OF ENGINEERING SERVICES

BRIDGE NO. 56E0077
POST MILE 20.3

CU 08
EA 448401

DS OSD 2147A (ENGLISH STANDARD DRAWING "XS" BORDER REV. 01/11/08)

ORIGINAL SCALE IN INCHES FOR REDUCED PLANS 0 1 2 3

DISREGARD PRINTS BEARING EARLIER REVISION DATES 2-09-10

REVISION DATES (PRELIMINARY STAGE ONLY)

SHEET 10 OF 25

USERNAME => trmartin

56e0077s_msedt10.dgn

DATE PLOTTED => 30-APR-2011 TIME PLOTTED => 12:15

DIST.	COUNTY	ROUTE	POST MILES TOTAL PROJECT	SHEET NO.	TOTAL SHEETS
08	Riv	91	15.6/21.6	1611	2028

11-12-10
REGISTERED ENGINEER - CIVIL

4-25-11
PLANS APPROVAL DATE

REGISTERED PROFESSIONAL ENGINEER MINH THUONG VO No. C59297 Exp. 06-30-11 CIVIL STATE OF CALIFORNIA

The State of California or its officers or agents shall not be responsible for the accuracy or completeness of electronic copies of this plan sheet.

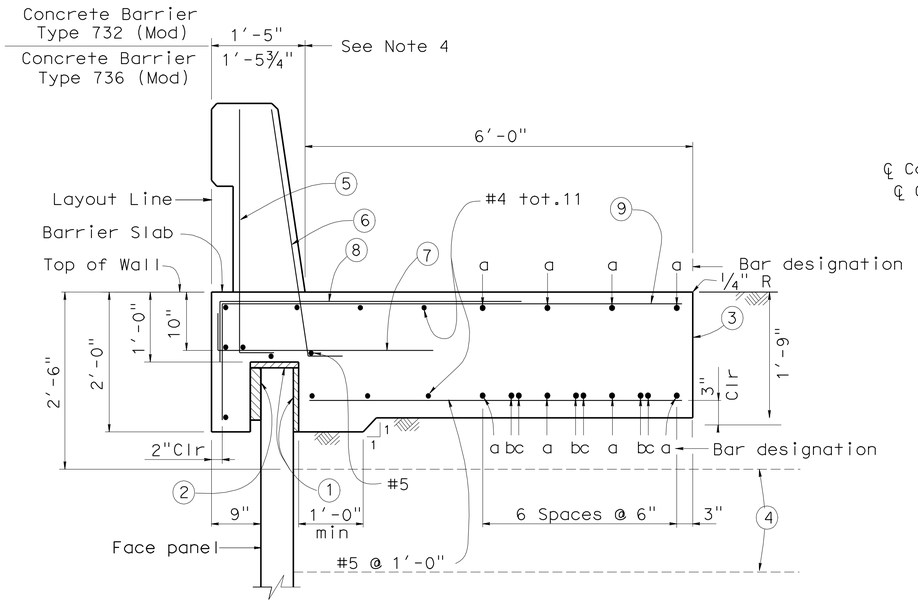

SECTION AT TOP OF WALL WITH BARRIER SLAB AND CONCRETE BARRIER

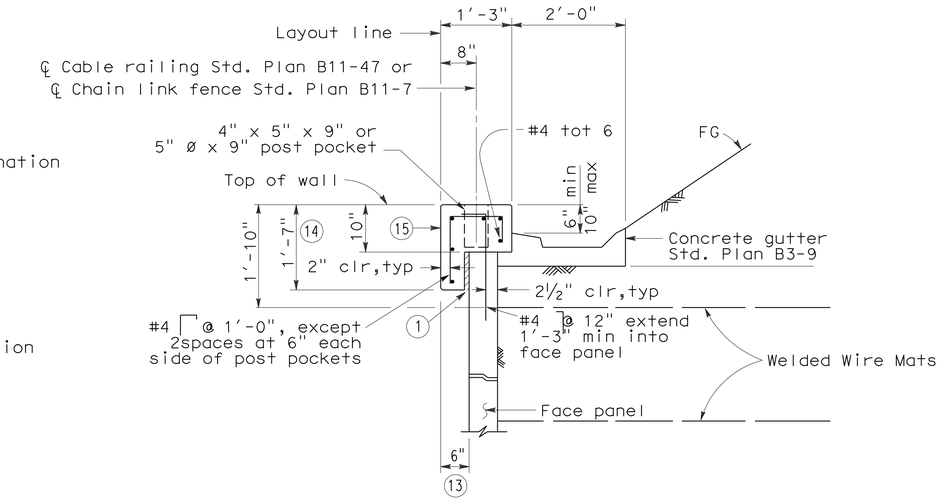

SECTION AT TOP OF WALL WITH COPING AND GUTTER

NOTES:

1. Clearance to reinforcing steel in concrete barrier to be 1".
2. Not all barrier reinforcement shown.
3. No expansion joints in concrete barrier or barrier slab within MSE wall limits.
4. Specific concrete barrier to be utilized as shown on typical section elsewhere in Project Plans.
5. Install cable railing or chain link fence when indicated in Project Plans.

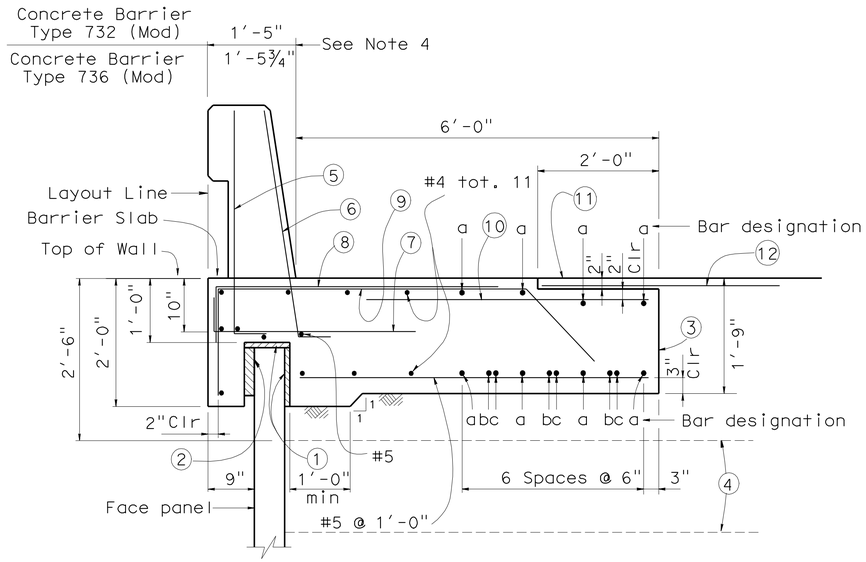

SECTION AT TOP OF WALL WITH BARRIER SLAB WITH PAVING NOTCH AND CONCRETE BARRIER

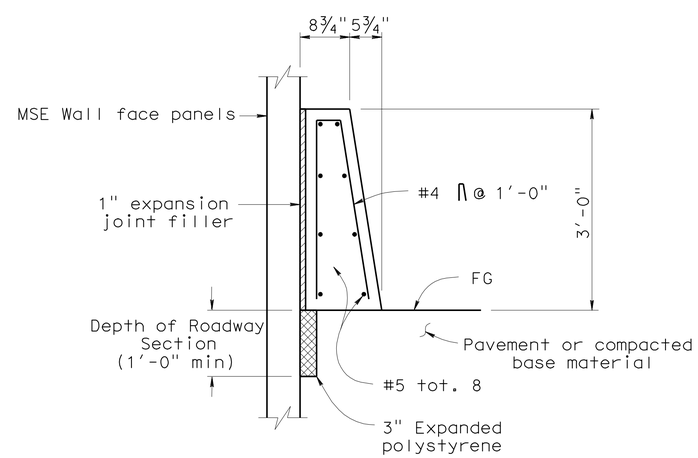

CONCRETE BARRIER TYPE 60D (MOD) AT FACE OF MSE WALL

LEGEND:

1. 1" Expanded polystyrene.
2. 2" Expanded polystyrene. Recess expanded polystyrene 2" into barrier slab.
3. Contact joint.
4. Welded Wire Mat Soil reinforcement.
5. #5 6¼" @ 1'-4" (To be in place prior to barrier slab concrete).
6. #5 6¼" @ 8" (To be in place prior to barrier slab concrete).
7. #5 6¼" 3'-4" @ 1'-0"
8. #5 4'-7" @ 1'-0" bundled with 9 bars.
9. #5 5'-0" 1'-3¾" @ 1'-0"
10. #5 X 1400 @ 1'-0"

    "a" bar = #6 continuous.
    "b" bar = #6 X 59'-0"
    "c" bar = #6 X 49'-2"
    Place "b" and "c" bars at beginning and ending ends of barrier slab.
11. AC Overlay on barrier slab (see Road Plans).
12. 4'-0" wide pavement reinforcing fabric.
13. Except 9" when coping and barrier slab occur along the top of the same wall.
14. Except 2'-0" when coping and barrier slab occur along the top of the same wall.
15. ½" expansion joints in coping at every fourth panel joint.

RETAINING WALL NO. 389

MECHANICALLY STABILIZED EMBANKMENT

DETAILS NO. 4

STANDARD DRAWING

FILE NO. xs13-020-4e

APPROVED BY K. GRISWELL — RESPONSIBLE TECHNICAL SPECIALIST
APPROVAL DATE 5-6-08

RELEASED BY ROBERTO LACALLE — RESPONSIBLE OFFICE CHIEF
RELEASE DATE 5-6-08

STATE OF CALIFORNIA DEPARTMENT OF TRANSPORTATION

DIVISION OF ENGINEERING SERVICES

BRIDGE NO. 56E0077
POST MILE 20.3

CU 08
EA 448401

DS OSD 2147A (ENGLISH STANDARD DRAWING "XS" BORDER REV. 01/11/08)

ORIGINAL SCALE IN INCHES FOR REDUCED PLANS 0 1 2 3

DISREGARD PRINTS BEARING EARLIER REVISION DATES

REVISION DATES (PRELIMINARY STAGE ONLY) 2-09-10 5-03-10

SHEET 11 OF 25

USERNAME => trmartin

56e0077s_msedt11.dgn

DATE PLOTTED => 30-APR-2011 TIME PLOTTED => 12:15

DIST.	COUNTY	ROUTE	POST MILES TOTAL PROJECT	SHEET NO.	TOTAL SHEETS
08	Riv	91	15.6/21.6	1612	2028

11-12-10
REGISTERED ENGINEER - CIVIL

4-25-11
PLANS APPROVAL DATE

REGISTERED PROFESSIONAL ENGINEER MINH THUONG VO No. C59297 Exp. 06-30-11 CIVIL STATE OF CALIFORNIA

The State of California or its officers or agents shall not be responsible for the accuracy or completeness of electronic copies of this plan sheet.

NOTES:

1. Low end of subgrade drain shown, at high end install cap at end of ¾" slotted pipe. Subgrade drain located at end of structure approach slab, see "Subgrade Drain Detail".
2. Not all barrier reinforcement shown.
3. Outlet details shown elsewhere in Project Plans.
4. At acute corners of approach slab, bend reinforcement as required to clear expansion joint.
5. Specific concrete barrier to be utilized as shown on typical section elsewhere in Project Plans.

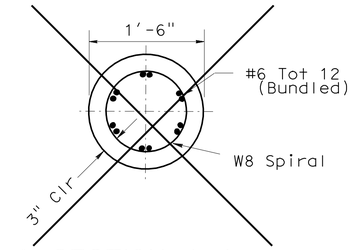

1 SECTION A-A

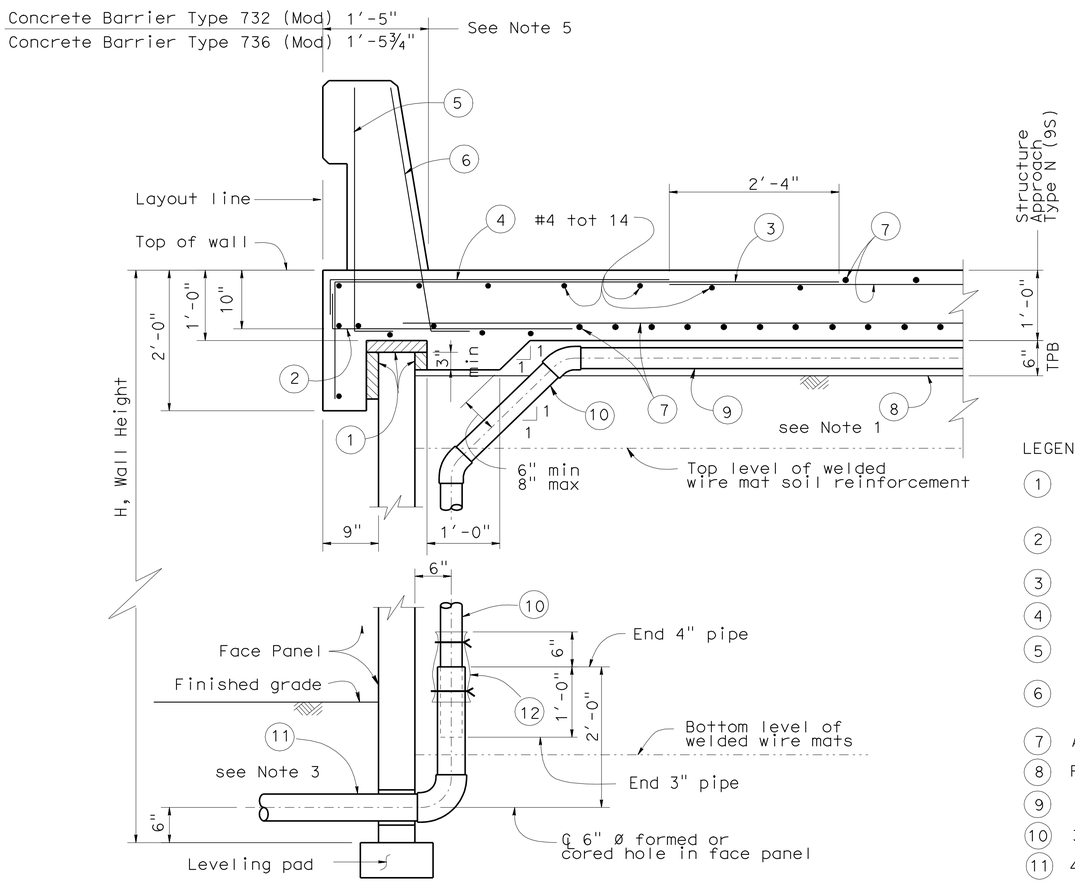

SECTION AT TOP OF WALL WITH STRUCTURE APPROACH SLAB AND CONCRETE BARRIER

LEGEND:

1. 2" Expanded polystyrene recessed 2" into barrier slab at front of MSE face panel.
2. #5 6¼" 3'-4" @ 1'-0"
3. #5 6'-10⅝" @ 1'-0"
4. #5 4'-7" @ 1'-0" bundle with 3 bars.
5. #5 L @ 1'-4" (To be in place prior to 6¼" approach slab concrete).
6. #5 L @ 8" (To be in place prior to 6¼" approach slab concrete).
7. Approach slab reinforcement.
8. Filter fabric.
9. 3" Plastic pipe (slotted).
10. 3" Plastic pipe and fittings (unslotted).
11. 4" Sch 80 PVC outlet pipe and fittings (unslotted).
12. 1'-0" wide x 2'-0" filter fabric wrapped around pipe and secured with nylon ties.
13. 1" Expanded polystyrene.
14. Five elastomeric bearing pads ¾" x 4" x 6" bonded to top of MSE face panel.
15. 0.5" Expanded polystyrene.

2

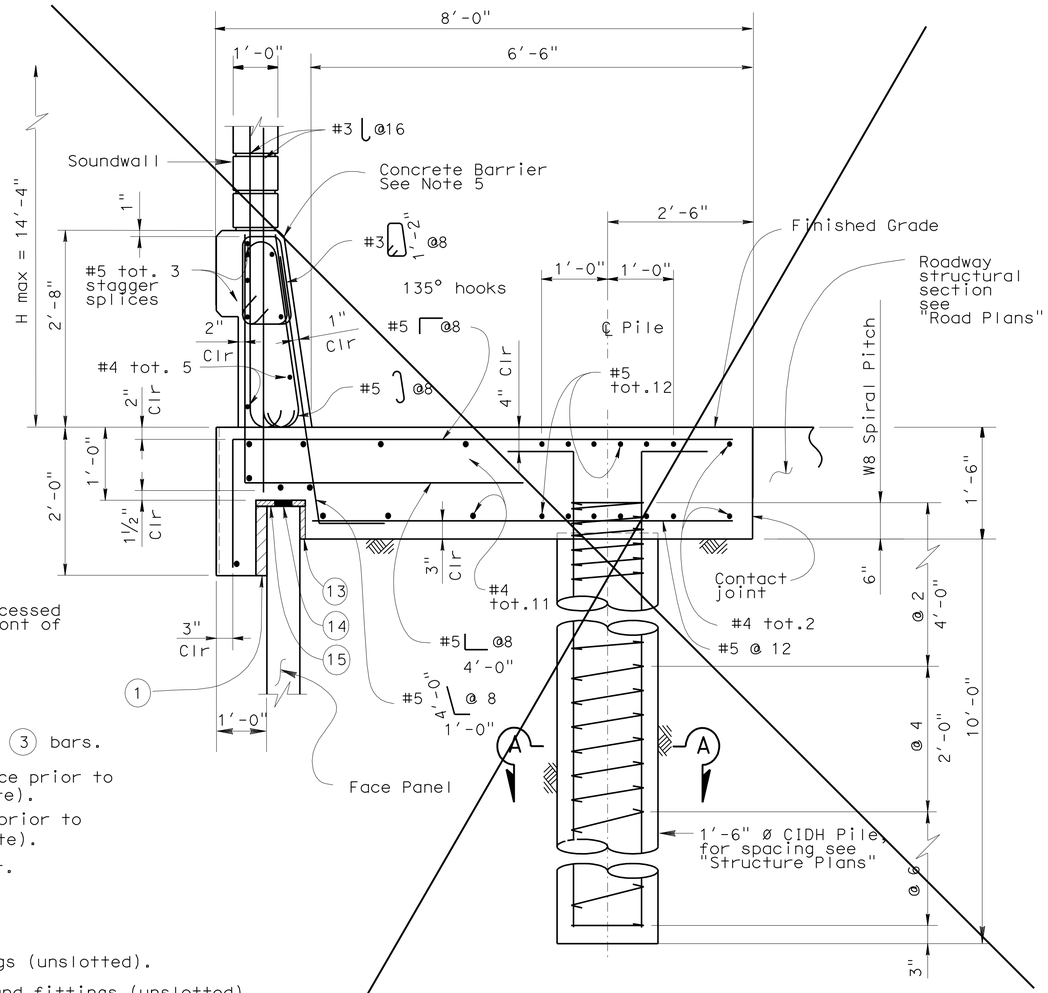

1 SECTION AT TOP OF WALL WITH SOUNDWALL AND CONCRETE BARRIER

STANDARD DRAWING			
FILE NO. xs13-020-5e	APPROVED BY K. GRISWELL (RESPONSIBLE TECHNICAL SPECIALIST)	RELEASED BY ROBERTO LACALLE (RESPONSIBLE OFFICE CHIEF)	
	APPROVAL DATE 5-6-08	RELEASE DATE 5-6-08	

1 Detail not used
2 Notes not used

STATE OF CALIFORNIA DEPARTMENT OF TRANSPORTATION

DIVISION OF ENGINEERING SERVICES

BRIDGE NO. 56E0077
POST MILE 20.3

RETAINING WALL NO. 389
MECHANICALLY STABILIZED EMBANKMENT
DETAILS NO. 5

DS OSD 2147A (ENGLISH STANDARD DRAWING "XS" BORDER REV. 01/11/08)

ORIGINAL SCALE IN INCHES FOR REDUCED PLANS 0 1 2 3

CU 08
EA 448401

DISREGARD PRINTS BEARING EARLIER REVISION DATES 2-09-10

REVISION DATES (PRELIMINARY STAGE ONLY)

SHEET 12 OF 25

USERNAME => trmartin

56e0077s_msedt12.dgn

DATE PLOTTED => 30-APR-2011 TIME PLOTTED => 12:22

DIST.	COUNTY	ROUTE	POST MILES TOTAL PROJECT	SHEET NO.	TOTAL SHEETS
08	Riv	91	15.6/21.6	1613	2028

11-12-10
REGISTERED ENGINEER - CIVIL

4-25-11
PLANS APPROVAL DATE

REGISTERED PROFESSIONAL ENGINEER MINH THUONG VO No. C59297 Exp. 06-30-11 CIVIL STATE OF CALIFORNIA

The State of California or its officers or agents shall not be responsible for the accuracy or completeness of electronic copies of this plan sheet.

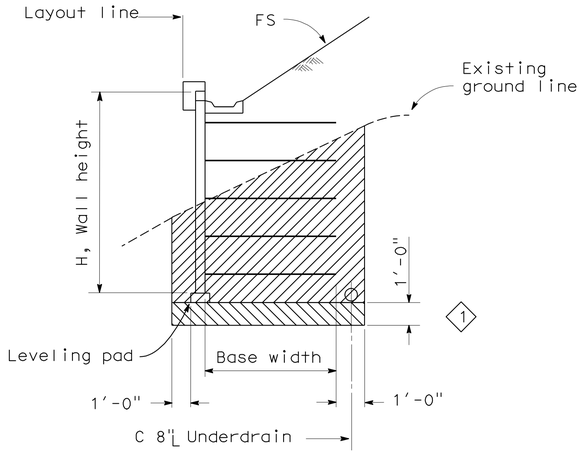

LIMITS OF EXCAVATION
No Scale

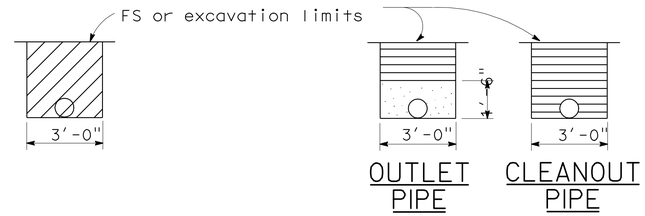

EXCAVATION BACKFILL

OUTLET OR CLEANOUT PIPE FOR UNDERDRAIN
No Scale

ABBREVIATIONS:

OG	Original ground
FS	Planned finished surface
GP	Planned grading plane

LEGEND:

- Limits of structure excavation
- Limits of structure backfill
- Limits of permeable material
- (1) Limits of structure overexcavation

NOTES:

1. Limits to FS except to GP when in roadway section.
2. Locate 8" perforated underdrain below bottom level of welded wire mats.
3. Maximum spacing of outlet pipes is 200 ft.
4. At sags in profile of underdrain, install outlet pipe for each direction of flow.

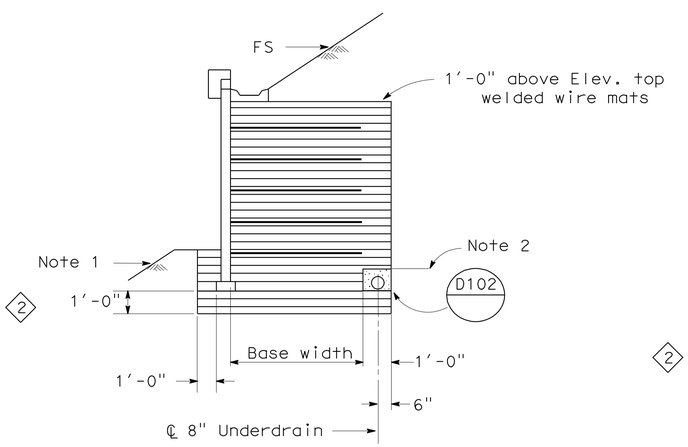

SLOPING FINISHED SURFACE

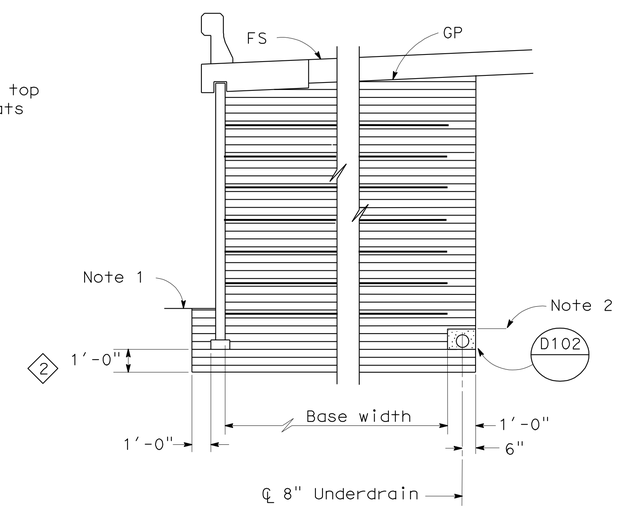

ROADWAY SECTION WITH BASE WIDTH 16' OR GREATER

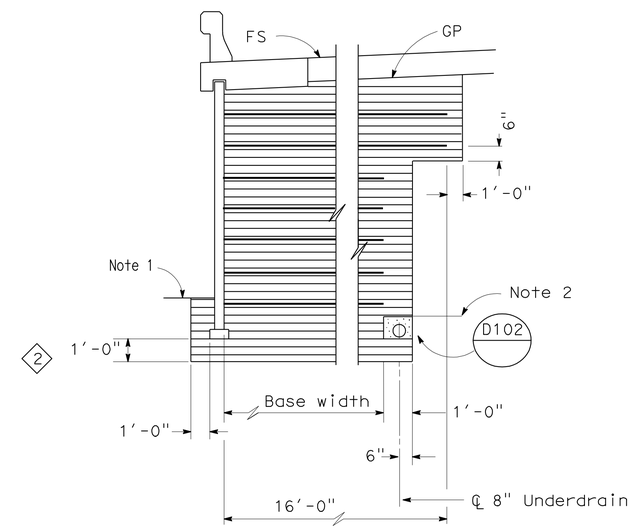

ROADWAY SECTION WITH BASE WIDTH LESS THAN 16'

LIMITS OF BACKFILL
No Scale

STANDARD DRAWING

FILE NO. xs13-020-6e

APPROVED BY K. GRISWELL (RESPONSIBLE TECHNICAL SPECIALIST)
APPROVAL DATE 5-6-08

RELEASED BY ROBERTO LACALLE (RESPONSIBLE OFFICE CHIEF)
RELEASE DATE 5-6-08

(1) Add Limits of Overexcavation
(2) Add Limits of Backfill

STATE OF CALIFORNIA DEPARTMENT OF TRANSPORTATION

DIVISION OF ENGINEERING SERVICES

BRIDGE NO. 56E0077
POST MILE 20.3

RETAINING WALL NO. 389
MECHANICALLY STABILIZED EMBANKMENT
DETAILS NO. 6

DS OSD 2147A (ENGLISH STANDARD DRAWING "XS" BORDER REV. 01/11/08)

ORIGINAL SCALE IN INCHES FOR REDUCED PLANS 0 1 2 3

CU 08
EA 448401

DISREGARD PRINTS BEARING EARLIER REVISION DATES

REVISION DATES (PRELIMINARY STAGE ONLY) 2-09-10 7-13-10 9-09-10 11-03-10

SHEET 13 OF 25

USERNAME => trmartin

56e0077s_msedt13.dgn

DATE PLOTTED => 30-APR-2011 TIME PLOTTED => 12:15

Dist	COUNTY	ROUTE	POST MILES TOTAL PROJECT	SHEET No.	TOTAL SHEETS
08	Riv	91	15.6/21.6	1614	2028

LICENSED LANDSCAPE ARCHITECT

4-25-11
PLANS APPROVAL DATE

LICENSED LANDSCAPE ARCHITECT
Matthew Harry Hall
No. 2010
Signature
10/31/2011
Renewal Date
11/12/2010
Date
STATE OF CALIFORNIA

THE STATE OF CALIFORNIA OR ITS OFFICERS OR AGENTS SHALL NOT BE RESPONSIBLE FOR THE ACCURACY OR COMPLETENESS OF SCANNED COPIES OF THIS PLAN SHEET.

NOTES:

1. For Section E-E, see "Architectural Details No. 1" sheet.
2. For Section H-H, see "Architectural Details No. 2" sheet.

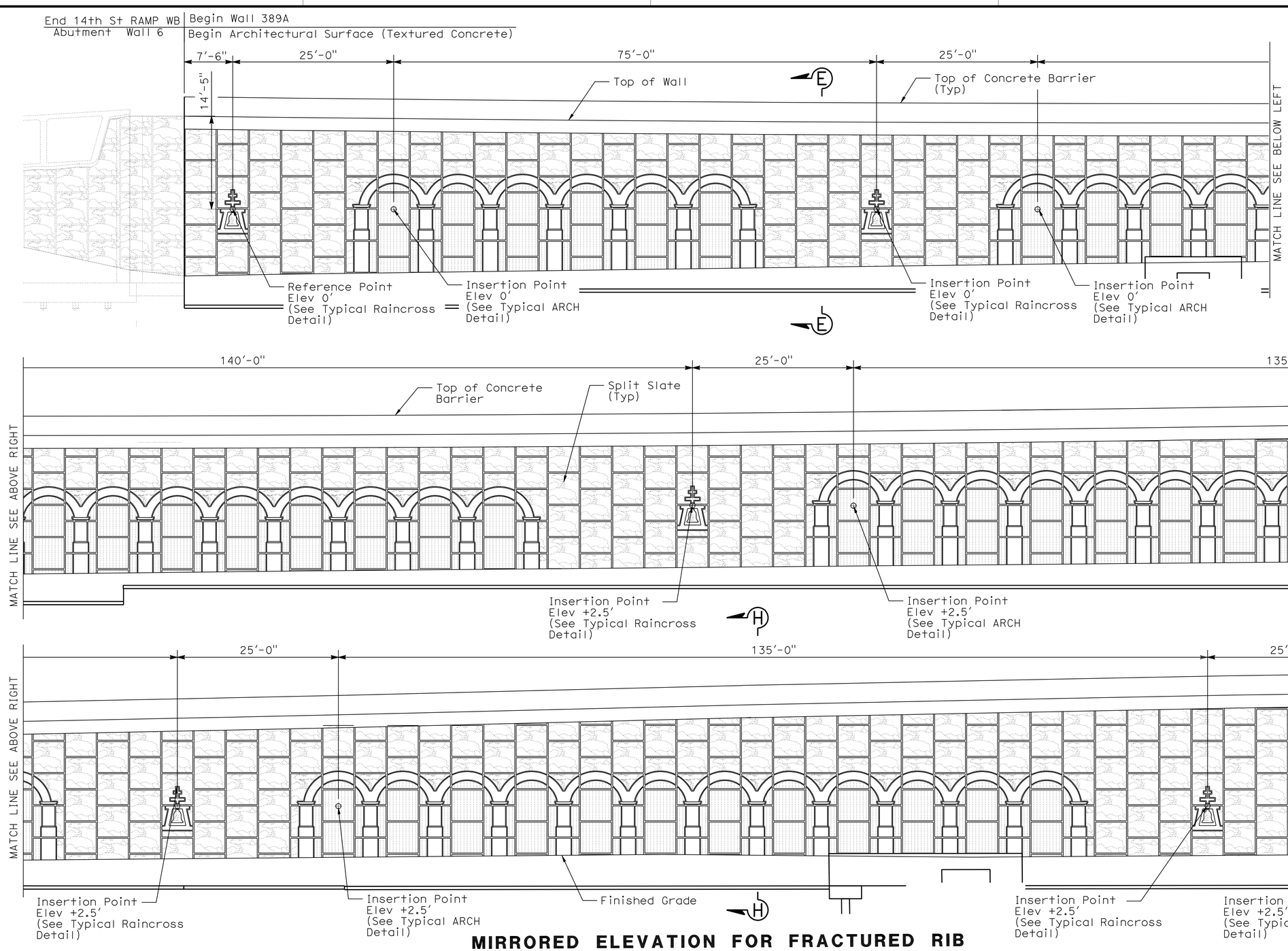

MIRRORED ELEVATION FOR FRACTURED RIB SPLIT FACE TEXTURE MSE RETAINING WALL 389A-1

1/8"=1'-0"

THIS PLAN IS ACCURATE FOR ARCHITECTUAL TREATMENT WORK ONLY.

	BY	CHECKED
DESIGN	MATTHEW HALL	MIRIAM BISHOP
DETAILS	Y. Tang	MIRIAM BISHOP
QUANTITIES	A. McPhee	M. Vo

STATE OF CALIFORNIA
DEPARTMENT OF TRANSPORTATION

DIVISION OF ENGINEERING SERVICES
STRUCTURE DESIGN
DESIGN BRANCH 10

BRIDGE NO. 56E0077
POST MILE 20.3

RETAINING WALL NO. 389
ARCHITECTURAL SURFACE NO. 1

STRUCTURES DESIGN DETAIL SHEET (ENGLISH) (REV. 10/25/05)

ORIGINAL SCALE IN INCHES FOR REDUCED PLANS 0 1 2 3

CU 08
EA 448401

DISREGARD PRINTS BEARING EARLIER REVISION DATES → 8-18-10

REVISION DATES

SHEET 14 OF 25

FILE => 56e0077sars14.dgn

USERNAME => trmartin DATE PLOTTED => 30-APR-2011 TIME PLOTTED => 12:15

Dist	COUNTY	ROUTE	POST MILES TOTAL PROJECT	SHEET No.	TOTAL SHEETS
08	Riv	91	15.6/21.6	1615	2028

LICENSED LANDSCAPE ARCHITECT

4-25-11
PLANS APPROVAL DATE

LICENSED LANDSCAPE ARCHITECT
Matthew Harry Hall No. 2522
Signature
10/31/2011
Renewal Date
11/12/2010
Date
STATE OF CALIFORNIA

THE STATE OF CALIFORNIA OR ITS OFFICERS OR AGENTS SHALL NOT BE RESPONSIBLE FOR THE ACCURACY OR COMPLETENESS OF SCANNED COPIES OF THIS PLAN SHEET.

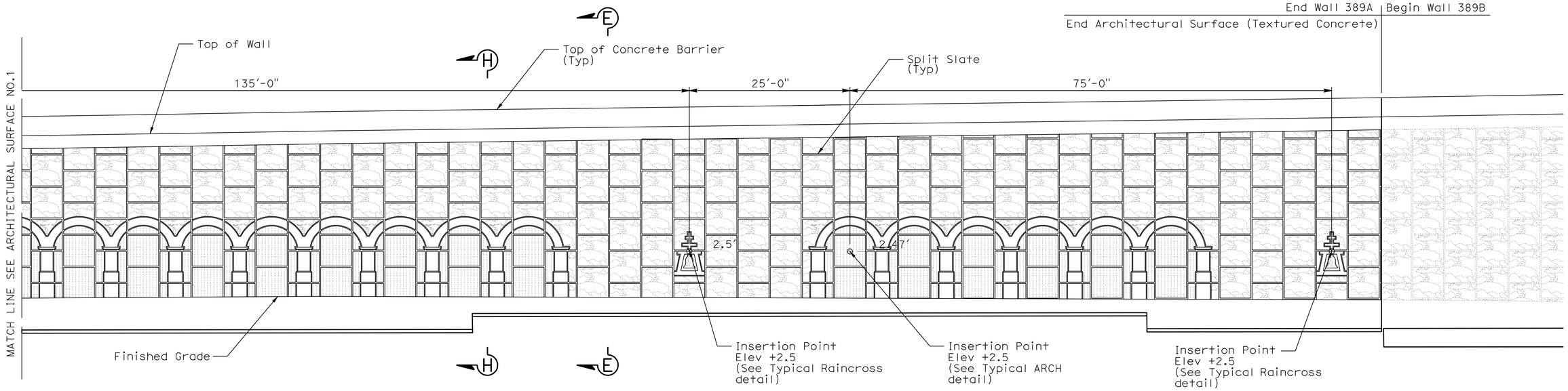

NOTES:

1. For Section E-E, see "Architectural Details No. 1" sheet.
2. For Section H-H, see "Architectural Details No. 2" sheet.

MIRRORED ELEVATION FOR FRACTURED RIB SPLIT FACE TEXTURE MSE RETAINING WALL 389A-2

1/8"=1'-0"

THIS PLAN IS ACCURATE FOR ARCHITECTUAL TREATMENT WORK ONLY.

	BY	CHECKED
DESIGN	MATTHEW HALL	MIRIAM BISHOP
DETAILS	Y. Tang	MIRIAM BISHOP
QUANTITIES	A. McPhee	M. Vo

STATE OF CALIFORNIA
DEPARTMENT OF TRANSPORTATION

DIVISION OF ENGINEERING SERVICES
STRUCTURE DESIGN
DESIGN BRANCH 10

BRIDGE NO. 56E0077
POST MILE 20.3

RETAINING WALL NO. 389
ARCHITECTURAL SURFACE NO. 2

STRUCTURES DESIGN DETAIL SHEET (ENGLISH) (REV. 10/25/05)

ORIGINAL SCALE IN INCHES FOR REDUCED PLANS 0 1 2 3

CU 08
EA 448401

DISREGARD PRINTS BEARING EARLIER REVISION DATES

REVISION DATES: 8-18-10

SHEET 15 OF 25

FILE => 56e0077sars15.dgn

USERNAME => trmartin DATE PLOTTED => 30-APR-2011 TIME PLOTTED => 12:31

Dist	COUNTY	ROUTE	POST MILES TOTAL PROJECT	SHEET No.	TOTAL SHEETS
08	Riv	91	15.6/21.6	1616	2028

LICENSED LANDSCAPE ARCHITECT

4-25-11
PLANS APPROVAL DATE

LICENSED LANDSCAPE ARCHITECT
Matthew Harry Hall
No. 2522
Signature
10/31/2011
Renewal Date
11/12/2010
Date
STATE OF CALIFORNIA

THE STATE OF CALIFORNIA OR ITS OFFICERS OR AGENTS SHALL NOT BE RESPONSIBLE FOR THE ACCURACY OR COMPLETENESS OF SCANNED COPIES OF THIS PLAN SHEET.

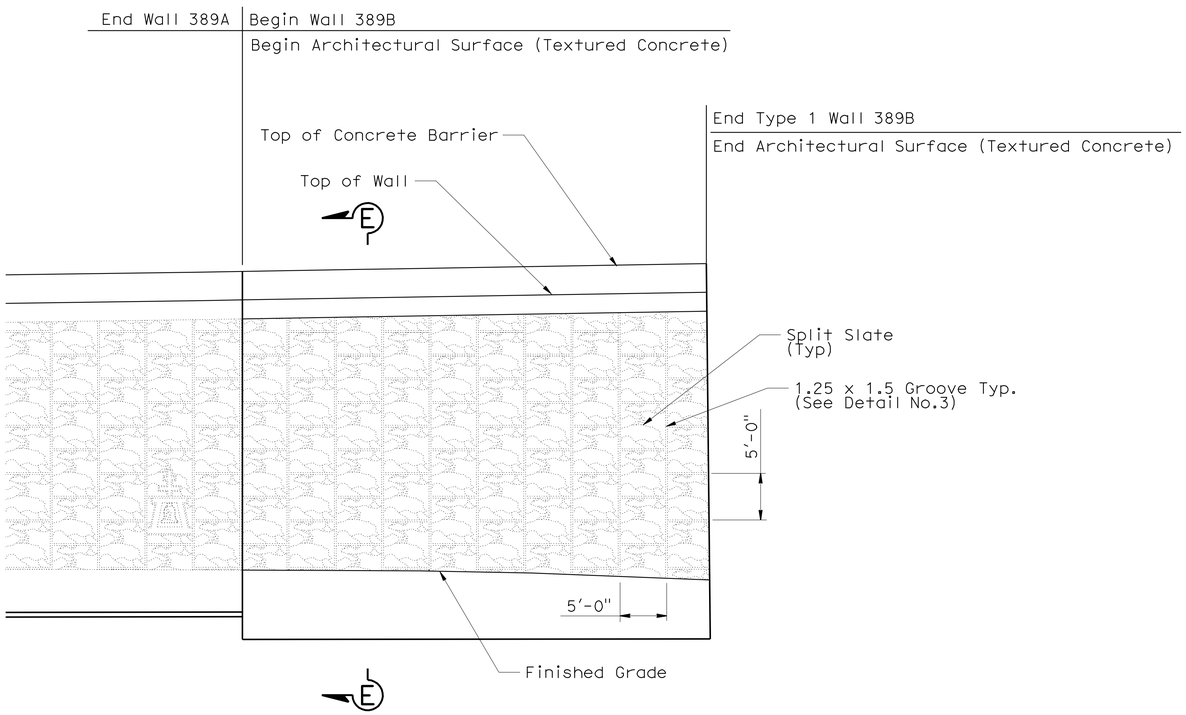

NOTE:

1. For Section E-E, see "Architectural Details No. 1" sheet.

MIRRORED ELEVATION FOR SPLIT FACE TEXTURE RETAINING WALL 389B

1/8"=1'-0"

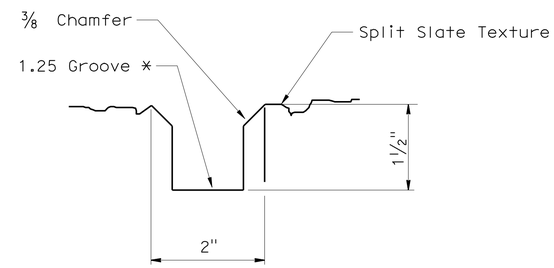

DETAL No. 5- TYPICAL 1.25" X 1.5" GROOVE FOR SIMULATED MSE PANELS

NO SCALE

*
PERMITTED LOCATION OF WEAKEN PLANE AND EXPANSION JOINTS

THIS PLAN IS ACCURATE FOR ARCHITECTUAL TREATMENT WORK ONLY.

	BY	CHECKED
DESIGN	MATTHEW HALL	MIRIAM BISHOP
DETAILS	Y. Tang	MIRIAM BISHOP
QUANTITIES	A. McPhee	M. Vo

STATE OF CALIFORNIA
DEPARTMENT OF TRANSPORTATION

DIVISION OF ENGINEERING SERVICES
STRUCTURE DESIGN
DESIGN BRANCH 10

BRIDGE NO. 56E0077
POST MILE 20.3

RETAINING WALL NO. 389
ARCHITECTURAL SURFACE NO. 3

STRUCTURES DESIGN DETAIL SHEET (ENGLISH) (REV. 10/25/05)

ORIGINAL SCALE IN INCHES FOR REDUCED PLANS 0 1 2 3

CU 08
EA 448401

DISREGARD PRINTS BEARING EARLIER REVISION DATES

REVISION DATES: 8-18-10

SHEET 16 OF 25

FILE => 56e0077sars16.dgn

USERNAME => trmartin DATE PLOTTED => 30-APR-2011 TIME PLOTTED => 12:31

Dist	COUNTY	ROUTE	POST MILES TOTAL PROJECT	SHEET No.	TOTAL SHEETS
08	Riv	91	15.6/21.6	1617	2028

LICENSED LANDSCAPE ARCHITECT

4-25-11
PLANS APPROVAL DATE

LICENSED LANDSCAPE ARCHITECT
Matthew Perry Hall No. 4262
Signature
10/31/2011
Renewal Date
11/12/2010
Date
STATE OF CALIFORNIA

THE STATE OF CALIFORNIA OR ITS OFFICERS OR AGENTS SHALL NOT BE RESPONSIBLE FOR THE ACCURACY OR COMPLETENESS OF SCANNED COPIES OF THIS PLAN SHEET.

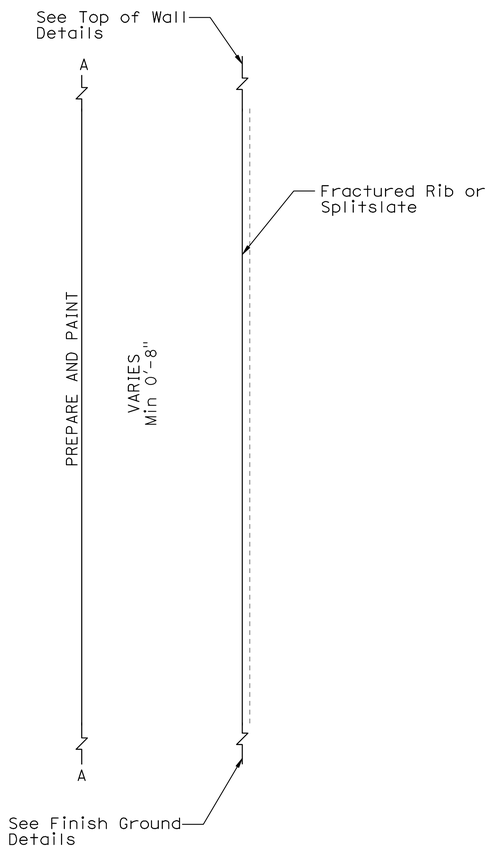

SECTION E-E

No Scale

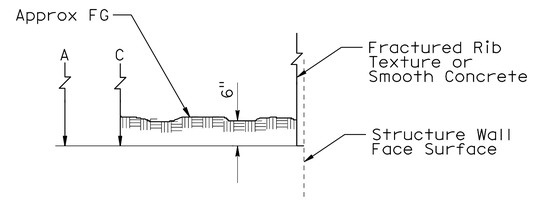

FINISH GROUND DETAIL
TYPICAL DETAIL AT FINISH GRADE

No Scale

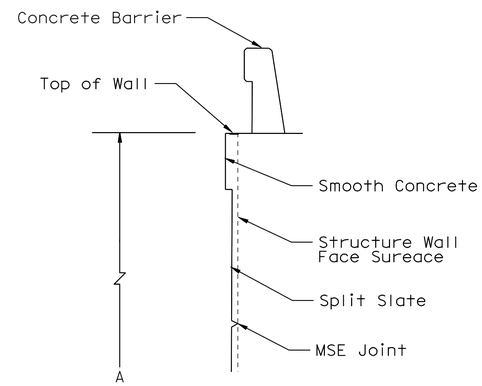

TOP OF WALL DETAIL
TYPICAL WITH CONCRETE BARRIER

No Scale

DESIGN	BY MATTHEW HALL	CHECKED MIRIAM BISHOP	
DETAILS	BY Y. Tang	CHECKED MIRIAM BISHOP	
QUANTITIES	BY A. McPhee	CHECKED M. Vo	

STATE OF CALIFORNIA
DEPARTMENT OF TRANSPORTATION

DIVISION OF ENGINEERING SERVICES
STRUCTURE DESIGN
DESIGN BRANCH 10

BRIDGE NO. 56E0077
POST MILE 20.3

RETAINING WALL NO. 389
ARCHITECTURAL DETAILS NO. 1

STRUCTURES DESIGN DETAIL SHEET (ENGLISH) (REV. 10/25/05)

ORIGINAL SCALE IN INCHES FOR REDUCED PLANS 0 1 2 3

CU 08
EA 448401

DISREGARD PRINTS BEARING EARLIER REVISION DATES

REVISION DATES: 8-18-10

SHEET 17 OF 25

FILE => 56e0077sarsdt17.dgn

USERNAME => trmikesl DATE PLOTTED => 02-MAY-2011 TIME PLOTTED => 08:31

Dist	COUNTY	ROUTE	POST MILES TOTAL PROJECT	SHEET No.	TOTAL SHEETS
08	Riv	91	15.6/21.6	1618	2028

LICENSED LANDSCAPE ARCHITECT

4-25-11
PLANS APPROVAL DATE

LICENSED LANDSCAPE ARCHITECT Matthew Perry Hall No. 4562 Signature 10/31/2011 Renewal Date 11/12/2010 Date STATE OF CALIFORNIA

THE STATE OF CALIFORNIA OR ITS OFFICERS OR AGENTS SHALL NOT BE RESPONSIBLE FOR THE ACCURACY OR COMPLETENESS OF SCANNED COPIES OF THIS PLAN SHEET.

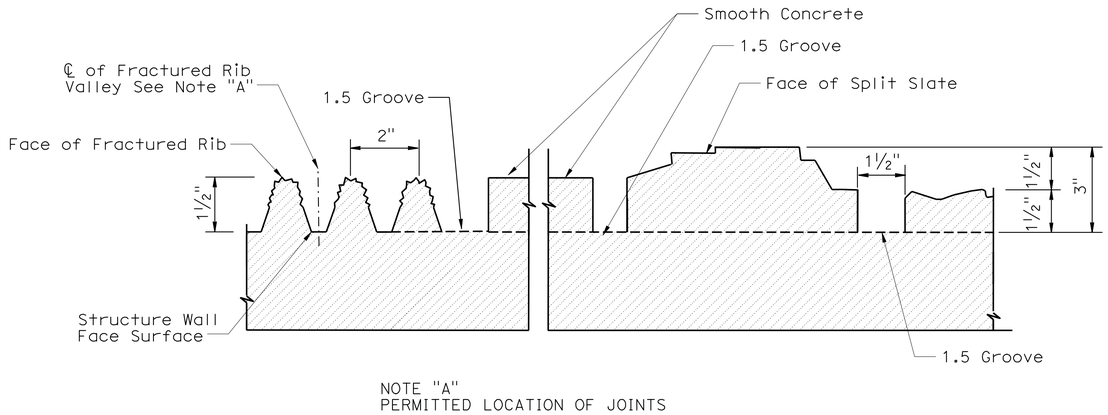

TYPICAL FRACTURED RIB WITH SPLIT SLATE TEXTURE

NO SCALE

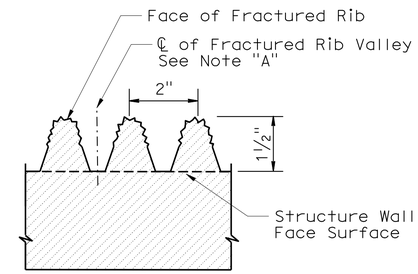

TYPICAL FRACTURED RIB TEXTURE

NO SCALE

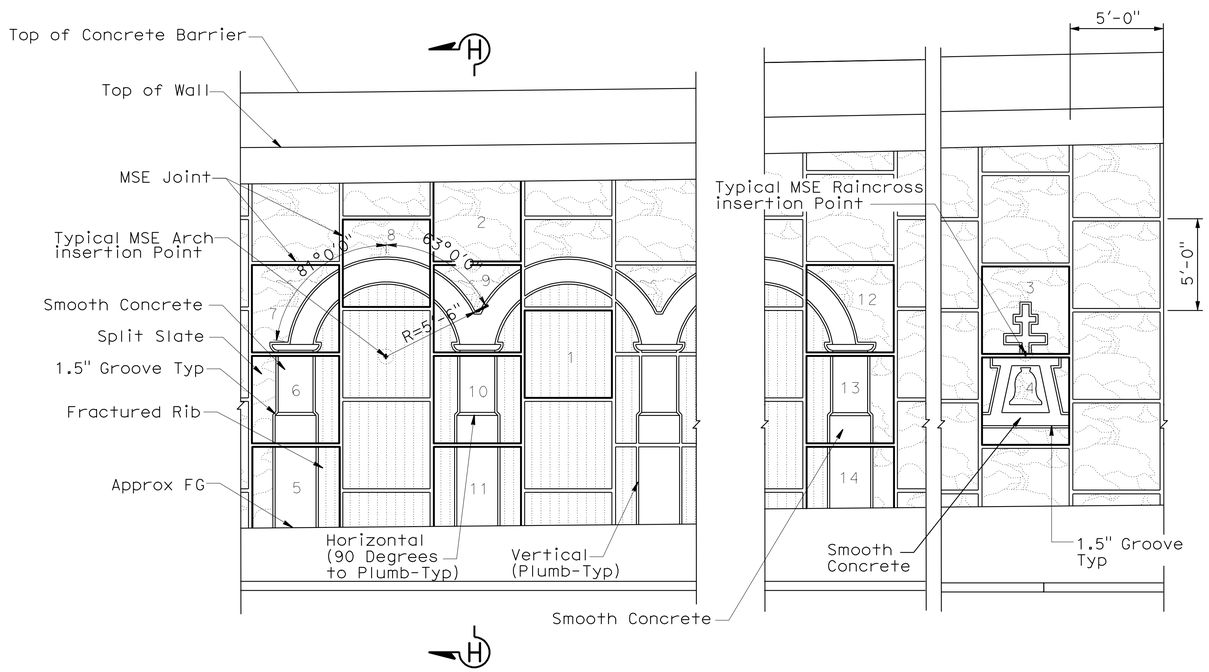

TYPICAL ARCHITECTURAL SURFACE ELEVATION FOR MECHANICALLY STABILIZED EMBANKMENT (MSE) WALLS

NO SCALE

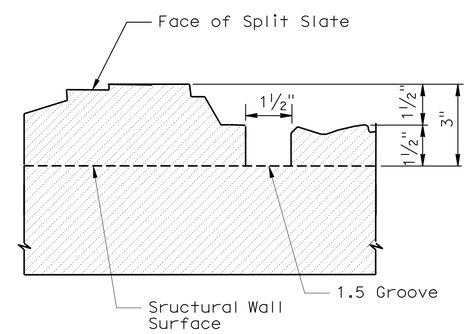

TYPICAL SPLIT SLATE TEXTURE

NO SCALE

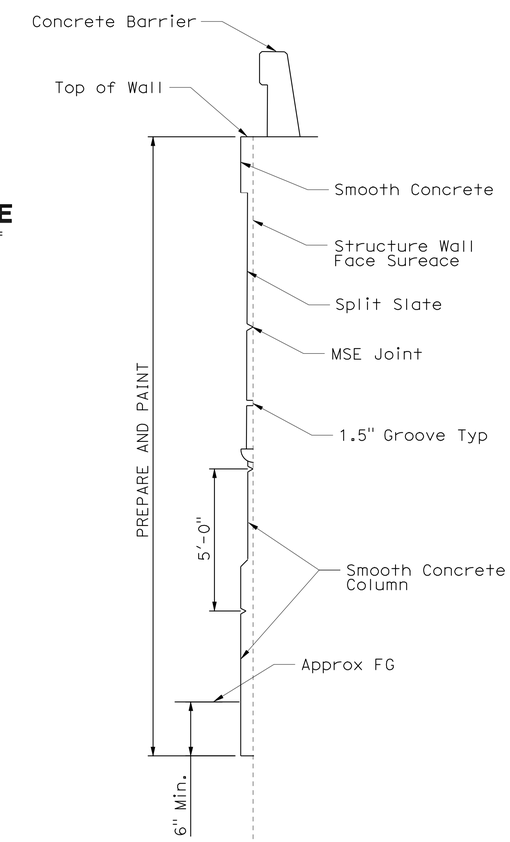

SECTION H-H

NO SCALE

DESIGN	BY MATTHEW HALL	CHECKED MIRIAM BISHOP	
DETAILS	BY Y. Tang	CHECKED MIRIAM BISHOP	
QUANTITIES	BY A. McPhee	CHECKED M. Vo	

STATE OF CALIFORNIA DEPARTMENT OF TRANSPORTATION

DIVISION OF ENGINEERING SERVICES STRUCTURE DESIGN DESIGN BRANCH 10

BRIDGE NO. 56E0077
POST MILE 20.3

RETAINING WALL NO. 389
ARCHITECTURAL DETAILS NO. 2

STRUCTURES DESIGN DETAIL SHEET (ENGLISH) (REV. 10/25/05)

ORIGINAL SCALE IN INCHES FOR REDUCED PLANS 0 1 2 3

CU 08
EA 448401

DISREGARD PRINTS BEARING EARLIER REVISION DATES 8-16-10 9-09-10

REVISION DATES

SHEET 18 OF 25

FILE => 56e0077sarsdt18.dgn

USERNAME => trmikesl DATE PLOTTED => 02-MAY-2011 TIME PLOTTED => 08:31

Dist	COUNTY	ROUTE	POST MILES TOTAL PROJECT	SHEET No.	TOTAL SHEETS
08	Riv	91	15.6/21.6	1619	2028

LICENSED LANDSCAPE ARCHITECT

4-25-11
PLANS APPROVAL DATE

LICENSED LANDSCAPE ARCHITECT Matthew Perry Hall No. 4262 Signature 10/31/2011 Renewal Date 11/12/2010 Date STATE OF CALIFORNIA

THE STATE OF CALIFORNIA OR ITS OFFICERS OR AGENTS SHALL NOT BE RESPONSIBLE FOR THE ACCURACY OR COMPLETENESS OF SCANNED COPIES OF THIS PLAN SHEET.

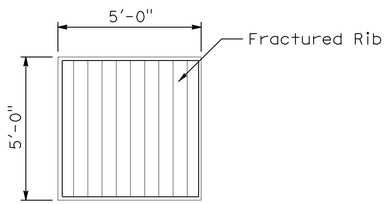

PANEL 1

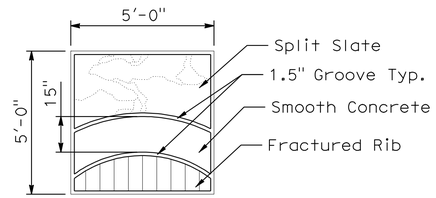

PANEL 8

PANEL 2

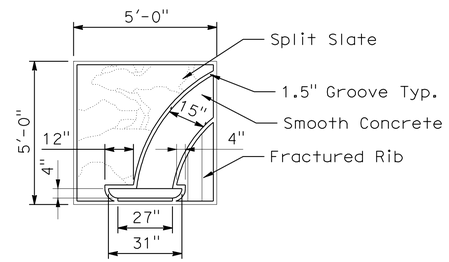

PANEL 7

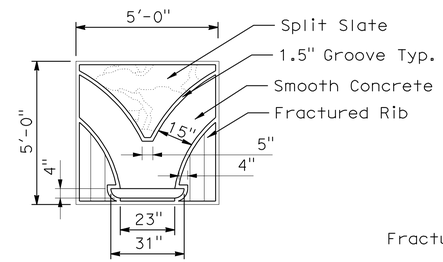

PANEL 9

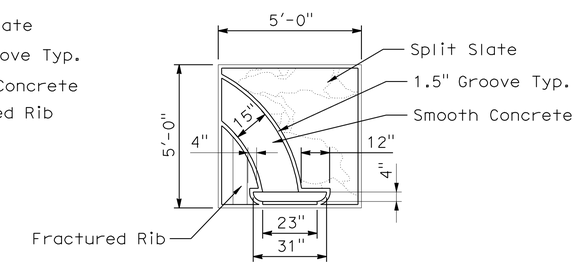

PANEL 12

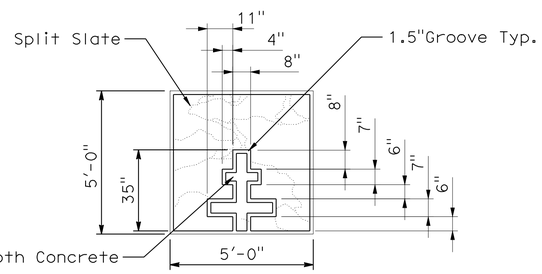

PANEL 3

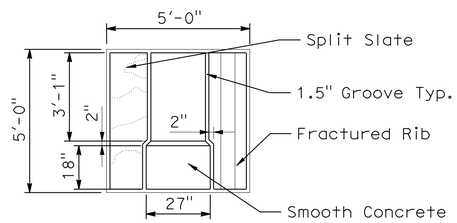

PANEL 6

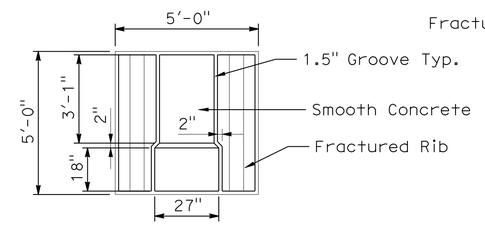

PANEL 10

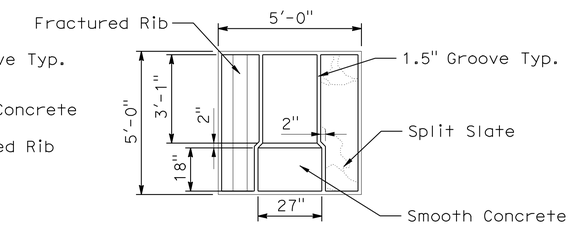

PANEL 13

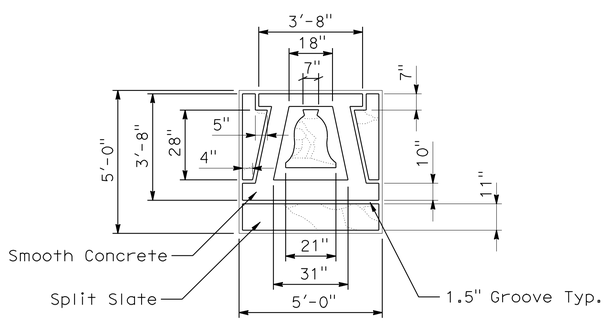

PANEL 4

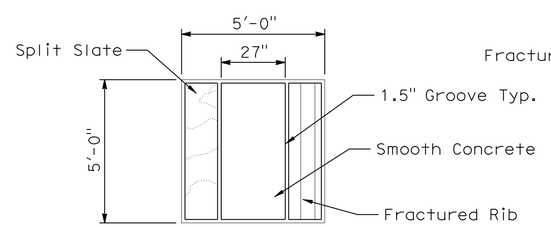

PANEL 5

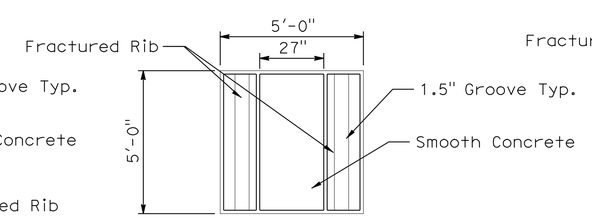

PANEL 11

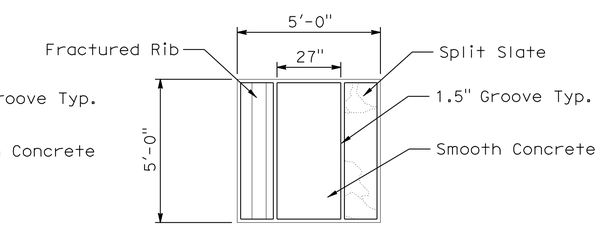

PANEL 14

ARCHITECTURAL SURFACE FOR TYPICAL MECHANICALLY STABILIZED EMBANKMENT (MSE) PANELS

No Scale

	BY	CHECKED
DESIGN	MATTHEW HALL	MIRIAM BISHOP
DETAILS	Y. Tang	MIRIAM BISHOP
QUANTITIES	A. McPhee	M. Vo

STATE OF CALIFORNIA DEPARTMENT OF TRANSPORTATION

DIVISION OF ENGINEERING SERVICES STRUCTURE DESIGN DESIGN BRANCH 10

BRIDGE NO. 56E0077
POST MILE 20.3

RETAINING WALL NO. 389
ARCHITECTURAL DETAILS NO. 3

STRUCTURES DESIGN DETAIL SHEET (ENGLISH) (REV. 10/25/05)

ORIGINAL SCALE IN INCHES FOR REDUCED PLANS 0 1 2 3

CU 08
EA 448401

DISREGARD PRINTS BEARING EARLIER REVISION DATES

REVISION DATES 8-18-10

SHEET 19 OF 25

FILE => 56e0077sarsdt19.dgn

USERNAME => trmikesl DATE PLOTTED => 02-MAY-2011 TIME PLOTTED => 08:31

DIST	COUNTY	ROUTE	POST MILES TOTAL PROJECT	SHEET No	TOTAL SHEETS
08	Riv	91	15.6/21.6	1620	2028

GEOTECHNICAL PROFESSIONAL — DATE 11/03/10

4-25-11
PLANS APPROVAL DATE

REGISTERED PROFESSIONAL ENGINEER — Farid Motamed — No. 2738 — Exp. 6-30-11 — GEOTECHNICAL — STATE OF CALIFORNIA

The State of California or its officers or agents shall not be responsible for the accuracy or completeness of electronic copies of this plan sheet.

California Department of Transportation
5900 Folsom Boulevard
Sacramento, CA 95819

URS Corporation
2020 East First Street, Suite 400
Santa Ana, CA 92705

GROUP SYMBOLS AND NAMES

Graphic / Symbol	Group Names	Graphic / Symbol	Group Names
GW	Well-graded GRAVEL Well-graded GRAVEL with SAND	CL	Lean CLAY Lean CLAY with SAND Lean CLAY with GRAVEL SANDY lean CLAY SANDY lean CLAY with GRAVEL GRAVELLY lean CLAY GRAVELLY lean CLAY with SAND
GP	Poorly graded GRAVEL Poorly graded GRAVEL with SAND		
GW-GM	Well-graded GRAVEL with SILT Well-graded GRAVEL with SILT and SAND	CL-ML	SILTY CLAY SILTY CLAY with SAND SILTY CLAY with GRAVEL SANDY SILTY CLAY SANDY SILTY CLAY with GRAVEL GRAVELLY SILTY CLAY GRAVELLY SILTY CLAY with SAND
GW-GC	Well-graded GRAVEL with CLAY (or SILTY CLAY) Well-graded GRAVEL with CLAY and SAND (or SILTY CLAY and SAND)		
GP-GM	Poorly graded GRAVEL with SILT Poorly graded GRAVEL with SILT and SAND	ML	SILT SILT with SAND SILT with GRAVEL SANDY SILT SANDY SILT with GRAVEL GRAVELLY SILT GRAVELLY SILT with SAND
GP-GC	Poorly graded GRAVEL with CLAY (or SILTY CLAY) Poorly graded GRAVEL with CLAY and SAND (or SILTY CLAY and SAND)		
GM	SILTY GRAVEL SILTY GRAVEL with SAND	OL	ORGANIC lean CLAY ORGANIC lean CLAY with SAND ORGANIC lean CLAY with GRAVEL SANDY ORGANIC lean CLAY SANDY ORGANIC lean CLAY with GRAVEL GRAVELLY ORGANIC lean CLAY GRAVELLY ORGANIC lean CLAY with SAND
GC	CLAYEY GRAVEL CLAYEY GRAVEL with SAND		
GC-GM	SILTY, CLAYEY GRAVEL SILTY, CLAYEY GRAVEL with SAND	OL	ORGANIC SILT ORGANIC SILT with SAND ORGANIC SILT with GRAVEL SANDY ORGANIC SILT SANDY ORGANIC SILT with GRAVEL GRAVELLY ORGANIC SILT GRAVELLY ORGANIC SILT with SAND
SW	Well-graded SAND Well-graded SAND with GRAVEL		
SP	Poorly graded SAND Poorly graded SAND with GRAVEL	CH	Fat CLAY Fat CLAY with SAND Fat CLAY with GRAVEL SANDY fat CLAY SANDY fat CLAY with GRAVEL GRAVELLY fat CLAY GRAVELLY fat CLAY with SAND
SW-SM	Well-graded SAND with SILT Well-graded SAND with SILT and GRAVEL		
SW-SC	Well-graded SAND with CLAY (or SILTY CLAY) Well-graded SAND with CLAY and GRAVEL (or SILTY CLAY and GRAVEL)	MH	Elastic SILT Elastic SILT with SAND Elastic SILT with GRAVEL SANDY elastic SILT SANDY elastic SILT with GRAVEL GRAVELLY elastic SILT GRAVELLY elastic SILT with SAND
SP-SM	Poorly graded SAND with SILT Poorly graded SAND with SILT and GRAVEL		
SP-SC	Poorly graded SAND with CLAY (or SILTY CLAY) Poorly graded SAND with CLAY and GRAVEL (or SILTY CLAY and GRAVEL)	OH	ORGANIC fat CLAY ORGANIC fat CLAY with SAND ORGANIC fat CLAY with GRAVEL SANDY ORGANIC fat CLAY SANDY ORGANIC fat CLAY with GRAVEL GRAVELLY ORGANIC fat CLAY GRAVELLY ORGANIC fat CLAY with SAND
SM	SILTY SAND SILTY SAND with GRAVEL		
SC	CLAYEY SAND CLAYEY SAND with GRAVEL	OH	ORGANIC elastic SILT ORGANIC elastic SILT with SAND ORGANIC elastic SILT with GRAVEL SANDY elastic ELASTIC SILT SANDY ORGANIC elastic SILT with GRAVEL GRAVELLY ORGANIC elastic SILT GRAVELLY ORGANIC elastic SILT with SAND
SC-SM	SILTY, CLAYEY SAND SILTY, CLAYEY SAND with GRAVEL		
PT	PEAT	OL/OH	ORGANIC SOIL ORGANIC SOIL with SAND ORGANIC SOIL with GRAVEL SANDY ORGANIC SOIL SANDY ORGANIC SOIL with GRAVEL GRAVELLY ORGANIC SOIL GRAVELLY ORGANIC SOIL with SAND
	COBBLES COBBLES and BOULDERS BOULDERS		

FIELD AND LABORATORY TESTS

C	Consolidation (ASTM D 2435-04)
CL	Collapse Potential (ASTM D 5333-03)
CP	Compaction Curve (CTM 216 - 06)
CR	Corrosion, Sulfates, Chlorides (CTM 643 - 99; CTM 417 - 06; CTM 422 - 06)
CU	Consolidated Undrained Triaxial (ASTM D 4767-02)
DS	Direct Shear (ASTM D 3080-04)
EI	Expansion Index (ASTM D 4829-03)
M	Moisture Content (ASTM D 2216-05)
OC	Organic Content (ASTM D 2974-07)
P	Permeability (CTM 220 - 05)
PA	Particle Size Analysis (ASTM D 422-63 [2002])
PI	Liquid Limit, Plastic Limit, Plasticity Index (AASHTO T 89-02, AASHTO T 90-00)
PL	Point Load Index (ASTM D 5731-05)
PM	Pressure Meter
PP	Pocket Penetrometer
R	R-Value (CTM 301 - 00)
SE	Sand Equivalent (CTM 217 - 99)
SG	Specific Gravity (AASHTO T 100-06)
SL	Shrinkage Limit (ASTM D 427-04)
SW	Swell Potential (ASTM D 4546-03)
TV	Pocket Torvane
UC	Unconfined Compression - Soil (ASTM D 2166-06) Unconfined Compression - Rock (ASTM D 2938-95)
UU	Unconsolidated Undrained Triaxial (ASTM D 2850-03)
UW	Unit Weight (ASTM D 4767-04)
VS	Vane Shear (AASHTO T 223-96 [2004])

CONSISTENCY OF COHESIVE SOILS

Descriptor	Unconfined Compressive Strength (tsf)	Pocket Penetrometer (tsf)	Torvane (tsf)	Field Approximation
Very Soft	< 0.25	< 0.25	< 0.12	Easily penetrated several inches by fist
Soft	0.25 - 0.50	0.25 - 0.50	0.12 - 0.25	Easily penetrated several inches by thumb
Medium Stiff	0.50 - 1.0	0.50 - 1.0	0.25 - 0.50	Can be penetrated several inches by thumb with moderate effort
Stiff	1.0 - 2.0	1.0 - 2.0	0.50 - 1.0	Readily indented by thumb but penetrated only with great effort
Very Stiff	2.0 - 4.0	2.0 - 4.0	1.0 - 2.0	Readily indented by thumbnail
Hard	> 4.0	> 4.0	> 2.0	Indented by thumbnail with difficulty

APPARENT DENSITY OF COHESIONLESS SOILS

Descriptor	SPT N60 - Value (blows / foot)
Very Loose	0 - 4
Loose	5 - 10
Medium Dense	11 - 30
Dense	31 - 50
Very Dense	> 50

MOISTURE

Descriptor	Criteria
Dry	Absence of moisture, dusty, dry to the touch
Moist	Damp but no visible water
Wet	Visible free water, usually soil is below water table

PERCENT OR PROPORTION OF SOILS

Descriptor	Criteria
Trace	Particles are present but estimated to be less than 5%
Few	5 to 10%
Little	15 to 25%
Some	30 to 45%
Mostly	50 to 100%

SOIL PARTICLE SIZE

Descriptor		Size
Boulder		> 12 inches
Cobble		3 to 12 inches
Gravel	Coarse	3/4 inch to 3 inches
	Fine	No. 4 Sieve to 3/4 inch
Sand	Coarse	No. 10 Sieve to No. 4 Sieve
	Medium	No. 40 Sieve to No. 10 Sieve
	Fine	No. 200 Sieve to No. 40 Sieve
Silt and Clay		Passing No. 200 Sieve

PLASTICITY OF FINE-GRAINED SOILS

Descriptor	Criteria
Nonplastic	A 1/8-inch thread cannot be rolled at any water content.
Low	The thread can barely be rolled, and the lump cannot be formed when drier than the plastic limit.
Medium	The thread is easy to roll, and not much time is required to reach the plastic limit; it cannot be rerolled after reaching the plastic limit. The lump crumbles when drier than the plastic limit.
High	It takes considerable time rolling and kneading to reach the plastic limit. The thread can be rerolled several times after reaching the plastic limit. The lump can be formed without crumbling when drier than the plastic limit.

CEMENTATION

Descriptor	Criteria
Weak	Crumbles or breaks with handling or little finger pressure.
Moderate	Crumbles or breaks with considerable finger pressure.
Strong	Will not crumble or break with finger pressure.

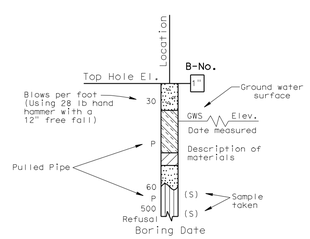

SAMPLE BORING (DRY)

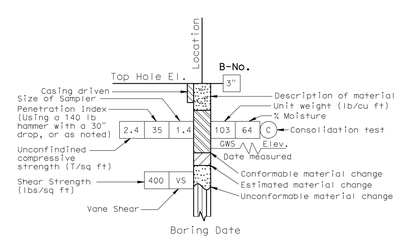

ROTARY SAMPLE BORING (WET)

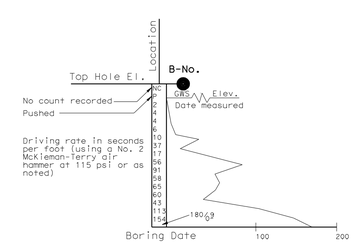

2 1/4" CONE PENETRATION BORING

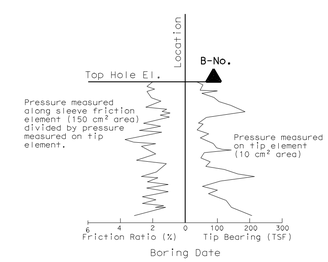

ELECTRONIC CONE PENETROMETER TEST

Cone Penetrometer dimensions and testing procedures are in accordance with ASTM standard D 3441-79, or as noted.

GINA PURSELL DESIGN OVERSIGHT	SHAWN WEI FUNCTIONAL SUPERVISOR	DRAWN BY	P. QUACH	P.CHAU/D.WADER/C.CARBINO FIELD INVESTIGATION BY:	PREPARED FOR THE STATE OF CALIFORNIA DEPARTMENT OF TRANSPORTATION
11/12/10 SIGN OFF DATE		CHECKED BY	S. PIRATHIVIRAJ	DATE: Nov 6 2007 to March 7 2008	

A. LEE
PROJECT ENGINEER

BRIDGE NO. 56E0077
POST MILE 20.3

RETAINING WALL NO. 389

LOG OF TEST BORINGS 1 OF 6

OSF GEOTECHNICAL LOG OF TEST BORINGS SHEET (ENGLISH) (REV. 2/25/05)

ORIGINAL SCALE IN INCHES FOR REDUCED PLANS 0 1 2 3

CU 59A0590
EA 08-448400

DISREGARD PRINTS BEARING EARLIER REVISION DATES 8-18-10

REVISION DATES (PRELIMINARY STAGE ONLY)

SHEET 20 OF 25

FILE => 56e0077zltb20.dgn

USERNAME => trmartin DATE PLOTTED => 30-APR-2011 TIME PLOTTED =>

DIST	COUNTY	ROUTE	POST MILES TOTAL PROJECT	SHEET No	TOTAL SHEETS
08	Riv	91	15.6/21.6	1621	2028

GEOTECHNICAL PROFESSIONAL — DATE 11/03/10

4-25-11
PLANS APPROVAL DATE

REGISTERED PROFESSIONAL ENGINEER — Farid Motamed — No. 2738 — Exp. 6-30-11 — GEOTECHNICAL — STATE OF CALIFORNIA

The State of California or its officers or agents shall not be responsible for the accuracy or completeness of electronic copies of this plan sheet.

California Department of Transportation
5900 Folsom Boulevard
Sacramento, CA 95819

URS Corporation
2020 East First Street, Suite 400
Santa Ana, CA 92705

FOR PLAN VIEW, SEE
"LOG OF TEST BORINGS" 5 & 6 OF 6

NOTE: 1. This LOTB sheet was prepared in accordance with the Caltrans Soil & Rock Logging, Classification, and Presentation Manual (June 2007).

2. For legend, see "Log of Test Borings" 1 of 6

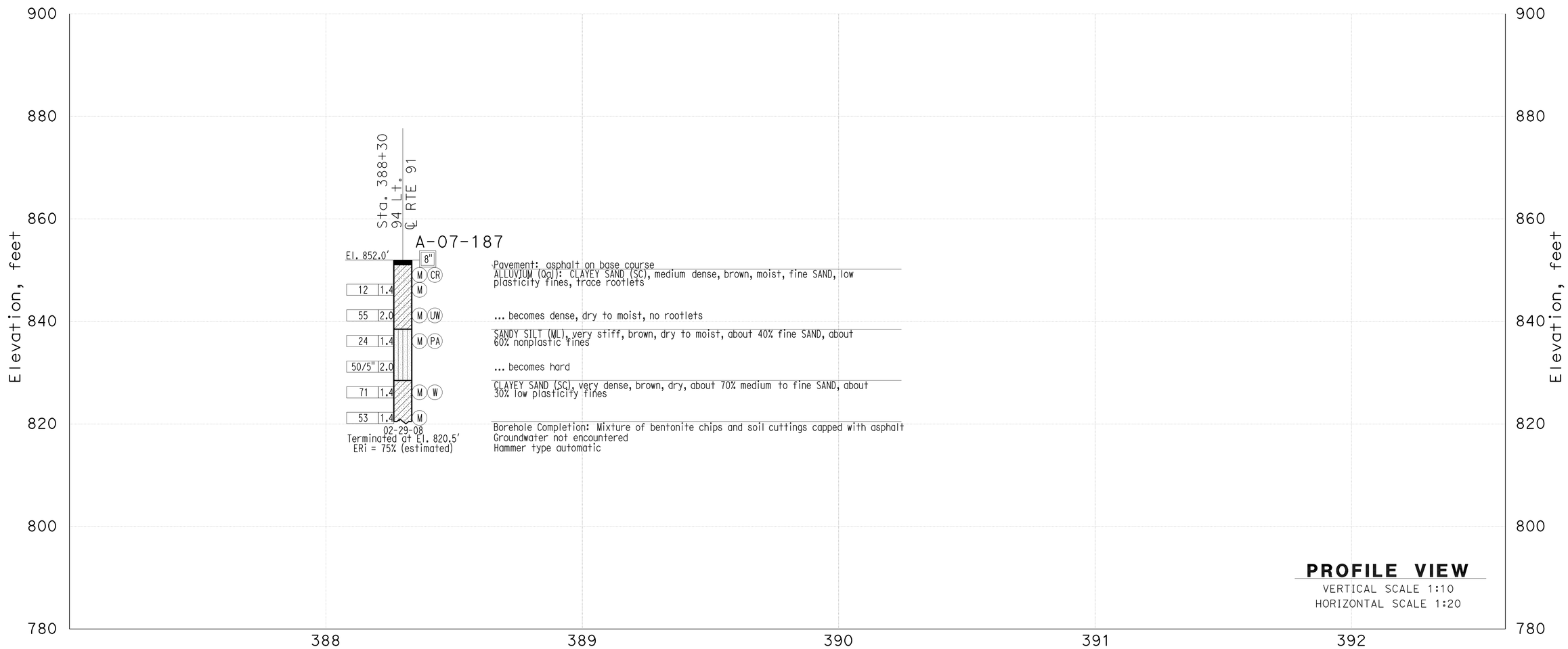

THIS PLAN ACCURATE FOR SOUND WALL AND RETAINING WALL WORK ONLY

GINA PURSELL DESIGN OVERSIGHT 11/12/10 SIGN OFF DATE	SHAWN WEI FUNCTIONAL SUPERVISOR	DRAWN BY CHECKED BY	P. QUACH S. PIRATHIVIRAJ	P.CHAU/D.WADER/C.CARBINO FIELD INVESTIGATION BY: DATE: Nov 6 2007 to March 7 2008	PREPARED FOR THE STATE OF CALIFORNIA DEPARTMENT OF TRANSPORTATION	A. LEE PROJECT ENGINEER	BRIDGE NO. 56E0077 POST MILE 20.3

Retaining Wall 389

LOG OF TEST BORINGS SHEET 2 OF 6

OSF GEOTECHNICAL LOG OF TEST BORINGS SHEET (ENGLISH) (REV. 2/25/05)

ORIGINAL SCALE IN INCHES FOR REDUCED PLANS 0 1 2 3

CU 59A0590
EA 08-448400

DISREGARD PRINTS BEARING EARLIER REVISION DATES 8-18-10

REVISION DATES (PRELIMINARY STAGE ONLY)

SHEET 21 OF 25

FILE => 56e0077zltb21.dgn

USERNAME => trmnguye DATE PLOTTED => 30-APR-2011 TIME PLOTTED =>

DIST	COUNTY	ROUTE	POST MILES TOTAL PROJECT	SHEET No	TOTAL SHEETS
08	Riv	91	15.6/21.6	1622	2028

GEOTECHNICAL PROFESSIONAL — DATE 11/03/10

4-25-11
PLANS APPROVAL DATE

REGISTERED PROFESSIONAL ENGINEER — Farid Motamed — No. 2738 — Exp. 6-30-11 — GEOTECHNICAL — STATE OF CALIFORNIA

The State of California or its officers or agents shall not be responsible for the accuracy or completeness of electronic copies of this plan sheet.

California Department of Transportation
5900 Folsom Boulevard
Sacramento, CA 95819

URS Corporation
2020 East First Street, Suite 400
Santa Ana, CA 92705

FOR PLAN VIEW, SEE
"LOG OF TEST BORINGS" 5 & 6 OF 6

NOTE: 1. This LOTB sheet was prepared in accordance with the Caltrans Soil & Rock Logging, Classification, and Presentation Manual (June 2007).

2. For legend, see "Log of Test Borings" 1 of 6

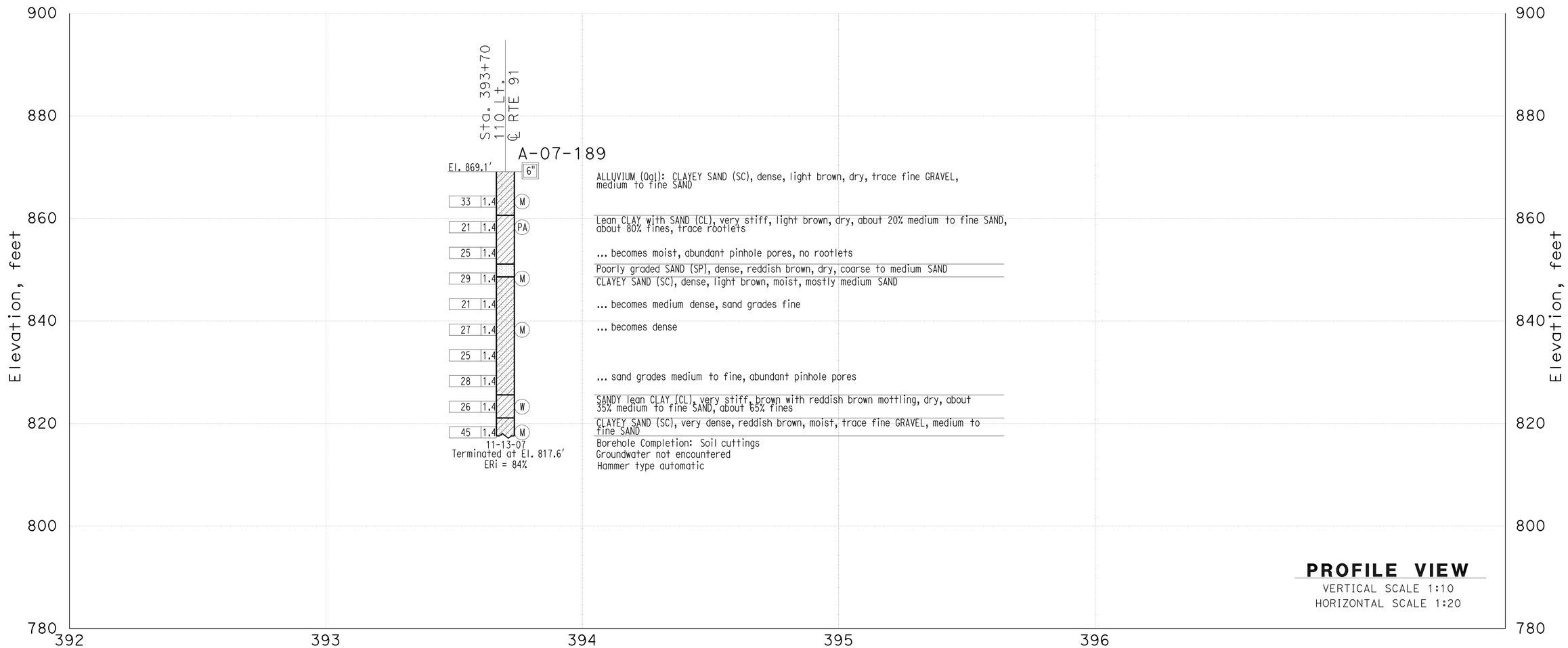

THIS PLAN ACCURATE FOR SOUND WALL AND RETAINING WALL WORK ONLY

GINA PURSELL DESIGN OVERSIGHT 11/12/10 SIGN OFF DATE	SHAWN WEI FUNCTIONAL SUPERVISOR	DRAWN BY CHECKED BY	P. QUACH S. PIRATHIVIRAJ	P.CHAU/D.WADER/C.CARBINO FIELD INVESTIGATION BY: DATE: Nov 6 2007 to March 7 2008	PREPARED FOR THE STATE OF CALIFORNIA DEPARTMENT OF TRANSPORTATION	A. LEE PROJECT ENGINEER	BRIDGE NO. 56E0077 POST MILE 20.3

Retaining Wall 389

LOG OF TEST BORINGS SHEET 3 OF 6

OSF GEOTECHNICAL LOG OF TEST BORINGS SHEET (ENGLISH) (REV. 2/25/05)

ORIGINAL SCALE IN INCHES FOR REDUCED PLANS 0 1 2 3

CU 59A0590
EA 08-448400

DISREGARD PRINTS BEARING EARLIER REVISION DATES 8-18-10

REVISION DATES (PRELIMINARY STAGE ONLY)

SHEET 22 OF 25

FILE => 56e0077zltb22.dgn

USERNAME => trmnguye DATE PLOTTED => 30-APR-2011 TIME PLOTTED =>

DIST	COUNTY	ROUTE	POST MILES TOTAL PROJECT	SHEET No	TOTAL SHEETS
08	Riv	91	15.6/21.6	1623	2028

GEOTECHNICAL PROFESSIONAL — DATE 11/03/10

4-25-11
PLANS APPROVAL DATE

REGISTERED PROFESSIONAL ENGINEER — Farid Motamed — No. 2738 — Exp. 6-30-11 — GEOTECHNICAL — STATE OF CALIFORNIA

The State of California or its officers or agents shall not be responsible for the accuracy or completeness of electronic copies of this plan sheet.

California Department of Transportation
5900 Folsom Boulevard
Sacramento, CA 95819

URS Corporation
2020 East First Street, Suite 400
Santa Ana, CA 92705

FOR PLAN VIEW, SEE
"LOG OF TEST BORINGS" 5 & 6 OF 6

NOTE: 1. This LOTB sheet was prepared in accordance with the Caltrans Soil & Rock Logging, Classification, and Presentation Manual (June 2007).

2. For legend, see "Log of Test Borings" 1 of 6

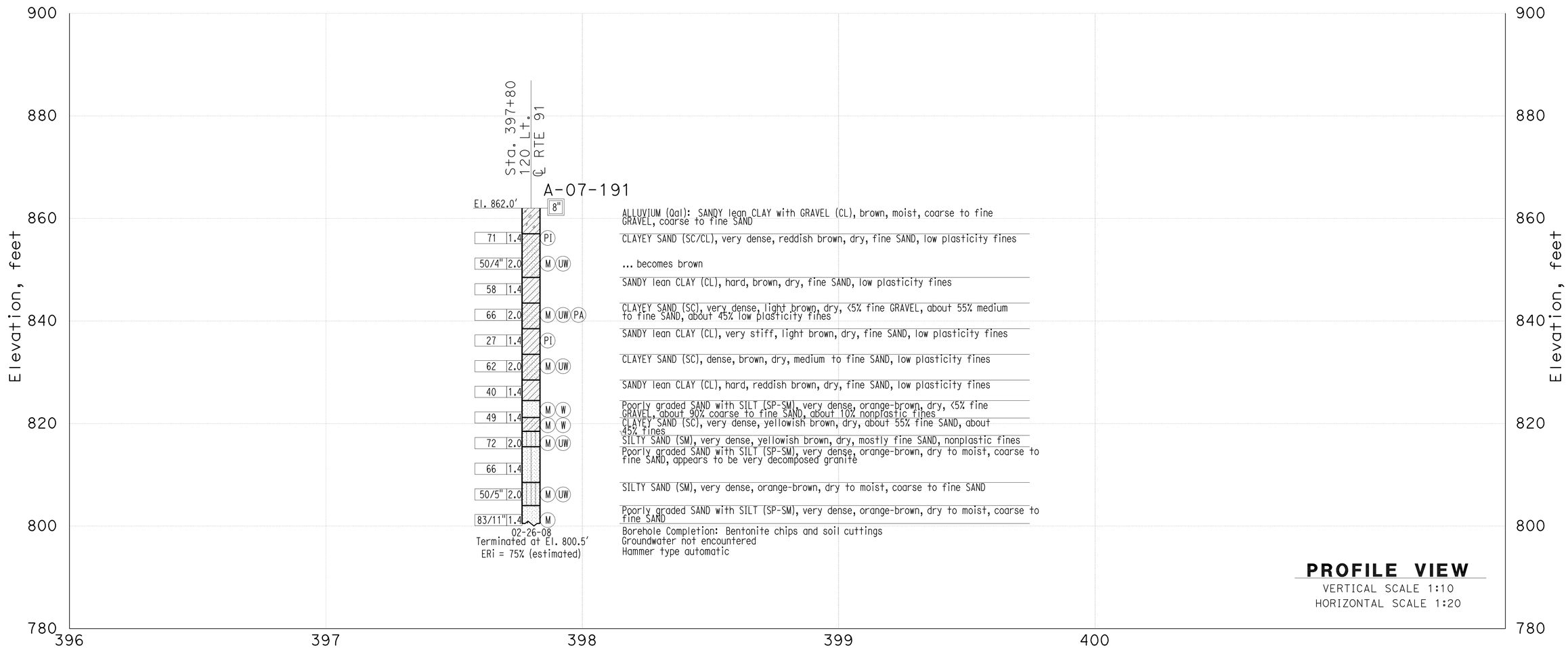

THIS PLAN ACCURATE FOR SOUND WALL AND RETAINING WALL WORK ONLY

GINA PURSELL DESIGN OVERSIGHT	SHAWN WEI FUNCTIONAL SUPERVISOR	DRAWN BY	P. QUACH	P.CHAU/D.WADER/C.CARBINO FIELD INVESTIGATION BY:	PREPARED FOR THE STATE OF CALIFORNIA DEPARTMENT OF TRANSPORTATION	A. LEE PROJECT ENGINEER	BRIDGE NO. 56E0077 POST MILE 20.3
11/12/10 SIGN OFF DATE		CHECKED BY	S. PIRATHIVIRAJ	DATE: Nov 6 2007 to March 7 2008			

Retaining Wall 389

LOG OF TEST BORINGS SHEET 4 OF 6

OSF GEOTECHNICAL LOG OF TEST BORINGS SHEET (ENGLISH) (REV. 2/25/05)

ORIGINAL SCALE IN INCHES FOR REDUCED PLANS 0 1 2 3

CU 59A0590
EA 08-448400

DISREGARD PRINTS BEARING EARLIER REVISION DATES 8-18-10

REVISION DATES (PRELIMINARY STAGE ONLY)

SHEET 23 OF 25

FILE => 56e0077zltb23.dgn

USERNAME => trmmguye DATE PLOTTED => 30-APR-2011 TIME PLOTTED =>

DIST	COUNTY	ROUTE	POST MILES TOTAL PROJECT	SHEET No	TOTAL SHEETS
08	Riv	91	15.6/21.6	1624	2028

GEOTECHNICAL PROFESSIONAL — DATE 11/03/10

4-25-11
PLANS APPROVAL DATE

REGISTERED PROFESSIONAL ENGINEER — Farid Motamed — No. 2738 — Exp. 6-30-11 — GEOTECHNICAL — STATE OF CALIFORNIA

The State of California or its officers or agents shall not be responsible for the accuracy or completeness of electronic copies of this plan sheet.

California Department of Transportation
5900 Folsom Boulevard
Sacramento, CA 95819

URS Corporation
2020 East First Street, Suite 400
Santa Ana, CA 92705

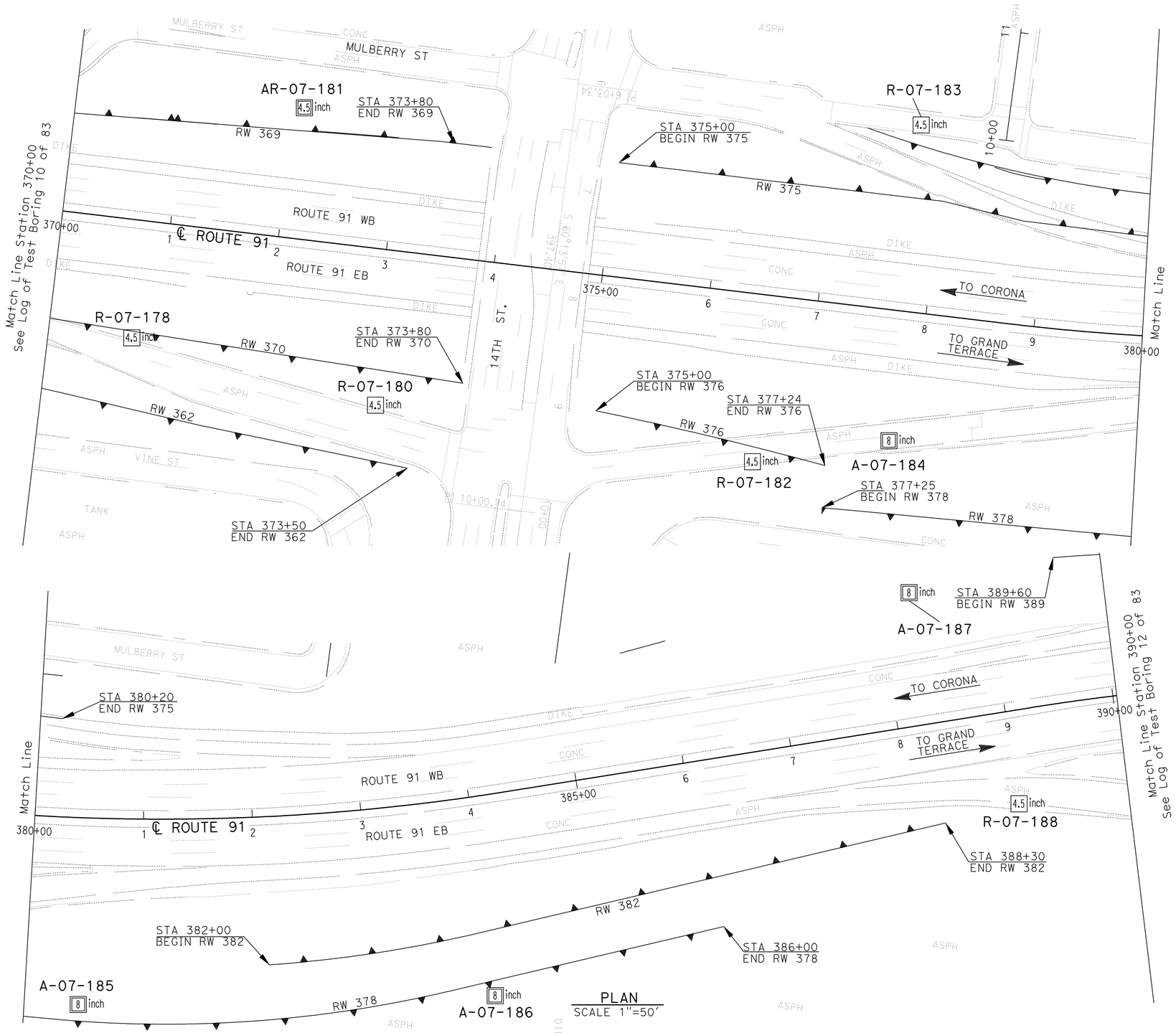

PLAN
SCALE 1"=50'

Borehole Number	Drill Rig	Hammer Type	Avg. Hammer Efficiency, ETR (%)
R-07-178	CS-2000	Automatic	84
R-07-180	CME 85	Automatic	87
AR-07-181	CS-2000	Automatic	84
R-07-182	CS-2000	Automatic	84
R-07-183	CS-2000	Automatic	84
A-07-184	Diedrich D-120	Automatic	75*
A-07-185	Diedrich D-120	Automatic	75*
A-07-186	Diedrich D-120	Automatic	75*
A-07-187	Diedrich D-120	Automatic	75*
R-07-188	CS-2000	Automatic	84

Sampler Type	Inside Diameter (Inches)	Borehole Numbers
SPT	1.375	R-07-178, R-07-180, R-07-181 R-07-182, R-07-183, A-07-184 A-07-185, A-07-186, A-07-187 R-07-188
Modified California 1	1.94	R-07-180, R-07-183
Modified California 2	2.40	A-07-184, A-07-185, A-07-186 A-07-187

*Estimated Hammer Efficiency Rating.

GINA PURSELL — DESIGN OVERSIGHT
SHAWN WEI — FUNCTIONAL SUPERVISOR
11/12/10 — SIGN OFF DATE

DRAWN BY: P. QUACH
CHECKED BY: S. PIRATHIVIRAJ

P.CHAU/D.WADER/C.CARBINO
FIELD INVESTIGATION BY:
DATE: Nov 6 2007 to March 7 2008

PREPARED FOR THE STATE OF CALIFORNIA DEPARTMENT OF TRANSPORTATION

A. LEE — PROJECT ENGINEER

BRIDGE NO. 56E0077
POST MILE 20.3

RETAINING WALL 389
LOG OF TEST BORINGS 5 OF 6

OSF GEOTECHNICAL LOG OF TEST BORINGS SHEET (ENGLISH) (REV. 2/25/05)

ORIGINAL SCALE IN INCHES FOR REDUCED PLANS 0 1 2 3

CU 59A0590
EA 08-448400

DISREGARD PRINTS BEARING EARLIER REVISION DATES 8-18-10

REVISION DATES (PRELIMINARY STAGE ONLY)

SHEET 24 OF 25

FILE => 56e0077zltb24.dgn

USERNAME => trmnguye DATE PLOTTED => 30-APR-2011 TIME PLOTTED =>

DIST	COUNTY	ROUTE	POST MILES TOTAL PROJECT	SHEET No	TOTAL SHEETS
08	Riv	91	15.6/21.6	1625	2028

GEOTECHNICAL PROFESSIONAL — DATE 11/03/10

4-25-11
PLANS APPROVAL DATE

REGISTERED PROFESSIONAL ENGINEER — Farid Motamed — No. 2738 — Exp. 6-30-11 — GEOTECHNICAL — STATE OF CALIFORNIA

The State of California or its officers or agents shall not be responsible for the accuracy or completeness of electronic copies of this plan sheet.

California Department of Transportation
5900 Folsom Boulevard
Sacramento, CA 95819

URS Corporation
2020 East First Street, Suite 400
Santa Ana, CA 92705

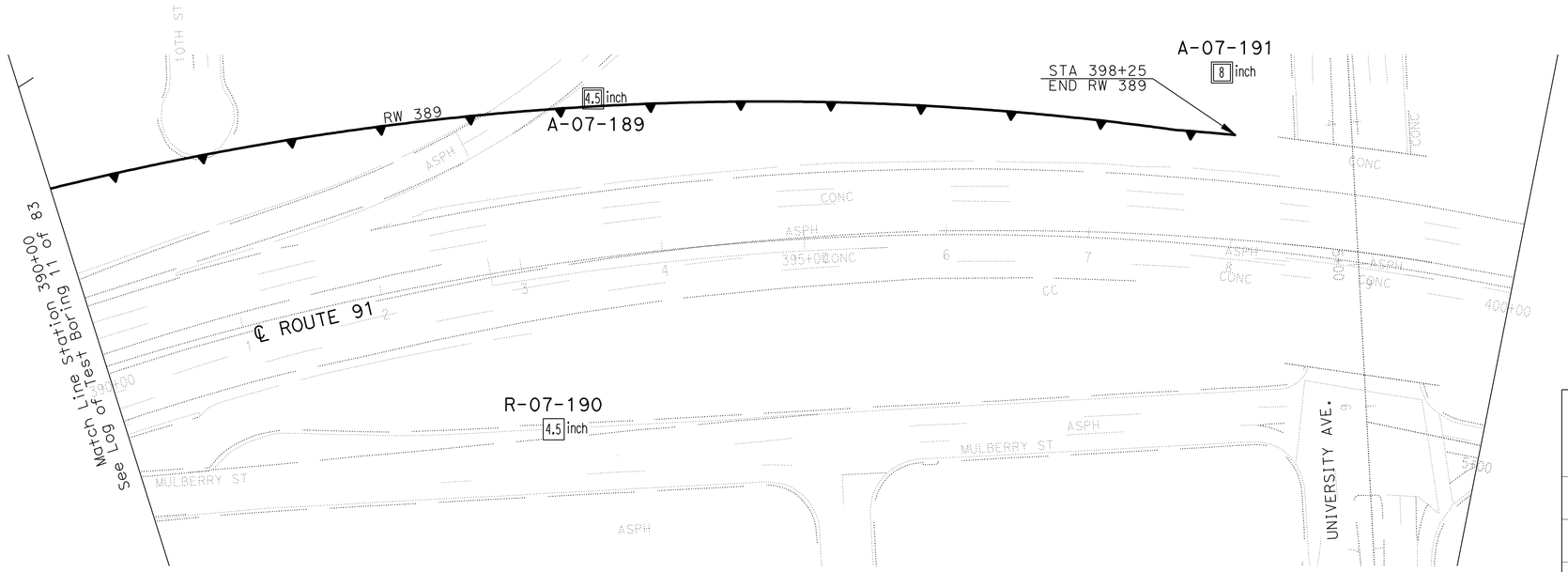

PLAN
SCALE 1"=50'

Borehole Number	Drill Rig	Hammer Type	Avg. Hammer Efficiency, ETR (%)
A-07-189	CS-2000	Automatic	84
R-07-190	CS-2000	Automatic	84
A-07-191	Diedrich D-120	Automatic	75*

Sampler Type	Inside Diameter (Inches)	Borehole Numbers
SPT	1.375	A-07-189, R-07-190 A-07-191
Modified California 1	1.94	-
Modified California 2	2.40	A-07-191

*Estimated Hammer Efficiency Rating.

GINA PURSELL — DESIGN OVERSIGHT
11/12/10 — SIGN OFF DATE
SHAWN WEI — FUNCTIONAL SUPERVISOR
DRAWN BY: P. QUACH
CHECKED BY: S. PIRATHIVIRAJ
P.CHAU/D.WADER/C.CARBINO — FIELD INVESTIGATION BY:
DATE: Nov 6 2007 to March 7 2008

PREPARED FOR THE STATE OF CALIFORNIA DEPARTMENT OF TRANSPORTATION

A. LEE — PROJECT ENGINEER

BRIDGE NO. 56E0077
POST MILE 20.3

RETAINING WALL 389
LOG OF TEST BORINGS 6 OF 6

OSF GEOTECHNICAL LOG OF TEST BORINGS SHEET (ENGLISH) (REV. 2/25/05)

ORIGINAL SCALE IN INCHES FOR REDUCED PLANS 0 1 2 3

CU 59A0590
EA 08-448400

DISREGARD PRINTS BEARING EARLIER REVISION DATES
REVISION DATES (PRELIMINARY STAGE ONLY): 8-18-10

SHEET 25 OF 25

FILE => 56e0077zltb25.dgn

USERNAME => trmnguye DATE PLOTTED => 30-APR-2011 TIME PLOTTED =>

DIST	COUNTY	ROUTE	POST MILES TOTAL PROJECT	SHEET No	TOTAL SHEETS
08	Riv	91	15.6/21.6	1626	2028

REGISTERED CIVIL ENGINEER 11/12/10 DATE

4-25-11
PLANS APPROVAL DATE

REGISTERED PROFESSIONAL ENGINEER MINH THUONG VO No. C59297 Exp. 06-30-11 CIVIL STATE OF CALIFORNIA

The State of California or its officers or agents shall not be responsible for the accuracy or completeness of electronic copies of this plan sheet.

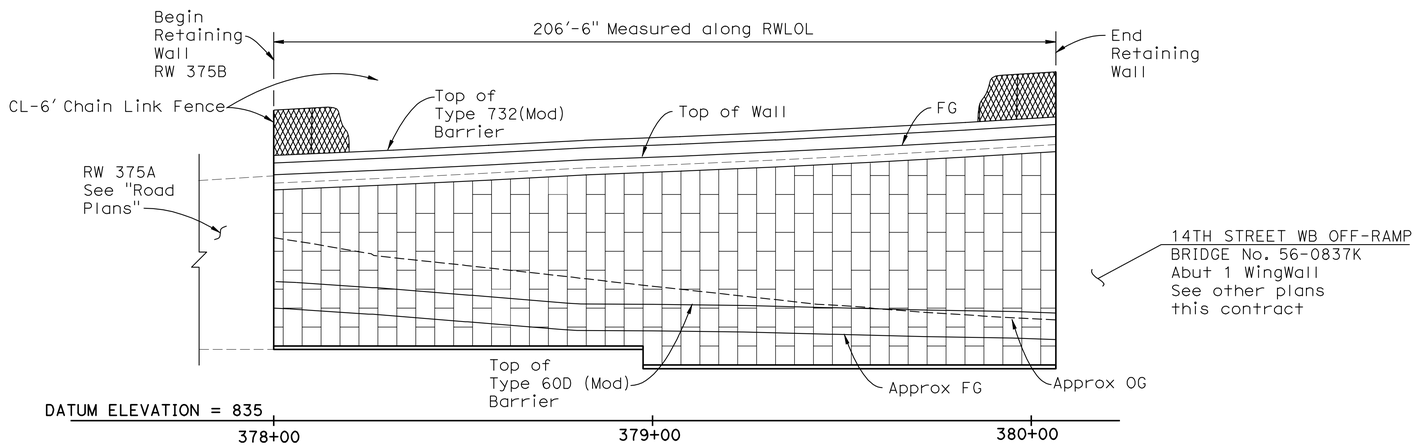

DEVELOPED ELEVATION

Horiz. 1" = 20'
Vert. 1" = 10'

Notes:

1 For Top of Wall and Leveling Pad Elevations see "STRUCTURE PLAN NO. 1" sheet.

2 For General Notes see "MECHANICALLY STABILIZED EMBANKMENT DETAILS NO. 2" sheet.

3 For Details see "MECHANICALLY STABILIZED EMBANKMENT DETAILS NO. 1 and 2" sheets.

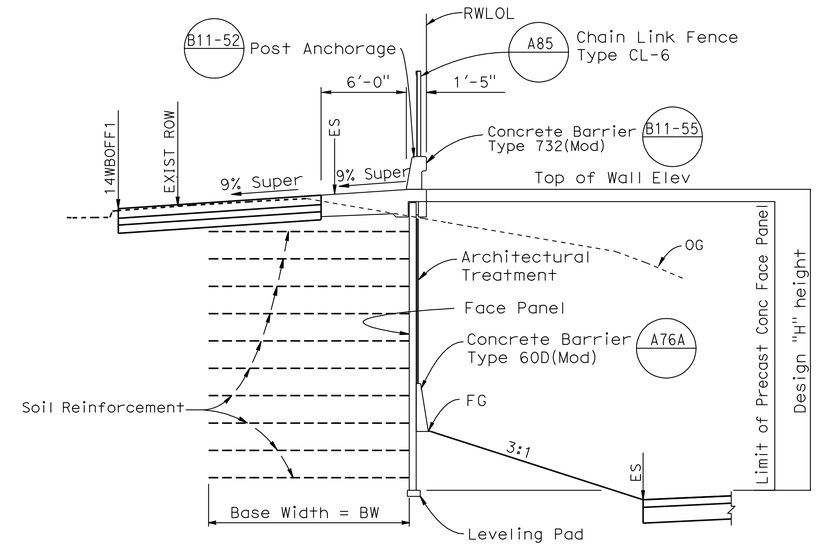

TYPICAL SECTION

3/16" = 1'-0"

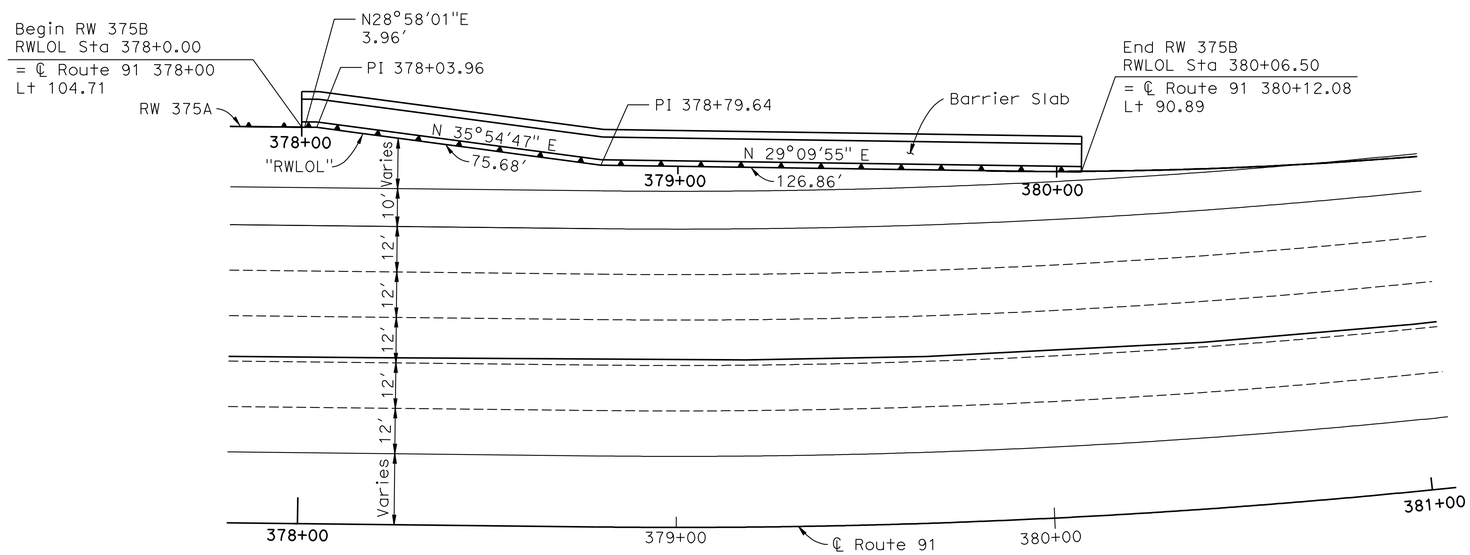

PLAN

1" = 20'

INDEX TO PLANS

Sheet No.	Title
1	GENERAL PLAN
2	STRUCTURE PLAN
3	MECHANICALLY STABILIZED EMBANKMENT DETAILS NO. 1
4	MECHANICALLY STABILIZED EMBANKMENT DETAILS NO. 2
5	MECHANICALLY STABILIZED EMBANKMENT DETAILS NO. 3
6	MECHANICALLY STABILIZED EMBANKMENT DETAILS NO. 4
7	MECHANICALLY STABILIZED EMBANKMENT DETAILS NO. 5
8	MECHANICALLY STABILIZED EMBANKMENT DETAILS NO. 6
9	ARCHITECTURAL SURFACE
10	ARCHITECTURAL DETAILS NO. 1
11	ARCHITECTURAL DETAILS NO. 2
12	ARCHITECTURAL DETAILS NO. 3
13	LOG OF TEST BORINGS 1 OF 3
14	LOG OF TEST BORINGS 2 OF 3
15	LOG OF TEST BORINGS 3 OF 3

STANDARD PLANS DATED MAY 2006

A10A	ACRONYMS AND ABBREVIATIONS (SHEET 1 OF 2)
A10B	ACRONYMS AND ABBREVIATIONS (SHEET 2 OF 2)
A10C	SYMBOLS (SHEET 1 OF 2)
A10D	SYMBOLS (SHEET 2 OF 2)
A76A	CONCRETE BARRIER TYPE 60
A85	CHAIN LINK FENCE
B11-52	CHAIN LINK RAILING TYPE 7
B11-55	CONCRETE BARRIER TYPE 732
D102	UNDERDRAINS

STANDARD PLAN SHEET NO.
DETAIL NO.

QUANTITIES

EARTH RETAINING STRUCTURE	5,445	SQFT
STRUCTURAL CONCRETE, BARRIER SLAB	99	CY
BAR REINFORCING STEEL (BARRIER SLAB)	10,591	LB
CHAIN LINK FENCE (TYPE CL-6)	207	LF
CONCRETE BARRIER (TYPE 732 MODIFIED)	207	LF
CONCRETE BARRIER (TYPE 60D MODIFIED)	207	LF

NOTE:
THE CONTRACTOR SHALL VERIFY ALL CONTROLLING FIELD DIMENSIONS BEFORE ORDERING OR FABRICATING ANY MATERIAL.

Daniel T Adams
DESIGN ENGINEER

	BY	CHECKED
DESIGN	M. Vo	A. McPhee
DETAILS	Y. Tang	A. McPhee
QUANTITIES	A. McPhee	M. Vo

LOAD & RESISTANCE FACTOR DESIGN — LIVE LOADING: HL93 W/"LOW-BOY"; PERMIT DESIGN VEHICLE

	BY	CHECKED
LAYOUT	M. Vo	A. McPhee
SPECIFICATIONS	Dave Klein	PLANS AND SPECS COMPARED Dave Klein

ORIGINAL SCALE IN INCHES FOR REDUCED PLANS 0 1 2 3

STATE OF CALIFORNIA
DEPARTMENT OF TRANSPORTATION

DIVISION OF ENGINEERING SERVICES
STRUCTURE DESIGN
DESIGN BRANCH 10

CU 08
EA 448401

BRIDGE NO. 56E0078
POST MILE 20.05

RETAINING WALL NO. 375B
GENERAL PLAN

DISREGARD PRINTS BEARING EARLIER REVISION DATES

REVISION DATES: 7-15-10 7-15-10 8-19-10 11-03-10

SHEET 1 OF 15

STRUCTURES DESIGN GENERAL PLAN SHEET (ENGLISH) (REV.07-24-06)

FILE => 56e0078agp01.dgn

USERNAME => trmnguye DATE PLOTTED => 30-APR-2011 TIME PLOTTED => 12:39

DIST	COUNTY	ROUTE	POST MILES TOTAL PROJECT	SHEET No	TOTAL SHEETS
08	Riv	91	15.6/21.6	1627	2028

REGISTERED CIVIL ENGINEER 11/12/10 DATE

4-25-11
PLANS APPROVAL DATE

REGISTERED PROFESSIONAL ENGINEER MINH THUONG VO No. C59297 Exp. 06-30-11 CIVIL STATE OF CALIFORNIA

The State of California or its officers or agents shall not be responsible for the accuracy or completeness of electronic copies of this plan sheet.

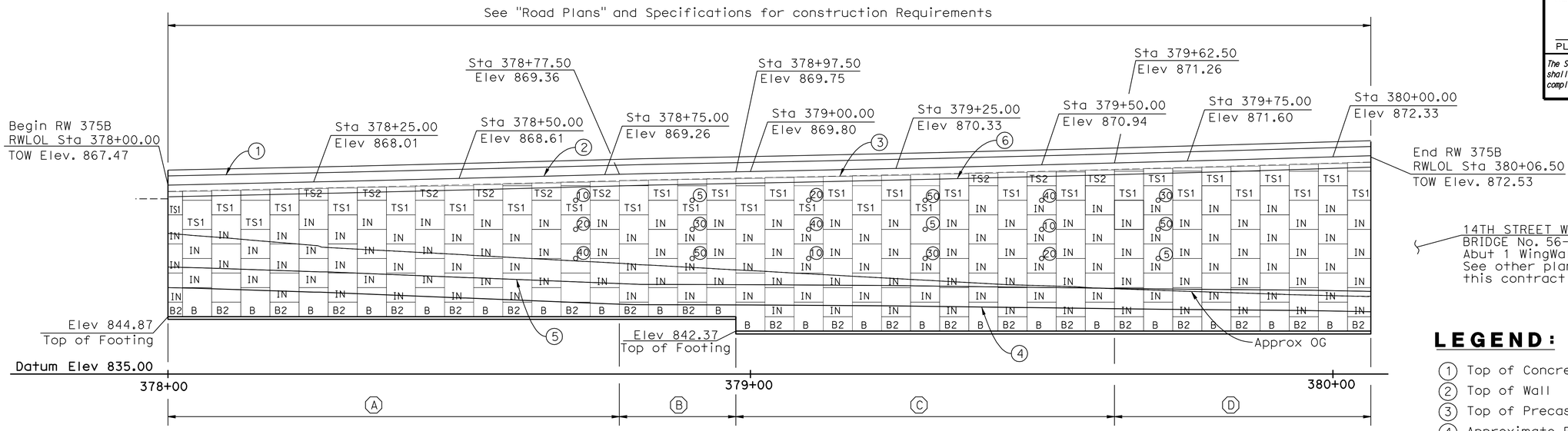

14TH STREET WB OFF-RAMP
BRIDGE No. 56-0387K
Abut 1 WingWall
See other plans
this contract

DEVELOPED ELEVATION

1" = 10'

LEGEND:

1. Top of Concrete Barrier Type 732(Mod)
2. Top of Wall
3. Top of Precast Concrete Panel
4. Approximate FG
5. Approximate OG
6. Bottom of Barrier Slab

50 — Indicates interval in years from time of construction to time of removal of inspection wire

IN — Indicates location of inspection wire replacement, see "MECHANICALLY STABILIZED EMBANKMENT DETAILS NO. 3" sheet

Panel type designation, see "MECHANICALLY STABILIZED EMBANKMENT DETAILS NO. 1" sheet

SOIL REINFORCEMENT TABLE

	(A)	(B)	(C)	(D)
Design "H"	H=23.82' Max	H=24.38' Max	H=28.70' Max	H=29.93' Max
Base Width (BW)	BW = 16' Min	BW = 18' Min	BW = 19' Min	BW = 21' Min
Top level of Mesh: Levels Below:	5 @ W11 x W11 + 6" x18" 4 @ W11 x W11 + 6" x 24"	5 @ W11 x W11 + 6" x 18" 5 @ W11 x W11 + 6" x 24"	5 @ W11 x W11 + 6" x 18" 5 @ W11 x W11 + 6" x 24" 5 @ W11 x W11 + 6" x 30"	10 @ W11 x W11 + 6" x 24" 2 @ W11 x W11 + 6" x 30"

NOTES:

1. Contractor to field verify all utility locations prior to retaining wall construction.
2. For Typical Sections, see "General Plan No. 1" sheet.
3. For Architectural Treatment, see "Architectural Treatment Details" sheet
4. For utility information, see "Utility Plans".

MSE NOTES:

1. Mesh is indicated sequentially from top level of mesh to bottom level of mesh.
2. For limits of excavation & backfill, see "Mechanically Stabilized Embankment Details No. 6" sheet.
3. For Barrier Slab details, see "Mechanically Stabilized Embankment Details No. 4" sheet.
4. For panel details, see "Mechanically Stabilized Embankment Details No. 1" sheet.
5. For General Notes and wire mat details, see "Mechanically Stabilized Embankment Details No. 2" sheet.
6. For inspection wire details, see "Mechanically Stabilized Embankment Details No. 3" sheet.

LEGEND:

2 @ W11 x W11 + 6" x 9"

- Longitudinal wire spacing x Transverse wire spacing
- Longitudinal wire size x Transverse wire size
- Number of welded wire mats.

NOTE:
THE CONTRACTOR SHALL VERIFY ALL CONTROLLING FIELD DIMENSIONS BEFORE ORDERING OR FABRICATING ANY MATERIAL.

	BY	CHECKED
DESIGN	M. Vo	A. McPhee
DETAILS	Y. Tang	A. McPhee
QUANTITIES	A. McPhee	M. Vo

STATE OF CALIFORNIA
DEPARTMENT OF TRANSPORTATION

DIVISION OF ENGINEERING SERVICES
STRUCTURE DESIGN
DESIGN BRANCH 10

BRIDGE NO. 56E0078
POST MILE 20.05

RETAINING WALL NO. 375B
STRUCTURE PLAN

STRUCTURES DESIGN DETAIL SHEET (ENGLISH) (REV. 10/25/05)

ORIGINAL SCALE IN INCHES FOR REDUCED PLANS 0 1 2 3

CU 08
EA 448401

DISREGARD PRINTS BEARING EARLIER REVISION DATES

REVISION DATES: 3-16-10 5-03-10 8-19-10

SHEET 2 OF 15

FILE => 56e0078csp02.dgn

USERNAME => trmnguye DATE PLOTTED => 30-APR-2011 TIME PLOTTED => 12:39

DIST	COUNTY	ROUTE	POST MILES TOTAL PROJECT	SHEET No	TOTAL SHEETS
08	Riv	91	15.6/21.6	1628	2028

REGISTERED CIVIL ENGINEER 11/12/10 DATE

4-25-11
PLANS APPROVAL DATE

REGISTERED PROFESSIONAL ENGINEER MINH THUONG VO No. C59297 Exp. 06-30-11 CIVIL STATE OF CALIFORNIA

The State of California or its officers or agents shall not be responsible for the accuracy or completeness of electronic copies of this plan sheet.

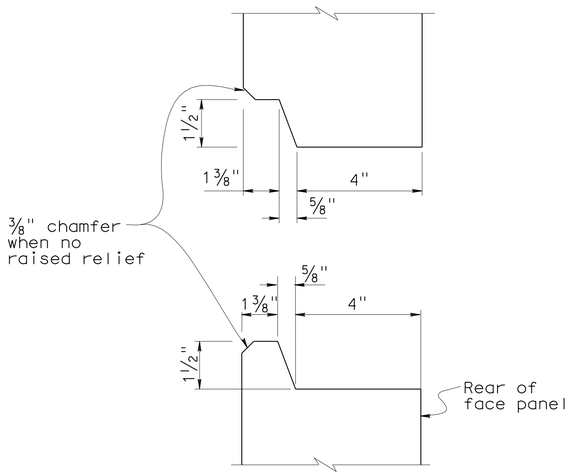

HORIZONTAL JOINT DETAIL
No Scale

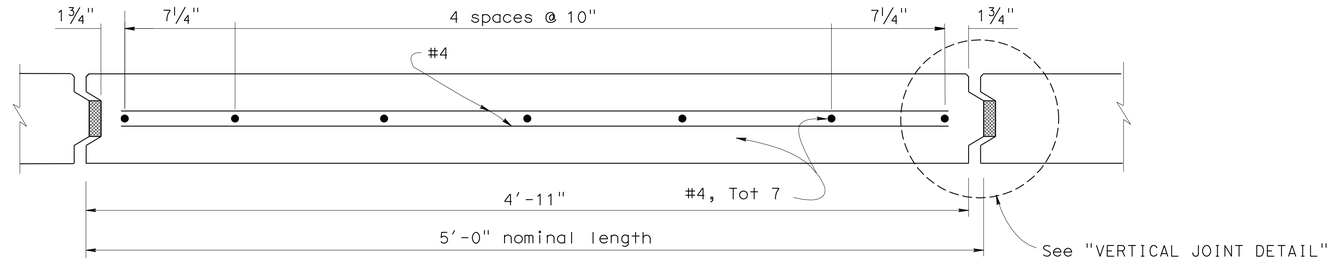

PLAN - FACE PANEL
No Scale

NOTES:

1. Architectural treatment not shown. Architectural surface extends beyond face of panel. See "Architectural Treatment Details" sheet.
2. Place reinforced elastomeric bearing pads in all of the panel joints between the panels. Place one in each vertical joint where the horizontal joint intersects it. Place two per panel in each horizontal joint.
   3/4" x 2 3/8" x 6" for vertical joints
   3/4" x 4" x 6" for horizontal joints.
3. Bond a strip of filter fabric, 1' - 0" wide, over the full length of all panel joints.

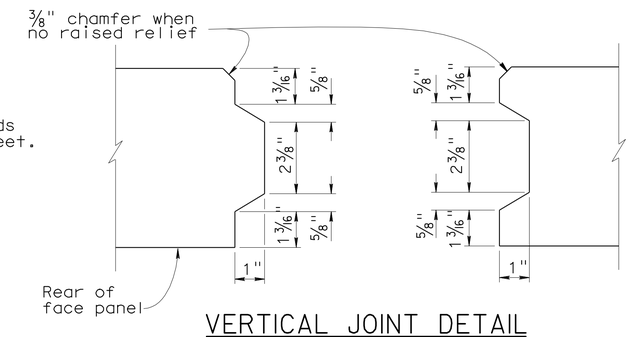

VERTICAL JOINT DETAIL
No Scale

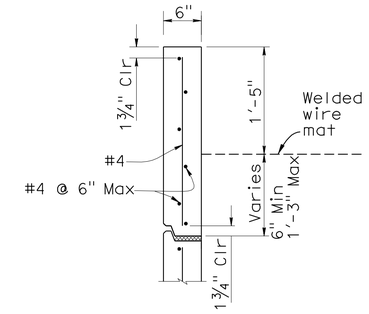

TOP PANEL (TYPE "TS2")
1" =1'-0"

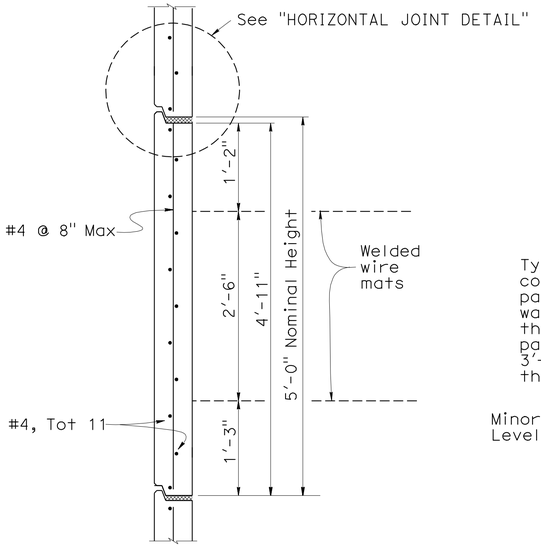

INTERMEDIATE PANEL (TYPE "IN")
1" = 1'-0"

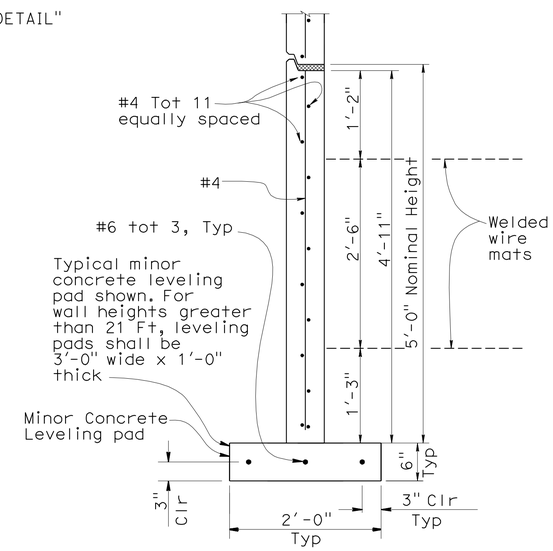

BOTTOM PANEL (TYPE "B")
1" = 1'-0"

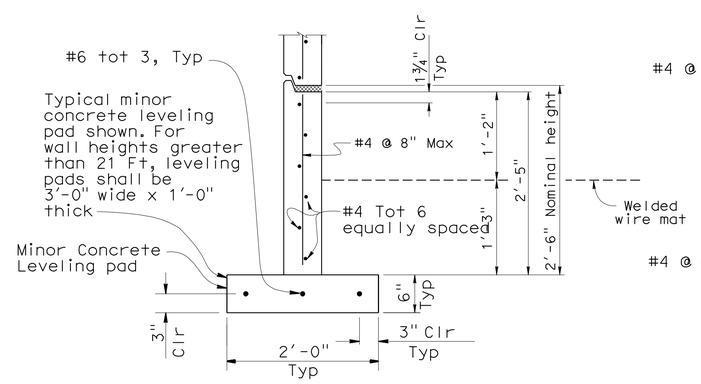

BOTTOM HALF PANEL (TYPE "B2")
1" = 1'-0"

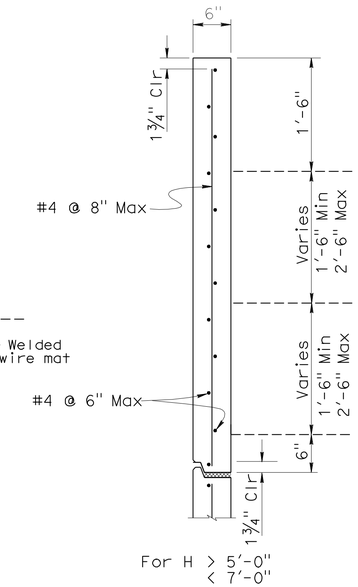

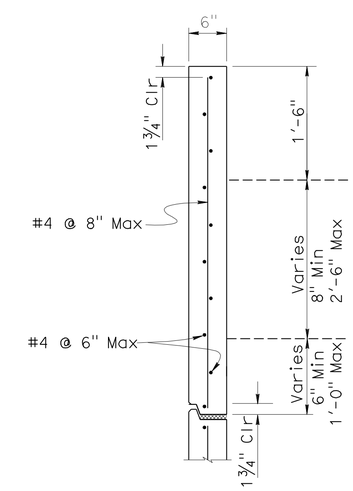

TOP PANEL (TYPE "TSI")
1" = 1'-0"

RETAINING WALL NO. 375B
MECHANICALLY STABILIZED EMBANKMENT
DETAILS NO. 1

	BY	CHECKED
DESIGN	M. Vo	A. McPhee
DETAILS	Y. Tang	A. McPhee
QUANTITIES	A. McPhee	M. Vo

STATE OF CALIFORNIA
DEPARTMENT OF TRANSPORTATION

DIVISION OF ENGINEERING SERVICES
STRUCTURE DESIGN
DESIGN BRANCH 10

BRIDGE NO. 56E0078
POST MILE 20.05

STRUCTURES DESIGN DETAIL SHEET (ENGLISH) (REV. 10/25/05)

ORIGINAL SCALE IN INCHES FOR REDUCED PLANS 0 1 2 3

CU 08
EA 448401

DISREGARD PRINTS BEARING EARLIER REVISION DATES 1-19-10 1-15-10

REVISION DATES

SHEET 3 OF 15

FILE => 56e0078s_msedt03.dgn

USERNAME => trmoguye DATE PLOTTED => 30-APR-2011 TIME PLOTTED => 12:39

DIST.	COUNTY	ROUTE	POST MILES TOTAL PROJECT	SHEET NO.	TOTAL SHEETS
08	Riv	91	15.6/21.6	1629	2028

11-12-10
REGISTERED ENGINEER - CIVIL

4-25-11
PLANS APPROVAL DATE

REGISTERED PROFESSIONAL ENGINEER
MINH THUONG VO
No. C59297
Exp. 06-30-11
CIVIL
STATE OF CALIFORNIA

The State of California or its officers or agents shall not be responsible for the accuracy or completeness of electronic copies of this plan sheet.

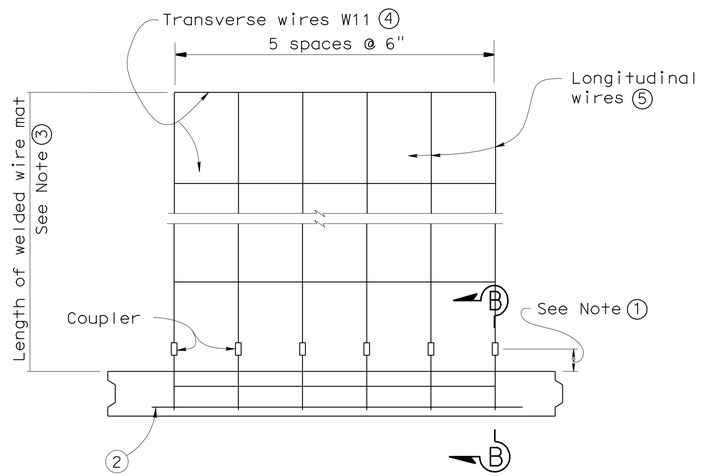

PLAN OF PANEL WITH WELDED WIRE MAT
No scale

GENERAL NOTES (MSE WALLS)

Live loading: Surcharge = 240 lb/ft^2

Soil parameters:

Internal design ϕ = 34°, γ = 120 lb/ft^3
External design ϕ(Backfill) = 34°, γ = 120 lb/ft^3
ϕ(Foundation) = 30°

Precast concrete panels:

f′c = 4,000 psi (Concrete compressive strength at 28 days)
fy = 60,000 psi (Yield strength of reinforcement)

Soil reinforcement:

Welded wire mats: fy = 65,000 psi (Yield strength)
Coupler: fy = 36,000 psi (Yield strength)
Corrosion rate = 1.1 mils/year

Reinforced concrete:

f′c = 3,600 psi, except as noted
(Concrete compressive strength at 28 days)

fy = 60,000 psi (Yield strength of reinforcement)

MSE = Mechanically stabilized embankment

Notes:

① Distance as required to permit coupler to be swaged.

② Place #4 bar, 3′ - 2" long, centered on connector mat, but not welded to it.

③ Length equals "Base width" of wall, except it shall not be less than 16′ for the top 2 levels of mats at the top of the wall.

④ All Transverse Wires size W11 at various spacings as shown elsewhere in plans.

⑤ All Longitudinal Wires at 6" spacing, of various sizes, as shown elsewhere in plans.

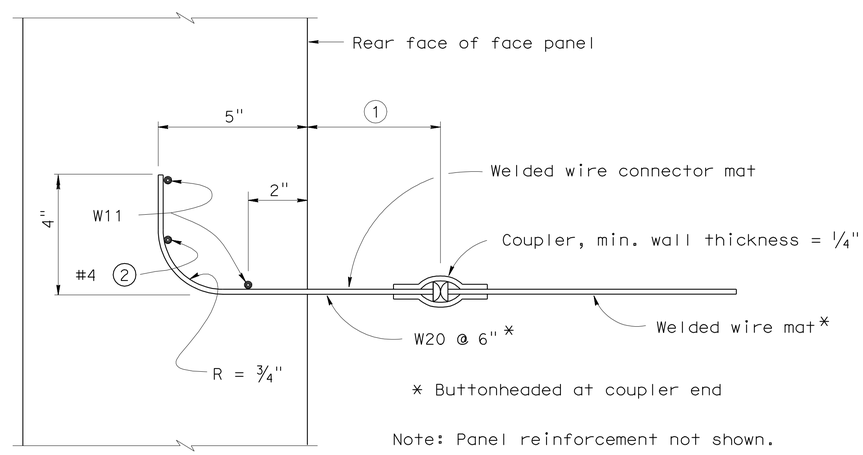

SECTION B-B
No scale

STANDARD DRAWING

FILE NO. xs13-020-2e

APPROVED BY K. GRISWELL
RESPONSIBLE TECHNICAL SPECIALIST
APPROVAL DATE 5-6-08

RELEASED BY ROBERTO LACALLE
RESPONSIBLE OFFICE CHIEF
RELEASE DATE 5-6-08

STATE OF CALIFORNIA
DEPARTMENT OF TRANSPORTATION

DIVISION OF ENGINEERING SERVICES

BRIDGE NO. 56E0078
POST MILE 20.05

RETAINING WALL NO. 375B
MECHANICALLY STABILIZED EMBANKMENT
DETAILS NO. 2

DS OSD 2147A (ENGLISH STANDARD DRAWING "XS" BORDER REV. 01/11/08)

ORIGINAL SCALE IN INCHES FOR REDUCED PLANS 0 1 2 3

CU 08
EA 448401

DISREGARD PRINTS BEARING EARLIER REVISION DATES 3-17-10

REVISION DATES (PRELIMINARY STAGE ONLY)

SHEET 4 OF 15

USERNAME => trmnguye

56e0078s_msedt04.dgn

DATE PLOTTED => 30-APR-2011 TIME PLOTTED => 12:39

DIST.	COUNTY	ROUTE	POST MILES TOTAL PROJECT	SHEET NO.	TOTAL SHEETS
08	Riv	91	15.6/21.6	1630	2028

11-12-10
REGISTERED ENGINEER - CIVIL

4-25-11
PLANS APPROVAL DATE

REGISTERED PROFESSIONAL ENGINEER
MINH THUONG VO
No. C59297
Exp. 06-30-11
CIVIL
STATE OF CALIFORNIA

The State of California or its officers or agents shall not be responsible for the accuracy or completeness of electronic copies of this plan sheet.

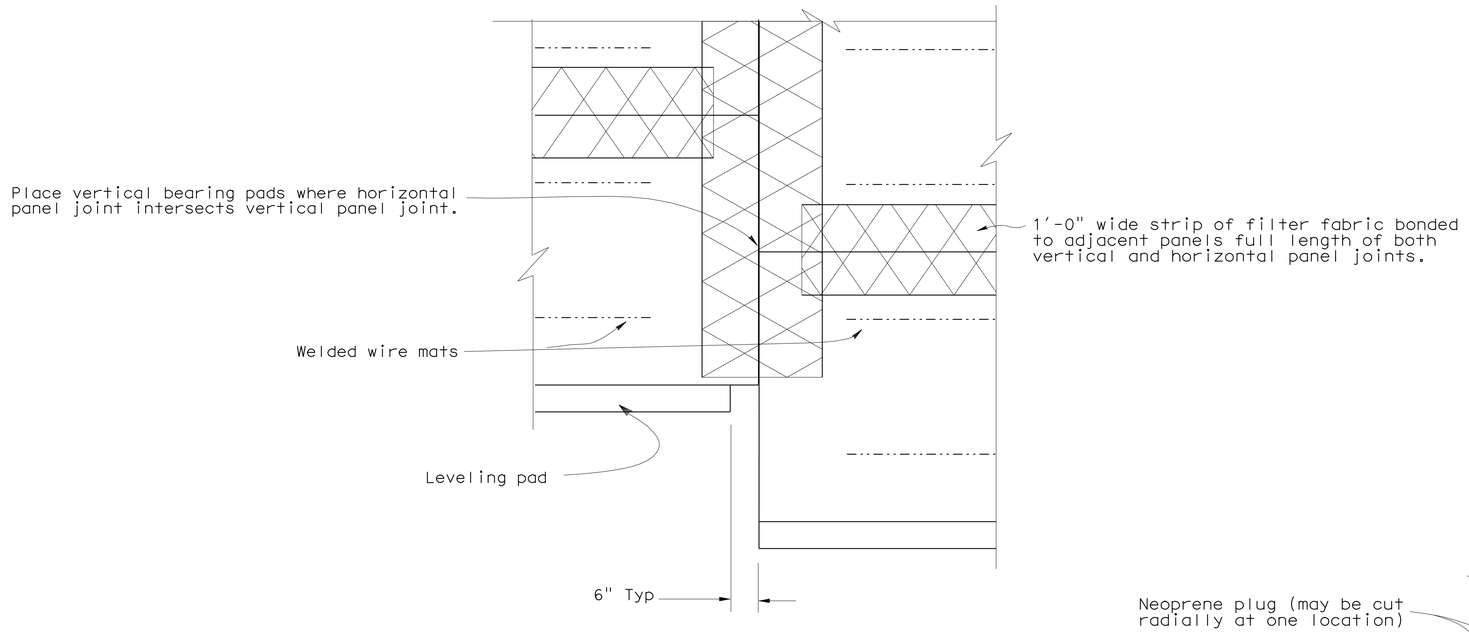

REAR ELEVATION

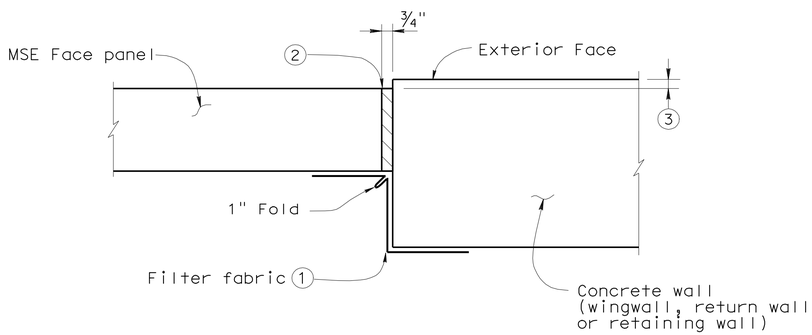

MSE FACE PANEL-TO-CONCRETE WALL JOINT DETAIL

LEGEND:

1. Bond a strip of filter fabric, 1'-6" wide, to back of MSE panels and the adjacent concrete wall for entire length of vertical joint.
2. Bond expansion joint material to the concrete wall.
3. Offset between face of MSE face panel and face of the concrete wall as dictated by location of layout lines shown elsewhere in Project Plans.

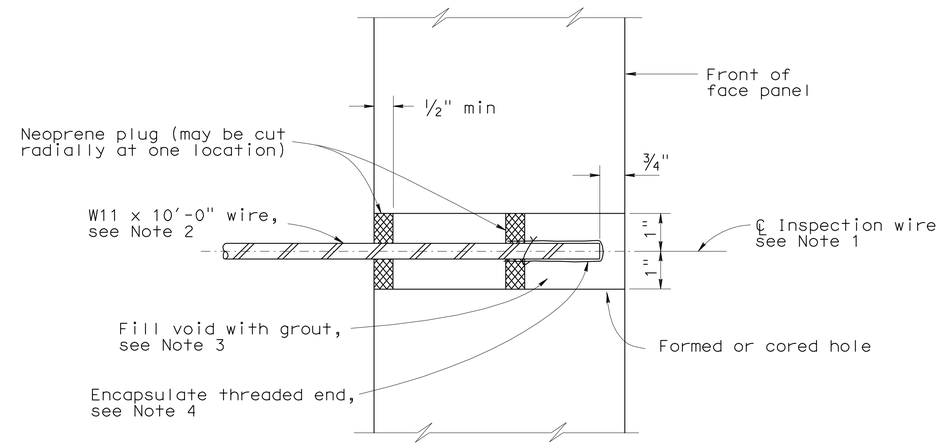

SECTION THRU INSPECTION WIRE

NOTES:

1. Center inspection wire in face panel.
2. Fabricate inspection wires from W11 wire representative of the welded wire mats, with 3/8" dia - 16 UNC threads for at least 1 1/2" of one end.
3. Place inspection wire horizontal and perpendicular to the wall panel prior to backfilling. After backfill placement to a level at least 2'-0" above the inspection wire, dry pack opening with 1000 to 1500 psi mortar. Trowel mortar smooth and flush with face of panel.
4. Encapsulate threaded end with corrosion inhibiting mastic, and secure round vinyl cover with nylon tie.

UNC = Unified coarse threads

STANDARD DRAWING

FILE NO. xs13-020-3e

APPROVED BY K. GRISWELL
RESPONSIBLE TECHNICAL SPECIALIST
APPROVAL DATE 5-6-08

RELEASED BY ROBERTO LACALLE
RESPONSIBLE OFFICE CHIEF
RELEASE DATE 5-6-08

STATE OF CALIFORNIA
DEPARTMENT OF TRANSPORTATION

DIVISION OF ENGINEERING SERVICES

BRIDGE NO. 56E0078
POST MILE 20.05

RETAINING WALL NO. 375B
MECHANICALLY STABILIZED EMBANKMENT
DETAILS NO. 3

DS OSD 2147A (ENGLISH STANDARD DRAWING "XS" BORDER REV. 01/11/08)

ORIGINAL SCALE IN INCHES FOR REDUCED PLANS 0 1 2 3

CU 08
EA 448401

DISREGARD PRINTS BEARING EARLIER REVISION DATES 3-17-10

REVISION DATES (PRELIMINARY STAGE ONLY)

SHEET 5 OF 15

USERNAME => trmnguye

56e0078s_msedt05.dgn

DATE PLOTTED => 30-APR-2011 TIME PLOTTED => 12:39

DIST.	COUNTY	ROUTE	POST MILES TOTAL PROJECT	SHEET NO.	TOTAL SHEETS
08	Riv	91	15.6/21.6	1631	2028

11-12-10
REGISTERED ENGINEER - CIVIL

4-25-11
PLANS APPROVAL DATE

REGISTERED PROFESSIONAL ENGINEER MINH THUONG VO No. C59297 Exp. 06-30-11 CIVIL STATE OF CALIFORNIA

The State of California or its officers or agents shall not be responsible for the accuracy or completeness of electronic copies of this plan sheet.

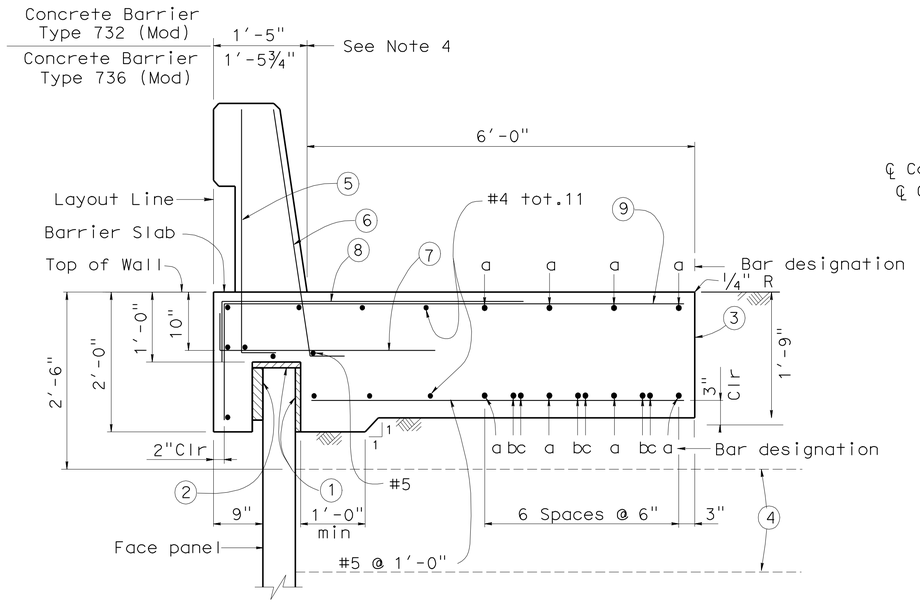

SECTION AT TOP OF WALL WITH BARRIER SLAB AND CONCRETE BARRIER

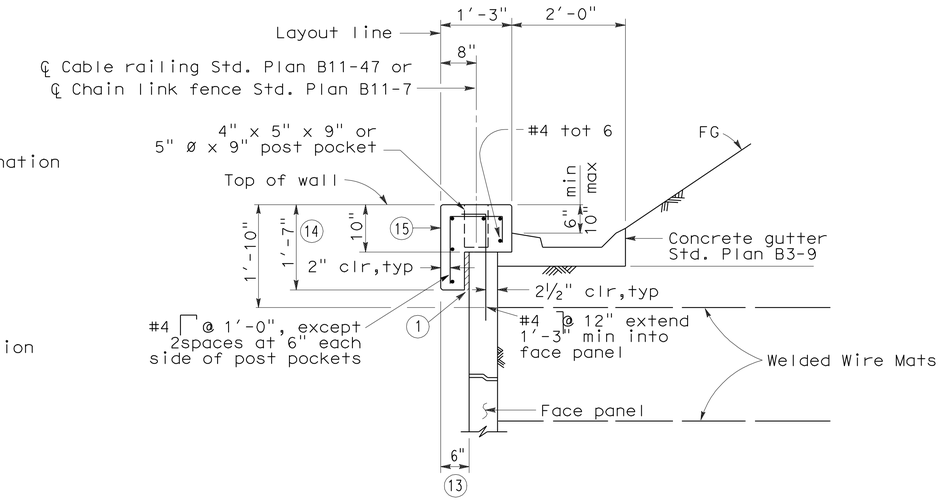

SECTION AT TOP OF WALL WITH COPING AND GUTTER

NOTES:

1. Clearance to reinforcing steel in concrete barrier to be 1".
2. Not all barrier reinforcement shown.
3. No expansion joints in concrete barrier or barrier slab within MSE wall limits.
4. Specific concrete barrier to be utilized as shown on typical section elsewhere in Project Plans.
5. Install cable railing or chain link fence when indicated in Project Plans.

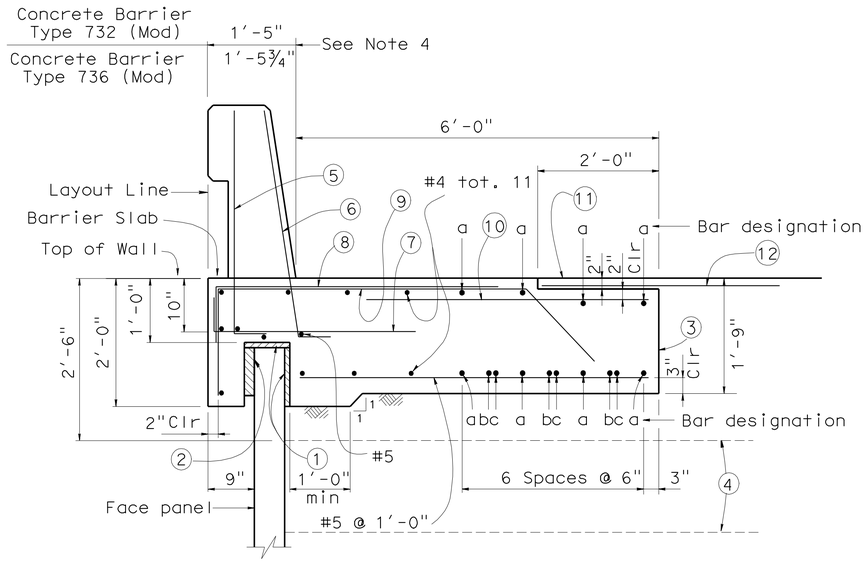

SECTION AT TOP OF WALL WITH BARRIER SLAB WITH PAVING NOTCH AND CONCRETE BARRIER

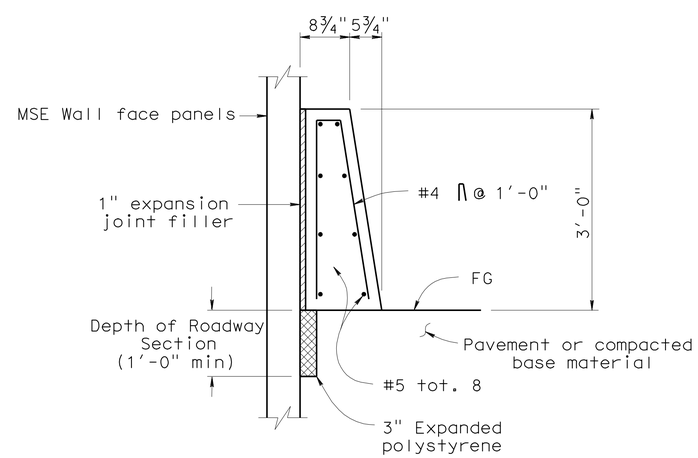

CONCRETE BARRIER TYPE 60D (MOD) AT FACE OF MSE WALL

LEGEND:

1. 1" Expanded polystyrene.
2. 2" Expanded polystyrene. Recess expanded polystyrene 2" into barrier slab.
3. Contact joint.
4. Welded Wire Mat Soil reinforcement.
5. #5 6¼" @ 1'-4" (To be in place prior to barrier slab concrete).
6. #5 6¼" @ 8" (To be in place prior to barrier slab concrete).
7. #5 6¼" 3'-4" @ 1'-0"
8. #5 4'-7" @ 1'-0" bundled with 9 bars.
9. #5 5'-0" 1'-3¾" @ 1'-0"
10. #5 X 1400 @ 1'-0"

    "a" bar = #6 continuous.
    "b" bar = #6 X 59'-0"
    "c" bar = #6 X 49'-2"
    Place "b" and "c" bars at beginning and ending ends of barrier slab.
11. AC Overlay on barrier slab (see Road Plans).
12. 4'-0" wide pavement reinforcing fabric.
13. Except 9" when coping and barrier slab occur along the top of the same wall.
14. Except 2'-0" when coping and barrier slab occur along the top of the same wall.
15. ½" expansion joints in coping at every fourth panel joint.

RETAINING WALL NO. 375B

MECHANICALLY STABILIZED EMBANKMENT

DETAILS NO. 4

STANDARD DRAWING

FILE NO. xs13-020-4e

APPROVED BY K. GRISWELL, RESPONSIBLE TECHNICAL SPECIALIST — APPROVAL DATE 5-6-08

RELEASED BY ROBERTO LACALLE, RESPONSIBLE OFFICE CHIEF — RELEASE DATE 5-6-08

STATE OF CALIFORNIA DEPARTMENT OF TRANSPORTATION

DIVISION OF ENGINEERING SERVICES

BRIDGE NO. 56E0078

POST MILE 20.05

CU 08
EA 448401

DS OSD 2147A (ENGLISH STANDARD DRAWING "XS" BORDER REV. 01/11/08)

ORIGINAL SCALE IN INCHES FOR REDUCED PLANS 0 1 2 3

DISREGARD PRINTS BEARING EARLIER REVISION DATES 3-17-10

REVISION DATES (PRELIMINARY STAGE ONLY)

SHEET 6 OF 15

USERNAME => trmnguye

56e0078s_msedt06.dgn

DATE PLOTTED => 30-APR-2011 TIME PLOTTED => 12:40

DIST.	COUNTY	ROUTE	POST MILES TOTAL PROJECT	SHEET NO.	TOTAL SHEETS
08	Riv	91	15.6/21.6	1632	2028

11-12-10
REGISTERED ENGINEER - CIVIL

4-25-11
PLANS APPROVAL DATE

REGISTERED PROFESSIONAL ENGINEER MINH THUONG VO No. C59297 Exp. 06-30-11 CIVIL STATE OF CALIFORNIA

The State of California or its officers or agents shall not be responsible for the accuracy or completeness of electronic copies of this plan sheet.

NOTES:

1. Low end of subgrade drain shown, at high end install cap at end of ¾" slotted pipe. Subgrade drain located at end of structure approach slab, see "Subgrade Drain Detail".
2. Not all barrier reinforcement shown.
3. Outlet details shown elsewhere in Project Plans.
4. At acute corners of approach slab, bend reinforcement as required to clear expansion joint.
5. Specific concrete barrier to be utilized as shown on typical section elsewhere in Project Plans.

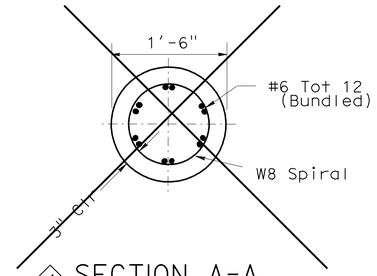

1 SECTION A-A

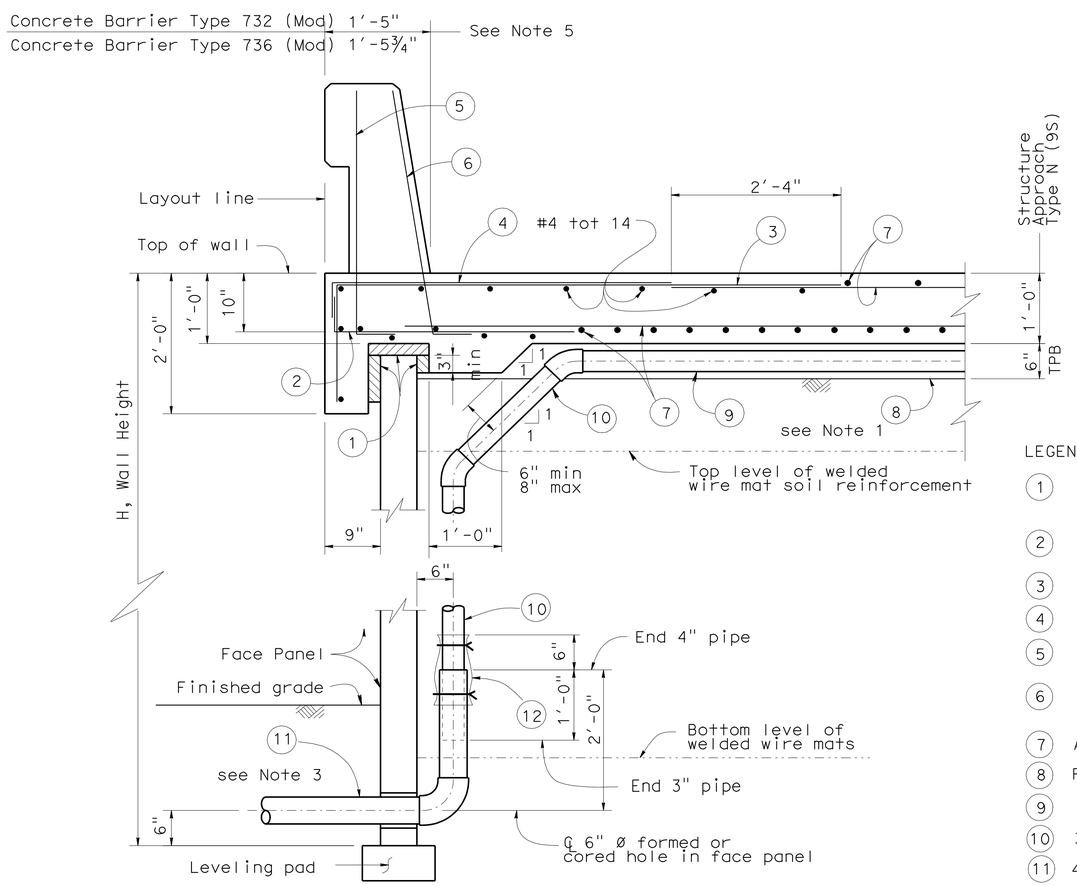

SECTION AT TOP OF WALL WITH STRUCTURE APPROACH SLAB AND CONCRETE BARRIER

LEGEND:

1. 2" Expanded polystyrene recessed 2" into barrier slab at front of MSE face panel.
2. #5 6¼" 3'-4" @ 1'-0"
3. #5 6'-10⅝" @ 1'-0"
4. #5 4'-7" @ 1'-0" bundle with 3 bars.
5. #5 L @ 1'-4" (To be in place prior to 6¼" approach slab concrete).
6. #5 L @ 8" (To be in place prior to 6¼" approach slab concrete).
7. Approach slab reinforcement.
8. Filter fabric.
9. 3" Plastic pipe (slotted).
10. 3" Plastic pipe and fittings (unslotted).
11. 4" Sch 80 PVC outlet pipe and fittings (unslotted).
12. 1'-0" wide x 2'-0" filter fabric wrapped around pipe and secured with nylon ties.
13. 1" Expanded polystyrene.
14. Five elastomeric bearing pads ¾" x 4" x 6" bonded to top of MSE face panel.
15. 0.5" Expanded polystyrene.

2

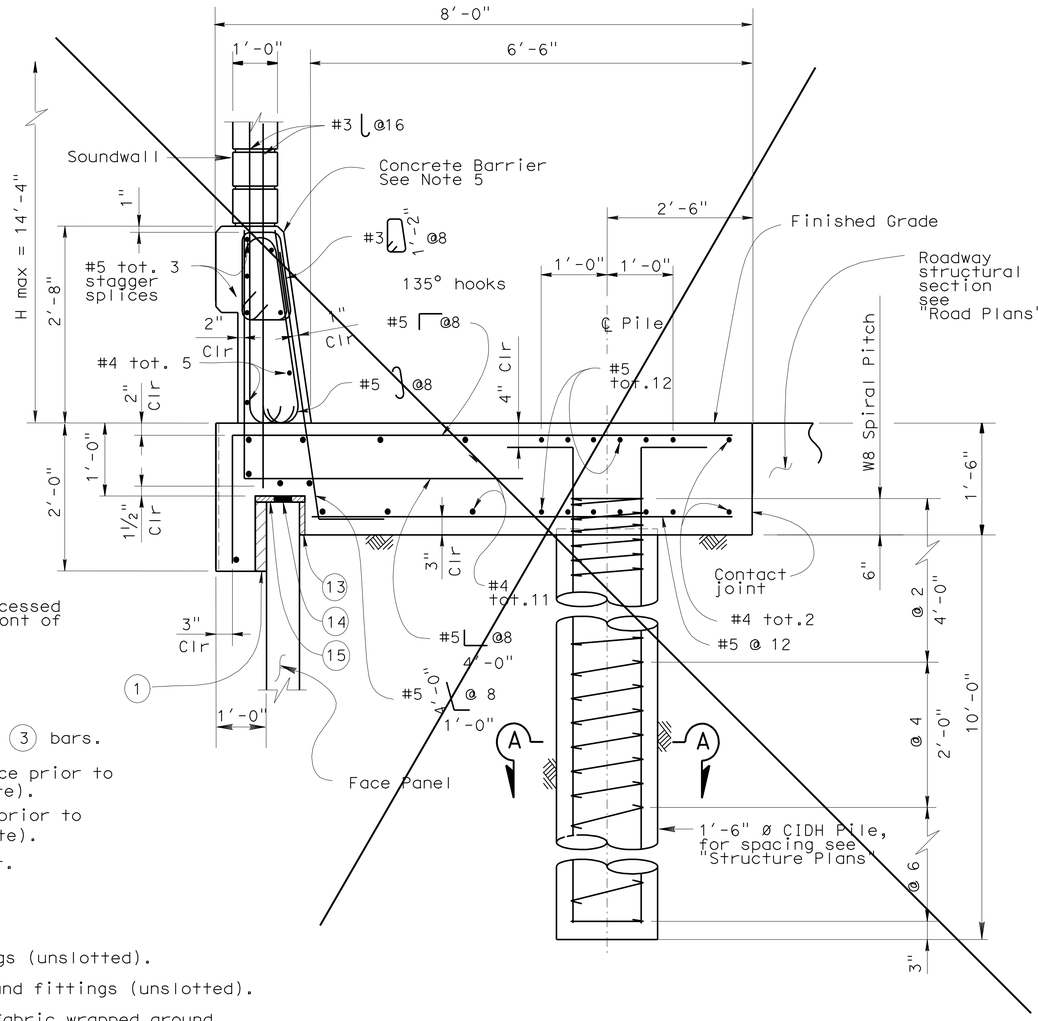

1 SECTION AT TOP OF WALL WITH SOUNDWALL AND CONCRETE BARRIER

STANDARD DRAWING			
FILE NO. xs13-020-5e	APPROVED BY K. GRISWELL (RESPONSIBLE TECHNICAL SPECIALIST)	RELEASED BY ROBERTO LACALLE (RESPONSIBLE OFFICE CHIEF)	
	APPROVAL DATE 5-6-08	RELEASE DATE 5-6-08	

1 Detail not used
2 Notes not used

STATE OF CALIFORNIA DEPARTMENT OF TRANSPORTATION

DIVISION OF ENGINEERING SERVICES

BRIDGE NO. 56E0078
POST MILE 20.05

RETAINING WALL NO. 375B
MECHANICALLY STABILIZED EMBANKMENT
DETAILS NO. 5

DS OSD 2147A (ENGLISH STANDARD DRAWING "XS" BORDER REV. 01/11/08)

ORIGINAL SCALE IN INCHES FOR REDUCED PLANS 0 1 2 3

CU 08
EA 448401

DISREGARD PRINTS BEARING EARLIER REVISION DATES 3-17-10 7-15-10

REVISION DATES (PRELIMINARY STAGE ONLY)

SHEET 7 OF 15

USERNAME => trmnguye

56e0078s_msedt07.dgn

DATE PLOTTED => 30-APR-2011 TIME PLOTTED => 12:40

DIST.	COUNTY	ROUTE	POST MILES TOTAL PROJECT	SHEET NO.	TOTAL SHEETS
08	Riv	91	15.6/21.6	1633	2028

11-12-10
REGISTERED ENGINEER - CIVIL

4-25-11
PLANS APPROVAL DATE

REGISTERED PROFESSIONAL ENGINEER MINH THUONG VO No. C59297 Exp. 06-30-11 CIVIL STATE OF CALIFORNIA

The State of California or its officers or agents shall not be responsible for the accuracy or completeness of electronic copies of this plan sheet.

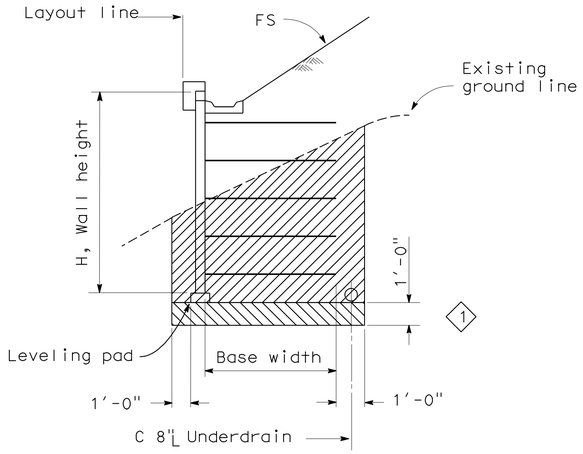

LIMITS OF EXCAVATION
No Scale

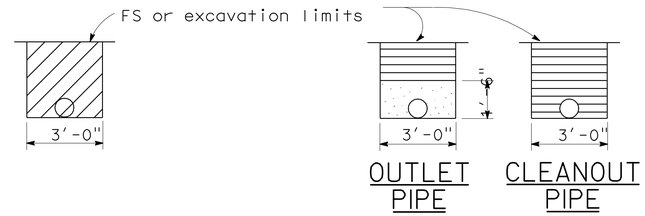

EXCAVATION BACKFILL

OUTLET OR CLEANOUT PIPE FOR UNDERDRAIN
No Scale

ABBREVIATIONS

OG	Original ground
FS	Planned finished surface
GP	Planned grading plane

LEGEND

	Limits of structure excavation
	Limits of structure backfill
	Limits of permeable material
1	Limits of structure overexcavation

NOTES:

1. Limits to FS except to GP when in roadway section.
2. Locate 8" perforated underdrain below bottom level of welded wire mats.
3. Maximum spacing of outlet pipes is 200 ft.
4. At sags in profile of underdrain, install outlet pipe for each direction of flow.

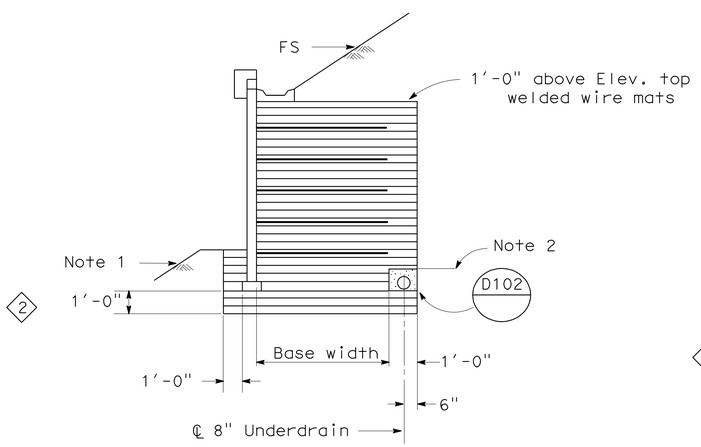

SLOPING FINISHED SURFACE

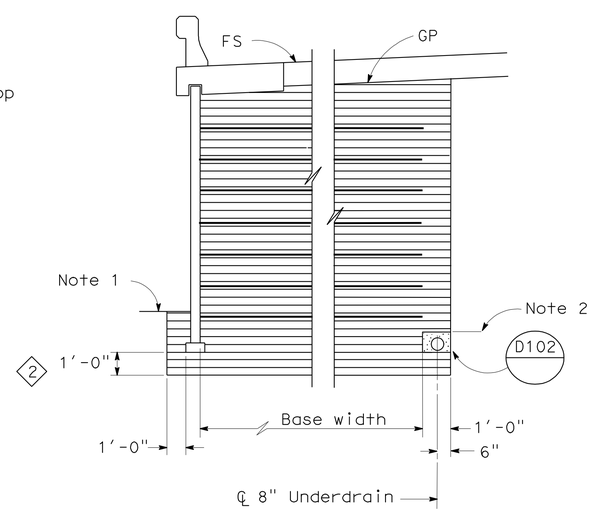

ROADWAY SECTION WITH BASE WIDTH 16' OR GREATER

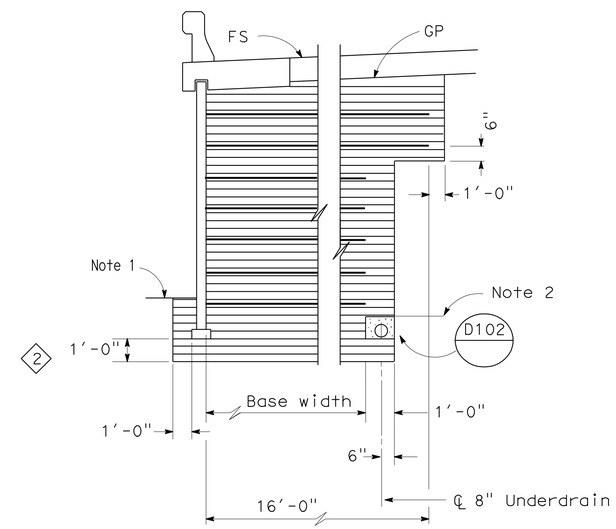

ROADWAY SECTION WITH BASE WIDTH LESS THAN 16'

LIMITS OF BACKFILL
No Scale

STANDARD DRAWING

FILE NO. xs13-020-6e

APPROVED BY K. GRISWELL
RESPONSIBLE TECHNICAL SPECIALIST
APPROVAL DATE 5-6-08

RELEASED BY ROBERTO LACALLE
RESPONSIBLE OFFICE CHIEF
RELEASE DATE 5-6-08

1 Add Limits of Overexcavation
2 Add Limits of Backfill

STATE OF CALIFORNIA DEPARTMENT OF TRANSPORTATION

DIVISION OF ENGINEERING SERVICES

BRIDGE NO. 56E0078
POST MILE 20.05

RETAINING WALL NO. 375B
MECHANICALLY STABILIZED EMBANKMENT
DETAILS NO. 6

DS OSD 2147A (ENGLISH STANDARD DRAWING "XS" BORDER REV. 01/11/08)

ORIGINAL SCALE IN INCHES FOR REDUCED PLANS 0 1 2 3

CU 08
EA 448401

DISREGARD PRINTS BEARING EARLIER REVISION DATES

REVISION DATES (PRELIMINARY STAGE ONLY) 3-11-10 7-15-10 9-13-10 11-03-10

SHEET 8 OF 15

USERNAME => trmnguye

56e0078s_msedt08.dgn

DATE PLOTTED => 30-APR-2011 TIME PLOTTED => 12:40

Dist	COUNTY	ROUTE	POST MILES TOTAL PROJECT	SHEET No.	TOTAL SHEETS
08	Riv	91	15.6/21.6	1634	2028

LICENSED LANDSCAPE ARCHITECT

4-25-11
PLANS APPROVAL DATE

LICENSED LANDSCAPE ARCHITECT
Matthew Perry Hall No. 4399
Signature
10/31/2011
Renewal Date
11/12/2010
Date
STATE OF CALIFORNIA

THE STATE OF CALIFORNIA OR ITS OFFICERS OR AGENTS SHALL NOT BE RESPONSIBLE FOR THE ACCURACY OR COMPLETENESS OF SCANNED COPIES OF THIS PLAN SHEET.

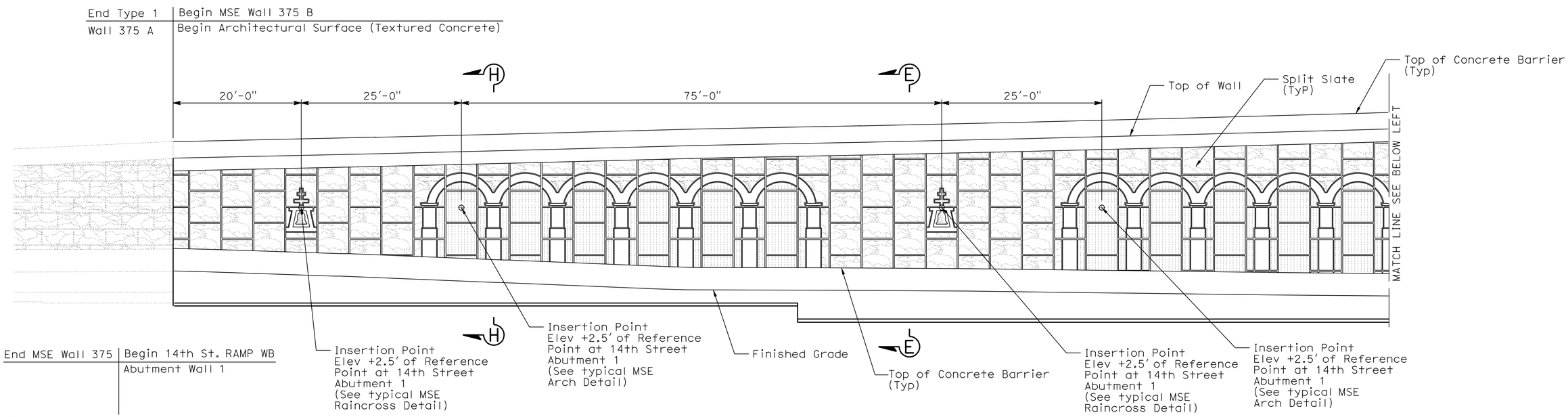

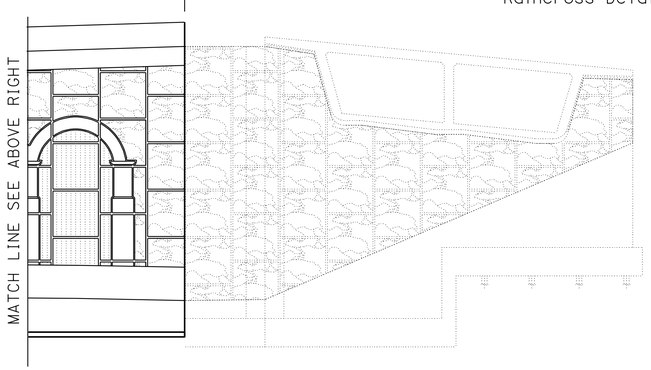

NOTES:
1. For Section E-E, see "Architectural Details No. 1" sheet.
2. For Section H-H, see "Architectural Details No. 2" sheet.

ELEVATION FOR FRACTURED RIB SPLIT FACE TEXTURE MSE RETAINING WALL 375 B

1/8"=1'-0"

THIS PLAN IS ACCURATE FOR ARCHITECTUAL TREATMENT WORK ONLY.

	BY	CHECKED
DESIGN	MATTHEW HALL	MIRIAM BISHOP
DETAILS	Y. Tang	MIRIAM BISHOP
QUANTITIES	A. McPhee	M. Vo

STATE OF CALIFORNIA
DEPARTMENT OF TRANSPORTATION

DIVISION OF ENGINEERING SERVICES
STRUCTURE DESIGN
DESIGN BRANCH 10

BRIDGE NO. 56E0078
POST MILE 20.05

RETAINING WALL NO. 375B
ARCHITECTURAL SURFACE NO. 1

STRUCTURES DESIGN DETAIL SHEET (ENGLISH) (REV. 10/25/05)

ORIGINAL SCALE IN INCHES FOR REDUCED PLANS 0 1 2 3

CU 08
EA 448401

DISREGARD PRINTS BEARING EARLIER REVISION DATES → 8-18-10

REVISION DATES

SHEET 9 OF 15

FILE => 56e0078sars09.dgn

USERNAME => trmnguye DATE PLOTTED => 30-APR-2011 TIME PLOTTED => 12:40

Dist	COUNTY	ROUTE	POST MILES TOTAL PROJECT	SHEET No.	TOTAL SHEETS
08	Riv	91	15.6/21.6	1635	2028

LICENSED LANDSCAPE ARCHITECT

4-25-11
PLANS APPROVAL DATE

LICENSED LANDSCAPE ARCHITECT
Matthew Perry Hall No. 4393
Signature
10/31/2011
Renewal Date
11/12/2010
Date
STATE OF CALIFORNIA

THE STATE OF CALIFORNIA OR ITS OFFICERS OR AGENTS SHALL NOT BE RESPONSIBLE FOR THE ACCURACY OR COMPLETENESS OF SCANNED COPIES OF THIS PLAN SHEET.

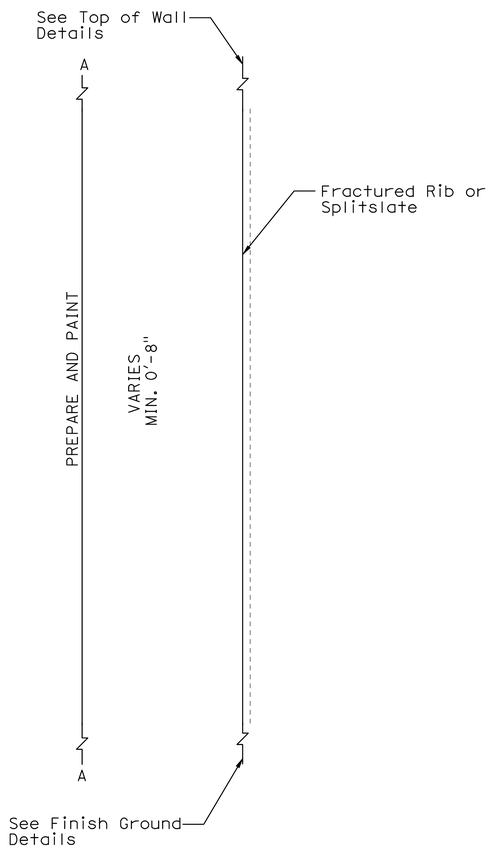

SECTION E-E

No Scale

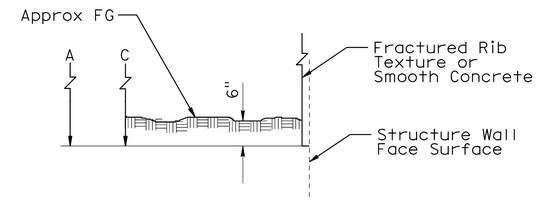

FINISH GROUND DETAIL
TYPICAL DETAIL AT FINISH GRADE

No Scale

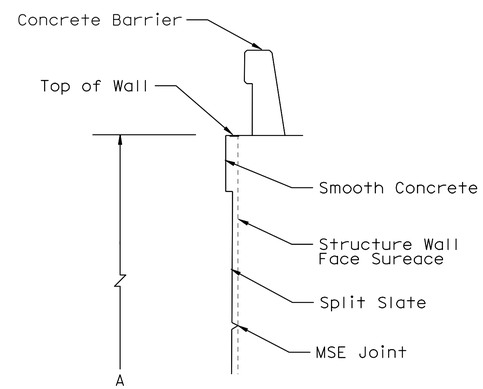

TOP OF WALL DETAIL
TYPICAL WITH CONCRETE BARRIER

No Scale

DESIGN	BY MATTHEW HALL	CHECKED MIRIAM BISHOP	
DETAILS	BY Y. Tang	CHECKED MIRIAM BISHOP	
QUANTITIES	BY A. McPhee	CHECKED M. Vo	

STATE OF CALIFORNIA
DEPARTMENT OF TRANSPORTATION

DIVISION OF ENGINEERING SERVICES
STRUCTURE DESIGN
DESIGN BRANCH 10

BRIDGE NO. 56E0078
POST MILE 20.05

RETAINING WALL NO. 375B
ARCHITECTURAL DETAILS NO. 1

STRUCTURES DESIGN DETAIL SHEET (ENGLISH) (REV. 10/25/05)

ORIGINAL SCALE IN INCHES FOR REDUCED PLANS 0 1 2 3

CU 08
EA 448401

DISREGARD PRINTS BEARING EARLIER REVISION DATES 8-19-10

REVISION DATES

SHEET 10 OF 15

FILE => 56e0078sarsdt10.dgn

USERNAME => trmmgoye DATE PLOTTED => 30-APR-2011 TIME PLOTTED => 12:40

Dist	COUNTY	ROUTE	POST MILES TOTAL PROJECT	SHEET No.	TOTAL SHEETS
08	Riv	91	15.6/21.6	1636	2028

LICENSED LANDSCAPE ARCHITECT

4-25-11
PLANS APPROVAL DATE

LICENSED LANDSCAPE ARCHITECT
Matthew Perry Hall No. 4393
Signature
10/31/2011
Renewal Date
11/12/2010
Date
STATE OF CALIFORNIA

THE STATE OF CALIFORNIA OR ITS OFFICERS OR AGENTS SHALL NOT BE RESPONSIBLE FOR THE ACCURACY OR COMPLETENESS OF SCANNED COPIES OF THIS PLAN SHEET.

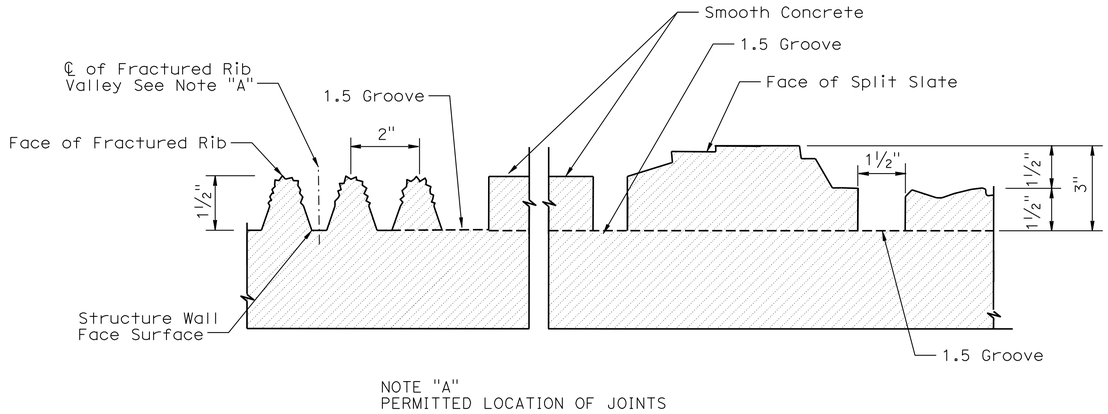

NOTE "A"
PERMITTED LOCATION OF JOINTS

TYPICAL FRACTURED RIB WITH SPLIT SLATE TEXTURE

NO SCALE

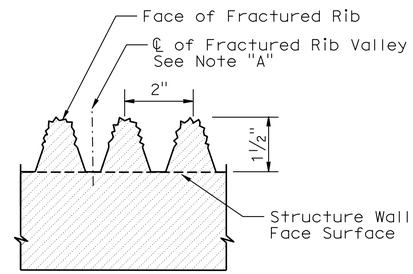

TYPICAL FRACTURED RIB TEXTURE

NO SCALE

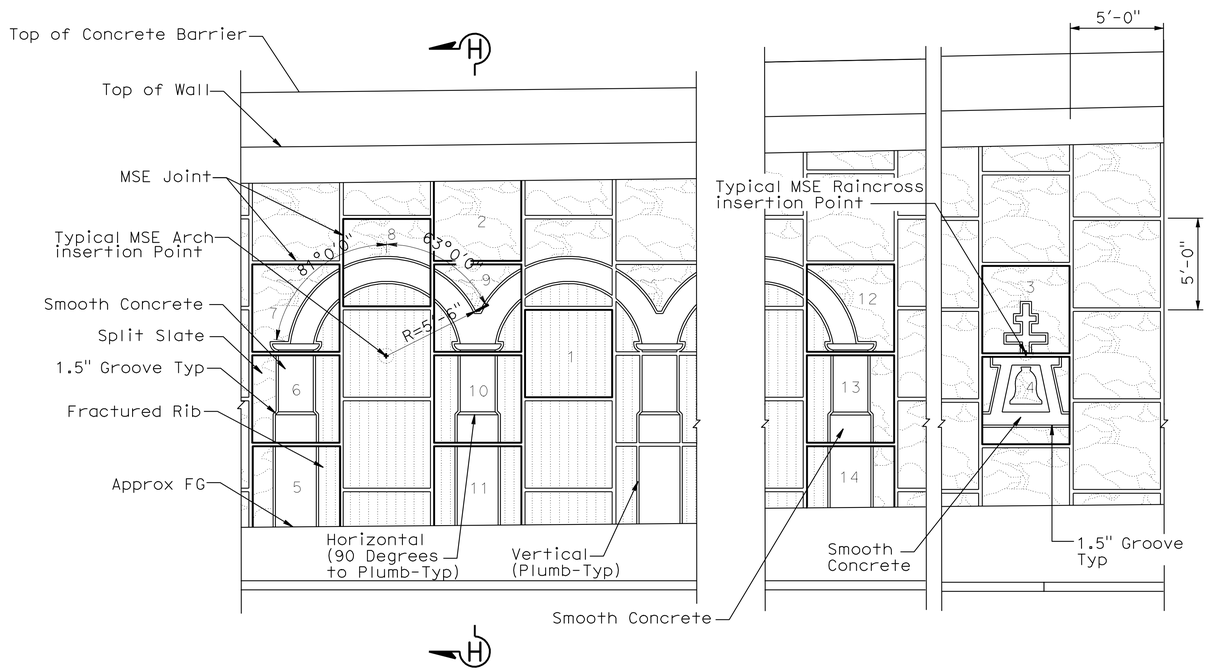

TYPICAL ARCHITECTURAL SURFACE ELEVATION FOR MECHANICALLY STABILIZED EMBANKMENT (MSE) WALLS

NO SCALE

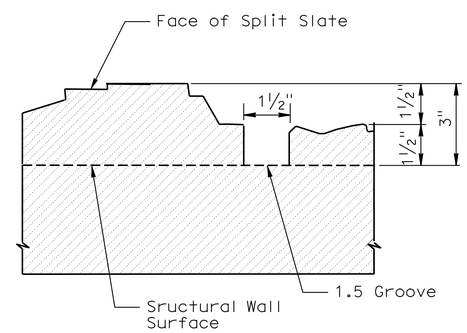

TYPICAL SPLIT SLATE TEXTURE

NO SCALE

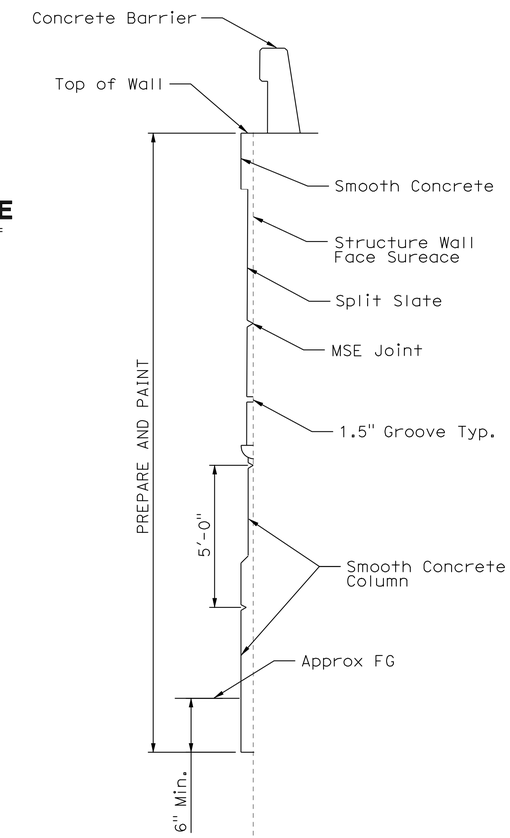

SECTION H-H

NO SCALE

	BY	CHECKED
DESIGN	MATTHEW HALL	MIRIAM BISHOP
DETAILS	Y. Tang	MIRIAM BISHOP
QUANTITIES	A. McPhee	M. Vo

STATE OF CALIFORNIA
DEPARTMENT OF TRANSPORTATION

DIVISION OF ENGINEERING SERVICES
STRUCTURE DESIGN
DESIGN BRANCH 10

BRIDGE NO. 56E0078
POST MILE 20.05

RETAINING WALL NO. 375B
ARCHITECTURAL DETAILS NO. 2

STRUCTURES DESIGN DETAIL SHEET (ENGLISH) (REV. 10/25/05)

ORIGINAL SCALE IN INCHES FOR REDUCED PLANS 0 1 2 3

CU 08
EA 448401

DISREGARD PRINTS BEARING EARLIER REVISION DATES → 8-19-10

REVISION DATES

SHEET 11 OF 15

FILE => 56e0078sarsdt11.dgn

USERNAME => trmnguye DATE PLOTTED => 30-APR-2011 TIME PLOTTED => 12:40

Dist	COUNTY	ROUTE	POST MILES TOTAL PROJECT	SHEET No.	TOTAL SHEETS
08	Riv	91	15.6/21.6	1637	2028

LICENSED LANDSCAPE ARCHITECT

4-25-11
PLANS APPROVAL DATE

LICENSED LANDSCAPE ARCHITECT
Matthew Perry Hall No. 4401
Signature
10/31/2011
Renewal Date
11/12/2010
Date
STATE OF CALIFORNIA

THE STATE OF CALIFORNIA OR ITS OFFICERS OR AGENTS SHALL NOT BE RESPONSIBLE FOR THE ACCURACY OR COMPLETENESS OF SCANNED COPIES OF THIS PLAN SHEET.

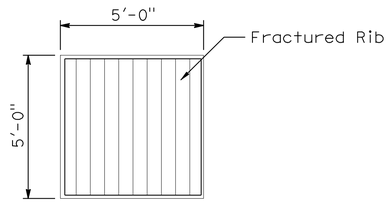

PANEL 1

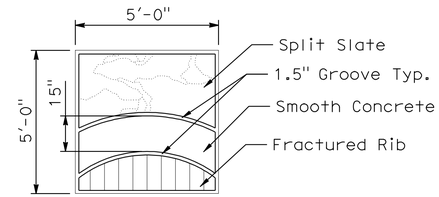

PANEL 8

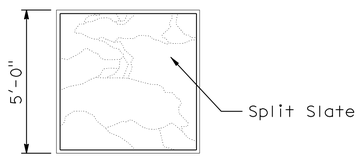

PANEL 2

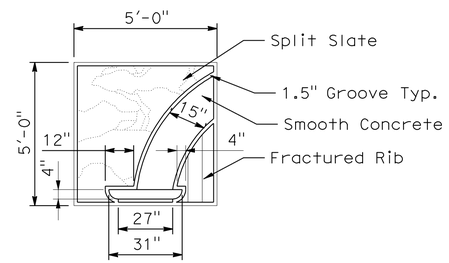

PANEL 7

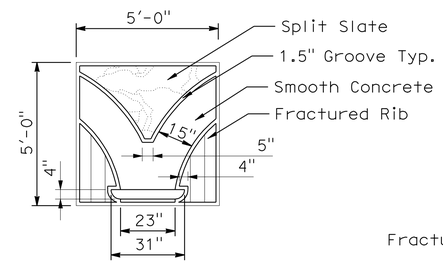

PANEL 9

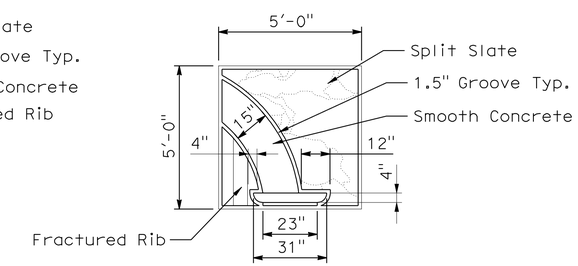

PANEL 12

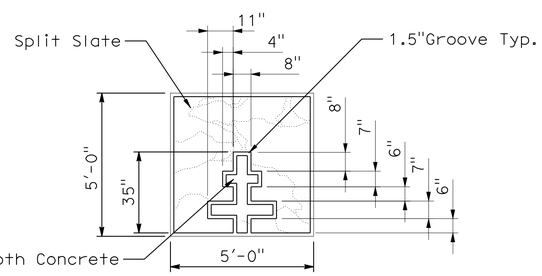

PANEL 3

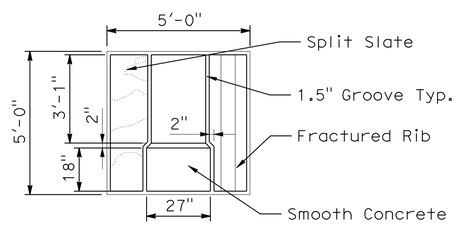

PANEL 6

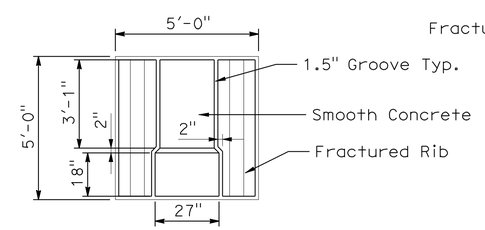

PANEL 10

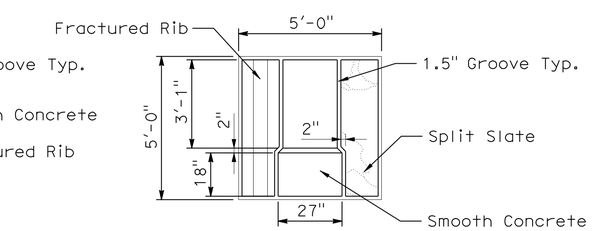

PANEL 13

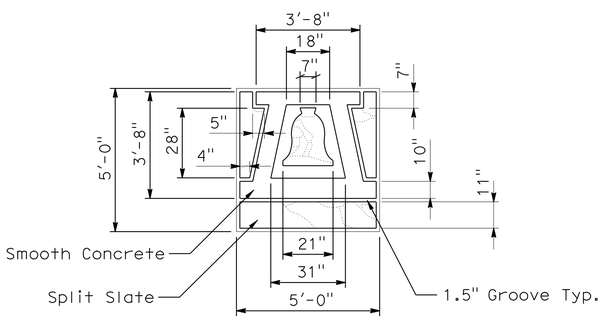

PANEL 4

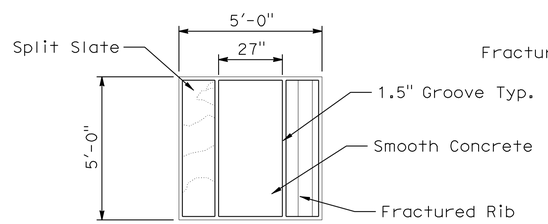

PANEL 5

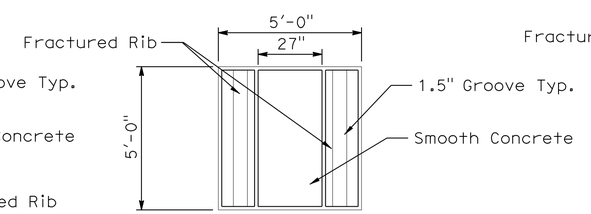

PANEL 11

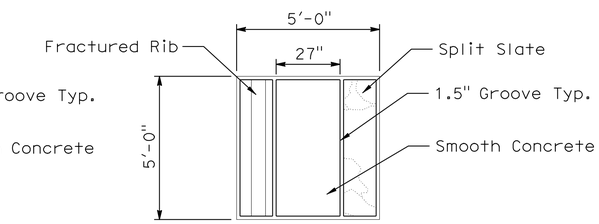

PANEL 14

ARCHITECTURAL SURFACE FOR TYPICAL MECHANICALLY STABILIZED EMBANKMENT (MSE) PANELS

No Scale

DESIGN	BY MATTHEW HALL	CHECKED MIRIAM BISHOP	
DETAILS	BY Y. Tang	CHECKED MIRIAM BISHOP	
QUANTITIES	BY A. McPhee	CHECKED M. Vo	

STATE OF CALIFORNIA
DEPARTMENT OF TRANSPORTATION

DIVISION OF ENGINEERING SERVICES
STRUCTURE DESIGN
DESIGN BRANCH 10

BRIDGE NO. 56E0078
POST MILE 20.05

RETAINING WALL NO. 375B
ARCHITECTURAL DETAILS NO. 3

STRUCTURES DESIGN DETAIL SHEET (ENGLISH) (REV. 10/25/05)

ORIGINAL SCALE IN INCHES FOR REDUCED PLANS 0 1 2 3

CU 08
EA 448401

DISREGARD PRINTS BEARING EARLIER REVISION DATES 8-18-10

REVISION DATES

SHEET 12 OF 15

FILE => 56e0078sarsdt12.dgn

USERNAME => trmnguye DATE PLOTTED => 30-APR-2011 TIME PLOTTED => 12:41

DIST	COUNTY	ROUTE	POST MILES TOTAL PROJECT	SHEET No	TOTAL SHEETS
08	Riv	91	15.6/21.6	1638	2028

GEOTECHNICAL PROFESSIONAL — DATE 11/03/10

4-25-11
PLANS APPROVAL DATE

REGISTERED PROFESSIONAL ENGINEER — Farid Motamed — No. 2738 — Exp. 6-30-11 — GEOTECHNICAL — STATE OF CALIFORNIA

The State of California or its officers or agents shall not be responsible for the accuracy or completeness of electronic copies of this plan sheet.

California Department of Transportation
5900 Folsom Boulevard
Sacramento, CA 95819

URS Corporation
2020 East First Street, Suite 400
Santa Ana, CA 92705

GROUP SYMBOLS AND NAMES

Graphic / Symbol	Group Names
GW	Well-graded GRAVEL Well-graded GRAVEL with SAND
GP	Poorly graded GRAVEL Poorly graded GRAVEL with SAND
GW-GM	Well-graded GRAVEL with SILT Well-graded GRAVEL with SILT and SAND
GW-GC	Well-graded GRAVEL with CLAY (or SILTY CLAY) Well-graded GRAVEL with CLAY and SAND (or SILTY CLAY and SAND)
GP-GM	Poorly graded GRAVEL with SILT Poorly graded GRAVEL with SILT and SAND
GP-GC	Poorly graded GRAVEL with CLAY (or SILTY CLAY) Poorly graded GRAVEL with CLAY and SAND (or SILTY CLAY and SAND)
GM	SILTY GRAVEL SILTY GRAVEL with SAND
GC	CLAYEY GRAVEL CLAYEY GRAVEL with SAND
GC-GM	SILTY, CLAYEY GRAVEL SILTY, CLAYEY GRAVEL with SAND
SW	Well-graded SAND Well-graded SAND with GRAVEL
SP	Poorly graded SAND Poorly graded SAND with GRAVEL
SW-SM	Well-graded SAND with SILT Well-graded SAND with SILT and GRAVEL
SW-SC	Well-graded SAND with CLAY (or SILTY CLAY) Well-graded SAND with CLAY and GRAVEL (or SILTY CLAY and GRAVEL)
SP-SM	Poorly graded SAND with SILT Poorly graded SAND with SILT and GRAVEL
SP-SC	Poorly graded SAND with CLAY (or SILTY CLAY) Poorly graded SAND with CLAY and GRAVEL (or SILTY CLAY and GRAVEL)
SM	SILTY SAND SILTY SAND with GRAVEL
SC	CLAYEY SAND CLAYEY SAND with GRAVEL
SC-SM	SILTY, CLAYEY SAND SILTY, CLAYEY SAND with GRAVEL
PT	PEAT
	COBBLES COBBLES and BOULDERS BOULDERS

Graphic / Symbol	Group Names
CL	Lean CLAY Lean CLAY with SAND Lean CLAY with GRAVEL SANDY lean CLAY SANDY lean CLAY with GRAVEL GRAVELLY lean CLAY GRAVELLY lean CLAY with SAND
CL-ML	SILTY CLAY SILTY CLAY with SAND SILTY CLAY with GRAVEL SANDY SILTY CLAY SANDY SILTY CLAY with GRAVEL GRAVELLY SILTY CLAY GRAVELLY SILTY CLAY with SAND
ML	SILT SILT with SAND SILT with GRAVEL SANDY SILT SANDY SILT with GRAVEL GRAVELLY SILT GRAVELLY SILT with SAND
OL	ORGANIC lean CLAY ORGANIC lean CLAY with SAND ORGANIC lean CLAY with GRAVEL SANDY ORGANIC lean CLAY SANDY ORGANIC lean CLAY with GRAVEL GRAVELLY ORGANIC lean CLAY GRAVELLY ORGANIC lean CLAY with SAND
OL	ORGANIC SILT ORGANIC SILT with SAND ORGANIC SILT with GRAVEL SANDY ORGANIC SILT SANDY ORGANIC SILT with GRAVEL GRAVELLY ORGANIC SILT GRAVELLY ORGANIC SILT with SAND
CH	Fat CLAY Fat CLAY with SAND Fat CLAY with GRAVEL SANDY fat CLAY SANDY fat CLAY with GRAVEL GRAVELLY fat CLAY GRAVELLY fat CLAY with SAND
MH	Elastic SILT Elastic SILT with SAND Elastic SILT with GRAVEL SANDY elastic SILT SANDY elastic SILT with GRAVEL GRAVELLY elastic SILT GRAVELLY elastic SILT with SAND
OH	ORGANIC fat CLAY ORGANIC fat CLAY with SAND ORGANIC fat CLAY with GRAVEL SANDY ORGANIC fat CLAY SANDY ORGANIC fat CLAY with GRAVEL GRAVELLY ORGANIC fat CLAY GRAVELLY ORGANIC fat CLAY with SAND
OH	ORGANIC elastic SILT ORGANIC elastic SILT with SAND ORGANIC elastic SILT with GRAVEL SANDY elastic ELASTIC SILT SANDY ORGANIC elastic SILT with GRAVEL GRAVELLY ORGANIC elastic SILT GRAVELLY ORGANIC elastic SILT with SAND
OL/OH	ORGANIC SOIL ORGANIC SOIL with SAND ORGANIC SOIL with GRAVEL SANDY ORGANIC SOIL SANDY ORGANIC SOIL with GRAVEL GRAVELLY ORGANIC SOIL GRAVELLY ORGANIC SOIL with SAND

FIELD AND LABORATORY TESTS

C	Consolidation (ASTM D 2435-04)
CL	Collapse Potential (ASTM D 5333-03)
CP	Compaction Curve (CTM 216 - 06)
CR	Corrosion, Sulfates, Chlorides (CTM 643 - 99; CTM 417 - 06; CTM 422 - 06)
CU	Consolidated Undrained Triaxial (ASTM D 4767-02)
DS	Direct Shear (ASTM D 3080-04)
EI	Expansion Index (ASTM D 4829-03)
M	Moisture Content (ASTM D 2216-05)
OC	Organic Content (ASTM D 2974-07)
P	Permeability (CTM 220 - 05)
PA	Particle Size Analysis (ASTM D 422-63 [2002])
PI	Liquid Limit, Plastic Limit, Plasticity Index (AASHTO T 89-02, AASHTO T 90-00)
PL	Point Load Index (ASTM D 5731-05)
PM	Pressure Meter
PP	Pocket Penetrometer
R	R-Value (CTM 301 - 00)
SE	Sand Equivalent (CTM 217 - 99)
SG	Specific Gravity (AASHTO T 100-06)
SL	Shrinkage Limit (ASTM D 427-04)
SW	Swell Potential (ASTM D 4546-03)
TV	Pocket Torvane
UC	Unconfined Compression - Soil (ASTM D 2166-06) Unconfined Compression - Rock (ASTM D 2938-95)
UU	Unconsolidated Undrained Triaxial (ASTM D 2850-03)
UW	Unit Weight (ASTM D 4767-04)
VS	Vane Shear (AASHTO T 223-96 [2004])

CONSISTENCY OF COHESIVE SOILS

Descriptor	Unconfined Compressive Strength (tsf)	Pocket Penetrometer (tsf)	Torvane (tsf)	Field Approximation
Very Soft	< 0.25	< 0.25	< 0.12	Easily penetrated several inches by fist
Soft	0.25 - 0.50	0.25 - 0.50	0.12 - 0.25	Easily penetrated several inches by thumb
Medium Stiff	0.50 - 1.0	0.50 - 1.0	0.25 - 0.50	Can be penetrated several inches by thumb with moderate effort
Stiff	1.0 - 2.0	1.0 - 2.0	0.50 - 1.0	Readily indented by thumb but penetrated only with great effort
Very Stiff	2.0 - 4.0	2.0 - 4.0	1.0 - 2.0	Readily indented by thumbnail
Hard	> 4.0	> 4.0	> 2.0	Indented by thumbnail with difficulty

APPARENT DENSITY OF COHESIONLESS SOILS

Descriptor	SPT N60 - Value (blows / foot)
Very Loose	0 - 4
Loose	5 - 10
Medium Dense	11 - 30
Dense	31 - 50
Very Dense	> 50

MOISTURE

Descriptor	Criteria
Dry	Absence of moisture, dusty, dry to the touch
Moist	Damp but no visible water
Wet	Visible free water, usually soil is below water table

PERCENT OR PROPORTION OF SOILS

Descriptor	Criteria
Trace	Particles are present but estimated to be less than 5%
Few	5 to 10%
Little	15 to 25%
Some	30 to 45%
Mostly	50 to 100%

SOIL PARTICLE SIZE

Descriptor		Size
Boulder		> 12 inches
Cobble		3 to 12 inches
Gravel	Coarse	3/4 inch to 3 inches
	Fine	No. 4 Sieve to 3/4 inch
Sand	Coarse	No. 10 Sieve to No. 4 Sieve
	Medium	No. 40 Sieve to No. 10 Sieve
	Fine	No. 200 Sieve to No. 40 Sieve
Silt and Clay		Passing No. 200 Sieve

PLASTICITY OF FINE-GRAINED SOILS

Descriptor	Criteria
Nonplastic	A 1/8-inch thread cannot be rolled at any water content.
Low	The thread can barely be rolled, and the lump cannot be formed when drier than the plastic limit.
Medium	The thread is easy to roll, and not much time is required to reach the plastic limit; it cannot be rerolled after reaching the plastic limit. The lump crumbles when drier than the plastic limit.
High	It takes considerable time rolling and kneading to reach the plastic limit. The thread can be rerolled several times after reaching the plastic limit. The lump can be formed without crumbling when drier than the plastic limit.

CEMENTATION

Descriptor	Criteria
Weak	Crumbles or breaks with handling or little finger pressure.
Moderate	Crumbles or breaks with considerable finger pressure.
Strong	Will not crumble or break with finger pressure.

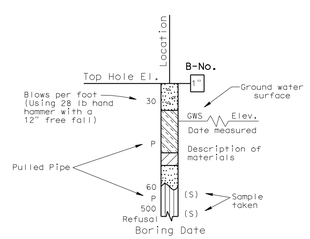

SAMPLE BORING (DRY)

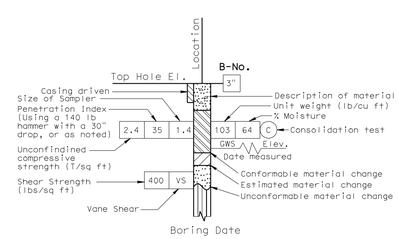

ROTARY SAMPLE BORING (WET)

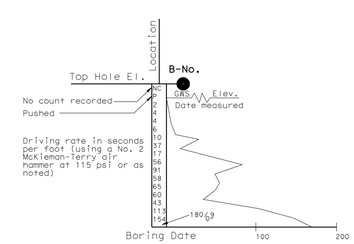

2 1/4" CONE PENETRATION BORING

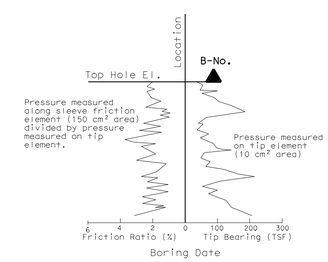

ELECTRONIC CONE PENETROMETER TEST

Cone Penetrometer dimensions and testing procedures are in accordance with ASTM standard D 3441-79, or as noted.

GINA PURSELL DESIGN OVERSIGHT	SHAWN WEI FUNCTIONAL SUPERVISOR	DRAWN BY	P. QUACH	P.CHAU/D.WADER/C.CARBINO FIELD INVESTIGATION BY:	PREPARED FOR THE STATE OF CALIFORNIA DEPARTMENT OF TRANSPORTATION	A. LEE PROJECT ENGINEER	BRIDGE NO. 56E0078 POST MILE 20.05
11/12/10 SIGN OFF DATE		CHECKED BY	S. PIRATHIVIRAJ	DATE: Nov 6 2007 to March 7 2008			

RETAINING WALL NO. 375B

LOG OF TEST BORINGS 1 OF 3

OSF GEOTECHNICAL LOG OF TEST BORINGS SHEET (ENGLISH) (REV. 2/25/05)

ORIGINAL SCALE IN INCHES FOR REDUCED PLANS 0 1 2 3

CU 59A0590
EA 08-448400

DISREGARD PRINTS BEARING EARLIER REVISION DATES

REVISION DATES (PRELIMINARY STAGE ONLY): 8-18-10

SHEET 13 OF 15

FILE => 56e0078zltb13.dgn

USERNAME => trmmguye DATE PLOTTED => 30-APR-2011 TIME PLOTTED =>

DIST	COUNTY	ROUTE	POST MILES TOTAL PROJECT	SHEET No	TOTAL SHEETS
08	Riv	91	15.6/21.6	1639	2028

GEOTECHNICAL PROFESSIONAL — DATE 11/03/10

4-25-11
PLANS APPROVAL DATE

REGISTERED PROFESSIONAL ENGINEER — Farid Motamed — No. 2738 — Exp. 6-30-11 — GEOTECHNICAL — STATE OF CALIFORNIA

The State of California or its officers or agents shall not be responsible for the accuracy or completeness of electronic copies of this plan sheet.

California Department of Transportation
5900 Folsom Boulevard
Sacramento, CA 95819

URS Corporation
2020 East First Street, Suite 400
Santa Ana, CA 92705

FOR PLAN VIEW, SEE
"LOG OF TEST BORINGS" 3 OF 3

NOTE: 1. This LOTB sheet was prepared in accordance with the Caltrans Soil & Rock Logging, Classification, and Presentation Manual (June 2007).

2. For legend, see "Log of Test Borings" 1 of 3

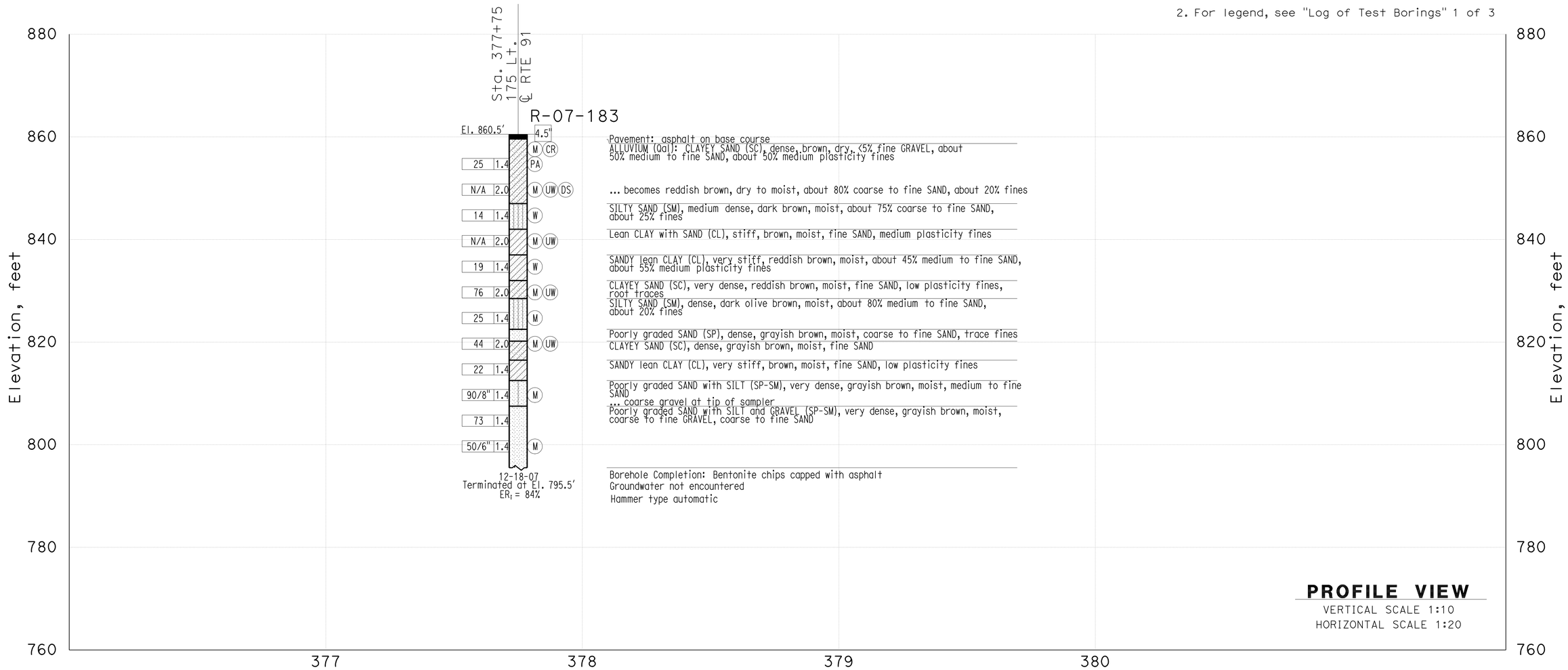

THIS PLAN ACCURATE FOR SOUND WALL AND RETAINING WALL WORK ONLY

GINA PURSELL DESIGN OVERSIGHT	SHAWN WEI FUNCTIONAL SUPERVISOR	DRAWN BY	P. QUACH	P.CHAU/D.WADER/C.CARBINO FIELD INVESTIGATION BY:	PREPARED FOR THE STATE OF CALIFORNIA DEPARTMENT OF TRANSPORTATION	A. LEE PROJECT ENGINEER	BRIDGE NO. 56E0078 POST MILE 20.05
11/12/10 SIGN OFF DATE		CHECKED BY	S. PIRATHIVIRAJ	DATE: Nov 6 2007 to March 7 2008			

RETAINING WALL 375

LOG OF TEST BORINGS 2 OF 3

OSF GEOTECHNICAL LOG OF TEST BORINGS SHEET (ENGLISH) (REV. 2/25/05)

ORIGINAL SCALE IN INCHES FOR REDUCED PLANS 0 1 2 3

CU 59A0590
EA 08-448400

DISREGARD PRINTS BEARING EARLIER REVISION DATES

REVISION DATES (PRELIMINARY STAGE ONLY) X

SHEET 14 OF 15

FILE => 56e0078zltb14.dgn

USERNAME => trstrk DATE PLOTTED => 30-APR-2011 TIME PLOTTED =>

DIST	COUNTY	ROUTE	POST MILES TOTAL PROJECT	SHEET No	TOTAL SHEETS
08	Riv	91	15.6/21.6	1640	2028

GEOTECHNICAL PROFESSIONAL — DATE 11/03/10

4-25-11
PLANS APPROVAL DATE

The State of California or its officers or agents shall not be responsible for the accuracy or completeness of electronic copies of this plan sheet.

REGISTERED PROFESSIONAL ENGINEER — Farid Motamed — No. 2738 — Exp. 6-30-11 — GEOTECHNICAL — STATE OF CALIFORNIA

California Department of Transportation
5900 Folsom Boulevard
Sacramento, CA 95819

URS Corporation
2020 East First Street, Suite 400
Santa Ana, CA 92705

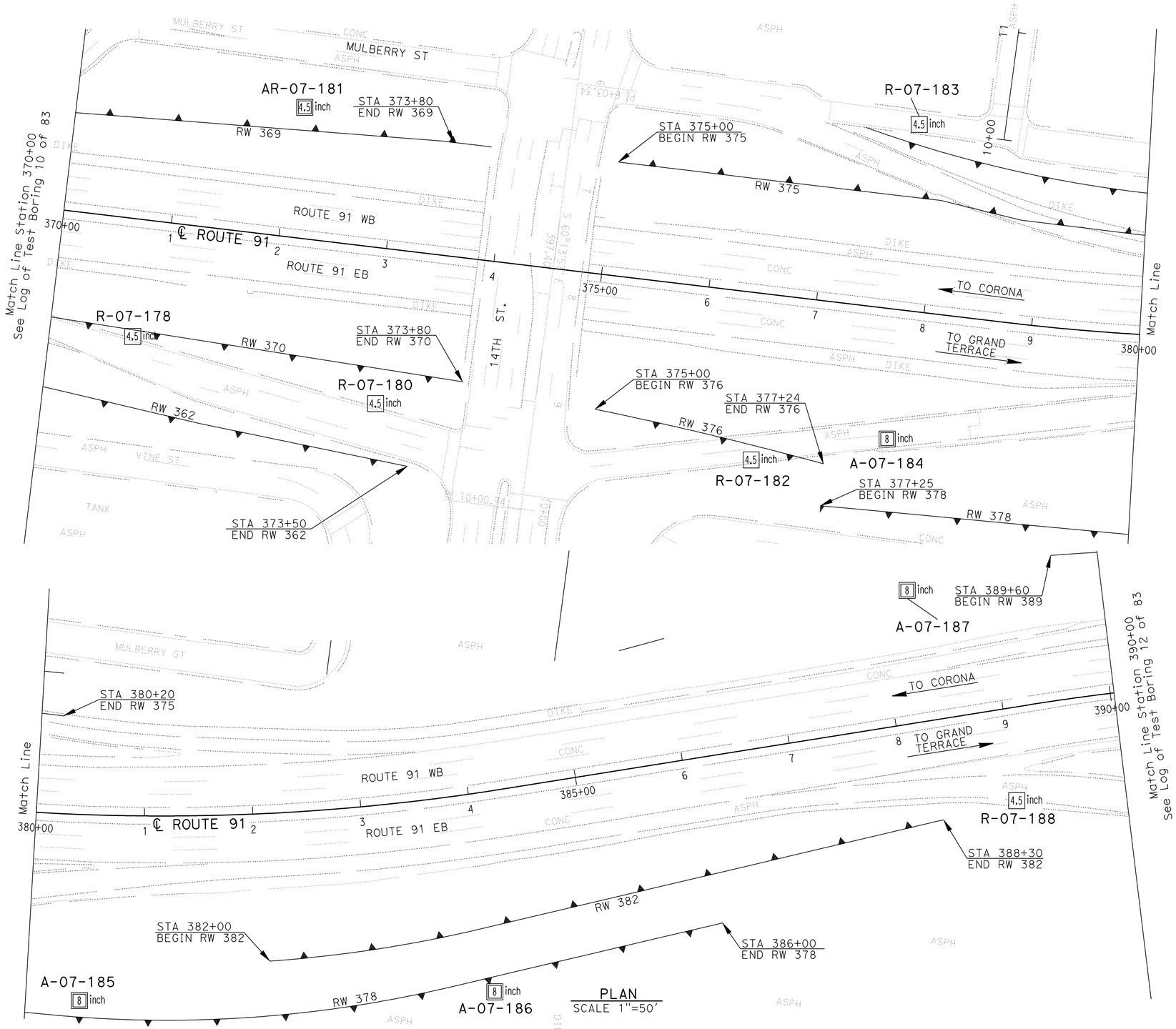

PLAN
SCALE 1"=50'

Borehole Number	Drill Rig	Hammer Type	Avg. Hammer Efficiency, ETR (%)
R-07-178	CS-2000	Automatic	84
R-07-180	CME 85	Automatic	87
AR-07-181	CS-2000	Automatic	84
R-07-182	CS-2000	Automatic	84
R-07-183	CS-2000	Automatic	84
A-07-184	Diedrich D-120	Automatic	75*
A-07-185	Diedrich D-120	Automatic	75*
A-07-186	Diedrich D-120	Automatic	75*
A-07-187	Diedrich D-120	Automatic	75*
R-07-188	CS-2000	Automatic	84

Sampler Type	Inside Diameter (Inches)	Borehole Numbers
SPT	1.375	R-07-178, R-07-180, R-07-181 R-07-182, R-07-183, A-07-184 A-07-185, A-07-186, A-07-187 R-07-188
Modified California 1	1.94	R-07-180, R-07-183
Modified California 2	2.40	A-07-184, A-07-185, A-07-186 A-07-187

*Estimated Hammer Efficiency Rating.

GINA PURSELL — DESIGN OVERSIGHT
SHAWN WEI — FUNCTIONAL SUPERVISOR
11/12/10 — SIGN OFF DATE

DRAWN BY: P. QUACH
CHECKED BY: S. PIRATHIVIRAJ

P.CHAU/D.WADER/C.CARBINO
FIELD INVESTIGATION BY:
DATE: Nov 6 2007 to March 7 2008

PREPARED FOR THE STATE OF CALIFORNIA DEPARTMENT OF TRANSPORTATION

A. LEE — PROJECT ENGINEER

BRIDGE NO. 56E0078
POST MILE 20.05

RETAINING WALL 375B
LOG OF TEST BORINGS 3 OF 3

OSF GEOTECHNICAL LOG OF TEST BORINGS SHEET (ENGLISH) (REV. 2/25/05)

ORIGINAL SCALE IN INCHES FOR REDUCED PLANS 0 1 2 3

CU 59A0590
EA 08-448400

DISREGARD PRINTS BEARING EARLIER REVISION DATES 8-19-10

REVISION DATES (PRELIMINARY STAGE ONLY)

SHEET 15 OF 15

FILE => 56e0078zltb15.dgn

USERNAME => trmnguye DATE PLOTTED => 30-APR-2011 TIME PLOTTED =>

DIST	COUNTY	ROUTE	POST MILES TOTAL PROJECT	SHEET No	TOTAL SHEETS
08	Riv	91	15.6/21.6	1641	2028

REGISTERED CIVIL ENGINEER X DATE

4-25-11
PLANS APPROVAL DATE

REGISTERED PROFESSIONAL ENGINEER ANDREW BUI No. C63560 Exp. 9/30/10 CIVIL STATE OF CALIFORNIA

The State of California or its officers or agents shall not be responsible for the accuracy or completeness of electronic copies of this plan sheet.

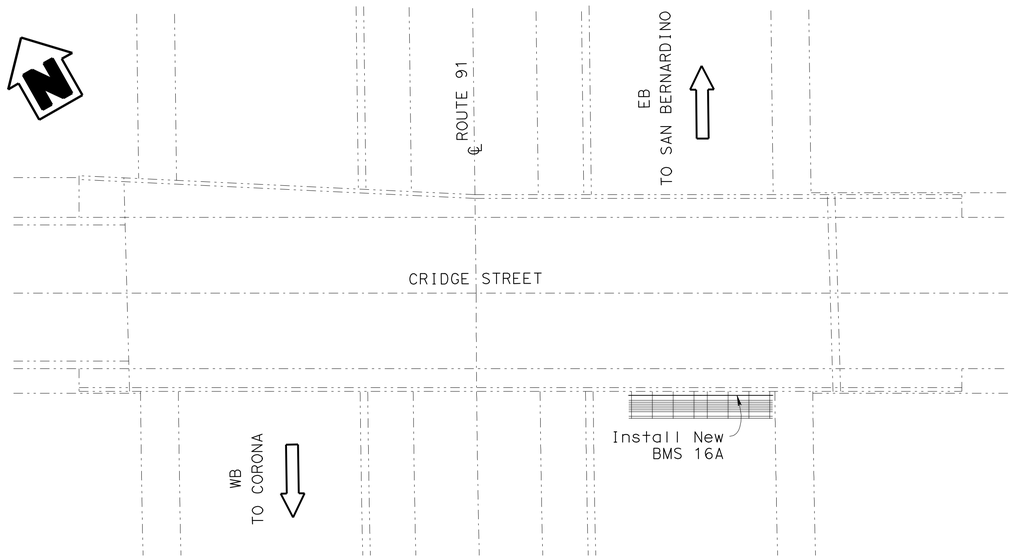

LOCATION PLAN

1"= 20'

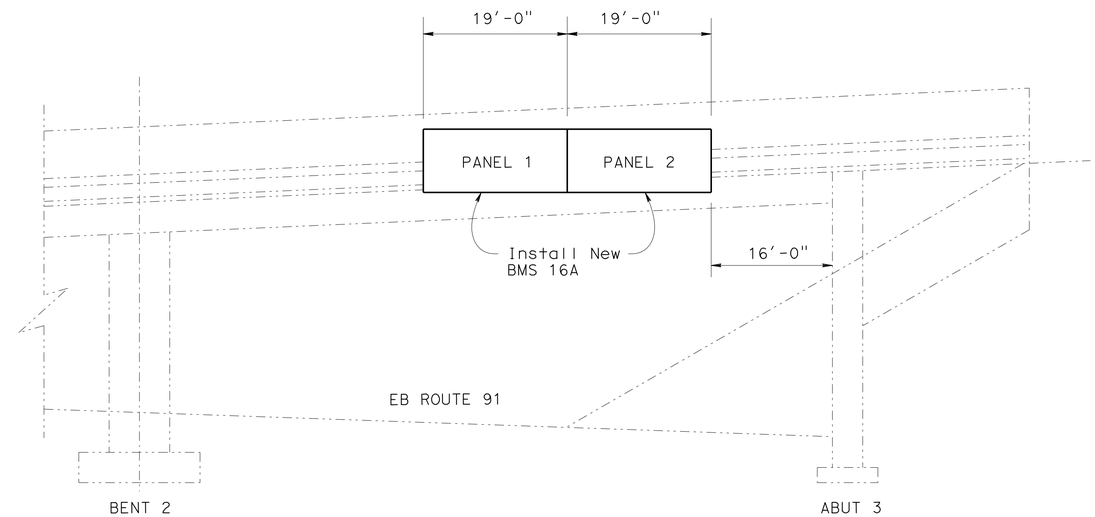

EB ELEVATION

Cridge Street OC
56-0835

LEGEND

Bridge

New structure.

STANDARD PLANS DATED MAY 2006

A10A ACRONYMS AND ABBREVIATIONS (A-L)
A10B ACRONYMS AND ABBREVIATIONS (M-Z)

Notes:

1. For details not shown, see "STANDARD PLANS MAY 2006".
2. Unless otherwise shown, all steel shall be galvanized after fabrication.
3. Min size fillet weld is 1/4" or thickness of thinner part unless noted otherwise.
4. Contractor to provide anchor bolt layout before anchor bolts are placed.
5. For sign location, see "PAVEMENT DELINEATION AND SIGN PLANS".

NOTE:
THE CONTRACTOR SHALL VERIFY ALL CONTROLLING FIELD DIMENSIONS BEFORE ORDERING OR FABRICATING ANY MATERIAL.

BRANCH CHIEF Jeffrey B Woody

	BY	CHECKED
DESIGN	A GUTIERREZ	A BUI
DETAILS	A R DUDSAK	A BUI
QUANTITIES	A GUTIERREZ	A BUI

STATE OF CALIFORNIA
DEPARTMENT OF TRANSPORTATION

DIVISION OF ENGINEERING SERVICES
DESIGN AND TECHNICAL SERVICES
SPECIAL DESIGNS BRANCH A

BRIDGE NO. 56-0835
POST MILE 19.62

CRIDGE STREET OC (REPLACE)

BRIDGE MOUNTED SIGN (BMS) LOCATION PLAN

SDS-1

SHEET 1 OF 25

(ENGLISH) SPECIAL DESIGNS BRANCH BORDER SHEET (REV. 7-1-09)

ORIGINAL SCALE IN INCHES FOR REDUCED PLANS 0 1 2 3

CU 08
EA 448401

DISREGARD PRINTS BEARING EARLIER REVISION DATES

REVISION DATES: 6/3/10 6/22/10 7/28/10 7/29/10

FILE => spec_des_br_prj/2010sd/08-448401/08-448401_sds-1.dgn

USERNAME => trmnguye DATE PLOTTED => 30-APR-2011 TIME PLOTTED => 12:41

DIST	COUNTY	ROUTE	POST MILES TOTAL PROJECT	SHEET No	TOTAL SHEETS
08	Riv	91	15.6/21.6	1642	2028

REGISTERED CIVIL ENGINEER X DATE

4-25-11
PLANS APPROVAL DATE

REGISTERED PROFESSIONAL ENGINEER ANDREW BUI No. C63560 Exp. 9/30/10 CIVIL STATE OF CALIFORNIA

The State of California or its officers or agents shall not be responsible for the accuracy or completeness of electronic copies of this plan sheet.

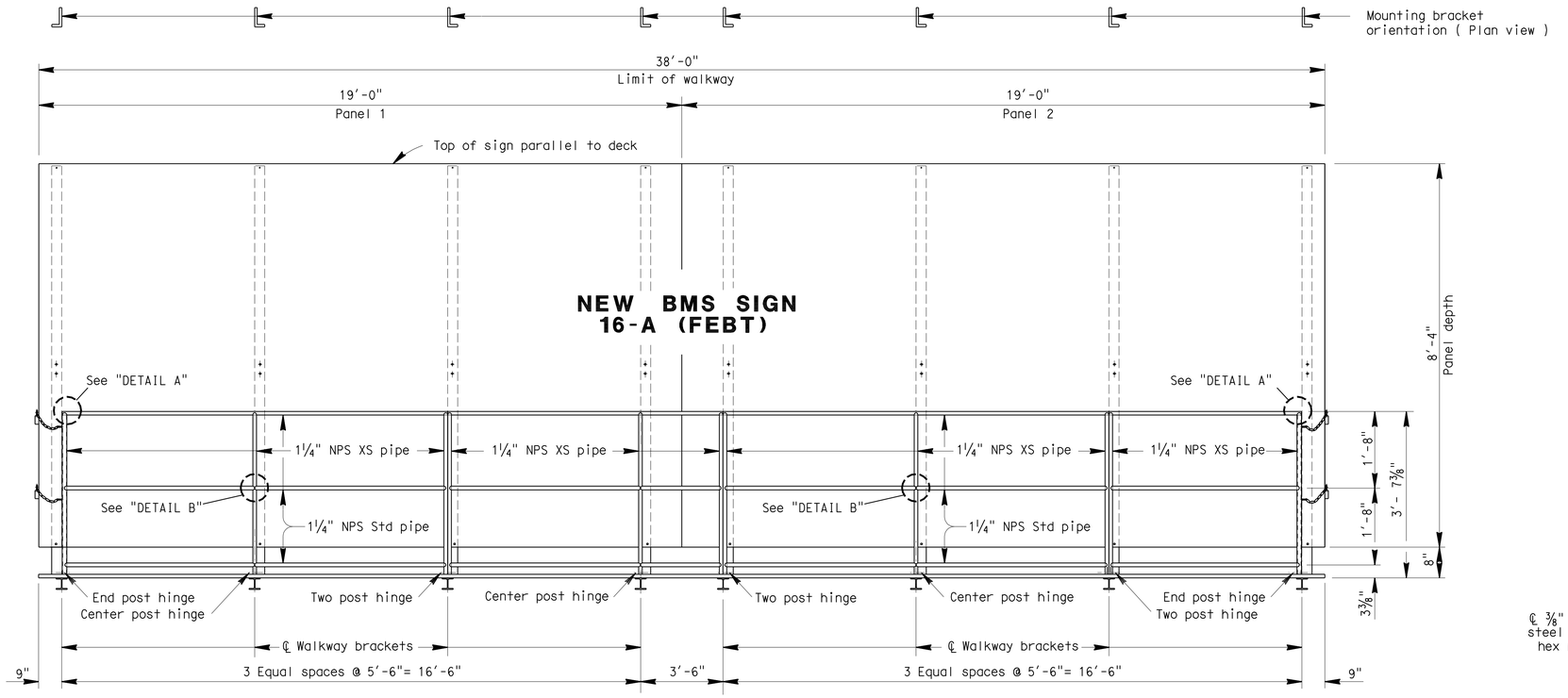

FRONT VIEW

NOTES:

1. For details not shown, see "BRIDGE MOUNTED SIGN TYPICAL DETAILS NO.1", "BRIDGE MOUNTED SIGN TYPICAL DETAILS NO.2" and "BRIDGE MOUNTED SIGN TYPICAL DETAILS NO.3".
2. Special care shall be taken to insure that the complete hinge and latch assembly will hold the safety railing in a steady manner, free of wobble while in the raised position. Max allowable displacement from vertical at top of railing when latched shall be 1".
3. Safety chain shall be ¼" galvanized steel coil chain, approximately 12 links per foot. Length shall be min which allows lock-up of safety railing. Min of two safety chains at each end of safety railing. Material shall be Grade 43 high test chain ASTM A413.
4. Safety chain is located at the ends of the walkway only but is shown here for clarity.
5. All high strength (HS) bolts shall be snug tightened.

NOTE:
THE CONTRACTOR SHALL VERIFY ALL CONTROLLING FIELD DIMENSIONS BEFORE ORDERING OR FABRICATING ANY MATERIAL.

REVISED STANDARD PLAN SHEET NO.
DETAIL NO.

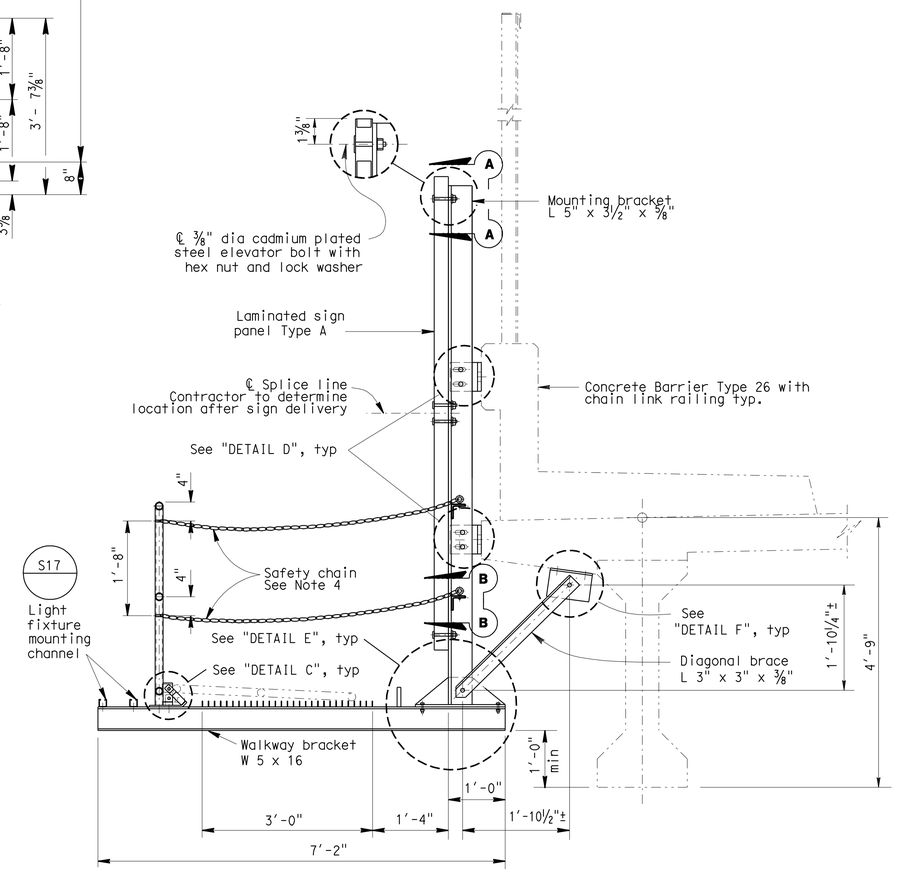

TYPICAL SECTION

BRANCH CHIEF Jeffrey B Woody

	BY	CHECKED
DESIGN	A GUTIERREZ	A BUI
DETAILS	A R DUDSAK	A BUI
QUANTITIES	A GUTIERREZ	A BUI

STATE OF CALIFORNIA
DEPARTMENT OF TRANSPORTATION

DIVISION OF ENGINEERING SERVICES
DESIGN AND TECHNICAL SERVICES
SPECIAL DESIGNS BRANCH
A

BRIDGE NO. 56-0835
POST MILE 19.62

CRIDGE STREET OC (REPLACE)
BRIDGE MOUNTED SIGN (BMS) LAYOUT

SDS-2

(ENGLISH) SPECIAL DESIGNS BRANCH BORDER SHEET (REV. 7-1-09)

ORIGINAL SCALE IN INCHES FOR REDUCED PLANS 0 1 2 3

CU 08
EA 448401

DISREGARD PRINTS BEARING EARLIER REVISION DATES

REVISION DATES: 6/3/10 6/22/10 7/26/10

SHEET 2 OF 25

FILE => spec_des_br_prj/2010sd/08-448401/08-448401_sds-2.dgn

USERNAME => trmnguye DATE PLOTTED => 30-APR-2011 TIME PLOTTED => 12:42

DIST	COUNTY	ROUTE	POST MILES TOTAL PROJECT	SHEET No	TOTAL SHEETS
08	Riv	91	15.6/21.6	1643	2028

REGISTERED CIVIL ENGINEER — DATE X

4-25-11
PLANS APPROVAL DATE

REGISTERED PROFESSIONAL ENGINEER — ANDREW BUI — No. C63560 — Exp. 9/30/10 — CIVIL — STATE OF CALIFORNIA

The State of California or its officers or agents shall not be responsible for the accuracy or completeness of electronic copies of this plan sheet.

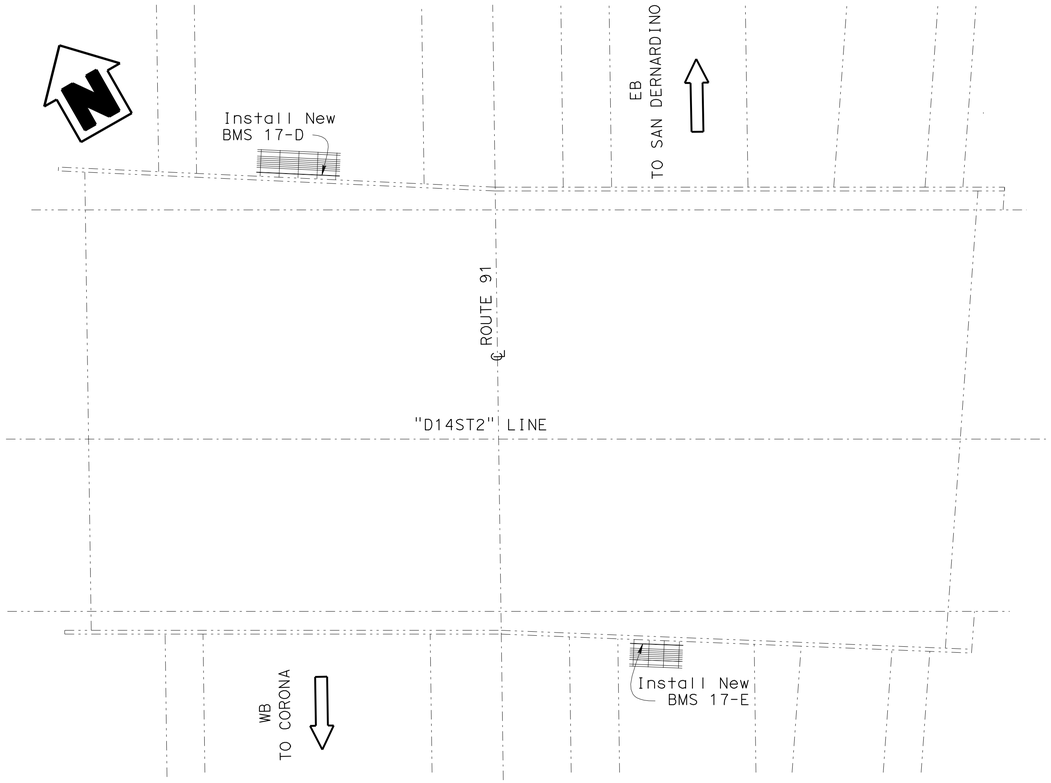

LOCATION PLAN

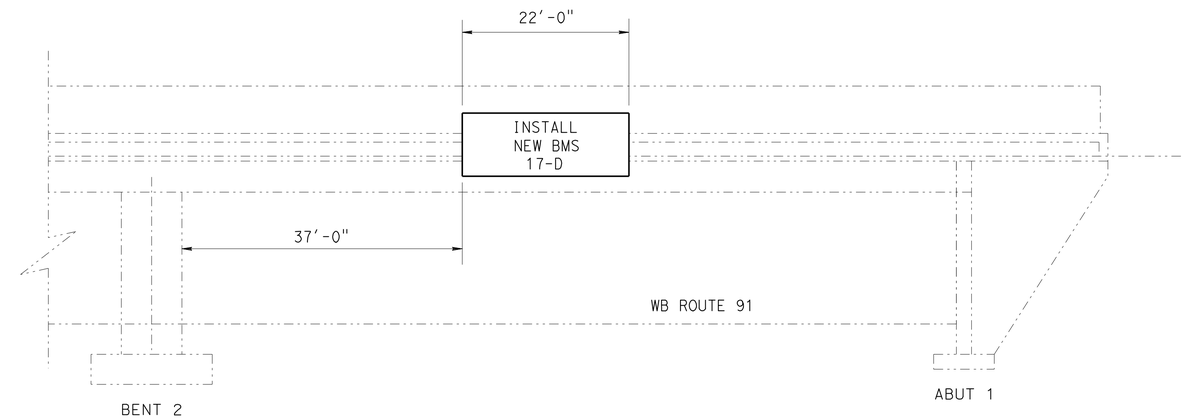

WB ELEVATION

14th Street OC
56-0836

EB ELEVATION

14th Street OC
56-0836

LEGEND

Bridge

New structure.

STANDARD PLANS DATED MAY 2006

A10A ACRONYMS AND ABBREVIATIONS (A-L)
A10B ACRONYMS AND ABBREVIATIONS (M-Z)

Notes:

1. For details not shown, see "STANDARD PLANS MAY 2006".
2. Unless otherwise shown, all steel shall be galvanized after fabrication.
3. Min size fillet weld is 1/4" or thickness of thinner part unless noted otherwise.
4. Contractor to provide anchor bolt layout before anchor bolts are placed.
5. For sign location, see "PAVEMENT DELINEATION AND SIGN PLANS".

NOTE:
THE CONTRACTOR SHALL VERIFY ALL CONTROLLING FIELD DIMENSIONS BEFORE ORDERING OR FABRICATING ANY MATERIAL.

BRANCH CHIEF Jeffrey B Wrody

	BY	CHECKED
DESIGN	A GUTIERREZ	A BUI
DETAILS	A R DUDSAK	A BUI
QUANTITIES	A GUTIERREZ	A BUI

STATE OF CALIFORNIA
DEPARTMENT OF TRANSPORTATION

DIVISION OF ENGINEERING SERVICES
DESIGN AND TECHNICAL SERVICES
SPECIAL DESIGNS BRANCH A

BRIDGE NO. 56-0836
POST MILE 20.0

14TH STREET OC (REPLACE)
BRIDGE MOUNTED SIGN (BMS) LOCATION PLAN

SDS-3

(ENGLISH) SPECIAL DESIGNS BRANCH BORDER SHEET (REV. 7-1-09)

ORIGINAL SCALE IN INCHES FOR REDUCED PLANS 0 1 2 3

CU 08
EA 448401

DISREGARD PRINTS BEARING EARLIER REVISION DATES

REVISION DATES: 6/3/10 6/22/10 7/14/10 7/26/10

SHEET 3 OF 25

FILE => spec_des_br_prj/2010sd/08-448401/08-448401_sds-3.dgn

USERNAME => trmnguye DATE PLOTTED => 30-APR-2011 TIME PLOTTED => 12:42

DIST	COUNTY	ROUTE	POST MILES TOTAL PROJECT	SHEET No	TOTAL SHEETS
08	Riv	91	15.6/21.6	1644	2028

REGISTERED CIVIL ENGINEER X DATE

4-25-11
PLANS APPROVAL DATE

REGISTERED PROFESSIONAL ENGINEER ANDREW BUI No. C63560 Exp. 9/30/10 CIVIL STATE OF CALIFORNIA

The State of California or its officers or agents shall not be responsible for the accuracy or completeness of electronic copies of this plan sheet.

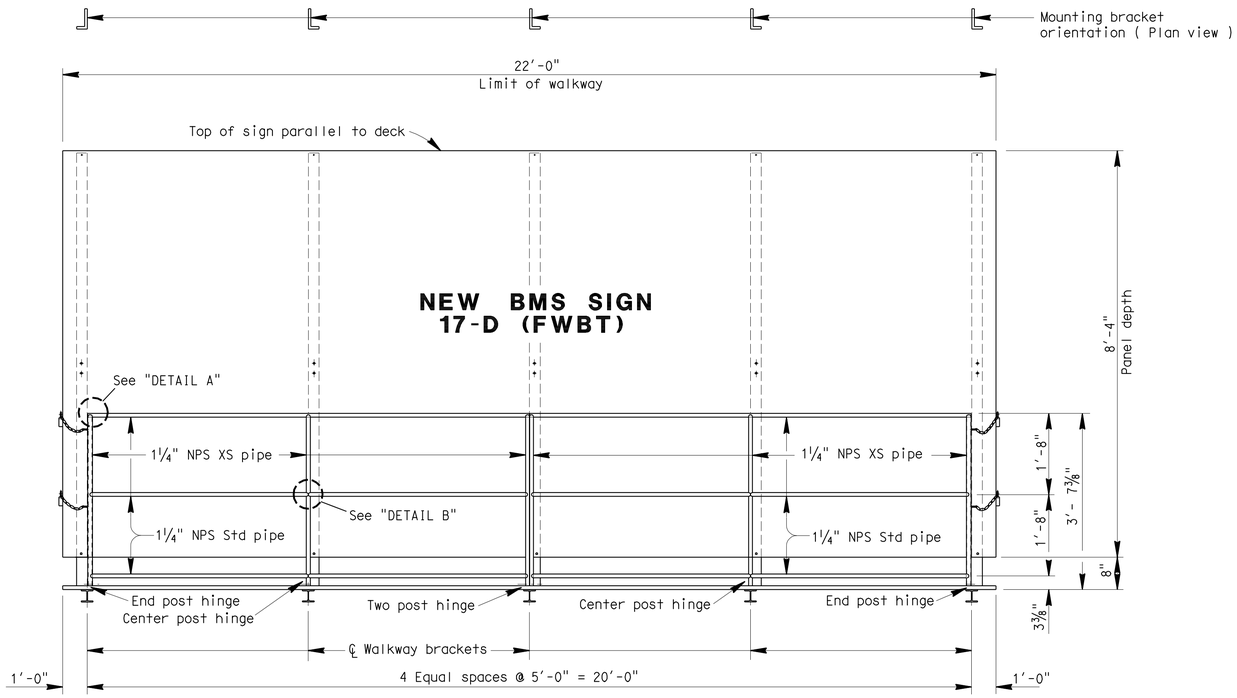

FRONT VIEW

NOTES:

1. For details not shown, see "BRIDGE MOUNTED SIGN TYPICAL DETAILS NO.1", "BRIDGE MOUNTED SIGN TYPICAL DETAILS NO.2" and "BRIDGE MOUNTED SIGN TYPICAL DETAILS NO.3".
2. Special care shall be taken to insure that the complete hinge and latch assembly will hold the safety railing in a steady manner, free of wobble while in the raised position. Max allowable displacement from vertical at top of railing when latched shall be 1".
3. Safety chain shall be ¼" galvanized steel coil chain, approximately 12 links per foot. Length shall be min which allows lock-up of safety railing. Min of two safety chains at each end of safety railing. Material shall be Grade 43 high test chain ASTM A413.
4. Safety chain is located at the ends of the walkway only but is shown here for clarity.
5. All high strength (HS) bolts shall be snug tightened.

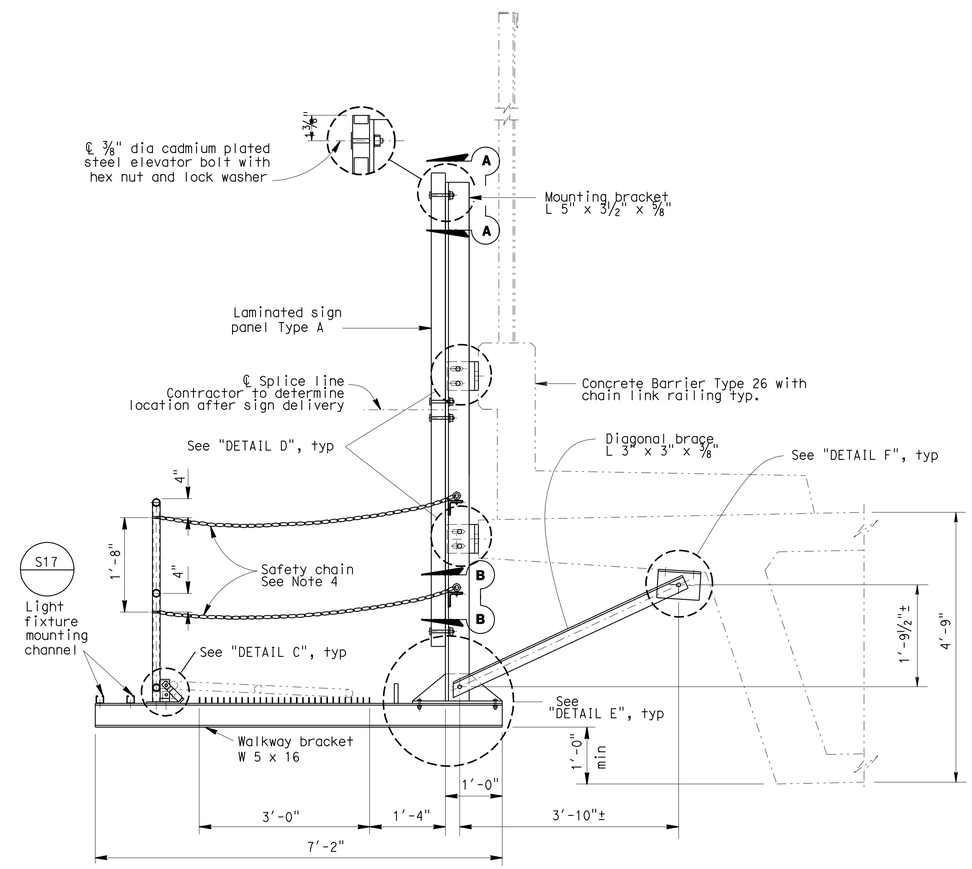

TYPICAL SECTION

NOTE:
THE CONTRACTOR SHALL VERIFY ALL CONTROLLING FIELD DIMENSIONS BEFORE ORDERING OR FABRICATING ANY MATERIAL.

REVISED STANDARD PLAN SHEET NO.
DETAIL NO.

BRANCH CHIEF Jeffrey B Woody	DESIGN	BY A GUTIERREZ	CHECKED A BUI	STATE OF CALIFORNIA DEPARTMENT OF TRANSPORTATION	DIVISION OF ENGINEERING SERVICES DESIGN AND TECHNICAL SERVICES SPECIAL DESIGNS BRANCH A
	DETAILS	BY A R DUDSAK	CHECKED A BUI		
	QUANTITIES	BY A GUTIERREZ	CHECKED A BUI		

BRIDGE NO. 56-0836
POST MILE 20.0

14TH STREET OC (REPLACE)
BRIDGE MOUNTED SIGN (BMS) LAYOUT

SDS-4

(ENGLISH) SPECIAL DESIGNS BRANCH BORDER SHEET (REV. 7-1-09)

ORIGINAL SCALE IN INCHES FOR REDUCED PLANS 0 1 2 3

CU 08
EA 448401

DISREGARD PRINTS BEARING EARLIER REVISION DATES 6/3/10 6/22/10 7/26/10

REVISION DATES

SHEET 4 OF 25

FILE => spec_des_br_prj/2010sd/08-448401/08-448401_sds-4.dgn

USERNAME => trimmguye DATE PLOTTED => 30-APR-2011 TIME PLOTTED => 12:42

DIST	COUNTY	ROUTE	POST MILES TOTAL PROJECT	SHEET No	TOTAL SHEETS
08	Riv	91	15.6/21.6	1645	2028

REGISTERED CIVIL ENGINEER X DATE

4-25-11
PLANS APPROVAL DATE

REGISTERED PROFESSIONAL ENGINEER ANDREW BUI No. C63560 Exp. 9/30/10 CIVIL STATE OF CALIFORNIA

The State of California or its officers or agents shall not be responsible for the accuracy or completeness of electronic copies of this plan sheet.

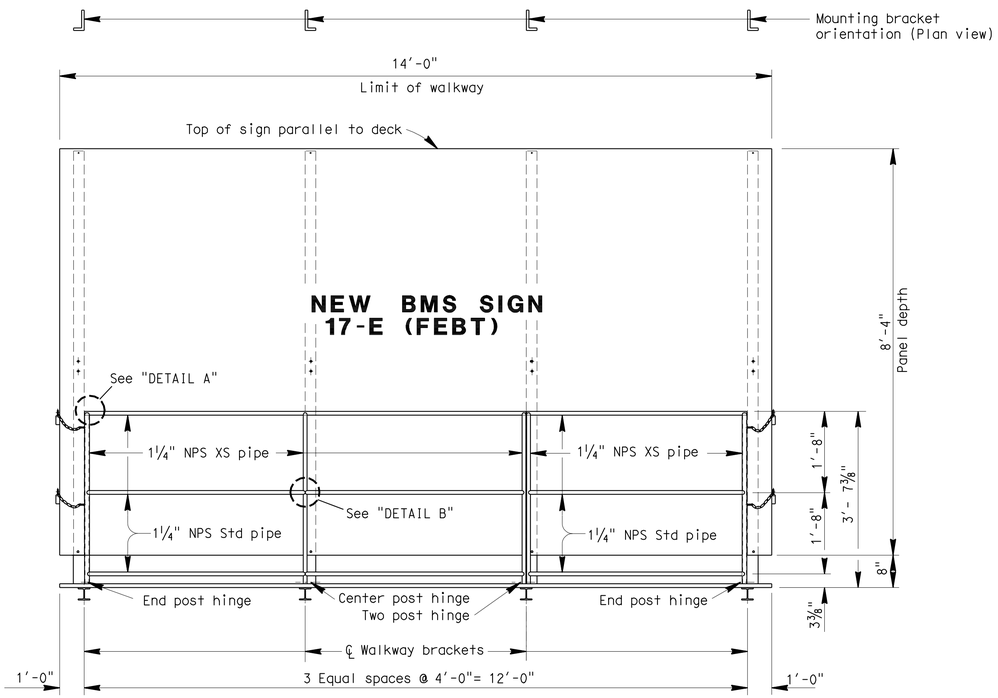

FRONT VIEW

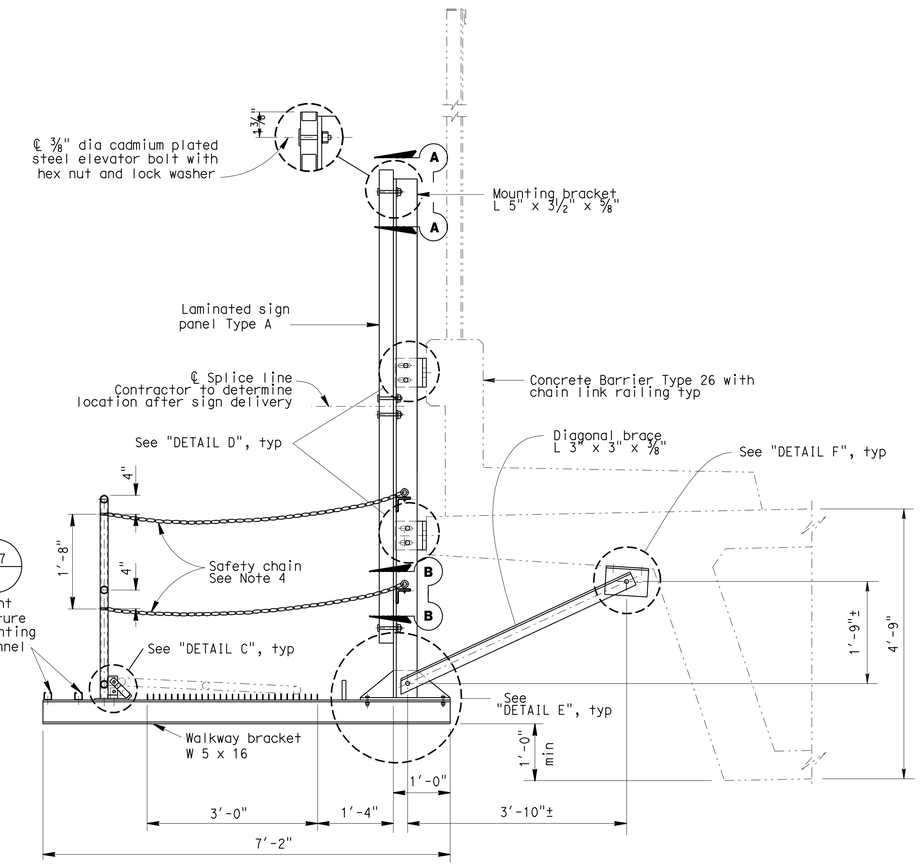

TYPICAL SECTION

NOTES:

1. For details not shown, see "BRIDGE MOUNTED SIGN TYPICAL DETAILS NO.1", "BRIDGE MOUNTED SIGN TYPICAL DETAILS NO.2" and "BRIDGE MOUNTED SIGN TYPICAL DETAILS NO. 4".
2. Special care shall be taken to insure that the complete hinge and latch assembly will hold the safety railing in a steady manner, free of wobble while in the raised position. Max allowable displacement from vertical at top of railing when latched shall be 1".
3. Safety chain shall be ¼" galvanized steel coil chain, approximately 12 links per foot. Length shall be min which allows lock-up of safety railing. Min of two safety chains at each end of safety railing. Material shall be Grade 43 high test chain ASTM A413.
4. Safety chain is located at the ends of the walkway only but is shown here for clarity.
5. All high strength (HS) bolts shall be snug tightened.

NOTE:
THE CONTRACTOR SHALL VERIFY ALL CONTROLLING FIELD DIMENSIONS BEFORE ORDERING OR FABRICATING ANY MATERIAL.

REVISED STANDARD PLAN SHEET NO.
DETAIL NO.

BRANCH CHIEF Jeffrey B Woody

	BY	CHECKED
DESIGN	A GUTIERREZ	A BUI
DETAILS	A R DUDSAK	A BUI
QUANTITIES	A GUTIERREZ	A BUI

STATE OF CALIFORNIA
DEPARTMENT OF TRANSPORTATION

DIVISION OF ENGINEERING SERVICES
DESIGN AND TECHNICAL SERVICES
SPECIAL DESIGNS BRANCH A

BRIDGE NO. 56-0836
POST MILE 20.0

14TH STREET OC (REPLACE)
BRIDGE MOUNTED SIGN (BMS) LAYOUT

SDS-5

(ENGLISH) SPECIAL DESIGNS BRANCH BORDER SHEET (REV. 7-1-09)

ORIGINAL SCALE IN INCHES FOR REDUCED PLANS 0 1 2 3

CU 08
EA 448401

DISREGARD PRINTS BEARING EARLIER REVISION DATES 6/3/10 6/22/10 7/26/10

REVISION DATES

SHEET 5 OF 25

FILE => spec_des_br_prj/2010sd/08-448401/08-448401_sds-5.dgn

USERNAME => trmnguye DATE PLOTTED => 30-APR-2011 TIME PLOTTED => 12:42

DIST	COUNTY	ROUTE	POST MILES TOTAL PROJECT	SHEET No	TOTAL SHEETS
08	Riv	91	15.6/21.6	1646	2028

REGISTERED CIVIL ENGINEER X DATE

4-25-11
PLANS APPROVAL DATE

REGISTERED PROFESSIONAL ENGINEER ANDREW BUI No. C63560 Exp. 9/30/10 CIVIL STATE OF CALIFORNIA

The State of California or its officers or agents shall not be responsible for the accuracy or completeness of electronic copies of this plan sheet.

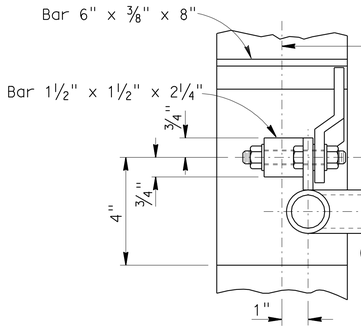

END POST HINGE

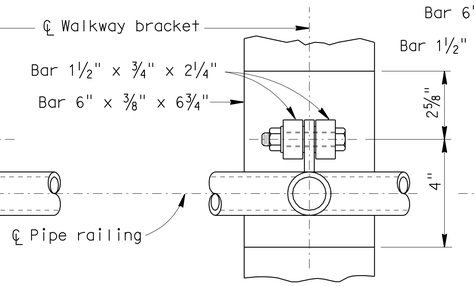

CENTER POST WELDED HINGE - PLAN

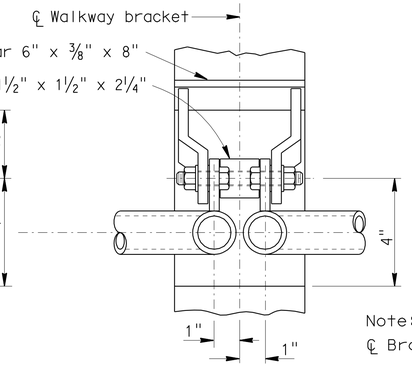

TWO POST HINGE

Note:
℄ Bracket = ℄ Welded hinge

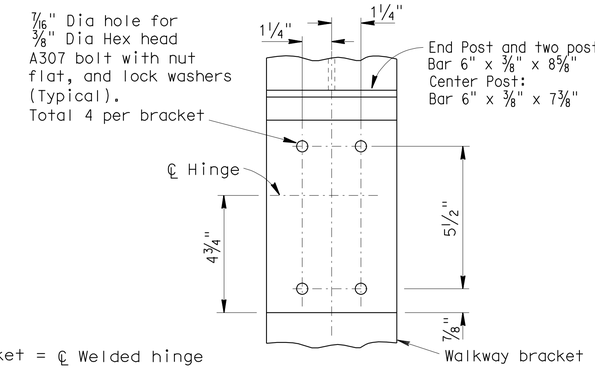

TYPICAL BOLTED (ALTERNATIVE) HINGED CONNECTION

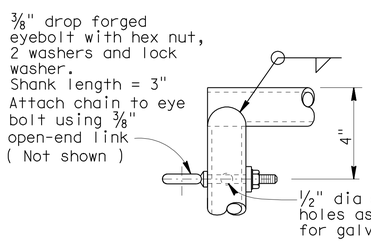

DETAIL A

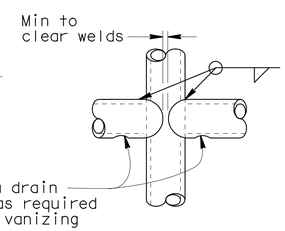

DETAIL B

Note: Alternative venting methods may be used if approved by the Engineer.

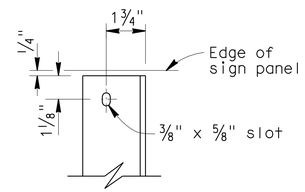

SECTION A-A

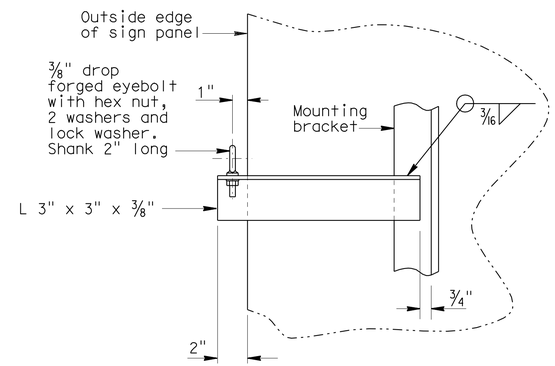

SECTION B-B

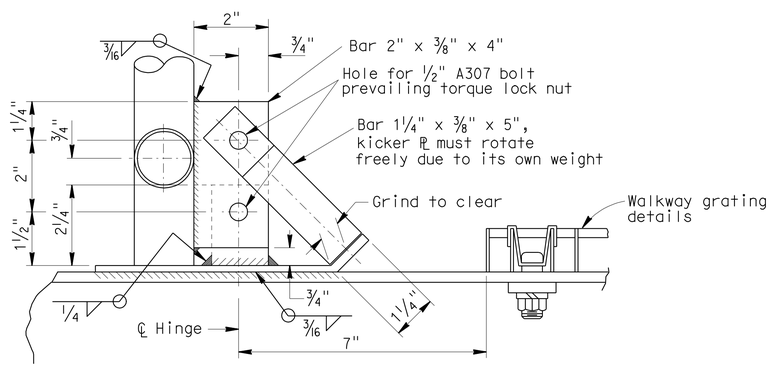

DETAIL C

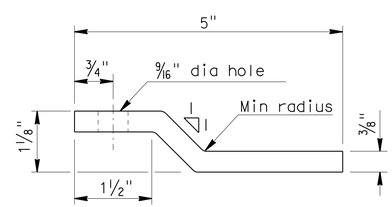

PLAN - KICKER BAR

NOTE:
THE CONTRACTOR SHALL VERIFY ALL CONTROLLING FIELD DIMENSIONS BEFORE ORDERING OR FABRICATING ANY MATERIAL.

BRANCH CHIEF Jeffrey B Woody

	BY	CHECKED
DESIGN	A GUTIERREZ	A BUI
DETAILS	A R DUDSAK	A BUI
QUANTITIES	A GUTIERREZ	A BUI

STATE OF CALIFORNIA
DEPARTMENT OF TRANSPORTATION

DIVISION OF ENGINEERING SERVICES
DESIGN AND TECHNICAL SERVICES
SPECIAL DESIGNS BRANCH A

BRIDGE NO.
POST MILE

SIGN DETAILS BRIDGE MOUNTED SIGN
TYPICAL DETAILS NO. 1

SDS-6

(ENGLISH) SPECIAL DESIGNS BRANCH BORDER SHEET (REV. 7-1-09)

ORIGINAL SCALE IN INCHES FOR REDUCED PLANS 0 1 2 3

CU 08
EA 448401

DISREGARD PRINTS BEARING EARLIER REVISION DATES 6/21/10 6/22/10

REVISION DATES

SHEET 6 OF 25

FILE => spec_des_br_prj/2010sd/08-448401/08-448401_sds-6.dgn

USERNAME => trmnguye DATE PLOTTED => 30-APR-2011 TIME PLOTTED => 12:42

DIST	COUNTY	ROUTE	POST MILES TOTAL PROJECT	SHEET No	TOTAL SHEETS
08	Riv	91	15.6/21.6	1647	2028

REGISTERED CIVIL ENGINEER X DATE

4-25-11
PLANS APPROVAL DATE

The State of California or its officers or agents shall not be responsible for the accuracy or completeness of electronic copies of this plan sheet.

REGISTERED PROFESSIONAL ENGINEER ANDREW BUI No. C63560 Exp. 9/30/10 CIVIL STATE OF CALIFORNIA

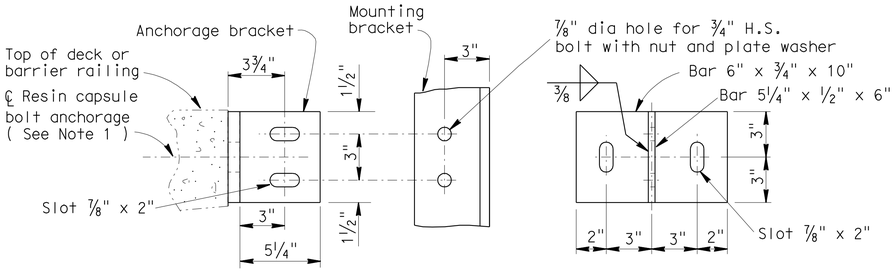

DETAIL D

Note:

Where new resin capsule bolt anchorage coincides with Type 7 fence post or existing bridge mounted sign anchorage, adjust new mounting bracket to create a minimum distance of 6" measured from the ℄ of nearest resin capsule bolt anchorage to the ℄ fence post or ℄ existing bridge mounted sign anchorage, or as approved by the Engineer.

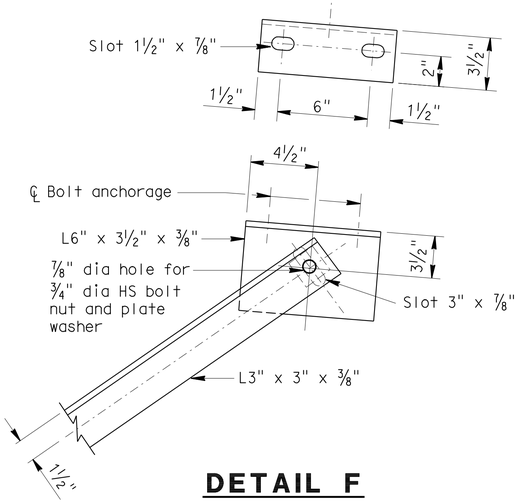

DETAIL F

NOTES:

1. Resin capsule bolts shall not interfere with existing railing anchorages.
2. Resin capsule anchorage is subject to approval of engineer. Installation procedure shall comply with manufacturer's instructions.
3. Unless otherwise shown all steel shall be galvanized after fabrication.
4. Existing bridge mounted sign anchors shall be cut flush with edge of deck by mechanical means. Damage to concrete surface resulting from cut shall be repaired at the Contractor's expense to the Engineers satisfaction. Cut ends of anchors shall be coated with 2 coats of zinc rich primer.
5. Resin capsule bolt anchors shall be installed in sound concrete free of cracks or delamination.

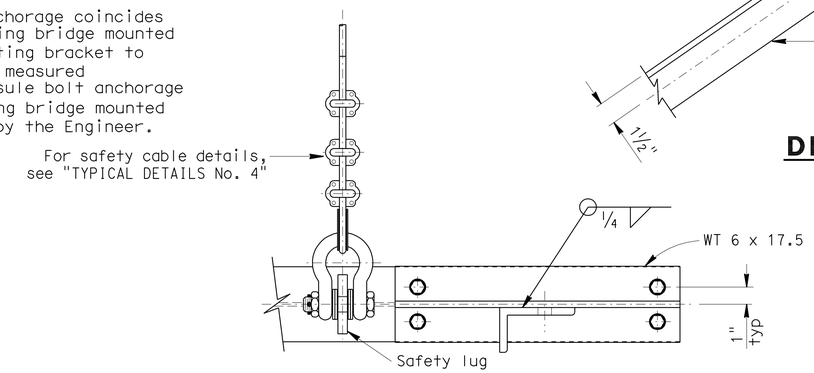

SECTION C-C

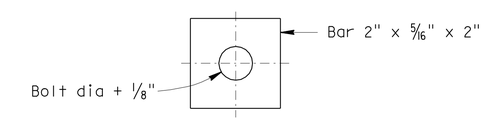

PLATE WASHER

FOR ALL SLOTTED HOLES

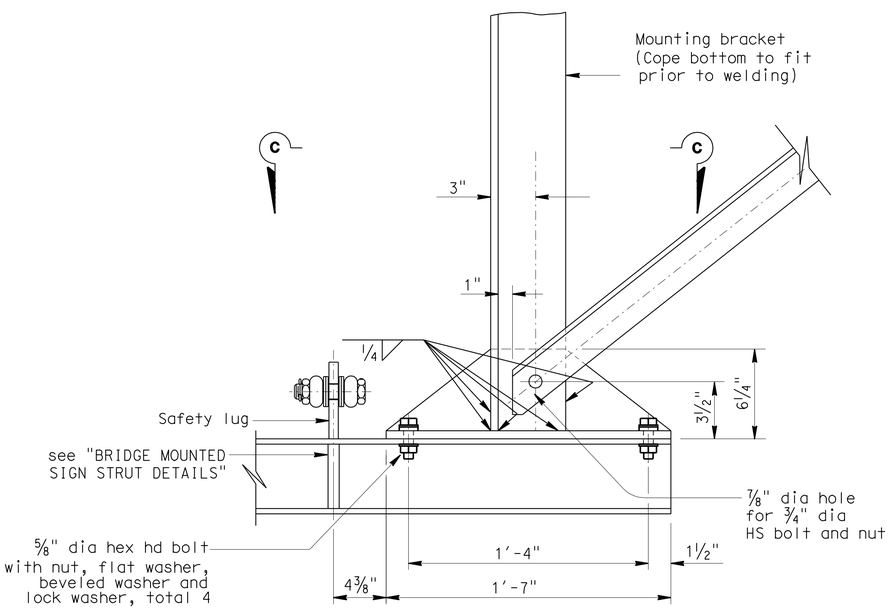

DETAIL E

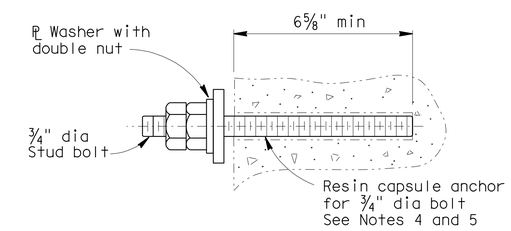

RESIN CAPSULE BOLT ANCHORAGE

NOTE:
THE CONTRACTOR SHALL VERIFY ALL CONTROLLING FIELD DIMENSIONS BEFORE ORDERING OR FABRICATING ANY MATERIAL.

BRANCH CHIEF Jeffrey B Woody	DESIGN	BY A GUTIERREZ	CHECKED A BUI
	DETAILS	BY A R DUDSAK	CHECKED A BUI
	QUANTITIES	BY A GUTIERREZ	CHECKED A BUI

STATE OF CALIFORNIA
DEPARTMENT OF TRANSPORTATION

DIVISION OF ENGINEERING SERVICES
DESIGN AND TECHNICAL SERVICES
SPECIAL DESIGNS BRANCH A

BRIDGE NO.
POST MILE

SIGN DETAILS BRIDGE MOUNTED SIGN
TYPICAL DETAILS NO. 2

SDS-7

(ENGLISH) SPECIAL DESIGNS BRANCH BORDER SHEET (REV. 7-1-09)

ORIGINAL SCALE IN INCHES FOR REDUCED PLANS 0 1 2 3

CU 08
EA 448401

DISREGARD PRINTS BEARING EARLIER REVISION DATES 6/3/10 6/22/10

REVISION DATES

SHEET 7 OF 25

FILE => spec_des_br_prj/2010sd/08-448401/08-448401_sds-7.dgn

USERNAME => trmguye DATE PLOTTED => 30-APR-2011 TIME PLOTTED => 12:42

DIST	COUNTY	ROUTE	POST MILES TOTAL PROJECT	SHEET No	TOTAL SHEETS
08	Riv	91	15.6/21.6	1648	2028

REGISTERED CIVIL ENGINEER X DATE

4-25-11
PLANS APPROVAL DATE

The State of California or its officers or agents shall not be responsible for the accuracy or completeness of electronic copies of this plan sheet.

REGISTERED PROFESSIONAL ENGINEER ANDREW BUI No. C63560 Exp. 9/30/10 CIVIL STATE OF CALIFORNIA

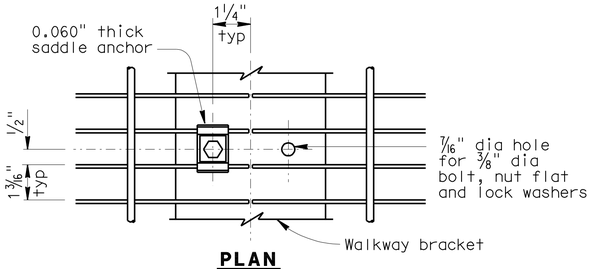

PLAN

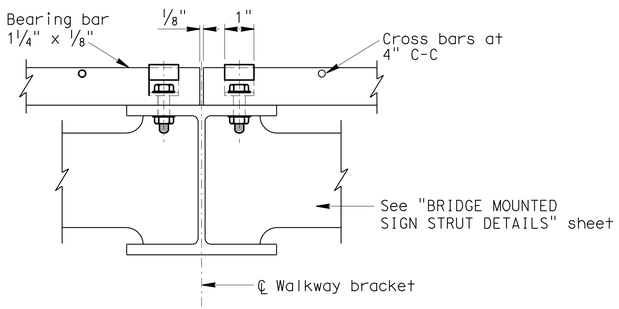

WALKWAY GRATING DETAILS

(Shown at splice)

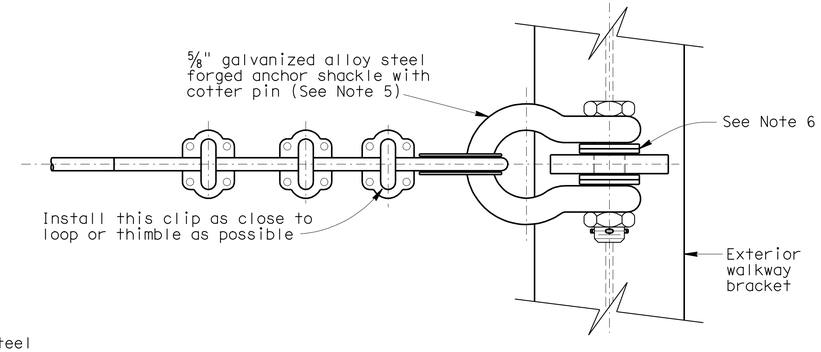

PLAN

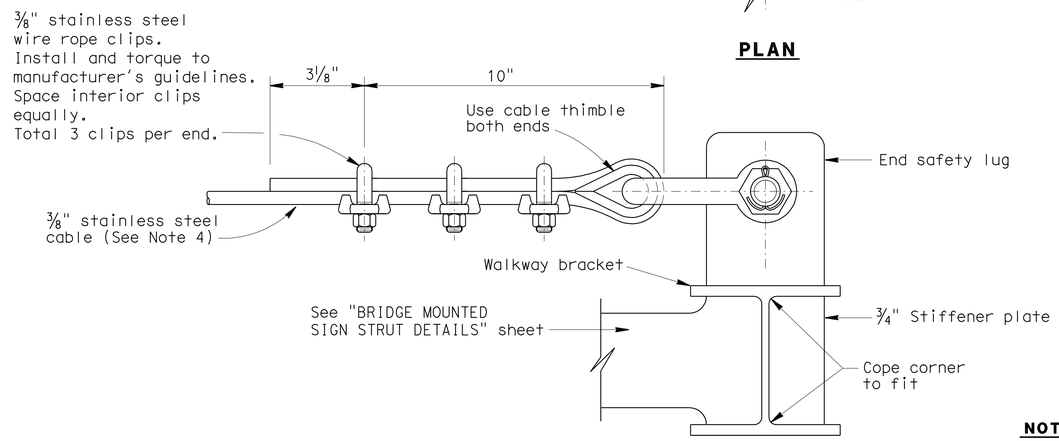

ELEVATION

END VIEW SAFETY CABLE

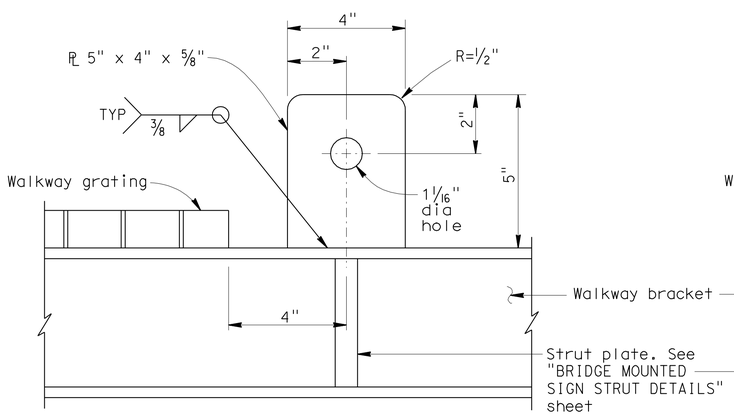

INTERIOR SAFETY LUG DETAIL

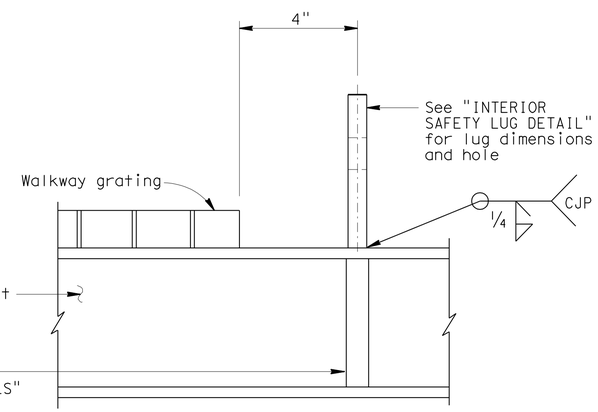

END SAFETY LUG DETAIL

NOTES:

1. Welded type grating shall have 1¼" x ⅛" bearing bars at 1³⁄₁₆" centers with ¼" diameter (or equal) cross bars at 4" centers. If mechanical lock grating is used, it shall be equal in strength to the welded type. Alternate hold-down clips may be submitted for approval.
2. Walkway grating and light fixture mounting channels to be continuous (no splices) over as many walkway brackets as practical and consistent with fabrication, ease of handling and assembly.
3. Contractor may substitute 1⅝" x 1⅝" x .1084" cont-slot steel channel with pre-punched slots not larger than ¹³⁄₃₂" x 3". Slots shall be at bottom of channel and shall be parallel to channel. Slots shall be spaced not closer than 4" center to center.
4. Stainless steel cable shall be plain with 7 x 19 class strand core construction using Type 302 or 304 alloy stainless steel strands. Minimum cable breaking strength shall be 10,000 pounds. Cable shall be free of kinks, knots, or deformation and shall be continuous between end lugs. Splices not allowed. Safety cable shall not be prestretched.
5. Shackle shall be galvanized steel with working load limit of 10,000 pounds.
6. Place an equal amount of washers on each side to align cable with end lug without restricting shackle bolt rotation or contacting cable.
7. Prior to tightening cable clips at exterior anchorage, slack in cable shall be removed by the full effort of a typical construction worker.

NOTE:
THE CONTRACTOR SHALL VERIFY ALL CONTROLLING FIELD DIMENSIONS BEFORE ORDERING OR FABRICATING ANY MATERIAL.

BRANCH CHIEF Jeffrey B. Woody

	BY	CHECKED
DESIGN	A GUTIERREZ	A BUI
DETAILS	A R DUDSAK	A BUI
QUANTITIES	A GUTIERREZ	A BUI

STATE OF CALIFORNIA
DEPARTMENT OF TRANSPORTATION

DIVISION OF ENGINEERING SERVICES
DESIGN AND TECHNICAL SERVICES
SPECIAL DESIGNS BRANCH A

BRIDGE NO.
POST MILE

SIGN DETAILS BRIDGE MOUNTED SIGN
TYPICAL DETAILS NO. 3

SDS-8

(ENGLISH) SPECIAL DESIGNS BRANCH BORDER SHEET (REV. 7-1-09)

ORIGINAL SCALE IN INCHES FOR REDUCED PLANS 0 1 2 3

CU 08
EA 448401

DISREGARD PRINTS BEARING EARLIER REVISION DATES 6/21/10 6/22/10

REVISION DATES

SHEET 8 OF 25

FILE => spec_des_br_prj/2010sd/08-448401/08-448401_sds-8.dgn

USERNAME => trmnguye DATE PLOTTED => 30-APR-2011 TIME PLOTTED => 14:35

DIST	COUNTY	ROUTE	POST MILES TOTAL PROJECT	SHEET No	TOTAL SHEETS
08	Riv	91	15.6/21.6	1649	2028

REGISTERED CIVIL ENGINEER X DATE

4-25-11
PLANS APPROVAL DATE

The State of California or its officers or agents shall not be responsible for the accuracy or completeness of electronic copies of this plan sheet.

REGISTERED PROFESSIONAL ENGINEER ANDREW BUI No. C63560 Exp. 9/30/10 CIVIL STATE OF CALIFORNIA

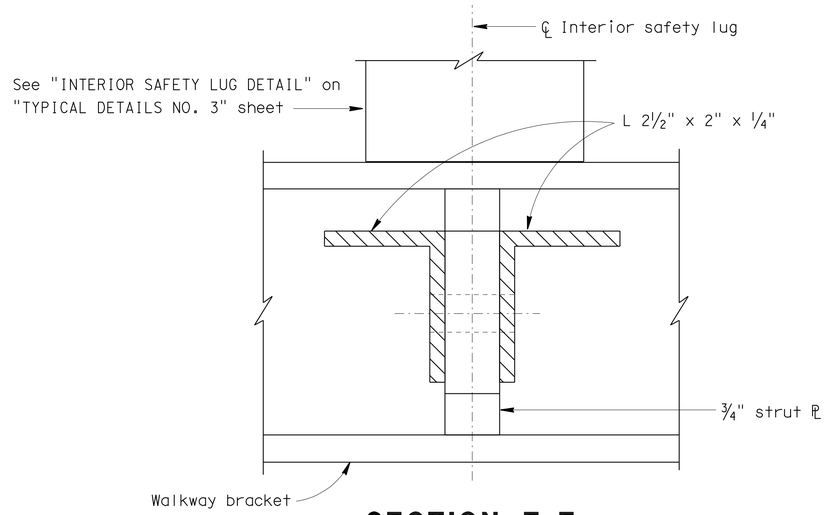

SECTION E-E

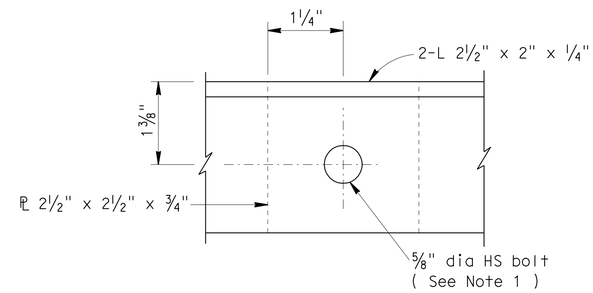

FILLER PLATE (TYP)

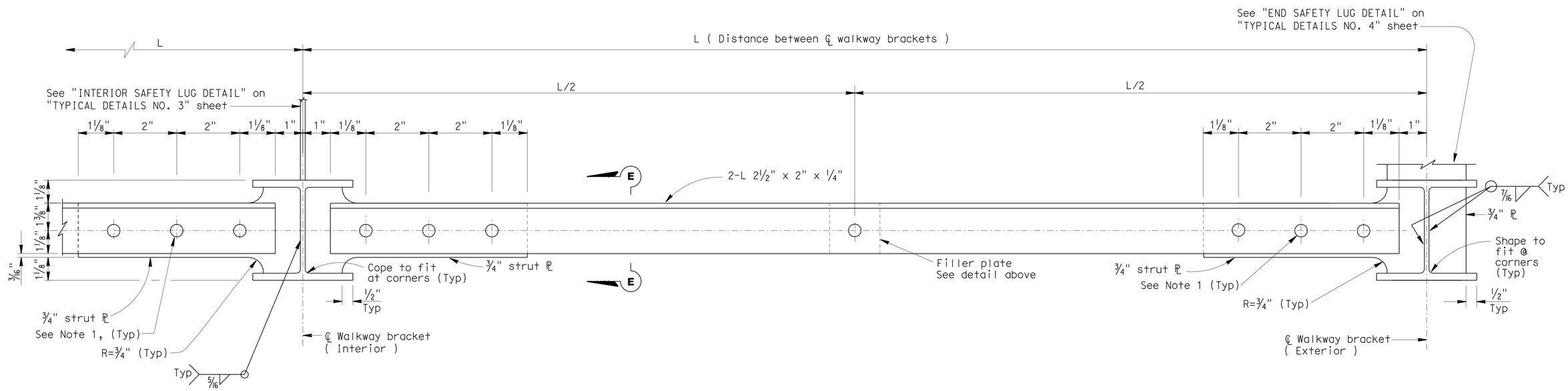

INTERIOR SAFETY LUG LOCATION (TYP)

STRUT SYSTEM (TYP)

(Continuous between end safety lug locations)

END SAFETY LUG LOCATION (TYP)

NOTE:

1. Drill ¾" dia hole for ⅝" dia HS bolt, 2 hardened washers and nut.

NOTE:
THE CONTRACTOR SHALL VERIFY ALL CONTROLLING FIELD DIMENSIONS BEFORE ORDERING OR FABRICATING ANY MATERIAL.

BRANCH CHIEF Jeffrey B Woody	DESIGN	BY A GUTIERREZ	CHECKED A BUI
	DETAILS	BY A R DUDSAK	CHECKED A BUI
	QUANTITIES	BY A GUTIERREZ	CHECKED A BUI

STATE OF CALIFORNIA
DEPARTMENT OF TRANSPORTATION

DIVISION OF ENGINEERING SERVICES
DESIGN AND TECHNICAL SERVICES
SPECIAL DESIGNS BRANCH A

BRIDGE NO.
POST MILE

SIGN DETAILS BRIDGE MOUNTED SIGN
STRUT DETAILS

SDS-9

(ENGLISH) SPECIAL DESIGNS BRANCH BORDER SHEET (REV. 7-1-09)

ORIGINAL SCALE IN INCHES FOR REDUCED PLANS 0 1 2 3

CU 08
EA 448401

DISREGARD PRINTS BEARING EARLIER REVISION DATES 6/22/10

REVISION DATES

SHEET 9 OF 25

FILE => spec_des_br_prj/2010sd/08-448401/08-448401_sds-9.dgn

USERNAME => trmmguye DATE PLOTTED => 30-APR-2011 TIME PLOTTED => 12:43

DIST	COUNTY	ROUTE	POST MILES TOTAL PROJECT	SHEET No	TOTAL SHEETS
08	Riv	91	15.6/21.6	1650	2028

REGISTERED CIVIL ENGINEER 3/11/11 DATE

4-25-11
PLANS APPROVAL DATE

REGISTERED PROFESSIONAL ENGINEER ANDREW BUI No. C63560 Exp. 9/30/12 CIVIL STATE OF CALIFORNIA

The State of California or its officers or agents shall not be responsible for the accuracy or completeness of electronic copies of this plan sheet.

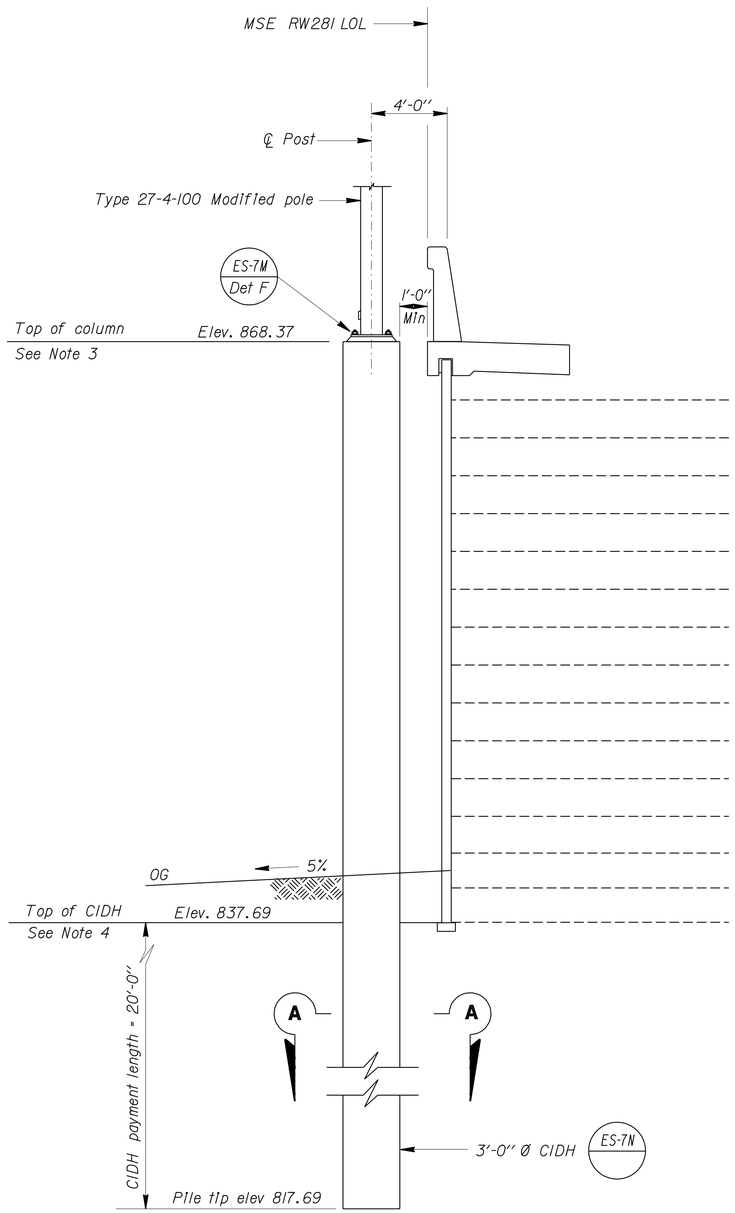

ELEVATION

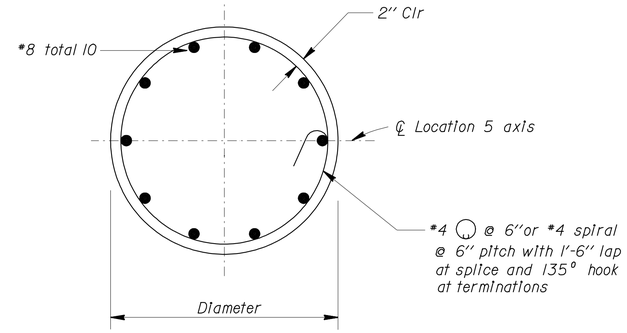

SECTION A-A

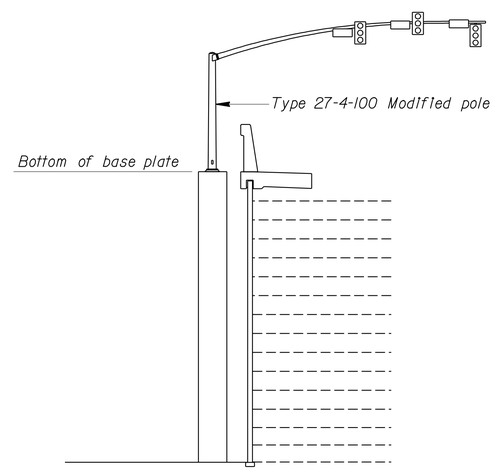

SIGN LAYOUT

Sta. 285 + 85

NOTES:

1. Column and reinforcing shall be centered from sign axis.
2. For location of signal, see "ROAD PLANS".
3. Top column elevation will be the same as top of retaining wall elevation for such location.
4. Top of CIDH elevation will be the same as top of leveling pad elevation for such location.
5. For Type 27-4-100 Modified Pole details, see sheet SES-3.
6. Minimum f'_c = 3,600 psi @ 28 days.
7. Minimum concrete strength shall be achieved prior to installing Type 27-4-100 Modified Pole.

NOTE:
THE CONTRACTOR SHALL VERIFY ALL CONTROLLING FIELD DIMENSIONS BEFORE ORDERING OR FABRICATING ANY MATERIAL.

STANDARD PLAN SHEET NO.
DETAIL NO.

NO SCALE

BRANCH CHIEF Jeffrey B Woody

DESIGN	BY MAHFOUD LICHA	CHECKED ANDREW BUI
DETAILS	BY R. YEE	CHECKED MAHFOUD LICHA
QUANTITIES	BY ANDREW BUI	CHECKED JOEL MAGANA

STATE OF CALIFORNIA
DEPARTMENT OF TRANSPORTATION

DIVISION OF ENGINEERING SERVICES
DESIGN AND TECHNICAL SERVICES
SPECIAL DESIGNS BRANCH A

BRIDGE NO.
POST MILE

RAMP METER SIGNAL
LOCATION 5 - FOUNDATION DETAILS

SDS-10

(ENGLISH) SPECIAL DESIGNS BRANCH BORDER SHEET (REV. 7-1-09)

ORIGINAL SCALE IN INCHES FOR REDUCED PLANS 0 1 2 3

CU 08
EA 448401

DISREGARD PRINTS BEARING EARLIER REVISION DATES

REVISION DATES: 7/29/10 8/27/10 9/27/10 1/3/11 1/18/11 3/11/11 3/16/11

SHEET 10 OF 25

FILE => /2010sd/08-448401/sds10.dgn

USERNAME => trstrk DATE PLOTTED => 30-APR-2011 TIME PLOTTED => 12:19

DIST	COUNTY	ROUTE	POST MILES TOTAL PROJECT	SHEET No	TOTAL SHEETS
08	Riv	91	15.6/21.6	1651	2028

REGISTERED CIVIL ENGINEER 3/11/11 DATE

4-25-11
PLANS APPROVAL DATE

REGISTERED PROFESSIONAL ENGINEER ANDREW BUI No. C63560 Exp. 9/30/12 CIVIL STATE OF CALIFORNIA

The State of California or its officers or agents shall not be responsible for the accuracy or completeness of electronic copies of this plan sheet.

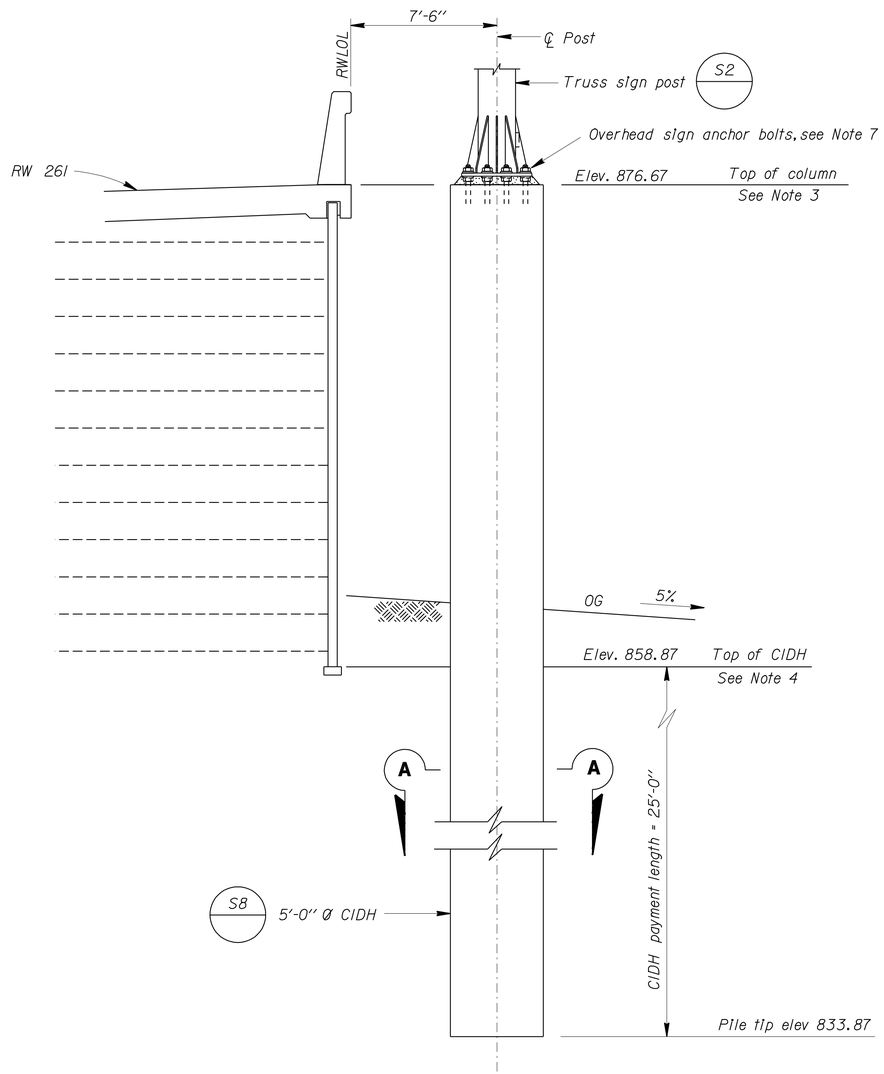

ELEVATION

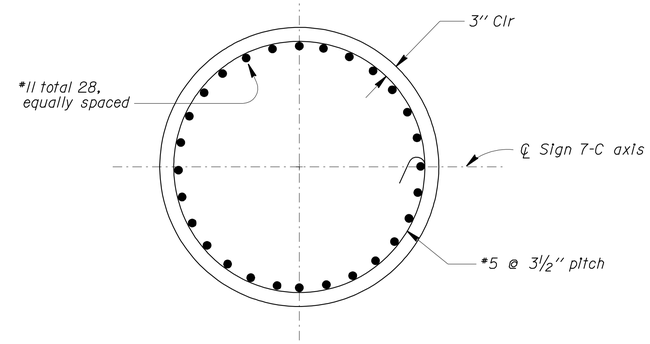

SECTION A-A

NOTES:

1. Reinforcement shall be centered from sign axis.
2. For location of truss sign, see "ROAD PLANS".
3. Top column elevation will be the same as top of retaining wall elevation for such location.
4. Top of CIDH elevation will be the same as top of leveling pad elevation for such location.
5. Minimum f'_c = 3,600 psi at 28 days.
6. Minimum concrete strength shall be achieved prior to installing truss sign.
7. For post base plate anchors and gusset plate details, see 2006 Revised Standard Plan S3.

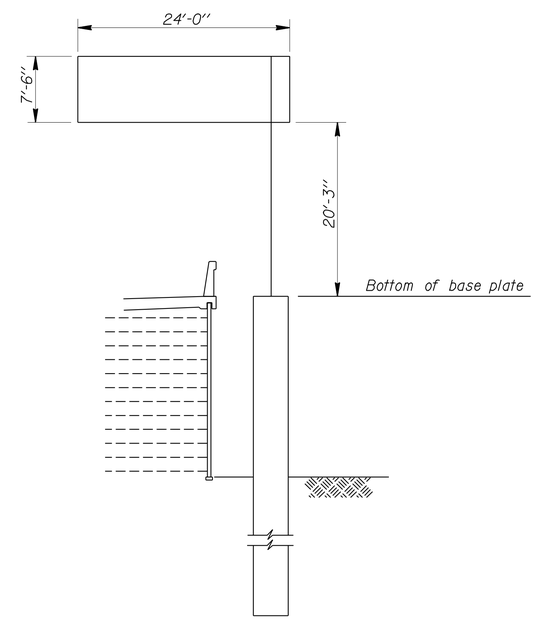

SIGN LAYOUT

Sta. 262 + 00

NOTE:
THE CONTRACTOR SHALL VERIFY ALL CONTROLLING FIELD DIMENSIONS BEFORE ORDERING OR FABRICATING ANY MATERIAL.

STANDARD PLAN SHEET NO.
DETAIL NO.

NO SCALE

BRANCH CHIEF Jeffrey B Woody

	BY	CHECKED
DESIGN	MAHFOUD LICHA	ANDREW BUI
DETAILS	R. YEE	MAHFOUD LICHA
QUANTITIES	ANDREW BUI	JOEL MAGANA

STATE OF CALIFORNIA
DEPARTMENT OF TRANSPORTATION

DIVISION OF ENGINEERING SERVICES
DESIGN AND TECHNICAL SERVICES
SPECIAL DESIGNS BRANCH A

BRIDGE NO.
POST MILE

OVERHEAD SIGN 7-C - SINGLE POST TRUSS
FOUNDATION DETAILS

SDS-11

(ENGLISH) SPECIAL DESIGNS BRANCH BORDER SHEET (REV. 7-1-09)

ORIGINAL SCALE IN INCHES FOR REDUCED PLANS 0 1 2 3

CU 08
EA 448401

DISREGARD PRINTS BEARING EARLIER REVISION DATES

REVISION DATES: 7/22/10 9/13/10 9/21/10 3/8/11 3/8/11 3/11/11 3/16/11

SHEET 11 OF 25

FILE => /2010sd/08-448401/sds11.dgn

USERNAME => trstrk DATE PLOTTED => 30-APR-2011 TIME PLOTTED => 12:19

DIST	COUNTY	ROUTE	POST MILES TOTAL PROJECT	SHEET No	TOTAL SHEETS
08	Riv	91	15.6/21.6	1652	2028

Mahfoud A. Licha 3/11/11
REGISTERED CIVIL ENGINEER DATE

4-25-11
PLANS APPROVAL DATE

REGISTERED PROFESSIONAL ENGINEER MAHFOUD A. LICHA No. C62816 Exp. 6/30/12 CIVIL STATE OF CALIFORNIA

The State of California or its officers or agents shall not be responsible for the accuracy or completeness of electronic copies of this plan sheet.

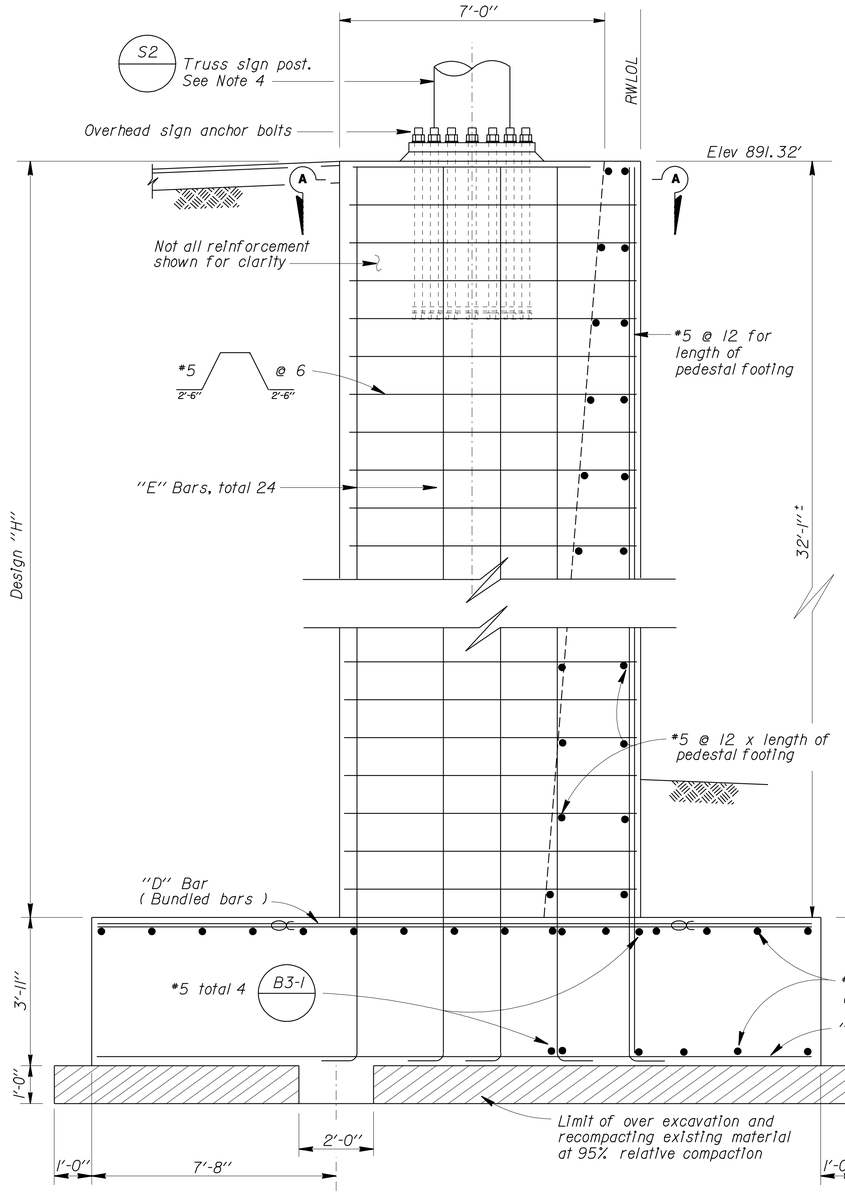

TYPICAL SECTION

Sta 398 + 10

TABLE A	
L	56'-2"
D BAR	#11 @ 8 ○C
E BAR	#11
F BAR	#11 @ 8

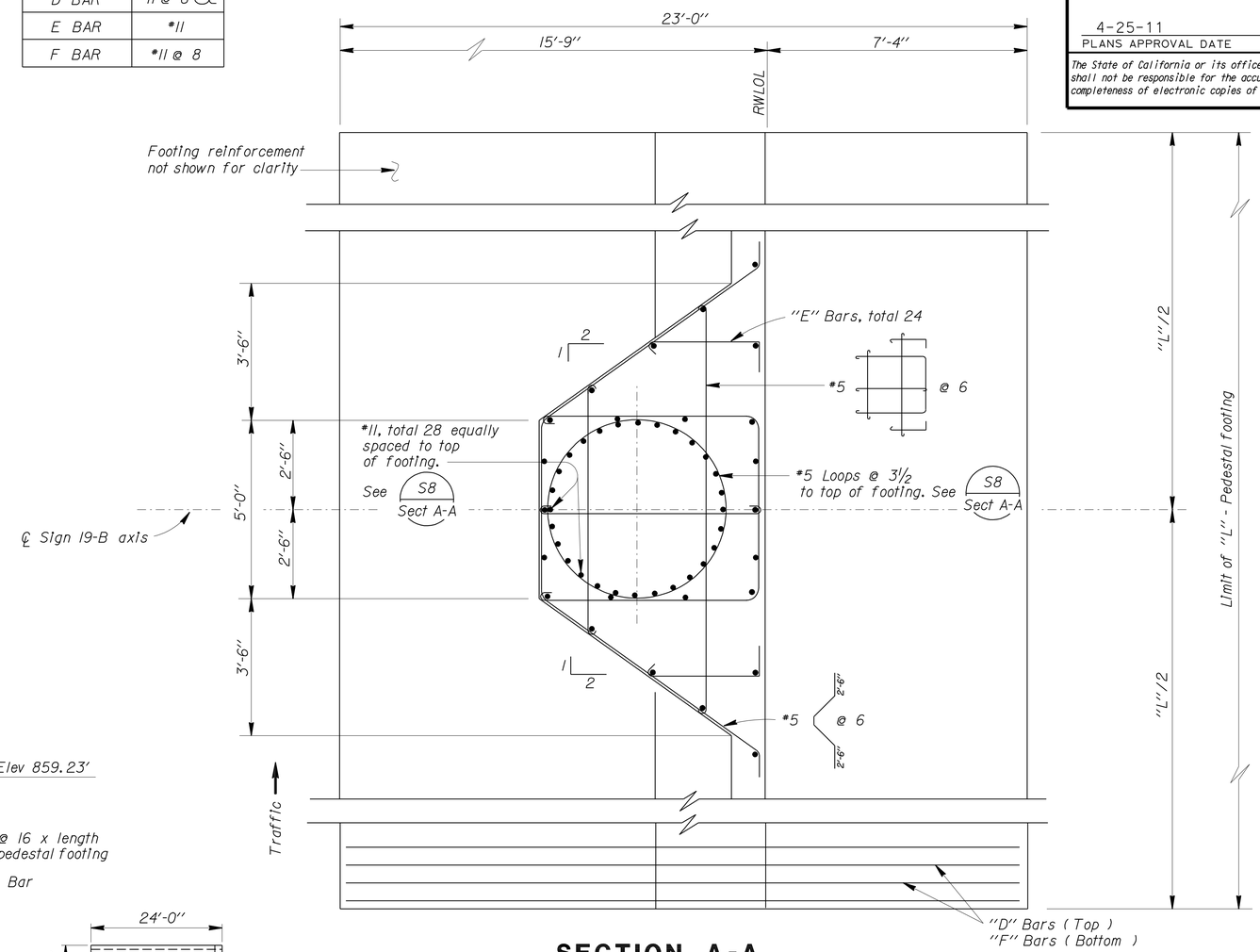

SECTION A-A

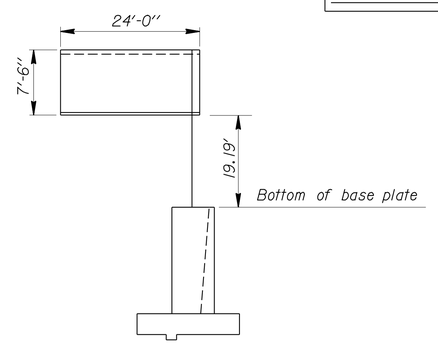

SIGN LAYOUT

NO SCALE

STANDARD PLAN SHEET NO.
DETAIL NO.

Retaining wall reinforcement (a), (b), and (c) not shown for clarity. See B3-2

NOTE:
THE CONTRACTOR SHALL VERIFY ALL CONTROLLING FIELD DIMENSIONS BEFORE ORDERING OR FABRICATING ANY MATERIAL.

NOTES:

1. Reinforcing shall be centered from sign axis.
2. For location of sign, see "ROAD PLANS".
3. For post base plate anchors and gusset plate details, see Revised Standard Plan S3.
4. Horizontal reinforcement in pedestal can be adjusted to clear vertical pedestal reinforcement.
5. For dimensions associated with Design "H" and retaining wall reinforcement (a), (b), and (c), see "RETAINING WALL TYPE I".
6. All vertical pedestal rebars to be bent 90° at the bottom and radiate out the center.
7. Minimum f'_c = 3,600 psi @ 28 days.
8. Minimum concrete strength shall be achieved and backfill placed prior to installation of truss signs.

BRANCH CHIEF Jeffrey B Woody

	BY	CHECKED
DESIGN	MAHFOUD LICHA	ANDREW BUI
DETAILS	R. YEE	MAHFOUD LICHA
QUANTITIES	JOEL MAGANA	MAHFOUD LICHA

STATE OF CALIFORNIA
DEPARTMENT OF TRANSPORTATION

DIVISION OF ENGINEERING SERVICES
DESIGN AND TECHNICAL SERVICES
SPECIAL DESIGNS BRANCH
A

BRIDGE NO.
POST MILE

OVERHEAD SIGN
SINGLE POST TRUSS - SIGN 19-B
PEDESTAL FOUNDATION DETAILS

SDS-12

(ENGLISH) SPECIAL DESIGNS BRANCH BORDER SHEET (REV. 7-1-09)

ORIGINAL SCALE IN INCHES FOR REDUCED PLANS 0 1 2 3

CU 08
EA 448401

DISREGARD PRINTS BEARING EARLIER REVISION DATES

REVISION DATES: 6/28/10 6/30/10 7/13/10 7/29/10 2/25/11 3/3/11 3/9/11 3/11/11

SHEET 12 OF 25

FILE => /2010sd/08-448401/sds12.dgn

USERNAME => trstrk DATE PLOTTED => 30-APR-2011 TIME PLOTTED => 12:20

DIST	COUNTY	ROUTE	POST MILES TOTAL PROJECT	SHEET No	TOTAL SHEETS
08	Riv	91	15.6/21.6	1653	2028

REGISTERED CIVIL ENGINEER 3/11/11 DATE

4-25-11
PLANS APPROVAL DATE

REGISTERED PROFESSIONAL ENGINEER MAHFOUD A. LICHA No. C62816 Exp. 6/30/12 CIVIL STATE OF CALIFORNIA

The State of California or its officers or agents shall not be responsible for the accuracy or completeness of electronic copies of this plan sheet.

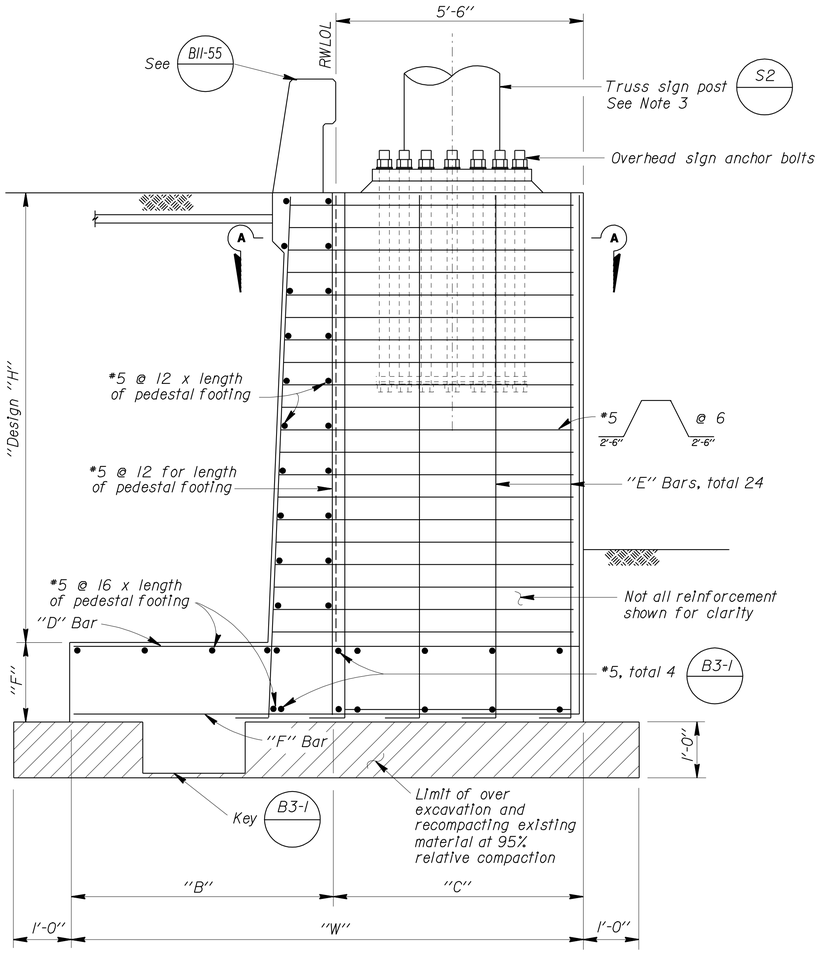

TYPICAL SECTION

Retaining wall reinforcement (a), (b), and (c) not shown for clarity. See B3-1

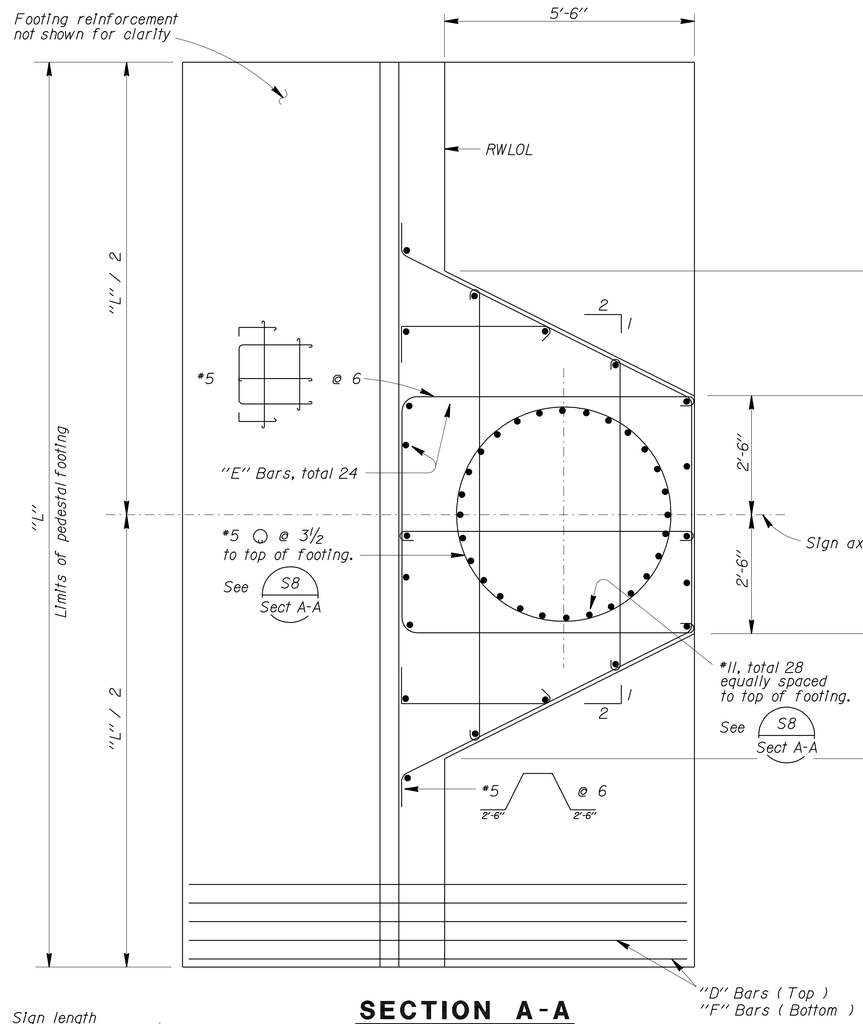

SECTION A-A

RETAINING WALL DESIGN "H"			
SIGN No.	1-B, 3-B	9-C	6-A, 6-C
Design "H"	10'-0"	12'-0"	20'-0"
W	13'-9"	14'-9"	18'-3"
C	5'-6"	5'-6"	5'-6"
B	8'-3"	9'-3"	12'-9"
F	1'-10"	1'-10"	2'-0"
L	17'-6"	21'-0"	35'-0"
D BAR	*9 @ 14	*7 @ 8	*9 @ 7
E BAR	*9	*9	*10
F BAR	*9 @ 14	*7 @ 8	*9 @ 7

NOTES:

1. Reinforcing shall be centered from sign axis.
2. For location of sign, see "ROAD PLANS".
3. For post base plate anchors and gusset plate details, see Revised Standard Plan S3.
4. Horizontal reinforcement in pedestal can be adjusted to clear vertical pedestal reinforcement.
5. For dimensions associated with Design "H" and retaining wall reinforcement (a), (b), and (c), see "RETAINING WALL TYPE 1".
6. All vertical pedestal rebars to be bent 90° at the bottom and radiate out the center.
7. Minimum f'_c = 3,600 psi @ 28 days.
8. Minimum concrete strength shall be achieved and backfill placed prior to installation of truss signs.

SIGN DATA TABLE					
SIGN	SIGN FACE	STATION	SIGN DEPTH (IN)	SIGN LENGTH (FT)	"H"
1-B	FEBT	172 + 00	90	20'-0"	20.44'
3-B	FEBT	199 + 50	90	22'-0"	20.46'
6-A	FWBT	237 + 00	90	24'-0"	20.25'
6-C	FEBT	241 + 50	100	38'-0"	22.49'
9-C	FEBT	263 + 50	100	24'-0"	20.65'

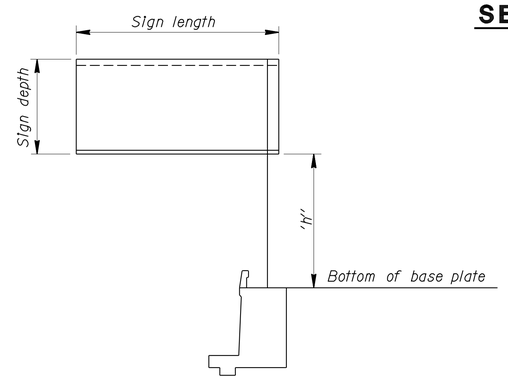

SIGN LAYOUT

STANDARD PLAN SHEET NO.
DETAIL NO.

NOTE:
THE CONTRACTOR SHALL VERIFY ALL CONTROLLING FIELD DIMENSIONS BEFORE ORDERING OR FABRICATING ANY MATERIAL.

NO SCALE

BRANCH CHIEF Jeffrey B. Woody

	BY	CHECKED
DESIGN	MAHFOUD LICHA	AIMAN MALAK
DETAILS	R. YEE	MAHFOUD LICHA
QUANTITIES	JOEL MAGANA	MAHFOUD LICHA

STATE OF CALIFORNIA
DEPARTMENT OF TRANSPORTATION

DIVISION OF ENGINEERING SERVICES
DESIGN AND TECHNICAL SERVICES
SPECIAL DESIGNS BRANCH A

BRIDGE NO.
POST MILE

OVERHEAD SIGN-SINGLE POST TRUSS PEDESTAL FOUNDATION DETAILS

SDS-13

(ENGLISH) SPECIAL DESIGNS BRANCH BORDER SHEET (REV. 7-1-09)

ORIGINAL SCALE IN INCHES FOR REDUCED PLANS 0 1 2 3

CU 08
EA 448401

DISREGARD PRINTS BEARING EARLIER REVISION DATES

REVISION DATES 7/30/10 8/30/10 9/27/10 10/14/10 8/29/11 3/9/11 3/10/11 3/11/11

SHEET 13 OF 25

FILE => /2010sd/08-448401/sds13.dgn

USERNAME => trstrk DATE PLOTTED => 30-APR-2011 TIME PLOTTED => 12:20

DIST	COUNTY	ROUTE	POST MILES TOTAL PROJECT	SHEET No	TOTAL SHEETS
08	Riv	91	15.6/21.6	1654	2028

Mahfoud A. Licha 3/11/11
REGISTERED CIVIL ENGINEER DATE

4-25-11
PLANS APPROVAL DATE

REGISTERED PROFESSIONAL ENGINEER MAHFOUD A. LICHA No. C62816 Exp. 6/30/12 CIVIL STATE OF CALIFORNIA

The State of California or its officers or agents shall not be responsible for the accuracy or completeness of electronic copies of this plan sheet.

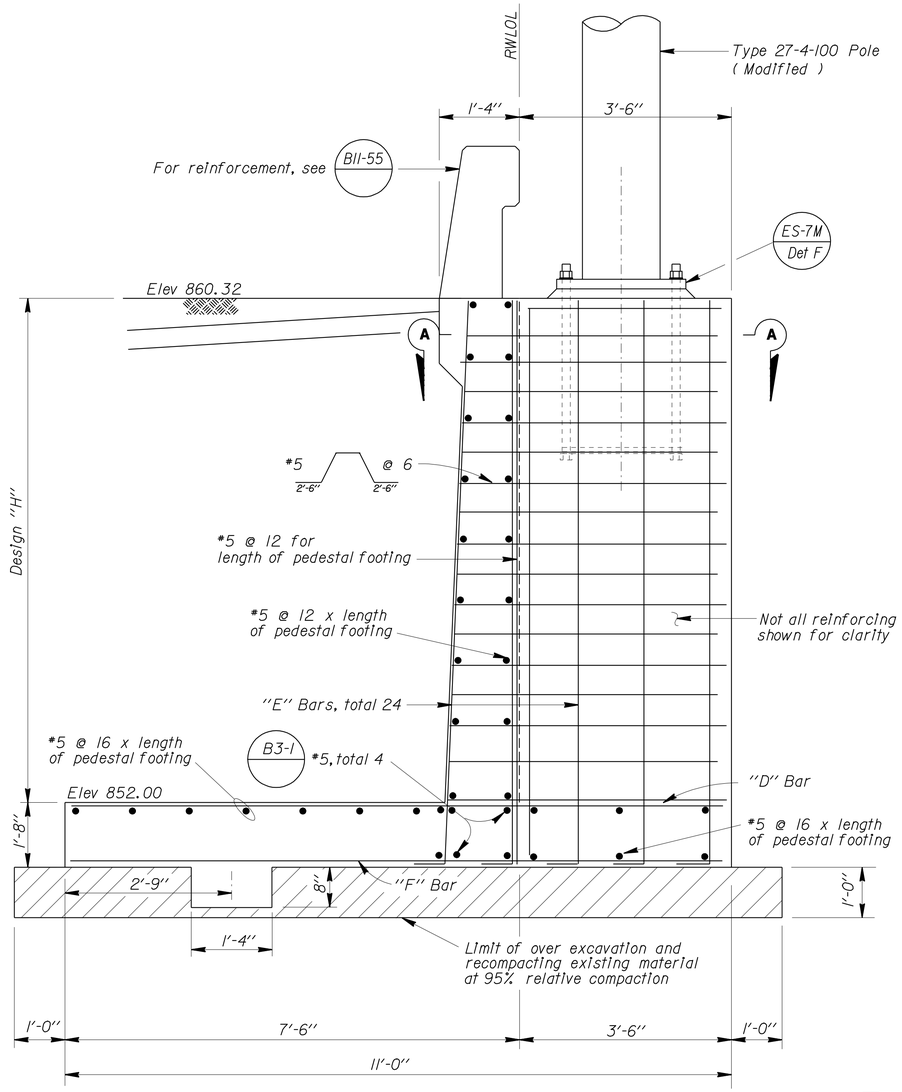

TYPICAL SECTION

Retaining wall reinforcement (a), (b), and (c) not shown for clarity

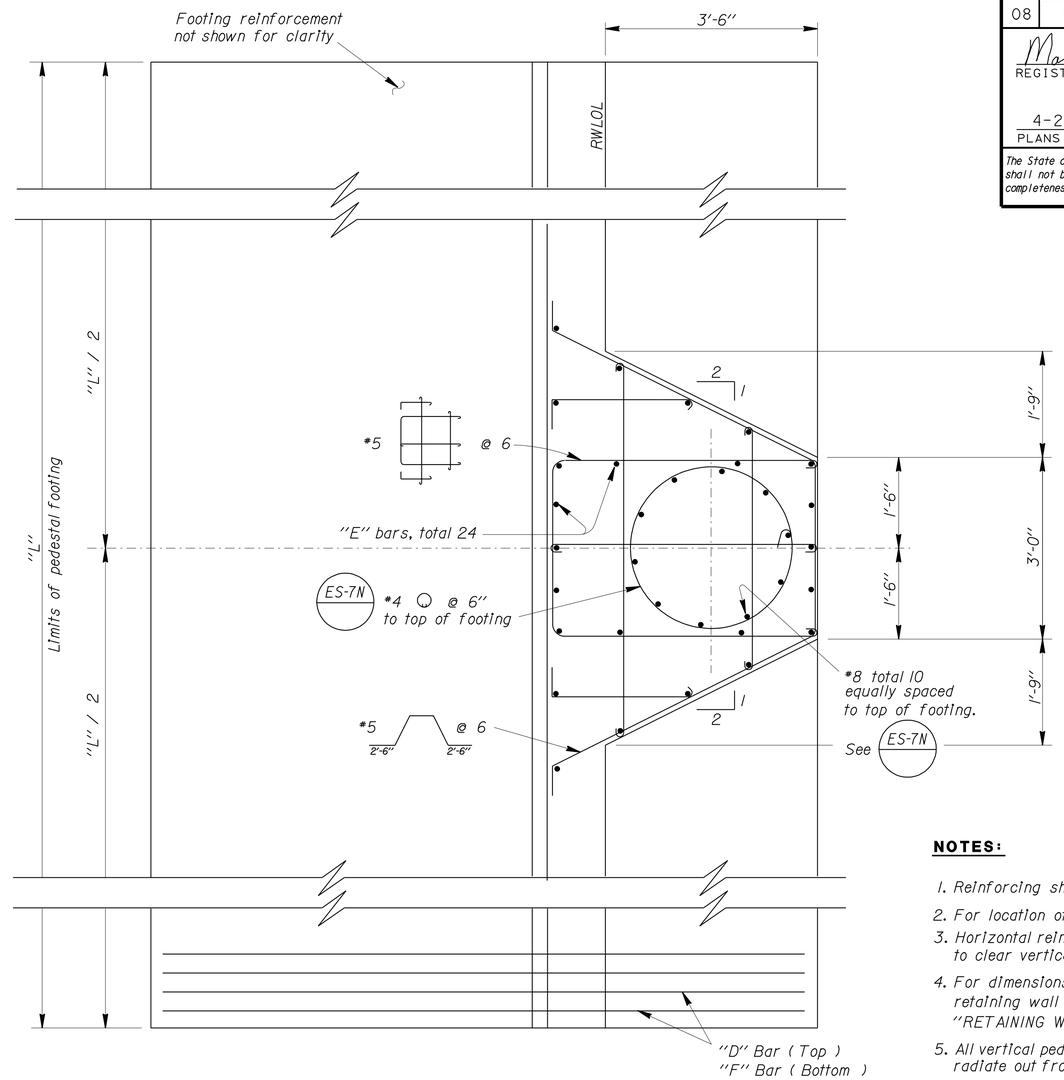

SECTION A-A

TABLE A	
L	14'-7"
D BAR	*9 @ 14
E BAR	*9
F BAR	*9 @ 14

NOTES:

1. Reinforcing shall be centered from sign axis.
2. For location of sign, see "ROAD PLANS".
3. Horizontal reinforcement in pedestal can be adjusted to clear vertical pedestal reinforcement.
4. For dimensions associated with Design "H" and retaining wall reinforcement (a), (b), and (c), see "RETAINING WALL TYPE 1".
5. All vertical pedestal rebars to be bent 90° at the bottom and radiate out from the center.
6. Minimum f'_c = 3,600 psi @ 28 days.
7. Minimum concrete strength shall be achieved and backfill placed prior to installation of Type 27-4-100 Pole (Modified).

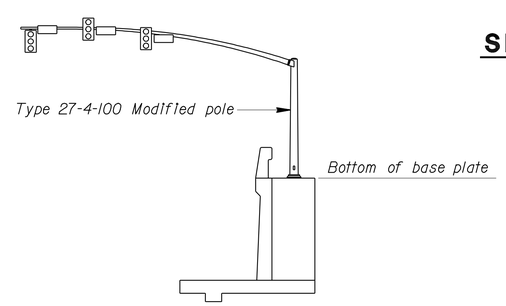

SIGNAL LAYOUT

Sta 204 + 80

NOTE:
THE CONTRACTOR SHALL VERIFY ALL CONTROLLING FIELD DIMENSIONS BEFORE ORDERING OR FABRICATING ANY MATERIAL.

STANDARD PLAN SHEET NO.
DETAIL NO.

NO SCALE

BRANCH CHIEF Jeffrey B Woody

	BY	CHECKED
DESIGN	MAHFOUD LICHA	YU SONG
DETAILS	R. YEE	MAHFOUD LICHA
QUANTITIES	JOEL MAGANA	YU SONG

STATE OF CALIFORNIA
DEPARTMENT OF TRANSPORTATION

DIVISION OF ENGINEERING SERVICES
DESIGN AND TECHNICAL SERVICES
SPECIAL DESIGNS BRANCH A

BRIDGE NO.
POST MILE

RAMP METER SIGNAL
LOCATION 2 - FOUNDATION DETAILS

SDS-14

(ENGLISH) SPECIAL DESIGNS BRANCH BORDER SHEET (REV. 7-1-09)

ORIGINAL SCALE IN INCHES FOR REDUCED PLANS 0 1 2 3

CU 08
EA 448401

DISREGARD PRINTS BEARING EARLIER REVISION DATES

REVISION DATES: 10/8/10 10/15/10 2/14/11 2/28/11 3/4/11 3/9/11

SHEET 14 OF 25

FILE => /2010sd/08-448401/sds14.dgn

USERNAME => tr-stik DATE PLOTTED => 30-APR-2011 TIME PLOTTED => 12:20

DIST	COUNTY	ROUTE	POST MILES TOTAL PROJECT	SHEET No	TOTAL SHEETS
08	Riv	91	15.6/21.6	1655	2028

Mahfoud A. Licha 3/11/11
REGISTERED CIVIL ENGINEER DATE

4-25-11
PLANS APPROVAL DATE

REGISTERED PROFESSIONAL ENGINEER MAHFOUD A. LICHA No. C62816 Exp. 6/30/12 CIVIL STATE OF CALIFORNIA

The State of California or its officers or agents shall not be responsible for the accuracy or completeness of electronic copies of this plan sheet.

TABLE A	
L	17'-11"
D BAR	#7 @ 9
E BAR	#9
F BAR	#7 @ 9

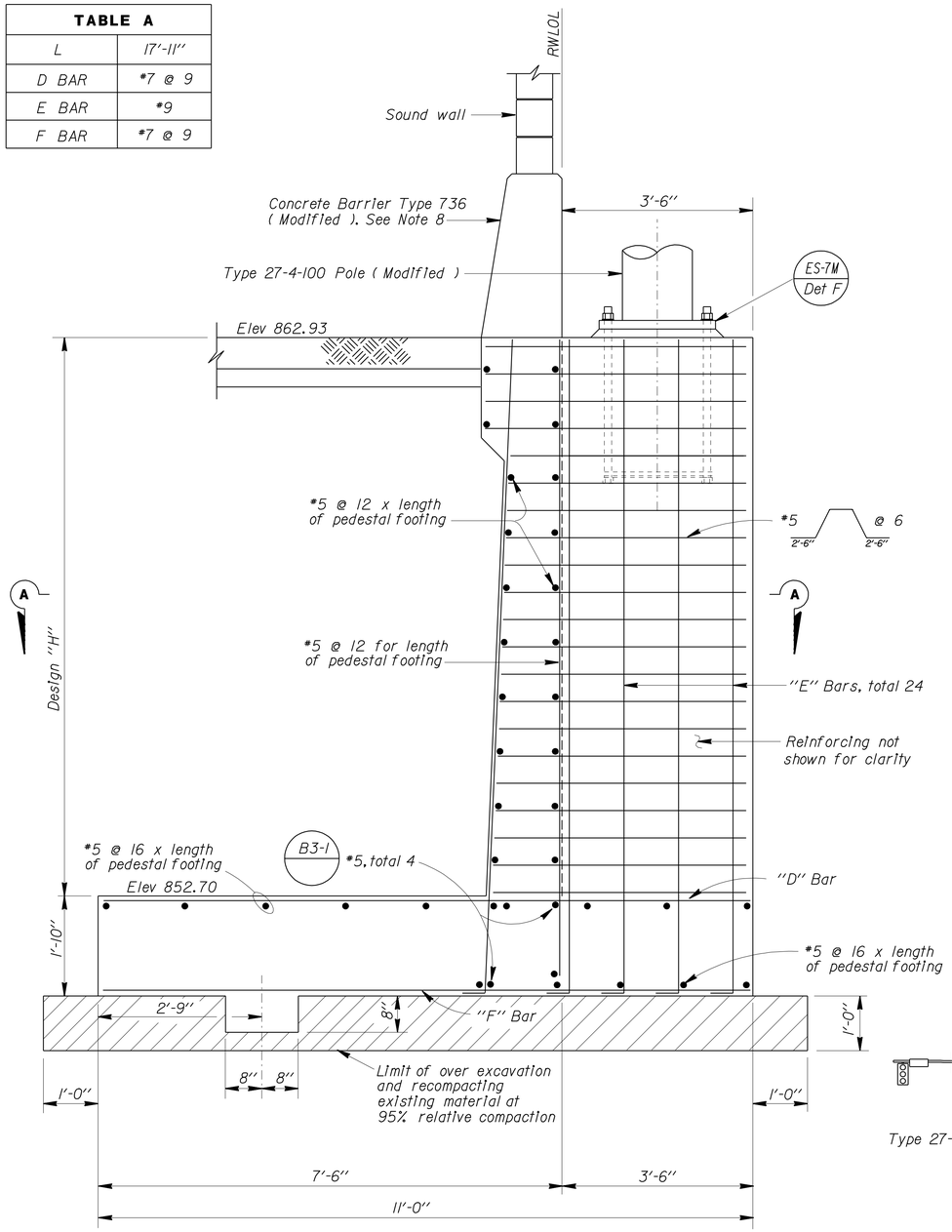

TYPICAL SECTION

Retaining Wall Type ISWB reinforcement
(a), (b), and (c) not shown for clarity

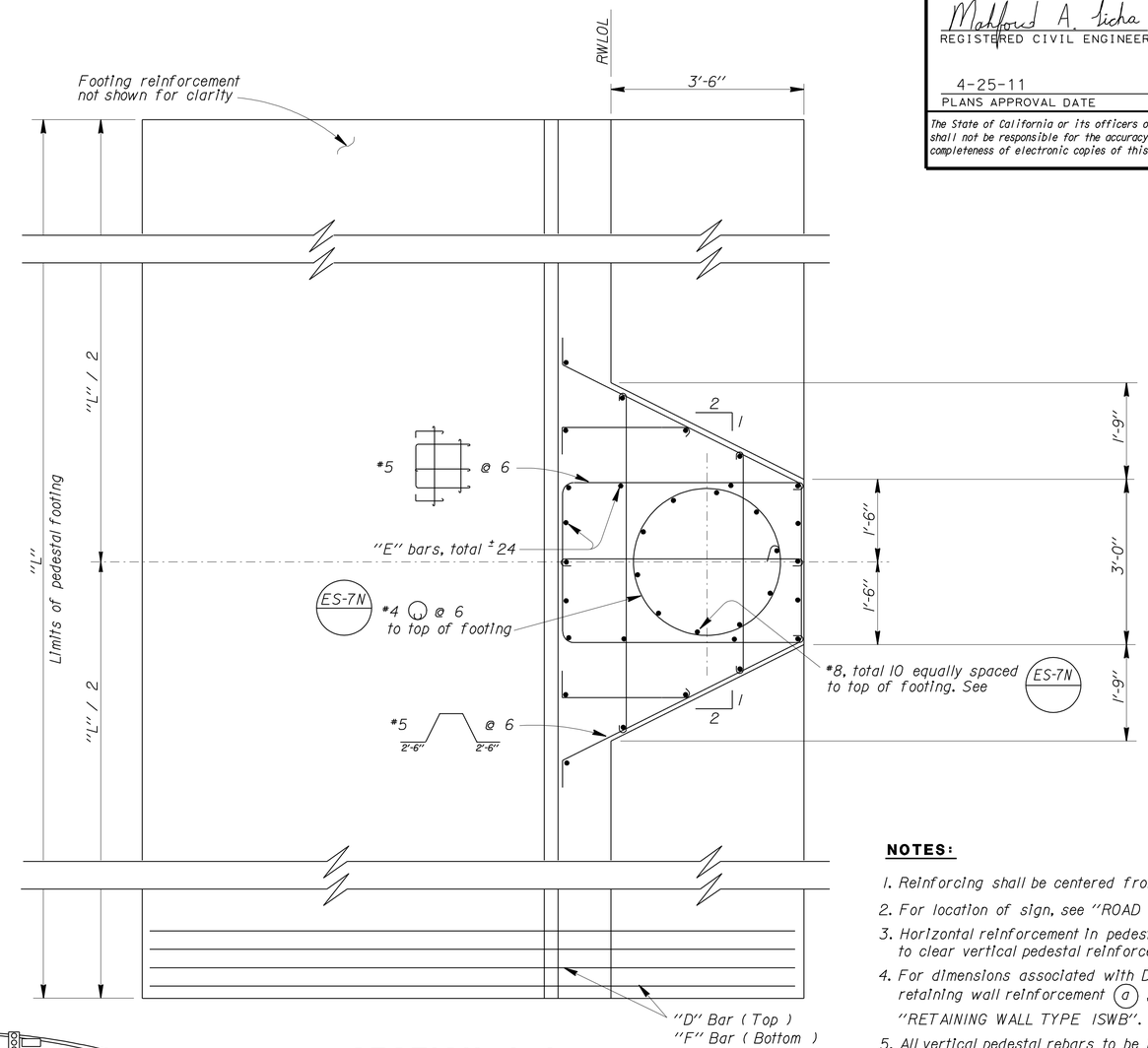

SECTION A-A

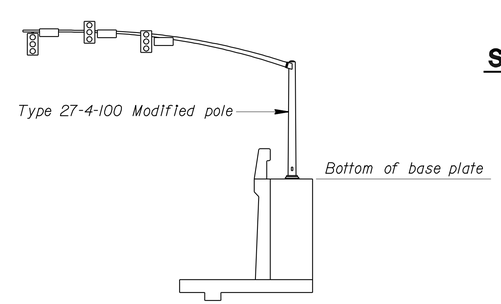

SIGNAL LAYOUT

Sta 252 + 50

NOTES:

1. Reinforcing shall be centered from sign axis.
2. For location of sign, see "ROAD PLANS".
3. Horizontal reinforcement in pedestal can be adjusted to clear vertical pedestal reinforcement.
4. For dimensions associated with Design "H" and retaining wall reinforcement (a), (b), and (c), see "RETAINING WALL TYPE ISWB".
5. All vertical pedestal rebars to be bent 90° at the bottom and radiate out from the center.
6. Minimum f'_c = 3,600 psi @ 28 days.
7. Minimum concrete strength shall be achieved and backfill placed prior to installation of Type 27-4-100 Pole (Modified).
8. For haunch and barrier reinforcement, see "RETAINING WALL TYPE ISWB".

NOTE:
THE CONTRACTOR SHALL VERIFY ALL CONTROLLING FIELD DIMENSIONS BEFORE ORDERING OR FABRICATING ANY MATERIAL.

STANDARD PLAN SHEET NO.
DETAIL NO.

NO SCALE

BRANCH CHIEF Jeffrey S Woody

	BY	CHECKED
DESIGN	MAHFOUD LICHA	YU SONG
DETAILS	R. YEE	MAHFOUD LICHA
QUANTITIES	JOEL MAGANA	YU SONG

STATE OF CALIFORNIA
DEPARTMENT OF TRANSPORTATION

DIVISION OF ENGINEERING SERVICES
DESIGN AND TECHNICAL SERVICES
SPECIAL DESIGNS BRANCH A

BRIDGE NO.
POST MILE

RAMP METER SIGNAL
LOCATION 3 - FOUNDATION DETAILS

SDS-15

(ENGLISH) SPECIAL DESIGNS BRANCH BORDER SHEET (REV. 7-1-09)

ORIGINAL SCALE IN INCHES FOR REDUCED PLANS 0 1 2 3

CU 08
EA 448401

DISREGARD PRINTS BEARING EARLIER REVISION DATES

REVISION DATES: 10/13/10 10/28/10 2/18/11 2/28/11 3/3/11 3/9/11

SHEET 15 OF 25

FILE => /2010sd/08-448401/sds15.dgn

USERNAME => trstrk DATE PLOTTED => 30-APR-2011 TIME PLOTTED => 12:20

DIST	COUNTY	ROUTE	POST MILES TOTAL PROJECT	SHEET No	TOTAL SHEETS
08	Riv	91	15.6/21.6	1656	2028

Mahfoud A Licha 3/11/11
REGISTERED CIVIL ENGINEER DATE

4-25-11
PLANS APPROVAL DATE

REGISTERED PROFESSIONAL ENGINEER MAHFOUD A. LICHA No. C62816 Exp. 6/30/12 CIVIL STATE OF CALIFORNIA

The State of California or its officers or agents shall not be responsible for the accuracy or completeness of electronic copies of this plan sheet.

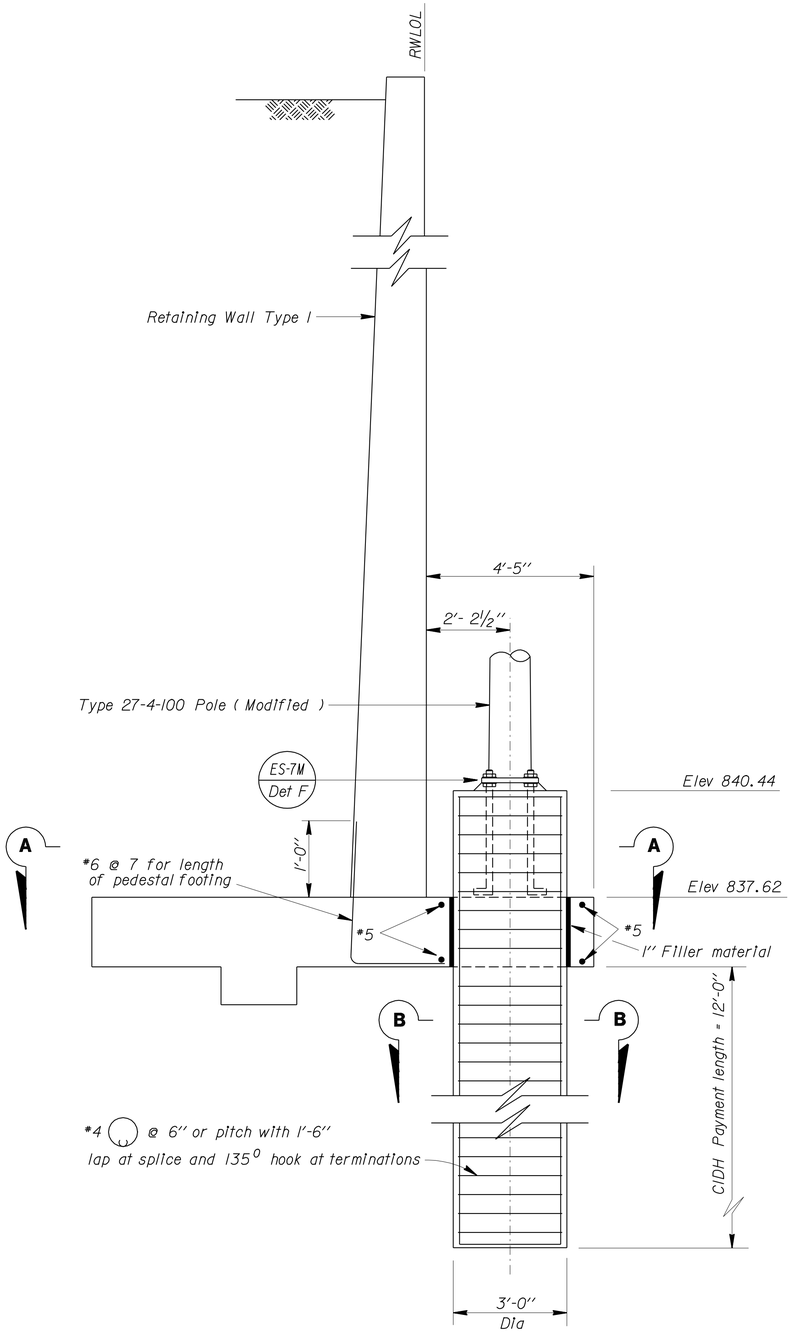

TYPICAL SECTION

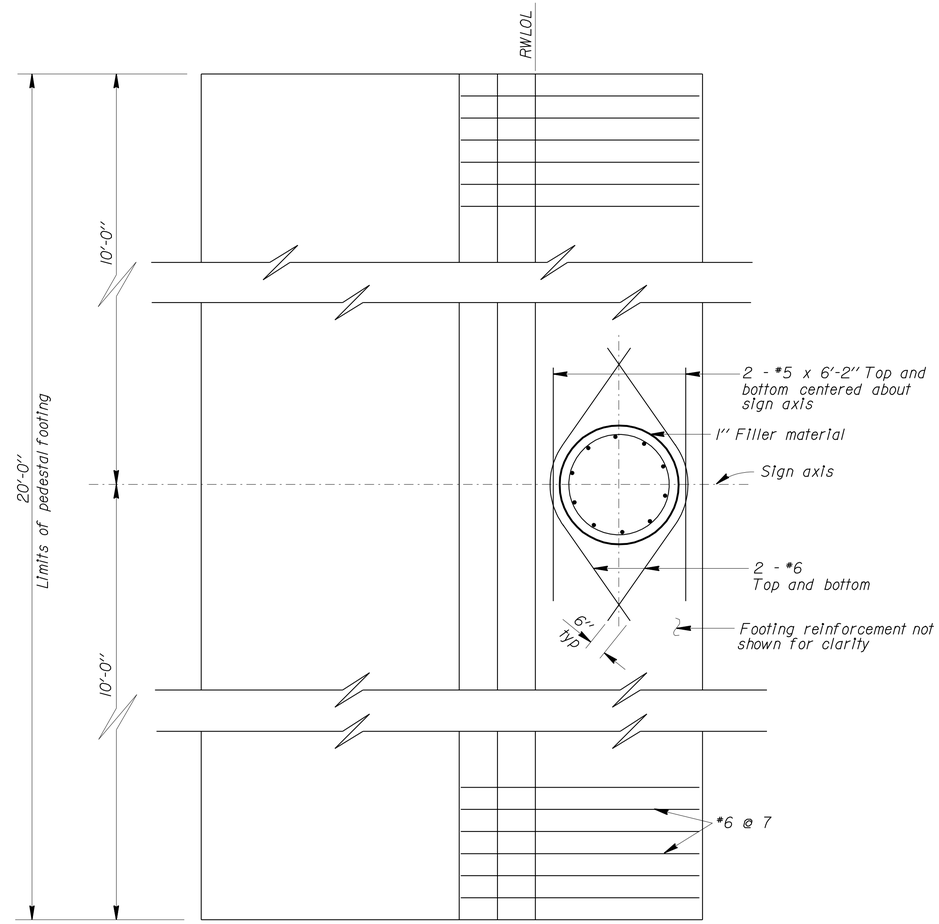

SECTION A-A

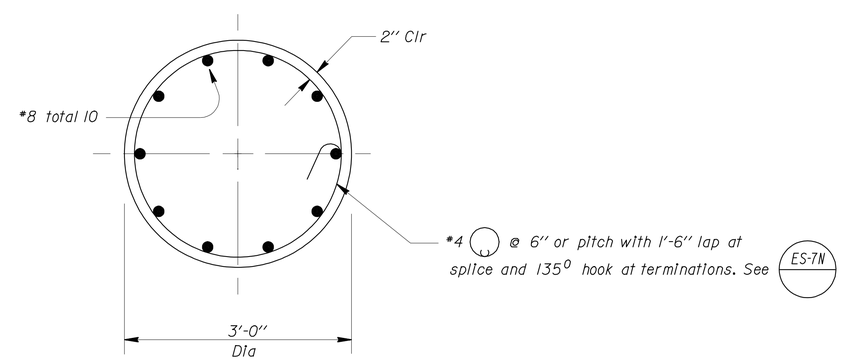

SECTION B-B

NOTES:

1. Reinforcement shall be centered from sign axis.
2. For location of sign, see "ROAD PLANS".
3. For Retaining Wall Type I, see "RETAINING WALL PLAN" and standard plan.
4. Reinforcement shown is in addition to 2006 "RETAINING WALL STANDARD PLANS".
5. Minimum f'_c = 3,600 psi at 28 days.
6. Minimum concrete strength shall be achieved prior to installing signal.

NOTE:
THE CONTRACTOR SHALL VERIFY ALL CONTROLLING FIELD DIMENSIONS BEFORE ORDERING OR FABRICATING ANY MATERIAL.

STANDARD PLAN SHEET NO.
DETAIL NO.

NO SCALE

BRANCH CHIEF Jeffrey B Woody

	BY	CHECKED
DESIGN	MAHFOUD LICHA	AIMAN MALAK
DETAILS	R. YEE	MAHFOUD LICHA
QUANTITIES	JOEL MAGANA	YU SONG

STATE OF CALIFORNIA
DEPARTMENT OF TRANSPORTATION

DIVISION OF ENGINEERING SERVICES
DESIGN AND TECHNICAL SERVICES
SPECIAL DESIGNS BRANCH A

BRIDGE NO.
POST MILE

RAMP METER SIGNAL
LOCATION 7 - FOUNDATION DETAILS

SDS-16

(ENGLISH) SPECIAL DESIGNS BRANCH BORDER SHEET (REV. 7-1-09)

ORIGINAL SCALE IN INCHES FOR REDUCED PLANS 0 1 2 3

CU 08
EA 448401

DISREGARD PRINTS BEARING EARLIER REVISION DATES

REVISION DATES: 10/11/10 10/25/10 2/15/11 2/18/11 3/4/11 3/9/11

SHEET 16 OF 25

FILE => /2010sd/08-448401/sds16.dgn

USERNAME => trstrk DATE PLOTTED => 30-APR-2011 TIME PLOTTED => 12:20

DIST	COUNTY	ROUTE	POST MILES TOTAL PROJECT	SHEET No	TOTAL SHEETS
08	Riv	91	15.6/21.6	1657	2028

REGISTERED CIVIL ENGINEER — 3/11/11 DATE

4-25-11
PLANS APPROVAL DATE

REGISTERED PROFESSIONAL ENGINEER — MAHFOUD A. LICHA — No. C62816 — Exp. 6/30/12 — CIVIL — STATE OF CALIFORNIA

The State of California or its officers or agents shall not be responsible for the accuracy or completeness of electronic copies of this plan sheet.

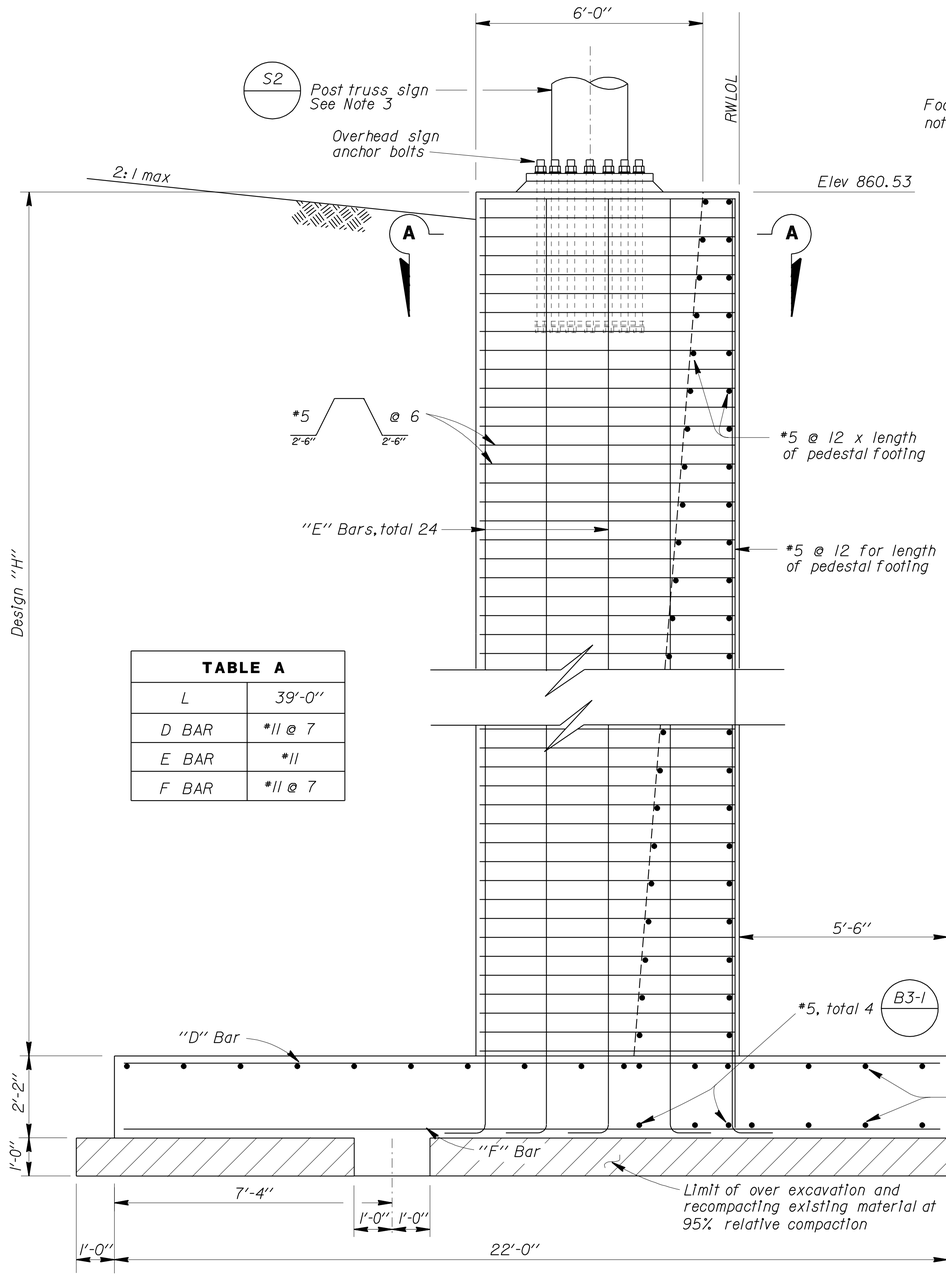

TABLE A	
L	39'-0"
D BAR	#11 @ 7
E BAR	#11
F BAR	#11 @ 7

TYPICAL SECTION

Retaining Wall Type I reinforcement
(a), (b), and (c) not shown for clarity. See B3-1

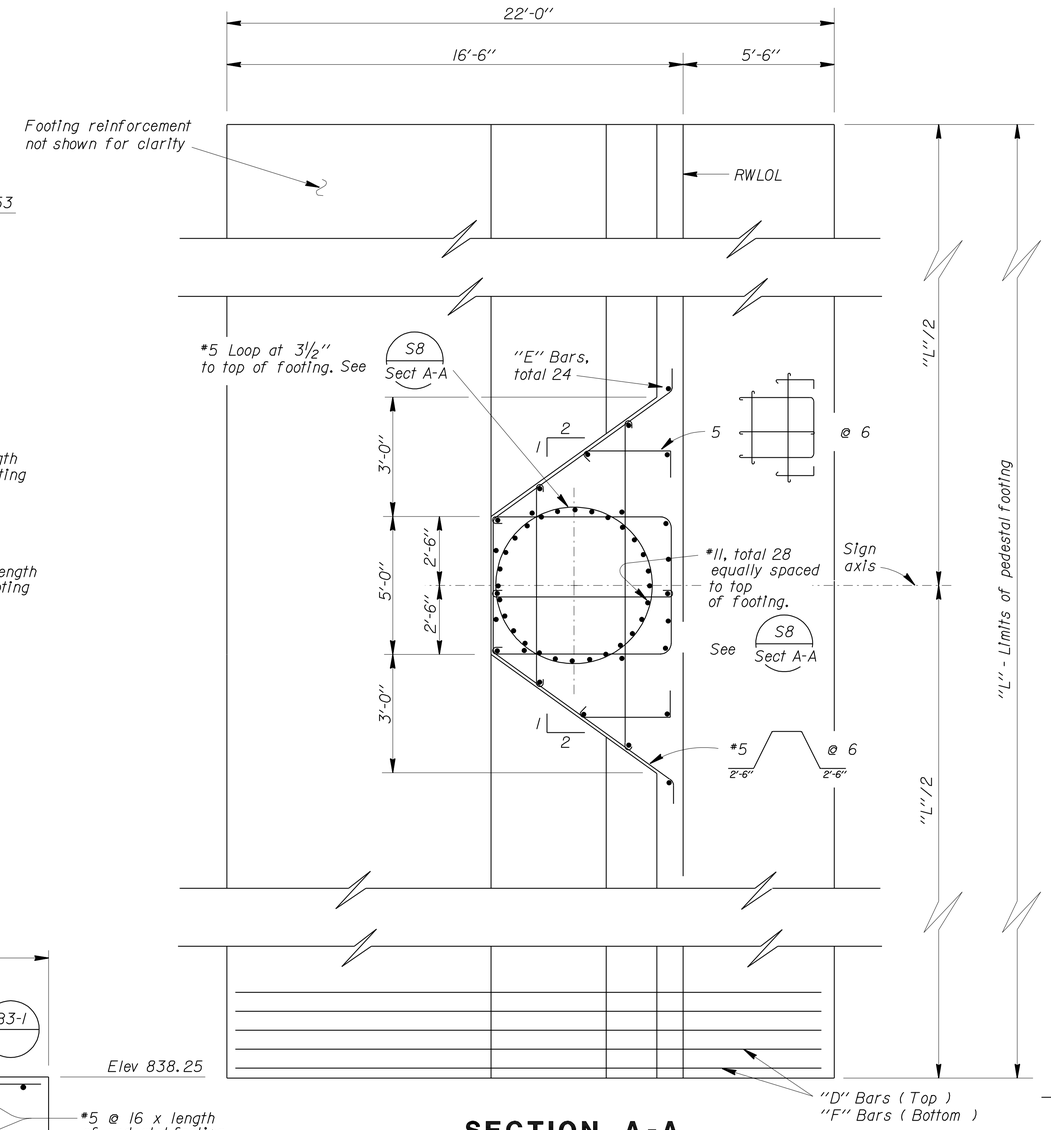

SECTION A-A

NOTES:

1. Reinforcing shall be centered from sign axis.
2. For location of sign, see "ROAD PLANS".
3. For post base plate anchors and gusset plate details, see revised Standard Plan S3.
4. Horizontal reinforcement in pedestal can be adjusted to clear vertical pedestal reinforcement.
5. For dimensions associated with Design "H" and retaining wall reinforcement (a), (b), and (c), see "RETAINING WALL TYPE I".
6. All vertical pedestal rebars to be bent 90° at the bottom and radiate out from the center.
7. Minimum f'_c = 3,600 psi @ 28 days.
8. Minimum concrete strength shall be achieved and backfill placed prior to installation of truss signs.

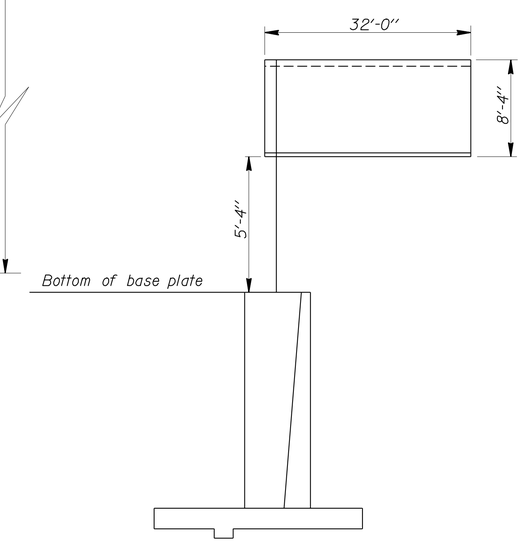

SIGN LAYOUT (FEBT)

NOTE:
THE CONTRACTOR SHALL VERIFY ALL CONTROLLING FIELD DIMENSIONS BEFORE ORDERING OR FABRICATING ANY MATERIAL.

STANDARD PLAN SHEET NO.
DETAIL NO.

NO SCALE

BRANCH CHIEF	DESIGN	BY MAHFOUD LICHA	CHECKED K.C. LIU
	DETAILS	BY R. YEE	CHECKED MAHFOUD LICHA
	QUANTITIES	BY JOEL MAGANA	CHECKED MAHFOUD LICHA

STATE OF CALIFORNIA
DEPARTMENT OF TRANSPORTATION

DIVISION OF ENGINEERING SERVICES
DESIGN AND TECHNICAL SERVICES
SPECIAL DESIGNS BRANCH
A

BRIDGE NO.
POST MILE

OVERHEAD SIGN
SINGLE POST TRUSS - SIGN 16-B
PEDESTAL FOUNDATION DETAILS

SDS-17

(ENGLISH) SPECIAL DESIGNS BRANCH BORDER SHEET (REV. 7-1-09)

ORIGINAL SCALE IN INCHES FOR REDUCED PLANS 0 1 2 3

CU 08
EA 448401

DISREGARD PRINTS BEARING EARLIER REVISION DATES — REVISION DATES 10/14/10 2/25/11 2/25/11 3/3/11 3/9/11

SHEET 17 OF 25

FILE => /2010sd/08-448401/sds17.dgn

USERNAME => trstrk DATE PLOTTED => 30-APR-2011 TIME PLOTTED => 12:21

DIST	COUNTY	ROUTE	POST MILES TOTAL PROJECT	SHEET No	TOTAL SHEETS
08	Riv	91	15.6/21.6	1658	2028

REGISTERED CIVIL ENGINEER 4/28/11 DATE

4-25-11
PLANS APPROVAL DATE

REGISTERED PROFESSIONAL ENGINEER ROBERT B. GIORGIS JR. No. C60705 Exp. 12/31/12 CIVIL STATE OF CALIFORNIA

The State of California or its officers or agents shall not be responsible for the accuracy or completeness of electronic copies of this plan sheet.

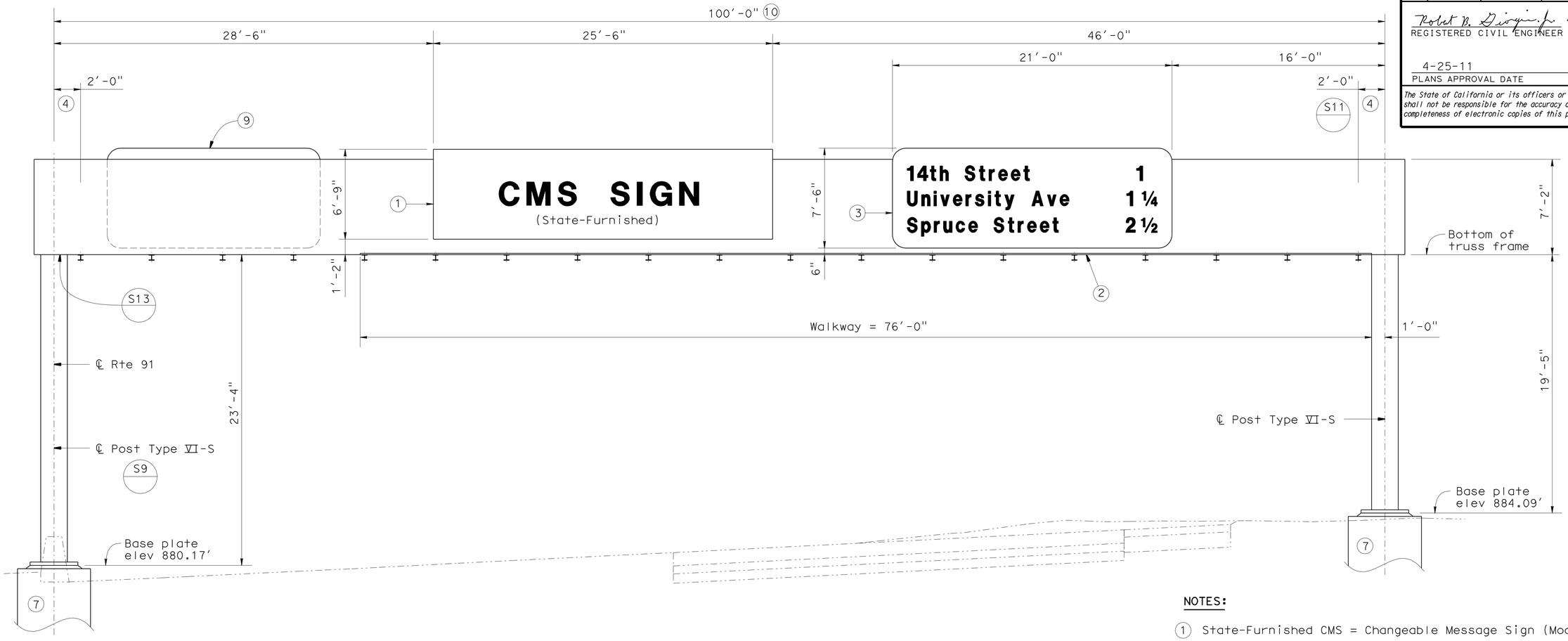

ELEVATION (FEBT)

Sta. 307+20
(NO SCALE)

NOTES:

1. State-Furnished CMS = Changeable Message Sign (Model 500).
2. Walkway and Sign Panel lighting.
3. Sign 12-D, see "SIGN DETAILS" sheet and Standard Plan sheet S19.
4. Location of first vertical angle from centerline of post.
5. For details not shown, see "2006 STANDARD PLANS" and "2006 REVISED STANDARD PLANS".
6. For General Notes, see Standard Plan sheet S1.
7. For Pedestal and CIDH details, see sheet SDS-25.
8. For CMS mounting details, see sheet SDS-24.
9. For details, see sheet SDS-19.
10. Use L8x4x3/4 for top and bottom chords. Use L3x3x3/8 for wind bracing. For other truss members see Standard Plan S11.

STANDARD PLANS DATED MAY 2006

A10A ACRONYMS AND ABBREVIATIONS (SHEET 1 OF 2)
A10B ACRONYMS AND ABBREVIATIONS (SHEET 2 OF 2)

NOTE:
THE CONTRACTOR SHALL VERIFY ALL CONTROLLING FIELD DIMENSIONS BEFORE ORDERING OR FABRICATING ANY MATERIAL.

Standard Plan No.
Detail No.

BRANCH CHIEF Jeffrey B Woody

	BY	CHECKED
DESIGN	A L HOUGH	R GIORGIS
DETAILS	A R DUDSAK	A L HOUGH
QUANTITIES	A L HOUGH	R GIORGIS

STATE OF CALIFORNIA
DEPARTMENT OF TRANSPORTATION

DIVISION OF ENGINEERING SERVICES
DESIGN AND TECHNICAL SERVICES
SPECIAL DESIGNS BRANCH A

BRIDGE NO.
POST MILE

TWO-POST CMS TRUSS
SIGN LAYOUT NO. 1

SDS-18

(ENGLISH) SPECIAL DESIGNS BRANCH BORDER SHEET (REV. 7-1-09)

ORIGINAL SCALE IN INCHES FOR REDUCED PLANS 0 1 2 3

CU 08
EA 448401

DISREGARD PRINTS BEARING EARLIER REVISION DATES 10/14/10 10/29/10 11/2/10

REVISION DATES

SHEET 18 OF 25

FILE => spec_des_br_prj/2010sd/08-448401/08-448401_sds-18t.dgn

USERNAME => trestrk DATE PLOTTED => 30-APR-2011 TIME PLOTTED => 12:21

DIST	COUNTY	ROUTE	POST MILES TOTAL PROJECT	SHEET No	TOTAL SHEETS
08	Riv	91	15.6/21.6	1659	2028

Robert B. Giorgis Jr. 4/28/11
REGISTERED CIVIL ENGINEER DATE

4-25-11
PLANS APPROVAL DATE

The State of California or its officers or agents shall not be responsible for the accuracy or completeness of electronic copies of this plan sheet.

REGISTERED PROFESSIONAL ENGINEER ROBERT B. GIORGIS JR. No. C60705 Exp. 12/31/12 CIVIL STATE OF CALIFORNIA

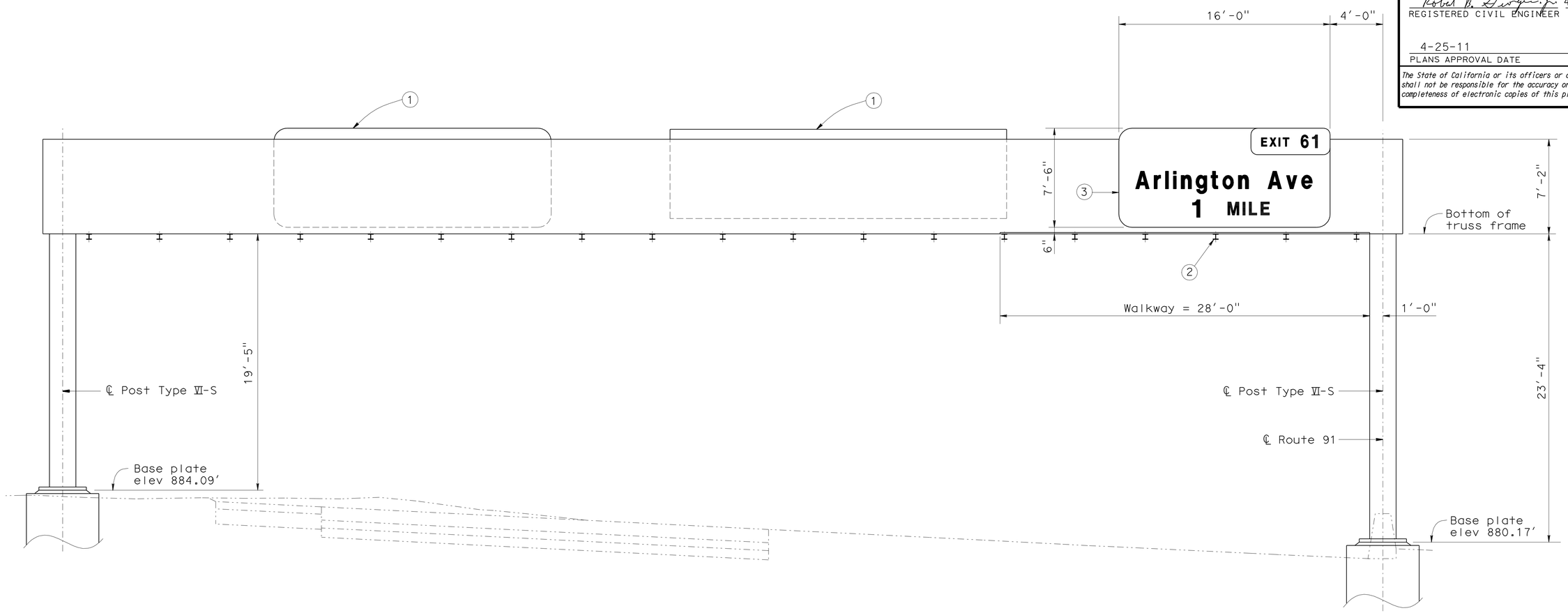

ELEVATION (FWBT)

Sta 307+20
(NO SCALE)

NOTES:

1. See Sheet SDS-18.
2. Walkway and Sign Panel lighting.
3. Sign 12-C, See "SIGN DETAILS" sheet and Standard Plan sheet S19.

NOTE:
THE CONTRACTOR SHALL VERIFY ALL CONTROLLING FIELD DIMENSIONS BEFORE ORDERING OR FABRICATING ANY MATERIAL.

BRANCH CHIEF Jeffrey B Woody

	BY	CHECKED
DESIGN	A L HOUGH	R GIORGIS
DETAILS	A R DUDSAK	A L HOUGH
QUANTITIES	A L HOUGH	R GIORGIS

STATE OF CALIFORNIA
DEPARTMENT OF TRANSPORTATION

DIVISION OF ENGINEERING SERVICES
DESIGN AND TECHNICAL SERVICES
SPECIAL DESIGNS BRANCH A

BRIDGE NO.
POST MILE

TWO-POST CMS TRUSS
SIGN LAYOUT NO. 2

SDS-19

(ENGLISH) SPECIAL DESIGNS BRANCH BORDER SHEET (REV. 7-1-09)

ORIGINAL SCALE IN INCHES FOR REDUCED PLANS 0 1 2 3

CU 08
EA 448401

DISREGARD PRINTS BEARING EARLIER REVISION DATES → 10-14-10 10-29-10 11-2-10

REVISION DATES

SHEET 19 OF 25

USERNAME => trstrk DATE PLOTTED => 30-APR-2011 TIME PLOTTED => 12:21

FILE => spec_des_br_prj/2010sd/08-448401/08-448401_sds-19t.dgn

DIST	COUNTY	ROUTE	POST MILES TOTAL PROJECT	SHEET No	TOTAL SHEETS
08	Riv	91	15.6/21.6	1660	2028

Robert B. Giorgis Jr. 4/28/11
REGISTERED CIVIL ENGINEER DATE

4-25-11
PLANS APPROVAL DATE

REGISTERED PROFESSIONAL ENGINEER ROBERT B. GIORGIS JR. No. C60705 Exp. 12/31/12 CIVIL STATE OF CALIFORNIA

The State of California or its officers or agents shall not be responsible for the accuracy or completeness of electronic copies of this plan sheet.

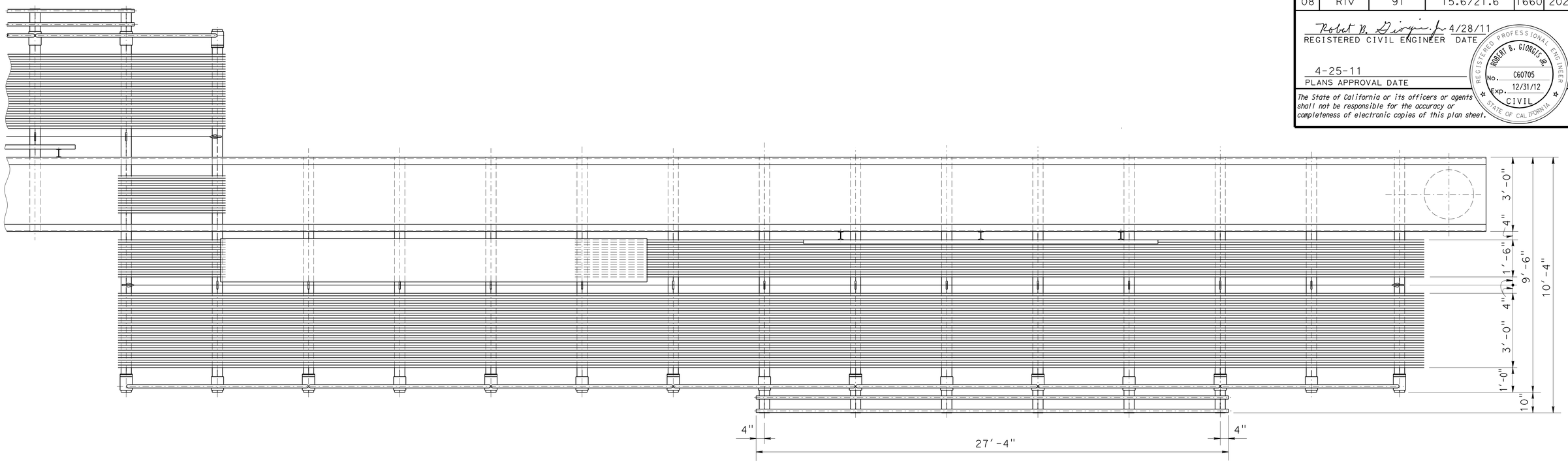

PLAN VIEW

No Scale

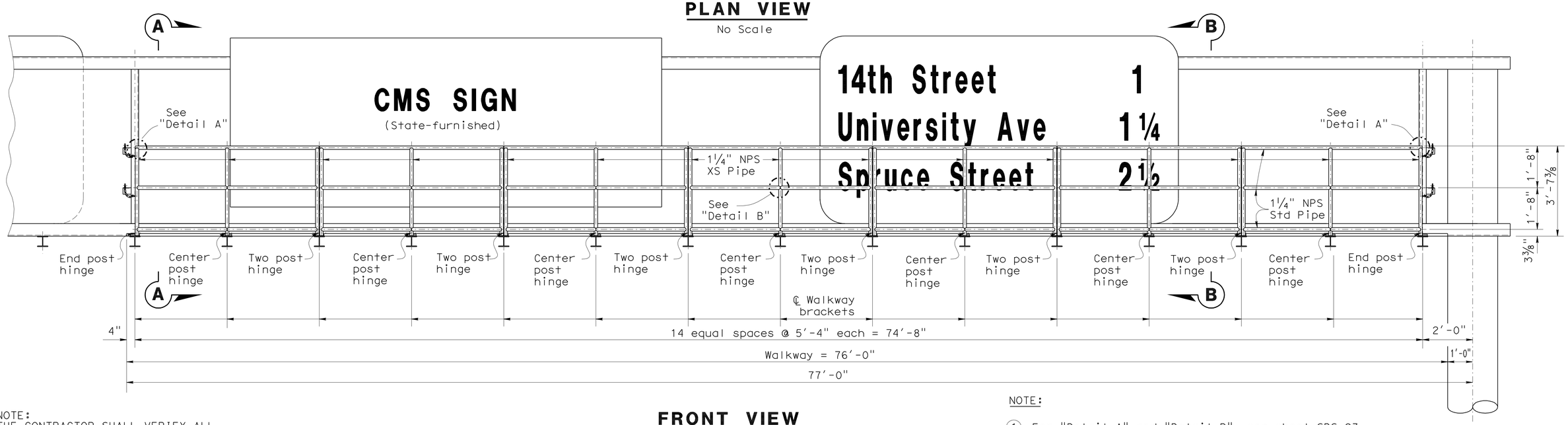

FRONT VIEW

No Scale

NOTE:
THE CONTRACTOR SHALL VERIFY ALL CONTROLLING FIELD DIMENSIONS BEFORE ORDERING OR FABRICATING ANY MATERIAL.

NOTE:

1. For "Detail A" and "Detail B", see sheet SDS-23.
2. For "Section A-A" and "Section B-B", see sheet SDS-22.

BRANCH CHIEF Jeffrey B Woody

	BY	CHECKED
DESIGN	A L HOUGH	R GIORGIS
DETAILS	A R DUDSAK	A L HOUGH
QUANTITIES	A L HOUGH	R GIORGIS

STATE OF CALIFORNIA
DEPARTMENT OF TRANSPORTATION

DIVISION OF ENGINEERING SERVICES
DESIGN AND TECHNICAL SERVICES
SPECIAL DESIGNS BRANCH A

BRIDGE NO.
POST MILE

TWO-POST CMS TRUSS WALKWAY DETAILS NO. 1

SDS-20

(ENGLISH) SPECIAL DESIGNS BRANCH BORDER SHEET (REV. 7-1-09)

ORIGINAL SCALE IN INCHES FOR REDUCED PLANS 0 1 2 3

CU 08
EA 448401

DISREGARD PRINTS BEARING EARLIER REVISION DATES 10/14/10 10/29/10 11/2/10
REVISION DATES

SHEET 20 OF 25

FILE => spec_des_br_prj/2010sd/08-448401/08-448401_sds-20t.dgn

USERNAME => trstrk DATE PLOTTED => 30-APR-2011 TIME PLOTTED => 12:21

DIST	COUNTY	ROUTE	POST MILES TOTAL PROJECT	SHEET No	TOTAL SHEETS
08	Riv	91	15.6/21.6	1661	2028

Robert B. Giorgis Jr. 4/28/11
REGISTERED CIVIL ENGINEER DATE

4-25-11
PLANS APPROVAL DATE

REGISTERED PROFESSIONAL ENGINEER ROBERT B. GIORGIS JR. No. C60705 Exp. 12/31/12 CIVIL STATE OF CALIFORNIA

The State of California or its officers or agents shall not be responsible for the accuracy or completeness of electronic copies of this plan sheet.

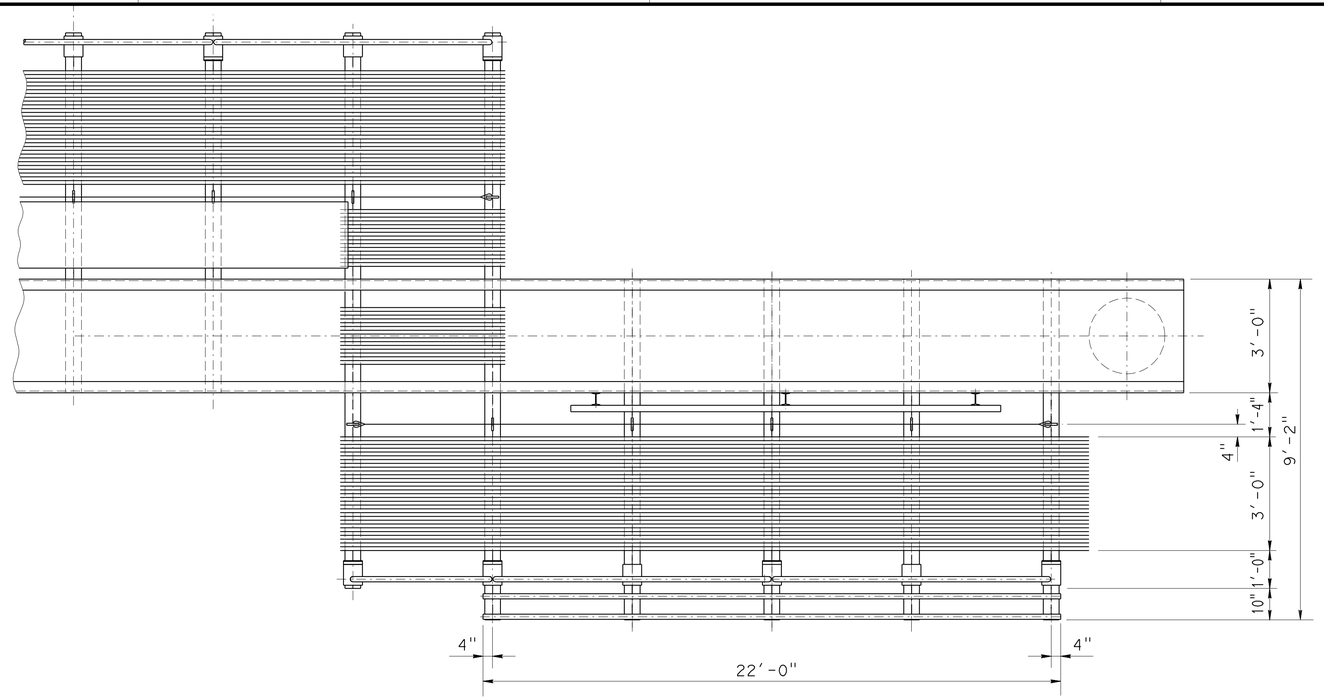

PLAN VIEW

No Scale

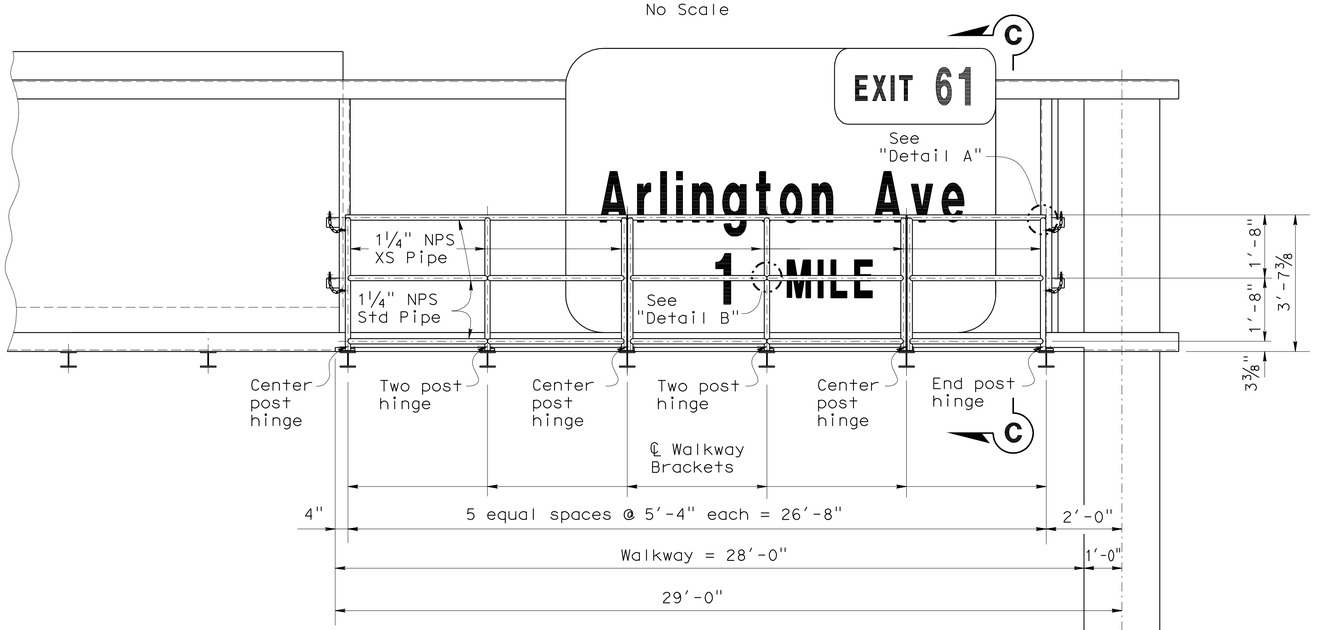

FRONT VIEW

No Scale

NOTE:
THE CONTRACTOR SHALL VERIFY ALL CONTROLLING FIELD DIMENSIONS BEFORE ORDERING OR FABRICATING ANY MATERIAL.

NOTE:

1. For "Detail A" and "Detail B", see sheet SDS-23.
2. For "Section C-C", see sheet SDS-22.

BRANCH CHIEF Jeffrey B. Woody	DESIGN	BY A L HOUGH	CHECKED R GIORGIS
	DETAILS	BY A R DUDSAK	CHECKED A L HOUGH
	QUANTITIES	BY A L HOUGH	CHECKED R GIORGIS

STATE OF CALIFORNIA
DEPARTMENT OF TRANSPORTATION

DIVISION OF ENGINEERING SERVICES
DESIGN AND TECHNICAL SERVICES
SPECIAL DESIGNS BRANCH A

BRIDGE NO.
POST MILE

TWO-POST CMS TRUSS WALKWAY DETAILS NO. 2

SDS-21

(ENGLISH) SPECIAL DESIGNS BRANCH BORDER SHEET (REV. 7-1-09)

ORIGINAL SCALE IN INCHES FOR REDUCED PLANS 0 1 2 3

CU 08
EA 448401

DISREGARD PRINTS BEARING EARLIER REVISION DATES → 10/14/10 10/29/10 11/2/10

REVISION DATES

SHEET 21 OF 25

FILE => spec_des_br_prj/2010sd/08-448401/08-448401_sds-21t.dgn

USERNAME => trstrk DATE PLOTTED => 30-APR-2011 TIME PLOTTED => 12:21

DIST	COUNTY	ROUTE	POST MILES TOTAL PROJECT	SHEET No	TOTAL SHEETS
08	Riv	91	15.6/21.6	1662	2028

Robert B. Giorgis Jr. 4/28/11
REGISTERED CIVIL ENGINEER DATE

4-25-11
PLANS APPROVAL DATE

REGISTERED PROFESSIONAL ENGINEER ROBERT B. GIORGIS JR. No. C60705 Exp. 12/31/12 CIVIL STATE OF CALIFORNIA

The State of California or its officers or agents shall not be responsible for the accuracy or completeness of electronic copies of this plan sheet.

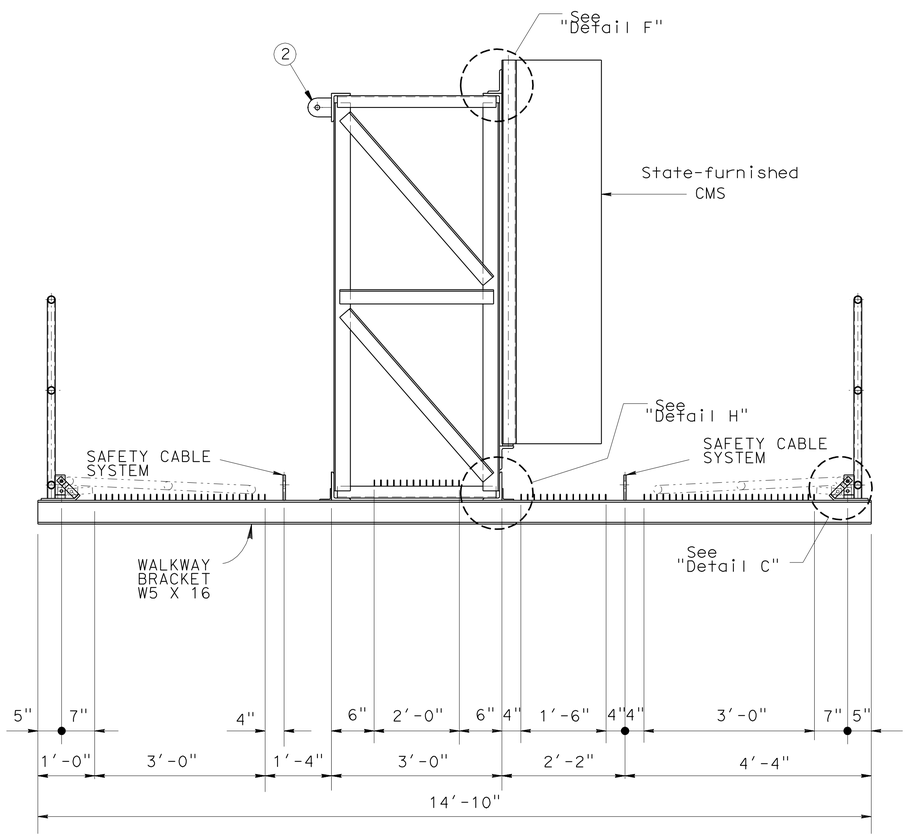

SECTION A-A

No Scale

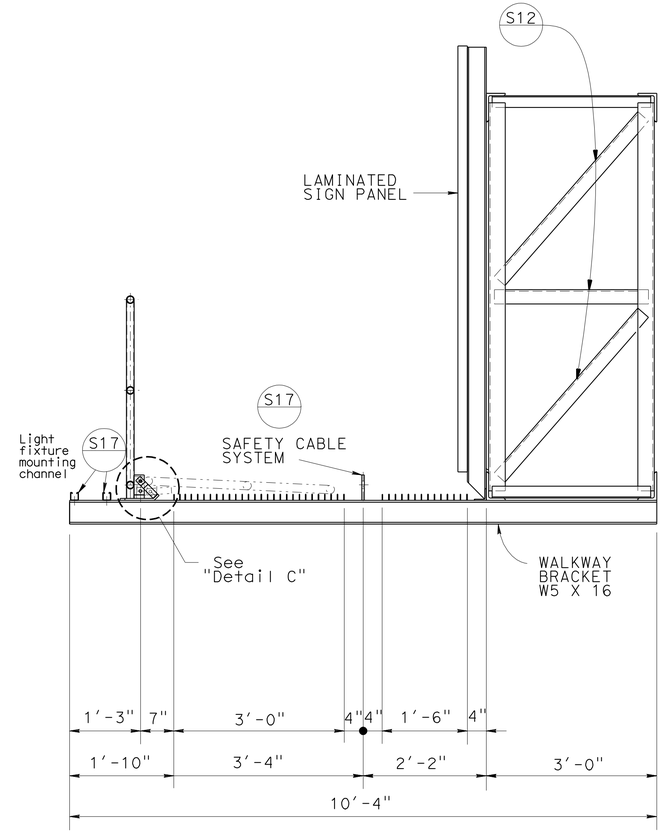

SECTION B-B

No Scale

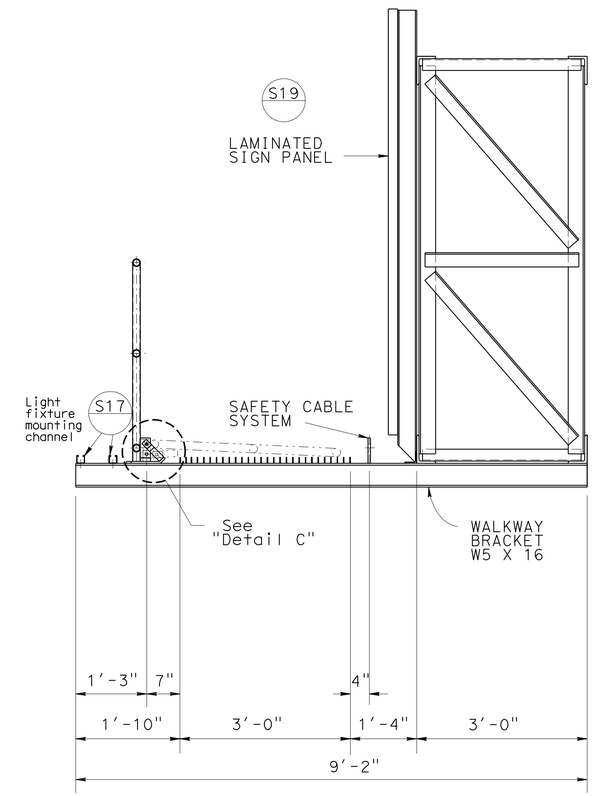

SECTION C-C

No Scale

NOTES:

1. Diagonal L's in plane of truss not shown. Bracing shown is at all vertical L's of truss.
2. Interior grating and backside weld lugs shall be installed only for projects requiring backside walkways.
3. For "Detail H" and "Detail F" see sheet SDS-24.
4. For "Detail C" see sheet SDS-23.

NOTE:
THE CONTRACTOR SHALL VERIFY ALL CONTROLLING FIELD DIMENSIONS BEFORE ORDERING OR FABRICATING ANY MATERIAL.

BRANCH CHIEF Jeffrey B. Woody

	BY	CHECKED
DESIGN	A L HOUGH	R GIORGIS
DETAILS	A R DUDSAK	A L HOUGH
QUANTITIES	A L HOUGH	R GIORGIS

STATE OF CALIFORNIA
DEPARTMENT OF TRANSPORTATION

DIVISION OF ENGINEERING SERVICES
DESIGN AND TECHNICAL SERVICES
SPECIAL DESIGNS BRANCH A

BRIDGE NO.
POST MILE

TWO-POST CMS TRUSS
WALKWAY DETAILS NO. 3

SDS-22

(ENGLISH) SPECIAL DESIGNS BRANCH BORDER SHEET (REV. 7-1-09)

ORIGINAL SCALE IN INCHES FOR REDUCED PLANS 0 1 2 3

CU 08
EA 448401

DISREGARD PRINTS BEARING EARLIER REVISION DATES
REVISION DATES: 10/14/10 10/29/10 11/2/10

SHEET 22 OF 25

FILE => spec_des_br_prj/2010sd/08-448401/08-448401_sds-22t.dgn

USERNAME => trstrk DATE PLOTTED => 30-APR-2011 TIME PLOTTED => 12:21

DIST	COUNTY	ROUTE	POST MILES TOTAL PROJECT	SHEET No	TOTAL SHEETS
08	Riv	91	15.6/21.6	1663	2028

REGISTERED CIVIL ENGINEER — DATE 4/28/11

4-25-11
PLANS APPROVAL DATE

REGISTERED PROFESSIONAL ENGINEER ROBERT B. GIORGIS JR. No. C60705 Exp. 12/31/12 CIVIL STATE OF CALIFORNIA

The State of California or its officers or agents shall not be responsible for the accuracy or completeness of electronic copies of this plan sheet.

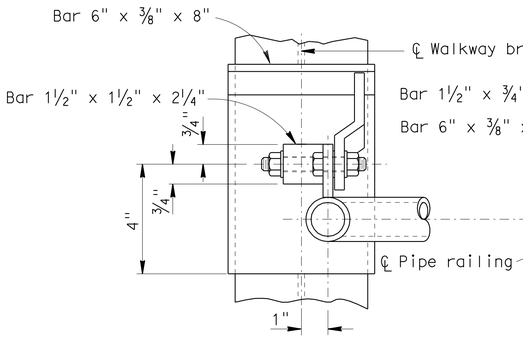

END POST HINGE

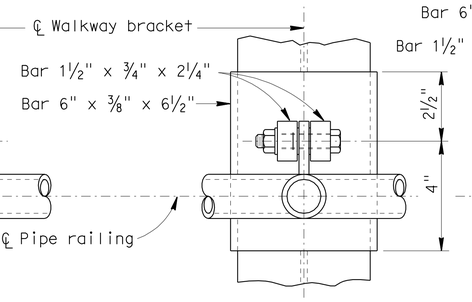

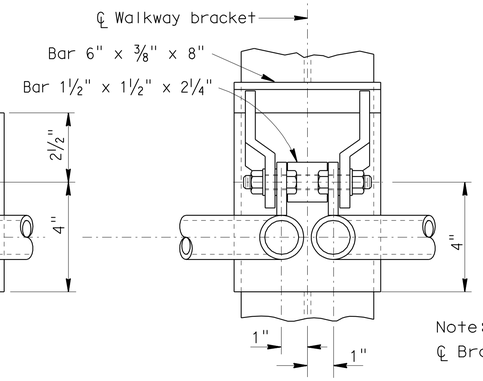

CENTER POST WELDED HINGE - PLAN

(NO SCALE)

TWO POST HINGE

Note:
℄ Bracket = ℄ Welded hinge

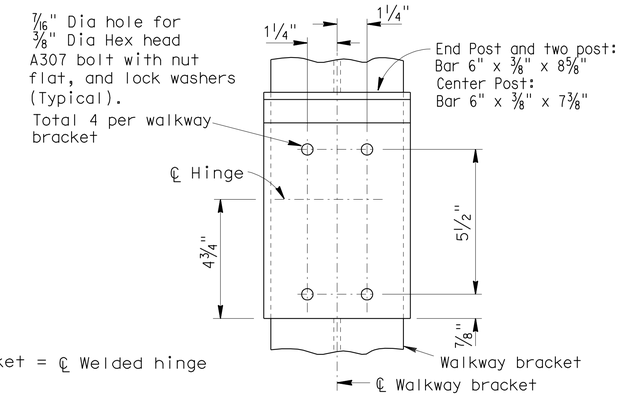

TYPICAL BOLTED (ALTERNATIVE) HINGED CONNECTION

(NO SCALE)

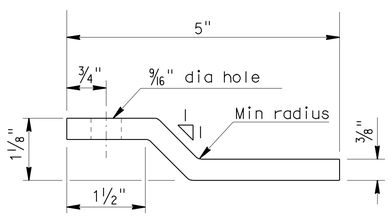

PLAN - KICKER BAR

(NO SCALE)

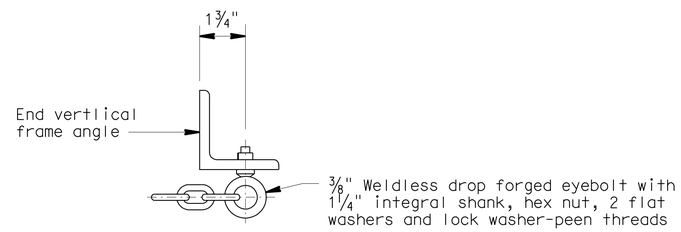

VIEW B-B

(NO SCALE)

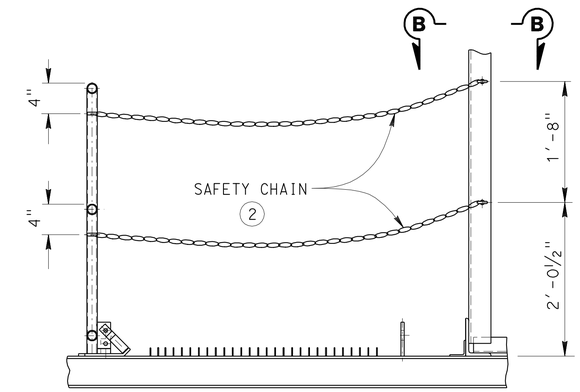

CHAIN ASSEMBLY

(NO SCALE)

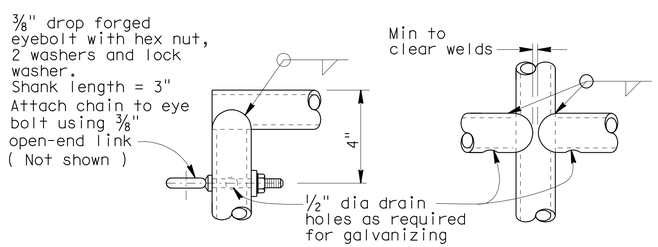

DETAIL A

(NO SCALE)

DETAIL B

(NO SCALE)

Note: Alternative venting methods may be used if approved by the Engineer.

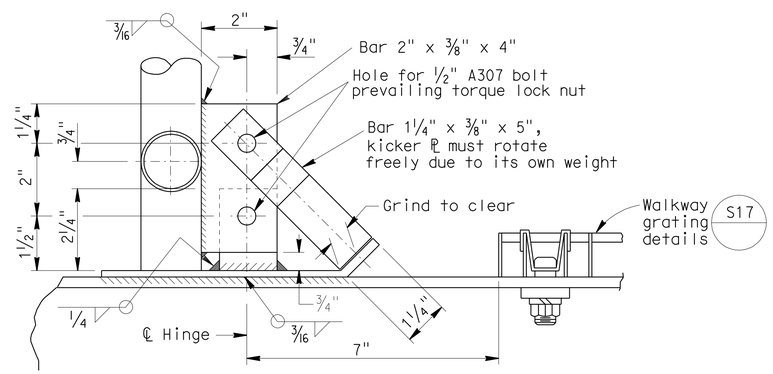

DETAIL C

(NO SCALE)

NOTES:

1. Special care shall be taken to insure that the complete hinge and latch assembly will hold the safety railing in a steady manner, free of wobble while in the raised position. Maximum allowable displacement from vertical at top of railing when latched shall be 1".
2. Safety chain shall be 1/4" galvanized steel coil chain, approximately 12 links per foot. Length shall be minimum which allows lock-up of safety railing. Minimum of two safety chains per safety railing. Material shall be grade 43 high test chain ASTM A413.
3. Cable clips shall be installed according to manufacturer's recommendation.

NOTE:
THE CONTRACTOR SHALL VERIFY ALL CONTROLLING FIELD DIMENSIONS BEFORE ORDERING OR FABRICATING ANY MATERIAL.

BRANCH CHIEF Jeffrey B Woody

	BY	CHECKED
DESIGN	A L HOUGH	R GIORGIS
DETAILS	A R DUDSAK	A L HOUGH
QUANTITIES	A L HOUGH	R GIORGIS

STATE OF CALIFORNIA
DEPARTMENT OF TRANSPORTATION

DIVISION OF ENGINEERING SERVICES
DESIGN AND TECHNICAL SERVICES
SPECIAL DESIGNS BRANCH
A

BRIDGE NO.
POST MILE

TWO-POST CMS TRUSS WALKWAY DETAILS NO. 4

SDS-23

(ENGLISH) SPECIAL DESIGNS BRANCH BORDER SHEET (REV. 7-1-09)

ORIGINAL SCALE IN INCHES FOR REDUCED PLANS 0 1 2 3

CU 08
EA 448401

DISREGARD PRINTS BEARING EARLIER REVISION DATES
REVISION DATES: 10/14/10 10/29/10 11/2/10

SHEET 23 OF 25

FILE => spec_des_br_prj/2010sd/08-448401/08-448401_sds-23t.dgn

USERNAME => trstrk DATE PLOTTED => 30-APR-2011 TIME PLOTTED => 12:22

DIST	COUNTY	ROUTE	POST MILES TOTAL PROJECT	SHEET No	TOTAL SHEETS
08	Riv	91	15.6/21.6	1664	2028

REGISTERED CIVIL ENGINEER 4/28/11 DATE

4-25-11
PLANS APPROVAL DATE

REGISTERED PROFESSIONAL ENGINEER ROBERT B. GIORGIS JR. No. C60705 Exp. 12/31/12 CIVIL STATE OF CALIFORNIA

The State of California or its officers or agents shall not be responsible for the accuracy or completeness of electronic copies of this plan sheet.

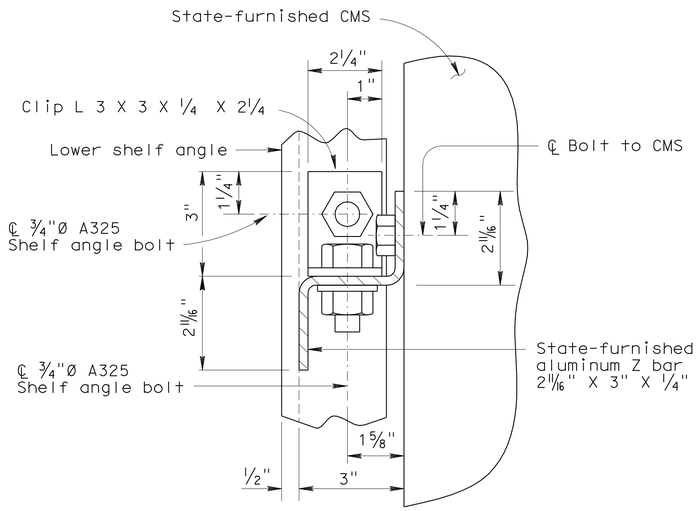

PLAN VIEW Z BAR AT LOWER SHELF ANGLE

NO SCALE

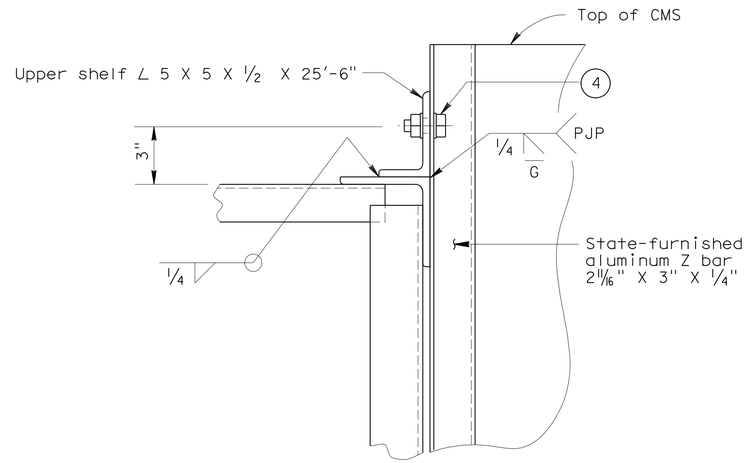

DETAIL F

NO SCALE

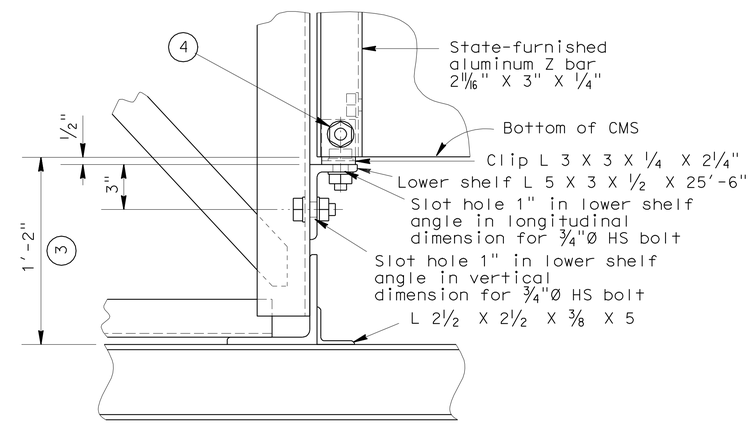

DETAIL H

NO SCALE

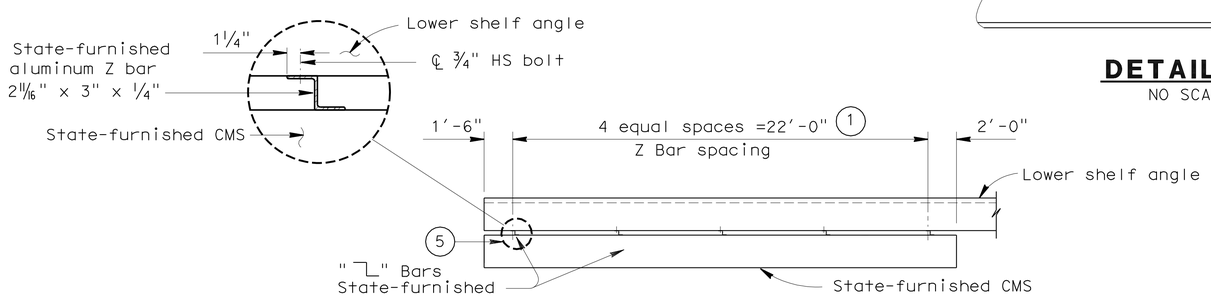

ALUMINUM Z BAR SPACING

NO SCALE

NOTES:

1. Contractor shall verify Z bar spacing prior to drilling holes in shelf angle
2. Diagonal ∠'s in plane of truss not shown. Bracing shown is at all vertical ∠'s of truss.
3. L8x4x3/4 for bottom (and top) truss chords.
4. For Z bar connections only, field drill aluminum Z bar ⅞"Ø hole for ¾" Ø HS bolt with hardened washer each side, lock washer between nut and hardened flat washer. HS bolts shall be snug tight.
5. See "Plan View Z Bar at Lower Shelf Angle".

NOTE:
THE CONTRACTOR SHALL VERIFY ALL CONTROLLING FIELD DIMENSIONS BEFORE ORDERING OR FABRICATING ANY MATERIAL.

BRANCH CHIEF Jeffrey B Woody

	BY	CHECKED
DESIGN	A L HOUGH	R GIORGIS
DETAILS	A R DUDSAK	A L HOUGH
QUANTITIES	A L HOUGH	R GIORGIS

STATE OF CALIFORNIA
DEPARTMENT OF TRANSPORTATION

DIVISION OF ENGINEERING SERVICES
DESIGN AND TECHNICAL SERVICES
SPECIAL DESIGNS BRANCH A

BRIDGE NO.
POST MILE

TWO-POST CMS TRUSS MOUNTING DETAILS

SDS-24

(ENGLISH) SPECIAL DESIGNS BRANCH BORDER SHEET (REV. 7-1-09)

ORIGINAL SCALE IN INCHES FOR REDUCED PLANS 0 1 2 3

CU 08
EA 448401

DISREGARD PRINTS BEARING EARLIER REVISION DATES

REVISION DATES: 10-12-10 10-29-10 11-2-10

SHEET 24 OF 25

FILE => spec_des_br_prj/2010sd/08-448401/08-448401_sds-24t.dgn

USERNAME => trstrk DATE PLOTTED => 30-APR-2011 TIME PLOTTED => 12:22

DIST	COUNTY	ROUTE	POST MILES TOTAL PROJECT	SHEET No	TOTAL SHEETS
08	Riv	91	15.6/21.6	1665	2028

Robert B. Giorgis Jr. 4/28/11
REGISTERED CIVIL ENGINEER DATE

4-25-11
PLANS APPROVAL DATE

REGISTERED PROFESSIONAL ENGINEER ROBERT B. GIORGIS JR. No. C60705 Exp. 12/31/12 CIVIL STATE OF CALIFORNIA

The State of California or its officers or agents shall not be responsible for the accuracy or completeness of electronic copies of this plan sheet.

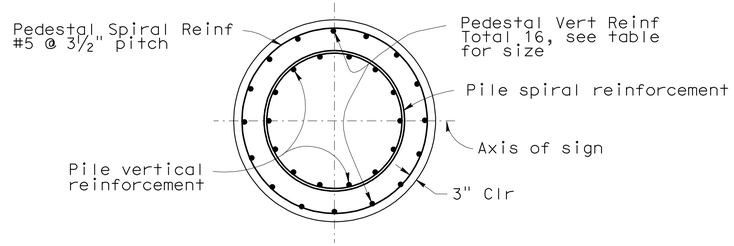

SECTION D-D

Post Type	Anchor Bolts				Round Pile Pedestal					CIDH Pile					Foundation Depth
	Total	Dia	Bolt Circle	Total Length	Dia	Vertical Reinforcing		Spiral		Pile Dia	Vertical Reinforcing		Spiral		
						Total	Bar Size	Bar Size	Pitch		Total	Bar Size	Bar Size	Pitch	
VI-S	16	2½"	3'-5"	5'-0"	5'-9"	16	#11	#5	3½"	5'-0"	28	#11	#5	3½"	27'-10"

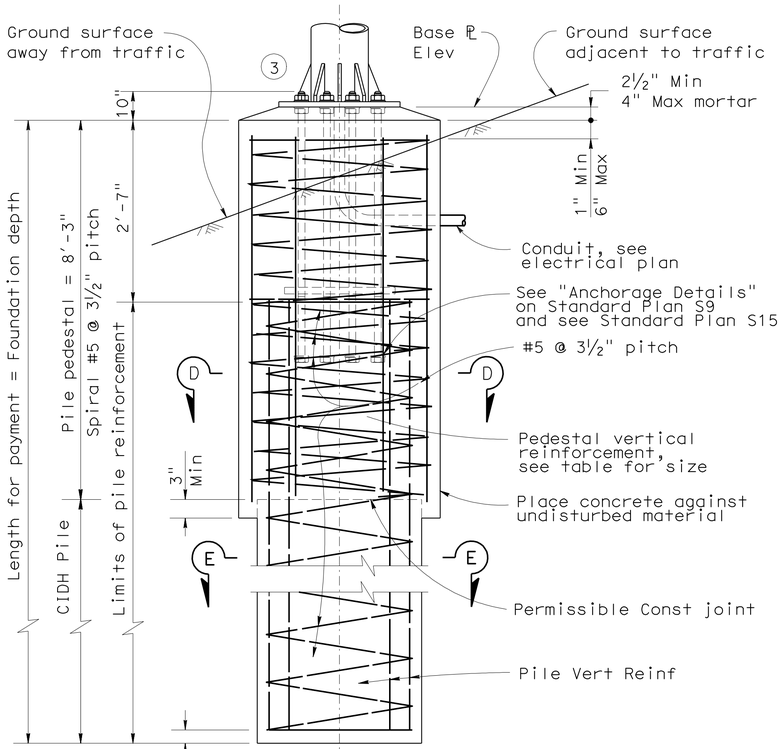

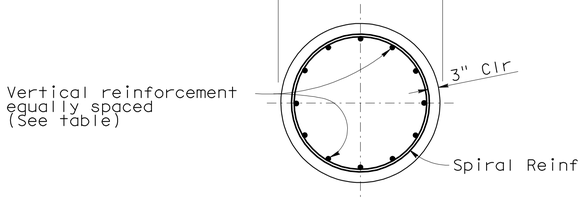

SECTION E-E

NOTE:
THE CONTRACTOR SHALL VERIFY ALL CONTROLLING FIELD DIMENSIONS BEFORE ORDERING OR FABRICATING ANY MATERIAL.

NOTES:

1. For anchor bolt layout, see Standard Plan S10.
2. For "Base ℙ elevation" see sheet SDS-18.
3. Major axis of split post cross section shall be normal to axis of sign.
4. Prior to erection of the post, backfill which is equivalent to the surrounding material shall be in place.
5. Pedestal shall be formed 6" minimum below ground surface Remainder to be placed against undisturbed material.
6. Slope protection required when indicated on the Project Plans.
7. Foundation design is based on 2001 AASHTO article 13.6 Broms' approximate procedure assuming a cohesionless material. The angle of internal friction used is 30 degree and unit weight of soil used is 120 lb/ft^3.
8. The standard soil properties shall be verified in the field. Foundation shall be approved by engineer if the soil properties are inconsistent with Standard plan assumptions.

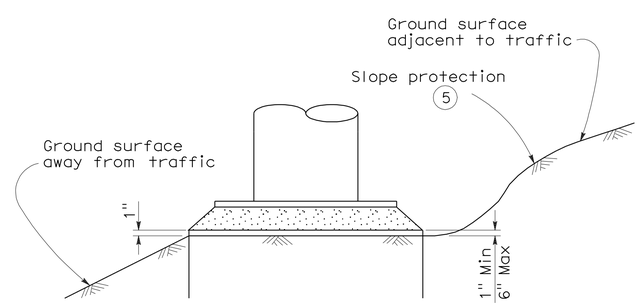

DETAIL E

BRANCH CHIEF Jeffrey B Woody	DESIGN	BY A L HOUGH	CHECKED R GIORGIS
	DETAILS	BY A R DUDSAK	CHECKED A L HOUGH
	QUANTITIES	BY A L HOUGH	CHECKED R GIORGIS

STATE OF CALIFORNIA
DEPARTMENT OF TRANSPORTATION

DIVISION OF ENGINEERING SERVICES
DESIGN AND TECHNICAL SERVICES
SPECIAL DESIGNS BRANCH A

BRIDGE NO.
POST MILE

TWO-POST CMS TRUSS PEDESTAL AND CIDH DETAILS

SDS-25

(ENGLISH) SPECIAL DESIGNS BRANCH BORDER SHEET (REV. 7-1-09)

ORIGINAL SCALE IN INCHES FOR REDUCED PLANS 0 1 2 3

CU 08
EA 448401

DISREGARD PRINTS BEARING EARLIER REVISION DATES 10/14/10 10/29/10 11/2/10

REVISION DATES

SHEET 25 OF 25

FILE => spec_des_br_prj/2010sd/08-448401/08-448401_sds-25t.dgn

USERNAME => trstrk DATE PLOTTED => 30-APR-2011 TIME PLOTTED => 12:22

DIST	COUNTY	ROUTE	POST MILES TOTAL PROJECT	SHEET No	TOTAL SHEETS
08	Riv	91	15.6/21.6	1666	2028

REGISTERED CIVIL ENGINEER 11-30-10 DATE

4-25-11
PLANS APPROVAL DATE

The State of California or its officers or agents shall not be responsible for the accuracy or completeness of electronic copies of this plan sheet.

REGISTERED PROFESSIONAL ENGINEER HUAN VU No. 60696 Exp. 12-31-10 CIVIL STATE OF CALIFORNIA

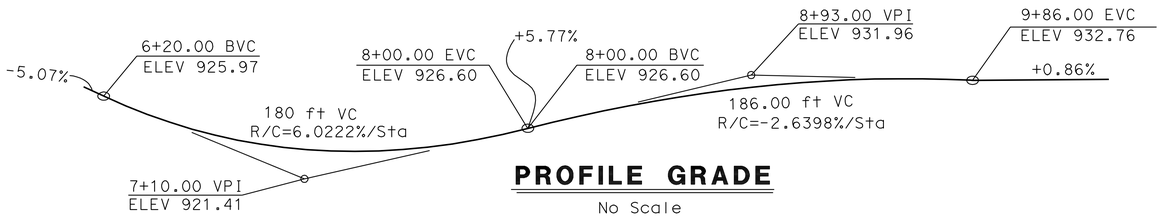

PROFILE GRADE

No Scale

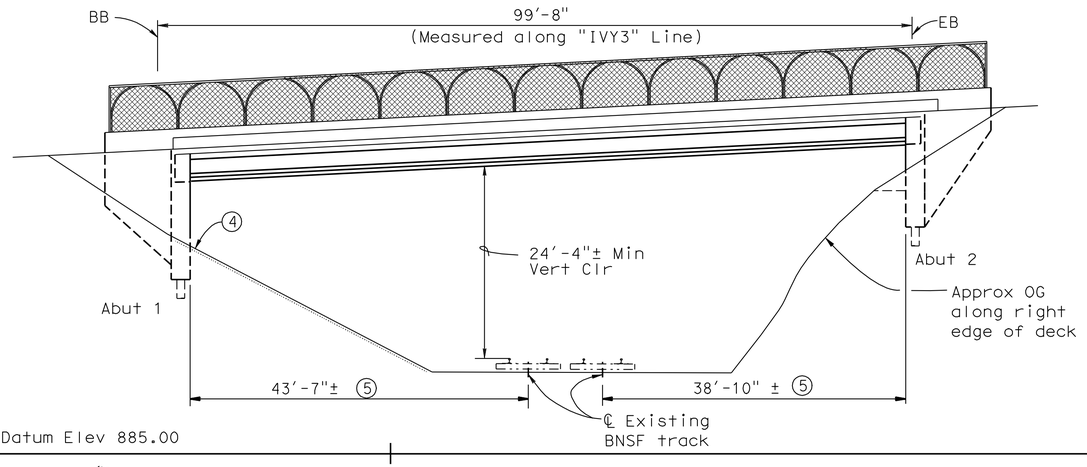

ELEVATION

1"=10'

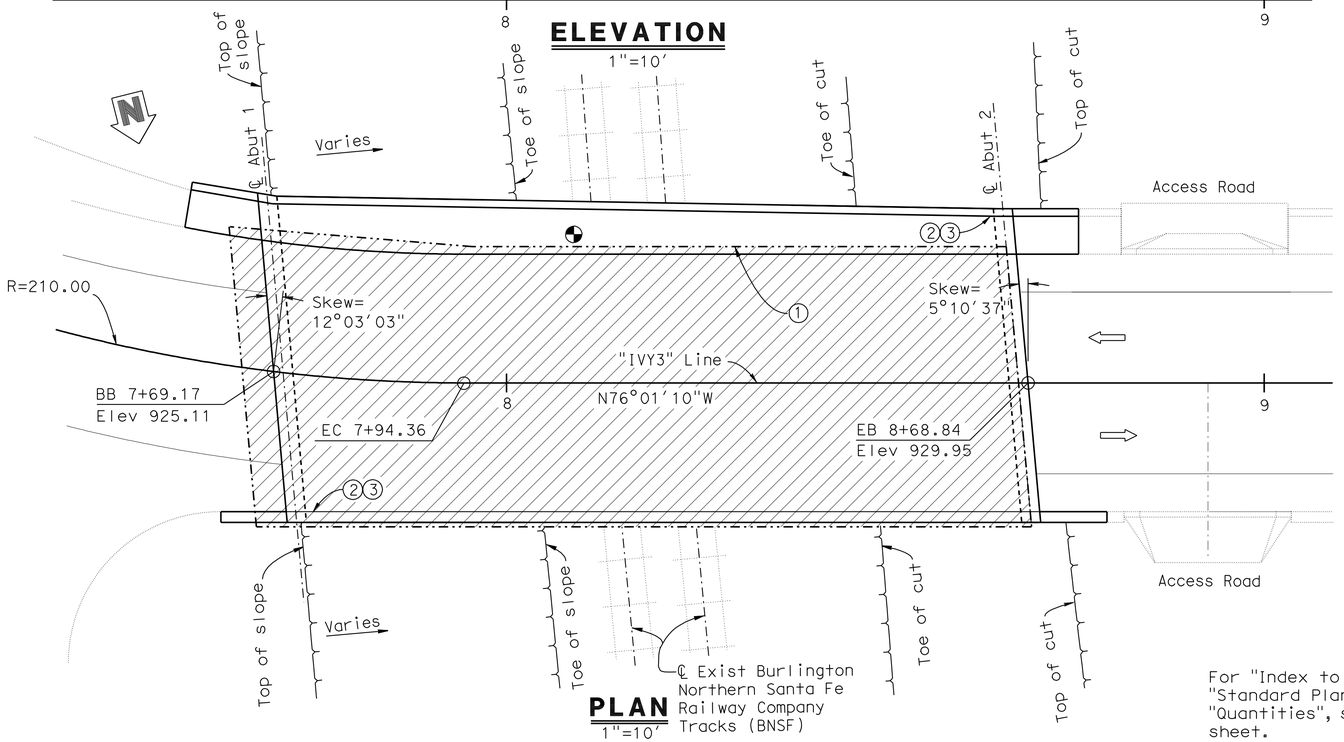

PLAN

1"=10'

For "Index to Plans", "General Notes", "Standard Plans", "Pile Data" and "Quantities", see "INDEX TO PLANS" sheet.

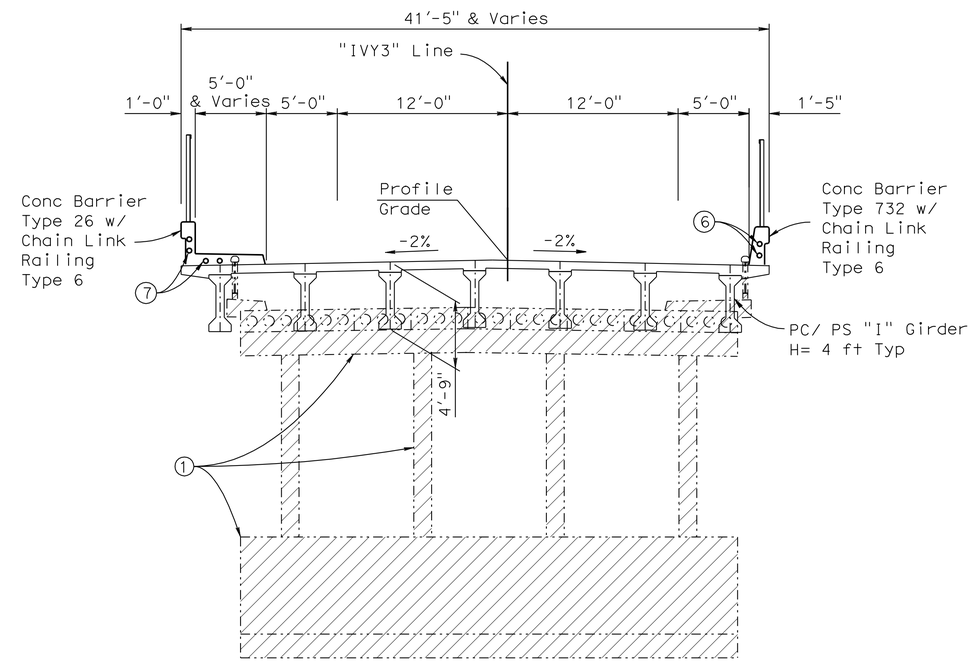

TYPICAL SECTION

NOTES: 3/16" =1'-0"

1. Existing Bridge No. 56C-0258 to be removed
2. Paint "BR. NO. 56C-0562"
3. Paint "IVY STREET OH"
4. Existing Slope Paving to Remain
5. BNSF tracks Min clearance to face of abutment
6. 2 - 2"Ø Electrical Conduit, see "Roadway Plans".
7. 4 - 2"Ø Electrical Conduit, see "Roadway Plans".

LEGEND:

- Indicates existing structure
- Indicates new construction
- Indicates point of minimum Vert Clr
- Indicates bridge removal

DANIEL T. ADAMS
DESIGN ENGINEER

	BY	CHECKED		
DESIGN	H.Vu	F. Chen	LOAD & RESISTANCE FACTOR DESIGN	LIVE LOADING: HL93 W/"LOW-BOY"; PERMIT DESIGN VEHICLE
DETAILS	D.Wooten / Y. Tang	F. Chen	LAYOUT: H.Vu	CHECKED: F. Chen
QUANTITIES	M. Crete	A. McPhee	SPECIFICATIONS	BY / PLANS AND SPECS COMPARED

ORIGINAL SCALE IN INCHES FOR REDUCED PLANS 0 1 2 3

STATE OF CALIFORNIA
DEPARTMENT OF TRANSPORTATION

DIVISION OF ENGINEERING SERVICES
STRUCTURE DESIGN
DESIGN BRANCH 10

CU 08
EA 448401

BRIDGE NO. 56C-0562
POST MILE 18.98

IVY STREET OH (REPLACE)
GENERAL PLAN

DISREGARD PRINTS BEARING EARLIER REVISION DATES

REVISION DATES: 10-16-08 11-18-09 12-31-09 3-24-10 8-05-10 10-04-10 11-30-10

SHEET 1 OF 18

STRUCTURES DESIGN GENERAL PLAN SHEET (ENGLISH) (REV.07-24-06)

FILE => 56c0562agp01.dgn

USERNAME => trpbtis DATE PLOTTED => 30-APR-2011 TIME PLOTTED => 13:43

DIST	COUNTY	ROUTE	POST MILES TOTAL PROJECT	SHEET No	TOTAL SHEETS
08	Riv	91	15.6/21.6	1667	2028

REGISTERED CIVIL ENGINEER 11-30-10 DATE

4-25-11
PLANS APPROVAL DATE

The State of California or its officers or agents shall not be responsible for the accuracy or completeness of electronic copies of this plan sheet.

REGISTERED PROFESSIONAL ENGINEER HUAN VU No. 60696 Exp. 12-31-10 CIVIL STATE OF CALIFORNIA

INDEX TO PLANS

Sheet No.	Title
1.	GENERAL PLAN
2.	INDEX TO PLANS
3.	DECK CONTOURS
4.	FOUNDATION PLAN
5.	ABUTMENT LAYOUT
6.	ABUTMENT DETAILS
7.	TYPICAL SECTION
8.	GIRDER LAYOUT
9.	PRESTRESSED I GIRDER
10.	CHAIN LINK RAILING TYPE 6
11.	LOG OF TEST BORINGS SHEET 1 OF 8
12.	LOG OF TEST BORINGS SHEET 2 OF 8
13.	LOG OF TEST BORINGS SHEET 3 OF 8
14.	LOG OF TEST BORINGS SHEET 4 OF 8
15.	LOG OF TEST BORINGS SHEET 5 OF 8
16.	LOG OF TEST BORINGS SHEET 6 OF 8
17.	LOG OF TEST BORINGS SHEET 7 OF 8
18.	LOG OF TEST BORINGS SHEET 8 OF 8

QUANTITIES

BRIDGE REMOVAL LOCATION F	LUMP	SUM
STRUCTURE EXCAVATION (BRIDGE)	121	CY
STRUCTURE BACKFILL (BRIDGE)	83	CY
PERVIOUS BACKFILL MATERIAL	15	CY
16" CAST-IN-DRILLED-HOLE CONCRETE PILING	561	LF
STRUCTURAL CONCRETE, BRIDGE	234	CY
FURNISH PRECAST PRESTRESSED CONCRETE GIRDER (90'-100')	7	EA
ERECT PRECAST PRESTRESSED CONCRETE GIRDER	7	EA
BAR REINFORCING STEEL (BRIDGE)	39,557	LB
CHAIN LINK RAILING (TYPE 6)	200	LF
CONCRETE BARRIER (TYPE 26)	100	LF
CONCRETE BARRIER (TYPE 732)	100	LF

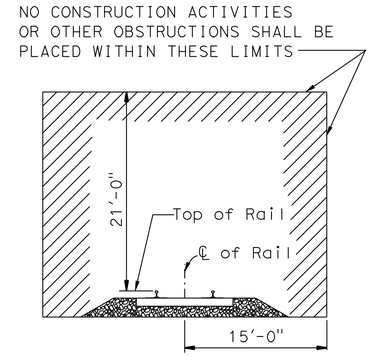

MINIMUM CONSTRUCTION CLEARANCE ENVELOPE

No Scale
(NORMAL TO RAILROAD)
FIGURE 1

STANDARD PLANS DATED MAY 2006

	A10A	ACRONYMS AND ABBREVIATIONS (SHEET 1 OF 2)
	A10B	ACRONYMS AND ABBREVIATIONS (SHEET 2 OF 2)
	A10C	SYMBOLS (SHEET 1 OF 2)
	A10D	SYMBOLS (SHEET 2 OF 2)
	A62-C	LIMITS OF PAYMENT FOR EXCAVATION AND BACKFILL - BRIDGE
	BO-1	BRIDGE DETAILS
	BO-3	BRIDGE DETAILS
	BO-5	BRIDGE DETAILS
	BO-13	BRIDGE DETAILS
	B2-3	16" AND 24" CAST-IN-DRILLED-HOLE CONCRETE PILE
RSP	B6-21	JOINT SEALS (MAXIMUM MOVEMENT RATING = 2")
	B11-54	CONCRETE BARRIER TYPE 26
	B11-55	CONCRETE BARRIER TYPE 732

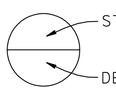

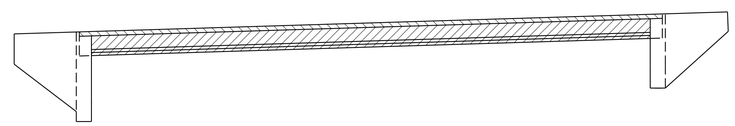

Precast Prestressed I- Girders
Structural Concrete, Bridge
Structural Concrete, Bridge (4000 psi @ 28 Days)

CONCRETE STRENGTH AND TYPE LIMITS

No Scale

GENERAL NOTES
LOAD AND RESISTANCE FACTOR DESIGN

DESIGN: AASHTO LRFD BRIDGE DESIGN SPECIFICATIONS, 4th Edition and the CALTRANS Amendments preface dated Dec. 2008.

SEISMIC DESIGN: Caltrans Seismic Design Criteria (SDC) Version 1.4, July, 2006.

DEAD LOAD: Includes 35 Psf for future wearing surface. Includes 10% of the additional deck dead load between girders for stay-in-place deck forms.

LIVE LOADING: HL93 with alternative and permit design load.

SEISMIC LOADING: CALTRANS SDC ARS Curve for Soil Profile Type C (M = 6.75), (Peak Bedrock Acceleration = 0.4g).

REINFORCED CONCRETE: f_y = 60 ksi
f'_c = 3600 psi, unless otherwise noted
n = 9

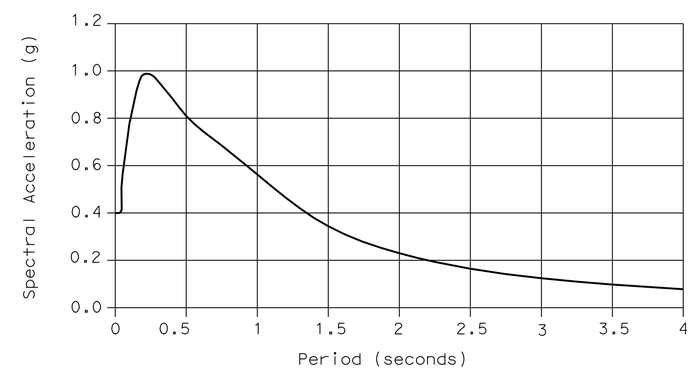

Modified CALTRANS SDC ARS Curve:
Type C Soil Profile, Magnitude Mw=7.5, 5% Damping

PILE DATA TABLE (B2-3)

LOCATION	PILE TYPE	NOMINAL RESISTANCE (kips)		DESIGN TIP ELEV. (ft)	SPECIFIED TIP ELEV. (ft)	NOMINAL DRIVING RESISTANCE (kips)
		COMPRESSION	TENSION			
Abut 1	16" CIDH Concrete Pile	280	140	868.00 (1)	868.00	N/A
Abut 2	16" CIDH Concrete Pile	280	140	875.00 (1)	875.00	N/A

Tip Elev is controlled by the following demands:
(1) Compression
(2) Settlement
(3) Lateral

	BY	CHECKED
DESIGN	H. Vu	F. Chen
DETAILS	D. Wooten/Y. Tang	F. Chen
QUANTITIES	M. Crete	A. McPhee

STATE OF CALIFORNIA
DEPARTMENT OF TRANSPORTATION

DIVISION OF ENGINEERING SERVICES
STRUCTURE DESIGN
DESIGN BRANCH 10

BRIDGE NO. 56C-0562
POST MILE 18.98

IVY STREET OH (REPLACE)
INDEX TO PLANS

STRUCTURES DESIGN DETAIL SHEET (ENGLISH) (REV. 10/25/05)

ORIGINAL SCALE IN INCHES FOR REDUCED PLANS 0 1 2 3

CU 08
EA 448401

DISREGARD PRINTS BEARING EARLIER REVISION DATES

REVISION DATES: 11-18-09 3-18-10 8-03-10 10-01-10

SHEET 2 OF 18

FILE => 56c0562aitp02.dgn

USERNAME => trpbitis DATE PLOTTED => 30-APR-2011 TIME PLOTTED => 13:43

DIST	COUNTY	ROUTE	POST MILES TOTAL PROJECT	SHEET No	TOTAL SHEETS
08	Riv	91	15.6/21.6	1668	2028

REGISTERED CIVIL ENGINEER 11-30-10 DATE

4-25-11
PLANS APPROVAL DATE

REGISTERED PROFESSIONAL ENGINEER HUAN VU No. 60696 Exp. 12-31-10 CIVIL STATE OF CALIFORNIA

The State of California or its officers or agents shall not be responsible for the accuracy or completeness of electronic copies of this plan sheet.

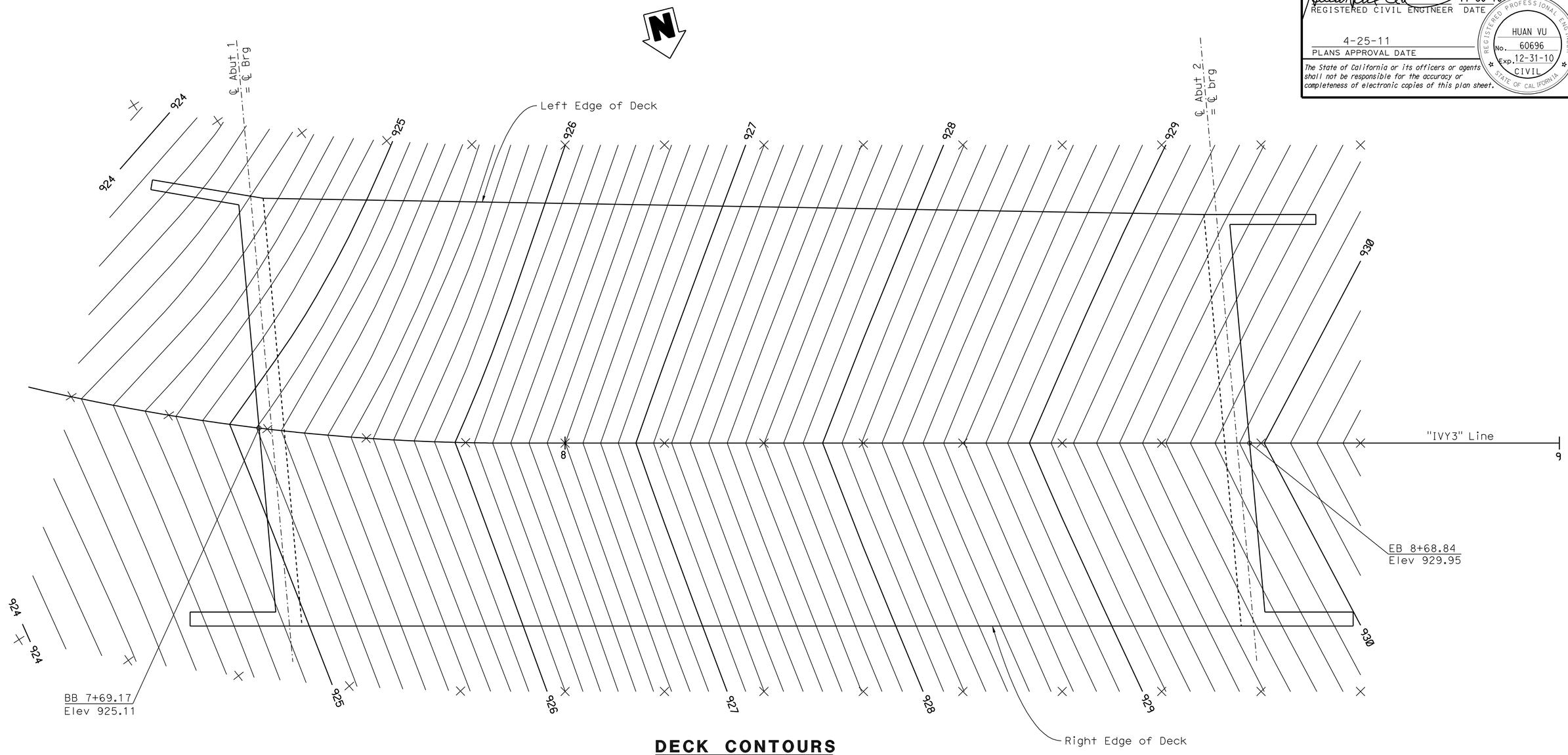

DECK CONTOURS

1"=5'

NOTES:

1. x - 10'-0" intervals along station line.
2. Contour intervals = 0.1'.
3. Contours do not include camber.

DESIGN	BY H. Vu	CHECKED F. Chen	
DETAILS	BY D. Wooten	CHECKED F. Chen	
QUANTITIES	BY M. Crete	CHECKED A. McPhee	

STATE OF CALIFORNIA
DEPARTMENT OF TRANSPORTATION

DIVISION OF ENGINEERING SERVICES
STRUCTURE DESIGN
DESIGN BRANCH 10

BRIDGE NO. 56C-0562
POST MILE 18.98

IVY STREET OH (REPLACE)
DECK CONTOURS

STRUCTURES DESIGN DETAIL SHEET (ENGLISH) (REV. 10/25/05)

ORIGINAL SCALE IN INCHES FOR REDUCED PLANS 0 1 2 3

CU 08
EA 448401

DISREGARD PRINTS BEARING EARLIER REVISION DATES → 11-30-10

REVISION DATES

SHEET 3 OF 18

FILE => 56c0562ddc03.dgn

USERNAME => trphilis DATE PLOTTED => 30-APR-2011 TIME PLOTTED => 13:43

DIST	COUNTY	ROUTE	POST MILES TOTAL PROJECT	SHEET No	TOTAL SHEETS
08	Riv	91	15.6/21.6	1669	2028

REGISTERED CIVIL ENGINEER 11-30-10 DATE

4-25-11
PLANS APPROVAL DATE

REGISTERED PROFESSIONAL ENGINEER HUAN VU No. 60696 Exp. 12-31-10 CIVIL STATE OF CALIFORNIA

The State of California or its officers or agents shall not be responsible for the accuracy or completeness of electronic copies of this plan sheet.

1. Sta 9+91.99, "IVY3" LINE, ℄ IVY ST =
   Sta 320+79.65, "GE1" LINE, ℄ ROUTE 91
2. Sta 8+26.05, "IVY3" LINE, ℄ IVY ST =
   Sta 597+69.67, "TRACK1" LINE
3. Sta 8+11.99, "IVY3" LINE, ℄ IVY ST =
   Sta 625+05.33, "TRACK2" LINE
4. Sta 7+29.35, "IVY3" LINE, ℄ IVY ST =
   Sta 7+29.35, "RKHILL1" LINE, ROCKHILL WAY

CURVE DATA

No.	R	Δ	T	L
A	2500.00	47°18′51"	1095.19	2064.47
B	2583.43	12°49′51"	290.48	578.54
C	2577.43	10°59′22"	247.94	494.35
D	210.00	40°10′08"	76.78	147.23
E	194.94	49°26′03"	89.73	168.19

BRIDGE LOCATION (Exist Br.No 56c-0258)

(F) 15.88 Ft Rt ℄ Ivy St, "Ivy3" Line, Sta 8+66.84, Elev= 923.29±
(G) 17.62 Ft Rt ℄ Ivy St, "Ivy3" Line, Sta 7+67.72, Elev= 921.78±
(H) 11.80 Ft Lt ℄ Ivy St, "Ivy3" Line, Sta 8+64.38, Elev= 923.19±
(I) 14.65 Ft Lt ℄ Ivy St, "Ivy3" Line, Sta 7+60.17, Elev= 921.64±

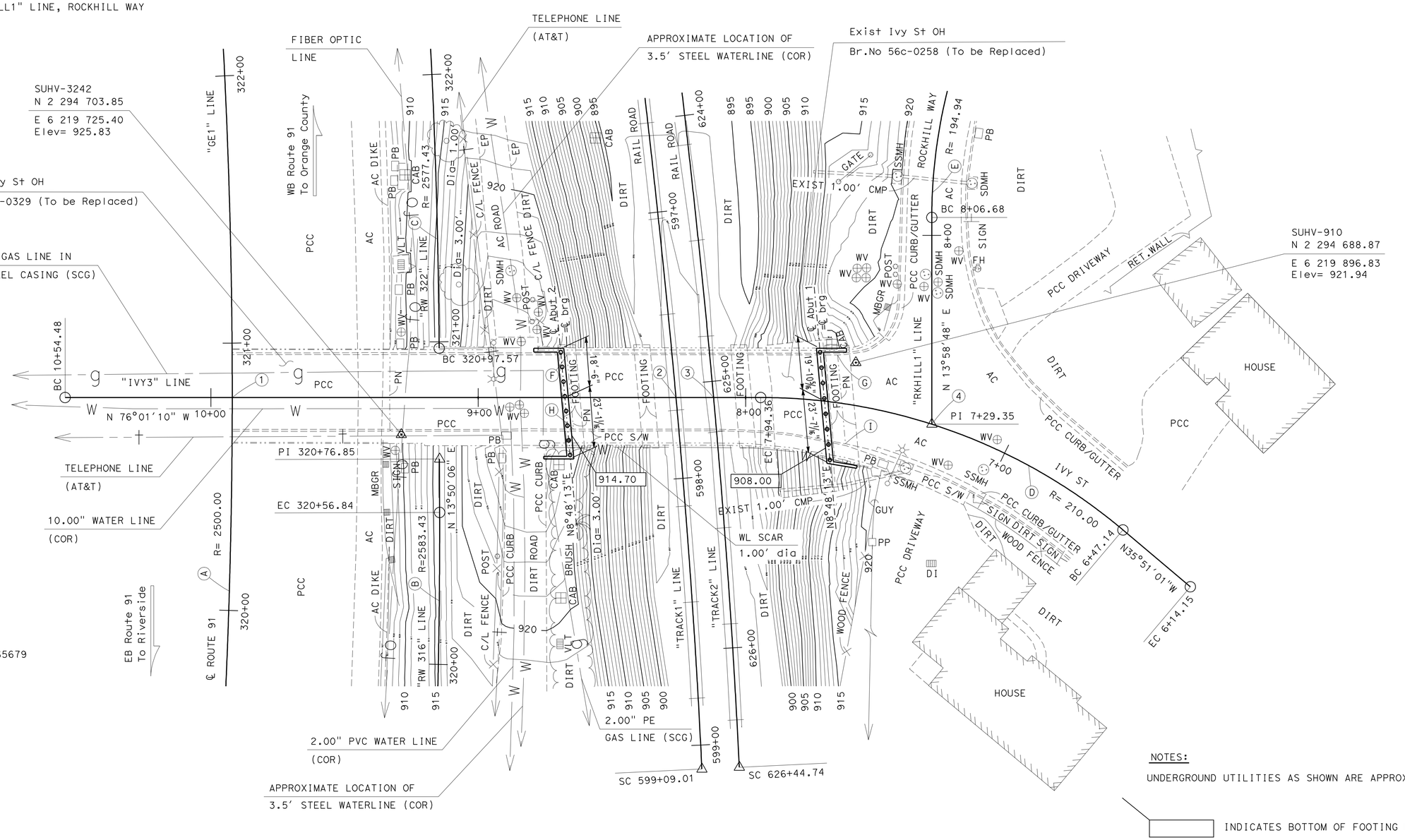

SURVEY CONTROL

SUHV-3242

Fnd Br Dsk RIV91-18.98LS5679
13.83 Ft Lt ℄ Ivy St
Sta 9+28.76
N 2 294 703.85
E 6 219 725.40
Elev= 925.83

SUHV-910

Fnd C.Nail/AC
15.87 Ft Rt ℄ Ivy St
Sta 7+61.15
N 2 294 688.87
E 6 219 896.83
Elev= 921.94

NOTES:

UNDERGROUND UTILITIES AS SHOWN ARE APPROXIMATE

INDICATES BOTTOM OF FOOTING ELEVATION

PRELIMINARY INVESTIGATION SECTION

SCALE	VERT.DATUM NGVD29	PHOTOGRAMMETRY AS OF: X			
1"=20′	HORZ.DATUM NAD 83(1984.00)	SURVEYED	BY T.PHUNG 12/2008	CHECKED	BY C.STEWART 12/2008
ALIGNMENT TIES DIST.TRAVERSE SHEETS		DRAFTED	BY V.PHAM 12/2008	CHECKED	BY S.ALIVIO 12/2008

	BY	CHECKED
DESIGN	H.Vu	F. Chen
DETAILS	D.Wooten/G. Hallstrom	F. Chen
QUANTITIES	M. Crete	A. McPhee

STATE OF CALIFORNIA
DEPARTMENT OF TRANSPORTATION

DIVISION OF ENGINEERING SERVICES
STRUCTURE DESIGN
DESIGN BRANCH 10

BRIDGE NO. 56C-0562
POST MILE 18.98

IVY STREET OVERHEAD (REPLACE)
FOUNDATION PLAN

STRUCTURES FOUNDATION PLAN SHEET (ENGLISH) (REV. 10/25/05)

ORIGINAL SCALE IN INCHES FOR REDUCED PLANS 0 1 2 3

CU 08-227
EA 448401

DISREGARD PRINTS BEARING EARLIER REVISION DATES → 12/21/08 03/24/10

REVISION DATES

SHEET 4 OF 18

FILE => 56c0562efdp04.dgn

USERNAME => trphtis DATE PLOTTED => 30-APR-2011 TIME PLOTTED => 13:43

DIST	COUNTY	ROUTE	POST MILES TOTAL PROJECT	SHEET No	TOTAL SHEETS
08	Riv	91	15.6/21.6	1670	2028

REGISTERED CIVIL ENGINEER 11-30-10 DATE

4-25-11
PLANS APPROVAL DATE

REGISTERED PROFESSIONAL ENGINEER HUAN VU No. 60696 Exp. 12-31-10 CIVIL STATE OF CALIFORNIA

The State of California or its officers or agents shall not be responsible for the accuracy or completeness of electronic copies of this plan sheet.

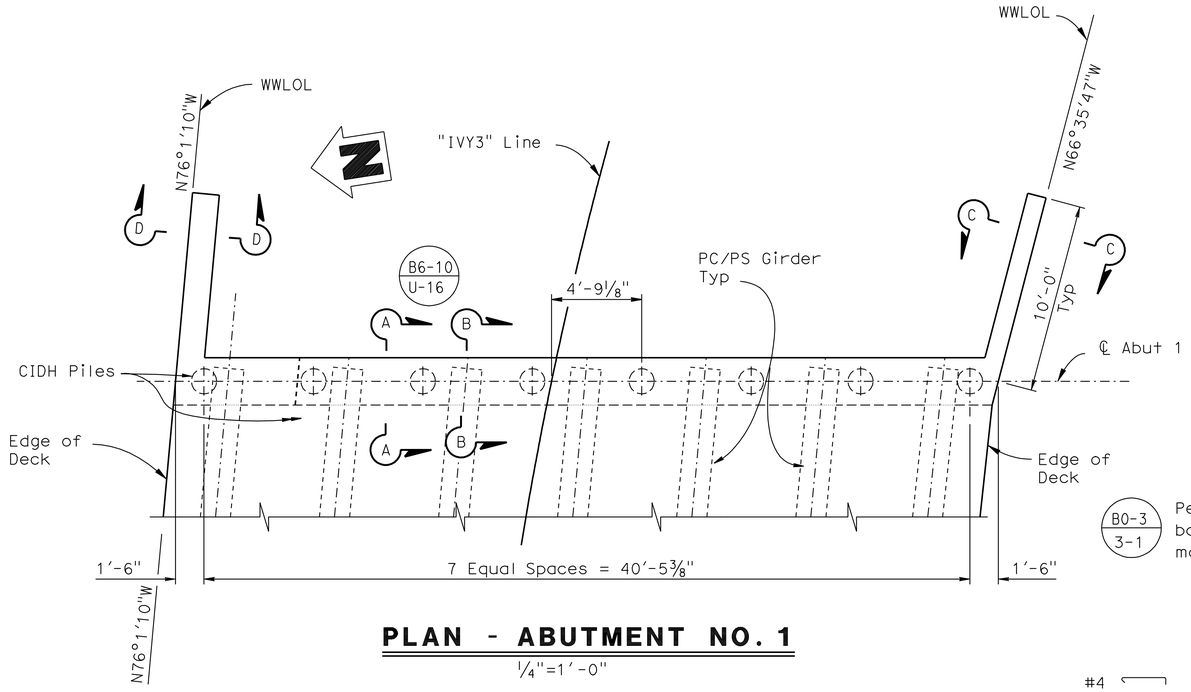

PLAN - ABUTMENT NO. 1

¼"=1'-0"

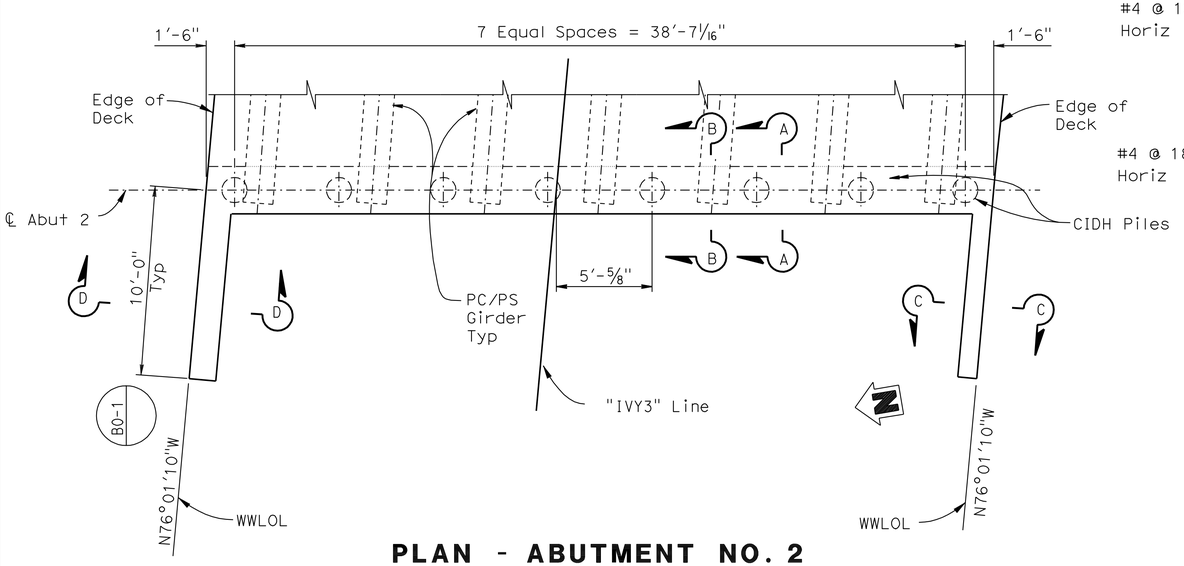

PLAN - ABUTMENT NO. 2

¼"=1'-0"

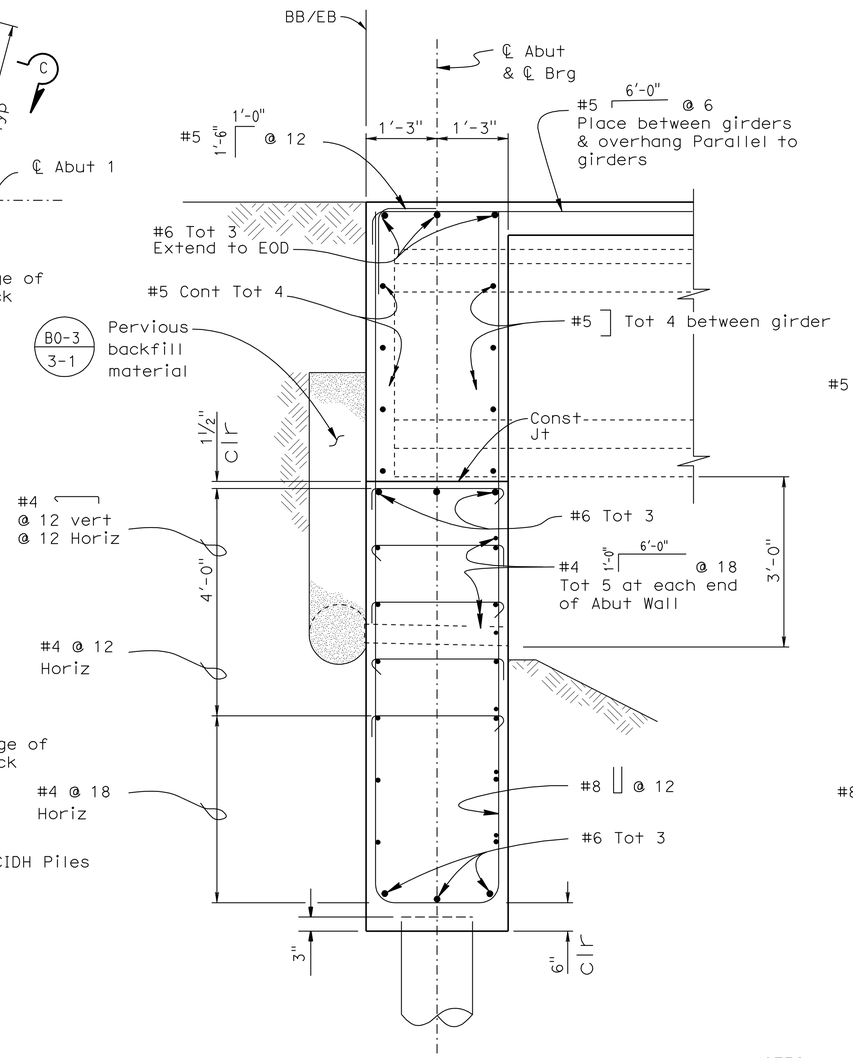

SECTION A-A

¾"=1'-0"

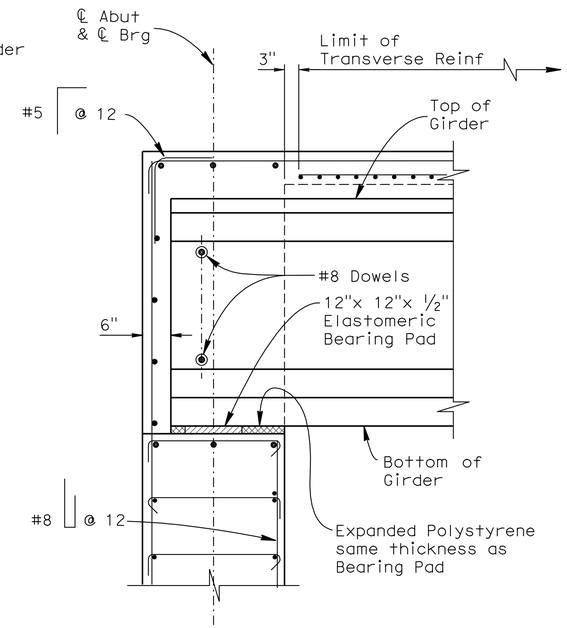

SECTION B-B

¾"=1'-0"

NOTES:

1. For Sections C-C and D-D, see "ABUTMENT DETAILS" sheet

DESIGN	BY H. Vu	CHECKED F. Chen	
DETAILS	BY D. Wooten/G.Hallstrom	CHECKED F. Chen	
QUANTITIES	BY M. Crete	CHECKED A. McPhee	

STATE OF CALIFORNIA
DEPARTMENT OF TRANSPORTATION

DIVISION OF ENGINEERING SERVICES
STRUCTURE DESIGN
DESIGN BRANCH 10

BRIDGE NO. 56C-0562
POST MILE 18.98

IVY STREET OH (REPLACE)
ABUTMENT LAYOUT

STRUCTURES DESIGN DETAIL SHEET (ENGLISH) (REV. 10/25/05)

ORIGINAL SCALE IN INCHES FOR REDUCED PLANS 0 1 2 3

CU 08
EA 448401

DISREGARD PRINTS BEARING EARLIER REVISION DATES

REVISION DATES: 11-14-09 3-22-10 8-04-10 10-01-10

SHEET 5 OF 18

FILE => 56c0562fab_1o05.dgn

USERNAME => trphtis DATE PLOTTED => 30-APR-2011 TIME PLOTTED => 13:44

DIST	COUNTY	ROUTE	POST MILES TOTAL PROJECT	SHEET No	TOTAL SHEETS
08	Riv	91	15.6/21.6	1671	2028

REGISTERED CIVIL ENGINEER 11-30-10 DATE

4-25-11
PLANS APPROVAL DATE

REGISTERED PROFESSIONAL ENGINEER HUAN VU No. 60696 Exp. 12-31-10 CIVIL STATE OF CALIFORNIA

The State of California or its officers or agents shall not be responsible for the accuracy or completeness of electronic copies of this plan sheet.

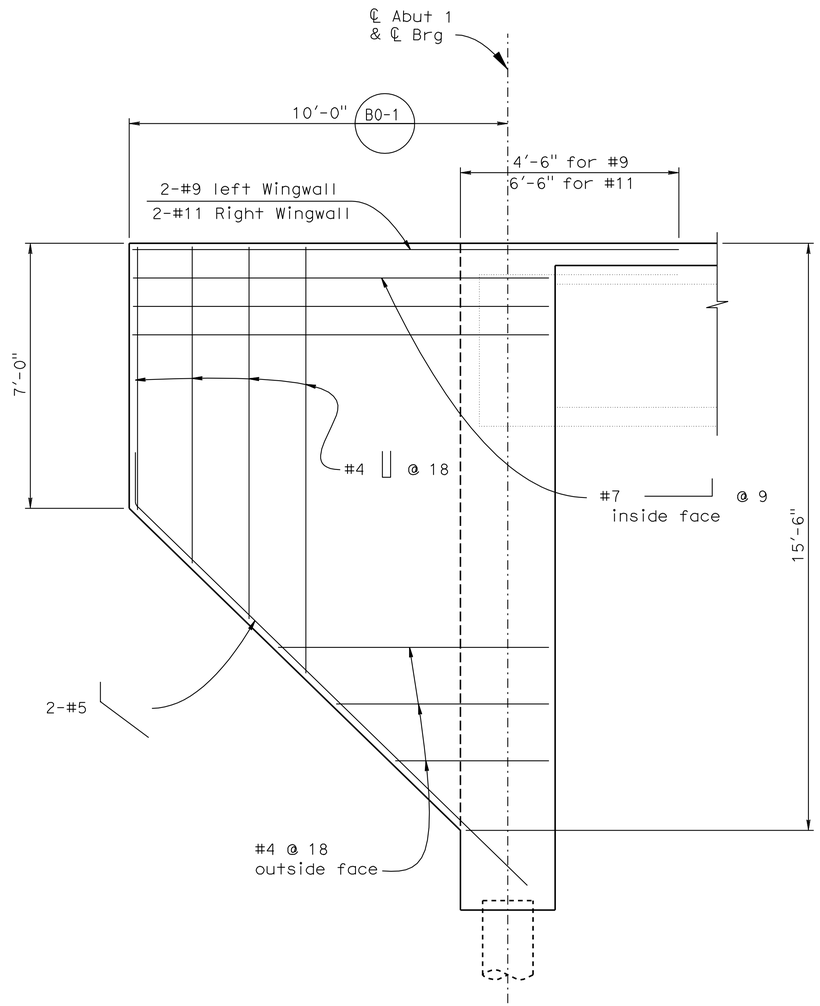

WINGWALL ELEVATION

B0-1

1/2"=1'-0"

Notes: Abut 1 right wingwall shown
Abut 1 left wingwall & Abut 2 wingwall similar

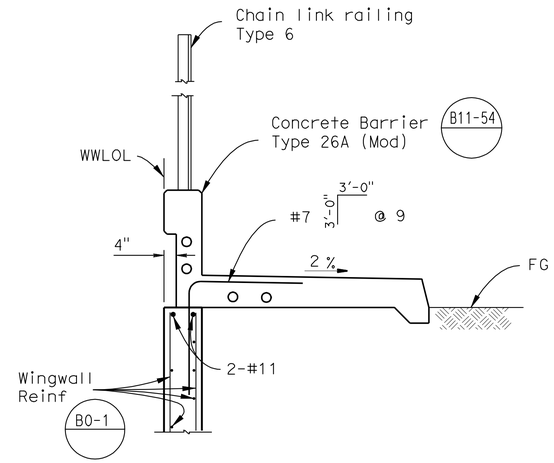

SECTION C-C

1/2"=1'-0"

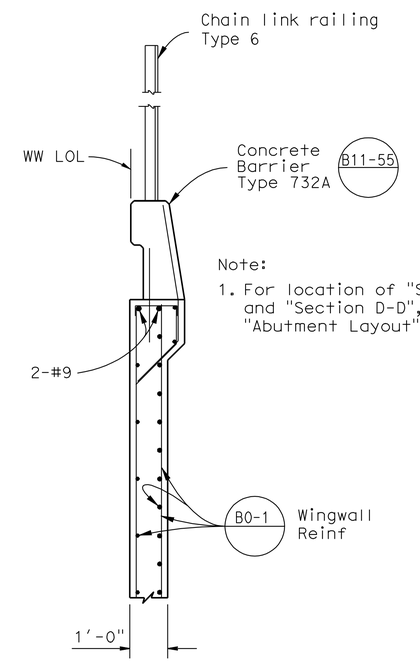

Note:

1. For location of "Section C-C" and "Section D-D", see "Abutment Layout" sheet

SECTION D-D

1/2"=1'-0"

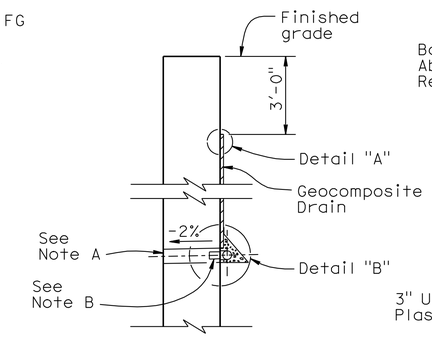

WALL SECTION

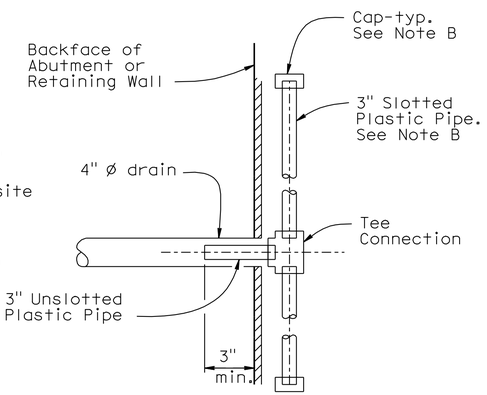

SECTION A-A

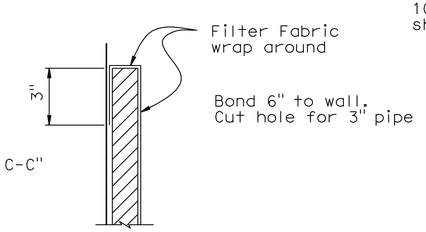

DETAIL "A"

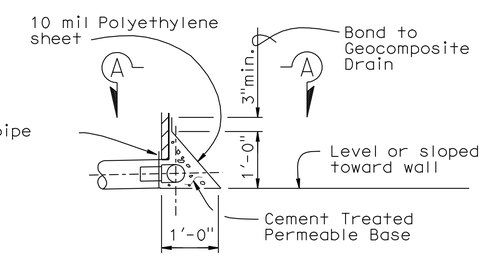

DETAIL "B"

WEEP HOLE AND GEOCOMPOSITE DRAIN

ALTERNATIVE TO BRIDGE DETAIL B0-3 / 3-1

Notes:

A. 4" ø drains at intermediate sag points and at 25' max center to center (9' c-c for Type 3 and 9'-3" c-c for Type 4 retaining walls).
For walls adjacent to sidewalks or curbs, provide 4" cast iron or asbestos cement pipe under the sidewalk to discharge through curb face.
Exposed wall drains shall be located 3"± above finished grade.

B. Geocomposite drain, cement treated permeable base, and 3"ø slotted plastic pipe continuous behind retaining wall or abutment. Cap ends of pipe. Provide "Tee" connection at each 4" ø drain.

C. Connect the low end of plastic pipe to the main outlet pipe as apprlicable.

	BY	CHECKED
DESIGN	H. Vu	F. Chen
DETAILS	D. Wooteø Y. Tang	F. Chen
QUANTITIES	M. Crete	A. McPhee

STATE OF CALIFORNIA
DEPARTMENT OF TRANSPORTATION

DIVISION OF ENGINEERING SERVICES
STRUCTURE DESIGN
DESIGN BRANCH 10

BRIDGE NO. 56C-0562
POST MILE 18.98

IVY STREET OH (REPLACE)
ABUTMENT DETAILS

STRUCTURES DESIGN DETAIL SHEET (ENGLISH) (REV. 10/25/05)

ORIGINAL SCALE IN INCHES FOR REDUCED PLANS 0 1 2 3

CU 08
EA 448401

DISREGARD PRINTS BEARING EARLIER REVISION DATES 11-18-09 3-26-10 8-04-10

REVISION DATES

SHEET 6 OF 18

FILE => 56c0562fabdt06.dgn

USERNAME => trlenard DATE PLOTTED => 30-APR-2011 TIME PLOTTED => 14:26

DIST	COUNTY	ROUTE	POST MILES TOTAL PROJECT	SHEET No	TOTAL SHEETS
08	Riv	91	15.6/21.6	1672	2028

REGISTERED CIVIL ENGINEER 11-30-10 DATE

4-25-11
PLANS APPROVAL DATE

REGISTERED PROFESSIONAL ENGINEER HUAN VU No. 60696 Exp. 12-31-10 CIVIL STATE OF CALIFORNIA

The State of California or its officers or agents shall not be responsible for the accuracy or completeness of electronic copies of this plan sheet.

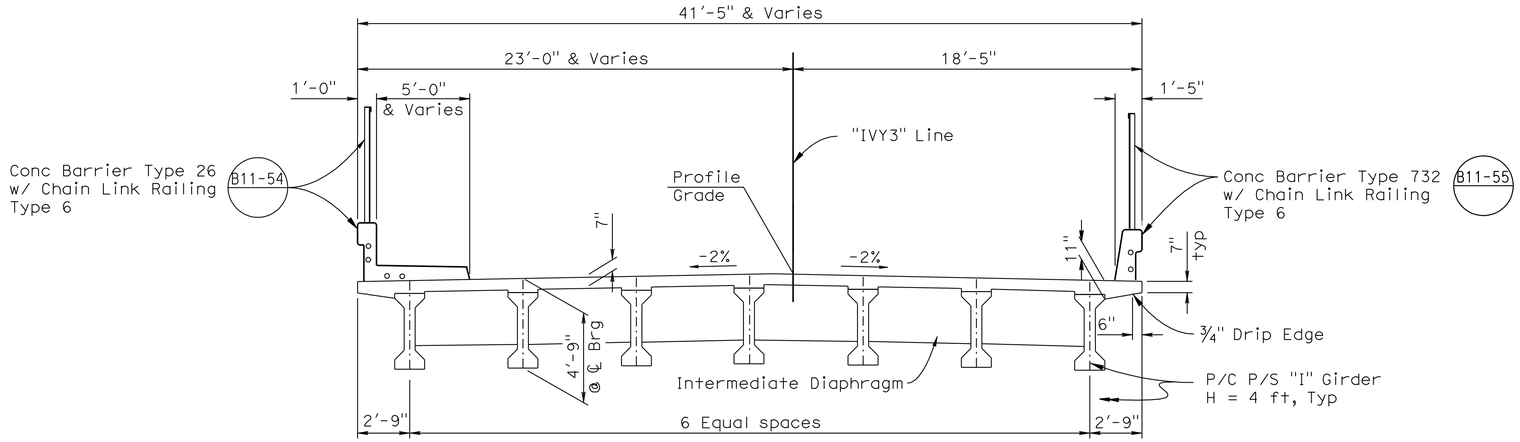

TYPICAL SECTION

1/4"=1'-0"

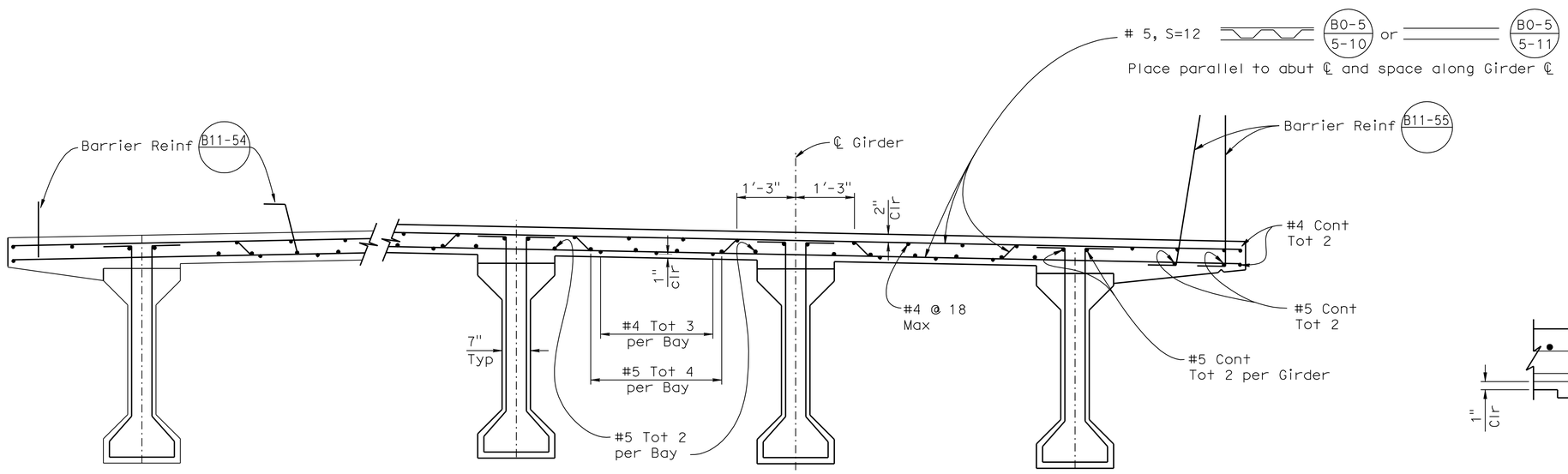

PART TYPICAL SECTION

B0-5

3/4"=1'-0"

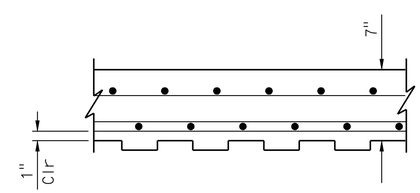

CONCRETE DECK WITH OPTIONAL PERMANENT STEEL DECK FORM

1 1/2"=1'-0"

NOTE:

Reinforcement are symmetric about ℄ Bridge.

DESIGN	BY H. Vu	CHECKED F. Chen	
DETAILS	BY D. Wooten / Y. Tang	CHECKED F. Chen	
QUANTITIES	BY M. Crete	CHECKED A. McPhee	

STATE OF CALIFORNIA DEPARTMENT OF TRANSPORTATION

DIVISION OF ENGINEERING SERVICES STRUCTURE DESIGN DESIGN BRANCH 10

BRIDGE NO. 56C-0562
POST MILE 18.98

IVY STREET OH (REPLACE)
TYPICAL SECTION

STRUCTURES DESIGN DETAIL SHEET (ENGLISH) (REV. 10/25/05)

ORIGINAL SCALE IN INCHES FOR REDUCED PLANS 0 1 2 3

CU 08
EA 448401

DISREGARD PRINTS BEARING EARLIER REVISION DATES 11-19-09 12-22-10 10-04-10

REVISION DATES

SHEET 7 OF 18

FILE => 56c0562kts07.dgn

USERNAME => trpbrit6 DATE PLOTTED => 30-APR-2011 TIME PLOTTED => 13:44

DIST	COUNTY	ROUTE	POST MILES TOTAL PROJECT	SHEET No	TOTAL SHEETS
08	Riv	91	15.6/21.6	1673	2028

REGISTERED CIVIL ENGINEER — DATE 11-30-10

4-25-11
PLANS APPROVAL DATE

REGISTERED PROFESSIONAL ENGINEER — HUAN VU — No. 60696 — Exp. 12-31-10 — CIVIL — STATE OF CALIFORNIA

The State of California or its officers or agents shall not be responsible for the accuracy or completeness of electronic copies of this plan sheet.

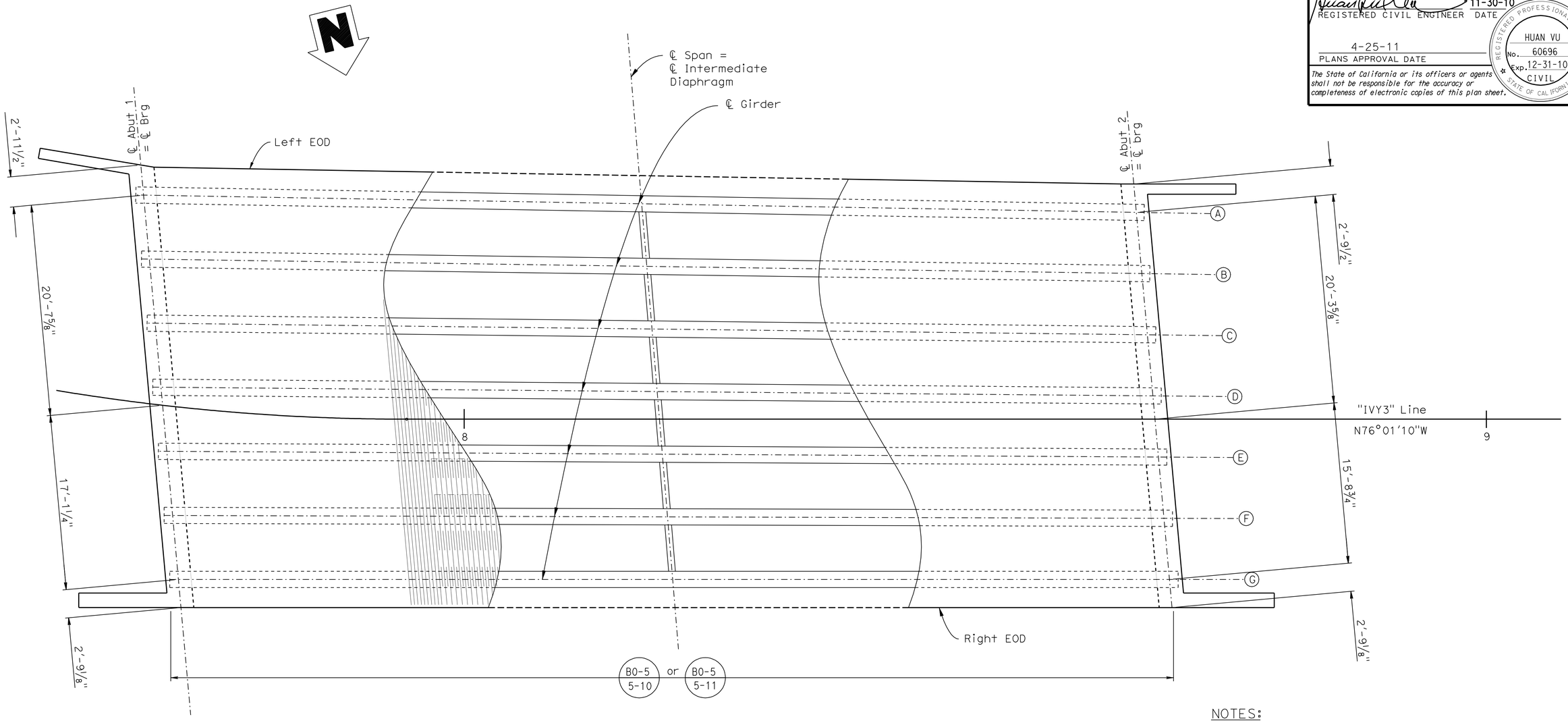

GIRDER LAYOUT

1"=5'

NOTES:

For Details of intermediate diaphragm, see "PRECAST PRESTRESSED I GIRDER (LRFD)" sheet.

DESIGN	BY H. Vu	CHECKED F. Chen	
DETAILS	BY D. Wooten/G.Hallstrom	CHECKED F. Chen	
QUANTITIES	BY M. Crete	CHECKED A. McPhee	

STATE OF CALIFORNIA
DEPARTMENT OF TRANSPORTATION

DIVISION OF ENGINEERING SERVICES
STRUCTURE DESIGN
DESIGN BRANCH 10

BRIDGE NO. 56C-0562
POST MILE 18.98

IVY STREET OH (REPLACE)
GIRDER LAYOUT

STRUCTURES DESIGN DETAIL SHEET (ENGLISH) (REV. 10/25/05)

ORIGINAL SCALE IN INCHES FOR REDUCED PLANS 0 1 2 3

CU 08
EA 448401

DISREGARD PRINTS BEARING EARLIER REVISION DATES

REVISION DATES: ~~11-19-09~~ ~~3-23-10~~ 8-04-10

SHEET 8 OF 18

FILE => 56c0562lglo08.dgn

USERNAME => trphtls DATE PLOTTED => 30-APR-2011 TIME PLOTTED => 13:44

DIST.	COUNTY	ROUTE	POST MILES TOTAL PROJECT	SHEET NO.	TOTAL SHEETS
08	Riv	91	15.6/21.6	1674	2028

REGISTERED ENGINEER - CIVIL 11-30-10

4-25-11
PLANS APPROVAL DATE

The State of California or its officers or agents shall not be responsible for the accuracy or completeness of electronic copies of this plan sheet.

REGISTERED PROFESSIONAL ENGINEER HUAN VU No. 60696 Exp. 12-31-10 CIVIL STATE OF CALIFORNIA

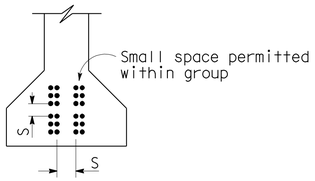

CLEARANCES FOR PRETENSIONED STRANDS

1. Strands may be bundled in groups consisting of 3 vertically 2 horizontally, and separated at the ends.
2. The min distance "S" between groups or individual strands is 1½" for ⅜" strands, 1¾" for ½" strands, 2" for 0.6" strands.
3. "S" is measured between centers of adjacent strands.
4. Approval from the Engineer is required for deviation.

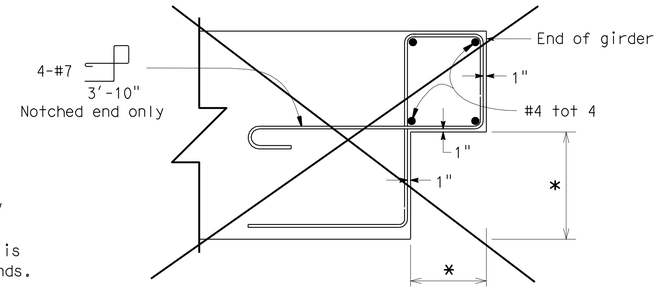

DETAIL "B" ◇1

For optional notched end detail only

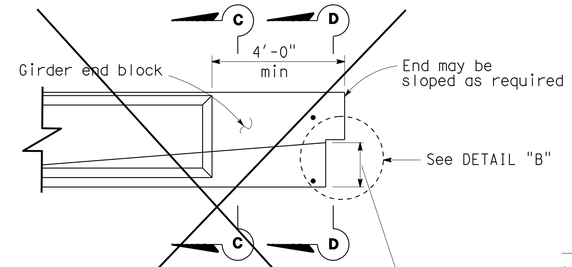

OPTIONAL NOTCHED END DETAIL ◇1

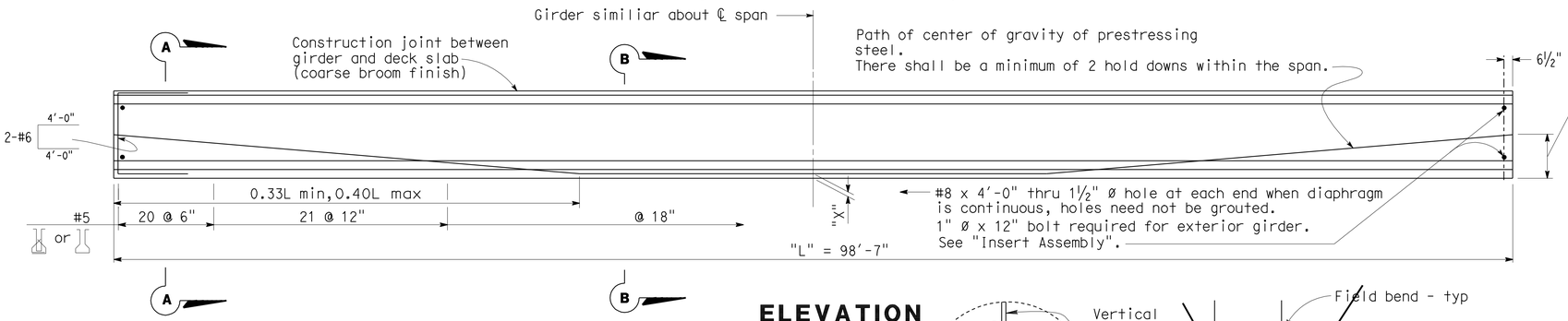

ELEVATION

GENERAL NOTES

JACKING FORCE (P): The jacking force required at the point of control along the span. The jacking force does not include any fabrication specific losses.

The maximum tensile stress in the prestressing steel upon release shall not exceed 75 percent of the specified minimum ultimate tensile strength of the prestressing steel.

The maximum temporary tensile stress (jacking stress) in the prestressing steel shall not exceed 80 percent of the specified minimum ultimate tensile strength of the prestressing steel.

CONCRETE STRENGTH: f'ci is at time of initial stressing.
f'c is at 28 days

DEFLECTION COMPONENTS: Informational - to be used in setting screed line elevations.

Screed line elevations for deck concrete will be determined by the Engineer.

Contractor may interpolate "P" and "X" values between limits shown, as approved by the Engineer.

Use epoxy coated reinforcement in Enviromental Area III

Girder location or designation and length	Jacking Force (P) (Kips) "X"		"Y" (in)	Concrete Strength (ksi) f'ci	Concrete Strength (ksi) f'c	Midspan Dead Load Deflection (inches) Deck	Midspan Dead Load Deflection (inches) Rail
Ⓐ TO Ⓖ	4"	1010	16	6	6.5	1.8	0.3
	6"	1060					

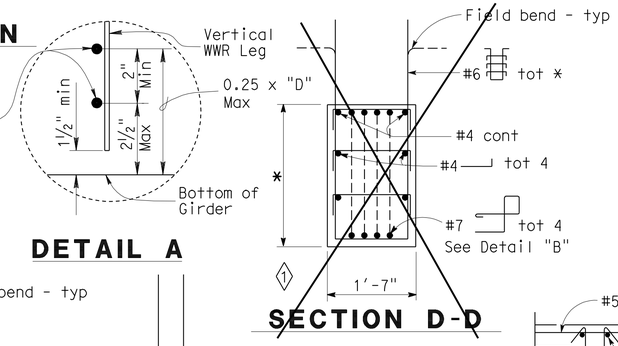

DETAIL A

SECTION D-D ◇1

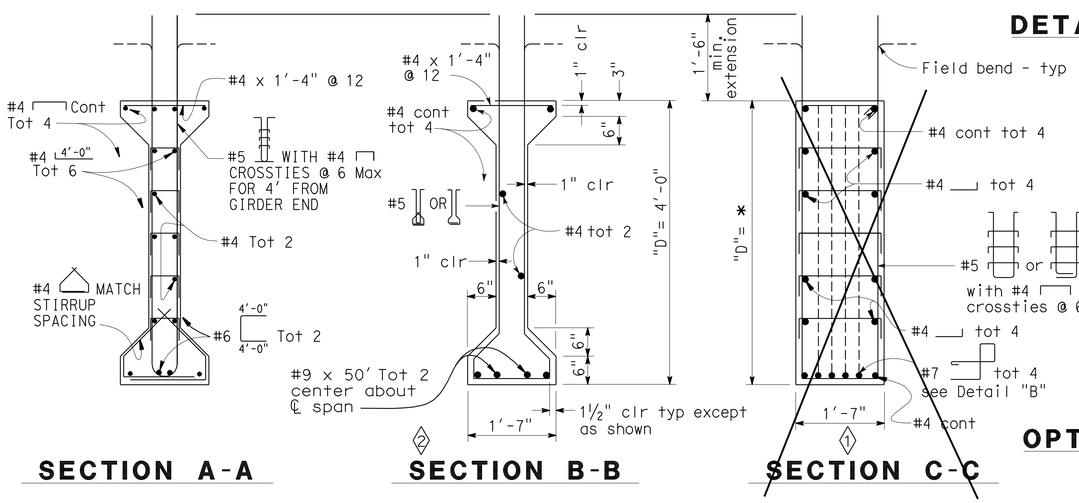

SECTION A-A

SECTION B-B ◇2

SECTION C-C ◇1

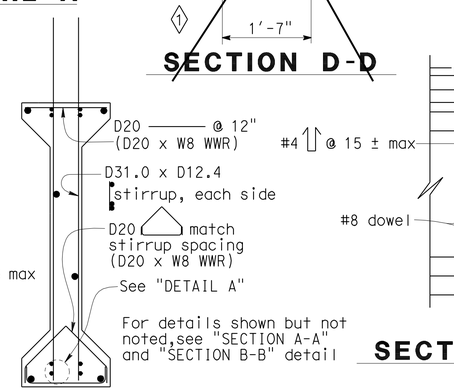

OPTIONAL WELDED WIRE REINFORCEMENT (WWR) DETAIL

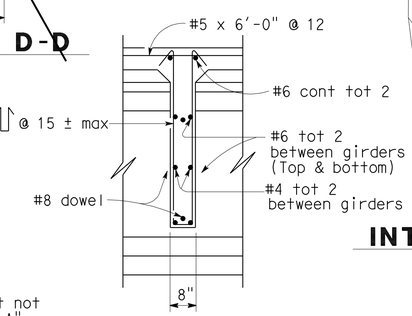

SECTION E-E

WWR Note: Manufacturer's shop drawing shall conform to the reinforcement shown on this sheet as noted and the special provisions.

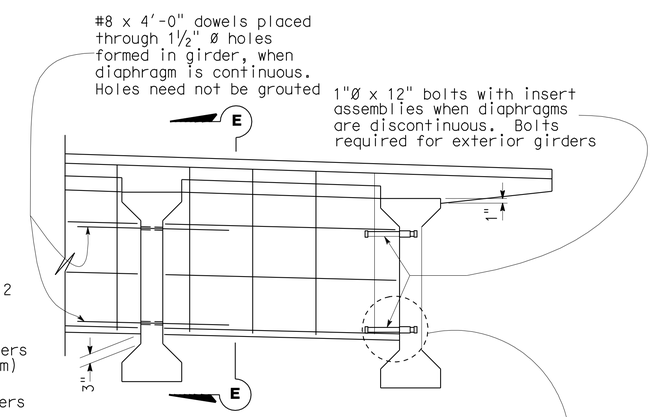

INTERMEDIATE DIAPHRAGM

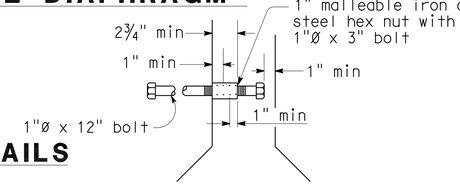

SPECIAL DETAILS

INSERT ASSEMBLY

NO SCALE

REVISED STANDARD DRAWING

FILE NO. xs 1-120-e

APPROVED BY Jim Ma — RESPONSIBLE TECHNICAL SPECIALIST
APPROVAL DATE 02-01-10

RELEASED BY Susan Hida — RESPONSIBLE OFFICE CHIEF
RELEASE DATE 02-01-10

◇1 Does Not Apply
◇2 Revised Detail

STATE OF CALIFORNIA
DEPARTMENT OF TRANSPORTATION

DIVISION OF ENGINEERING SERVICES

BRIDGE NO. 56C-0562
POST MILE 18.98

IVY STREET OH (REPLACE)
PRECAST PRESTRESSED I GIRDER

DS OSD 2147A (ENGLISH STANDARD DRAWING "XS" BORDER REV. 01/11/08)

ORIGINAL SCALE IN INCHES FOR REDUCED PLANS 0 1 2 3

CU 08
EA 448401

DISREGARD PRINTS BEARING EARLIER REVISION DATES

REVISION DATES (PRELIMINARY STAGE ONLY) 10-31-06 11-06-06 12-26-07 07-21-08 08-01-08 08-05-08 04-23-09 05-14-09 03-23-10 8-04-10

SHEET 9 OF 18

USERNAME => trphils

56c0562lgt09.dgn

DATE PLOTTED => 30-APR-2011 TIME PLOTTED => 13:44

DIST.	COUNTY	ROUTE	POST MILES TOTAL PROJECT	SHEET NO.	TOTAL SHEETS
08	Riv	91	15.6/21.6	1675	2028

REGISTERED ENGINEER - CIVIL 11-30-10

4-25-11
PLANS APPROVAL DATE

REGISTERED PROFESSIONAL ENGINEER HUAN VU No. 60696 Exp. 12-31-10 CIVIL STATE OF CALIFORNIA

The State of California or its officers or agents shall not be responsible for the accuracy or completeness of electronic copies of this plan sheet.

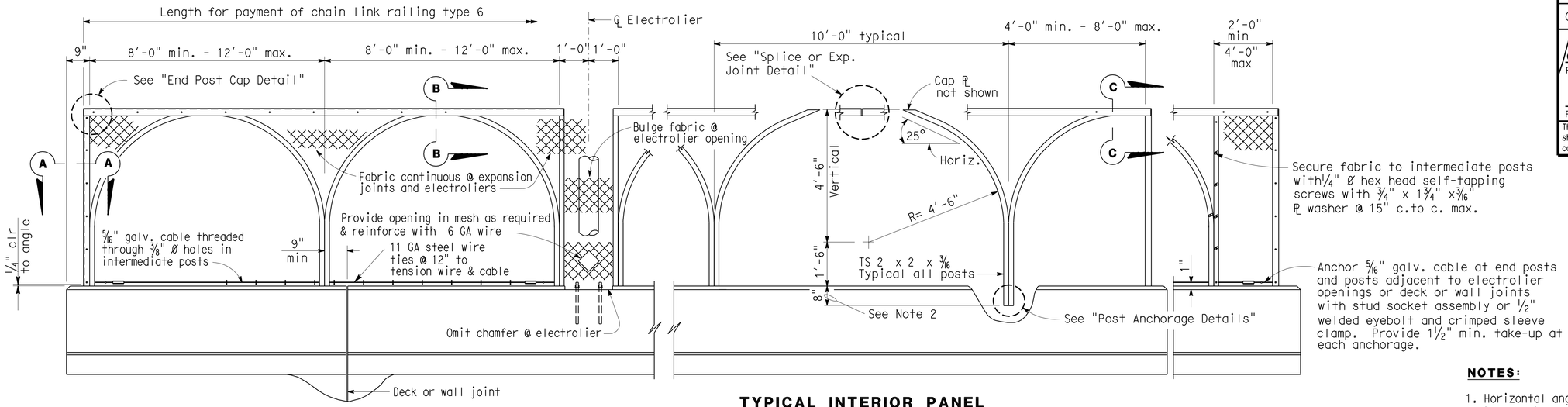

END PANEL 8'-0" - 12'-0" | **EXPANSION PANEL AT ELECTROLIER** | **TYPICAL INTERIOR PANEL** | **END PANEL 4'-0" - 8'-0"** | **END PANEL 2'-0" - 4'-0"**

ELEVATION

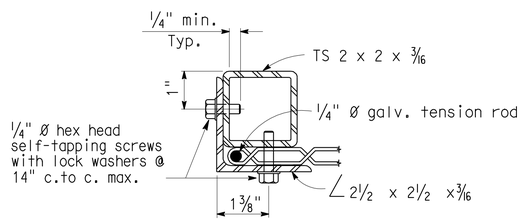

SECTION A-A

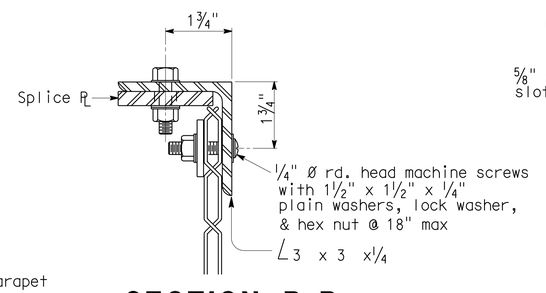

SECTION B-B

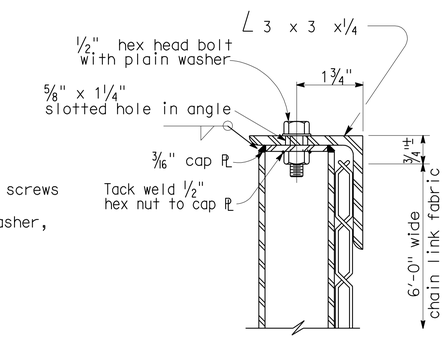

SECTION C-C

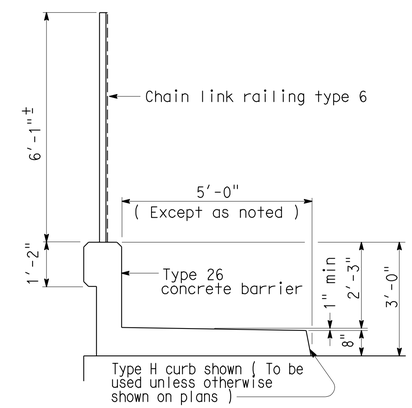

TYPICAL SECTION

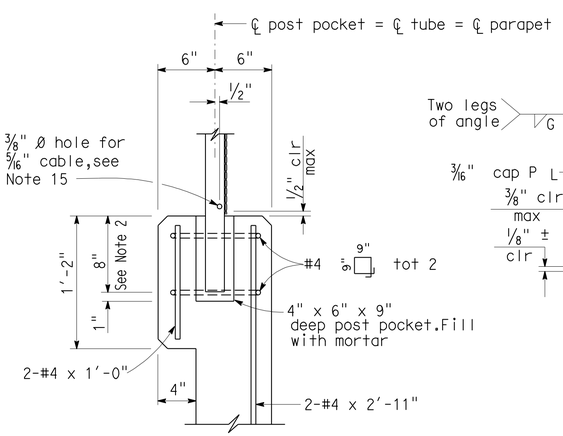

POST ANCHORAGE DETAIL

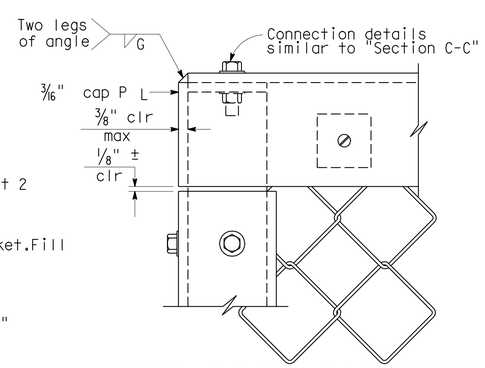

END POST CAP DETAIL

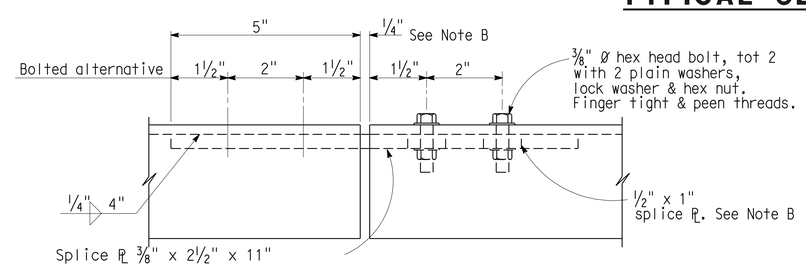

SPLICE OR EXPANSION JOINT DETAIL

Note B: Expansion joint same dimension as expansion joint in deck or wall. Increase slotted hole length and splice PL length correspondingly.

NOTES:

1. Horizontal angle shall be continuous over not less than two intermediate posts except that a shorter length is permitted at expansion joints, electroliers and other rail discontinuities.
2. One post may be embedded 6" minimum to accomodate grade changes, otherwise fabricate post lengths as required.
3. Curved posts may be rotated in plan within its post pocket to accomodate curved horizontal alignment.
4. Straight posts and straight portions of curved posts shall be installed normal to bridge profile grade.
5. Top horizontal angle shall be parallel to bridge profile grade and shall be shop bent to fit horizontal curves.
6. When railing is on slope, fabric shall be placed parallel to slope.
7. Alternative details may be submitted by Contractor for Engineer's approval.
8. Railing assembly except chain link fabric shall be galvanized after fabrication.
9. For details and reinforcement not shown, see "Concrete Barrier Type 26" sheet.
10. See Bridge Plans for limits of Chain Link Railing Type 6.
11. Provide thimbles at all cable loops.
12. Chain link fabric to be 6'-0" wide with 1" mesh and with knuckled selvage top and bottom.
13. When railing is placed on a horizontal alignment with a radius of 150'-0" or less, thread 5/16" cable through 3/8" Ø welded eye rods embedded 4" into the top of the concrete parapet and equally spaced to limit the middle ordinate distance between the 5/16" cable and the curve to 1" max.
14. Splices and expansion joints shall be located at ℄ panel.
15. Holes in posts for 5/16" cable and its anchorage may be field drilled and painted with zinc rich paint.

STANDARD DRAWING

FILE NO. xs16-340e

APPROVED BY T SATTER — RESPONSIBLE TECHNICAL SPECIALIST
APPROVAL DATE 4-15-08

RELEASED BY ROBERTO LACALLE — RESPONSIBLE OFFICE CHIEF
RELEASE DATE 4-15-08

STATE OF CALIFORNIA DEPARTMENT OF TRANSPORTATION

DIVISION OF ENGINEERING SERVICES

BRIDGE NO. 56C-0562
POST MILE 18.98

IVY STREET OH (REPLACE)
CHAIN LINK RAILING TYPE 6

DS OSD 2147A (ENGLISH STANDARD DRAWING "XS" BORDER REV. 01/11/08)

ORIGINAL SCALE IN INCHES FOR REDUCED PLANS 0 1 2 3

CU 08
EA 448401

DISREGARD PRINTS BEARING EARLIER REVISION DATES 8-04-10

REVISION DATES (PRELIMINARY STAGE ONLY)

SHEET 10 OF 18

USERNAME => trphils

56c0562tclrdt10.dgn

DATE PLOTTED => 30-APR-2011 TIME PLOTTED => 13:44

DIST	COUNTY	ROUTE	POST MILES TOTAL PROJECT	SHEET No	TOTAL SHEETS
08	Riv	91	15.6/21.6	1676	2028

K. Douglas Cook 9-23-10
CERTIFIED ENGINEERING GEOLOGIST

4-25-11
PLANS APPROVAL DATE

PROFESSIONAL GEOLOGIST
K. Douglas Cook
No. 1391
Exp. 12-31-11
CERTIFIED ENGINEERING GEOLOGIST
STATE OF CALIFORNIA

The State of California or its officers or agents shall not be responsible for the accuracy or completeness of electronic copies of this plan sheet.

This LOTB sheet was prepared in accordance with the Caltrans Soil & Rock Logging, Classification, & Presentation Manual (June 2007).

BENCH MARK

FD STD Br Disk Stamped
"RIV91-18.98 LS 5679 1990"
in Conc Sidewalk Sly Side
Ivey St Overpass

N 2,294,906.88
E 6,219,561.51
Elev 934.14′
Set PK Nail w/CT Washer
E'ly Side Panorama,
Approx 300′ along CL from Ivy OC

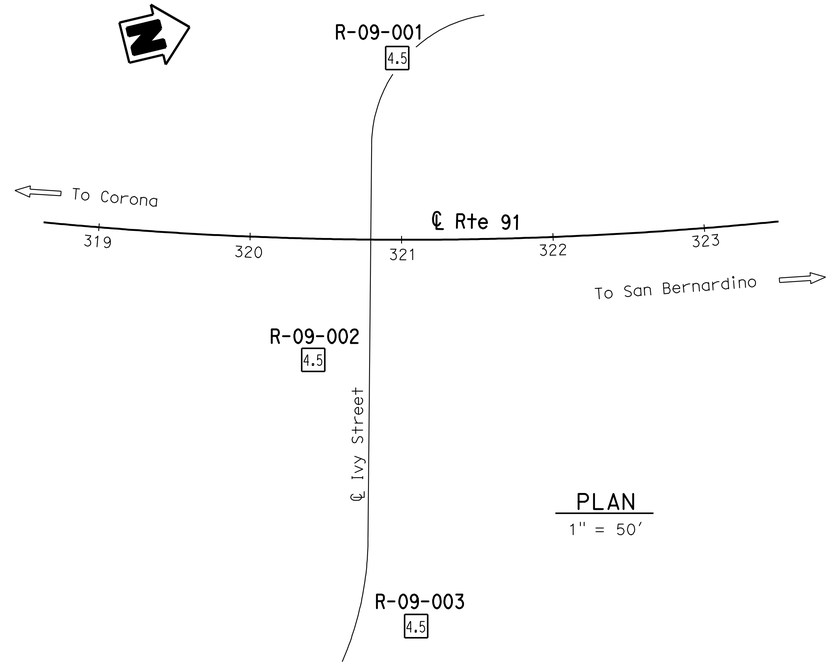

PLAN
1" = 50′

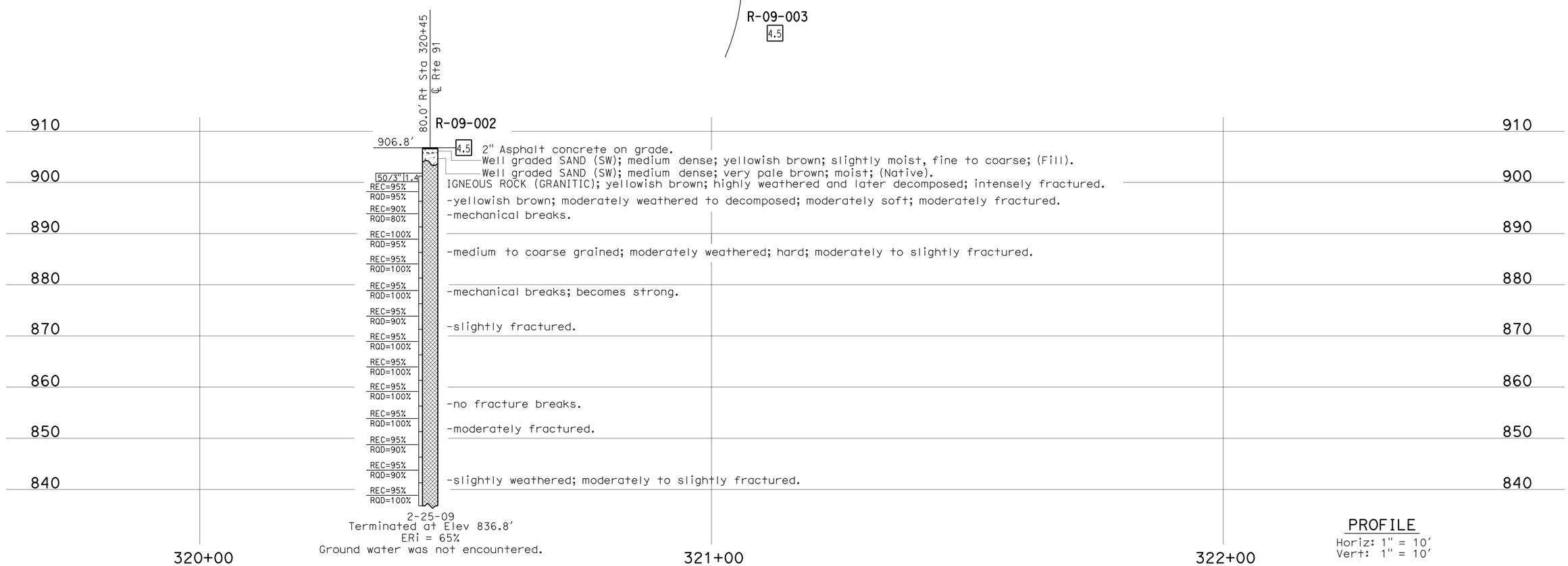

PROFILE
Horiz: 1" = 10′
Vert: 1" = 10′

ENGINEERING SERVICES	GEOTECHNICAL SERVICES	STATE OF CALIFORNIA DEPARTMENT OF TRANSPORTATION	DIVISION OF ENGINEERING SERVICES STRUCTURE DESIGN	BRIDGE NO. 56c-0562	IVY STREET OH (REPLACE)
FUNCTIONAL SUPERVISOR	DRAWN BY: F. Nguyen 02/10	FIELD INVESTIGATION BY:	DESIGN BRANCH	POST MILES 19.1	LOG OF TEST BORINGS 1 OF 8
NAME: A. Perez-Cobo	CHECKED BY: W. J. Levine	D. Cook			

OGS CIVIL LOG OF TEST BORINGS SHEET

ORIGINAL SCALE IN INCHES FOR REDUCED PLANS 0 1 2 3

CU 08
EA 448401

DISREGARD PRINTS BEARING EARLIER REVISION DATES 03-16-10

REVISION DATES

SHEET 11 OF 18

FILE => 56c0562zltb11.dgn

USERNAME => trphtis DATE PLOTTED => 30-APR-2011 TIME PLOTTED => 13:45

DIST	COUNTY	ROUTE	POST MILES TOTAL PROJECT	SHEET No	TOTAL SHEETS
08	Riv	91	15.6/21.6	1677	2028

K. Douglas Cook 9-23-10
CERTIFIED ENGINEERING GEOLOGIST

4-25-11
PLANS APPROVAL DATE

PROFESSIONAL GEOLOGIST
K. Douglas Cook
No. 1391
Exp. 12-31-11
CERTIFIED ENGINEERING GEOLOGIST
STATE OF CALIFORNIA

The State of California or its officers or agents shall not be responsible for the accuracy or completeness of electronic copies of this plan sheet.

This LOTB sheet was prepared in accordance with the Caltrans Soil & Rock Logging, Classification, & Presentation Manual (June 2007).

FOR PLAN VIEW, SEE
"LOG OF TEST BORINGS 1 OF 8"

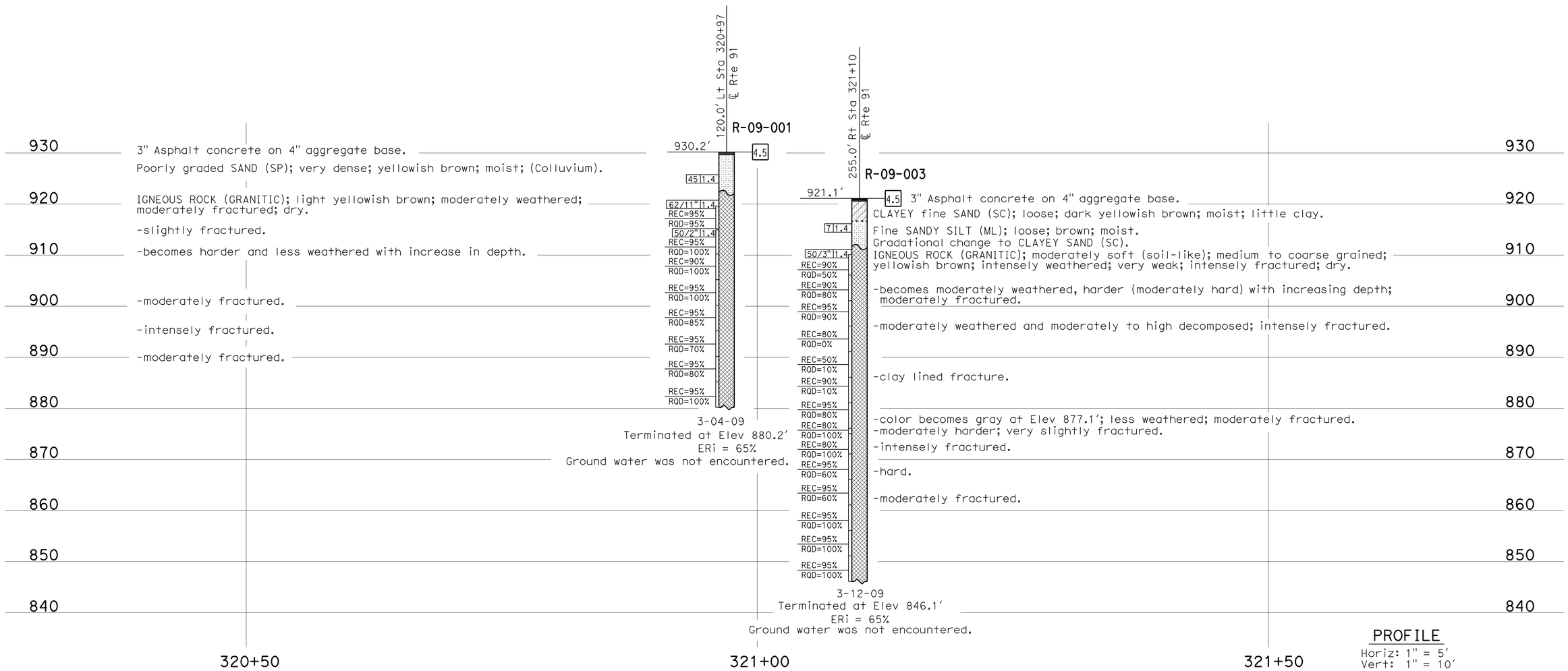

ENGINEERING SERVICES		GEOTECHNICAL SERVICES	STATE OF CALIFORNIA DEPARTMENT OF TRANSPORTATION	DIVISION OF ENGINEERING SERVICES STRUCTURE DESIGN	BRIDGE NO. 56c-0562	IVY STREET OH (REPLACE)
FUNCTIONAL SUPERVISOR	DRAWN BY: F. Nguyen 01/10	FIELD INVESTIGATION BY:		DESIGN BRANCH	POST MILES 19.1	LOG OF TEST BORINGS 2 OF 8
NAME: A. Perez-Cobo	CHECKED BY: W. J. Levine	D. Cook				

OGS CIVIL LOG OF TEST BORINGS SHEET

ORIGINAL SCALE IN INCHES FOR REDUCED PLANS 0 1 2 3

CU 08
EA 448401

DISREGARD PRINTS BEARING EARLIER REVISION DATES 03-16-10

REVISION DATES

SHEET 12 OF 18

FILE => 56c0562zltb12.dgn

USERNAME => trphtls DATE PLOTTED => 30-APR-2011 TIME PLOTTED => 13:45

DIST	COUNTY	ROUTE	POST MILES TOTAL PROJECT	SHEET No	TOTAL SHEETS
08	Riv	91	15.6/21.6	1678	2028

K. Douglas Cook 9-23-10
CERTIFIED ENGINEERING GEOLOGIST

4-25-11
PLANS APPROVAL DATE

PROFESSIONAL GEOLOGIST K. Douglas Cook No. 1391 Exp. 12-31-11 CERTIFIED ENGINEERING GEOLOGIST STATE OF CALIFORNIA

The State of California or its officers or agents shall not be responsible for the accuracy or completeness of electronic copies of this plan sheet.

REFERENCE: CALTRANS SOIL & ROCK LOGGING, CLASSIFICATION, AND PRESENTATION MANUAL (JUNE 2007)

CEMENTATION

Description	Criteria
Weak	Crumbles or breaks with handling or little finger pressure.
Moderate	Crumbles or breaks with considerable finger pressure.
Strong	Will not crumble or break with finger pressure.

CONSISTENCY OF COHESIVE SOILS

Description	Unconfined Compressive Strength (tsf)	Pocket Penetrometer Measurement (tsf)	Torvane Measurement (tsf)	Field Approximation
Very Soft	< 0.25	< 0.25	< 0.12	Easily penetrated several inches by fist
Soft	0.25 to 0.50	0.25 to 0.50	0.12 to 0.25	Easily penetrated several inches by thumb
Medium Stiff	0.50 to 1.0	0.50 to 1.0	0.25 to 0.50	Penetrated several inches by thumb with moderate effort
Stiff	1 to 2	1 to 2	0.50 to 1.0	Readily indented by thumb but penetrated only with great effort
Very Stiff	2 to 4	2 to 4	1.0 to 2.0	Readily indented by thumbnail
Hard	> 4.0	> 4.0	> 2.0	Indented by thumbnail with difficulty

BOREHOLE IDENTIFICATION

Symbol	Hole Type	Description
Size	A	Auger Boring
Size	R P	Rotary drilled boring Rotary percussion boring (air)
Size	R	Rotary drilled diamond core
Size	HD HA	Hand driven (1-inch soil tube) Hand Auger
●	D	Dynamic Cone Penetration Boring
▲	CPT	Cone Penetration Test (ASTM D 5778-95)
⬚	O	Other

Note: Size in inches.

PLASTICITY OF FINE-GRAINED SOILS

Description	Criteria
Nonplastic	A 1/8-inch thread cannot be rolled at any water content.
Low	The thread can barely be rolled and the lump cannot be formed when drier than the plastic limit.
Medium	The thread is easy to roll and not much time is required to reach the plastic limit. The thread cannot be rerolled after reaching the plastic limit. The lump crumbles when drier than the plastic limit.
High	It takes considerable time rolling and kneading to reach the plastic limit. The thread can be rerolled several times after reaching the plastic limit. The lump can be formed without crumbling when drier than the plastic limit.

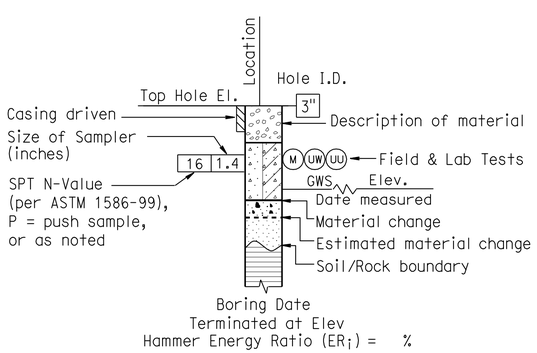

ROTARY BORING

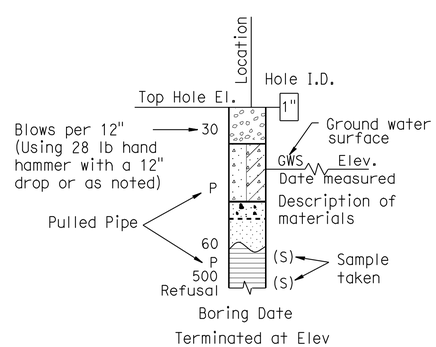

HAND BORING

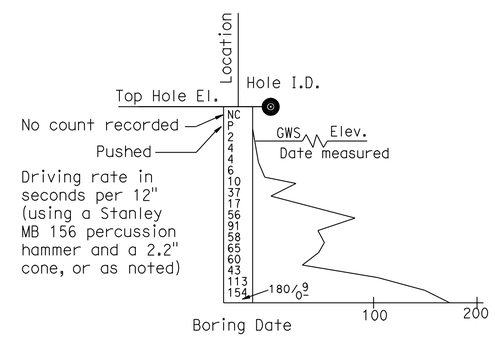

DYNAMIC CONE PENETRATION BORING

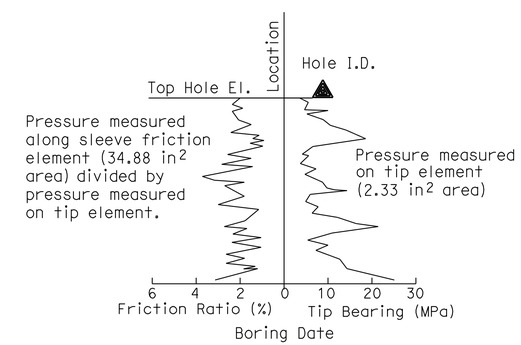

CONE PENETRATION TEST (CPT) SOUNDING

ENGINEERING SERVICES	GEOTECHNICAL SERVICES	STATE OF CALIFORNIA DEPARTMENT OF TRANSPORTATION	DIVISION OF ENGINEERING SERVICES STRUCTURE DESIGN DESIGN BRANCH	BRIDGE NO. 56c-0562 POST MILE 19.1	IVY STREET OH (REPLACE) LOG OF TEST BORINGS 3 OF 8
	PREPARED BY: F. Nguyen 02/10				

GS LOTB SOIL LEGEND

ORIGINAL SCALE IN INCHES FOR REDUCED PLANS 0 1 2 3

CU 08
EA 448401

DISREGARD PRINTS BEARING EARLIER REVISION DATES → 03-16-10

REVISION DATES

SHEET 13 OF 18

FILE => 56c0562zltb13.dgn

USERNAME => trphtis DATE PLOTTED => 30-APR-2011 TIME PLOTTED => 13:45

REFERENCE: CALTRANS SOIL & ROCK LOGGING, CLASSIFICATION, AND PRESENTATION MANUAL (JUNE 2007)

DIST	COUNTY	ROUTE	POST MILES TOTAL PROJECT	SHEET No	TOTAL SHEETS
08	Riv	91	15.6/21.6	1679	2028

K. Douglas Cook 9-23-10
CERTIFIED ENGINEERING GEOLOGIST

4-25-11
PLANS APPROVAL DATE

PROFESSIONAL GEOLOGIST K. Douglas Cook No. 1391 Exp. 12-31-11 CERTIFIED ENGINEERING GEOLOGIST STATE OF CALIFORNIA

The State of California or its officers or agents shall not be responsible for the accuracy or completeness of electronic copies of this plan sheet.

GROUP SYMBOLS AND NAMES

Graphic/Symbol	Group Names	Graphic/Symbol	Group Names
GW	Well-graded GRAVEL Well-graded GRAVEL with SAND	CL	Lean CLAY Lean CLAY with SAND Lean CLAY with GRAVEL SANDY lean CLAY SANDY lean CLAY with GRAVEL GRAVELLY lean CLAY GRAVELLY lean CLAY with SAND
GP	Poorly graded GRAVEL Poorly graded GRAVEL with SAND		
GW-GM	Well-graded GRAVEL with SILT Well-graded GRAVEL with SILT and SAND	CL-ML	SILTY CLAY SILTY CLAY with SAND SILTY CLAY with GRAVEL SANDY SILTY CLAY SANDY SILTY CLAY with GRAVEL GRAVELLY SILTY CLAY GRAVELLY SILTY CLAY with SAND
GW-GC	Well-graded GRAVEL with CLAY (or SILTY CLAY) Well-graded GRAVEL with CLAY and SAND (or SILTY CLAY and SAND)		
GP-GM	Poorly graded GRAVEL with SILT Poorly graded GRAVEL with SILT and SAND	ML	SILT SILT with SAND SILT with GRAVEL SANDY SILT SANDY SILT with GRAVEL GRAVELLY SILT GRAVELLY SILT with SAND
GP-GC	Poorly graded GRAVEL with CLAY (or SILTY CLAY) Poorly graded GRAVEL with CLAY and SAND (or SILTY CLAY and SAND)		
GM	SILTY GRAVEL SILTY GRAVEL with SAND	OL	ORGANIC lean CLAY ORGANIC lean CLAY with SAND ORGANIC lean CLAY with GRAVEL SANDY ORGANIC lean CLAY SANDY ORGANIC lean CLAY with GRAVEL GRAVELLY ORGANIC lean CLAY GRAVELLY ORGANIC lean CLAY with SAND
GC	CLAYEY GRAVEL CLAYEY GRAVEL with SAND		
GC-GM	SILTY, CLAYEY GRAVEL SILTY, CLAYEY GRAVEL with SAND	OL	ORGANIC SILT ORGANIC SILT with SAND ORGANIC SILT with GRAVEL SANDY ORGANIC SILT SANDY ORGANIC SILT with GRAVEL GRAVELLY ORGANIC SILT GRAVELLY ORGANIC SILT with SAND
SW	Well-graded SAND Well-graded SAND with GRAVEL		
SP	Poorly graded SAND Poorly graded SAND with GRAVEL	CH	Fat CLAY Fat CLAY with SAND Fat CLAY with GRAVEL SANDY fat CLAY SANDY fat CLAY with GRAVEL GRAVELLY fat CLAY GRAVELLY fat CLAY with SAND
SW-SM	Well-graded SAND with SILT Well-graded SAND with SILT and GRAVEL		
SW-SC	Well-graded SAND with CLAY (or SILTY CLAY) Well-graded SAND with CLAY and GRAVEL (or SILTY CLAY and GRAVEL)	MH	Elastic SILT Elastic SILT with SAND Elastic SILT with GRAVEL SANDY elastic SILT SANDY elastic SILT with GRAVEL GRAVELLY elastic SILT GRAVELLY elastic SILT with SAND
SP-SM	Poorly graded SAND with SILT Poorly graded SAND with SILT and GRAVEL		
SP-SC	Poorly graded SAND with CLAY (or SILTY CLAY) Poorly graded SAND with CLAY and GRAVEL (or SILTY CLAY and GRAVEL)	OH	ORGANIC fat CLAY ORGANIC fat CLAY with SAND ORGANIC fat CLAY with GRAVEL SANDY ORGANIC fat CLAY SANDY ORGANIC fat CLAY with GRAVEL GRAVELLY ORGANIC fat CLAY GRAVELLY ORGANIC fat CLAY with SAND
SM	SILTY SAND SILTY SAND with GRAVEL		
SC	CLAYEY SAND CLAYEY SAND with GRAVEL	OH	ORGANIC elastic SILT ORGANIC elastic SILT with SAND ORGANIC elastic SILT with GRAVEL SANDY ORGANIC elastic SILT SANDY ORGANIC elastic SILT with GRAVEL GRAVELLY ORGANIC elastic SILT GRAVELLY ORGANIC elastic SILT with SAND
SC-SM	SILTY, CLAYEY SAND SILTY, CLAYEY SAND with GRAVEL		
PT	PEAT	OL/OH	ORGANIC SOIL ORGANIC SOIL with SAND ORGANIC SOIL with GRAVEL SANDY ORGANIC SOIL SANDY ORGANIC SOIL with GRAVEL GRAVELLY ORGANIC SOIL GRAVELLY ORGANIC SOIL with SAND
	COBBLES COBBLES and BOULDERS BOULDERS		

FIELD AND LABORATORY TESTING

- (C) Consolidation (ASTM D 2435)
- (CL) Collapse Potential (ASTM D 5333)
- (CP) Compaction Curve (CTM 216)
- (CR) Corrosivity Testing (CTM 643, CTM 422, CTM 417)
- (CU) Consolidated Undrained Triaxial (ASTM D 4767)
- (DS) Direct Shear (ASTM D 3080)
- (EI) Expansion Index (ASTM D 4829)
- (M) Moisture Content (ASTM D 2216)
- (OC) Organic Content-% (ASTM D 2974)
- (P) Permeability (CTM 220)
- (PA) Particle Size Analysis (ASTM D 422)
- (PI) Plasticity Index (AASHTO T 90) Liquid Limit (AASHTO T 89)
- (PL) Point Load Index (ASTM D 5731)
- (PM) Pressure Meter
- (PP) Pocket Penetrometer
- (R) R-Value (CTM 301)
- (SE) Sand Equivalent (CTM 217)
- (SG) Specific Gravity (AASHTO T 100)
- (SL) Shrinkage Limit (ASTM D 427)
- (SW) Swell Potential (ASTM D 4546)
- (TV) Pocket Torvane
- (UC) Unconfined Compression-Soil (ASTM D 2166) Unconfined Compression-Rock (ASTM D 2938)
- (UU) Unconsolidated Undrained Triaxial (ASTM D 2850)
- (UW) Unit Weight (ASTM D 4767)
- (VS) Vane Shear (AASHTO T 223)

APPARENT DENSITY OF COHESIONLESS SOILS

Description	SPT N_{60} (Blows / 12 inches)
Very loose	0 - 4
Loose	5 - 10
Medium Dense	11 - 30
Dense	31 - 50
Very Dense	> 50

MOISTURE

Description	Criteria
Dry	Absence of moisture, dusty, dry to the touch
Moist	Damp but no visible water
Wet	Visible free water, usually soil is below water table

PERCENT OR PROPORTION OF SOILS

Description	Criteria
Trace	Particles are present but estimated to be less than 5%
Few	5 to 10%
Little	15 to 25%
Some	30 to 45%
Mostly	50 to 100%

PARTICLE SIZE

Description		Size
Boulder		> 12"
Cobble		3" to 12"
Gravel	Coarse	3/4" to 3"
	Fine	No. 4 to 3/4"
Sand	Coarse	No. 10 to No. 4
	Medium	No. 40 to No. 10
	Fine	No. 200 to No. 40

ENGINEERING SERVICES

GEOTECHNICAL SERVICES
PREPARED BY: F. Nguyen 02/10

STATE OF CALIFORNIA DEPARTMENT OF TRANSPORTATION

DIVISION OF ENGINEERING SERVICES STRUCTURE DESIGN
DESIGN BRANCH

BRIDGE NO. 56c-0562
POST MILE 19.1

IVY STREET OH (REPLACE)
LOG OF TEST BORINGS 4 OF 8

GS LOTB SOIL LEGEND

ORIGINAL SCALE IN INCHES FOR REDUCED PLANS 0 1 2 3

CU 08
EA 448401

DISREGARD PRINTS BEARING EARLIER REVISION DATES 03-16-10

REVISION DATES

SHEET 14 OF 18

FILE => 56c0562zltb14.dgn

USERNAME => trphilis DATE PLOTTED => 30-APR-2011 TIME PLOTTED => 13:46

DIST	COUNTY	ROUTE	POST MILES TOTAL PROJECT	SHEET No	TOTAL SHEETS
08	Riv	91	15.6/21.6	1680	2028

K. Douglas Cook 9-23-10
CERTIFIED ENGINEERING GEOLOGIST

4-25-11
PLANS APPROVAL DATE

PROFESSIONAL GEOLOGIST K. Douglas Cook No. 1391 Exp. 12-31-11 CERTIFIED ENGINEERING GEOLOGIST STATE OF CALIFORNIA

The State of California or its officers or agents shall not be responsible for the accuracy or completeness of electronic copies of this plan sheet.

REFERENCE: CALTRANS SOIL & ROCK LOGGING, CLASSIFICATION, AND PRESENTATION MANUAL (JUNE 2007)

PERCENT CORE RECOVERY (REC) & ROCK QUALITY DESIGNATION (RQD)

$$REC = \frac{\sum \text{Length of the recovered core pieces (inches)}}{\text{Total length of core run (inches)}} \times 100\%$$

$$RQD = \frac{\sum \text{Length of intact core pieces} \geq 4''}{\text{Total length of core run (inches)}} \times 100\%$$

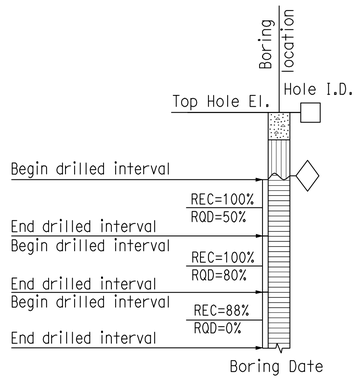

RELATIVE STRENGTH OF INTACT ROCK

Term	Uniaxial Compressive Strength (PSI)
Extremely Strong	> 30,000
Very Strong	14,500 - 30,000
Strong	7,000 - 14,500
Medium Strong	3,500 - 7,000
Weak	700 - 3,500
Very Weak	150 - 700
Extremely Weak	< 150

BEDDING SPACING

Description	Thickness / Spacing
Massive	Greater than 10 ft
Very thickly bedded	3 to 10 ft
Thickly bedded	1 to 3 ft
Moderately bedded	3-5/8" to 1 ft
Thinly bedded	1-1/4" to 3-5/8"
Very thinly bedded	3/8" to 1-1/4"
Laminated	Less than 3/8"

LEGEND OF ROCK MATERIALS

- IGNEOUS ROCK
- SEDIMENTARY ROCK
- METAMORPHIC ROCK

ROCK HARDNESS

Description	Criteria
Extremely Hard	Specimen cannot be scratched with a pocket knife or sharp pick; can only be chipped with repeated heavy hammer blows.
Very Hard	Specimen cannot be scratched with a pocket knife or sharp pick. Breaks with repeated heavy hammer blows.
Hard	Specimen can be scratched with a pocket knife or sharp pick with difficulty (heavy pressure). Heavy hammer blows required to break specimen.
Moderately Hard	Specimen can be scratched with pocket knife or sharp pick with light or moderate pressure. Core breaks with moderate hammer blows.
Moderately Soft	Specimen can be grooved 1/6" deep with a pocket knife or sharp pick with moderate or heavy pressure. Breaks with light hammer blow or heavy manual pressure.
Soft	Specimen can be grooved or gouged easily by a pocket knife or sharp pick with light pressure, can be scratched with fingernail. Breaks with light to moderate manual pressure.
Very Soft	Specimen can be readily indented, grooved or gouged with fingernail, or carved with a pocket knife. Breaks with light manual pressure.

FRACTURE DENSITY

Description	Observed Fracture Density
Unfractured	No fractures.
Very slightly fractured	Lengths greater than 3 feet.
Slightly fractured	Lengths from 1 to 3 feet with few lengths less than 1 foot or greater than 3 feet.
Moderately fractured	Lengths mostly in 4" to 1 foot range with most lengths about 8"
Intensely fractured	Lengths average from 1 to 4" with scattered fragmented intervals with lengths less than 4"
Very intensely fractured	Mostly chips and fragments with a few scattered short core lengths.

Combination descriptors (such as "Very intensely to intensely fractured") are used where equal distribution of both fracture density characteristics is present over a significant interval or exposure, or where characteristics are "in between" the descriptor definitions. Only two adjacent descriptors may be combined.

WEATHERING DESCRIPTORS FOR INTACT ROCK

Description	Diagnostic features					General Characteristics
	Chemical Weathering-Discoloration and/or oxidation		Mechanical Weathering-Grain boundary conditions (disaggregation) primarily for granitics and some coarse-grained sediments	Texture and Solutioning		
	Body of Rock	Fracture Surfaces		Texture	Solutioning	
Fresh	No discoloration, not oxidized.	No discoloration or oxidation.	No separation, intact (tight).	No change.	No solutioning.	Hammer rings when crystalline rocks are struck.
Slightly Weathered	Discoloration or oxidation is limited to surface of, or short distance from, fractures; some feldspar crystals are dull.	Minor to complete discoloration or oxidation of most surfaces.	No visible separation, intact (tight).	Preserved.	Minor leaching of some soluble minerals may be noted.	Hammer rings when crystalline rocks are struck. Body of rock not weakened.
Moderately Weathered	Discoloration or oxidation extends from fractures usually throughout; Fe-Mg minerals are "rusty," feldspar crystals are "cloudy."	All fracture surfaces are discolored or oxidized.	Partial separation of boundaries visible.	Generally preserved.	Soluble minerals may be mostly leached.	Hammer does not ring when rock is struck. Body of rock is slightly weakened.
Intensely Weathered	Discoloration or oxidation throughout; all feldspars and Fe-Mg minerals are altered to clay to some extent; or chemical alteration produces in-situ disaggregation, see grain boundary conditions.	All fracture surfaces are discolored or oxidized, surfaces friable.	Partial separation, rock is friable; in semiarid conditions granitics are disaggregated.	Texture altered by chemical disintegration (hydration, argillation).	Leaching of soluble minerals may be complete.	Dull sound when struck with hammer, usually can be broken with moderate to heavy manual pressure or by light hammer blow without reference to planes of weakness such as incipient or hairline fractures, or veinlets. Rock is significantly weakened.
Decomposed	Discolored or oxidized throughout, but resistant minerals such as quartz may be unaltered; all feldspars and Fe-Mg minerals are completely altered to clay.		Complete separation of grain boundaries (disaggregated).	Resembles a soil, partial or complete remnant rock structure may be preserved; leaching of soluble minerals usually complete.		Can be granulated by hand. Resistant minerals such as quartz may be present as "stringers" or "dikes."

Combination descriptors (such as "slightly weathered to fresh") are permissible where equal distribution of both weathering characteristics is present over significant intervals or where characteristics present are "in between" the diagnostic feature. However, combination descriptors should not be used where significant, identifiable zones can be delineated. Only two adjacent descriptors may be combined. "Very intensely weathered" is the combination descriptor for "intensely weathered to decomposed."

ENGINEERING SERVICES	GEOTECHNICAL SERVICES	STATE OF CALIFORNIA DEPARTMENT OF TRANSPORTATION	DIVISION OF ENGINEERING SERVICES STRUCTURE DESIGN DESIGN BRANCH	BRIDGE NO. 56c-0562 POST MILE 19.1	IVY STREET OH (REPLACE) LOG OF TEST BORINGS 5 OF 8
	PREPARED BY: F. Nguyen 02/10		CU 08 EA 448401	DISREGARD PRINTS BEARING EARLIER REVISION DATES → 03-16-10	SHEET 15 OF 18

GS LOTB ROCK LEGEND

ORIGINAL SCALE IN INCHES FOR REDUCED PLANS 0 1 2 3

FILE => 56c0562zltb15.dgn

USERNAME => trphillis DATE PLOTTED => 30-APR-2011 TIME PLOTTED => 13:46

DIST	COUNTY	ROUTE	POST MILES TOTAL PROJECT	SHEET No	TOTAL SHEETS
08	RIV	91	15.6/21.6		

GEOTECHNICAL PROFESSIONAL DATE 10/2008

PLANS APPROVAL DATE

The State of California or its officers or agents shall not be responsible for the accuracy or completeness of electronic copies of this plan sheet.

REGISTERED PROFESSIONAL ENGINEER ANDREW C. LEE No. 2616 Exp. 6-30-10 GEOTECHNICAL STATE OF CALIFORNIA

California Department of Transportation
5900 Folsom Boulevard
Sacramento, CA 95819

URS Corporation
2020 East First Street, Suite 400
Santa Ana, CA 92705

FOR PLAN VIEW, SEE
"LOG OF TEST BORINGS" 8 OF 83

NOTE: 1. This LOTB sheet was prepared in accordance with the Caltrans Soil & Rock Logging, Classification, and Presentation Manual (June 2007).

2. For legend, see "Log of Test Borings" 1 of 83

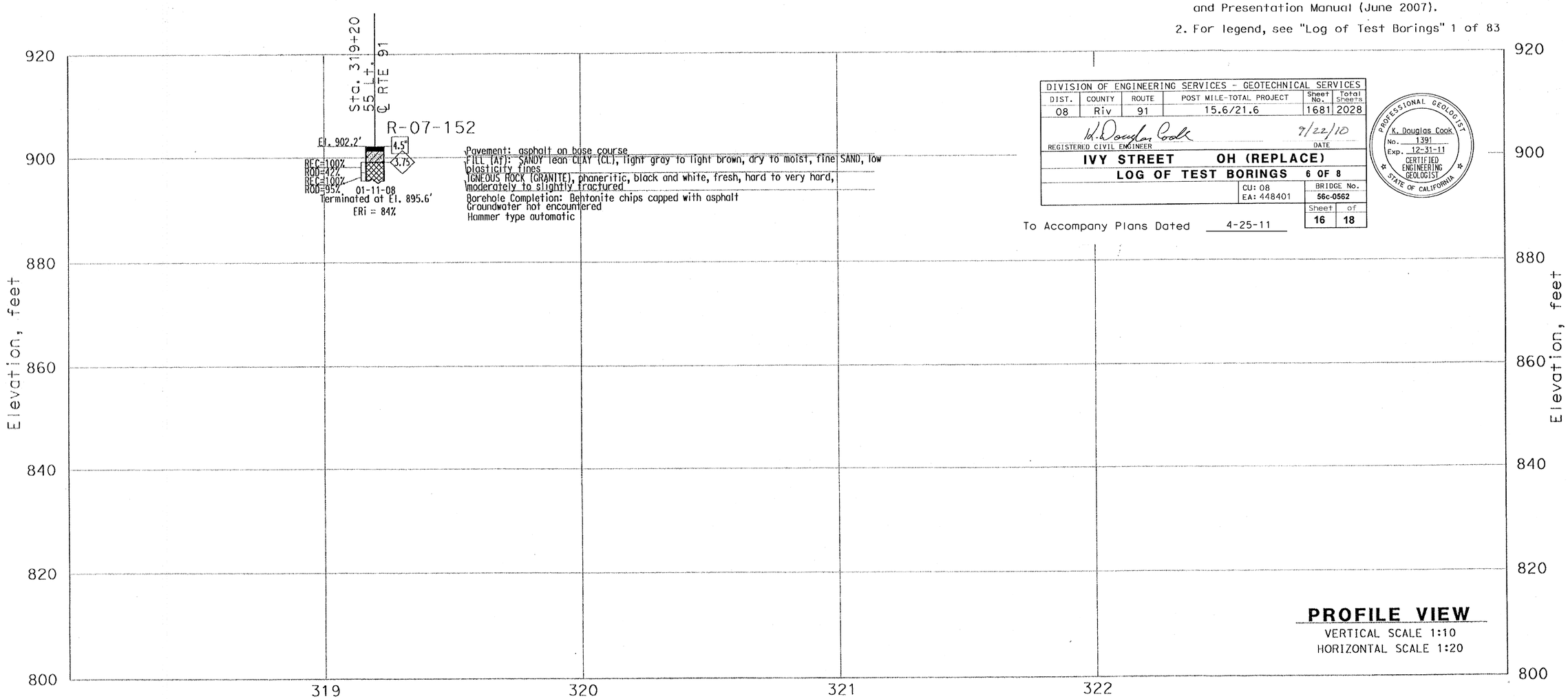

DIVISION OF ENGINEERING SERVICES - GEOTECHNICAL SERVICES					
DIST.	COUNTY	ROUTE	POST MILE-TOTAL PROJECT	Sheet No.	Total Sheets
08	Riv	91	15.6/21.6	1681	2028

K. Douglas Cook 9/22/10
REGISTERED CIVIL ENGINEER DATE

IVY STREET OH (REPLACE)

LOG OF TEST BORINGS 6 OF 8

CU: 08
EA: 448401

BRIDGE No. 56c-0562

Sheet 16 of 18

PROFESSIONAL GEOLOGIST K. Douglas Cook No. 1391 Exp. 12-31-11 CERTIFIED ENGINEERING GEOLOGIST STATE OF CALIFORNIA

To Accompany Plans Dated 4-25-11

THIS PLAN ACCURATE FOR SOUND WALL AND RETAINING WALL WORK ONLY

GINA PURSELL DESIGN OVERSIGHT	FUNCTIONAL SUPERVISOR	DRAWN BY	P. OUACH	P.CHAU/D.WADER/C.CARBINO FIELD INVESTIGATION BY:	PREPARED FOR THE STATE OF CALIFORNIA DEPARTMENT OF TRANSPORTATION	A. LEE PROJECT ENGINEER	BRIDGE NO. X
X SIGN OFF DATE		CHECKED BY	S. PIRATHIVIRAJ	DATE: Nov 6 2007 to March 7 2008			POST MILE X

Retaining Wall 315

LOG OF TEST BORINGS

OSF GEOTECHNICAL LOG OF TEST BORINGS SHEET (ENGLISH) (REV. 2/25/05)

ORIGINAL SCALE IN INCHES FOR REDUCED PLANS 0 1 2 3

CU 59A0590
EA 08-448400

FILE => ...\lotb_rw315.dgn

DISREGARD PRINTS BEARING EARLIER REVISION DATES

REVISION DATES (PRELIMINARY STAGE ONLY) X

SHEET 52 OF 83

56c0562zltb16.tif

DIST	COUNTY	ROUTE	POST MILES TOTAL PROJECT	SHEET No	TOTAL SHEETS
08	RIV	91	15.6/21.6		

GEOTECHNICAL PROFESSIONAL DATE 10/2008

PLANS APPROVAL DATE

REGISTERED PROFESSIONAL ENGINEER ANDREW C. LEE No. 2616 Exp. 6-30-10 GEOTECHNICAL STATE OF CALIFORNIA

The State of California or its officers or agents shall not be responsible for the accuracy or completeness of electronic copies of this plan sheet.

California Department of Transportation
5900 Folsom Boulevard
Sacramento, CA 95819

URS Corporation
2020 East First Street, Suite 400
Santa Ana, CA 92705

FOR PLAN VIEW, SEE
"LOG OF TEST BORINGS" 8 OF 83

NOTE: 1. This LOTB sheet was prepared in accordance with the Caltrans Soil & Rock Logging, Classification, and Presentation Manual (June 2007).

2. For legend, see "Log of Test Borings" 1 of 83

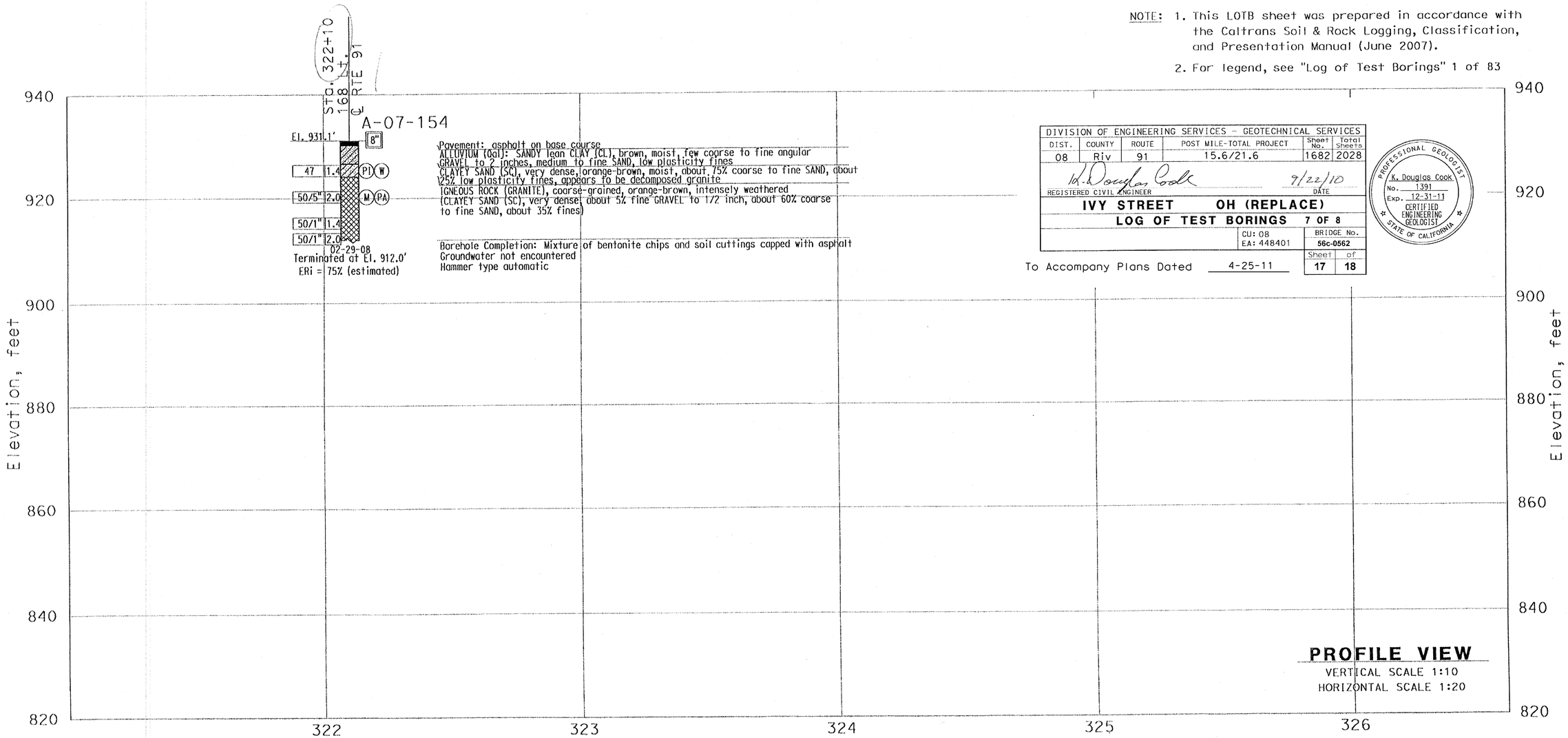

DIVISION OF ENGINEERING SERVICES - GEOTECHNICAL SERVICES					
DIST.	COUNTY	ROUTE	POST MILE-TOTAL PROJECT	Sheet No.	Total Sheets
08	Riv	91	15.6/21.6	1682	2028

REGISTERED CIVIL ENGINEER K. Douglas Cook DATE 9/22/10

PROFESSIONAL GEOLOGIST K. Douglas Cook No. 1391 Exp. 12-31-11 CERTIFIED ENGINEERING GEOLOGIST STATE OF CALIFORNIA

IVY STREET OH (REPLACE)

LOG OF TEST BORINGS 7 OF 8

CU: 08
EA: 448401

BRIDGE No. 56c-0562

Sheet 17 of 18

To Accompany Plans Dated 4-25-11

THIS PLAN ACCURATE FOR SOUND WALL AND RETAINING WALL WORK ONLY

GINA PURSELL DESIGN OVERSIGHT	FUNCTIONAL SUPERVISOR	DRAWN BY	P. QUACH	P.CHAU/D.WADER/C.CARBINO FIELD INVESTIGATION BY:	PREPARED FOR THE STATE OF CALIFORNIA DEPARTMENT OF TRANSPORTATION	A. LEE PROJECT ENGINEER	BRIDGE NO. X
X SIGN OFF DATE		CHECKED BY	S. PIRATHIVIRAJ	DATE: Nov 6 2007 to March 7 2008			POST MILE X

Retaining Wall 321

LOG OF TEST BORINGS SHEET 1 OF 3

OSF GEOTECHNICAL LOG OF TEST BORINGS SHEET (ENGLISH) (REV. 2/25/05)

ORIGINAL SCALE IN INCHES FOR REDUCED PLANS 0 1 2 3

CU 59A0590
EA 08-448400

DISREGARD PRINTS BEARING EARLIER REVISION DATES

REVISION DATES (PRELIMINARY STAGE ONLY) X

SHEET 54 OF 83

FILE => ...\lotb_rw321_1.dgn

56c0562zltb17.tif

DIST	COUNTY	ROUTE	POST MILES TOTAL PROJECT	SHEET No	TOTAL SHEETS
08	RIV	91	15.6/21.6		

GEOTECHNICAL PROFESSIONAL — DATE 10/2008

PLANS APPROVAL DATE

The State of California or its officers or agents shall not be responsible for the accuracy or completeness of electronic copies of this plan sheet.

REGISTERED PROFESSIONAL ENGINEER — ANDREW C. LEE — No. 2616 — Exp. 6-30-10 — GEOTECHNICAL — STATE OF CALIFORNIA

California Department of Transportation
5900 Folsom Boulevard
Sacramento, CA 95819

URS Corporation
2020 East First Street, Suite 400
Santa Ana, CA 92705

FOR PLAN VIEW, SEE
"LOG OF TEST BORINGS" 8 OF 83

NOTE: 1. This LOTB sheet was prepared in accordance with the Caltrans Soil & Rock Logging, Classification, and Presentation Manual (June 2007).

2. For legend, see "Log of Test Borings" 1 of 83

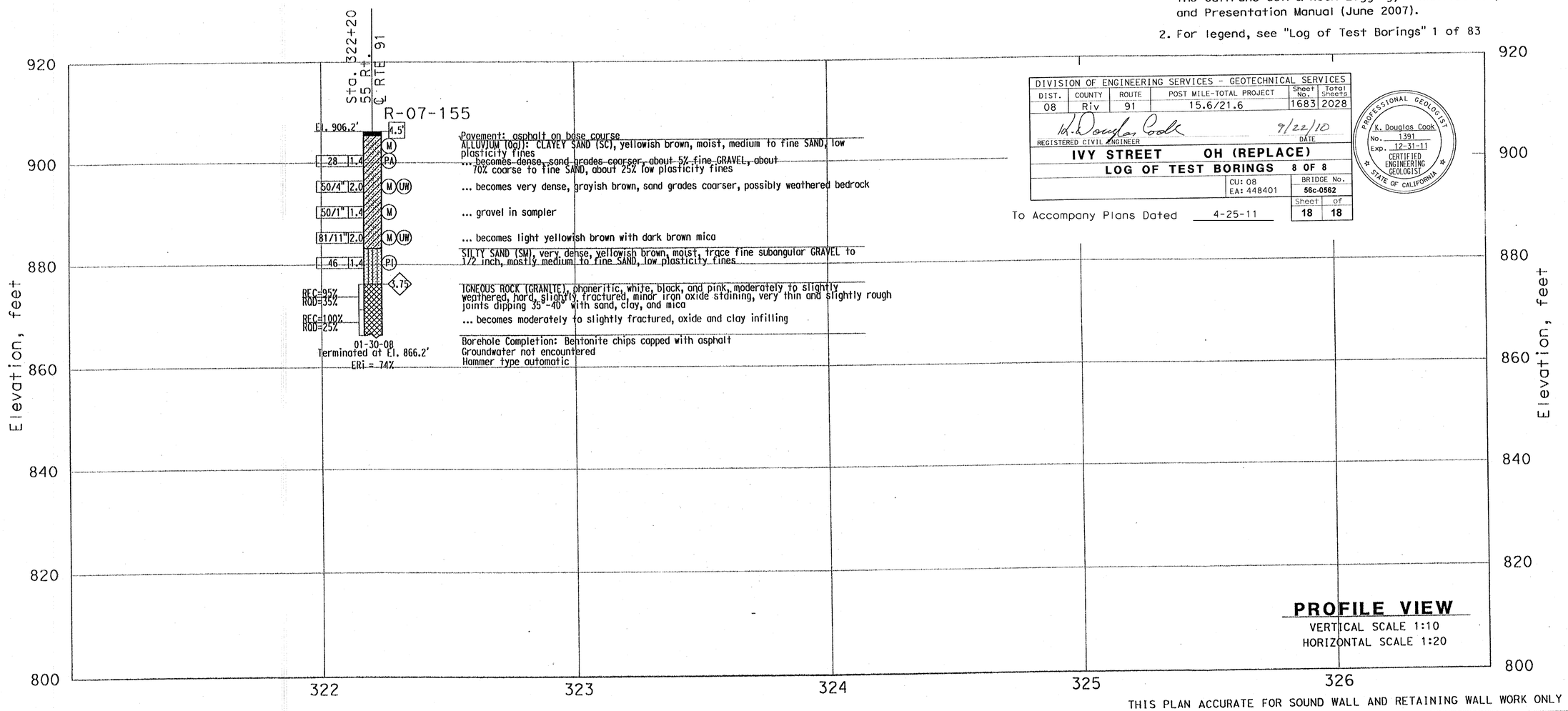

DIVISION OF ENGINEERING SERVICES - GEOTECHNICAL SERVICES					
DIST.	COUNTY	ROUTE	POST MILE-TOTAL PROJECT	Sheet No.	Total Sheets
08	Riv	91	15.6/21.6	1683	2028

K. Douglas Cook — 9/22/10
REGISTERED CIVIL ENGINEER — DATE

PROFESSIONAL GEOLOGIST — K. Douglas Cook — No. 1391 — Exp. 12-31-11 — CERTIFIED ENGINEERING GEOLOGIST — STATE OF CALIFORNIA

IVY STREET OH (REPLACE)

LOG OF TEST BORINGS 8 OF 8

CU: 08
EA: 448401

BRIDGE No. 56c-0562

Sheet 18 of 18

To Accompany Plans Dated 4-25-11

THIS PLAN ACCURATE FOR SOUND WALL AND RETAINING WALL WORK ONLY

GINA PURSELL DESIGN OVERSIGHT		DRAWN BY	P. OUACH	P.CHAU/D.WADER/C.CARBINO FIELD INVESTIGATION BY:	PREPARED FOR THE STATE OF CALIFORNIA DEPARTMENT OF TRANSPORTATION	A. LEE PROJECT ENGINEER	BRIDGE NO. X POST MILE X
X SIGN OFF DATE	FUNCTIONAL SUPERVISOR	CHECKED BY	S. PIRATHIVIRAJ	DATE: Nov 6 2007 to March 7 2008			

Retaining Wall 322

LOG OF TEST BORINGS SHEET 1 OF 3

CU 59A0590
EA 08-448400

DISREGARD PRINTS BEARING EARLIER REVISION DATES

REVISION DATES (PRELIMINARY STAGE ONLY) X

SHEET 57 OF 83

OSF GEOTECHNICAL LOG OF TEST BORINGS SHEET (ENGLISH) (REV. 2/25/05)

ORIGINAL SCALE IN INCHES FOR REDUCED PLANS 0 1 2 3

FILE => ...\lotb_rw322_1.dgn

USERNAME => pnuong_quach DATE PLOTTED => 12/1/2008 TIME PLOTTED =>

56c0562zltb18.tif

DIST	COUNTY	ROUTE	POST MILES TOTAL PROJECT	SHEET No	TOTAL SHEETS
08	Riv	91	15.6/21.6	1684	2028

REGISTERED CIVIL ENGINEER 11-30-10 DATE

4-25-11
PLANS APPROVAL DATE

REGISTERED PROFESSIONAL ENGINEER HUAN VU No. 60696 Exp. 12-31-10 CIVIL STATE OF CALIFORNIA

The State of California or its officers or agents shall not be responsible for the accuracy or completeness of electronic copies of this plan sheet.

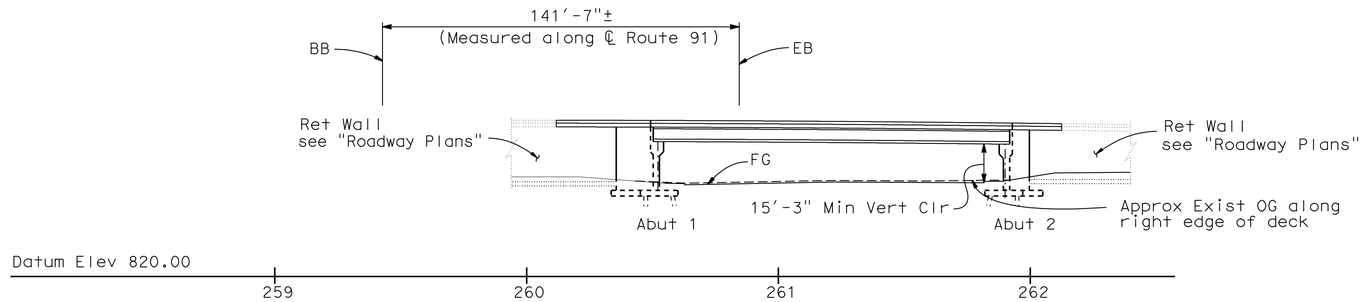

ELEVATION
1"=30'

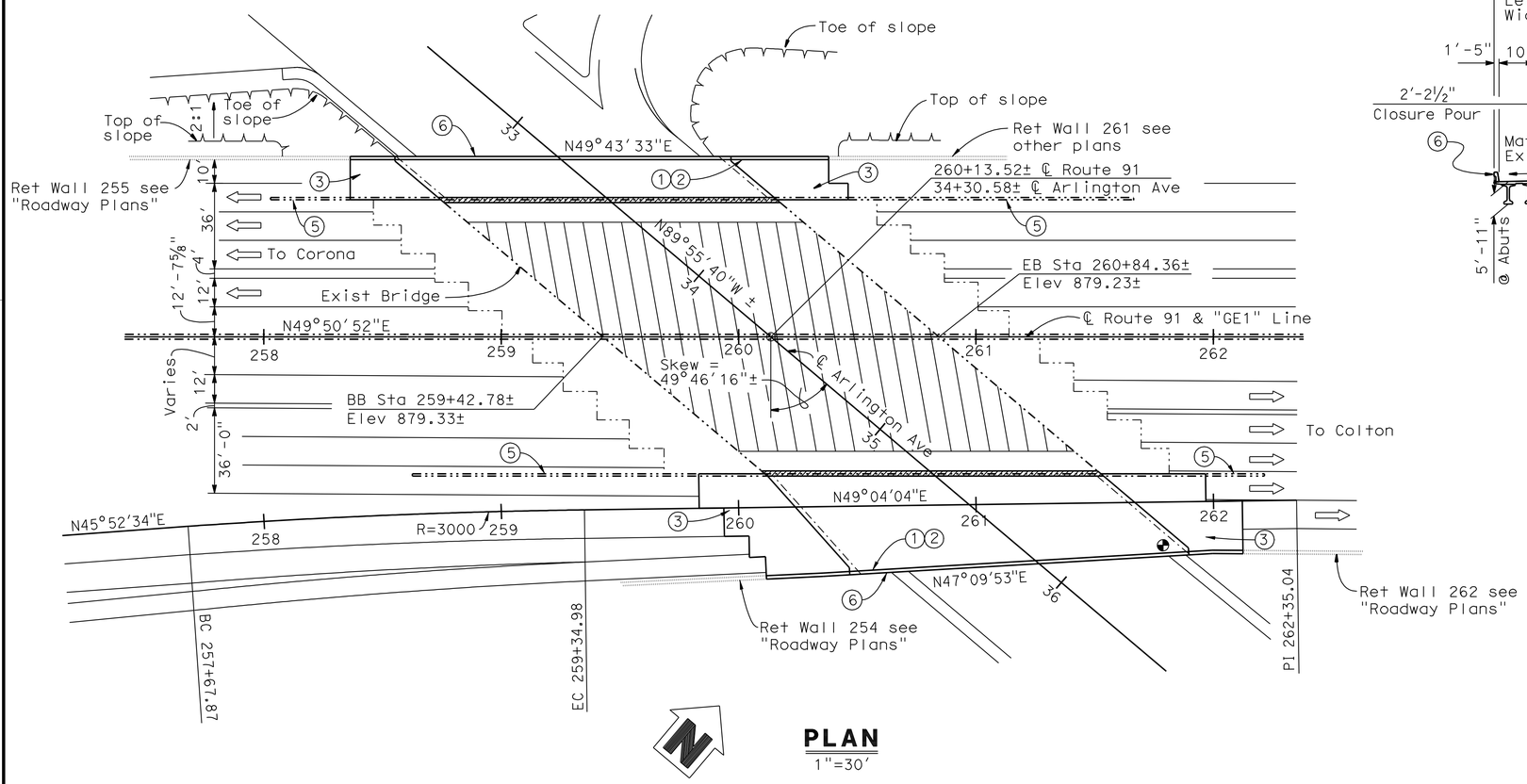

PLAN
1"=30'

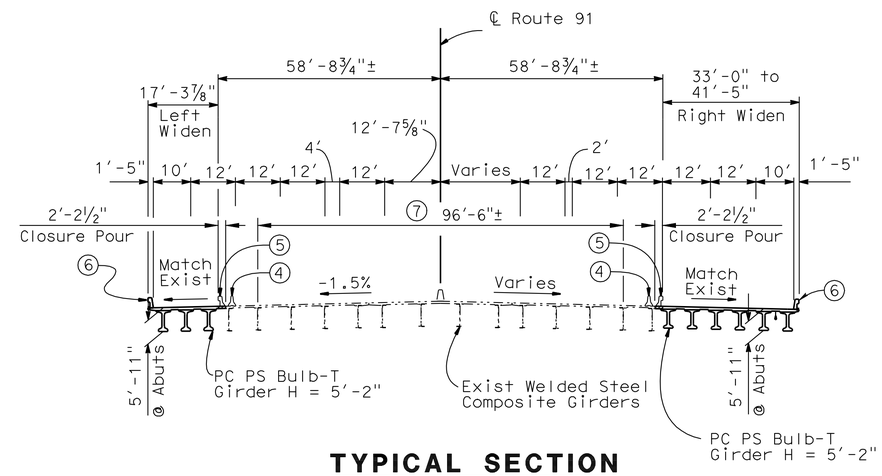

TYPICAL SECTION
1"=20'

LEGEND:

1. Paint "BRIDGE NO. 56-0330"
2. Paint "ARLINGTON AVENUE UC"
3. Structure Approach Type N (30S)
4. Temporary Railing (Type K), see "Roadway Plans"
5. Remove Exist Concrete Barrier (Type 25)
6. Concrete Barrier Type 732 (Mod)
7. Clean and treat bridge deck with methcrylate Prior to bridge deck treatment, remove unsound concrete and patch with rapid setting concrete
8. 4" Dia communication conduit, see "Roadway Plans"

- - Indicates existing structure
- Indicates new construction
- Indicates direction of traffic flow
- Indicates point of minimum Vert clearance
- Indicates limit of concrete removal
- Indicates limit of clean and treat deck

NOTE:
THE CONTRACTOR SHALL VERIFY ALL CONTROLLING FIELD DIMENSIONS BEFORE ORDERING OR FABRICATING ANY MATERIAL.

Note: For Index to Plans, General Notes, Quantities and Pile Data, see "INDEX TO PLANS" sheet

DANIEL T. ADAMS
DESIGN ENGINEER

	BY	CHECKED			
DESIGN	A. Salimi	F. Chen	LOAD & RESISTANCE FACTOR DESIGN	LIVE LOADING: HL93 W/"LOW-BOY"; PERMIT DESIGN VEHICLE	
DETAILS	Y. Tang	F. Chen	LAYOUT	A. Salimi	F. Chen
QUANTITIES	J. Szabo	A. McPhee	SPECIFICATIONS	D.Klein	PLANS AND SPECS COMPARED D.Klein

STATE OF CALIFORNIA
DEPARTMENT OF TRANSPORTATION

DIVISION OF ENGINEERING SERVICES
STRUCTURE DESIGN
DESIGN BRANCH 10

CU 08
EA 448401

BRIDGE NO. 56-0330
POST MILE 17.82

ARLINGTON AVE UC (WIDEN)
GENERAL PLAN

STRUCTURES DESIGN GENERAL PLAN SHEET (ENGLISH) (REV. 10/25/05)

ORIGINAL SCALE IN INCHES FOR REDUCED PLANS 0 1 2 3

DISREGARD PRINTS BEARING EARLIER REVISION DATES

REVISION DATES: 6-29-08 10-02-08 2-26-10 5-12-10

SHEET 1 OF 24

FILE => 560330agp01.dgn

STRUCTURES DESIGN GENERAL PLAN SHEET (ENGLISH) (REV.07-24-06)

USERNAME => trphtis DATE PLOTTED => 30-APR-2011 TIME PLOTTED => 13:46

DIST	COUNTY	ROUTE	POST MILES TOTAL PROJECT	SHEET No	TOTAL SHEETS
08	Riv	91	15.6/21.6	1685	2028

REGISTERED CIVIL ENGINEER 11-30-10 DATE

4-25-11
PLANS APPROVAL DATE

REGISTERED PROFESSIONAL ENGINEER HUAN VU No. 60696 Exp. 12-31-10 CIVIL STATE OF CALIFORNIA

The State of California or its officers or agents shall not be responsible for the accuracy or completeness of electronic copies of this plan sheet.

INDEX TO PLANS

Sheet No.	Title
1	GENERAL PLAN
2	INDEX TO PLANS
3	FOUNDATION PLAN
4	ABUTMENT NO.1 LAYOUT
5	ABUTMENT NO.2 LAYOUT
6	ABUTMENT DETAILS No. 1
7	ABUTMENT DETAILS No. 2
8	ABUTMENT DETAILS No. 3
9	ABUTMENT DETAILS No. 4
10	ABUTMENT DETAILS No. 5
11	TYPICAL SECTION
12	GIRDER LAYOUT NO.1
13	GIRDER LAYOUT NO.2
14	PRESTRESSED BULB-TEE GIRDER (HARPED STRANDS)
15	PRESTRESSED BULB-TEE GIRDER (MISCELLANEOUS DETAILS)
16	DECK DRAIN DETAILS
17	STRUCTURE APPROACH DRAINAGE DETAILS
18	STRUCTURE APPROACH TYPE N (30S)
19	MISCELLANEOUS DETAILS
20	ARCHITECTURAL DETAILS
21	LOG OF TEST BORINGS (1 OF 4)
22	LOG OF TEST BORINGS (2 OF 4)
23	LOG OF TEST BORINGS (3 OF 4)
24	LOG OF TEST BORINGS (4 OF 4)

QUANTITIES

REMOVE UNSOUND CONCRETE	17	CF
CLEAN BRIDGE DECK	13,663	SQFT
BRIDGE REMOVAL (PORTION), LOCATION D	LUMP	SUM
STRUCTURE EXCAVATION (BRIDGE)	626	CY
STRUCTURE BACKFILL (BRIDGE)	1,017	CY
FURNISH PILING (CLASS 90) (ALTERNATIVE V)	289	LF
DRIVE PILE (CLASS 90) (ALTERNATIVE V)	10	EA
FURNISH PILING (CLASS 140) (ALTERNATIVE V)	2,603	LF
DRIVE PILE (CLASS 140) (ALTERNATIVE V)	92	EA
STRUCTURAL CONCRETE, BRIDGE FOOTING	228	CY
STRUCTURAL CONCRETE, BRIDGE	794	CY
STRUCTURAL CONCRETE, APPROACH SLAB (TYPE N)	121	CY
ARCHITECTURAL SURFACE(TEXTURED CONCRETE) SPLIT SLATE TEXTURE	1,328	SQFT
DRILL AND BOND DOWEL	45	LF
RAPID SETTING CONCRETE (PATCH)	17	CF
FURNISH PRECAST PRESTRESSED CONCRETE BULB-TEE GIRDER (130'-140')	9	EA
ERECT PRECAST PRESTRESSED CONCRETE GIRDER	9	EA
JOINT SEAL (MR 1")	165	LF
BAR REINFORCING STEEL (BRIDGE)	155,198	LB
TREAT BRIDGE DECK	13,663	SQFT
PUBLIC SAFETY PLAN	LUMP	SUM
FURNISH BRIDGE DECK TREATMENT MATERIAL	152	GAL
WELDED STEEL PIPE CASING (BRIDGE)	40	LF
BRIDGE DECK DRAINAGE SYSTEM	1,611	LB
CONCRETE BARRIER (TYPE 732 MODIFIED)	341	LF

NOTE:
THE CONTRACTOR SHALL VERIFY ALL CONTROLLING FIELD DIMENSIONS BEFORE ORDERING OR FABRICATING ANY MATERIAL.

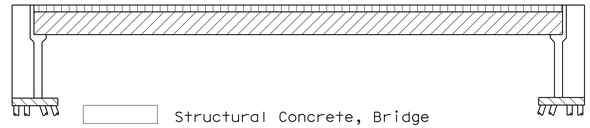

Structural Concrete, Bridge

Structural Concrete, Bridge (5000 psi @ 28 days)

Structural Concrete, Bridge Footing

Indicates PC/PS Bulb-Tee Girders

CONCRETE STRENGTH AND TYPE LIMITS

NO SCALE

STANDARD PLANS DATED MAY 2006

	A10A	ACRONYMS AND ABBREVIATIONS (SHEET 1 OF 2)
	A10B	ACRONYMS AND ABBREVIATIONS (SHEET 2 OF 2)
	A10C	SYMBOLS (SHEET 1 OF 2)
	A10D	SYMBOLS (SHEET 2 OF 2)
	A62-C	LIMITS OF PAYMENT FOR EXCAVATION AND BACKFILL - BRIDGE
	BO-1	BRIDGE DETAILS
	BO-3	BRIDGE DETAILS
	BO-5	BRIDGE DETAILS
	BO-13	BRIDGE DETAILS
	B2-5	PILE DETAILS CLASS 90 AND CLASS 140
	B3-1	RETAINING WALL TYPE 1 H=4' THROUGH 30'
	B3-8	RETAINING WALL DETAILS No. 1
	B6-10	UTILITY OPENINGS, T-BEAM
RSP	B6-21	JOINT SEALS (MAXIMUM MOVEMENT RATING = 2")
	B7-8	DECK DRAINAGE DETAILS
	B11-55	CONCRETE BARRIER TYPE 732

STANDARD PLAN SHEET NO.

DETAIL NO.

PILE DATA TABLE

Location	Pile Type	Nominal Resistance (kips)		Design Tip Elevation (ft)	Specified Tip Elevation (ft)	Nominal Driving Resistance Required (Kips)
		Compression	Tension			
Abut 1 (Right)	Class 140 Alt. V	280	0	825.0 (a)	825.0	280
Abut 2 (Right)	Class 140 Alt. V	280	0	820.0 (a)	820.0	280
Abut 1 & 2 (Left)	Class 140 Alt. V	280	0	825.0 (a)	825.0	280
Abut 2 WW (Left)	Class 90 Alt. V	180	0	835.0 (a)	835.0	180

Notes:

1. Design Tip Elev is controlled by (a) Compression

GENERAL NOTES
LOAD AND RESISTANCE FACTOR DESIGN

DESIGN: AASHTO LRFD BRIDGE DESIGN SPECIFICATIONS, 3rd Edition with 2006 Interims and CALTRANS Amendments, V3.06.01. Except for footing foundations are designed using CALTRANS BRIDGE DESIGN SPECIFICATIONS LFD Version April 2000 (1996 AASHTO with Interims and Revisions by CALTRANS)

SEISMIC DESIGN: Caltrans Seismic Design Criteria (SDC) Version 1.4, July, 2006.

DEAD LOAD: Includes 35 Psf for future wearing surface.

LIVE LOADING: HL93 with "Low Boy"and permit design load.

SEISMIC LOADING: CALTRANS SDC Acceleration Response Spectrum for Soil Profile Type D (M = 6.75±0.25), (Peak Rock Acceleration = 0.4g).

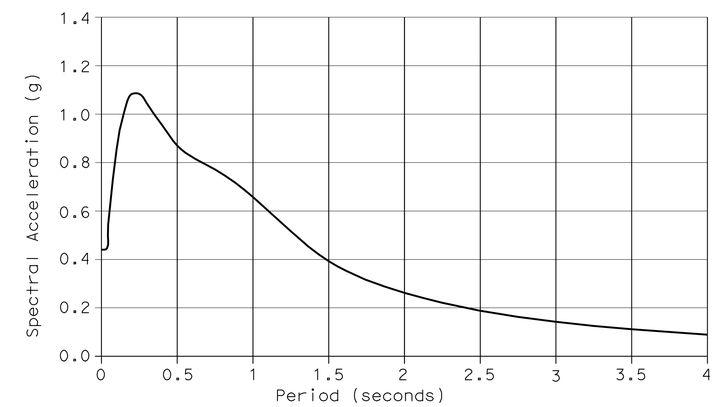

Modified CALTRANS SDC ARS Curve:
Type D Soil Profile, Magnitude Mw=6.75, 5% Damping

ACCELERATION RESPONSE SPECTRUM

REINFORCED CONCRETE: f_y = 60 ksi
f'_c = 4000 psi, unless otherwise noted
n = 9

PRESTRESSED CONCRETE: See "Prestressing Notes" on "PRESTRESSED BULB-TEE GIRDER" sheet.

DESIGN	BY A. Salimi	CHECKED F. Chen	
DETAILS	BY D.Wooten	CHECKED F. Chen	
QUANTITIES	BY J. Szabo	CHECKED A. McPhee	

STATE OF CALIFORNIA
DEPARTMENT OF TRANSPORTATION

DIVISION OF ENGINEERING SERVICES
STRUCTURE DESIGN
DESIGN BRANCH 10

BRIDGE NO. 56-0330
POST MILE 17.82

ARLINGTON AVE UC (WIDEN)
INDEX TO PLANS

STRUCTURES DESIGN DETAIL SHEET (ENGLISH) (REV. 10/25/05)

ORIGINAL SCALE IN INCHES FOR REDUCED PLANS 0 1 2 3

CU 08
EA 448401

DISREGARD PRINTS BEARING EARLIER REVISION DATES

REVISION DATES 7-26-10 6-08-10 9-20-10

SHEET 2 OF 24

FILE => 560330aitp02.dgn

USERNAME => trphilis DATE PLOTTED => 30-APR-2011 TIME PLOTTED => 13:47

DIST	COUNTY	ROUTE	POST MILES TOTAL PROJECT	SHEET No	TOTAL SHEETS
08	Riv	91	15.6/21.6	1686	2028

REGISTERED CIVIL ENGINEER 11-30-10 DATE

4-25-11
PLANS APPROVAL DATE

The State of California or its officers or agents shall not be responsible for the accuracy or completeness of electronic copies of this plan sheet.

REGISTERED PROFESSIONAL ENGINEER HUAN VU No. 60696 Exp. 12-31-10 CIVIL STATE OF CALIFORNIA

① Sta 258+71.63 , "ARLON1" LINE =
Sta 32+42.48, "ARLT1" LINE, ℄ ARLINGTON AVE
② Sta 260+13.52, "GE1" LINE, ℄ ROUTE 91
Sta 34+30.58, "ARLT1" LINE, ℄ ARLINGTON AVE
③ Sta 260+97.12 , "INDION1" LINE =
Sta 35+40.07, "ARLT1" LINE, ℄ ARLINGTON AVE

CURVE DATA				
No.	R	Δ	T	L
④	3000.00	03°11′30"	83.58	167.11
⑤	2951.28	03°12′32"	82.67	165.29

BRIDGE LOCATION (Exist Br.No 56-0330)

Ⓐ 57.14 Ft Lt "GE1" Line, ℄ ROUTE 91 Sta 258+76.91, Elev= 877.70±
Ⓑ 57.19 Ft Lt "GE1" Line, ℄ ROUTE 91 Sta 260+17.96, Elev= 878.09±
Ⓒ 56.86 Ft Rt "GE1" Line, ℄ ROUTE 91 Sta 260+09.42, Elev= 878.54±
Ⓓ 56.95 Ft Rt "GE1" Line, ℄ ROUTE 91 Sta 261+49.73, Elev= 878.01±

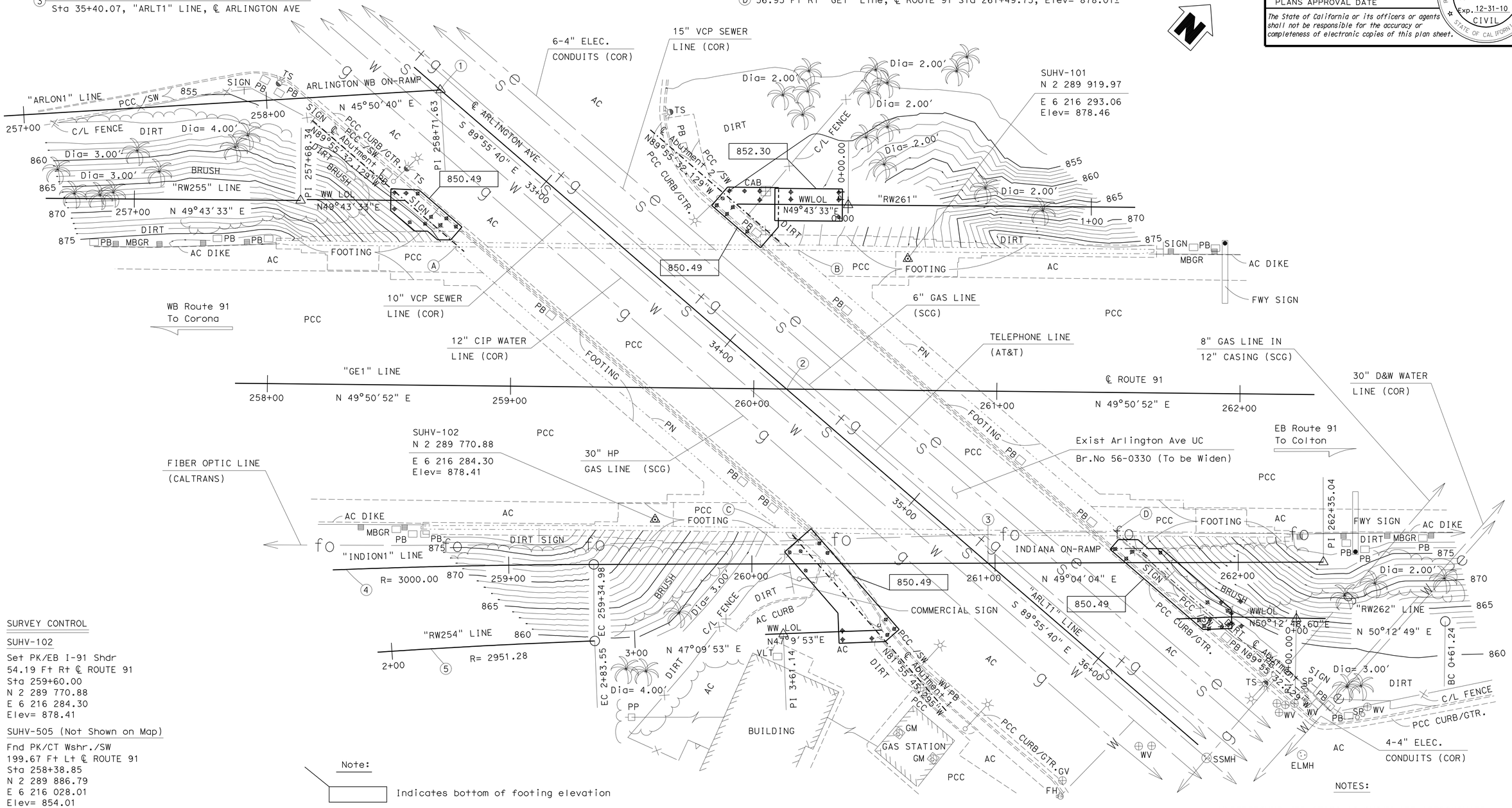

SURVEY CONTROL

SUHV-102

Set PK/EB I-91 Shdr
54.19 Ft Rt ℄ ROUTE 91
Sta 259+60.00
N 2 289 770.88
E 6 216 284.30
Elev= 878.41

SUHV-505 (Not Shown on Map)

Fnd PK/CT Wshr./SW
199.67 Ft Lt ℄ ROUTE 91
Sta 258+38.85
N 2 289 886.79
E 6 216 028.01
Elev= 854.01

Note:

Indicates bottom of footing elevation

NOTES:

UNDERGROUND UTILITIES AS SHOWN ARE APPROXIMATE

PRELIMINARY INVESTIGATION SECTION								
SCALE 1"=20′	VERT.DATUM NGVD29	PHOTOGRAMMETRY AS OF: X				DESIGN	BY A.Salimi	CHECKED F.Chen
	HORZ.DATUM NAD 83(1984.00)	SURVEYED	BY T.PHUNG 02/2009	CHECKED	BY C.STEWART 02/2009	DETAILS	BY D.Wooten	CHECKED F.Chen
	ALIGNMENT TIES DIST.TRAVERSE SHEETS	DRAFTED	BY V.PHAM 03/2009	CHECKED	BY S.ALIVIO 03/2009	QUANTITIES	BY J.Szabo	CHECKED

STATE OF CALIFORNIA
DEPARTMENT OF TRANSPORTATION

DIVISION OF ENGINEERING SERVICES
STRUCTURE DESIGN
DESIGN BRANCH 10

BRIDGE NO. 56-0330
POST MILE 17.82

ARLINGTON AVENUE UC (WIDEN)
FOUNDATION PLAN

STRUCTURES FOUNDATION PLAN SHEET (ENGLISH) (REV. 10/25/05)

ORIGINAL SCALE IN INCHES FOR REDUCED PLANS 0 1 2 3

CU 08-227
EA 448401

DISREGARD PRINTS BEARING EARLIER REVISION DATES

REVISION DATES 3/26/09 2/26/10

SHEET 3 OF 24

FILE => 560330efdp03.dgn

USERNAME => trphi16 DATE PLOTTED => 30-APR-2011 TIME PLOTTED => 13:47

DIST	COUNTY	ROUTE	POST MILES TOTAL PROJECT	SHEET No	TOTAL SHEETS
08	Riv	91	15.6/21.6	1687	2028

REGISTERED CIVIL ENGINEER 11-30-10 DATE

4-25-11
PLANS APPROVAL DATE

REGISTERED PROFESSIONAL ENGINEER HUAN VU No. 60696 Exp. 12-31-10 CIVIL STATE OF CALIFORNIA

The State of California or its officers or agents shall not be responsible for the accuracy or completeness of electronic copies of this plan sheet.

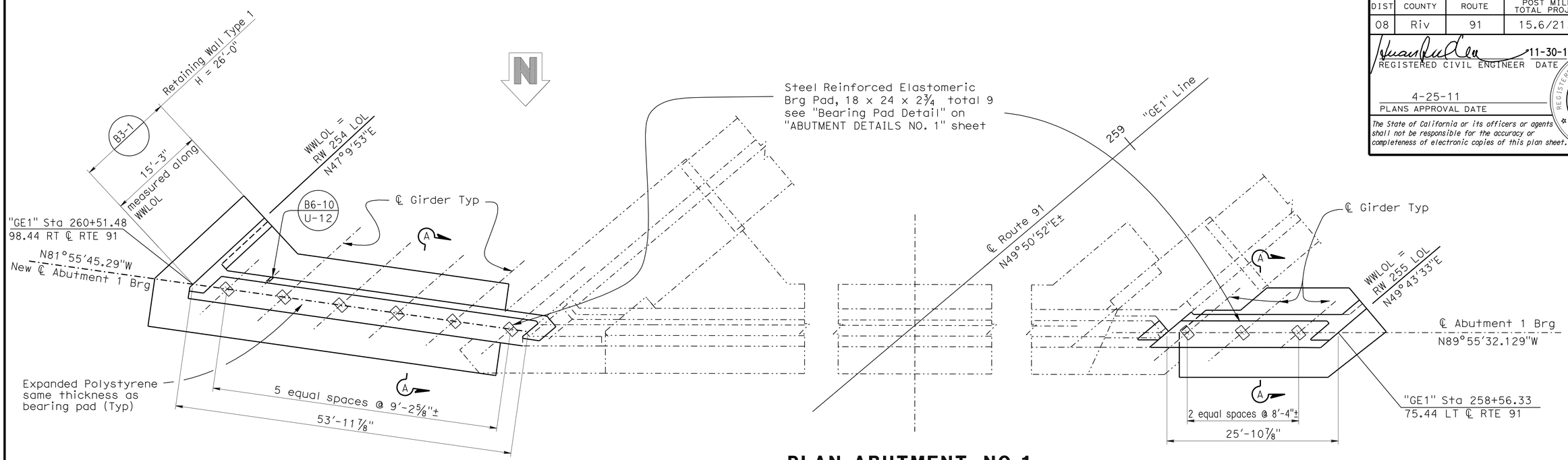

PLAN-ABUTMENT NO.1

⅛"=1'-0"

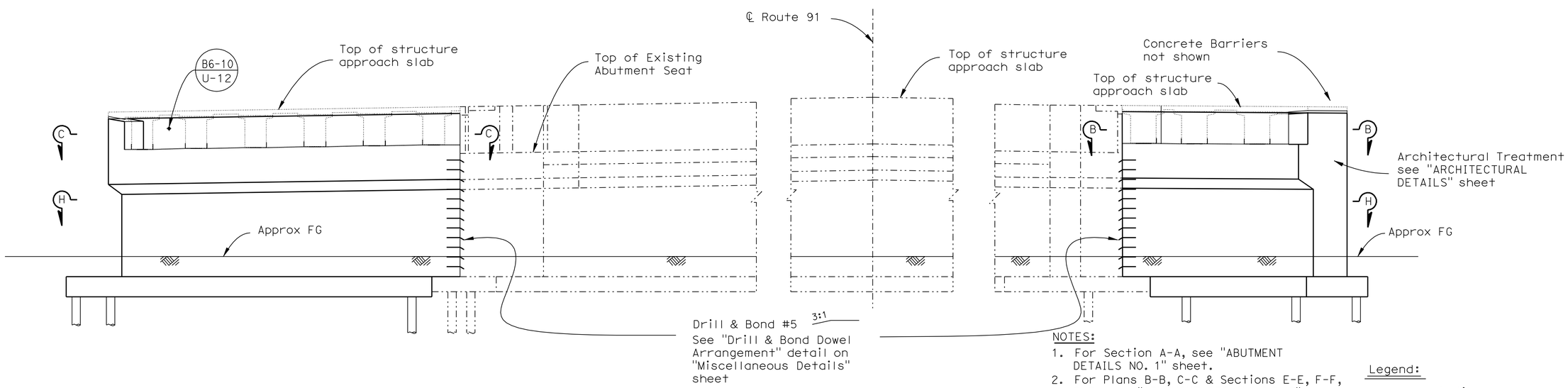

ELEVATION

⅛"=1'-0"

NOTES:

1. For Section A-A, see "ABUTMENT DETAILS NO. 1" sheet.
2. For Plans B-B, C-C & Sections E-E, F-F, G-G see "ABUTMENT DETAILS NO. 2" sheet.
3. For Detail C & Plan H-H, see "ABUTMENT DETAILS NO. 5" sheet.
4. Not all piles shown, see "ABUTMENT DETAILS NO. 3" sheet for pile locations

Legend:

——— Indicates new construction

-·-·-·- Indicates existing structure

NOTE:
THE CONTRACTOR SHALL VERIFY ALL CONTROLLING FIELD DIMENSIONS BEFORE ORDERING OR FABRICATING ANY MATERIAL.

	BY	CHECKED
DESIGN	A.Salimi	F. Chen
DETAILS	D. Wooten	F. Chen
QUANTITIES	J. Szabo	A. McPhee

STATE OF CALIFORNIA
DEPARTMENT OF TRANSPORTATION

DIVISION OF ENGINEERING SERVICES
STRUCTURE DESIGN
DESIGN BRANCH 10

BRIDGE NO. 56-0330
POST MILE 17.82

ARLINGTON AVE UC (WIDEN)
ABUTMENT NO.1 LAYOUT

STRUCTURES DESIGN DETAIL SHEET (ENGLISH) (REV. 10/25/05)

ORIGINAL SCALE IN INCHES FOR REDUCED PLANS 0 1 2 3

CU 08
EA 448401

DISREGARD PRINTS BEARING EARLIER REVISION DATES

REVISION DATES: 2-26-10 5-03-10

SHEET 4 OF 24

FILE => 560330fa1_1o04.dgn

USERNAME => trphilis DATE PLOTTED => 30-APR-2011 TIME PLOTTED => 13:47

DIST	COUNTY	ROUTE	POST MILES TOTAL PROJECT	SHEET No	TOTAL SHEETS
08	Riv	91	15.6/21.6	1688	2028

REGISTERED CIVIL ENGINEER 11-30-10 DATE

4-25-11
PLANS APPROVAL DATE

REGISTERED PROFESSIONAL ENGINEER HUAN VU No. 60696 Exp. 12-31-10 CIVIL STATE OF CALIFORNIA

The State of California or its officers or agents shall not be responsible for the accuracy or completeness of electronic copies of this plan sheet.

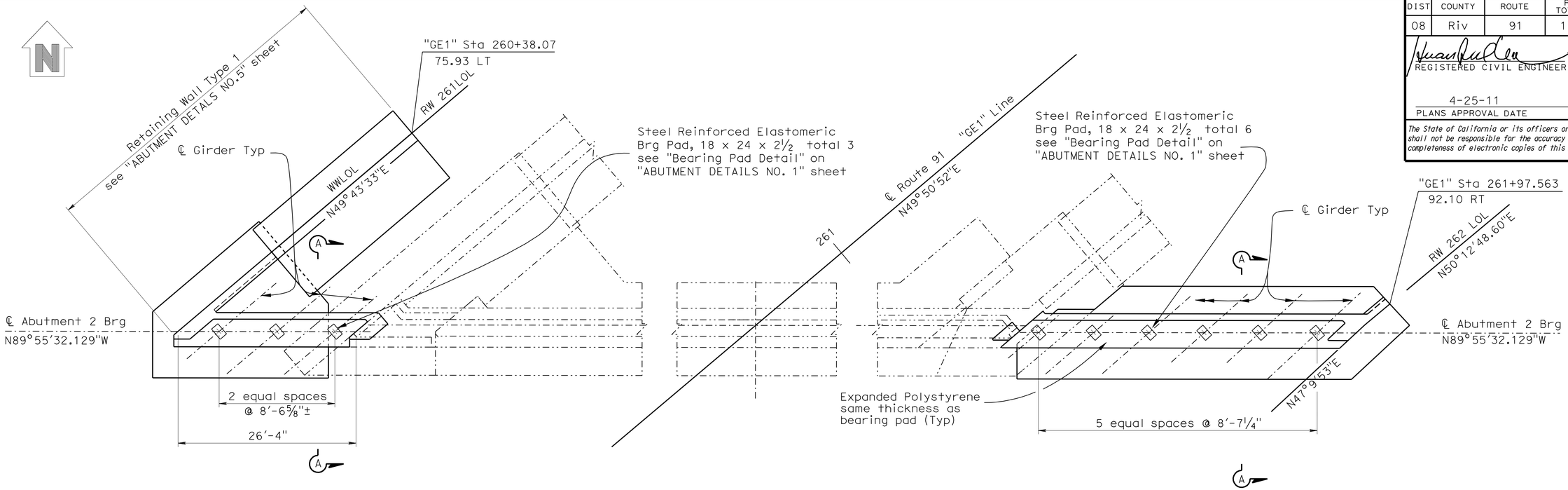

PLAN-ABUTMENT NO.2

⅛"=1'-0"

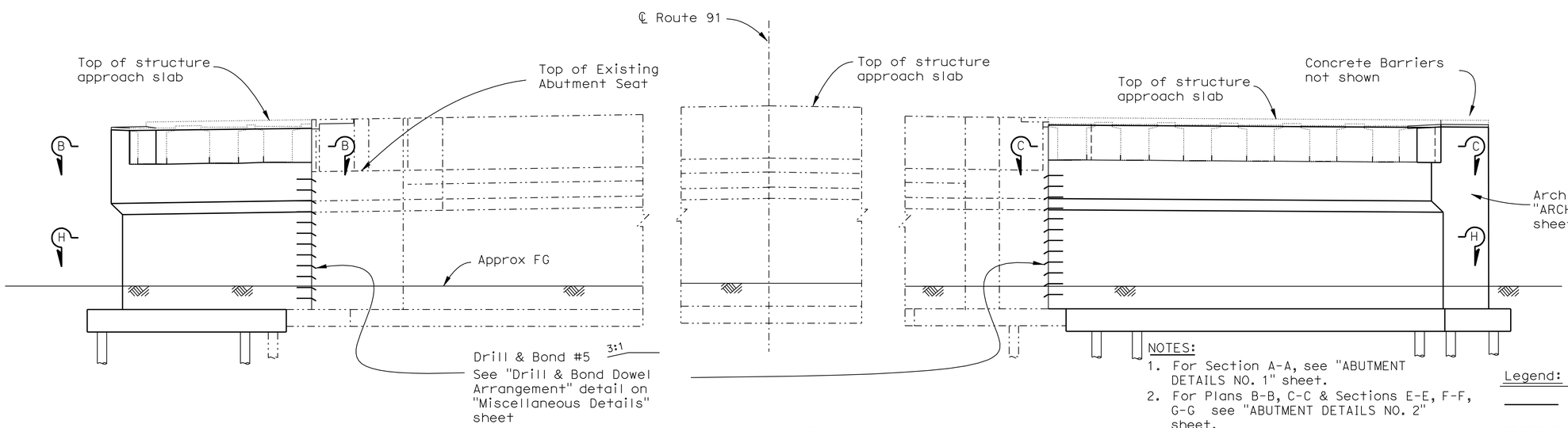

ELEVATION

⅛"=1'-0"

NOTES:

1. For Section A-A, see "ABUTMENT DETAILS NO. 1" sheet.
2. For Plans B-B, C-C & Sections E-E, F-F, G-G see "ABUTMENT DETAILS NO. 2" sheet.
3. For Detail C & Plan H-H, see "ABUTMENT DETAILS NO. 5" sheet.
4. Not all piles shown, see "ABUTMENT DETAILS NO. 3" sheet for pile locations

Legend:

——— Indicates new construction

·—··—·— Indicates existing structure

NOTE:
THE CONTRACTOR SHALL VERIFY ALL CONTROLLING FIELD DIMENSIONS BEFORE ORDERING OR FABRICATING ANY MATERIAL.

	BY	CHECKED
DESIGN	A.Salimi	F. Chen
DETAILS	D. Wooten	F. Chen
QUANTITIES	J. Szabo	A. McPhee

STATE OF CALIFORNIA
DEPARTMENT OF TRANSPORTATION

DIVISION OF ENGINEERING SERVICES
STRUCTURE DESIGN
DESIGN BRANCH 10

BRIDGE NO. 56-0330
POST MILE 17.82

ARLINGTON AVE UC (WIDEN)
ABUTMENT NO.2 LAYOUT

STRUCTURES DESIGN DETAIL SHEET (ENGLISH) (REV. 10/25/05)

ORIGINAL SCALE IN INCHES FOR REDUCED PLANS 0 1 2 3

CU 08
EA 448401

DISREGARD PRINTS BEARING EARLIER REVISION DATES

REVISION DATES: 2-26-10 5-04-10

SHEET 5 OF 24

FILE => 560330fa2_1o05.dgn

USERNAME => trphilis DATE PLOTTED => 30-APR-2011 TIME PLOTTED => 13:47

DIST	COUNTY	ROUTE	POST MILES TOTAL PROJECT	SHEET No	TOTAL SHEETS
08	Riv	91	15.6/21.6	1689	2028

REGISTERED CIVIL ENGINEER 11-30-10 DATE

4-25-11
PLANS APPROVAL DATE

REGISTERED PROFESSIONAL ENGINEER HUAN VU No. 60696 Exp. 12-31-10 CIVIL STATE OF CALIFORNIA

The State of California or its officers or agents shall not be responsible for the accuracy or completeness of electronic copies of this plan sheet.

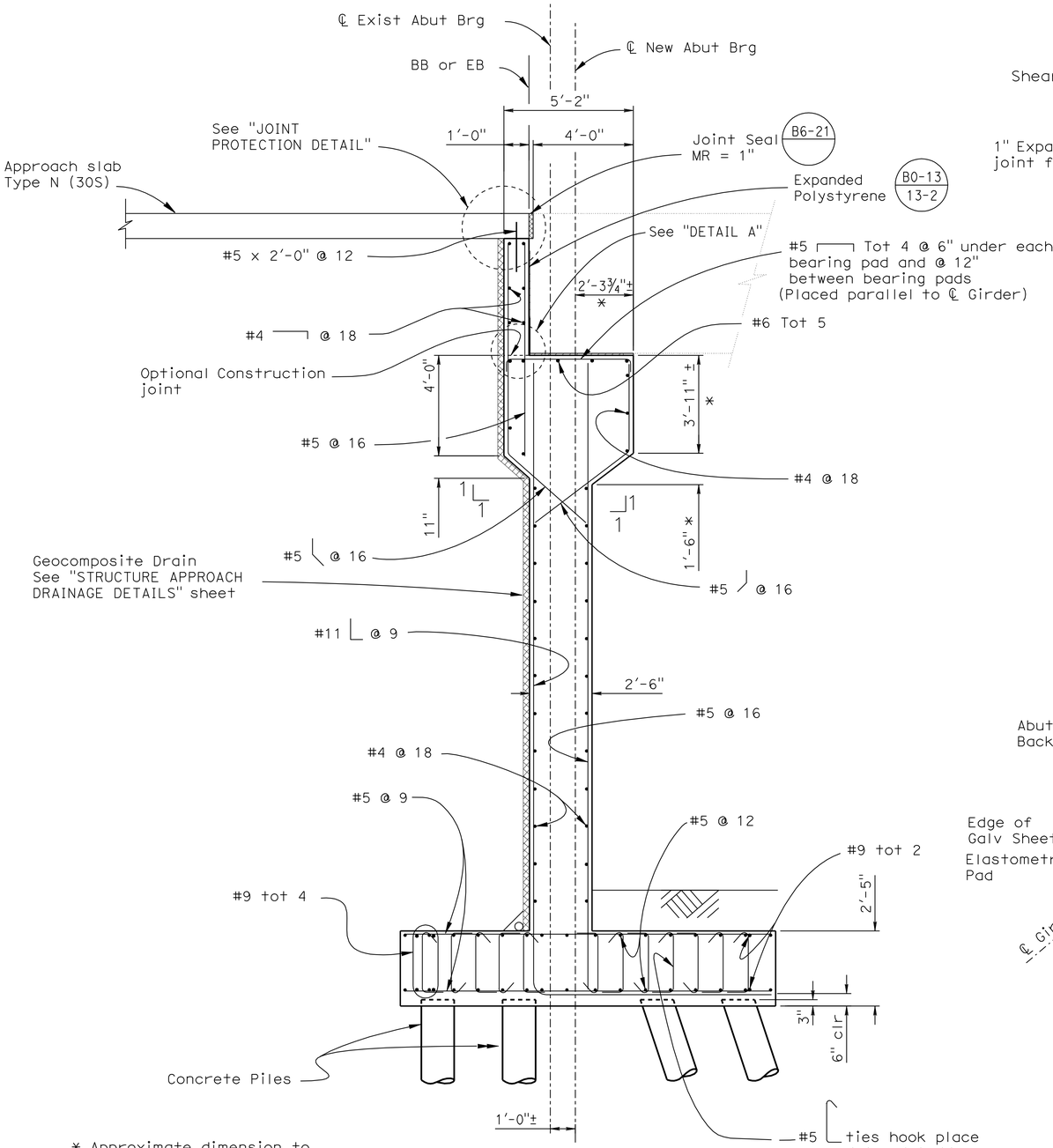

* Approximate dimension to match existing.

SECTION A-A

⅜" = 1'-0"

ALL DIMENSIONS ARE NORMAL TO ℄ ABUTMENT

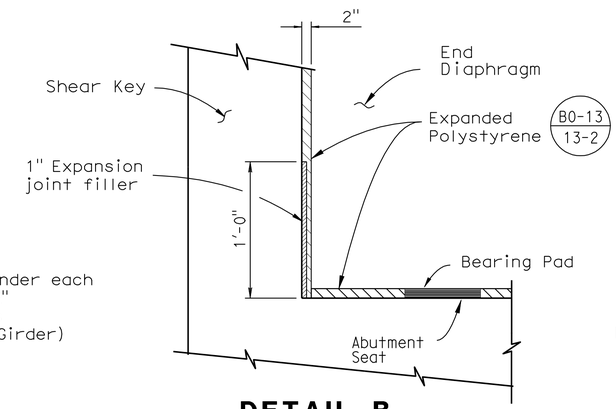

DETAIL B

No Scale

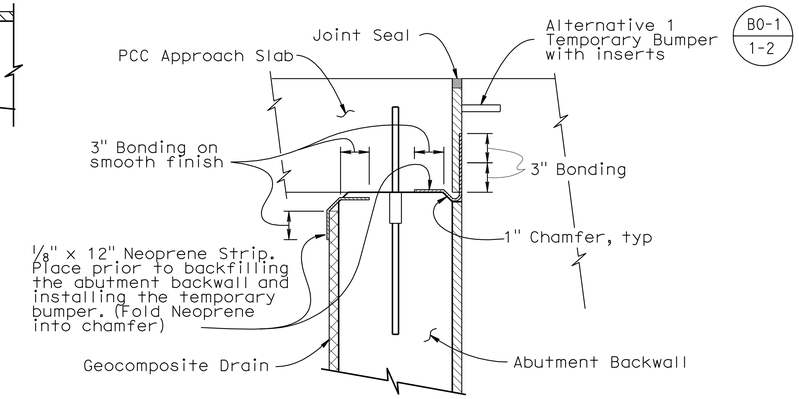

JOINT PROTECTION DETAIL

No Scale

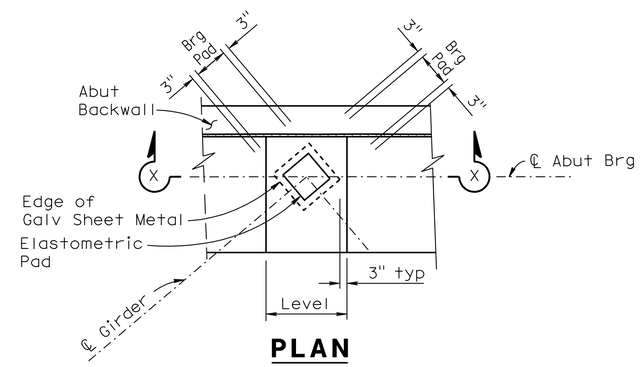

PLAN

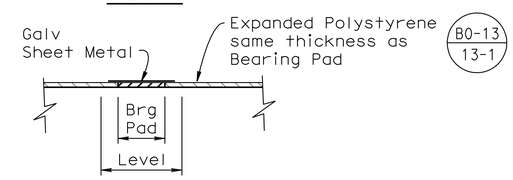

SECTION X-X

BEARING PAD DETAIL

⅜" = 1'-0"

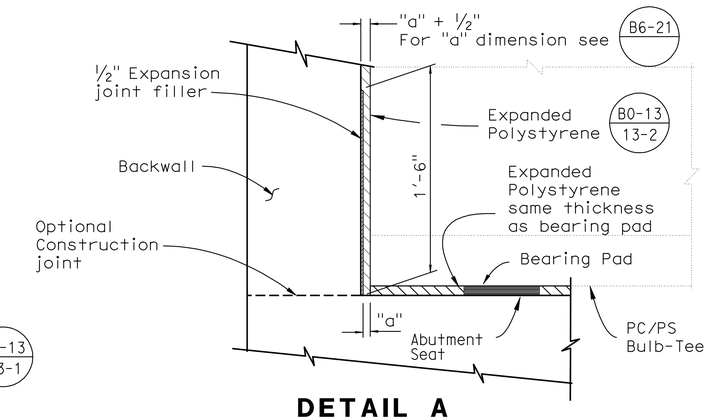

DETAIL A

No Scale

NOTE:
THE CONTRACTOR SHALL VERIFY ALL CONTROLLING FIELD DIMENSIONS BEFORE ORDERING OR FABRICATING ANY MATERIAL.

Note: Match Abutment front face

DESIGN	BY A. Salimi	CHECKED F. Chen	
DETAILS	BY R. Kirkland	CHECKED F. Chen	
QUANTITIES	BY J. Szabo	CHECKED A. McPhee	

STATE OF CALIFORNIA
DEPARTMENT OF TRANSPORTATION

DIVISION OF ENGINEERING SERVICES
STRUCTURE DESIGN
DESIGN BRANCH 10

BRIDGE NO. 56-0330
POST MILE 17.82

ARLINGTON AVE UC (WIDEN)
ABUTMENT DETAILS NO. 1

STRUCTURES DESIGN DETAIL SHEET (ENGLISH) (REV. 10/25/05)

ORIGINAL SCALE IN INCHES FOR REDUCED PLANS 0 1 2 3

CU 08
EA 448401

DISREGARD PRINTS BEARING EARLIER REVISION DATES 2-26-10

REVISION DATES

SHEET 6 OF 24

FILE => 560330fadt106.dgn

USERNAME => trphtis DATE PLOTTED => 30-APR-2011 TIME PLOTTED => 13:47

DIST	COUNTY	ROUTE	POST MILES TOTAL PROJECT	SHEET No	TOTAL SHEETS
08	Riv	91	15.6/21.6	1690	2028

REGISTERED CIVIL ENGINEER 11-30-10 DATE

4-25-11
PLANS APPROVAL DATE

The State of California or its officers or agents shall not be responsible for the accuracy or completeness of electronic copies of this plan sheet.

REGISTERED PROFESSIONAL ENGINEER HUAN VU No. 60696 Exp. 12-31-10 CIVIL STATE OF CALIFORNIA

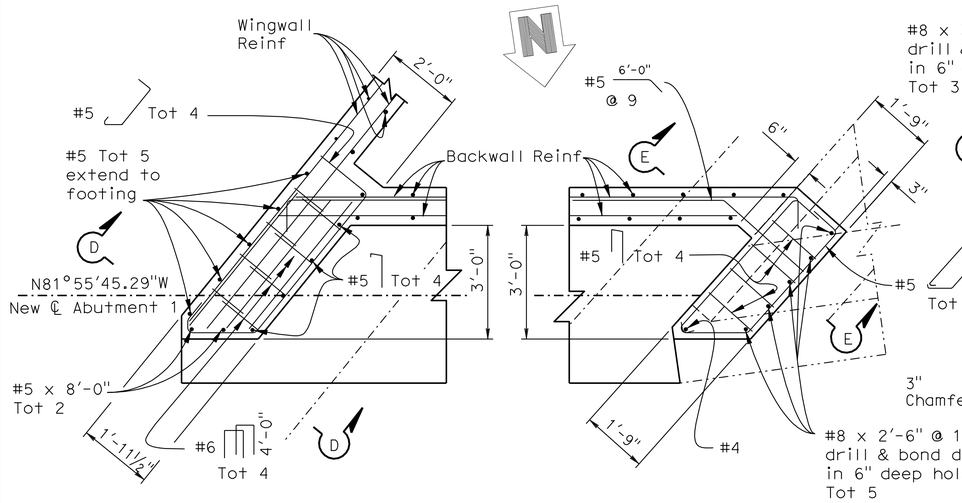

PLAN C-C ABUT NO.1 RIGHT

½"=1'-0"

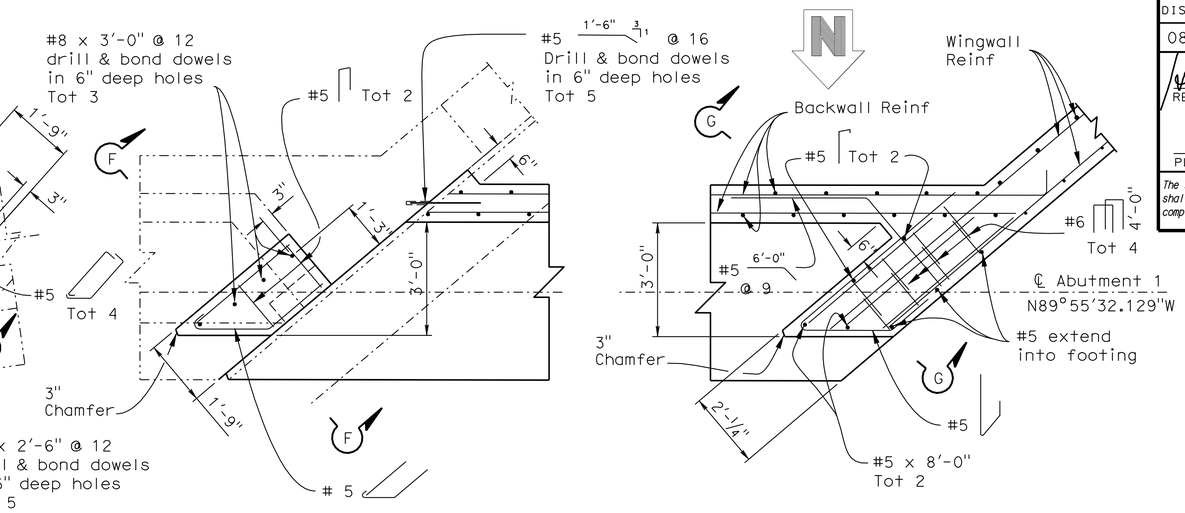

PLAN B-B ABUT NO.1 LEFT

½"=1'-0"

NOTE: ABUTMENT NO.1 SHOWN, ABUTMENT NO.2 SIMILAR

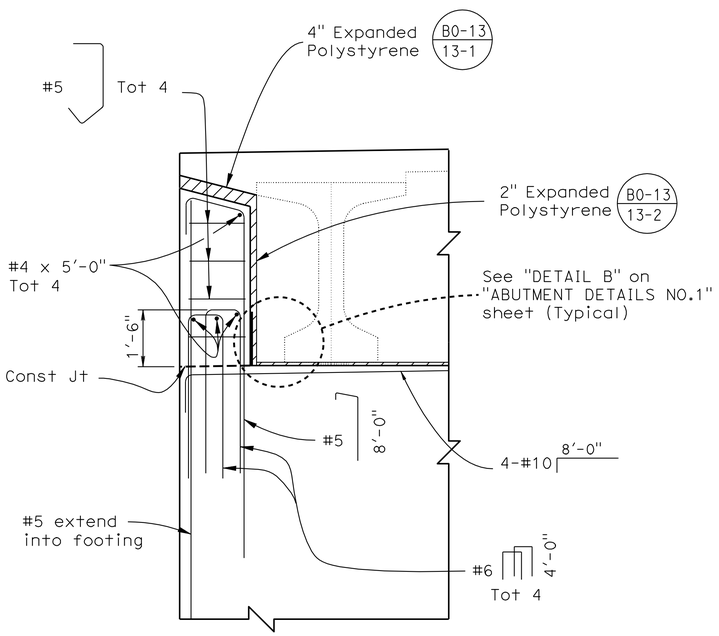

SECTION D-D

½"=1'-0"

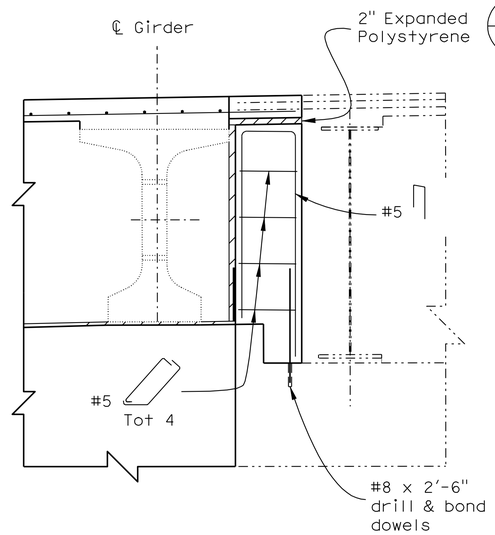

SECTION E-E

½"=1'-0"

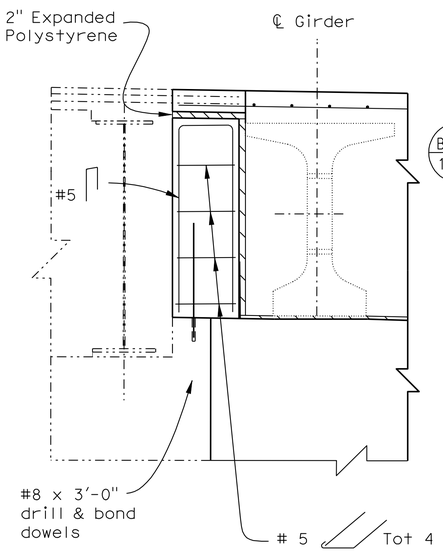

SECTION F-F

½"=1'-0"

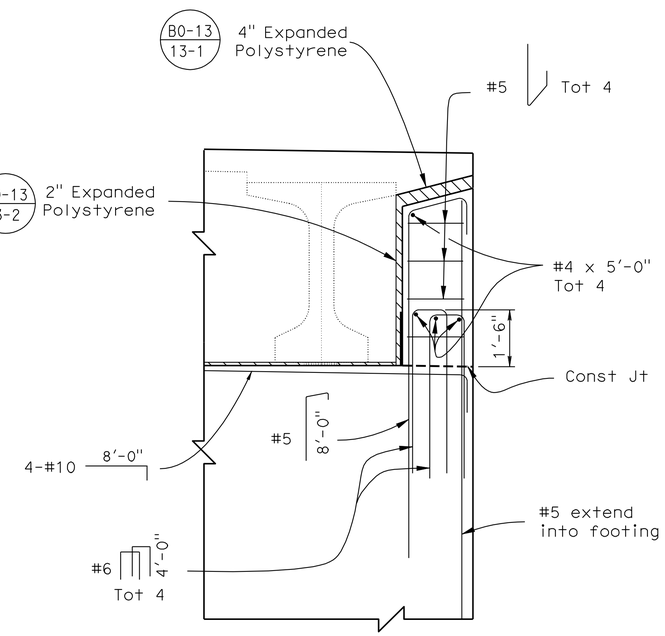

SECTION G-G

½"=1'-0"

NOTE:
THE CONTRACTOR SHALL VERIFY ALL CONTROLLING FIELD DIMENSIONS BEFORE ORDERING OR FABRICATING ANY MATERIAL.

	BY	CHECKED
DESIGN	A. Salimi/H.Vu	F. Chen
DETAILS	R. Kirkland/D.Wooten	F. Chen
QUANTITIES	J. Szabo	A. McPhee

STATE OF CALIFORNIA DEPARTMENT OF TRANSPORTATION

DIVISION OF ENGINEERING SERVICES STRUCTURE DESIGN DESIGN BRANCH 10

BRIDGE NO. 56-0330
POST MILE 17.82

ARLINGTON AVE UC (WIDEN)
ABUTMENT DETAILS NO. 2

STRUCTURES DESIGN DETAIL SHEET (ENGLISH) (REV. 10/25/05)

ORIGINAL SCALE IN INCHES FOR REDUCED PLANS 0 1 2 3

CU 08
EA 448401

DISREGARD PRINTS BEARING EARLIER REVISION DATES 2-26-10

REVISION DATES

SHEET 7 OF 24

FILE => 560330fadt207.dgn

USERNAME => trphillis DATE PLOTTED => 30-APR-2011 TIME PLOTTED => 13:48

DIST	COUNTY	ROUTE	POST MILES TOTAL PROJECT	SHEET No	TOTAL SHEETS
08	Riv	91	15.6/21.6	1691	2028

REGISTERED CIVIL ENGINEER 11-30-10 DATE

4-25-11
PLANS APPROVAL DATE

REGISTERED PROFESSIONAL ENGINEER HUAN VU No. 60696 Exp. 12-31-10 CIVIL STATE OF CALIFORNIA

The State of California or its officers or agents shall not be responsible for the accuracy or completeness of electronic copies of this plan sheet.

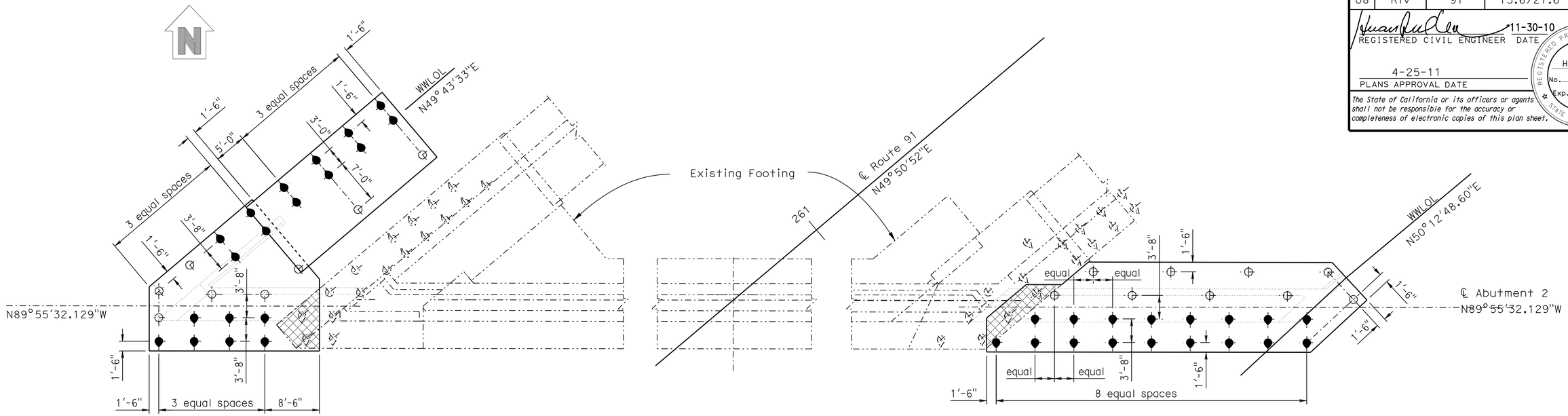

PLAN-ABUTMENT NO.2 PILE LAYOUT

1/8"=1'-0"

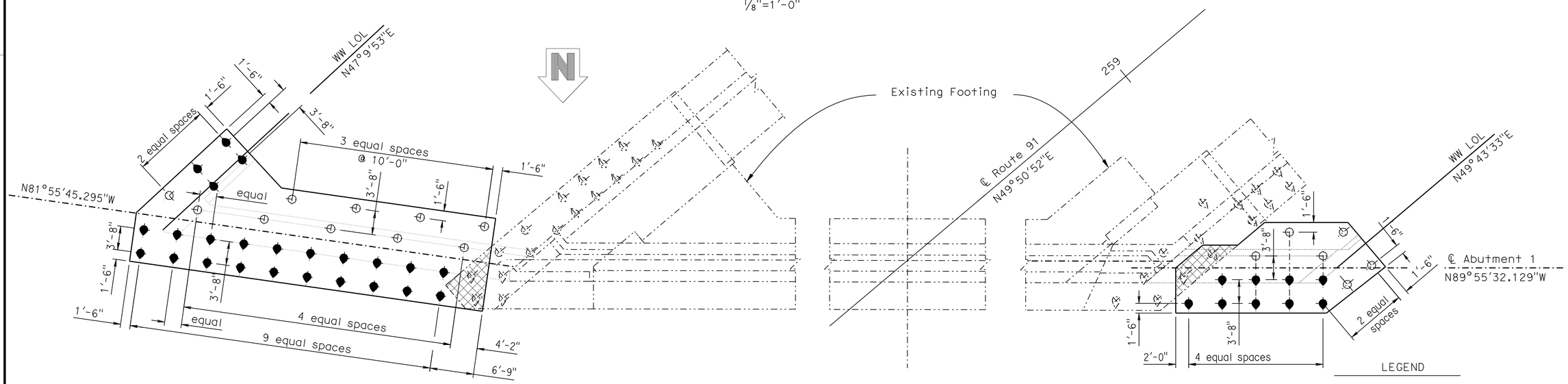

PLAN-ABUTMENT NO.1 PILE LAYOUT

1/8"=1'-0"

NOTE:
THE CONTRACTOR SHALL VERIFY ALL CONTROLLING FIELD DIMENSIONS BEFORE ORDERING OR FABRICATING ANY MATERIAL.

LEGEND

- Denotes existing Battered Pile 3:1
- Denotes existing Vertical Pile
- Denotes New Battered Pile 3:1
- Denotes New Vertical Pile
- Denotes existing structure
- Denotes New Construction
- Denotes Limits of Bridge Removal (Portion) Existing longitudinal Reinf to remain

	BY	CHECKED
DESIGN	A. Salimi/H.Vu	F. Chen
DETAILS	R. Kirkland/D.Wooten	F. Chen
QUANTITIES	J. Szabo	A. McPhee

STATE OF CALIFORNIA
DEPARTMENT OF TRANSPORTATION

DIVISION OF ENGINEERING SERVICES
STRUCTURE DESIGN
DESIGN BRANCH 10

BRIDGE NO. 56-0330
POST MILE 17.82

ARLINGTON AVE UC (WIDEN)
ABUTMENT DETAILS NO. 3

STRUCTURES DESIGN DETAIL SHEET (ENGLISH) (REV. 10/25/05)

ORIGINAL SCALE IN INCHES FOR REDUCED PLANS 0 1 2 3

CU 08
EA 448401

DISREGARD PRINTS BEARING EARLIER REVISION DATES 2-26-10

REVISION DATES

SHEET 8 OF 24

FILE => 560330fadt308.dgn

USERNAME => trphilis DATE PLOTTED => 30-APR-2011 TIME PLOTTED => 13:48

DIST	COUNTY	ROUTE	POST MILES TOTAL PROJECT	SHEET No	TOTAL SHEETS
08	Riv	91	15.6/21.6	1692	2028

REGISTERED CIVIL ENGINEER 11-30-10 DATE

4-25-11
PLANS APPROVAL DATE

REGISTERED PROFESSIONAL ENGINEER HUAN VU No. 60696 Exp. 12-31-10 CIVIL STATE OF CALIFORNIA

The State of California or its officers or agents shall not be responsible for the accuracy or completeness of electronic copies of this plan sheet.

Note: #9 rebar on top of each pile not shown

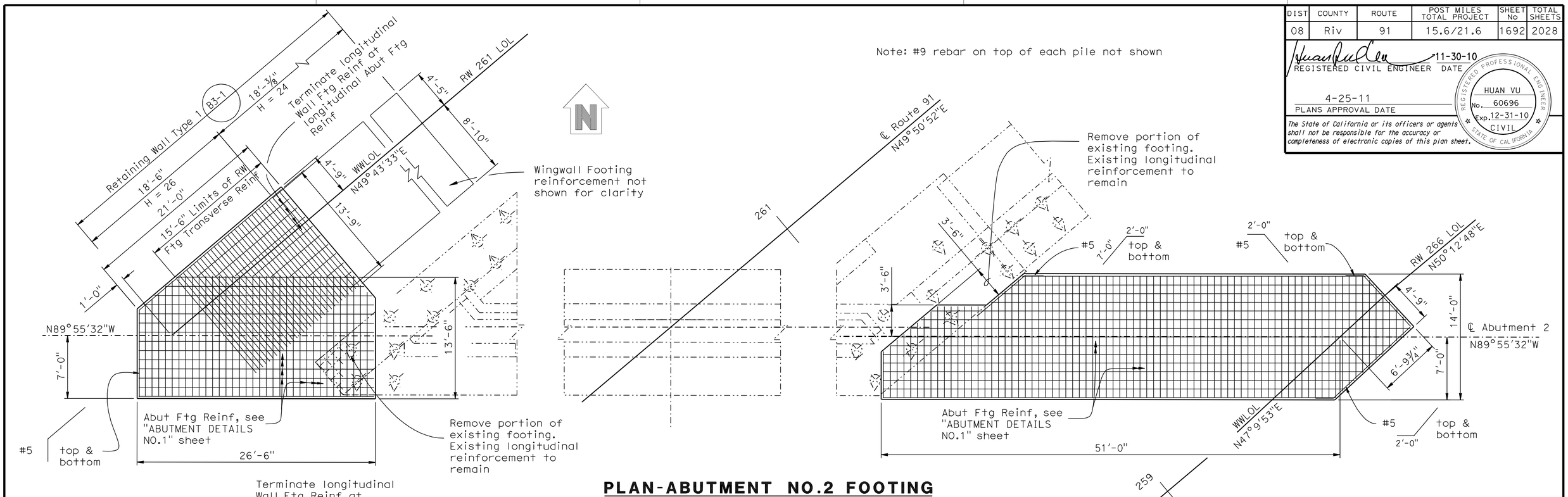

PLAN-ABUTMENT NO.2 FOOTING

3/16"=1'-0"

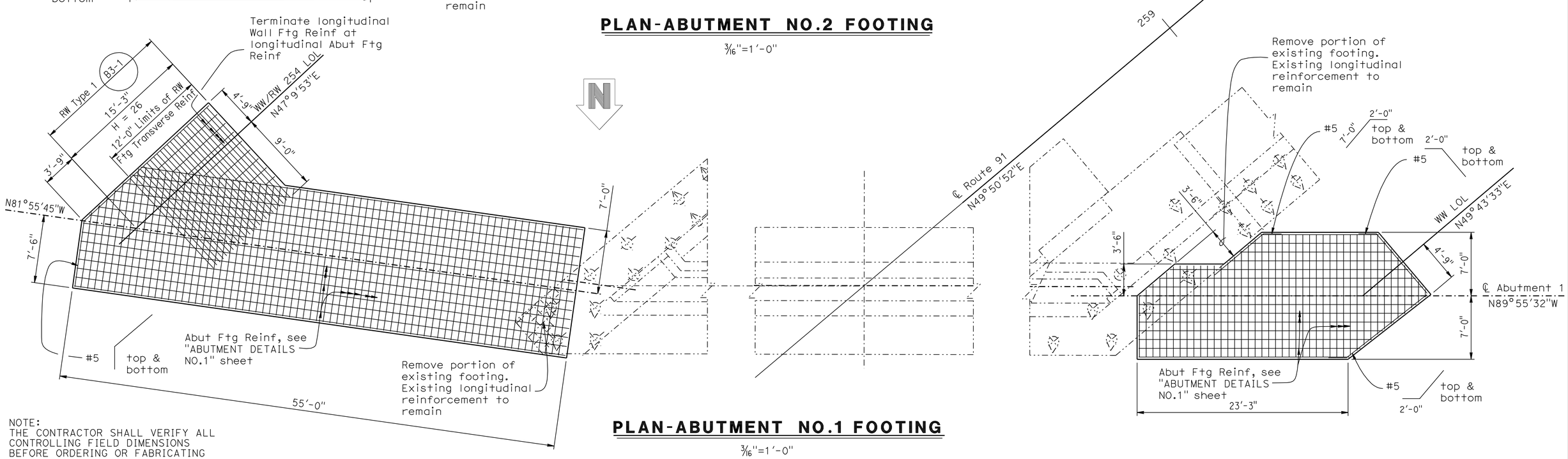

PLAN-ABUTMENT NO.1 FOOTING

3/16"=1'-0"

NOTE:
THE CONTRACTOR SHALL VERIFY ALL CONTROLLING FIELD DIMENSIONS BEFORE ORDERING OR FABRICATING ANY MATERIAL.

	BY	CHECKED
DESIGN	A. Salimi/H.Vu	F. Chen
DETAILS	R. Kirkland/D.Wooten	F. Chen
QUANTITIES	J. Szabo	A. McPhee

STATE OF CALIFORNIA
DEPARTMENT OF TRANSPORTATION

DIVISION OF ENGINEERING SERVICES
STRUCTURE DESIGN
DESIGN BRANCH 10

BRIDGE NO. 56-0330
POST MILE 17.82

ARLINGTON AVE UC (WIDEN)
ABUTMENT DETAILS NO. 4

STRUCTURES DESIGN DETAIL SHEET (ENGLISH) (REV. 10/25/05)

ORIGINAL SCALE IN INCHES FOR REDUCED PLANS 0 1 2 3

CU 08
EA 448401

DISREGARD PRINTS BEARING EARLIER REVISION DATES 2-26-10

REVISION DATES

SHEET 9 OF 24

FILE => 560330fadt409.dgn

USERNAME => trphils DATE PLOTTED => 30-APR-2011 TIME PLOTTED => 13:48

DIST	COUNTY	ROUTE	POST MILES TOTAL PROJECT	SHEET No	TOTAL SHEETS
08	Riv	91	15.6/21.6	1693	2028

REGISTERED CIVIL ENGINEER 11-30-10 DATE

4-25-11
PLANS APPROVAL DATE

REGISTERED PROFESSIONAL ENGINEER HUAN VU No. 60696 Exp. 12-31-10 CIVIL STATE OF CALIFORNIA

The State of California or its officers or agents shall not be responsible for the accuracy or completeness of electronic copies of this plan sheet.

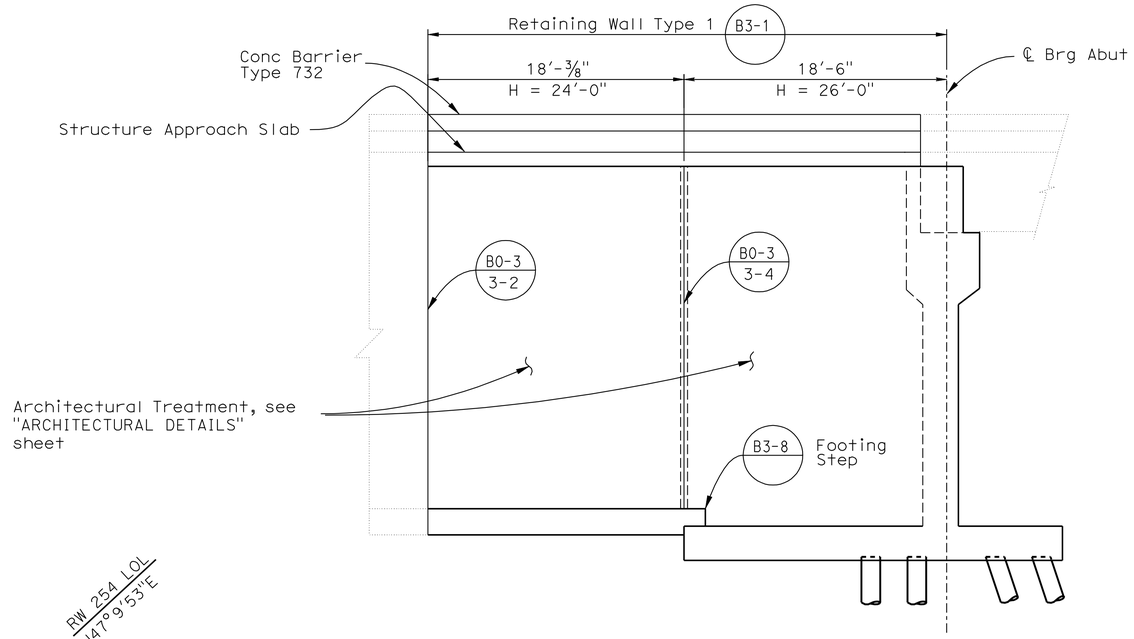

ABUT NO.2 LEFT WINGWALL ELEVATION

3/16" = 1'-0"

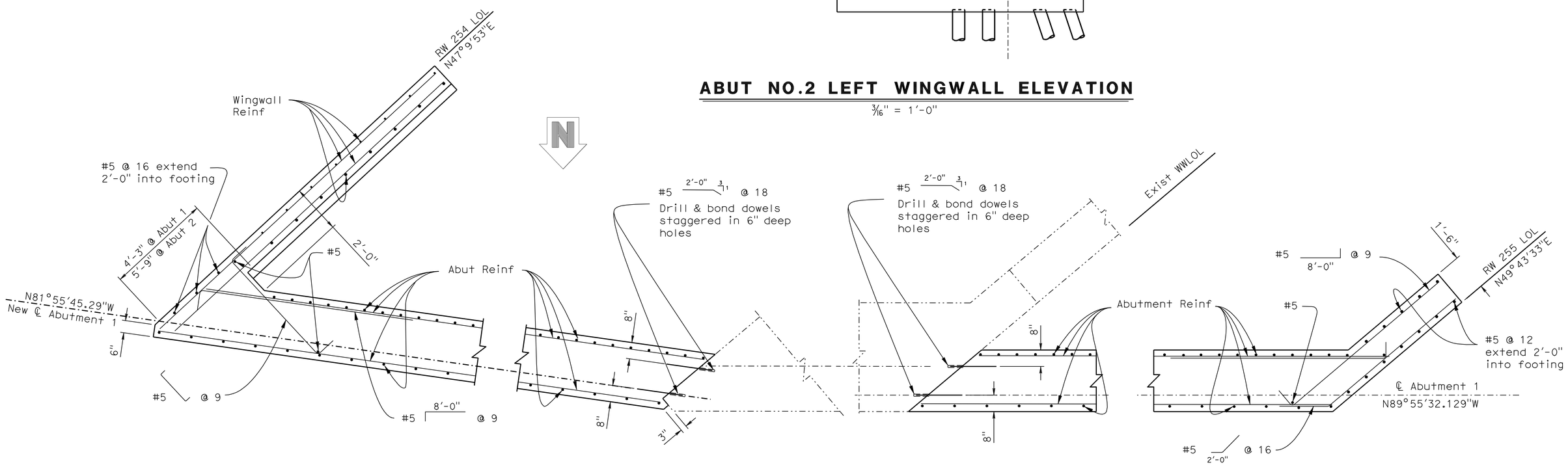

NOTE: ABUTMENT NO.1 SHOWN, ABUTMENT NO.2 SIMILAR

PLAN H-H ABUTMENT NO.1 RIGHT

1/2"=1'-0"

NOTE:
THE CONTRACTOR SHALL VERIFY ALL CONTROLLING FIELD DIMENSIONS BEFORE ORDERING OR FABRICATING ANY MATERIAL.

Legend:

——— Indicates new construction

·—··—··— Indicates existing structure

	BY	CHECKED
DESIGN	A. Salimi/H.Vu	F. Chen
DETAILS	R. Kirkland/D.Wooten	F. Chen
QUANTITIES	J. Szabo	A. McPhee

STATE OF CALIFORNIA
DEPARTMENT OF TRANSPORTATION

DIVISION OF ENGINEERING SERVICES
STRUCTURE DESIGN
DESIGN BRANCH 10

BRIDGE NO. 56-0330
POST MILE 17.82

ARLINGTON AVE UC (WIDEN)
ABUTMENT DETAILS NO.5

STRUCTURES DESIGN DETAIL SHEET (ENGLISH) (REV. 10/25/05)

ORIGINAL SCALE IN INCHES FOR REDUCED PLANS 0 1 2 3

CU 08
EA 448401

DISREGARD PRINTS BEARING EARLIER REVISION DATES 2-26-10

REVISION DATES

SHEET 10 OF 24

FILE => 560330fadt510.dgn

USERNAME => trphtis DATE PLOTTED => 30-APR-2011 TIME PLOTTED => 13:48

DIST	COUNTY	ROUTE	POST MILES TOTAL PROJECT	SHEET No	TOTAL SHEETS
08	Riv	91	15.6/21.6	1694	2028

REGISTERED CIVIL ENGINEER 11-30-10 DATE

4-25-11
PLANS APPROVAL DATE

REGISTERED PROFESSIONAL ENGINEER HUAN VU No. 60696 Exp. 12-31-10 CIVIL STATE OF CALIFORNIA

The State of California or its officers or agents shall not be responsible for the accuracy or completeness of electronic copies of this plan sheet.

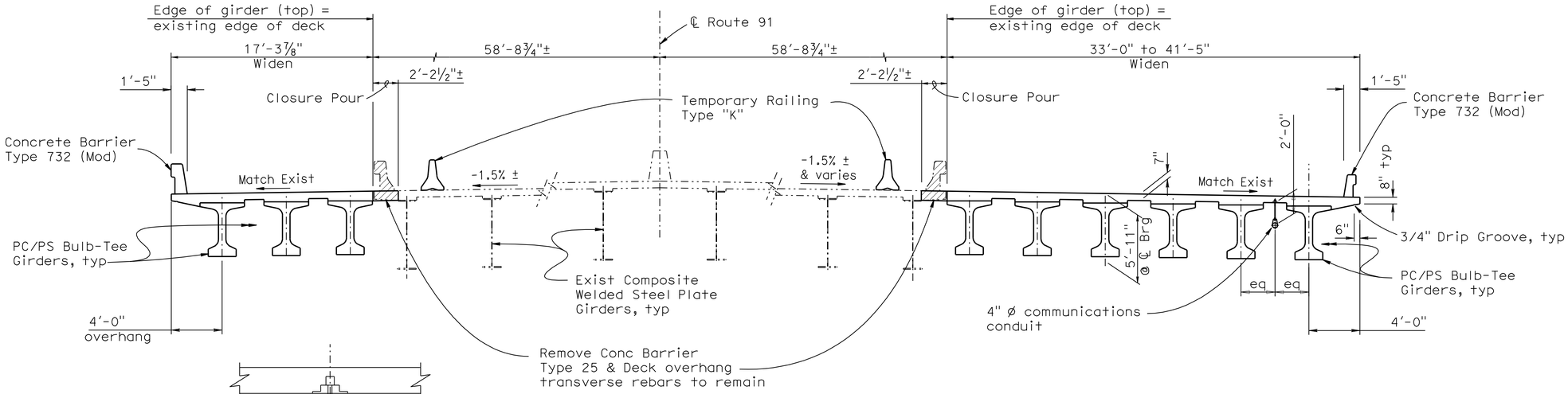

TYPICAL SECTION

3/16" = 1'-0"

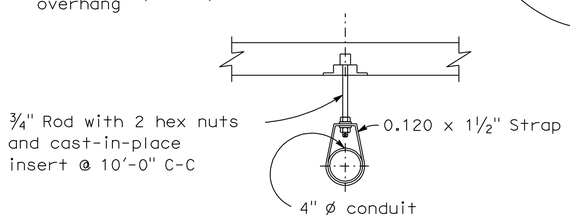

CONDUIT HANGER SUPPORT DETAIL

NO SCALE

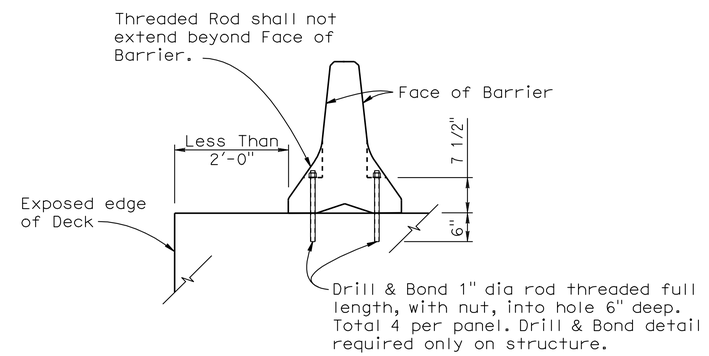

TEMPORARY RAILING TYPE "K" ATTACHMENT TO DETAIL

3/4" = 1'-0"

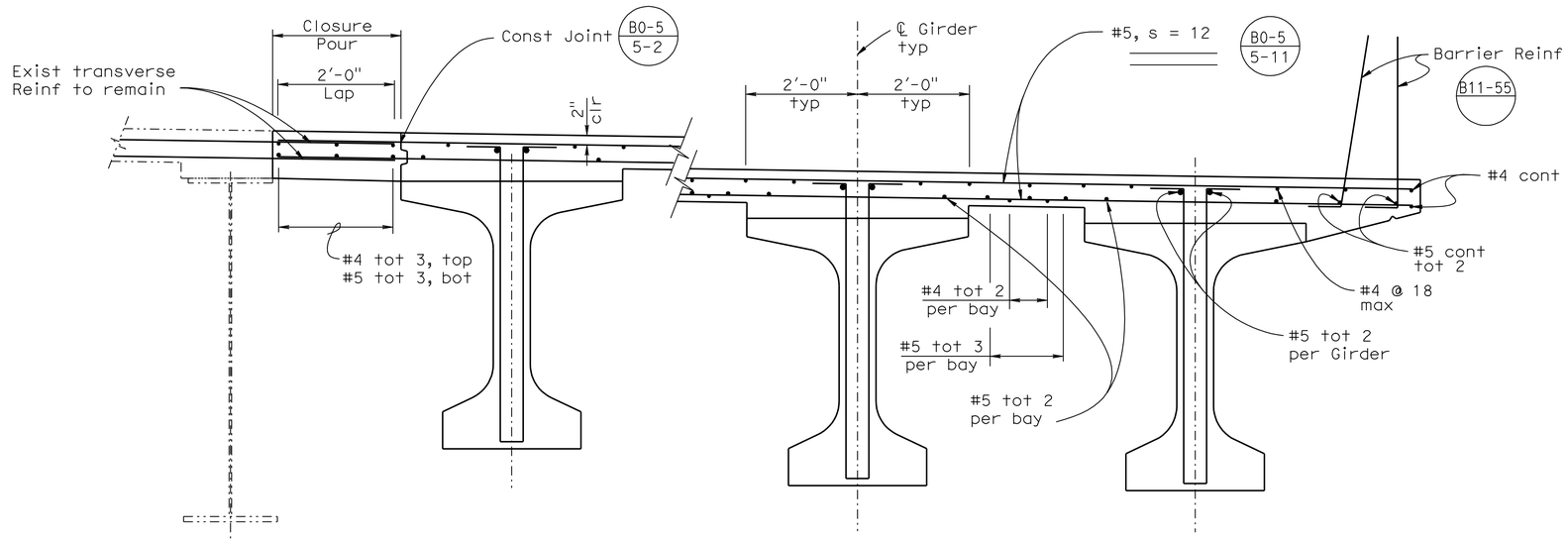

PART TYPICAL SECTION

3/4" = 1'-0"

B0-5

NOTE:
THE CONTRACTOR SHALL VERIFY ALL CONTROLLING FIELD DIMENSIONS BEFORE ORDERING OR FABRICATING ANY MATERIAL.

LEGEND

- Indicates new Construction
- Indicates Existing Structure
- Indicates Limits of Removal

Notes

1. For Girder Details and Intermediate Diaphram Details, see "Prestressed Bulb-Tee Girder" sheet.
2. For Concrete Barrier Type 732 (Mod), see "Architectural Details" sheet.
3. Right widening shown, Left widening similar

DESIGN	BY A. Salimi	CHECKED F. Chen	
DETAILS	BY R. Kirkland/D.Wooten	CHECKED F. Chen	
QUANTITIES	BY J. Szabo	CHECKED A. McPhee	

STATE OF CALIFORNIA
DEPARTMENT OF TRANSPORTATION

DIVISION OF ENGINEERING SERVICES
STRUCTURE DESIGN
DESIGN BRANCH 10

BRIDGE NO. 56-0330
POST MILE 17.82

ARLINGTON AVE UC (WIDEN)
TYPICAL SECTION

STRUCTURES DESIGN DETAIL SHEET (ENGLISH) (REV. 10/25/05)

ORIGINAL SCALE IN INCHES FOR REDUCED PLANS 0 1 2 3

CU 08
EA 448401

DISREGARD PRINTS BEARING EARLIER REVISION DATES

REVISION DATES 2-26-10

SHEET 11 OF 24

FILE => 560330kts11.dgn

USERNAME => trphilis DATE PLOTTED => 30-APR-2011 TIME PLOTTED => 13:48

DIST	COUNTY	ROUTE	POST MILES TOTAL PROJECT	SHEET No	TOTAL SHEETS
08	Riv	91	15.6/21.6	1695	2028

REGISTERED CIVIL ENGINEER 11-30-10 DATE

4-25-11
PLANS APPROVAL DATE

REGISTERED PROFESSIONAL ENGINEER HUAN VU No. 60696 Exp. 12-31-10 CIVIL STATE OF CALIFORNIA

The State of California or its officers or agents shall not be responsible for the accuracy or completeness of electronic copies of this plan sheet.

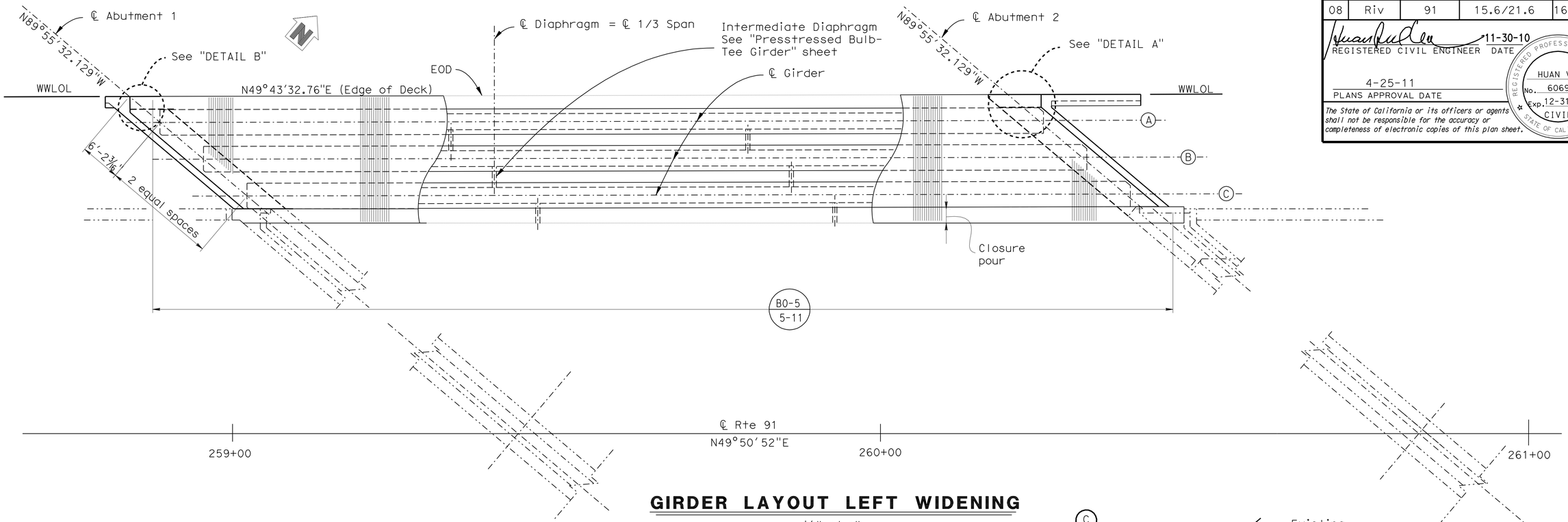

GIRDER LAYOUT LEFT WIDENING

1/8"=1'-0"

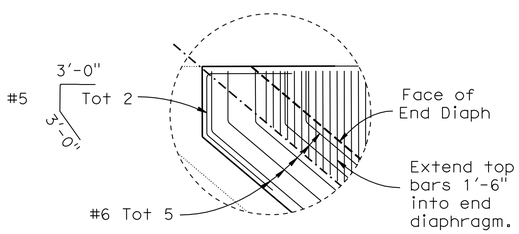

DETAIL "B"

3/8" = 1'-0"

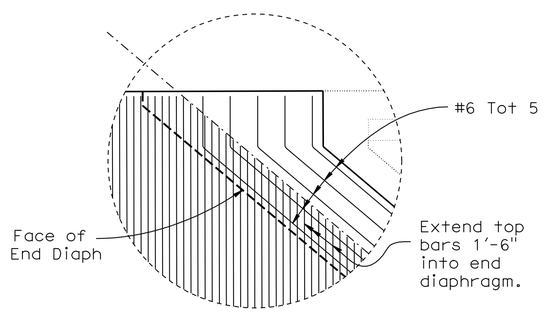

DETAIL "A"

3/8" = 1'-0"

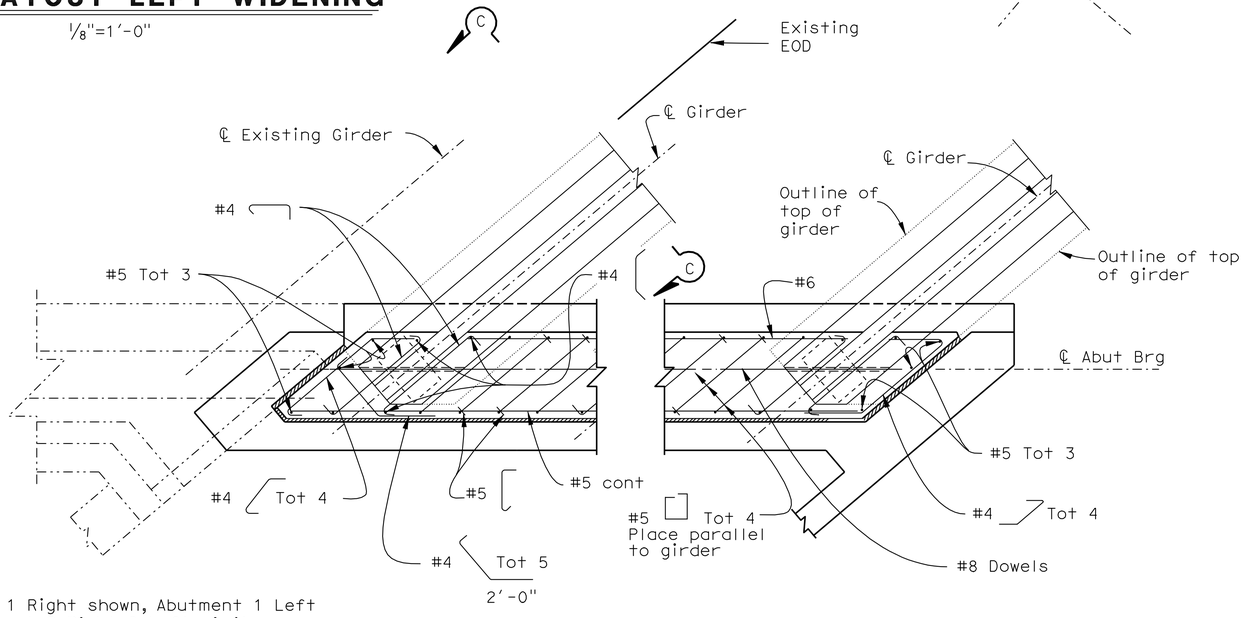

PLAN VIEW-END DIAPHRAGM

3/8"=1'-0"

NOTE:
THE CONTRACTOR SHALL VERIFY ALL CONTROLLING FIELD DIMENSIONS BEFORE ORDERING OR FABRICATING ANY MATERIAL.

Notes:

1. Abutment 1 Right shown, Abutment 1 Left and Abutment 2 Right & Left similar
2. For "SECTION C-C", see "GIRDER LAYOUT NO.2" sheet

	BY	CHECKED
DESIGN	A. Salimi/H.Vu	F. Chen
DETAILS	D. Wooten	F. Chen
QUANTITIES	J. Szabo	A. McPhee

STATE OF CALIFORNIA
DEPARTMENT OF TRANSPORTATION

DIVISION OF ENGINEERING SERVICES
STRUCTURE DESIGN
DESIGN BRANCH 10

BRIDGE NO. 56-0330
POST MILE 17.82

ARLINGTON AVE UC (WIDEN)
GIRDER LAYOUT NO.1

STRUCTURES DESIGN DETAIL SHEET (ENGLISH) (REV. 10/25/05)

ORIGINAL SCALE IN INCHES FOR REDUCED PLANS 0 1 2 3

CU 08
EA 448401

DISREGARD PRINTS BEARING EARLIER REVISION DATES

REVISION DATES: 2-26-10

SHEET 12 OF 24

FILE => 5603301g_lo112.dgn

USERNAME => trphtis DATE PLOTTED => 30-APR-2011 TIME PLOTTED => 13:49

DIST	COUNTY	ROUTE	POST MILES TOTAL PROJECT	SHEET No	TOTAL SHEETS
08	Riv	91	15.6/21.6	1696	2028

REGISTERED CIVIL ENGINEER 11-30-10 DATE

4-25-11
PLANS APPROVAL DATE

REGISTERED PROFESSIONAL ENGINEER HUAN VU No. 60696 Exp. 12-31-10 CIVIL STATE OF CALIFORNIA

The State of California or its officers or agents shall not be responsible for the accuracy or completeness of electronic copies of this plan sheet.

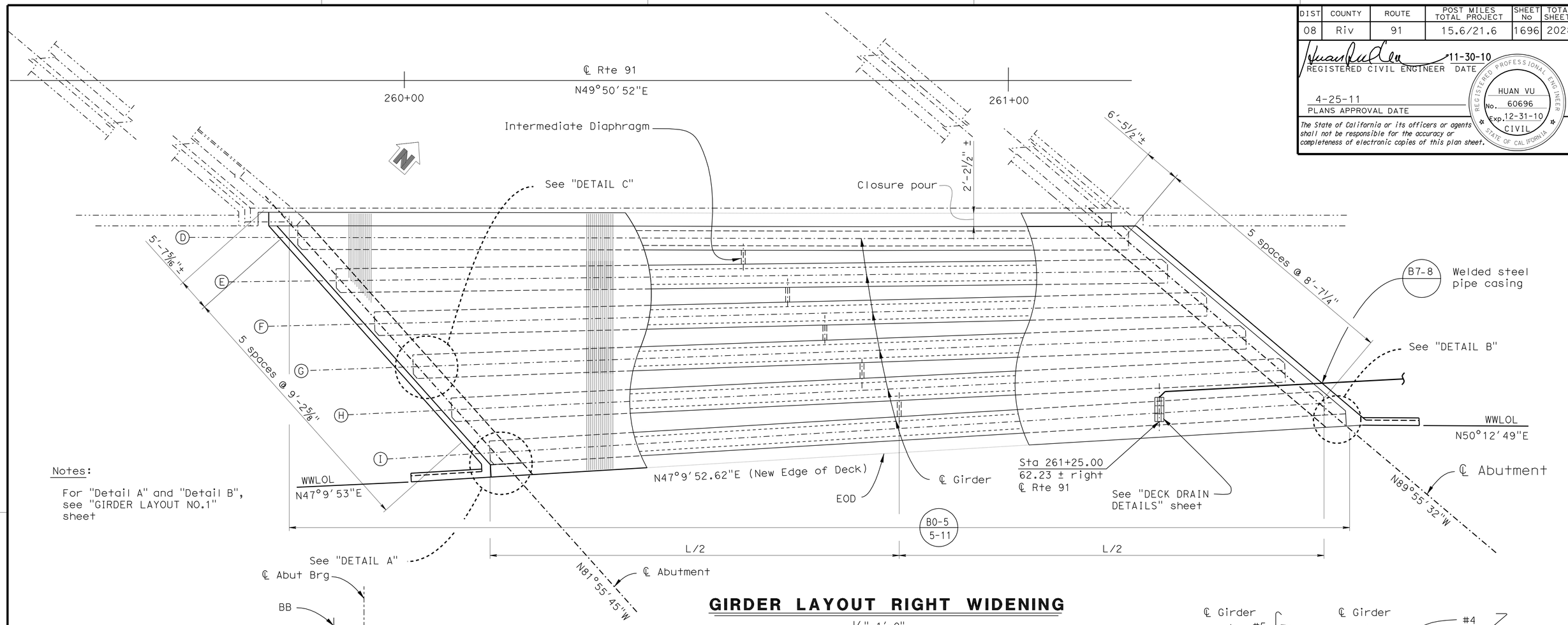

Notes:

For "Detail A" and "Detail B", see "GIRDER LAYOUT NO.1" sheet

GIRDER LAYOUT RIGHT WIDENING

1/8"=1'-0"

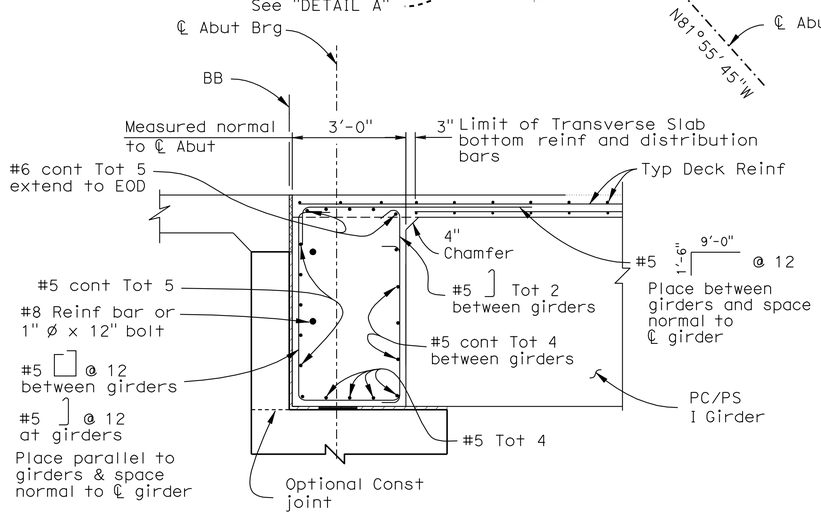

END DIAPHRAGM

1/2"=1'-0"

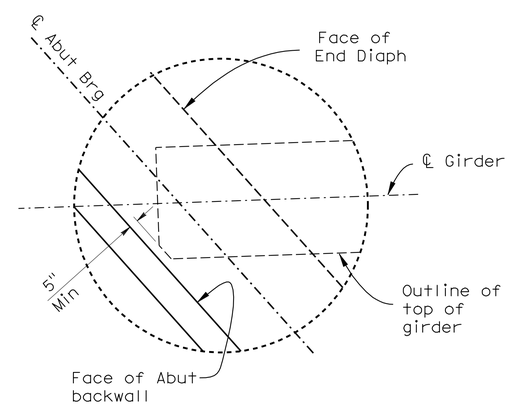

DETAIL "C"

3/8" = 1'-0"

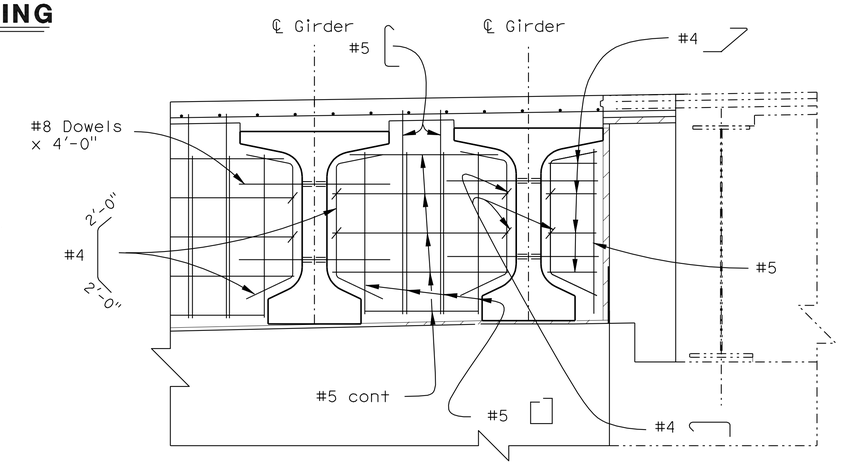

SECTION C-C

1/2"=1'-0"

NOTE:
THE CONTRACTOR SHALL VERIFY ALL CONTROLLING FIELD DIMENSIONS BEFORE ORDERING OR FABRICATING ANY MATERIAL.

	BY	CHECKED
DESIGN	A. Salimi	F. Chen
DETAILS	D. Wooten	F. Chen
QUANTITIES	J. Szabo	A. McPhee

STATE OF CALIFORNIA
DEPARTMENT OF TRANSPORTATION

DIVISION OF ENGINEERING SERVICES
STRUCTURE DESIGN
DESIGN BRANCH 10

BRIDGE NO. 56-0330
POST MILE 17.82

ARLINGTON AVE UC (WIDEN)
GIRDER LAYOUT NO.2

STRUCTURES DESIGN DETAIL SHEET (ENGLISH) (REV. 10/25/05)

ORIGINAL SCALE IN INCHES FOR REDUCED PLANS 0 1 2 3

CU 08
EA 448401

DISREGARD PRINTS BEARING EARLIER REVISION DATES

REVISION DATES: 2-26-10 6-02-10

SHEET 13 OF 24

FILE => 5603301g_1o213.dgn

USERNAME => trcarol DATE PLOTTED => 30-APR-2011 TIME PLOTTED => 12:55

DIST.	COUNTY	ROUTE	POST MILES TOTAL PROJECT	SHEET NO.	TOTAL SHEETS
08	Riv	91	15.6/21.6	1697	2028

REGISTERED ENGINEER - CIVIL 11-30-10

4-25-11
PLANS APPROVAL DATE

REGISTERED PROFESSIONAL ENGINEER HUAN VU No. 60696 Exp. 12-31-10 CIVIL STATE OF CALIFORNIA

The State of California or its officers or agents shall not be responsible for the accuracy or completeness of electronic copies of this plan sheet.

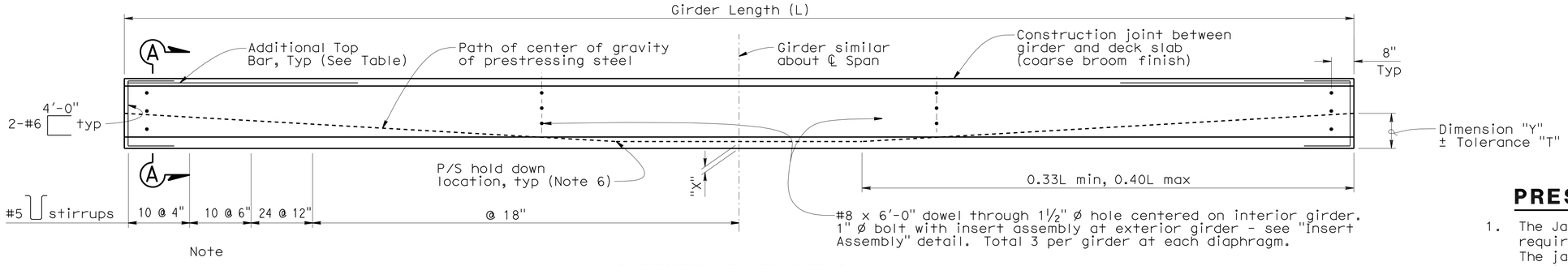

Note

~~Girder~~ ends to be cast such that a level surface is provided at bearing pads.

GIRDER ELEVATION

Location	Girder Length (ft)	"D" (in)	"X" (in)	Jacking Force (P) (kips)	As, min (in^2)	"Y" (in)	Concrete Strength (ksi) f'ci	Concrete Strength (ksi) f'c	Midspan Dead Load Deflection (ft) Deck	Midspan Dead Load Deflection (ft) Rail	Additional Top Bar (each end)
Girder A	137.00	62.00	4	1990	N/A	20.0	5.5	6.5	0.41	0.06	N/A
			6	2100	N/A						
Girder B & C	137.00	62.00	4	1600	N/A	20.0	4.5	6.5	0.35	0.06	N/A
			6	1700	N/A						
Girder D	137.50	62.00	4	1850	N/A	21.0	5.0	6.0	0.42	0.03	N/A
			6	1940	N/A						
Girder E	138.00	62.00	4	1810	N/A	21.0	5.0	6.0	0.42	0.03	N/A
			6	1940	N/A						
Girder F	138.50	62.00	4	2110	N/A	20.0	6.0	6.5	0.44	0.03	N/A
			6	2220	N/A						
Girder G	139.00	62.00	4	2110	N/A	20.0	6.0	6.5	0.46	0.03	N/A
			6	2250	N/A						
Girder H	139.50	62.00	4	2140	N/A	20.0	6.0	6.5	0.46	0.03	N/A
			6	2240	12.1						
Girder I	140.00	62.00	4	2130	11.5	20.0	6.0	6.5	0.46	0.03	N/A
			6	2240	12.2						

PRESTRESSING NOTES

1. The Jacking Force (P) is the jacking force required at the point of control along the span. The jacking force does not include any fabrication specific losses.
2. The maximum tensile stress in the prestressing steel upon release shall not exceed 75% of the specified minimum ultimate tensile strength of the prestressing steel.
3. The maximum temporary tensile stress (jacking stress) in the prestressing steel shall not exceed 80% of the specified minimum ultimate tensile strength of the prestressing steel.
4. Concrete strength:
   f'ci is at time of initial stressing.
   f'c is at 28 days.
5. Deflection components are informational and will be used to set screed line elevations.
6. Screed line elevations for deck concrete will be determined by the Engineer.
7. Contractor may interpolate "P" and "X" values between the limits shown, as approved by the Engineer.
8. There shall be a minimum of two hold downs per girder for the prestressing.
9. Prestressing strand shall be 270 ksi low relaxation.
10. As, Min is the minimum area required of prestressing steel.

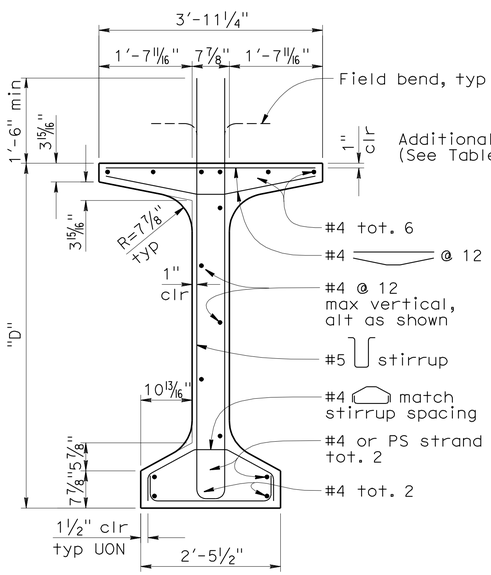

TYPICAL GIRDER SECTION

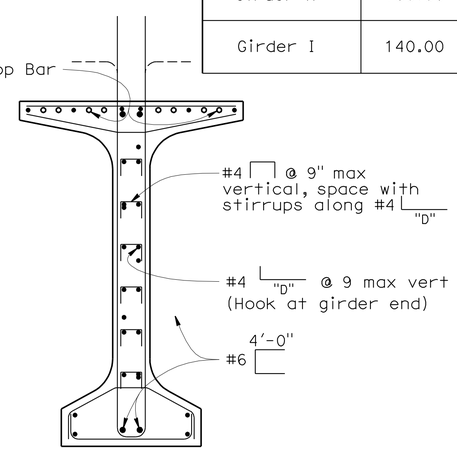

Note: For details shown but not noted, see "Typical Girder Section" detail.

SECTION A-A

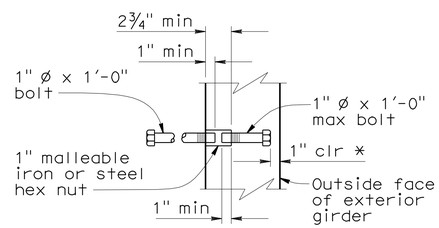

* Dimension may be increased when insert assembly is used at end block

INSERT ASSEMBLY

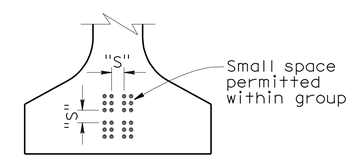

CLEARANCES FOR PRETENSIONED STRANDS

NOTES

1. Strands may be bundled in groups consisting of 3 vertically, 2 horizontally, and separated at the ends.
2. The minimum distance "S" between groups or individual strands is 1¾" for 0.5" ø strand and 2" for 0.6" ø strand.
3. "S" is measured between centers of adjacent strands.
4. Approval by Engineer is required for deviation.

Note: For "WELDED WIRE REINFORCEMENT (WWR) ALTERNATIVE, see "PC/PS BULB-TEE GIRDER (MISCELLANEOUS DETAILS" sheet.

NO SCALE

STANDARD DRAWING

FILE NO. xs1-122-1

APPROVED BY Jim Ma — RESPONSIBLE TECHNICAL SPECIALIST
APPROVAL DATE 01-03-11

RELEASED BY Susan Hida — RESPONSIBLE OFFICE CHIEF
RELEASE DATE 01-03-11

STATE OF CALIFORNIA DEPARTMENT OF TRANSPORTATION

DIVISION OF ENGINEERING SERVICES

BRIDGE NO. 56-0330
POST MILE 18.40

ARLINGTON AVE UC (WIDEN)

PC/PS BULB-TEE GIRDER (HARPED STRANDS)

DS OSD 2147A (ENGLISH STANDARD DRAWING "XS" BORDER REV. 01/11/08)

ORIGINAL SCALE IN INCHES FOR REDUCED PLANS 0 1 2 3

CU 08
EA 448401

DISREGARD PRINTS BEARING EARLIER REVISION DATES

REVISION DATES (PRELIMINARY STAGE ONLY)

SHEET 14 OF 24

USERNAME => trcarol

5603301gdt14.dgn

DATE PLOTTED => 30-APR-2011 TIME PLOTTED => 12:55

DIST.	COUNTY	ROUTE	POST MILES TOTAL PROJECT	SHEET NO.	TOTAL SHEETS
08	Riv	91	15.6/21.6	1698	2028

REGISTERED ENGINEER - CIVIL 11-30-10

4-25-11
PLANS APPROVAL DATE

REGISTERED PROFESSIONAL ENGINEER HUAN VU No. 60696 Exp. 12-31-10 CIVIL STATE OF CALIFORNIA

The State of California or its officers or agents shall not be responsible for the accuracy or completeness of electronic copies of this plan sheet.

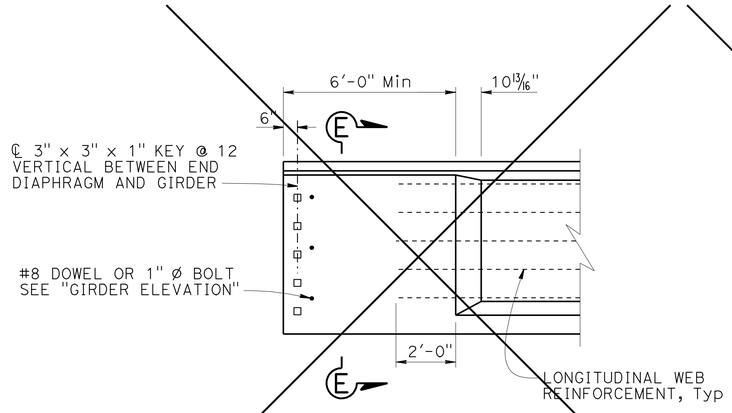

1 OPTIONAL END BLOCK - ELEVATION

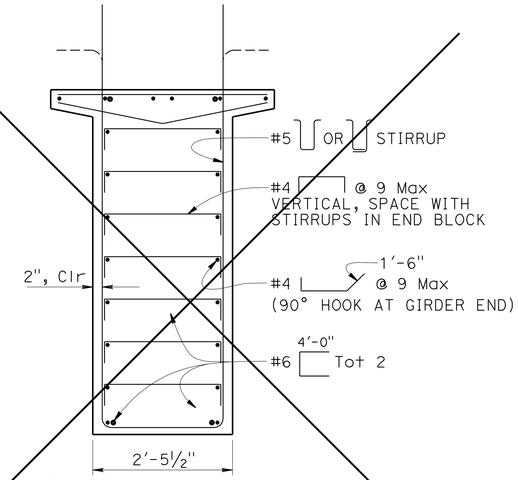

NOTE:

1. For details not shown, see "TYPICAL GIRDER SECTION" detail

1 SECTION E-E

NOTES:

1. For details shown but not noted, see "TYPICAL GIRDER SECTION" detail
2. W8 WWR not shown

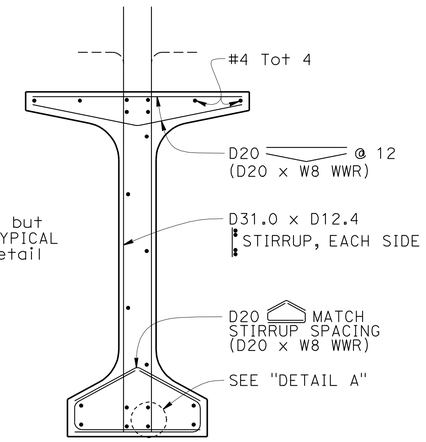

WELDED WIRE REINFORCEMENT (WWR) ALTERNATIVE

NOTE:

1. For "GIRDER ELEVATION" and "TYPICAL GIRDER SECTION", see "PC/PS BULB-TEE GIRDER" sheet

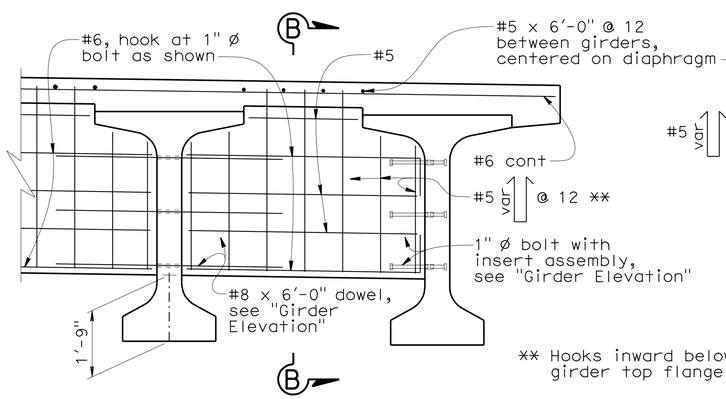

** Hooks inward below girder top flange

INTERMEDIATE DIAPHRAGM

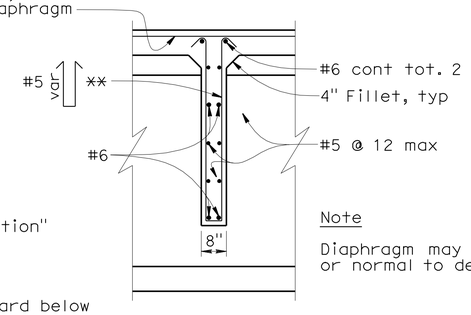

Note

Diaphragm may be vertical or normal to deck grade

SECTION B-B

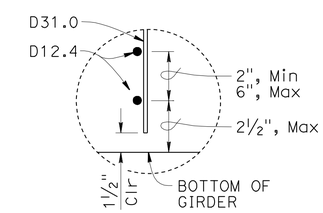

DETAIL A

NOTES:

1. Bottom of stirrup WWR detail shown, top similar
2. Longitudinal wire area shall be 40% or greater of vertical deformed wire's area

NOTE: For INTERMEDIATE DIAPHRAGM LOCATIONS, see "GIRDER LAYOUT" sheet.

REVISED STANDARD DRAWING

FILE NO. xs 1-121-2e

APPROVED BY Jim Ma RESPONSIBLE TECHNICAL SPECIALIST
APPROVAL DATE 02-01-10

RELEASED BY Susan Hida RESPONSIBLE OFFICE CHIEF
RELEASE DATE 02-01-10

1 Detail Not Used

STATE OF CALIFORNIA DEPARTMENT OF TRANSPORTATION

DIVISION OF ENGINEERING SERVICES

BRIDGE NO. 56-0330
POST MILE 17.82

ARLINGTON AVENUE UC (WIDEN)

PC/PS BULB-TEE GIRDER (MISCELLANEOUS DETAILS)

DS OSD 2147A (ENGLISH STANDARD DRAWING "XS" BORDER REV. 01/11/08)

ORIGINAL SCALE IN INCHES FOR REDUCED PLANS 0 1 2 3

CU 08
EA 448401

DISREGARD PRINTS BEARING EARLIER REVISION DATES 11-05-10

REVISION DATES (PRELIMINARY STAGE ONLY)

SHEET 15 OF 24

5603301gdt15.dgn

USERNAME => trcarol

DATE PLOTTED => 30-APR-2011 TIME PLOTTED => 12:55

DIST	COUNTY	ROUTE	POST MILES TOTAL PROJECT	SHEET No	TOTAL SHEETS
08	Riv	91	15.6/21.6	1699	2028

REGISTERED CIVIL ENGINEER 11-30-10 DATE

4-25-11
PLANS APPROVAL DATE

The State of California or its officers or agents shall not be responsible for the accuracy or completeness of electronic copies of this plan sheet.

REGISTERED PROFESSIONAL ENGINEER HUAN VU No. 60696 Exp. 12-31-10 CIVIL STATE OF CALIFORNIA

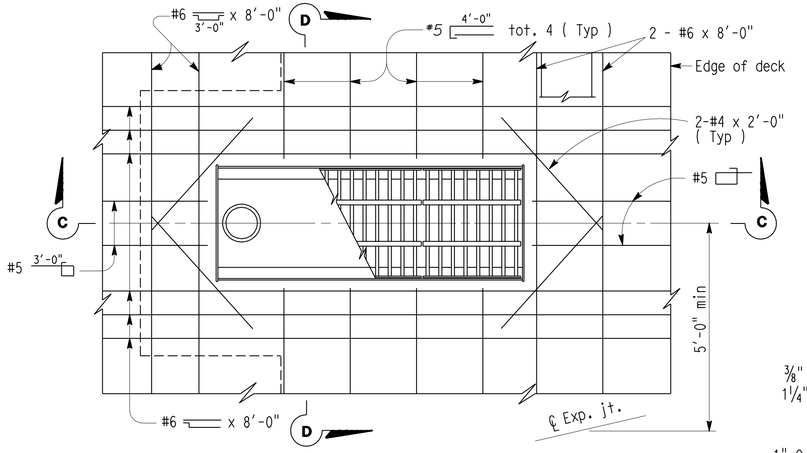

PLAN - CURB INSTALLATION

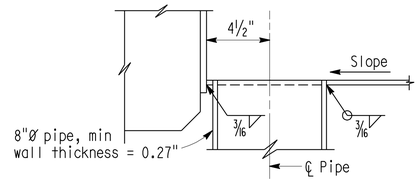

PIPE SECTION

Notes: Galvanize deck drain assembly after fabrication. Reinforcement shown at drains is to be placed in addition to typical slab reinforcement. Typical slab reinforcement not shown

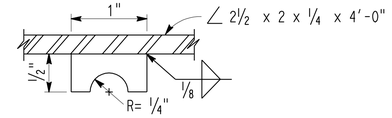

LOCK BAR-1/2 x 1/2 x 1

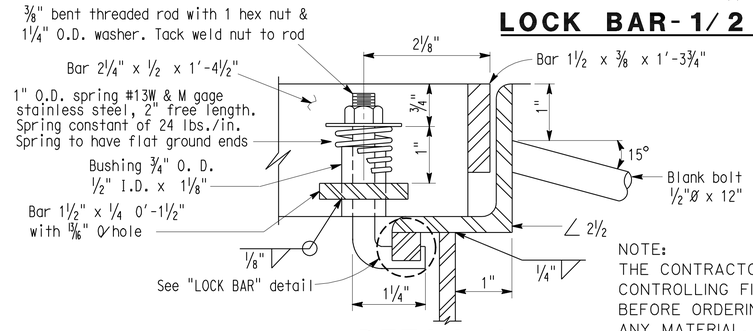

DETAIL A

NOTE:
THE CONTRACTOR SHALL VERIFY ALL CONTROLLING FIELD DIMENSIONS BEFORE ORDERING OR FABRICATING ANY MATERIAL.

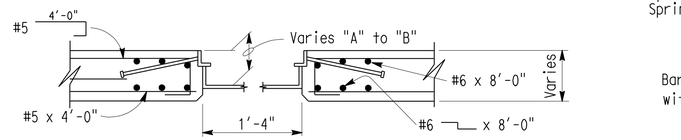

SECTION D-D

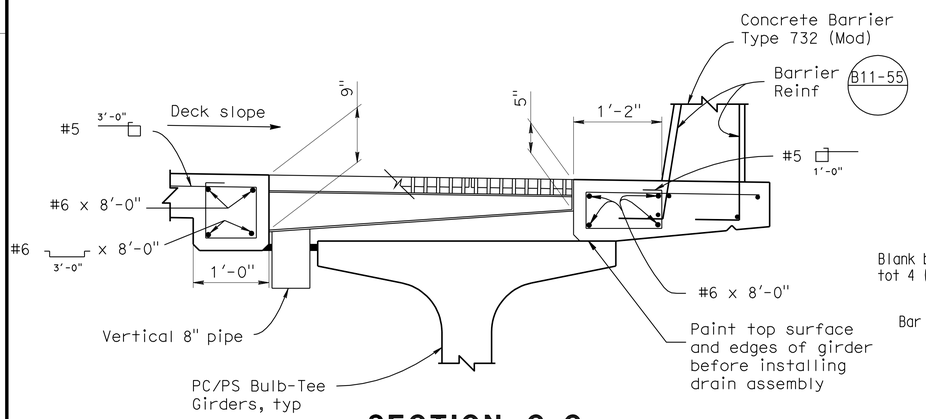

SECTION C-C

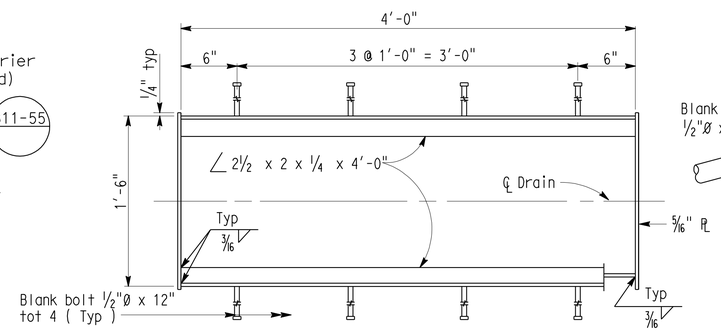

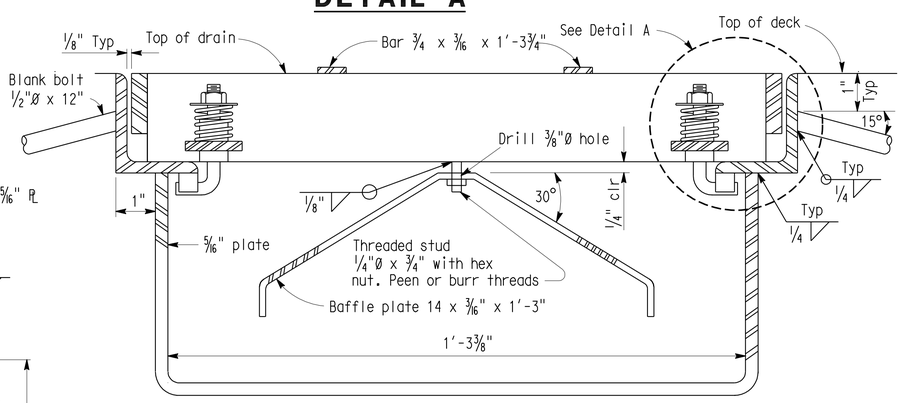

SECTION A-A (FRAME & GRATE)

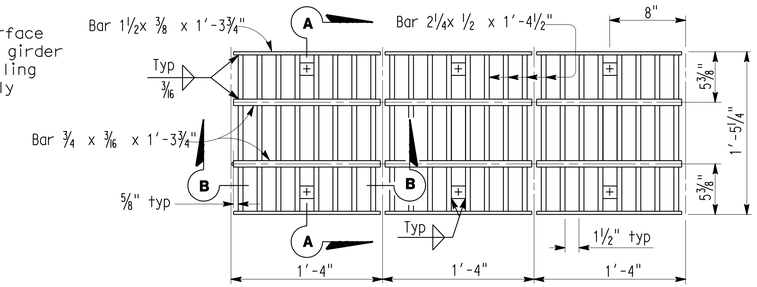

PLAN - FRAME & GRATE

Note: Grating consists of 3 identical units except for baffle plate. Baffle plate is required only for the grate over the 6" Ø pipe

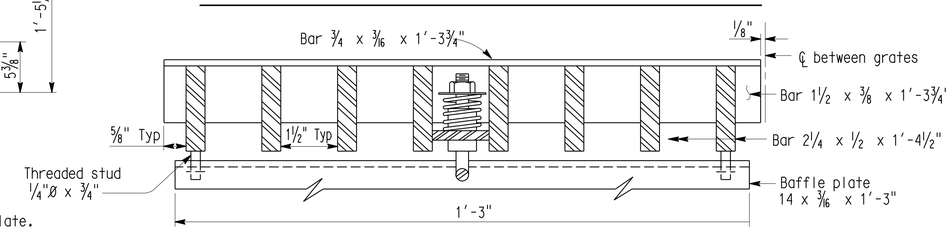

SECTION B-B

NOTE:
THE CONTRACTOR SHALL VERIFY ALL CONTROLLING FIELD DIMENSIONS BEFORE ORDERING OR FABRICATING ANY MATERIAL.

	BY	CHECKED
DESIGN	H. Vu	F. Chen
DETAILS	D. Wooten	F. Chen
QUANTITIES	J. Szabo	A. McPhee

STATE OF CALIFORNIA
DEPARTMENT OF TRANSPORTATION

DIVISION OF ENGINEERING SERVICES
STRUCTURE DESIGN
DESIGN BRANCH 10

BRIDGE NO. 56-0330
POST MILE 17.82

ARLINGTON AVE UC (WIDEN)
DECK DRAIN DETAILS

STRUCTURES DESIGN DETAIL SHEET (ENGLISH) (REV. 10/25/05)

ORIGINAL SCALE IN INCHES FOR REDUCED PLANS 0 1 2 3

CU 08
EA 448401

DISREGARD PRINTS BEARING EARLIER REVISION DATES

REVISION DATES: 6-02-10

SHEET 16 OF 24

FILE => 560330rddet16.dgn

USERNAME => trcarol DATE PLOTTED => 30-APR-2011 TIME PLOTTED => 12:55

DIST.	COUNTY	ROUTE	MILE POST TOTAL PROJECT	SHEET NO.	TOTAL SHEETS
08	Riv	91	15.6/21.6	1700	2028

REGISTERED ENGINEER - CIVIL 11-30-10

4-25-11
PLANS APPROVAL DATE

REGISTERED PROFESSIONAL ENGINEER HUAN VU No. 60696 Exp. 12-31-10 CIVIL STATE OF CALIFORNIA

The State of California or its officers or agents shall not be responsible for the accuracy or completeness of electronic copies of this plan sheet.

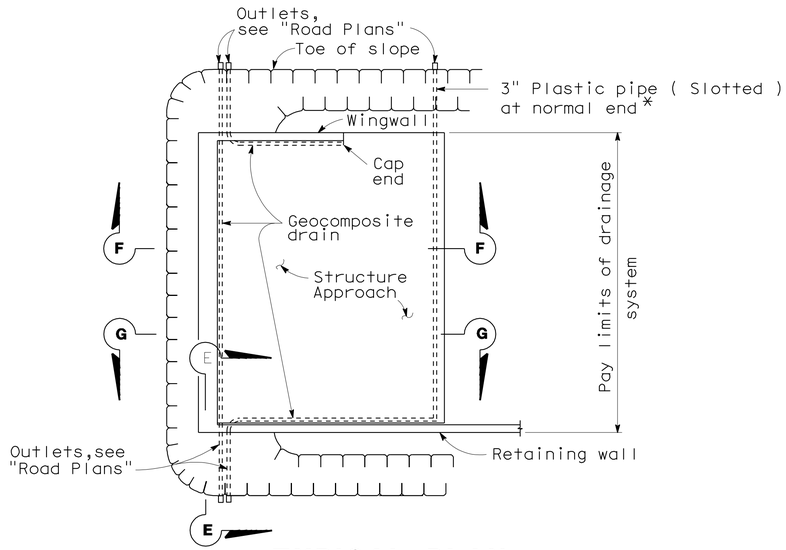

TYPICAL PLAN

1"=10'

*For pipe layout at staggered end,see "Detail B".

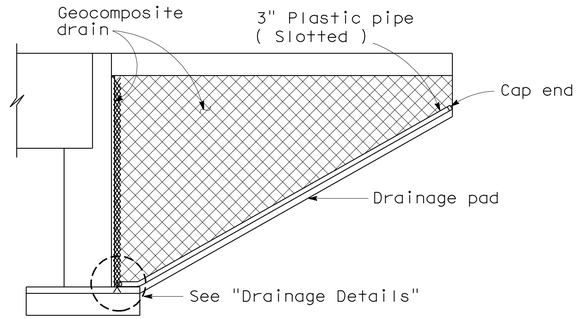

CANTILEVER WINGWALL SECTION F-F

1/4"=1'-0"

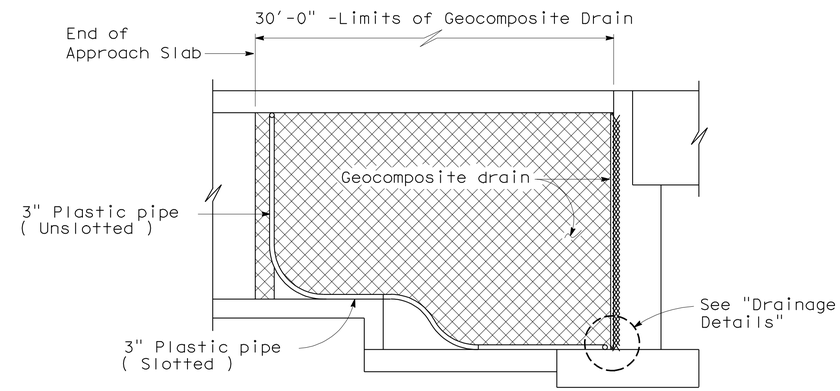

RETAINING WALL WINGWALL SECTION G-G

1/4"=1'-0"

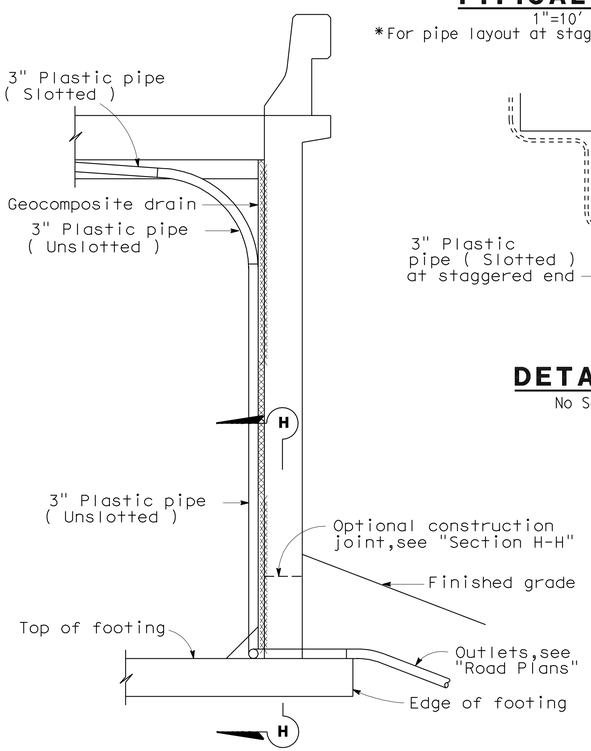

SECTION E-E

1/2"=1'-0"

NOTE: Bends and junctions in 3" plastic pipe are 30" radius min.

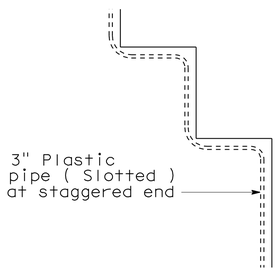

DETAIL B

No Scale

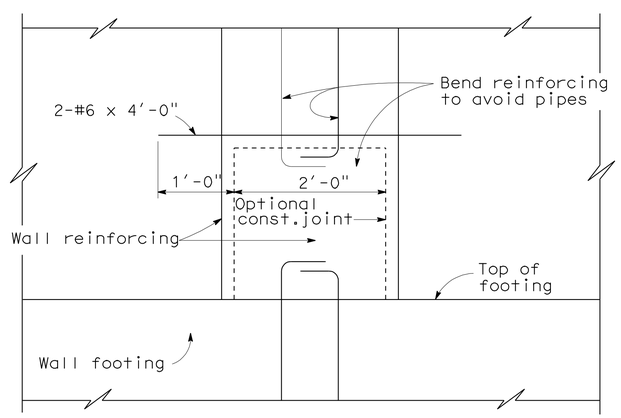

SECTION H-H

1"=1'-0"

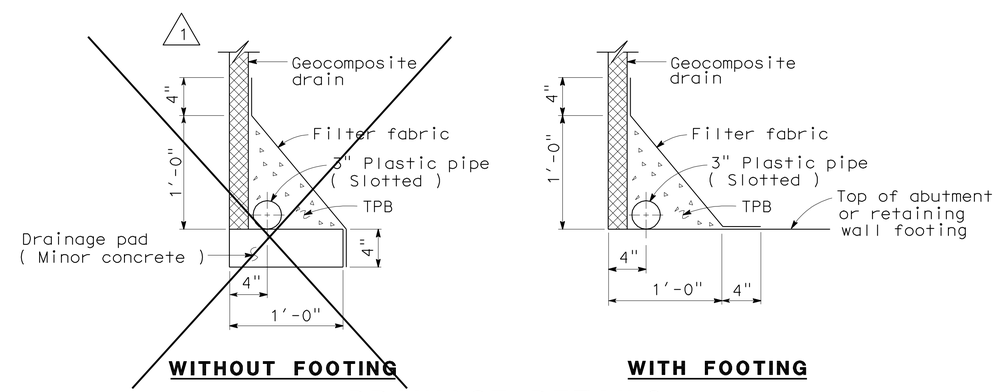

WITHOUT FOOTING

WITH FOOTING

DRAINAGE DETAILS

1 1/2"=1'-0"

STANDARD DRAWING				
RELEASE DATE 4/23/98	DESIGN	BY M.TRAFFALIS	CHECKED E.THORKILDSEN	RELEASED BY
FILE NO. xs3-110e	DETAILS	BY R.YEE	CHECKED E.THORKILDSEN	
	SUBMITTED	BY M.HA	DRAWING DATE 4/98	OFFICE CHIEF

1 Deleted detail

STATE OF CALIFORNIA DEPARTMENT OF TRANSPORTATION

DIVISION OF ENGINEERING SERVICES

BRIDGE NO. 56-0330

MILE POST 17.82

ARLINGTON AVE UC (WIDEN)

STRUCTURE APPROACH DRAINAGE DETAILS

DS OSD 2147A (ENGLISH) (REV. X/XX/XX)

ORIGINAL SCALE IN INCHES FOR REDUCED PLANS 0 1 2 3

CU 08
EA 448401

DISREGARD PRINTS BEARING EARLIER REVISION DATES 2-26-10

REVISION DATES (PRELIMINARY STAGE ONLY)

SHEET 17 OF 24

USERNAME => trcarol

560330ssadd17.dgn

DATE PLOTTED => 30-APR-2011 TIME PLOTTED => 12:55