Dist	COUNTY	ROUTE	POST MILES TOTAL PROJECT	SHEET No.	TOTAL SHEETS
08	Riv	91	15.6/21.6	101	2028

REGISTERED CIVIL ENGINEER 12-1-10 DATE

4-25-11
PLANS APPROVAL DATE

REGISTERED PROFESSIONAL ENGINEER CUONG LE TRAN No. C60436 Exp. 6/30/12 CIVIL STATE OF CALIFORNIA

THE STATE OF CALIFORNIA OR ITS OFFICERS OR AGENTS SHALL NOT BE RESPONSIBLE FOR THE ACCURACY OR COMPLETENESS OF SCANNED COPIES OF THIS PLAN SHEET.

NOTE:

FOR ACCURATE RIGHT OF WAY AND ACCESS DATA,
CONTACT RIGHT OF WAY ENGINEERING AT THE DISTRICT OFFICE.

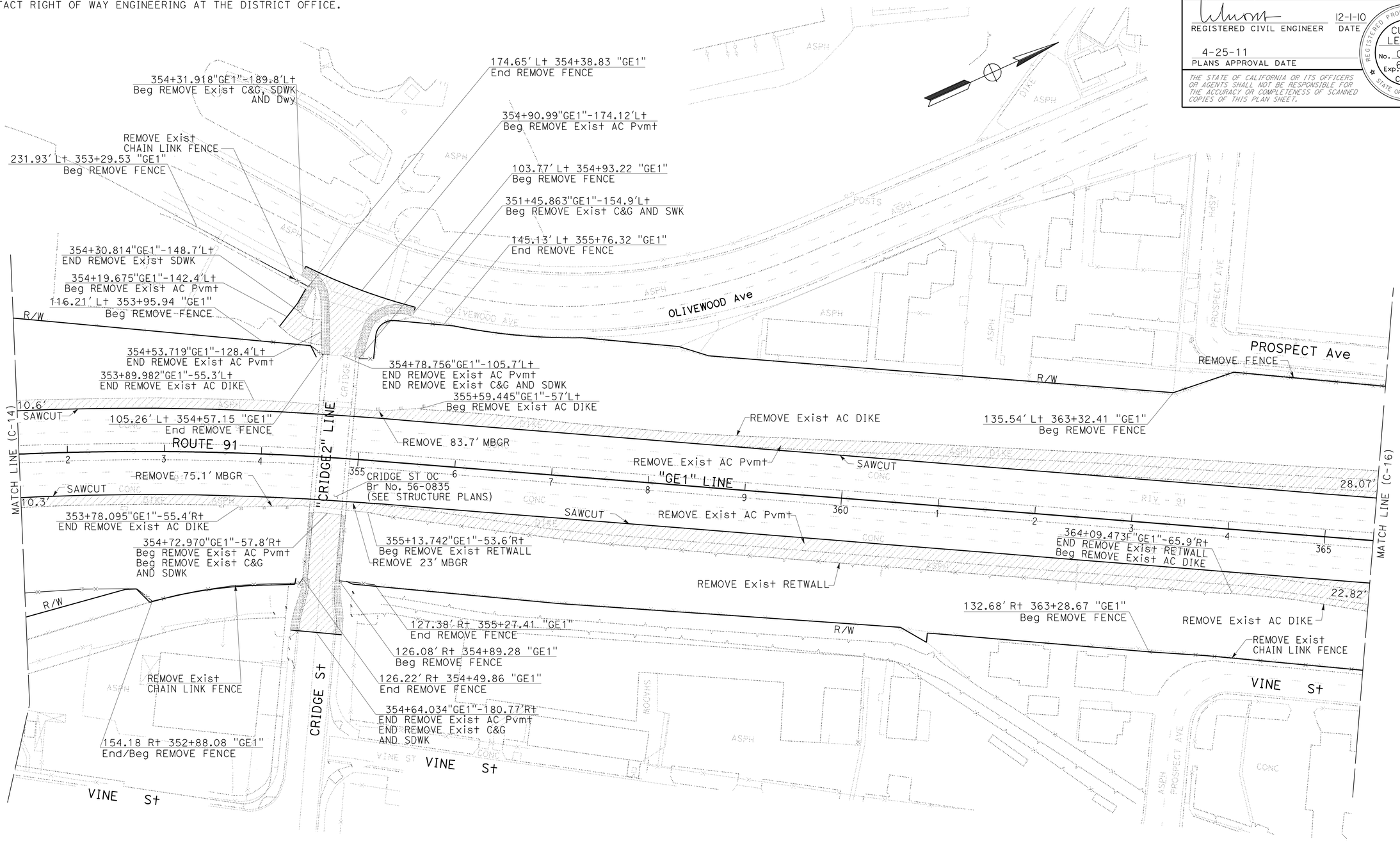

CONSTRUCTION DETAILS
(REMOVALS)

SCALE: 1" = 50'

C-15

STATE OF CALIFORNIA - DEPARTMENT OF TRANSPORTATION
Caltrans
DESIGN

FUNCTIONAL SUPERVISOR: MARK PERTILE
CALCULATED-DESIGNED BY: CUONG LE TRAN
CHECKED BY: ANNABELL WANG
REVISED BY
DATE REVISED

LAST REVISION 12-01-10
DATE PLOTTED => 29-APR-2011
TIME PLOTTED => 18:28

Dist	COUNTY	ROUTE	POST MILES TOTAL PROJECT	SHEET No.	TOTAL SHEETS
08	Riv	91	15.6/21.6	102	2028

REGISTERED CIVIL ENGINEER 12-1-10 DATE

4-25-11
PLANS APPROVAL DATE

REGISTERED PROFESSIONAL ENGINEER CUONG LE TRAN No. C60436 Exp. 6/30/12 CIVIL STATE OF CALIFORNIA

THE STATE OF CALIFORNIA OR ITS OFFICERS OR AGENTS SHALL NOT BE RESPONSIBLE FOR THE ACCURACY OR COMPLETENESS OF SCANNED COPIES OF THIS PLAN SHEET.

NOTE:

FOR ACCURATE RIGHT OF WAY AND ACCESS DATA, CONTACT RIGHT OF WAY ENGINEERING AT THE DISTRICT OFFICE.

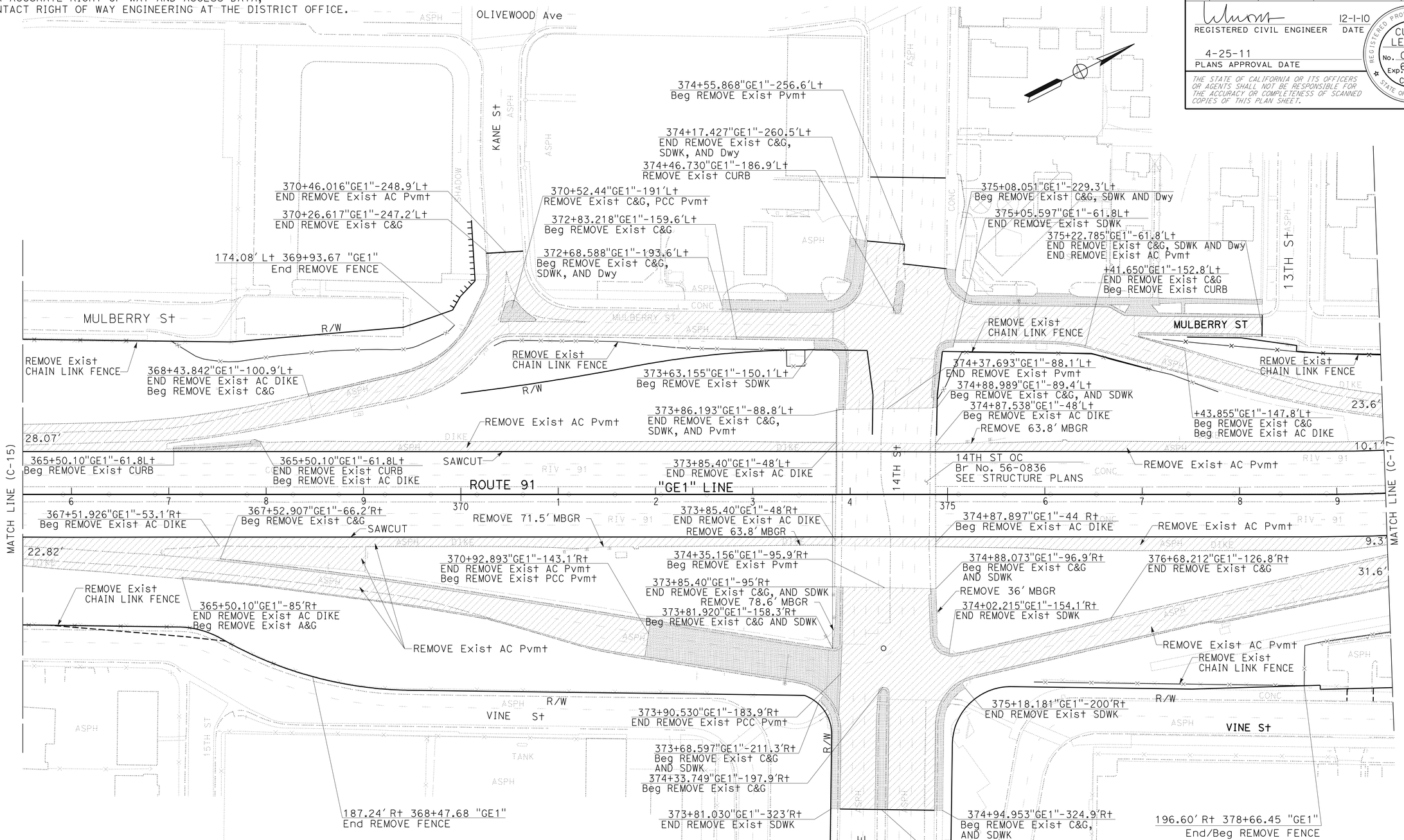

CONSTRUCTION DETAILS
(REMOVALS)

SCALE: 1" = 50'

C-16

STATE OF CALIFORNIA - DEPARTMENT OF TRANSPORTATION
Caltrans® DESIGN

FUNCTIONAL SUPERVISOR: MARK PERTILE
CALCULATED-DESIGNED BY: ANNABELL WANG
CHECKED BY: CUONG LE TRAN
REVISED BY
DATE REVISED

LAST REVISION 12-01-10 | DATE PLOTTED => 29-APR-2011 | TIME PLOTTED => 18:28

Dist	COUNTY	ROUTE	POST MILES TOTAL PROJECT	SHEET No.	TOTAL SHEETS
08	Riv	91	15.6/21.6	103	2028

REGISTERED CIVIL ENGINEER 12-1-10 DATE

4-25-11
PLANS APPROVAL DATE

REGISTERED PROFESSIONAL ENGINEER CUONG LE TRAN No. C60436 Exp. 6/30/12 CIVIL STATE OF CALIFORNIA

THE STATE OF CALIFORNIA OR ITS OFFICERS OR AGENTS SHALL NOT BE RESPONSIBLE FOR THE ACCURACY OR COMPLETENESS OF SCANNED COPIES OF THIS PLAN SHEET.

NOTE:

FOR ACCURATE RIGHT OF WAY AND ACCESS DATA,
CONTACT RIGHT OF WAY ENGINEERING AT THE DISTRICT OFFICE.

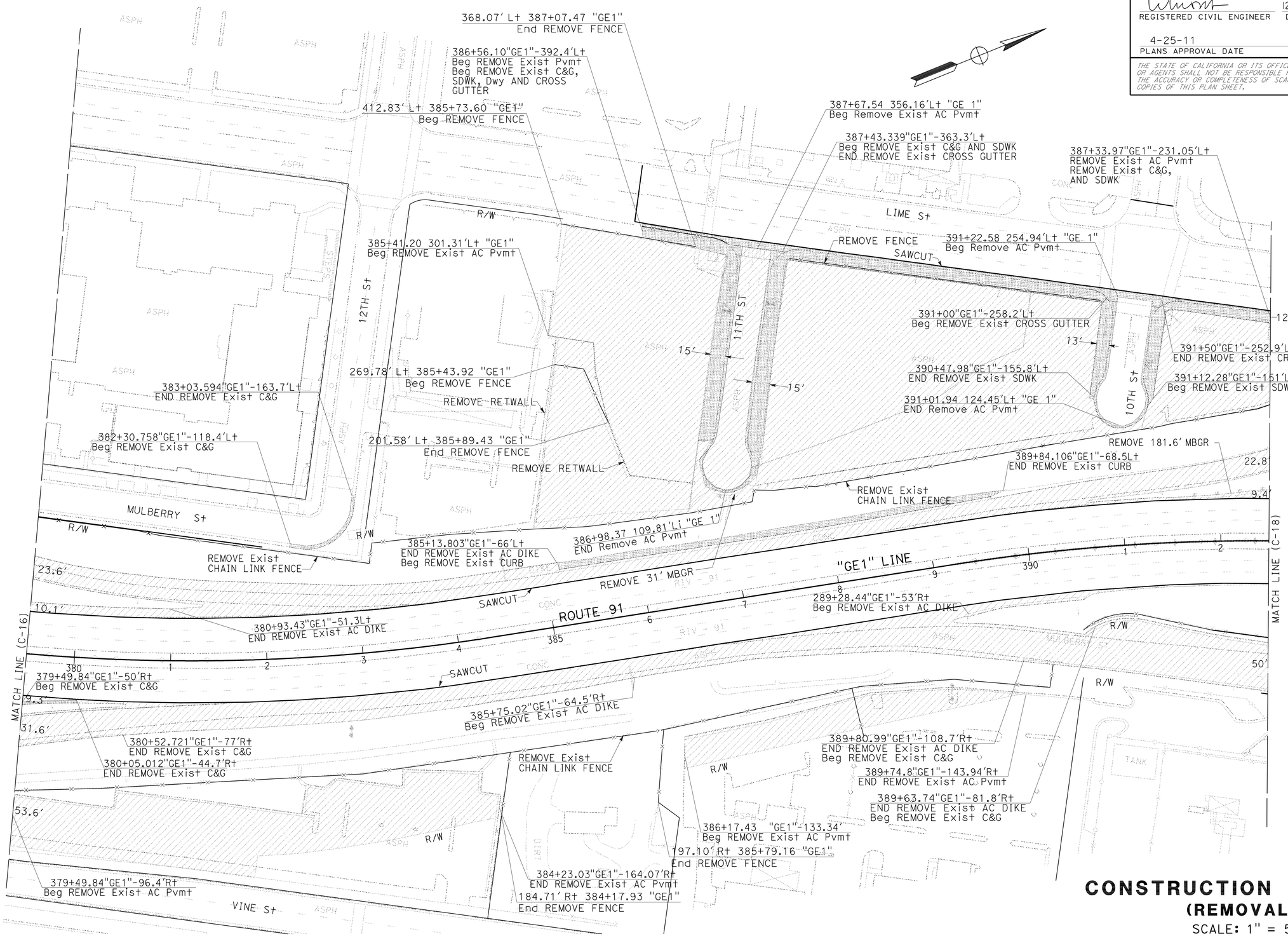

CONSTRUCTION DETAILS
(REMOVALS)

SCALE: 1" = 50'

C-17

STATE OF CALIFORNIA - DEPARTMENT OF TRANSPORTATION
Caltrans® DESIGN

FUNCTIONAL SUPERVISOR: MARK PERTILE
CALCULATED-DESIGNED BY: CUONG LE TRAN
CHECKED BY: ANNABELL WANG
REVISED BY
DATE REVISED

LAST REVISION 12-01-10
DATE PLOTTED => 29-APR-2011
TIME PLOTTED => 18:28

Dist	COUNTY	ROUTE	POST MILES TOTAL PROJECT	SHEET No.	TOTAL SHEETS
08	Riv	91	15.6/21.6	104	2028

REGISTERED CIVIL ENGINEER 12-1-10 DATE

4-25-11
PLANS APPROVAL DATE

REGISTERED PROFESSIONAL ENGINEER CUONG LE TRAN No. C60436 Exp. 6/30/12 CIVIL STATE OF CALIFORNIA

THE STATE OF CALIFORNIA OR ITS OFFICERS OR AGENTS SHALL NOT BE RESPONSIBLE FOR THE ACCURACY OR COMPLETENESS OF SCANNED COPIES OF THIS PLAN SHEET.

NOTE:

FOR ACCURATE RIGHT OF WAY AND ACCESS DATA, CONTACT RIGHT OF WAY ENGINEERING AT THE DISTRICT OFFICE.

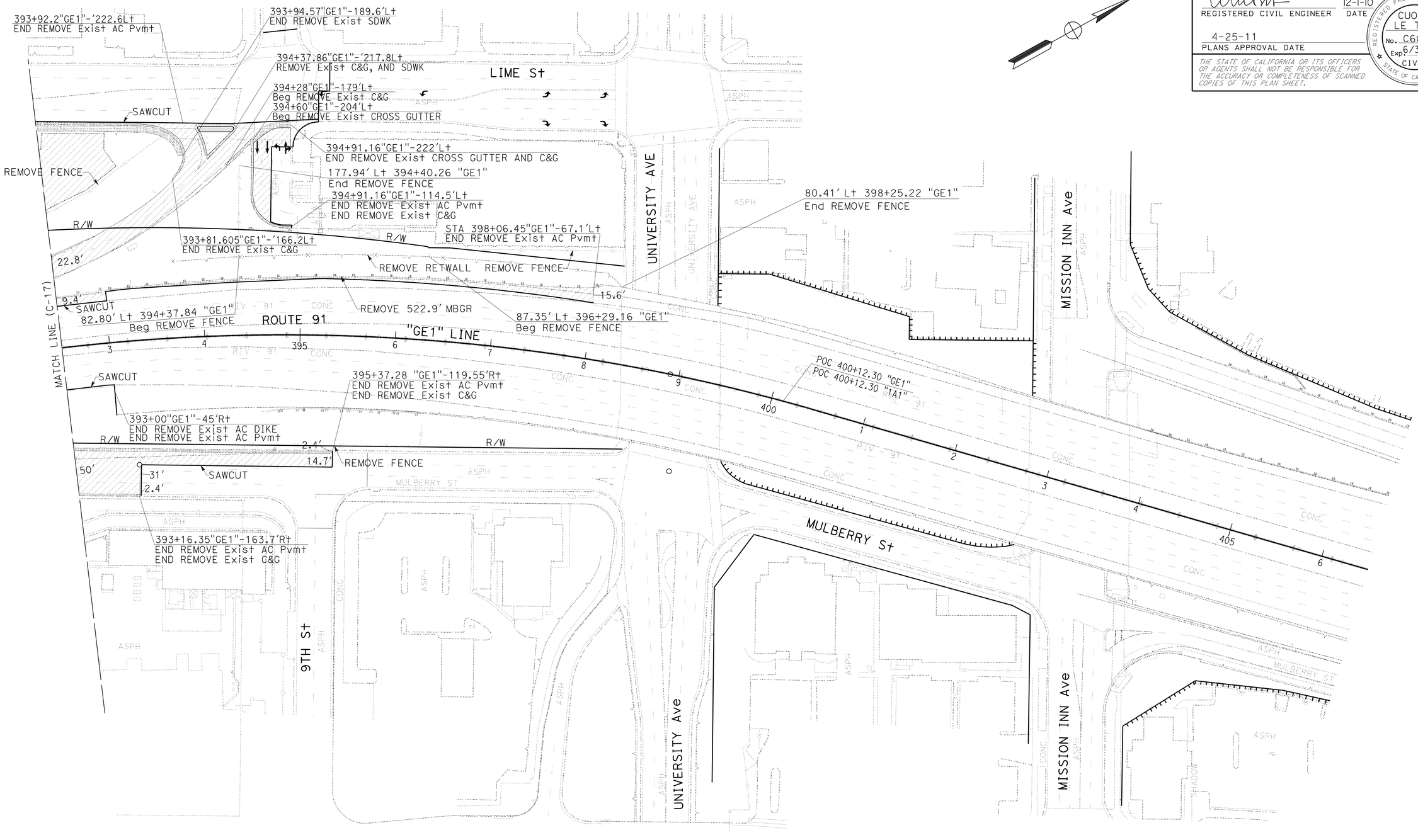

CONSTRUCTION DETAILS
(REMOVALS)

SCALE: 1" = 50'

C-18

REVISED BY	DATE REVISED
CUONG LE TRAN	ANNABELL WANG
CALCULATED-DESIGNED BY	CHECKED BY
FUNCTIONAL SUPERVISOR	MARK PERTILE

STATE OF CALIFORNIA - DEPARTMENT OF TRANSPORTATION

Caltrans

DESIGN

LAST REVISION 12-01-10 | DATE PLOTTED => 29-APR-2011 | TIME PLOTTED => 18:28

Dist	COUNTY	ROUTE	POST MILES TOTAL PROJECT	SHEET No.	TOTAL SHEETS
08	Riv	91	15.6/21.6	105	2028

REGISTERED CIVIL ENGINEER 12-1-10 DATE

4-25-11
PLANS APPROVAL DATE

REGISTERED PROFESSIONAL ENGINEER THOMAS HIEN NGO No. 68383 Exp. 9/30/11 CIVIL STATE OF CALIFORNIA

THE STATE OF CALIFORNIA OR ITS OFFICERS OR AGENTS SHALL NOT BE RESPONSIBLE FOR THE ACCURACY OR COMPLETENESS OF SCANNED COPIES OF THIS PLAN SHEET.

NOTE: FOR COMPLETE RIGHT OF WAY AND ACCURATE ACCESS DATA, SEE RIGHT OF WAY RECORD MAPS AT DISTRICT OFFICE.

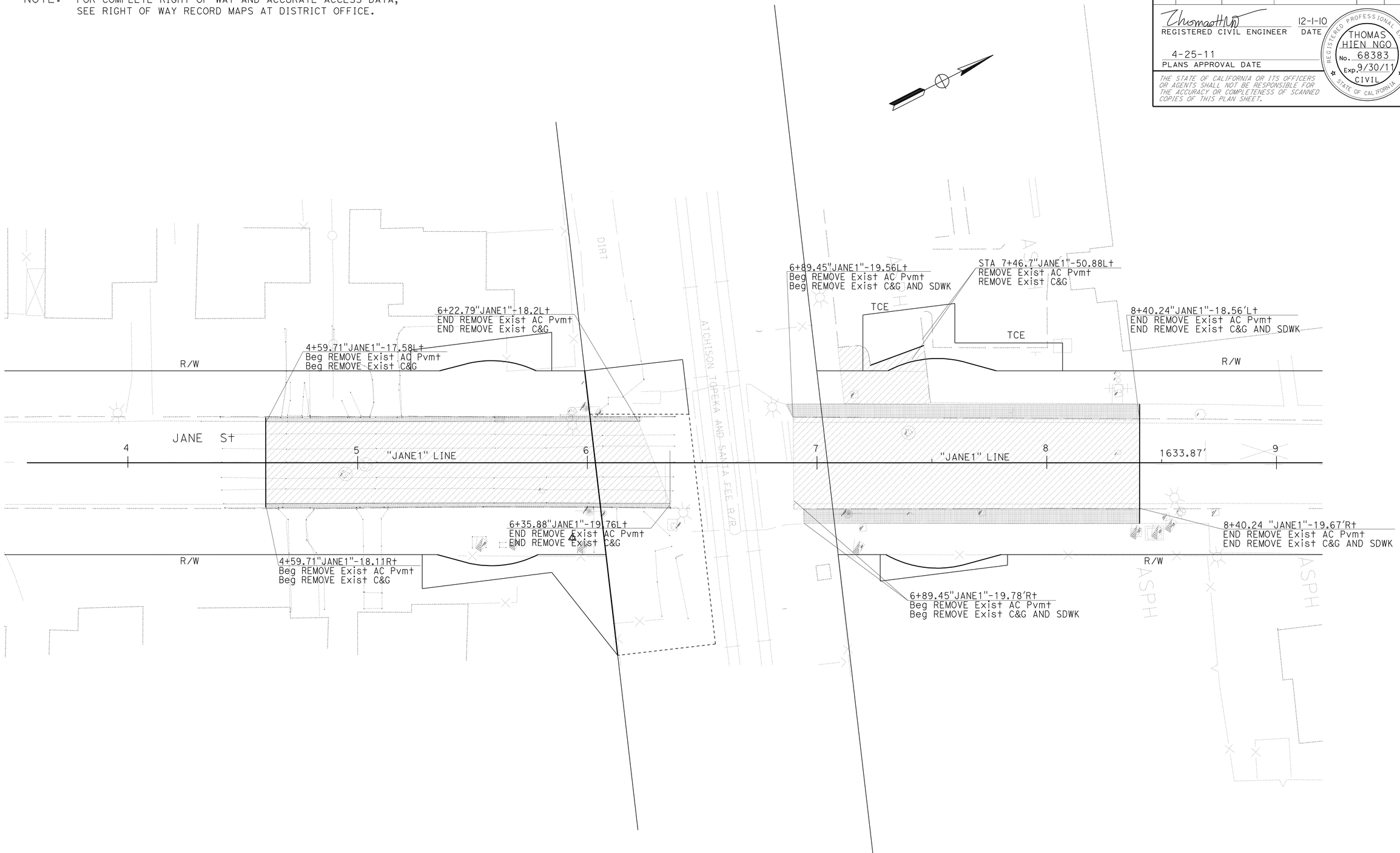

CONSTRUCTION DETAILS
(REMOVALS)
SCALE: 1" = 20'

C-19

REVISED BY	DATE REVISED
THAI VAN HGUYEN	THOMAS HIEN NGO

CALCULATED-DESIGNED BY / CHECKED BY

FUNCTIONAL SUPERVISOR: MARK PERTILE

STATE OF CALIFORNIA - DEPARTMENT OF TRANSPORTATION

Caltrans® DESIGN

LAST REVISION 12-01-10 | DATE PLOTTED => 29-APR-2011 | TIME PLOTTED => 18:28

Dist	COUNTY	ROUTE	POST MILES TOTAL PROJECT	SHEET No.	TOTAL SHEETS
08	Riv	91	15.6/21.6	106	2028

REGISTERED CIVIL ENGINEER 4-21-11 DATE

4-25-11
PLANS APPROVAL DATE

REGISTERED PROFESSIONAL ENGINEER CUONG LE TRAN No. C60436 Exp. 6/30/12 CIVIL STATE OF CALIFORNIA

THE STATE OF CALIFORNIA OR ITS OFFICERS OR AGENTS SHALL NOT BE RESPONSIBLE FOR THE ACCURACY OR COMPLETENESS OF SCANNED COPIES OF THIS PLAN SHEET.

NOTE:

FOR ACCURATE RIGHT OF WAY AND ACCESS DATA,
CONTACT RIGHT OF WAY ENGINEERING AT THE DISTRICT OFFICE.

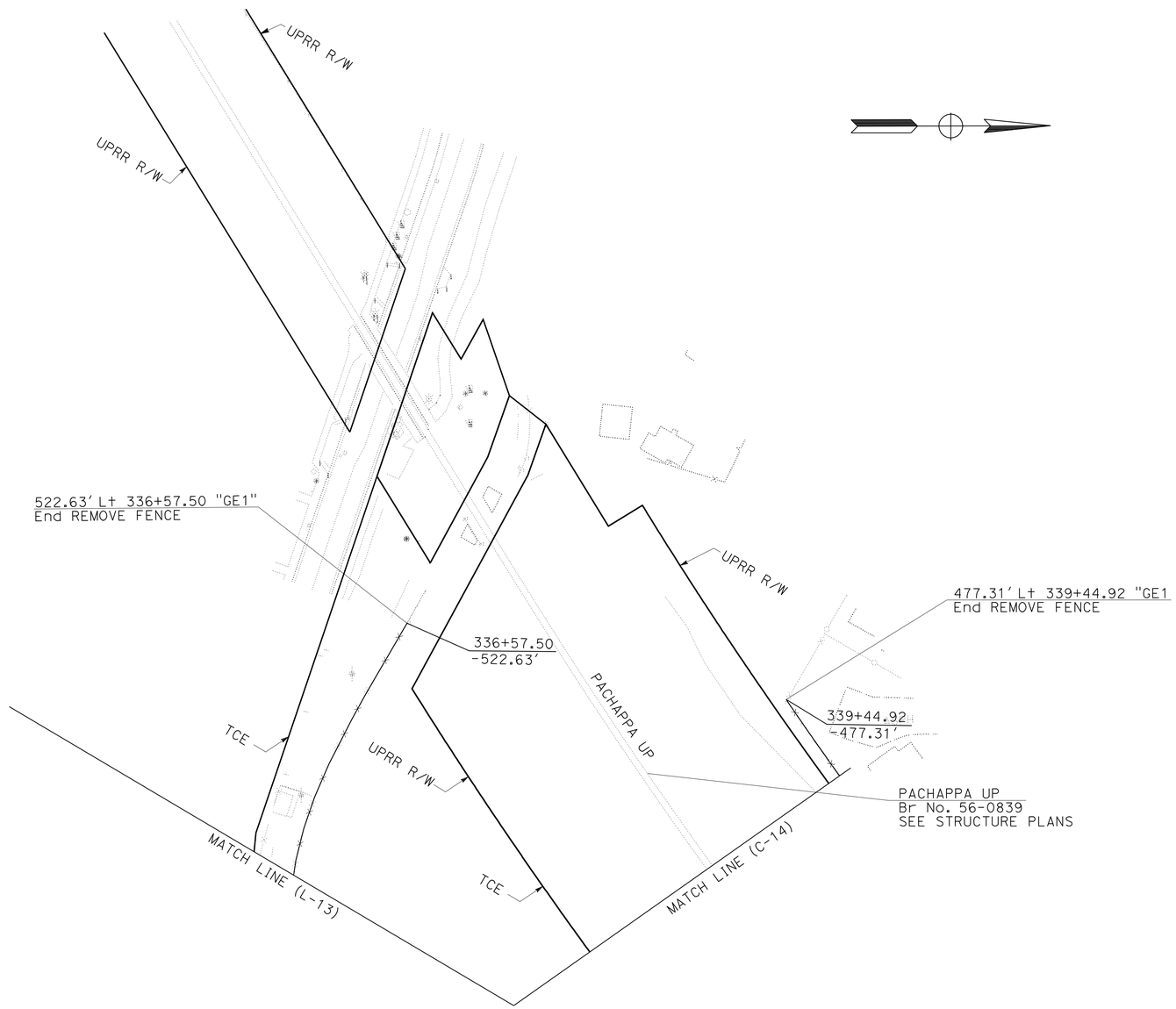

CONSTRUCTION DETAILS
(REMOVALS)

SCALE: 1" = 50'

C-20

STATE OF CALIFORNIA - DEPARTMENT OF TRANSPORTATION
Caltrans
DESIGN

FUNCTIONAL SUPERVISOR: MARK PERTILE
CALCULATED-DESIGNED BY: CUONG LE TRAN
CHECKED BY: ANNABELL WANG
REVISED BY
DATE REVISED

LAST REVISION 04-21-11
DATE PLOTTED => 04-MAY-2011
TIME PLOTTED => 11:07

Dist	COUNTY	ROUTE	POST MILES TOTAL PROJECT	SHEET No.	TOTAL SHEETS
08	Riv	91	15.6/21.6	107	2028

REGISTERED CIVIL ENGINEER — DATE 12-1-10

4-25-11
PLANS APPROVAL DATE

REGISTERED PROFESSIONAL ENGINEER — THOMAS HIEN NGO No. 68383 Exp. 9/30/11 CIVIL — STATE OF CALIFORNIA

THE STATE OF CALIFORNIA OR ITS OFFICERS OR AGENTS SHALL NOT BE RESPONSIBLE FOR THE ACCURACY OR COMPLETENESS OF SCANNED COPIES OF THIS PLAN SHEET.

CONSTRUCTION NOTES:

4 CONSTRUCT SIDEWALK, PROPERTY LINE SIDEWALK, SEE SHEET C-81

* HMA-A HOT MIX ASPHALT (TYPE A) PAVEMENT
* CP1 COLD PLANE 2" AC AND PLACE 2" HMA-A
* CP2 COLD PLANE 2" AC AND PLACE Var HMA-A

* FOR CONSTRUCTION DETAILS SHEET C-21 THRU C-50 ONLY

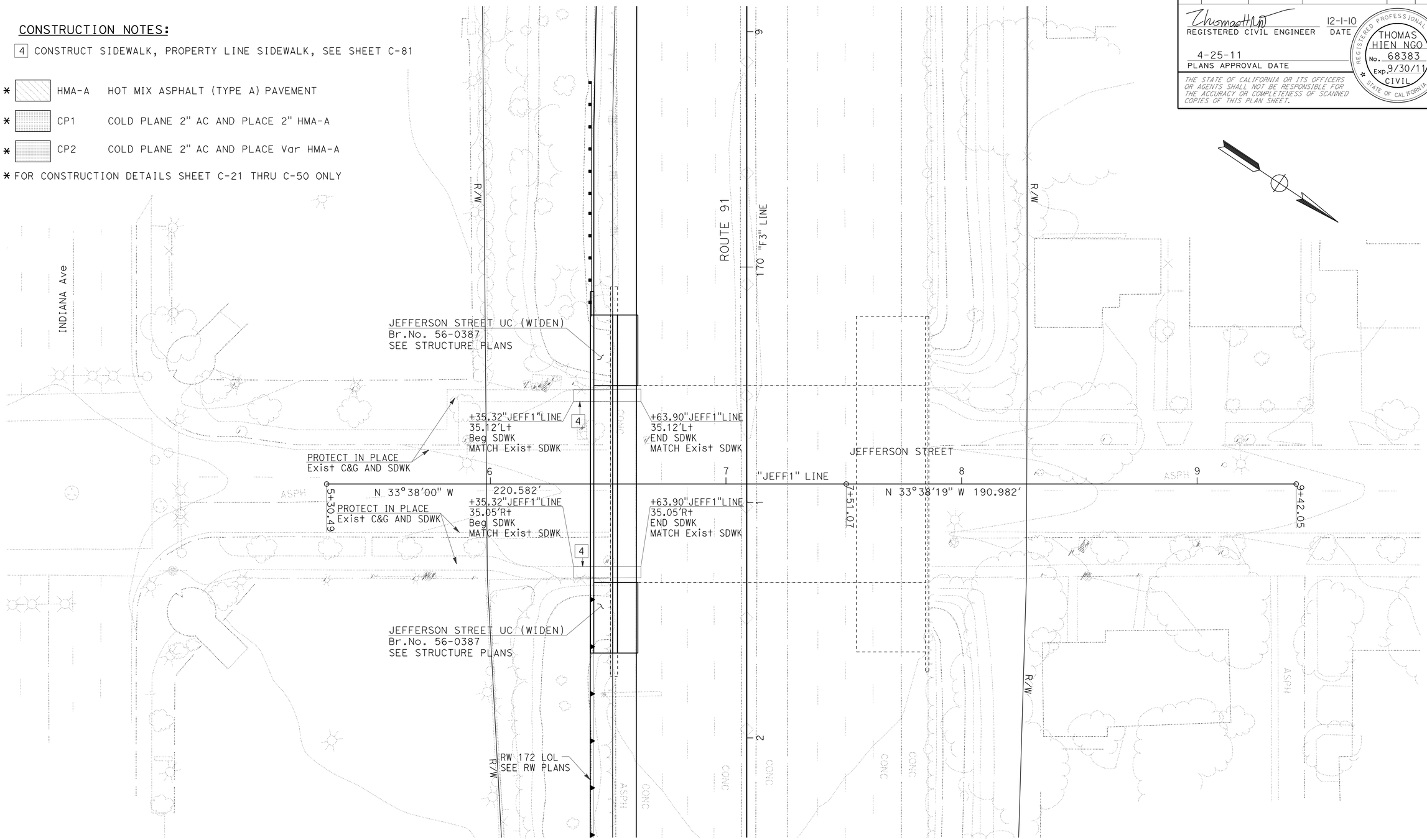

JEFFERSON STREET IMPROVEMENTS

CONSTRUCTION DETAILS

SCALE: 1" = 20'

C-21

NOTE:

FOR ACCURATE RIGHT OF WAY AND ACCESS DATA, CONTACT RIGHT OF WAY ENGINEERING AT THE DISTRICT OFFICE.

STATE OF CALIFORNIA - DEPARTMENT OF TRANSPORTATION
Caltrans
DESIGN

FUNCTIONAL SUPERVISOR: MARK PERTILE
CALCULATED-DESIGNED BY: THAI VAN HGUYEN
CHECKED BY: THOMAS HIEN NGO
REVISED BY
DATE REVISED

LAST REVISION 12-01-10
DATE PLOTTED => 29-APR-2011
TIME PLOTTED => 18:29

Dist	COUNTY	ROUTE	POST MILES TOTAL PROJECT	SHEET No.	TOTAL SHEETS
08	Riv	91	15.6/21.6	108	2028

REGISTERED CIVIL ENGINEER 12-1-10 DATE

4-25-11
PLANS APPROVAL DATE

REGISTERED PROFESSIONAL ENGINEER THOMAS HIEN NGO No. 68383 Exp. 9/30/11 CIVIL STATE OF CALIFORNIA

THE STATE OF CALIFORNIA OR ITS OFFICERS OR AGENTS SHALL NOT BE RESPONSIBLE FOR THE ACCURACY OR COMPLETENESS OF SCANNED COPIES OF THIS PLAN SHEET.

CONSTRUCTION NOTES:

1. CONSTRUCT CURB RAMP CASE A, SEE Std PLAN A88A
5. CONSTRUCT SIDEWALK, CURB SIDEWALK, SEE SHEET C-81
9. CONSTRUCT CROSS GUTTER, SEE SHEET C-87
11. CONSTRUCT CURB AND DIKE TRANSITION, SEE SHEET C-82

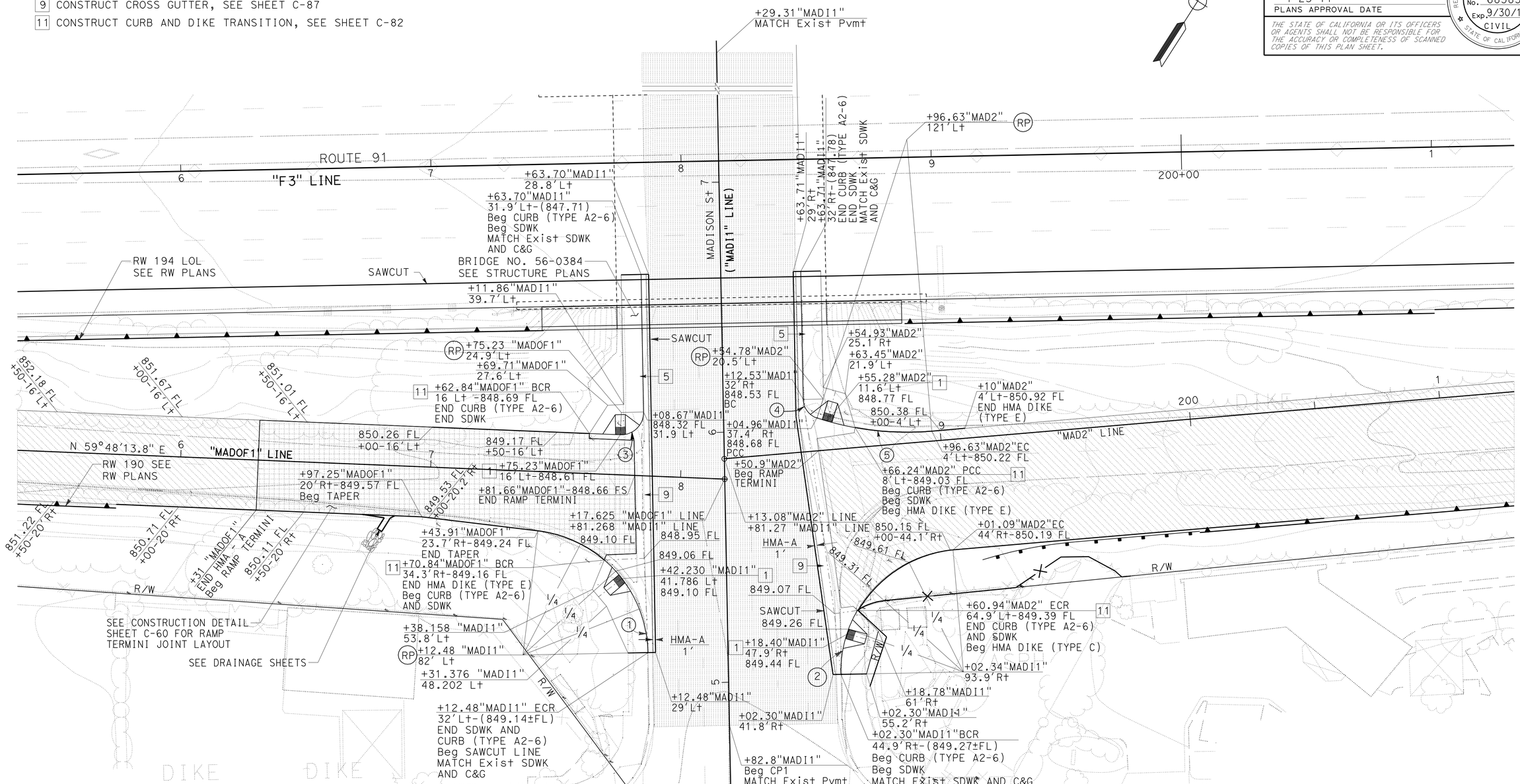

CURVE DATA

No.	R	Δ	T	L
1	50.00'	81°59'42"	43.46'	71.55'
2	49.00'	86°17'31"	45.93'	73.80'
3	8.92'	93°19'41"	9.46'	14.54'
4	8.00'	71°04'50"	5.71'	9.92'
5	117.00'	22°45'12"	23.54'	46.46'

NOTE:

FOR ACCURATE RIGHT OF WAY AND ACCESS DATA, CONTACT RIGHT OF WAY ENGINEERING AT THE DISTRICT OFFICE.

MADISON STREET IMPROVEMENTS

CONSTRUCTION DETAILS

SCALE: 1" = 20'

C-22

STATE OF CALIFORNIA - DEPARTMENT OF TRANSPORTATION
DESIGN
Caltrans
FUNCTIONAL SUPERVISOR: MARK PERTILE
CALCULATED-DESIGNED BY: THOMAS HIEN NGO
CHECKED BY: THAI VAN HGUYEN
REVISED BY
DATE REVISED

LAST REVISION 12-01-10
DATE PLOTTED => 29-APR-2011
TIME PLOTTED => 18:29

Dist	COUNTY	ROUTE	POST MILES TOTAL PROJECT	SHEET No.	TOTAL SHEETS
08	Riv	91	15.6/21.6	109	2028

REGISTERED CIVIL ENGINEER 12-1-10 DATE

4-25-11
PLANS APPROVAL DATE

REGISTERED PROFESSIONAL ENGINEER THOMAS HIEN NGO No. 68383 Exp. 9/30/11 CIVIL STATE OF CALIFORNIA

THE STATE OF CALIFORNIA OR ITS OFFICERS OR AGENTS SHALL NOT BE RESPONSIBLE FOR THE ACCURACY OR COMPLETENESS OF SCANNED COPIES OF THIS PLAN SHEET.

CONSTRUCTION NOTES:

5 CONSTRUCT SIDEWALK, CURB SIDEWALK, SEE SHEET C-81

10 CONSTRUCT PCC CURB AND GUTTER, SEE SHEET C-88

BROCKTON AVENUE IMPROVEMENTS

CONSTRUCTION DETAILS

SCALE: 1" = 20'

C-23

NOTE:

FOR ACCURATE RIGHT OF WAY AND ACCESS DATA, CONTACT RIGHT OF WAY ENGINEERING AT THE DISTRICT OFFICE.

STATE OF CALIFORNIA - DEPARTMENT OF TRANSPORTATION

Caltrans DESIGN

FUNCTIONAL SUPERVISOR: MARK PERTILE

CALCULATED-DESIGNED BY: THAI VAN HGUYEN

CHECKED BY: THOMAS HIEN NGO

REVISED BY / DATE REVISED

LAST REVISION 12-01-10

DATE PLOTTED => 29-APR-2011

TIME PLOTTED => 18:29

Dist	COUNTY	ROUTE	POST MILES TOTAL PROJECT	SHEET No.	TOTAL SHEETS
08	Riv	91	15.6/21.6	110	2028

REGISTERED CIVIL ENGINEER — DATE 1-26-11

4-25-11
PLANS APPROVAL DATE

REGISTERED PROFESSIONAL ENGINEER — THOMAS HIEN NGO — No. 68383 — Exp. 9/30/11 — CIVIL — STATE OF CALIFORNIA

THE STATE OF CALIFORNIA OR ITS OFFICERS OR AGENTS SHALL NOT BE RESPONSIBLE FOR THE ACCURACY OR COMPLETENESS OF SCANNED COPIES OF THIS PLAN SHEET.

CONSTRUCTION NOTES:

1. CONSTRUCT CURB RAMP CASE A, SEE Std PLAN A88A
5. CONSTRUCT SIDEWALK, CURB SIDEWALK, SEE SHEET C-81
9. CONSTRUCT CROSS GUTTER, SEE SHEET C-87
11. CONSTRUCT CURB AND DIKE TRANSITION, SEE SHEET C-82
17. CONSTRUCT CURB RAMP AND ISLAND PASSAGEWAY DETAILS TYPE C, SEE Std PLAN A88B

CURVE DATA

No.	R	Δ	T	L
1	45.00′	130°26′19"	97.47′	102.45′
2	3.00′	138°11′03"	7.85′	7.24′
3	63.65′	35°49′20"	20.57′	39.79′
4	3.00′	128°38′29"	6.24′	6.74′
5	3.00′	135°45′56"	7.38′	7.11′
6	16.00′	44°14′06"	6.50′	12.35′
7	43.00′	125°33′53"	83.61′	94.24′
8	265.00′	28°16′48"	66.76′	130.80′
9	156.00′	22°6′39"	30.48′	60.20′

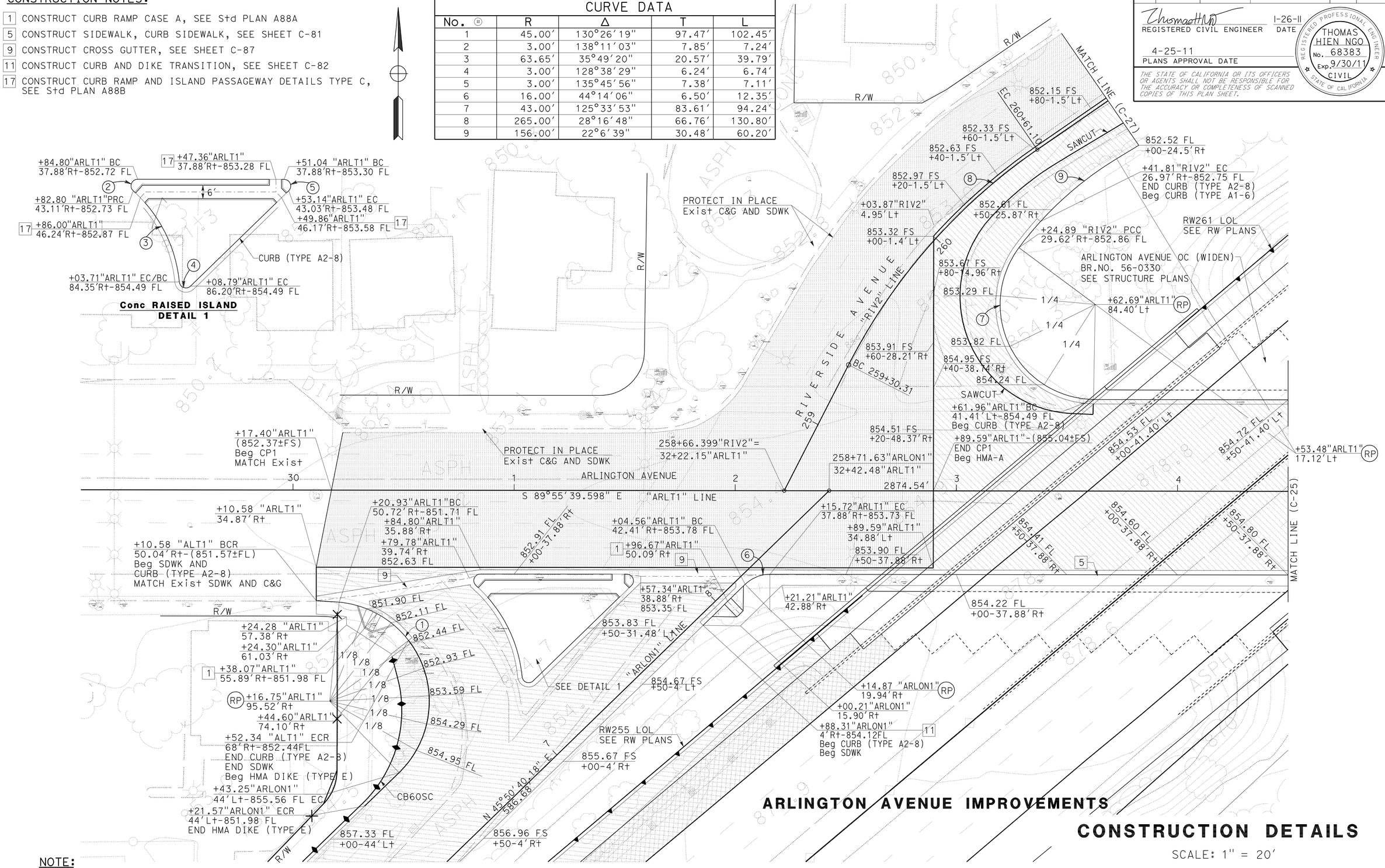

NOTE:

FOR ACCURATE RIGHT OF WAY AND ACCESS DATA, CONTACT RIGHT OF WAY ENGINEERING AT THE DISTRICT OFFICE.

C-24

STATE OF CALIFORNIA - DEPARTMENT OF TRANSPORTATION
Caltrans DESIGN
FUNCTIONAL SUPERVISOR: MARK PERTILE
CALCULATED-DESIGNED BY: THOMAS HIEN NGO
CHECKED BY: THAI VAN HGUYEN
REVISED BY / DATE REVISED

LAST REVISION 01-26-11
DATE PLOTTED => 29-APR-2011
TIME PLOTTED => 18:29

Dist	COUNTY	ROUTE	POST MILES TOTAL PROJECT	SHEET No.	TOTAL SHEETS
08	Riv	91	15.6/21.6	111	2028

REGISTERED CIVIL ENGINEER — DATE 12-1-10

4-25-11
PLANS APPROVAL DATE

REGISTERED PROFESSIONAL ENGINEER — THOMAS HIEN NGO No. 68383 Exp. 9/30/11 CIVIL — STATE OF CALIFORNIA

THE STATE OF CALIFORNIA OR ITS OFFICERS OR AGENTS SHALL NOT BE RESPONSIBLE FOR THE ACCURACY OR COMPLETENESS OF SCANNED COPIES OF THIS PLAN SHEET.

CONSTRUCTION NOTES:

1. CONSTRUCT CURB RAMP CASE A, SEE Std PLAN A88A
5. CONSTRUCT SIDEWALK, CURB SIDEWALK, SEE SHEET C-81
6. CONSTRUCT DRIVEWAY APPROACH, TYPE CURB I, SEE SHEET C-77
11. CONSTRUCT CURB AND DIKE TRANSITION, SEE SHEET C-82
13. CONSTRUCT WHEELCHAIR RAMP TYPE I, SEE SHEET C-83

PROTECT IN PLACE Exist RCB CHANNEL SHALLOW DEPTH

CURVE DATA

No.	R	Δ	T	L
1	120.00′	9°20′25"	9.80′	19.56′
2	120.00′	10°32′46"	11.08′	22.09′
3	43.75′	16°54′21"	6.50′	12.91′
4	49.00′	87°45′33"	47.12′	75.05′
5	82.00′	22°22′52"	16.22′	32.03′
6	134.00′	10°44′28"	12.60′	25.12′
7	47.00′	87°25′21"	44.93′	71.71′
8	10.00′	130°16′19"	21.58′	22.74′
9	0.90′	180°0′00"	-	2.83′
10	112.27′	15°13′03"	15.00′	29.82′
11	130.41′	13°18′15"	15.21′	30.28′
12	42.50′	10°48′52"	4.02′	8.02′
13	108.00′	12°18′51"	11.65′	23.21′
14	141.81′	12°32′57"	15.59′	31.06′
15	161.85′	10°42′50"	15.18′	30.26′
16	55.00′	130°50′04"	120.23′	125.59′

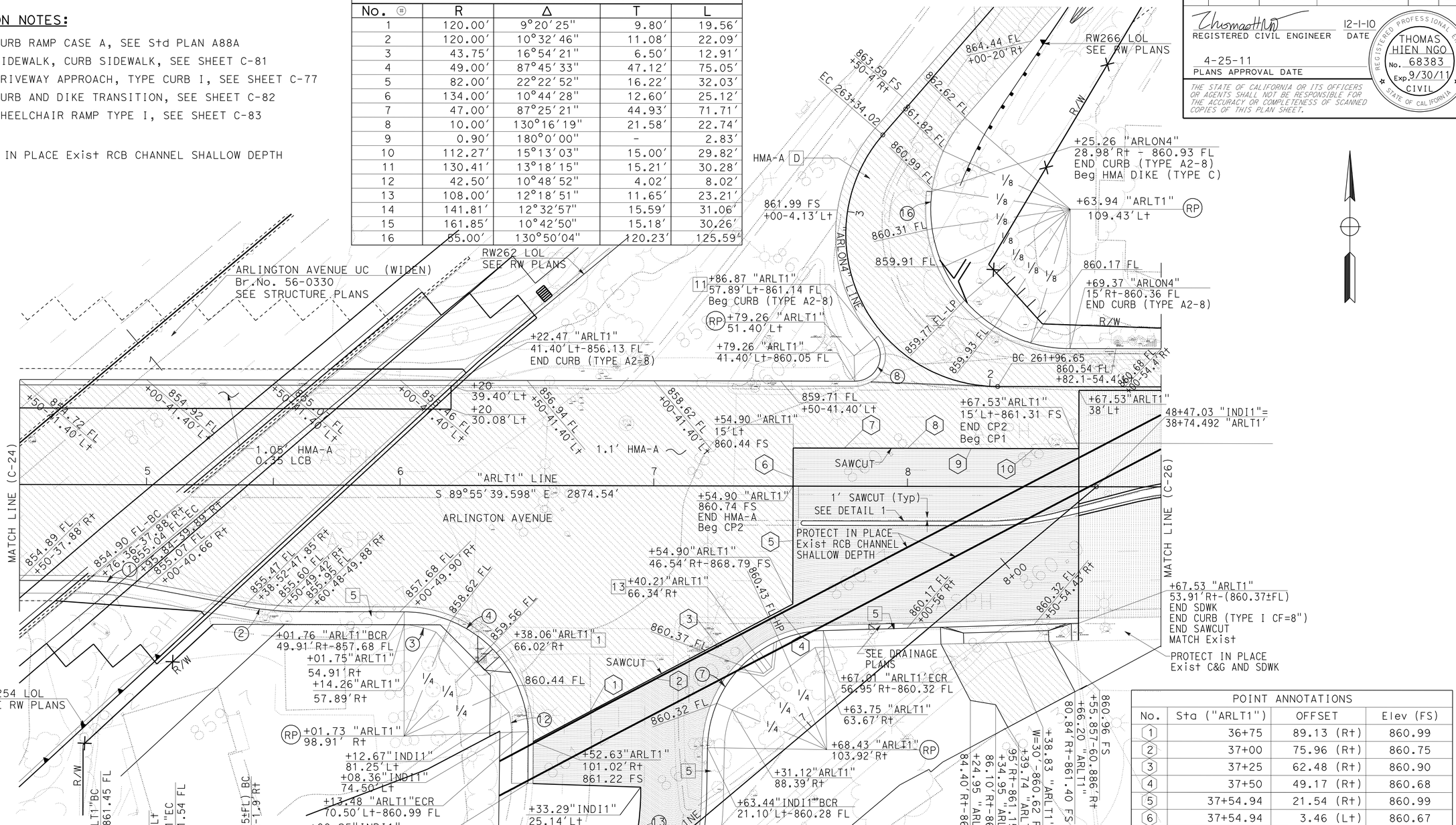

POINT ANNOTATIONS			
No.	Sta ("ARLT1")	OFFSET	Elev (FS)
1	36+75	89.13 (Rt)	860.99
2	37+00	75.96 (Rt)	860.75
3	37+25	62.48 (Rt)	860.90
4	37+50	49.17 (Rt)	860.68
5	37+54.94	21.54 (Rt)	860.99
6	37+54.94	3.46 (Lt)	860.67
7	37+75	15.00 (Lt)	860.70
8	38+00	15.00 (Lt)	860.97
9	38+25	15.00 (Lt)	861.05
10	38+50	15.00 (Lt)	861.16

NOTE:

FOR ACCURATE RIGHT OF WAY AND ACCESS DATA, CONTACT RIGHT OF WAY ENGINEERING AT THE DISTRICT OFFICE.

ARLINGTON AVENUE IMPROVEMENTS

CONSTRUCTION DETAILS

SCALE: 1" = 20′

C-25

STATE OF CALIFORNIA - DEPARTMENT OF TRANSPORTATION — DESIGN

FUNCTIONAL SUPERVISOR: MARK PERTILE

CALCULATED-DESIGNED BY: THAI VAN HGUYEN — CHECKED BY: THOMAS HIEN NGO

REVISED BY — DATE REVISED

LAST REVISION 12-01-10 — DATE PLOTTED => 30-APR-2011 — TIME PLOTTED => 06:28

Dist	COUNTY	ROUTE	POST MILES TOTAL PROJECT	SHEET No.	TOTAL SHEETS
08	Riv	91	15.6/21.6	112	2028

REGISTERED CIVIL ENGINEER 12-1-10 DATE

4-25-11
PLANS APPROVAL DATE

REGISTERED PROFESSIONAL ENGINEER THOMAS HIEN NGO No. 68383 Exp. 9/30/11 CIVIL STATE OF CALIFORNIA

THE STATE OF CALIFORNIA OR ITS OFFICERS OR AGENTS SHALL NOT BE RESPONSIBLE FOR THE ACCURACY OR COMPLETENESS OF SCANNED COPIES OF THIS PLAN SHEET.

NOTE:

FOR ACCURATE RIGHT OF WAY AND ACCESS DATA,
CONTACT RIGHT OF WAY ENGINEERING AT THE DISTRICT OFFICE.

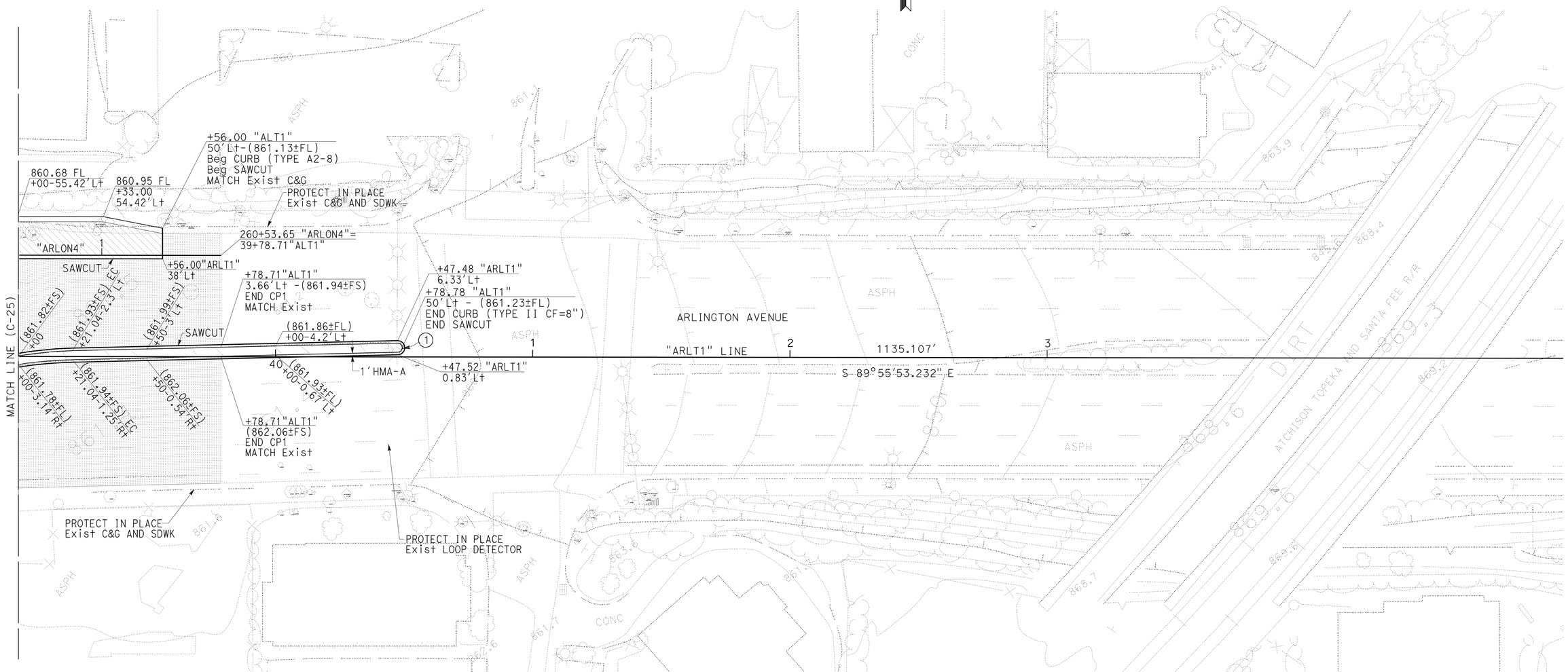

CURVE DATA				
No. ⊕	R	Δ	T	L
1	1.75'	180°0'00"	-	5.50'

ARLINGTON AVENUE IMPROVEMENTS

CONSTRUCTION DETAILS

SCALE: 1" = 20'

C-26

STATE OF CALIFORNIA - DEPARTMENT OF TRANSPORTATION
Caltrans
DESIGN

FUNCTIONAL SUPERVISOR: MARK PERTILE
CALCULATED-DESIGNED BY: THAI VAN HGUYEN
CHECKED BY: THOMAS HIEN NGO
REVISED BY
DATE REVISED

LAST REVISION 00-00-00
DATE PLOTTED => 29-APR-2011
TIME PLOTTED => 18:29

Dist	COUNTY	ROUTE	POST MILES TOTAL PROJECT	SHEET No.	TOTAL SHEETS
08	Riv	91	15.6/21.6	113	2028

REGISTERED CIVIL ENGINEER — DATE 1-26-11

PLANS APPROVAL DATE 4-25-11

REGISTERED PROFESSIONAL ENGINEER — THOMAS HIEN NGO No. 68383 Exp. 9/30/11 CIVIL — STATE OF CALIFORNIA

THE STATE OF CALIFORNIA OR ITS OFFICERS OR AGENTS SHALL NOT BE RESPONSIBLE FOR THE ACCURACY OR COMPLETENESS OF SCANNED COPIES OF THIS PLAN SHEET.

CURVE DATA

No.	R	Δ	T	L
1	230.00′	37°34′38"	78.25′	150.84′
2	10.00′	38°10′06"	3.46′	6.66′
3	53.00′	139°33′50"	143.91′	129.10′
4	3.00′	165°20′29"	23.32′	8.66′
5	226.38′	7°37′50"	15.10′	30.15′
6	30.00′	43°32′46"	11.98′	22.80′
7	687.66′	0°44′22"	4.44′	8.88′
8	3.00′	154°24′37"	13.21′	8.08′
9	333.89′	6°53′53"	20.12′	40.20′
10	265.00′	36°58′58"	88.62′	171.05′
11	330.20′	16°0′44"	46.44′	92.28′
12	681.00′	8°24′39"	50.07′	99.97′
13	332.89′	7°37′15"	22.17′	44.28′
14	31.00′	43°32′46"	12.38′	23.56′
15	227.38′	8°31′46"	16.96′	33.85′

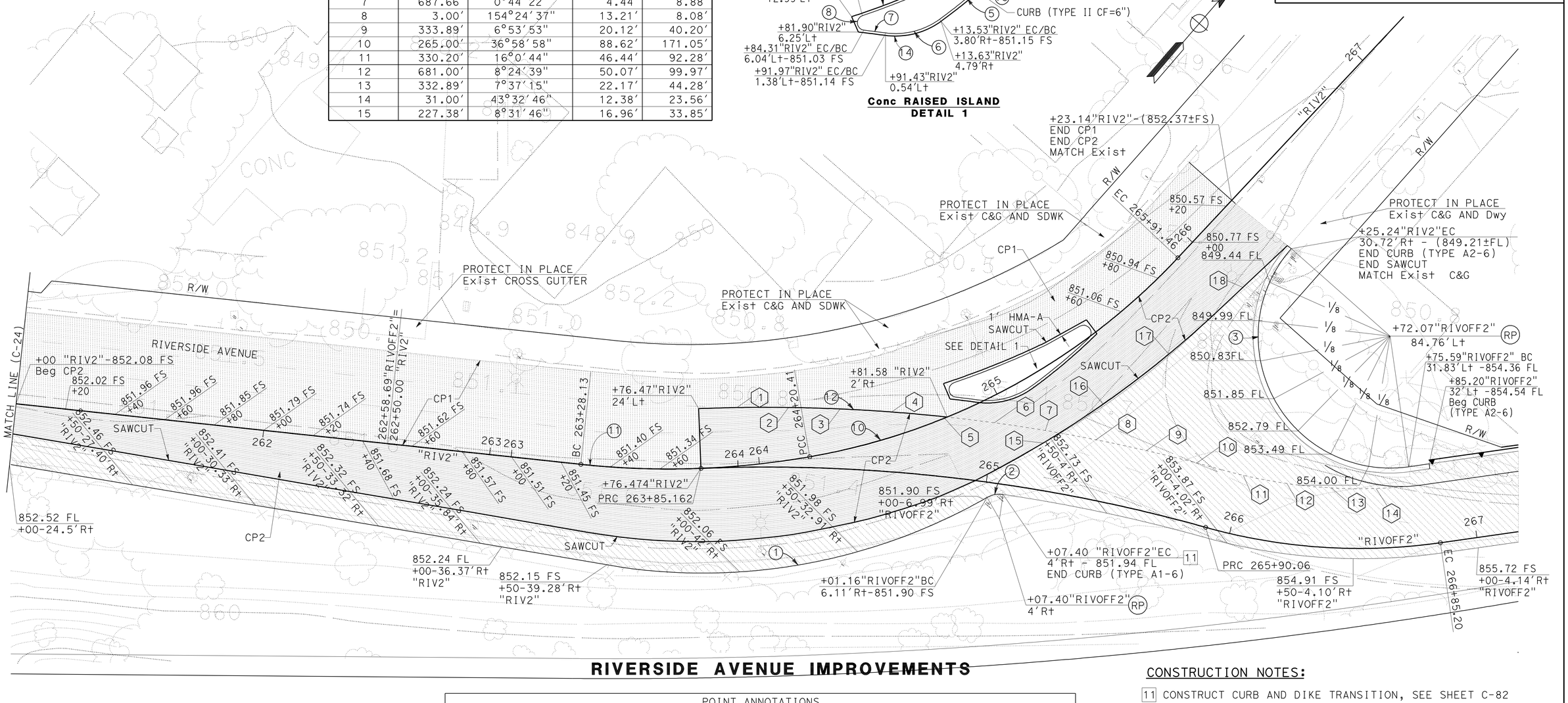

RIVERSIDE AVENUE IMPROVEMENTS

CONSTRUCTION NOTES:

11 CONSTRUCT CURB AND DIKE TRANSITION, SEE SHEET C-82

POINT ANNOTATIONS							
No.	Sta ("RIVOFF2")	OFFSET (Lt)	Elev (FS)	No.	Sta ("RIVOFF2")	OFFSET (Lt)	Elev (FS)
1	264+00	24.00	850.77	10	265+80	24.00	852.85
2	264+20	24.00	850.80	11	266+00	24.00	853.31
3	264+40	24.00	850.82	12	266+20	24.00	853.76
4	264+60	24.00	850.93	13	266+40	24.00	854.16
5	264+80	24.00	851.17	14	266+60	24.00	854.53
6	265+00	24.00	851.33	15	265+20	18.90	851.78
7	265+20	24.00	851.62	16	265+40	38.62	851.65
8	265+40	24.00	851.97	17	265+60	63.76	850.86
9	265+60	24.00	852.38	18	265+80	96.80	849.69

NOTE:

FOR ACCURATE RIGHT OF WAY AND ACCESS DATA, CONTACT RIGHT OF WAY ENGINEERING AT THE DISTRICT OFFICE.

CONSTRUCTION DETAILS

SCALE: 1" = 20′

C-27

STATE OF CALIFORNIA - DEPARTMENT OF TRANSPORTATION — DESIGN

FUNCTIONAL SUPERVISOR: MARK PERTILE

CALCULATED-DESIGNED BY: THAI VAN HGUYEN — CHECKED BY: THOMAS HIEN NGO

REVISED BY — DATE REVISED

LAST REVISION 01-26-11 — DATE PLOTTED => 29-APR-2011 — TIME PLOTTED => 18:30

Dist	COUNTY	ROUTE	POST MILES TOTAL PROJECT	SHEET No.	TOTAL SHEETS
08	Riv	91	15.6/21.6	114	2028

REGISTERED CIVIL ENGINEER — DATE 1-26-11

4-25-11
PLANS APPROVAL DATE

REGISTERED PROFESSIONAL ENGINEER — THOMAS HIEN NGO — No. 68383 — Exp. 9/30/11 — CIVIL — STATE OF CALIFORNIA

THE STATE OF CALIFORNIA OR ITS OFFICERS OR AGENTS SHALL NOT BE RESPONSIBLE FOR THE ACCURACY OR COMPLETENESS OF SCANNED COPIES OF THIS PLAN SHEET.

NOTE:

FOR ACCURATE RIGHT OF WAY AND ACCESS DATA,
CONTACT RIGHT OF WAY ENGINEERING AT THE DISTRICT OFFICE.

CONSTRUCTION NOTES:

5 CONSTRUCT SIDEWALK, CURB SIDEWALK, SEE SHEET C-81

6 CONSTRUCT DRIVEWAY APPROACH, TYPE CURB I, SEE SHEET C-77

NEW 6" PCC PAVEMENT

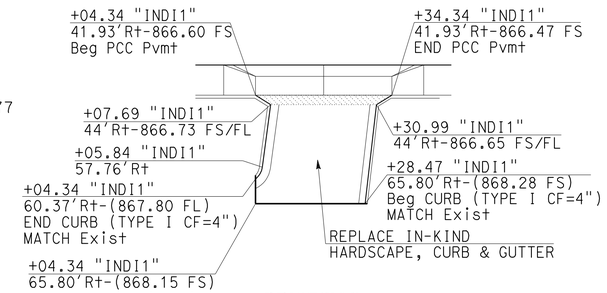

DRIVEWAY DETAIL 4

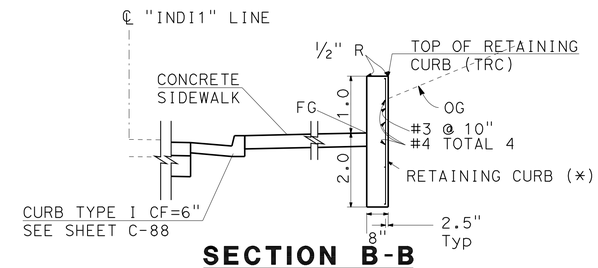

SECTION B-B
NO SCALE
Note: (*) 8" CF TYPE II-SEE SHEET C-88

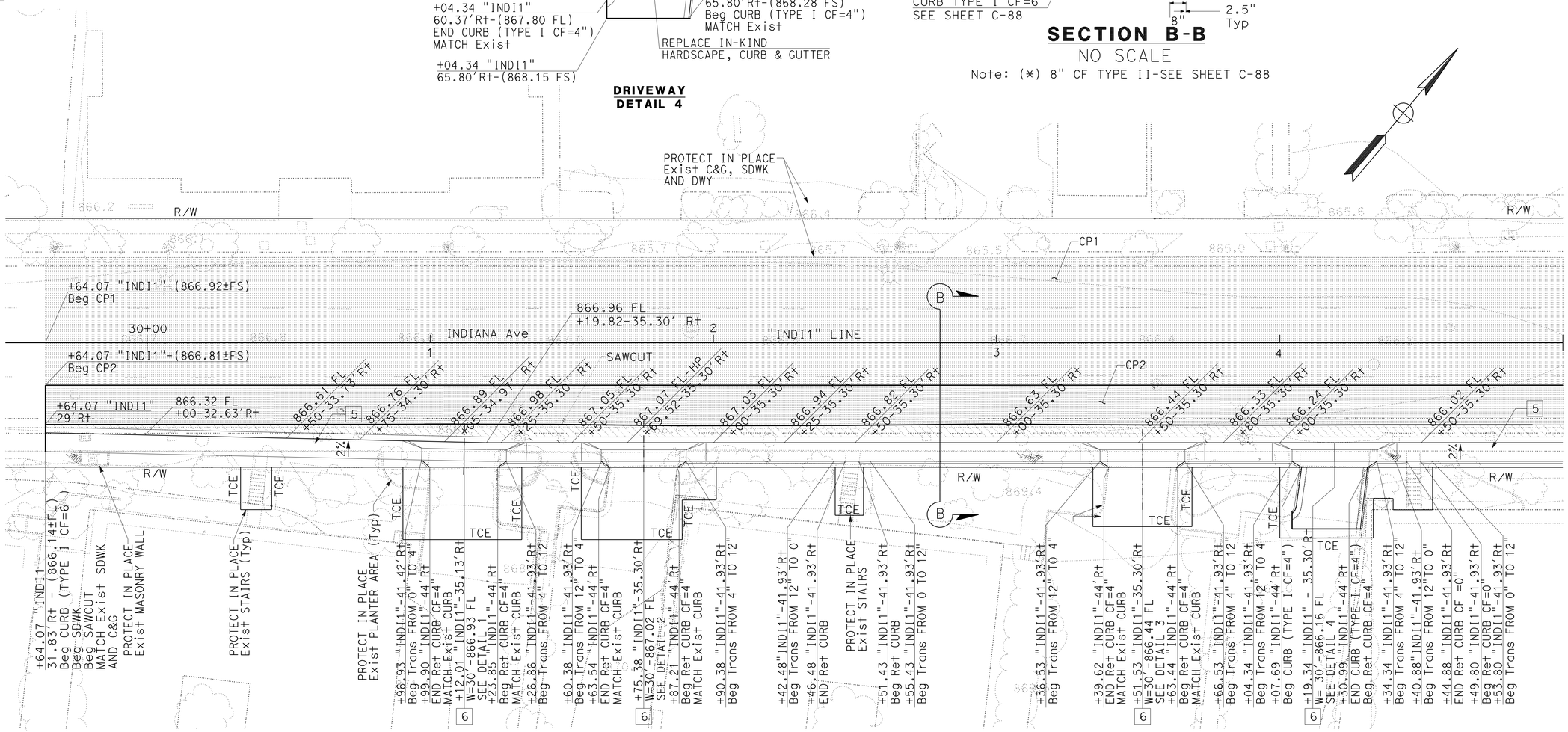

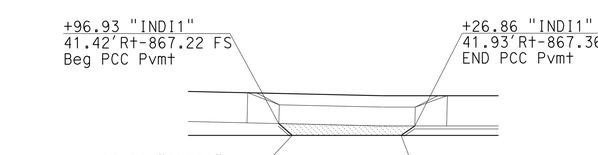

DRIVEWAY DETAIL 1

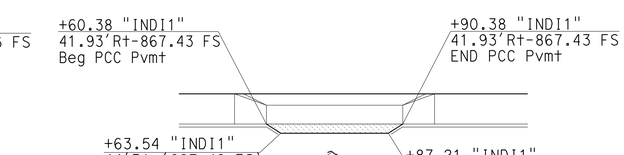

DRIVEWAY DETAIL 2

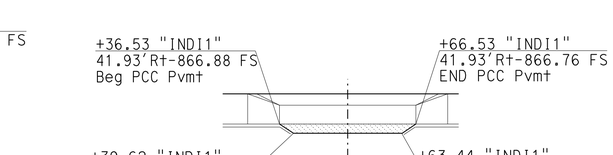

DRIVEWAY DETAIL 3

CONSTRUCTION DETAILS

SCALE: 1" = 20'

C-28

INDIANA AVENUE IMPROVEMENTS

STATE OF CALIFORNIA - DEPARTMENT OF TRANSPORTATION
Caltrans® DESIGN
FUNCTIONAL SUPERVISOR: MARK PERTILE
CALCULATED-DESIGNED BY: THAI VAN HGUYEN
CHECKED BY: THOMAS HIEN NGO
REVISED BY / DATE REVISED

LAST REVISION 01-26-11
DATE PLOTTED => 29-APR-2011
TIME PLOTTED => 18:30

Dist	COUNTY	ROUTE	POST MILES TOTAL PROJECT	SHEET No.	TOTAL SHEETS
08	Riv	91	15.6/21.6	115	2028

REGISTERED CIVIL ENGINEER — DATE 1-26-11

4-25-11
PLANS APPROVAL DATE

REGISTERED PROFESSIONAL ENGINEER — THOMAS HIEN NGO — No. 68383 — Exp. 9/30/11 — CIVIL — STATE OF CALIFORNIA

THE STATE OF CALIFORNIA OR ITS OFFICERS OR AGENTS SHALL NOT BE RESPONSIBLE FOR THE ACCURACY OR COMPLETENESS OF SCANNED COPIES OF THIS PLAN SHEET.

CONSTRUCTION NOTES:

1. CONSTRUCT CURB RAMP CASE A, SEE Std PLAN A88A
5. CONSTRUCT SIDEWALK, CURB SIDEWALK, SEE SHEET C-81
9. CONSTRUCT CROSS GUTTER, SEE SHEET C-87
11. CONSTRUCT CURB AND DIKE TRANSITION, SEE SHEET C-82
13. CONSTRUCT WHEELCHAIR RAMP TYPE I, SEE SHEET C-83
18. CONSTRUCT CURB RAMP AND ISLAND PASSAGEWAY DETAILS TYPE A, SEE Std PLAN A88B

NOTE:

FOR ACCURATE RIGHT OF WAY AND ACCESS DATA, CONTACT RIGHT OF WAY ENGINEERING AT THE DISTRICT OFFICE.

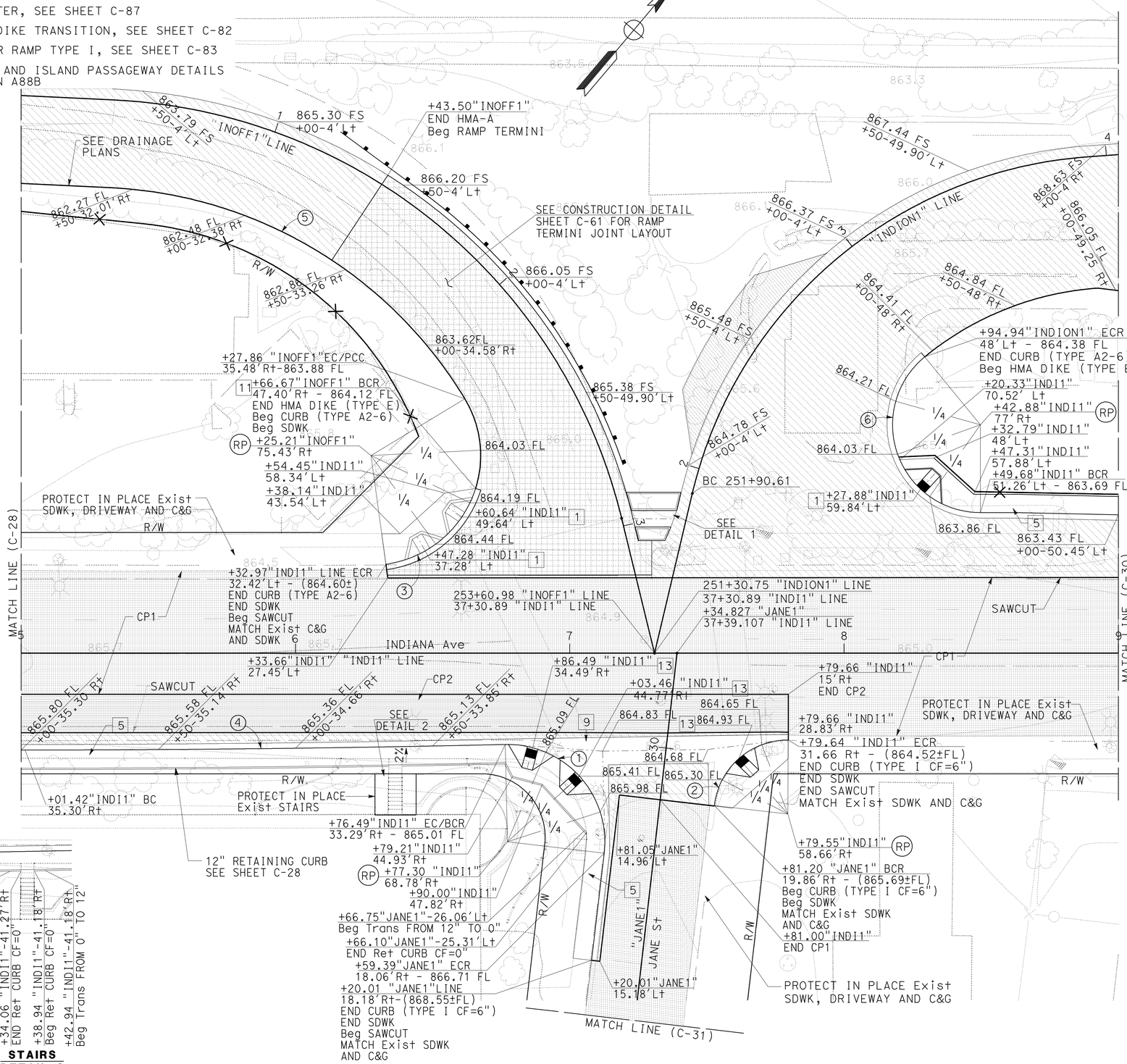

CURVE DATA

No.	R	Δ	T	L
1	35.50'	97°58'01"	40.81'	60.70'
2	27.00'	83°59'43"	24.31'	39.58'
3	40.00'	113°19'04"	60.80'	79.11'
4	7608.60'	1°19'06"	87.55'	175.08'
5	159.82'	56° 04'28"	85.11'	156.41'
6	32.00'	140°40'36"	89.56'	78.57'

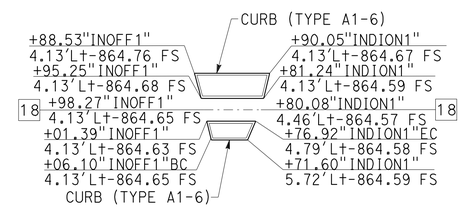

Conc RAISED ISLAND DETAIL 1

CONSTRUCTION DETAILS

SCALE: 1" = 20'

C-29

STATE OF CALIFORNIA - DEPARTMENT OF TRANSPORTATION — Caltrans — DESIGN

FUNCTIONAL SUPERVISOR: MARK PERTILE

CALCULATED-DESIGNED BY: THAI VAN HGUYEN — CHECKED BY: THOMAS HIEN NGO

REVISED BY — DATE REVISED

LAST REVISION 01-26-11 — DATE PLOTTED => 29-APR-2011 — TIME PLOTTED => 18:30

Dist	COUNTY	ROUTE	POST MILES TOTAL PROJECT	SHEET No.	TOTAL SHEETS
08	Riv	91	15.6/21.6	116	2028

REGISTERED CIVIL ENGINEER 12-1-10 DATE

4-25-11
PLANS APPROVAL DATE

REGISTERED PROFESSIONAL ENGINEER THOMAS HIEN NGO No. 68383 Exp. 9/30/11 CIVIL STATE OF CALIFORNIA

THE STATE OF CALIFORNIA OR ITS OFFICERS OR AGENTS SHALL NOT BE RESPONSIBLE FOR THE ACCURACY OR COMPLETENESS OF SCANNED COPIES OF THIS PLAN SHEET.

NOTE:

FOR ACCURATE RIGHT OF WAY AND ACCESS DATA, CONTACT RIGHT OF WAY ENGINEERING AT THE DISTRICT OFFICE.

CONSTRUCTION NOTES:

5 CONSTRUCT SIDEWALK, CURB SIDEWALK, SEE SHEET C-81

7 CONSTRUCT DRIVEWAY APPROACH, TYPE CURB II, SEE SHEET C-77

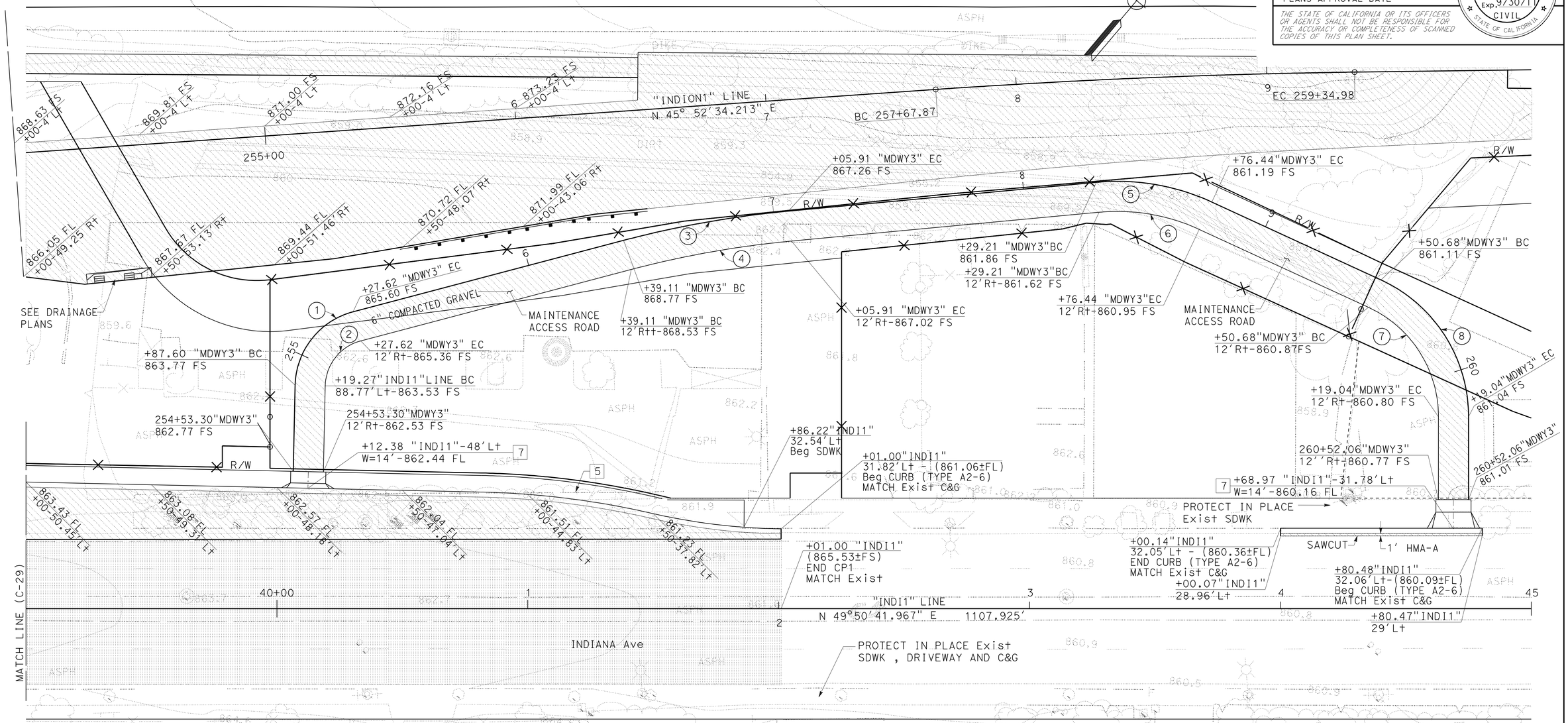

CURVE DATA

No. ⊕	R	Δ	T	L
1	31.00'	73°58'09"	23.35'	40.02'
2	19.00'	73°58'09"	14.31'	24.53'
3	406.00'	9°25'36"	33.47'	66.80'
4	394.00'	9°25'36"	32.49'	64.82'
5	90.00'	30°3'56"	24.17'	47.23'
6	78.00'	30°3'56"	20.95'	40.93'
7	48.00'	65°16'50"	30.74'	54.69'
8	60.00'	65°16'50"	38.43'	68.36'

INDIANA AVENUE IMPROVEMENTS

CONSTRUCTION DETAILS

SCALE: 1" = 20'

C-30

STATE OF CALIFORNIA - DEPARTMENT OF TRANSPORTATION

Caltrans® DESIGN

FUNCTIONAL SUPERVISOR: MARK PERTILE

CALCULATED-DESIGNED BY: THAI VAN HGUYEN

CHECKED BY: THOMAS HIEN NGO

REVISED BY / DATE REVISED

LAST REVISION 12-01-10 | DATE PLOTTED => 29-APR-2011 | TIME PLOTTED => 18:30

Dist	COUNTY	ROUTE	POST MILES TOTAL PROJECT	SHEET No.	TOTAL SHEETS
08	Riv	91	15.6/21.6	117	2028

REGISTERED CIVIL ENGINEER 3-29-10 DATE

4-25-11
PLANS APPROVAL DATE

REGISTERED PROFESSIONAL ENGINEER THOMAS HIEN NGO No. 68383 Exp. 9/30/11 CIVIL STATE OF CALIFORNIA

THE STATE OF CALIFORNIA OR ITS OFFICERS OR AGENTS SHALL NOT BE RESPONSIBLE FOR THE ACCURACY OR COMPLETENESS OF SCANNED COPIES OF THIS PLAN SHEET.

NOTE: FOR COMPLETE RIGHT OF WAY AND ACCURATE ACCESS DATA, SEE RIGHT OF WAY RECORD MAPS AT DISTRICT OFFICE.

CONSTRUCTION NOTES:

5 CONSTRUCT SIDEWALK, CURB SIDEWALK, SEE SHEET C-81
6 CONSTRUCT DRIVEWAY APPROACH, TYPE CURB I, SEE SHEET C-77
8 CONSTRUCT DRIVEWAY APPROACH, TYPE CURB III, SEE SHEET C-77

NEW 6" PCC PAVEMENT

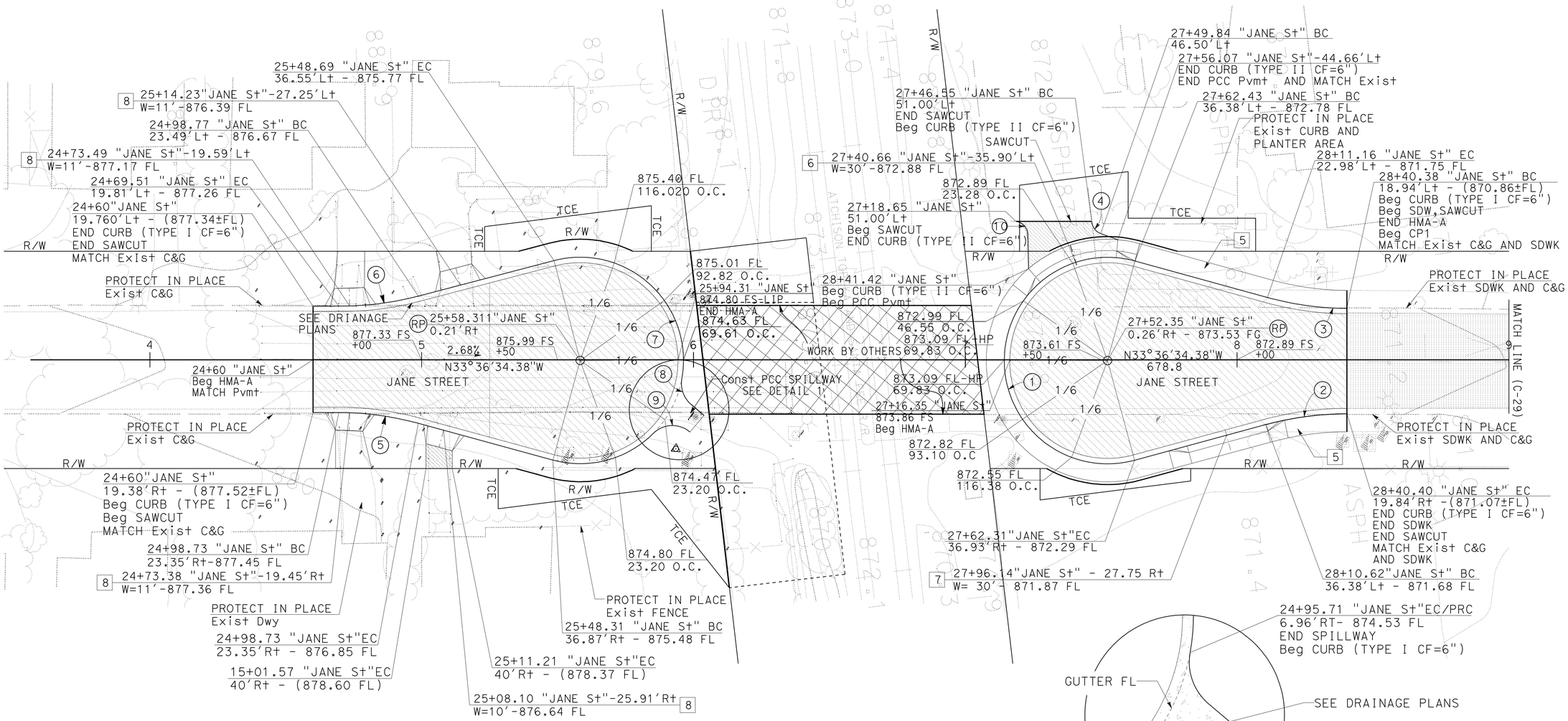

PCC SPILLWAY DETAIL 1

CURVE DATA				
No. ⊕	R	Δ	T	L
1	38.00'	210°33'56"	139.07'	139.65'
2	115.00'	15°0'06"	15.14'	30.11'
3	113.00'	14°59'54"	14.88'	29.58'
4	5.00'	67°46'41"	3.36'	5.91'
5	113.00'	14°59'54"	14.88'	29.58'
6	113.00'	14°59'54"	14.88'	29.58'
7	38.00'	114°53'31"	59.52'	76.20'
8	10.00'	59°54'26"	5.76'	10.46'
9	10.00'	85°18'03"	9.21'	14.89'
10	5.00'	82°3'53"	4.35'	7.16'

NOTE:
FOR ACCURATE RIGHT OF WAY AND ACCESS DATA, CONTACT RIGHT OF WAY ENGINEERING AT THE DISTRICT OFFICE.

JANE STREET IMPROVEMENTS

CONSTRUCTION DETAILS

SCALE: 1" = 20'

C-31

STATE OF CALIFORNIA - DEPARTMENT OF TRANSPORTATION
DESIGN
FUNCTIONAL SUPERVISOR: MARK PERTILE
CALCULATED-DESIGNED BY: THAI VAN HGUYEN
CHECKED BY: THOMAS HIEN NGO
REVISED BY / DATE REVISED

LAST REVISION 03-29-11 | DATE PLOTTED => 08-SEP-2011 | TIME PLOTTED => 08:36

BORDER LAST REVISED 4/11/2008 | RELATIVE BORDER SCALE IS IN INCHES 0 1 2 3 | USERNAME => s124496 | DGN FILE => 844840ga031.dgn | CU 08227 | EA 448401

Dist	COUNTY	ROUTE	POST MILES TOTAL PROJECT	SHEET No.	TOTAL SHEETS
08	Riv	91	15.6/21.6	118	2028

REGISTERED CIVIL ENGINEER 12-1-10 DATE

4-25-11
PLANS APPROVAL DATE

REGISTERED PROFESSIONAL ENGINEER CUONG LE TRAN No. C60436 Exp. 6/30/12 CIVIL STATE OF CALIFORNIA

THE STATE OF CALIFORNIA OR ITS OFFICERS OR AGENTS SHALL NOT BE RESPONSIBLE FOR THE ACCURACY OR COMPLETENESS OF SCANNED COPIES OF THIS PLAN SHEET.

CONSTRUCTION NOTES:

1. CONSTRUCT CURB RAMP CASE A, SEE Std PLAN A88A
2. CONSTRUCT CURB RAMP CASE C, SEE Std PLAN A88A
3. CONSTRUCT CURB RAMP CASE CM, SEE Std PLAN A88A
5. CONSTRUCT SIDEWALK, CURB SIDEWALK, SEE SHEET C-81
11. CONSTRUCT CURB AND DIKE TRANSITION, SEE SHEET C-82
19. CONSTRUCT CURB RAMP AND ISLAND PASSAGEWAY DETAILS TYPE B, SEE Std PLAN A88B
20. CONSTRUCT CURB RAMP CASE C (MOD), SEE SHEET C-81

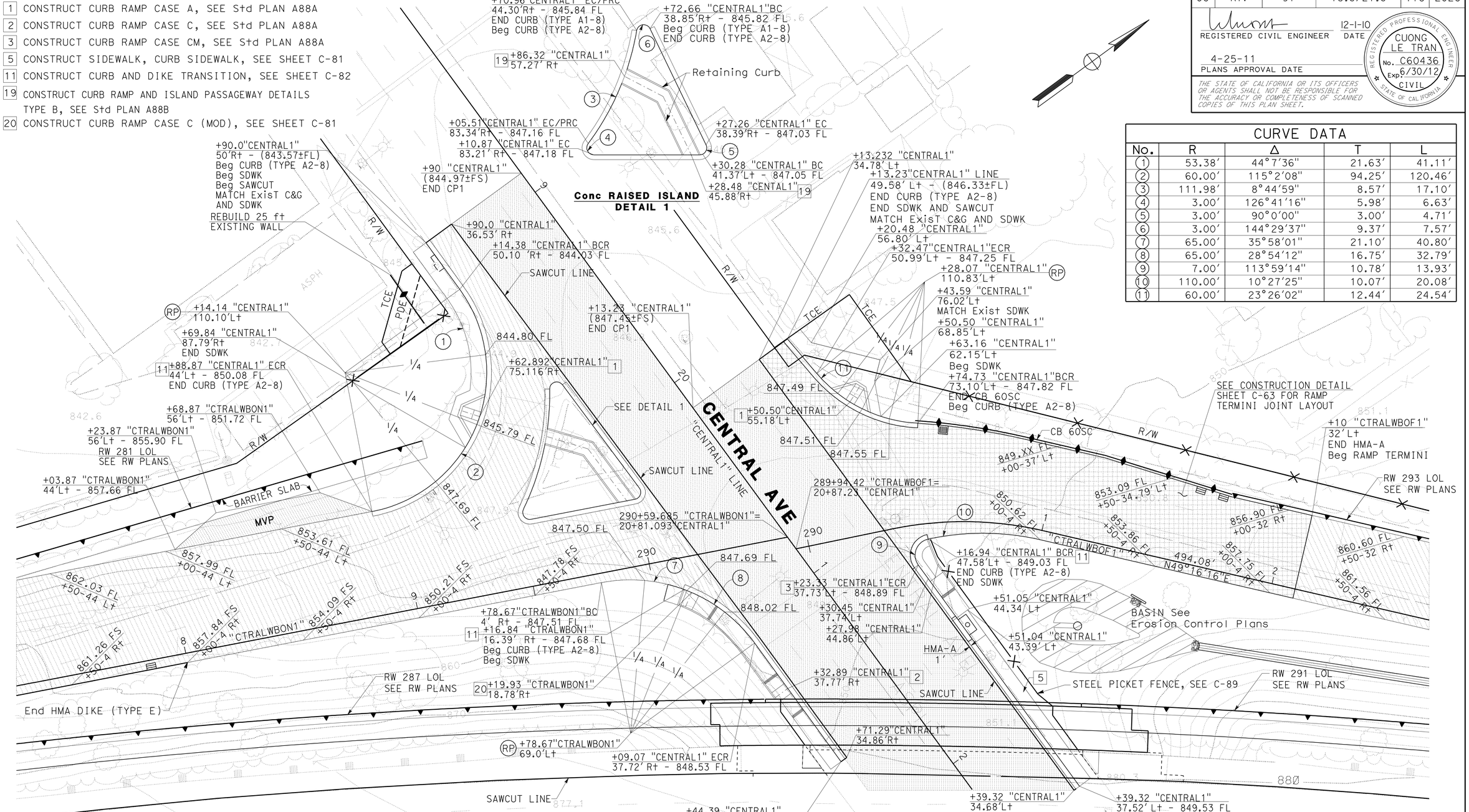

CURVE DATA

No.	R	Δ	T	L
1	53.38'	44°7'36"	21.63'	41.11'
2	60.00'	115°2'08"	94.25'	120.46'
3	111.98'	8°44'59"	8.57'	17.10'
4	3.00'	126°41'16"	5.98'	6.63'
5	3.00'	90°0'00"	3.00'	4.71'
6	3.00'	144°29'37"	9.37'	7.57'
7	65.00'	35°58'01"	21.10'	40.80'
8	65.00'	28°54'12"	16.75'	32.79'
9	7.00'	113°59'14"	10.78'	13.93'
10	110.00'	10°27'25"	10.07'	20.08'
11	60.00'	23°26'02"	12.44'	24.54'

NOTE:

FOR ACCURATE RIGHT OF WAY AND ACCESS DATA, CONTACT RIGHT OF WAY ENGINEERING AT THE DISTRICT OFFICE.

CENTRAL AVENUE IMPROVEMENTS

CONSTRUCTION DETAILS

SCALE: 1" = 20'

C-32

STATE OF CALIFORNIA - DEPARTMENT OF TRANSPORTATION
Caltrans DESIGN

FUNCTIONAL SUPERVISOR: MARK PERTILE
CALCULATED-DESIGNED BY: CUONG LE TRAN
CHECKED BY: ANNABELL WANG
REVISED BY / DATE REVISED

LAST REVISION 12-01-10 | DATE PLOTTED => 29-APR-2011 | TIME PLOTTED => 18:31

Dist	COUNTY	ROUTE	POST MILES TOTAL PROJECT	SHEET No.	TOTAL SHEETS
08	Riv	91	15.6/21.6	119	2028

REGISTERED CIVIL ENGINEER 12-1-10 DATE

4-25-11
PLANS APPROVAL DATE

REGISTERED PROFESSIONAL ENGINEER CUONG LE TRAN No. C60436 Exp. 6/30/12 CIVIL STATE OF CALIFORNIA

THE STATE OF CALIFORNIA OR ITS OFFICERS OR AGENTS SHALL NOT BE RESPONSIBLE FOR THE ACCURACY OR COMPLETENESS OF SCANNED COPIES OF THIS PLAN SHEET.

CONSTRUCTION NOTES:

1. CONSTRUCT CURB RAMP CASE A, SEE Std PLAN A88A
3. CONSTRUCT CURB RAMP CASE CM, SEE Std PLAN A88A
5. CONSTRUCT SIDEWALK, CURB SIDEWALK, SEE SHEET C-81
11. CONSTRUCT CURB AND DIKE TRANSITION, SEE SHEET C-82
18. CONSTRUCT CURB RAMP AND ISLAND PASSAGEWAY DETAILS TYPE A, SEE Std PLAN A88B
20. CONSTRUCT CURB RAMP CASE C (MOD), SEE SHEET C-81

CURVE DATA				
No.	R	Δ	T	L
1	7.00′	123°31′56″	13.04′	15.09′
2	35.00′	48°16′22″	15.68′	29.49′
3	33.00′	55°3′35″	17.20′	31.71′
4	2.00′	131°11′27″	4.41′	4.58′
5	2.00′	126°4′42″	3.93′	4.40′
6	90.00′	39°33′35″	32.37′	62.14′
7	2.00′	142°17′25″	5.86′	4.97′
8	54.00′	128°32′40″	112.06′	121.15′

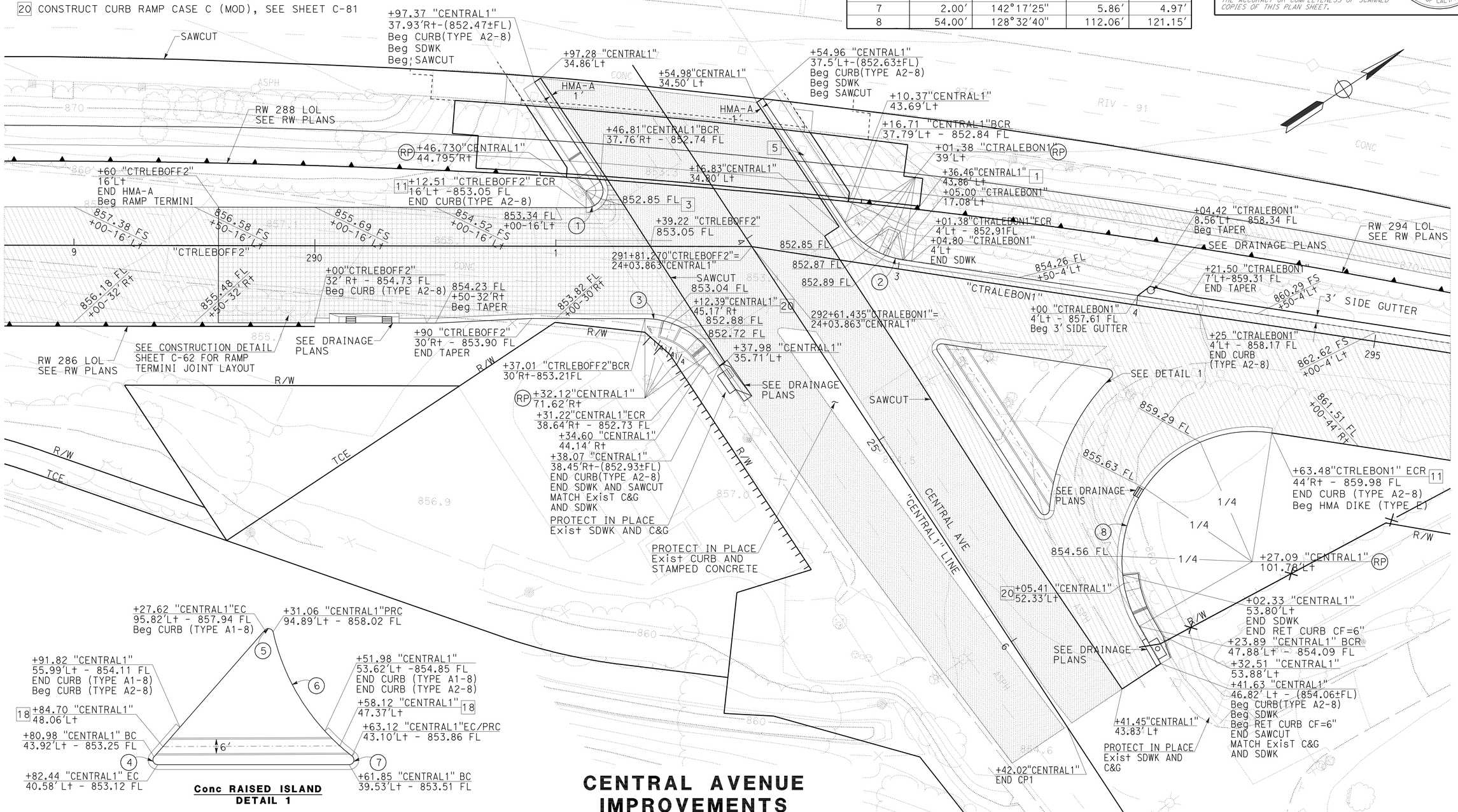

NOTE:

FOR ACCURATE RIGHT OF WAY AND ACCESS DATA, CONTACT RIGHT OF WAY ENGINEERING AT THE DISTRICT OFFICE.

CONSTRUCTION DETAILS

SCALE: 1" = 20′

C-33

STATE OF CALIFORNIA - DEPARTMENT OF TRANSPORTATION
Caltrans® DESIGN

FUNCTIONAL SUPERVISOR: MARK PERTILE
CALCULATED-DESIGNED BY: ANNABELL WANG
CHECKED BY: CUONG LE TRAN
REVISED BY / DATE REVISED

LAST REVISION 12-01-10 | DATE PLOTTED => 29-APR-2011 | TIME PLOTTED => 18:31

BORDER LAST REVISED 4/11/2008 | RELATIVE BORDER SCALE IS IN INCHES 0 1 2 3 | USERNAME => trmnguye | DGN FILE => 844840ga033.dgn | CU 08227 | EA 448401

Dist	COUNTY	ROUTE	POST MILES TOTAL PROJECT	SHEET No.	TOTAL SHEETS
08	Riv	91	15.6/21.6	120	2028

REGISTERED CIVIL ENGINEER — DATE 1-26-11

4-25-11
PLANS APPROVAL DATE

REGISTERED PROFESSIONAL ENGINEER — CUONG LE TRAN — No. C60436 — Exp. 6/30/12 — CIVIL — STATE OF CALIFORNIA

THE STATE OF CALIFORNIA OR ITS OFFICERS OR AGENTS SHALL NOT BE RESPONSIBLE FOR THE ACCURACY OR COMPLETENESS OF SCANNED COPIES OF THIS PLAN SHEET.

NOTE:

FOR ACCURATE RIGHT OF WAY AND ACCESS DATA, CONTACT RIGHT OF WAY ENGINEERING AT THE DISTRICT OFFICE.

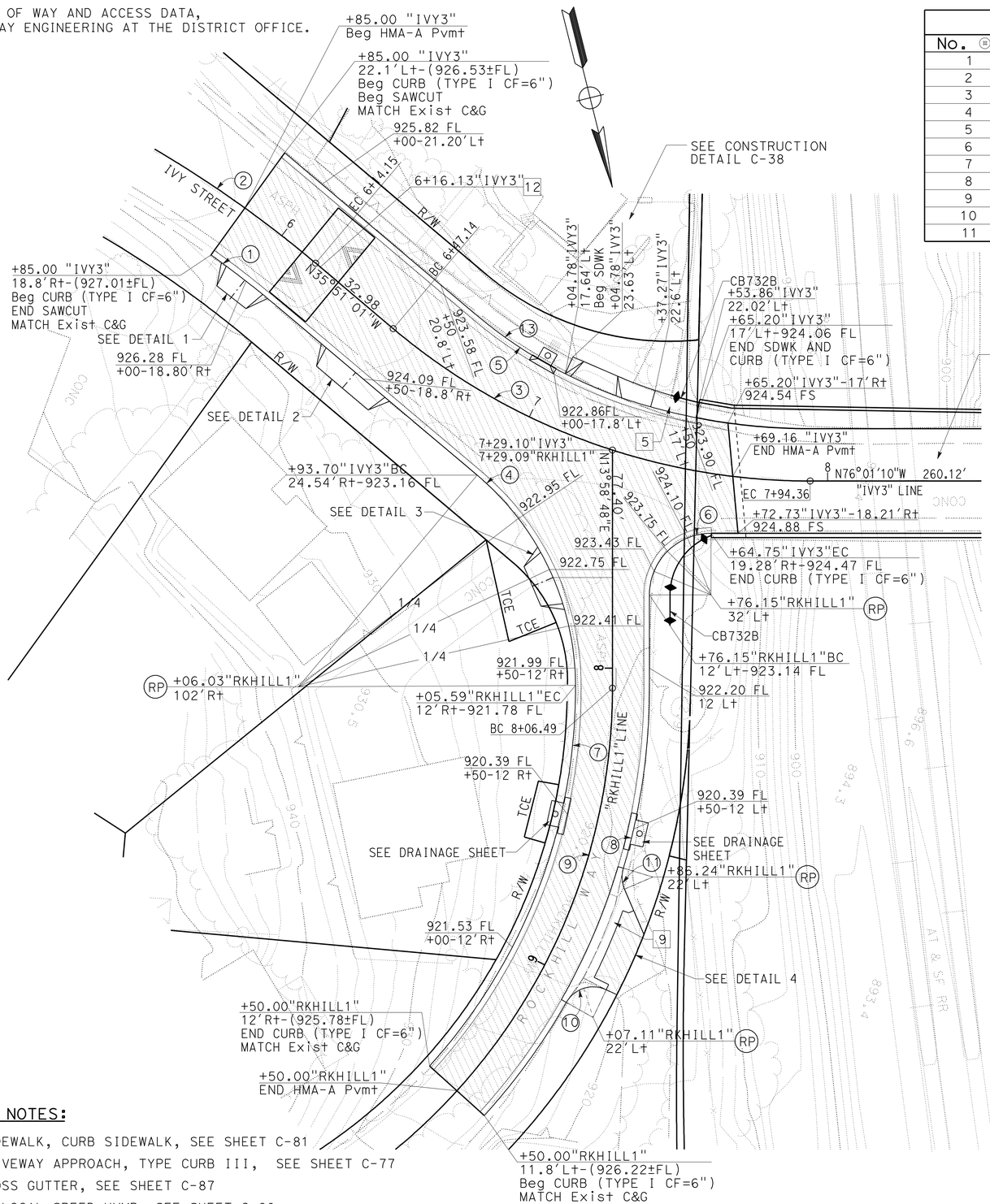

CURVE DATA				
No. (H)	R	Δ	T	L
1	361.20′	4°23′43"	13.86′	27.71′
2	380.00′	32°54′34"	112.23′	218.26′
3	210.00′	40°10′08"	76.78′	147.23′
4	90.00′	49°32′47"	41.53′	77.83′
5	150.90′	24°41′02"	33.02′	65.01′
6	20.00′	90°0′02"	20.00′	31.42′
7	182.70′	42°30′53"	71.08′	135.57′
8	206.70′	16°27′03"	29.88′	59.35′
9	194.70′	68°31′34"	132.63′	232.86′
10	10.00′	85°35′51"	9.26′	14.94′
11	10.00′	39°36′05"	3.60′	6.91′

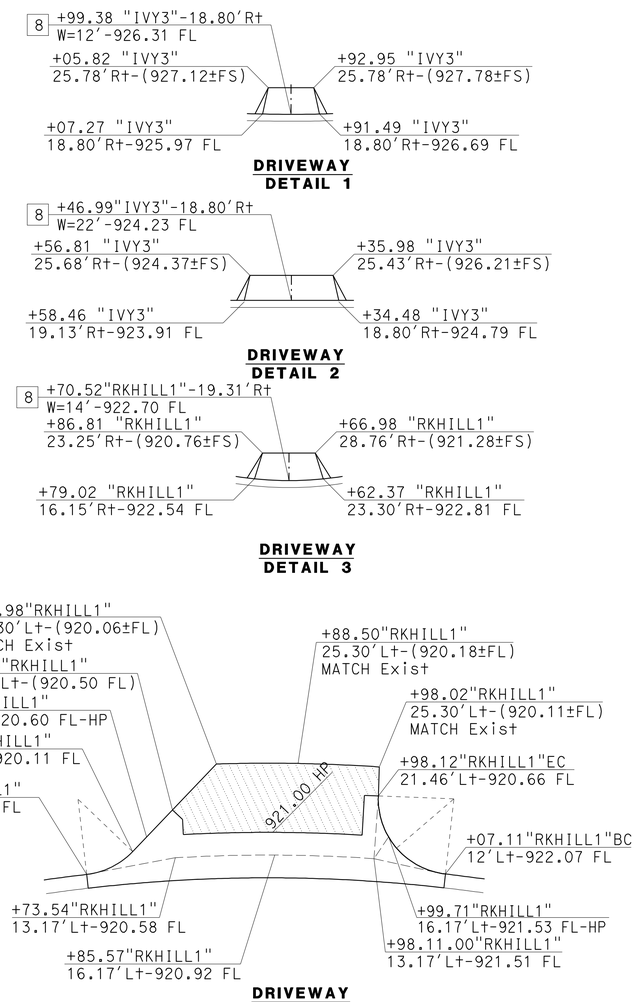

CONSTRUCTION NOTES:

5 CONSTRUCT SIDEWALK, CURB SIDEWALK, SEE SHEET C-81
8 CONSTRUCT DRIVEWAY APPROACH, TYPE CURB III, SEE SHEET C-77
9 CONSTRUCT CROSS GUTTER, SEE SHEET C-87
12 CONSTRUCT 14′LOCAL SPEED HUMP, SEE SHEET C-80

IVY STREET IMPROVEMENTS

CONSTRUCTION DETAILS

SCALE: 1" = 20′

C-34

STATE OF CALIFORNIA - DEPARTMENT OF TRANSPORTATION
DESIGN
FUNCTIONAL SUPERVISOR: MARK PERTILE
CALCULATED-DESIGNED BY: ANNABELL WANG
CHECKED BY: CUONG LE TRAN
REVISED BY / DATE REVISED

LAST REVISION 01-26-11
DATE PLOTTED => 29-APR-2011
TIME PLOTTED => 18:31

Dist	COUNTY	ROUTE	POST MILES TOTAL PROJECT	SHEET No.	TOTAL SHEETS
08	Riv	91	15.6/21.6	121	2028

REGISTERED CIVIL ENGINEER — DATE 1-26-11

4-25-11
PLANS APPROVAL DATE

REGISTERED PROFESSIONAL ENGINEER CUONG LE TRAN No. C60436 Exp. 6/30/12 CIVIL STATE OF CALIFORNIA

THE STATE OF CALIFORNIA OR ITS OFFICERS OR AGENTS SHALL NOT BE RESPONSIBLE FOR THE ACCURACY OR COMPLETENESS OF SCANNED COPIES OF THIS PLAN SHEET.

CONSTRUCTION NOTES:

5 CONSTRUCT SIDEWALK, CURB SIDEWALK, SEE SHEET C-81

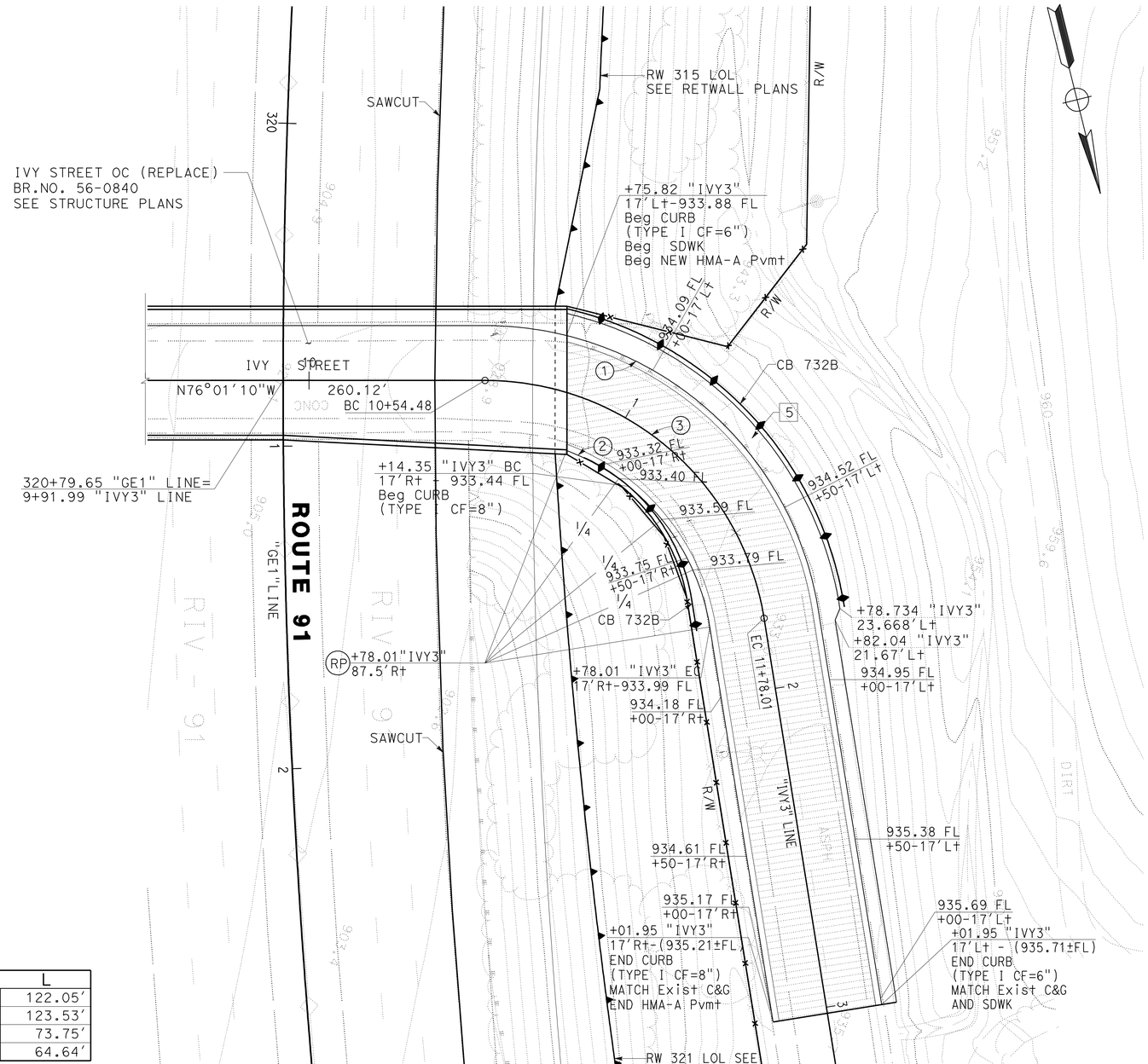

CURVE DATA

No.	R	Δ	T	L
10	104.50'	66°54'57"	69.06'	122.05'
11	87.50'	80°53'17"	74.58'	123.53'
12	70.50'	59°56'14"	40.65'	73.75'
13	150.08'	24°40'41"	32.83'	64.64'

IVY STREET IMPROVEMENTS

NOTE:

FOR ACCURATE RIGHT OF WAY AND ACCESS DATA, CONTACT RIGHT OF WAY ENGINEERING AT THE DISTRICT OFFICE.

CONSTRUCTION DETAILS

SCALE: 1" = 20'

C-35

STATE OF CALIFORNIA - DEPARTMENT OF TRANSPORTATION
Caltrans DESIGN

FUNCTIONAL SUPERVISOR: MARK PERTILE
CALCULATED-DESIGNED BY: CUONG LE TRAN
CHECKED BY: ANNABELL WANG
REVISED BY
DATE REVISED

LAST REVISION 01-26-11
DATE PLOTTED => 29-APR-2011
TIME PLOTTED => 18:31

Dist	COUNTY	ROUTE	POST MILES TOTAL PROJECT	SHEET No.	TOTAL SHEETS
08	Riv	91	15.6/21.6	122	2028

REGISTERED CIVIL ENGINEER 12-1-10 DATE

4-25-11
PLANS APPROVAL DATE

REGISTERED PROFESSIONAL ENGINEER CUONG LE TRAN No. C60436 Exp. 6/30/12 CIVIL STATE OF CALIFORNIA

THE STATE OF CALIFORNIA OR ITS OFFICERS OR AGENTS SHALL NOT BE RESPONSIBLE FOR THE ACCURACY OR COMPLETENESS OF SCANNED COPIES OF THIS PLAN SHEET.

CONSTRUCTION NOTES:

6 CONSTRUCT DRIVEWAY APPROACH, TYPE CURB I, SEE SHEET C-77

CURVE DATA				
No. ⊕	R	Δ	T	L
1	2650.17′	7°0′59″	162.47′	324.54′
2	1000.00′	7°1′38″	61.40′	122.65′

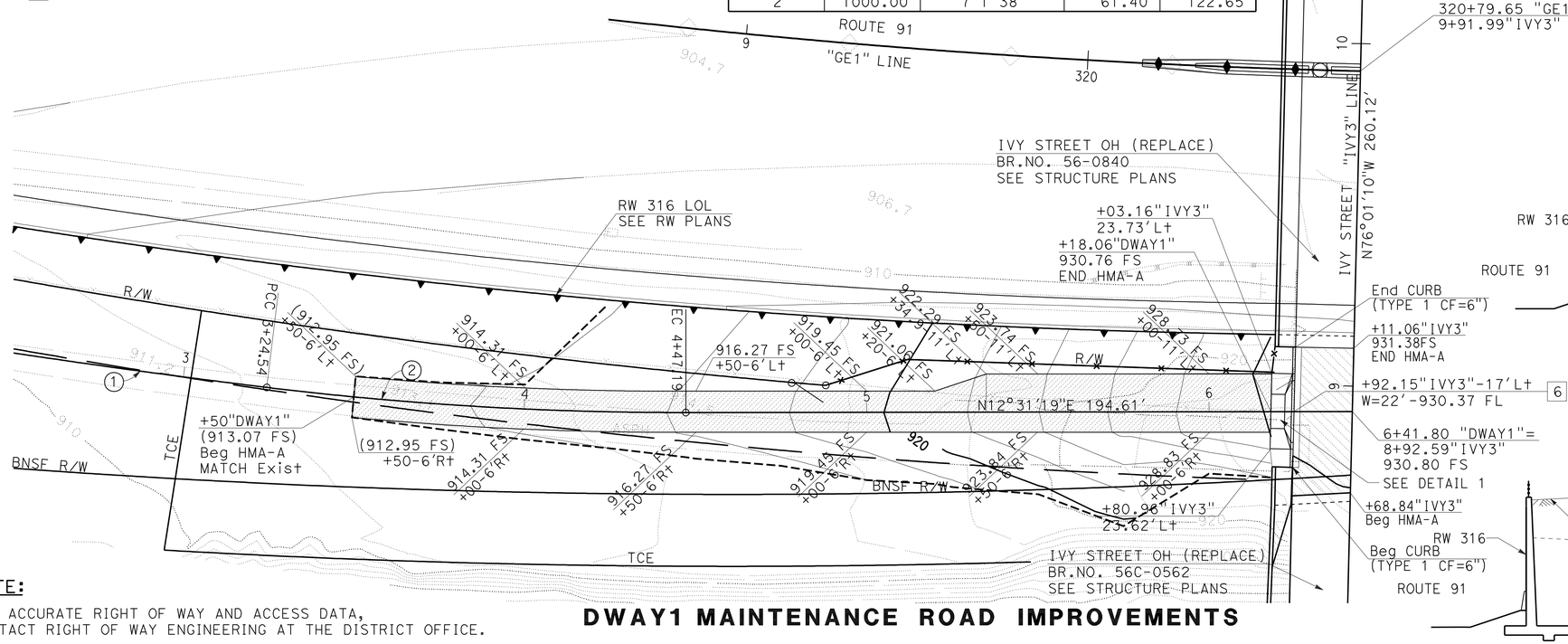

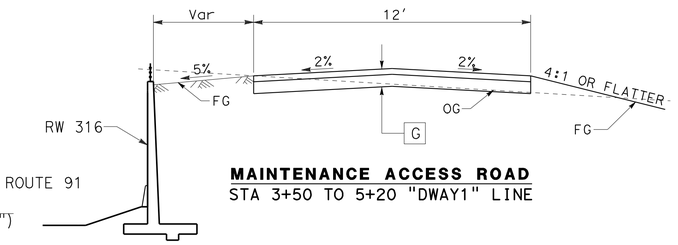

MAINTENANCE ACCESS ROAD
STA 3+50 TO 5+20 "DWAY1" LINE

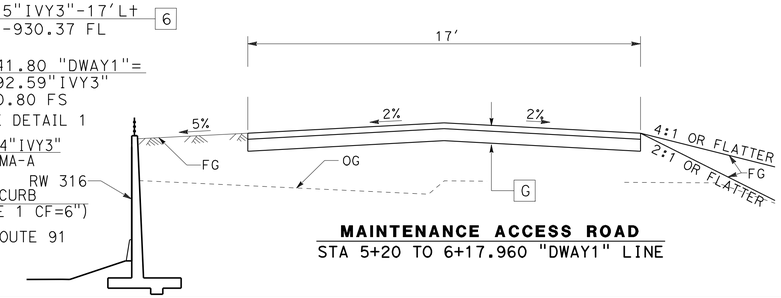

MAINTENANCE ACCESS ROAD
STA 5+20 TO 6+17.960 "DWAY1" LINE

NOTE:

FOR ACCURATE RIGHT OF WAY AND ACCESS DATA, CONTACT RIGHT OF WAY ENGINEERING AT THE DISTRICT OFFICE.

DWAY1 MAINTENANCE ROAD IMPROVEMENTS

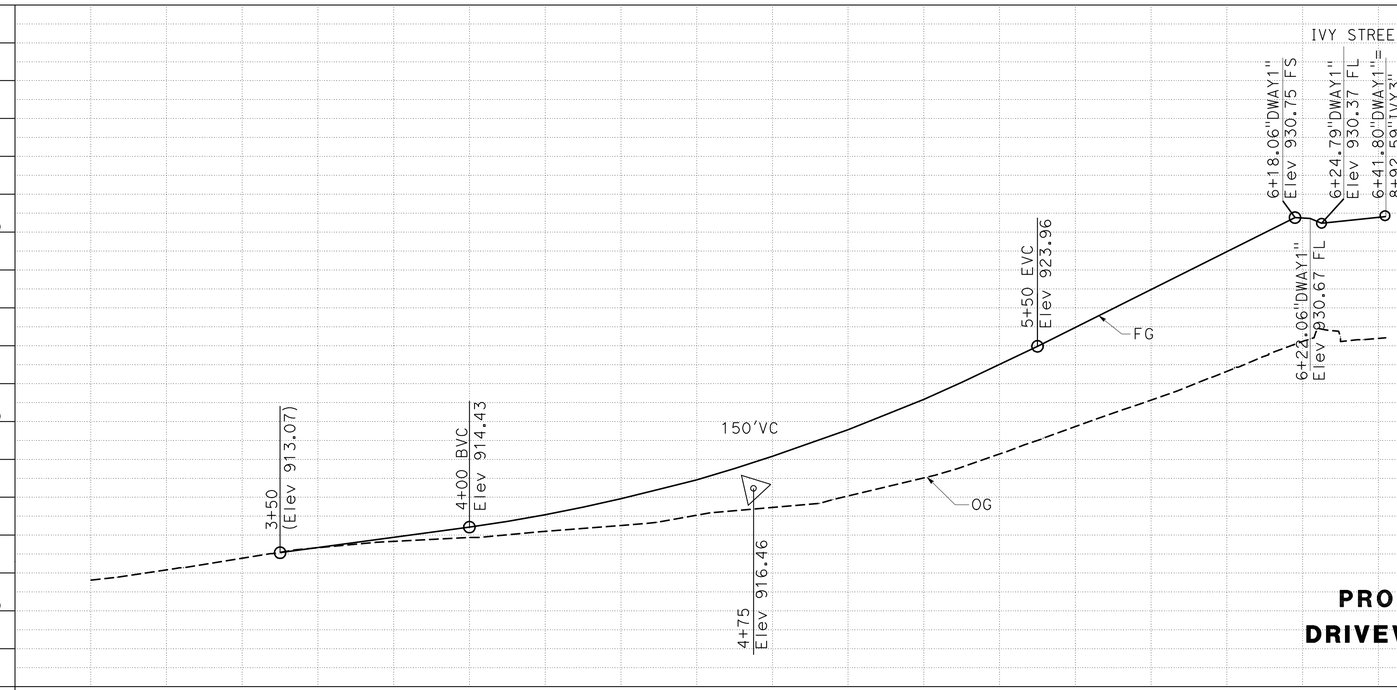

PROFILE
DRIVEWAY 1

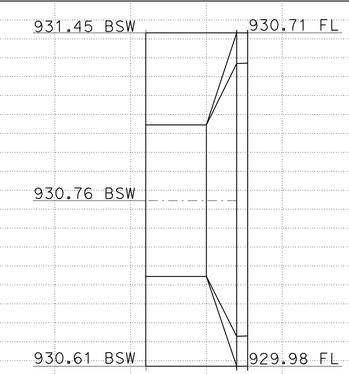

DRIVEWAY APPROACH
DETAIL 1

CONSTRUCTION DETAILS

SCALE: Horiz 1"=20′
Vert 1"= 5′

C-36

STATE OF CALIFORNIA - DEPARTMENT OF TRANSPORTATION
Caltrans
DESIGN
FUNCTIONAL SUPERVISOR: MARK PERTILE
CALCULATED-DESIGNED BY: ANNABELL WANG
CHECKED BY: CUONG LE TRAN
REVISED BY
DATE REVISED
LAST REVISION 12-01-10
DATE PLOTTED => 29-APR-2011
TIME PLOTTED => 18:31

Dist	COUNTY	ROUTE	POST MILES TOTAL PROJECT	SHEET No.	TOTAL SHEETS
08	Riv	91	15.6/21.6	123	2028

REGISTERED CIVIL ENGINEER 12-1-10 DATE

4-25-11
PLANS APPROVAL DATE

REGISTERED PROFESSIONAL ENGINEER CUONG LE TRAN No. C60436 Exp. 6/30/12 CIVIL STATE OF CALIFORNIA

THE STATE OF CALIFORNIA OR ITS OFFICERS OR AGENTS SHALL NOT BE RESPONSIBLE FOR THE ACCURACY OR COMPLETENESS OF SCANNED COPIES OF THIS PLAN SHEET.

CONSTRUCTION NOTES:

8 CONSTRUCT DRIVEWAY APPROACH, TYPE CURB III, SEE SHEET C-77

NOTE:

FOR ACCURATE RIGHT OF WAY AND ACCESS DATA, CONTACT RIGHT OF WAY ENGINEERING AT THE DISTRICT OFFICE.

CURVE DATA

No.	R	Δ	T	L
1	399.99′	6°34′29″	22.97′	45.90′

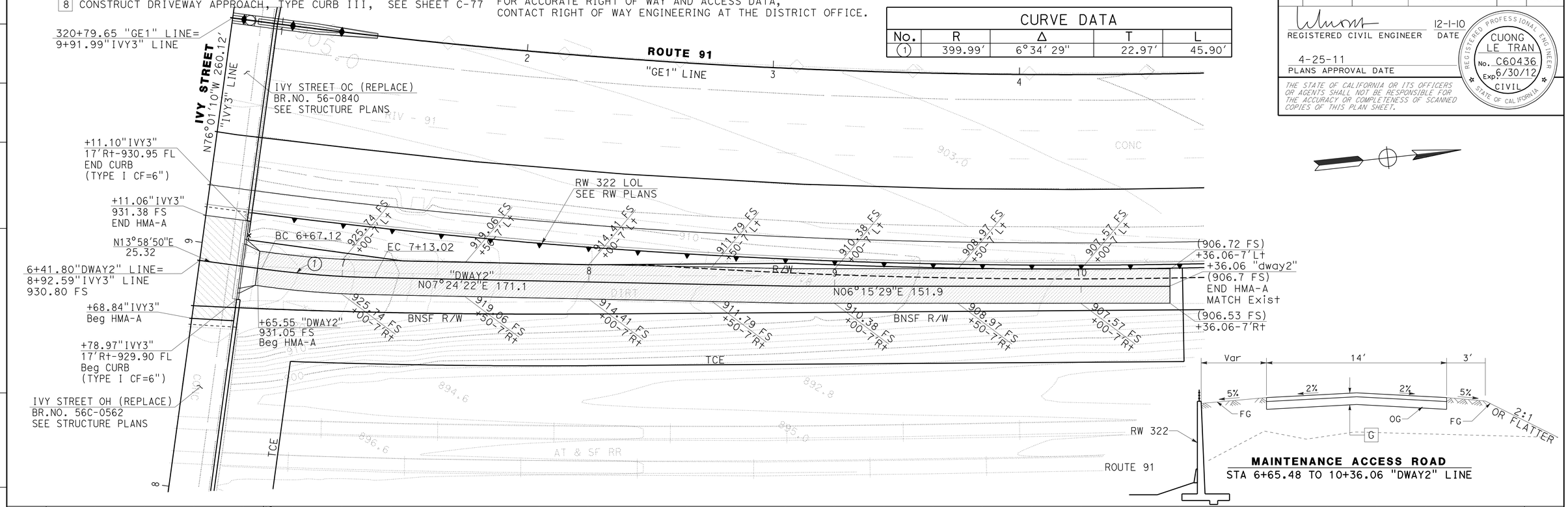

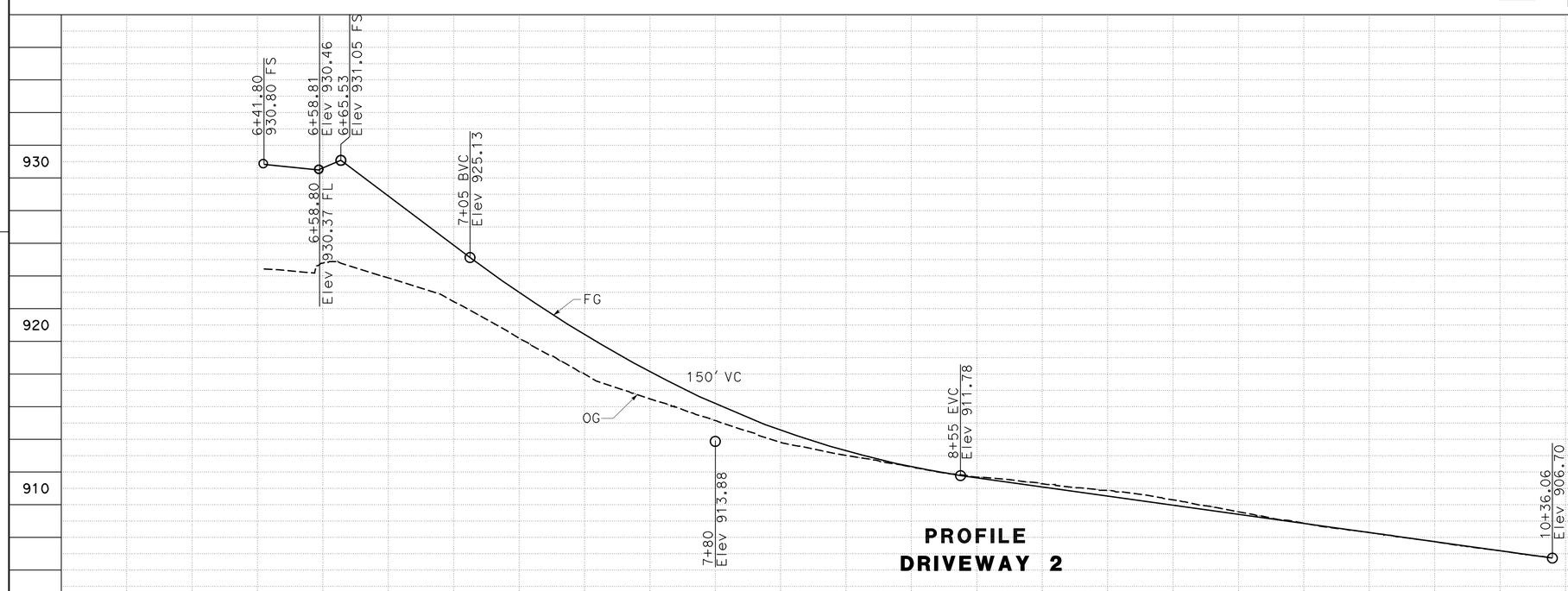

PROFILE
DRIVEWAY 2

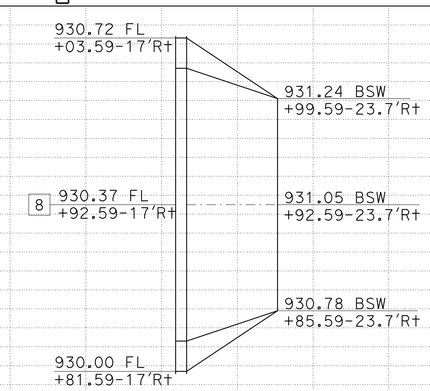

DRIVEWAY APPROACH
DETAIL 1

CONSTRUCTION DETAILS

SCALE: Horiz 1"=20′
Vert 1"= 5′

C-37

STATE OF CALIFORNIA - DEPARTMENT OF TRANSPORTATION
Caltrans
DESIGN

FUNCTIONAL SUPERVISOR: MARK PERTILE
CALCULATED-DESIGNED BY: CUONG LE TRAN
CHECKED BY: ANNABELL WANG
REVISED BY
DATE REVISED

LAST REVISION 12-01-10
DATE PLOTTED => 29-APR-2011
TIME PLOTTED => 18:32

Dist	COUNTY	ROUTE	POST MILES TOTAL PROJECT	SHEET No.	TOTAL SHEETS
08	Riv	91	15.6/21.6	124	2028

REGISTERED CIVIL ENGINEER 12-1-10 DATE

4-25-11
PLANS APPROVAL DATE

REGISTERED PROFESSIONAL ENGINEER CUONG LE TRAN No. C60436 Exp. 6/30/12 CIVIL STATE OF CALIFORNIA

THE STATE OF CALIFORNIA OR ITS OFFICERS OR AGENTS SHALL NOT BE RESPONSIBLE FOR THE ACCURACY OR COMPLETENESS OF SCANNED COPIES OF THIS PLAN SHEET.

LEGEND

DRIVEWAY THICKNESS, SHALL BE 4" *

PARKING AREA THICKNESS, SHALL BE 6" *

* REINFORCE DRIVEWAY AND PARKING AREA WITH A WIRE MESH OF 6-6-10

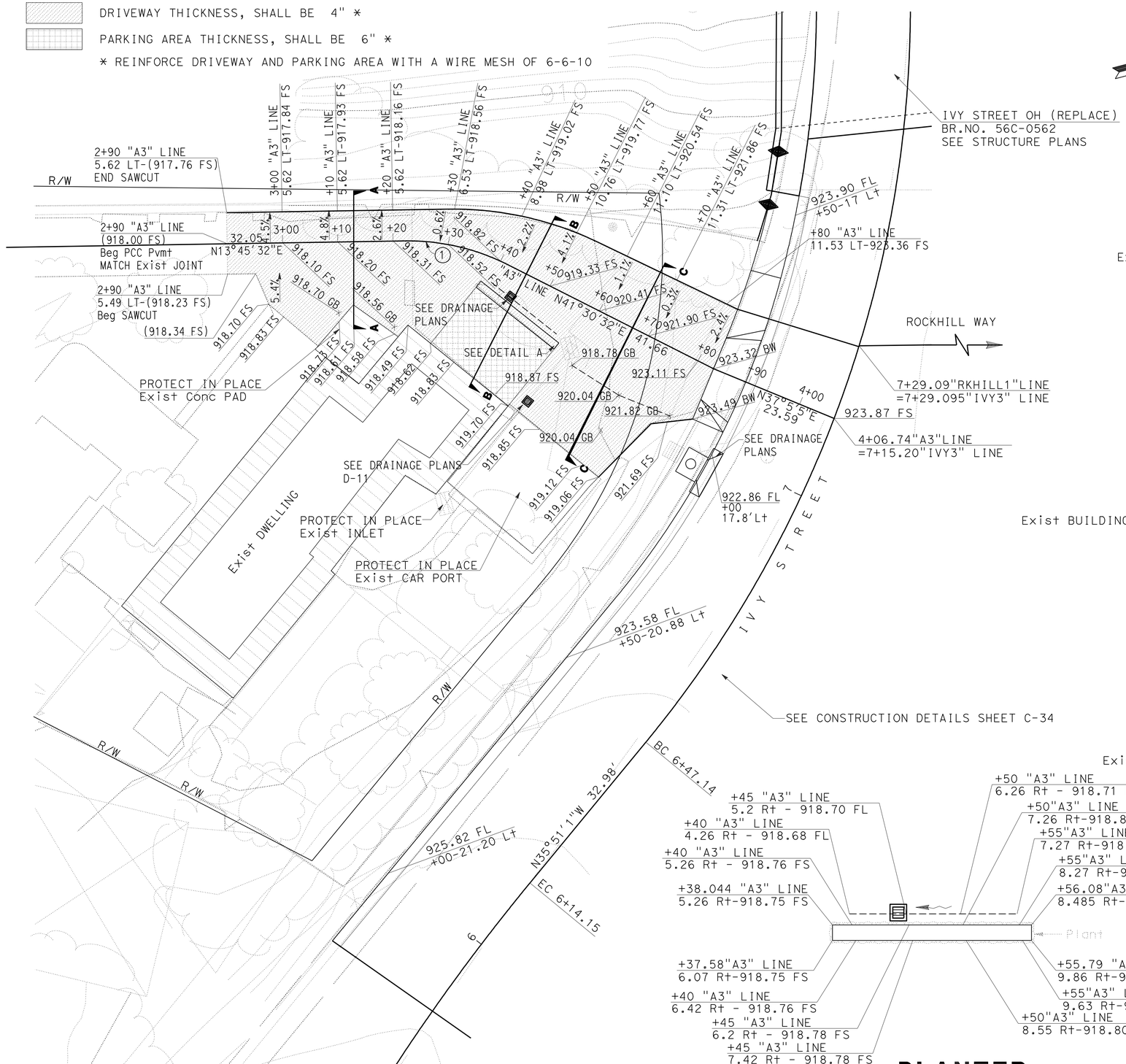

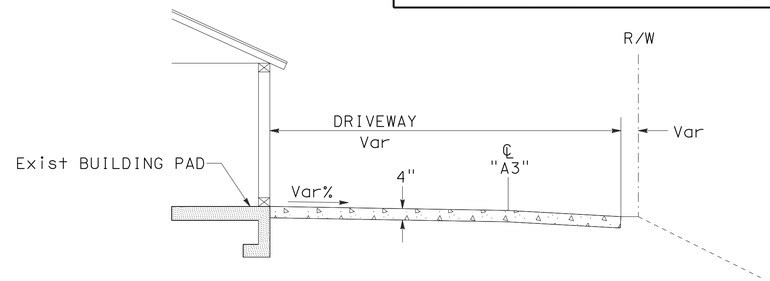

DRIVEWAY SECTION A-A

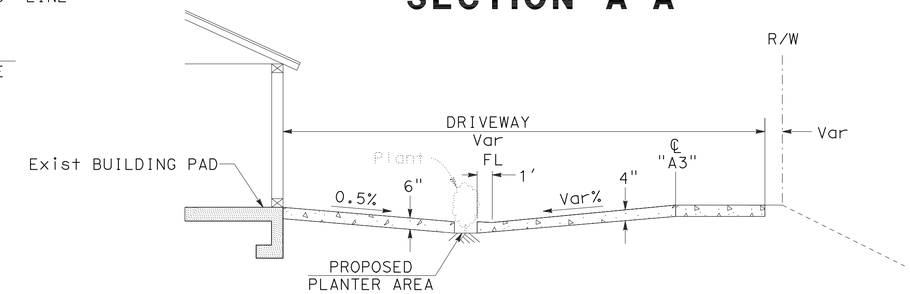

DRIVEWAY SECTION B-B

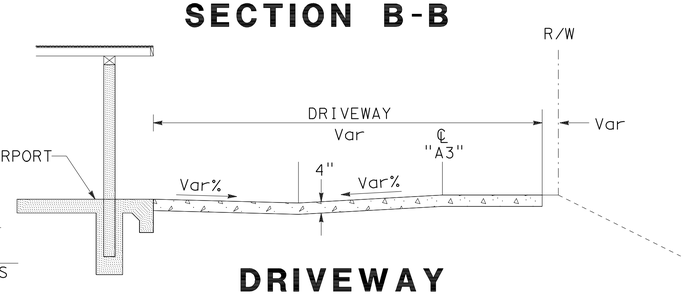

DRIVEWAY SECTION C-C

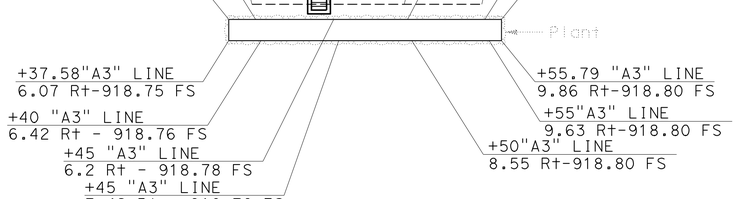

PLANTER DETAIL A

NOTE:

FOR ACCURATE RIGHT OF WAY AND ACCESS DATA, CONTACT RIGHT OF WAY ENGINEERING AT THE DISTRICT OFFICE.

CURVE DATA

No.	R	Δ	T	L
1	40.00'	27°50'27"	9.91'	19.44'

CONSTRUCTION DETAILS
PARCEL 20867 IMPROVEMENTS

SCALE: 1" = 10'

C-38

STATE OF CALIFORNIA - DEPARTMENT OF TRANSPORTATION

Caltrans DESIGN

FUNCTIONAL SUPERVISOR: MARK PERTILE

CALCULATED-DESIGNED BY: CUONG LE TRAN

CHECKED BY: ANNABELL WANG

REVISED BY / DATE REVISED

LAST REVISION 12-01-10

DATE PLOTTED => 29-APR-2011
TIME PLOTTED => 18:32

Dist	COUNTY	ROUTE	POST MILES TOTAL PROJECT	SHEET No.	TOTAL SHEETS
08	Riv	91	15.6/21.6	125	2028

REGISTERED CIVIL ENGINEER 12-1-10 DATE

4-25-11
PLANS APPROVAL DATE

REGISTERED PROFESSIONAL ENGINEER CUONG LE TRAN No. C60436 Exp. 6/30/12 CIVIL STATE OF CALIFORNIA

THE STATE OF CALIFORNIA OR ITS OFFICERS OR AGENTS SHALL NOT BE RESPONSIBLE FOR THE ACCURACY OR COMPLETENESS OF SCANNED COPIES OF THIS PLAN SHEET.

NOTE:

FOR ACCURATE RIGHT OF WAY AND ACCESS DATA, CONTACT RIGHT OF WAY ENGINEERING AT THE DISTRICT OFFICE.

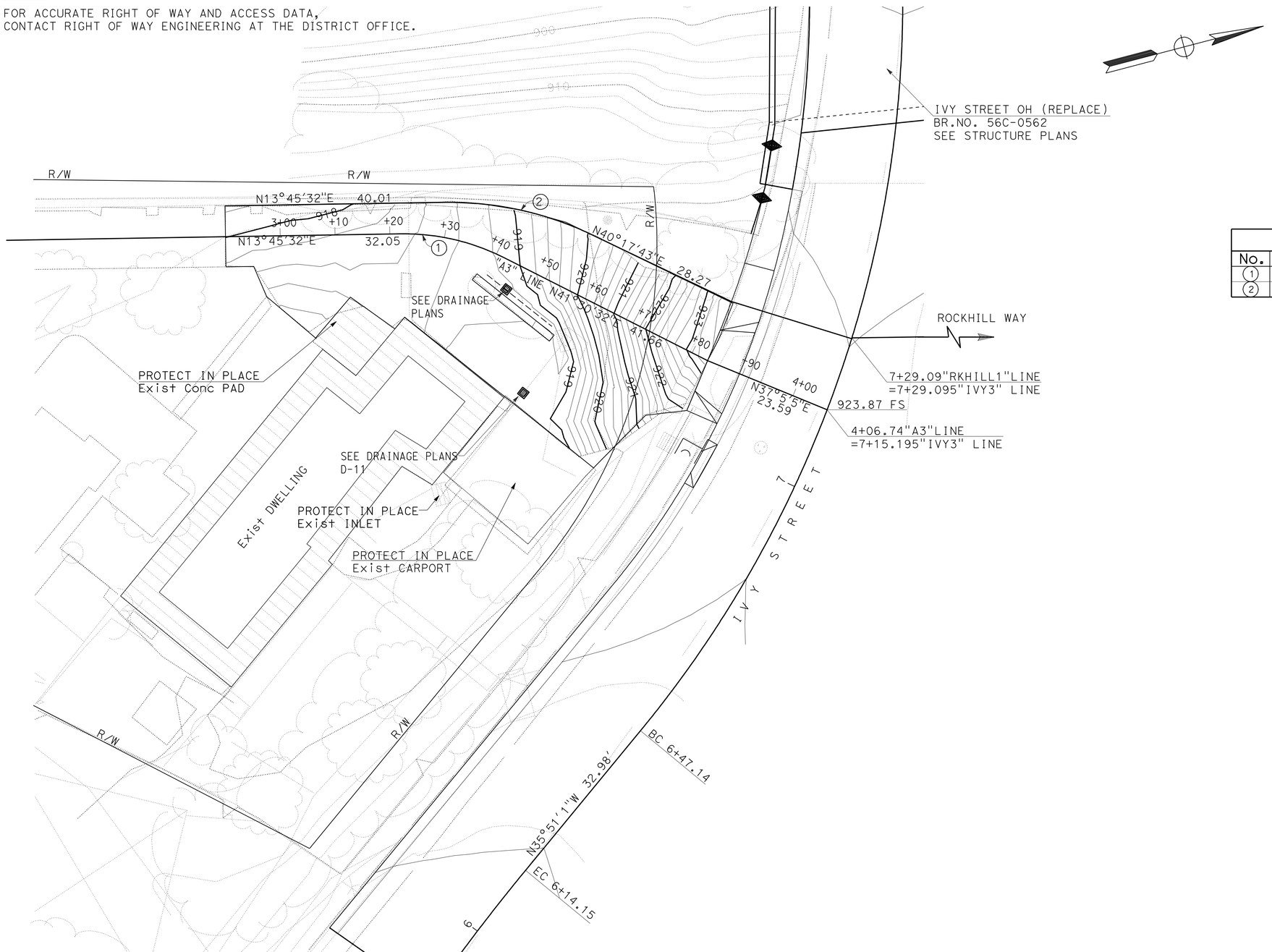

CURVE DATA				
No.	R	Δ	T	L
1	40.00'	27°50'27"	9.91'	19.44'
2	60.00'	26°32'10"	14.15'	27.79'

CONTOUR GRADING PLAN

CONSTRUCTION DETAILS
PARCEL 20867 IMPROVEMENTS
SCALE: 1" = 10'

C-39

STATE OF CALIFORNIA - DEPARTMENT OF TRANSPORTATION
Caltrans DESIGN

FUNCTIONAL SUPERVISOR: MARK PERTILE
CALCULATED-DESIGNED BY: ANNABELL WANG
CHECKED BY: CUONG LE TRAN
REVISED BY
DATE REVISED

LAST REVISION 12-01-10
DATE PLOTTED => 29-APR-2011
TIME PLOTTED => 18:32

Dist	COUNTY	ROUTE	POST MILES TOTAL PROJECT	SHEET No.	TOTAL SHEETS
08	Riv	91	15.6/21.6	126	2028

REGISTERED CIVIL ENGINEER 12-1-10 DATE

4-25-11
PLANS APPROVAL DATE

REGISTERED PROFESSIONAL ENGINEER CUONG LE TRAN No. C60436 Exp. 6/30/12 CIVIL STATE OF CALIFORNIA

THE STATE OF CALIFORNIA OR ITS OFFICERS OR AGENTS SHALL NOT BE RESPONSIBLE FOR THE ACCURACY OR COMPLETENESS OF SCANNED COPIES OF THIS PLAN SHEET.

CONSTRUCTION NOTES:

5 CONSTRUCT SIDEWALK, CURB SIDEWALK, SEE SHEET C-81
6 CONSTRUCT DRIVEWAY APPROACH, TYPE CURB I, SEE SHEET C-77
13 CONSTRUCT WHEELCHAIR RAMP TYPE I, SEE SHEET C-83
14 CONSTRUCT WHEELCHAIR RAMP TYPE II, SEE SHEET C-83
15 CONSTRUCT WHEELCHAIR RAMP TYPE III, SEE SHEET C-83

PROTECT IN PLACE Exist RCB CHANNEL SHALLOW DEPTH

NOTE:

FOR ACCURATE RIGHT OF WAY AND ACCESS DATA, CONTACT RIGHT OF WAY ENGINEERING AT THE DISTRICT OFFICE.

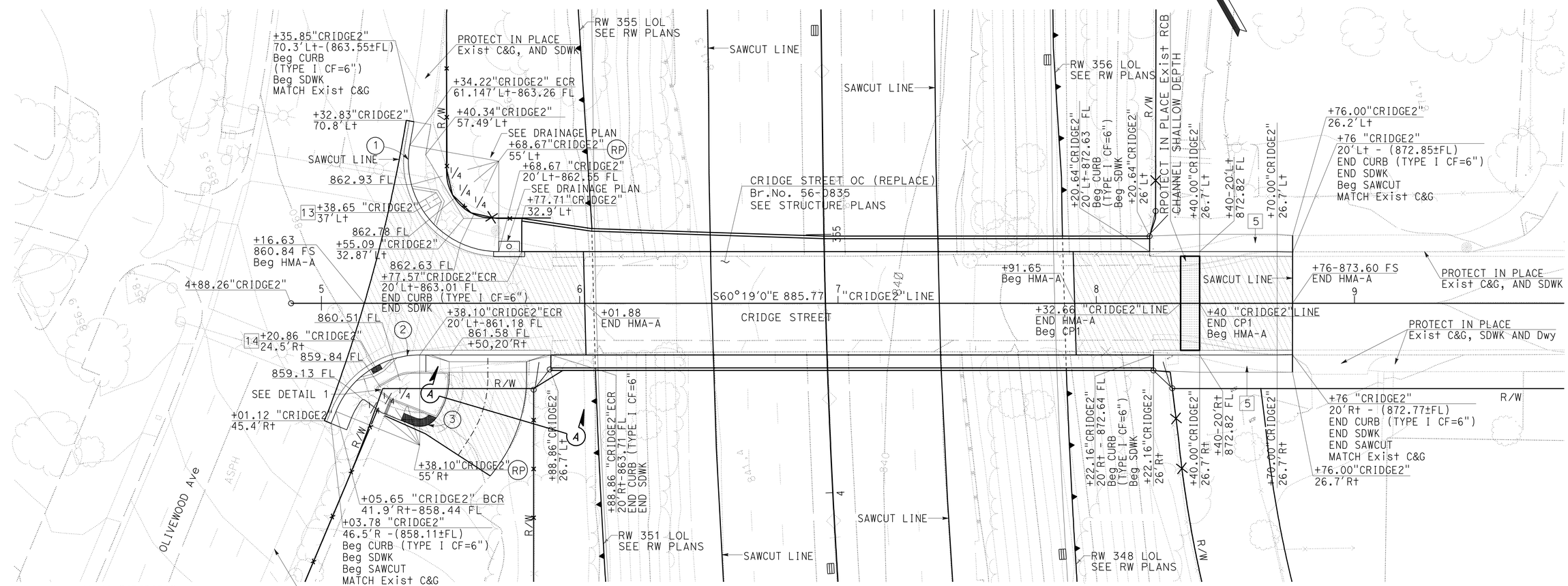

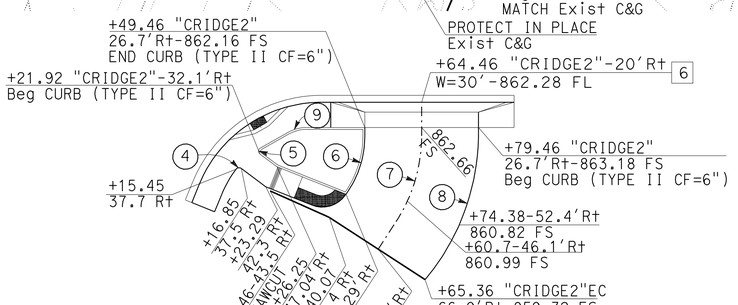

DRIVEWAY AND PLANTER AREA DETAIL 1

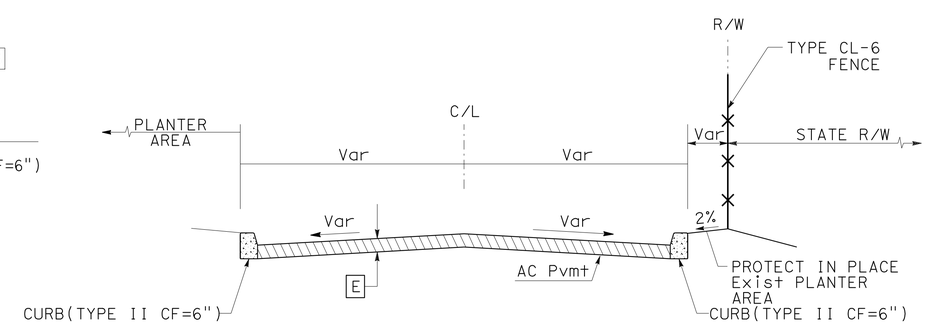

SECTION A-A
NOT TO SCALE

CURVE DATA

No.	R	Δ	T	L
1	35.00'	100°6'56"	41.80'	61.16'
2	35.00'	67°58'24"	23.60'	41.52'
3	7.50'	76°6'55"	5.87'	9.96'
4	1.00'	89°24'27"	0.99'	1.56'
5	1.00'	113°42'24"	1.53'	1.98'
6	26.56'	35°32'30"	8.51'	16.48'
7	41.56'	33°2'41"	12.33'	23.97'
8	60.00'	40°5'20"	21.89'	41.98'
9	10.00'	29°30'26"	2.63'	5.15'

CRIDGE STREET IMPROVEMENTS

CONSTRUCTION DETAILS

SCALE: 1" = 20'

C-40

STATE OF CALIFORNIA - DEPARTMENT OF TRANSPORTATION
DESIGN
Caltrans

FUNCTIONAL SUPERVISOR: MARK PERTILE
CALCULATED-DESIGNED BY: CUONG LE TRAN
CHECKED BY: ANNABELL WANG
REVISED BY / DATE REVISED

LAST REVISION 12-01-10
DATE PLOTTED => 29-APR-2011
TIME PLOTTED => 18:32

Dist	COUNTY	ROUTE	POST MILES TOTAL PROJECT	SHEET No.	TOTAL SHEETS
08	Riv	91	15.6/21.6	127	2028

REGISTERED CIVIL ENGINEER 12-1-10 DATE

4-25-11
PLANS APPROVAL DATE

REGISTERED PROFESSIONAL ENGINEER CUONG LE TRAN No. C60436 Exp. 6/30/12 CIVIL STATE OF CALIFORNIA

THE STATE OF CALIFORNIA OR ITS OFFICERS OR AGENTS SHALL NOT BE RESPONSIBLE FOR THE ACCURACY OR COMPLETENESS OF SCANNED COPIES OF THIS PLAN SHEET.

CONSTRUCTION NOTES:

1 CONSTRUCT CURB RAMP CASE A, SEE Std PLAN A88A
5 CONSTRUCT SIDEWALK, CURB SIDEWALK, SEE SHEET C-81
6 CONSTRUCT DRIVEWAY APPROACH, TYPE CURB I, SEE SHEET C-77
11 CONSTRUCT CURB AND DIKE TRANSITION, SEE SHEET C-82
13 CONSTRUCT WHEELCHAIR RAMP TYPE I, SEE SHEET C-83

NOTE:

FOR ACCURATE RIGHT OF WAY AND ACCESS DATA, CONTACT RIGHT OF WAY ENGINEERING AT THE DISTRICT OFFICE.

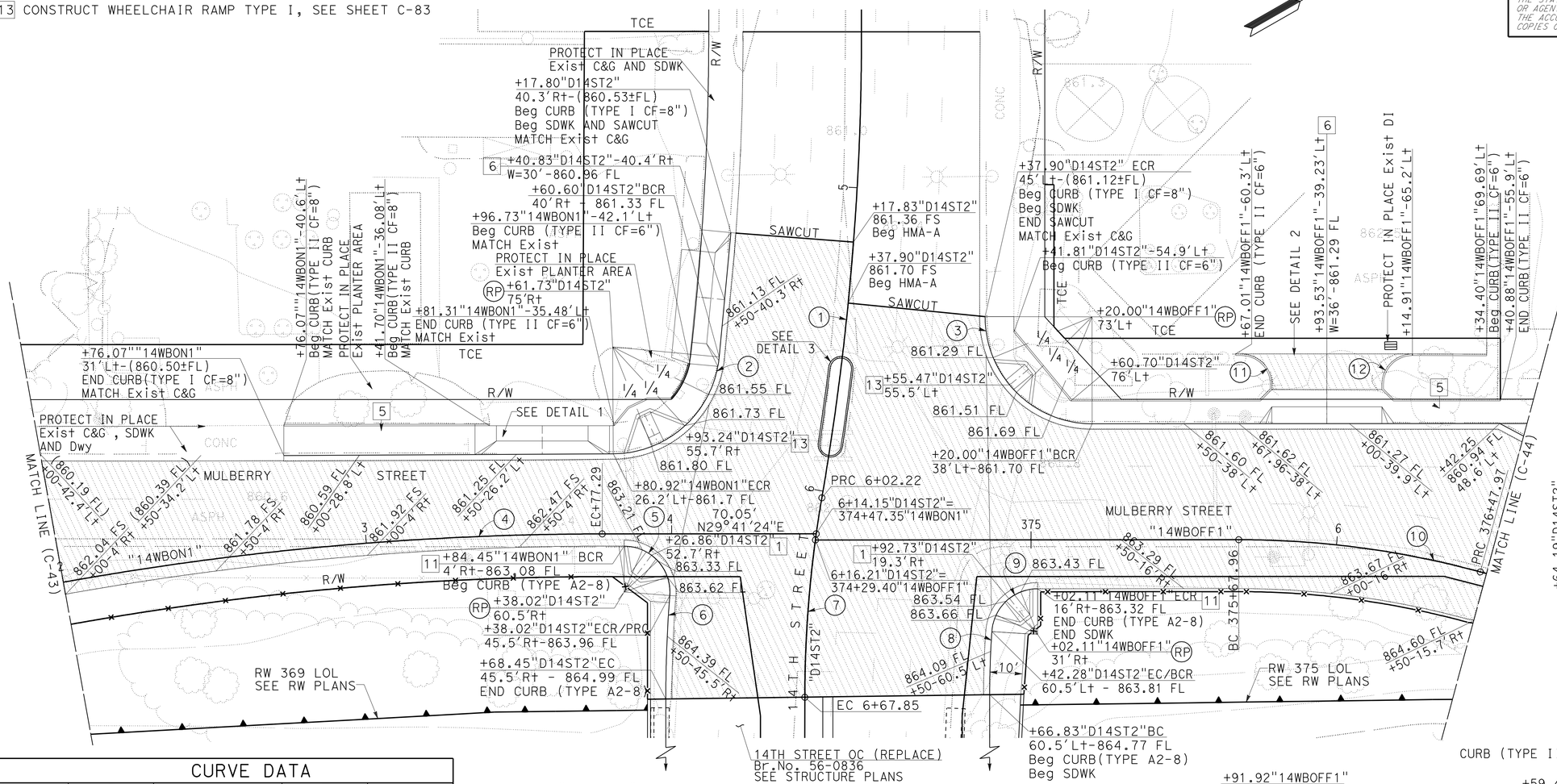

CURVE DATA				
No. (#)	R	Δ	T	L
1	900.00'	9°43'48"	76.60'	152.84'
2	35.00'	84°18'17"	31.68'	51.50'
3	35.00'	90°7'43"	35.08'	55.06'
4	1000.00'	11°30'39"	100.79'	200.90'
5	15.00'	94°24'17"	16.20'	24.72'
6	432.40'	4°29'48"	16.98'	33.93'
7	386.90'	9°43'11"	32.90'	65.63'
8	326.40'	3°38'12"	10.36'	20.72'
9	15.00'	86°9'08"	14.03'	22.55'
10	299.99'	15°16'51"	40.24'	80.01'
11	10.00'	90°43'39"	10.13'	15.83'
12	10.00'	90°14'08"	10.04'	15.75'
13	4.00'	180°0'00"	-	12.57'
14	904.00'	1°36'11"	12.65'	25.29'
15	4.00'	180°0'00"	-	12.57'
16	896.00'	1°36'11"	12.53'	25.07'

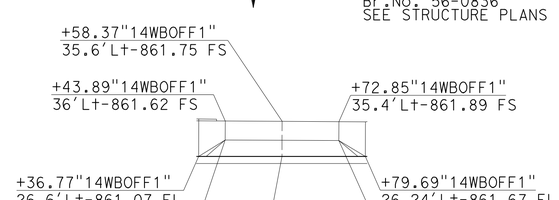

DRIVEWAY DETAIL 1

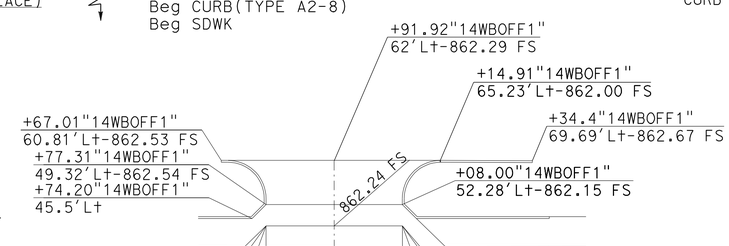

DRIVEWAY DETAIL 2

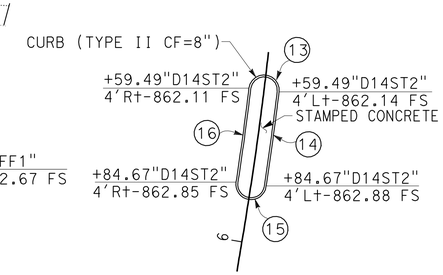

Conc RAISED ISLAND DETAIL 3

14TH STREET IMPROVEMENTS

CONSTRUCTION DETAILS

SCALE: 1" = 20'

C-41

STATE OF CALIFORNIA - DEPARTMENT OF TRANSPORTATION
Caltrans® DESIGN
FUNCTIONAL SUPERVISOR: MARK PERTILE
CALCULATED-DESIGNED BY: ANNABELL WANG
CHECKED BY: CUONG LE TRAN
REVISED BY / DATE REVISED

LAST REVISION 12-01-10
DATE PLOTTED => 29-APR-2011
TIME PLOTTED => 18:32

Dist	COUNTY	ROUTE	POST MILES TOTAL PROJECT	SHEET No.	TOTAL SHEETS
08	Riv	91	15.6/21.6	128	2028

REGISTERED CIVIL ENGINEER — DATE 12-1-10

4-25-11
PLANS APPROVAL DATE

REGISTERED PROFESSIONAL ENGINEER CUONG LE TRAN No. C60436 Exp. 6/30/12 CIVIL STATE OF CALIFORNIA

THE STATE OF CALIFORNIA OR ITS OFFICERS OR AGENTS SHALL NOT BE RESPONSIBLE FOR THE ACCURACY OR COMPLETENESS OF SCANNED COPIES OF THIS PLAN SHEET.

NOTE:

FOR ACCURATE RIGHT OF WAY AND ACCESS DATA, CONTACT RIGHT OF WAY ENGINEERING AT THE DISTRICT OFFICE.

CONSTRUCTION NOTES:

1. CONSTRUCT CURB RAMP CASE A, SEE Std PLAN A88A
2. CONSTRUCT CURB RAMP CASE C, SEE Std PLAN A88A
3. CONSTRUCT CURB RAMP CASE CM, SEE Std PLAN A88A
5. CONSTRUCT SIDEWALK, CURB SIDEWALK, SEE SHEET C-81
11. CONSTRUCT CURB AND DIKE TRANSITION, SEE SHEET C-82

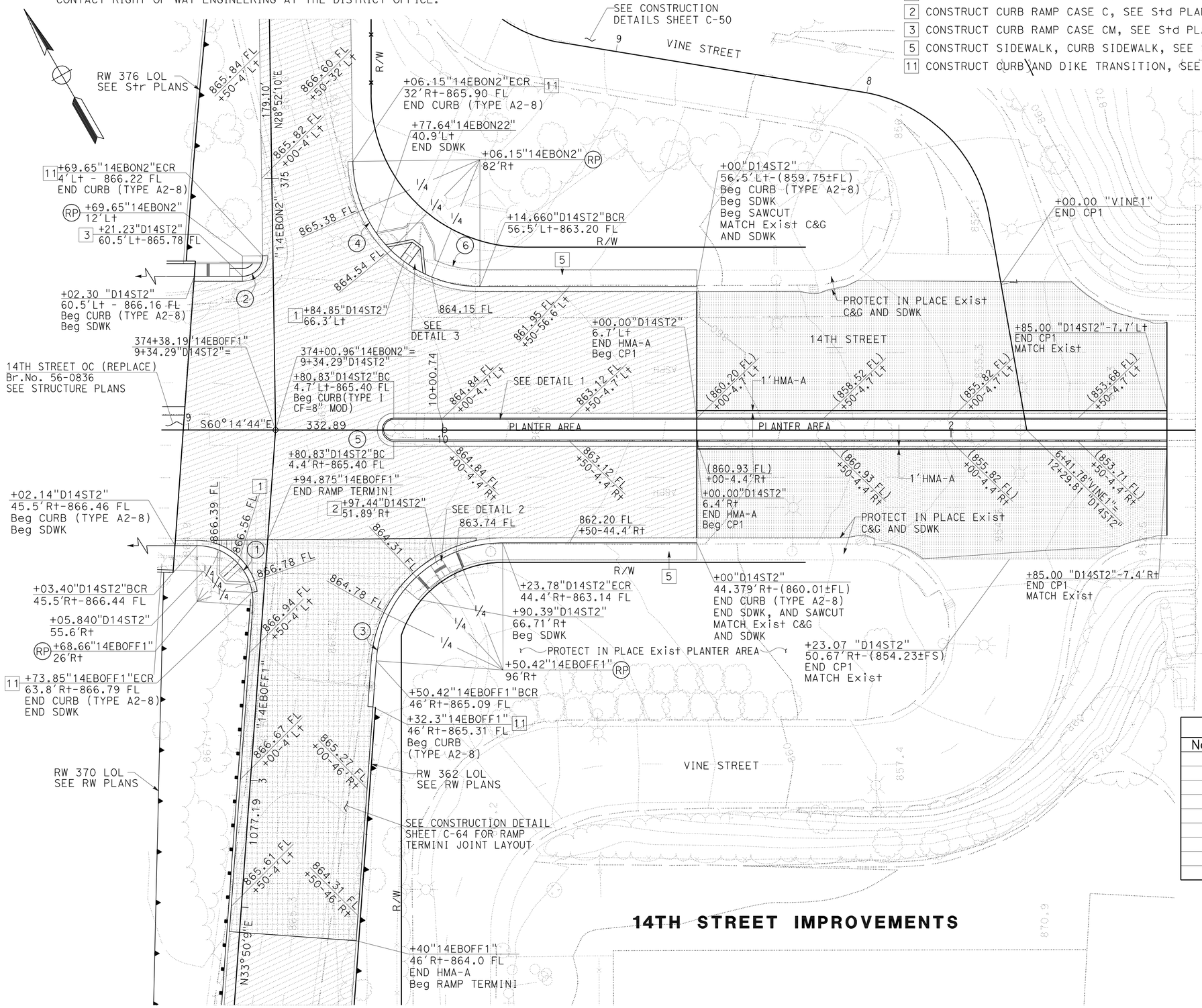

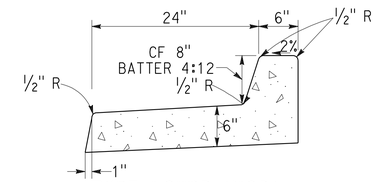

TYPE I CURB (MOD)
NON-WATER CARRYING GUTTER
DETAIL 1

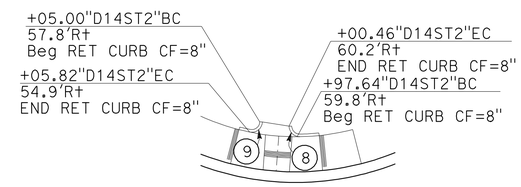

CURB RAMP
DETAIL 2

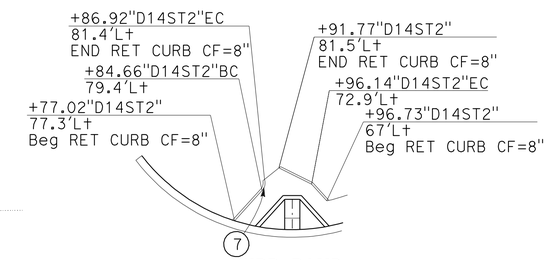

CURB RAMP
DETAIL 3

CURVE DATA

No.	R	Δ	T	L
1	22.00'	80°25'37"	18.60'	30.88'
2	8.00'	90°53'06"	8.12'	12.69'
3	50.00'	85°54'27"	46.55'	74.97'
4	50.00'	89°7'34"	49.24'	77.78'
5	4.55'	180°1'21"	23242.36'	14.30'
6	43.38'	24°25'08"	9.39'	18.49'
7	3.00'	60°5'20"	1.74'	3.15'
8	2.00'	90°44'17"	2.03'	3.17'
9	2.00'	100°0'41"	2.38'	3.49'

CONSTRUCTION DETAILS

SCALE: 1" = 20'

C-42

REVISED BY | DATE REVISED
CALCULATED- | DESIGNED BY
CHECKED BY
CUONG LE TRAN | ANNABELL WANG
FUNCTIONAL SUPERVISOR | MARK PERTILE
STATE OF CALIFORNIA - DEPARTMENT OF TRANSPORTATION
Caltrans
DESIGN

LAST REVISION 12-01-10 | DATE PLOTTED => 29-APR-2011 | TIME PLOTTED => 18:32

Dist	COUNTY	ROUTE	POST MILES TOTAL PROJECT	SHEET No.	TOTAL SHEETS
08	Riv	91	15.6/21.6	129	2028

REGISTERED CIVIL ENGINEER 12-1-10 DATE

4-25-11
PLANS APPROVAL DATE

REGISTERED PROFESSIONAL ENGINEER CUONG LE TRAN No. C60436 Exp. 6/30/12 CIVIL STATE OF CALIFORNIA

THE STATE OF CALIFORNIA OR ITS OFFICERS OR AGENTS SHALL NOT BE RESPONSIBLE FOR THE ACCURACY OR COMPLETENESS OF SCANNED COPIES OF THIS PLAN SHEET.

CURVE DATA

No. Ⓡ	R	Δ	T	L
1	9820.01′	3°47′47"	325.46′	650.69′
2	2699.99′	5°50′44"	137.85′	275.47′
3	4.00′	148°4′56"	13.99′	10.34′
4	2672.00′	1°23′10"	32.33′	64.65′
5	4.00′	148°31′00"	14.19′	10.37′
6	80.44′	37°23′40"	27.22′	52.50′
7	73.31′	40°1′39"	26.70′	51.21′
8	2.00′	139°26′13"	5.41′	4.87′
9	80.00′	86°31′16"	75.28′	120.81′
10	1000.00′	11°30′39"	100.79′	200.90′

CONSTRUCTION NOTES:

11 CONSTRUCT CURB AND DIKE TRANSITION, SEE SHEET C-82

12 ROCK BLANKET, SEE LANDSCAPE PLANS

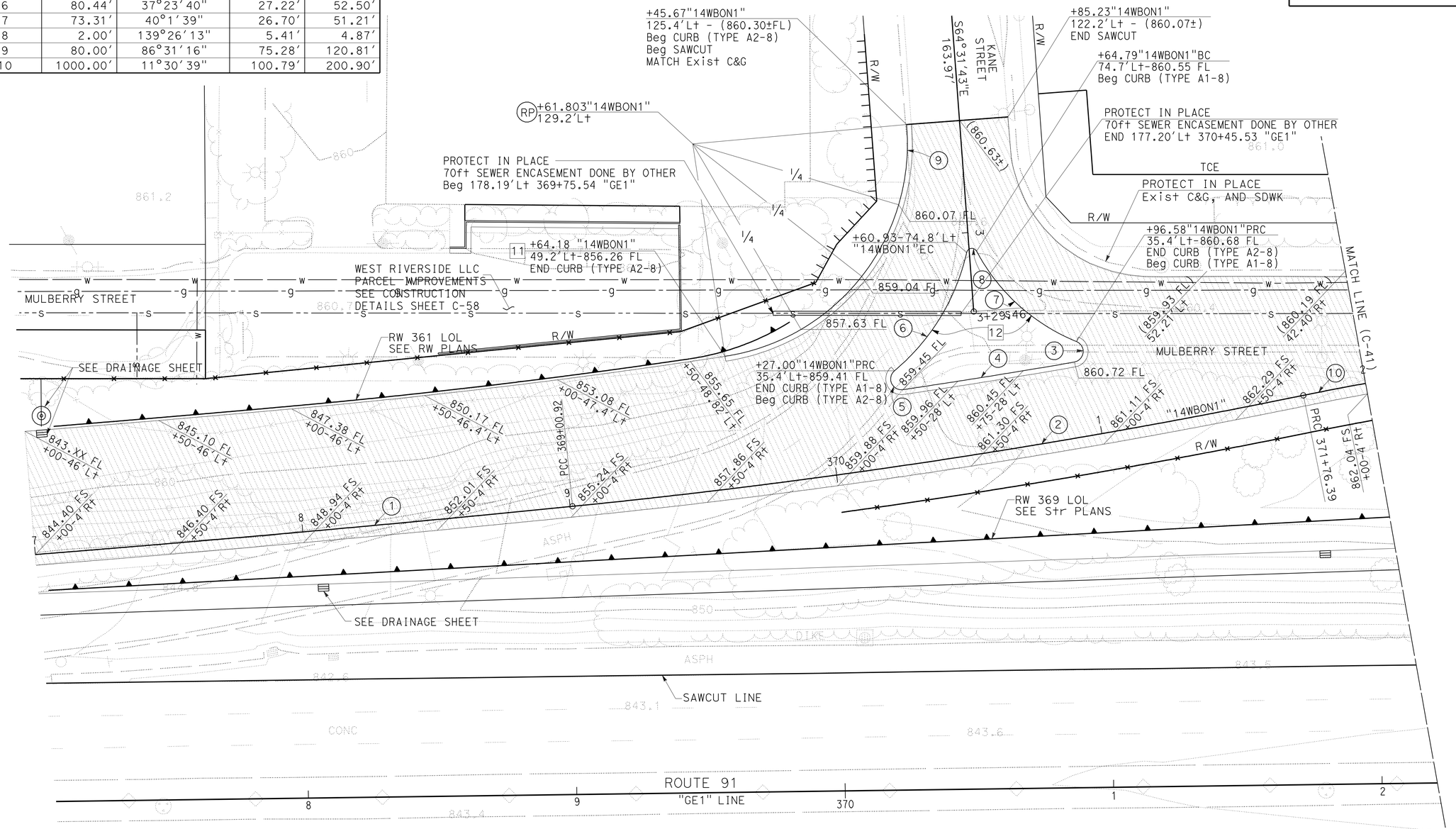

NOTE:

FOR ACCURATE RIGHT OF WAY AND ACCESS DATA,
CONTACT RIGHT OF WAY ENGINEERING AT THE DISTRICT OFFICE.

CONSTRUCTION DETAILS

SCALE: 1" = 20′

C-43

STATE OF CALIFORNIA - DEPARTMENT OF TRANSPORTATION
Caltrans
DESIGN

FUNCTIONAL SUPERVISOR: MARK PERTILE
CALCULATED-DESIGNED BY: ANNABELL WANG
CHECKED BY: CUONG LE TRAN
REVISED BY
DATE REVISED

LAST REVISION 12-01-10 | DATE PLOTTED => 29-APR-2011 | TIME PLOTTED => 18:33

Dist	COUNTY	ROUTE	POST MILES TOTAL PROJECT	SHEET No.	TOTAL SHEETS
08	Riv	91	15.6/21.6	130	2028

REGISTERED CIVIL ENGINEER 12-1-10 DATE

4-25-11
PLANS APPROVAL DATE

REGISTERED PROFESSIONAL ENGINEER CUONG LE TRAN No. C60436 Exp. 6/30/12 CIVIL STATE OF CALIFORNIA

THE STATE OF CALIFORNIA OR ITS OFFICERS OR AGENTS SHALL NOT BE RESPONSIBLE FOR THE ACCURACY OR COMPLETENESS OF SCANNED COPIES OF THIS PLAN SHEET.

CONSTRUCTION NOTES:

4 CONSTRUCT SIDEWALK, PROPERTY LINE SIDEWALK, SEE SHEET C-81

21 CONSTRUCT DRIVEWAY APPROACH, TYPE PL-I, SEE SHEET C-77

CURVE DATA				
No.	R	Δ	T	L
1	60′	89°45′09"	59.74′	93.99′
2	2′	168°15′55"	19.46′	5.87′
3	31′	89°58′ 10"	30.78′	48.36′

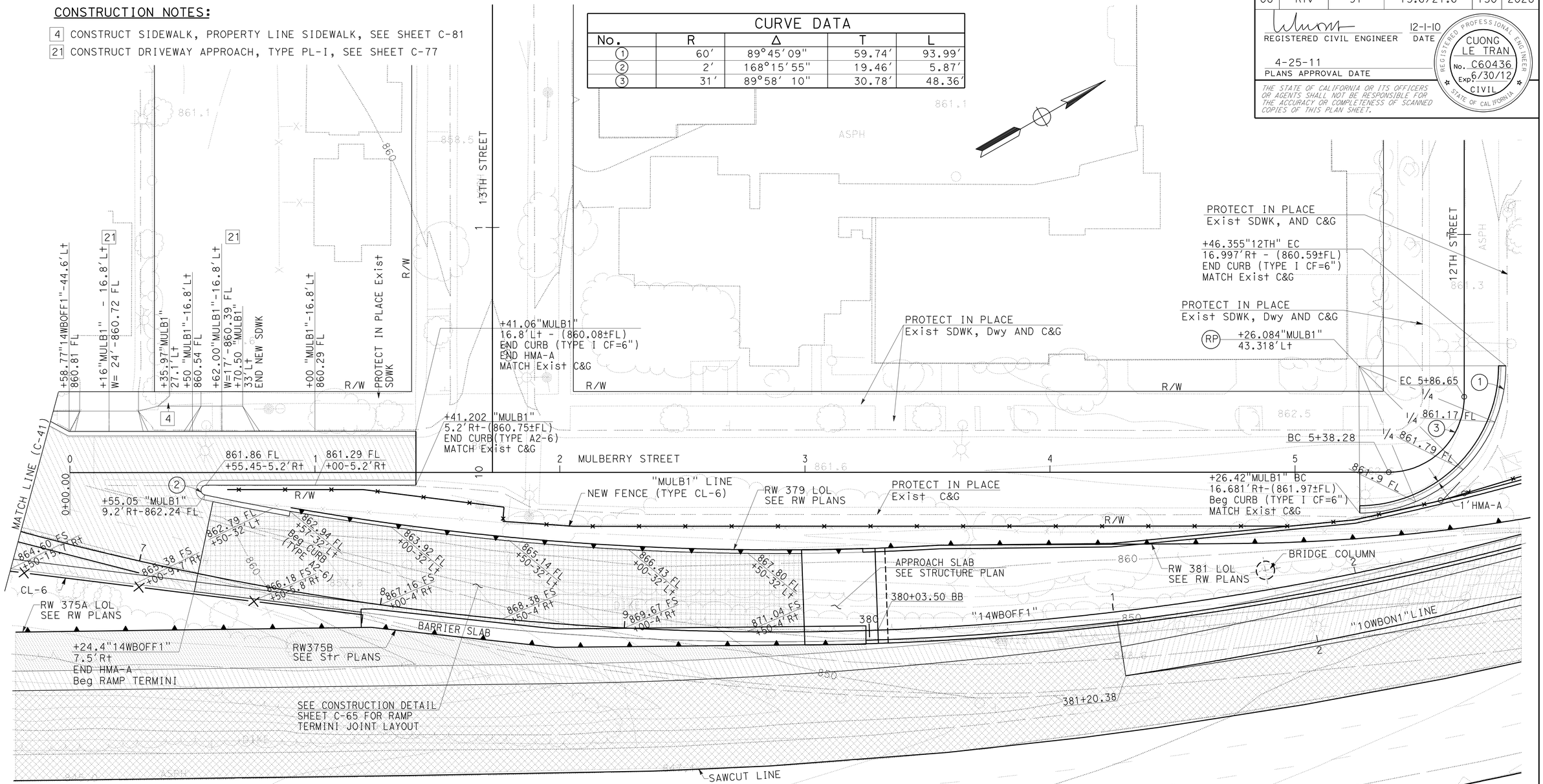

14th STREET OFF RAMP AND MULBERRY STREET IMPROVEMENTS

CONSTRUCTION DETAILS

SCALE: 1" = 20′

C-44

NOTE:

FOR ACCURATE RIGHT OF WAY AND ACCESS DATA, CONTACT RIGHT OF WAY ENGINEERING AT THE DISTRICT OFFICE.

STATE OF CALIFORNIA - DEPARTMENT OF TRANSPORTATION

Caltrans DESIGN

FUNCTIONAL SUPERVISOR MARK PERTILE

CALCULATED-DESIGNED BY CUONG LE TRAN

CHECKED BY ANNABELL WANG

REVISED BY

DATE REVISED

LAST REVISION 12-01-10

DATE PLOTTED => 29-APR-2011

TIME PLOTTED => 18:33

Dist	COUNTY	ROUTE	POST MILES TOTAL PROJECT	SHEET No.	TOTAL SHEETS
08	Riv	91	15.6/21.6	131	2028

REGISTERED CIVIL ENGINEER 12-1-10 DATE

4-25-11
PLANS APPROVAL DATE

REGISTERED PROFESSIONAL ENGINEER CUONG LE TRAN No. C60436 Exp. 6/30/12 CIVIL STATE OF CALIFORNIA

THE STATE OF CALIFORNIA OR ITS OFFICERS OR AGENTS SHALL NOT BE RESPONSIBLE FOR THE ACCURACY OR COMPLETENESS OF SCANNED COPIES OF THIS PLAN SHEET.

CONSTRUCTION NOTES:

5 CONSTRUCT SIDEWALK, CURB SIDEWALK, SEE SHEET C-81

6 CONSTRUCT DRIVEWAY APPROACH, TYPE CURB I, SEE SHEET C-77

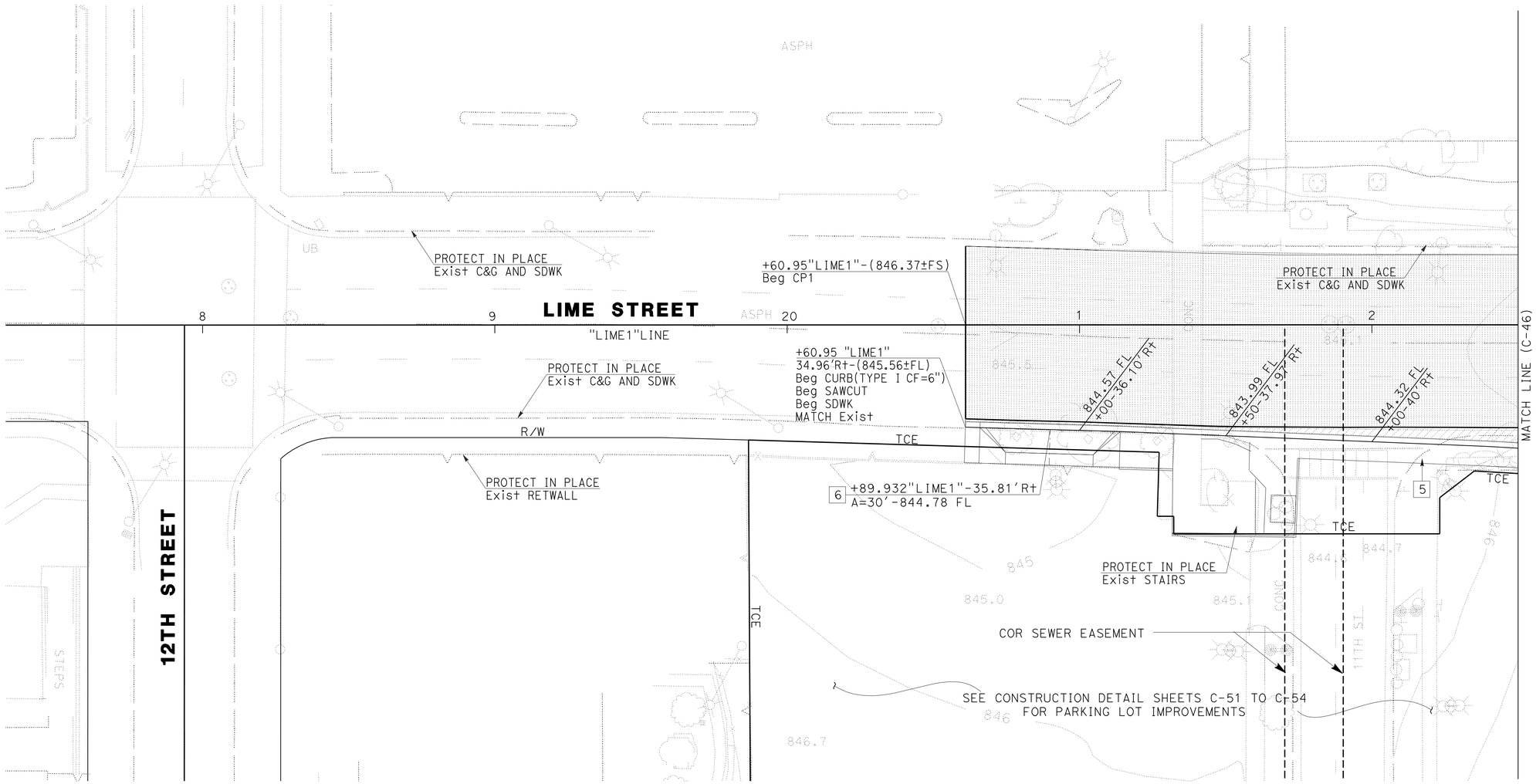

LIME STREET IMPROVEMENTS

NOTE:

FOR ACCURATE RIGHT OF WAY AND ACCESS DATA,
CONTACT RIGHT OF WAY ENGINEERING AT THE DISTRICT OFFICE.

CONSTRUCTION DETAILS

SCALE: 1" = 20'

C-45

STATE OF CALIFORNIA - DEPARTMENT OF TRANSPORTATION
Caltrans
DESIGN

FUNCTIONAL SUPERVISOR: MARK PERTILE
CALCULATED-DESIGNED BY: CUONG LE TRAN
CHECKED BY: ANNABELL WANG
REVISED BY
DATE REVISED

LAST REVISION 12-01-10
DATE PLOTTED => 29-APR-2011
TIME PLOTTED => 18:33

Dist	COUNTY	ROUTE	POST MILES TOTAL PROJECT	SHEET No.	TOTAL SHEETS
08	Riv	91	15.6/21.6	132	2028

REGISTERED CIVIL ENGINEER — DATE 12-1-10

4-25-11
PLANS APPROVAL DATE

REGISTERED PROFESSIONAL ENGINEER — CUONG LE TRAN — No. C60436 — Exp. 6/30/12 — CIVIL — STATE OF CALIFORNIA

THE STATE OF CALIFORNIA OR ITS OFFICERS OR AGENTS SHALL NOT BE RESPONSIBLE FOR THE ACCURACY OR COMPLETENESS OF SCANNED COPIES OF THIS PLAN SHEET.

CONSTRUCTION NOTES:

1. CONSTRUCT CURB RAMP CASE A, SEE Std PLAN A88A
5. CONSTRUCT SIDEWALK, CURB SIDEWALK, SEE SHEET C-81
6. CONSTRUCT DRIVEWAY APPROACH, TYPE CURB I, SEE SHEET C-77
9. CONSTRUCT CROSS GUTTER W=6′, SEE SHEET C-87
11. CONSTRUCT CURB AND DIKE TRANSITION, SEE SHEET C-82

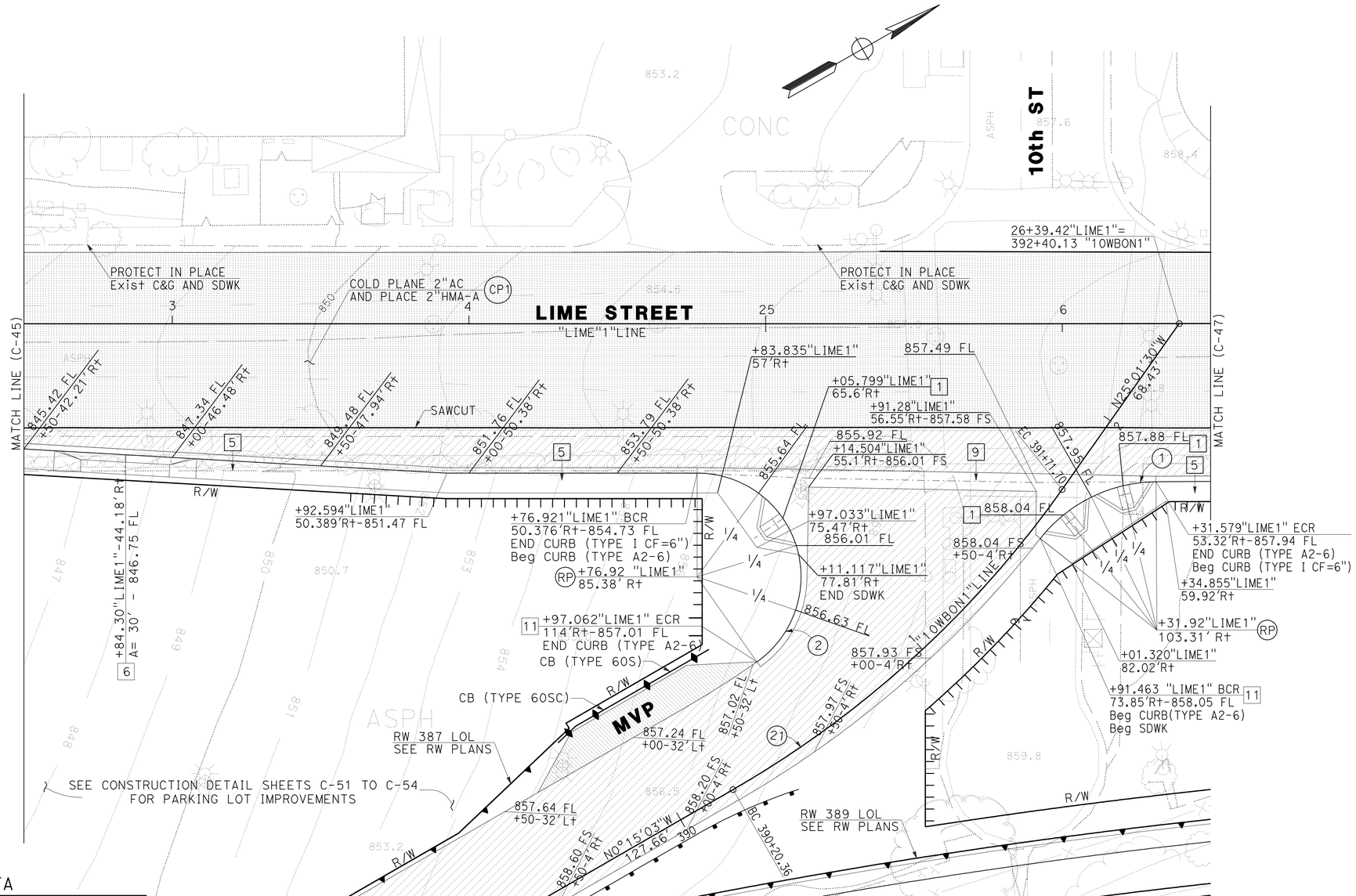

LIME STREET IMPROVEMENTS

CURVE DATA

No.	R	Δ	T	L
1	35.00′	144°52′21"	110.58′	88.50′
2	50.00′	51°30′11"	24.12′	44.94′
21	350.00′	24°46′27"	76.87′	151.34′

NOTE:

FOR ACCURATE RIGHT OF WAY AND ACCESS DATA,
CONTACT RIGHT OF WAY ENGINEERING AT THE DISTRICT OFFICE.

CONSTRUCTION DETAILS

SCALE: 1" = 20′

C-46

STATE OF CALIFORNIA - DEPARTMENT OF TRANSPORTATION
Caltrans® DESIGN

FUNCTIONAL SUPERVISOR: MARK PERTILE
CALCULATED-DESIGNED BY: CUONG LE TRAN
CHECKED BY: ANNABELL WANG
REVISED BY
DATE REVISED

LAST REVISION 12-01-10 | DATE PLOTTED => 29-APR-2011 | TIME PLOTTED => 18:33

Dist	COUNTY	ROUTE	POST MILES TOTAL PROJECT	SHEET No.	TOTAL SHEETS
08	Riv	91	15.6/21.6	133	2028

REGISTERED CIVIL ENGINEER 12-1-10 DATE

4-25-11
PLANS APPROVAL DATE

REGISTERED PROFESSIONAL ENGINEER CUONG LE TRAN No. C60436 Exp. 6/30/12 CIVIL STATE OF CALIFORNIA

THE STATE OF CALIFORNIA OR ITS OFFICERS OR AGENTS SHALL NOT BE RESPONSIBLE FOR THE ACCURACY OR COMPLETENESS OF SCANNED COPIES OF THIS PLAN SHEET.

NOTE:

FOR ACCURATE RIGHT OF WAY AND ACCESS DATA, CONTACT RIGHT OF WAY ENGINEERING AT THE DISTRICT OFFICE.

CONSTRUCTION NOTES:

5 CONSTRUCT SIDEWALK, CURB SIDEWALK, SEE SHEET C-81

6 CONSTRUCT DRIVEWAY APPROACH, TYPE CURB I, SEE SHEET C-77

13 CONSTRUCT WHEELCHAIR RAMP TYPE I, SEE SHEET C-83

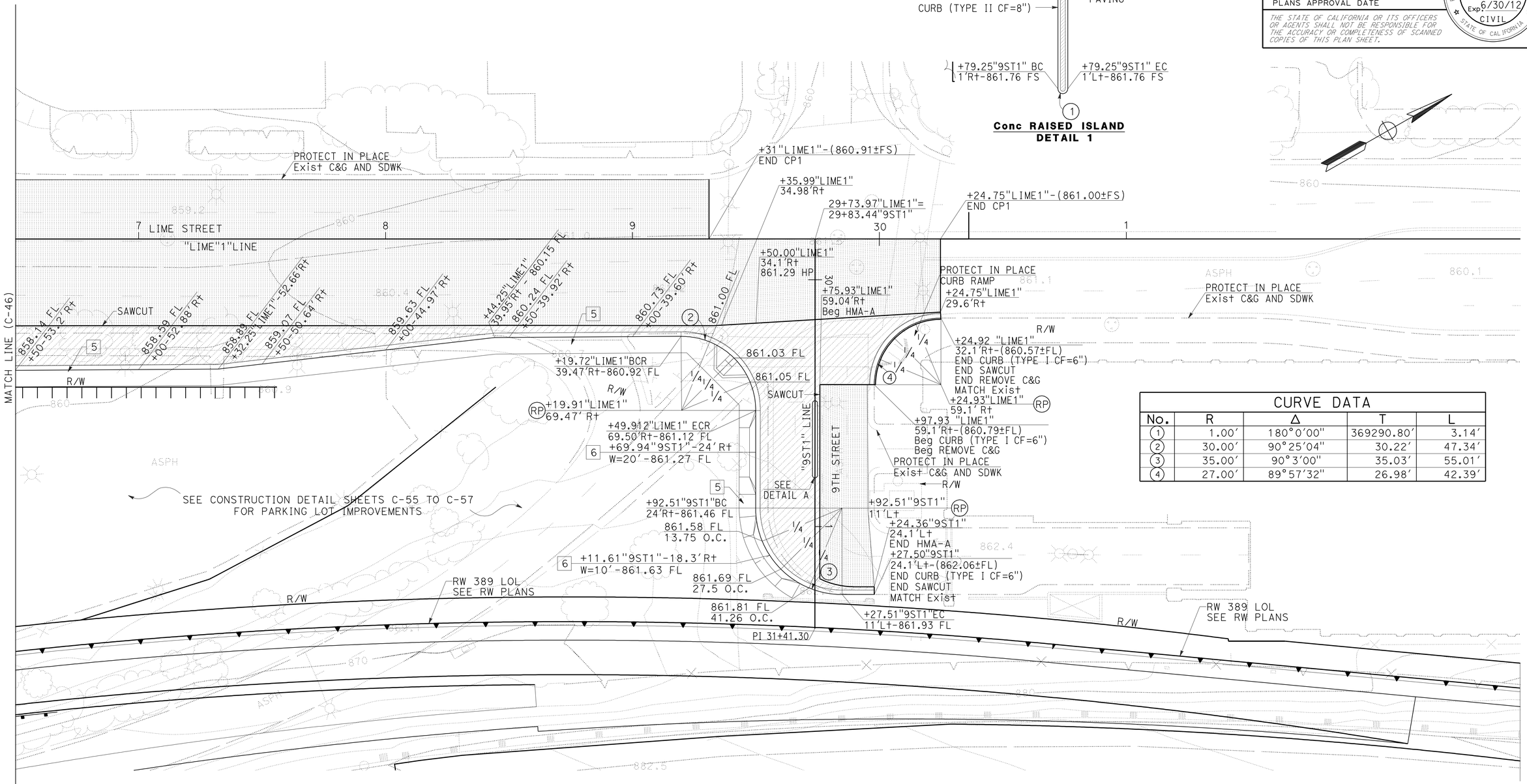

CURVE DATA				
No.	R	Δ	T	L
1	1.00'	180°0'00"	369290.80'	3.14'
2	30.00'	90°25'04"	30.22'	47.34'
3	35.00'	90°3'00"	35.03'	55.01'
4	27.00'	89°57'32"	26.98'	42.39'

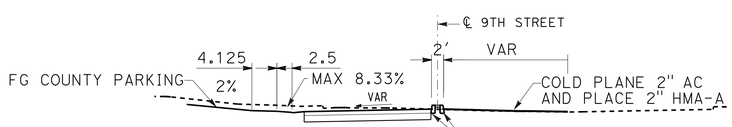

9TH STREET
Sta 30+16.00 TO Sta 31+30.00

LIME STREET AND 9TH STREET IMPROVEMENTS

CONSTRUCTION DETAILS

SCALE: 1" = 20'

C-47

STATE OF CALIFORNIA - DEPARTMENT OF TRANSPORTATION
DESIGN
FUNCTIONAL SUPERVISOR: MARK PERTILE
CALCULATED-DESIGNED BY: ANNABELL WANG
CHECKED BY: CUONG LE TRAN
REVISED BY
DATE REVISED

LAST REVISION 12-01-10
DATE PLOTTED => 29-APR-2011
TIME PLOTTED => 18:33

Dist	COUNTY	ROUTE	POST MILES TOTAL PROJECT	SHEET No.	TOTAL SHEETS
08	Riv	91	15.6/21.6	134	2028

REGISTERED CIVIL ENGINEER 12-1-10 DATE

4-25-11
PLANS APPROVAL DATE

REGISTERED PROFESSIONAL ENGINEER CUONG LE TRAN No. C60436 Exp. 6/30/12 CIVIL STATE OF CALIFORNIA

THE STATE OF CALIFORNIA OR ITS OFFICERS OR AGENTS SHALL NOT BE RESPONSIBLE FOR THE ACCURACY OR COMPLETENESS OF SCANNED COPIES OF THIS PLAN SHEET.

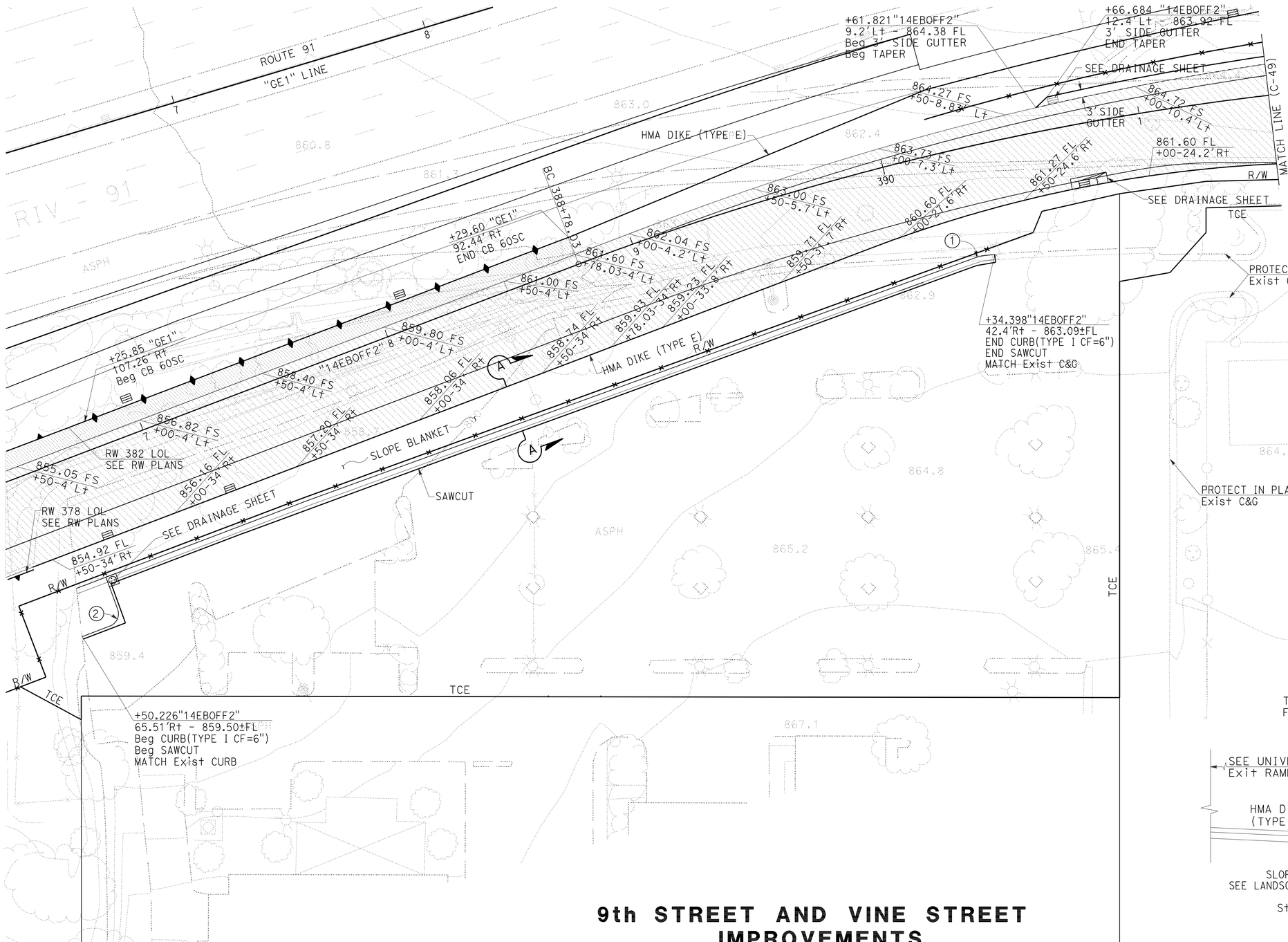

9th STREET AND VINE STREET IMPROVEMENTS

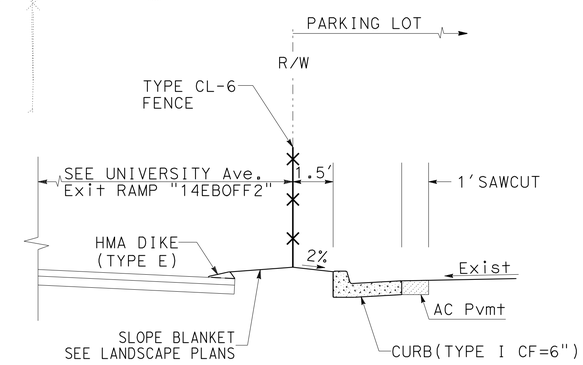

Sta."14EBOFF2" 386+66.81 TO 390+42.385

SECTION A-A

NOT TO SCALE

CURVE DATA				
No.	R	Δ	T	L
1	20.00'	13°58'08"	2.45'	4.88'
2	5.00'	89°8'45"	4.93'	7.78'

NOTE:

FOR ACCURATE RIGHT OF WAY AND ACCESS DATA, CONTACT RIGHT OF WAY ENGINEERING AT THE DISTRICT OFFICE.

CONSTRUCTION DETAILS

SCALE: 1" = 20'

C-48

STATE OF CALIFORNIA - DEPARTMENT OF TRANSPORTATION
DESIGN
FUNCTIONAL SUPERVISOR: MARK PERTILE
CALCULATED-DESIGNED BY: CUONG LE TRAN
CHECKED BY: ANNABELL WANG
REVISED BY
DATE REVISED

LAST REVISION 12-01-10
DATE PLOTTED => 29-APR-2011
TIME PLOTTED => 18:34

Dist	COUNTY	ROUTE	POST MILES TOTAL PROJECT	SHEET No.	TOTAL SHEETS
08	Riv	91	15.6/21.6	135	2028

REGISTERED CIVIL ENGINEER 12-1-10 DATE

4-25-11
PLANS APPROVAL DATE

REGISTERED PROFESSIONAL ENGINEER CUONG LE TRAN No. C60436 Exp. 6/30/12 CIVIL STATE OF CALIFORNIA

THE STATE OF CALIFORNIA OR ITS OFFICERS OR AGENTS SHALL NOT BE RESPONSIBLE FOR THE ACCURACY OR COMPLETENESS OF SCANNED COPIES OF THIS PLAN SHEET.

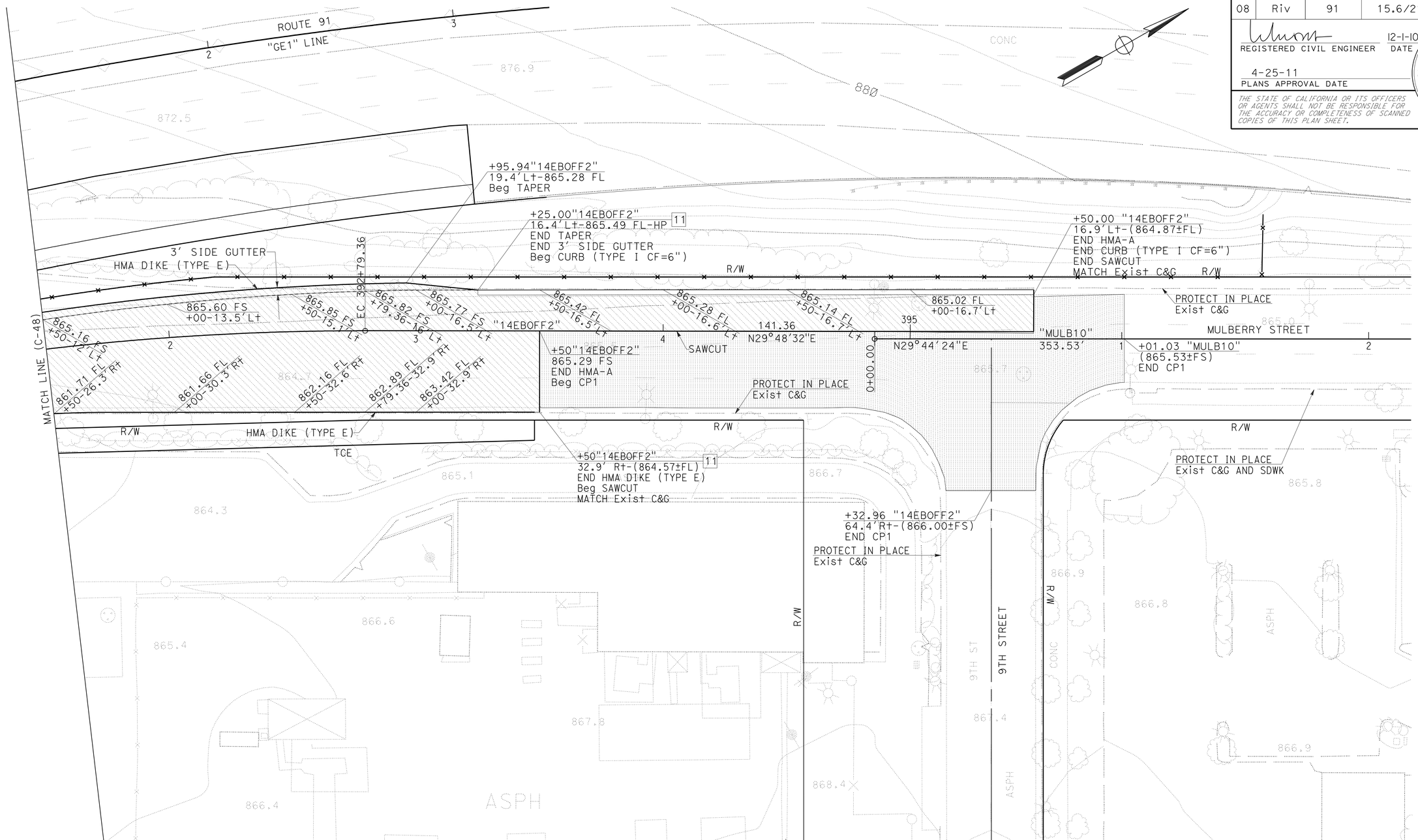

MULBERRY STREET IMPROVEMENTS

CONSTRUCTION NOTES:

11 CONSTRUCT CURB AND DIKE TRANSITION, SEE SHEET C-82

NOTE:

FOR ACCURATE RIGHT OF WAY AND ACCESS DATA,
CONTACT RIGHT OF WAY ENGINEERING AT THE DISTRICT OFFICE.

CONSTRUCTION DETAILS

SCALE: 1" = 20'

C-49

STATE OF CALIFORNIA - DEPARTMENT OF TRANSPORTATION
Caltrans DESIGN

FUNCTIONAL SUPERVISOR: MARK PERTILE
CALCULATED-DESIGNED BY: CUONG LE TRAN
CHECKED BY: ANNABELL WANG
REVISED BY
DATE REVISED

LAST REVISION 12-01-10 | DATE PLOTTED => 29-APR-2011 | TIME PLOTTED => 18:34

Dist	COUNTY	ROUTE	POST MILES TOTAL PROJECT	SHEET No.	TOTAL SHEETS
08	Riv	91	15.6/21.6	136	2028

REGISTERED CIVIL ENGINEER 12-1-10 DATE

4-25-11
PLANS APPROVAL DATE

REGISTERED PROFESSIONAL ENGINEER CUONG LE TRAN No. C60436 Exp. 6/30/12 CIVIL STATE OF CALIFORNIA

THE STATE OF CALIFORNIA OR ITS OFFICERS OR AGENTS SHALL NOT BE RESPONSIBLE FOR THE ACCURACY OR COMPLETENESS OF SCANNED COPIES OF THIS PLAN SHEET.

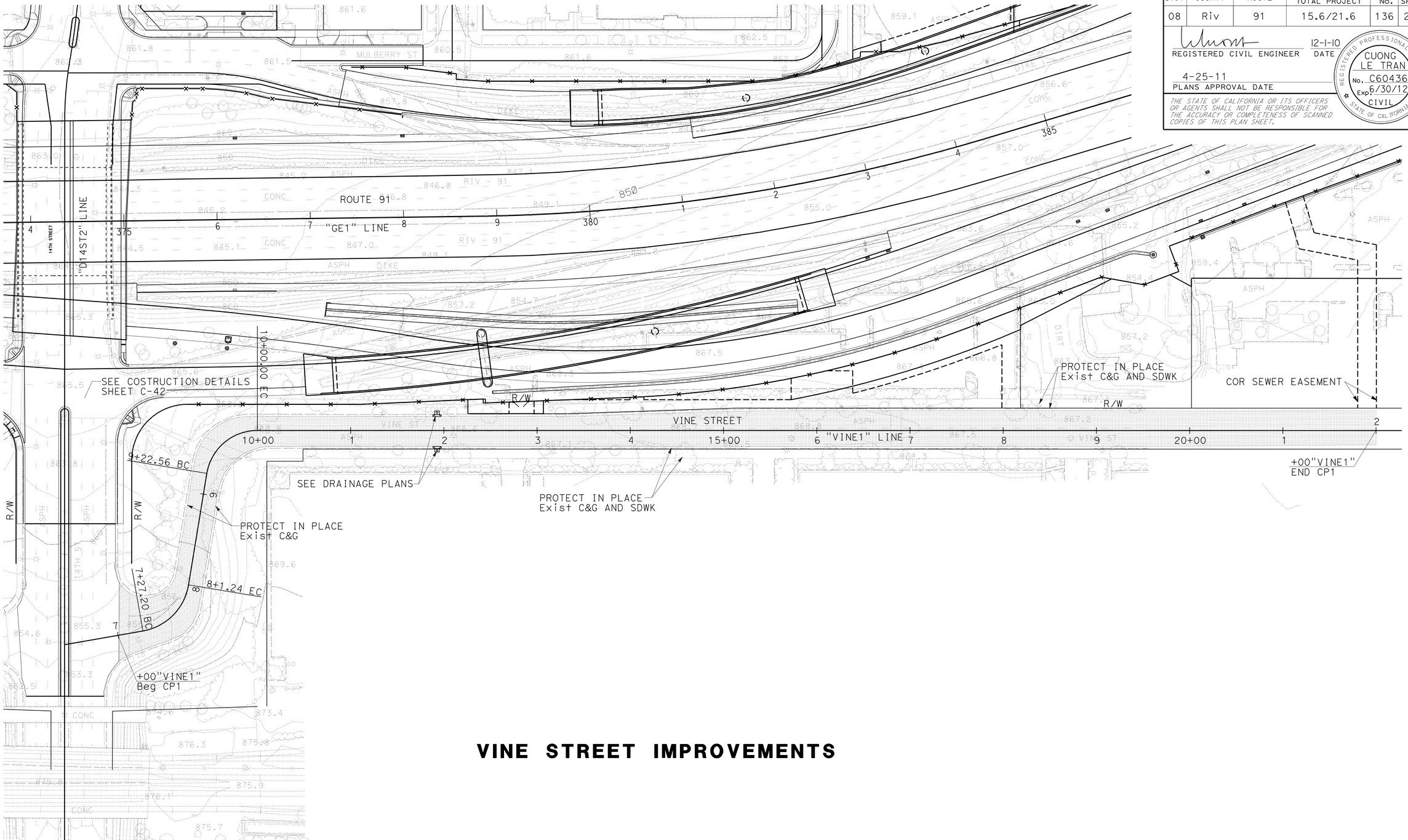

VINE STREET IMPROVEMENTS

NOTE:

FOR ACCURATE RIGHT OF WAY AND ACCESS DATA,
CONTACT RIGHT OF WAY ENGINEERING AT THE DISTRICT OFFICE.

CONSTRUCTION DETAILS

SCALE: 1" = 50'

C-50

REVISED BY	DATE REVISED
CUONG LE TRAN	ANNABELL WANG
CALCULATED-DESIGNED BY	CHECKED BY
FUNCTIONAL SUPERVISOR	MARK PERTILE

STATE OF CALIFORNIA - DEPARTMENT OF TRANSPORTATION

Caltrans DESIGN

LAST REVISION 12-01-10 | DATE PLOTTED => 29-APR-2011 | TIME PLOTTED => 18:34

Dist	COUNTY	ROUTE	POST MILES TOTAL PROJECT	SHEET No.	TOTAL SHEETS
08	Riv	91	15.6/21.6	137	2028

REGISTERED CIVIL ENGINEER 12-1-10 DATE

4-25-11
PLANS APPROVAL DATE

REGISTERED PROFESSIONAL ENGINEER CUONG LE TRAN No. C60436 Exp. 6/30/12 CIVIL STATE OF CALIFORNIA

THE STATE OF CALIFORNIA OR ITS OFFICERS OR AGENTS SHALL NOT BE RESPONSIBLE FOR THE ACCURACY OR COMPLETENESS OF SCANNED COPIES OF THIS PLAN SHEET.

NOTE:

FOR ACCURATE RIGHT OF WAY AND ACCESS DATA, CONTACT RIGHT OF WAY ENGINEERING AT THE DISTRICT OFFICE.

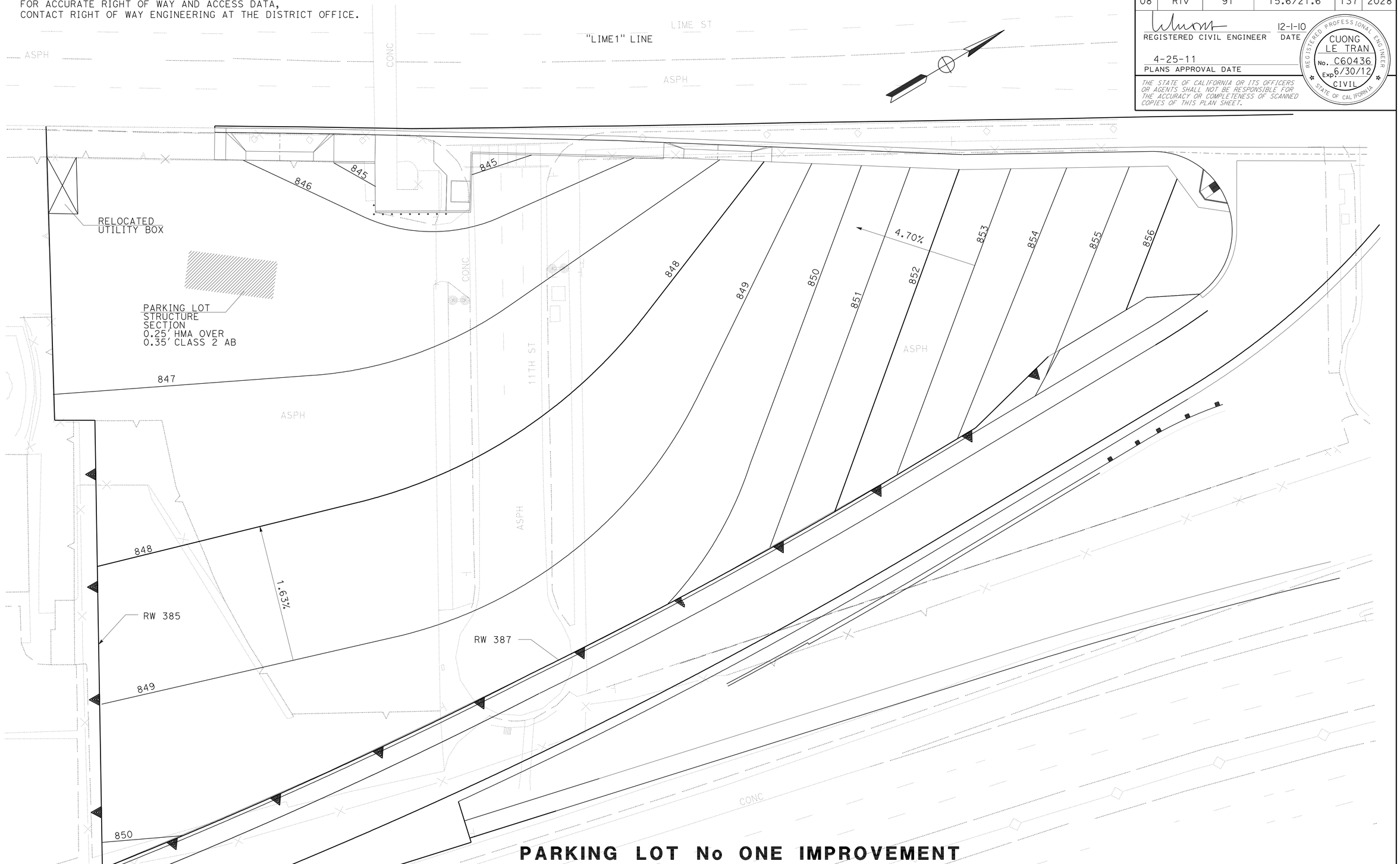

PARKING LOT No ONE IMPROVEMENT

CONSTRUCTION DETAILS

SCALE: 1" = 20'

C-51

STATE OF CALIFORNIA - DEPARTMENT OF TRANSPORTATION

Caltrans DESIGN

FUNCTIONAL SUPERVISOR: MARK PERTILE

CALCULATED-DESIGNED BY: CUONG LE TRAN

CHECKED BY: ANNABELL WANG

REVISED BY

DATE REVISED

LAST REVISION 12-01-10 | DATE PLOTTED => 29-APR-2011 | TIME PLOTTED => 18:34

BORDER LAST REVISED 4/11/2008

RELATIVE BORDER SCALE IS IN INCHES 0 1 2 3

USERNAME => trmnguye
DGN FILE => 844840ga051.dgn

CU 08227

EA 448401

Dist	COUNTY	ROUTE	POST MILES TOTAL PROJECT	SHEET No.	TOTAL SHEETS
08	Riv	91	15.6/21.6	138	2028

REGISTERED CIVIL ENGINEER 12-1-10 DATE

4-25-11
PLANS APPROVAL DATE

REGISTERED PROFESSIONAL ENGINEER CUONG LE TRAN No. C60436 Exp. 6/30/12 CIVIL STATE OF CALIFORNIA

THE STATE OF CALIFORNIA OR ITS OFFICERS OR AGENTS SHALL NOT BE RESPONSIBLE FOR THE ACCURACY OR COMPLETENESS OF SCANNED COPIES OF THIS PLAN SHEET.

NOTE:

FOR ACCURATE RIGHT OF WAY AND ACCESS DATA,
CONTACT RIGHT OF WAY ENGINEERING AT THE DISTRICT OFFICE.

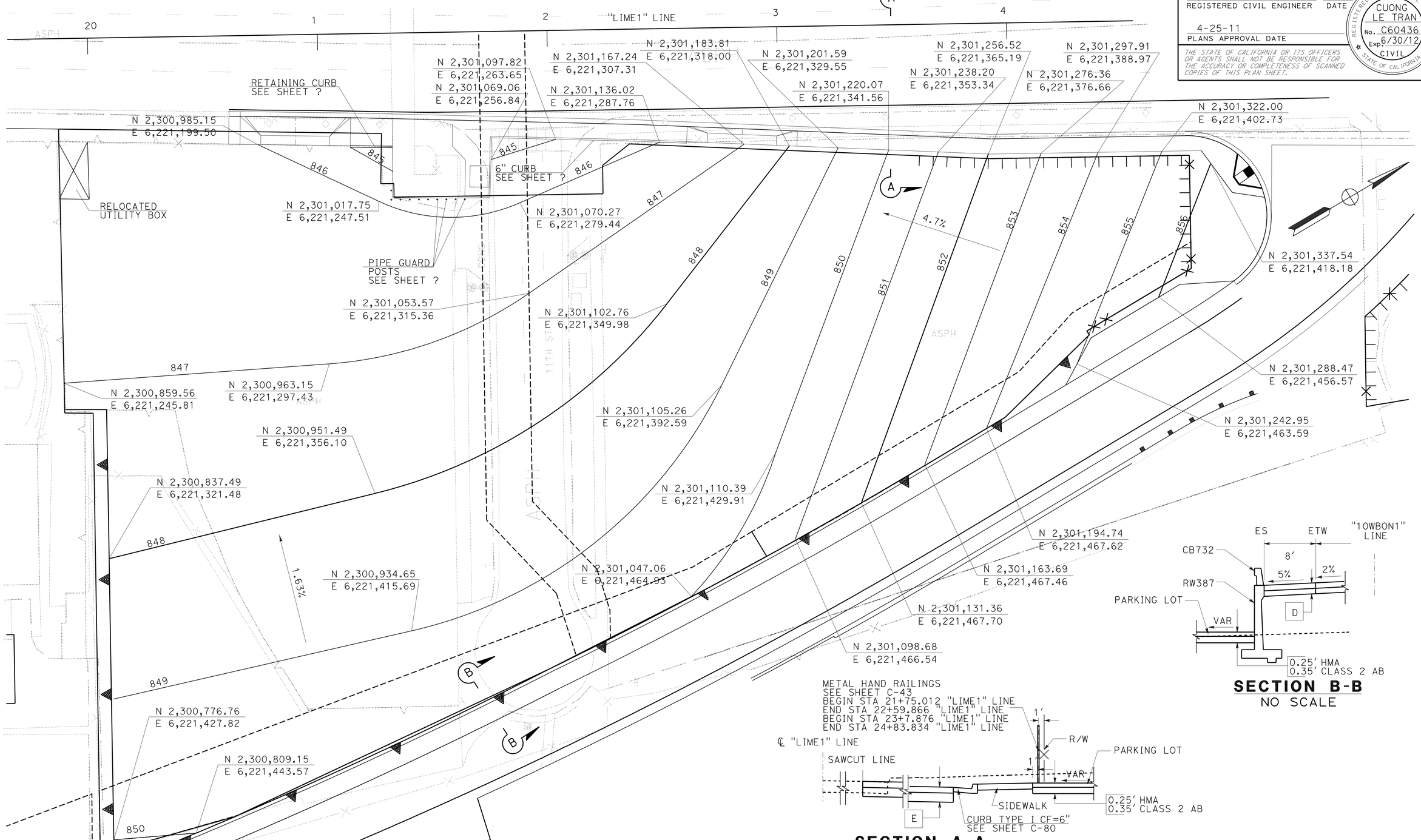

SECTION B-B
NO SCALE

SECTION A-A
NO SCALE

PARKING LOT No ONE IMPROVEMENT

CONSTRUCTION DETAILS

SCALE: 1" = 20'

C-52

STATE OF CALIFORNIA - DEPARTMENT OF TRANSPORTATION
Caltrans®
DESIGN

FUNCTIONAL SUPERVISOR: MARK PERTILE
CALCULATED-DESIGNED BY: ANNABELL WANG
CHECKED BY: CUONG LE TRAN
REVISED BY
DATE REVISED

LAST REVISION 12-01-10
DATE PLOTTED => 29-APR-2011
TIME PLOTTED => 18:34

Dist	COUNTY	ROUTE	POST MILES TOTAL PROJECT	SHEET No.	TOTAL SHEETS
08	Riv	91	15.6/21.6	139	2028

REGISTERED CIVIL ENGINEER — DATE 12-1-10

4-25-11
PLANS APPROVAL DATE

REGISTERED PROFESSIONAL ENGINEER — CUONG LE TRAN — No. C60436 — Exp 6/30/12 — CIVIL — STATE OF CALIFORNIA

THE STATE OF CALIFORNIA OR ITS OFFICERS OR AGENTS SHALL NOT BE RESPONSIBLE FOR THE ACCURACY OR COMPLETENESS OF SCANNED COPIES OF THIS PLAN SHEET.

NOTE:

FOR ACCURATE RIGHT OF WAY AND ACCESS DATA, CONTACT RIGHT OF WAY ENGINEERING AT THE DISTRICT OFFICE.

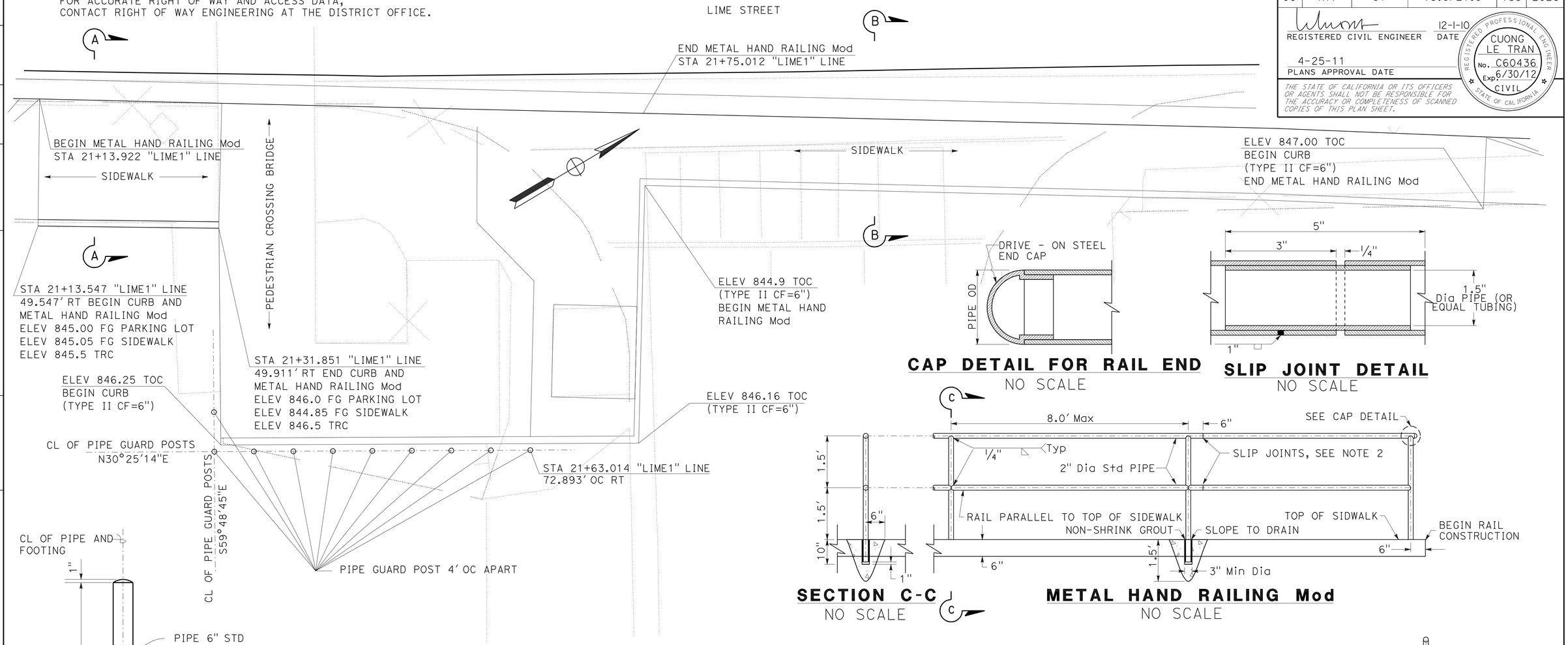

CAP DETAIL FOR RAIL END
NO SCALE

SLIP JOINT DETAIL
NO SCALE

SECTION C-C
NO SCALE

METAL HAND RAILING Mod
NO SCALE

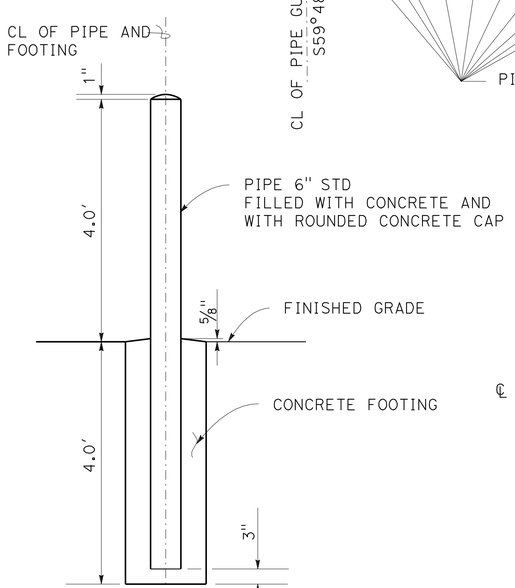

PIPE GUARD POST DETAIL
NO SCALE

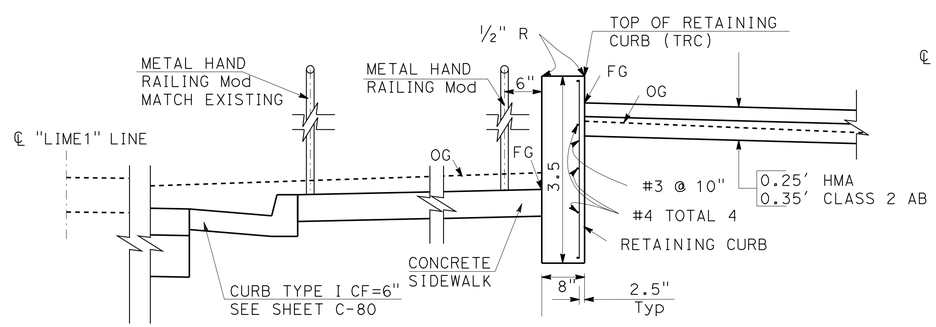

SECTION A-A
NO SCALE

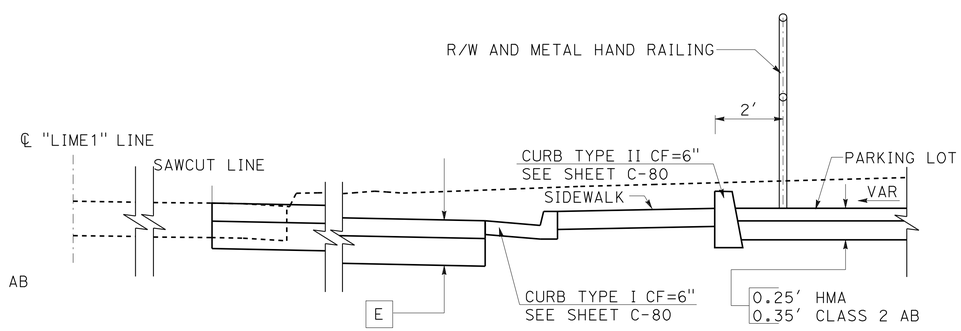

SECTION B-B
NO SCALE

PARKING LOT No ONE IMPROVEMENT

CONSTRUCTION DETAILS

SCALE: 1" = 5'

C-53

STATE OF CALIFORNIA - DEPARTMENT OF TRANSPORTATION — DESIGN — Caltrans

FUNCTIONAL SUPERVISOR: MARK PERTILE
CALCULATED-DESIGNED BY: ANNABELL WANG
CHECKED BY: CUONG LE TRAN
REVISED BY / DATE REVISED

LAST REVISION 12-01-10
DATE PLOTTED => 29-APR-2011
TIME PLOTTED => 18:34

Dist	COUNTY	ROUTE	POST MILES TOTAL PROJECT	SHEET No.	TOTAL SHEETS
08	Riv	91	15.6/21.6	140	2028

REGISTERED CIVIL ENGINEER 12-1-10 DATE

4-25-11
PLANS APPROVAL DATE

REGISTERED PROFESSIONAL ENGINEER CUONG LE TRAN No. C60436 Exp. 6/30/12 CIVIL STATE OF CALIFORNIA

THE STATE OF CALIFORNIA OR ITS OFFICERS OR AGENTS SHALL NOT BE RESPONSIBLE FOR THE ACCURACY OR COMPLETENESS OF SCANNED COPIES OF THIS PLAN SHEET.

258 STALLS

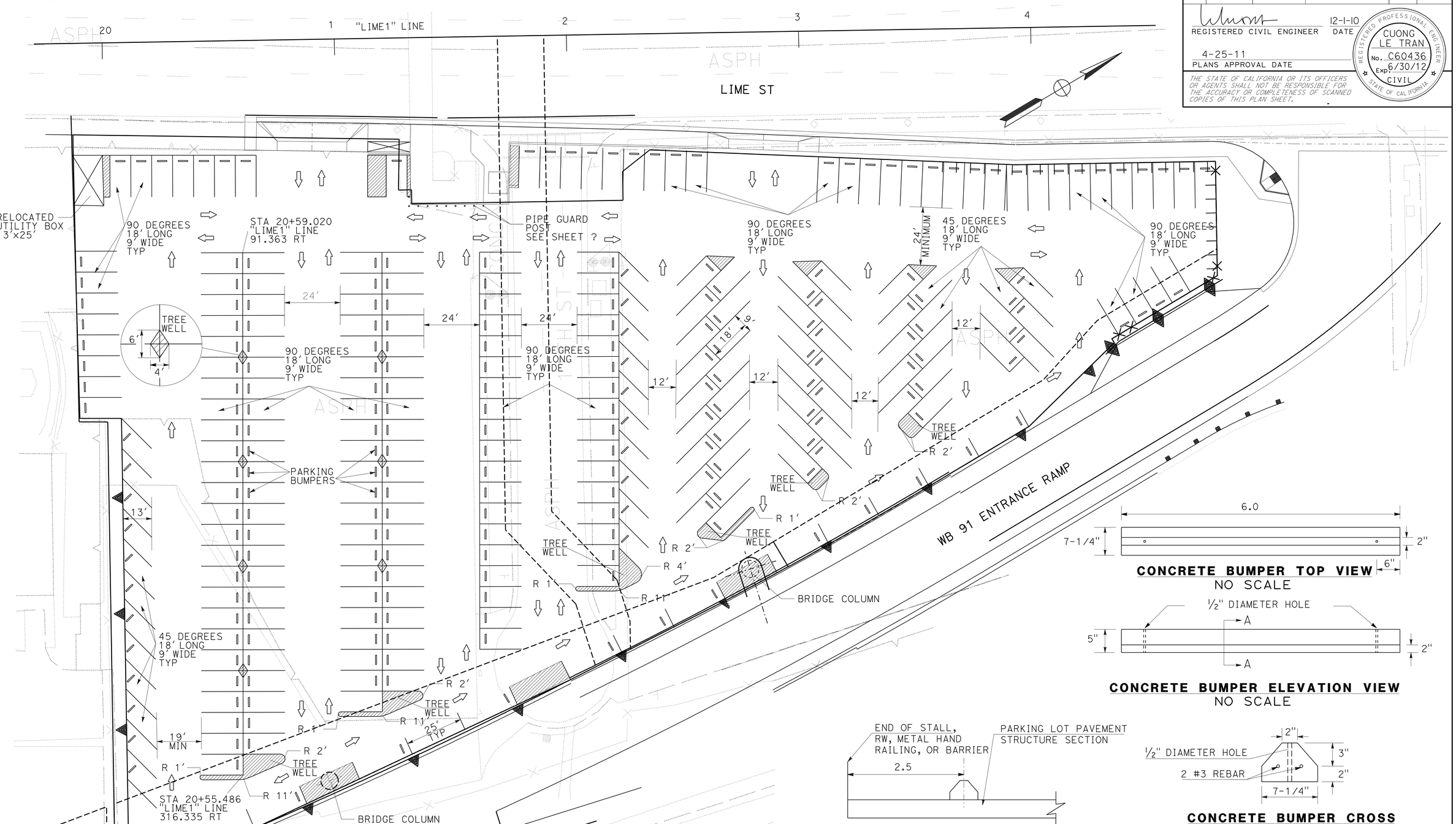

NOTE:
FOR ACCURATE RIGHT OF WAY AND ACCESS DATA, CONTACT RIGHT OF WAY ENGINEERING AT THE DISTRICT OFFICE.

PARKING LOT No ONE IMPROVEMENT

CONSTRUCTION DETAILS
SCALE: 1" = 20'

C-54

STATE OF CALIFORNIA - DEPARTMENT OF TRANSPORTATION
Caltrans DESIGN

FUNCTIONAL SUPERVISOR: MARK PERTILE
CALCULATED-DESIGNED BY: CUONG LE TRAN
CHECKED BY: ANNABELL WANG
REVISED BY / DATE REVISED

LAST REVISION 12-01-10
DATE PLOTTED => 29-APR-2011
TIME PLOTTED => 18:35

Dist	COUNTY	ROUTE	POST MILES TOTAL PROJECT	SHEET No.	TOTAL SHEETS
08	Riv	91	15.6/21.6	141	2028

REGISTERED CIVIL ENGINEER 12-1-10 DATE

4-25-11
PLANS APPROVAL DATE

REGISTERED PROFESSIONAL ENGINEER CUONG LE TRAN No. C60436 Exp. 6/30/12 CIVIL STATE OF CALIFORNIA

THE STATE OF CALIFORNIA OR ITS OFFICERS OR AGENTS SHALL NOT BE RESPONSIBLE FOR THE ACCURACY OR COMPLETENESS OF SCANNED COPIES OF THIS PLAN SHEET.

NOTE:

FOR ACCURATE RIGHT OF WAY AND ACCESS DATA,
CONTACT RIGHT OF WAY ENGINEERING AT THE DISTRICT OFFICE.

PARKING LOT No TWO IMPROVEMENT

CONSTRUCTION DETAILS

SCALE: 1" = 20'

C-55

REVISED BY | DATE REVISED

CUONG LE TRAN | ANNABELL WANG

CALCULATED-DESIGNED BY | CHECKED BY

FUNCTIONAL SUPERVISOR: MARK PERTILE

STATE OF CALIFORNIA - DEPARTMENT OF TRANSPORTATION

Caltrans

DESIGN

LAST REVISION 12-01-10 | DATE PLOTTED => 29-APR-2011 | TIME PLOTTED => 18:35

Dist	COUNTY	ROUTE	POST MILES TOTAL PROJECT	SHEET No.	TOTAL SHEETS
08	Riv	91	15.6/21.6	142	2028

REGISTERED CIVIL ENGINEER 12-1-10 DATE

4-25-11
PLANS APPROVAL DATE

REGISTERED PROFESSIONAL ENGINEER CUONG LE TRAN No. C60436 Exp. 6/30/12 CIVIL STATE OF CALIFORNIA

THE STATE OF CALIFORNIA OR ITS OFFICERS OR AGENTS SHALL NOT BE RESPONSIBLE FOR THE ACCURACY OR COMPLETENESS OF SCANNED COPIES OF THIS PLAN SHEET.

NOTE:

FOR ACCURATE RIGHT OF WAY AND ACCESS DATA, CONTACT RIGHT OF WAY ENGINEERING AT THE DISTRICT OFFICE.

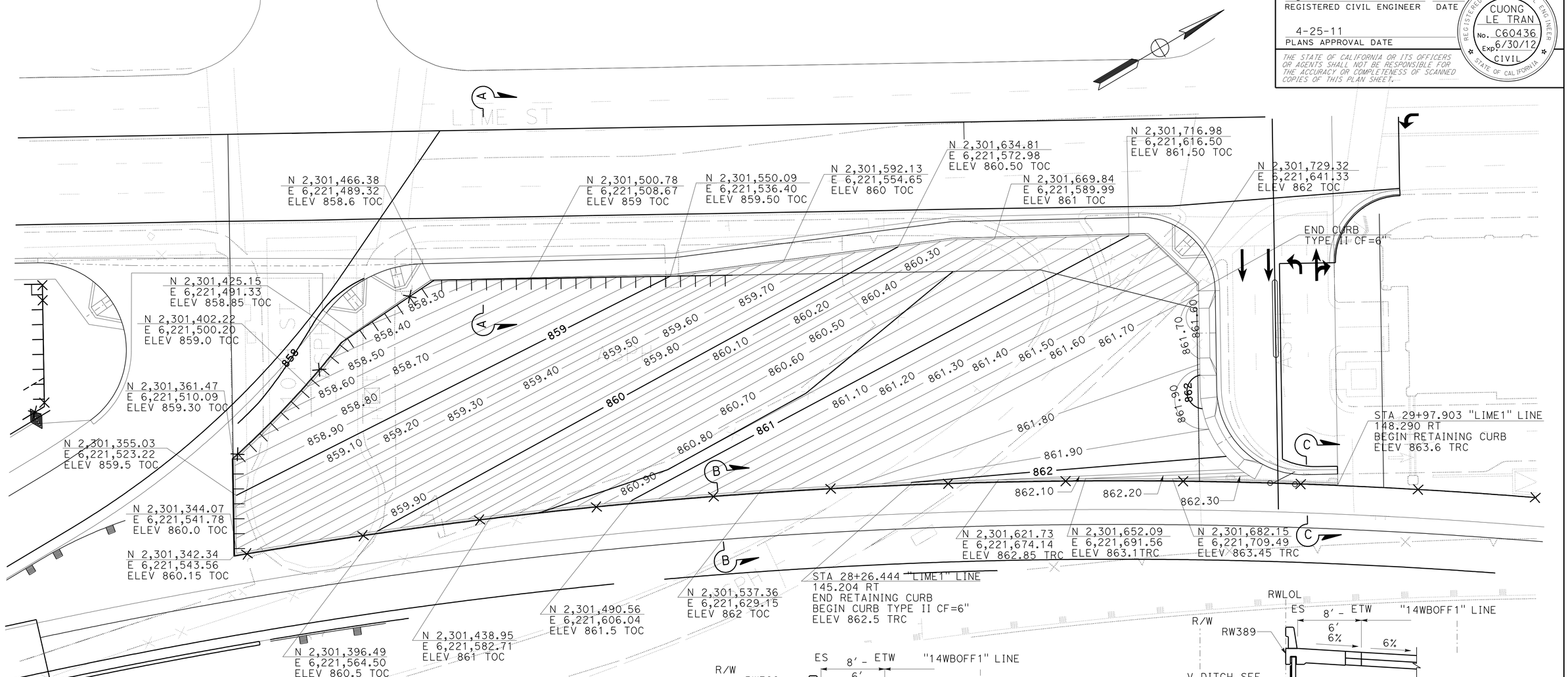

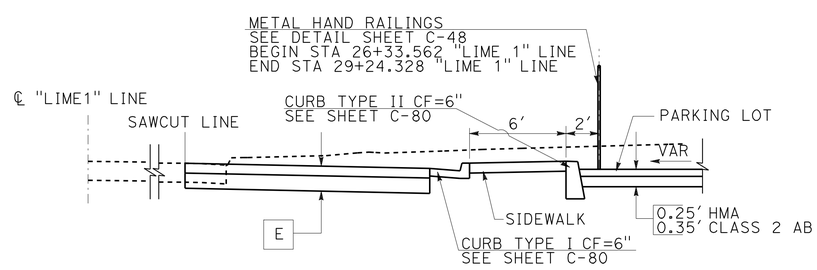

SECTION A-A
NO SCALE

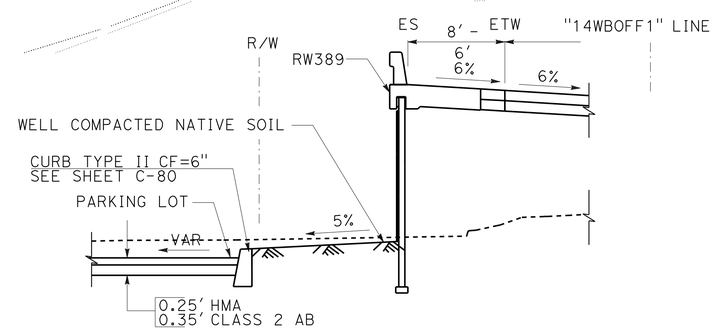

STA 25+54.171 TO STA 28.26.44 "LIME1" LINE

SECTION B-B
NO SCALE

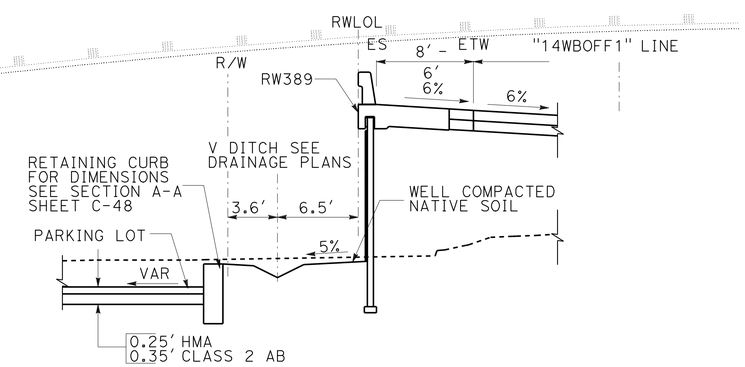

STA 28.26.44 TO STA 29+97.903 "LIME1" LINE

SECTION C-C
NO SCALE

PARKING LOT No TWO IMPROVEMENT

CONSTRUCTION DETAILS
SCALE: 1" = 20'

C-56

STATE OF CALIFORNIA - DEPARTMENT OF TRANSPORTATION
Caltrans® DESIGN
FUNCTIONAL SUPERVISOR: MARK PERTILE
CALCULATED-DESIGNED BY: ANNABELL WANG
CHECKED BY: CUONG LE TRAN
REVISED BY
DATE REVISED

LAST REVISION: DATE PLOTTED => 29-APR-2011
12-01-10 TIME PLOTTED => 18:35

Dist	COUNTY	ROUTE	POST MILES TOTAL PROJECT	SHEET No.	TOTAL SHEETS
08	Riv	91	15.6/21.6	143	2028

REGISTERED CIVIL ENGINEER 12-1-10 DATE

4-25-11
PLANS APPROVAL DATE

REGISTERED PROFESSIONAL ENGINEER CUONG LE TRAN No. C60436 Exp. 6/30/12 CIVIL STATE OF CALIFORNIA

THE STATE OF CALIFORNIA OR ITS OFFICERS OR AGENTS SHALL NOT BE RESPONSIBLE FOR THE ACCURACY OR COMPLETENESS OF SCANNED COPIES OF THIS PLAN SHEET.

NOTE:

FOR ACCURATE RIGHT OF WAY AND ACCESS DATA,
CONTACT RIGHT OF WAY ENGINEERING AT THE DISTRICT OFFICE.

104 STALLS

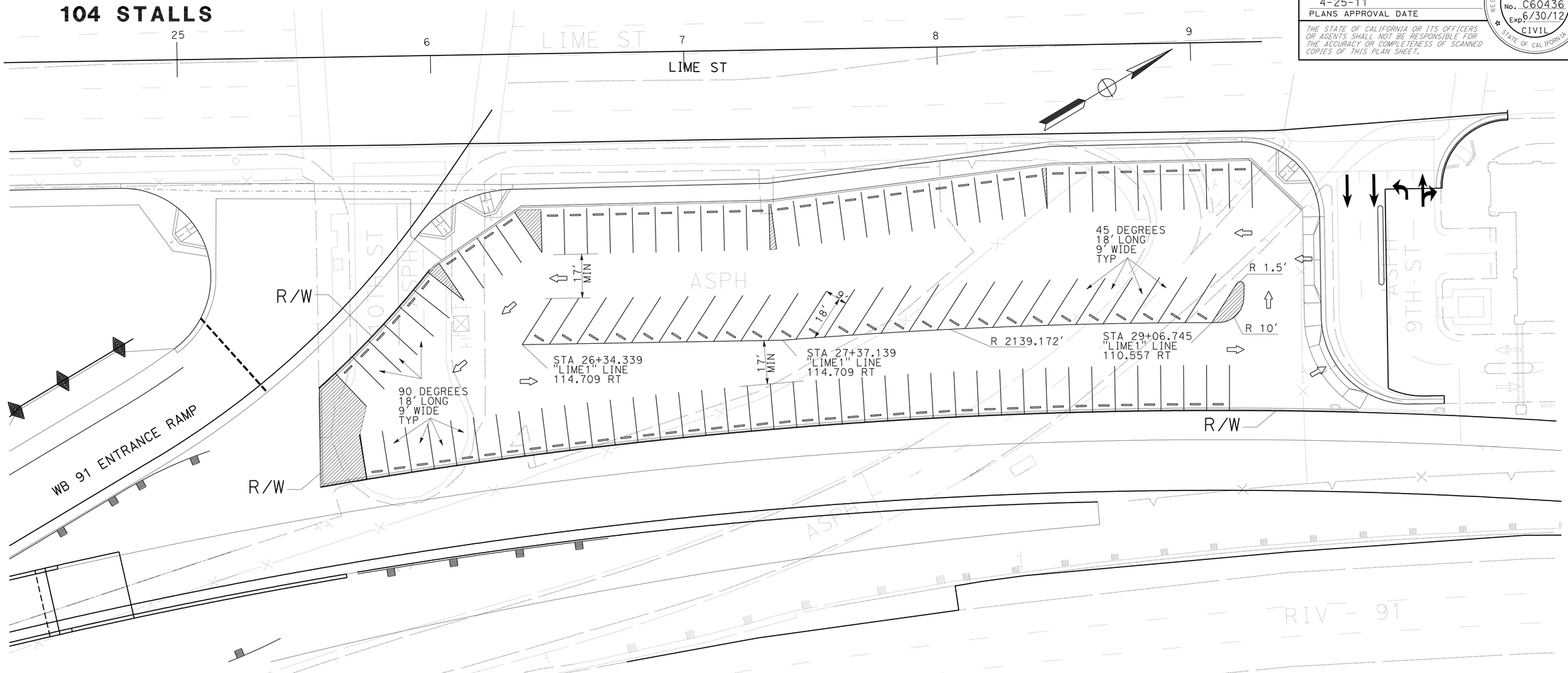

TOP VIEW
NO SCALE

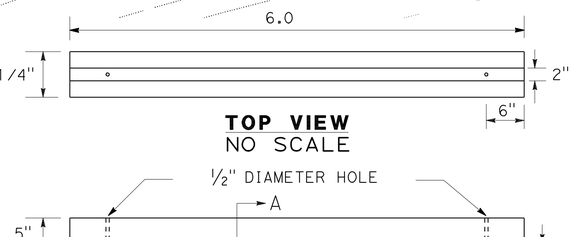

ELEVATION VIEW
NO SCALE

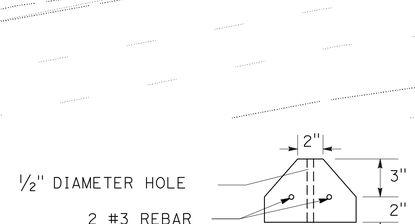

CONCRETE BUMPER CROSS SECTION A-A ENLARGED
NO SCALE

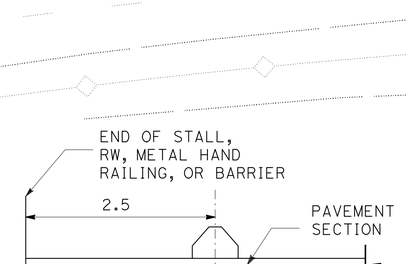

CONCRETE BUMPER LOCATION
NO SCALE

PARKING LOT No TWO IMPROVEMENT

CONSTRUCTION DETAILS

SCALE: 1" = 20'

C-57

STATE OF CALIFORNIA - DEPARTMENT OF TRANSPORTATION
Caltrans® DESIGN

FUNCTIONAL SUPERVISOR: MARK PERTILE
CALCULATED-DESIGNED BY: CUONG LE TRAN
CHECKED BY: ANNABELL WANG
REVISED BY
DATE REVISED

LAST REVISION 12-01-10
DATE PLOTTED => 29-APR-2011
TIME PLOTTED => 18:35

Dist	COUNTY	ROUTE	POST MILES TOTAL PROJECT	SHEET No.	TOTAL SHEETS
08	Riv	91	15.6/21.6	144	2028

REGISTERED CIVIL ENGINEER 12-1-10 DATE

4-25-11
PLANS APPROVAL DATE

REGISTERED PROFESSIONAL ENGINEER CUONG LE TRAN No. C60436 Exp. 6/30/12 CIVIL STATE OF CALIFORNIA

THE STATE OF CALIFORNIA OR ITS OFFICERS OR AGENTS SHALL NOT BE RESPONSIBLE FOR THE ACCURACY OR COMPLETENESS OF SCANNED COPIES OF THIS PLAN SHEET.

NOTE:

FOR ACCURATE RIGHT OF WAY AND ACCESS DATA,
CONTACT RIGHT OF WAY ENGINEERING AT THE DISTRICT OFFICE.

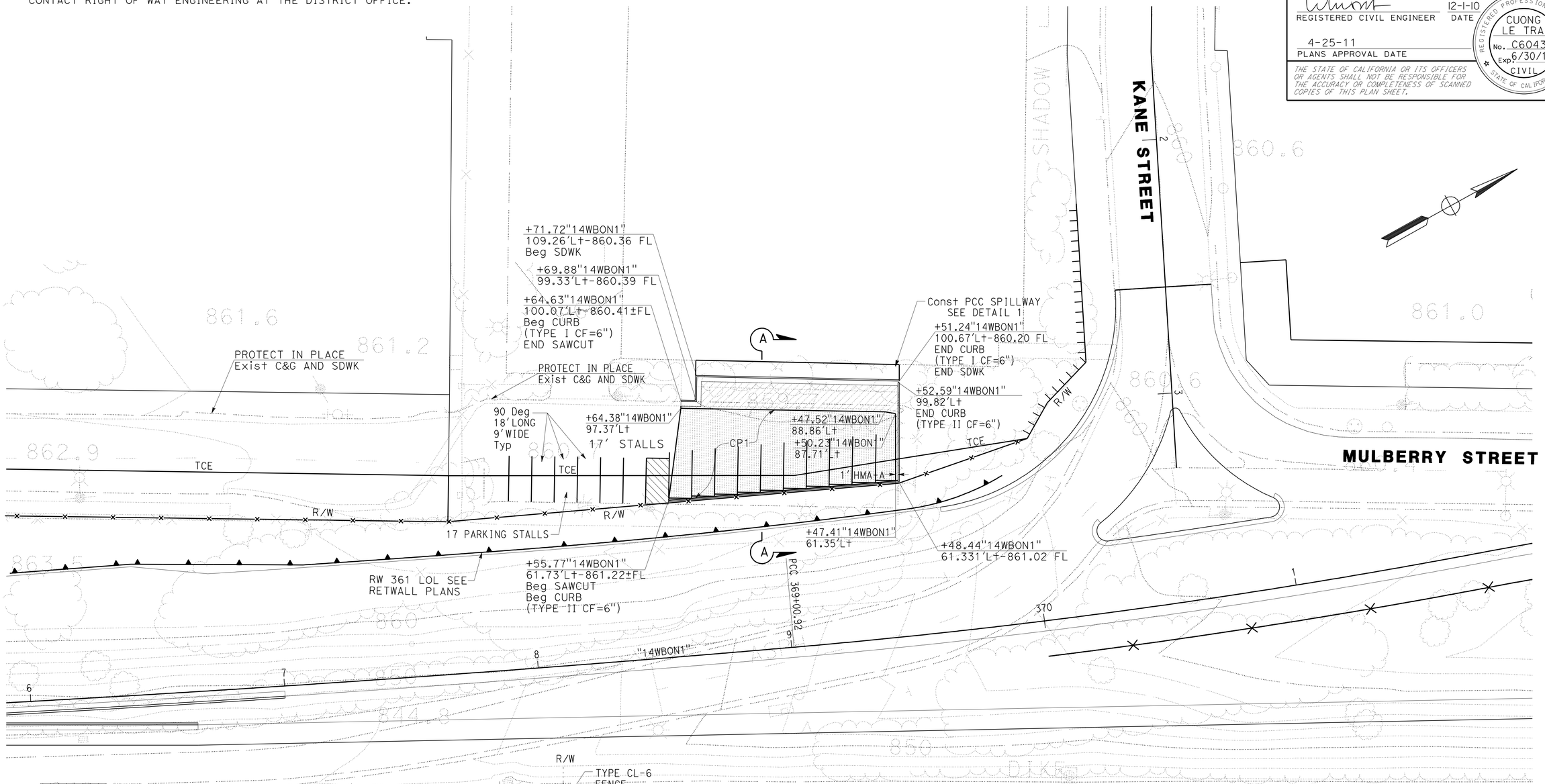

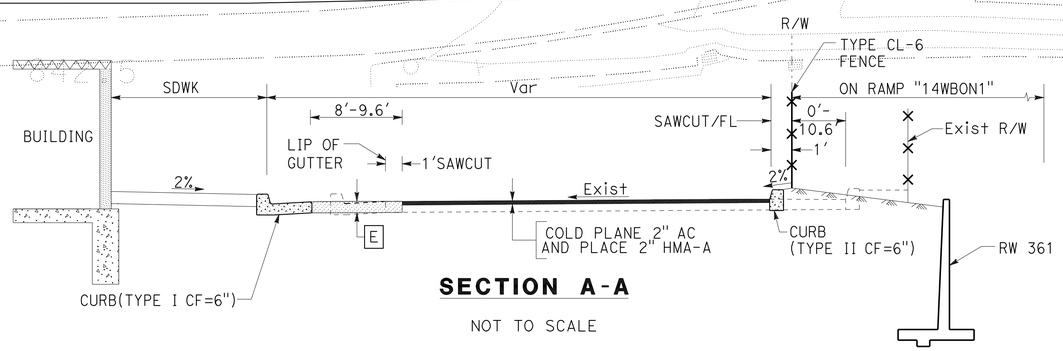

SECTION A-A

NOT TO SCALE

CONSTRUCTION DETAILS
WEST RIVERSIDE
LLC PARCEL IMPROVEMENTS

SCALE: 1" = 20'

C-58

STATE OF CALIFORNIA - DEPARTMENT OF TRANSPORTATION
Caltrans®
DESIGN

FUNCTIONAL SUPERVISOR: MARK PERTILE
CALCULATED-DESIGNED BY: CUONG LE TRAN
CHECKED BY: ANNABELL WANG
REVISED BY
DATE REVISED

LAST REVISION 12-01-10
DATE PLOTTED => 29-APR-2011
TIME PLOTTED => 18:35

Dist	COUNTY	ROUTE	POST MILES TOTAL PROJECT	SHEET No.	TOTAL SHEETS
08	Riv	91	15.6/21.6	145	2028

REGISTERED CIVIL ENGINEER — DATE 4-21-11

4-25-11
PLANS APPROVAL DATE

REGISTERED PROFESSIONAL ENGINEER — THOMAS HIEN NGO — No. 68383 — Exp. 9/30/11 — CIVIL — STATE OF CALIFORNIA

THE STATE OF CALIFORNIA OR ITS OFFICERS OR AGENTS SHALL NOT BE RESPONSIBLE FOR THE ACCURACY OR COMPLETENESS OF SCANNED COPIES OF THIS PLAN SHEET.

NOTE: FOR COMPLETE RIGHT OF WAY AND ACCURATE ACCESS DATA, SEE RIGHT OF WAY RECORD MAPS AT DISTRICT OFFICE.

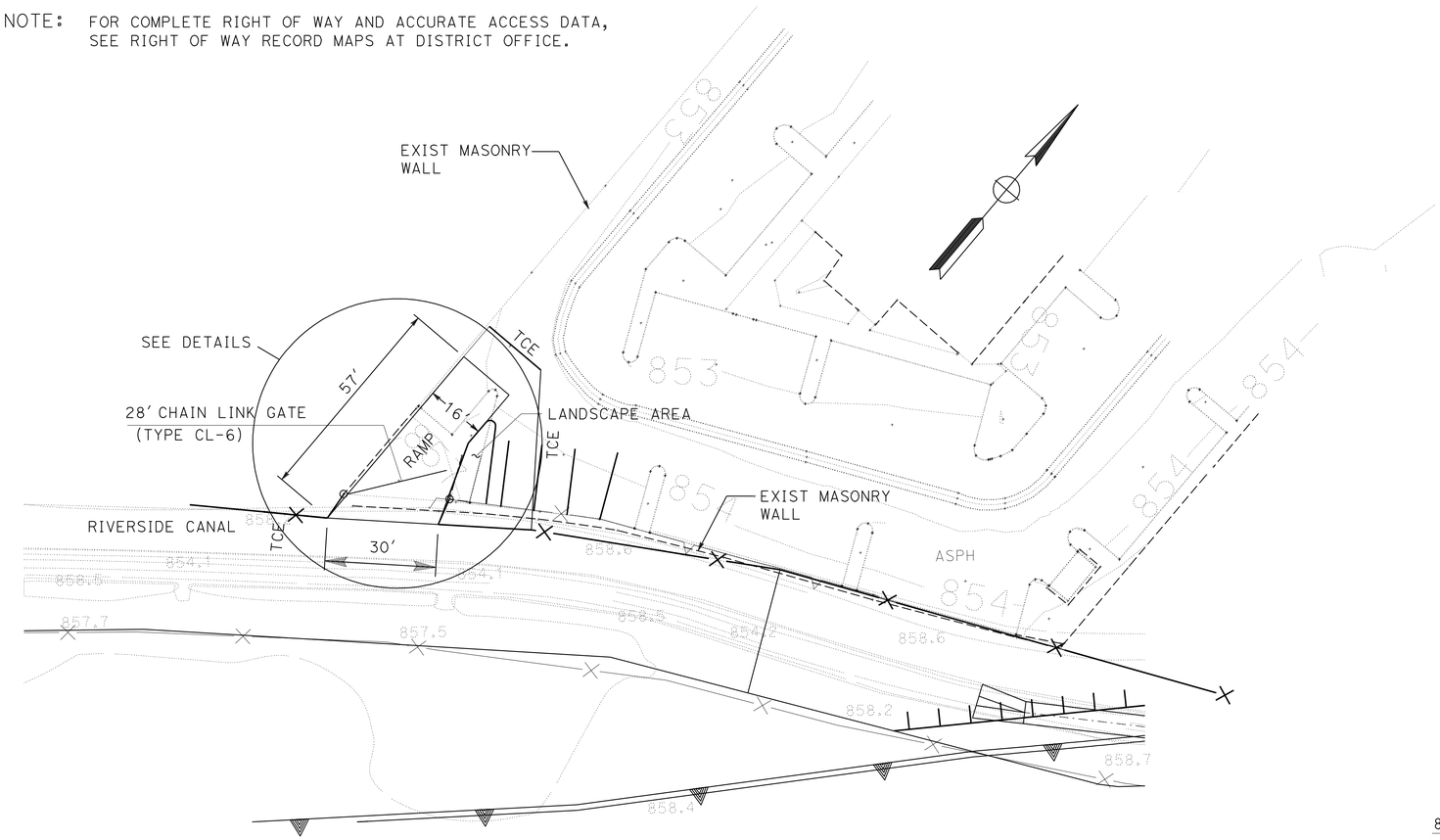

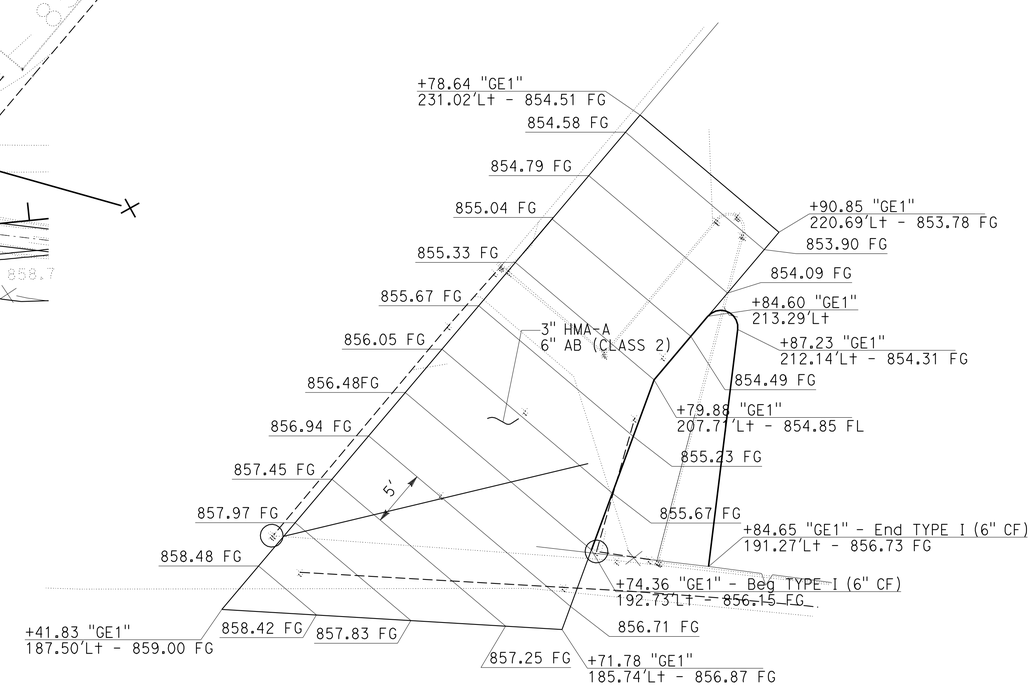

DETAILS

MAINTENANCE DRIVE WAY FOR RIVERSIDE CANAL AT CARDOZA INVESTMENT CO. SEE DISTRICT RIGHT OF WAY MAP

CONSTRUCTION DETAILS

SCALE: 1" = 20'

C-59

STATE OF CALIFORNIA - DEPARTMENT OF TRANSPORTATION
Caltrans
DESIGN

FUNCTIONAL SUPERVISOR: MARK PERTILE
CALCULATED-DESIGNED BY: THAI VAN HGUYEN
CHECKED BY: THOMAS HIEN NGO
REVISED BY
DATE REVISED

LAST REVISION 04-21-11
DATE PLOTTED => 29-APR-2011
TIME PLOTTED => 18:35

Dist	COUNTY	ROUTE	POST MILES TOTAL PROJECT	SHEET No.	TOTAL SHEETS
08	Riv	91	15.6/21.6	146	2028

REGISTERED CIVIL ENGINEER 12-1-10 DATE

4-25-11
PLANS APPROVAL DATE

REGISTERED PROFESSIONAL ENGINEER THOMAS HIEN NGO No. 68383 Exp. 9/30/11 CIVIL STATE OF CALIFORNIA

THE STATE OF CALIFORNIA OR ITS OFFICERS OR AGENTS SHALL NOT BE RESPONSIBLE FOR THE ACCURACY OR COMPLETENESS OF SCANNED COPIES OF THIS PLAN SHEET.

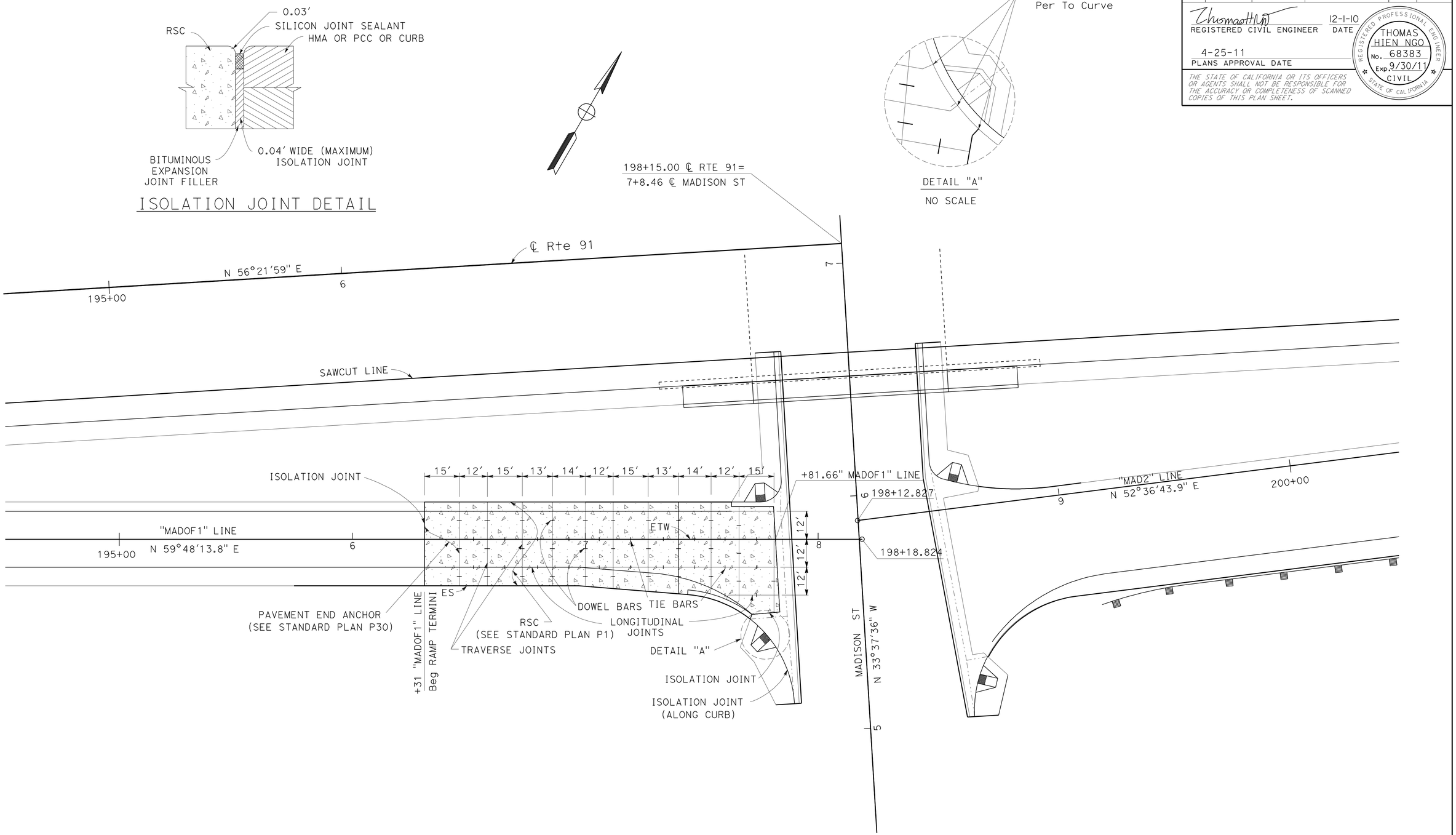

MADISON ST EB OFF RAMP TERMINI JOINT LAYOUTS

CONSTRUCTION DETAILS

SCALE: 1" = 20'

C-60

STATE OF CALIFORNIA - DEPARTMENT OF TRANSPORTATION
Caltrans® DESIGN

FUNCTIONAL SUPERVISOR: MARK PERTILE
CALCULATED-DESIGNED BY: THAI VAN HGUYEN
CHECKED BY: THOMAS HIEN NGO
REVISED BY
DATE REVISED

LAST REVISION 12-01-10 | DATE PLOTTED => 29-APR-2011 | TIME PLOTTED => 18:35

Dist	COUNTY	ROUTE	POST MILES TOTAL PROJECT	SHEET No.	TOTAL SHEETS
08	Riv	91	15.6/21.6	147	2028

REGISTERED CIVIL ENGINEER 12-1-10 DATE

4-25-11
PLANS APPROVAL DATE

REGISTERED PROFESSIONAL ENGINEER THOMAS HIEN NGO No. 68383 Exp. 9/30/11 CIVIL STATE OF CALIFORNIA

THE STATE OF CALIFORNIA OR ITS OFFICERS OR AGENTS SHALL NOT BE RESPONSIBLE FOR THE ACCURACY OR COMPLETENESS OF SCANNED COPIES OF THIS PLAN SHEET.

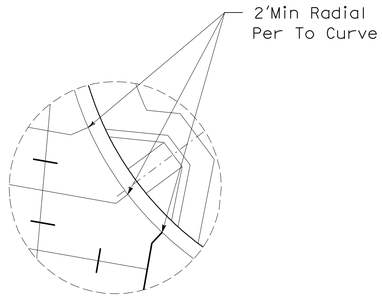

DETAIL "A"

NO SCALE

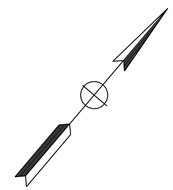

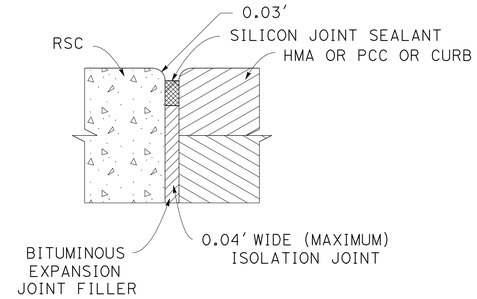

ISOLATION JOINT DETAIL

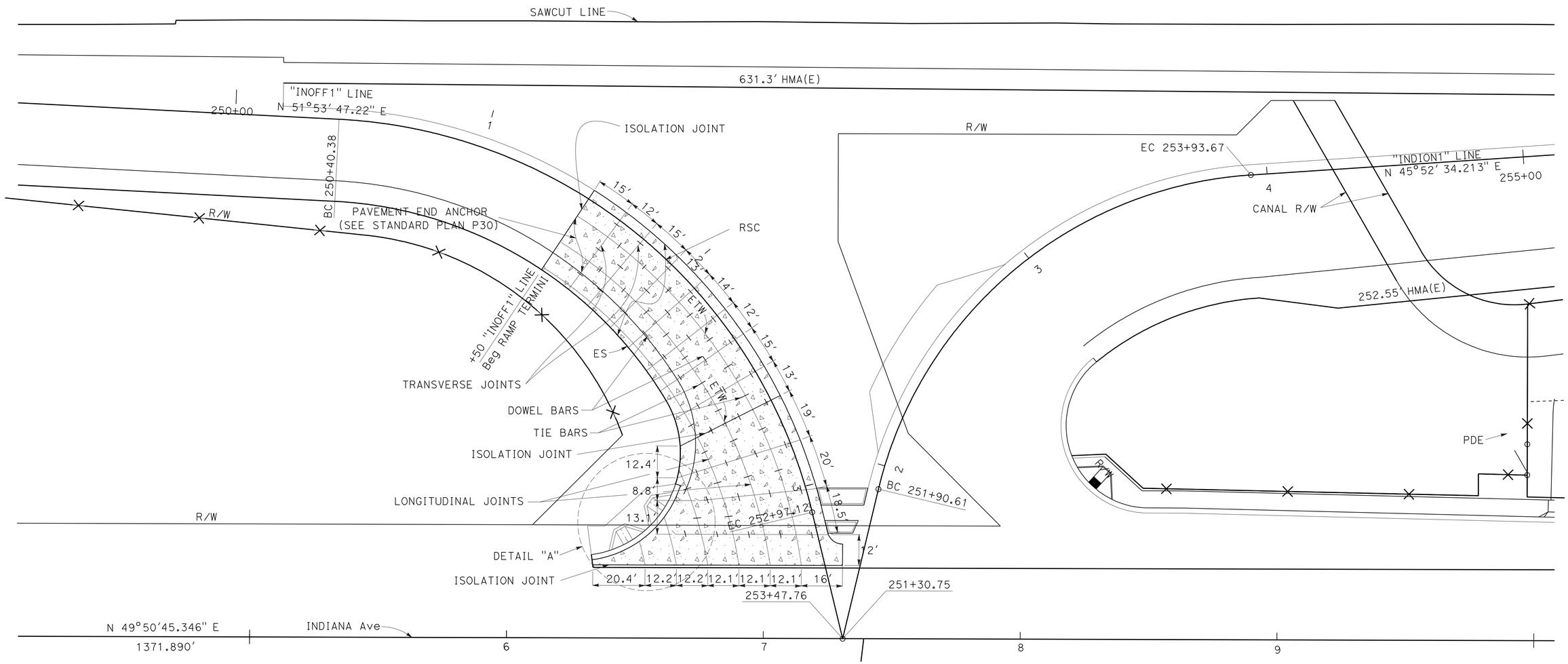

INDIANA St OFF RAMP TERMINI JOINT LAYOUTS

CONSTRUCTION DETAILS

SCALE: 1" = 20'

C-61

THAI VAN HGUYEN | THOMAS HIEN NGO | CALCULATED-DESIGNED BY | CHECKED BY | FUNCTIONAL SUPERVISOR: MARK PERTILE | REVISED BY | DATE REVISED

STATE OF CALIFORNIA - DEPARTMENT OF TRANSPORTATION
Caltrans
DESIGN

LAST REVISION 12-01-10 | DATE PLOTTED => 29-APR-2011 | TIME PLOTTED => 18:35

Dist	COUNTY	ROUTE	POST MILES TOTAL PROJECT	SHEET No.	TOTAL SHEETS
08	Riv	91	15.6/21.6	148	2028

REGISTERED CIVIL ENGINEER 12-1-10 DATE

4-25-11
PLANS APPROVAL DATE

REGISTERED PROFESSIONAL ENGINEER CUONG LE TRAN No. C60436 Exp. 6/30/12 CIVIL STATE OF CALIFORNIA

THE STATE OF CALIFORNIA OR ITS OFFICERS OR AGENTS SHALL NOT BE RESPONSIBLE FOR THE ACCURACY OR COMPLETENESS OF SCANNED COPIES OF THIS PLAN SHEET.

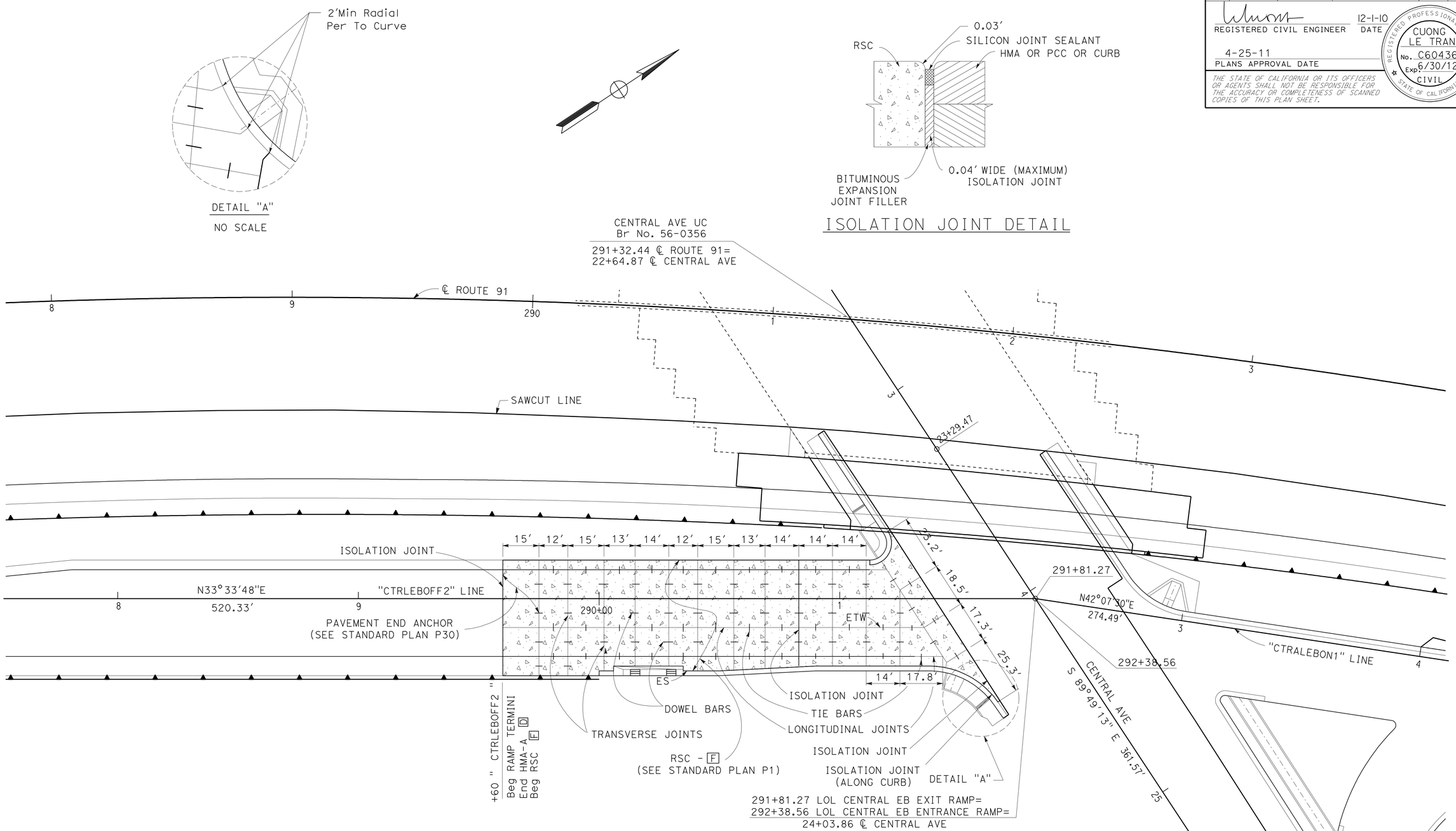

CENTRAL AVE EB OFF RAMP TERMINI JOINT LAYOUTS

NOTE:

FOR ACCURATE RIGHT OF WAY AND ACCESS DATA,
CONTACT RIGHT OF WAY ENGINEERING AT THE DISTRICT OFFICE.

CONSTRUCTION DETAILS

SCALE: 1" = 20'

C-62

REVISED BY | DATE REVISED
CUONG LE TRAN | ANNABELL WANG
CALCULATED-DESIGNED BY | CHECKED BY
FUNCTIONAL SUPERVISOR | MARK PERTILE
STATE OF CALIFORNIA - DEPARTMENT OF TRANSPORTATION
Caltrans
DESIGN

LAST REVISION 12-01-10 | DATE PLOTTED => 29-APR-2011 | TIME PLOTTED => 18:36

Dist	COUNTY	ROUTE	POST MILES TOTAL PROJECT	SHEET No.	TOTAL SHEETS
08	Riv	91	15.6/21.6	149	2028

REGISTERED CIVIL ENGINEER 12-1-10 DATE

4-25-11
PLANS APPROVAL DATE

REGISTERED PROFESSIONAL ENGINEER CUONG LE TRAN No. C60436 Exp. 6/30/12 CIVIL STATE OF CALIFORNIA

THE STATE OF CALIFORNIA OR ITS OFFICERS OR AGENTS SHALL NOT BE RESPONSIBLE FOR THE ACCURACY OR COMPLETENESS OF SCANNED COPIES OF THIS PLAN SHEET.

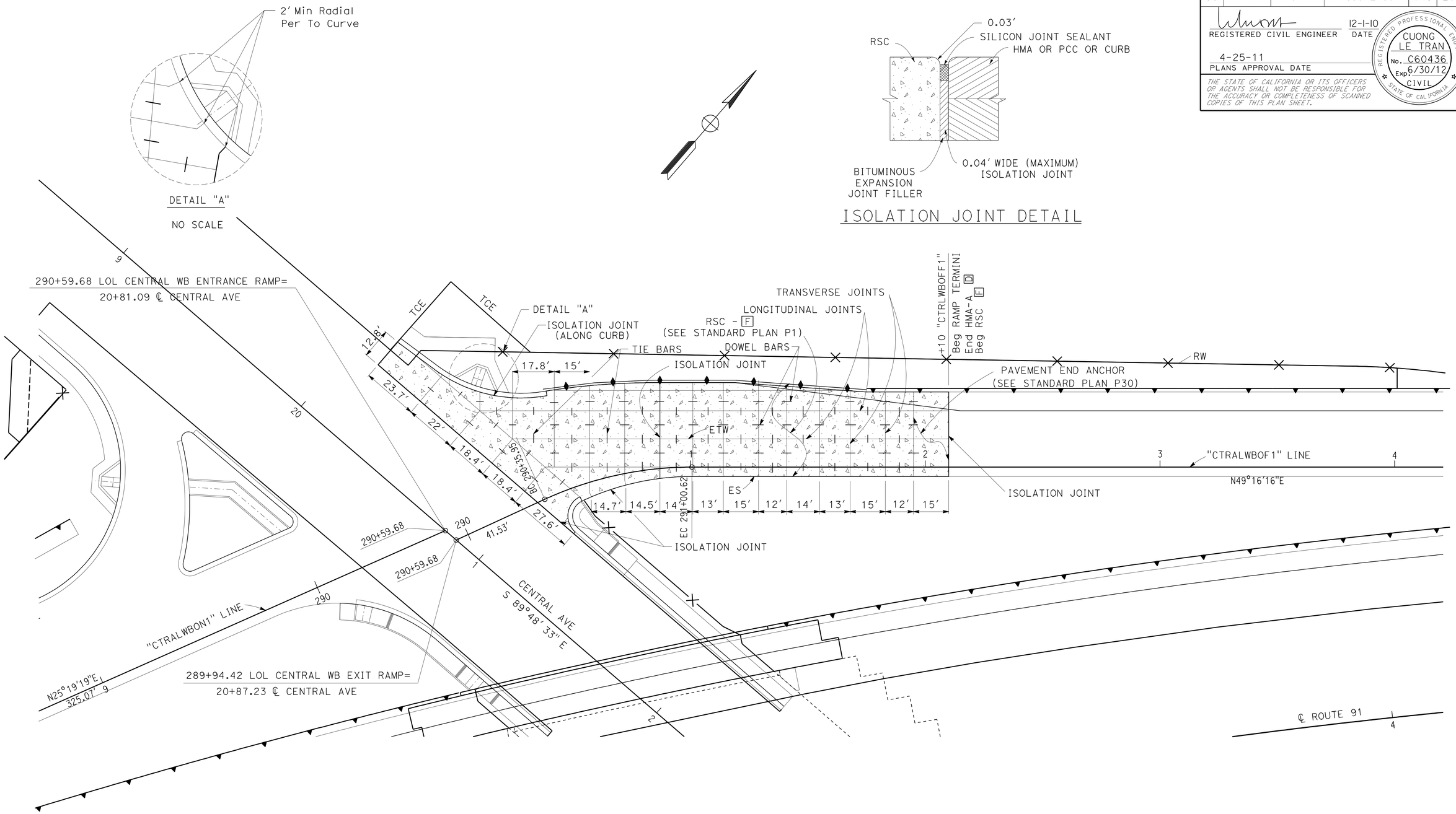

CENTRAL AVE WB OFF RAMP TERMINI JOINT LAYOUTS

NOTE:

FOR ACCURATE RIGHT OF WAY AND ACCESS DATA, CONTACT RIGHT OF WAY ENGINEERING AT THE DISTRICT OFFICE.

CONSTRUCTION DETAILS

SCALE: 1" = 20'

C-63

STATE OF CALIFORNIA - DEPARTMENT OF TRANSPORTATION
Caltrans®
DESIGN

FUNCTIONAL SUPERVISOR: MARK PERTILE
CALCULATED-DESIGNED BY: CUONG LE TRAN
CHECKED BY: ANNABELL WANG
REVISED BY
DATE REVISED

LAST REVISION 12-01-10 | DATE PLOTTED => 29-APR-2011 | TIME PLOTTED => 18:36

Dist	COUNTY	ROUTE	POST MILES TOTAL PROJECT	SHEET No.	TOTAL SHEETS
08	Riv	91	15.6/21.6	150	2028

REGISTERED CIVIL ENGINEER 12-1-10 DATE

4-25-11
PLANS APPROVAL DATE

REGISTERED PROFESSIONAL ENGINEER CUONG LE TRAN No. C60436 Exp. 6/30/12 CIVIL STATE OF CALIFORNIA

THE STATE OF CALIFORNIA OR ITS OFFICERS OR AGENTS SHALL NOT BE RESPONSIBLE FOR THE ACCURACY OR COMPLETENESS OF SCANNED COPIES OF THIS PLAN SHEET.

NOTE:

FOR ACCURATE RIGHT OF WAY AND ACCESS DATA,
CONTACT RIGHT OF WAY ENGINEERING AT THE DISTRICT OFFICE.

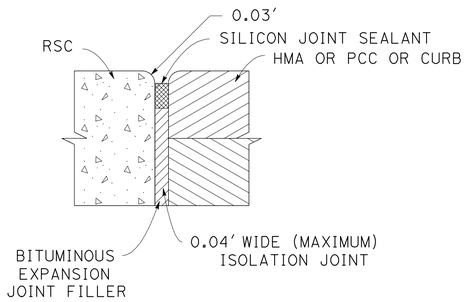

ISOLATION JOINT DETAIL

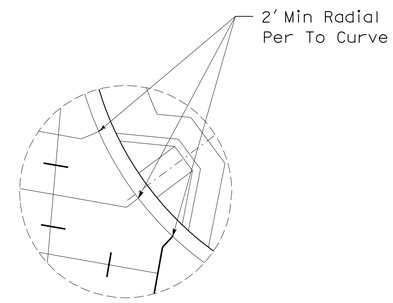

DETAIL "A"

NO SCALE

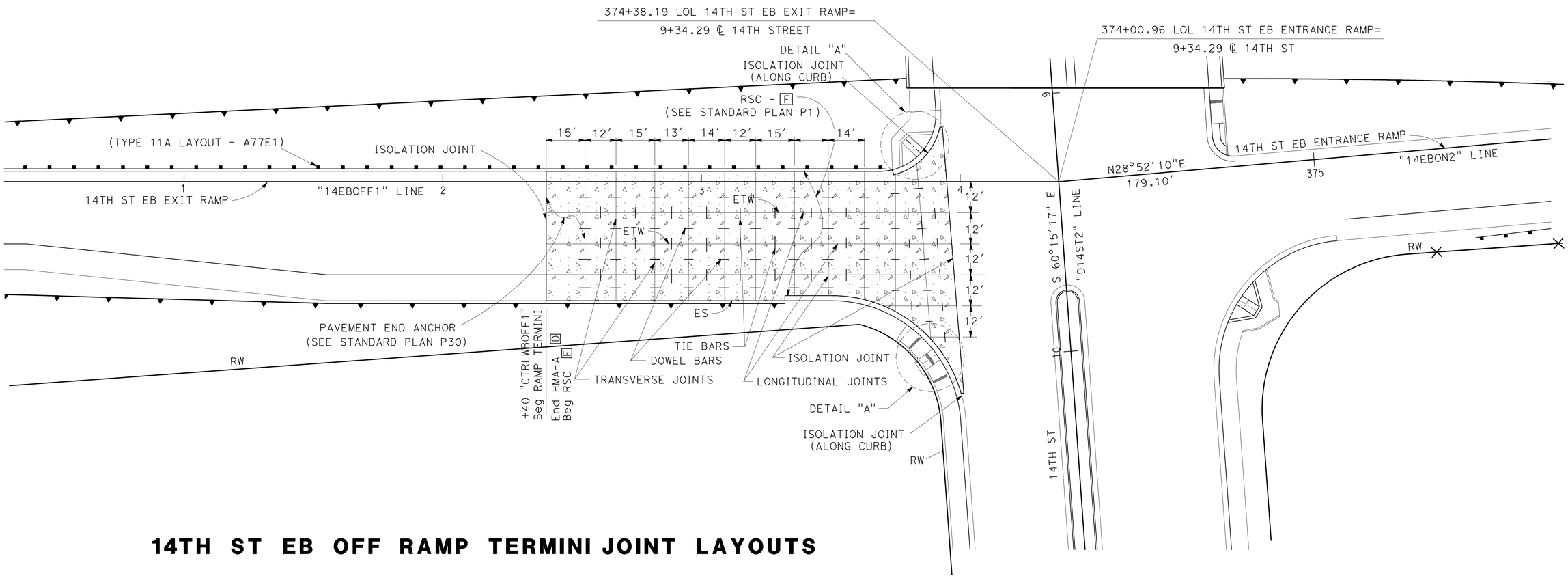

14TH ST EB OFF RAMP TERMINI JOINT LAYOUTS

CONSTRUCTION DETAILS

SCALE: 1" = 20'

C-64

STATE OF CALIFORNIA - DEPARTMENT OF TRANSPORTATION
Caltrans
DESIGN

FUNCTIONAL SUPERVISOR: MARK PERTILE
CALCULATED-DESIGNED BY: CUONG LE TRAN
CHECKED BY: ANNABELL WANG
REVISED BY
DATE REVISED

LAST REVISION 12-01-10 | DATE PLOTTED => 29-APR-2011 | TIME PLOTTED => 18:36

Dist	COUNTY	ROUTE	POST MILES TOTAL PROJECT	SHEET No.	TOTAL SHEETS
08	Riv	91	15.6/21.6	151	2028

REGISTERED CIVIL ENGINEER 12-1-10 DATE

4-25-11
PLANS APPROVAL DATE

REGISTERED PROFESSIONAL ENGINEER CUONG LE TRAN No. C60436 Exp. 6/30/12 CIVIL STATE OF CALIFORNIA

THE STATE OF CALIFORNIA OR ITS OFFICERS OR AGENTS SHALL NOT BE RESPONSIBLE FOR THE ACCURACY OR COMPLETENESS OF SCANNED COPIES OF THIS PLAN SHEET.

NOTE:

FOR ACCURATE RIGHT OF WAY AND ACCESS DATA,
CONTACT RIGHT OF WAY ENGINEERING AT THE DISTRICT OFFICE.

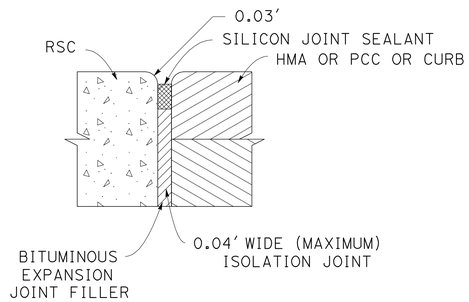

ISOLATION JOINT DETAIL

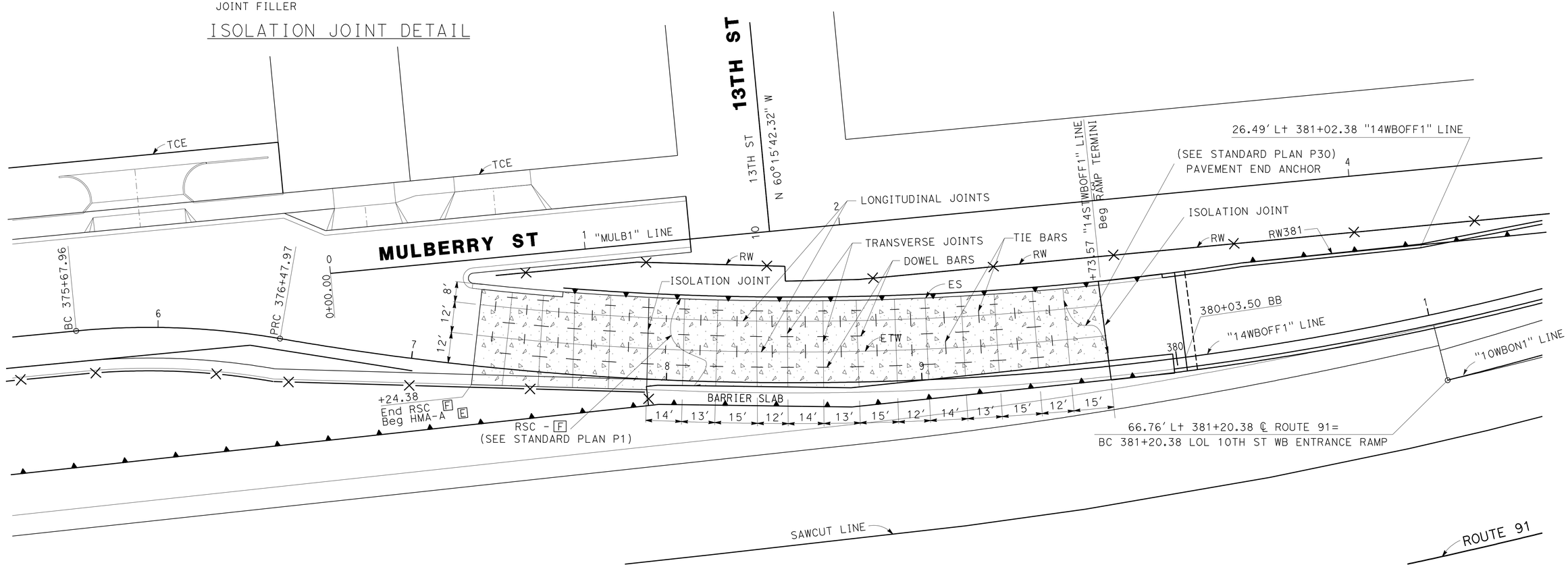

14TH ST WB OFF RAMP TERMINI JOINT LAYOUTS

CONSTRUCTION DETAILS

SCALE: 1" = 20'

C-65

STATE OF CALIFORNIA - DEPARTMENT OF TRANSPORTATION
Caltrans
DESIGN

FUNCTIONAL SUPERVISOR: MARK PERTILE
CALCULATED-DESIGNED BY: CUONG LE TRAN
CHECKED BY: ANNABELL WANG
REVISED BY
DATE REVISED

LAST REVISION 12-01-10
DATE PLOTTED => 29-APR-2011
TIME PLOTTED => 20:11

Dist	COUNTY	ROUTE	POST MILES TOTAL PROJECT	SHEET No.	TOTAL SHEETS
08	Riv	91	15.6/21.6	152	2028

REGISTERED CIVIL ENGINEER 4-21-11 DATE

4-25-11
PLANS APPROVAL DATE

REGISTERED PROFESSIONAL ENGINEER CUONG LE TRAN No. C60436 Exp. 6/30/12 CIVIL STATE OF CALIFORNIA

THE STATE OF CALIFORNIA OR ITS OFFICERS OR AGENTS SHALL NOT BE RESPONSIBLE FOR THE ACCURACY OR COMPLETENESS OF SCANNED COPIES OF THIS PLAN SHEET.

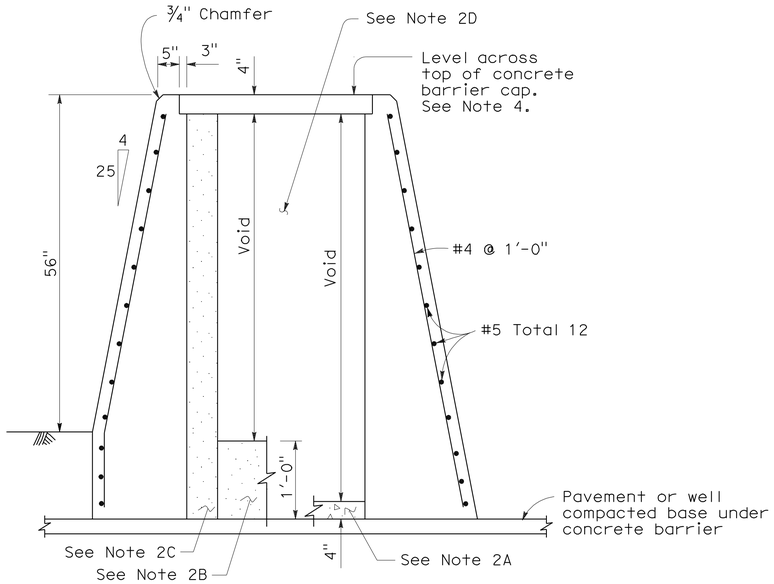

SECTION A-A

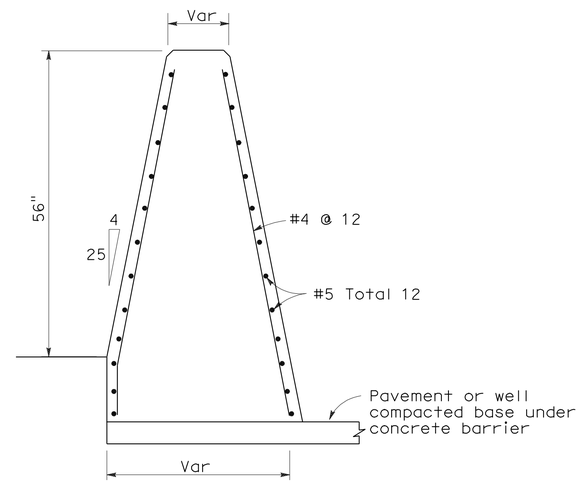

SECTION B-B

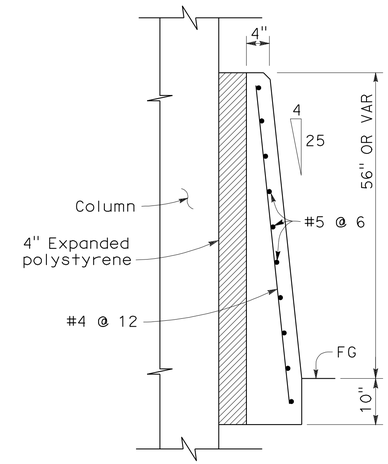

SECTION C-C

NOTES:

1. See Standard Plan A76D for Concrete Barrier Type 60G.
2. Contractor options for fill between concrete barrier walls:
   A. Place 4" PCC at base between concrete barrier walls.
   B. Place 1'-0" of granular material at base between walls.
   C. Place granular material from base to bottom of 4" cap.
   D. Monolithic concrete with foam blockouts is not permitted.
3. Reinforcing steel shall extend continuous through construction joints.
4. Adjust height of concrete barrier wall on low side of offset or superelevated roadways to provide level grade across top of concrete barrier cap.

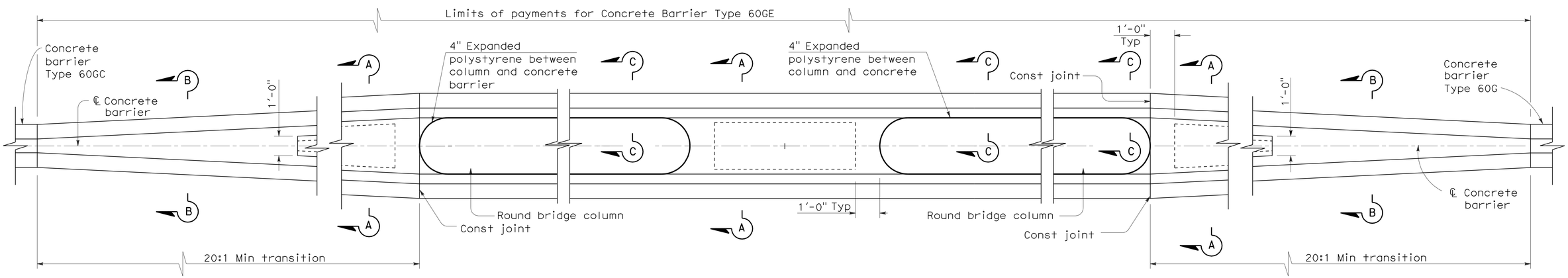

CONCRETE BARRIER TYPE 60GE (MOD) TRANSITION AT BRIDGE COLUMN

CONSTRUCTION DETAILS

NO SCALE

C-66

STATE OF CALIFORNIA - DEPARTMENT OF TRANSPORTATION
DESIGN
FUNCTIONAL SUPERVISOR: MARK PERTILE
CALCULATED-DESIGNED BY: CUONG LE TRAN
CHECKED BY: ANNABELL WANG
REVISED BY / DATE REVISED

LAST REVISION 04-21-11
DATE PLOTTED => 29-APR-2011
TIME PLOTTED => 20:11

Dist	COUNTY	ROUTE	POST MILES TOTAL PROJECT	SHEET No.	TOTAL SHEETS
08	Riv	91	15.6/21.6	153	2028

REGISTERED CIVIL ENGINEER 12-1-10 DATE

4-25-11
PLANS APPROVAL DATE

REGISTERED PROFESSIONAL ENGINEER THOMAS HIEN NGO No. 68383 Exp. 9/30/11 CIVIL STATE OF CALIFORNIA

THE STATE OF CALIFORNIA OR ITS OFFICERS OR AGENTS SHALL NOT BE RESPONSIBLE FOR THE ACCURACY OR COMPLETENESS OF SCANNED COPIES OF THIS PLAN SHEET.

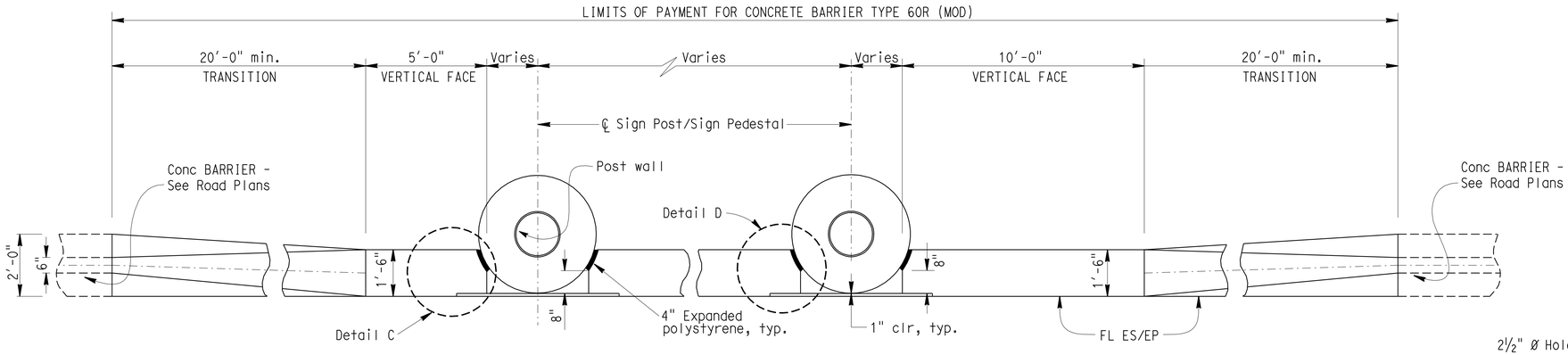

PLAN-CIRCULAR SIGN PEDESTAL

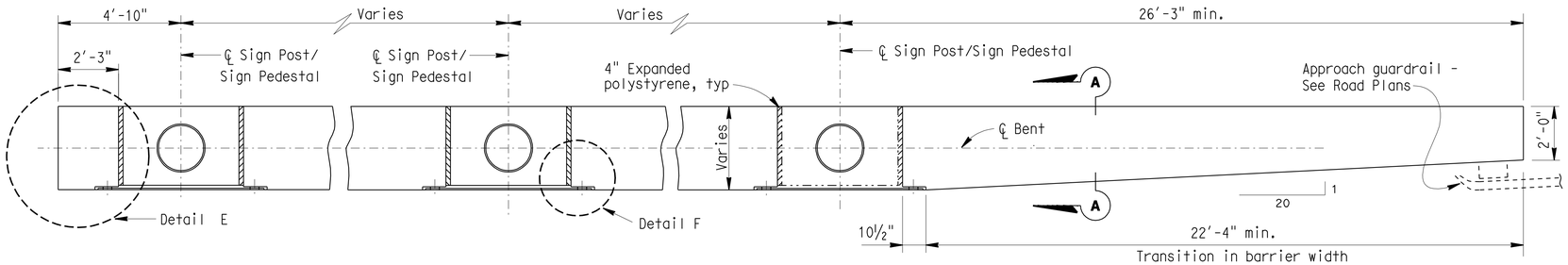

PLAN-RECTANGULAR SIGN PEDESTAL

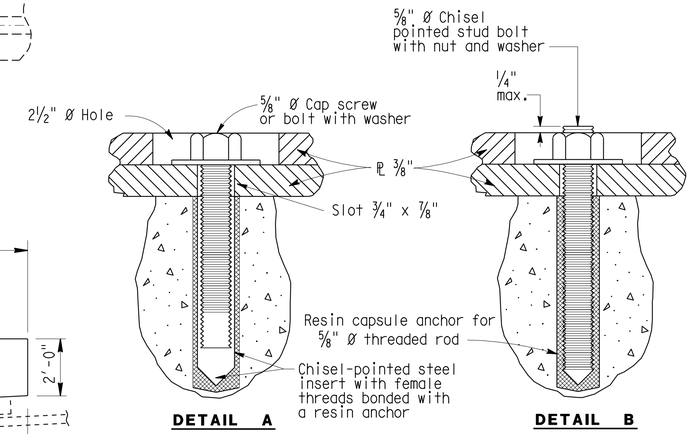

ALTERNATIVE ANCHORAGE

See Notes 1 and 2

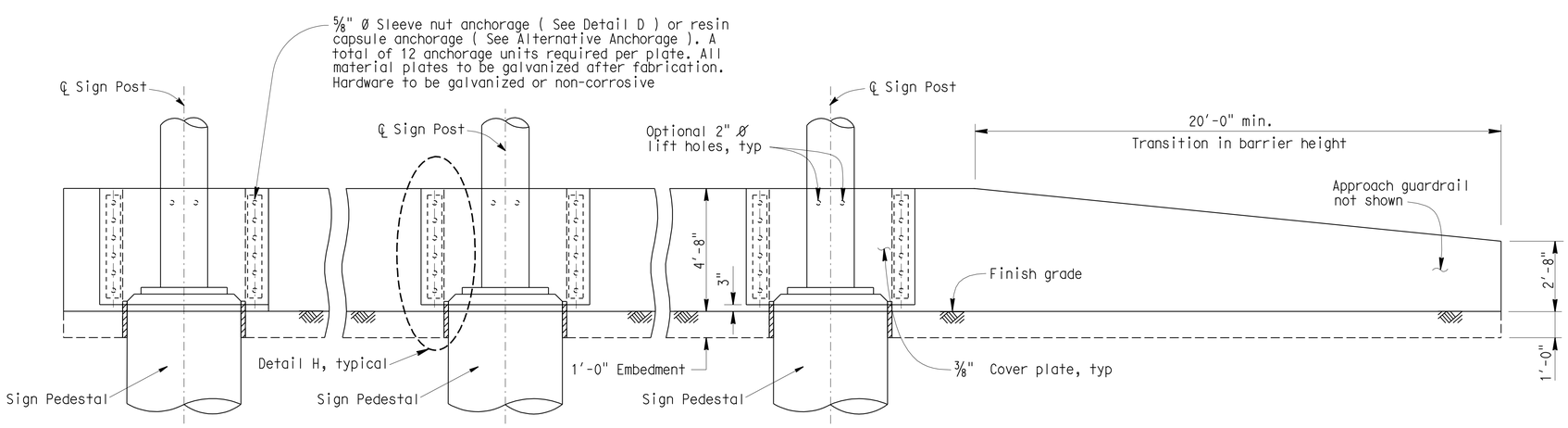

ELEVATION

NOTES:

1. Resin capsule anchorage is subject to approval of the engineer. Installation procedures shall comply with manufacturer's instructions.
2. Detail B similar to Detail A except for anchorage devices.
3. For drainage control, see "Roadway Plans".
4. The contractor shall verify all controlled field dimensions before ordering or fabricating any materials.

CONCRETE BARRIER TYPE 60R (MOD)
VERTICAL FACE FOR SIDE OF ROAD AT SIGN POST
SHEET 1 OF 2

CONSTRUCTION DETAILS

NO SCALE

C-67

STATE OF CALIFORNIA - DEPARTMENT OF TRANSPORTATION
Caltrans
DESIGN
FUNCTIONAL SUPERVISOR: MARK PERTILE
CALCULATED-DESIGNED BY: THAI VAN HGUYEN
CHECKED BY: THOMAS HIEN NGO
REVISED BY
DATE REVISED

LAST REVISION 12-01-10 | DATE PLOTTED => 29-APR-2011 | TIME PLOTTED => 20:11

Dist	COUNTY	ROUTE	POST MILES TOTAL PROJECT	SHEET No.	TOTAL SHEETS
08	Riv	91	15.6/21.6	154	2028

REGISTERED CIVIL ENGINEER 12-1-10 DATE

4-25-11
PLANS APPROVAL DATE

REGISTERED PROFESSIONAL ENGINEER CUONG LE TRAN No. C60436 Exp. 6/30/12 CIVIL STATE OF CALIFORNIA

THE STATE OF CALIFORNIA OR ITS OFFICERS OR AGENTS SHALL NOT BE RESPONSIBLE FOR THE ACCURACY OR COMPLETENESS OF SCANNED COPIES OF THIS PLAN SHEET.

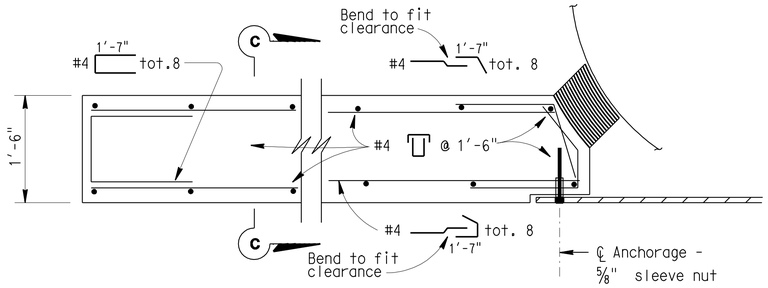

DETAIL C

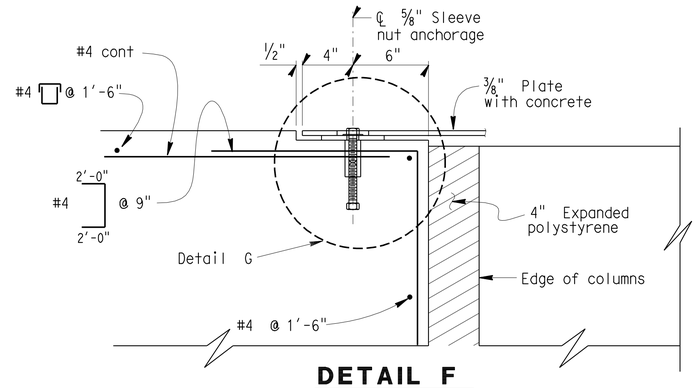

DETAIL F

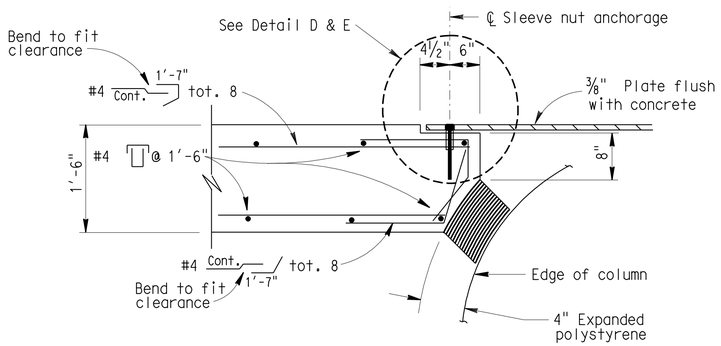

DETAIL D

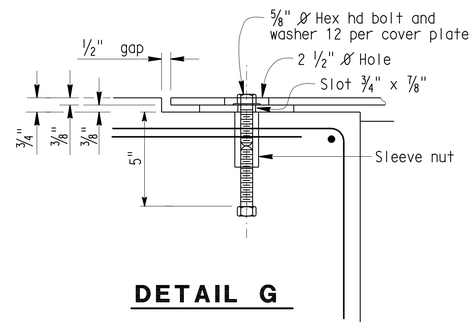

DETAIL G

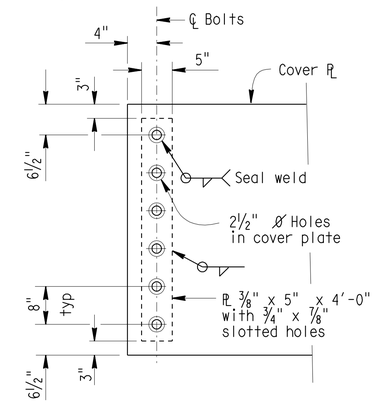

DETAIL H

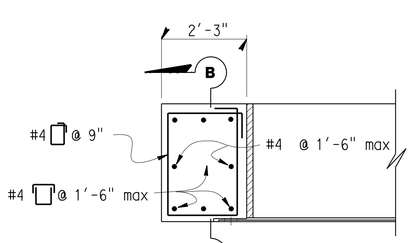

DETAIL E

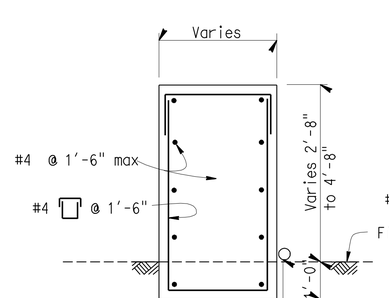

SECTION A-A

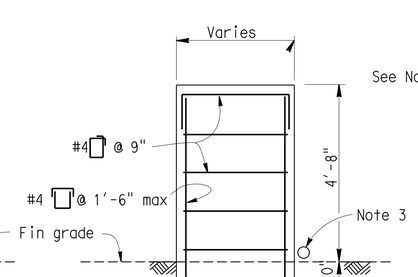

SECTION B-B

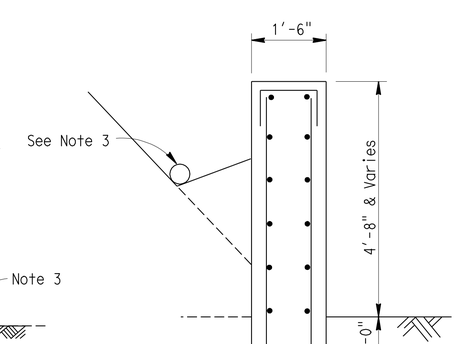

SECTION C-C

CONCRETE BARRIER TYPE 60R (MOD) VERTICAL FACE FOR SIDE OF ROAD SHEET 2 OF 2

CONSTRUCTION DETAILS

NO SCALE

C-68

STATE OF CALIFORNIA - DEPARTMENT OF TRANSPORTATION
Caltrans
DESIGN

FUNCTIONAL SUPERVISOR: MARK PERTILE
CALCULATED-DESIGNED BY: ANNABELL WANG
CHECKED BY
REVISED BY
DATE REVISED

LAST REVISION 12-01-10
DATE PLOTTED => 29-APR-2011
TIME PLOTTED => 20:12

Dist	COUNTY	ROUTE	POST MILES TOTAL PROJECT	SHEET No.	TOTAL SHEETS
08	Riv	91	15.6/21.6	155	2028

REGISTERED CIVIL ENGINEER — DATE 12-1-10

4-25-11
PLANS APPROVAL DATE

REGISTERED PROFESSIONAL ENGINEER CUONG LE TRAN No. C60436 Exp. 6/30/12 CIVIL STATE OF CALIFORNIA

THE STATE OF CALIFORNIA OR ITS OFFICERS OR AGENTS SHALL NOT BE RESPONSIBLE FOR THE ACCURACY OR COMPLETENESS OF SCANNED COPIES OF THIS PLAN SHEET.

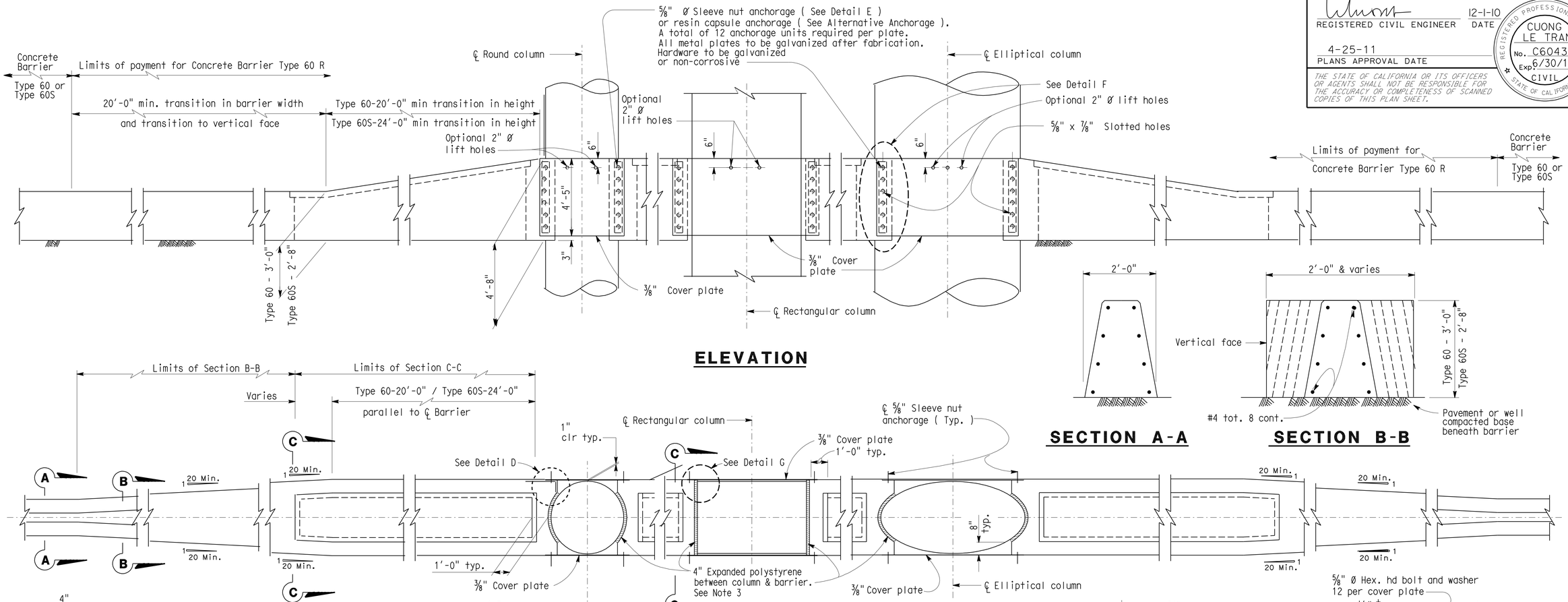

ELEVATION

SECTION A-A

SECTION B-B

PLAN

DETAIL F

SECTION C-C

DETAIL A **DETAIL B**

ALTERNATIVE ANCHORAGE

DETAIL D

DETAIL E

NOTES: 1) Resin capsule anchorage is subject to approval of the Engineer. Installation procedures shall comply with manufacturer's instructions. 2) Detail B similar to Detail A except for anchorage devices.

NOTES:

1. Contractor options for fill between barrier walls.
   - (A) Place 2'-0" PCC at base between barrier walls.
   - (B) Place granular material from base to bottom of 4" cap.
2. Forming material for 4" cap may remain in place.
3. Enclose column with 4" expanded polystyrene at locations where concrete or cement treated base encases the column.
4. For Detail G, see Transition at Bridge Column sheet 2 of 2.

CONCRETE BARRIER TYPE 60R (MOD) TRANSITION AT BRIDGE COLUMN SHEET 1 OF 2

CONSTRUCTION DETAILS
NO SCALE

C-69

STATE OF CALIFORNIA - DEPARTMENT OF TRANSPORTATION
Caltrans DESIGN

CALCULATED-DESIGNED BY CUONG LE TRAN
CHECKED BY ANNABELL WANG
FUNCTIONAL SUPERVISOR MARK PERTILE
REVISED BY
DATE REVISED

LAST REVISION 12-01-10
DATE PLOTTED => 29-APR-2011
TIME PLOTTED => 20:12

Dist	COUNTY	ROUTE	POST MILES TOTAL PROJECT	SHEET No.	TOTAL SHEETS
08	Riv	91	15.6/21.6	156	2028

REGISTERED CIVIL ENGINEER 12-1-10 DATE

4-25-11
PLANS APPROVAL DATE

REGISTERED PROFESSIONAL ENGINEER CUONG LE TRAN No. C60436 Exp. 6/30/12 CIVIL STATE OF CALIFORNIA

THE STATE OF CALIFORNIA OR ITS OFFICERS OR AGENTS SHALL NOT BE RESPONSIBLE FOR THE ACCURACY OR COMPLETENESS OF SCANNED COPIES OF THIS PLAN SHEET.

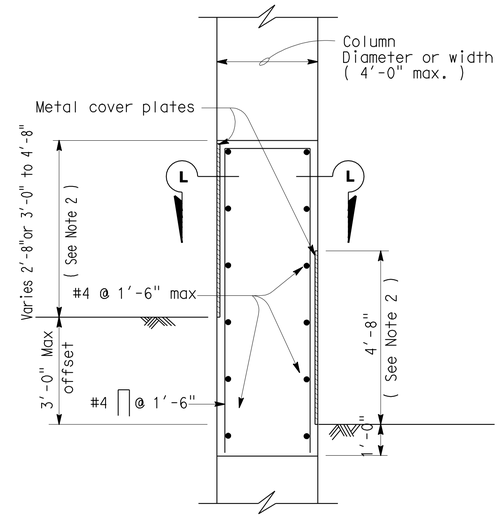

TYPICAL SECTION

Roadway offset 3'-0" or less
Column width less than 4'-0"

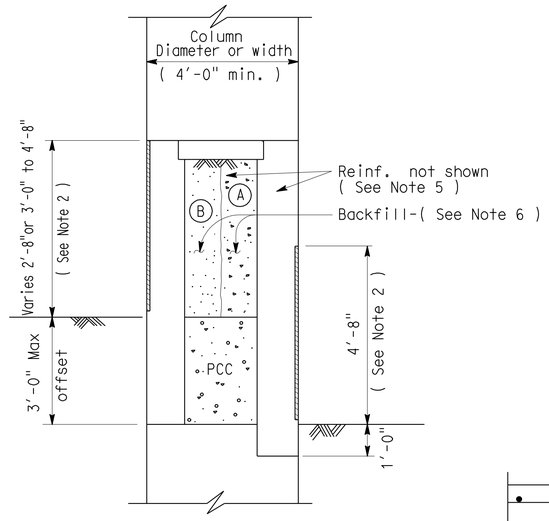

TYPICAL SECTION

Roadway offset 3'-0" or less
Column width less than 4'-0"

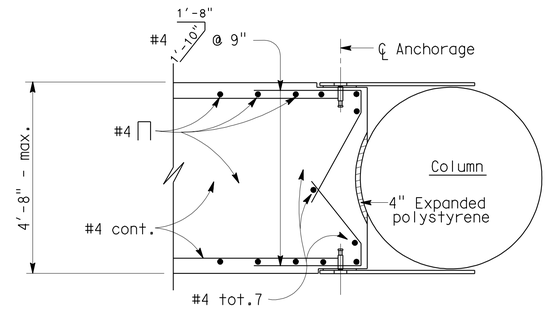

SECTION L-L

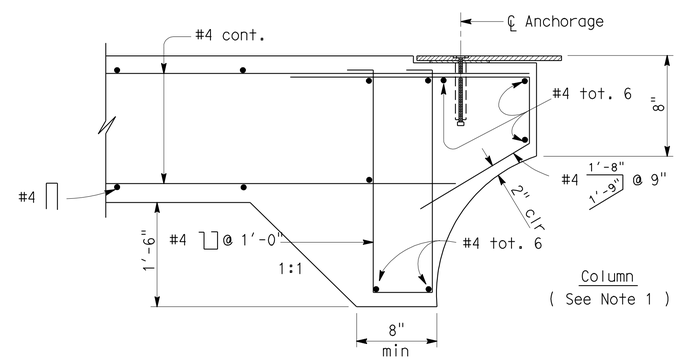

SECTION M-M

NOTES:

1. These details are to be combined with "Concrete Barrier Type 60 R" Sheet No.1. Details not indicated are similar to the details shown elsewhere on said sheet.
2. Metal plate details at columns shown on Concrete Barrier Type 60 R Sheet No.1.
3. For Retaining Wall Type 1A details, see Standard Plans.
4. Extend retaining wall footing dimension "B" to satisfy column width as indicated.
5. Extend reinforcement as shown in Section C-C on Concrete Barrier Type 60 R Sheet No.1.
6. Contractor options for fill between barrier walls:
   - (A) Place PCC between barrier walls, may be placed monolithic.
   - (B) Place granular material from base to bottom of concrete cap.

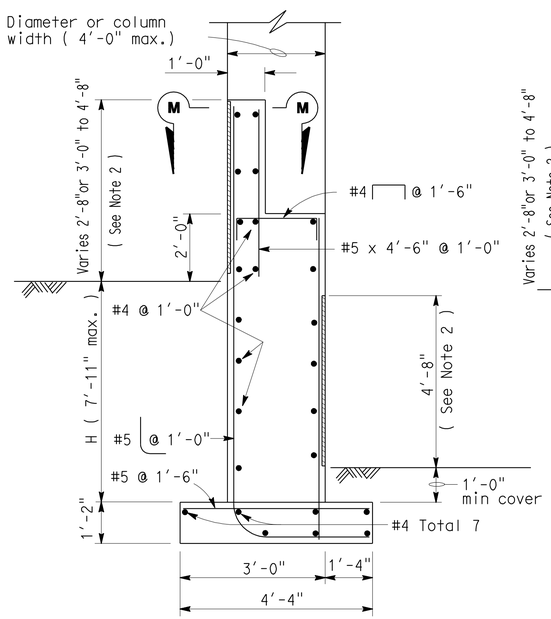

TYPICAL SECTION

Roadway offsets greater than 3'-0"
Column widths 4'-4" or less

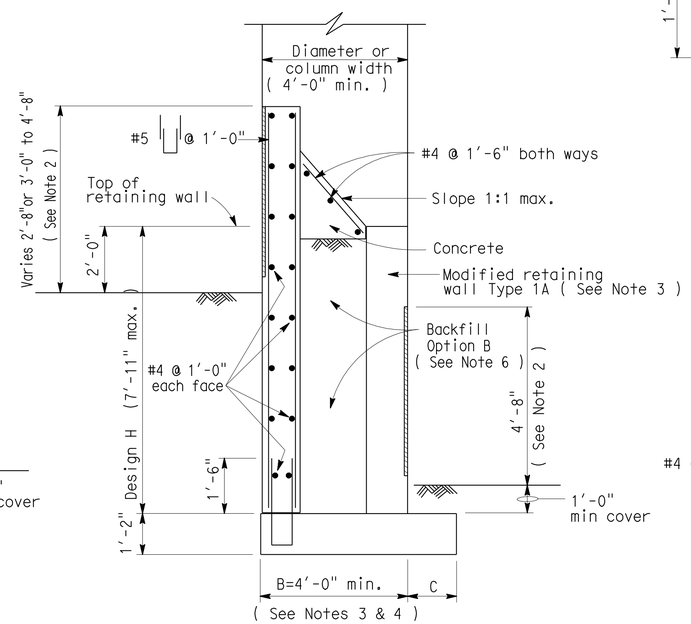

TYPICAL SECTION

Roadway offsets greater than 3'-0"
Column widths greater than 4'-0"

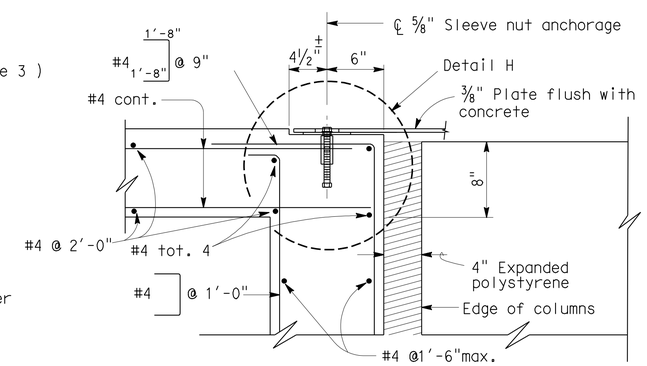

DETAIL G

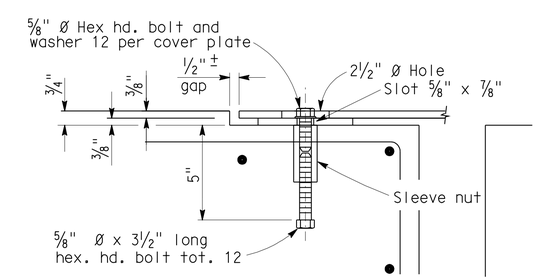

DETAIL H

CONCRETE BARRIER TYPE 60R (MOD) TRANSITION AT BRIDGE COLUMN SHEET 2 OF 2

CONSTRUCTION DETAILS

NO SCALE

C-70

STATE OF CALIFORNIA - DEPARTMENT OF TRANSPORTATION
DESIGN
Caltrans
FUNCTIONAL SUPERVISOR: MARK PERTILE
CALCULATED-DESIGNED BY: ANNABELL WANG
CHECKED BY: CUONG LE TRAN
REVISED BY
DATE REVISED

LAST REVISION 12-01-10
DATE PLOTTED => 29-APR-2011
TIME PLOTTED => 20:12

Dist	COUNTY	ROUTE	POST MILES TOTAL PROJECT	SHEET No.	TOTAL SHEETS
08	Riv	91	15.6/21.6	157	2028

REGISTERED CIVIL ENGINEER 12-1-10 DATE

4-25-11
PLANS APPROVAL DATE

REGISTERED PROFESSIONAL ENGINEER CUONG LE TRAN No. C60436 Exp. 6/30/12 CIVIL STATE OF CALIFORNIA

THE STATE OF CALIFORNIA OR ITS OFFICERS OR AGENTS SHALL NOT BE RESPONSIBLE FOR THE ACCURACY OR COMPLETENESS OF SCANNED COPIES OF THIS PLAN SHEET.

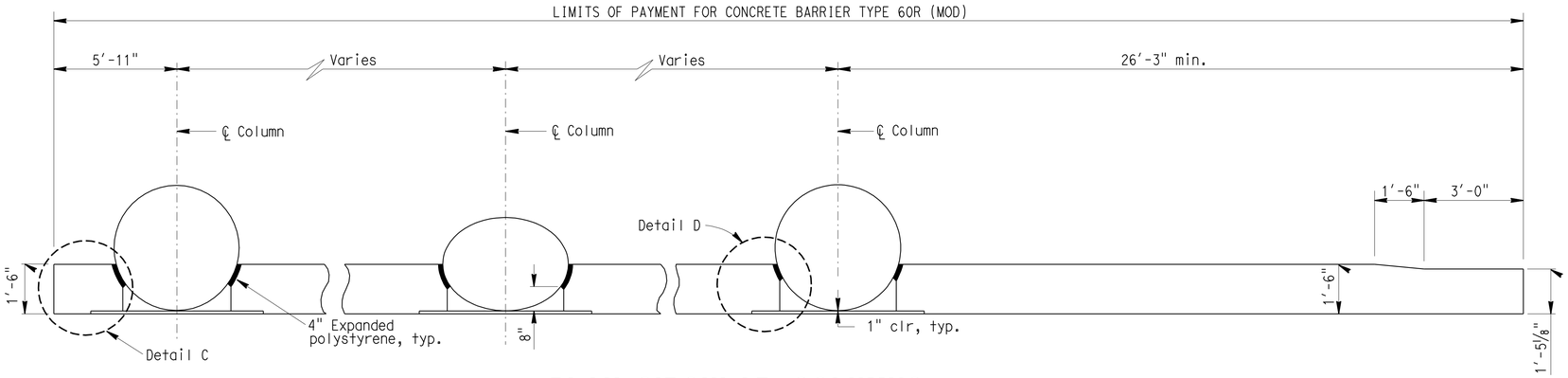

PLAN-CIRCULAR COLUMNS

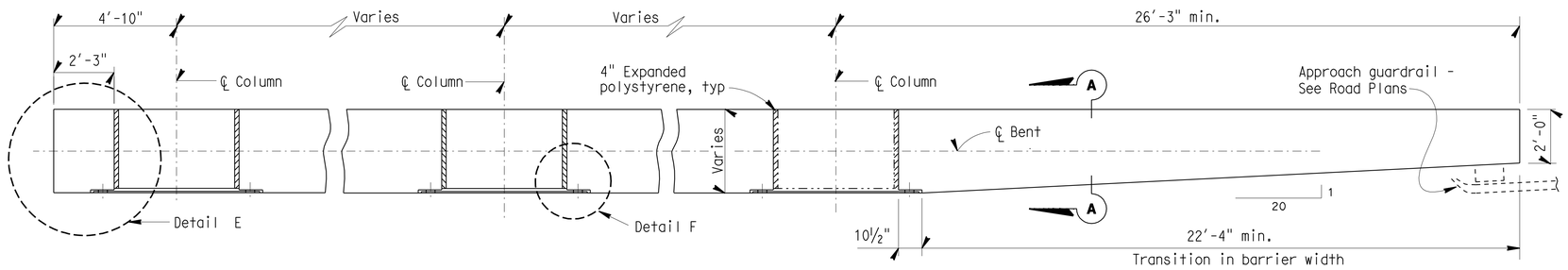

PLAN-RECTANGULAR COLUMNS

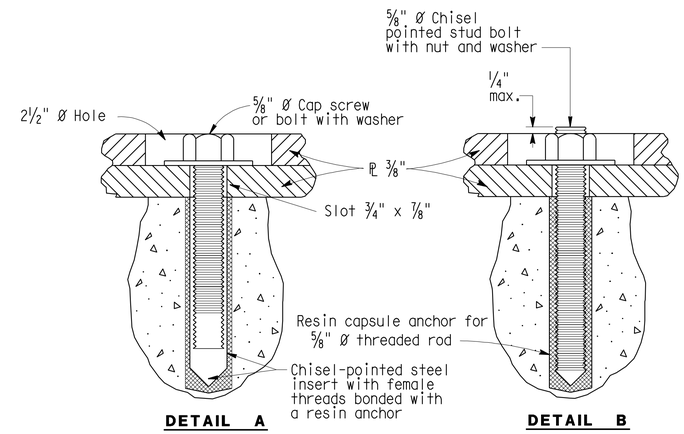

ALTERNATIVE ANCHORAGE

See Notes 1 and 2

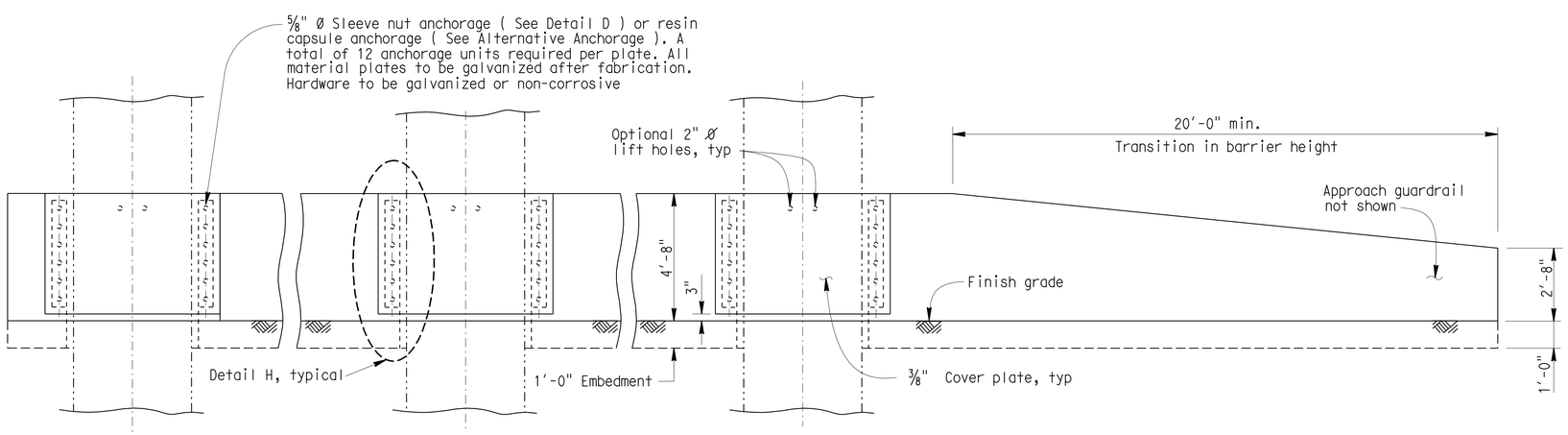

ELEVATION

NOTES:

1. Resin capsule anchorage is subject to approval of the engineer. Installation procedures shall comply with manufacturer's instructions.
2. Detail B similar to Detail A except for anchorage devices.
3. For drainage control, see "Roadway Plans".
4. The contractor shall verify all controlled field dimensions before ordering or fabricating any materials.

CONCRETE BARRIER TYPE 60R (MOD) VERTICAL FACE FOR SIDE OF ROAD SHEET 1 OF 2

CONSTRUCTION DETAILS

NO SCALE

C-71

STATE OF CALIFORNIA - DEPARTMENT OF TRANSPORTATION
DESIGN
Caltrans

FUNCTIONAL SUPERVISOR: MARK PERTILE
CALCULATED-DESIGNED BY: CUONG LE TRAN
CHECKED BY: ANNABELL WANG
REVISED BY
DATE REVISED

LAST REVISION 12-01-10
DATE PLOTTED => 29-APR-2011
TIME PLOTTED => 20:12

Dist	COUNTY	ROUTE	POST MILES TOTAL PROJECT	SHEET No.	TOTAL SHEETS
08	Riv	91	15.6/21.6	158	2028

REGISTERED CIVIL ENGINEER 12-1-10 DATE

4-25-11
PLANS APPROVAL DATE

REGISTERED PROFESSIONAL ENGINEER CUONG LE TRAN No. C60436 Exp. 6/30/12 CIVIL STATE OF CALIFORNIA

THE STATE OF CALIFORNIA OR ITS OFFICERS OR AGENTS SHALL NOT BE RESPONSIBLE FOR THE ACCURACY OR COMPLETENESS OF SCANNED COPIES OF THIS PLAN SHEET.

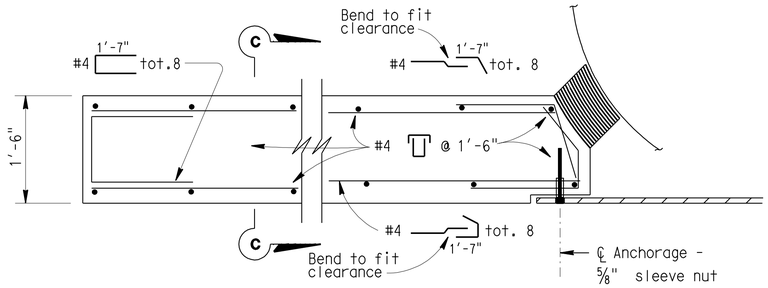

DETAIL C

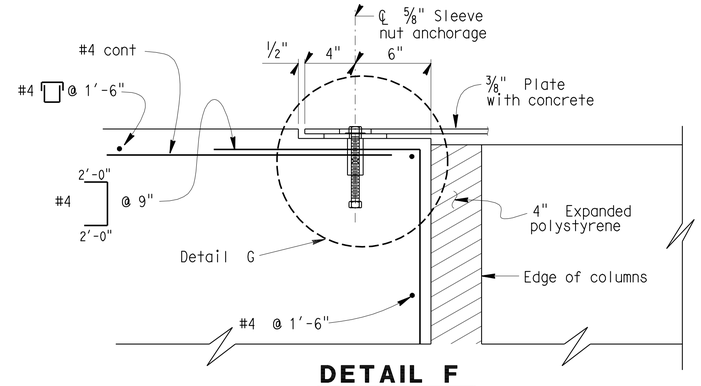

DETAIL F

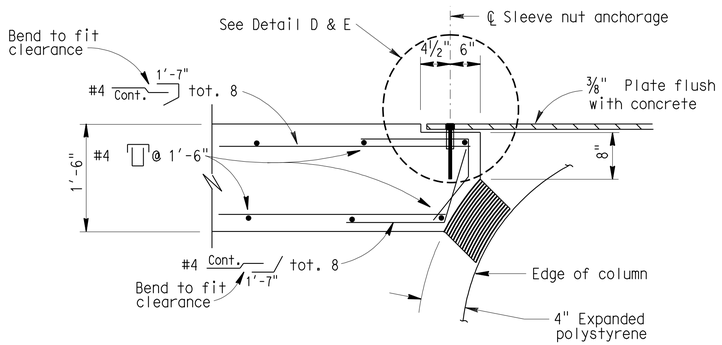

DETAIL D

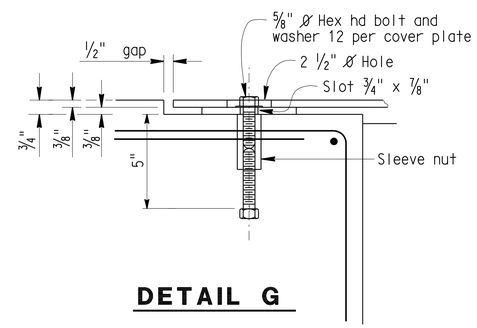

DETAIL G

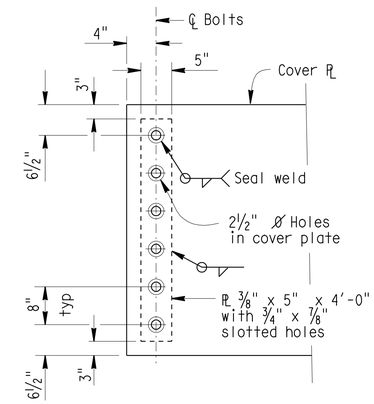

DETAIL H

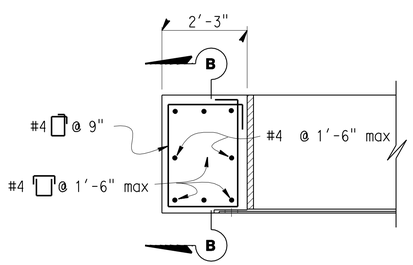

DETAIL E

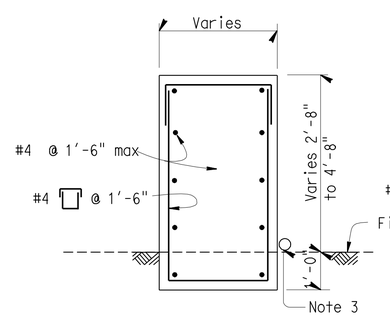

SECTION A-A

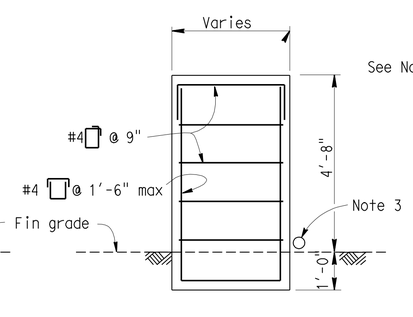

SECTION B-B

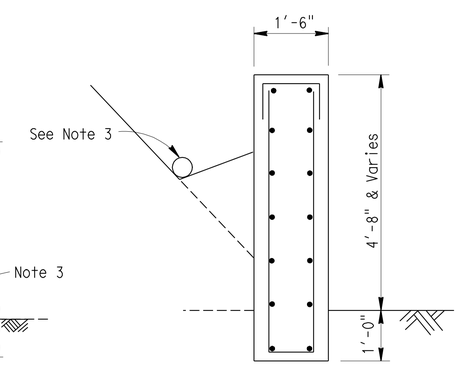

SECTION C-C

CONCRETE BARRIER TYPE 60R (MOD)
VERTICAL FACE FOR SIDE OF ROAD
SHEET 2 OF 2

CONSTRUCTION DETAILS
NO SCALE

C-72

STATE OF CALIFORNIA - DEPARTMENT OF TRANSPORTATION
Caltrans
DESIGN
FUNCTIONAL SUPERVISOR: MARK PERTILE
CALCULATED-DESIGNED BY: CUONG LE TRAN
CHECKED BY: ANNABELL WANG
REVISED BY
DATE REVISED

LAST REVISION 12-01-10
DATE PLOTTED => 29-APR-2011
TIME PLOTTED => 20:12

Dist	COUNTY	ROUTE	POST MILES TOTAL PROJECT	SHEET No.	TOTAL SHEETS
08	Riv	91	15.6/21.6	159	2028

REGISTERED CIVIL ENGINEER 12-1-10 DATE

4-25-11
PLANS APPROVAL DATE

REGISTERED PROFESSIONAL ENGINEER CUONG LE TRAN No. C60436 Exp. 6/30/12 CIVIL STATE OF CALIFORNIA

THE STATE OF CALIFORNIA OR ITS OFFICERS OR AGENTS SHALL NOT BE RESPONSIBLE FOR THE ACCURACY OR COMPLETENESS OF SCANNED COPIES OF THIS PLAN SHEET.

① 5/8" Ø Sleeve nut anchorage (See Detail E) or Resin capsule anchorage (See Alternative Anchorage). A total of 8 anchorage units required per plate. All metal plates to be galvanized after fabrication. Hardware to be galvanized or non-corrosive

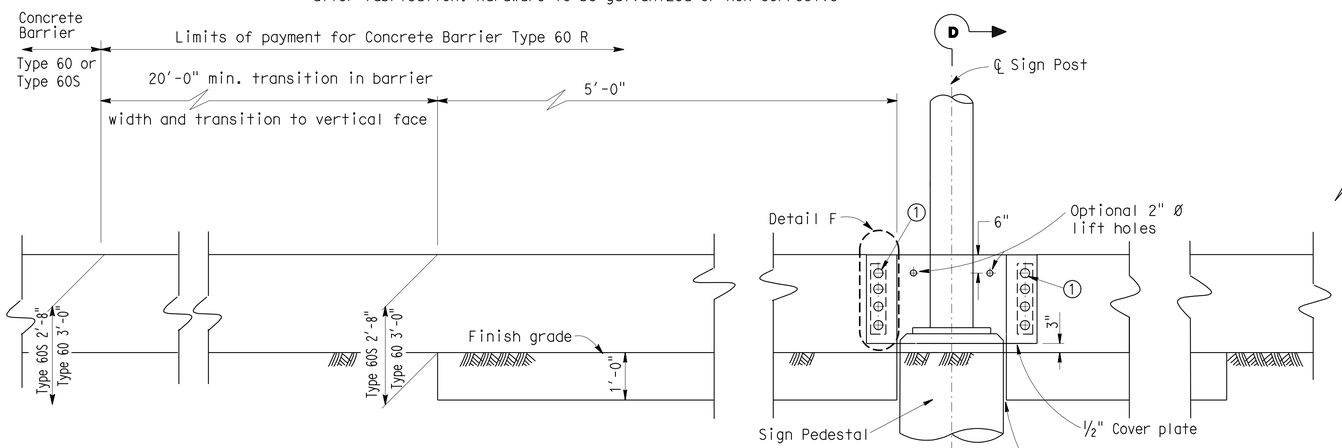

ELEVATION

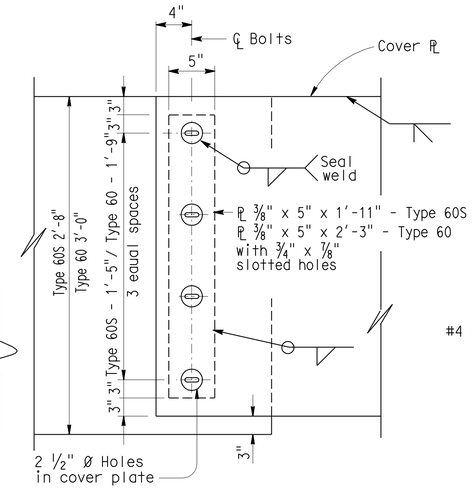

DETAIL F

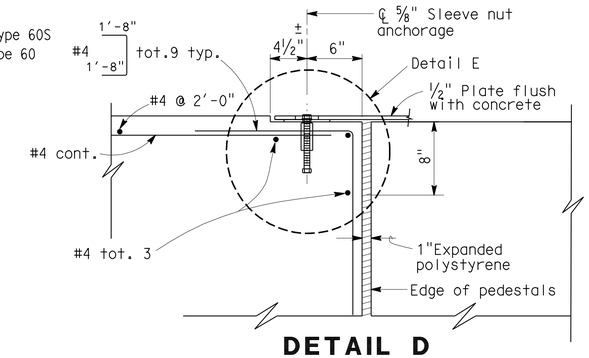

DETAIL D

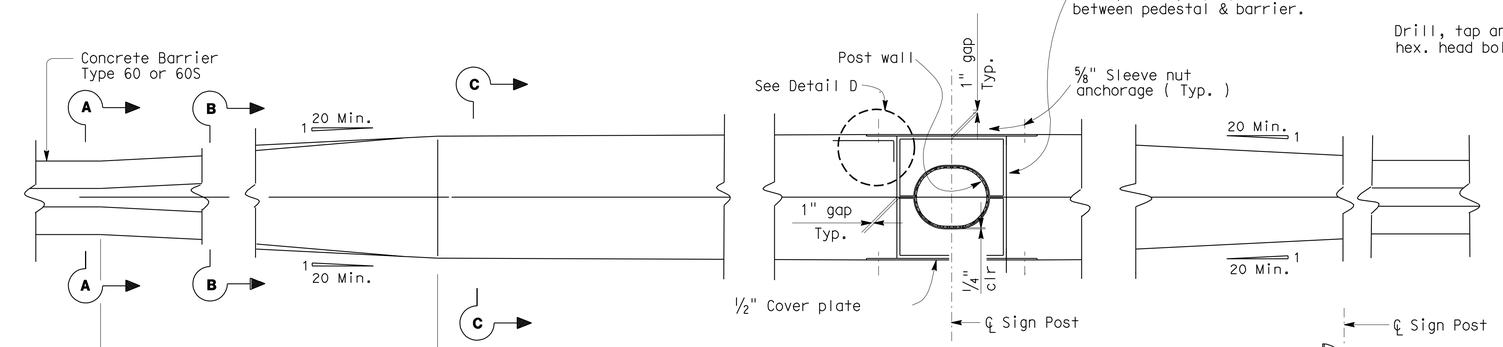

PLAN

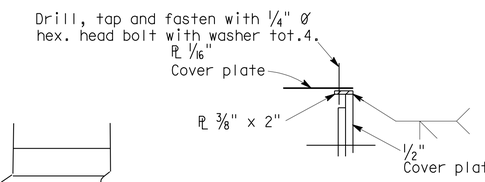

DETAIL G

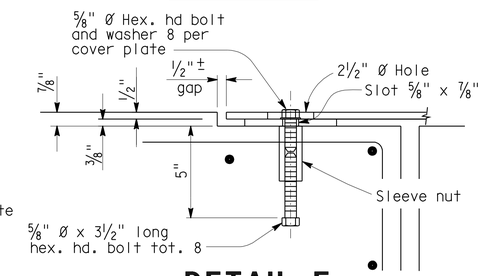

DETAIL E

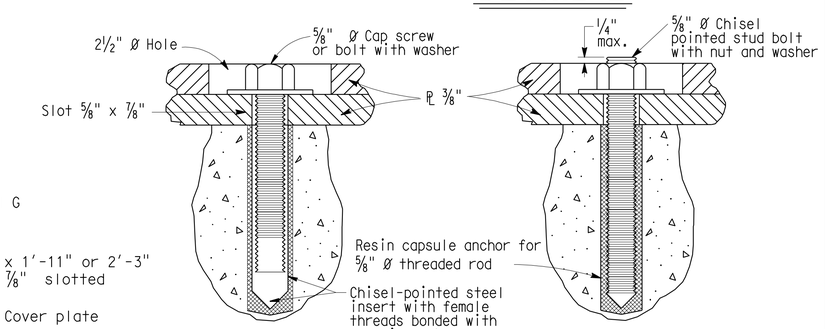

DETAIL A DETAIL B

ALTERNATIVE ANCHORAGE

NOTES: 1) Resin capsule anchorage is subject to approval of the Engineer. Installation procedures shall comply with manufacturer's instructions.

2) Detail B similar to Detail A except for anchorage devices.

NO SCALE

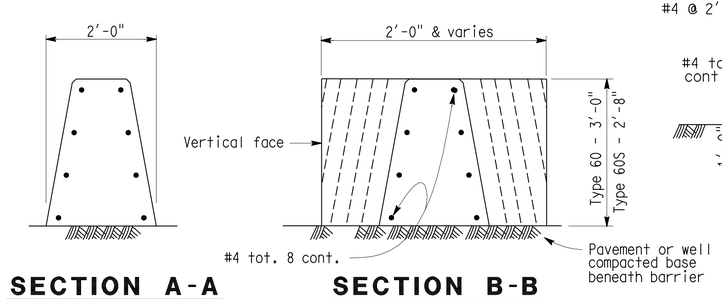

SECTION A-A SECTION B-B

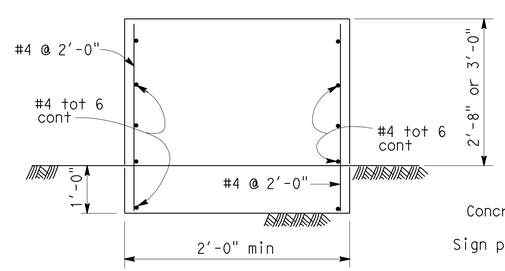

SECTION C-C

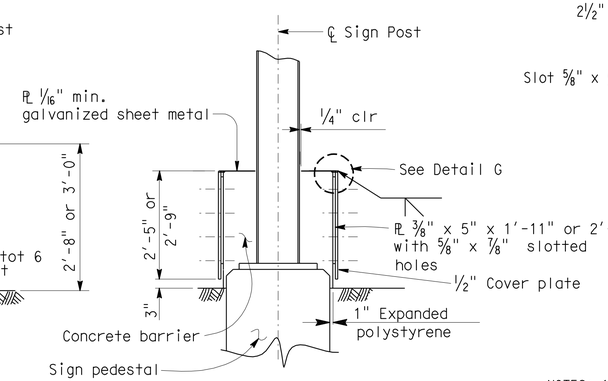

SECTION D-D

Note: Concrete Barrier Type 60 R is symmetrical about ℄ of sign post.

CONCRETE BARRIER TYPE 60R (MOD) TRANSITION AT SIGN POST SHEET 1 OF 1

NOTE:

FOR ACCURATE RIGHT OF WAY AND ACCESS DATA, CONTACT RIGHT OF WAY ENGINEERING AT THE DISTRICT OFFICE.

CONSTRUCTION DETAILS

NO SCALE

C-73

STATE OF CALIFORNIA - DEPARTMENT OF TRANSPORTATION DESIGN

FUNCTIONAL SUPERVISOR MARK PERTILE

CALCULATED-DESIGNED BY ANNABELL WANG

CHECKED BY CUONG LE TRAN

REVISED BY DATE REVISED

LAST REVISION 12-01-10 DATE PLOTTED => 29-APR-2011 TIME PLOTTED => 20:13

Dist	COUNTY	ROUTE	POST MILES TOTAL PROJECT	SHEET No.	TOTAL SHEETS
08	Riv	91	15.6/21.6	160	2028

REGISTERED CIVIL ENGINEER 12-1-10 DATE

4-25-11
PLANS APPROVAL DATE

REGISTERED PROFESSIONAL ENGINEER CUONG LE TRAN No. C60436 Exp. 6/30/12 CIVIL STATE OF CALIFORNIA

THE STATE OF CALIFORNIA OR ITS OFFICERS OR AGENTS SHALL NOT BE RESPONSIBLE FOR THE ACCURACY OR COMPLETENESS OF SCANNED COPIES OF THIS PLAN SHEET.

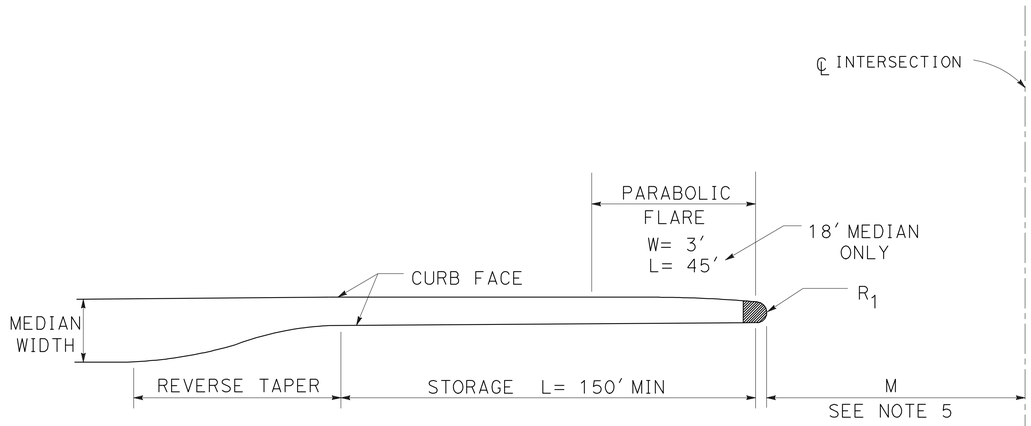

TYPE I - PROVIDES STORAGE FOR LEFT TURN

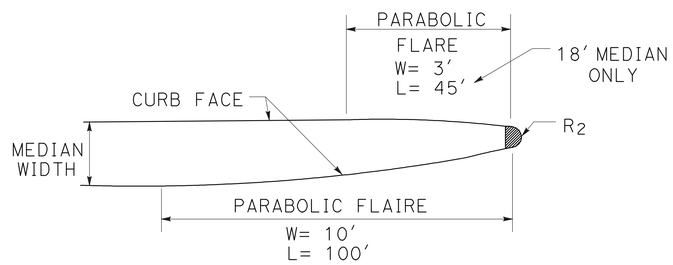

TYPE II - PROVIDES FOR LEFT TURN WITH NO STORAGE

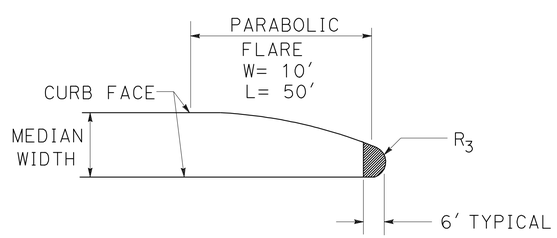

TYPE III - FOR USE WHERE LEFT TURN IS PROHIBITED

NOTES:

1. MEDIAN OPENINGS PER CITY OF RIVERSIDE STANDARD DRAWING No. 121.
2. FOR INTERSECTIONS WITH DRIVEWAYS M = 30′,
   FOR INTERSECTIONS WITH STREETS SEE STANDARD DWG.120.
3. MEDIAN OPENINGS PER CITY OF RIVERSIDE

REFERENCE DETAILS
REVERSE TAPER DETAIL CONSTRUCTION DETAILS SHEET 67
PARABOLIC FLARE CONSTRUCTION DETAILS SHEET 68

MEDIAN DIMENSIONS (FEET)

MEDIAN WIDTH	REVERSE TAPER		NOSE RADIUS		
	W	L	R_1	R_2	R_3
18′	10′	120′	2.5′	2.5′	4′
12′	10′	120′	1′	1′	1′

MEDIAN OPENINGS

CONSTRUCTION DETAILS
NO SCALE

C-74

STATE OF CALIFORNIA - DEPARTMENT OF TRANSPORTATION
Caltrans DESIGN
FUNCTIONAL SUPERVISOR MARK PERTILE
CALCULATED-DESIGNED BY CUONG LE TRAN
CHECKED BY ANNABELL WANG
REVISED BY
DATE REVISED

LAST REVISION 12-01-10 DATE PLOTTED => 29-APR-2011 TIME PLOTTED => 20:13

Dist	COUNTY	ROUTE	POST MILES TOTAL PROJECT	SHEET No.	TOTAL SHEETS
08	Riv	91	15.6/21.6	161	2028

REGISTERED CIVIL ENGINEER 12-1-10 DATE

4-25-11
PLANS APPROVAL DATE

REGISTERED PROFESSIONAL ENGINEER CUONG LE TRAN No. C60436 Exp. 6/30/12 CIVIL STATE OF CALIFORNIA

THE STATE OF CALIFORNIA OR ITS OFFICERS OR AGENTS SHALL NOT BE RESPONSIBLE FOR THE ACCURACY OR COMPLETENESS OF SCANNED COPIES OF THIS PLAN SHEET.

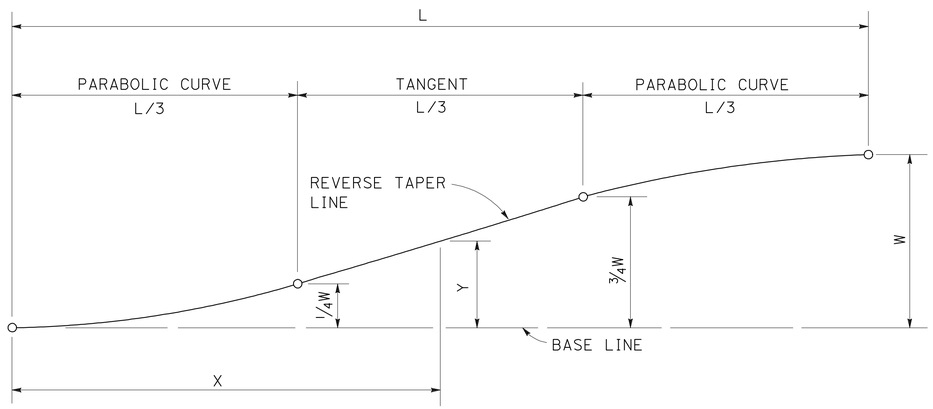

NOTES:

1- BASE LINE IS PARALLEL TO TRAVELED WAY
2- WHERE THE BASE LINE IS CURVED THE CENTRAL PORTION WILL NOT BE TANGENT. USE PROPORTIONAL OFFSETS TO DEFINE CURVE
3- REVERSE TAPER PER CITY OF RIVERSIDE

L	DISTANCE "X" ALONG BASE LINE (FT)									
60′	5′	10′	15′	20′	30′	40′	45′	50′	55′	60′
90′	7.5′	15′	22.5′	30′	45′	60′	67.5′	75′	82.5′	90′
120′	10′	20′	30′	40′	60′	80′	90′	100′	110′	120′
W	OFFSET "Y" FROM BASE LINE (FT)									
8′	0.12′	0.50′	1.12′	2.00′	4.00′	6.00′	6.88′	7.50′	7.88′	8.00′
9′	0.14′	0.56′	1.26′	2.25′	4.50′	6.75′	7.74′	8.44′	8.86′	9.00′
10′	0.16′	0.62′	1.41′	2.50′	5.00′	7.50′	8.59′	9.38′	9.84′	10.00′
11′	0.17′	0.69′	1.55′	2.75′	5.50′	8.25′	9.45′	10.31′	10.83′	11.00′
12′	0.19′	0.75′	1.69′	3.00′	6.00′	9.00′	10.3′	11.25′	11.81′	12.00′

REVERSE TAPER

CONSTRUCTION DETAILS
NO SCALE
C-75

STATE OF CALIFORNIA - DEPARTMENT OF TRANSPORTATION
Caltrans®
DESIGN

FUNCTIONAL SUPERVISOR: MARK PERTILE
CALCULATED-DESIGNED BY: ANNABELL WANG
CHECKED BY: CUONG LE TRAN
REVISED BY
DATE REVISED

LAST REVISION 12-01-10
DATE PLOTTED => 29-APR-2011
TIME PLOTTED => 20:13

Dist	COUNTY	ROUTE	POST MILES TOTAL PROJECT	SHEET No.	TOTAL SHEETS
08	Riv	91	15.6/21.6	162	2028

REGISTERED CIVIL ENGINEER 12-1-10 DATE

4-25-11
PLANS APPROVAL DATE

REGISTERED PROFESSIONAL ENGINEER CUONG LE TRAN No. C60436 Exp. 6/30/12 CIVIL STATE OF CALIFORNIA

THE STATE OF CALIFORNIA OR ITS OFFICERS OR AGENTS SHALL NOT BE RESPONSIBLE FOR THE ACCURACY OR COMPLETENESS OF SCANNED COPIES OF THIS PLAN SHEET.

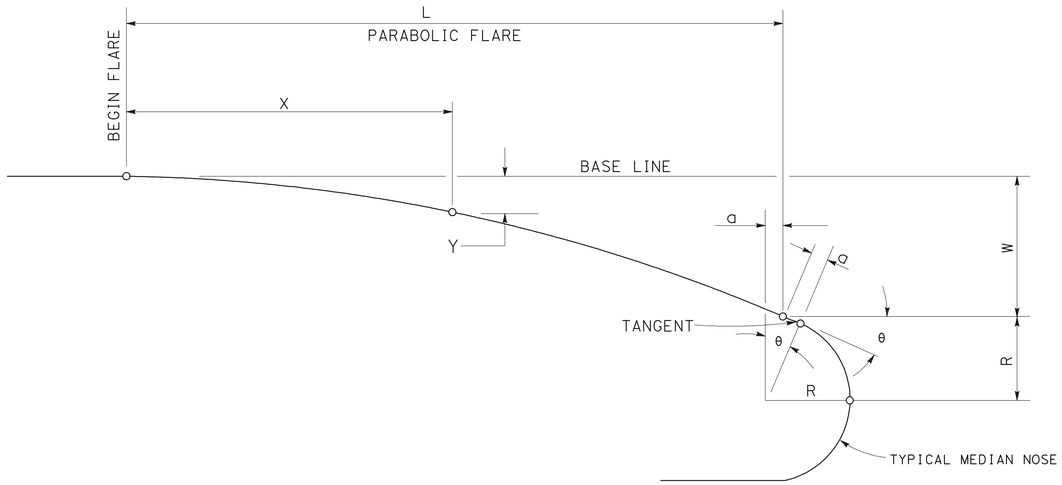

NOTES:

1. SHOW W, L, AND "BEGIN FLARE " STATION ON PLAN
2. PARABOLIC FLARE PER CITY OF RIVERSIDE

DESIGN DATA

$\tan\theta = 2W/L$

$a = R \tan\frac{1}{2}\theta$

$Y = W(X/L)^2$

		OFFSET (Y) AT DISTANCES (X) ALONG BASE LINE (FT)														
W	L \ X	10′	20′	25′	30′	40′	45′	50′	60′	70′	75′	80′	90′	100′	θ	TAN½θ
5′	25′	0.80′	3.20′	5′											21°48′05"	.1926
10′	50′	0.40′	1.60′		3.60′	6.40′		10′								
5′	50′	0.20′	0.80′		1.80′	3.20′		5′							11°18′36"	.0990
10′	100′	0.10′	0.40′		0.90′	1.60′		2.50′	3.60′	4.90′		6.40′	8.10′	10′		
3′	45′	0.15′	0.59′		1.33′	2.37′	3′								7°35′41"	.0664
5′	75′	0.09′	0.36′		0.80′	1.42′		2.22′	3.20′	4.36′	5′					
6′	90′	0.07′	0.30′		0.67′	1.19′		1.85′	2.67′	3.63′		4.74′	6′			

PARABOLIC FLARE

CONSTRUCTION DETAILS
NO SCALE
C-76

REVISED BY | DATE REVISED
CUONG LE TRAN | ANNABELL WANG
CALCULATED-DESIGNED BY | CHECKED BY
FUNCTIONAL SUPERVISOR
MARK PERTILE
STATE OF CALIFORNIA - DEPARTMENT OF TRANSPORTATION
Caltrans
DESIGN

LAST REVISION 12-01-10 | DATE PLOTTED => 29-APR-2011 | TIME PLOTTED => 20:13

Dist	COUNTY	ROUTE	POST MILES TOTAL PROJECT	SHEET No.	TOTAL SHEETS
08	Riv	91	15.6/21.6	163	2028

REGISTERED CIVIL ENGINEER 12-1-10 DATE

4-25-11
PLANS APPROVAL DATE

REGISTERED PROFESSIONAL ENGINEER CUONG LE TRAN No. C60436 Exp. 6/30/12 CIVIL STATE OF CALIFORNIA

THE STATE OF CALIFORNIA OR ITS OFFICERS OR AGENTS SHALL NOT BE RESPONSIBLE FOR THE ACCURACY OR COMPLETENESS OF SCANNED COPIES OF THIS PLAN SHEET.

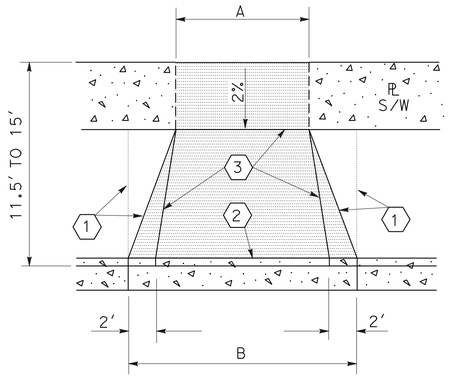

TYPE PL-I

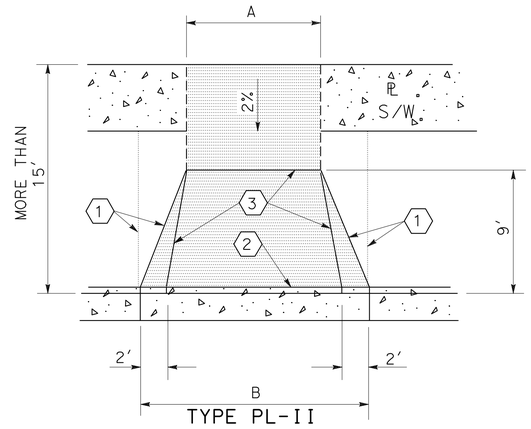

TYPE PL-II

DRIVEWAY APPROACH WITH PROPERTY-LINE SIDEWALK

NOTES:

CONCRETE IN THE SHADED AREA SHALL BE AT LEAST 6" THICK.

(1) DOTTED LINE SHOWS OPTIONAL DRIVEWAY/SIDEWALK CONFIGURATION. WHEN THE OPTIONAL CONFIGURATION IS CHOSEN, THE ADDITIONAL CONCRETE SHALL BE AT LEAST 6" THICK

(2) SCORE LINE OR COLD JOINT.

(3) GRADE BREAK LINES SHALL BE PRECISE AND STRAIGHT. SCREEDS AND/OR FALSE FORMS MUST BE USED TO ACHIEVE PRECISE CONSTRUCTION.

(4) DRIVEWAY APPROACH PER CITY OF RIVERSIDE

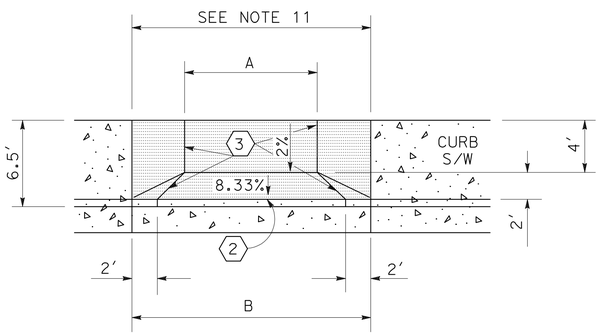

TYPE CURB -I

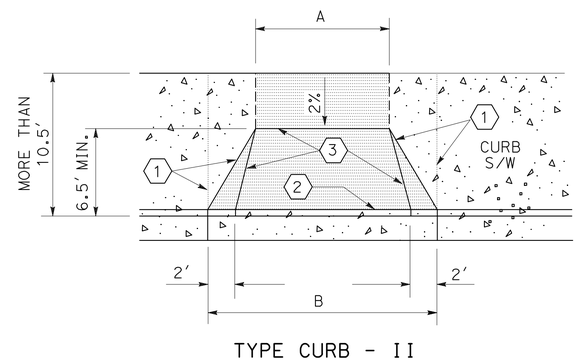

TYPE CURB - II

DRIVEWAY APPROACH WITH CURB SIDEWALK

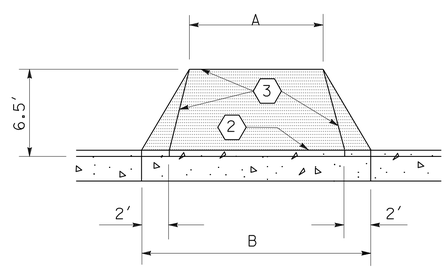

TYPE CURB-III

DRIVEWAY APPROACH WITH NO SIDEWALK

NOTE: CURB-III REQUIRES APPROVAL BY THE CITY ENGINEER PRIOR TO USE.

DRIVEWAY APPROACH

(SHEET 1 OF 3)

CONSTRUCTION DETAILS

NO SCALE

C-77

STATE OF CALIFORNIA - DEPARTMENT OF TRANSPORTATION
Caltrans
DESIGN

FUNCTIONAL SUPERVISOR: MARK PERTILE
CALCULATED-DESIGNED BY: ANNABELL WANG
CHECKED BY: CUONG LE TRAN
REVISED BY
DATE REVISED

LAST REVISION DATE PLOTTED => 29-APR-2011
12-01-10 TIME PLOTTED => 20:13

Dist	COUNTY	ROUTE	POST MILES TOTAL PROJECT	SHEET No.	TOTAL SHEETS
08	Riv	91	15.6/21.6	164	2028

REGISTERED CIVIL ENGINEER 12-1-10 DATE

4-25-11
PLANS APPROVAL DATE

REGISTERED PROFESSIONAL ENGINEER CUONG LE TRAN No. C60436 Exp. 6/30/12 CIVIL STATE OF CALIFORNIA

THE STATE OF CALIFORNIA OR ITS OFFICERS OR AGENTS SHALL NOT BE RESPONSIBLE FOR THE ACCURACY OR COMPLETENESS OF SCANNED COPIES OF THIS PLAN SHEET.

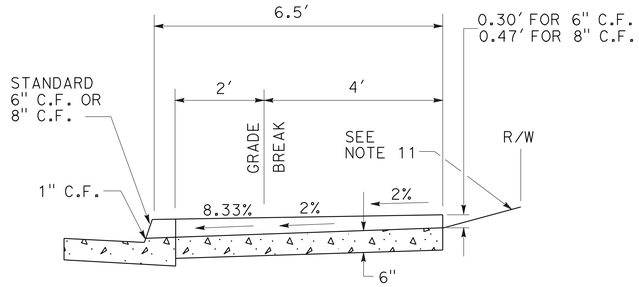

TYPE CURB -I

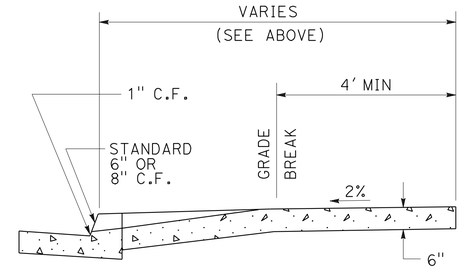

TYPES CURB-II, PL-I & PL-II

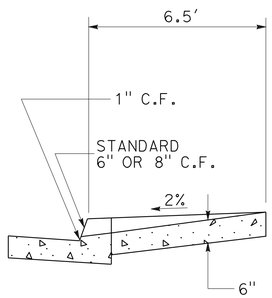

TYPE CURB-III

TYPICAL SECTIONS

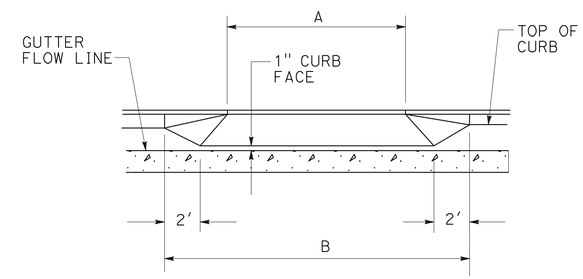

ELEVATION

DRIVEWAY APPROACH DIMENSIONS				
LAND USE AND DRIVEWAY TYPE		A	B	B*
RESIDENTIAL (SINGLE OR DUPLEX)	SINGLE GARAGE	10′ (MIN)	(A+7′)	A+14′
	DOUBLE GARAGE	20′ (MAX)		
	TRIPLE GARAGE	28′		
COMMERCIAL OR APARTMENTS		30′	A+14′	A+18′
COMMERCIAL (JOINT)		36′		

* USE THIS "B" DIMENSION WHEN THE DRIVEWAY APPROACH IS ON A MAJOR STREET OR WHEN A DRIVING LANE IS ADJACENT TO THE CURB.

DRIVEWAY APPROACH
(SHEET 2 OF 3)

CONSTRUCTION DETAILS
NO SCALE

C-78

REVISED BY | DATE REVISED
CUONG LE TRAN | ANNABELL WANG
CALCULATED-DESIGNED BY | CHECKED BY
FUNCTIONAL SUPERVISOR | MARK PERTILE
STATE OF CALIFORNIA - DEPARTMENT OF TRANSPORTATION
Caltrans® DESIGN

LAST REVISION 12-01-10 | DATE PLOTTED => 29-APR-2011 | TIME PLOTTED => 20:13

Dist	COUNTY	ROUTE	POST MILES TOTAL PROJECT	SHEET No.	TOTAL SHEETS
08	Riv	91	15.6/21.6	165	2028

REGISTERED CIVIL ENGINEER 12-1-10 DATE

4-25-11
PLANS APPROVAL DATE

REGISTERED PROFESSIONAL ENGINEER CUONG LE TRAN No. C60436 Exp. 6/30/12 CIVIL STATE OF CALIFORNIA

THE STATE OF CALIFORNIA OR ITS OFFICERS OR AGENTS SHALL NOT BE RESPONSIBLE FOR THE ACCURACY OR COMPLETENESS OF SCANNED COPIES OF THIS PLAN SHEET.

NOTES

1. A CONSTRUCTION PERMIT IS REQUIRED PRIOR TO CONSTRUCTION OF A DRIVEWAY APPROACH. AS A PREREQUISITE TO THE CONSTRUCTION PERMIT, THE PERMITTEE SHALL SUBMIT FOR REVIEW AND APPROVAL OF THE CITY ENGINEER, A DETAILED PLOT PLAN SHOWING THE LOCATION OF THE PROPERTY TO BE SERVED BY THE DRIVEWAY APPROACH, THE STREET RIGHT-OF-WAY, THE PROPERTY LINES, THE EXISTING AND PROPOSED GARAGES, DRIVEWAY, CURB AND GUTTERS, SIDEWALKS, TREES, FIRE HYDRANTS, UTILITY VAULTS AND POLES AND OTHER IMPROVEMENTS WHICH MAY BE AFFECTED BY THE PROPOSED CONSTRUCTION. THE PLOT PLAN SHALL SPECIFY THE TYPE AND LOCATION OF THE PROPOSED DRIVEWAY APPROACH WITH ITS DIMENSIONS "A" AND "B"
2. A DRIVEWAY APPROACH REQUIRING RELOCATION OR REMOVAL OF TREES, POLES, UTILITIES OR OTHER APPURTENANCES SHALL BE APPROVED BY THE AFFECTED UTILITY COMPANY AND/OR CITY DEPARTMENTS PRIOR TO ISSUANCE OF THE CONSTRUCTION PERMIT. ALL SUCH WORK SHALL BE DONE AT THE EXPENSE OF THE PERMITTEE.
3. NO PORTION OF A DRIVEWAY APPROACH SHALL BE LOCATED WITHIN A CURB RETURN.
4. ANY UNUSED DRIVEWAY OPENINGS SERVING THE PROPERTY ON WHICH A NEW DRIVEWAY IS BEING BUILT, SHALL BE CLOSED WITH FULL HEIGHT CURB; SEE STD. DWG. 303 FOR REMOVAL OF CURB ONLY.
5. THE EDGE OF THE DRIVEWAY APPROACH AT THE CURB SHALL BE AT LEAST 5′ FROM THE EXTENSION OF THE NEAREST PROPERTY LINE AT THE CURB.
6. WHEN A JOINT DRIVEWAY APPROACH IS PERMITTED , A RECORDED EASEMENT ALLOWING FOR MUTUAL ACCESS ON THE ADJOINING PROPERTIES IS REQUIRED.
7. CONCRETE SHALL BE CLASS 520-C-2500
8. A CONSTRUCTION JOINT OR A WEAKENED PLANE JOINT SHALL BE INSTALLED BETWEEN THE DRIVEWAY APPROACH AND THE ADJACENT SIDEWALK AND DRIVEWAY.
9. A WEAKENED PLANE JOINT SHALL BE CONSTRUCTED THROUGH THE CENTER OF THE DRIVEWAY APPROACH WHEN "A" EXCEEDS 15′.
10. WHEN A DRIVEWAY APPROACH IS TO JOIN AN ALLEY , THE DRIVEWAY APPROACH AND THE ALLEY SHALL BE CONSTRUCTED TO ALLOW FOR PROPER DRAINAGE.
11. FOR TYPE CURB-I, A POSITIVE SLOPE BEYOND THE DRIVEWAY APPROACH AS WELL AS TRANSITION CURBS BEHIND THE SIDEWALK AND ADJACENT TO THE DRIVEWAY MAY BE RERQUIRED TO CONTAIN 100-YEAR STORM RUNOFF WITHIN THE RIGHT-OF-WAY.
12. WHEN DRIVEWAY APPROACH IS TO BE USED AS A MIDBLOCK WHEELCHAIR RAMP USE STANDARD DRAWING 304, TYPE VII.
13. DRIVEWAY APPROACH PER CITY OF RIVERSIDE

FOR ANY VARIATION FROM THIS STANDARD, APPROVAL MUST BE OBTAINED FROM THE CITY ENGINEER.

DRIVEWAY APPROACH
(SHEET 3 OF 3)

CONSTRUCTION DETAILS
C-79

REVISED BY | DATE REVISED
CUONG LE TRAN | ANNABELL WANG
CALCULATED-DESIGNED BY | CHECKED BY
FUNCTIONAL SUPERVISOR
MARK PERTILE

STATE OF CALIFORNIA - DEPARTMENT OF TRANSPORTATION
Caltrans
DESIGN

LAST REVISION 12-01-10 | DATE PLOTTED => 29-APR-2011 TIME PLOTTED => 20:13

Dist	COUNTY	ROUTE	POST MILES TOTAL PROJECT	SHEET No.	TOTAL SHEETS
08	Riv	91	15.6/21.6	166	2028

REGISTERED CIVIL ENGINEER 12-1-10 DATE

4-25-11
PLANS APPROVAL DATE

REGISTERED PROFESSIONAL ENGINEER CUONG LE TRAN No. C60436 Exp. 6/30/12 CIVIL STATE OF CALIFORNIA

THE STATE OF CALIFORNIA OR ITS OFFICERS OR AGENTS SHALL NOT BE RESPONSIBLE FOR THE ACCURACY OR COMPLETENESS OF SCANNED COPIES OF THIS PLAN SHEET.

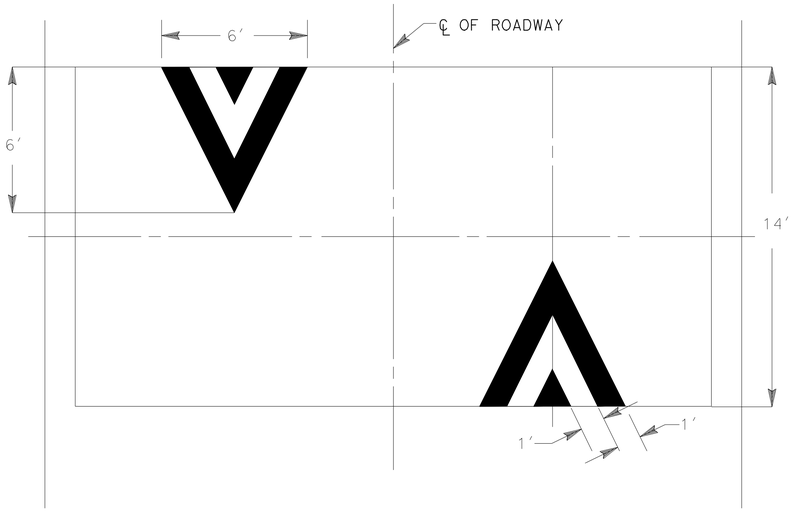

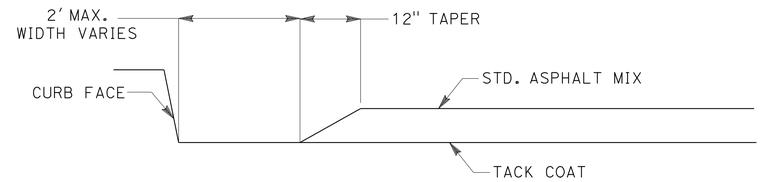

CURB DETAIL

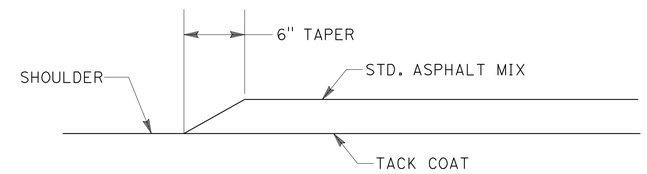

SHOULDER DETAIL

NOTE:

1. TRAFFIC DESIGN CRITERIA PER CITY OF RIVERSIDE

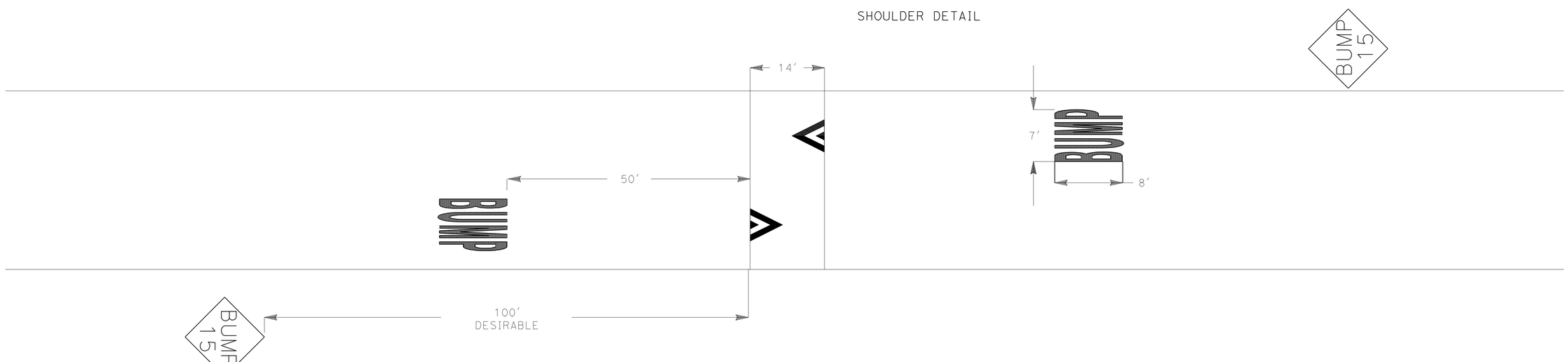

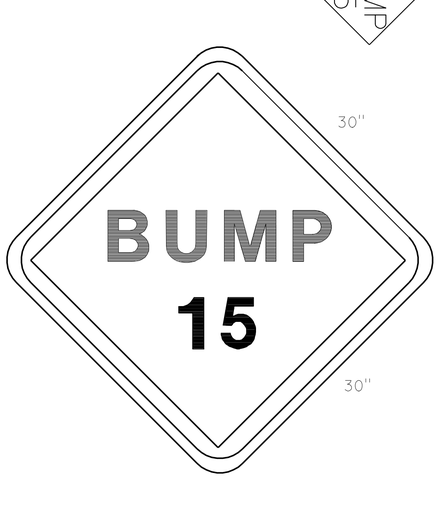

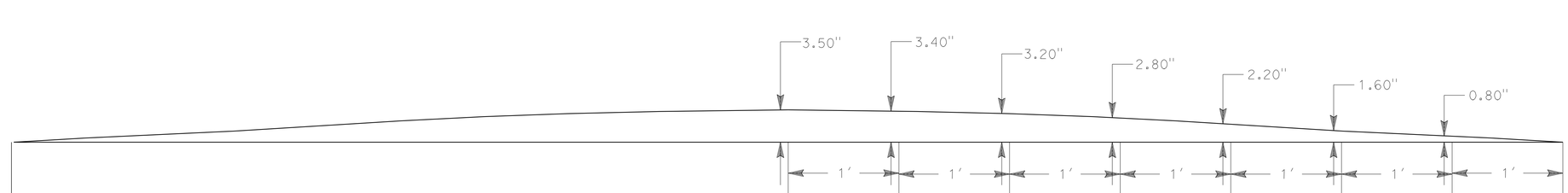

PARABOLIC CROWN

14' LOCAL SPEED HUMP

CONSTRUCTION DETAILS

NO SCALE

C-80

STATE OF CALIFORNIA - DEPARTMENT OF TRANSPORTATION
Caltrans DESIGN

FUNCTIONAL SUPERVISOR: MARK PERTILE
CALCULATED-DESIGNED BY: ANNABELL WANG
CHECKED BY: CUONG LE TRAN
REVISED BY
DATE REVISED

LAST REVISION 12-01-10 | DATE PLOTTED => 29-APR-2011 | TIME PLOTTED => 20:13

Dist	COUNTY	ROUTE	POST MILES TOTAL PROJECT	SHEET No.	TOTAL SHEETS
08	Riv	91	15.6/21.6	167	2028

REGISTERED CIVIL ENGINEER 12-1-10 DATE

4-25-11
PLANS APPROVAL DATE

REGISTERED PROFESSIONAL ENGINEER CUONG LE TRAN No. C60436 Exp. 6/30/12 CIVIL STATE OF CALIFORNIA

THE STATE OF CALIFORNIA OR ITS OFFICERS OR AGENTS SHALL NOT BE RESPONSIBLE FOR THE ACCURACY OR COMPLETENESS OF SCANNED COPIES OF THIS PLAN SHEET.

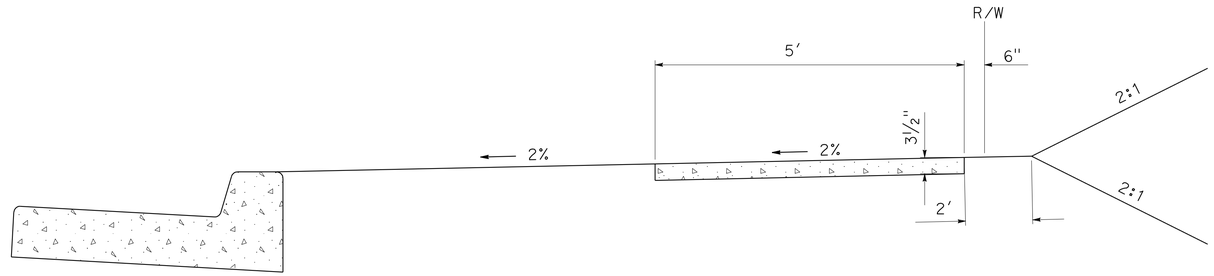

PROPERTY LINE SIDEWALK

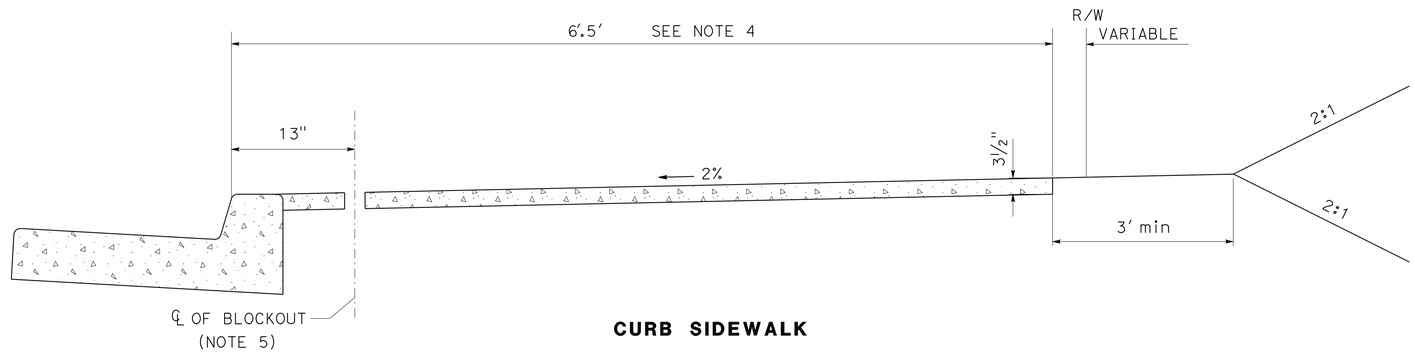

CURB SIDEWALK

TYPICAL SECTIONS

NOTES:

1. 1/2" THICK TRANSVERSE EXPANSION JOINTS SHALL BE INSTALLED AT ALL CURB RETURNS. 1/4" THICK EXPANSION JOINTS SHALL BE INSTALLED BETWEEN THE SIDEWALK AND THE BACK OF CURB AT CURB RETURNS AND AROUND DRAINAGE STRUCTURES, POLES, AND PIPES WHICH ARE IN THE SIDEWALK. CURB SIDEWALKS SHALL HAVE THE EXPANSION JOINTS AT THE SAME LOCATION AS THOSE IN THE CURB.
2. WEAKENED PLANE JOINTS SHALL BE CONSTRUCTED AT 10′ MAXIMUM INTERVALS THROUGHOUT THE LENGTH OF THE SIDEWALK AND AT LOCATIONS WHERE THE SIDEWALK SECTION IS INTERRUPTED BY TREEWELLS, UTILITY VAULTS, BLOCKOUTS FOR STREET LIGHTS AND SIMILAR OBJECTS.
3. A SIDEWALK WIDER THAN 6.5′ MAY BE REQUIRED IN COMMERCIAL AREAS AND AREAS WITH HIGH PEDESTRIAN TRAFFIC.
4. WHEN A STREET LIGHT STANDARD IS TO BE PLACED IN THE SIDEWALK, BLOCK OUT 3′ SQUARE AROUND THE STANDARD AND BRING THE STREET LIGHT FOUNDATION TO GRADE AFTER THE STANDARD IS PLUMB.
5. IN RESIDENTIAL AREAS 6"X 6" OR 6" DIAMETER BLOCKOUTS FOR MAILBOXES ARE REQUIRED IN CURB SIDEWALK 13" FROM CURB FACE AT THE PROPERTY LINE BETWEEN ADJACENT RESIDENCES. FOR MAILBOXES FOR BUSINESS, MOBILEHOME PARKS OR APARTMENT HOUSES, DEVELOPER TO CHECK WITH THE U.S.P.S FOR THE NUMBER AND LOCATION OF MAILBOXES.
6. 4′ WIDTH OF SIDEWALK IS THE MINIMUM WIDTH BETWEEN EDGE OF SIDEWALK AND ANY OBJECTS THAT INTERFERE WITH PEDESTRIAN R/W (TREE WELLS, FIRE HYDRANTS, ETC.)
7. SIDEWALK PER CITY OF RIVERSIDE

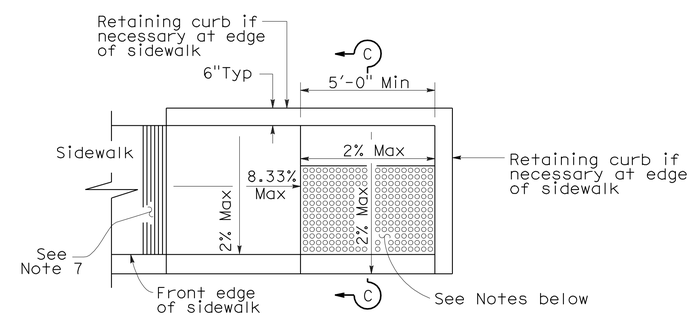

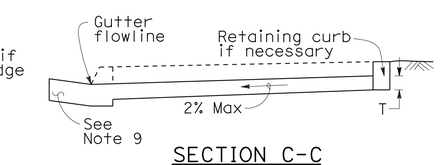

SECTION C-C

CURB RAMP CASE C (MOD)

NOTE: 1. FOR ALL NOTES AND ADDITIONAL DETAILS, SEE 2006 STANDARD PLAN A88A.

SIDEWALK

CONSTRUCTION DETAILS
NO SCALE

C-81

REVISED BY | DATE REVISED
CUONG LE TRAN | ANNABELL WANG
CALCULATED-DESIGNED BY | CHECKED BY
FUNCTIONAL SUPERVISOR: MARK PERTILE
STATE OF CALIFORNIA - DEPARTMENT OF TRANSPORTATION
Caltrans® DESIGN

LAST REVISION 12-01-10 | DATE PLOTTED => 29-APR-2011 | TIME PLOTTED => 20:14

Dist	COUNTY	ROUTE	POST MILES TOTAL PROJECT	SHEET No.	TOTAL SHEETS
08	Riv	91	15.6/21.6	168	2028

REGISTERED CIVIL ENGINEER 12-1-10 DATE

4-25-11
PLANS APPROVAL DATE

REGISTERED PROFESSIONAL ENGINEER CUONG LE TRAN No. C60436 Exp. 6/30/12 CIVIL STATE OF CALIFORNIA

THE STATE OF CALIFORNIA OR ITS OFFICERS OR AGENTS SHALL NOT BE RESPONSIBLE FOR THE ACCURACY OR COMPLETENESS OF SCANNED COPIES OF THIS PLAN SHEET.

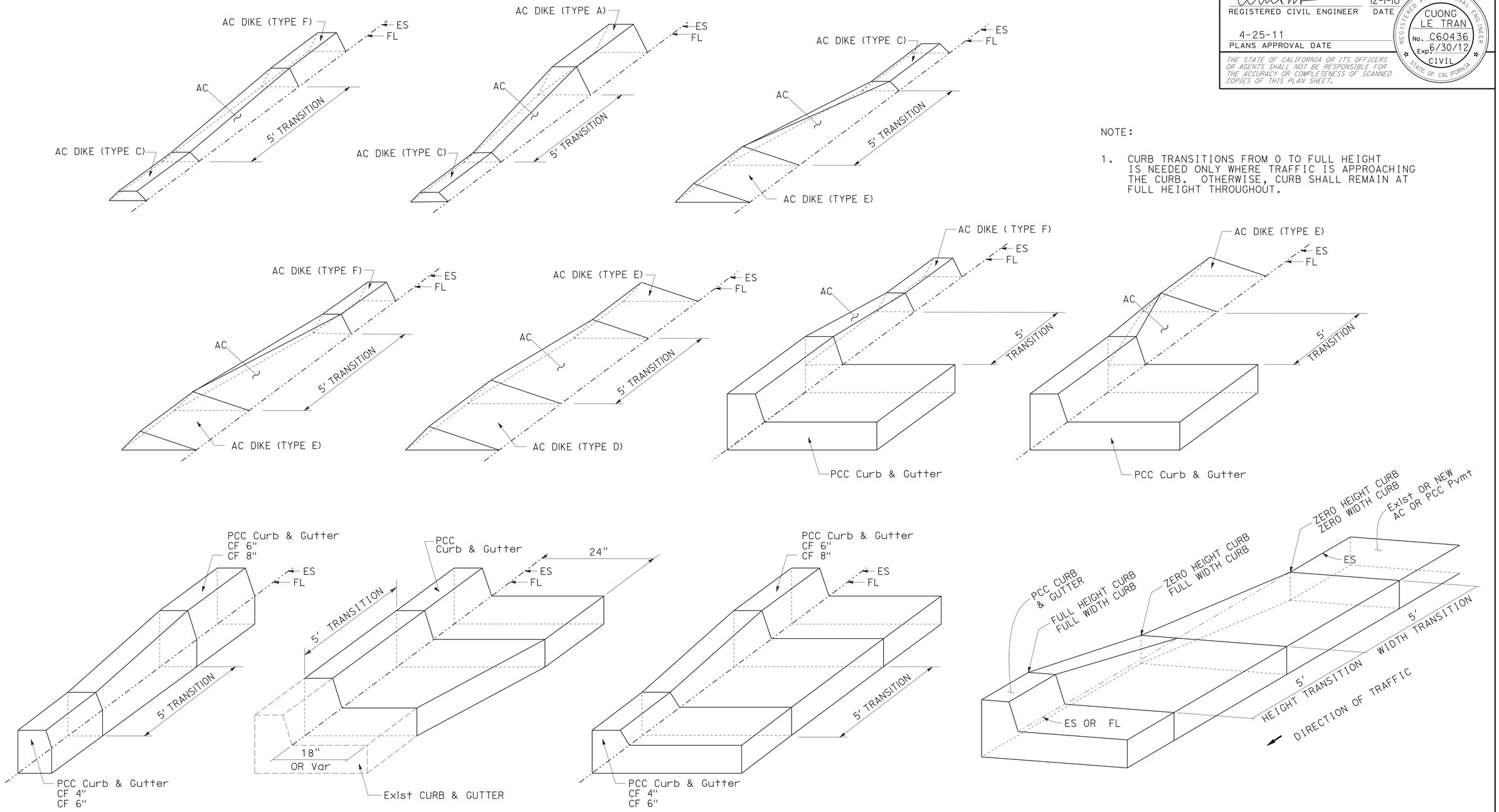

NOTE:

1. CURB TRANSITIONS FROM 0 TO FULL HEIGHT IS NEEDED ONLY WHERE TRAFFIC IS APPROACHING THE CURB. OTHERWISE, CURB SHALL REMAIN AT FULL HEIGHT THROUGHOUT.

CURB AND DIKE TRANSITIONS

CONSTRUCTION DETAILS

NO SCALE

C-82

STATE OF CALIFORNIA - DEPARTMENT OF TRANSPORTATION
Caltrans
DESIGN

FUNCTIONAL SUPERVISOR: MARK PERTILE
CALCULATED-DESIGNED BY: CUONG LE TRAN
CHECKED BY: ANNABELL WANG
REVISED BY
DATE REVISED

LAST REVISION 12-01-10
DATE PLOTTED => 29-APR-2011
TIME PLOTTED => 20:14

Dist	COUNTY	ROUTE	POST MILES TOTAL PROJECT	SHEET No.	TOTAL SHEETS
08	Riv	91	15.6/21.6	169	2028

REGISTERED CIVIL ENGINEER 12-1-10 DATE

4-25-11
PLANS APPROVAL DATE

REGISTERED PROFESSIONAL ENGINEER CUONG LE TRAN No. C60436 Exp. 6/30/12 CIVIL STATE OF CALIFORNIA

THE STATE OF CALIFORNIA OR ITS OFFICERS OR AGENTS SHALL NOT BE RESPONSIBLE FOR THE ACCURACY OR COMPLETENESS OF SCANNED COPIES OF THIS PLAN SHEET.

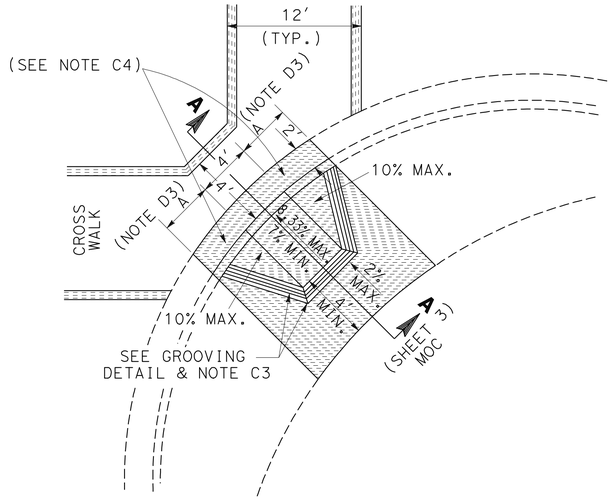

TYPE I

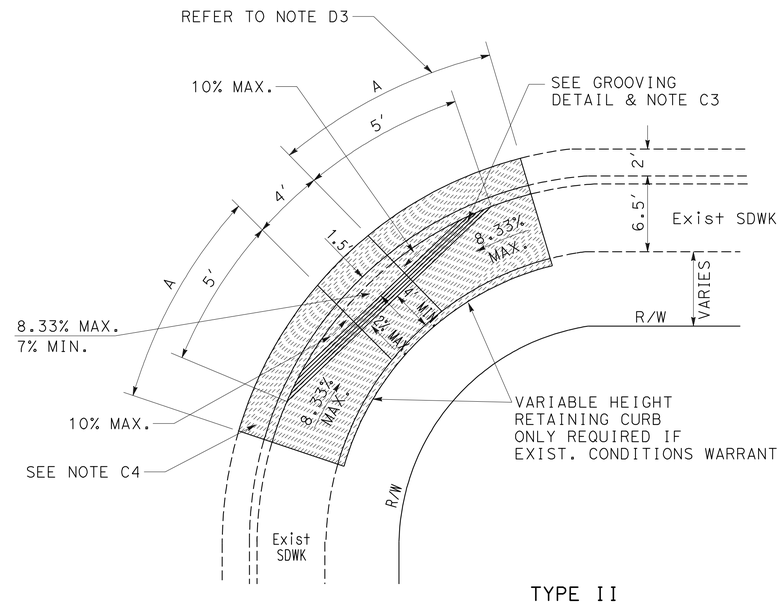

TYPE II

NOTE:

1. WHEELCHAIR RAMP PER CITY OF RIVERSIDE

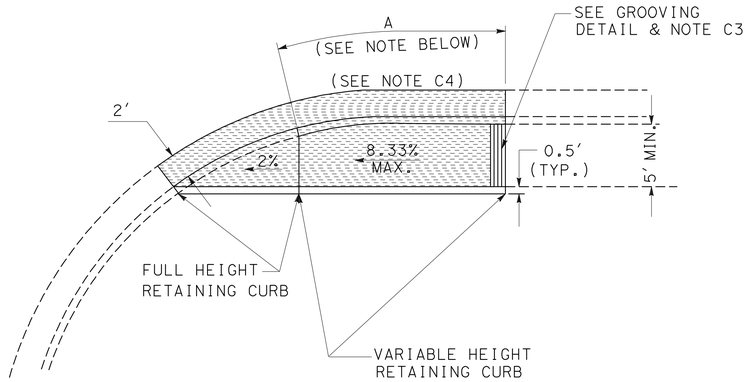

TYPE III

NOTE:

THE "A" DIMENSION SHALL BE ADJUSTED TO MEET THE SLOPE REQUIREMENTS AS SHOWN ON THIS PLAN.

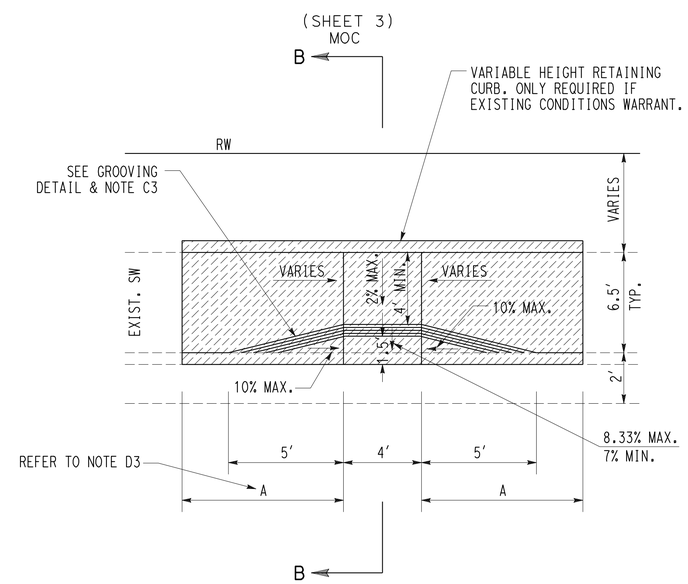

TYPE II-A - @ MID BLOCK

W/ CURB SIDE SW

WHEELCHAIR RAMP
(SHEET 1 OF 4)

CONSTRUCTION DETAILS
NO SCALE

C-83

STATE OF CALIFORNIA - DEPARTMENT OF TRANSPORTATION
Caltrans DESIGN

FUNCTIONAL SUPERVISOR: MARK PERTILE
CALCULATED-DESIGNED BY: ANNABELL WANG
CHECKED BY: CUONG LE TRAN
REVISED BY
DATE REVISED

LAST REVISION 12-01-10
DATE PLOTTED => 29-APR-2011
TIME PLOTTED => 20:14

Dist	COUNTY	ROUTE	POST MILES TOTAL PROJECT	SHEET No.	TOTAL SHEETS
08	Riv	91	15.6/21.6	170	2028

REGISTERED CIVIL ENGINEER 12-1-10 DATE

4-25-11
PLANS APPROVAL DATE

REGISTERED PROFESSIONAL ENGINEER CUONG LE TRAN No. C60436 Exp. 6/30/12 CIVIL STATE OF CALIFORNIA

THE STATE OF CALIFORNIA OR ITS OFFICERS OR AGENTS SHALL NOT BE RESPONSIBLE FOR THE ACCURACY OR COMPLETENESS OF SCANNED COPIES OF THIS PLAN SHEET.

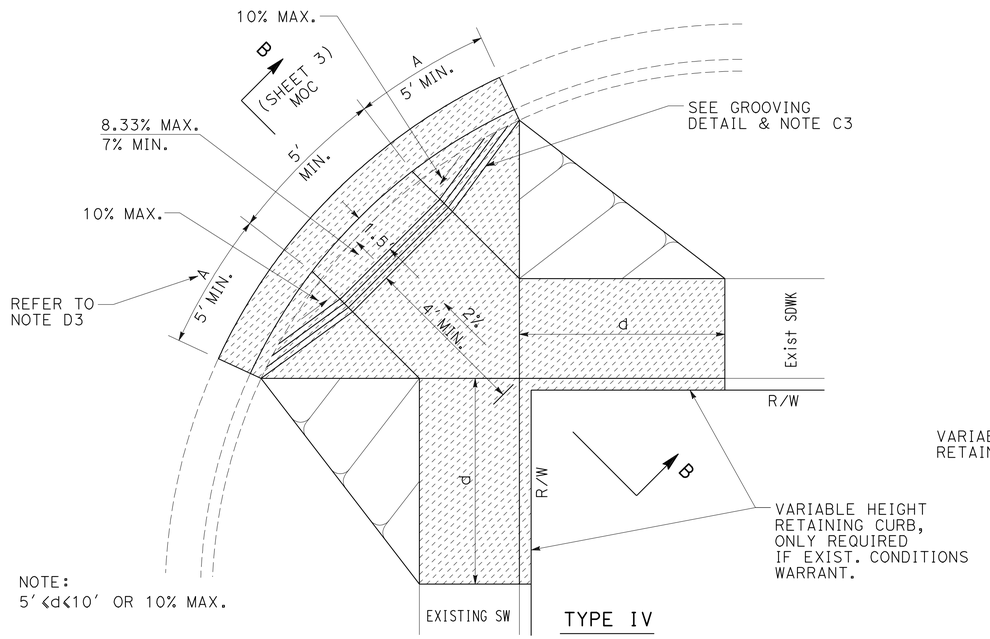

TYPE IV

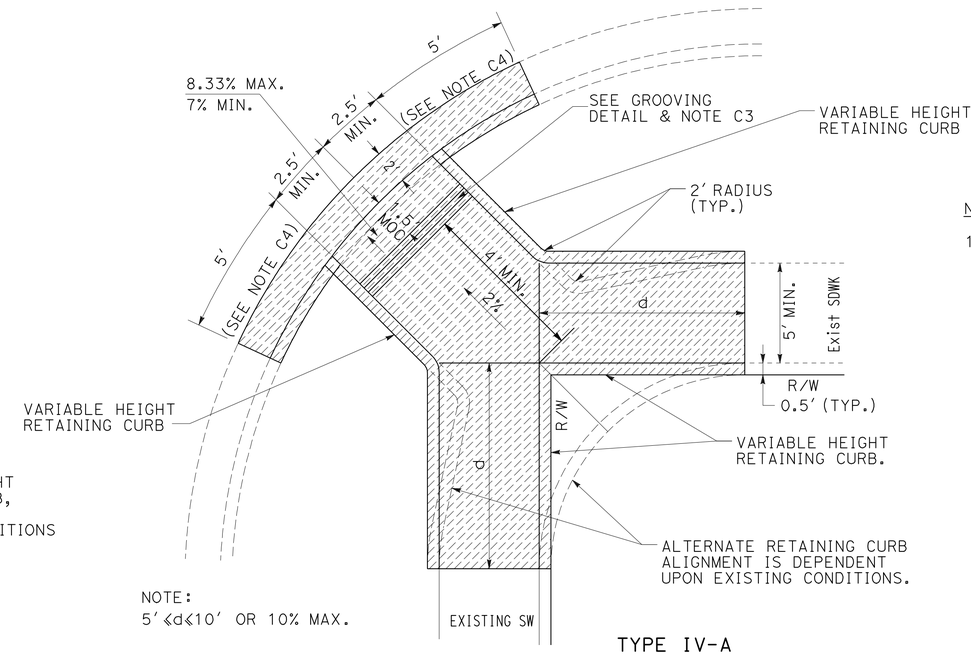

TYPE IV-A

NOTE:

1. WHEELCHAIR RAMP PER CITY OF RIVERSIDE

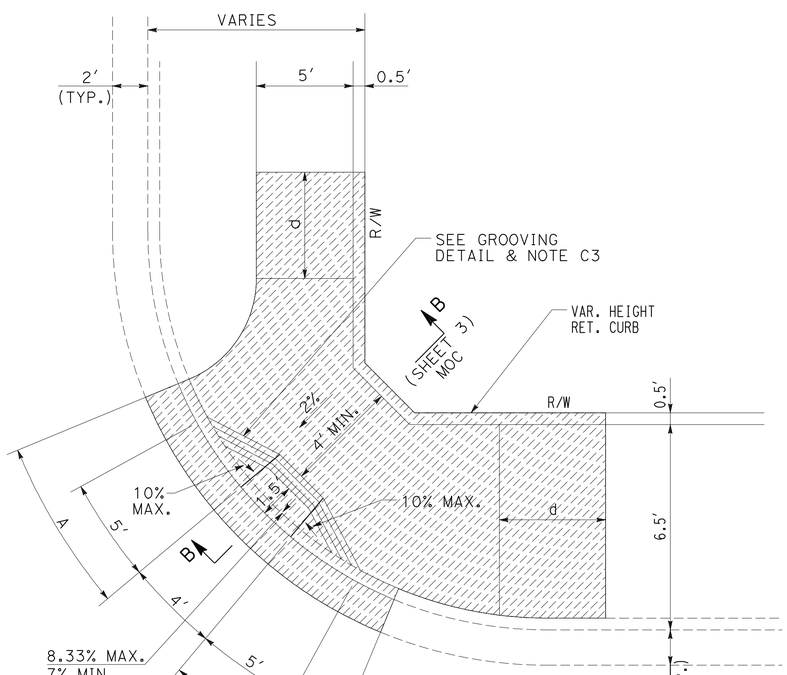

TYPE V

WHEELCHAIR RAMP
(SHEET 2 OF 4)

CONSTRUCTION DETAILS
NO SCALE

C-84

STATE OF CALIFORNIA - DEPARTMENT OF TRANSPORTATION
Caltrans®
DESIGN

FUNCTIONAL SUPERVISOR: MARK PERTILE
CALCULATED-DESIGNED BY: ANNABELL WANG
CHECKED BY: CUONG LE TRAN
REVISED BY
DATE REVISED

LAST REVISION 12-01-10
DATE PLOTTED => 29-APR-2011
TIME PLOTTED => 20:14

Dist	COUNTY	ROUTE	POST MILES TOTAL PROJECT	SHEET No.	TOTAL SHEETS
08	Riv	91	15.6/21.6	171	2028

REGISTERED CIVIL ENGINEER 12-1-10 DATE

4-25-11
PLANS APPROVAL DATE

REGISTERED PROFESSIONAL ENGINEER CUONG LE TRAN No. C60436 Exp. 6/30/12 CIVIL STATE OF CALIFORNIA

THE STATE OF CALIFORNIA OR ITS OFFICERS OR AGENTS SHALL NOT BE RESPONSIBLE FOR THE ACCURACY OR COMPLETENESS OF SCANNED COPIES OF THIS PLAN SHEET.

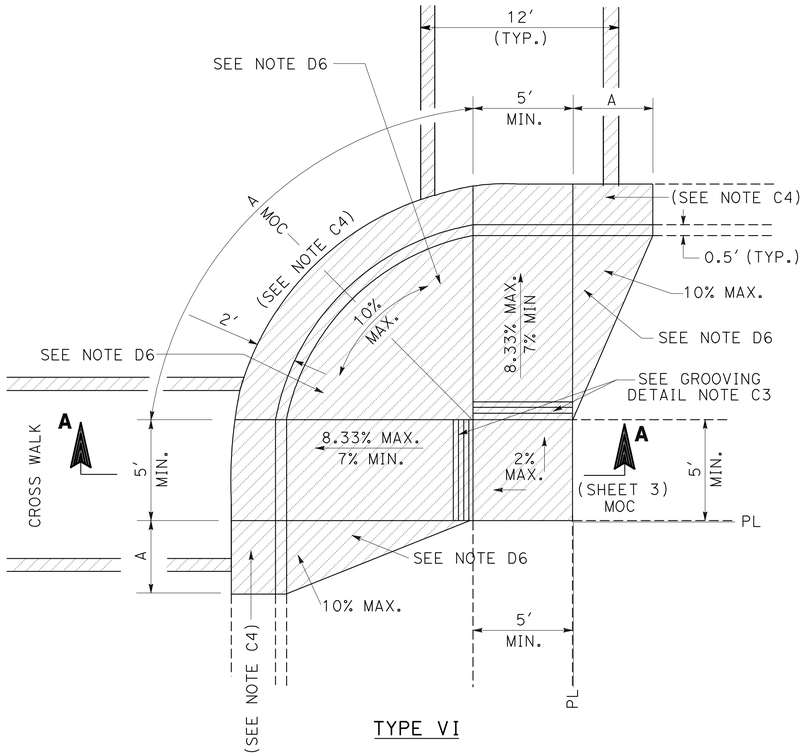

TYPE VI

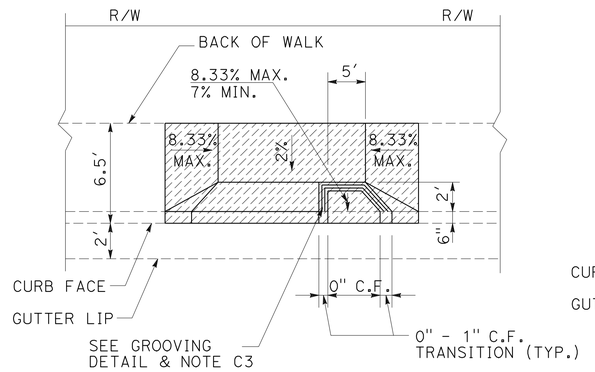

TYPE VII - @ MID BLOCK DWY

W/ CURB SIDE SW
(REFER TO STD. DWG. 302 FOR DWY)

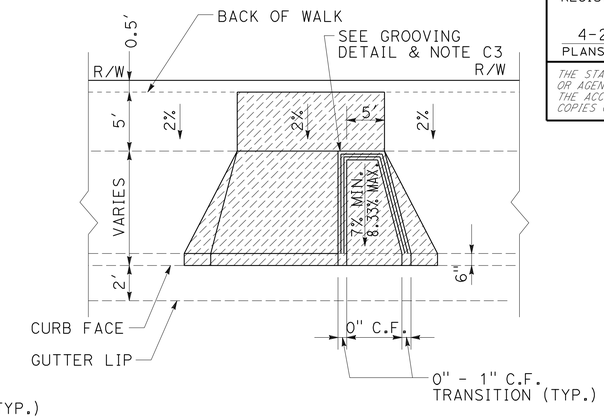

TYPE VII - @ MID BLOCK DWY

W/ PROPERTY LINE SW
(REFER TO STD. DWG. 302 FOR DWY)

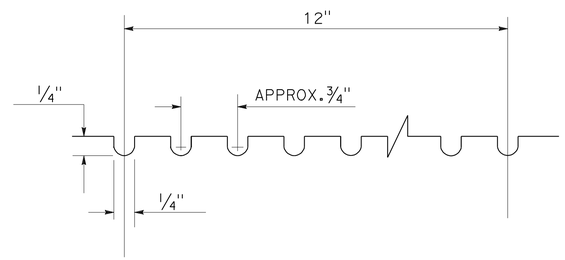

GROOVING DETAIL

NOTE:

1. WHEELCHAIR RAMP PER CITY OF RIVERSIDE

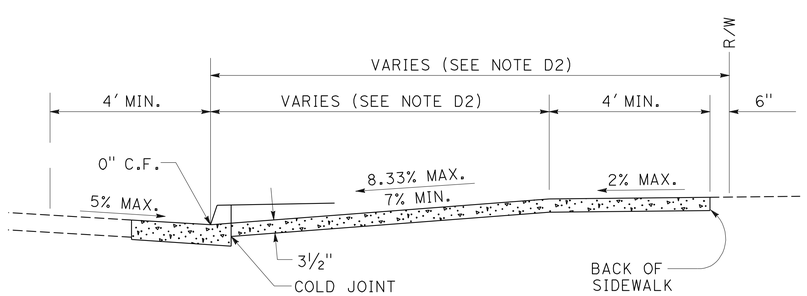

SECTION A-A

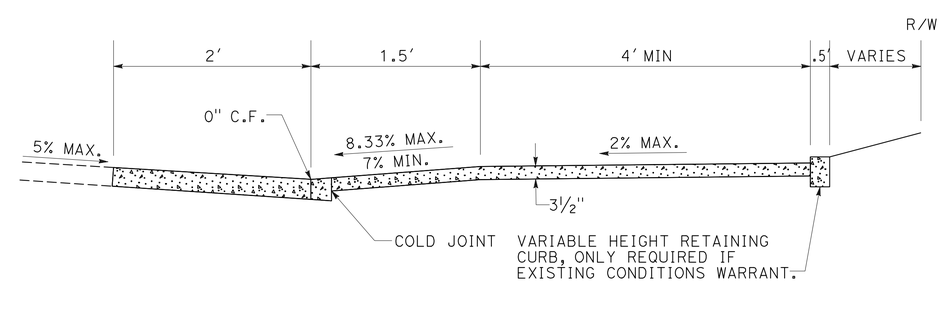

SECTION B-B

WHEELCHAIR RAMP
(SHEET 3 OF 4)

CONSTRUCTION DETAILS
NO SCALE

C-85

STATE OF CALIFORNIA - DEPARTMENT OF TRANSPORTATION
Caltrans
DESIGN

FUNCTIONAL SUPERVISOR: MARK PERTILE
CALCULATED-DESIGNED BY: ANNABELL WANG
CHECKED BY: CUONG LE TRAN
REVISED BY
DATE REVISED

LAST REVISION 12-01-10
DATE PLOTTED => 29-APR-2011
TIME PLOTTED => 20:14

Dist	COUNTY	ROUTE	POST MILES TOTAL PROJECT	SHEET No.	TOTAL SHEETS
08	Riv	91	15.6/21.6	172	2028

REGISTERED CIVIL ENGINEER 12-1-10 DATE

4-25-11
PLANS APPROVAL DATE

REGISTERED PROFESSIONAL ENGINEER CUONG LE TRAN No. C60436 Exp. 6/30/12 CIVIL STATE OF CALIFORNIA

THE STATE OF CALIFORNIA OR ITS OFFICERS OR AGENTS SHALL NOT BE RESPONSIBLE FOR THE ACCURACY OR COMPLETENESS OF SCANNED COPIES OF THIS PLAN SHEET.

NOTES:

CONSTRUCTION NOTES:

C1. CONCRETE SHALL BE PER CURRENT EDITION OF THE "STANDARD SPECIFICATIONS FOR PUBLIC WORKS CONSTRUCTION." (520. C. 2500)

C2. THE WHEELCHAIR RAMP SHALL BE POURED MONOLITHICALLY WITH THE ADJACENT SIDEWALK, FOLLOWING THE REQUIREMENTS SPECIFIED ON SHEET 1.

C3. THE RAMP SHALL HAVE A 12" WIDE BORDER WITH 1/4" GROOVES APPROXIMATELY 3/4" O.C. SEE GROOVING DETAIL, SHEET 2. THE SURFACE OF THE RAMP SHALL HAVE A TRANSVERSE BROOMED SURFACE TEXTURE ROUGHER THAN THE SURROUNDING SIDEWALK.

C4. GUTTER CROSS SLOPE SHALL BE TRANSITIONED FROM THE STANDARD OR EXISTING AT THE FULL HEIGHT CURB THROUGH THE "A" DISTANCE TO 5% AT THE BOTTOM OF THE WHEELCHAIR RAMP WHERE THE CURB FACE IS 0" IN HEIGHT.

C5. TYPICAL CROSSWALK SHALL BE ALIGNED WITH THE RAMP AT THE M.O.C. AS SHOWN (TYPE I). OR AS SHOWN CENTERED ON DIRECTIONAL RAMP (TYPE VI).

DESIGN NOTES:

D1. TYPE 1 RAMP SHALL BE USED FOR ALL NEW CONSTRUCTION OR WHEREVER EXISTING CONDITIONS PERMIT. RAMP TYPES II THROUGH V ARE TO BE USED WHEREVER EXISTING CONDITIONS RESTRICT THE USE OF A TYPE I RAMP. VARIABLE HEIGHT RETAINING CURB SHALL BE USED ONLY ADJACENT TO NON. TRAVERSIBLE AREAS.

D2. WHEELCHAIR RAMP LENGTH(S) SHALL BE ADJUSTED TO MEET THE SLOPE REQUIREMENTS AS SHOWN ON THIS PLAN.

D3. "A" DIMENSION SHALL BE ADJUSTED TO MEET THE SLOPE REQUIREMENTS AS SHOWN ON THIS PLAN, EXCEPT THE RAMP MUST NOT EXTEND BEYOND THE END OF THE CURB RETURN.

D4. WHEELCHAIR RAMPS SHALL BE REQUIRED IN EACH QUADRANT OR CORNER OF AN INTERSECTION AND AT MIDBLOCK LOCATIONS ON STREETS OPPOSITE "T" INTERSECTIONS.

D5. WHEELCHAIR RAMPS IN MID. BLOCK (AT "T" INTERSECTIONS) SHALL BE PLACED IN LINE WITH RAMPS ON THE OPPOSITE SIDE OF THE STREET. IF NO OPENING IS PROVIDED IN A MEDIAN (ON DIVIDED STREETS), THE RAMPS SHALL BE OMITTED IN THE MID. BLOCK LOCATION.

D6. WHERE THE GUTTER CAN BE RAISED TO THE TOP OF THE CURB (NO DRAINAGE IN THE RETURN AREA BECAUSE OF CATCH BASINS OR HIGH POINT IN GRADE) THE WHEELCHAIR RAMP MAY BE ELIMINATED BY RAISING THE GUTTER GRADE AND DECREASING THE CURB FACE TO 0". THE 12" WIDE BORDER AS DESCRIBED IN NOTE C3 SHALL BE PLACED ALONG THE BACK OF CURB THROUGH THE WIDTH OF THE 0" CURB FACE.

D7. WHEELCHAIR RAMPS SHALL BE LOCATED AS SHOWN ON SHEETS 1 & 2 EXCEPT UNDER THE FOLLOWING CONDITIONS:
(a) WHEN LOCATION CONFLICTS WITH EXISTING STORM DRAIN, TRAFFIC SIGNAL OR UTILITY FACILITIES, THE WHEELCHAIR RAMP SHALL BE RELOCATED TO AN APPROPRIATE POSITION WITHIN OR ADJACENT TO THE CURB RETURN AREA AS APPROVED BY THE CITY ENGINEER. HOWEVER, IF THE RAMP CANNOT BE POSITIONED IN A SAFE LOCATION THE CONFLICTING FACILITY IS TO BE RELOCATED.

(b) WHEN THE WHEELCHAIR RAMP IS TO BE CONSTRUCTED IN A RETURN THAT IS DOWNSTREAM OF A CROSS GUTTER AND THE WHEELCHAIR RAMP MAY CAUSE A DRAINAGE PROBLEM, THE WHEELCHAIR RAMP SHALL BE RELOCATED TO AN APPROPRIATE AREA DOWNSTREAM OF THE M.O.C.

(c) IN EXISTING CURB RETURNS WITH RIGHT. OF. WAY LIMITATIONS, THE WHEELCHAIR RAMP SHALL BE LOCATED WITHIN THE CURB RETURN AREA WHERE THE RIGHT. OF. WAY WIDTH IS SUFFICIENT.

D8. WHEELCHAIR RAMP WINGS OR RETAINING CURBS:
(a) WHERE ADJACENT AREAS ARE PAVED, WHEELCHAIR RAMP WINGS (10% SLOPE) SHALL BE INSTALLED.
(b) WHERE ADJACENT AREAS ARE LANDSCAPED OR RAMP CONSTRUCTION IS ADJACENT TO EXISTING FACILITIES (AS LISTED IN D7. a) VARIABLE HEIGHT RETAINING CURB SHALL BE INSTALLED.

D9. THE WHEELCHAIR RAMP MUST BE LOCATED TO BE ALIGNED COMPLETELY WITHIN A STRIPED CROSSWALK.

NOTE:

1. WHEELCHAIR RAMP PER CITY OF RIVERSIDE

WHEELCHAIR RAMP
(SHEET 4 OF 4)

CONSTRUCTION DETAILS
C-86

STATE OF CALIFORNIA - DEPARTMENT OF TRANSPORTATION
Caltrans® DESIGN

FUNCTIONAL SUPERVISOR: MARK PERTILE
CALCULATED-DESIGNED BY: ANNABELL WANG
CHECKED BY: CUONG LE TRAN
REVISED BY
DATE REVISED

LAST REVISION 12-01-10
DATE PLOTTED => 29-APR-2011
TIME PLOTTED => 20:14

Dist	COUNTY	ROUTE	POST MILES TOTAL PROJECT	SHEET No.	TOTAL SHEETS
08	Riv	91	15.6/21.6	173	2028

REGISTERED CIVIL ENGINEER 12-1-10 DATE

4-25-11
PLANS APPROVAL DATE

REGISTERED PROFESSIONAL ENGINEER CUONG LE TRAN No. C60436 Exp. 6/30/12 CIVIL STATE OF CALIFORNIA

THE STATE OF CALIFORNIA OR ITS OFFICERS OR AGENTS SHALL NOT BE RESPONSIBLE FOR THE ACCURACY OR COMPLETENESS OF SCANNED COPIES OF THIS PLAN SHEET.

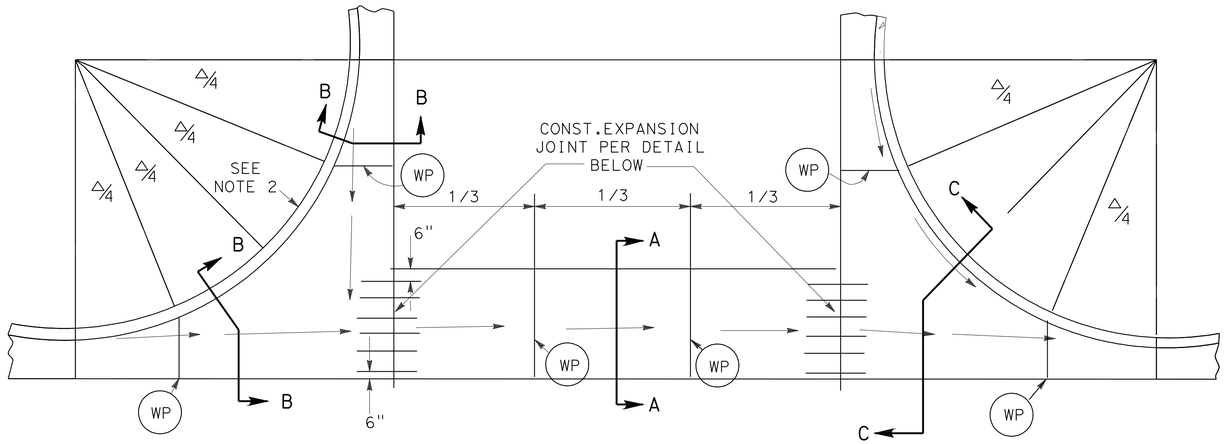

PLAN VIEW

W	D
6′	1"
8′	1¼"
10′	1½"

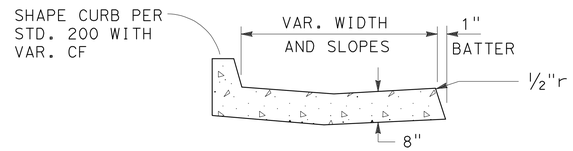

SECTION B - B

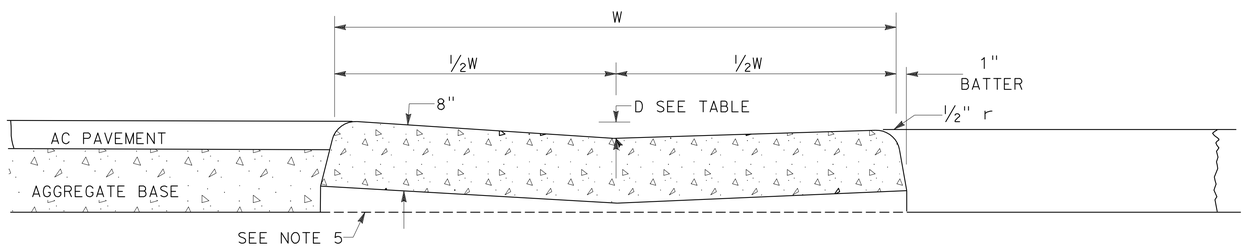

SECTION A-A

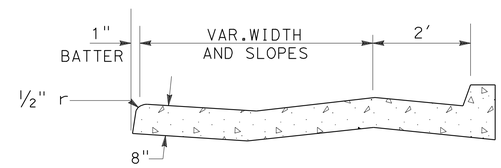

SECTION C - C

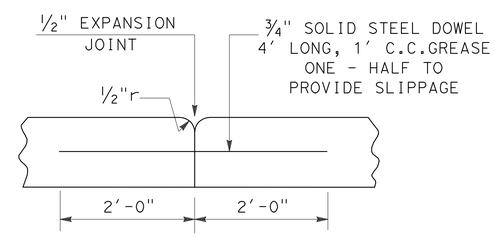

EXPANSION JOINT DETAIL

NOTES

1. W SHALL BE 6′ UNLESS OTHERWISE SPECIFIED
2. REDUCE CF TO INSURE DRAINAGE AWAY FROM FL ON UPSTREAM CURB RETURN
3. INSTALL ½" EXPANSION JOINTS AT CURB RETURNS
4. CONSTRUCT WEAKENED PLANE JOINTS AT LOCATIONS INDICATED BY (WP)
5. WHEN STRUCTURAL SECTION EXCEEDS 14" THE BASE SHALL BE CONTINUED UNDER CROSS GUTTER
6. CROSS GUTTERS PER CITY OF RIVERSIDE

CROSS GUTTERS

CONSTRUCTION DETAILS

NO SCALE

C-87

STATE OF CALIFORNIA - DEPARTMENT OF TRANSPORTATION
Caltrans
DESIGN

FUNCTIONAL SUPERVISOR: MARK PERTILE
CALCULATED-DESIGNED BY: CUONG LE TRAN
CHECKED BY: ANNABELL WANG
REVISED BY
DATE REVISED

LAST REVISION 12-01-10
DATE PLOTTED => 29-APR-2011
TIME PLOTTED => 20:14

Dist	COUNTY	ROUTE	POST MILES TOTAL PROJECT	SHEET No.	TOTAL SHEETS
08	Riv	91	15.6/21.6	174	2028

REGISTERED CIVIL ENGINEER 12-1-10 DATE

4-25-11
PLANS APPROVAL DATE

REGISTERED PROFESSIONAL ENGINEER CUONG LE TRAN No. C60436 Exp. 6/30/12 CIVIL STATE OF CALIFORNIA

THE STATE OF CALIFORNIA OR ITS OFFICERS OR AGENTS SHALL NOT BE RESPONSIBLE FOR THE ACCURACY OR COMPLETENESS OF SCANNED COPIES OF THIS PLAN SHEET.

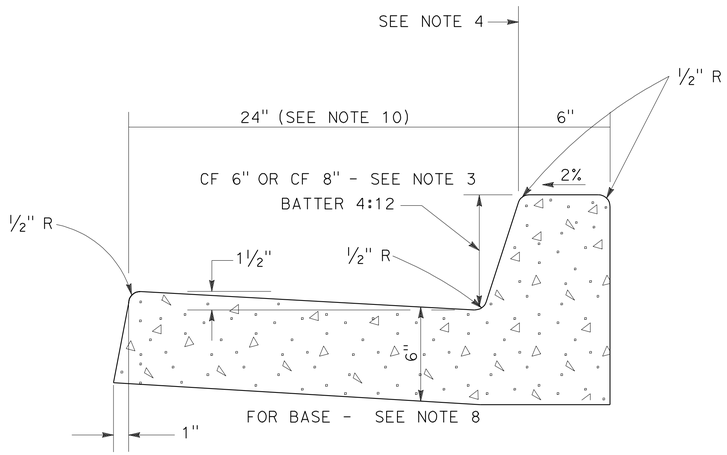

TYPE I

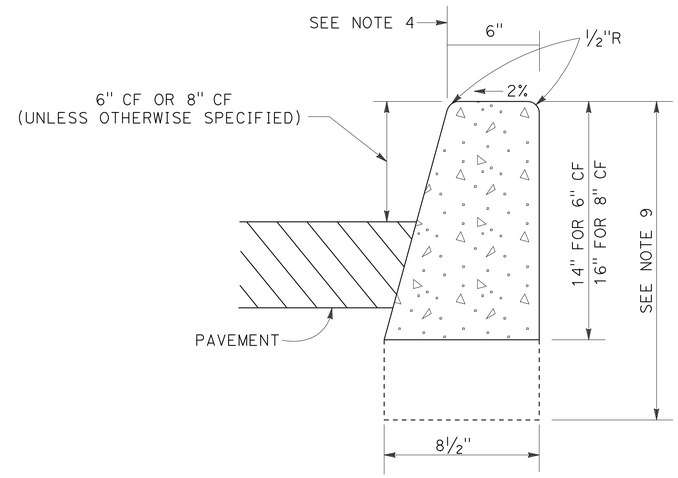

TYPE II

CONCRETE QUANTITIES		
TYPE	CF	C.Y. PER L.F.
I	6"	0.05825
I	8"	0.06211
II	6"	0.02552
II	8"	0.02972

NOTES:

1. CONCRETE SHALL BE CLASS 520-C-2500 FOR FORMED CURB OR EXTRUDED CURB
2. TYPE II CURB SHALL BE USED ONLY WHERE PAVEMENT SLOPES AWAY FROM CURB EXCEPT AS APPROVED BY ENGINEER
3. TYPES I AND II CURB FACE SHALL BE AS SPECIFIED ON PLANS
4. CURB LOCATION DIMENSIONS ON PLAN SHALL BE TO THIS POINT
5. EXPANSION JOINTS (1/2 "THICK SHALL BE INSTALLED AT ALL CURB RETURNS
6. WEAKENED PLANE JOINTS SHALL BE CONSTRUCTED AT 10′ INTERVALS THROUGHOUT THE LENGTH OF THE CURB, AT QUARTER POINTS OF CURB RETURNS, AND AT ANY POINT WHERE THE CURB SECTION IS INTERRUPTED BY A DRAINAGE OUTLET THROUGH THE CURB
7. EPOXY APPROVED BY THE CITY MAY BE USED IN LIEU OF BARS
8. WHEN STRUCTURAL SECTION THICKNESS EXCEEDS 14", THE BASE SHALL BE CONTINUED UNDER CURB AND GUTTER
9. NEXT TO IRRIGATED AREAS THE CURB HEIGHT SHALL BE THE LARGER OF 18" OR THE BOTTOM OF THE BASE
10. ~~FOR STREETS ON THE BICYCLE MASTER PLAN, A GUTTER WIDTH OF 5′ WITH A 5% CROSS SLOPE MAY BE REQUIRED BY THE ENGINEER~~
11. WHERE GRADE IS EQUAL TO OR GREATER THAN 0.4%, CURB AND GUTTER SHALL BE STAKED WITH 3′ OFFSETS AT 25′ INTERVALS. WHERE GRADE IS LESS THAN 0.4%, CURB AND GUTTER SHALL BE STAKED WITH 3′ OFFSETS AT 12.5′ INTERVALS AND TWO ROWS OF NUMBER 3 RE-BAR SHALL BE PLACED IN GUTTER WITH ¾" DOWEL PINS AT ALL EXPANSION JOINTS
12. CURB AND GUTTER IS PER CITY OF RIVERSIDE

CURB AND GUTTER

CONSTRUCTION DETAILS
NO SCALE
C-88

REVISED BY | DATE REVISED
CUONG LE TRAN | ANNABELL WANG
CALCULATED-DESIGNED BY | CHECKED BY
FUNCTIONAL SUPERVISOR: MARK PERTILE
STATE OF CALIFORNIA - DEPARTMENT OF TRANSPORTATION
Caltrans® DESIGN

LAST REVISION 12-01-10 | DATE PLOTTED => 29-APR-2011 | TIME PLOTTED => 20:14

Dist	COUNTY	ROUTE	POST MILES TOTAL PROJECT	SHEET No.	TOTAL SHEETS
08	Riv	91	15.6/21.6	175	2028

REGISTERED CIVIL ENGINEER 12-1-10 DATE

4-25-11
PLANS APPROVAL DATE

REGISTERED PROFESSIONAL ENGINEER CUONG LE TRAN No. C60436 Exp. 6/30/12 CIVIL STATE OF CALIFORNIA

THE STATE OF CALIFORNIA OR ITS OFFICERS OR AGENTS SHALL NOT BE RESPONSIBLE FOR THE ACCURACY OR COMPLETENESS OF SCANNED COPIES OF THIS PLAN SHEET.

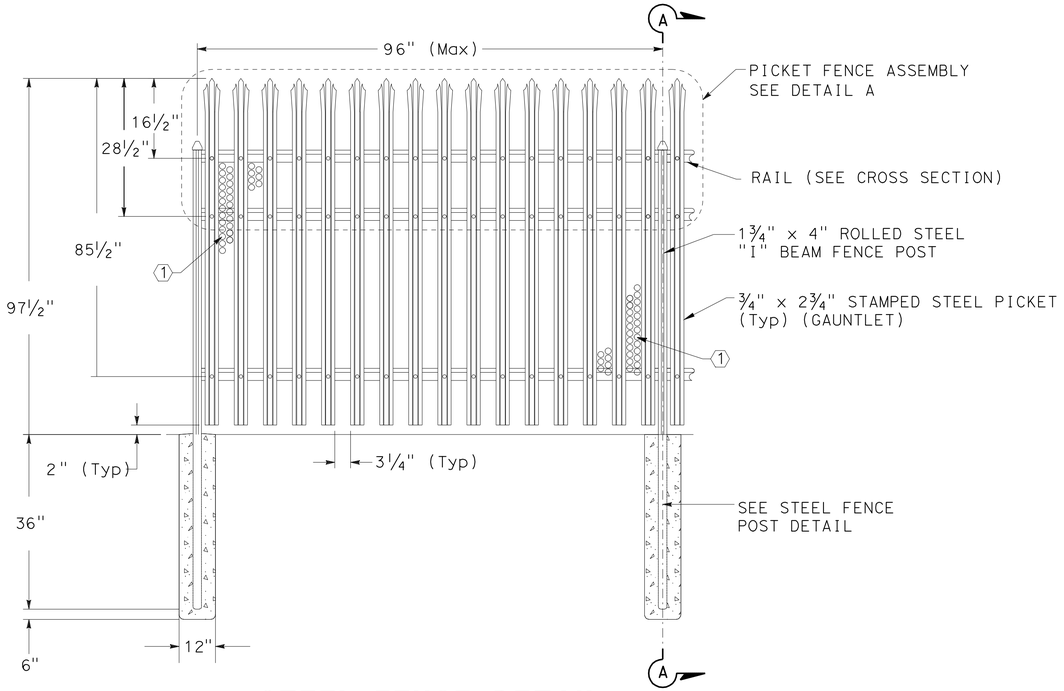

STEEL FENCE DETAIL

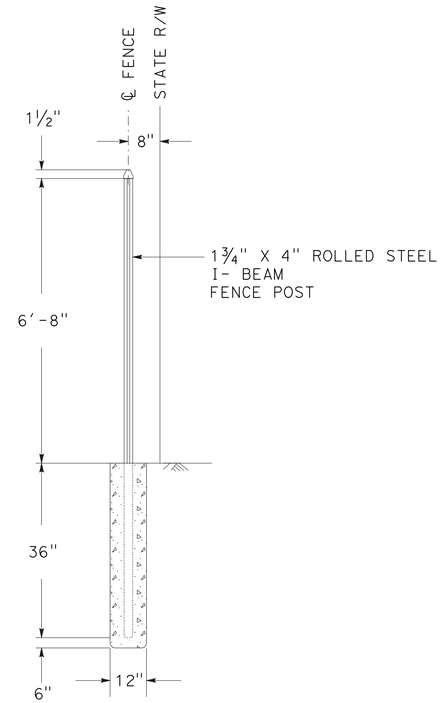

SECTION A-A

NOTES

1. INSTALL 11 GAGE PERFORATED STEEL PANEL BETWEEN RAIL AND POST. PICKET PANELS SHALL BE PAINTED SAME COLOR AND FINISH AS PICKETS

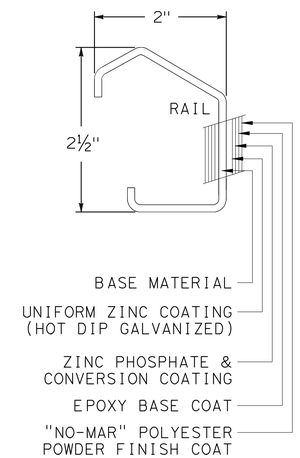

RAIL CROSS SECTION

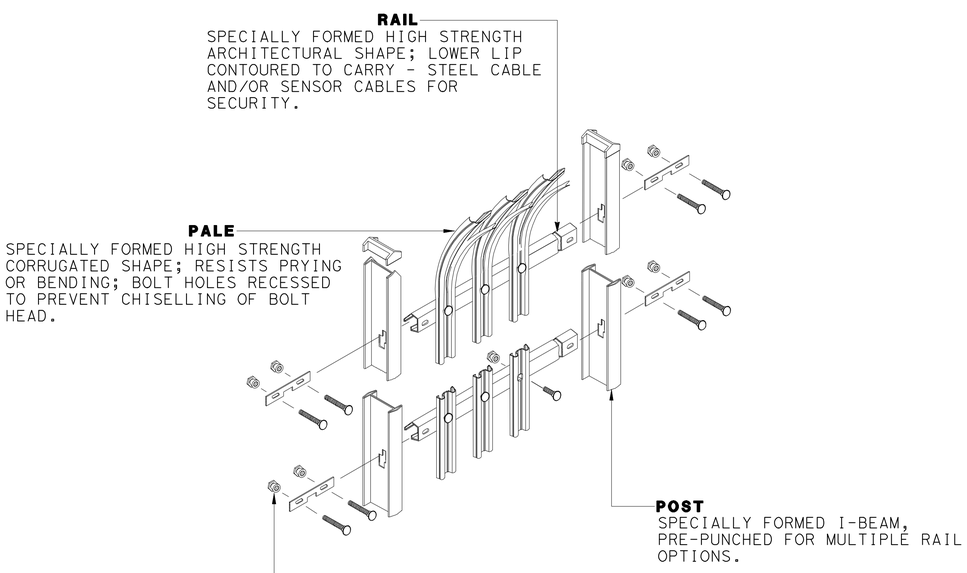

DETAIL A

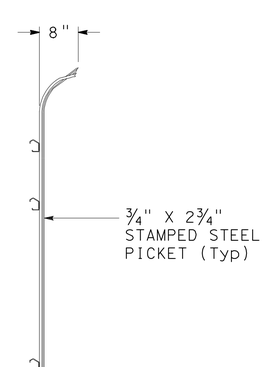

Typ.PICKET ALONG STATE R/W

DECORATIVE STEEL PICKET FENCE

CONSTRUCTION DETAILS

NO SCALE

C-89

REVISED BY	DATE REVISED
CUONG LE TRAN	ANNABELL WANG
CALCULATED-DESIGNED BY	CHECKED BY
FUNCTIONAL SUPERVISOR	MARK PERTILE

STATE OF CALIFORNIA - DEPARTMENT OF TRANSPORTATION
Caltrans DESIGN

LAST REVISION 12-01-10 | DATE PLOTTED => 29-APR-2011 | TIME PLOTTED => 20:14

Dist	COUNTY	ROUTE	POST MILES TOTAL PROJECT	SHEET No.	TOTAL SHEETS
08	Riv	91	15.6/21.6	176	2028

REGISTERED CIVIL ENGINEER — DATE 12-1-10

4-25-11
PLANS APPROVAL DATE

REGISTERED PROFESSIONAL ENGINEER — THOMAS HIEN NGO — No. 68383 — Exp. 9/30/11 — CIVIL — STATE OF CALIFORNIA

THE STATE OF CALIFORNIA OR ITS OFFICERS OR AGENTS SHALL NOT BE RESPONSIBLE FOR THE ACCURACY OR COMPLETENESS OF SCANNED COPIES OF THIS PLAN SHEET.

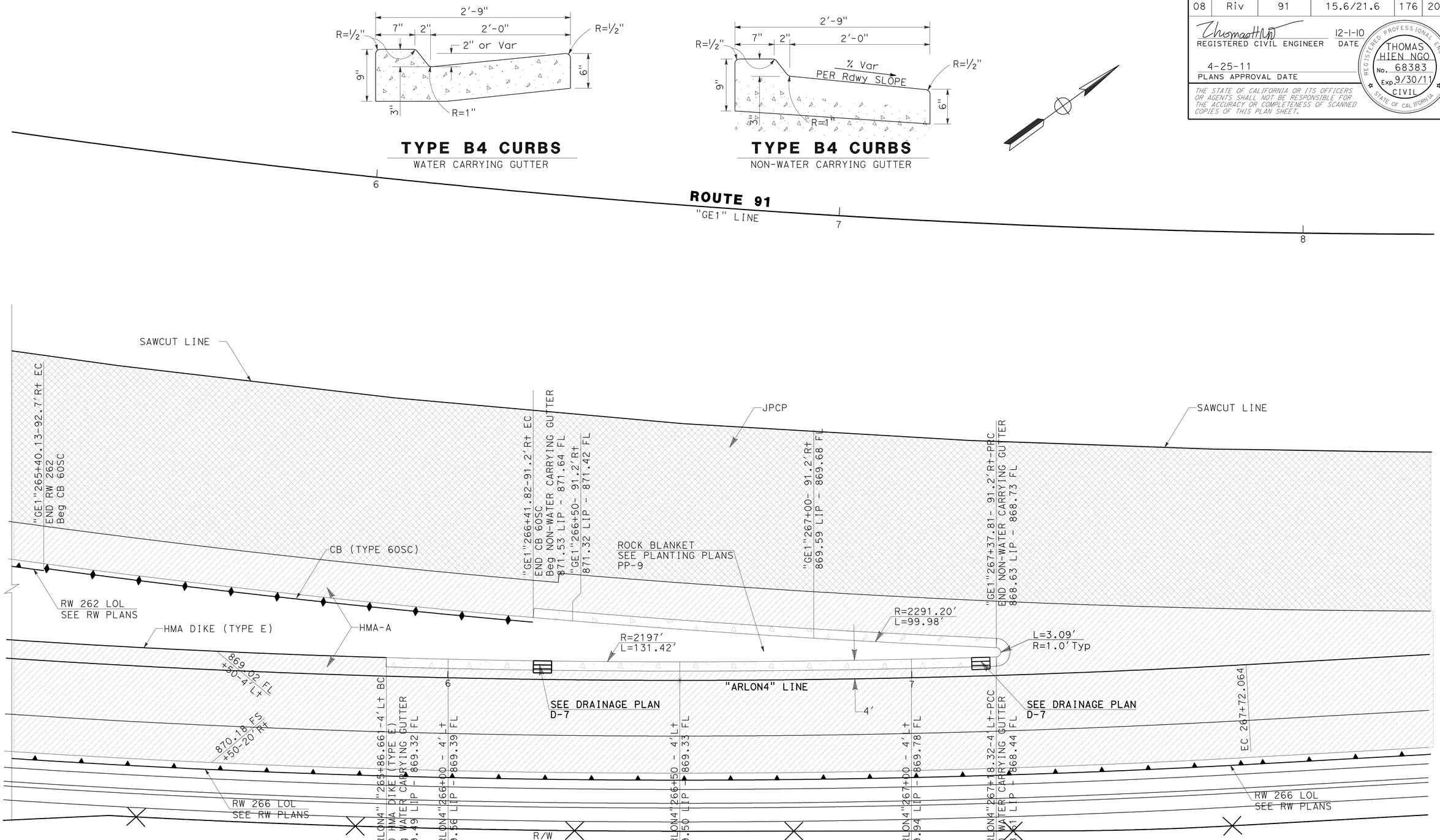

ARLINGTON AVE EB ON-RAMP
B4 CURB DETAIL

CONSTRUCTION DETAILS

SCALE: 1" = 10'

C-90

STATE OF CALIFORNIA - DEPARTMENT OF TRANSPORTATION
Caltrans®
DESIGN

FUNCTIONAL SUPERVISOR: MARK PERTILE
CALCULATED-DESIGNED BY: THAI VAN HGUYEN
CHECKED BY: THOMAS HIEN NGO
REVISED BY
DATE REVISED

LAST REVISION 12-01-10 | DATE PLOTTED => 30-APR-2011 | TIME PLOTTED => 06:25

Dist	COUNTY	ROUTE	POST MILES TOTAL PROJECT	SHEET No.	TOTAL SHEETS
08	Riv	91	15.6/21.6	177	2028

REGISTERED CIVIL ENGINEER 12-1-10 DATE

4-25-11
PLANS APPROVAL DATE

REGISTERED PROFESSIONAL ENGINEER THOMAS HIEN NGO No. 68383 Exp. 9/30/11 CIVIL STATE OF CALIFORNIA

THE STATE OF CALIFORNIA OR ITS OFFICERS OR AGENTS SHALL NOT BE RESPONSIBLE FOR THE ACCURACY OR COMPLETENESS OF SCANNED COPIES OF THIS PLAN SHEET.

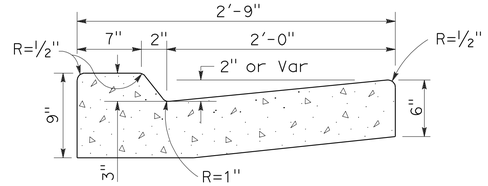

TYPE B4 CURBS
WATER CARRYING GUTTER

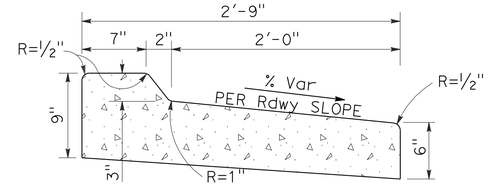

TYPE B4 CURBS
NON-WATER CARRYING GUTTER

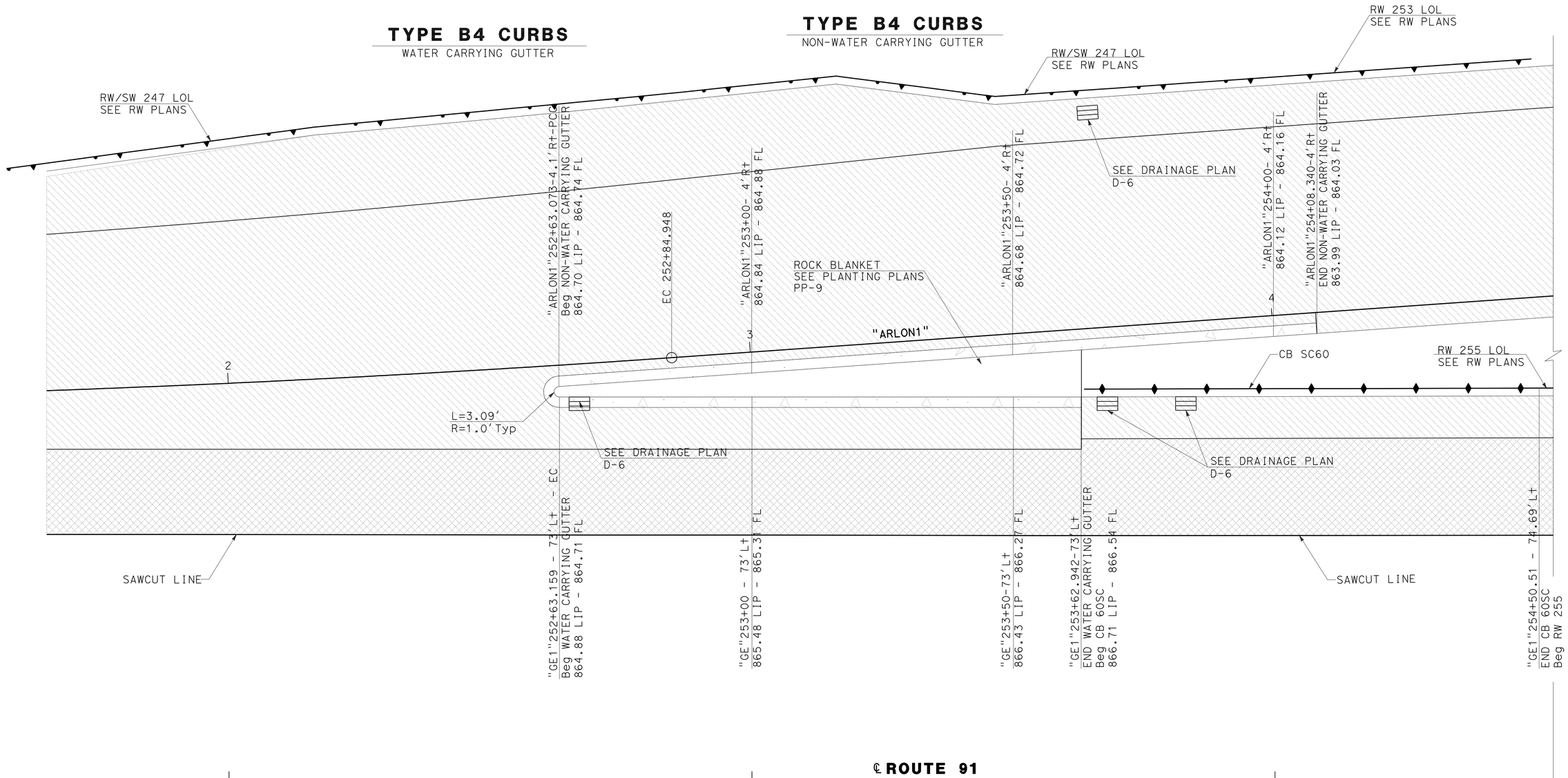

ARLINGTON AVE WB ON-RAMP
B4 CURB DETAIL

CONSTRUCTION DETAILS

SCALE: 1" = 10'

C-91

STATE OF CALIFORNIA - DEPARTMENT OF TRANSPORTATION
Caltrans®
DESIGN

FUNCTIONAL SUPERVISOR: MARK PERTILE
CALCULATED-DESIGNED BY: THAI VAN HGUYEN
CHECKED BY: THOMAS HIEN NGO
REVISED BY
DATE REVISED

LAST REVISION 12-01-10
DATE PLOTTED => 30-APR-2011
TIME PLOTTED => 06:25

Dist	COUNTY	ROUTE	POST MILES TOTAL PROJECT	SHEET No.	TOTAL SHEETS
08	Riv	91	15.6/21.6	178	2028

REGISTERED CIVIL ENGINEER 12-1-10 DATE

4-25-11
PLANS APPROVAL DATE

REGISTERED PROFESSIONAL ENGINEER CUONG LE TRAN No. C60436 Exp 6/30/12 CIVIL STATE OF CALIFORNIA

THE STATE OF CALIFORNIA OR ITS OFFICERS OR AGENTS SHALL NOT BE RESPONSIBLE FOR THE ACCURACY OR COMPLETENESS OF SCANNED COPIES OF THIS PLAN SHEET.

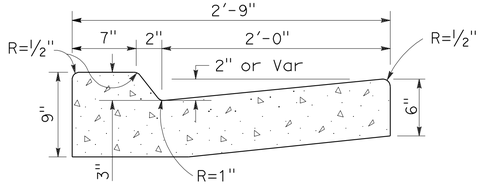

TYPE B4 CURBS
WATER CARRYING GUTTER

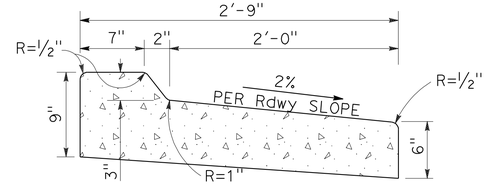

TYPE B4 CURBS
NON-WATER CARRYING GUTTER

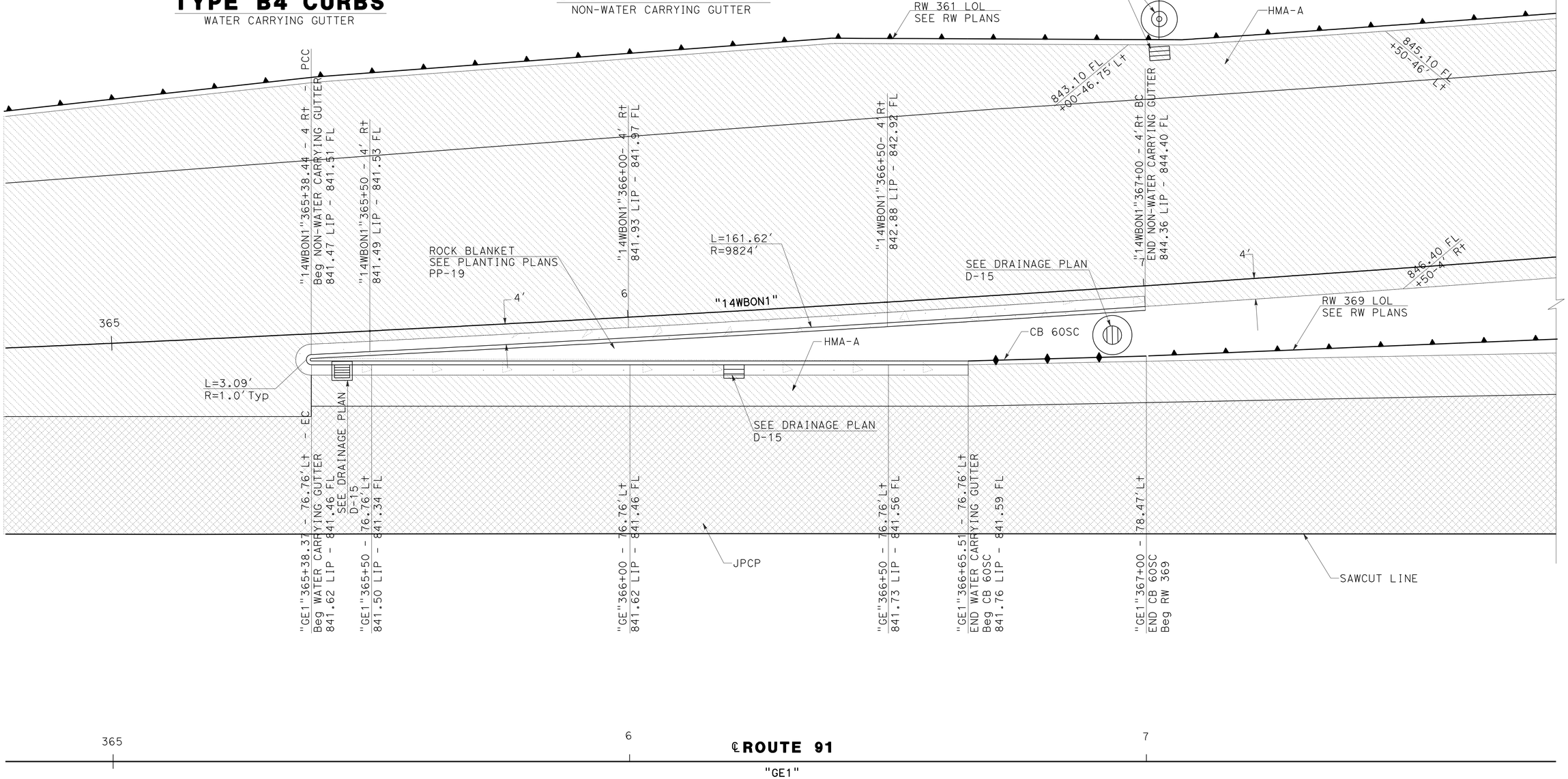

14TH STREET WB ON-RAMP
B4 CURB DETAIL

CONSTRUCTION DETAILS
SCALE: 1" = 10'

C-92

STATE OF CALIFORNIA - DEPARTMENT OF TRANSPORTATION
Caltrans
DESIGN

FUNCTIONAL SUPERVISOR: MARK PERTILE
CALCULATED-DESIGNED BY: CUONG LE TRAN
CHECKED BY: ANNABELL WANG
REVISED BY
DATE REVISED

LAST REVISION 12-01-10
DATE PLOTTED => 30-APR-2011
TIME PLOTTED => 06:25

Dist	COUNTY	ROUTE	POST MILES TOTAL PROJECT	SHEET No.	TOTAL SHEETS
08	Riv	91	15.6/21.6	179	2028

REGISTERED CIVIL ENGINEER 12-1-10 DATE

4-25-11
PLANS APPROVAL DATE

REGISTERED PROFESSIONAL ENGINEER THOMAS HIEN NGO No. 68383 Exp. 9/30/11 CIVIL STATE OF CALIFORNIA

THE STATE OF CALIFORNIA OR ITS OFFICERS OR AGENTS SHALL NOT BE RESPONSIBLE FOR THE ACCURACY OR COMPLETENESS OF SCANNED COPIES OF THIS PLAN SHEET.

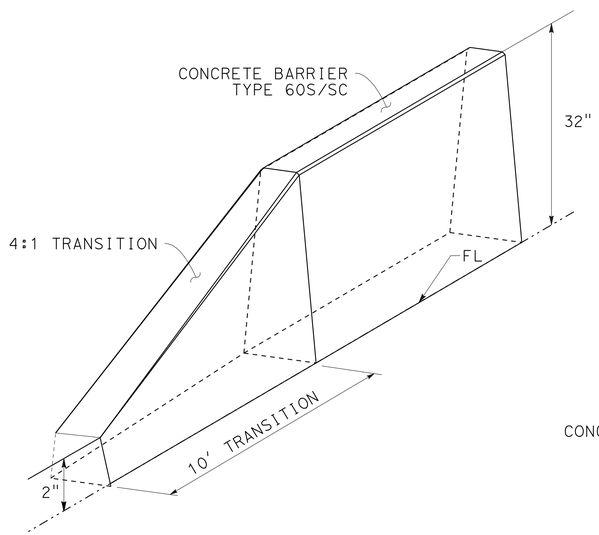

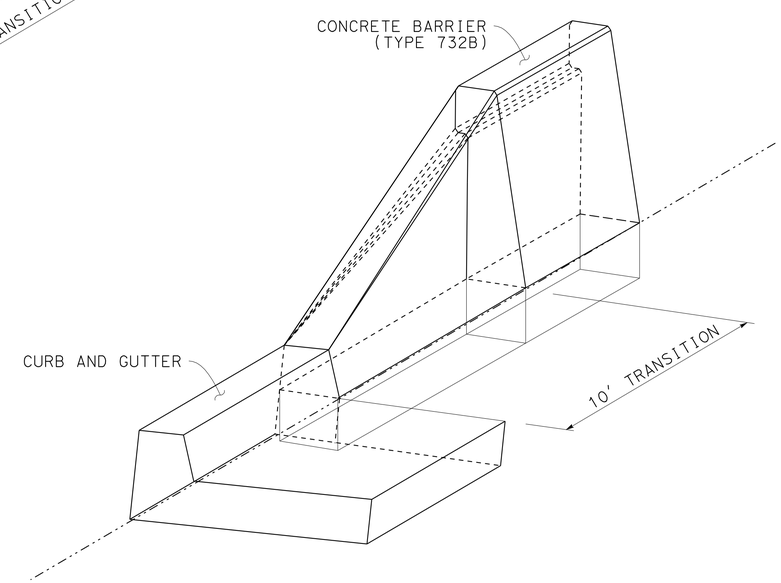

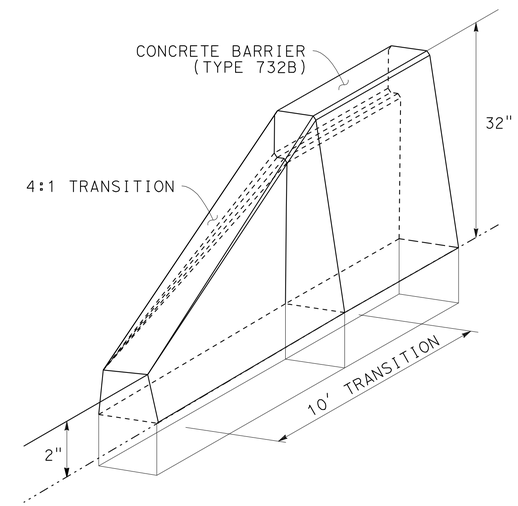

CONCRETE BARRIER TRANSITIONS

CONSTRUCTION DETAILS

NO SCALE

C-93

STATE OF CALIFORNIA - DEPARTMENT OF TRANSPORTATION
Caltrans® DESIGN

FUNCTIONAL SUPERVISOR: MARK PERTILE
CALCULATED-DESIGNED BY: THAI VAN HGUYEN
CHECKED BY: THOMAS HIEN NGO
REVISED BY
DATE REVISED

LAST REVISION 12-01-10
DATE PLOTTED => 29-APR-2011
TIME PLOTTED => 20:15

Dist	COUNTY	ROUTE	POST MILES TOTAL PROJECT	SHEET No.	TOTAL SHEETS
08	Riv	91	15.6/21.6	180	2028

REGISTERED CIVIL ENGINEER 12-1-10 DATE

4-25-11
PLANS APPROVAL DATE

REGISTERED PROFESSIONAL ENGINEER THOMAS HIEN NGO No. 68383 Exp. 9/30/11 CIVIL STATE OF CALIFORNIA

THE STATE OF CALIFORNIA OR ITS OFFICERS OR AGENTS SHALL NOT BE RESPONSIBLE FOR THE ACCURACY OR COMPLETENESS OF SCANNED COPIES OF THIS PLAN SHEET.

NOTES

1. See Retaining Wall Details for Concrete Barrier Type 60D(mod).
2. Contractor options for fill between concrete barrier walls:
   A. Place 4" PCC at base between concrete barrier walls.
   B. Place 12" of granular material at base between walls.
   C. Place granular material from base to bottom of 4" cap.
   D. Monolithic concrete with foam blockouts is not permitted.
3. Reinforcing steel shall extend continuous through construction joints.
4. Adjust height of concrete barrier wall on low side of offset or superelevated roadways to provide level grade across top of concrete barrier cap.
5. Pull Boxes to be placed as shown or as directed by the Engineer.

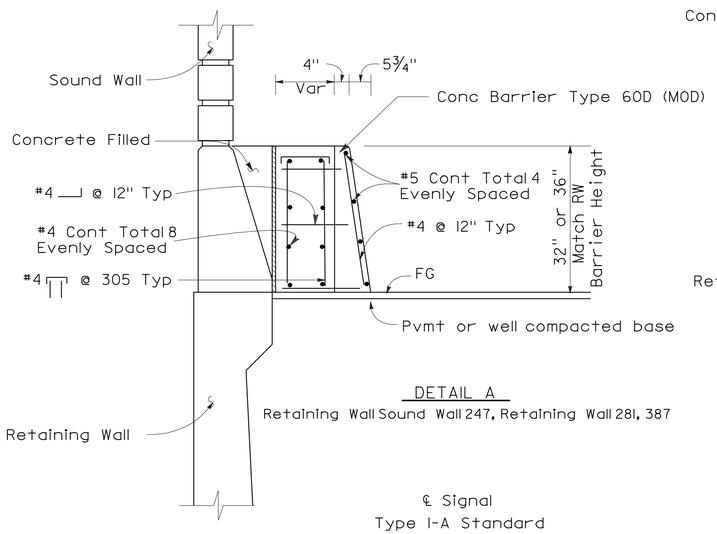

DETAIL A

Retaining Wall Sound Wall 247, Retaining Wall 281, 387

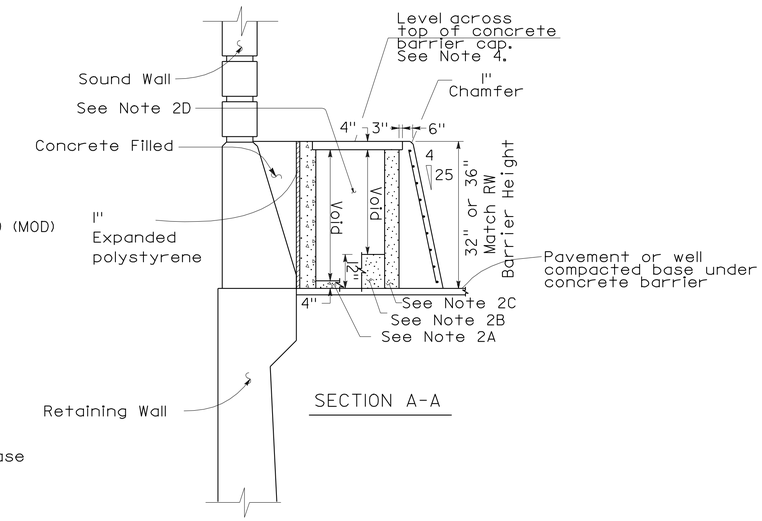

SECTION A-A

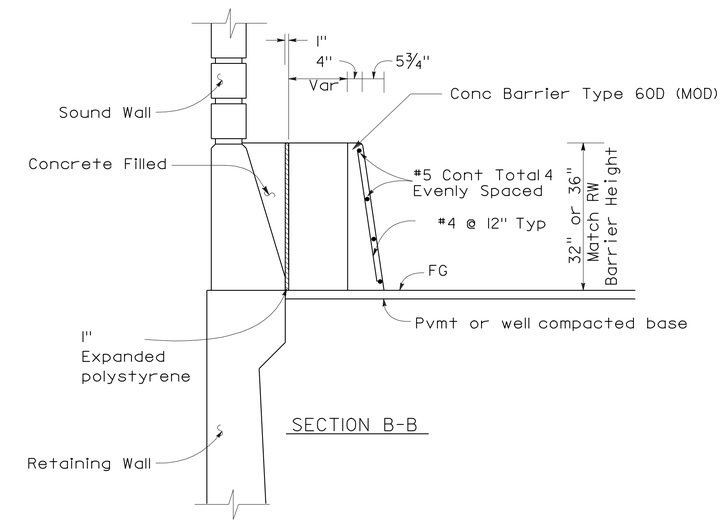

SECTION B-B

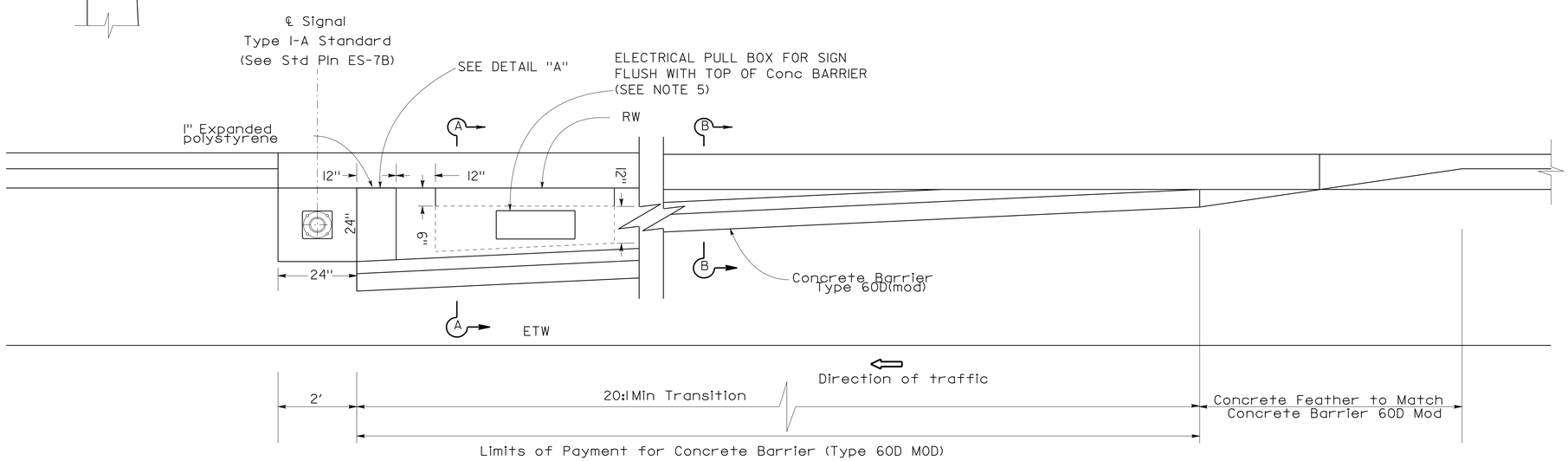

CONCRETE BARRIER 60D MOD FOR ELECTRICAL SYSTEM TYPE 1-A Std,

CONSTRUCTION DETAILS

NO SCALE

C-94

STATE OF CALIFORNIA - DEPARTMENT OF TRANSPORTATION
Caltrans®
DESIGN

FUNCTIONAL SUPERVISOR: MARK PERTILE
CALCULATED-DESIGNED BY: THAI VAN HGUYEN
CHECKED BY: THOMAS HIEN NGO
REVISED BY
DATE REVISED

LAST REVISION 12-01-10
DATE PLOTTED => 29-APR-2011
TIME PLOTTED => 20:15

Dist	COUNTY	ROUTE	POST MILES TOTAL PROJECT	SHEET No.	TOTAL SHEETS
08	Riv	91	15.6/21.6	181	2028

REGISTERED CIVIL ENGINEER 4-11-10 DATE

4-25-11
PLANS APPROVAL DATE

REGISTERED PROFESSIONAL ENGINEER CUONG LE TRAN No. C60436 Exp. 6/30/12 CIVIL STATE OF CALIFORNIA

THE STATE OF CALIFORNIA OR ITS OFFICERS OR AGENTS SHALL NOT BE RESPONSIBLE FOR THE ACCURACY OR COMPLETENESS OF SCANNED COPIES OF THIS PLAN SHEET.

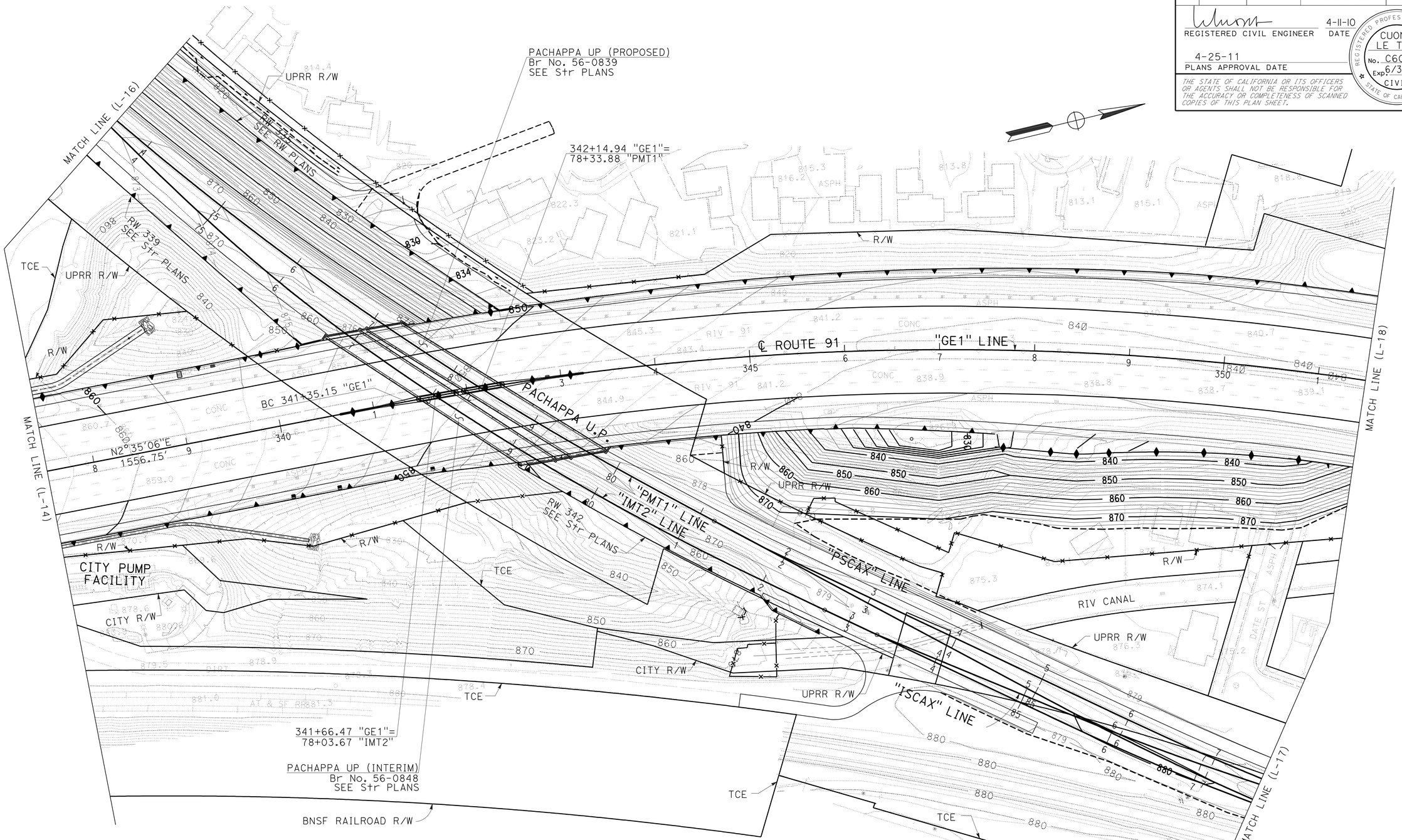

NOTES: THIS SHEET ONLY

1. FOR ACCURATE RIGHT OF WAY AND ACCESS DATA, CONTACT RIGHT OF WAY ENGINEERING AT THE DISTRICT OFFICE.
2. CONTOUR GRADING ALONG RAILROAD TRACKS IS TO THE SUBGRADE LEVEL ONLY.
3. BALLAST AND TRACK WORK TO BE DONE BY OTHERS.

INTERIM CONTOUR GRADING

THIS PLAN ACCURATE FOR CONTOUR GRADING WORK ONLY.

CONSTRUCTION DETAILS

SCALE: 1" = 50'

C-95

STATE OF CALIFORNIA - DEPARTMENT OF TRANSPORTATION
Caltrans DESIGN

FUNCTIONAL SUPERVISOR: MARK PERTILE
CALCULATED-DESIGNED BY: CUONG LE TRAN
CHECKED BY: ANNABELL WANG
REVISED BY
DATE REVISED

LAST REVISION 04-11-10
DATE PLOTTED => 29-APR-2011
TIME PLOTTED => 20:15

Dist	COUNTY	ROUTE	POST MILES TOTAL PROJECT	SHEET No.	TOTAL SHEETS
08	Riv	91	15.6/21.6	182	2028

REGISTERED CIVIL ENGINEER 4-11-10 DATE

4-25-11
PLANS APPROVAL DATE

REGISTERED PROFESSIONAL ENGINEER CUONG LE TRAN No. C60436 Exp. 6/30/12 CIVIL STATE OF CALIFORNIA

THE STATE OF CALIFORNIA OR ITS OFFICERS OR AGENTS SHALL NOT BE RESPONSIBLE FOR THE ACCURACY OR COMPLETENESS OF SCANNED COPIES OF THIS PLAN SHEET.

NOTES: THIS SHEET ONLY

1. FOR ACCURATE RIGHT OF WAY AND ACCESS DATA, CONTACT RIGHT OF WAY ENGINEERING AT THE DISTRICT OFFICE.
2. CONTOUR GRADING ALONG RAILROAD TRACKS IS TO THE SUBGRADE LEVEL ONLY.
3. BALLAST AND TRACK WORK TO BE DONE BY OTHERS.

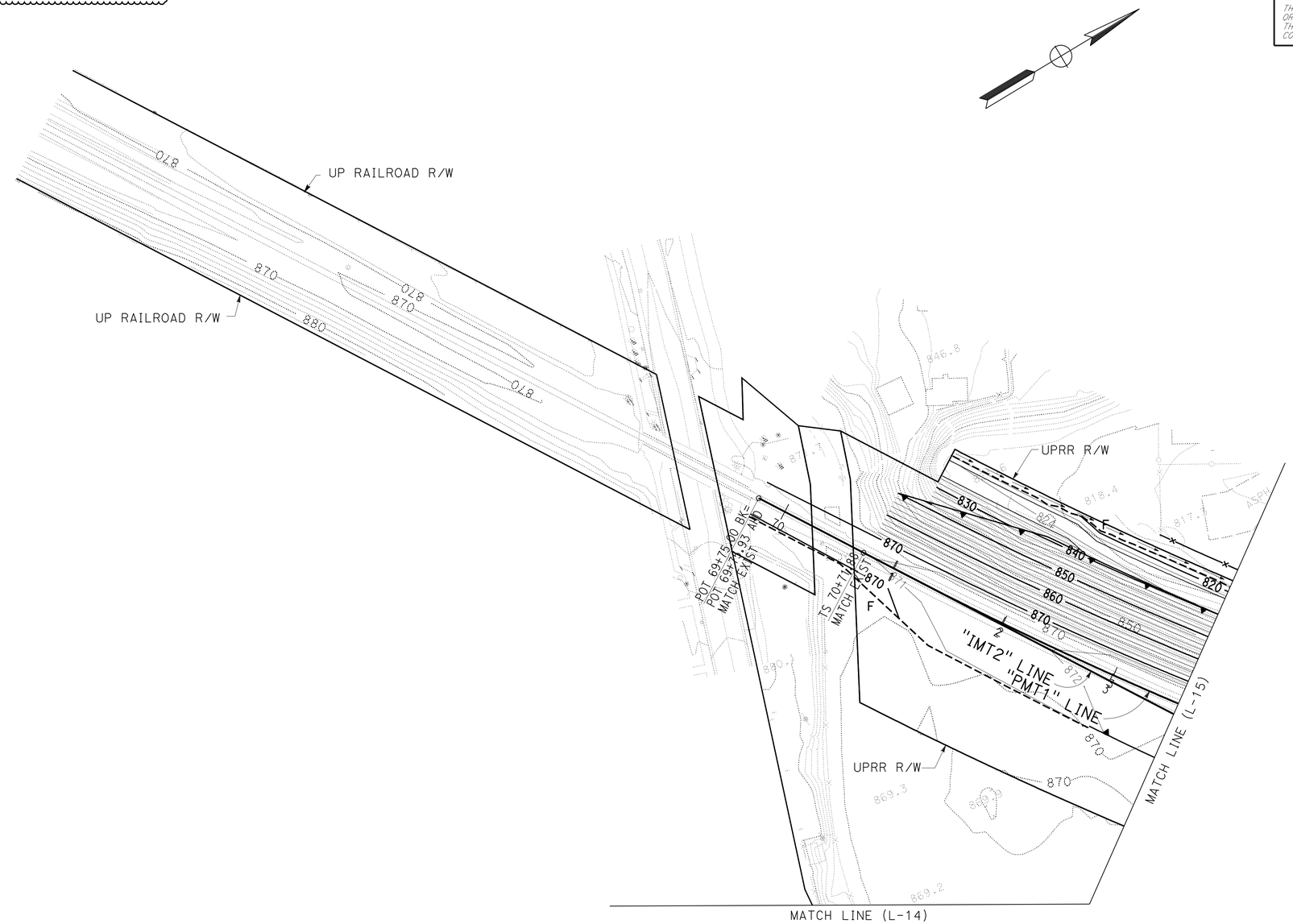

INTERIM CONTOUR GRADING

THIS PLAN ACCURATE FOR CONTOUR GRADING WORK ONLY.

CONSTRUCTION DETAILS

SCALE: 1" = 50'

C-96

STATE OF CALIFORNIA - DEPARTMENT OF TRANSPORTATION
Caltrans® DESIGN

FUNCTIONAL SUPERVISOR: MARK PERTILE

CALCULATED-DESIGNED BY: CUONG LE TRAN
CHECKED BY: ANNABELL WANG

REVISED BY
DATE REVISED

LAST REVISION 04-11-10
DATE PLOTTED => 29-APR-2011
TIME PLOTTED => 20:15

Dist	COUNTY	ROUTE	POST MILES TOTAL PROJECT	SHEET No.	TOTAL SHEETS
08	Riv	91	15.6/21.6	183	2028

REGISTERED CIVIL ENGINEER — DATE 4-11-10

4-25-11
PLANS APPROVAL DATE

REGISTERED PROFESSIONAL ENGINEER CUONG LE TRAN No. C60436 Exp. 6/30/12 CIVIL STATE OF CALIFORNIA

THE STATE OF CALIFORNIA OR ITS OFFICERS OR AGENTS SHALL NOT BE RESPONSIBLE FOR THE ACCURACY OR COMPLETENESS OF SCANNED COPIES OF THIS PLAN SHEET.

NOTES: THIS SHEET ONLY

1. FOR ACCURATE RIGHT OF WAY AND ACCESS DATA, CONTACT RIGHT OF WAY ENGINEERING AT THE DISTRICT OFFICE.
2. CONTOUR GRADING ALONG RAILROAD TRACKS IS TO THE SUBGRADE LEVEL ONLY.
3. BALLAST AND TRACK WORK TO BE DONE BY OTHERS.

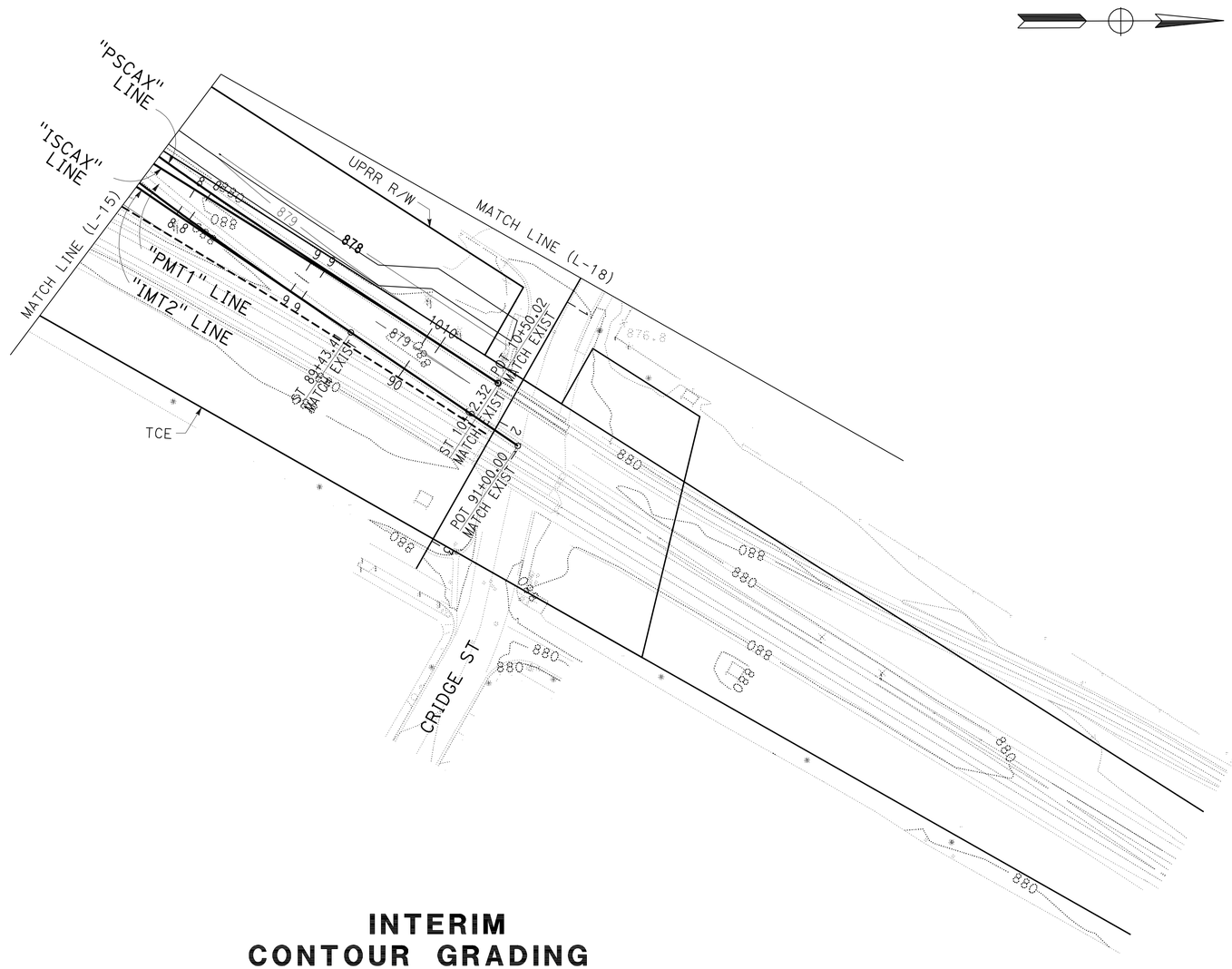

INTERIM CONTOUR GRADING

THIS PLAN ACCURATE FOR CONTOUR GRADING WORK ONLY.

CONSTRUCTION DETAILS

SCALE: 1" = 50'

C-97

STATE OF CALIFORNIA - DEPARTMENT OF TRANSPORTATION
Caltrans
DESIGN

FUNCTIONAL SUPERVISOR: MARK PERTILE
CALCULATED-DESIGNED BY: CUONG LE TRAN
CHECKED BY: ANNABELL WANG
REVISED BY
DATE REVISED

LAST REVISION 04-11-11
DATE PLOTTED => 29-APR-2011
TIME PLOTTED => 20:16

Dist	COUNTY	ROUTE	POST MILES TOTAL PROJECT	SHEET No.	TOTAL SHEETS
08	Riv	91	15.6/21.6	184	2028

REGISTERED CIVIL ENGINEER 12-1-10 DATE

4-25-11
PLANS APPROVAL DATE

REGISTERED PROFESSIONAL ENGINEER RUSSELL McNAUGHT No. C65853 Exp. 12/31/11 CIVIL STATE OF CALIFORNIA

THE STATE OF CALIFORNIA OR ITS OFFICERS OR AGENTS SHALL NOT BE RESPONSIBLE FOR THE ACCURACY OR COMPLETENESS OF SCANNED COPIES OF THIS PLAN SHEET.

HDR ONE COMPANY / *Many Solutions*
2280 Market Street, Suite 100
Riverside, CA. 92501
(951) 320-7300

RCTC

PROJECT CONTACTS

CONTACT	PHONE NUMBER	UPRR
? NAME ?	(xxx) xxx-xxxx	CONSTRUCTION PROJECT MANAGER
? NAME ?	(xxx) xxx-xxxx	CONSTRUCTION FIELD MANAGER
? NAME ?	(xxx) xxx-xxxx	PROJECT DESIGN MANAGER
? NAME ?	(xxx) xxx-xxxx	PROJECT DESIGN SR. PROJECT DESIGNER
? NAME ?	(xxx) xxx-xxxx	STRUCTURES DESIGN SR. MANAGER
? NAME ?	(xxx) xxx-xxxx	STRUCTURES DESIGN MANAGER
? NAME ?	(xxx) xxx-xxxx	INFORMATION TECHNOLOGY - FIBER
? NAME ?	(xxx) xxx-xxxx	REAL ESTATE - UTILITIES

GENERAL NOTES

1. CONTRACTORS SHALL NOTIFY SERVICE ALERT, (800) 642-2444 AND UPRR FIBER OPTICS HOTLINE (800) 336-9193, 48 HOURS PRIOR TO ANY EXCAVATION. THE USA AUTHORIZATION NUMBERS SHALL BE KEPT AT THE JOB SITE.
2. NO WORK WHATSOEVER SHALL BE COMMENCED WITHOUT FIRST NOTIFYING THE UPRR ENGINEER.
3. THE CONTRACTOR SHALL COMPLY WITH ALL FEDERAL, STATE, COUNTY, AND CITY LAWS AND ORDINANCES AND REGULATIONS OF THE DEPARTMENT OF INDUSTRIAL RELATIONS, OSHA, NPDES AND INDUSTRIAL ACCIDENT COMMISSION RELATED TO THE SAFETY AND CHARACTER OF THE WORK, EQUIPMENT AND LABOR PERSONNEL.
4. CONTRACTOR SHALL BE RESPONSIBLE FOR COORDINATING WITH ALL UTILITY AGENCIES.
5. CONTRACTOR SHALL PROTECT IN PLACE (BY ANY MEANS NECESSARY) ALL EXISTING UTILITIES TO REMAIN UNLESS OTHERWISE SPECIFIED HEREIN, CONTRACTOR SHALL BE RESPONSIBLE FOR THE COMPLETE REPAIR AT HIS EXPENSE, FOR ANY DAMAGE TO EXISTING UTILITIES, STRUCTURES, OR OTHER SITE FEATURES, AS A RESULT OF HIS WORK.
6. PRIOR TO PLACING CURBS, PAVEMENTS, BASE, SUBBASE, TRACK, ETC., ALL UNDERGROUND UTILITIES SHALL BE INSTALLED, BACKFILL COMPLETED, AND THE ENGINEER NOTIFIED BY EACH OF THE UTILITY COMPANIES HAVING FACILITIES WITHIN THE WORK AREA, THAT THE UTILITY INSTALLATION HAS SATISFACTORILY PASSED ACCEPTANCE TESTS.
7. ALL EXISTING UNDERGROUND UTILITIES, THAT ARE NOT TO BE RE-USED SHALL BE ABANDONED IN PLACE. ALL EXISTING PIPELINES TO BE ABANDONED IN PLACE SHALL BE CEMENT SLURRY FILLED AND CAPPED AT LEAST 3'-0" BELOW TOP OF PROPOSED SUBGRADE.
8. CONTRACTOR SHALL VERIFY LOCATIONS AND ELEVATIONS OF EXISTING UTILITIES WHETHER KNOWN OR UNKNOWN PRIOR TO BEGINNING CONSTRUCTION.
9. ANY UNDERGROUND STRUCTURES SUCH AS CESSPOOLS, CISTERNS, MINING SHAFTS, TUNNELS, SEPTIC TANKS, WELLS, AND PIPELINES NOT LOCATED PRIOR TO CONSTRUCTION SHALL BE BROUGHT TO THE ATTENTION OF THE ENGINEER FOR DETERMINATION OF APPROPRIATE ACTION SUCH AS REMOVAL OR TREATMENT IN A MANNER JUDGED SUITABLE TO THE ENGINEER.
10. CONTRACTOR SHALL COORDINATE LOCATION OF ALL PROPOSED UTILITIES WITH UPRR TO ASSURE ACCURACY OF UTILITY CONNECTIONS AND COMPLIANCE WITH LOCAL CODES.
11. ANY EXISTING CONDITIONS FOUND TO BE A VARIANCE WITH THESE DRAWINGS MUST BE IMMEDIATELY REPORTED TO THE ENGINEER.
12. CONTRACTOR SHALL MAINTAIN AND CLEAN TO THE SATISFACTION OF THE ENGINEER, ALL ACCESS AND SERVICE ROADS USED DURING CONSTRUCTION.
13. CONTRACTOR SHALL PERFORM ALL CONSTRUCTION IN SUCH A MANNER AS TO PROTECT ADJACENT EXISTING BUILDINGS, AND OTHER SITE ELEMENTS WHICH ARE TO REMAIN IN SERVICE.
14. CONTRACTOR SHALL PROVIDE AS-BUILT DRAWINGS FOR ALL IMPROVEMENTS.
15. NO FIELD CHANGES WILL BE PERMITTED WITHOUT DIRECT WRITTEN AUTHORIZATION FROM THE UPRR ENGINEER OR HIS REPRESENTATIVE.
16. CONTRACTOR SHALL COORDINATE WORK WHICH AFFECTS ADJACENT PROPERTY OWNERS. ANY QUESTIONS OR AGREEMENTS BETWEEN ADJACENT PROPERTY OWNERS AND CONTRACTOR SHALL BE MADE IN WRITING. A COPY OF SUCH AGREEMENT SHALL BE PROVIDED TO THE UPRR ENGINEER OR HIS REPRESENTATIVE.
17. THE CONTRACTOR IS RESPONSIBLE FOR PREPARING A STORMWATER POLLUTION PREVENTION PLAN (SWPPP) TO COMPLY WITH STATE REGULATIONS. GENERAL SPECIFICATIONS AND TYPICAL EROSION CONTROL DETAILS SHALL BE INCLUDED IN THE PLAN SET.
18. RIGHT-OF-WAY LINES SHOWN ON THE PLANS WERE TAKEN FROM EXISTING UPRR RIGHT-OF-WAY MAP AND ARE APPROXIMATE.
19. WHERE EXISTING CULVERTS ARE TO BE EXTENDED, THE CONTRACTOR SHALL EXPOSE EXISTING DRAINAGE STRUCTURES AND FIELD VERIFY SIZE AND TYPE BEFORE ORDERING.
20. THE CONTRACTOR IS RESPONSIBLE FOR THE REMOVAL OF ALL PAVEMENT MARKINGS THAT WILL BE IN CONFLICT WITH THE PROPOSED WORK.
21. CONTRACTOR SHALL COMPLY WITH ALL STATE AND CITY STANDARD SPECIFICATIONS FOR CONSTRUCTION OF PUBLIC IMPROVEMENTS REQUIREMENTS. CITY STANDARD SPECIFICATIONS SHALL PREVAIL.
22. CONTRACTOR SHALL MAINTAIN AT LEAST ONE ACCESS TO ALL AFFECTED BUSINESSES. IF NECESSARY, MULTIPHASE CONSTRUCTION SHALL BE UTILIZED.

DESIGN CRITERIA

1. UPRR STANDARD PLANS AND TRACKWORKS.
2. AMERICAN RAILWAY ENGINEERING AND MAINTENANCE OF WAY ASSOCIATION
3. CITY PUBLIC WORKS ENGINEERING DIVISION.
4. STATE DEPARTMENT OF TRANSPORTATION ROADWAY STANDARDS.

PHONE NUMBER	GENERAL
(800) 336-9193	UPRR CALL BEFORE YOU DIG
(888) 258-0808	CALL BEFORE YOU DIG (NATIONAL DIRECTORY)
(888) 877-7267	UPRR RESPONSE MANAGEMENT COMMUNICATIONS CENTER (RMCC)

CONSTRUCTION DETAILS
RAILROAD
GENERAL NOTES

C-98

REVISED BY | DATE REVISED
MICHAEL MIHALOVICH | JIM CONWAY
CALCULATED-DESIGNED BY | CHECKED BY
CONSULTANT FUNCTIONAL SUPERVISOR
GERARD REMINISKEY
STATE OF CALIFORNIA - DEPARTMENT OF TRANSPORTATION
Caltrans

LAST REVISION 08-30-10 | DATE PLOTTED => 29-APR-2011 | TIME PLOTTED => 20:16

Dist	COUNTY	ROUTE	POST MILES TOTAL PROJECT	SHEET No.	TOTAL SHEETS
08	Riv	91	15.6/21.6	185	2028

REGISTERED CIVIL ENGINEER — DATE 12-1-10

4-25-11
PLANS APPROVAL DATE

REGISTERED PROFESSIONAL ENGINEER — RUSSELL McNAUGHT — No. C65853 — Exp. 12/31/11 — CIVIL — STATE OF CALIFORNIA

THE STATE OF CALIFORNIA OR ITS OFFICERS OR AGENTS SHALL NOT BE RESPONSIBLE FOR THE ACCURACY OR COMPLETENESS OF SCANNED COPIES OF THIS PLAN SHEET.

HDR ONE COMPANY / Many Solutions
2280 Market Street, Suite 100
Riverside, CA. 92501
(951) 320-7300

RCTC

ABBREVIATIONS

MISCELLANEOUS

AC.	ACRES
AVE.	AVENUE
BLVD.	BOULEVARD
BLDG.	BUILDING
BNSF	BNSF RAILWAY
C.Y.	CUBIC YARDS
CONC.	CONCRETE
°	DEGREE (S)
DIA.	DIAMETER
DR.	DRIVE
DWG.	DRAWING
E	EAST
ELEV.	ELEVATION
EXIST.	EXISTING
′	FOOT, FEET OR MINUTE (S)
F.S.	FINISHED SURFACE
HORIZ.	HORIZONTAL
"	INCH, INCHES OR SECOND (S)
INV.	INVERT
LT.	LEFT
L	LENGTH
L.F.	LINEAL FEET
MAX.	MAXIMUM
MIN.	MINIMUM
N	NORTH
NTS	NOT TO SCALE
NO.	NUMBER
OH	OVERHEAD
PROP.	PROPOSED
RR	RAILROAD
RWY	RAILWAY
R/W	RIGHT OF WAY
RT.	RIGHT
S	SOUTH
S.F.	SQUARE FEET
STA.	STATION
STD.	STANDARD
ST.	STREET
TWP.	TOWNSHIP
TYP.	TYPICAL
UG	UNDERGROUND
UPRR	UNION PACIFIC RAILROAD
V	VELOCITY
WT.	WEIGHT
W	WEST
X-ING	CROSSING

SIGNAL

ABS	AUTOMATIC BLOCK SIGNAL
ATC	AUTOMATIC TRAIN CONTROL
CTC	CENTRALIZED TRAFFIC CONTROL
DED	DRAGGING EQUIPMENT DETECTOR
DTC	DIRECT TRAFFIC CONTROL
ELTO	ELECTRIC LOCK TURNOUT
HBD	HOT BOX DETECTOR
HTTO	HAND THROW TURNOUT
HWD	HIGH WIDE DETECTOR
POTO	POWER OPERATED TURNOUT
TWC	TRACK WARRANT CONTROL
WILD	WHEEL IMPACT LOAD DETECTOR

STRUCTURES

BLDG.	BUILDING
BR.	BRIDGE
CB	CATCH BASIN
CIP	CAST IRON PIPE
CMP	CORRUGATED METAL PIPE
CMPA	CORRUGATED METAL PIPE ARCH
CPT	CONCRETE PILE TRESTLE - BALLAST DECK
CSP	CORRUGATED STEEL PIPE
CULV.	CULVERT
DI	DROP INLET
DPGBD	DECK PLATE GIRDER - BALLAST DECK
DPGOD	DECK PLATE GIRDER - OPEN DECK
EBW	EAST BACKWALL
F.F.	FINISHED FLOOR
F.L.	FLOWLINE
GIP	GALVANIZED IRON PIPE
HDWL	HEADWALL
NBW	NORTH BACKWALL
PSCT	PRESTRESSED CONCRETE TRESTLE
RCA	REINFORCED CONCRETE ARCH
RCB	REINFORCED CONCRETE BOX
RCP	REINFORCED CONCRETE PIPE
SBW	SOUTH BACKWALL
SPP	STRUCTURAL PLATE PIPE
SPTBD	STEEL PILE TRESTLE - BALLAST DECK
SPTOD	STEEL PILE TRESTLE - OPEN DECK
SSP	SMOOTH STEEL PIPE
TPGBD	THROUGH PLATE GIRDER - BALLAST DECK
TPGOD	THROUGH PLATE GIRDER - OPEN DECK
TPTBD	TIMBER PILE TRESTLE - BALLAST DECK
TPTOD	TIMBER PILE TRESTLE - OPEN DECK
TTBD	THROUGH TRUSS - BALLAST DECK
TTOD	THROUGH TRUSS - OPEN DECK
TWB	TREATED WOOD BOX
VCP	VITRIFIED CLAY PIPE
VIAD.	VIADUCT
WBW	WEST BACKWALL
WIP	WROUGHT IRON PIPE

TRACK

ALIGN.	ALIGNMENT
ATR	ABOVE TOP OF RAIL
BBR	BELOW BASE OF RAIL
CNTRS.	CENTERS
CS	POINT OF CURVE TO SPIRAL
CWR	CONTINUOUS WELDED RAIL
EOT	END OF TRACK
HH	HEAD HARDENED
JTD.	JOINTED RAIL
LH	LEFT HAND
ML	MAIN LINE
MM	MILE MARKER
MP	MILE POST
NSC	NOT SUFFICIENT CLEARANCE
OTM	OTHER TRACK MATERIAL
PCC	POINT OF COMPOUND CURVE
PF	½" POINT OF FROG
PITO	POINT OF INTERSECTION OF TURNOUT
POC	POINT ON CURVE
POS	POINT ON SPIRAL
POT	POINT ON TANGENT
PT. SW.	POINT OF SWITCH
RH	RIGHT HAND
SH	SECOND HAND
T.F.	TRACK FEET
TC	TRACK CENTERS
TPI	POINT OF INTERSECTION OF TOTAL CURVE
TRK.	TRACK
UXO	UNIVERSAL CROSS-OVER
X-OVER	CROSS-OVER

SYMBOLS

ROAD CROSSING WARNING DEVICES

- CROSSBUCK SIGN
- FLASHING LIGHT WARNING DEVICE
- FLASHING LIGHT WARNING DEVICE WITH GATE
- CANTILEVER FLASHING LIGHT WARNING DEVICE
- CANTILEVER FLASHING LIGHT SIGNAL WITH GATE

SIGNAL

- ABSOLUTE SIGNAL
- SIGNAL BRIDGE
- CANTILEVER SIGNAL
- ACS OR CTC SIGNAL
- DWARF SIGNAL
- BEGIN CTC
- 3 LIGHT SIGNAL
- MICROWAVE TOWER
- AEI — AEI

SIGNS

- STOP
- YARD LIMIT
- 1 MILE TO YARD LIMIT
- WHISTLE POST
- FLANGER
- STATION
- REDUCE SPEED
- RESUME SPEED
- GENERAL PURPOSE

TRACK

- EXISTING MAINLINE
- EXISTING SIDING OR SPUR
- PROPOSED
- REMOVE
- SHIFT
- FUTURE
- FOREIGN RAILROAD OR INDUSTRY
- IN BUILDINGS OR UNDER STRUCTURES
- TURNOUT
- WHEEL STOP
- BUMPING POST
- EARTHEN BUMPER
- 56′ INERT RETARDER
- 52′ DOWTY RETARDER
- DERAIL
- SWITCH POINT DERAIL OR DOUBLE SWITCH POINT DERAIL

CONSTRUCTION DETAILS
RAILROAD
ABBREVIATIONS & LEGEND
C-99

REVISED BY	DATE REVISED
MICHAEL MIHALOVICH	JIM CONWAY

CALCULATED-DESIGNED BY — CHECKED BY

CONSULTANT FUNCTIONAL SUPERVISOR: GERARD REMINISKEY

STATE OF CALIFORNIA - DEPARTMENT OF TRANSPORTATION — Caltrans

LAST REVISION 08-30-10 | DATE PLOTTED => 29-APR-2011 | TIME PLOTTED => 20:16

Dist	COUNTY	ROUTE	POST MILES TOTAL PROJECT	SHEET No.	TOTAL SHEETS
08	Riv	91	15.6/21.6	186	2028

REGISTERED CIVIL ENGINEER — DATE: 12-1-10

4-25-11
PLANS APPROVAL DATE

REGISTERED PROFESSIONAL ENGINEER — RUSSELL McNAUGHT — No. C65853 — Exp. 12/31/11 — CIVIL — STATE OF CALIFORNIA

THE STATE OF CALIFORNIA OR ITS OFFICERS OR AGENTS SHALL NOT BE RESPONSIBLE FOR THE ACCURACY OR COMPLETENESS OF SCANNED COPIES OF THIS PLAN SHEET.

HDR — ONE COMPANY / *Many Solutions*
2280 Market Street, Suite 100
Riverside, CA. 92501
(951) 320-7300

RCTC

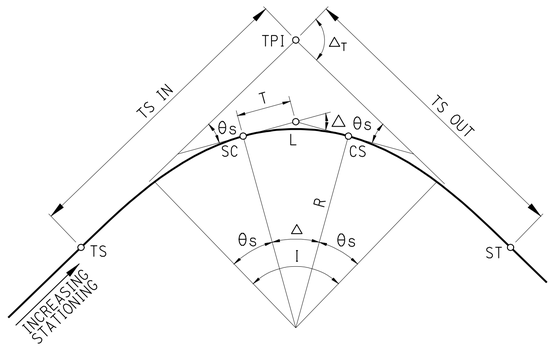

FIGURE A

CIRCULAR CURVES
WITH SPIRAL TRANSITION

Δ_T - TOTAL INTERSECTION ANGLE

θs - SPIRAL ANGLE = $\frac{AL^2}{2}$

Δ - CENTRAL ANGLE OF CIRCULAR CURVE = $\Delta_T - 2\theta s$

Dc - DEGREE OF CURVE

A - RATE OF CHANGE OF DEGREE OF CURVE PER 100-ft. OF LENGTH = $\frac{Dc}{L}$

R - RADIUS OF CIRCULAR CURVE

T - TANGENT LENGTH OF CIRCULAR CURVE = R TAN $\frac{\Delta}{2}$

L - LENGTH OF CIRCULAR CURVE = $\frac{\Delta}{Dc} \times 100$

TS - TANGENT TO SPIRAL

SC - SPIRAL TO CURVE

CS - CURVE TO SPIRAL

ST - SPIRAL TO TANGENT

TPI - POINT OF INTERSECTION OF MAIN TANGENTS

(TS IN)
(TS OUT) - TANGENT LENGTH OF COMPLETE CURVE = (R+o) TAN $\frac{\Delta_T}{2}$ + †

(WHEN SPIRALS OF EQUAL LENGTH ARE USED ON BOTH SIDES OF CIRCULAR CURVE, SEE FIGURE C FOR o AND †).

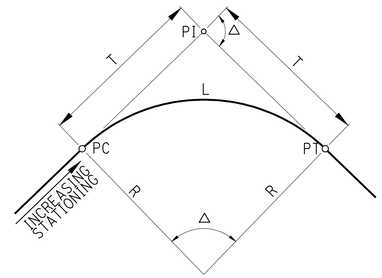

FIGURE B

SIMPLE CIRCULAR CURVE

R = RADIUS OF CIRCULAR CURVE

Δ = CENTRAL ANGLE OF CIRCULAR CURVE

T = R TAN $\frac{\Delta}{2}$

L = $\frac{\Delta}{Dc} \times 100$

Dc = 2 SIN^{-1} (50/R) = DEGREE OF CURVE (CHORD DEFINITION)

PC = POINT OF CURVATURE

PI = POINT OF INTERSECTION

PT = POINT OF TANGENCY

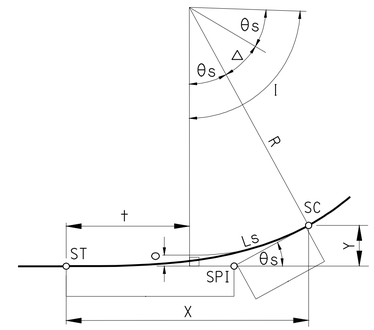

FIGURE C

SPIRAL TRANSITION CURVE

SPIRAL TRANSITION CURVE DATA:
THE SPIRAL USED IS DEFINED BY THE TALBOT SPIRAL.

Ls = LENGTH OF SPIRAL (TS TO SC)

$\theta s = \frac{AL^2}{2}$

$X = 100L_1 - 0.000762A^2L_1^5$

$Y = 0.291AL_1^3 - 0.00000158A^3L_1^7$

$o = 0.0727AL_1^3$

$\dagger = 50L_1 - 0.000127A^2L_1^5$

$ST = \frac{Y}{SIN\theta s}$

$LT = X - \frac{Y}{TAN\theta s}$

Dc = 2 SIN^{-1}(50/R) = DEGREE OF CURVE (CHORD DEFINITION)

L_1 - TOTAL NO. OF STATIONS IN SPIRAL

SPI - SPIRAL POINT OF INTERSECTION

NOTE: Dc, θs, Δ, AND Δ_T ARE IN DEGREES.
ALL OTHERS DIMENSIONS ARE FEET.

CONSTRUCTION DETAILS
RAILROAD
GEOMETRY CONTROL POINTS

NO SCALE

C-100

REVISED BY	DATE REVISED
MICHAEL MIHALOVICH	JIM CONWAY

CALCULATED-DESIGNED BY	CHECKED BY

CONSULTANT FUNCTIONAL SUPERVISOR: GERARD REMINISKEY

STATE OF CALIFORNIA - DEPARTMENT OF TRANSPORTATION — Caltrans

LAST REVISION 08-30-10 | DATE PLOTTED => 29-APR-2011 | TIME PLOTTED => 20:16

Dist	COUNTY	ROUTE	POST MILES TOTAL PROJECT	SHEET No.	TOTAL SHEETS
08	Riv	91	15.6/21.6	187	2028

REGISTERED CIVIL ENGINEER 12-1-10 DATE

4-25-11
PLANS APPROVAL DATE

REGISTERED PROFESSIONAL ENGINEER RUSSELL McNAUGHT No. C65853 Exp. 12/31/11 CIVIL STATE OF CALIFORNIA

THE STATE OF CALIFORNIA OR ITS OFFICERS OR AGENTS SHALL NOT BE RESPONSIBLE FOR THE ACCURACY OR COMPLETENESS OF SCANNED COPIES OF THIS PLAN SHEET.

HDR ONE COMPANY / *Many Solutions*
2280 Market Street, Suite 100
Riverside, CA. 92501
(951) 320-7300

RCTC

INTERIM MAIN TRACK 2 (IMT2)

CURVE/ TURNOUT	CURVE DATA	POINT	STATION	NORTHING	EASTING	BEARING	DISTANCE	FREIGHT S (mph)	FREIGHT E	FREIGHT Eu	PASSENGER S (mph)	PASSENGER E	PASSENGER Eu	ACTUAL Ea
			69+75.00 BK=											
		POT	69+75.93 AHD	2296345.7693	6219129.0539									
						N 58°32′04″ E	337.26′							
	Ls = 220.00′	TS	73+13.18	2296521.8130	6219416.7185									
	θs = 3°34′28″					N 58°32′04″ E	146.70′							
		SPI	74+59.88	2296598.3867	6219541.8439									
	Δ = 4°41′47″					N 54°57′36″ E	73.36′							
	Dc = 3°15′00″	SC	75+33.18	2296640.5066	6219601.9078									
	R = 1763.18′							45	4.50″	0.50″	55	7.00″	3.00″	4.00″
	T = 72.30′	CS	76+77.69	2296728.2400	6219716.7068									
	L = 144.51′					N 50°15′48″ E	50.86′							
		SPI	77+28.55	2296760.7536	6219755.8187									
	CMP SPIRAL					N 47°20′55″ E	59.16′							
	Ls = 110.00′	SC	77+87.69	2296800.8380	6219799.3320									
	θs = 2°54′53″													
C1-1	TOTAL CURVE													
	ΔT = 19°41′25″ LT													
	L† = 944.38′													
	TS IN = 456.80′	TPI	77+69.98	2296760.2546	6219806.3447									
	TS OUT = 495.57′													
	Δ = 7°22′38″													
	Dc = 2°03′00″													
	R = 2795.07′							45	3.00″	1.00″	55	4.25″	2.25″	2.00″
	T = 180.19′	CS	81+47.56	2297061.0179	6220047.6187									
	L = 359.87′					N 39°58′17″ E	36.67′							
		SPI	81+84.23	2297089.1190	6220071.1745									
	Ls = 110.00′					N 38°50′38″ E	73.33′							
	θs = 1°07′39″	ST	82+57.56	2297146.2363	6220117.1702									
						N 38°50′38″ E	260.68′							
	Ls = 90.00′	TS	85+18.24	2297349.2683	6220280.6689									
	θs = 1°07′30″					N 38°50′38″ E	60.00′							
		SPI	85+78.24	2297396.0007	6220318.3018									
	Δ = 2°15′44″					N 37°43′09″ E	30.00′							
	Dc = 2°30′00″	SC	86+08.24	2297419.7321	6220336.6562									
	R = 2292.01′													
	T = 45.26′													
	L = 90.49′													
C1-2		TPI	86+53.54	2297454.6490	6220365.5305			40	2.75″	1.00″	50	4.50″	2.75″	1.75″
	TOTAL CURVE													
	ΔT = 4°30′44″ LT													
	L† = 270.49′													
	TS IN = 135.30′	CS	86+98.73	2297492.3936	6220390.5956									
	TS OUT = 135.30′					N 35°27′24″ E	30.00′							
		SPI	87+28.73	2297516.8311	6220407.9989									
	Ls = 90.00′					N 34°19′55″ E	60.00′							
	θs = 1°07′30″	ST	87+88.73	2297566.3792	6220441.8387									
						N 34°19′55″ E	311.27′							
		POT	91+00.00	2297823.4217	6220617.3906									

CONSTRUCTION DETAILS
RAILROAD
TRACK GEOMETRY
C-101

STATE OF CALIFORNIA - DEPARTMENT OF TRANSPORTATION
Caltrans

CONSULTANT FUNCTIONAL SUPERVISOR: GERARD REMINISKEY
CALCULATED-DESIGNED BY: MICHAEL MIHALOVICH
CHECKED BY: JIM CONWAY
REVISED BY
DATE REVISED

LAST REVISION 08-30-10
DATE PLOTTED => 29-APR-2011
TIME PLOTTED => 20:16

Dist	COUNTY	ROUTE	POST MILES TOTAL PROJECT	SHEET No.	TOTAL SHEETS
08	Riv	91	15.6/21.6	188	2028

REGISTERED CIVIL ENGINEER 12-1-10 DATE

4-25-11
PLANS APPROVAL DATE

REGISTERED PROFESSIONAL ENGINEER RUSSELL McNAUGHT No. C65853 Exp. 12/31/11 CIVIL STATE OF CALIFORNIA

THE STATE OF CALIFORNIA OR ITS OFFICERS OR AGENTS SHALL NOT BE RESPONSIBLE FOR THE ACCURACY OR COMPLETENESS OF SCANNED COPIES OF THIS PLAN SHEET.

HDR ONE COMPANY / *Many Solutions*
2280 Market Street, Suite 100
Riverside, CA. 92501
(951) 320-7300

RCTC

INTERIM SCAX TRACK (ISCAX)

CURVE/ TURNOUT	CURVE DATA	POINT	STATION	NORTHING	EASTING	BEARING	DISTANCE	FREIGHT S (mph)	FREIGHT E	FREIGHT Eu	PASSENGER S (mph)	PASSENGER E	PASSENGER Eu	ACTUAL Ea
T-01	LH No. 20 POTO	PS	2+71.56	2297157.1403	6220125.9510						45			
						N 38°50′38" E	61.04′							
		PITO	3+32.60	2297204.6817	6220164.2354									
						N 35°58′47" E	188.44′							
C1-3	Ls = 90.00′	TS	5+21.04	2297357.1692	6220274.9420									
	θs = 1°07′30"					N 35°58′47" E	60.00′							
		SPI	5+81.04	2297405.7236	6220310.1928									
	Δ = 1°28′35"					N 34°51′18" E	30.00′							
	Dc = 2°30′00"	SC	6+11.04	2297430.3426	6220327.3384									
	R = 2292.01′													
	T = 29.53′													
	L = 59.06′													
		TPI	6+40.60	2297453.9227	6220345.1855						50	4.50′′	3.00′′	1.50′′
	TOTAL CURVE													
	ΔT = 3°43′35" LT													
	Lt = 239.06′													
	TS IN = 119.56′	CS	6+70.10	2297479.2415	6220360.4662									
	TS OUT = 119.56′					N 33°22′42" E	30.00′							
		SPI	7+00.10	2297504.2941	6220376.9718									
	Ls = 90.00′					N 32°15′13" E	60.00′							
	θs = 1°07′30"	ST	7+60.10	2297555.0369	6220408.9924									
						N 32°15′13" E	113.21′							
C1-4	Ls = 70.00′	TS	8+73.31	2297650.7778	6220469.4085									
	θs = 0°21′00"					N 32°15′13" E	46.67′							
		SPI	9+19.97	2297690.2436	6220494.3130									
	Δ = 0°29′24"					N 32°36′13" E	23.33′							
	Dc = 1°00′00"	SC	9+43.31	2297709.9002	6220506.8855									
	R = 5729.65′													
	T = 24.51′													
	L = 49.01′													
		TPI	9+67.82	2297730.7039	6220519.8449						55	2.00′′	1.00′′	1.00′′
	TOTAL CURVE													
	ΔT = 1°11′24" RT													
	Lt = 189.01′													
	TS IN = 94.51′	CS	9+92.32	2297751.0768	6220533.4715									
	TS OUT = 94.51′					N 33°05′37" E	23.33′							
		SPI	10+15.65	2297770.6251	6220546.2117									
	Ls = 70.00′					N 33°26′37" E	46.67′							
	θs = 0°21′00"	ST	10+62.32	2297809.5651	6220571.9305									

CONSTRUCTION DETAILS
RAILROAD
TRACK GEOMETRY
C-102

REVISED BY | DATE REVISED
MICHAEL MIHALOVICH | JIM CONWAY
CALCULATED-DESIGNED BY | CHECKED BY
CONSULTANT FUNCTIONAL SUPERVISOR
GERARD REMINISKEY
STATE OF CALIFORNIA - DEPARTMENT OF TRANSPORTATION
Caltrans

LAST REVISION 08-30-10 | DATE PLOTTED => 29-APR-2011 | TIME PLOTTED => 20:16

Dist	COUNTY	ROUTE	POST MILES TOTAL PROJECT	SHEET No.	TOTAL SHEETS
08	Riv	91	15.6/21.6	189	2028

REGISTERED CIVIL ENGINEER 12-1-10 DATE

4-25-11
PLANS APPROVAL DATE

REGISTERED PROFESSIONAL ENGINEER RUSSELL McNAUGHT No. C65853 Exp. 12/31/11 CIVIL STATE OF CALIFORNIA

THE STATE OF CALIFORNIA OR ITS OFFICERS OR AGENTS SHALL NOT BE RESPONSIBLE FOR THE ACCURACY OR COMPLETENESS OF SCANNED COPIES OF THIS PLAN SHEET.

HDR ONE COMPANY / *Many Solutions*
2280 Market Street, Suite 100
Riverside, CA. 92501
(951) 320-7300

RCTC

PROPOSED MAIN TRACK 1 (PMT1)

CURVE/ TURNOUT	CURVE DATA	POINT	STATION	NORTHING	EASTING	BEARING	DISTANCE	FREIGHT S (mph)	FREIGHT E	FREIGHT Eu	PASSENGER S (mph)	PASSENGER E	PASSENGER Eu	ACTUAL Ea
	Ls = 85.00′	TS	70+71.88	2296396.3380	6219211.6857									
	θs = 0°45′54"					N 58°32′04" E	56.67′							
		SPI	71+28.54	2296425.9175	6219260.0202									
	Δ = 15°17′47"					N 57°46′10" E	28.33′							
	Dc = 1°48′00"	SC	71+56.88	2296441.0287	6219283.9880									
	R = 3183.23′													
	T = 427.46′													
	L = 849.79′													
C2-1		TPI	75+85.19	2296664.2826	6219649.5214			45	2.50′′	1.00′′	55	3.75′′	2.25′′	1.50′′
	TOTAL CURVE													
	Δт = 16°49′34" LT													
	Lт = 1019.79′													
	TS IN = 513.32′	CS	80+06.67	2296984.2928	6219934.2151									
	TS OUT = 513.32′					N 42°28′23" E	28.33′							
		SPI	80+35.01	2297005.1916	6219953.3473									
	Ls = 85.00′					N 41°42′29" E	56.67′							
	θs = 0°45′54"	ST	80+91.67	2297047.4961	6219991.0501									
						N 41°42′29" E	387.92′							
	Ls = 95.00′	TS	84+79.59	2297337.0964	6220249.1485									
	θs = 0°57′00"					N 41°42′29" E	63.33′							
		SPI	85+42.93	2297384.3782	6220291.2871									
	Δ = 5°28′35"					N 40°45′30" E	31.67′							
	Dc = 2°00′00"	SC	85+74.59	2297408.3654	6220311.9618									
	R = 2864.93′													
	T = 137.02′													
	L = 273.82′													
C2-2		TPI	87+11.77	2297510.4290	6220403.6264			45	2.75′′	1.00′′	55	4.25′′	2.50′′	1.75′′
	TOTAL CURVE													
	Δт = 7°22′35" LT													
	Lт = 463.82′													
	TS IN = 232.18′	CS	88+48.41	2297624.0085	6220480.5619									
	TS OUT = 232.18′					N 35°16′54" E	31.67′							
		SPI	88+80.08	2297649.8594	6220498.8530									
	Ls = 95.00′					N 34°19′55" E	63.33′							
	θs = 0°57′00"	ST	89+43.41	2297702.1598	6220534.5726									

PROPOSED SCAX TRACK (PSCAX)

CURVE/ TURNOUT	CURVE DATA	POINT	STATION	NORTHING	EASTING	BEARING	DISTANCE	FREIGHT S (mph)	FREIGHT E	FREIGHT Eu	PASSENGER S (mph)	PASSENGER E	PASSENGER Eu	ACTUAL Ea
	LH No. 20 POTO	PS	1+16.68	2297066.1597	6220007.6835									
T-02						N 41°42′29" E	61.04′				45			
		PITO	1+77.72	2297111.7287	6220048.2956									
						N 38°50′38" E	378.59′							
	Ls = 115.00′	TS	5+56.31	2297406.5928	6220285.7454									
	θs = 1°17′37"					N 38°50′38" E	76.67′							
		SPI	6+32.97	2297466.3067	6220333.8322									
	Δ = 2°48′47"					N 37°33′01" E	38.34′							
	Dc = 2°15′00"	SC	6+71.31	2297496.6996	6220357.1959									
	R = 2546.64′													
	T = 62.53′													
	L = 125.02′													
C2-3		TPI	7+33.92	2297544.9274	6220397.1443						55	4.75′′	3.00′′	1.75′′
	TOTAL CURVE													
	Δт = 5°24′01" LT													
	Lт = 355.02′													
	TS IN = 177.61′	CS	7+96.33	2297597.6549	6220430.9321									
	TS OUT = 177.61′					N 34°44′14" E	38.34′							
		SPI	8+34.66	2297629.1577	6220452.7761									
	Ls = 115.00′					N 33°26′37" E	76.67′							
	θs = 1°17′37"	ST	9+11.33	2297693.1322	6220495.0296									
						N 33°26′37" E	138.69′							
		POT	10+50.02	2297808.8606	6220571.4650									

CONSTRUCTION DETAILS
RAILROAD
TRACK GEOMETRY
C-103

LAST REVISION 08-30-10 DATE PLOTTED => 29-APR-2011 TIME PLOTTED => 20:16

STATE OF CALIFORNIA - DEPARTMENT OF TRANSPORTATION
Caltrans

CONSULTANT FUNCTIONAL SUPERVISOR: GERARD REMINISKEY
CALCULATED-DESIGNED BY: MICHAEL MIHALOVICH
CHECKED BY: JIM CONWAY
REVISED BY
DATE REVISED

Dist	COUNTY	ROUTE	POST MILES TOTAL PROJECT	SHEET No.	TOTAL SHEETS
08	Riv	91	15.6/21.6	190	2028

REGISTERED CIVIL ENGINEER 12-1-10 DATE

4-25-11
PLANS APPROVAL DATE

REGISTERED PROFESSIONAL ENGINEER
RUSSELL McNAUGHT
No. C65853
Exp. 12/31/11
CIVIL
STATE OF CALIFORNIA

THE STATE OF CALIFORNIA OR ITS OFFICERS OR AGENTS SHALL NOT BE RESPONSIBLE FOR THE ACCURACY OR COMPLETENESS OF SCANNED COPIES OF THIS PLAN SHEET.

HDR ONE COMPANY / *Many Solutions*
2280 Market Street, Suite 100
Riverside, CA. 92501
(951) 320-7300

RCTC

FUTURE MAIN TRACK 1 (FMT1)

CURVE/ TURNOUT	CURVE DATA	POINT	STATION	NORTHING	EASTING	BEARING	DISTANCE	FREIGHT S (mph)	FREIGHT E	FREIGHT Eu	PASSENGER S (mph)	PASSENGER E	PASSENGER Eu	ACTUAL Ea
		POT	69+75.00	2296345.7693	6219129.0539									
						N 58°32′04" E	96.88′							
	Ls = 85.00′	TS	70+71.88	2296396.3380	6219211.6857									
	θs = 0°45′54"					N 58°32′04" E	56.67′							
		SPI	71+28.54	2296425.9175	6219260.0202									
	Δ = 15°17′47"					N 57°46′10" E	28.33′							
	Dc = 1°48′00"	SC	71+56.88	2296441.0287	6219283.9880									
	R = 3183.23′													
	T = 427.46′													
	L = 849.79′													
C3-1		TPI	75+85.19	2296664.2826	6219649.5214			45	2.50″	1.00″	55	3.75″	2.25″	1.50″
	TOTAL CURVE													
	Δт = 16°49′34" LT													
	Lт = 1019.79′													
	TS IN = 513.32′	CS	80+06.67	2296984.2928	6219934.2151									
	TS OUT = 513.32′					N 42°28′23" E	28.33′							
		SPI	80+35.01	2297005.1916	6219953.3473									
	Ls = 85.00′					N 41°42′29" E	56.67′							
	θs = 1°48′00"	ST	80+91.67	2297047.4961	6219991.0501									
						N 41°42′29" E	299.13′							
	Ls = 70.00′	TS	83+90.80	2297270.8088	6220190.0715									
	θs = 0°42′00"					N 41°42′29" E	46.67′							
		SPI	84+37.47	2297305.6478	6220221.1208									
	Δ = 3°06′44"					N 41°00′29" E	23.33′							
	Dc = 2°00′00"	SC	84+60.80	2297323.2558	6220236.4315									
	R = 2864.93′													
	T = 77.83′													
	L = 155.61′													
C3-2		TPI	85+38.67	2297381.2003	6220288.4549			40	2.25″	1.00″	50	3.50″	2.25″	1.25″
	TOTAL CURVE													
	Δт = 4°30′44" LT													
	Lт = 295.61′													
	TS IN = 147.87′	CS	86+16.41	2297443.4027	6220335.3044									
	TS OUT = 147.87′					N 37°53′46" E	23.33′							
		SPI	86+39.74	2297461.8159	6220349.6366									
	Ls = 70.00′					N 37°11′46" E	46.67′							
	θs = 0°42′00"	ST	86+86.41	2297498.9895	6220377.8489									
						N 37°11′46" E	296.89′							
		PITO	89+83.30	2297735.4829	6220557.3312									
						N 34°19′55" E	61.04′							
T-03	RH No. 20 POTO	PS	90+44.34	2297785.8888	6220591.7569									

CONSTRUCTION DETAILS
RAILROAD TRACK GEOMETRY
C-104

STATE OF CALIFORNIA - DEPARTMENT OF TRANSPORTATION
Caltrans

CONSULTANT FUNCTIONAL SUPERVISOR: GERARD REMINISKEY

CALCULATED-DESIGNED BY: MICHAEL MIHALOVICH
CHECKED BY: JIM CONWAY

REVISED BY
DATE REVISED

LAST REVISION 08-30-10
DATE PLOTTED => 29-APR-2011
TIME PLOTTED => 20:17

Dist	COUNTY	ROUTE	POST MILES TOTAL PROJECT	SHEET No.	TOTAL SHEETS
08	Riv	91	15.6/21.6	191	2028

REGISTERED CIVIL ENGINEER 12-1-10 DATE

4-25-11
PLANS APPROVAL DATE

REGISTERED PROFESSIONAL ENGINEER RUSSELL McNAUGHT No. C65853 Exp. 12/31/11 CIVIL STATE OF CALIFORNIA

THE STATE OF CALIFORNIA OR ITS OFFICERS OR AGENTS SHALL NOT BE RESPONSIBLE FOR THE ACCURACY OR COMPLETENESS OF SCANNED COPIES OF THIS PLAN SHEET.

HDR ONE COMPANY / *Many Solutions*
2280 Market Street, Suite 100
Riverside, CA. 92501
(951) 320-7300

RCTC

FUTURE MAIN TRACK 2 (FMT2)

CURVE/ TURNOUT	CURVE DATA	POINT	STATION	NORTHING	EASTING	BEARING	DISTANCE	FREIGHT S (mph)	FREIGHT E	FREIGHT Eu	PASSENGER S (mph)	PASSENGER E	PASSENGER Eu	ACTUAL Ea
		POT	65+00.00	2296085.0314	6218731.7307									
						N 58°32′04" E	687.04′							
	Ls = 110.00′	TS	71+87.04	2296443.6594	6219317.7478									
	θs = 1°07′39"					N 58°32′04" E	73.33′							
		SPI	72+60.38	2296481.9392	6219380.2990									
	Δ = 17°26′08"					N 57°24′25" E	36.67′							
	Dc = 2°03′00"	SC	72+97.04	2296501.6911	6219411.1925									
	R = 2795.07′													
	T = 428.59′													
	L = 850.52′													
C3-3		TPI	77+27.14	2296725.5810	6219778.4225			45	3.00′′	1.00′′	55	4.25′′	2.25′′	2.00′′
	TOTAL CURVE													
	ΔT = 19°41′25" LT													
	Lt = 1070.52′													
	TS IN = 540.09′	CS	81+47.56	2297061.0179	6220047.6187									
	TS OUT = 540.09′					N 39°58′17" E	36.67′							
		SPI	81+84.23	2297089.1190	6220071.1745									
	Ls = 110.00′					N 38°50′38" E	73.33′							
	θs = 1°07′39"	ST	82+57.56	2297146.2363	6220117.1702									
						N 38°50′38" E	260.68′							
	Ls = 90.00′	TS	85+18.24	2297349.2683	6220280.6689									
	θs = 1°07′30"					N 38°50′38" E	60.00′							
		SPI	85+78.24	2297396.0007	6220318.3018									
	Δ = 2°15′44"					N 37°43′09" E	30.00′							
	Dc = 2°30′00"	SC	86+08.24	2297419.7321	6220336.6562									
	R = 2292.01′													
	T = 45.26′													
	L = 90.49′													
C3-4		TPI	86+53.54	2297454.6490	6220365.5305			40	2.75′′	1.00′′	55	4.50′′	2.75′′	1.75′′
	TOTAL CURVE													
	ΔT = 4°30′44" LT													
	Lt = 270.49′													
	TS IN = 135.30′	CS	86+98.73	2297492.3936	6220390.5956									
	TS OUT = 135.30′					N 35°27′24" E	30.00′							
		SPI	87+28.73	2297516.8311	6220407.9989									
	Ls = 90.00′					N 34°19′55" E	60.00′							
	θs = 1°07′30"	ST	87+88.73	2297566.3792	6220441.8387									
						N 34°19′55" E	311.27′							
		POT	91+00.00	2297823.4211	6220617.3903									

CONSTRUCTION DETAILS
RAILROAD
TRACK GEOMETRY
C-105

STATE OF CALIFORNIA - DEPARTMENT OF TRANSPORTATION
Caltrans

CONSULTANT FUNCTIONAL SUPERVISOR: GERARD REMINISKEY
CALCULATED-DESIGNED BY: MICHAEL MIHALOVICH
CHECKED BY: JIM CONWAY
REVISED BY
DATE REVISED

LAST REVISION 08-30-10
DATE PLOTTED => 29-APR-2011
TIME PLOTTED => 20:17

Dist	COUNTY	ROUTE	POST MILES TOTAL PROJECT	SHEET No.	TOTAL SHEETS
08	Riv	91	15.6/21.6	192	2028

REGISTERED CIVIL ENGINEER — DATE 12-1-10

4-25-11
PLANS APPROVAL DATE

REGISTERED PROFESSIONAL ENGINEER — RUSSELL McNAUGHT — No. C65853 — Exp. 12/31/11 — CIVIL — STATE OF CALIFORNIA

THE STATE OF CALIFORNIA OR ITS OFFICERS OR AGENTS SHALL NOT BE RESPONSIBLE FOR THE ACCURACY OR COMPLETENESS OF SCANNED COPIES OF THIS PLAN SHEET.

HDR — ONE COMPANY / *Many Solutions*
2280 Market Street, Suite 100
Riverside, CA. 92501
(951) 320-7300

RCTC

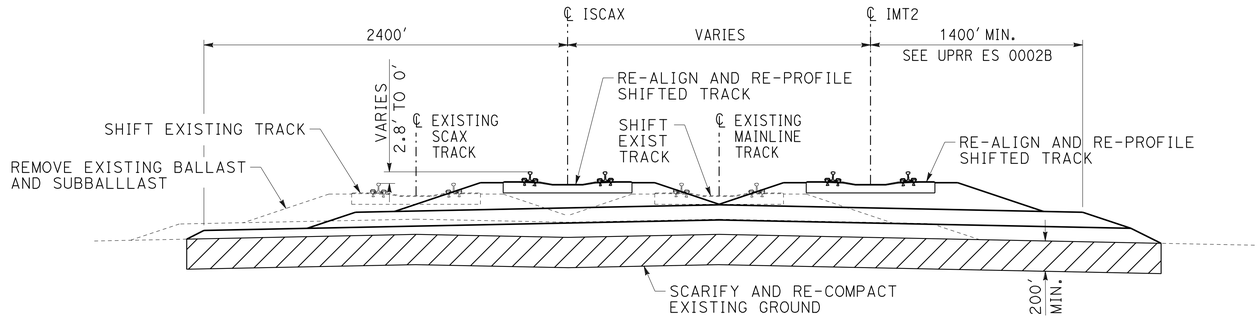

STA 86+32 TO STA 91+00

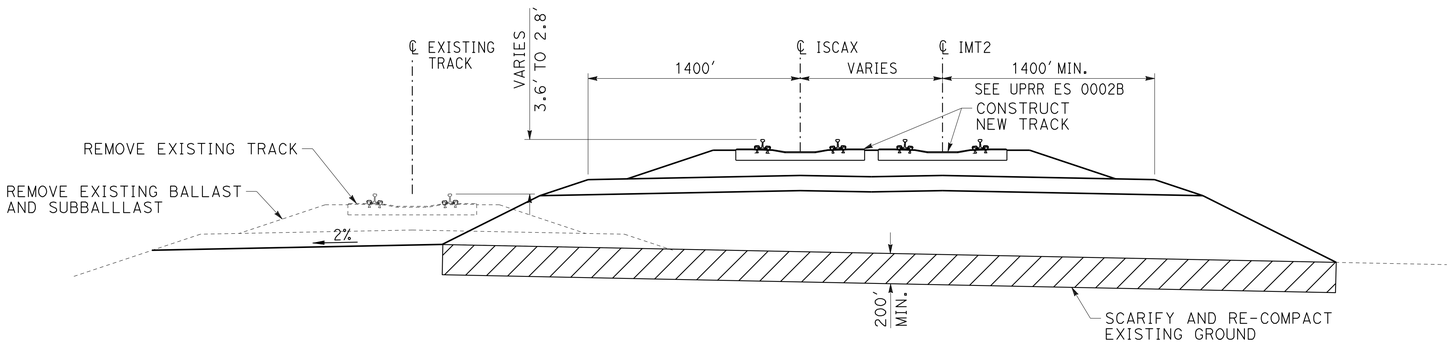

STA 83+10 TO STA 86+32

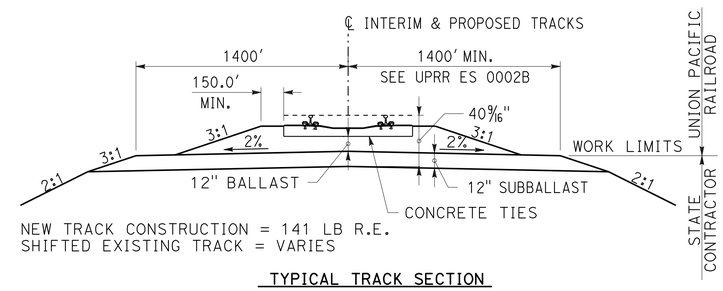

TYPICAL TRACK SECTION
PHASE 1 AND PHASE 2

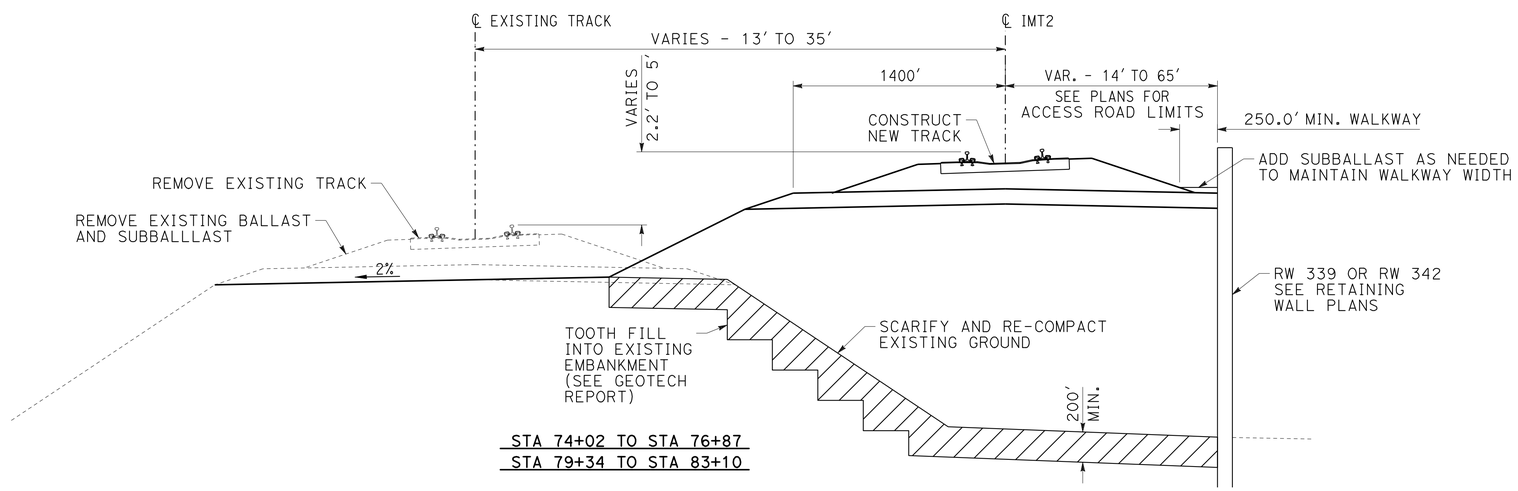

STA 74+02 TO STA 76+87
STA 79+34 TO STA 83+10

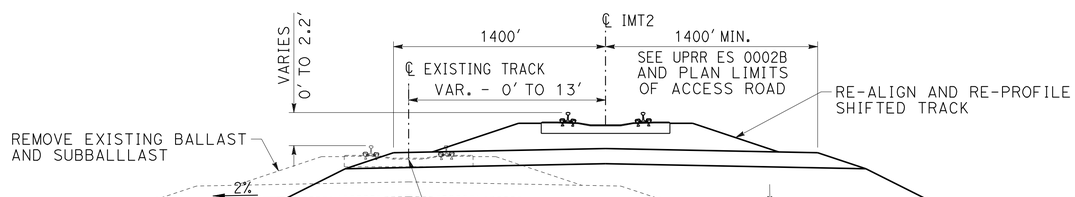

STA 69+76 TO STA 74+02

CONSTRUCTION DETAILS
RAILROAD
TYPICAL SECTIONS
PHASE 1

NO SCALE

C-106

REVISED BY	DATE REVISED
MICHAEL MIHALOVICH	JIM CONWAY
CALCULATED-DESIGNED BY	CHECKED BY
CONSULTANT FUNCTIONAL SUPERVISOR	GERARD REMINISKEY

STATE OF CALIFORNIA - DEPARTMENT OF TRANSPORTATION — Caltrans

LAST REVISION 08-30-10 | DATE PLOTTED => 29-APR-2011 | TIME PLOTTED => 20:17

Dist	COUNTY	ROUTE	POST MILES TOTAL PROJECT	SHEET No.	TOTAL SHEETS
08	Riv	91	15.6/21.6	193	2028

REGISTERED CIVIL ENGINEER — DATE: 12-1-10

4-25-11
PLANS APPROVAL DATE

REGISTERED PROFESSIONAL ENGINEER — RUSSELL McNAUGHT — No. C65853 — Exp. 12/31/11 — CIVIL — STATE OF CALIFORNIA

THE STATE OF CALIFORNIA OR ITS OFFICERS OR AGENTS SHALL NOT BE RESPONSIBLE FOR THE ACCURACY OR COMPLETENESS OF SCANNED COPIES OF THIS PLAN SHEET.

HDR — ONE COMPANY / *Many Solutions*
2280 Market Street, Suite 100
Riverside, CA. 92501
(951) 320-7300

RCTC

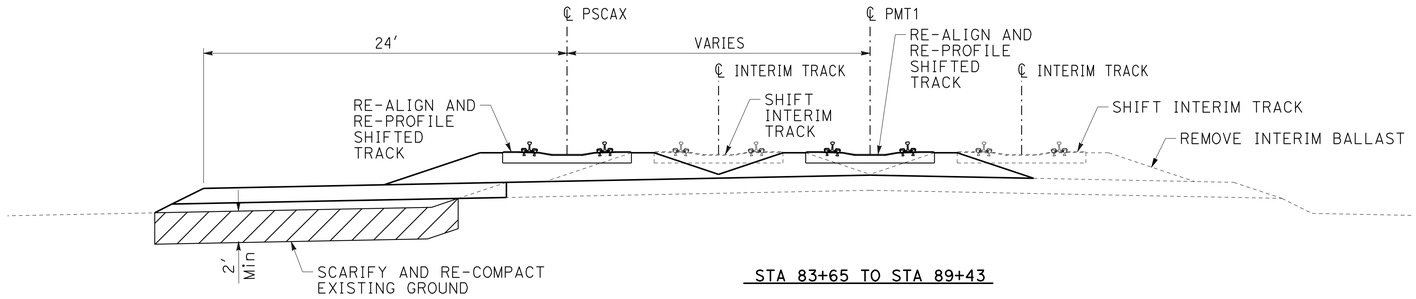

STA 83+65 TO STA 89+43

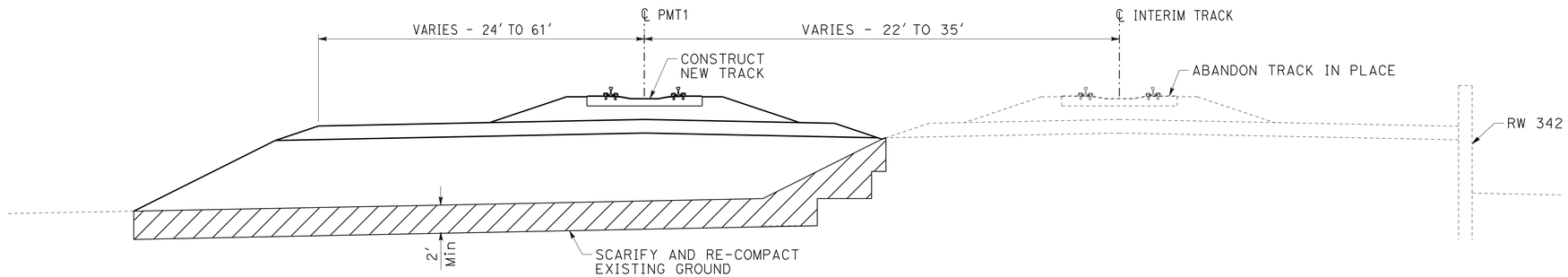

STA 79+68 TO STA 83+65

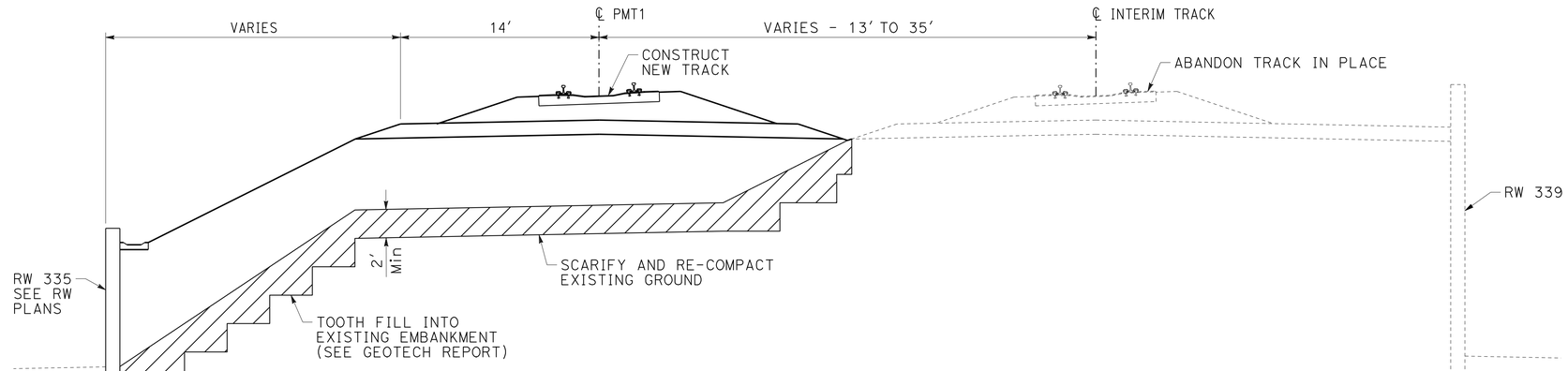

STA 74+02 TO STA 77+14

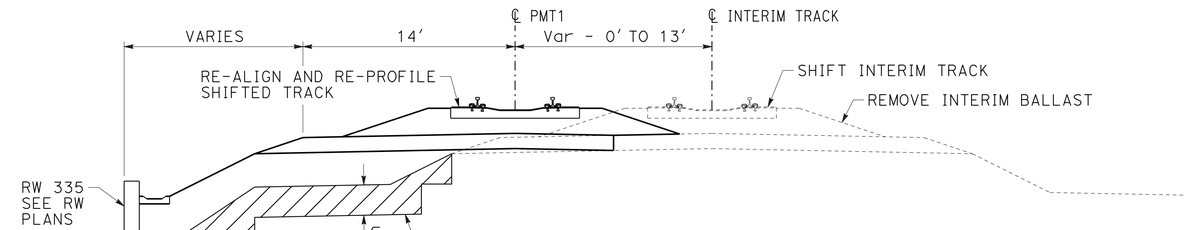

STA 71+72 TO STA 74+02

CONSTRUCTION DETAILS
RAILROAD
TYPICAL SECTIONS
PHASE 2

SCALE: 1" = 5'

C-107

STATE OF CALIFORNIA - DEPARTMENT OF TRANSPORTATION — Caltrans

CONSULTANT FUNCTIONAL SUPERVISOR: GERARD REMINISKEY

CALCULATED-DESIGNED BY: MICHAEL MIHALOVICH

CHECKED BY: JIM CONWAY

REVISED BY | DATE REVISED

LAST REVISION 08-30-10 | DATE PLOTTED => 29-APR-2011 | TIME PLOTTED => 20:17

Dist	COUNTY	ROUTE	POST MILES TOTAL PROJECT	SHEET No.	TOTAL SHEETS
08	Riv	91	15.6/21.6	194	2028

REGISTERED CIVIL ENGINEER — DATE: 12-1-10

4-25-11
PLANS APPROVAL DATE

REGISTERED PROFESSIONAL ENGINEER — RUSSELL McNAUGHT — No. C65853 — Exp. 12/31/11 — CIVIL — STATE OF CALIFORNIA

THE STATE OF CALIFORNIA OR ITS OFFICERS OR AGENTS SHALL NOT BE RESPONSIBLE FOR THE ACCURACY OR COMPLETENESS OF SCANNED COPIES OF THIS PLAN SHEET.

HDR — ONE COMPANY / *Many Solutions*
2280 Market Street, Suite 100
Riverside, CA. 92501
(951) 320-7300

RCTC

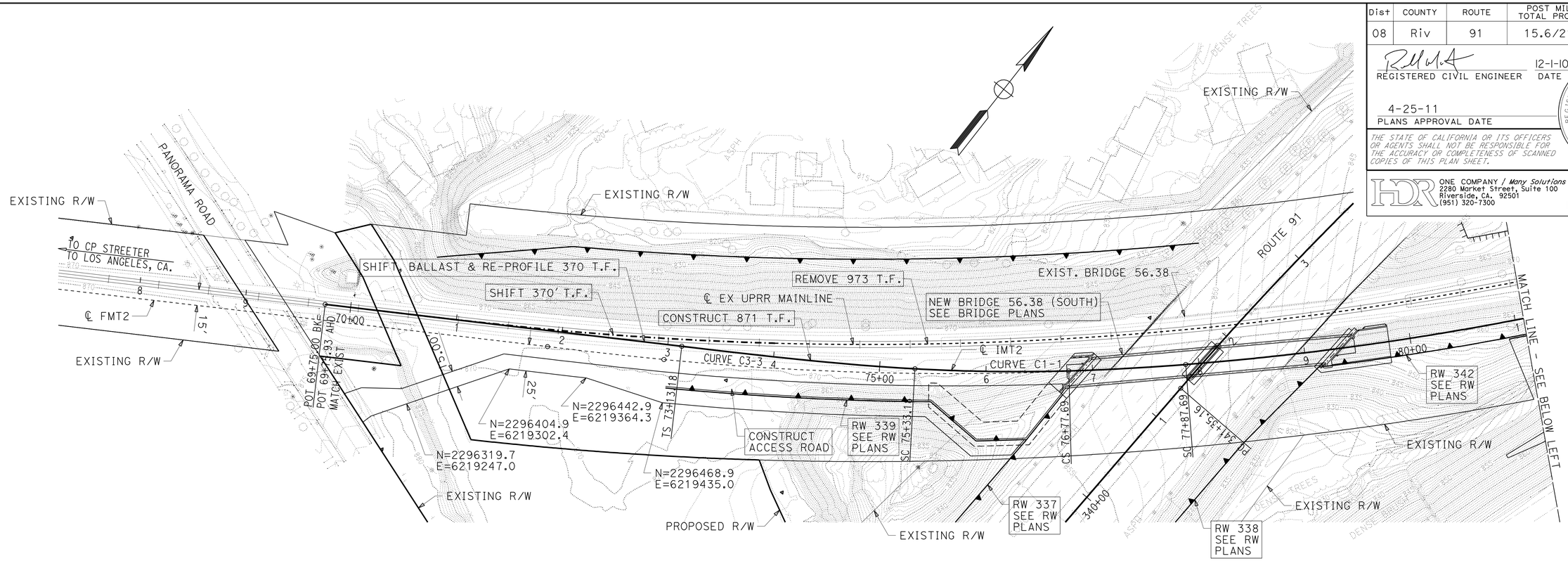

CONSTRUCTION DETAILS
RAILROAD
PHASE 1 LAYOUT

SCALE: 1" = 50'

C-108

REVISED BY	DATE REVISED
MICHAEL MIHALOVICH	JIM CONWAY
CALCULATED-DESIGNED BY	CHECKED BY
CONSULTANT FUNCTIONAL SUPERVISOR	GERARD REMINISKEY

STATE OF CALIFORNIA - DEPARTMENT OF TRANSPORTATION — Caltrans

LAST REVISION 08-30-10 | DATE PLOTTED => 29-APR-2011 | TIME PLOTTED => 20:17

Dist	COUNTY	ROUTE	POST MILES TOTAL PROJECT	SHEET No.	TOTAL SHEETS
08	Riv	91	15.6/21.6	195	2028

REGISTERED CIVIL ENGINEER 12-1-10 DATE

4-25-11
PLANS APPROVAL DATE

REGISTERED PROFESSIONAL ENGINEER RUSSELL McNAUGHT No. C65853 Exp. 12/31/11 CIVIL STATE OF CALIFORNIA

THE STATE OF CALIFORNIA OR ITS OFFICERS OR AGENTS SHALL NOT BE RESPONSIBLE FOR THE ACCURACY OR COMPLETENESS OF SCANNED COPIES OF THIS PLAN SHEET.

HDR ONE COMPANY / Many Solutions
2280 Market Street, Suite 100
Riverside, CA. 92501
(951) 320-7300

RCTC

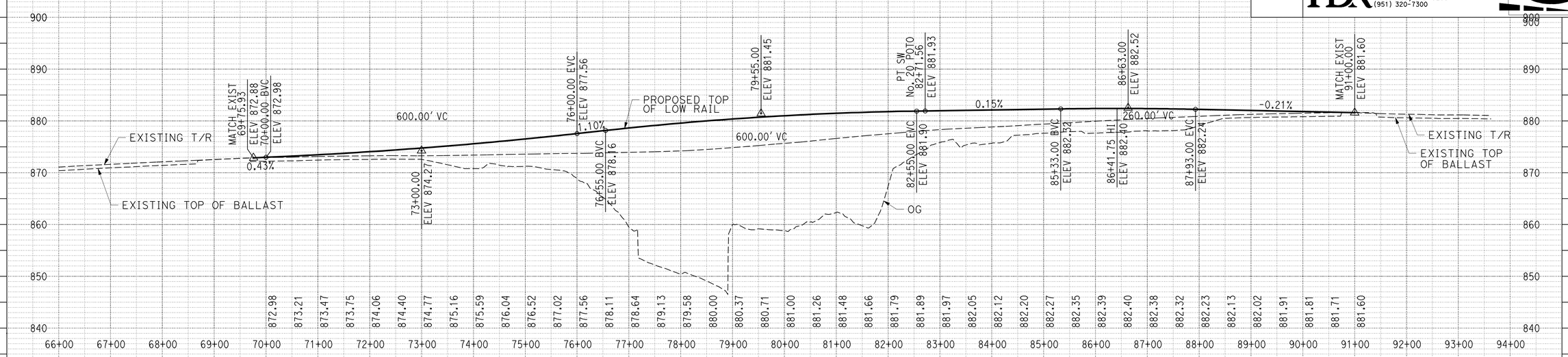

PROFILE

INTERIM MAIN TRACK 2 (IMT2)

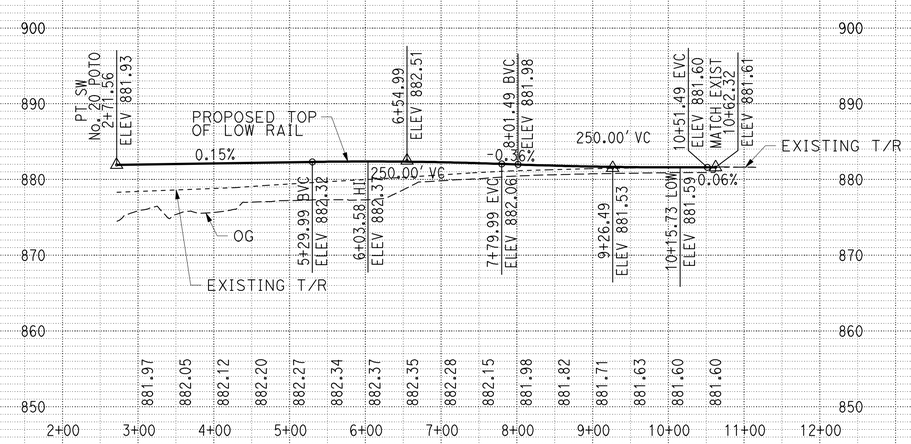

PROFILE

INTERIM SCAX TRACK (ISCAX)

CONSTRUCTION DETAILS
RAILROAD
PHASE 1 PROFILES

SCALE: HORZ 1"=100'
VERT 1"=10'

C-109

STATE OF CALIFORNIA - DEPARTMENT OF TRANSPORTATION
Caltrans

CONSULTANT FUNCTIONAL SUPERVISOR: GERARD REMINISKEY
CALCULATED-DESIGNED BY: MICHAEL MIHALOVICH
CHECKED BY: JIM CONWAY
REVISED BY / DATE REVISED

LAST REVISION 08-30-10
DATE PLOTTED => 29-APR-2011
TIME PLOTTED => 20:17

Dist	COUNTY	ROUTE	POST MILES TOTAL PROJECT	SHEET No.	TOTAL SHEETS
08	Riv	91	15.6/21.6	196	2028

REGISTERED CIVIL ENGINEER — DATE: 12-1-10

4-25-11
PLANS APPROVAL DATE

REGISTERED PROFESSIONAL ENGINEER — RUSSELL McNAUGHT — No. C65853 — Exp. 12/31/11 — CIVIL — STATE OF CALIFORNIA

THE STATE OF CALIFORNIA OR ITS OFFICERS OR AGENTS SHALL NOT BE RESPONSIBLE FOR THE ACCURACY OR COMPLETENESS OF SCANNED COPIES OF THIS PLAN SHEET.

HDR — ONE COMPANY / *Many Solutions*
2280 Market Street, Suite 100
Riverside, CA. 92501
(951) 320-7300

RCTC

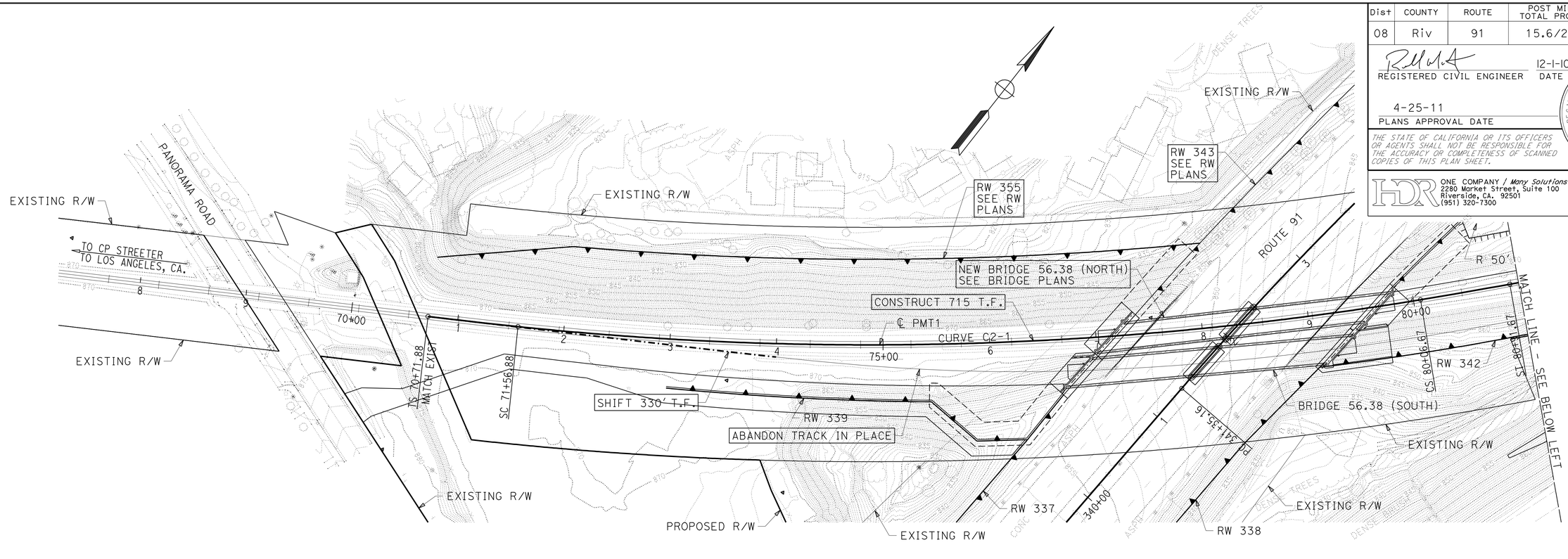

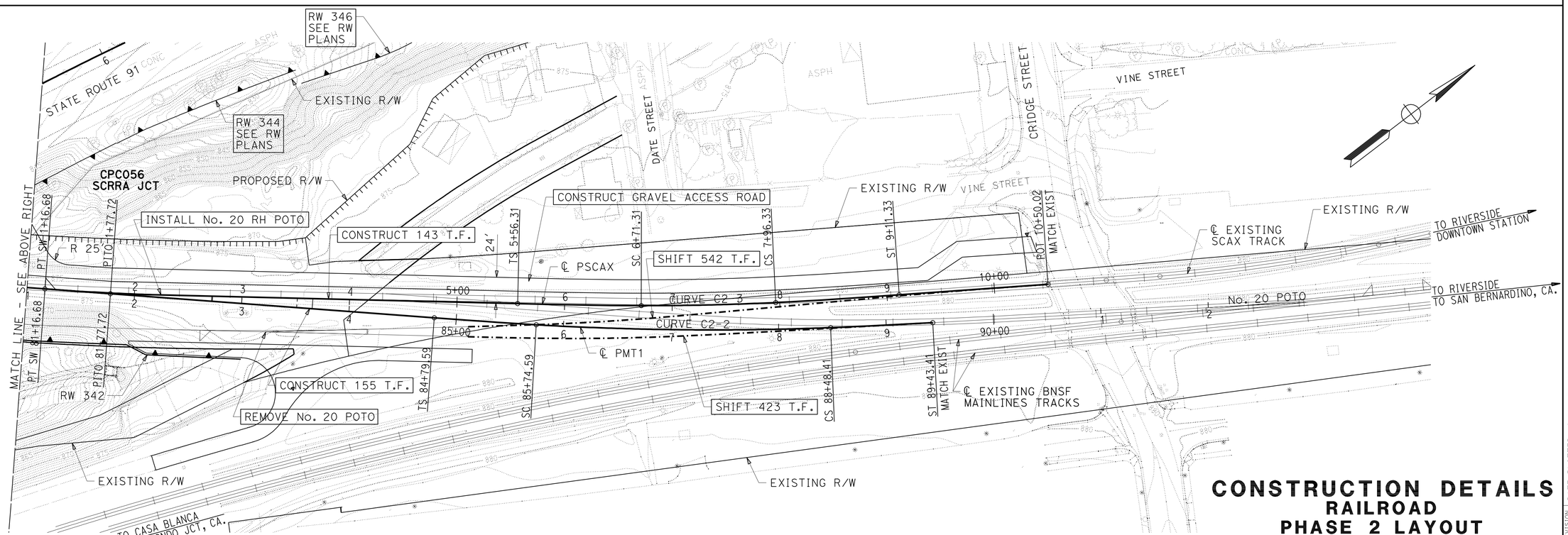

CONSTRUCTION DETAILS
RAILROAD
PHASE 2 LAYOUT

SCALE: 1" = 50'

C-110

REVISED BY	DATE REVISED
MICHAEL MIHALOVICH	JIM CONWAY

CALCULATED-DESIGNED BY — CHECKED BY

CONSULTANT FUNCTIONAL SUPERVISOR: GERARD REMINISKEY

STATE OF CALIFORNIA - DEPARTMENT OF TRANSPORTATION — Caltrans

LAST REVISION 08-30-10 — DATE PLOTTED => 29-APR-2011 — TIME PLOTTED => 20:17

Dist	COUNTY	ROUTE	POST MILES TOTAL PROJECT	SHEET No.	TOTAL SHEETS
08	Riv	91	15.6/21.6	197	2028

REGISTERED CIVIL ENGINEER — DATE 12-1-10

4-25-11
PLANS APPROVAL DATE

REGISTERED PROFESSIONAL ENGINEER — RUSSELL McNAUGHT — No. C65853 — Exp. 12/31/11 — CIVIL — STATE OF CALIFORNIA

THE STATE OF CALIFORNIA OR ITS OFFICERS OR AGENTS SHALL NOT BE RESPONSIBLE FOR THE ACCURACY OR COMPLETENESS OF SCANNED COPIES OF THIS PLAN SHEET.

HDR — ONE COMPANY / *Many Solutions*
2280 Market Street, Suite 100
Riverside, CA. 92501
(951) 320-7300

RCTC

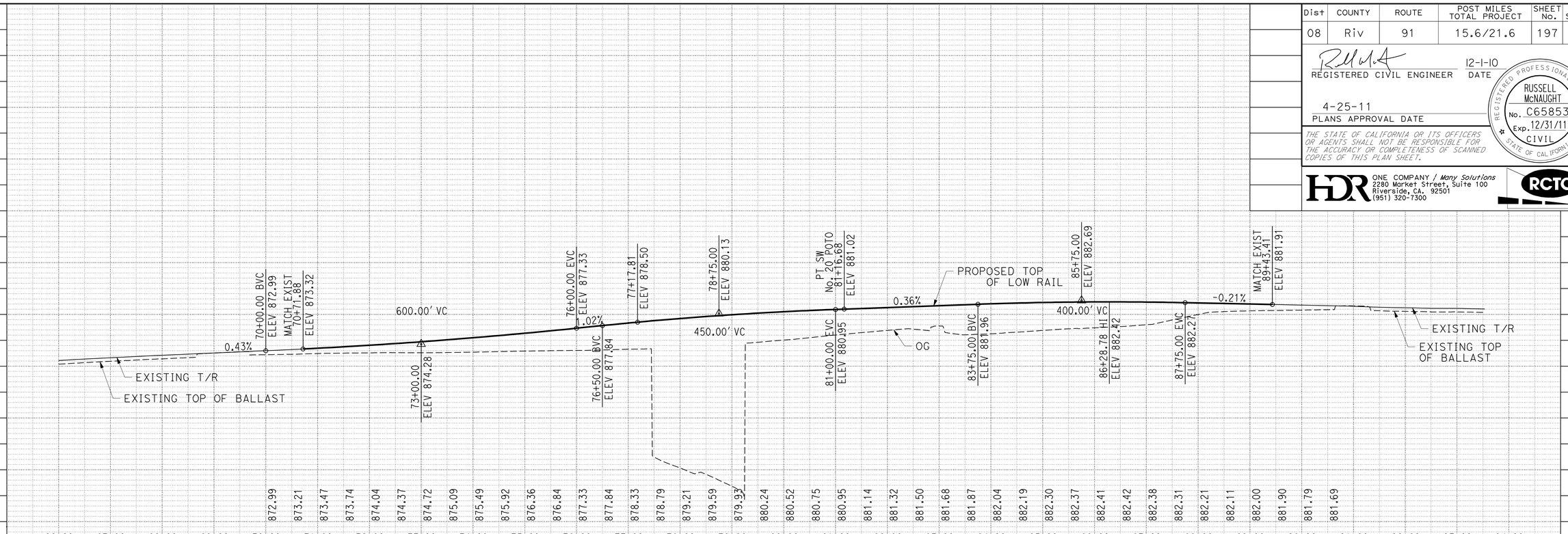

PROFILE

PROPOSED MAIN TRACK 1 (PMT1)

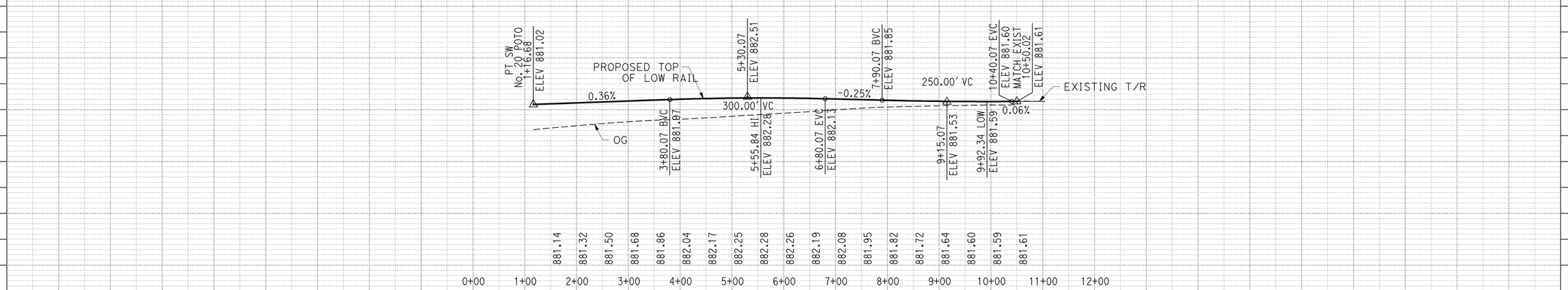

PROFILE

PROPOSED SCAX TRACK (PSCAX)

CONSTRUCTION DETAILS
RAILROAD
PHASE 2 PROFILES

SCALE: HORZ 1"=100'
VERT 1"=10'

C-111

REVISED BY | DATE REVISED
MICHAEL MIHALOVICH | JIM CONWAY
CALCULATED-DESIGNED BY | CHECKED BY
CONSULTANT FUNCTIONAL SUPERVISOR: GERARD REMINISKEY
STATE OF CALIFORNIA - DEPARTMENT OF TRANSPORTATION — Caltrans

LAST REVISION 08-30-10 | DATE PLOTTED => 29-APR-2011 | TIME PLOTTED => 20:18

Dist	COUNTY	ROUTE	POST MILES TOTAL PROJECT	SHEET No.	TOTAL SHEETS
08	Riv	91	15.6/21.6	198	2028

REGISTERED CIVIL ENGINEER 12-1-10 DATE

4-25-11
PLANS APPROVAL DATE

REGISTERED PROFESSIONAL ENGINEER RUSSELL McNAUGHT No. C65853 Exp. 12/31/11 CIVIL STATE OF CALIFORNIA

THE STATE OF CALIFORNIA OR ITS OFFICERS OR AGENTS SHALL NOT BE RESPONSIBLE FOR THE ACCURACY OR COMPLETENESS OF SCANNED COPIES OF THIS PLAN SHEET.

HDR ONE COMPANY / *Many Solutions*
2280 Market Street, Suite 100
Riverside, CA. 92501
(951) 320-7300

RCTC

NOTE:

1. REFERENCES BELOW TO "STATE" IMPLIES STATE CONTRACTOR.

2. REFERENCES BELOW TO "UPRR" IMPLIES UNION PACIFIC RAILROAD PERSONNEL.

PHASE 1 RAILROAD CONSTRUCTION:

1. WORK TO BE COMPLETED PRIOR TO RAILROAD WORK
   A. STATE - CONSTRUCT NEW BRIDGE 56.4 (SOUTH)
   B. STATE - CONSTRUCT RETAINING WALLS RW 337, RW 338, RW 339 AND RW 342

2. INTERIM MAIN TRACK 2 (IMT2) FROM APPROX. STA. 74+00 TO STA. 85+50
   A. STATE - COMPLETE COMPACTED ROADBED AND SUBBALLAST PLACEMENT
   B. UPRR - CONSTRUCT SKELETON TRACK (TIES AND RAILS) AND No. 20 TURNOUT ON TOP OF SUBBALLAST
   C. INSTALL NEW SIGNAL HOUSE, INTERIM SIGNALS, CONNECTIONS TO INTERIM TURNOUT (BY UPRR)

3. WEEKEND CLOSURE
   A. TAKE EXISTING MAINLINE AND SCAX TRACKS OUT OF SERVICE (UPRR)
   B. CUT AND SHIFT EXISTING MAINLINE TRACK FROM STA. 70+30 TO 74+00
   C. CUT AND SHIFT EXISTING MAINLINE TRACK FROM STA. 86+30 TO 90+45
   D. CUT AND SHIFT EXISTING SCAX TRACK FROM STA. 86+20 TO 90+50
   E. THE ABOVE SHIFTS ARE NOT TO INTERIM ALIGNMENTS, BUT RATHER TO CLEAR THE FOLLOWING BALLAST REMOVAL AND SUBGRADE CONSTRUCTION
   F. REMOVE EXISTING BALLAST AND SUBBALLAST ALONG ABOVE LIMITS
   G. COMPLETE COMPACTED ROADBED AND SUBBALLAST PLACEMENT ALONG ABOVE LIMITS
   H. ALIGN SHIFTED TRACK ONTO SUBBALLAST ALONG INTERIM ALIGNMENTS
   I. CONSTRUCT REMAINING IMT2 AND ISCAX NEW TRACK AND CONNECT TO SHIFTED TRACK
   J. BALLAST AND PROFILE ENTIRE LENGTH OF INTERIM ALIGNMENTS
   K. TEST AND ACTIVATE INTERIM TURNOUT AND SIGNALS (UPRR)
   L. RESTORE RAIL SERVICE ON INTERIM ALIGNMENTS (UPRR)

4. REMOVE EXISTING No. 20 TURNOUT (NEAR STA. 84+00) AND MAINLINE TRACK FROM STA. 74+00 TO STA. 83+70

PHASE 2 RAILROAD CONSTRUCTION:

1. WORK TO BE COMPLETED PRIOR TO RAILROAD WORK
   A. DEMOLISH EXISTING BRIDGE 56.4
   B. CONSTRUCT NEW BRIDGE 56.4 (NORTH)
   C. CONSTRUCT RETAINING WALLS RW 355, RW 343, AND RW 344

2. COMPLETE COMPACTED ROADBED AND SUBBALLAST PLACEMENT FROM STA. 70+70 TO STA. 90+50

3. PROPOSED MAIN TRACK 1 (PMT1) FROM APPROX. STA. 74+00 TO STA. 85+20
   A. CONSTRUCT SKELETON TRACK (TIES AND RAILS) AND No. 20 TURNOUT ON TOP OF SUBBALLAST
   B. INSTALL PROPOSED SIGNALS AND CONNECTIONS TO PROPOSED TURNOUT (BY UPRR)

4. WEEKEND CLOSURE
   A. TAKE INTERIM MAINLINE AND SCAX TRACKS OUT OF SERVICE (UPRR)
   B. CUT AND SHIFT INTERIM MAINLINE TRACK FROM STA. 70+70 TO 74+00
   C. CUT AND SHIFT INTERIM MAINLINE TRACK FROM STA. 85+20 TO 89+40
   D. CUT AND SHIFT INTERIM SCAX TRACK FROM STA. 85+20 TO 90+50
   E. ALIGN SHIFTED TRACK ALONG PROPOSED ALIGNMENTS
   F. CONSTRUCT REMAINING NEW TRACK AND CONNECT TO SHIFTED TRACK
   G. SHIFT ABANDONED TRACK AWAY FROM PROPOSED ALIGNMENT (NEAR STA. 74+00)
   H. BALLAST AND PROFILE ENTIRE LENGTH OF PROPOSED ALIGNMENTS
   I. TEST AND ACTIVATE PROPOSED TURNOUT AND SIGNALS (UPRR)
   J. RESTORE RAIL SERVICE ON PROPOSED ALIGNMENTS (UPRR)

5. REMOVE INTERIM No. 20 TURNOUT (NEAR STA. 83+00)

CONSTRUCTION DETAILS
RAILROAD CONSTRUCTION STAGING
C-112

REVISED BY	DATE REVISED

MICHAEL MIHALOVICH
JIM CONWAY
CALCULATED-DESIGNED BY
CHECKED BY
CONSULTANT FUNCTIONAL SUPERVISOR
GERARD REMINISKEY

STATE OF CALIFORNIA - DEPARTMENT OF TRANSPORTATION
Caltrans

LAST REVISION 08-30-10
DATE PLOTTED => 29-APR-2011
TIME PLOTTED => 20:18

Dist	COUNTY	ROUTE	POST MILES TOTAL PROJECT	SHEET No.	TOTAL SHEETS
08	Riv	91	15.6/21.6	199	2028

Touhida Haider 4-26-11
REGISTERED CIVIL ENGINEER DATE

4-25-11
PLANS APPROVAL DATE

REGISTERED PROFESSIONAL ENGINEER
TOUHIDA HAIDER
No. C 74470
Exp. 12/31/11
CIVIL
STATE OF CALIFORNIA

THE STATE OF CALIFORNIA OR ITS OFFICERS OR AGENTS SHALL NOT BE RESPONSIBLE FOR THE ACCURACY OR COMPLETENESS OF SCANNED COPIES OF THIS PLAN SHEET.

NOTE:

THE QUANTITY OF CONSTRUCTION SITE BMPs SHOWN ON THIS QUANTITIY SHEET (WPCQ-1) ARE INTENDED TO BE USED AS GUIDE LINES ONLY.
FIELD CONDITION MAY NECESSITATE MODIFICATION OR RELOCATION OF BMPs. AND ITS QUANTITIES AS PER INSTRUCTION OF ENGINEER.

TEMPORARY CONSTRUCTION SITE BMPs

TEMPORARY CONSTRUCTION SITE BMPs	UNITS	QUANTITIES
TEMPORARY FIBER ROLL	LF	56000
TEMPORARY CONSTRUCTION ENTRANCE	EA	8
MOVE-IN/MOVE-OUT (TEMPORARY EROSION CONTROL)	EA	18
TEMPORARY DRAINAGE INLET PROTECTION	EA	175
TEMPORARY CONCRETE WASHOUT BIN	EA	5
TEMPORARY CHECK DAM	LF	21000
RAIN EVENT ACTION PLAN	DAY	86
STORM WATER ANNUAL REPORT	EA	4
STORM WATER SAMPLING AND ANALYSIS DAY	DAY	28
TEMPORARY SOIL BINDER	SQYD	311000

TEMPORARY WATER POLLUTION CONTROL QUANTITIES

WPCQ-1

THIS PLAN ACCURATE FOR WATER POLLUTION CONTROL WORK ONLY

REVISED BY | DATE REVISED
TOUHIDA HAIDER | PAUL LAMBERT
CALCULATED-DESIGNED BY | CHECKED BY
FUNCTIONAL SUPERVISOR: PAUL LAMBERT
STATE OF CALIFORNIA - DEPARTMENT OF TRANSPORTATION
Caltrans® DESIGN

LAST REVISION 04-26-11 | DATE PLOTTED => 04-MAY-2011 | TIME PLOTTED => 11:07

NOTE: FOR COMPLETE RIGHT OF WAY AND ACCURATE ACCESS DATA, SEE RIGHT OF WAY RECORD MAPS AT DISTRICT OFFICE.

Dist	COUNTY	ROUTE	POST MILES TOTAL PROJECT	SHEET No.	TOTAL SHEETS
08	Riv	91	15.6/21.6	200	2028

REGISTERED CIVIL ENGINEER 4-21-11 DATE

4-25-11
PLANS APPROVAL DATE

REGISTERED PROFESSIONAL ENGINEER THOMAS HIEN NGO No. 68383 Exp. 9/30/11 CIVIL STATE OF CALIFORNIA

THE STATE OF CALIFORNIA OR ITS OFFICERS OR AGENTS SHALL NOT BE RESPONSIBLE FOR THE ACCURACY OR COMPLETENESS OF SCANNED COPIES OF THIS PLAN SHEET.

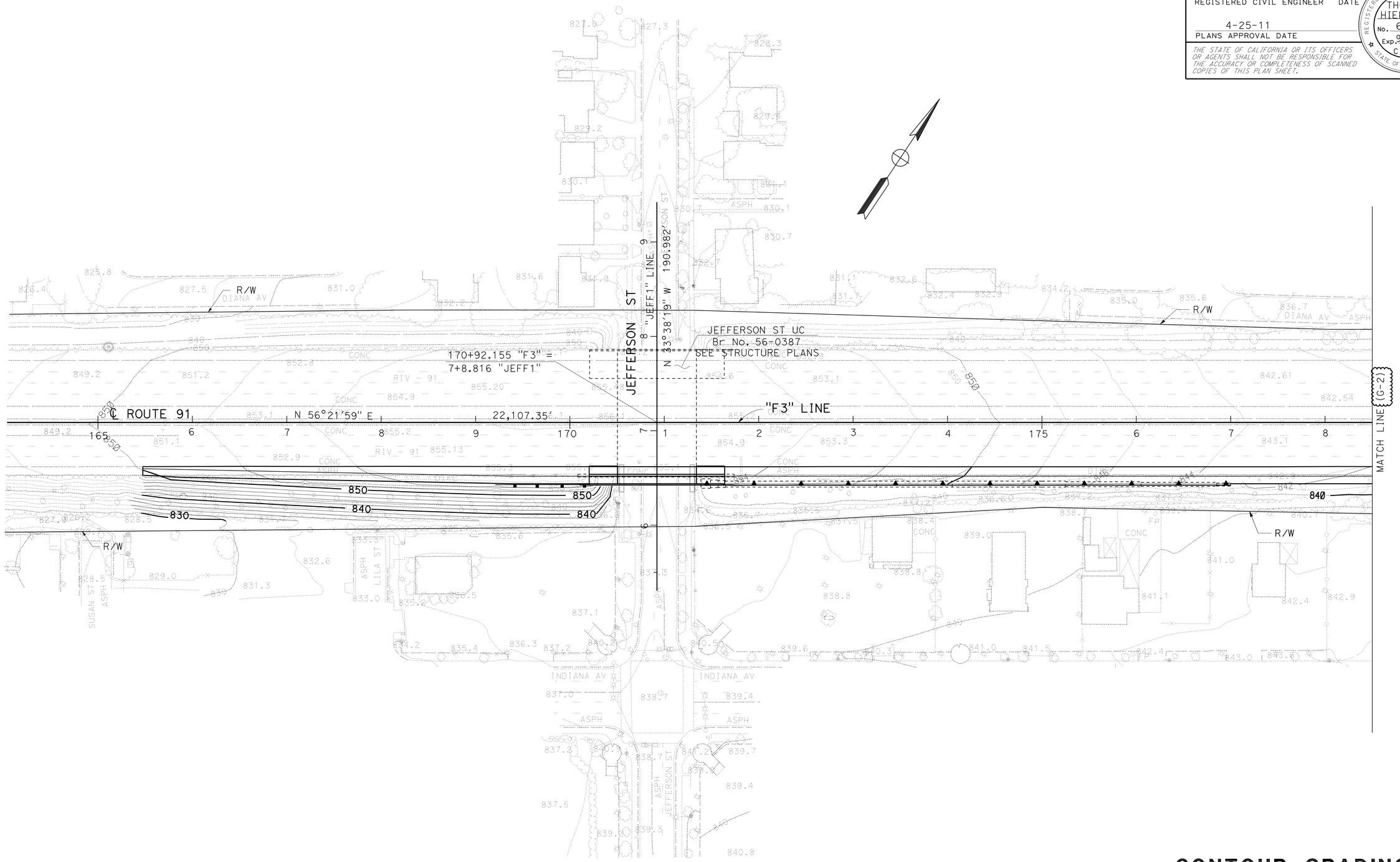

CONTOUR GRADING

SCALE: 1" = 50'

G-1

THAI VAN HGUYEN — CALCULATED-DESIGNED BY
THOMAS HIEN NGO — CHECKED BY
REVISED BY — DATE REVISED
MARK PERTILE — FUNCTIONAL SUPERVISOR

STATE OF CALIFORNIA - DEPARTMENT OF TRANSPORTATION
Caltrans®
DESIGN

LAST REVISION 04-21-11
DATE PLOTTED => 29-APR-2011
TIME PLOTTED => 17:27