Dist	COUNTY	ROUTE	POST MILES TOTAL PROJECT	SHEET No.	TOTAL SHEETS
08	Riv	91	15.6/21.6	19	2028

REGISTERED CIVIL ENGINEER — DATE 10-28-11

4-25-11
PLANS APPROVAL DATE

REGISTERED PROFESSIONAL ENGINEER — THOMAS HIEN NGO — No. 68383 — Exp. 9/30/11 — CIVIL — STATE OF CALIFORNIA

THE STATE OF CALIFORNIA OR ITS OFFICERS OR AGENTS SHALL NOT BE RESPONSIBLE FOR THE ACCURACY OR COMPLETENESS OF SCANNED COPIES OF THIS PLAN SHEET.

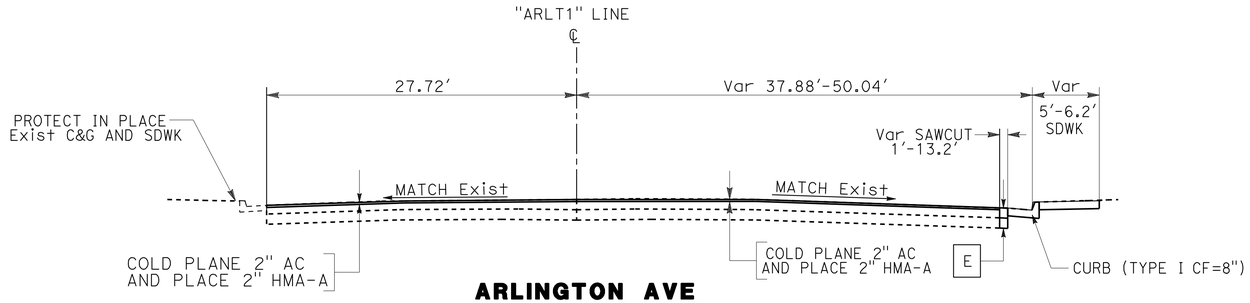

ARLINGTON AVE

STA 30+10 TO STA 33+00

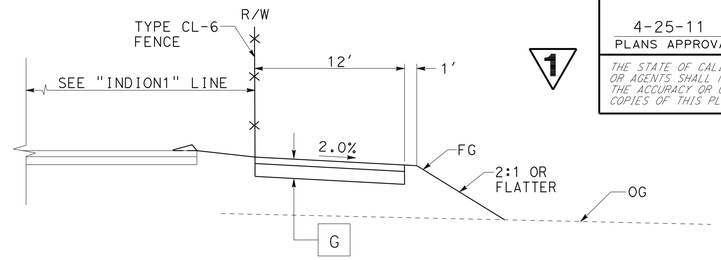

MAINTENANCE ACCESS ROAD

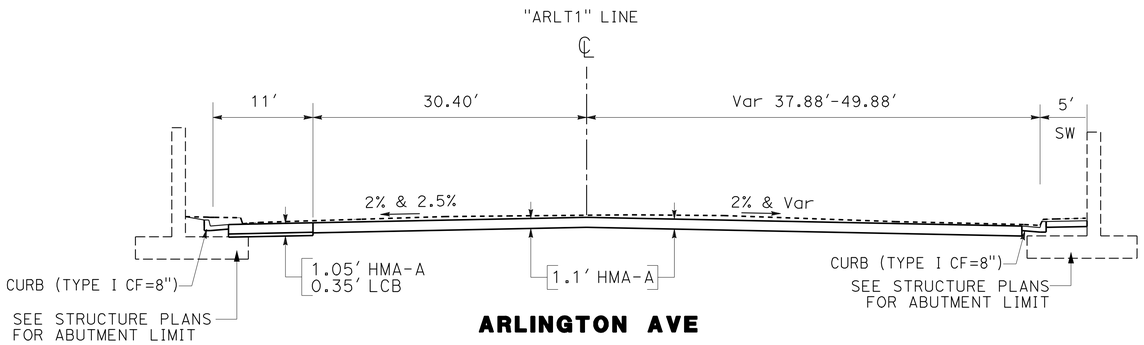

ARLINGTON AVE

STA 32+89.59 TO STA 37+55

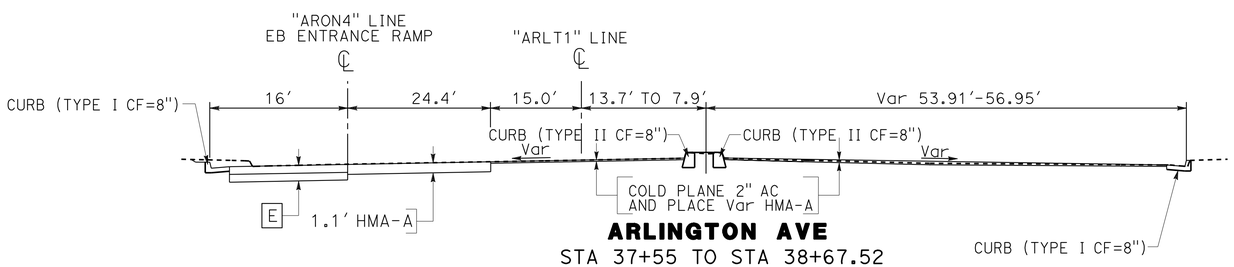

ARLINGTON AVE

STA 37+55 TO STA 38+67.52

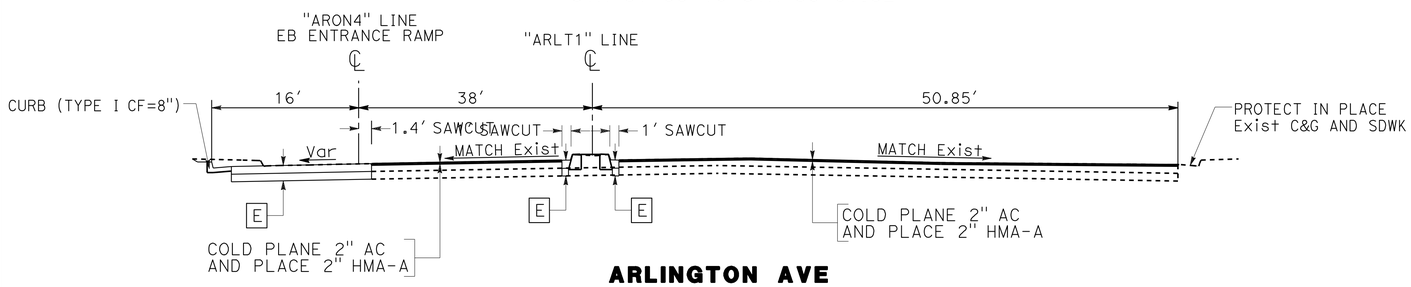

ARLINGTON AVE

STA 38+67.52 TO STA 39+78.7

1 **REVISED PER ADDENDUM No. 1 DATED NOVEMBER 8, 2011**

TYPICAL CROSS SECTIONS

NO SCALE

X-18

REVISED BY	DATE REVISED

CALCULATED-DESIGNED BY	CHECKED BY
THAI VAN HGUYEN	THOMAS HIEN NGO

FUNCTIONAL SUPERVISOR: MARK PERTILE

STATE OF CALIFORNIA - DEPARTMENT OF TRANSPORTATION — Caltrans — DESIGN

LAST REVISION 10-13-11 — DATE PLOTTED => 08-NOV-2011 — TIME PLOTTED => 11:11

Dist	COUNTY	ROUTE	POST MILES TOTAL PROJECT	SHEET No.	TOTAL SHEETS
08	Riv	91	15.6/21.6	37	2028

REGISTERED CIVIL ENGINEER — DATE 10-28-11

4-25-11
PLANS APPROVAL DATE

REGISTERED PROFESSIONAL ENGINEER CUONG LE TRAN No. C60436 Exp 6-30-12 CIVIL STATE OF CALIFORNIA

THE STATE OF CALIFORNIA OR ITS OFFICERS OR AGENTS SHALL NOT BE RESPONSIBLE FOR THE ACCURACY OR COMPLETENESS OF SCANNED COPIES OF THIS PLAN SHEET.

NOTE:

1. FOR ACCURATE RIGHT OF WAY AND ACCESS DATA, CONTACT RIGHT OF WAY ENGINEERING AT THE DISTRICT OFFICE.
2. CONSTRUCT DRIVEWAY APPROACH, TYPE CURB III WITH A=28′, B=34′, SEE SHEET C-77

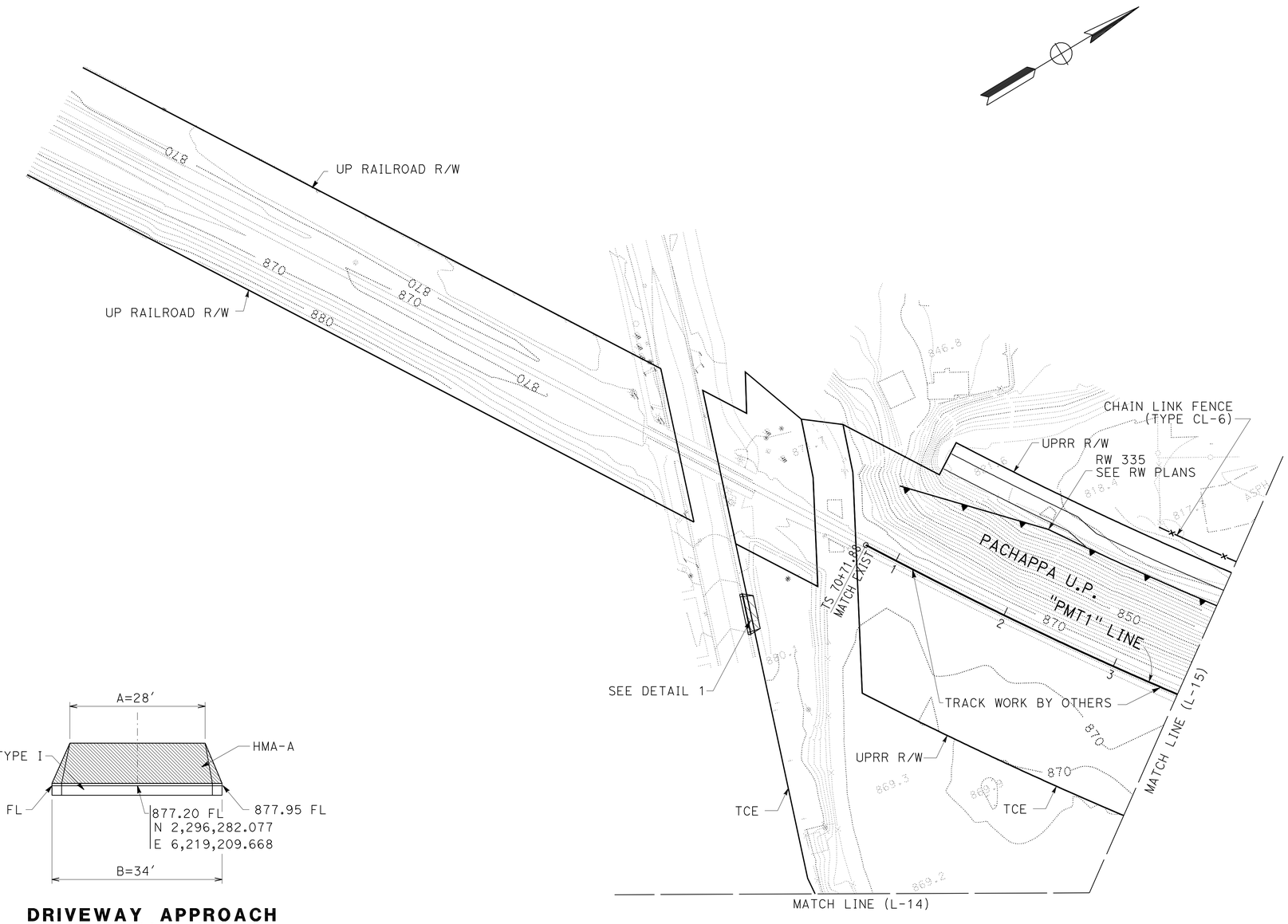

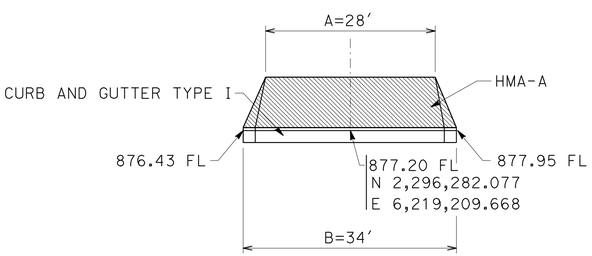

DRIVEWAY APPROACH DETAIL 1

1 **REVISED PER ADDENDUM No. 1 DATED NOVEMBER 8, 2011**

LAYOUT
SCALE: 1" = 50′
L-16

STATE OF CALIFORNIA - DEPARTMENT OF TRANSPORTATION
Caltrans
DESIGN
FUNCTIONAL SUPERVISOR: MARK PERTILE
CALCULATED-DESIGNED BY: ANNABELL WANG
CHECKED BY: CUONG LE TRAN
REVISED BY
DATE REVISED

LAST REVISION 10-13-11 | DATE PLOTTED => 08-NOV-2011 | TIME PLOTTED => 11:11

Dist	COUNTY	ROUTE	POST MILES TOTAL PROJECT	SHEET No.	TOTAL SHEETS
08	Riv	91	15.6/21.6	40	2028

REGISTERED CIVIL ENGINEER 10-28-11 DATE

4-25-11
PLANS APPROVAL DATE

REGISTERED PROFESSIONAL ENGINEER CUONG LE TRAN No. C60436 Exp. 6-30-12 CIVIL STATE OF CALIFORNIA

THE STATE OF CALIFORNIA OR ITS OFFICERS OR AGENTS SHALL NOT BE RESPONSIBLE FOR THE ACCURACY OR COMPLETENESS OF SCANNED COPIES OF THIS PLAN SHEET.

NOTES:

1. FOR COMPLETE RIGHT OF WAY AND ACCURATE ACCESS DATA, SEE RIGHT OF WAY RECORD MAPS AT DISTRICT OFFICE.
2. CRASH CUSHION (TYPE CAT), SEE Std PLAN A82A1.

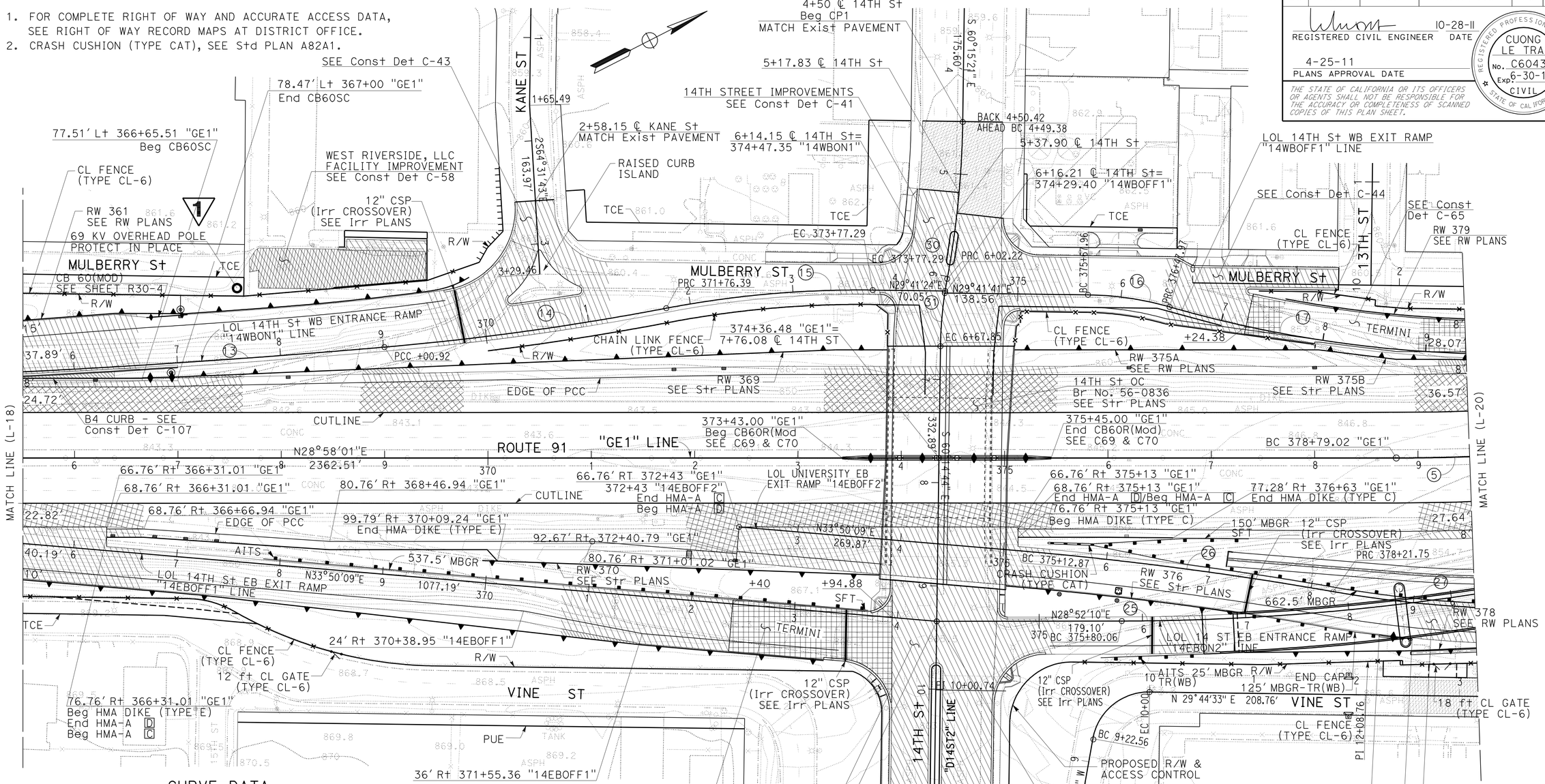

CURVE DATA

No.	R	Δ	T	L
5	2000.00'	15°54'8"	279.35'	555.10'
13	9820.00'	3°47'47"	325.46'	650.69'
14	2700.00'	5°50'44"	137.85'	275.47'
15	1000.00'	11°30'39"	100.79'	200.90'
16	300.00'	15°16'51"	40.24'	80.01'
17	1180.00'	34°58'25"	371.75'	720.28'
25	2300.00'	18°50'58"	381.78'	756.66'
26	3500.00'	5°3'23"	154.54'	308.88'
27	1100.00'	29°59'16"	294.62'	575.73'
30	900.00'	9°43'48"	76.60'	152.84'
31	386.90'	9°43'11"	32.90'	65.63'
32	60.00'	70°42'15"	42.56'	74.04'

1 REVISED PER ADDENDUM No. 1 DATED NOVEMBER 8, 2011

LAYOUT

SCALE: 1" = 50'

L-19

STATE OF CALIFORNIA - DEPARTMENT OF TRANSPORTATION

Caltrans DESIGN

FUNCTIONAL SUPERVISOR: MARK PERTILE

CALCULATED-DESIGNED BY: ANNABELL WANG

CHECKED BY: CUONG LE TRAN

REVISED BY / DATE REVISED

LAST REVISION 10-24-11 | DATE PLOTTED => 08-NOV-2011 | TIME PLOTTED => 11:11

Dist	COUNTY	ROUTE	POST MILES TOTAL PROJECT	SHEET No.	TOTAL SHEETS
08	Riv	91	15.6/21.6	41	2028

REGISTERED CIVIL ENGINEER 10-28-11 DATE

4-25-11
PLANS APPROVAL DATE

REGISTERED PROFESSIONAL ENGINEER CUONG LE TRAN No. C60436 Exp. 6-30-12 CIVIL STATE OF CALIFORNIA

THE STATE OF CALIFORNIA OR ITS OFFICERS OR AGENTS SHALL NOT BE RESPONSIBLE FOR THE ACCURACY OR COMPLETENESS OF SCANNED COPIES OF THIS PLAN SHEET.

NOTE:

1. FOR ACCURATE RIGHT OF WAY AND ACCESS DATA, CONTACT RIGHT OF WAY ENGINEERING AT THE DISTRICT OFFICE.
2. COLD MILL EXISTING AC PAVEMENT 2" DEEP UNIFORMLY OVER ENTIRE PARKING LOT AND PLACE 2" HMA-A (18,400 SF)
3. PROTECT IN PLACE / RESET EXISTING LIGHT POLE AFTER CONSTRUCTION WITH TEMPORARY LIGHTING POLE DURING CONSTRUCTION

CURVE DATA

No.	R	Δ	T	L
5	2000.00′	15°54′8"	279.35′	555.10′
6	2000.00′	32°8′13"	576.08′	1121.79′
17	1180.00′	34°58′25"	371.75′	720.28′
18	2070.00′	29°09′53"	538.51′	1053.67′
19	1950.00′	8°47′57"	150.03′	299.47′
20	2200.00′	12°18′53"	237.34′	472.85′
21	350.00′	24°46′27"	76.87′	151.34′
25	2300.00′	18°50′58"	381.78′	756.66′
27	1100.00′	29°59′16"	294.62′	575.73′
28	1945.71′	3°24′48"	57.97′	115.91′
29	1100.00′	20°54′16"	202.92′	401.33′

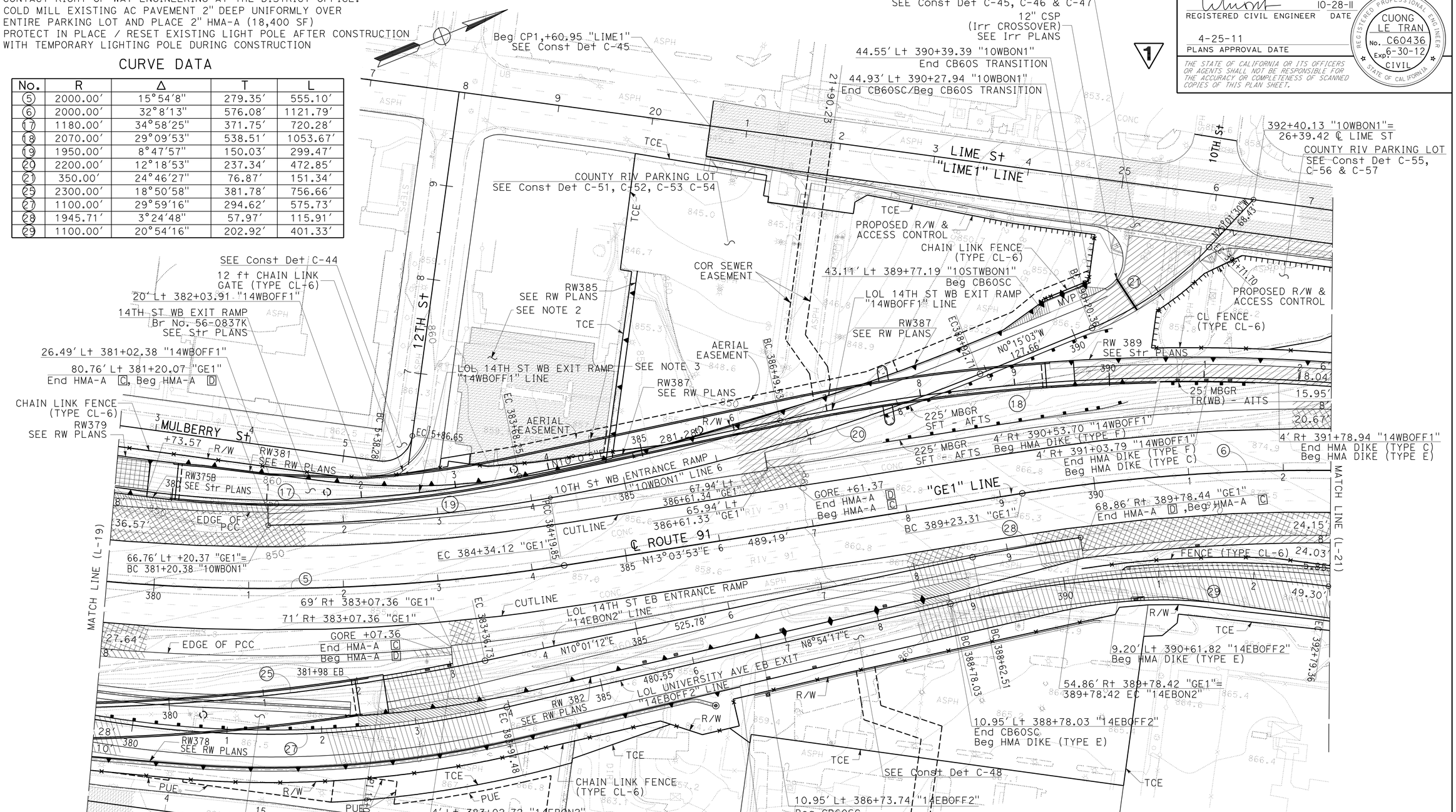

1 REVISED PER ADDENDUM No. 1 DATED NOVEMBER 8, 2011

LAYOUT
SCALE: 1" = 50′
L-20

STATE OF CALIFORNIA - DEPARTMENT OF TRANSPORTATION
Caltrans DESIGN
FUNCTIONAL SUPERVISOR MARK PERTILE
CALCULATED-DESIGNED BY ANNABELL WANG
CHECKED BY CUONG LE TRAN
REVISED BY
DATE REVISED

LAST REVISION 10-13-11
DATE PLOTTED => 08-NOV-2011
TIME PLOTTED => 11:11

Dist	COUNTY	ROUTE	POST MILES TOTAL PROJECT	SHEET No.	TOTAL SHEETS
08	Riv	91	15.6/21.6	122	2028

REGISTERED CIVIL ENGINEER 10-28-11 DATE

4-25-11
PLANS APPROVAL DATE

REGISTERED PROFESSIONAL ENGINEER CUONG LE TRAN No. C60436 Exp 6/30/12 CIVIL STATE OF CALIFORNIA

THE STATE OF CALIFORNIA OR ITS OFFICERS OR AGENTS SHALL NOT BE RESPONSIBLE FOR THE ACCURACY OR COMPLETENESS OF SCANNED COPIES OF THIS PLAN SHEET.

CONSTRUCTION NOTES:

6 CONSTRUCT DRIVEWAY APPROACH, TYPE CURB I, SEE SHEET C-77

CURVE DATA				
No. ⊕	R	Δ	T	L
1	2650.17′	7°0′59"	162.47′	324.54′
2	1000.00′	7°1′38"	61.40′	122.65′

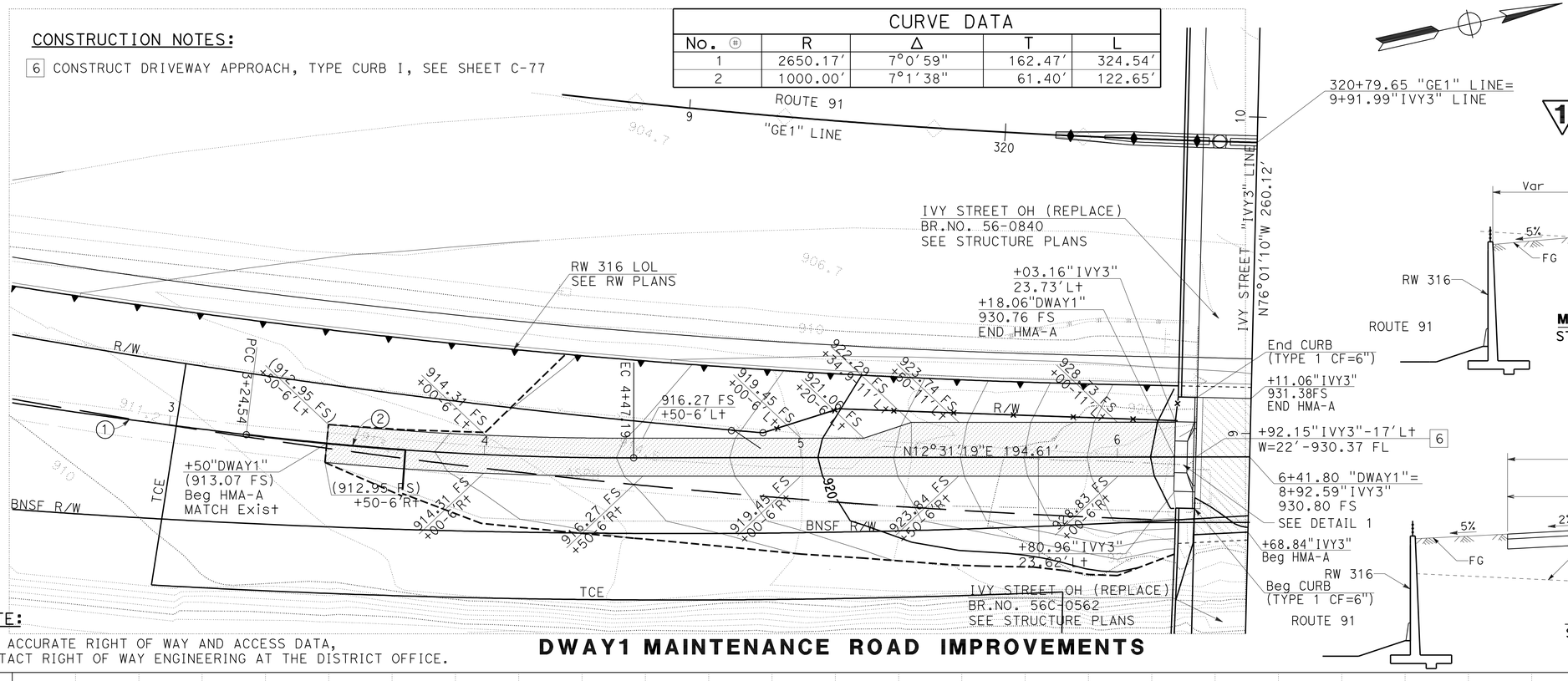

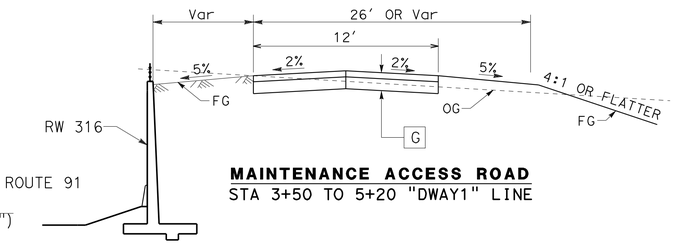

MAINTENANCE ACCESS ROAD
STA 3+50 TO 5+20 "DWAY1" LINE

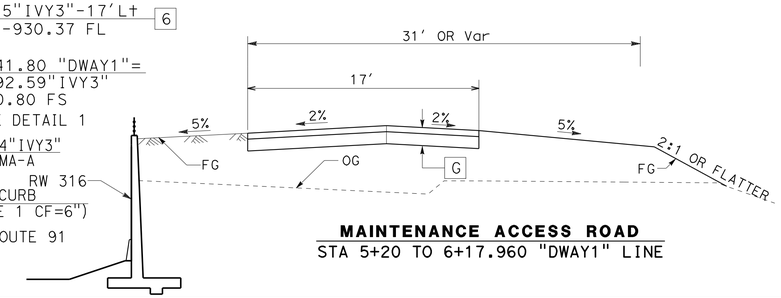

MAINTENANCE ACCESS ROAD
STA 5+20 TO 6+17.960 "DWAY1" LINE

NOTE:

FOR ACCURATE RIGHT OF WAY AND ACCESS DATA, CONTACT RIGHT OF WAY ENGINEERING AT THE DISTRICT OFFICE.

DWAY1 MAINTENANCE ROAD IMPROVEMENTS

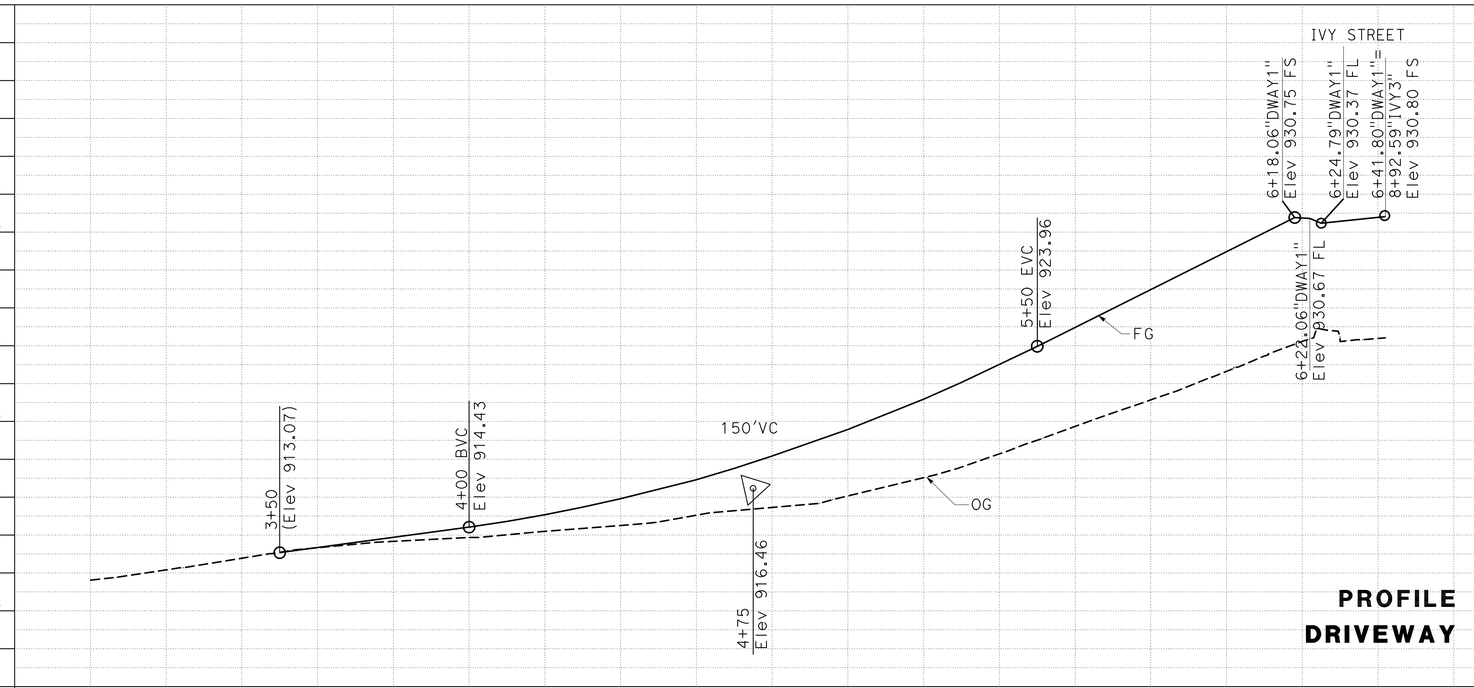

PROFILE
DRIVEWAY 1

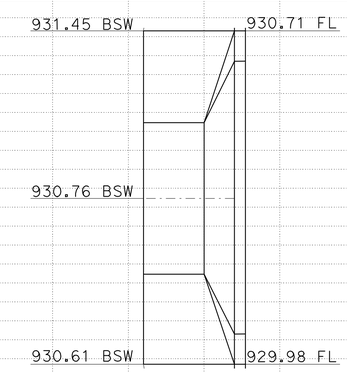

DRIVEWAY APPROACH
DETAIL 1

1 **REVISED PER ADDENDUM No. 1**
DATED NOVEMBER 8, 2011

CONSTRUCTION DETAILS

SCALE: Horiz 1"=20′
Vert 1"= 5′

C-36

REVISED BY	DATE REVISED	CUONG LE TRAN	ANNABELL WANG	CALCULATED-DESIGNED BY	CHECKED BY	FUNCTIONAL SUPERVISOR	MARK PERTILE

STATE OF CALIFORNIA - DEPARTMENT OF TRANSPORTATION
Caltrans
DESIGN

LAST REVISION 10-13-11
DATE PLOTTED => 08-NOV-2011
TIME PLOTTED => 11:12

Dist	COUNTY	ROUTE	POST MILES TOTAL PROJECT	SHEET No.	TOTAL SHEETS
08	Riv	91	15.6/21.6	123	2028

REGISTERED CIVIL ENGINEER 10-28-11 DATE

4-25-11
PLANS APPROVAL DATE

REGISTERED PROFESSIONAL ENGINEER CUONG LE TRAN No. C60436 Exp 6/30/12 CIVIL STATE OF CALIFORNIA

THE STATE OF CALIFORNIA OR ITS OFFICERS OR AGENTS SHALL NOT BE RESPONSIBLE FOR THE ACCURACY OR COMPLETENESS OF SCANNED COPIES OF THIS PLAN SHEET.

CONSTRUCTION NOTES:

8 CONSTRUCT DRIVEWAY APPROACH, TYPE CURB III, SEE SHEET C-77

NOTE:

FOR ACCURATE RIGHT OF WAY AND ACCESS DATA, CONTACT RIGHT OF WAY ENGINEERING AT THE DISTRICT OFFICE.

CURVE DATA

No.	R	Δ	T	L
1	399.99′	6°34′29″	22.97′	45.90′

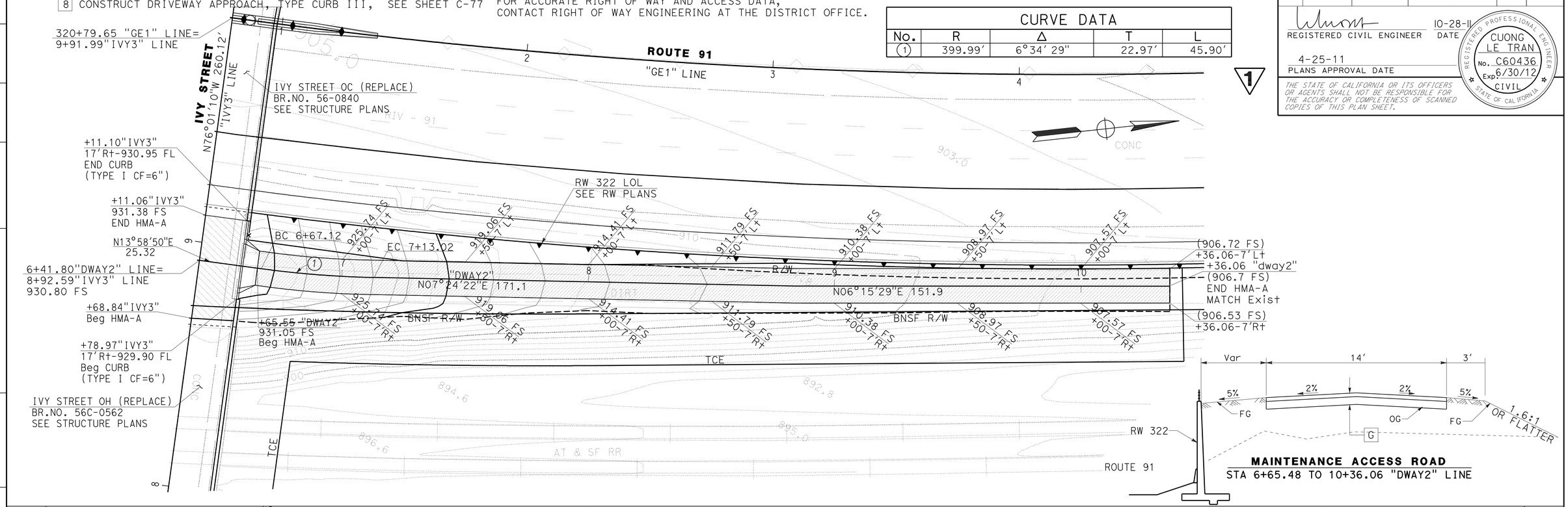

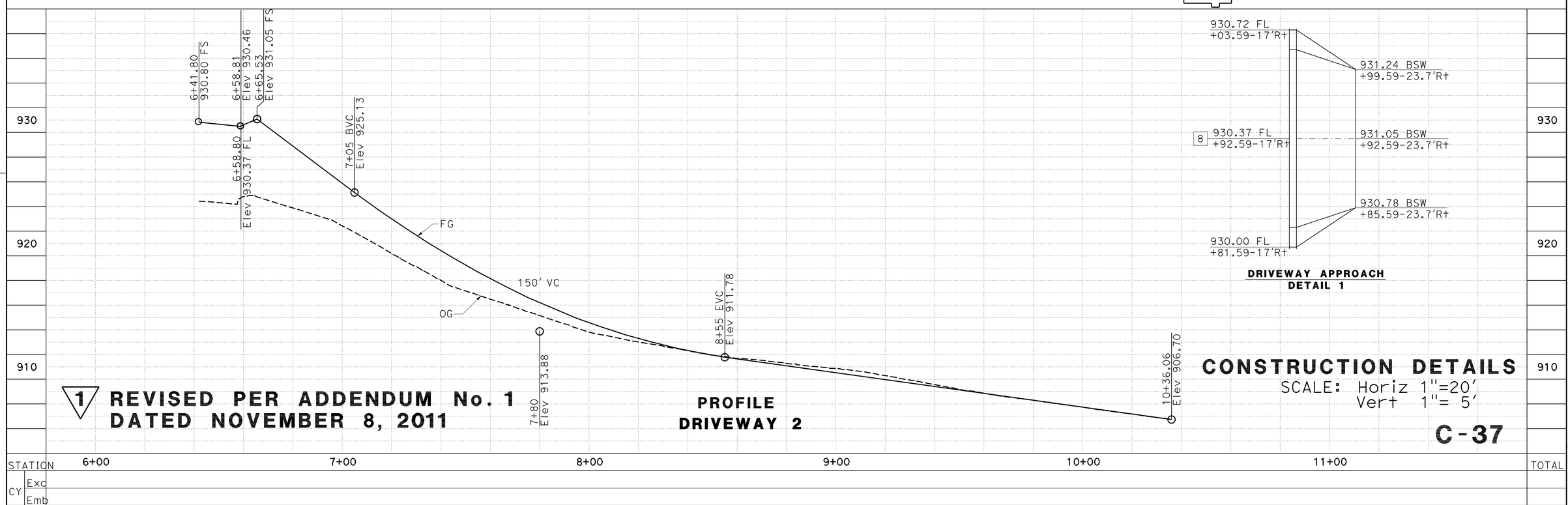

1 REVISED PER ADDENDUM No. 1
DATED NOVEMBER 8, 2011

PROFILE
DRIVEWAY 2

CONSTRUCTION DETAILS

SCALE: Horiz 1"=20′
Vert 1"= 5′

C-37

STATE OF CALIFORNIA - DEPARTMENT OF TRANSPORTATION
Caltrans
DESIGN

FUNCTIONAL SUPERVISOR: MARK PERTILE
CALCULATED-DESIGNED BY: CUONG LE TRAN
CHECKED BY: ANNABELL WANG
REVISED BY
DATE REVISED

LAST REVISION 10-13-11
DATE PLOTTED => 08-NOV-2011
TIME PLOTTED => 11:12

Dist	COUNTY	ROUTE	POST MILES TOTAL PROJECT	SHEET No.	TOTAL SHEETS
08	Riv	91	15.6/21.6	144	2028

REGISTERED CIVIL ENGINEER 10-28-11 DATE

4-25-11
PLANS APPROVAL DATE

REGISTERED PROFESSIONAL ENGINEER CUONG LE TRAN No. C60436 Exp 6/30/12 CIVIL STATE OF CALIFORNIA

THE STATE OF CALIFORNIA OR ITS OFFICERS OR AGENTS SHALL NOT BE RESPONSIBLE FOR THE ACCURACY OR COMPLETENESS OF SCANNED COPIES OF THIS PLAN SHEET.

NOTE:

FOR ACCURATE RIGHT OF WAY AND ACCESS DATA, CONTACT RIGHT OF WAY ENGINEERING AT THE DISTRICT OFFICE.

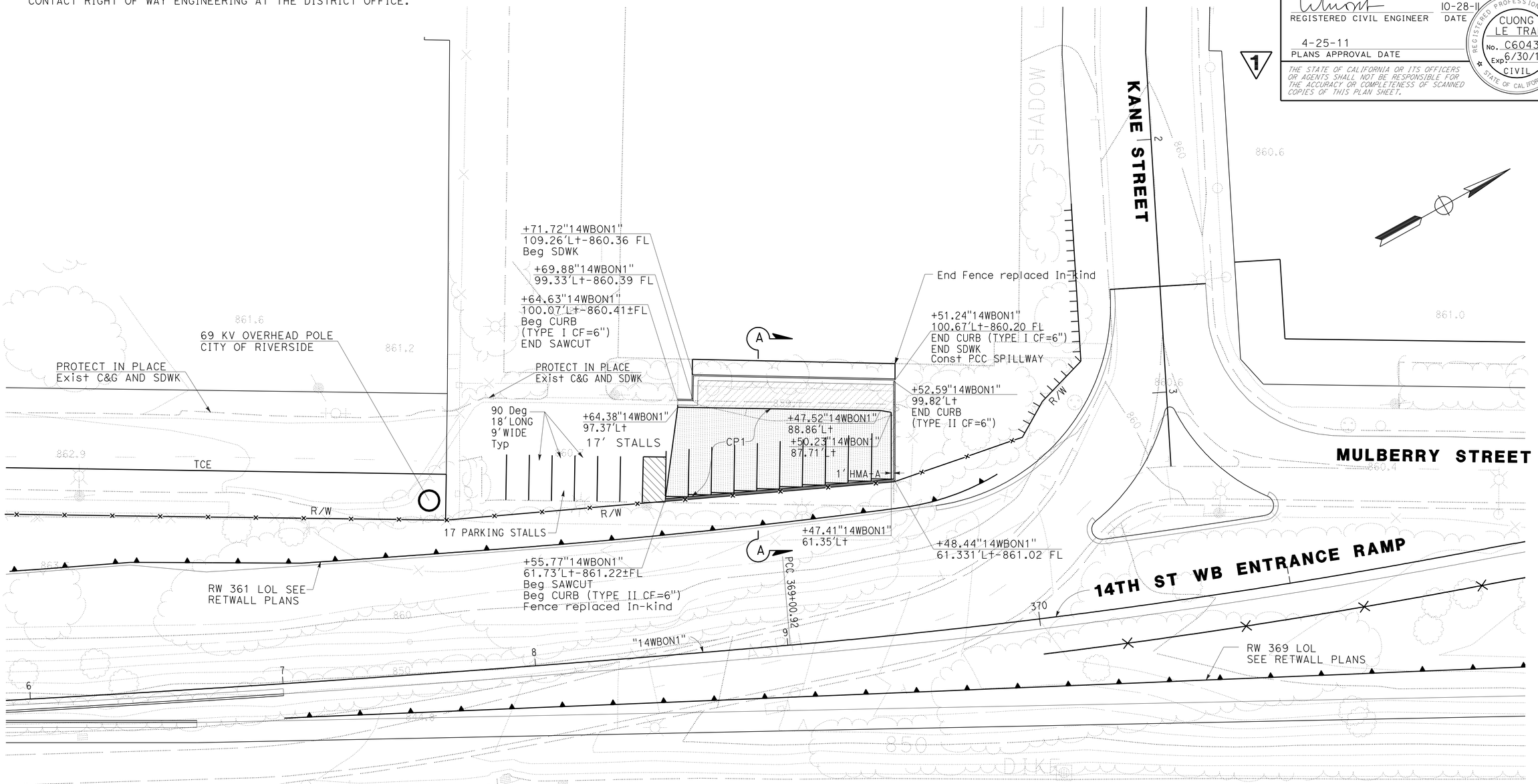

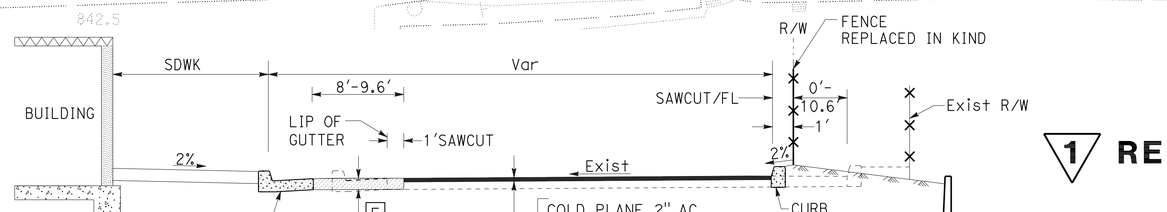

SECTION A-A

NOT TO SCALE

1 REVISED PER ADDENDUM No. 1 DATED NOVEMBER 8, 2011

CONSTRUCTION DETAILS
WEST RIVERSIDE LLC PARCEL IMPROVEMENTS

SCALE: 1" = 20'

C-58

STATE OF CALIFORNIA - DEPARTMENT OF TRANSPORTATION
Caltrans®
DESIGN

FUNCTIONAL SUPERVISOR: MARK PERTILE
CALCULATED-DESIGNED BY: CUONG LE TRAN
CHECKED BY: ANNABELL WANG
REVISED BY
DATE REVISED

LAST REVISION DATE PLOTTED => 08-NOV-2011
TIME PLOTTED => 11:12
10-18-11

BORDER LAST REVISED 4/11/2008
RELATIVE BORDER SCALE IS IN INCHES 0 1 2 3
USERNAME => s121614
DGN FILE => 844840ga058.add
CU 08227
EA 448401

Dist	COUNTY	ROUTE	POST MILES TOTAL PROJECT	SHEET No.	TOTAL SHEETS
08	Riv	91	15.6/21.6	181	2028

REGISTERED CIVIL ENGINEER — DATE 10-28-11

4-25-11
PLANS APPROVAL DATE

REGISTERED PROFESSIONAL ENGINEER — CUONG LE TRAN — No. C60436 — Exp 6/30/12 — CIVIL — STATE OF CALIFORNIA

THE STATE OF CALIFORNIA OR ITS OFFICERS OR AGENTS SHALL NOT BE RESPONSIBLE FOR THE ACCURACY OR COMPLETENESS OF SCANNED COPIES OF THIS PLAN SHEET.

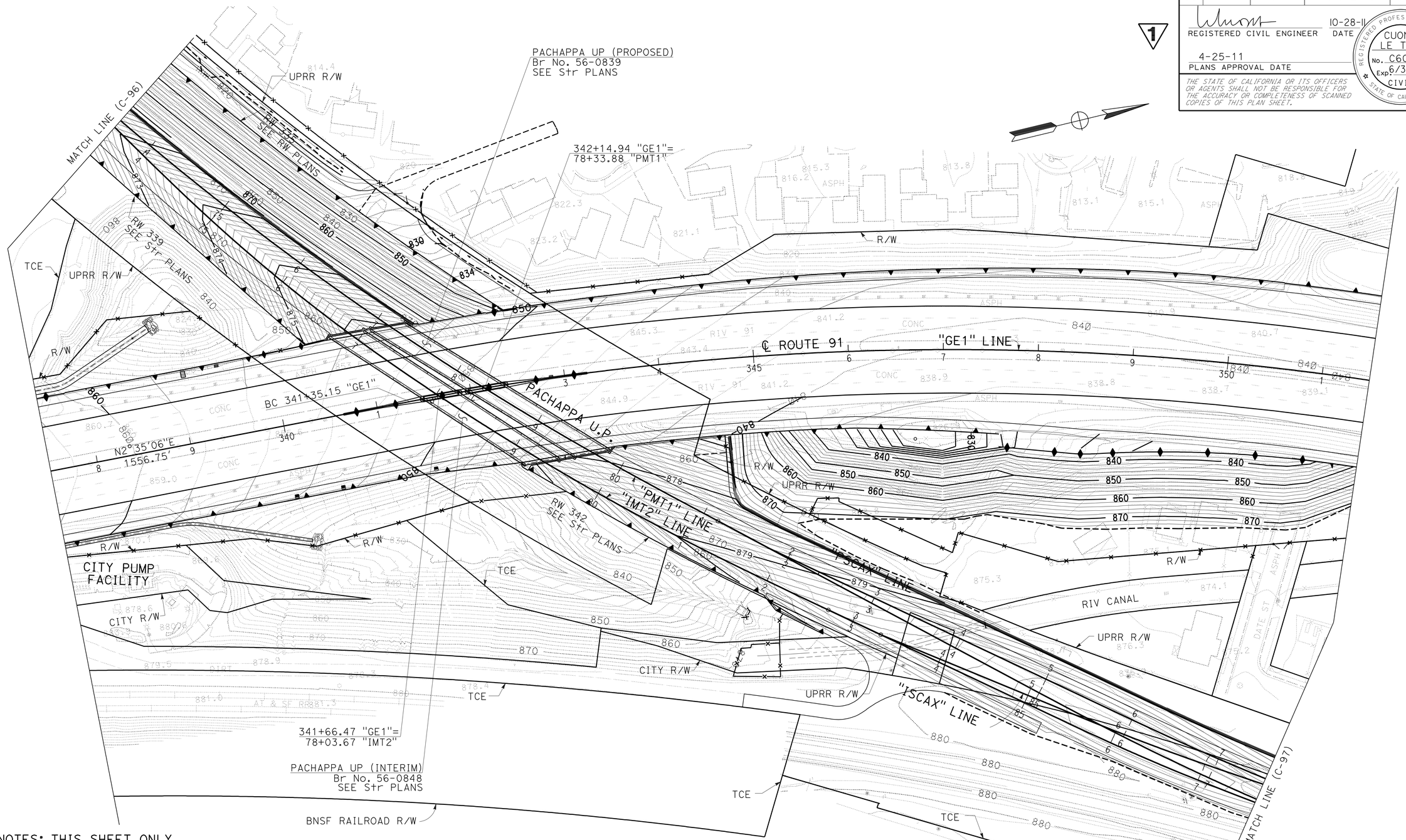

NOTES: THIS SHEET ONLY

1. FOR ACCURATE RIGHT OF WAY AND ACCESS DATA, CONTACT RIGHT OF WAY ENGINEERING AT THE DISTRICT OFFICE.
2. SUBBALLAST CONTOURS SHOWN AT 0.1' INTERVAL FOR CLARITY
3. BALLAST AND TRACK WORK TO BE DONE BY OTHERS.

INTERIM CONTOUR GRADING

1 REVISED PER ADDENDUM No. 1 DATED NOVEMBER 8, 2011

THIS PLAN ACCURATE FOR CONTOUR GRADING WORK ONLY.

CONSTRUCTION DETAILS

SCALE: 1" = 50'

C-95

STATE OF CALIFORNIA - DEPARTMENT OF TRANSPORTATION — DESIGN — Caltrans

FUNCTIONAL SUPERVISOR: MARK PERTILE

CALCULATED-DESIGNED BY: CUONG LE TRAN — CHECKED BY: ANNABELL WANG

REVISED BY — DATE REVISED

LAST REVISION 10-13-11 — DATE PLOTTED => 08-NOV-2011 — TIME PLOTTED => 11:12

Dist	COUNTY	ROUTE	POST MILES TOTAL PROJECT	SHEET No.	TOTAL SHEETS
08	Riv	91	15.6/21.6	182	2028

REGISTERED CIVIL ENGINEER — DATE 10-28-11

4-25-11
PLANS APPROVAL DATE

REGISTERED PROFESSIONAL ENGINEER CUONG LE TRAN No. C60436 Exp 6/30/12 CIVIL STATE OF CALIFORNIA

THE STATE OF CALIFORNIA OR ITS OFFICERS OR AGENTS SHALL NOT BE RESPONSIBLE FOR THE ACCURACY OR COMPLETENESS OF SCANNED COPIES OF THIS PLAN SHEET.

NOTES: THIS SHEET ONLY

1. FOR ACCURATE RIGHT OF WAY AND ACCESS DATA, CONTACT RIGHT OF WAY ENGINEERING AT THE DISTRICT OFFICE.
2. SUBBALLAST CONTOURS SHOWN AT 0.1′ INTERVAL FOR CLARITY
3. BALLAST AND TRACK WORK TO BE DONE BY OTHERS.

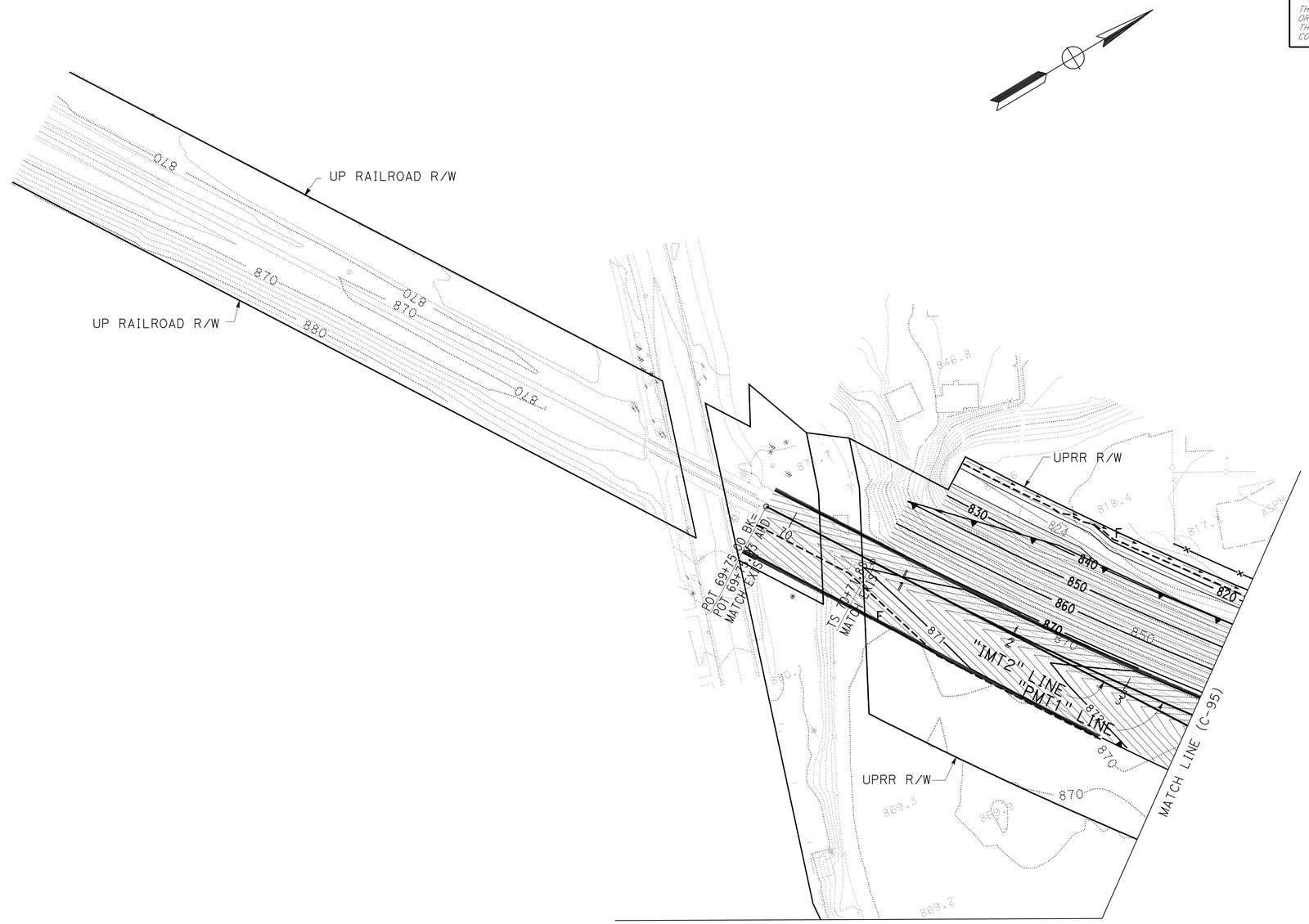

INTERIM CONTOUR GRADING

1 REVISED PER ADDENDUM No. 1 DATED NOVEMBER 8, 2011

THIS PLAN ACCURATE FOR CONTOUR GRADING WORK ONLY.

CONSTRUCTION DETAILS

SCALE: 1" = 50′

C-96

STATE OF CALIFORNIA - DEPARTMENT OF TRANSPORTATION
Caltrans DESIGN

FUNCTIONAL SUPERVISOR: MARK PERTILE

CALCULATED-DESIGNED BY: CUONG LE TRAN
CHECKED BY: ANNABELL WANG

REVISED BY
DATE REVISED

LAST REVISION 10-13-11
DATE PLOTTED => 08-NOV-2011
TIME PLOTTED => 11:12

Dist	COUNTY	ROUTE	POST MILES TOTAL PROJECT	SHEET No.	TOTAL SHEETS
08	Riv	91	15.6/21.6	183	2028

REGISTERED CIVIL ENGINEER — DATE 10-28-11

4-25-11
PLANS APPROVAL DATE

REGISTERED PROFESSIONAL ENGINEER CUONG LE TRAN No. C60436 Exp 6/30/12 CIVIL STATE OF CALIFORNIA

THE STATE OF CALIFORNIA OR ITS OFFICERS OR AGENTS SHALL NOT BE RESPONSIBLE FOR THE ACCURACY OR COMPLETENESS OF SCANNED COPIES OF THIS PLAN SHEET.

1

NOTES: THIS SHEET ONLY

1. FOR ACCURATE RIGHT OF WAY AND ACCESS DATA, CONTACT RIGHT OF WAY ENGINEERING AT THE DISTRICT OFFICE.
2. SUBBALAST CONTOURS SHOWN AT 0.1' INTERVAL FOR CLARITY
3. BALLAST AND TRACK WORK TO BE DONE BY OTHERS.

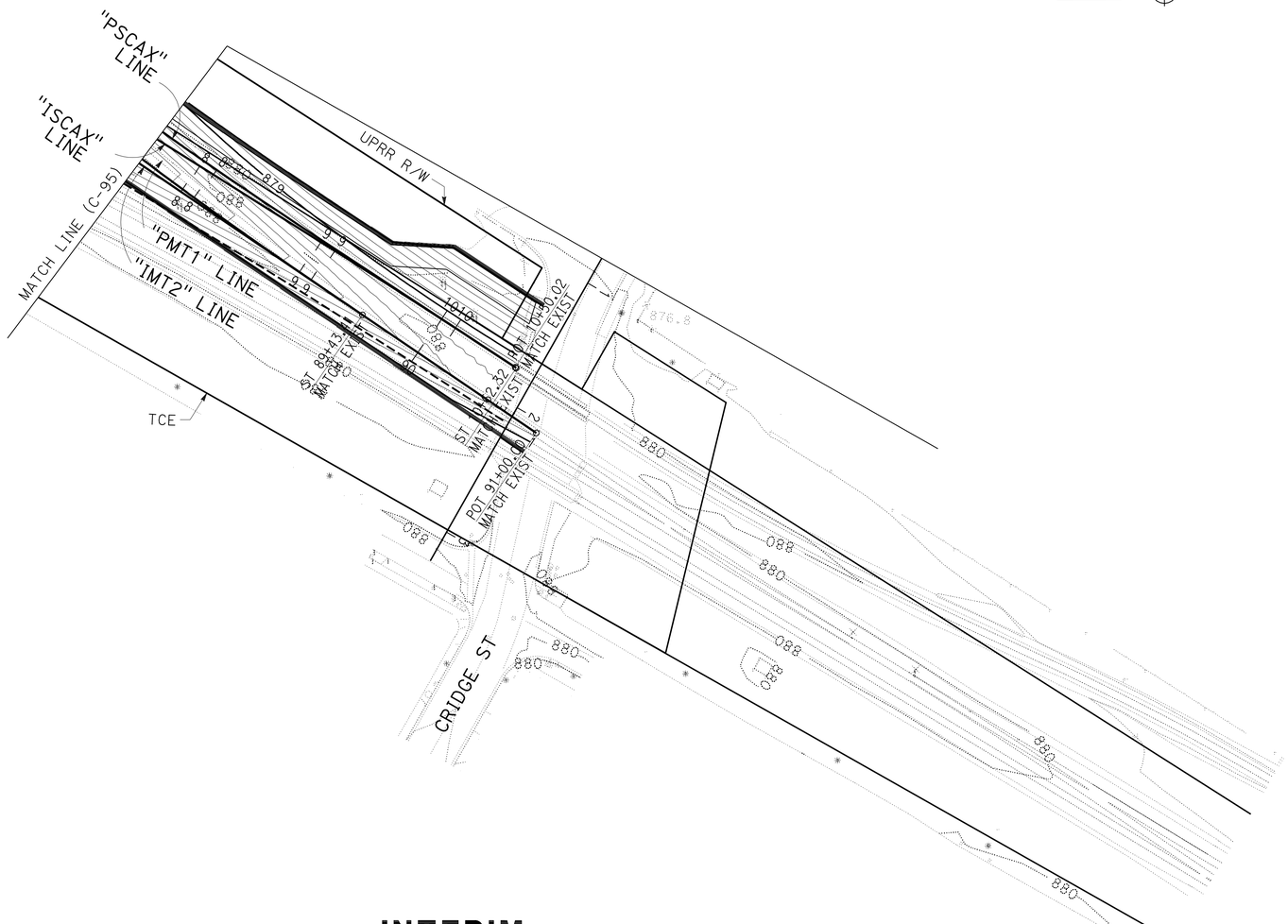

INTERIM CONTOUR GRADING

1 REVISED PER ADDENDUM No. 1 DATED NOVEMBER 8, 2011

THIS PLAN ACCURATE FOR CONTOUR GRADING WORK ONLY.

CONSTRUCTION DETAILS
SCALE: 1" = 50'
C-97

STATE OF CALIFORNIA - DEPARTMENT OF TRANSPORTATION
Caltrans DESIGN

FUNCTIONAL SUPERVISOR: MARK PERTILE
CALCULATED-DESIGNED BY: CUONG LE TRAN
CHECKED BY: ANNABELL WANG
REVISED BY
DATE REVISED

LAST REVISION 10-13-11
DATE PLOTTED => 08-NOV-2011
TIME PLOTTED => 11:13

Dist	COUNTY	ROUTE	POST MILES TOTAL PROJECT	SHEET No.	TOTAL SHEETS
08	Riv	91	15.6/21.6	184	2028

REGISTERED CIVIL ENGINEER 10-28-11 DATE

4-25-11
PLANS APPROVAL DATE

REGISTERED PROFESSIONAL ENGINEER RUSSELL McNAUGHT No. C65853 Exp. 12/31/11 CIVIL STATE OF CALIFORNIA

THE STATE OF CALIFORNIA OR ITS OFFICERS OR AGENTS SHALL NOT BE RESPONSIBLE FOR THE ACCURACY OR COMPLETENESS OF SCANNED COPIES OF THIS PLAN SHEET.

HDR ONE COMPANY / *Many Solutions*
2280 Market Street, Suite 100
Riverside, CA. 92501
(951) 320-7300

RCTC

1

INDEX OF RAILROAD - PACHAPPA SHEETS

DWG No.	TITLE
_	UPRR COVER SHEET (NOT INCLUDED IN STATE DRAWING SET)
C-98	INDEX OF SHEETS
C-99	GENERAL NOTES
C-100	ABBREVIATIONS AND LEGEND
C-101	GEOMETRY CONTROL POINTS
C-102	TRACK GEOMETRY - IMT2
C-103	TRACK GEOMETRY - ISCAX
C-104	TRACK GEOMETRY - PMT1 AND PSCAX
C-105	TRACK GEOMETRY - FMT1
C-106	TRACK GEOMETRY - FMT2
C-107	TYPICAL SECTION AND SUBBALLAST GRADING - 1 OF 2
C-108	TYPICAL SECTION AND SUBBALLAST GRADING - 2 OF 2
C-109	STAGING AND CONSTRUCTION - PHASE 1A - 1 OF 2
C-110	STAGING AND CONSTRUCTION - PHASE 1A - 2 OF 2
C-111	STAGING AND CONSTRUCTION - PHASE 1B - 1 OF 2
C-112	STAGING AND CONSTRUCTION - PHASE 1B - 2 OF 2
C-112A	STAGING AND CONSTRUCTION - PHASE 1C - 1 OF 2
C-112B	STAGING AND CONSTRUCTION - PHASE 1C - 2 OF 2
C-112C	STAGING AND CONSTRUCTION - PHASE 1D - 1 OF 2
C-112D	STAGING AND CONSTRUCTION - PHASE 1D - 2 OF 2
C-112E	STAGING AND CONSTRUCTION - PHASE 1E - 1 OF 2
C-112F	STAGING AND CONSTRUCTION - PHASE 1E - 2 OF 2
C-112G	STAGING AND CONSTRUCTION - PHASE 2A - 1 OF 2
C-112H	STAGING AND CONSTRUCTION - PHASE 2A - 2 OF 2
C-112I	STAGING AND CONSTRUCTION - PHASE 2B - 1 OF 2
C-112J	STAGING AND CONSTRUCTION - PHASE 2B - 2 OF 2
C-112K	STAGING AND CONSTRUCTION - PHASE 2C - 1 OF 2
C-112L	STAGING AND CONSTRUCTION - PHASE 2C - 2 OF 2
C-112M	STAGING AND CONSTRUCTION - PHASE 3 - 1 OF 2
C-112N	STAGING AND CONSTRUCTION - PHASE 3 - 2 OF 2
C-112O	PROFILES - INTERIM
C-112P	PROFILES - PROPOSED
C-112Q	PROFILES - FUTURE
C-112R	TOOTH FILL AND GEOSYNTHETIC REINFORCEMENT DETAILS

1 **REVISED PER ADDENDUM No. 1 DATED NOVEMBER 8, 2011**

CONSTRUCTION DETAILS
RAILROAD - PACHAPPA
INDEX OF SHEETS

C-98

STATE OF CALIFORNIA - DEPARTMENT OF TRANSPORTATION
Caltrans

CONSULTANT FUNCTIONAL SUPERVISOR: GERARD REMINISKEY
CALCULATED-DESIGNED BY: MICHAEL MIHALOVICH
CHECKED BY: JIM CONWAY, RUSSELL McNAUGHT
REVISED BY
DATE REVISED

LAST REVISION 10-18-11
DATE PLOTTED => 08-NOV-2011
TIME PLOTTED => 11:13

Dist	COUNTY	ROUTE	POST MILES TOTAL PROJECT	SHEET No.	TOTAL SHEETS
08	Riv	91	15.6/21.6	185	2028

REGISTERED CIVIL ENGINEER — DATE 10-28-11

4-25-11
PLANS APPROVAL DATE

REGISTERED PROFESSIONAL ENGINEER — RUSSELL McNAUGHT — No. C65853 — Exp. 12/31/11 — CIVIL — STATE OF CALIFORNIA

THE STATE OF CALIFORNIA OR ITS OFFICERS OR AGENTS SHALL NOT BE RESPONSIBLE FOR THE ACCURACY OR COMPLETENESS OF SCANNED COPIES OF THIS PLAN SHEET.

HDR ONE COMPANY / *Many Solutions*
2280 Market Street, Suite 100
Riverside, CA. 92501
(951) 320-7300

RCTC

PROJECT CONTACTS

CONTACT	PHONE NUMBER	UPRR
CURT MADDEX	(209) 546-7260	CONSTRUCTION PROJECT MANAGER
JOEL ADAMS	(916) 789-5484	CONSTRUCTION FIELD MANAGER
TRACI CHENEY	(402) 544-6885	PROJECT DESIGN MANAGER
GARY VOOGD	(402) 544-4361	STRUCTURES DESIGN MANAGER
MIKE HEALD	(402) 544-3719	FIBER
DANIELLE ALLEN	(402) 544-8020	REAL ESTATE
STAN DULINSKI	(402) 544-0353	UTILITIES

GENERAL NOTES

1. CONTRACTORS SHALL NOTIFY SERVICE ALERT, (800) 642-2444 AND UPRR FIBER OPTICS HOTLINE (800) 336-9193, 48 HOURS PRIOR TO ANY EXCAVATION. THE USA AUTHORIZATION NUMBERS SHALL BE KEPT AT THE JOB SITE.
2. NO WORK WITHIN UPRR ROW WHATSOEVER SHALL BE COMMENCED WITHOUT FIRST NOTIFYING THE UPRR ENGINEER.
3. THE CONTRACTOR SHALL COMPLY WITH ALL FEDERAL, STATE, COUNTY, AND CITY LAWS AND ORDINANCES AND REGULATIONS OF THE DEPARTMENT OF INDUSTRIAL RELATIONS, OSHA, NPDES AND INDUSTRIAL ACCIDENT COMMISSION RELATED TO THE SAFETY AND CHARACTER OF THE WORK, EQUIPMENT AND LABOR PERSONNEL.
4. CONTRACTOR SHALL BE RESPONSIBLE FOR COORDINATING WITH ALL UTILITY AGENCIES.
5. CONTRACTOR SHALL PROTECT IN PLACE (BY ANY MEANS NECESSARY) ALL EXISTING UTILITIES TO REMAIN UNLESS OTHERWISE SPECIFIED HEREIN, CONTRACTOR SHALL BE RESPONSIBLE FOR THE COMPLETE REPAIR AT HIS EXPENSE, FOR ANY DAMAGE TO EXISTING UTILITIES, STRUCTURES, OR OTHER SITE FEATURES, AS A RESULT OF HIS WORK.
6. PRIOR TO PLACING CURBS, PAVEMENTS, BASE, SUBBASE, TRACK, ETC., ALL UNDERGROUND UTILITIES SHALL BE INSTALLED, BACKFILL COMPLETED, AND THE ENGINEER NOTIFIED BY EACH OF THE UTILITY COMPANIES HAVING FACILITIES WITHIN THE WORK AREA, THAT THE UTILITY INSTALLATION HAS SATISFACTORILY PASSED ACCEPTANCE TESTS.
7. ALL EXISTING UNDERGROUND UTILITIES, THAT ARE NOT TO BE RE-USED SHALL BE ABANDONED IN PLACE. ALL EXISTING PIPELINES TO BE ABANDONED IN PLACE SHALL BE CEMENT SLURRY FILLED AND CAPPED AT LEAST 3'-0" BELOW TOP OF PROPOSED SUBGRADE.
8. CONTRACTOR SHALL VERIFY LOCATIONS AND ELEVATIONS OF EXISTING UTILITIES WHETHER KNOWN OR UNKNOWN PRIOR TO BEGINNING CONSTRUCTION.
9. ANY UNDERGROUND STRUCTURES SUCH AS CESSPOOLS, CISTERNS, MINING SHAFTS, TUNNELS, SEPTIC TANKS, WELLS, AND PIPELINES NOT LOCATED PRIOR TO CONSTRUCTION SHALL BE BROUGHT TO THE ATTENTION OF THE ENGINEER FOR DETERMINATION OF APPROPRIATE ACTION SUCH AS REMOVAL OR TREATMENT IN A MANNER JUDGED SUITABLE TO THE ENGINEER.
10. CONTRACTOR SHALL COORDINATE LOCATION OF ALL PROPOSED UTILITIES WITH UPRR TO ASSURE ACCURACY OF UTILITY CONNECTIONS AND COMPLIANCE WITH LOCAL CODES.
11. ANY EXISTING CONDITIONS FOUND TO BE A VARIANCE WITH THESE DRAWINGS MUST BE IMMEDIATELY REPORTED TO THE ENGINEER.
12. CONTRACTOR SHALL MAINTAIN AND CLEAN TO THE SATISFACTION OF THE ENGINEER, ALL ACCESS AND SERVICE ROADS USED DURING CONSTRUCTION.
13. CONTRACTOR SHALL PERFORM ALL CONSTRUCTION IN SUCH A MANNER AS TO PROTECT ADJACENT EXISTING BUILDINGS, AND OTHER SITE ELEMENTS WHICH ARE TO REMAIN IN SERVICE.
14. CONTRACTOR SHALL PROVIDE AS-BUILT DRAWINGS FOR ALL IMPROVEMENTS.
15. NO FIELD CHANGES WILL BE PERMITTED WITHOUT DIRECT WRITTEN AUTHORIZATION FROM THE UPRR ENGINEER OR HIS REPRESENTATIVE.
16. CONTRACTOR SHALL COORDINATE WORK WHICH AFFECTS ADJACENT PROPERTY OWNERS. ANY QUESTIONS OR AGREEMENTS BETWEEN ADJACENT PROPERTY OWNERS AND CONTRACTOR SHALL BE MADE IN WRITING. A COPY OF SUCH AGREEMENT SHALL BE PROVIDED TO THE UPRR ENGINEER OR HIS REPRESENTATIVE.
17. THE CONTRACTOR IS RESPONSIBLE FOR PREPARING A STORMWATER POLLUTION PREVENTION PLAN (SWPPP) TO COMPLY WITH STATE REGULATIONS. GENERAL SPECIFICATIONS AND TYPICAL EROSION CONTROL DETAILS SHALL BE INCLUDED IN THE PLAN SET.
18. RIGHT-OF-WAY LINES SHOWN ON THE PLANS WERE TAKEN FROM EXISTING UPRR RIGHT-OF-WAY MAP AND ARE APPROXIMATE.
19. WHERE EXISTING CULVERTS ARE TO BE EXTENDED, THE CONTRACTOR SHALL EXPOSE EXISTING DRAINAGE STRUCTURES AND FIELD VERIFY SIZE AND TYPE BEFORE ORDERING.
20. THE CONTRACTOR IS RESPONSIBLE FOR THE REMOVAL OF ALL PAVEMENT MARKINGS THAT WILL BE IN CONFLICT WITH THE PROPOSED WORK.
21. CONTRACTOR SHALL COMPLY WITH ALL STATE AND CITY STANDARD SPECIFICATIONS FOR CONSTRUCTION OF PUBLIC IMPROVEMENTS REQUIREMENTS. CITY STANDARD SPECIFICATIONS SHALL PREVAIL.
22. CONTRACTOR SHALL MAINTAIN AT LEAST ONE ACCESS TO ALL AFFECTED BUSINESSES. IF NECESSARY, MULTIPHASE CONSTRUCTION SHALL BE UTILIZED.

DESIGN CRITERIA

1. UPRR STANDARD PLANS AND TRACKWORKS.
2. AMERICAN RAILWAY ENGINEERING AND MAINTENANCE OF WAY ASSOCIATION
3. CITY PUBLIC WORKS ENGINEERING DIVISION.
4. STATE DEPARTMENT OF TRANSPORTATION ROADWAY STANDARDS.

PHONE NUMBER	GENERAL
(800) 336-9193	UPRR CALL BEFORE YOU DIG
(888) 258-0808	CALL BEFORE YOU DIG (NATIONAL DIRECTORY)
(888) 877-7267	UPRR RESPONSE MANAGEMENT COMMUNICATIONS CENTER (RMCC)

1 REVISED PER ADDENDUM No. 1 DATED NOVEMBER 8, 2011

CONSTRUCTION DETAILS
RAILROAD - PACHAPPA
GENERAL NOTES

C-99

STATE OF CALIFORNIA - DEPARTMENT OF TRANSPORTATION — Caltrans
CONSULTANT FUNCTIONAL SUPERVISOR: GERARD REMINISKEY
CALCULATED-DESIGNED BY: MICHAEL MIHALOVICH
CHECKED BY: JIM CONWAY, RUSSELL McNAUGHT
REVISED BY / DATE REVISED

LAST REVISION 10-17-11 — DATE PLOTTED => 08-NOV-2011 — TIME PLOTTED => 11:13

Dist	COUNTY	ROUTE	POST MILES TOTAL PROJECT	SHEET No.	TOTAL SHEETS
08	Riv	91	15.6/21.6	186	2028

REGISTERED CIVIL ENGINEER — DATE 10-28-11

4-25-11
PLANS APPROVAL DATE

REGISTERED PROFESSIONAL ENGINEER — RUSSELL McNAUGHT — No. C65853 — Exp. 12/31/11 — CIVIL — STATE OF CALIFORNIA

THE STATE OF CALIFORNIA OR ITS OFFICERS OR AGENTS SHALL NOT BE RESPONSIBLE FOR THE ACCURACY OR COMPLETENESS OF SCANNED COPIES OF THIS PLAN SHEET.

HDR ONE COMPANY / Many Solutions
2280 Market Street, Suite 100
Riverside, CA. 92501
(951) 320-7300

RCTC

ABBREVIATIONS

MISCELLANEOUS

AC.	ACRES
AVE.	AVENUE
BLVD.	BOULEVARD
BLDG.	BUILDING
BNSF	BNSF RAILWAY
C.Y.	CUBIC YARDS
CONC.	CONCRETE
°	DEGREE (S)
DIA.	DIAMETER
DR.	DRIVE
DWG.	DRAWING
E	EAST
ELEV.	ELEVATION
EXIST.	EXISTING
′	FOOT, FEET OR MINUTE (S)
F.S.	FINISHED SURFACE
HORIZ.	HORIZONTAL
"	INCH, INCHES OR SECOND (S)
INV.	INVERT
LT.	LEFT
L	LENGTH
L.F.	LINEAL FEET
MAX.	MAXIMUM
MIN.	MINIMUM
N	NORTH
NTS	NOT TO SCALE
NO.	NUMBER
OH	OVERHEAD
PROP.	PROPOSED
RR	RAILROAD
RWY	RAILWAY
R/W	RIGHT OF WAY
RT.	RIGHT
S	SOUTH
S.F.	SQUARE FEET
STA.	STATION
STD.	STANDARD
ST.	STREET
TWP.	TOWNSHIP
TYP.	TYPICAL
UG	UNDERGROUND
UPRR	UNION PACIFIC RAILROAD
V	VELOCITY
WT.	WEIGHT
W	WEST
X-ING	CROSSING

SIGNAL

ABS	AUTOMATIC BLOCK SIGNAL
ATC	AUTOMATIC TRAIN CONTROL
CTC	CENTRALIZED TRAFFIC CONTROL
DED	DRAGGING EQUIPMENT DETECTOR
DTC	DIRECT TRAFFIC CONTROL
ELTO	ELECTRIC LOCK TURNOUT
HBD	HOT BOX DETECTOR
HTTO	HAND THROW TURNOUT
HWD	HIGH WIDE DETECTOR
POTO	POWER OPERATED TURNOUT
TWC	TRACK WARRANT CONTROL
WILD	WHEEL IMPACT LOAD DETECTOR

STRUCTURES

BLDG.	BUILDING
BR.	BRIDGE
CB	CATCH BASIN
CIP	CAST IRON PIPE
CMP	CORRUGATED METAL PIPE
CMPA	CORRUGATED METAL PIPE ARCH
CPT	CONCRETE PILE TRESTLE - BALLAST DECK
CSP	CORRUGATED STEEL PIPE
CULV.	CULVERT
DI	DROP INLET
DPGBD	DECK PLATE GIRDER - BALLAST DECK
DPGOD	DECK PLATE GIRDER - OPEN DECK
EBW	EAST BACKWALL
F.F.	FINISHED FLOOR
F.L.	FLOWLINE
GIP	GALVANIZED IRON PIPE
HDWL	HEADWALL
NBW	NORTH BACKWALL
PSCT	PRESTRESSED CONCRETE TRESTLE
RCA	REINFORCED CONCRETE ARCH
RCB	REINFORCED CONCRETE BOX
RCP	REINFORCED CONCRETE PIPE
SBW	SOUTH BACKWALL
SPP	STRUCTURAL PLATE PIPE
SPTBD	STEEL PILE TRESTLE - BALLAST DECK
SPTOD	STEEL PILE TRESTLE - OPEN DECK
SSP	SMOOTH STEEL PIPE
TPGBD	THROUGH PLATE GIRDER - BALLAST DECK
TPGOD	THROUGH PLATE GIRDER - OPEN DECK
TPTBD	TIMBER PILE TRESTLE - BALLAST DECK
TPTOD	TIMBER PILE TRESTLE - OPEN DECK
TTBD	THROUGH TRUSS - BALLAST DECK
TTOD	THROUGH TRUSS - OPEN DECK
TWB	TREATED WOOD BOX
VCP	VITRIFIED CLAY PIPE
VIAD.	VIADUCT
WBW	WEST BACKWALL
WIP	WROUGHT IRON PIPE

TRACK

ALIGN.	ALIGNMENT
ATR	ABOVE TOP OF RAIL
BBR	BELOW BASE OF RAIL
CNTRS.	CENTERS
CS	POINT OF CURVE TO SPIRAL
CWR	CONTINUOUS WELDED RAIL
EOT	END OF TRACK
HH	HEAD HARDENED
JTD.	JOINTED RAIL
LH	LEFT HAND
ML	MAIN LINE
MM	MILE MARKER
MP	MILE POST
NSC	NOT SUFFICIENT CLEARANCE
OTM	OTHER TRACK MATERIAL
PCC	POINT OF COMPOUND CURVE
PF	½" POINT OF FROG
PITO	POINT OF INTERSECTION OF TURNOUT
POC	POINT ON CURVE
POS	POINT ON SPIRAL
POT	POINT ON TANGENT
PT. SW.	POINT OF SWITCH
RH	RIGHT HAND
SH	SECOND HAND
T.F.	TRACK FEET
TC	TRACK CENTERS
TPI	POINT OF INTERSECTION OF TOTAL CURVE
T/R	TOP OF RAIL
TRK.	TRACK
UXO	UNIVERSAL CROSS-OVER
X-OVER	CROSS-OVER

SYMBOLS

ROAD CROSSING WARNING DEVICES

- CROSSBUCK SIGN
- FLASHING LIGHT WARNING DEVICE
- FLASHING LIGHT WARNING DEVICE WITH GATE
- CANTILEVER FLASHING LIGHT WARNING DEVICE
- CANTILEVER FLASHING LIGHT SIGNAL WITH GATE

SIGNAL

- ABSOLUTE SIGNAL
- SIGNAL BRIDGE
- CANTILEVER SIGNAL
- ACS OR CTC SIGNAL
- DWARF SIGNAL
- BEGIN CTC
- 3 LIGHT SIGNAL
- MICROWAVE TOWER
- AEI — AEI

SIGNS

- STOP
- YARD LIMIT
- 1 MILE TO YARD LIMIT
- WHISTLE POST
- FLANGER
- STATION
- REDUCE SPEED
- RESUME SPEED
- GENERAL PURPOSE

TRACK

- EXISTING MAINLINE
- EXISTING SIDING OR SPUR
- PROPOSED
- REMOVE
- SHIFT
- FUTURE
- FOREIGN RAILROAD OR INDUSTRY
- IN BUILDINGS OR UNDER STRUCTURES
- TURNOUT (POWER OPERATED)
- TURNOUT (HAND THROWN)
- WHEEL STOP
- BUMPING POST
- EARTHEN BUMPER
- 56′ — INERT RETARDER
- 52′ — DOWTY RETARDER
- DERAIL
- SWITCH POINT DERAIL OR DOUBLE SWITCH POINT DERAIL

1 **REVISED PER ADDENDUM No. 1 DATED NOVEMBER 8, 2011**

CONSTRUCTION DETAILS
RAILROAD - PACHAPPA
ABBREVIATIONS & LEGEND

C-100

REVISED BY | DATE REVISED
MICHAEL MIHALOVICH | JIM CONWAY | RUSSELL McNAUGHT
CALCULATED-DESIGNED BY | CHECKED BY
CONSULTANT FUNCTIONAL SUPERVISOR: GERARD REMINISKEY
STATE OF CALIFORNIA - DEPARTMENT OF TRANSPORTATION — Caltrans

LAST REVISION 10-18-11 | DATE PLOTTED => 08-NOV-2011 | TIME PLOTTED => 11:13

Dist	COUNTY	ROUTE	POST MILES TOTAL PROJECT	SHEET No.	TOTAL SHEETS
08	Riv	91	15.6/21.6	187	2028

REGISTERED CIVIL ENGINEER — DATE 10-28-11

4-25-11
PLANS APPROVAL DATE

REGISTERED PROFESSIONAL ENGINEER — RUSSELL McNAUGHT — No. C65853 — Exp. 12/31/11 — CIVIL — STATE OF CALIFORNIA

THE STATE OF CALIFORNIA OR ITS OFFICERS OR AGENTS SHALL NOT BE RESPONSIBLE FOR THE ACCURACY OR COMPLETENESS OF SCANNED COPIES OF THIS PLAN SHEET.

HDR — ONE COMPANY / *Many Solutions*
2280 Market Street, Suite 100
Riverside, CA. 92501
(951) 320-7300

RCTC

1

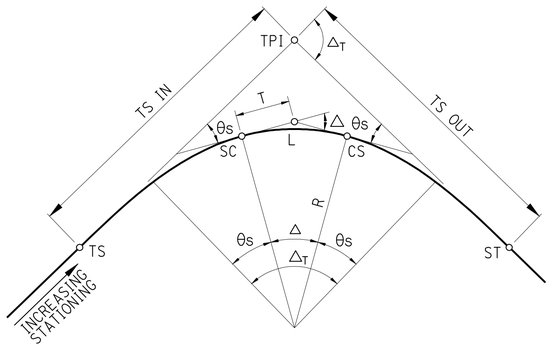

FIGURE A

CIRCULAR CURVES
WITH SPIRAL TRANSITION

Δ_T - TOTAL INTERSECTION ANGLE

θs - SPIRAL ANGLE = $\frac{AL^2}{2}$

Δ - CENTRAL ANGLE OF CIRCULAR CURVE = Δ_T - 2θs

Dc - DEGREE OF CURVE

A - RATE OF CHANGE OF DEGREE OF CURVE PER 100-ft. OF LENGTH = $\frac{Dc}{L}$

R - RADIUS OF CIRCULAR CURVE

T - TANGENT LENGTH OF CIRCULAR CURVE = R TAN $\frac{\Delta}{2}$

L - LENGTH OF CIRCULAR CURVE = $\frac{\Delta}{Dc} \times 100$

TS - TANGENT TO SPIRAL

SC - SPIRAL TO CURVE

CS - CURVE TO SPIRAL

ST - SPIRAL TO TANGENT

TPI - POINT OF INTERSECTION OF MAIN TANGENTS

(TS IN) (TS OUT) - TANGENT LENGTH OF COMPLETE CURVE = (R+o) TAN $\frac{\Delta_T}{2}$ + t

(WHEN SPIRALS OF EQUAL LENGTH ARE USED ON BOTH SIDES OF CIRCULAR CURVE, SEE FIGURE C FOR o AND t).

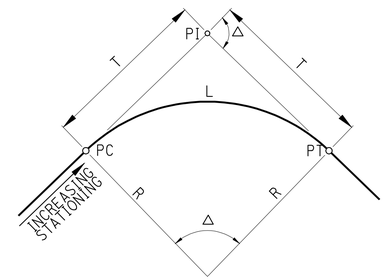

FIGURE B

SIMPLE CIRCULAR CURVE

R = RADIUS OF CIRCULAR CURVE

Δ = CENTRAL ANGLE OF CIRCULAR CURVE

T = R TAN $\frac{\Delta}{2}$

L = $\frac{\Delta}{Dc} \times 100$

Dc = 2 SIN^{-1} (50/R) = DEGREE OF CURVE (CHORD DEFINITION)

PC = POINT OF CURVATURE

PI = POINT OF INTERSECTION

PT = POINT OF TANGENCY

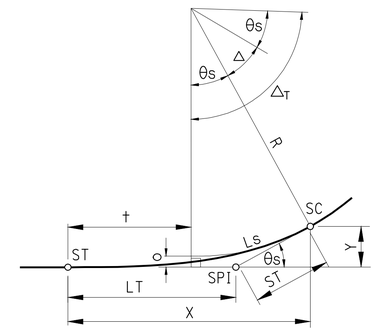

FIGURE C

SPIRAL TRANSITION CURVE

SPIRAL TRANSITION CURVE DATA:
THE SPIRAL USED IS DEFINED BY THE TALBOT SPIRAL.

Ls = LENGTH OF SPIRAL (TS TO SC)

θs = $\frac{AL^2}{2}$

X = $100L_1 - 0.000762A^2L_1^5$

Y = $0.291AL_1^3 - 0.00000158A^3L_1^7$

o = $0.0727AL_1^3$

t = $50L_1 - 0.000127A^2L_1^5$

ST = $\frac{Y}{SIN\theta s}$

LT = X - $\frac{Y}{TAN\theta s}$

Dc = 2 SIN^{-1}(50/R) = DEGREE OF CURVE (CHORD DEFINITION)

L_1 - TOTAL NO. OF STATIONS IN SPIRAL

SPI - SPIRAL POINT OF INTERSECTION

NOTE: Dc, θs, Δ, AND Δ_T ARE IN DEGREES.
ALL OTHERS DIMENSIONS ARE FEET.

1 **REVISED PER ADDENDUM No. 1 DATED NOVEMBER 8, 2011**

CONSTRUCTION DETAILS
RAILROAD - PACHAPPA
GEOMETRY CONTROL POINTS
C-101

STATE OF CALIFORNIA - DEPARTMENT OF TRANSPORTATION — Caltrans

CONSULTANT FUNCTIONAL SUPERVISOR: GERARD REMINISKEY

CALCULATED-DESIGNED BY: MICHAEL MIHALOVICH — CHECKED BY: JIM CONWAY, RUSSELL McNAUGHT

REVISED BY — DATE REVISED

LAST REVISION 10-17-11 — DATE PLOTTED => 08-NOV-2011 — TIME PLOTTED => 11:13

Dist	COUNTY	ROUTE	POST MILES TOTAL PROJECT	SHEET No.	TOTAL SHEETS
08	Riv	91	15.6/21.6	188	2028

1

REGISTERED CIVIL ENGINEER — DATE 10-28-11

4-25-11
PLANS APPROVAL DATE

REGISTERED PROFESSIONAL ENGINEER — RUSSELL McNAUGHT — No. C65853 — Exp. 12/31/11 — CIVIL — STATE OF CALIFORNIA

THE STATE OF CALIFORNIA OR ITS OFFICERS OR AGENTS SHALL NOT BE RESPONSIBLE FOR THE ACCURACY OR COMPLETENESS OF SCANNED COPIES OF THIS PLAN SHEET.

HDR — ONE COMPANY / *Many Solutions*
2280 Market Street, Suite 100
Riverside, CA. 92501
(951) 320-7300

RCTC

INTERIM MAIN TRACK 2 (IMT2)

CURVE/ TURNOUT	CURVE DATA	POINT	STATION	NORTHING	EASTING	BEARING	DISTANCE	FREIGHT S (mph)	FREIGHT E	FREIGHT Eu	PASSENGER S (mph)	PASSENGER E	PASSENGER Eu	ACTUAL Ea
		POT	69+75.00 MAIN BK=											
		POT	69+75.93 IMT2 AHD	2296345.7693	6219129.0539									
						N 58°32′04″ E	337.26′							
	Ls = 220.00′	TS	73+13.18	2296521.8130	6219416.7185									
	θs = 3°34′28″					N 58°32′04″ E	146.70′							
		SPI	74+59.88	2296598.3867	6219541.8439									
	Δ = 4°41′47″					N 54°57′36″ E	73.36′							
	Dc = 3°15′00″	SC	75+33.18	2296640.5066	6219601.9078									
	R = 1763.18′							45	4.50″	0.50″	55	7.00″	3.00″	4.00″
	T = 72.30′	CS	76+77.69	2296728.2400	6219716.7068									
	L = 144.51′					N 50°15′48″ E	50.86′							
		SPI	77+28.55	2296760.7536	6219755.8187									
	CMP SPIRAL					N 47°20′55″ E	59.16′							
	Ls = 110.00′	SC	77+87.69	2296800.8380	6219799.3320									
	θs = 2°54′53″													
C1-1	TOTAL CURVE													
	Δ_T = 19°41′25″ LT													
	L_T = 944.38′													
	TS IN = 456.80′	TPI	77+69.98	2296760.2546	6219806.3447									
	TS OUT = 495.57′													
	Δ = 7°22′38″													
	Dc = 2°03′00″													
	R = 2795.07′							45	3.00″	1.00″	55	4.25″	2.25″	2.00″
	T = 180.19′	CS	81+47.56	2297061.0179	6220047.6187									
	L = 359.87′					N 39°58′17″ E	36.67′							
		SPI	81+84.23	2297089.1190	6220071.1745									
	Ls = 110.00′					N 38°50′38″ E	73.33′							
	θs = 1°07′39″	ST	82+57.56	2297146.2363	6220117.1702									
						N 38°50′38″ E	260.68′							
	Ls = 90.00′	TS	85+18.24	2297349.2683	6220280.6689									
	θs = 1°07′30″					N 38°50′38″ E	60.00′							
		SPI	85+78.24	2297396.0007	6220318.3018									
	Δ = 2°15′44″					N 37°43′09″ E	30.00′							
	Dc = 2°30′00″	SC	86+08.24	2297419.7321	6220336.6562									
	R = 2292.01′													
	T = 45.26′													
	L = 90.49′													
C1-2		TPI	86+53.54	2297454.6490	6220365.5305			40	2.75″	1.00″	50	4.50″	2.75″	1.75″
	TOTAL CURVE													
	Δ_T = 4°30′44″ LT													
	L_T = 270.49′													
	TS IN = 135.30′	CS	86+98.73	2297492.3936	6220390.5956									
	TS OUT = 135.30′					N 35°27′24″ E	30.00′							
		SPI	87+28.73	2297516.8311	6220407.9989									
	Ls = 90.00′					N 34°19′55″ E	60.00′							
	θs = 1°07′30″	ST	87+88.73	2297566.3792	6220441.8387									
						N 34°19′55″ E	311.27′							
		POT	91+00.00 IMT2 BK=	2297823.4217	6220617.3906									
		POT	10+89.52 UPRR XO AHD											

1 **REVISED PER ADDENDUM No. 1 DATED NOVEMBER 8, 2011**

CONSTRUCTION DETAILS
RAILROAD - PACHAPPA
TRACK GEOMETRY - IMT2
C-102

STATE OF CALIFORNIA - DEPARTMENT OF TRANSPORTATION — Caltrans

CONSULTANT FUNCTIONAL SUPERVISOR: GERARD REMINISKEY

CALCULATED-DESIGNED BY: MICHAEL MIHALOVICH — CHECKED BY: JIM CONWAY, RUSSELL McNAUGHT

REVISED BY — DATE REVISED

LAST REVISION 10-18-11 — DATE PLOTTED => 08-NOV-2011 — TIME PLOTTED => 11:13

Dist	COUNTY	ROUTE	POST MILES TOTAL PROJECT	SHEET No.	TOTAL SHEETS
08	Riv	91	15.6/21.6	189	2028

REGISTERED CIVIL ENGINEER — 10-28-11 DATE

4-25-11
PLANS APPROVAL DATE

REGISTERED PROFESSIONAL ENGINEER — RUSSELL McNAUGHT — No. C65853 — Exp. 12/31/11 — CIVIL — STATE OF CALIFORNIA

THE STATE OF CALIFORNIA OR ITS OFFICERS OR AGENTS SHALL NOT BE RESPONSIBLE FOR THE ACCURACY OR COMPLETENESS OF SCANNED COPIES OF THIS PLAN SHEET.

HDR ONE COMPANY / *Many Solutions*
2280 Market Street, Suite 100
Riverside, CA. 92501
(951) 320-7300

RCTC

INTERIM SCAX TRACK (ISCAX)

CURVE/ TURNOUT	CURVE DATA	POINT	STATION	NORTHING	EASTING	BEARING	DISTANCE	FREIGHT S (mph)	FREIGHT E	FREIGHT Eu	PASSENGER S (mph)	PASSENGER E	PASSENGER Eu	ACTUAL Ea
		PS	82+71.56 IMT2 BK=											
	LH No. 20 POTO	PS	2+71.56 ISCAX AHD	2297157.1403	6220125.9510									
T-01						N 38°50′38″ E	61.04′				50	3.00″	3.00″	0.00″
		PITO	3+32.60	2297204.6817	6220164.2354									
						N 35°58′47″ E	188.44′							
	Ls = 90.00′	TS	5+21.04	2297357.1692	6220274.9420									
	θs = 1°07′30″					N 35°58′47″ E	60.00′							
		SPI	5+81.04	2297405.7236	6220310.1928									
	Δ = 1°28′35″					N 34°51′18″ E	30.00′							
	Dc = 2°30′00″	SC	6+11.04	2297430.3426	6220327.3384									
	R = 2292.01′													
	T = 29.53′													
	L = 59.06′													
C1-3		TPI	6+40.60	2297453.9227	6220345.1855						50	4.50″	3.00″	1.50″
	TOTAL CURVE													
	Δ_T = 3°43′35″ LT													
	L_T = 239.06′													
	TS IN = 119.56′	CS	6+70.10	2297479.2415	6220360.4662									
	TS OUT = 119.56′					N 33°22′42″ E	30.00′							
		SPI	7+00.10	2297504.2941	6220376.9718									
	Ls = 90.00′					N 32°15′13″ E	60.00′							
	θs = 1°07′30″	ST	7+60.10	2297555.0369	6220408.9924									
						N 32°15′13″ E	113.21′							
	Ls = 70.00′	TS	8+73.31	2297650.7778	6220469.4085									
	θs = 0°21′00″					N 32°15′13″ E	46.67′							
		SPI	9+19.97	2297690.2436	6220494.3130									
	Δ = 0°29′24″					N 32°36′13″ E	23.33′							
	Dc = 1°00′00″	SC	9+43.31	2297709.9002	6220506.8855									
	R = 5729.65′													
	T = 24.51′													
	L = 49.01′													
C1-4		TPI	9+67.82	2297730.7039	6220519.8449						55	2.00″	1.00″	1.00″
	TOTAL CURVE													
	Δ_T = 1°11′24″ RT													
	L_T = 189.01′													
	TS IN = 94.51′	CS	9+92.32	2297751.0768	6220533.4715									
	TS OUT = 94.51′					N 33°05′37″ E	23.33′							
		SPI	10+15.65	2297770.6251	6220546.2117									
	Ls = 70.00′					N 33°26′37″ E	46.67′							
	θs = 0°21′00″	ST	10+62.32 ISCAX BK=	2297809.5651	6220571.9305									
		POT	90+50.43 SCAX AHD											

1 REVISED PER ADDENDUM No. 1 DATED NOVEMBER 8, 2011

CONSTRUCTION DETAILS
RAILROAD - PACHAPPA
TRACK GEOMETRY - ISCAX
C-103

STATE OF CALIFORNIA - DEPARTMENT OF TRANSPORTATION — Caltrans

CONSULTANT FUNCTIONAL SUPERVISOR: GERARD REMINISKEY

CALCULATED-DESIGNED BY: MICHAEL MIHALOVICH — CHECKED BY: JIM CONWAY, RUSSELL McNAUGHT

REVISED BY — DATE REVISED

LAST REVISION 10-19-11 — DATE PLOTTED => 08-NOV-2011 — TIME PLOTTED => 11:14

Dist	COUNTY	ROUTE	POST MILES TOTAL PROJECT	SHEET No.	TOTAL SHEETS
08	Riv	91	15.6/21.6	190	2028

REGISTERED CIVIL ENGINEER — 10-28-11 DATE

4-25-11
PLANS APPROVAL DATE

REGISTERED PROFESSIONAL ENGINEER — RUSSELL McNAUGHT — No. C65853 — Exp. 12/31/11 — CIVIL — STATE OF CALIFORNIA

THE STATE OF CALIFORNIA OR ITS OFFICERS OR AGENTS SHALL NOT BE RESPONSIBLE FOR THE ACCURACY OR COMPLETENESS OF SCANNED COPIES OF THIS PLAN SHEET.

HDR — ONE COMPANY / *Many Solutions*
2280 Market Street, Suite 100
Riverside, CA. 92501
(951) 320-7300

RCTC

1

PROPOSED MAIN TRACK 1 (PMT1)

CURVE/ TURNOUT	CURVE DATA	POINT	STATION	NORTHING	EASTING	BEARING	DISTANCE	FREIGHT S (mph)	FREIGHT E	FREIGHT Eu	PASSENGER S (mph)	PASSENGER E	PASSENGER Eu	ACTUAL Ea
		POT	70+72.80 IMT2 BK=											
	Ls = 85.00′	TS	70+71.88 PMT1 AHD	2296396.3380	6219211.6857									
	θs = 0°45′54"					N 58°32′04" E	56.67′							
		SPI	71+28.54	2296425.9175	6219260.0202									
	Δ = 15°17′47"					N 57°46′10" E	28.33′							
	Dc = 1°48′00"	SC	71+56.88	2296441.0287	6219283.9880									
	R = 3183.23′													
	T = 427.46′													
	L = 849.79′													
C2-1		TPI	75+85.19	2296664.2826	6219649.5214			45	2.50′′	1.00′′	55	3.75′′	2.25′′	1.50′′
	TOTAL CURVE													
	Δ_T = 16°49′34" LT													
	L_T = 1019.79′													
	TS IN = 513.32′	CS	80+06.67	2296984.2928	6219934.2151									
	TS OUT = 513.32′					N 42°28′23" E	28.33′							
		SPI	80+35.01	2297005.1916	6219953.3473									
	Ls = 85.00′					N 41°42′29" E	56.67′							
	θs = 0°45′54"	ST	80+91.67	2297047.4961	6219991.0501									
						N 41°42′29" E	387.92′							
	Ls = 95.00′	TS	84+79.59	2297337.0964	6220249.1485									
	θs = 0°57′00"					N 41°42′29" E	63.33′							
		SPI	85+42.93	2297384.3782	6220291.2871									
	Δ = 5°28′35"					N 40°45′30" E	31.67′							
	Dc = 2°00′00"	SC	85+74.59	2297408.3654	6220311.9618									
	R = 2864.93′													
	T = 137.02′													
	L = 273.82′													
C2-2		TPI	87+11.77	2297510.4290	6220403.6264			45	2.75′′	1.00′′	55	4.25′′	2.50′′	1.75′′
	TOTAL CURVE													
	Δ_T = 7°22′35" LT													
	L_T = 463.82′													
	TS IN = 232.18′	CS	88+48.41	2297624.0085	6220480.5619									
	TS OUT = 232.18′					N 35°16′54" E	31.67′							
		SPI	88+80.08	2297649.8594	6220498.8530									
	Ls = 95.00′					N 34°19′55" E	63.33′							
	θs = 0°57′00"	ST	89+43.41 PMT1 BK=	2297702.1598	6220534.5726									
		POT	89+53.16 IMT2 AHD											

PROPOSED SCAX TRACK (PSCAX)

CURVE/ TURNOUT	CURVE DATA	POINT	STATION	NORTHING	EASTING	BEARING	DISTANCE	FREIGHT S (mph)	FREIGHT E	FREIGHT Eu	PASSENGER S (mph)	PASSENGER E	PASSENGER Eu	ACTUAL Ea
		PS	81+16.68 PMT1 BK=											
	LH No. 20 POTO	PS	1+16.68 PSCAX AHD	2297066.1597	6220007.6835									
T-02						N 41°42′29" E	61.04′				50	3.00′′	3.00′′	0.00′′
		PITO	1+77.72	2297111.7287	6220048.2956									
						N 38°50′38" E	378.59′							
	Ls = 115.00′	TS	5+56.31	2297406.5928	6220285.7454									
	θs = 1°17′37"					N 38°50′38" E	76.67′							
		SPI	6+32.97	2297466.3067	6220333.8322									
	Δ = 2°48′47"					N 37°33′01" E	38.34′							
	Dc = 2°15′00"	SC	6+71.31	2297496.6996	6220357.1959									
	R = 2546.64′													
	T = 62.53′													
	L = 125.02′													
C2-3		TPI	7+33.92	2297544.9274	6220397.1443						55	4.75′′	3.00′′	1.75′′
	TOTAL CURVE													
	Δ_T = 5°24′01" LT													
	L_T = 355.02′													
	TS IN = 177.61′	CS	7+96.33	2297597.6549	6220430.9321									
	TS OUT = 177.61′					N 34°44′14" E	38.34′							
		SPI	8+34.66	2297629.1577	6220452.7761									
	Ls = 115.00′					N 33°26′37" E	76.67′							
	θs = 1°17′37"	ST	9+11.33	2297693.1322	6220495.0296									
						N 33°26′37" E	139.54′							
		POT	10+50.86 PSCAX BK=	2297809.5651	6220571.9305									
		POT	90+50.43 SCAX AHD											

1 **REVISED PER ADDENDUM No. 1 DATED NOVEMBER 8, 2011**

CONSTRUCTION DETAILS
RAILROAD - PACHAPPA
TRACK GEOMETRY
PMT1 & PSCAX

C-104

LAST REVISION 10-19-11 | DATE PLOTTED => 08-NOV-2011 | TIME PLOTTED => 11:14

STATE OF CALIFORNIA - DEPARTMENT OF TRANSPORTATION — Caltrans

CONSULTANT FUNCTIONAL SUPERVISOR: GERARD REMINISKEY

CALCULATED-DESIGNED BY: MICHAEL MIHALOVICH — CHECKED BY: JIM CONWAY, RUSSELL McNAUGHT

REVISED BY — DATE REVISED

Dist	COUNTY	ROUTE	POST MILES TOTAL PROJECT	SHEET No.	TOTAL SHEETS
08	Riv	91	15.6/21.6	191	2028

REGISTERED CIVIL ENGINEER — DATE 10-28-11

4-25-11
PLANS APPROVAL DATE

REGISTERED PROFESSIONAL ENGINEER — RUSSELL McNAUGHT — No. C65853 — Exp. 12/31/11 — CIVIL — STATE OF CALIFORNIA

THE STATE OF CALIFORNIA OR ITS OFFICERS OR AGENTS SHALL NOT BE RESPONSIBLE FOR THE ACCURACY OR COMPLETENESS OF SCANNED COPIES OF THIS PLAN SHEET.

HDR — ONE COMPANY / *Many Solutions*
2280 Market Street, Suite 100
Riverside, CA. 92501
(951) 320-7300

RCTC

1

FUTURE MAIN TRACK 1 (FMT1)

CURVE/ TURNOUT	CURVE DATA	POINT	STATION	NORTHING	EASTING	BEARING	DISTANCE	FREIGHT S (mph)	FREIGHT E	FREIGHT Eu	PASSENGER S (mph)	PASSENGER E	PASSENGER Eu	ACTUAL Ea
		POT	69+75.00 MAIN BK=											
		POT	69+75.00 FMT1 AHD	2296345.7693	6219129.0539									
						N 58°32′04″ E	96.88′							
	Ls = 85.00′	TS	70+71.88	2296396.3380	6219211.6857									
	θs = 0°45′54″					N 58°32′04″ E	56.67′							
		SPI	71+28.54	2296425.9175	6219260.0202									
	Δ = 15°17′47″					N 57°46′10″ E	28.33′							
	Dc = 1°48′00″	SC	71+56.88	2296441.0287	6219283.9880									
	R = 3183.23′													
	T = 427.46′													
	L = 849.79′													
C3-1		TPI	75+85.19	2296664.2826	6219649.5214			45	2.50″	1.00″	55	3.75″	2.25″	1.50″
	TOTAL CURVE													
	Δ_T = 16°49′34″ LT													
	L_T = 1019.79′													
	TS IN = 513.32′	CS	80+06.67	2296984.2928	6219934.2151									
	TS OUT = 513.32′					N 42°28′23″ E	28.33′							
		SPI	80+35.01	2297005.1916	6219953.3473									
	Ls = 85.00′					N 41°42′29″ E	56.67′							
	θs = 0°45′54″	ST	80+91.67	2297047.4961	6219991.0501									
						N 41°42′29″ E	299.13′							
	Ls = 70.00′	TS	83+90.80	2297270.8088	6220190.0715									
	θs = 0°42′00″					N 41°42′29″ E	46.67′							
		SPI	84+37.47	2297305.6478	6220221.1208									
	Δ = 3°06′44″					N 41°00′29″ E	23.33′							
	Dc = 2°00′00″	SC	84+60.80	2297323.2558	6220236.4315									
	R = 2864.93′													
	T = 77.83′													
	L = 155.61′													
C3-2		TPI	85+38.67	2297381.2003	6220288.4549			40	2.25″	1.00″	50	3.50″	2.25″	1.25″
	TOTAL CURVE													
	Δ_T = 4°30′44″ LT													
	L_T = 295.61′													
	TS IN = 147.87′	CS	86+16.41	2297443.4027	6220335.3044									
	TS OUT = 147.87′					N 37°53′46″ E	23.33′							
		SPI	86+39.74	2297461.8159	6220349.6366									
	Ls = 70.00′					N 37°11′46″ E	46.67′							
	θs = 0°42′00″	ST	86+86.41	2297498.9895	6220377.8489									
						N 37°11′46″ E	296.89′							
		PITO	89+83.30	2297735.4829	6220557.3312									
T-03						N 34°19′55″ E	61.04′	35	1.50″	1.50″	50	3.00″	3.00″	0.00″
	RH No. 20 POTO	PS	90+44.34 FMT1 BK=	2297785.8888	6220591.7569									
		PS	90+54.55 FMT2 AHD											

1 REVISED PER ADDENDUM No. 1 DATED NOVEMBER 8, 2011

CONSTRUCTION DETAILS
RAILROAD - PACHAPPA
TRACK GEOMETRY - FMT1
C-105

STATE OF CALIFORNIA - DEPARTMENT OF TRANSPORTATION — Caltrans

CONSULTANT FUNCTIONAL SUPERVISOR: GERARD REMINISKEY

CALCULATED-DESIGNED BY: MICHAEL MIHALOVICH — CHECKED BY: JIM CONWAY, RUSSELL McNAUGHT

REVISED BY — DATE REVISED

LAST REVISION 10-19-11 — DATE PLOTTED => 08-NOV-2011 — TIME PLOTTED => 11:14

Dist	COUNTY	ROUTE	POST MILES TOTAL PROJECT	SHEET No.	TOTAL SHEETS
08	Riv	91	15.6/21.6	192	2028

REGISTERED CIVIL ENGINEER — DATE: 10-28-11

4-25-11
PLANS APPROVAL DATE

REGISTERED PROFESSIONAL ENGINEER — RUSSELL McNAUGHT — No. C65853 — Exp. 12/31/11 — CIVIL — STATE OF CALIFORNIA

THE STATE OF CALIFORNIA OR ITS OFFICERS OR AGENTS SHALL NOT BE RESPONSIBLE FOR THE ACCURACY OR COMPLETENESS OF SCANNED COPIES OF THIS PLAN SHEET.

HDR — ONE COMPANY / *Many Solutions*
2280 Market Street, Suite 100
Riverside, CA. 92501
(951) 320-7300

RCTC

FUTURE MAIN TRACK 2 (FMT2)

CURVE/ TURNOUT	CURVE DATA	POINT	STATION	NORTHING	EASTING	BEARING	DISTANCE	FREIGHT S (mph)	FREIGHT E	FREIGHT Eu	PASSENGER S (mph)	PASSENGER E	PASSENGER Eu	ACTUAL Ea
		POT	65+00.00	2296085.0314	6218731.7307									
						N 58°32′04″ E	687.04′							
	Ls = 110.00′	TS	71+87.04	2296443.6594	6219317.7478									
	θs = 1°07′39″					N 58°32′04″ E	73.33′							
		SPI	72+60.38	2296481.9392	6219380.2990									
	Δ = 17°26′08″					N 57°24′25″ E	36.67′							
	Dc = 2°03′00″	SC	72+97.04	2296501.6911	6219411.1925									
	R = 2795.07′													
	T = 428.59′													
	L = 850.52′													
C3-3		TPI	77+27.14	2296725.5810	6219778.4225			45	3.00″	1.00″	55	4.25″	2.25″	2.00″
	TOTAL CURVE													
	Δ_T = 19°41′25″ LT													
	L_T = 1070.52′													
	TS IN = 540.09′	CS	81+47.56	2297061.0179	6220047.6187									
	TS OUT = 540.09′					N 39°58′17″ E	36.67′							
		SPI	81+84.23	2297089.1190	6220071.1745									
	Ls = 110.00′					N 38°50′38″ E	73.33′							
	θs = 1°07′39″	ST	82+57.56	2297146.2363	6220117.1702									
						N 38°50′38″ E	260.68′							
	Ls = 90.00′	TS	85+18.24	2297349.2683	6220280.6689									
	θs = 1°07′30″					N 38°50′38″ E	60.00′							
		SPI	85+78.24	2297396.0007	6220318.3018									
	Δ = 2°15′44″					N 37°43′09″ E	30.00′							
	Dc = 2°30′00″	SC	86+08.24	2297419.7321	6220336.6562									
	R = 2292.01′													
	T = 45.26′													
	L = 90.49′													
C3-4		TPI	86+53.54	2297454.6490	6220365.5305			40	2.75″	1.00″	55	4.50″	2.75″	1.75″
	TOTAL CURVE													
	Δ_T = 4°30′44″ LT													
	L_T = 270.49′													
	TS IN = 135.30′	CS	86+98.73	2297492.3936	6220390.5956									
	TS OUT = 135.30′					N 35°27′24″ E	30.00′							
		SPI	87+28.73	2297516.8311	6220407.9989									
	Ls = 90.00′					N 34°19′55″ E	60.00′							
	θs = 1°07′30″	ST	87+88.73	2297566.3792	6220441.8387									
						N 34°19′55″ E	311.27′							
		POT	91+00.00 FMT2 BK=	2297823.4217	6220617.3906									
		POT	10+89.52 UPRR XO AHD											

1 REVISED PER ADDENDUM No. 1 DATED NOVEMBER 8, 2011

CONSTRUCTION DETAILS
RAILROAD - PACHAPPA
TRACK GEOMETRY - FMT2

C-106

STATE OF CALIFORNIA - DEPARTMENT OF TRANSPORTATION — Caltrans

CONSULTANT FUNCTIONAL SUPERVISOR: GERARD REMINISKEY

CALCULATED-DESIGNED BY: MICHAEL MIHALOVICH — CHECKED BY: JIM CONWAY, RUSSELL McNAUGHT

REVISED BY — DATE REVISED

LAST REVISION 10-19-11 — DATE PLOTTED => 08-NOV-2011 — TIME PLOTTED => 11:14

Dist	COUNTY	ROUTE	POST MILES TOTAL PROJECT	SHEET No.	TOTAL SHEETS
08	Riv	91	15.6/21.6	193	2028

REGISTERED CIVIL ENGINEER — DATE 10-28-11

4-25-11
PLANS APPROVAL DATE

REGISTERED PROFESSIONAL ENGINEER — RUSSELL McNAUGHT — No. C65853 — Exp. 12/31/11 — CIVIL — STATE OF CALIFORNIA

THE STATE OF CALIFORNIA OR ITS OFFICERS OR AGENTS SHALL NOT BE RESPONSIBLE FOR THE ACCURACY OR COMPLETENESS OF SCANNED COPIES OF THIS PLAN SHEET.

HDR — ONE COMPANY / *Many Solutions*
2280 Market Street, Suite 100
Riverside, CA. 92501
(951) 320-7300

RCTC

1

NOTE:

1. SUBBALLAST CONTOURS SHOWN AT 0.1′ INTERVAL FOR CLARITY
2. USE FUTURE TRACK FMT1 AND FMT2 FOR SUBGRADE AND SUBBALLAST GRADING PURPOSE ONLY.
3. SEE C-95 THRU C-97 FOR SITE GRADING OUTSIDE LIMITS OF SUBBALLAST

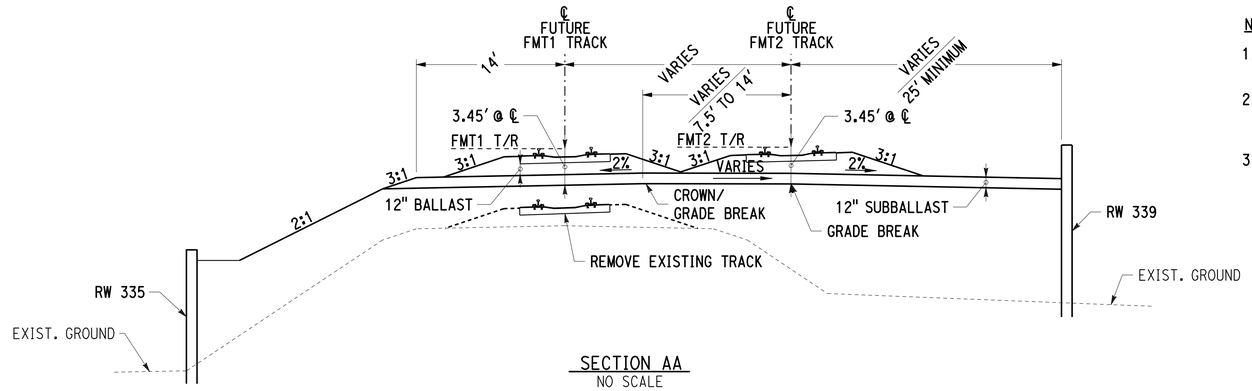

SECTION AA
NO SCALE

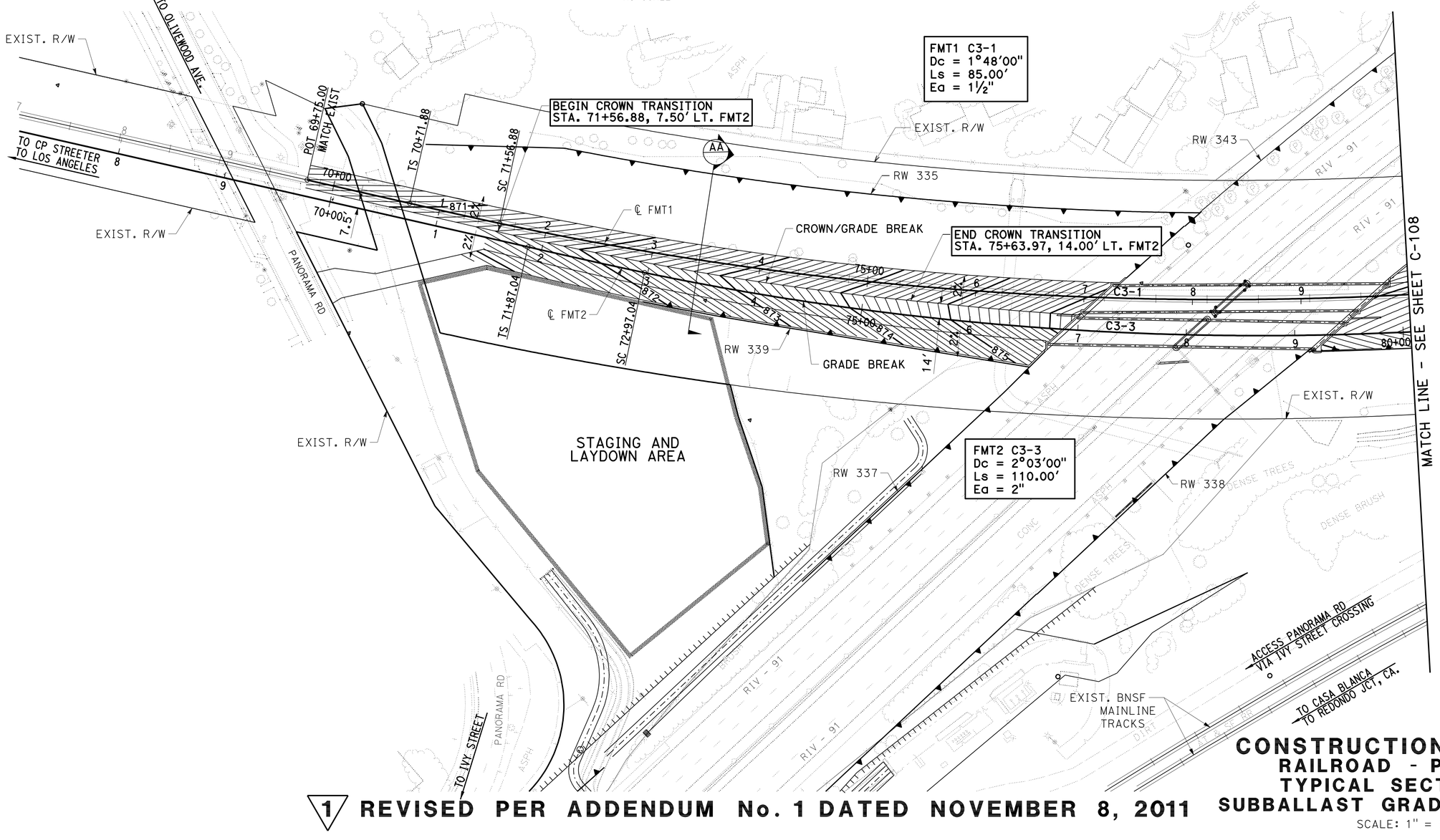

1 **REVISED PER ADDENDUM No. 1 DATED NOVEMBER 8, 2011**

CONSTRUCTION DETAILS
RAILROAD - PACHAPPA
TYPICAL SECTION AND SUBBALLAST GRADING - 1 OF 2

SCALE: 1" = 50′

C-107

STATE OF CALIFORNIA - DEPARTMENT OF TRANSPORTATION — Caltrans

CONSULTANT FUNCTIONAL SUPERVISOR: GERARD REMINISKEY

CALCULATED-DESIGNED BY: MICHAEL MIHALOVICH
CHECKED BY: JIM CONWAY, RUSSELL McNAUGHT

REVISED BY / DATE REVISED

LAST REVISION 10-19-11 — DATE PLOTTED => 08-NOV-2011 — TIME PLOTTED => 11:14

BORDER LAST REVISED 4/11/2008 — RELATIVE BORDER SCALE IS IN INCHES 0 1 2 3 — USERNAME => s121614 — DGN FILE => 844840ga107.add — CU 08227 — EA 448401

Dist	COUNTY	ROUTE	POST MILES TOTAL PROJECT	SHEET No.	TOTAL SHEETS
08	Riv	91	15.6/21.6	194	2028

REGISTERED CIVIL ENGINEER — DATE 10-28-11

4-25-11
PLANS APPROVAL DATE

REGISTERED PROFESSIONAL ENGINEER — RUSSELL McNAUGHT — No. C65853 — Exp. 12/31/11 — CIVIL — STATE OF CALIFORNIA

THE STATE OF CALIFORNIA OR ITS OFFICERS OR AGENTS SHALL NOT BE RESPONSIBLE FOR THE ACCURACY OR COMPLETENESS OF SCANNED COPIES OF THIS PLAN SHEET.

HDR — ONE COMPANY / *Many Solutions*
2280 Market Street, Suite 100
Riverside, CA. 92501
(951) 320-7300

RCTC

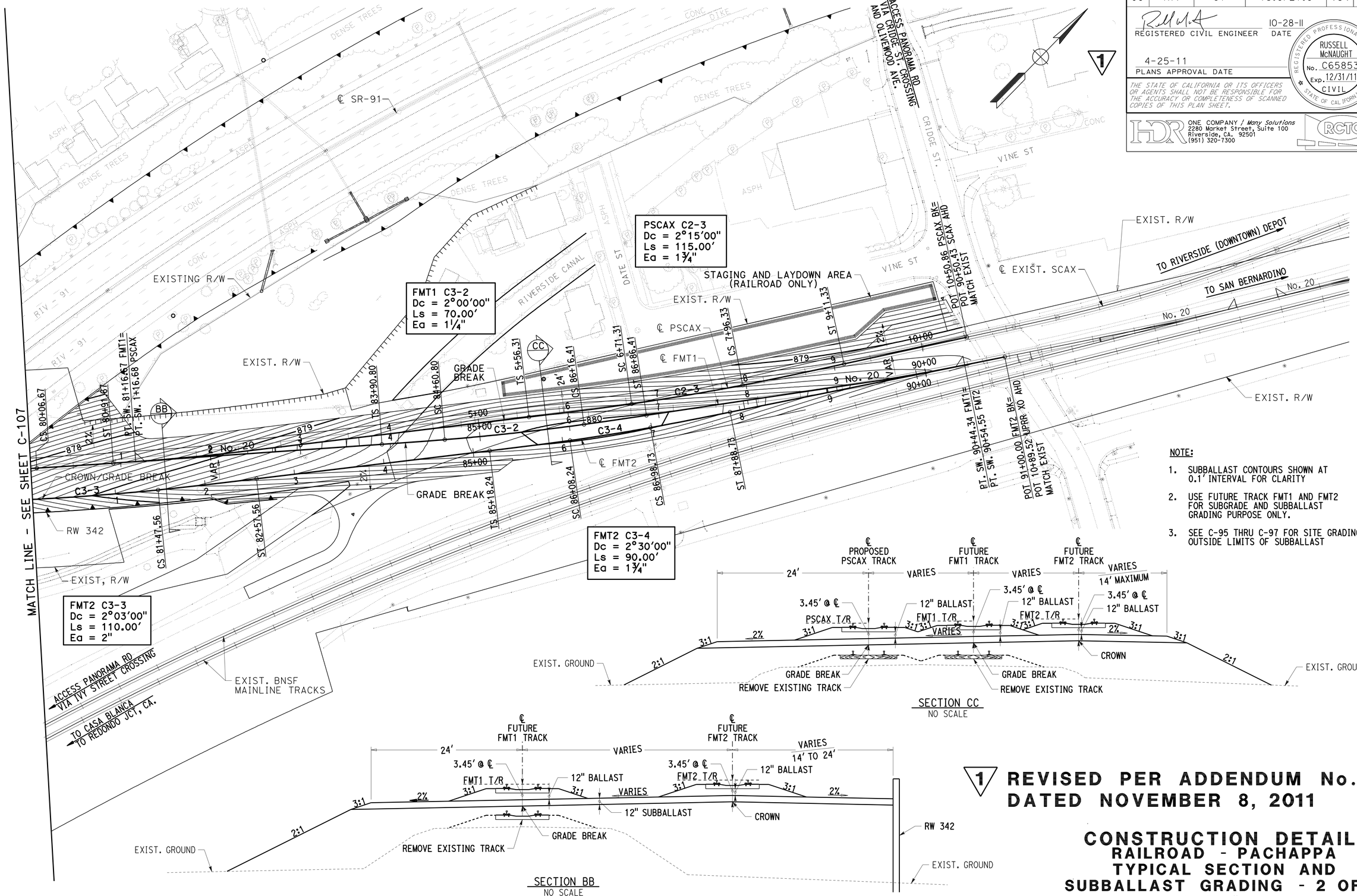

NOTE:

1. SUBBALLAST CONTOURS SHOWN AT 0.1' INTERVAL FOR CLARITY
2. USE FUTURE TRACK FMT1 AND FMT2 FOR SUBGRADE AND SUBBALLAST GRADING PURPOSE ONLY.
3. SEE C-95 THRU C-97 FOR SITE GRADING OUTSIDE LIMITS OF SUBBALLAST

SECTION CC
NO SCALE

SECTION BB
NO SCALE

1 **REVISED PER ADDENDUM No. 1 DATED NOVEMBER 8, 2011**

CONSTRUCTION DETAILS
RAILROAD - PACHAPPA
TYPICAL SECTION AND SUBBALLAST GRADING - 2 OF 2

SCALE: 1" = 50'

C-108

REVISED BY	DATE REVISED
MICHAEL MIHALOVICH	
JIM CONWAY	
RUSSELL McNAUGHT	

CALCULATED-DESIGNED BY
CHECKED BY
CONSULTANT FUNCTIONAL SUPERVISOR
GERARD REMINISKEY

STATE OF CALIFORNIA - DEPARTMENT OF TRANSPORTATION
Caltrans

LAST REVISION DATE PLOTTED => 08-NOV-2011
TIME PLOTTED => 11:14
10-19-11

Dist	COUNTY	ROUTE	POST MILES TOTAL PROJECT	SHEET No.	TOTAL SHEETS
08	Riv	91	15.6/21.6	195	2028

REGISTERED CIVIL ENGINEER — DATE 10-28-11

4-25-11
PLANS APPROVAL DATE

REGISTERED PROFESSIONAL ENGINEER — RUSSELL McNAUGHT — No. C65853 — Exp. 12/31/11 — CIVIL — STATE OF CALIFORNIA

THE STATE OF CALIFORNIA OR ITS OFFICERS OR AGENTS SHALL NOT BE RESPONSIBLE FOR THE ACCURACY OR COMPLETENESS OF SCANNED COPIES OF THIS PLAN SHEET.

HDR — ONE COMPANY / *Many Solutions* — 2280 Market Street, Suite 100, Riverside, CA. 92501, (951) 320-7300

RCTC

NOTE:

1. ALL WORK SHOWN IN PHASE 1A TO BE COMPLETED BY STATE CONTRACTOR
2. ALL EXISTING RAIL LINES TO REMAIN IN SERVICE THROUGHOUT DURATION OF PHASE 1A

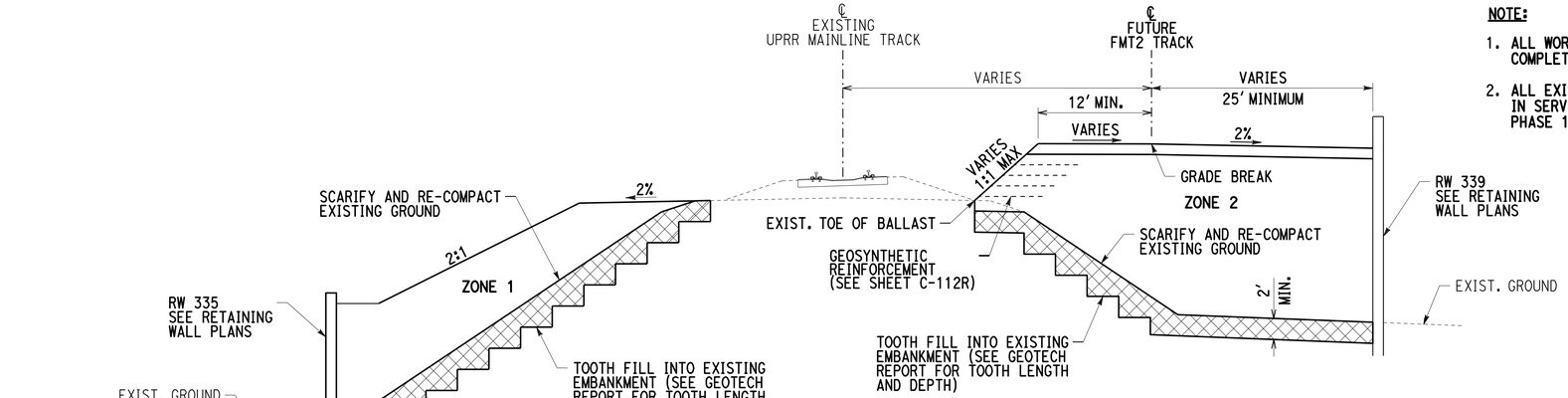

SECTION A
NO SCALE

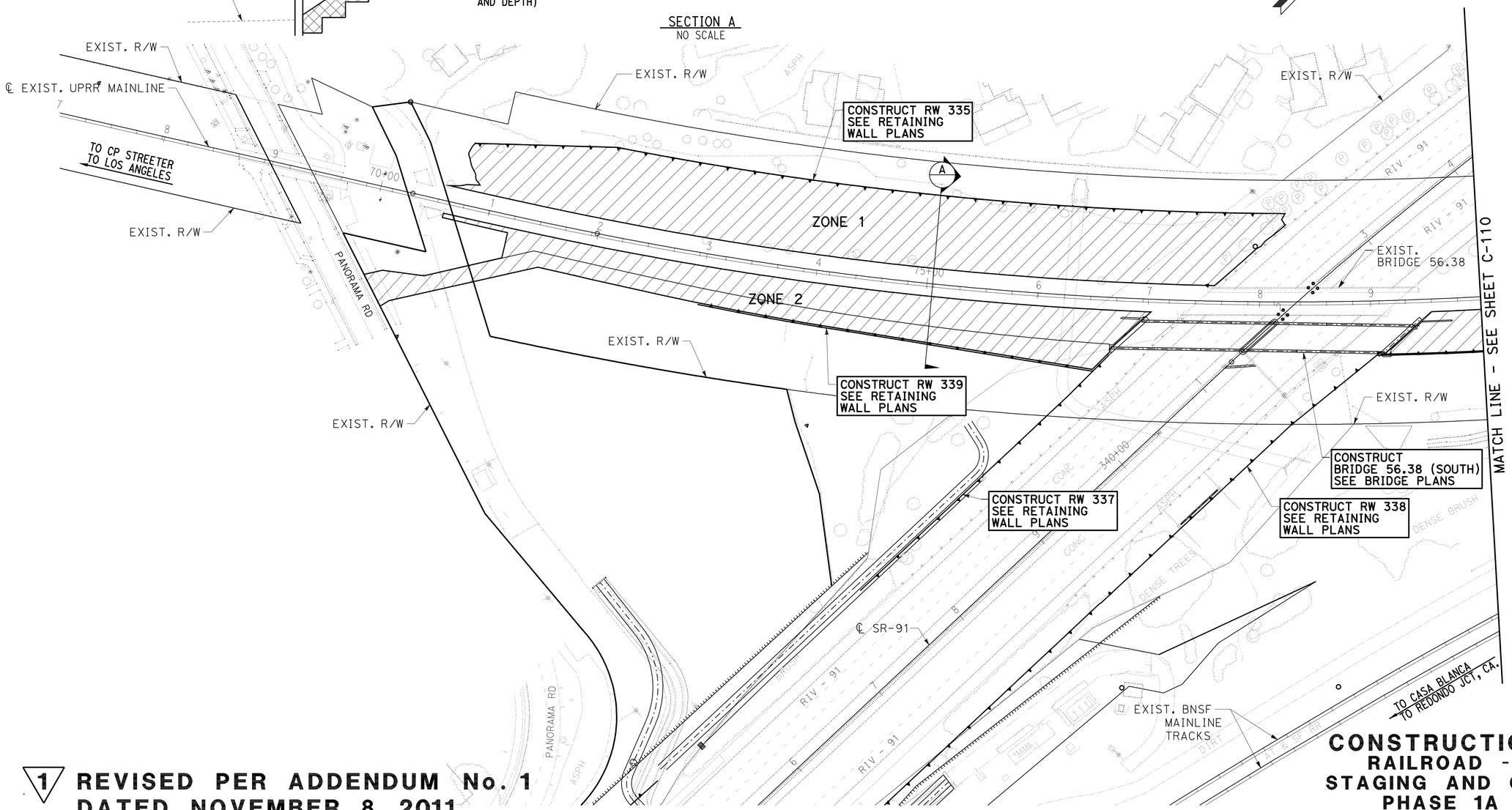

1 **REVISED PER ADDENDUM No. 1 DATED NOVEMBER 8, 2011**

CONSTRUCTION DETAILS
RAILROAD - PACHAPPA STAGING AND CONSTRUCTION PHASE 1A - 1 OF 2

SCALE: 1" = 50'

C-109

STATE OF CALIFORNIA - DEPARTMENT OF TRANSPORTATION — Caltrans

CONSULTANT FUNCTIONAL SUPERVISOR: GERARD REMINISKEY

CALCULATED-DESIGNED BY: MICHAEL MIHALOVICH — CHECKED BY: JIM CONWAY — REVISED BY: RUSSELL McNAUGHT — DATE REVISED

LAST REVISION 10-19-11 — DATE PLOTTED => 08-NOV-2011 — TIME PLOTTED => 11:15

Dist	COUNTY	ROUTE	POST MILES TOTAL PROJECT	SHEET No.	TOTAL SHEETS
08	Riv	91	15.6/21.6	196	2028

REGISTERED CIVIL ENGINEER — DATE: 10-28-11

4-25-11
PLANS APPROVAL DATE

REGISTERED PROFESSIONAL ENGINEER — RUSSELL McNAUGHT — No. C65853 — Exp. 12/31/11 — CIVIL — STATE OF CALIFORNIA

THE STATE OF CALIFORNIA OR ITS OFFICERS OR AGENTS SHALL NOT BE RESPONSIBLE FOR THE ACCURACY OR COMPLETENESS OF SCANNED COPIES OF THIS PLAN SHEET.

HDR — ONE COMPANY / *Many Solutions*
2280 Market Street, Suite 100
Riverside, CA. 92501
(951) 320-7300

RCTC

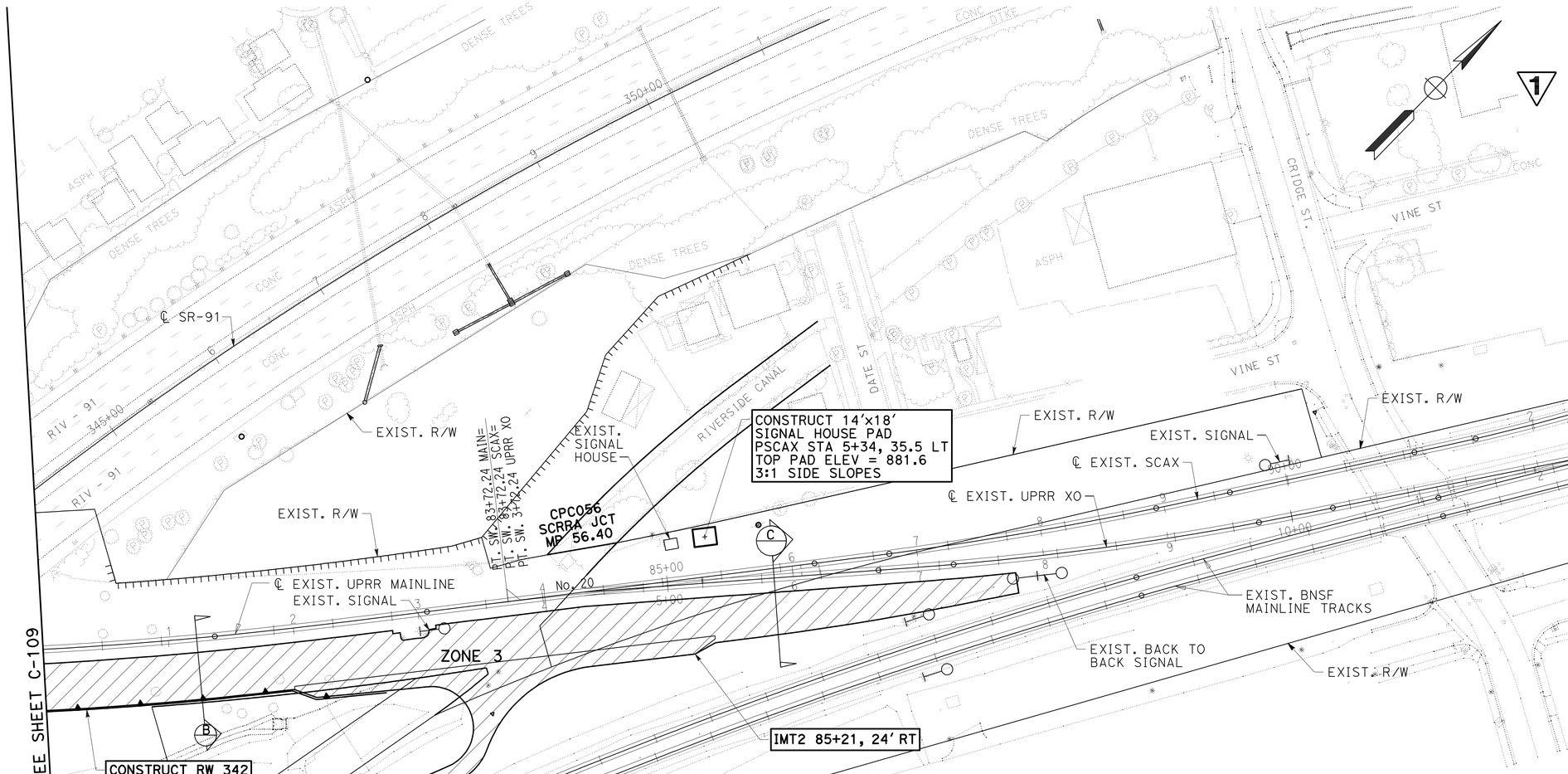

NOTE:

1. ALL WORK SHOWN IN PHASE 1A TO BE COMPLETED BY STATE CONTRACTOR
2. ALL EXISTING RAIL LINES TO REMAIN IN SERVICE THROUGHOUT DURATION OF PHASE 1A

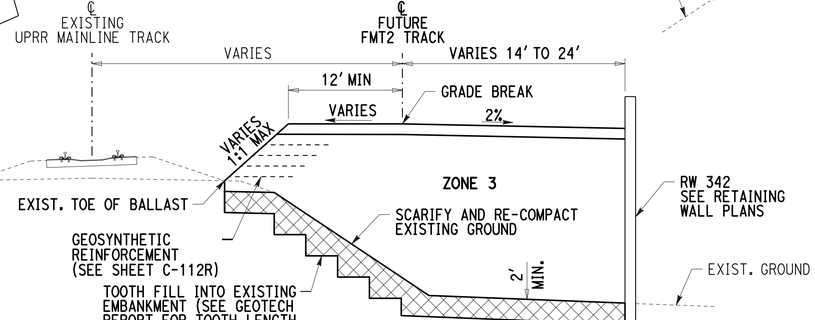

SECTION B
NO SCALE

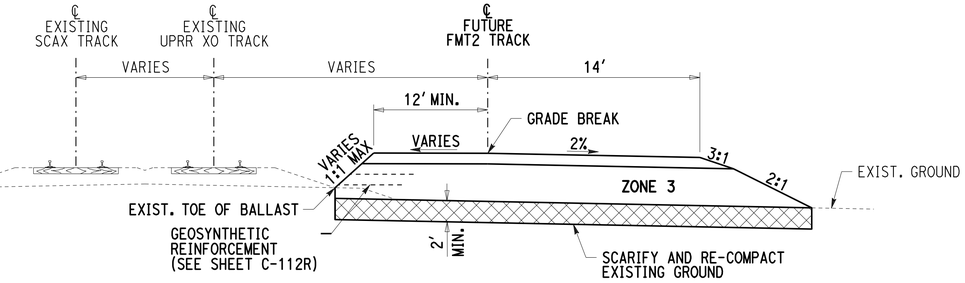

SECTION C
NO SCALE

1 **REVISED PER ADDENDUM No. 1 DATED NOVEMBER 8, 2011**

CONSTRUCTION DETAILS
RAILROAD - PACHAPPA STAGING AND CONSTRUCTION PHASE 1A - 2 OF 2

SCALE: 1" = 50'

C-110

STATE OF CALIFORNIA - DEPARTMENT OF TRANSPORTATION
Caltrans

CONSULTANT FUNCTIONAL SUPERVISOR: GERARD REMINISKEY
CALCULATED-DESIGNED BY: MICHAEL MIHALOVICH
CHECKED BY: JIM CONWAY, RUSSELL McNAUGHT
REVISED BY
DATE REVISED

LAST REVISION — DATE PLOTTED => 08-NOV-2011 — TIME PLOTTED => 11:15
10-19-11

Dist	COUNTY	ROUTE	POST MILES TOTAL PROJECT	SHEET No.	TOTAL SHEETS
08	Riv	91	15.6/21.6	197	2028

REGISTERED CIVIL ENGINEER — DATE 10-28-11

4-25-11
PLANS APPROVAL DATE

REGISTERED PROFESSIONAL ENGINEER — RUSSELL McNAUGHT — No. C65853 — Exp. 12/31/11 — CIVIL — STATE OF CALIFORNIA

THE STATE OF CALIFORNIA OR ITS OFFICERS OR AGENTS SHALL NOT BE RESPONSIBLE FOR THE ACCURACY OR COMPLETENESS OF SCANNED COPIES OF THIS PLAN SHEET.

HDR — ONE COMPANY / *Many Solutions*
2280 Market Street, Suite 100
Riverside, CA. 92501
(951) 320-7300

RCTC

NOTE:

1. ALL WORK SHOWN IN PHASE 1B TO BE COMPLETED BY UNION PACIFIC RAILROAD PERSONNEL
2. ALL EXISTING RAIL LINES TO REMAIN IN SERVICE THROUGHOUT DURATION OF PHASE 1B

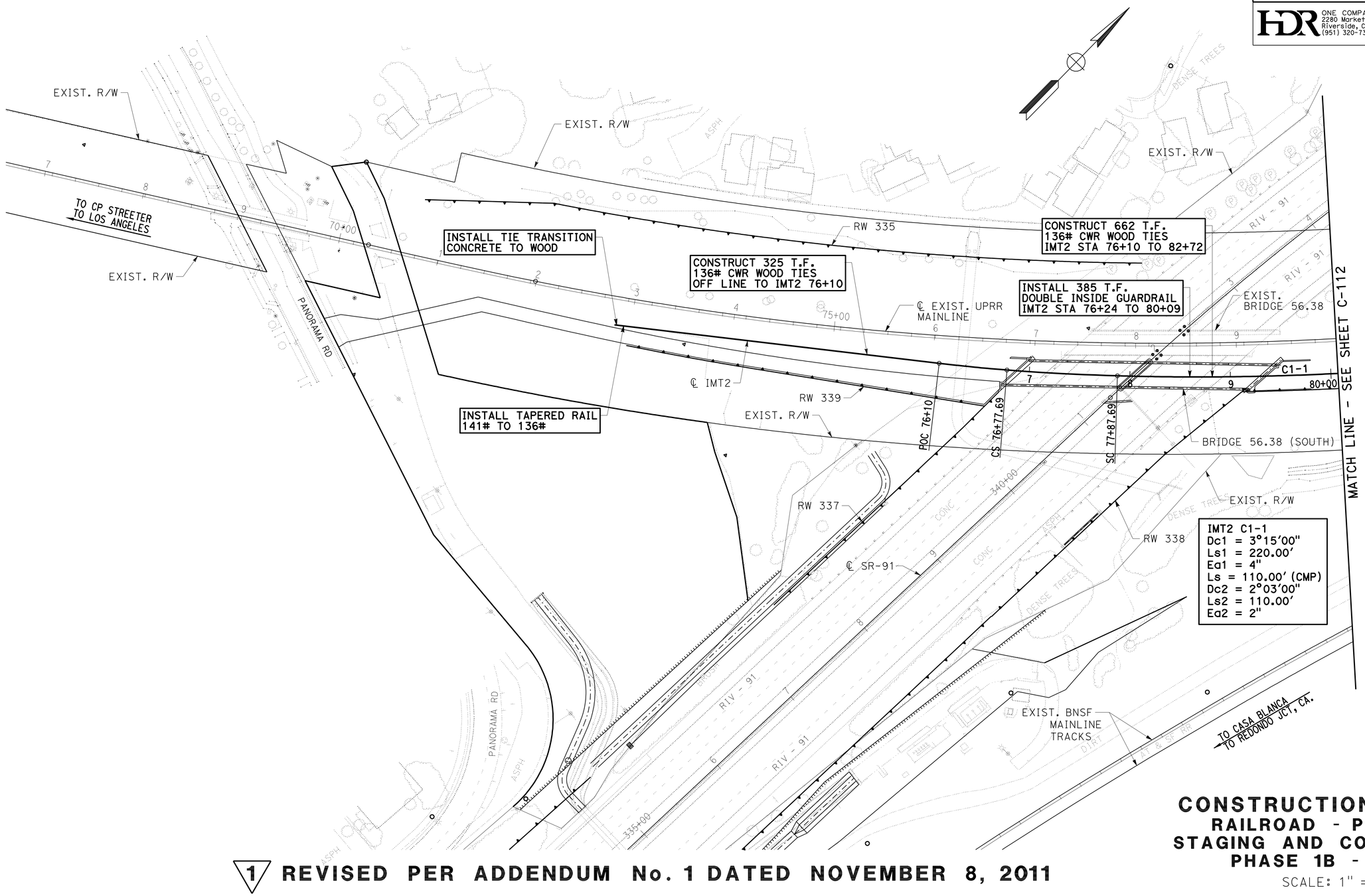

1 REVISED PER ADDENDUM No. 1 DATED NOVEMBER 8, 2011

CONSTRUCTION DETAILS
RAILROAD - PACHAPPA
STAGING AND CONSTRUCTION
PHASE 1B - 1 OF 2

SCALE: 1" = 50'

C-111

STATE OF CALIFORNIA - DEPARTMENT OF TRANSPORTATION — Caltrans

CONSULTANT FUNCTIONAL SUPERVISOR: GERARD REMINISKEY

CALCULATED-DESIGNED BY: MICHAEL MIHALOVICH — CHECKED BY: JIM CONWAY, RUSSELL McNAUGHT

REVISED BY — DATE REVISED

LAST REVISION 10-19-11 — DATE PLOTTED => 08-NOV-2011 — TIME PLOTTED => 11:15

BORDER LAST REVISED 4/11/2008 — RELATIVE BORDER SCALE IS IN INCHES 0 1 2 3 — USERNAME => s121614 — DGN FILE => 844840ga111.add — CU 08227 — EA 448401

Dist	COUNTY	ROUTE	POST MILES TOTAL PROJECT	SHEET No.	TOTAL SHEETS
08	Riv	91	15.6/21.6	198	2028

REGISTERED CIVIL ENGINEER — DATE 10-28-11

4-25-11
PLANS APPROVAL DATE

REGISTERED PROFESSIONAL ENGINEER — RUSSELL McNAUGHT — No. C65853 — Exp. 12/31/11 — CIVIL — STATE OF CALIFORNIA

THE STATE OF CALIFORNIA OR ITS OFFICERS OR AGENTS SHALL NOT BE RESPONSIBLE FOR THE ACCURACY OR COMPLETENESS OF SCANNED COPIES OF THIS PLAN SHEET.

HDR — ONE COMPANY / *Many Solutions*
2280 Market Street, Suite 100
Riverside, CA. 92501
(951) 320-7300

RCTC

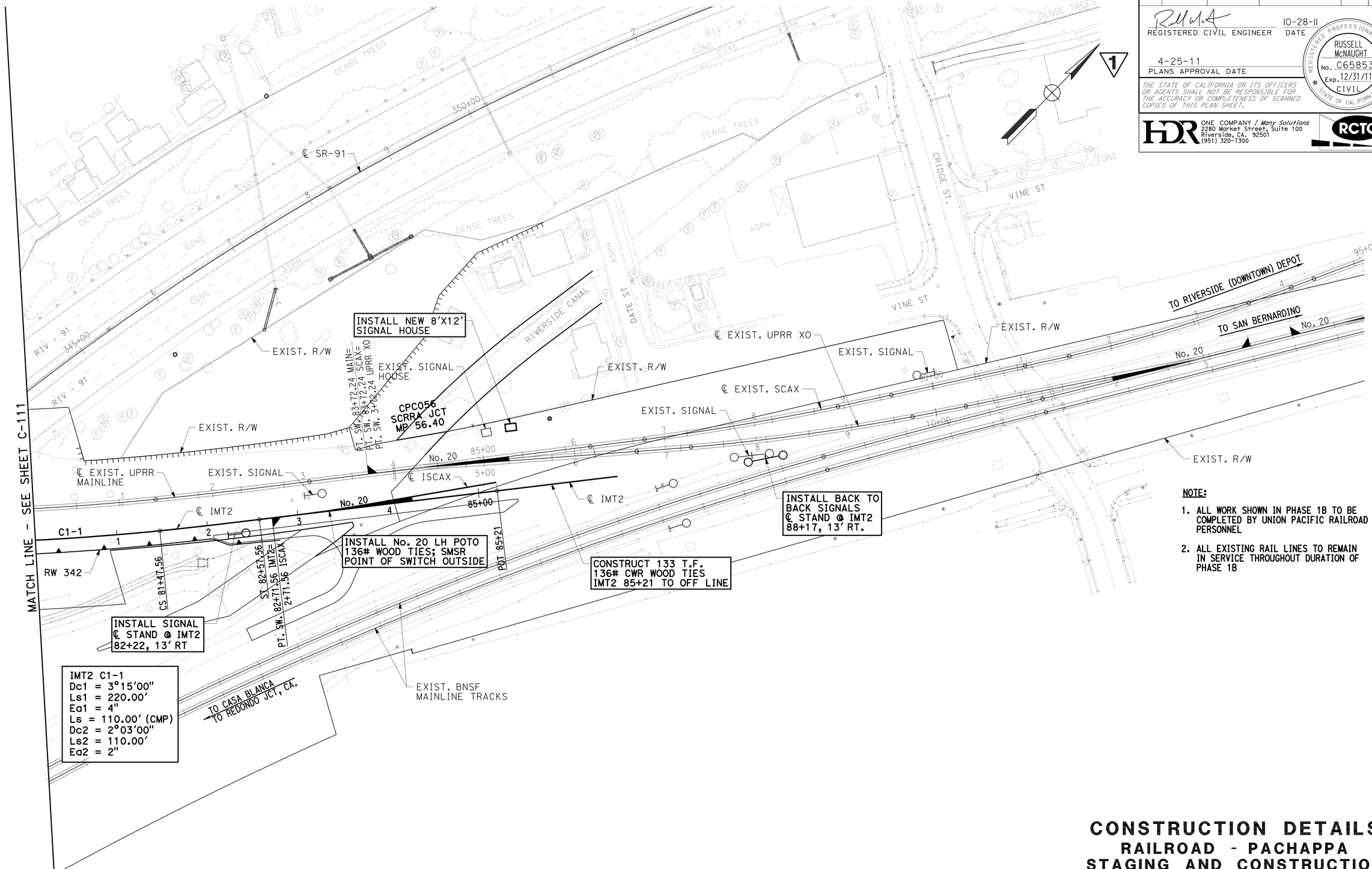

NOTE:

1. ALL WORK SHOWN IN PHASE 1B TO BE COMPLETED BY UNION PACIFIC RAILROAD PERSONNEL
2. ALL EXISTING RAIL LINES TO REMAIN IN SERVICE THROUGHOUT DURATION OF PHASE 1B

1 REVISED PER ADDENDUM No. 1 DATED NOVEMBER 8, 2011

CONSTRUCTION DETAILS
RAILROAD - PACHAPPA STAGING AND CONSTRUCTION PHASE 1B - 2 OF 2

SCALE: 1" = 50'

C-112

REVISED BY	DATE REVISED
MICHAEL MIHALOVICH	
JIM CONWAY / RUSSELL McNAUGHT	

CALCULATED-DESIGNED BY
CHECKED BY

CONSULTANT FUNCTIONAL SUPERVISOR: GERARD REMINISKEY

STATE OF CALIFORNIA - DEPARTMENT OF TRANSPORTATION — Caltrans

LAST REVISION 10-19-11 — DATE PLOTTED => 08-NOV-2011 — TIME PLOTTED => 11:16

Dist	COUNTY	ROUTE	POST MILES TOTAL PROJECT	SHEET No.	TOTAL SHEETS
08	Riv	91	15.6/21.6	198A	2028

REGISTERED CIVIL ENGINEER — DATE 10-28-11

4-25-11
PLANS APPROVAL DATE

REGISTERED PROFESSIONAL ENGINEER — RUSSELL McNAUGHT — No. C65853 — Exp. 12/31/11 — CIVIL — STATE OF CALIFORNIA

THE STATE OF CALIFORNIA OR ITS OFFICERS OR AGENTS SHALL NOT BE RESPONSIBLE FOR THE ACCURACY OR COMPLETENESS OF SCANNED COPIES OF THIS PLAN SHEET.

HDR ONE COMPANY / Many Solutions
2280 Market Street, Suite 100
Riverside, CA. 92501
(951) 320-7300

RCTC

NOTE:

1. ALL WORK SHOWN IN PHASE 1C TO BE COMPLETED BY UNION PACIFIC RAILROAD PERSONNEL
2. UPRR AND SCAX RAIL LINES TO REMAIN OUT OF SERVICE THROUGHOUT DURATION OF PHASES 1C, 1D AND 1E

1

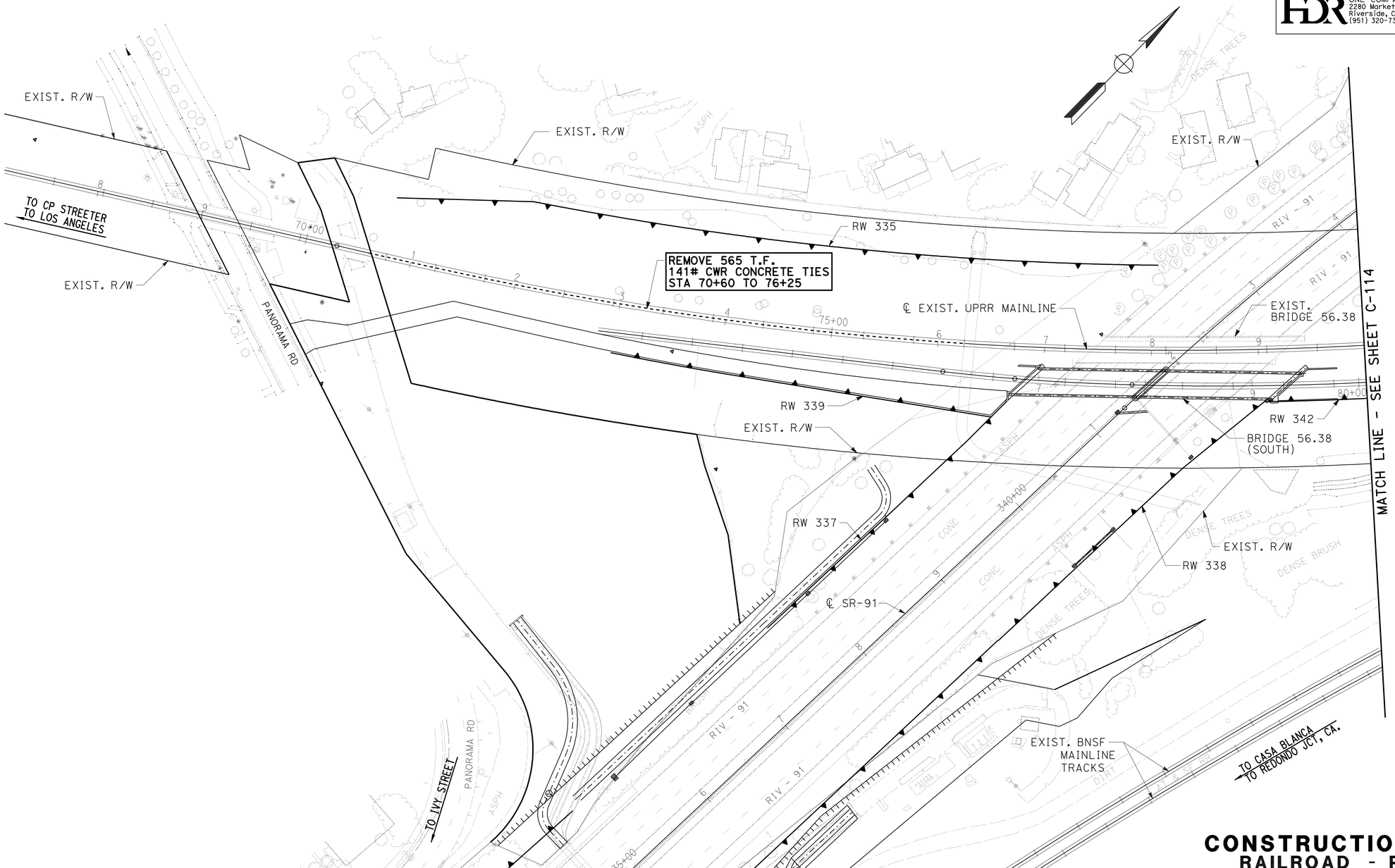

1 ADDED PER ADDENDUM No. 1 DATED NOVEMBER 8, 2011

CONSTRUCTION DETAILS
RAILROAD - PACHAPPA
STAGING AND CONSTRUCTION
PHASE 1C - 1 OF 2

SCALE: 1" = 50'

C-112A

STATE OF CALIFORNIA - DEPARTMENT OF TRANSPORTATION — Caltrans

CONSULTANT FUNCTIONAL SUPERVISOR: GERARD REMINISKEY

CALCULATED-DESIGNED BY: MICHAEL MIHALOVICH
CHECKED BY: JIM CONWAY, RUSSELL McNAUGHT

REVISED BY
DATE REVISED

LAST REVISION 10-18-11
DATE PLOTTED => 08-NOV-2011
TIME PLOTTED => 11:16

Dist	COUNTY	ROUTE	POST MILES TOTAL PROJECT	SHEET No.	TOTAL SHEETS
08	Riv	91	15.6/21.6	198B	2028

REGISTERED CIVIL ENGINEER — DATE 10-28-11

4-25-11
PLANS APPROVAL DATE

REGISTERED PROFESSIONAL ENGINEER — RUSSELL McNAUGHT — No. C65853 — Exp. 12/31/11 — CIVIL — STATE OF CALIFORNIA

THE STATE OF CALIFORNIA OR ITS OFFICERS OR AGENTS SHALL NOT BE RESPONSIBLE FOR THE ACCURACY OR COMPLETENESS OF SCANNED COPIES OF THIS PLAN SHEET.

HDR — ONE COMPANY / *Many Solutions*
2280 Market Street, Suite 100
Riverside, CA. 92501
(951) 320-7300

RCTC

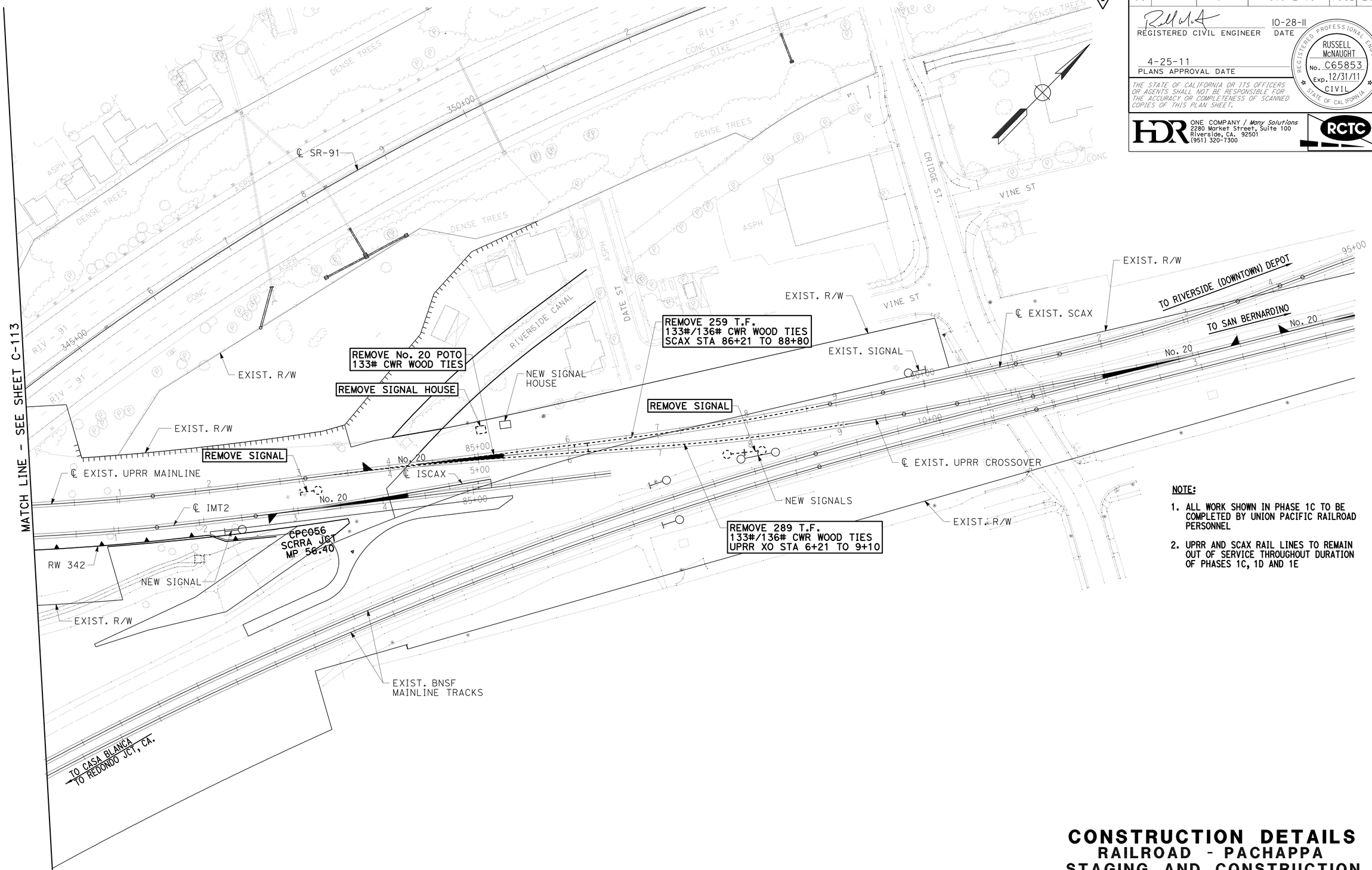

NOTE:

1. ALL WORK SHOWN IN PHASE 1C TO BE COMPLETED BY UNION PACIFIC RAILROAD PERSONNEL
2. UPRR AND SCAX RAIL LINES TO REMAIN OUT OF SERVICE THROUGHOUT DURATION OF PHASES 1C, 1D AND 1E

1 ADDED PER ADDENDUM No. 1 DATED NOVEMBER 8, 2011

CONSTRUCTION DETAILS
RAILROAD - PACHAPPA
STAGING AND CONSTRUCTION
PHASE 1C - 2 OF 2

SCALE: 1" = 50'

C-112B

STATE OF CALIFORNIA - DEPARTMENT OF TRANSPORTATION — Caltrans

CONSULTANT FUNCTIONAL SUPERVISOR: GERARD REMINISKEY

CALCULATED-DESIGNED BY: MICHAEL MIHALOVICH
CHECKED BY: JIM CONWAY, RUSSELL McNAUGHT

REVISED BY | DATE REVISED

LAST REVISION 10-18-11 | DATE PLOTTED => 08-NOV-2011 | TIME PLOTTED => 11:16

Dist	COUNTY	ROUTE	POST MILES TOTAL PROJECT	SHEET No.	TOTAL SHEETS
08	Riv	91	15.6/21.6	198C	2028

REGISTERED CIVIL ENGINEER — DATE 10-28-11

4-25-11
PLANS APPROVAL DATE

REGISTERED PROFESSIONAL ENGINEER — RUSSELL McNAUGHT — No. C65853 — Exp. 12/31/11 — CIVIL — STATE OF CALIFORNIA

THE STATE OF CALIFORNIA OR ITS OFFICERS OR AGENTS SHALL NOT BE RESPONSIBLE FOR THE ACCURACY OR COMPLETENESS OF SCANNED COPIES OF THIS PLAN SHEET.

HDR — ONE COMPANY / *Many Solutions*
2280 Market Street, Suite 100
Riverside, CA. 92501
(951) 320-7300

RCTC

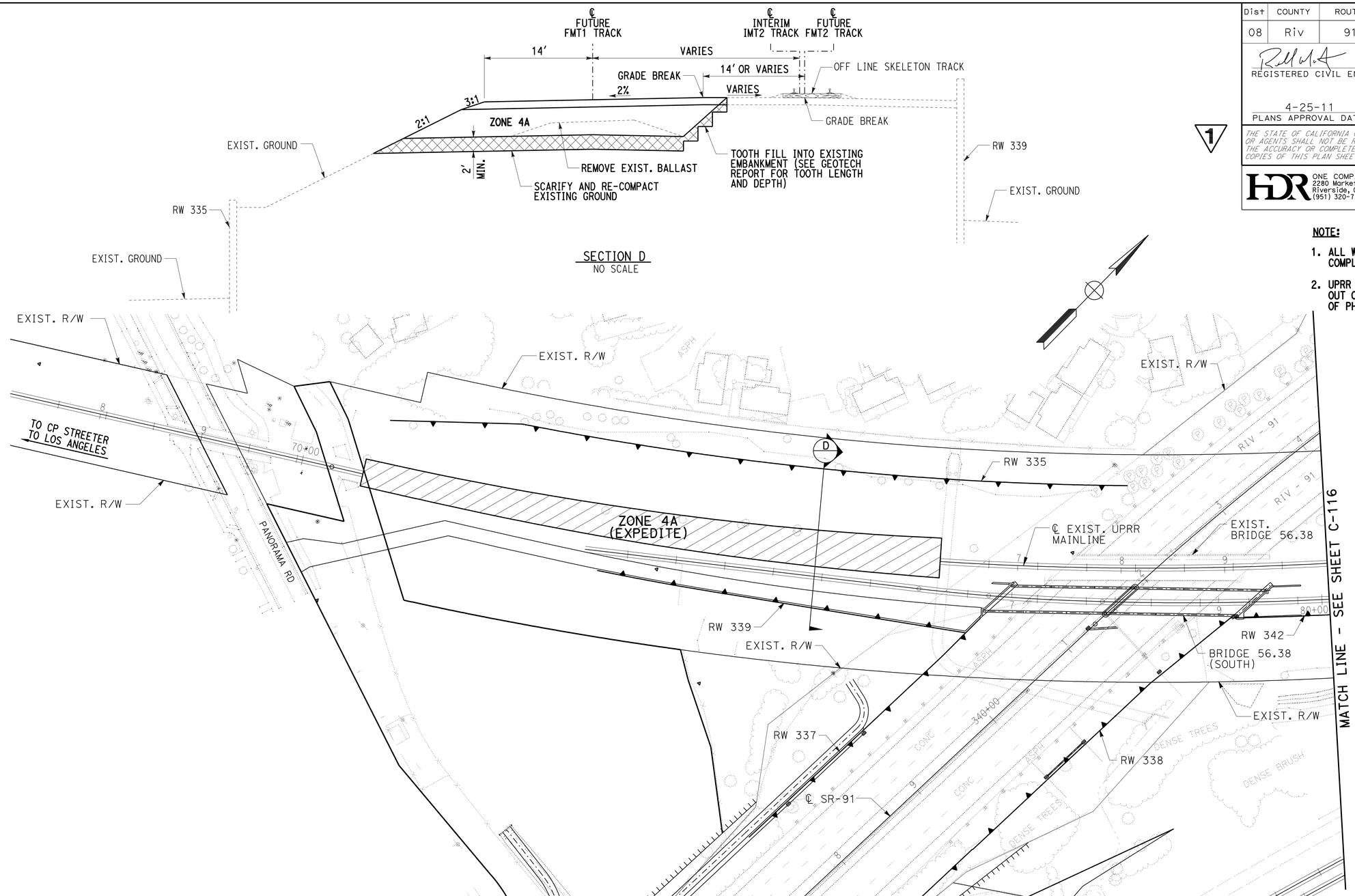

NOTE:

1. ALL WORK SHOWN IN PHASE 1D TO BE COMPLETED BY STATE CONTRACTOR
2. UPRR AND SCAX RAIL LINES TO REMAIN OUT OF SERVICE THROUGHOUT DURATION OF PHASES 1C, 1D AND 1E

1 ADDED PER ADDENDUM No. 1 DATED NOVEMBER 8, 2011

CONSTRUCTION DETAILS
RAILROAD - PACHAPPA STAGING AND CONSTRUCTION PHASE 1D - 1 OF 2

SCALE: 1" = 50'

C-112C

STATE OF CALIFORNIA - DEPARTMENT OF TRANSPORTATION — Caltrans

CONSULTANT FUNCTIONAL SUPERVISOR: GERARD REMINISKEY

CALCULATED-DESIGNED BY: MICHAEL MIHALOVICH — CHECKED BY: JIM CONWAY, RUSSELL McNAUGHT

REVISED BY — DATE REVISED

LAST REVISION — DATE PLOTTED => 08-NOV-2011 — TIME PLOTTED => 11:16 — 10-18-11

BORDER LAST REVISED 4/11/2008 — RELATIVE BORDER SCALE IS IN INCHES 0 1 2 3 — USERNAME => s121614 — DGN FILE => 844840ga112c.add — CU 08227 — EA 448401

Dist	COUNTY	ROUTE	POST MILES TOTAL PROJECT	SHEET No.	TOTAL SHEETS
08	Riv	91	15.6/21.6	198D	2028

REGISTERED CIVIL ENGINEER — DATE: 10-28-11

PLANS APPROVAL DATE: 4-25-11

REGISTERED PROFESSIONAL ENGINEER — RUSSELL McNAUGHT — No. C65853 — Exp. 12/31/11 — CIVIL — STATE OF CALIFORNIA

THE STATE OF CALIFORNIA OR ITS OFFICERS OR AGENTS SHALL NOT BE RESPONSIBLE FOR THE ACCURACY OR COMPLETENESS OF SCANNED COPIES OF THIS PLAN SHEET.

HDR ONE COMPANY / Many Solutions
2280 Market Street, Suite 100
Riverside, CA. 92501
(951) 320-7300

RCTC

1

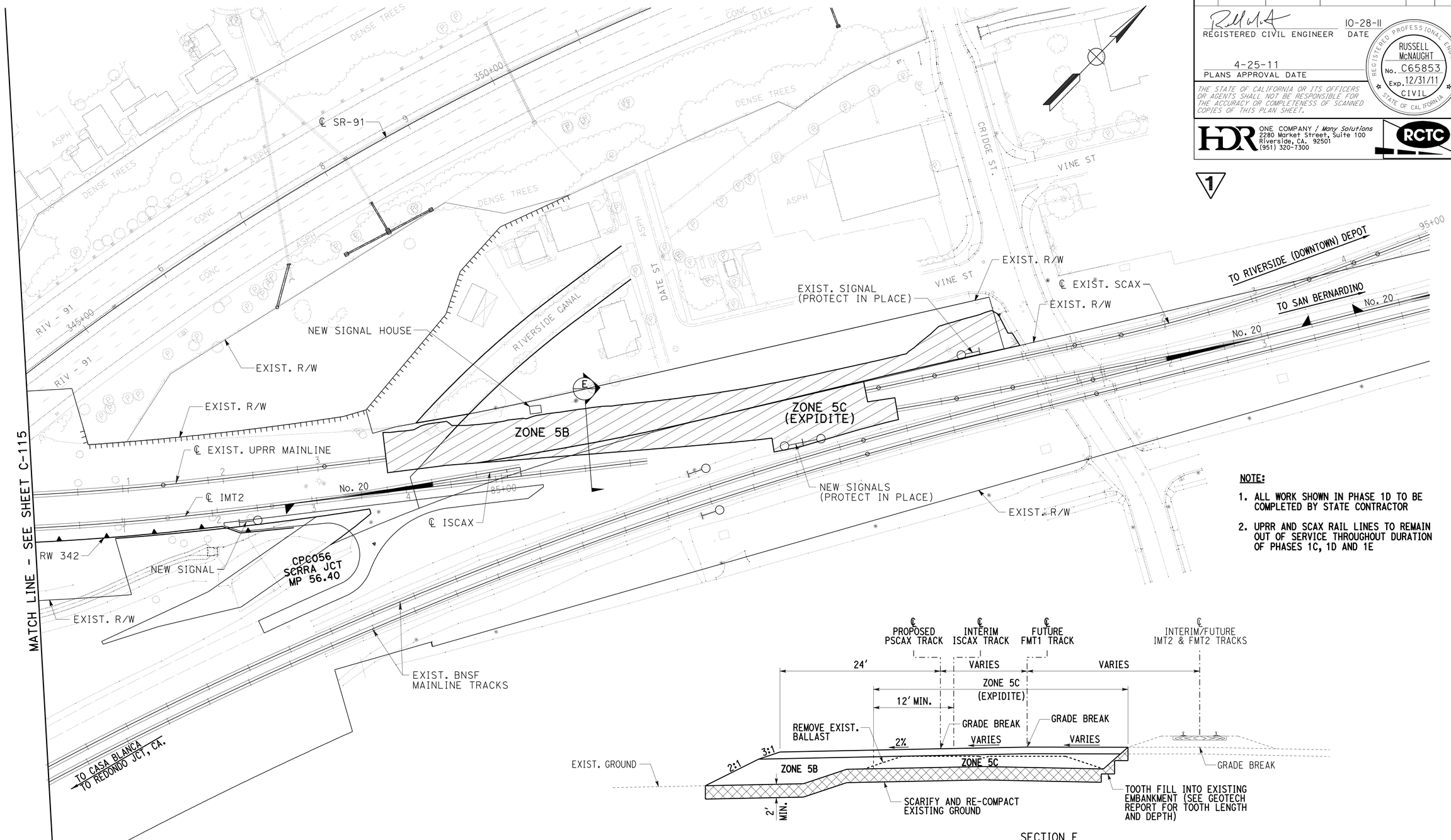

NOTE:

1. ALL WORK SHOWN IN PHASE 1D TO BE COMPLETED BY STATE CONTRACTOR
2. UPRR AND SCAX RAIL LINES TO REMAIN OUT OF SERVICE THROUGHOUT DURATION OF PHASES 1C, 1D AND 1E

SECTION E
NO SCALE

1 ADDED PER ADDENDUM No. 1 DATED NOVEMBER 8, 2011

CONSTRUCTION DETAILS
RAILROAD - PACHAPPA
STAGING AND CONSTRUCTION
PHASE 1D - 2 OF 2

SCALE: 1" = 50'

C-112D

STATE OF CALIFORNIA - DEPARTMENT OF TRANSPORTATION — Caltrans

CONSULTANT FUNCTIONAL SUPERVISOR: GERARD REMINISKEY

CALCULATED-DESIGNED BY: MICHAEL MIHALOVICH
CHECKED BY: JIM CONWAY, RUSSELL McNAUGHT

REVISED BY / DATE REVISED

LAST REVISION — DATE PLOTTED => 08-NOV-2011 — TIME PLOTTED => 11:16

Dist	COUNTY	ROUTE	POST MILES TOTAL PROJECT	SHEET No.	TOTAL SHEETS
08	Riv	91	15.6/21.6	198E	2028

REGISTERED CIVIL ENGINEER — DATE 10-28-11

4-25-11
PLANS APPROVAL DATE

REGISTERED PROFESSIONAL ENGINEER — RUSSELL McNAUGHT — No. C65853 — Exp. 12/31/11 — CIVIL — STATE OF CALIFORNIA

THE STATE OF CALIFORNIA OR ITS OFFICERS OR AGENTS SHALL NOT BE RESPONSIBLE FOR THE ACCURACY OR COMPLETENESS OF SCANNED COPIES OF THIS PLAN SHEET.

HDR ONE COMPANY / *Many Solutions*
2280 Market Street, Suite 100
Riverside, CA. 92501
(951) 320-7300

RCTC

NOTE:

1. ALL WORK SHOWN IN PHASE 1E TO BE COMPLETED BY UNION PACIFIC RAILROAD PERSONNEL
2. UPRR AND SCAX RAIL LINES TO REMAIN OUT OF SERVICE THROUGHOUT DURATION OF PHASES 1C, 1D AND 1E
3. ALL EXISTING RAIL LINES TO BE RETURNED TO SERVICE AT COMPLETION OF PHASES 1E

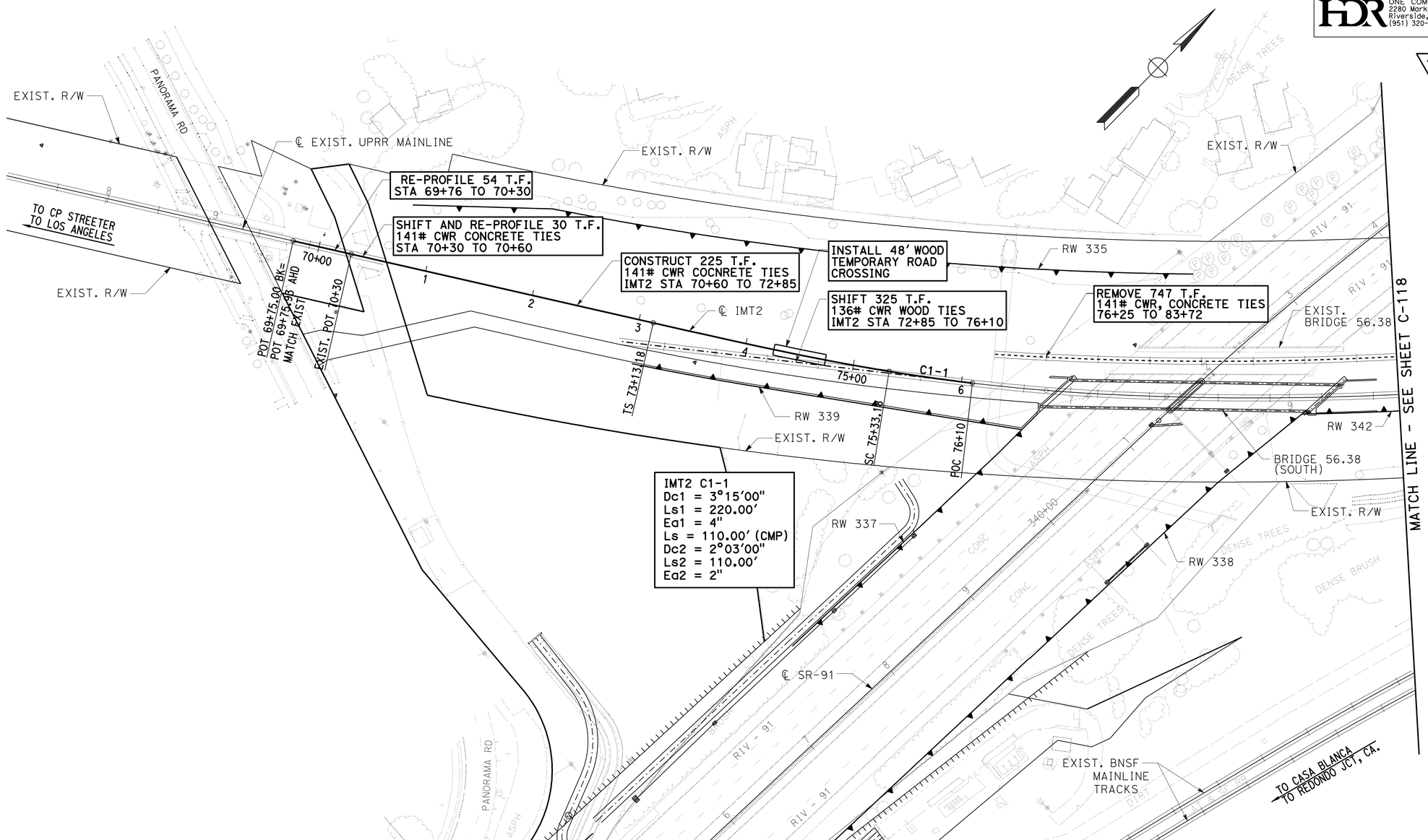

1 ADDED PER ADDENDUM No. 1 DATED NOVEMBER 8, 2011

CONSTRUCTION DETAILS
RAILROAD - PACHAPPA
STAGING AND CONSTRUCTION
PHASE 1E - 1 OF 2

SCALE: 1" = 50'

C-112E

REVISED BY	DATE REVISED
MICHAEL MIHALOVICH	
JIM CONWAY RUSSELL McNAUGHT	

CALCULATED-DESIGNED BY
CHECKED BY

CONSULTANT FUNCTIONAL SUPERVISOR
GERARD REMINISKEY

STATE OF CALIFORNIA - DEPARTMENT OF TRANSPORTATION
Caltrans

LAST REVISION 10-18-11 | DATE PLOTTED => 08-NOV-2011 | TIME PLOTTED => 11:17

Dist	COUNTY	ROUTE	POST MILES TOTAL PROJECT	SHEET No.	TOTAL SHEETS
08	Riv	91	15.6/21.6	198F	2028

REGISTERED CIVIL ENGINEER — DATE 10-28-11

4-25-11
PLANS APPROVAL DATE

REGISTERED PROFESSIONAL ENGINEER — RUSSELL McNAUGHT — No. C65853 — Exp. 12/31/11 — CIVIL — STATE OF CALIFORNIA

THE STATE OF CALIFORNIA OR ITS OFFICERS OR AGENTS SHALL NOT BE RESPONSIBLE FOR THE ACCURACY OR COMPLETENESS OF SCANNED COPIES OF THIS PLAN SHEET.

HDR — ONE COMPANY / *Many Solutions*
2280 Market Street, Suite 100
Riverside, CA. 92501
(951) 320-7300

RCTC

1

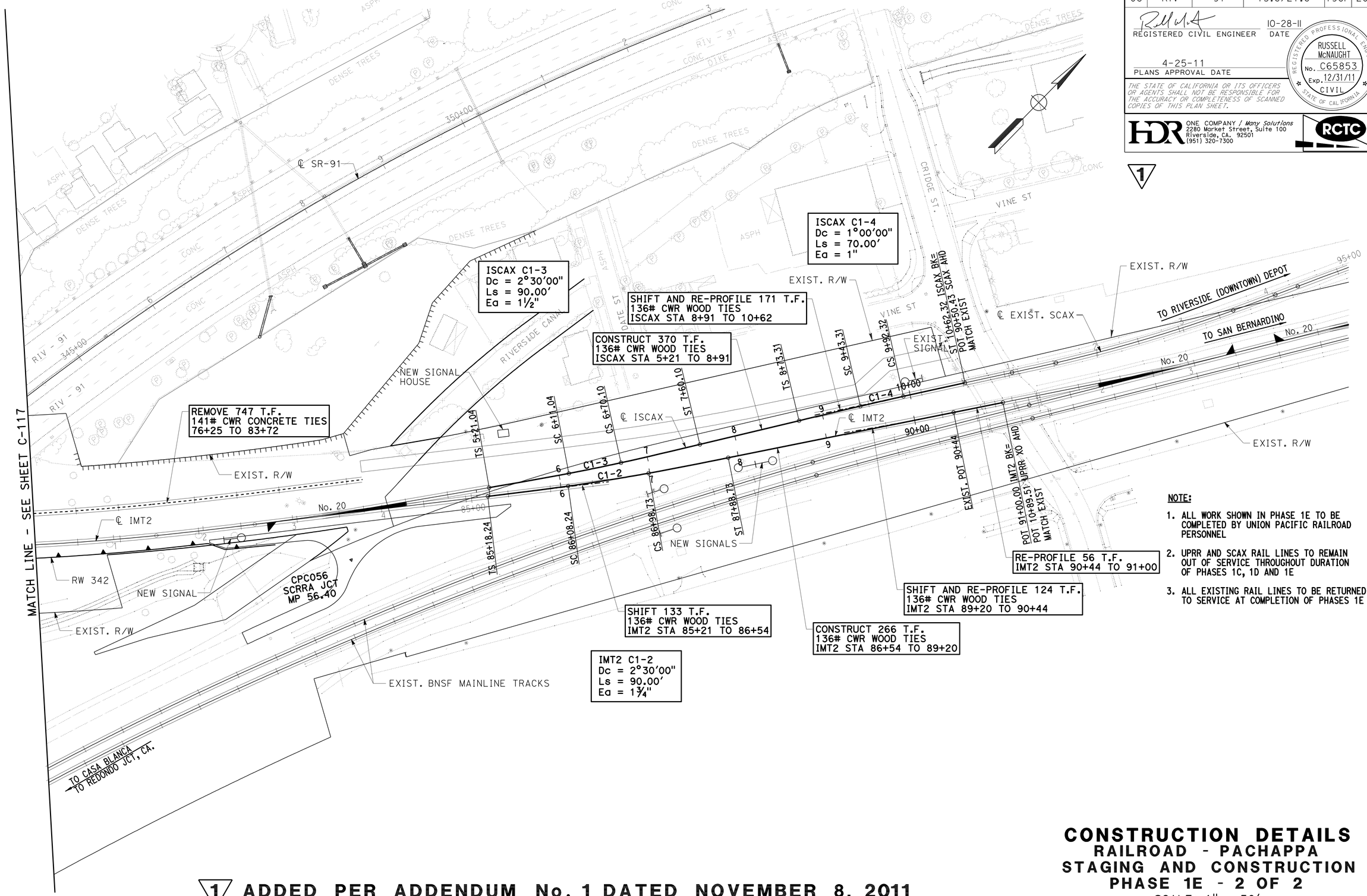

NOTE:

1. ALL WORK SHOWN IN PHASE 1E TO BE COMPLETED BY UNION PACIFIC RAILROAD PERSONNEL
2. UPRR AND SCAX RAIL LINES TO REMAIN OUT OF SERVICE THROUGHOUT DURATION OF PHASES 1C, 1D AND 1E
3. ALL EXISTING RAIL LINES TO BE RETURNED TO SERVICE AT COMPLETION OF PHASES 1E

1 ADDED PER ADDENDUM No. 1 DATED NOVEMBER 8, 2011

CONSTRUCTION DETAILS
RAILROAD - PACHAPPA
STAGING AND CONSTRUCTION
PHASE 1E - 2 OF 2

SCALE: 1" = 50'

C-112F

STATE OF CALIFORNIA - DEPARTMENT OF TRANSPORTATION — Caltrans

CONSULTANT FUNCTIONAL SUPERVISOR: GERARD REMINISKEY
CALCULATED-DESIGNED BY: MICHAEL MIHALOVICH
CHECKED BY: JIM CONWAY, RUSSELL McNAUGHT
REVISED BY / DATE REVISED

LAST REVISION 10-18-11 — DATE PLOTTED => 08-NOV-2011 — TIME PLOTTED => 11:17

BORDER LAST REVISED 4/11/2008 — RELATIVE BORDER SCALE IS IN INCHES 0 1 2 3 — USERNAME => s121614 — DGN FILE => 844840ga112f.dgn — CU 08227 — EA 448401

Dist	COUNTY	ROUTE	POST MILES TOTAL PROJECT	SHEET No.	TOTAL SHEETS
08	Riv	91	15.6/21.6	198G	2028

REGISTERED CIVIL ENGINEER — DATE 10-28-11

PLANS APPROVAL DATE 4-25-11

REGISTERED PROFESSIONAL ENGINEER — RUSSELL McNAUGHT — No. C65853 — Exp. 12/31/11 — CIVIL — STATE OF CALIFORNIA

THE STATE OF CALIFORNIA OR ITS OFFICERS OR AGENTS SHALL NOT BE RESPONSIBLE FOR THE ACCURACY OR COMPLETENESS OF SCANNED COPIES OF THIS PLAN SHEET.

HDR — ONE COMPANY / Many Solutions
2280 Market Street, Suite 100
Riverside, CA. 92501
(951) 320-7300

RCTC

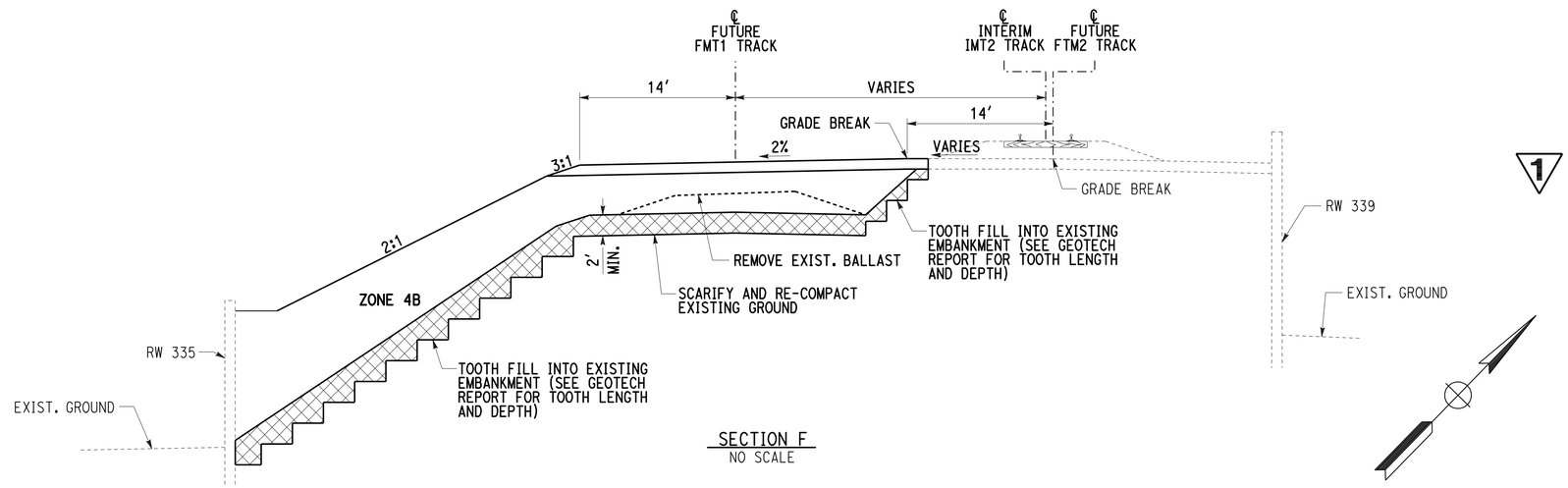

SECTION F
NO SCALE

1

NOTE:

1. ALL WORK SHOWN IN PHASE 2A TO BE COMPLETED BY STATE CONTRACTOR
2. ALL RAIL LINES TO REMAIN IN SERVICE THROUGHOUT DURATION OF PHASE 2A

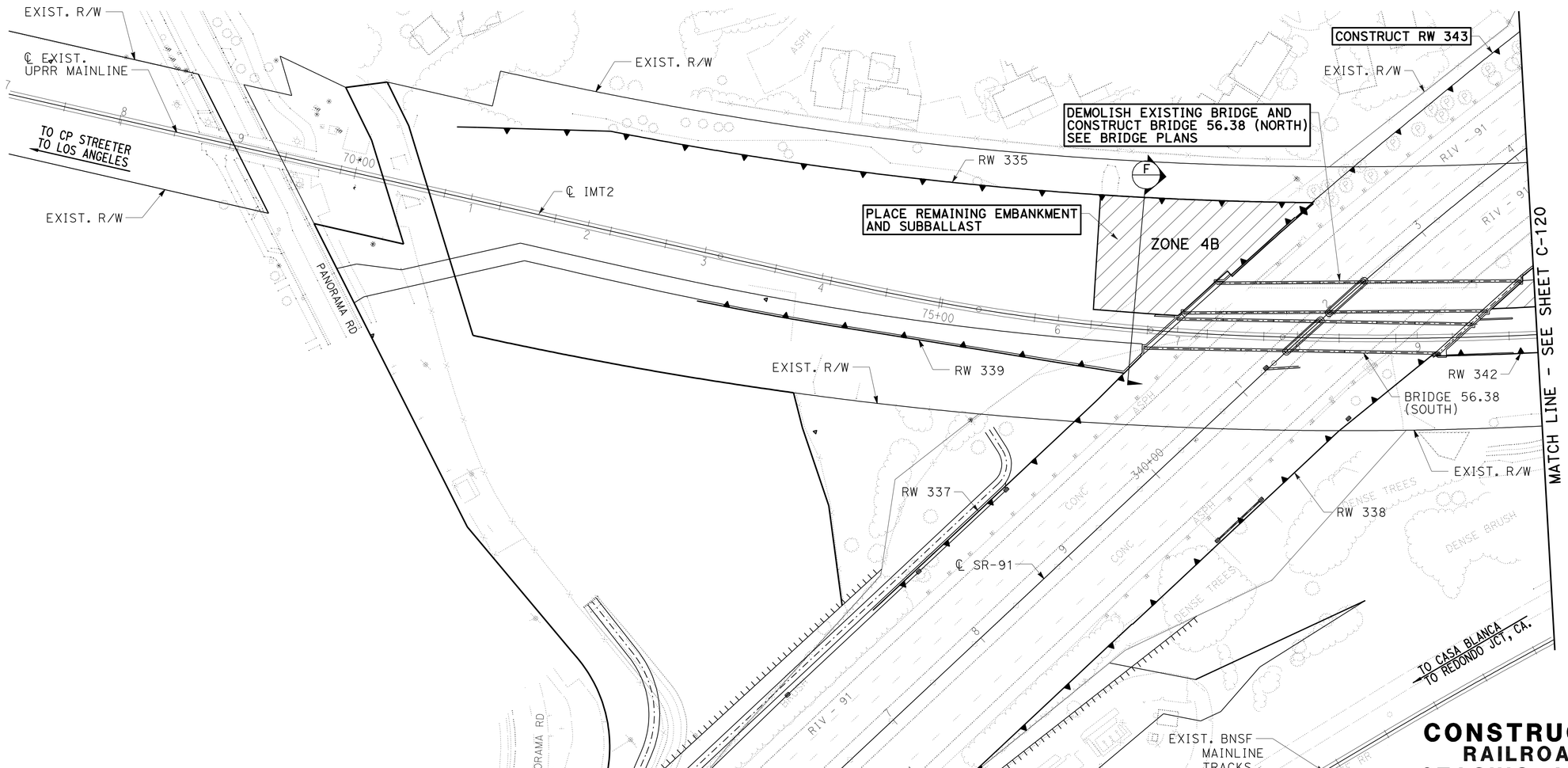

1 ADDED PER ADDENDUM No. 1 DATED NOVEMBER 8, 2011

CONSTRUCTION DETAILS
RAILROAD - PACHAPPA STAGING AND CONSTRUCTION PHASE 2A - 1 OF 2

SCALE: 1" = 50'

C-112G

STATE OF CALIFORNIA - DEPARTMENT OF TRANSPORTATION — Caltrans

CONSULTANT FUNCTIONAL SUPERVISOR: GERARD REMINISKEY

CALCULATED-DESIGNED BY: MICHAEL MIHALOVICH — CHECKED BY: JIM CONWAY, RUSSELL McNAUGHT

REVISED BY — DATE REVISED

LAST REVISION 10-18-11 — DATE PLOTTED => 08-NOV-2011 — TIME PLOTTED => 11:17

Dist	COUNTY	ROUTE	POST MILES TOTAL PROJECT	SHEET No.	TOTAL SHEETS
08	Riv	91	15.6/21.6	198H	2028

REGISTERED CIVIL ENGINEER — DATE 10-28-11

4-25-11
PLANS APPROVAL DATE

REGISTERED PROFESSIONAL ENGINEER — RUSSELL McNAUGHT — No. C65853 — Exp. 12/31/11 — CIVIL — STATE OF CALIFORNIA

THE STATE OF CALIFORNIA OR ITS OFFICERS OR AGENTS SHALL NOT BE RESPONSIBLE FOR THE ACCURACY OR COMPLETENESS OF SCANNED COPIES OF THIS PLAN SHEET.

HDR — ONE COMPANY / *Many Solutions*
2280 Market Street, Suite 100
Riverside, CA. 92501
(951) 320-7300

RCTC

1

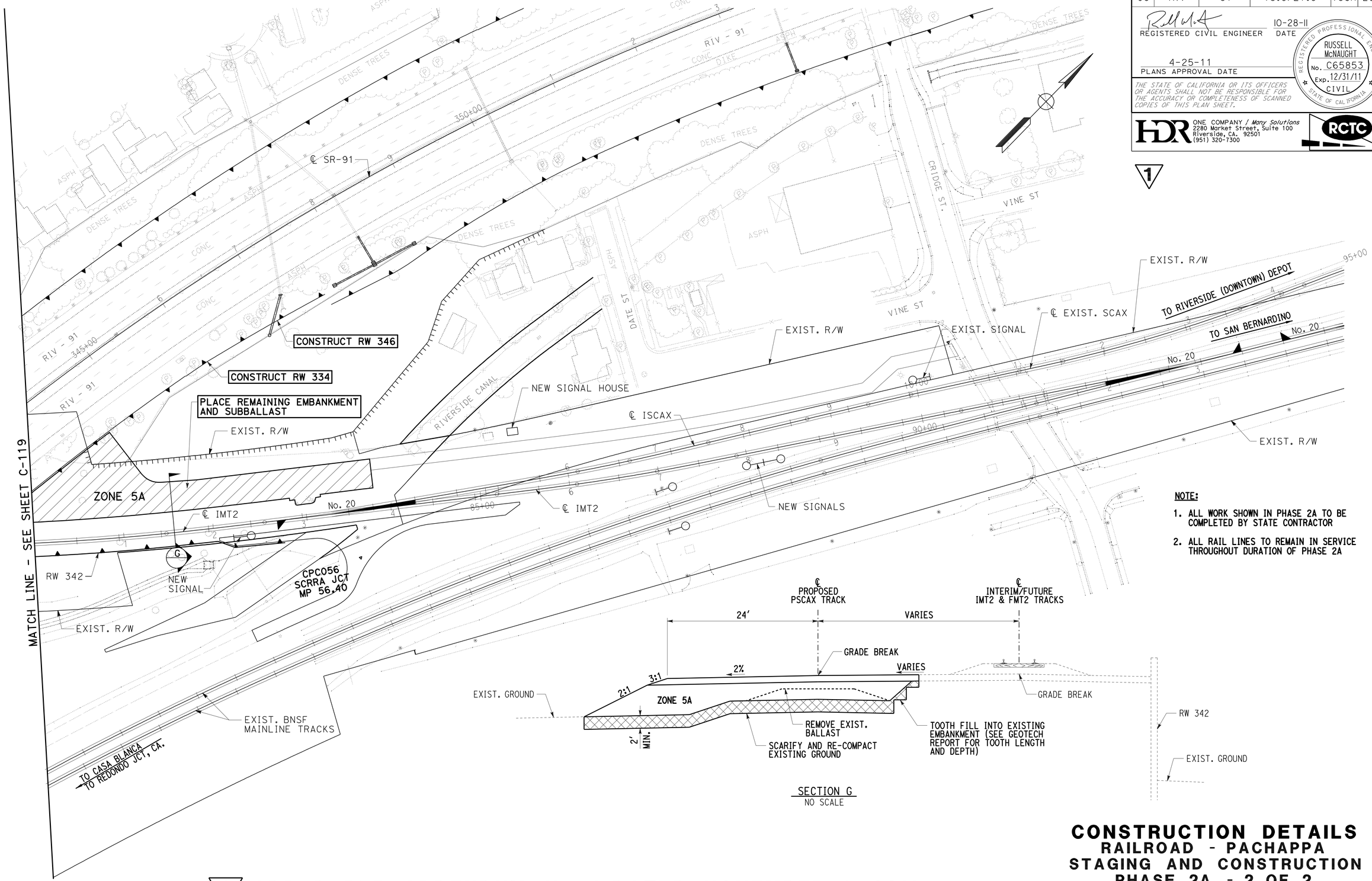

NOTE:

1. ALL WORK SHOWN IN PHASE 2A TO BE COMPLETED BY STATE CONTRACTOR
2. ALL RAIL LINES TO REMAIN IN SERVICE THROUGHOUT DURATION OF PHASE 2A

SECTION G
NO SCALE

1 ADDED PER ADDENDUM No. 1 DATED NOVEMBER 8, 2011

CONSTRUCTION DETAILS
RAILROAD - PACHAPPA
STAGING AND CONSTRUCTION
PHASE 2A - 2 OF 2

SCALE: 1" = 50'

C-112H

STATE OF CALIFORNIA - DEPARTMENT OF TRANSPORTATION — Caltrans

CONSULTANT FUNCTIONAL SUPERVISOR: GERARD REMINISKEY

CALCULATED-DESIGNED BY: MICHAEL MIHALOVICH
CHECKED BY: JIM CONWAY, RUSSELL McNAUGHT

REVISED BY / DATE REVISED

LAST REVISION 10-18-11 — DATE PLOTTED => 08-NOV-2011 — TIME PLOTTED => 11:17

Dist	COUNTY	ROUTE	POST MILES TOTAL PROJECT	SHEET No.	TOTAL SHEETS
08	Riv	91	15.6/21.6	198I	2028

REGISTERED CIVIL ENGINEER — DATE 10-28-11

4-25-11
PLANS APPROVAL DATE

REGISTERED PROFESSIONAL ENGINEER — RUSSELL McNAUGHT — No. C65853 — Exp. 12/31/11 — CIVIL — STATE OF CALIFORNIA

THE STATE OF CALIFORNIA OR ITS OFFICERS OR AGENTS SHALL NOT BE RESPONSIBLE FOR THE ACCURACY OR COMPLETENESS OF SCANNED COPIES OF THIS PLAN SHEET.

HDR ONE COMPANY / *Many Solutions*
2280 Market Street, Suite 100
Riverside, CA. 92501
(951) 320-7300

RCTC

NOTE:

1. ALL WORK SHOWN IN PHASE 2B TO BE COMPLETED BY UNION PACIFIC RAILROAD PERSONNEL
2. WITH EXCEPTION OF TEMPORARY TURNOUT CUT IN, ALL RAIL LINES TO REMAIN IN SERVICE THROUGHOUT DURATION OF PHASE 2B

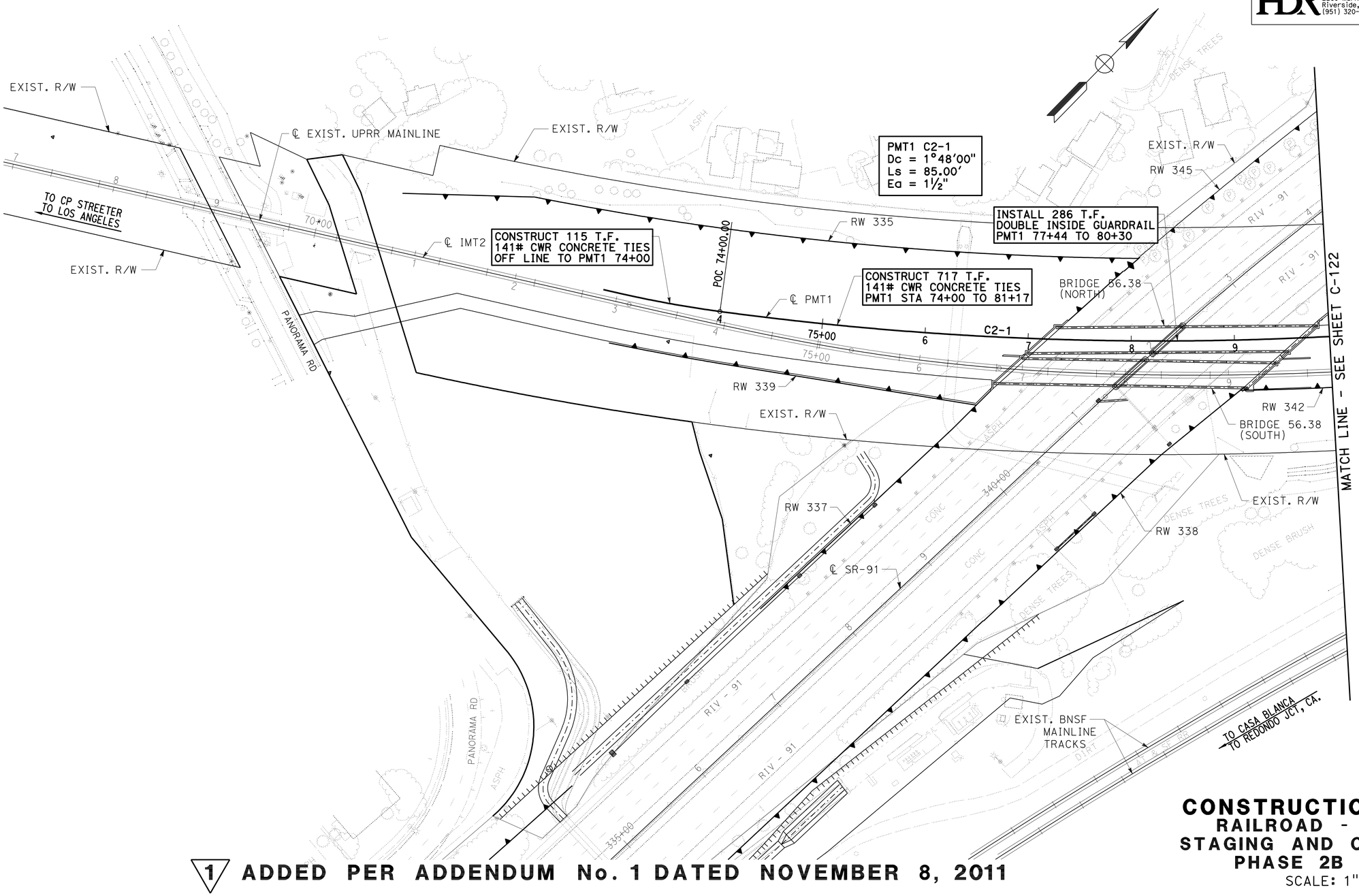

1 ADDED PER ADDENDUM No. 1 DATED NOVEMBER 8, 2011

CONSTRUCTION DETAILS
RAILROAD - PACHAPPA
STAGING AND CONSTRUCTION
PHASE 2B - 1 OF 2

SCALE: 1" = 50'

C-112I

REVISED BY	DATE REVISED
MICHAEL MIHALOVICH	
JIM CONWAY / RUSSELL McNAUGHT	

CALCULATED-DESIGNED BY
CHECKED BY

CONSULTANT FUNCTIONAL SUPERVISOR: GERARD REMINISKEY

STATE OF CALIFORNIA - DEPARTMENT OF TRANSPORTATION — Caltrans

LAST REVISION — DATE PLOTTED => 08-NOV-2011 — TIME PLOTTED => 11:17 — 10-18-11

BORDER LAST REVISED 4/11/2008 — RELATIVE BORDER SCALE IS IN INCHES 0 1 2 3 — USERNAME => s121614 — DGN FILE => 844840ga112i.dgn — CU 08227 — EA 448401

Dist	COUNTY	ROUTE	POST MILES TOTAL PROJECT	SHEET No.	TOTAL SHEETS
08	Riv	91	15.6/21.6	198J	2028

REGISTERED CIVIL ENGINEER — DATE 10-28-11

PLANS APPROVAL DATE 4-25-11

REGISTERED PROFESSIONAL ENGINEER — RUSSELL McNAUGHT — No. C65853 — Exp. 12/31/11 — CIVIL — STATE OF CALIFORNIA

THE STATE OF CALIFORNIA OR ITS OFFICERS OR AGENTS SHALL NOT BE RESPONSIBLE FOR THE ACCURACY OR COMPLETENESS OF SCANNED COPIES OF THIS PLAN SHEET.

HDR — ONE COMPANY / *Many Solutions* — 2280 Market Street, Suite 100, Riverside, CA. 92501, (951) 320-7300

RCTC

1

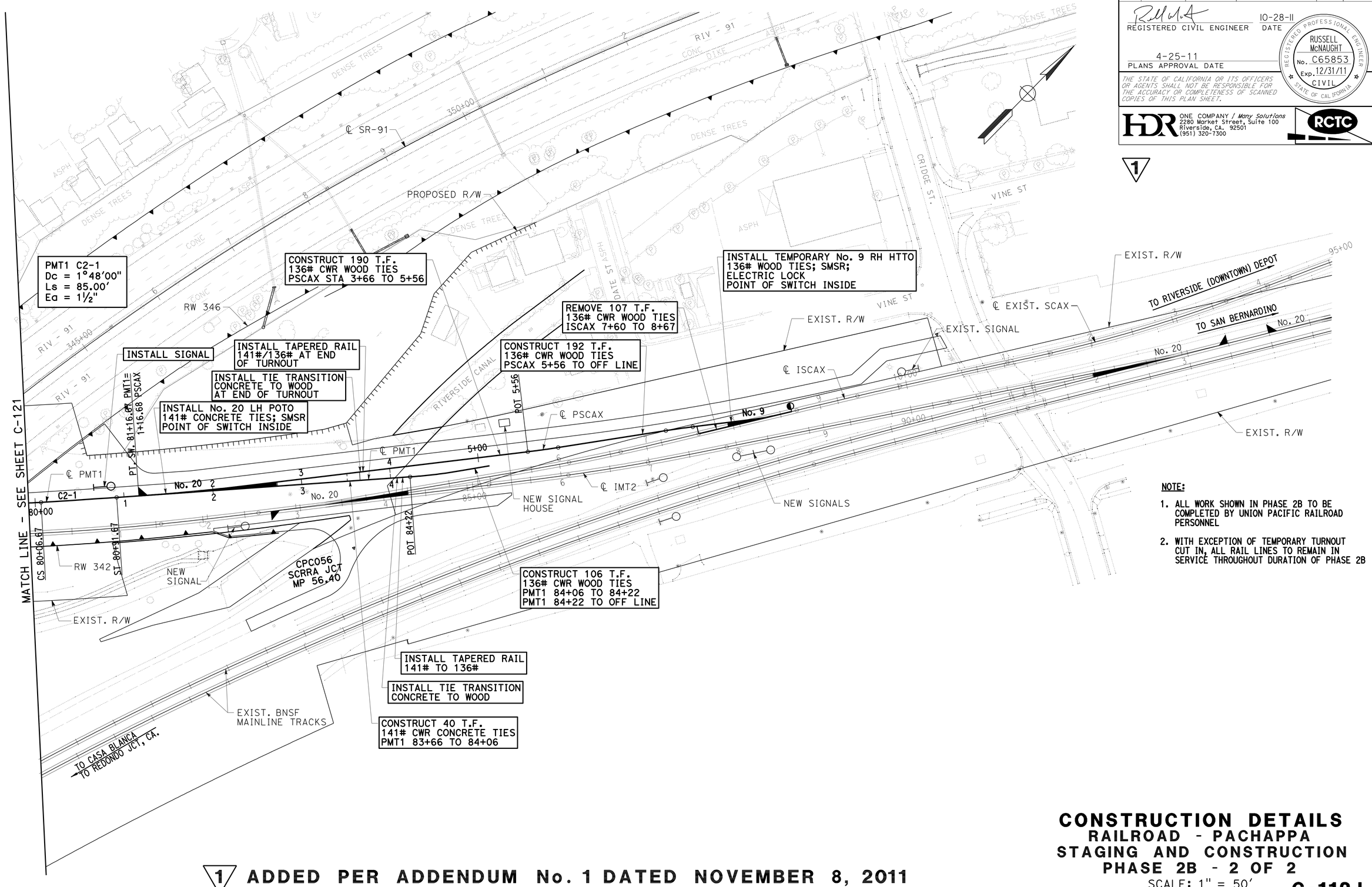

NOTE:

1. ALL WORK SHOWN IN PHASE 2B TO BE COMPLETED BY UNION PACIFIC RAILROAD PERSONNEL
2. WITH EXCEPTION OF TEMPORARY TURNOUT CUT IN, ALL RAIL LINES TO REMAIN IN SERVICE THROUGHOUT DURATION OF PHASE 2B

1 ADDED PER ADDENDUM No. 1 DATED NOVEMBER 8, 2011

CONSTRUCTION DETAILS
RAILROAD - PACHAPPA STAGING AND CONSTRUCTION PHASE 2B - 2 OF 2

SCALE: 1" = 50'

C-112J

STATE OF CALIFORNIA - DEPARTMENT OF TRANSPORTATION — Caltrans

CONSULTANT FUNCTIONAL SUPERVISOR: GERARD REMINISKEY

CALCULATED-DESIGNED BY: MICHAEL MIHALOVICH — CHECKED BY: JIM CONWAY, RUSSELL McNAUGHT — REVISED BY — DATE REVISED

LAST REVISION 10-18-11 — DATE PLOTTED => 08-NOV-2011 — TIME PLOTTED => 11:18

Dist	COUNTY	ROUTE	POST MILES TOTAL PROJECT	SHEET No.	TOTAL SHEETS
08	Riv	91	15.6/21.6	198K	2028

REGISTERED CIVIL ENGINEER — DATE 10-28-11

4-25-11
PLANS APPROVAL DATE

REGISTERED PROFESSIONAL ENGINEER — RUSSELL McNAUGHT — No. C65853 — Exp. 12/31/11 — CIVIL — STATE OF CALIFORNIA

THE STATE OF CALIFORNIA OR ITS OFFICERS OR AGENTS SHALL NOT BE RESPONSIBLE FOR THE ACCURACY OR COMPLETENESS OF SCANNED COPIES OF THIS PLAN SHEET.

HDR — ONE COMPANY / *Many Solutions*
2280 Market Street, Suite 100
Riverside, CA. 92501
(951) 320-7300

RCTC

NOTE:

1. ALL WORK SHOWN IN PHASE 2C TO BE COMPLETED BY UNION PACIFIC RAILROAD PERSONNEL
2. TEMPORARY OUTAGE REQUIRED. ALL RAIL LINES TO RETURN TO SERVICE AS SOON AS CUT IN COMPLETED.

1

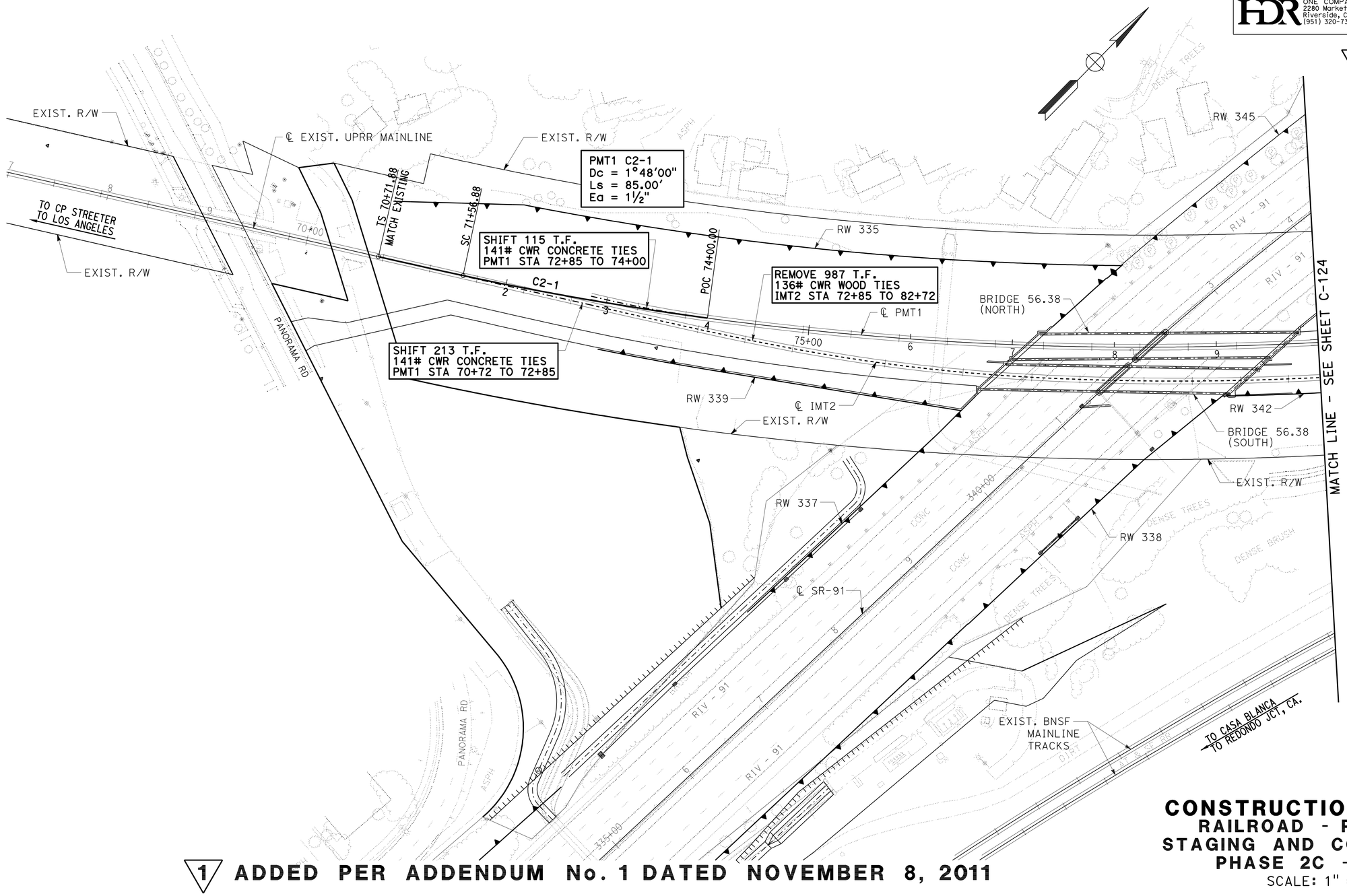

1 ADDED PER ADDENDUM No. 1 DATED NOVEMBER 8, 2011

CONSTRUCTION DETAILS
RAILROAD - PACHAPPA
STAGING AND CONSTRUCTION
PHASE 2C - 1 OF 2

SCALE: 1" = 50'

C-112K

STATE OF CALIFORNIA - DEPARTMENT OF TRANSPORTATION — Caltrans

CONSULTANT FUNCTIONAL SUPERVISOR: GERARD REMINISKEY

CALCULATED-DESIGNED BY: MICHAEL MIHALOVICH — CHECKED BY: JIM CONWAY, RUSSELL McNAUGHT

REVISED BY — DATE REVISED

LAST REVISION — DATE PLOTTED => 08-NOV-2011 — TIME PLOTTED => 11:18 — 10-18-11

BORDER LAST REVISED 4/11/2008 — RELATIVE BORDER SCALE IS IN INCHES 0 1 2 3

USERNAME => s121614
DGN FILE => 844840ga112k.dgn

CU 08227 — EA 448401

Dist	COUNTY	ROUTE	POST MILES TOTAL PROJECT	SHEET No.	TOTAL SHEETS
08	Riv	91	15.6/21.6	198L	2028

REGISTERED CIVIL ENGINEER — DATE 10-28-11

4-25-11
PLANS APPROVAL DATE

REGISTERED PROFESSIONAL ENGINEER — RUSSELL McNAUGHT — No. C65853 — Exp. 12/31/11 — CIVIL — STATE OF CALIFORNIA

THE STATE OF CALIFORNIA OR ITS OFFICERS OR AGENTS SHALL NOT BE RESPONSIBLE FOR THE ACCURACY OR COMPLETENESS OF SCANNED COPIES OF THIS PLAN SHEET.

HDR — ONE COMPANY / *Many Solutions*
2280 Market Street, Suite 100
Riverside, CA. 92501
(951) 320-7300

RCTC

1

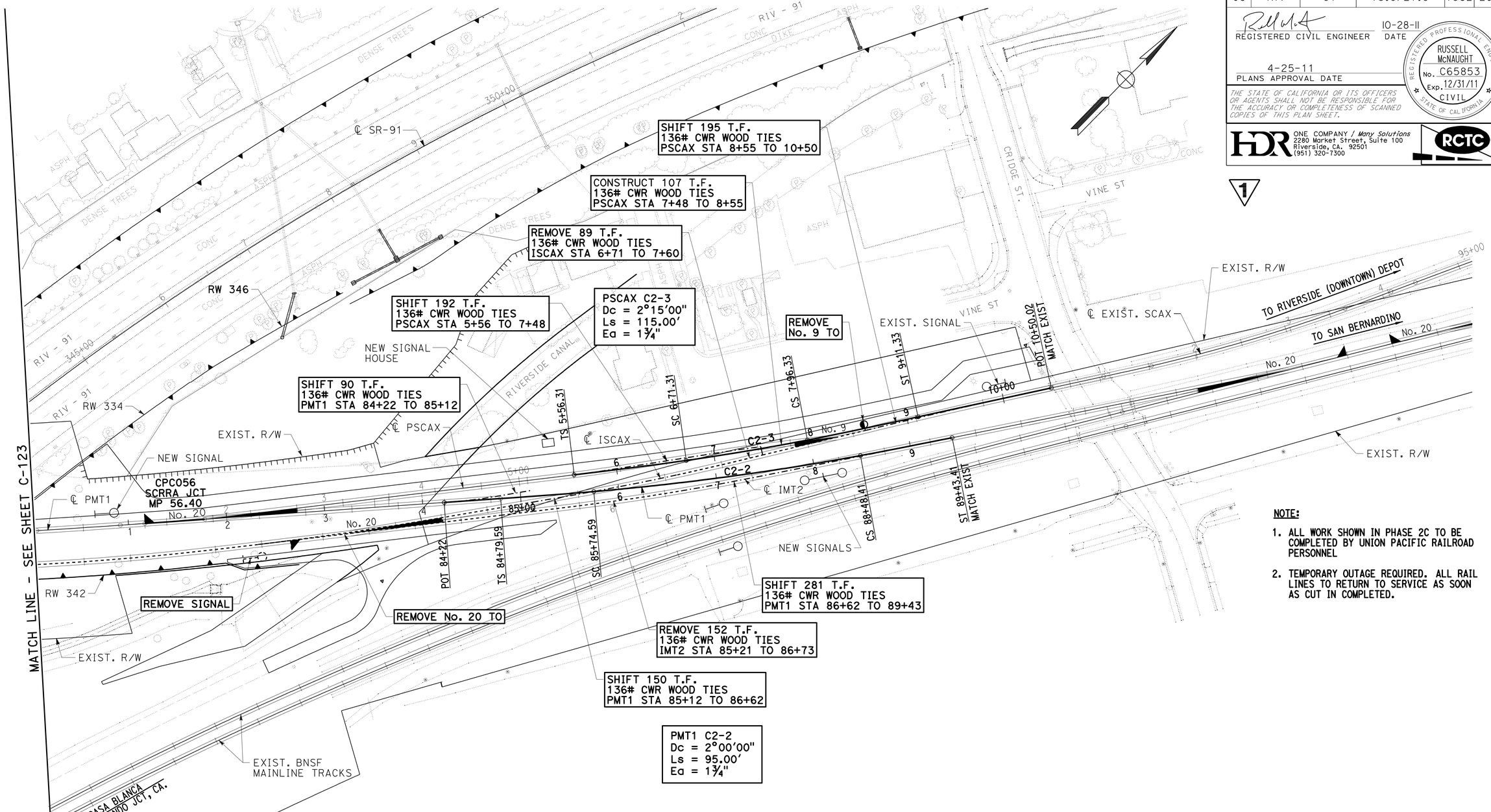

NOTE:

1. ALL WORK SHOWN IN PHASE 2C TO BE COMPLETED BY UNION PACIFIC RAILROAD PERSONNEL
2. TEMPORARY OUTAGE REQUIRED. ALL RAIL LINES TO RETURN TO SERVICE AS SOON AS CUT IN COMPLETED.

1 ADDED PER ADDENDUM No. 1 DATED NOVEMBER 8, 2011

CONSTRUCTION DETAILS
RAILROAD - PACHAPPA
STAGING AND CONSTRUCTION
PHASE 2C - 2 OF 2

SCALE: 1" = 50'

C-112L

STATE OF CALIFORNIA - DEPARTMENT OF TRANSPORTATION — Caltrans

CONSULTANT FUNCTIONAL SUPERVISOR: GERARD REMINISKEY

CALCULATED-DESIGNED BY: MICHAEL MIHALOVICH — CHECKED BY: JIM CONWAY, RUSSELL McNAUGHT — REVISED BY — DATE REVISED

LAST REVISION 10-18-11 — DATE PLOTTED => 08-NOV-2011 — TIME PLOTTED => 11:18

Dist	COUNTY	ROUTE	POST MILES TOTAL PROJECT	SHEET No.	TOTAL SHEETS
08	Riv	91	15.6/21.6	198M	2028

REGISTERED CIVIL ENGINEER — DATE 10-28-11

4-25-11
PLANS APPROVAL DATE

REGISTERED PROFESSIONAL ENGINEER — RUSSELL McNAUGHT — No. C65853 — Exp. 12/31/11 — CIVIL — STATE OF CALIFORNIA

THE STATE OF CALIFORNIA OR ITS OFFICERS OR AGENTS SHALL NOT BE RESPONSIBLE FOR THE ACCURACY OR COMPLETENESS OF SCANNED COPIES OF THIS PLAN SHEET.

HDR — ONE COMPANY / *Many Solutions*
2280 Market Street, Suite 100
Riverside, CA. 92501
(951) 320-7300

RCTC

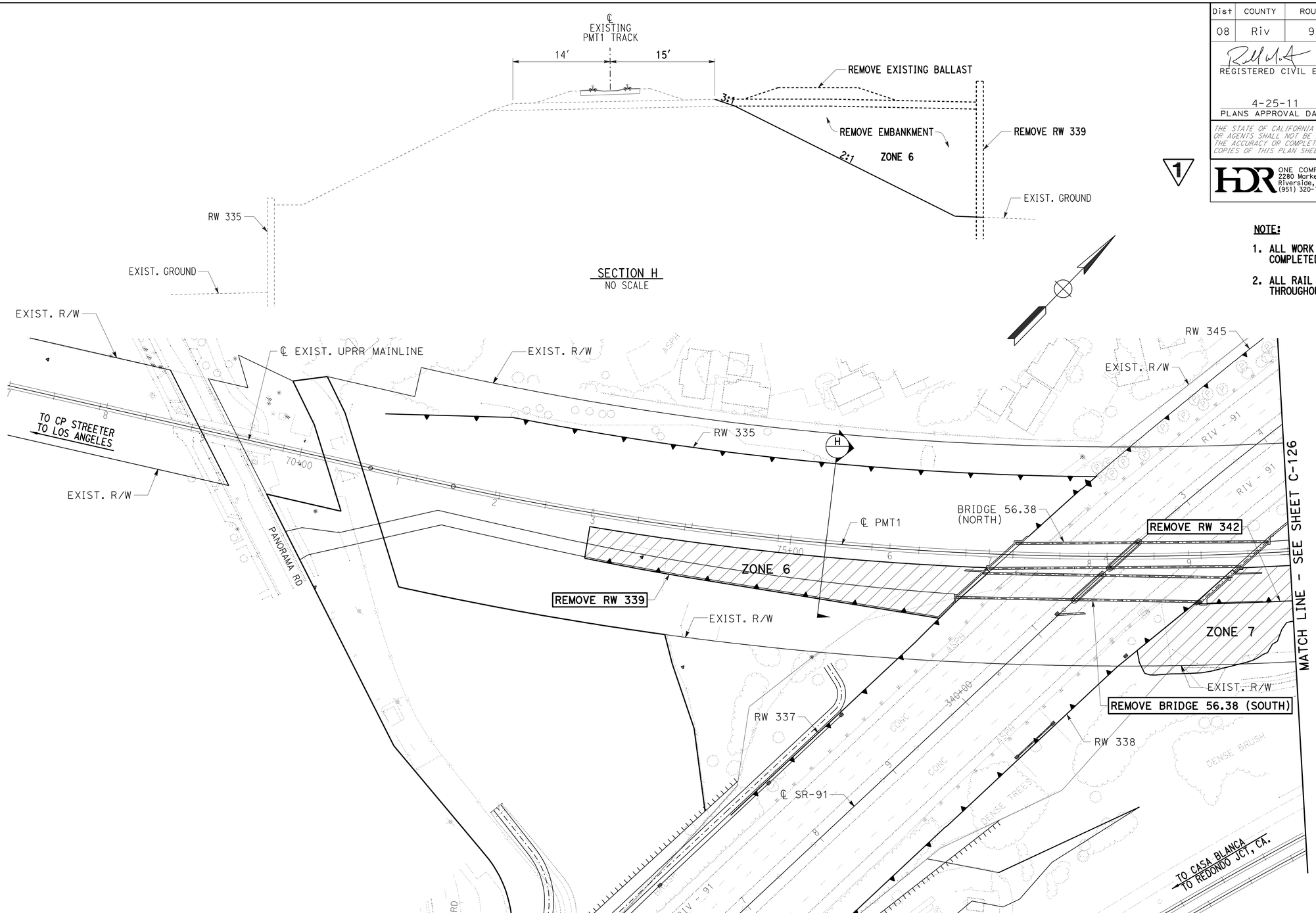

NOTE:

1. ALL WORK SHOWN IN PHASE 3 TO BE COMPLETED BY STATE CONTRACTOR
2. ALL RAIL LINES TO REMAIN TO SERVICE THROUGHOUT DURATION OF PHASE 3

1 ADDED PER ADDENDUM No. 1
DATED NOVEMBER 8, 2011

CONSTRUCTION DETAILS
RAILROAD - PACHAPPA
STAGING AND CONSTRUCTION
PHASE 3 - 1 OF 2

SCALE: 1" = 50′

C-112M

STATE OF CALIFORNIA - DEPARTMENT OF TRANSPORTATION — Caltrans

CONSULTANT FUNCTIONAL SUPERVISOR: GERARD REMINISKEY

CALCULATED-DESIGNED BY: MICHAEL MIHALOVICH
CHECKED BY: JIM CONWAY, RUSSELL McNAUGHT

REVISED BY / DATE REVISED

LAST REVISION — DATE PLOTTED => 08-NOV-2011 — TIME PLOTTED => 11:18 — 10-18-11

Dist	COUNTY	ROUTE	POST MILES TOTAL PROJECT	SHEET No.	TOTAL SHEETS
08	Riv	91	15.6/21.6	198N	2028

REGISTERED CIVIL ENGINEER — DATE 10-28-11

4-25-11
PLANS APPROVAL DATE

REGISTERED PROFESSIONAL ENGINEER — RUSSELL McNAUGHT — No. C65853 — Exp. 12/31/11 — CIVIL — STATE OF CALIFORNIA

THE STATE OF CALIFORNIA OR ITS OFFICERS OR AGENTS SHALL NOT BE RESPONSIBLE FOR THE ACCURACY OR COMPLETENESS OF SCANNED COPIES OF THIS PLAN SHEET.

HDR — ONE COMPANY / *Many Solutions*
2280 Market Street, Suite 100
Riverside, CA. 92501
(951) 320-7300

RCTC

1

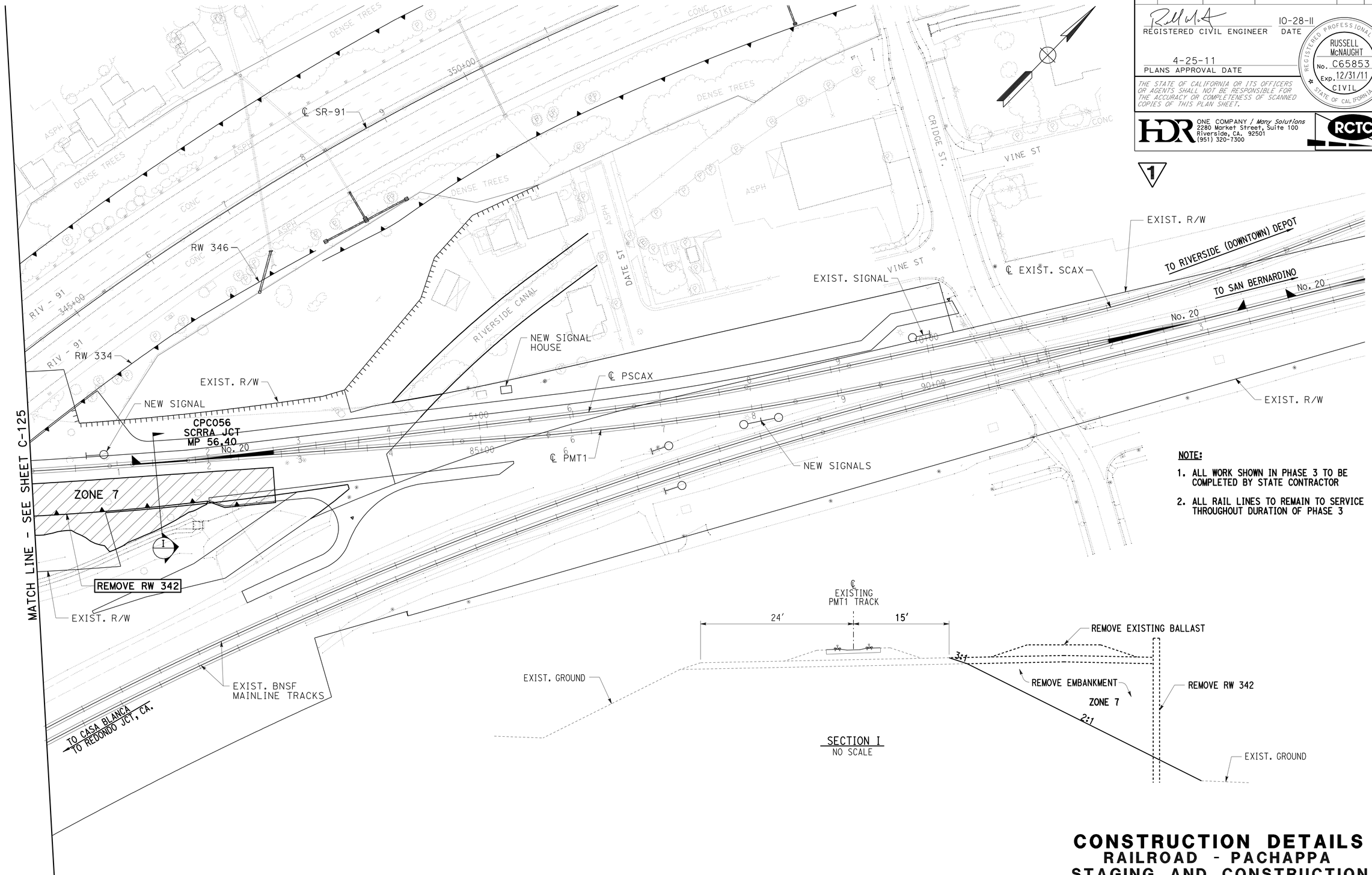

NOTE:

1. ALL WORK SHOWN IN PHASE 3 TO BE COMPLETED BY STATE CONTRACTOR
2. ALL RAIL LINES TO REMAIN TO SERVICE THROUGHOUT DURATION OF PHASE 3

1 ADDED PER ADDENDUM No. 1 DATED NOVEMBER 8, 2011

CONSTRUCTION DETAILS
RAILROAD - PACHAPPA
STAGING AND CONSTRUCTION
PHASE 3 - 2 OF 2

SCALE: 1" = 50'

C-112N

STATE OF CALIFORNIA - DEPARTMENT OF TRANSPORTATION — Caltrans

CONSULTANT FUNCTIONAL SUPERVISOR: GERARD REMINISKEY

CALCULATED-DESIGNED BY: MICHAEL MIHALOVICH
CHECKED BY: JIM CONWAY, RUSSELL McNAUGHT

REVISED BY / DATE REVISED

LAST REVISION — DATE PLOTTED => 08-NOV-2011 — TIME PLOTTED => 11:18 — 10-18-11

Dist	COUNTY	ROUTE	POST MILES TOTAL PROJECT	SHEET No.	TOTAL SHEETS
08	Riv	91	15.6/21.6	1980	2028

REGISTERED CIVIL ENGINEER — DATE 10-28-11

4-25-11
PLANS APPROVAL DATE

REGISTERED PROFESSIONAL ENGINEER — RUSSELL McNAUGHT — No. C65853 — Exp. 12/31/11 — CIVIL — STATE OF CALIFORNIA

THE STATE OF CALIFORNIA OR ITS OFFICERS OR AGENTS SHALL NOT BE RESPONSIBLE FOR THE ACCURACY OR COMPLETENESS OF ELECTRONIC COPIES OF THIS PLAN SHEET.

HDR — ONE COMPANY / *Many Solutions*
2280 Market Street, Suite 100
Riverside, CA. 92501
(951) 320-7300

RCTC

1

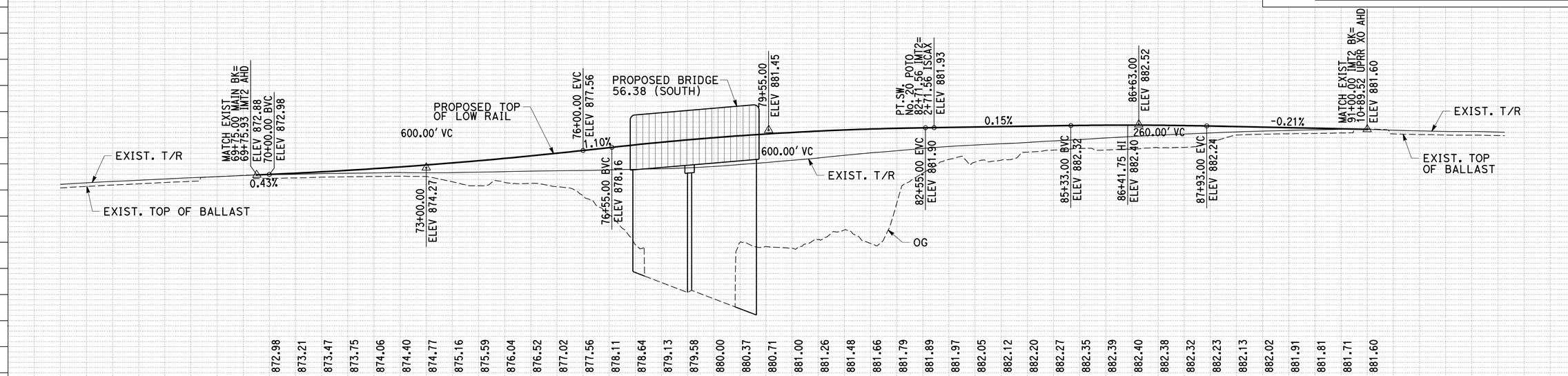

PROFILE

INTERIM MAIN TRACK 2 (IMT2)

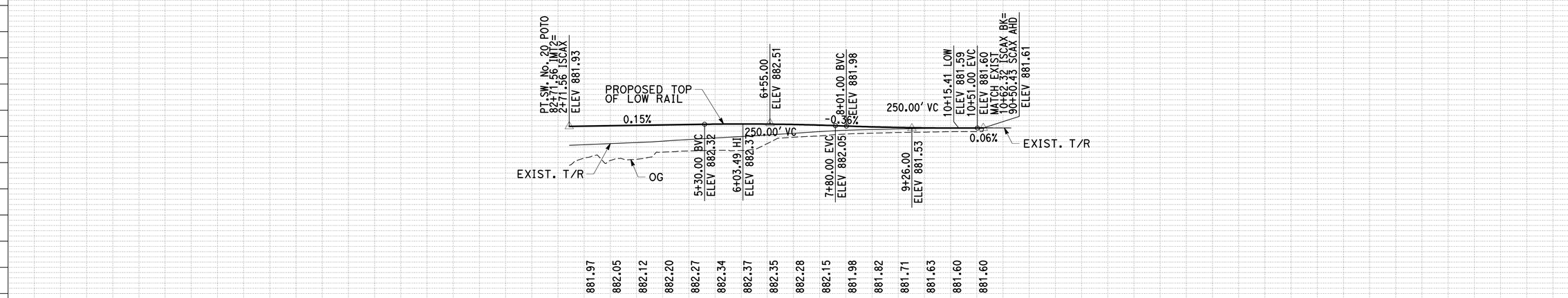

PROFILE

INTERIM SCAX TRACK (ISCAX)

1 **ADDED PER ADDENDUM No. 1 DATED NOVEMBER 8, 2011**

CONSTRUCTION DETAILS
RAILROAD - PACHAPPA
PROFILES - INTERIM

SCALE: HORZ 1"=100'
VERT 1"=10'

C-1120

REVISED BY | DATE REVISED
MICHAEL MIHALOVICH | JIM CONWAY | RUSSELL McNAUGHT
CALCULATED-DESIGNED BY | CHECKED BY
FUNCTIONAL SUPERVISOR: GERARD REMINISKEY
STATE OF CALIFORNIA - DEPARTMENT OF TRANSPORTATION
Caltrans
DESIGN

LAST REVISION 10-18-11 | DATE PLOTTED => 08-NOV-2011 | TIME PLOTTED => 11:19

Dist	COUNTY	ROUTE	POST MILES TOTAL PROJECT	SHEET No.	TOTAL SHEETS
08	Riv	91	15.6/21.6	198P	2028

REGISTERED CIVIL ENGINEER — DATE 10-28-11

4-25-11
PLANS APPROVAL DATE

REGISTERED PROFESSIONAL ENGINEER — RUSSELL McNAUGHT — No. C65853 — Exp. 12/31/11 — CIVIL — STATE OF CALIFORNIA

THE STATE OF CALIFORNIA OR ITS OFFICERS OR AGENTS SHALL NOT BE RESPONSIBLE FOR THE ACCURACY OR COMPLETENESS OF ELECTRONIC COPIES OF THIS PLAN SHEET.

HDR — ONE COMPANY / *Many Solutions*
2280 Market Street, Suite 100
Riverside, CA. 92501
(951) 320-7300

RCTC

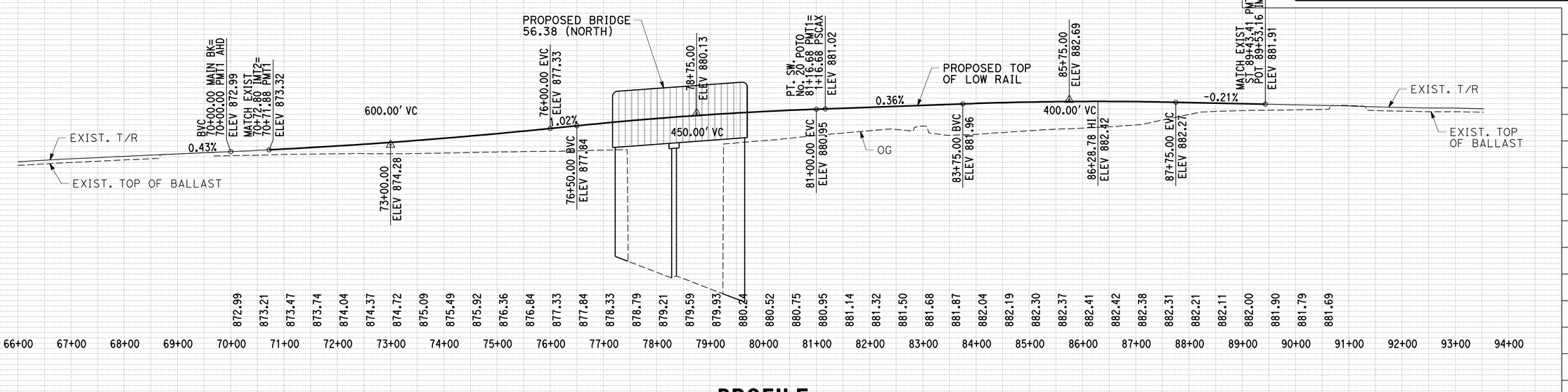

PROFILE

PROPOSED MAIN TRACK 1 (PMT1)

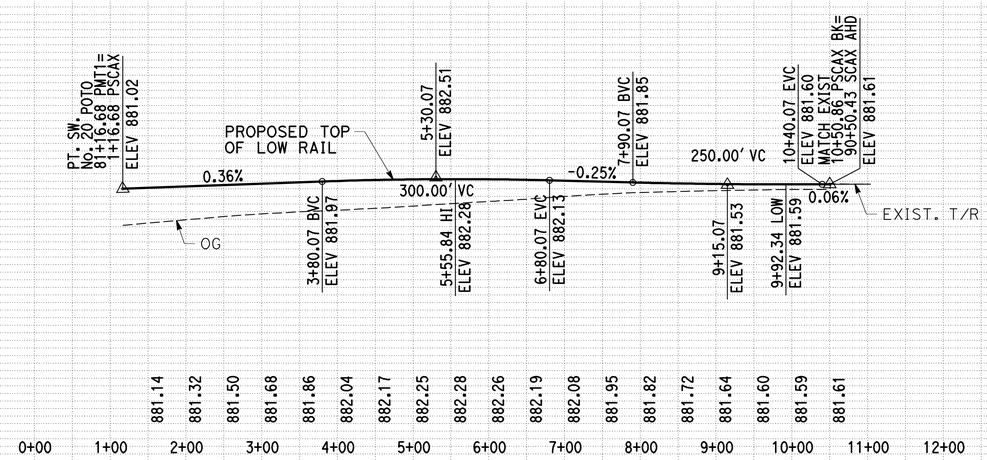

PROFILE

PROPOSED SCAX TRACK (PSCAX)

1 ADDED PER ADDENDUM No. 1 DATED NOVEMBER 8, 2011

CONSTRUCTION DETAILS
RAILROAD - PACHAPPA
PROFILES - PROPOSED

SCALE: HORZ 1"=100'
VERT 1"=10'

C-112P

STATE OF CALIFORNIA - DEPARTMENT OF TRANSPORTATION
Caltrans DESIGN
FUNCTIONAL SUPERVISOR: GERARD REMINISKEY
CALCULATED-DESIGNED BY: MICHAEL MIHALOVICH
CHECKED BY: JIM CONWAY, RUSSELL McNAUGHT
REVISED BY / DATE REVISED

LAST REVISION 10-18-11 — DATE PLOTTED => 08-NOV-2011 — TIME PLOTTED => 11:19

BORDER LAST REVISED 3/1/2007 — RELATIVE BORDER SCALE IS IN INCHES 0 1 2 3 — USERNAME => s121614 — DGN FILE => 844840ga112p.dgn — CU 08227 — EA 448401

Dist	COUNTY	ROUTE	POST MILES TOTAL PROJECT	SHEET No.	TOTAL SHEETS
08	Riv	91	15.6/21.6	1980	2028

REGISTERED CIVIL ENGINEER 10-28-11 DATE

4-25-11
PLANS APPROVAL DATE

REGISTERED PROFESSIONAL ENGINEER RUSSELL McNAUGHT No. C65853 Exp. 12/31/11 CIVIL STATE OF CALIFORNIA

THE STATE OF CALIFORNIA OR ITS OFFICERS OR AGENTS SHALL NOT BE RESPONSIBLE FOR THE ACCURACY OR COMPLETENESS OF ELECTRONIC COPIES OF THIS PLAN SHEET.

HDR ONE COMPANY / *Many Solutions*
2280 Market Street, Suite 100
Riverside, CA. 92501
(951) 320-7300

RCTC

1

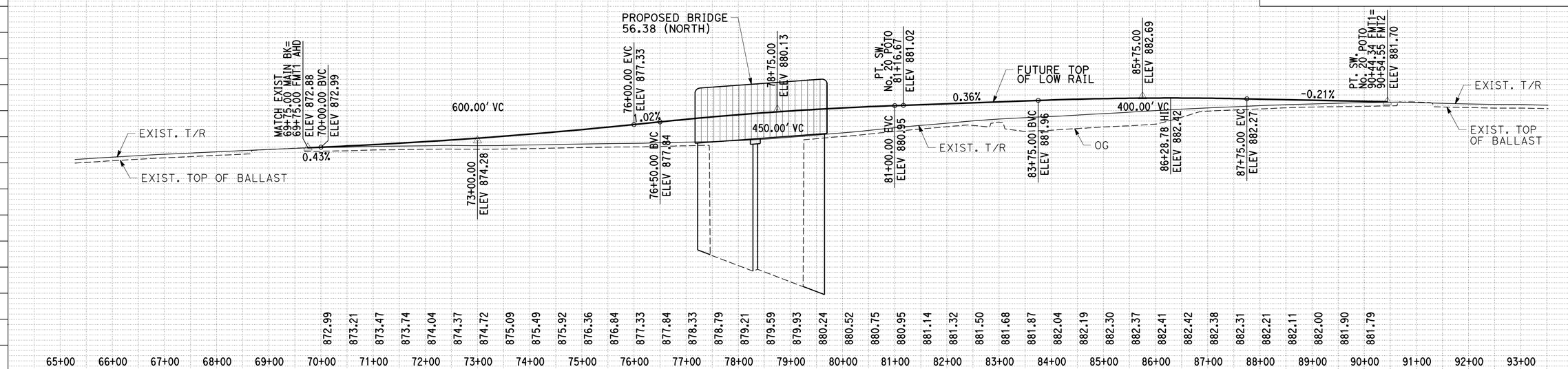

PROFILE

FUTURE MAIN TRACK 1 (FMT1)

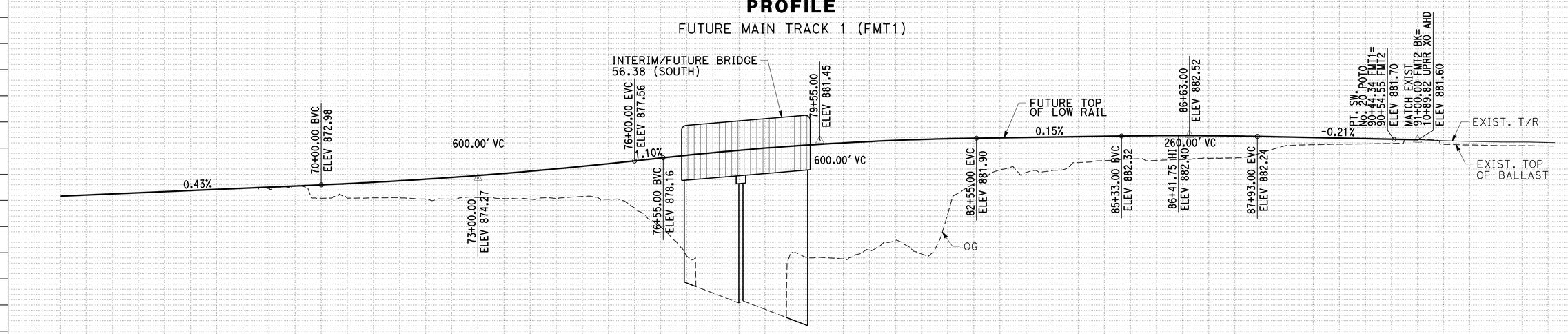

PROFILE

FUTURE MAIN TRACK 2 (FMT2)

1 **ADDED PER ADDENDUM No. 1 DATED NOVEMBER 8, 2011**

CONSTRUCTION DETAILS
RAILROAD - PACHAPPA
PROFILES - FUTURE

SCALE: HORZ 1"=100'
VERT 1"=10'

C-112Q

STATE OF CALIFORNIA - DEPARTMENT OF TRANSPORTATION
Caltrans
DESIGN

FUNCTIONAL SUPERVISOR: GERARD REMINISKEY
CALCULATED-DESIGNED BY: MICHAEL MIHALOVICH
CHECKED BY: JIM CONWAY, RUSSELL McNAUGHT
REVISED BY / DATE REVISED

LAST REVISION 10-18-11 DATE PLOTTED => 08-NOV-2011 TIME PLOTTED => 11:19

Dist	COUNTY	ROUTE	POST MILES TOTAL PROJECT	SHEET No.	TOTAL SHEETS
08	Riv	91	15.6/21.6	198R	2028

REGISTERED CIVIL ENGINEER — DATE 10-28-11

4-25-11
PLANS APPROVAL DATE

REGISTERED PROFESSIONAL ENGINEER — CUONG LE TRAN — No. C60436 — Exp 6/30/12 — CIVIL — STATE OF CALIFORNIA

THE STATE OF CALIFORNIA OR ITS OFFICERS OR AGENTS SHALL NOT BE RESPONSIBLE FOR THE ACCURACY OR COMPLETENESS OF SCANNED COPIES OF THIS PLAN SHEET.

1

NOTES:

1. THE CONTRACTOR SHALL VERIFY ALL CONTROLING FIELD DIMENSIONS BEFORE ORDERING OR FABRICATING ANY MATERIAL.
2. GEOSYNTHETIC REINFORCEMENT: USE 12′ IN LENGTH, 1.5′ VERTICAL SPACINGS, WITH SPECIFIED LTDS OF 3600 lbs/ft

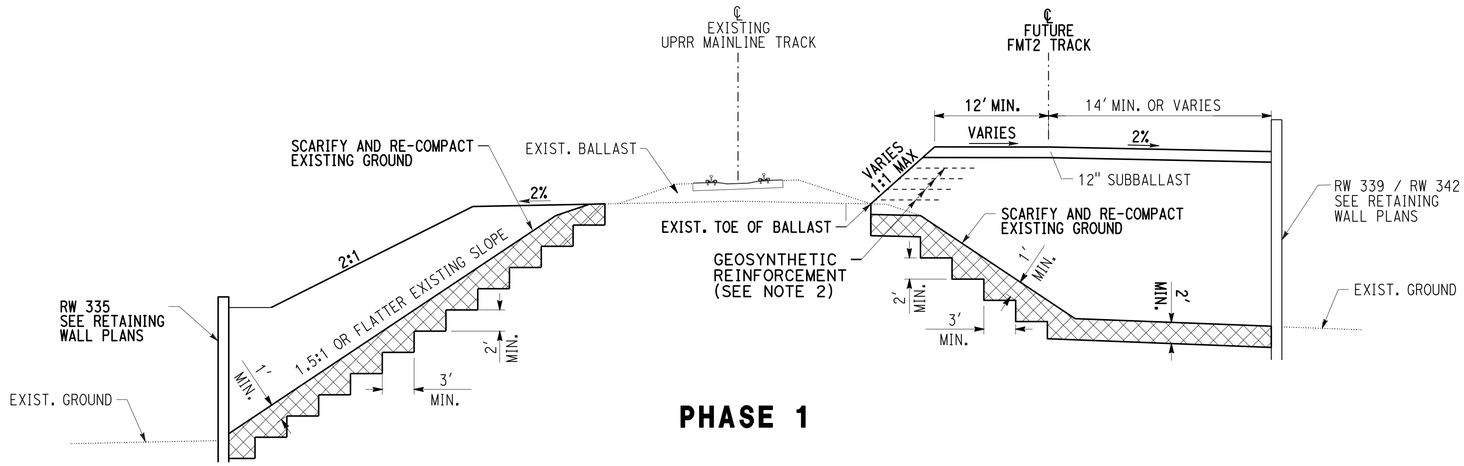

PHASE 1

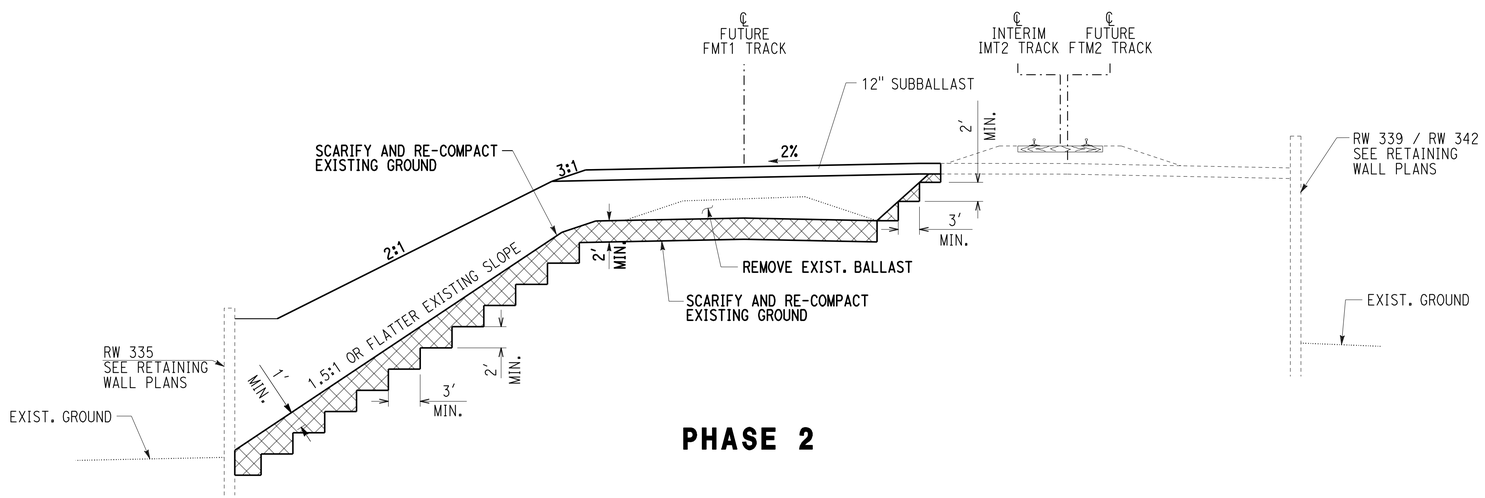

PHASE 2

TOOTH FILL INTO EXISTING EMBANKMENT AND GEOSYNTHETIC REINFORCEMENT DETAILS
RECOMMENDATION FROM GEOTECH

1 **ADDED PER ADDENDUM No. 1 DATED NOVEMBER 8, 2011**

CONSTRUCTION DETAILS
NO SCALE
C-112R

STATE OF CALIFORNIA - DEPARTMENT OF TRANSPORTATION
Caltrans®
DESIGN
FUNCTIONAL SUPERVISOR: MARK PERTILE
CALCULATED-DESIGNED BY: ANNABELL WANG
CHECKED BY: CUONG LE TRAN
REVISED BY
DATE REVISED

LAST REVISION 10-24-11
DATE PLOTTED => 08-NOV-2011
TIME PLOTTED => 11:19

Dist	COUNTY	ROUTE	POST MILES TOTAL PROJECT	SHEET No.	TOTAL SHEETS
08	Riv	91	15.6/21.6	209	2028

REGISTERED CIVIL ENGINEER — DATE 10-28-11

4-25-11
PLANS APPROVAL DATE

REGISTERED PROFESSIONAL ENGINEER — CUONG LE TRAN — No. C60436 — Exp 6/30/12 — CIVIL — STATE OF CALIFORNIA

THE STATE OF CALIFORNIA OR ITS OFFICERS OR AGENTS SHALL NOT BE RESPONSIBLE FOR THE ACCURACY OR COMPLETENESS OF SCANNED COPIES OF THIS PLAN SHEET.

NOTE:

FOR ACCURATE RIGHT OF WAY AND ACCESS DATA, CONTACT RIGHT OF WAY ENGINEERING AT THE DISTRICT OFFICE.

CURVE DATA

No.	R	Δ	T	L
1	207.50′	4°51′46"	8.81′	17.61′
2	192.50′	6°22′30"	10.72′	21.42′
3	207.50′	3°21′44"	6.09′	12.18′
4	192.51′	6°37′50"	11.15′	22.28′
5	25.00′	72°28′55"	18.32′	31.63′
6	1374.07′	12°3′57"	145.22′	289.36′

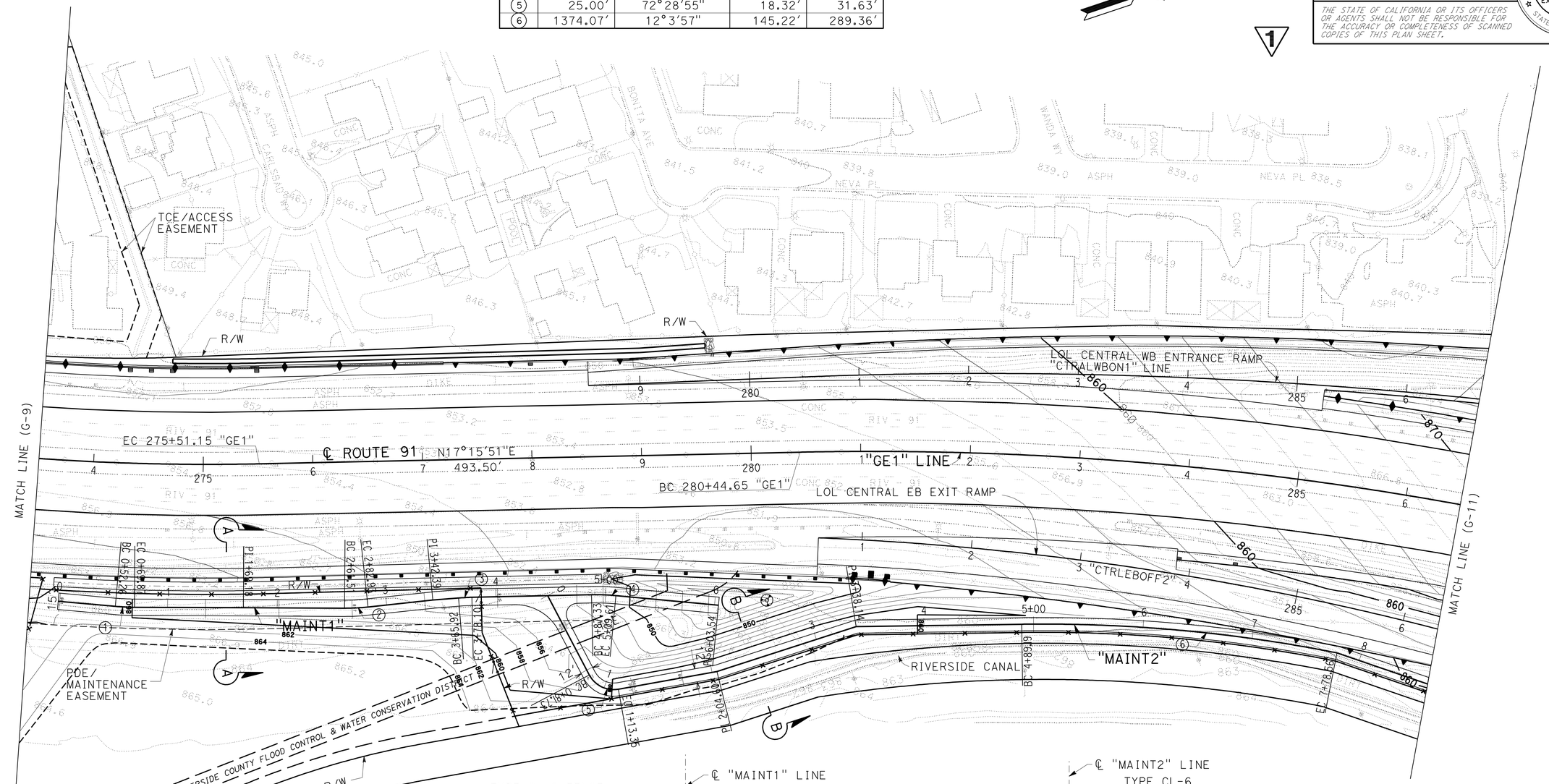

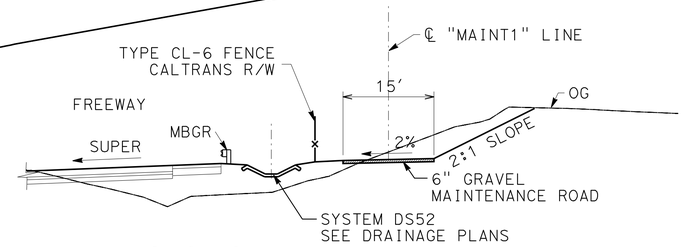

SECTION A-A
NOT TO SCALE

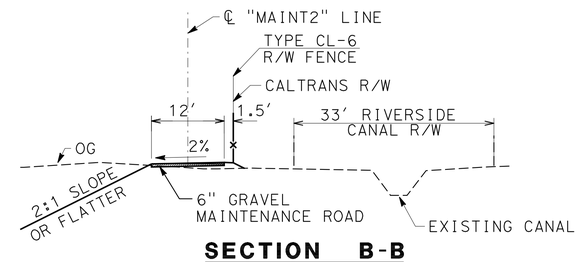

SECTION B-B
NOT TO SCALE

1 REVISED PER ADDENDUM No. 1 DATED NOVEMBER 8, 2011

THIS PLAN ACCURATE FOR CONTOUR GRADING WORK ONLY.

CONTOUR GRADING

SCALE: 1" = 50′ **G-10**

STATE OF CALIFORNIA - DEPARTMENT OF TRANSPORTATION
Caltrans®
DESIGN
FUNCTIONAL SUPERVISOR: MARK PERTILE
CALCULATED-DESIGNED BY: CUONG LE TRAN
CHECKED BY: ANNABELL WANG
REVISED BY
DATE REVISED

LAST REVISION 10-13-11
DATE PLOTTED => 08-NOV-2011
TIME PLOTTED => 11:19

Dist	COUNTY	ROUTE	POST MILES TOTAL PROJECT	SHEET No.	TOTAL SHEETS
08	Riv	91	15.6/21.6	214	2028

REGISTERED CIVIL ENGINEER — DATE 10-28-11

PLANS APPROVAL DATE 4-25-11

REGISTERED PROFESSIONAL ENGINEER CUONG LE TRAN No. C60436 Exp 6/30/12 CIVIL STATE OF CALIFORNIA

THE STATE OF CALIFORNIA OR ITS OFFICERS OR AGENTS SHALL NOT BE RESPONSIBLE FOR THE ACCURACY OR COMPLETENESS OF SCANNED COPIES OF THIS PLAN SHEET.

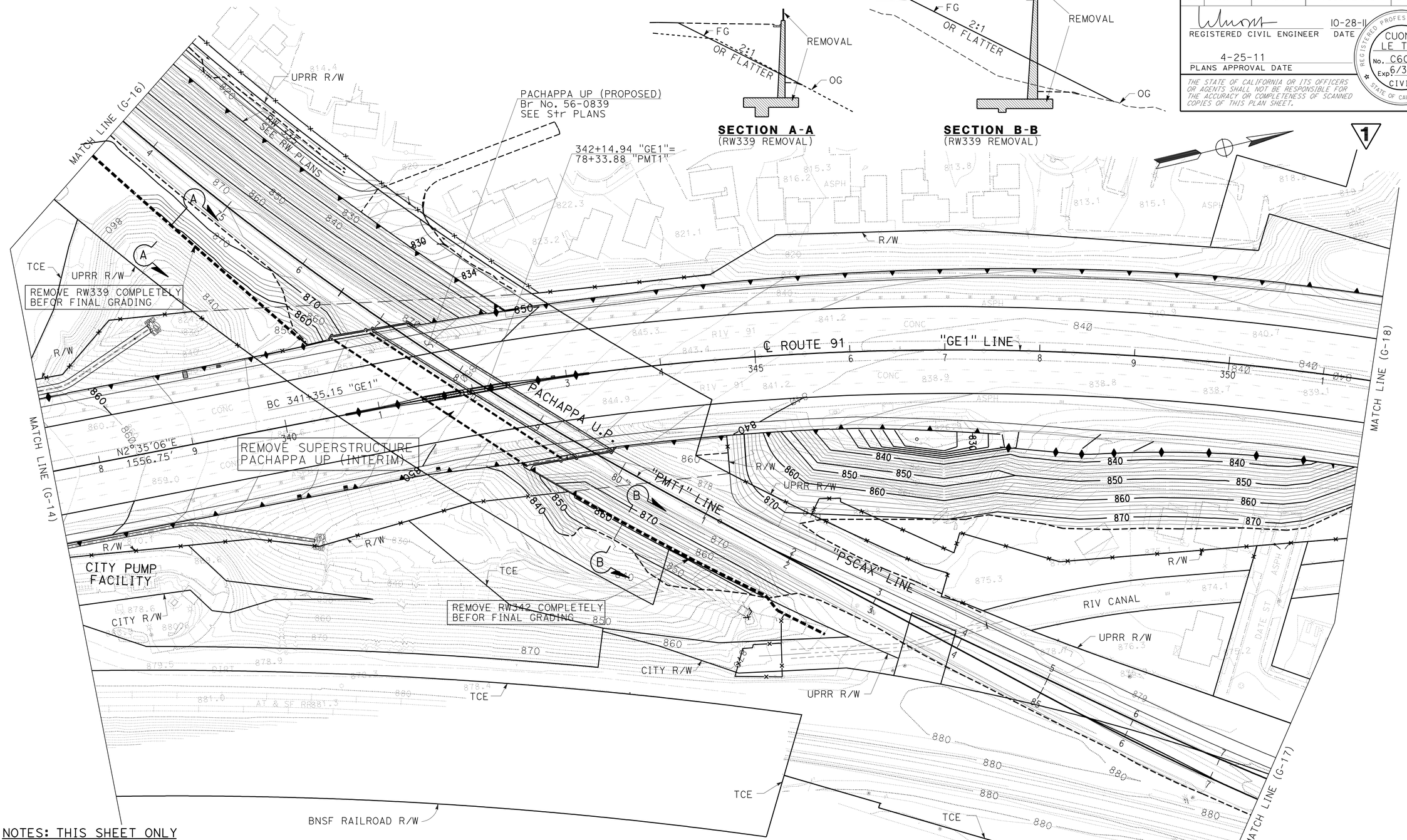

NOTES: THIS SHEET ONLY

1. FOR ACCURATE RIGHT OF WAY AND ACCESS DATA, CONTACT RIGHT OF WAY ENGINEERING AT THE DISTRICT OFFICE
2. FOR INTERIM CONTOUR GRADING ALONG RAILROAD TRACKS, SEE SHEET C-95.
3. CONTOUR GRADING ALONG RAILROAD TRACKS IS TO THE SUBBALLAST LEVEL ONLY.
4. BALLAST AND TRACK WORK TO BE DONE BY OTHERS.

1 REVISED PER ADDENDUM No. 1 DATED NOVEMBER 8, 2011

THIS PLAN ACCURATE FOR CONTOUR GRADING WORK ONLY.

CONTOUR GRADING

SCALE: 1" = 50'

G-15

STATE OF CALIFORNIA - DEPARTMENT OF TRANSPORTATION

Caltrans® DESIGN

FUNCTIONAL SUPERVISOR: MARK PERTILE

CALCULATED-DESIGNED BY: CUONG LE TRAN

CHECKED BY: ANNABELL WANG

REVISED BY / DATE REVISED

LAST REVISION 10-13-11 — DATE PLOTTED => 08-NOV-2011 — TIME PLOTTED => 11:19

Dist	COUNTY	ROUTE	POST MILES TOTAL PROJECT	SHEET No.	TOTAL SHEETS
08	Riv	91	15.6/21.6	215	2028

REGISTERED CIVIL ENGINEER — DATE 10-28-11

4-25-11
PLANS APPROVAL DATE

REGISTERED PROFESSIONAL ENGINEER — CUONG LE TRAN — No. C60436 — Exp 6/30/12 — CIVIL — STATE OF CALIFORNIA

THE STATE OF CALIFORNIA OR ITS OFFICERS OR AGENTS SHALL NOT BE RESPONSIBLE FOR THE ACCURACY OR COMPLETENESS OF SCANNED COPIES OF THIS PLAN SHEET.

NOTES: THIS SHEET ONLY

1. FOR ACCURATE RIGHT OF WAY AND ACCESS DATA, CONTACT RIGHT OF WAY ENGINEERING AT THE DISTRICT OFFICE
2. FOR INTERIM CONTOUR GRADING ALONG RAILROAD TRACKS, SEE SHEET C-96.
3. CONTOUR GRADING ALONG RAILROAD TRACKS IS TO THE SUBBALLAST LEVEL ONLY.
4. BALLAST AND TRACK WORK TO BE DONE BY OTHERS.

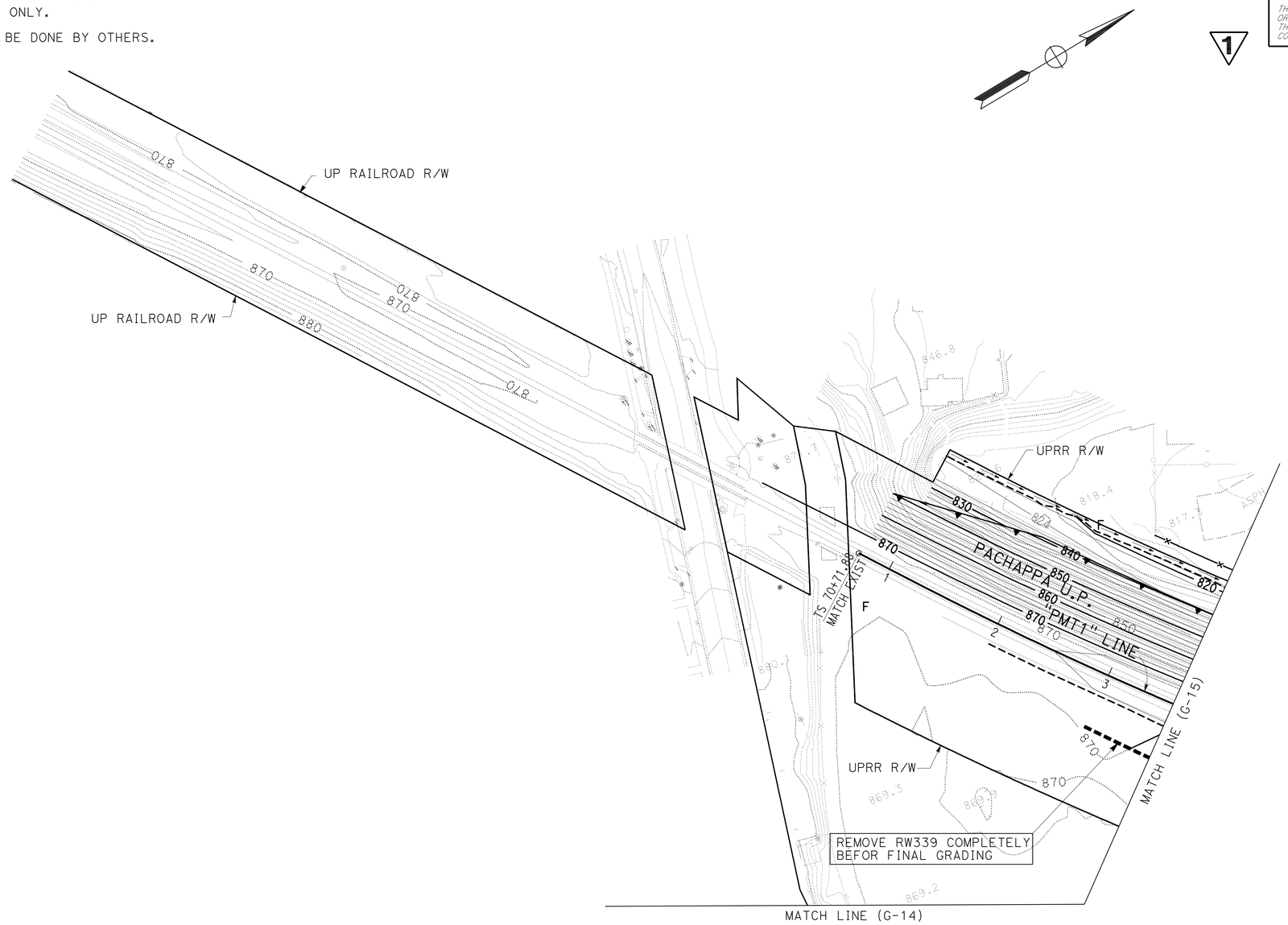

1 REVISED PER ADDENDUM No. 1 DATED NOVEMBER 8, 2011

THIS PLAN ACCURATE FOR CONTOUR GRADING WORK ONLY.

CONTOUR GRADING

SCALE: 1" = 50'

G-16

STATE OF CALIFORNIA - DEPARTMENT OF TRANSPORTATION
Caltrans
DESIGN

FUNCTIONAL SUPERVISOR: MARK PERTILE
CALCULATED-DESIGNED BY: CUONG LE TRAN
CHECKED BY: ANNABELL WANG
REVISED BY
DATE REVISED

LAST REVISION 10-13-11
DATE PLOTTED => 08-NOV-2011
TIME PLOTTED => 11:19

Dist	COUNTY	ROUTE	POST MILES TOTAL PROJECT	SHEET No.	TOTAL SHEETS
08	Riv	91	15.6/21.6	285	2028

REGISTERED CIVIL ENGINEER 10-28-11 DATE

4-25-11
PLANS APPROVAL DATE

REGISTERED PROFESSIONAL ENGINEER ALAN R. BISI No. C62808 Exp. 6-30-12 CIVIL STATE OF CALIFORNIA

THE STATE OF CALIFORNIA OR ITS OFFICERS OR AGENTS SHALL NOT BE RESPONSIBLE FOR THE ACCURACY OR COMPLETENESS OF SCANNED COPIES OF THIS PLAN SHEET.

1

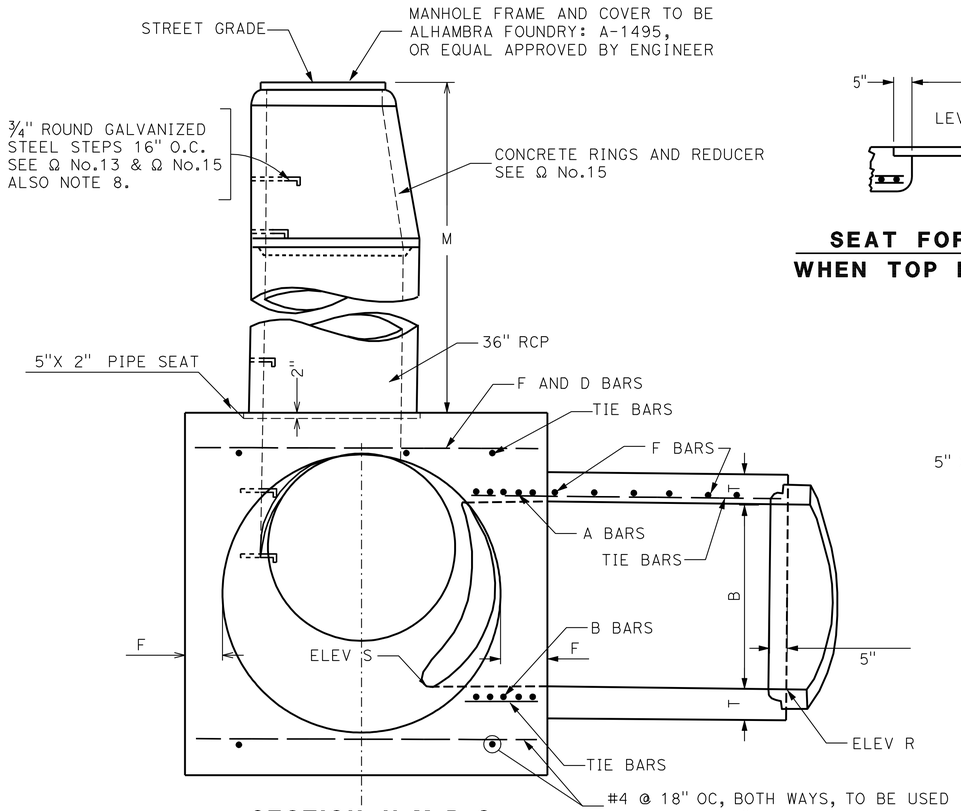

SECTION N-M-P-O
PROJECT ON P-P-O

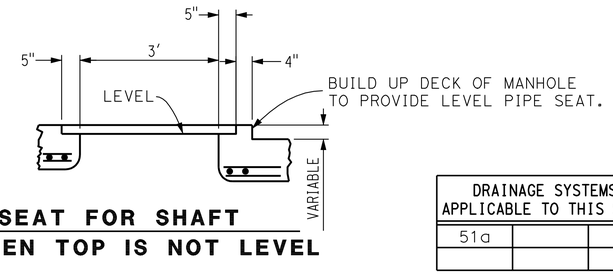

SEAT FOR SHAFT
WHEN TOP IS NOT LEVEL

DRAINAGE SYSTEMS APPLICABLE TO THIS SHEET		
51a		

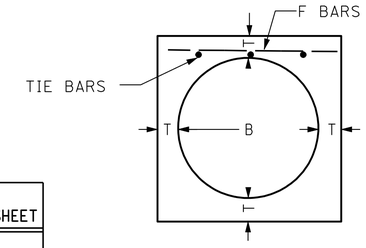

SECTION G-G

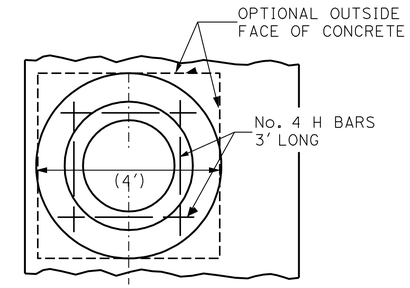

PLAN
(RINGS AND COVER NOT SHOWN)

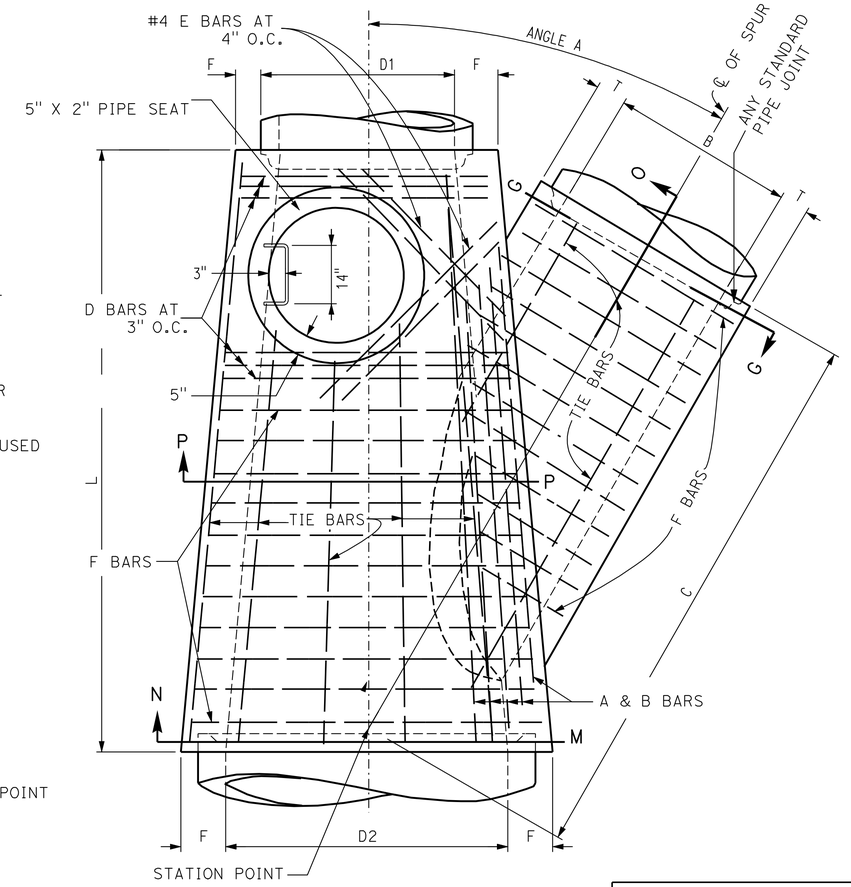

PLAN
(SHAFT NOT SHOWN)

	Max	Min
PAVED STREETS	11"	8½'
"UNPAVED"	16"	16"

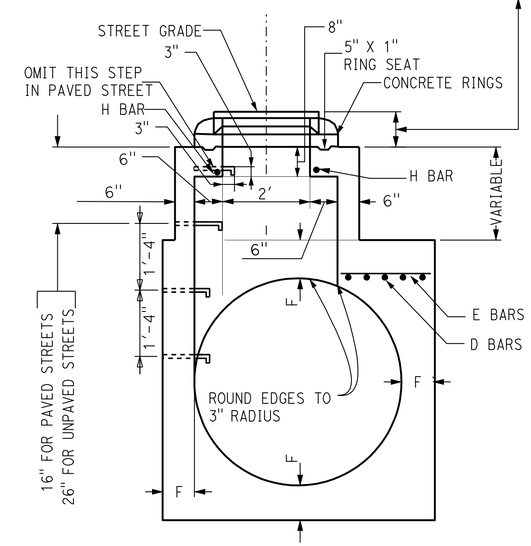

DETAIL "M"
(SEE NOTE 5)

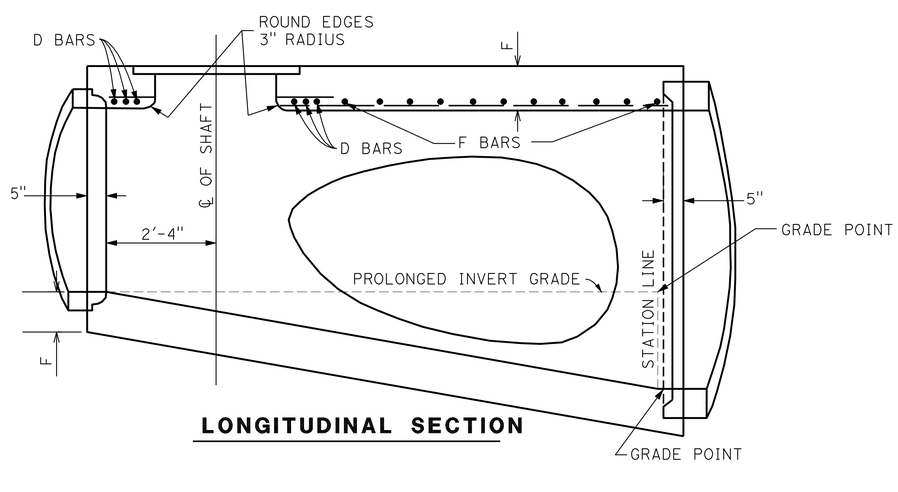

LONGITUDINAL SECTION

TABLE OF BAR SIZES		
D2,D1orB	A&B bars	D&F bars
12"-39"	No.5 at 3"	No.4 at 6"
42"-84"	No.6 at 3"	No.5 at 6"
90"-144"	No.7 at 3"	No.6 at 6"

MANHOLE No. 4 - RIVERSIDE COUNTY FLOOD CONTROL & WATER CONSERVATION DISTRICT

(SHEET 1 OF 2)

1 **REVISED PER ADDENDUM No. 1 DATED NOVEMBER 8, 2011**

DRAINAGE DETAILS

NO SCALE

DD-12

STATE OF CALIFORNIA - DEPARTMENT OF TRANSPORTATION
Caltrans® DESIGN
FUNCTIONAL SUPERVISOR: MARK PERTILE
CALCULATED-DESIGNED BY: MOHAMMAD ABDRABOH
CHECKED BY: ALAN R. BISI
REVISED BY
DATE REVISED

LAST REVISION 10-27-11
DATE PLOTTED => 08-NOV-2011
TIME PLOTTED => 11:20

Dist	COUNTY	ROUTE	POST MILES TOTAL PROJECT	SHEET No.	TOTAL SHEETS
08	Riv	91	15.6/21.6	286	2028

REGISTERED CIVIL ENGINEER 10-28-11 DATE

4-25-11
PLANS APPROVAL DATE

REGISTERED PROFESSIONAL ENGINEER ALAN R. BISI No. C62808 Exp. 6-30-12 CIVIL STATE OF CALIFORNIA

THE STATE OF CALIFORNIA OR ITS OFFICERS OR AGENTS SHALL NOT BE RESPONSIBLE FOR THE ACCURACY OR COMPLETENESS OF SCANNED COPIES OF THIS PLAN SHEET.

1

** TABLE OF VALUES FOR F AND T						
*D2, D2	F		B	T	B	T
12"	4"		12"	4"	78"	11¾"
15"	4¼"		15"	4¼"	84"	12½"
18"	4½"		18"	4½"	90"	13¼"
21"	5"		21"	5"	96"	14"
24"	5¼"		24"	5¼"	102"	15½"
27"	5½"		27"	5½"	108"	16"
30"	6"		30"	6"	114"	16½"
33"	6¼"		33"	6¼"	120"	17"
36"	6½"		36"	6½"	126"	17"
39"	7"		39"	7"	132"	17½"
42"	7½"		42"	7½"	138"	17½"
45"	7¾"		45"	7¾"	144"	18"
48"	8"		48"	8"		
51"	8½"		51"	8½"		
54"	9"		54"	9"		
57"	9¼"		57"	9¼"		
60"	9½"		60"	9½"		
63"	10"		63"	10"		
66"	10¼"		66"	10¼"		
69"	10¾"		69"	10¾"		
72"	11"		72"	11"		
78"	11¾"					
84"	12½"					
90"	13¼"					
96"	14"					
102"	15½"					
108"	16"					
114"	16½"					
120"	17"					
126"	17"					
132"	17½"					
138"	17½"					
144"	18"					

*USE D_2 OR D, WHICHEVER IS GREATER, OR B.

**IF D_2 OR D, OR B FALLS BETWEEN TABULATED VALUES THEN USE THE NEXT HIGHEST VALUE TO DETERMINE F OR T.

DRAINAGE SYSTEMS APPLICABLE TO THIS SHEET		
51a		

NOTES

1. VALUES FOR A, B, C, D1, D2. ELEVATION R, AND ELEVATION S ARE SHOWN ON THE IMPROVEMENT PLAN TABLE OF VALUES FOR F AND T HEREON.
2. LATERALS: IF LATERALS ENTER ON BOTH SIDES OF MANHOLE, ACCESS SHAFT SHALL BE LOCATED ON SIDE RECEIVING THE SMALLER LATERAL.
3. CENTER OF MANHOLE SHAFT SHALL BE LOCATED OVER CENTER LINE OF MAIN STORM DRAIN WHEN D IS 48" OR LESS, IN WHICH CASE PLACE 8 E BARS SYMMETRICALLY AROUND SHAFT AT 45° WITH CENTER LINE.
4. LENGTH L MAY BE INCREASED AT OPTION OF CONTRACTOR TO MEET PIPE ENDS, BUT ANY CHANGE IN LOCATION OF SPUR MUST BE APPROVED BY THE ENGINEER.
5. DETAIL M: WHEN DEPTH OF MANHOLE FROM STREET GRADE TO TOP OF BOX IS LESS THAN 2'-10½" FOR PAVED STREETS OR 3'-6" FOR UNPAVED STREETS, CONSTRUCT MONOLITHIC SHAFT AS PER DETAIL M. THE CONTRACTOR SHALL HAVE THE OPTION OF CONSTRUCTING SHAFT AS PER DETAIL M FOR ANY DEPTH OF MANHOLE. WHEN DIAMETER D1 IS 48" OR LESS, CENTER OF SHAFT SHALL BE LOCATED AS PER NOTE 3.
6. REINFORCING STEEL SHALL BE ROUND, DEFORMED, STRAIGHT BARS, 1½" CLEAR FROM INSIDE FACE UNLESS OTHERWISE SHOWN. TIE BARS SHALL BE NO 4 AND SPACED 18" ON CENTERS OR CLOSER.
7. CONCRETE SHALL BE CLASS 1.
8. STEPS SHALL BE ¾" ROUND GALVANIZED STEEL AND ANCHORED NOT LESS THAN 6" IN THE WALLS OF STRUCTURE. UNLESS OTHERWISE SHOWN, THE SPACING SHALL BE 16" ON CENTERS. THE LOWEST STEP SHALL BE NOT MORE THAN 2' ABOVE THE INVERT.
9. RINGS, REDUCER, AND PIPE FOR ACCESS SHAFT SHALL BE SEATED IN CEMENT MORTAR AND NEATLY POINTED OR WIPED INSIDE SHAFT.
10. FLOOR OF MANHOLE SHALL BE STEEL TROWELED TO SPRINGING LINE.
11. BODY OF MANHOLE, INCLUDING SPUR, SHALL BE POURED IN ONE CONTINUOUS OPERATION, EXCEPT THAT THE CONTRACTOR SHALL HAVE THE OPTION OF PLACING AT THE SPRINGING LINE A CONSTRUCTION JOINT WITH LONGITUDINAL KEYWAY.
12. THE MAXIMUM COVER ABOVE THIS STRUCTURE SHALL BE 25'. IF THE COVER EXCEEDS 25' A SPECIAL STRUCTURE SHALL BE DESIGNED FOR THE COVER AND DETAILED ON THE PROJECT DRAWING.

MANHOLE No. 4 - RIVERSIDE COUNTY FLOOD CONTROL & WATER CONSERVATION DISTRICT
(SHEET 2 OF 2)

1 **REVISED PER ADDENDUM No. 1 DATED NOVEMBER 8, 2011**

THIS PLAN ACCURATE FOR DRAINAGE WORK ONLY.

DRAINAGE DETAILS
NO SCALE
DD-13

STATE OF CALIFORNIA - DEPARTMENT OF TRANSPORTATION
Caltrans DESIGN

FUNCTIONAL SUPERVISOR: MARK PERTILE
CALCULATED-DESIGNED BY: MOHAMMAD ABDRABOH
CHECKED BY: ALAN R. BISI
REVISED BY
DATE REVISED

LAST REVISION 10-27-11
DATE PLOTTED => 08-NOV-2011
TIME PLOTTED => 11:20

Dist	COUNTY	ROUTE	POST MILES TOTAL PROJECT	SHEET No.	TOTAL SHEETS
08	Riv	91	15.6/21.6	313	2028

REGISTERED CIVIL ENGINEER 10-28-11 DATE

4-25-11
PLANS APPROVAL DATE

REGISTERED PROFESSIONAL ENGINEER ALAN R. BISI No. C62808 Exp. 6-30-12 CIVIL STATE OF CALIFORNIA

THE STATE OF CALIFORNIA OR ITS OFFICERS OR AGENTS SHALL NOT BE RESPONSIBLE FOR THE ACCURACY OR COMPLETENESS OF SCANNED COPIES OF THIS PLAN SHEET.

1

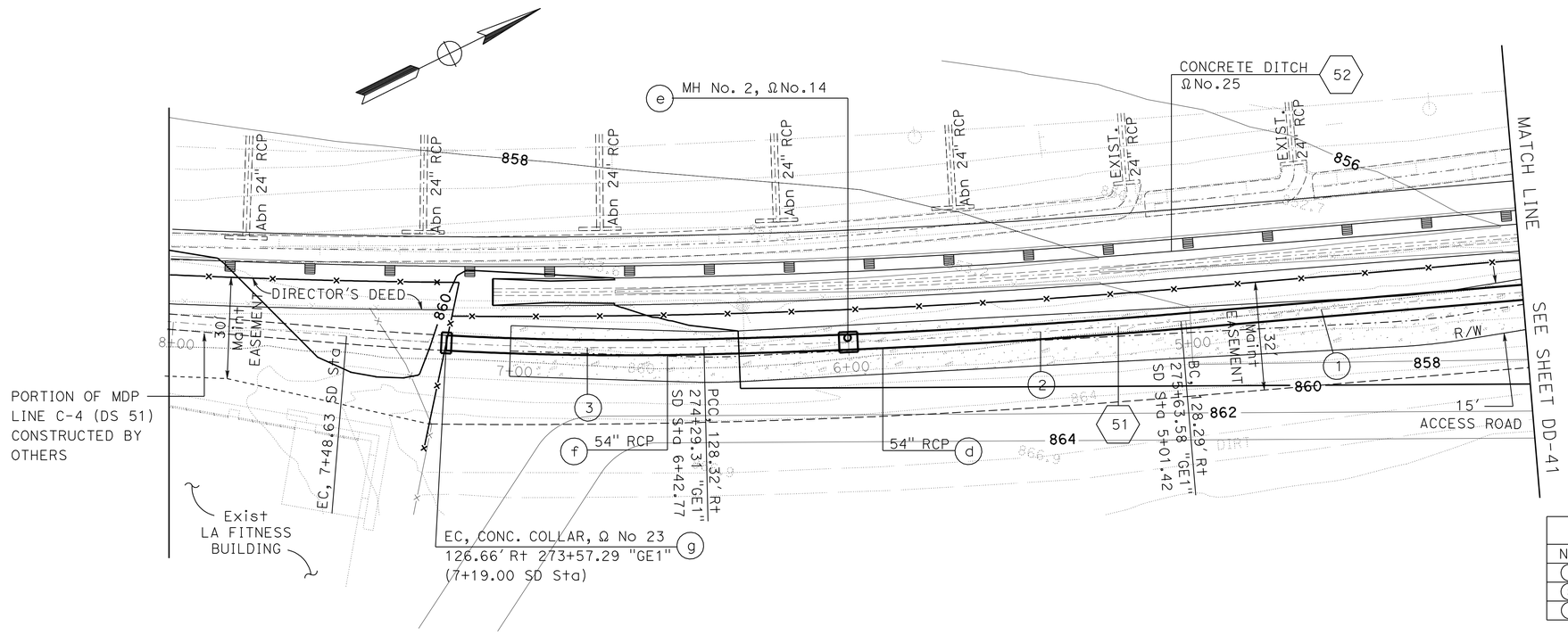

STORM DRAIN ALIGNMENT DATA (THIS SHEET ONLY)				
No.	R	Δ/BEARING	T	L
1		N 16°57'32" E		167.49
2	2328.00	3°28'44"	70.70	141.35
3	1000.00	4°22'04"	38.13	76.23

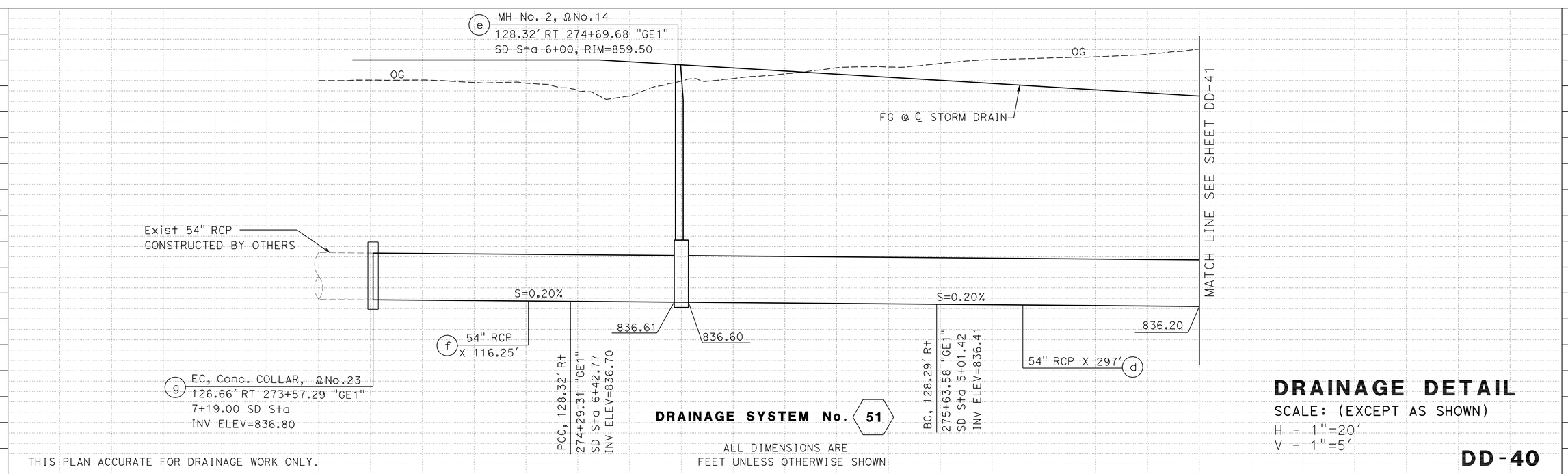

DRAINAGE DETAIL

SCALE: (EXCEPT AS SHOWN)
H - 1"=20'
V - 1"=5'

DD-40

1 **REVISED PER ADDENDUM No. 1 DATED NOVEMBER 8, 2011**

STATE OF CALIFORNIA - DEPARTMENT OF TRANSPORTATION
Caltrans® DESIGN
FUNCTIONAL SUPERVISOR MARK PERTILE
CALCULATED-DESIGNED BY MOHAMMAD ABDRABOH
CHECKED BY ALAN R. BISI
REVISED BY
DATE REVISED

LAST REVISION 10-13-11
DATE PLOTTED => 08-NOV-2011
TIME PLOTTED => 11:20

Dist	COUNTY	ROUTE	POST MILES TOTAL PROJECT	SHEET No.	TOTAL SHEETS
08	Riv	91	15.6/21.6	314	2028

REGISTERED CIVIL ENGINEER 10-28-11 DATE

4-25-11
PLANS APPROVAL DATE

REGISTERED PROFESSIONAL ENGINEER ALAN R. BISI No. C62808 Exp. 6-30-12 CIVIL STATE OF CALIFORNIA

THE STATE OF CALIFORNIA OR ITS OFFICERS OR AGENTS SHALL NOT BE RESPONSIBLE FOR THE ACCURACY OR COMPLETENESS OF SCANNED COPIES OF THIS PLAN SHEET.

1

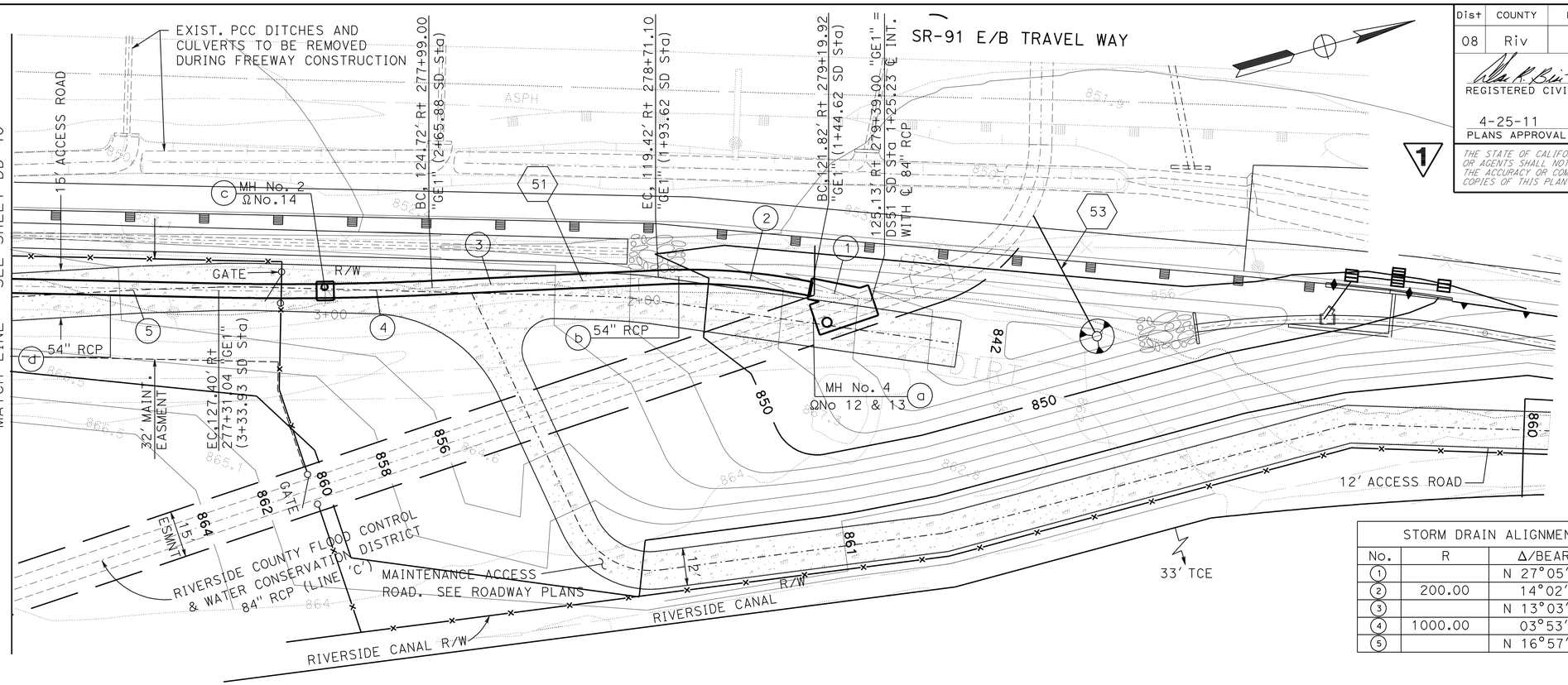

STORM DRAIN ALIGNMENT DATA (THIS SHEET ONLY)

No.	R	Δ/BEARING	T	L
1		N 27°05'53" E		19.39
2	200.00	14°02'18"	24.63	49.00
3		N 13°03'35" E		72.26
4	1000.00	03°53'57"	34.04	68.06
5		N 16°57'32" E		167.49

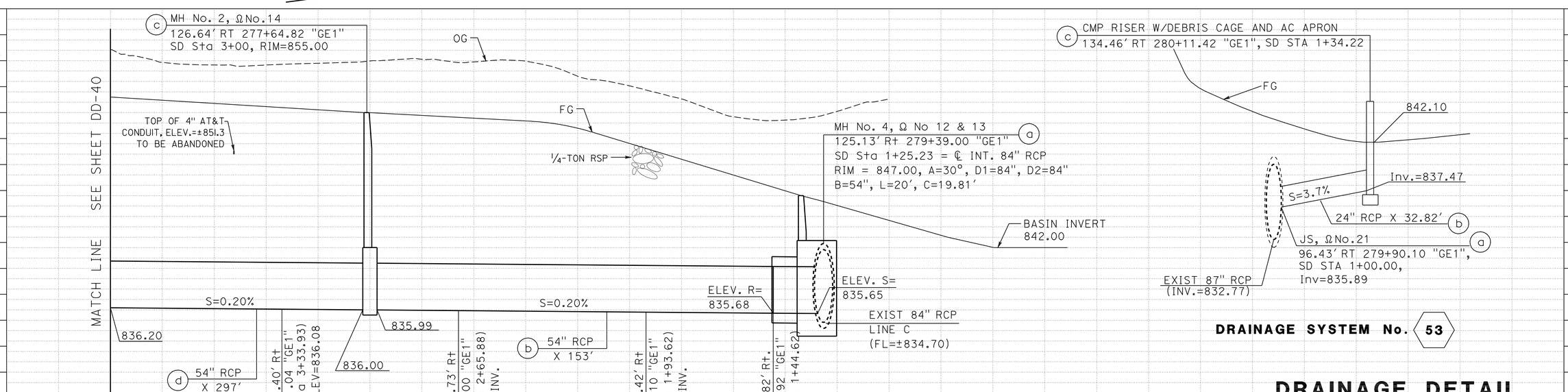

DRAINAGE DETAIL

SCALE: (EXCEPT AS SHOWN)
H - 1"=20'
V - 1"=5'

DD-41

1 REVISED PER ADDENDUM No. 1 DATED NOVEMBER 8, 2011

REVISED BY | DATE REVISED
MOHAMMAD ABDRABOH | ALAN R. BISI
CALCULATED-DESIGNED BY | CHECKED BY
FUNCTIONAL SUPERVISOR: MARK PERTILE

STATE OF CALIFORNIA - DEPARTMENT OF TRANSPORTATION
Caltrans DESIGN

LAST REVISION 10-13-11 | DATE PLOTTED => 08-NOV-2011 | TIME PLOTTED => 11:20

Dist	COUNTY	ROUTE	POST MILES TOTAL PROJECT	SHEET No.	TOTAL SHEETS
08	Riv	91	15.6/21.6	324	2028

REGISTERED CIVIL ENGINEER 10-28-11 DATE

4-25-11
PLANS APPROVAL DATE

REGISTERED PROFESSIONAL ENGINEER ALAN R. BISI No. C62808 Exp. 6-30-12 CIVIL STATE OF CALIFORNIA

THE STATE OF CALIFORNIA OR ITS OFFICERS OR AGENTS SHALL NOT BE RESPONSIBLE FOR THE ACCURACY OR COMPLETENESS OF SCANNED COPIES OF THIS PLAN SHEET.

1

NOTE:

1. FOR COMPLETE RIGHT OF WAY AND ACCURATE ACCESS DATA, SEE RIGHT OF WAY MAPS AT DISTRICT OFFICE.
2. SEE DRAINAGE DETAIL 55 FOR SPILLWAY INFORMATION.
3. SEE DRAINAGE DETAIL 24 AND 42 FOR OUTLET RISER AND MAINTENANCE VALVE INFORMATION.

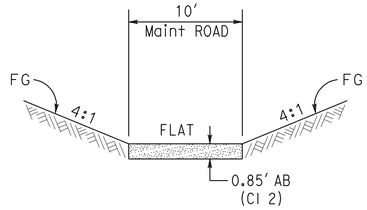

SECTION B-B
NTS

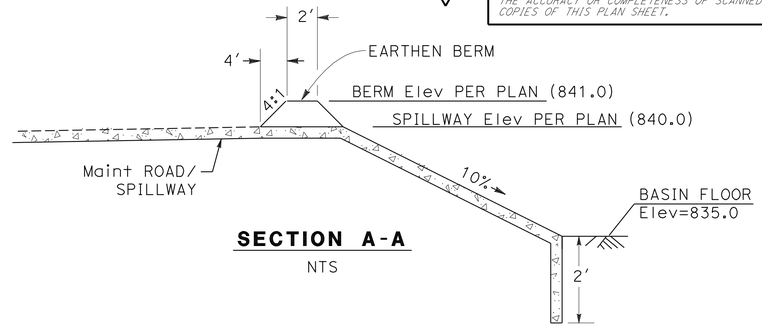

SECTION A-A
NTS

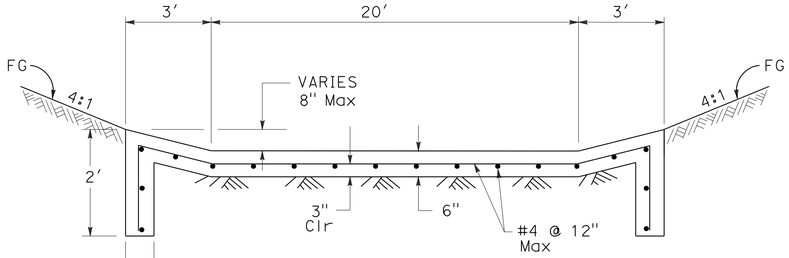

SECTION C-C
NTS

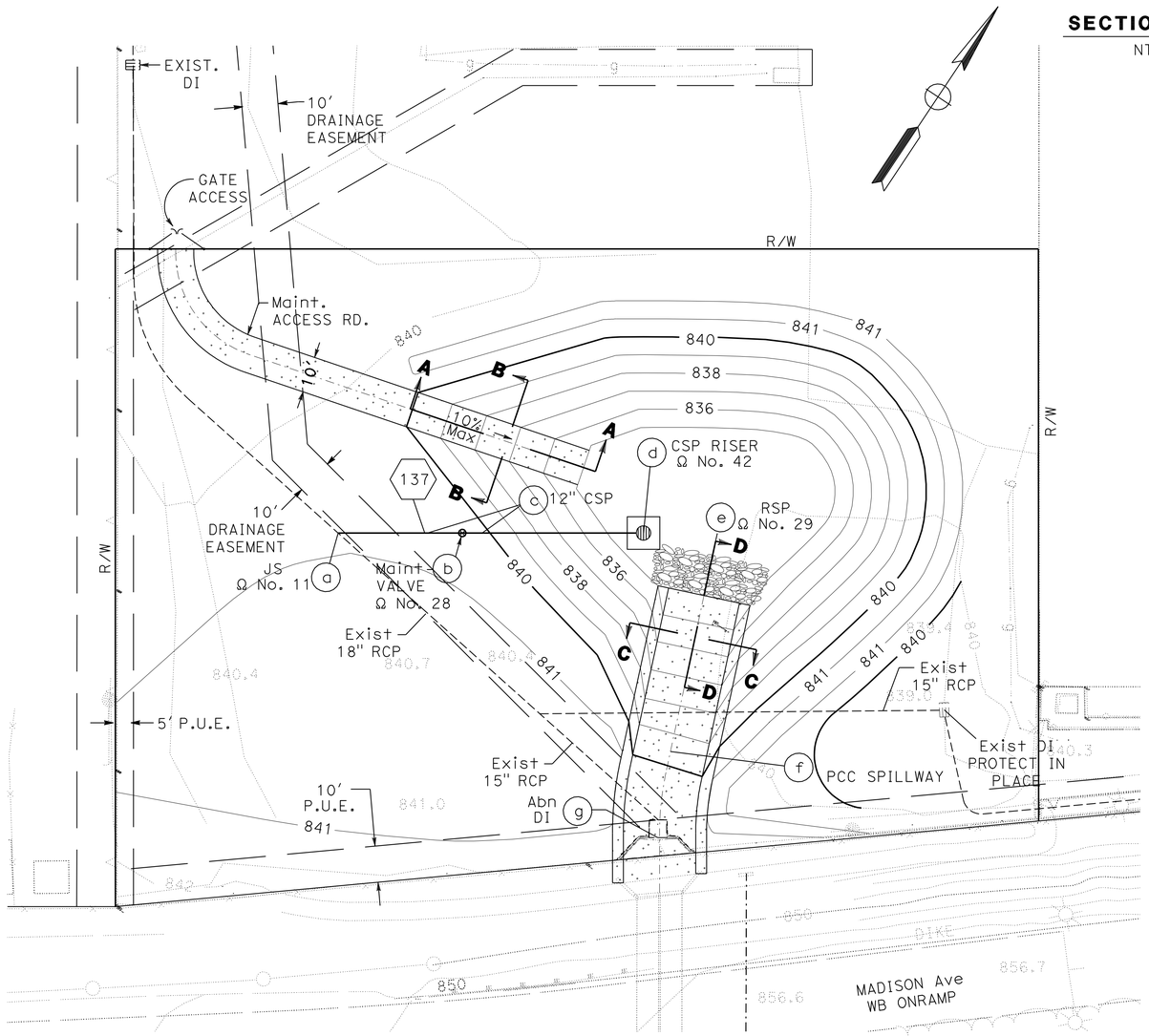

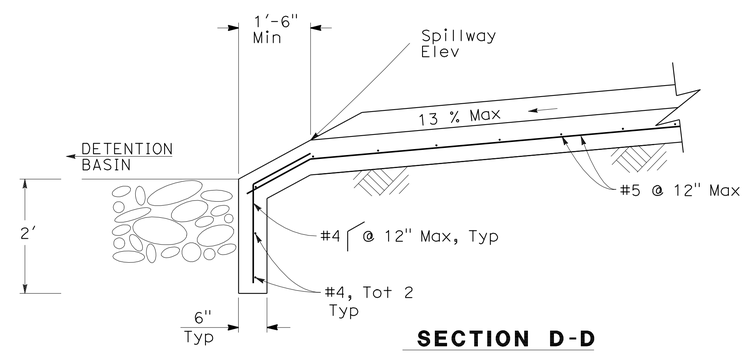

SECTION D-D

BASIN No. 1 DETAIL
Lt Sta 193+00 "F3" LINE

1 **REVISED PER ADDENDUM No. 1 DATED NOVEMBER 8, 2011**

THIS PLAN ACCURATE FOR DRAINAGE WORK ONLY.

DRAINAGE DETAILS
SCALE: 1" = 20'
DD-51

STATE OF CALIFORNIA - DEPARTMENT OF TRANSPORTATION
Caltrans
DESIGN
FUNCTIONAL SUPERVISOR: MARK PERTILE
CALCULATED-DESIGNED BY: ALAN R. BISI
CHECKED BY: MOHAMMAD ABDRABOH
REVISED BY
DATE REVISED

LAST REVISION 10-20-11
DATE PLOTTED => 08-NOV-2011
TIME PLOTTED => 11:21

Dist	COUNTY	ROUTE	POST MILES TOTAL PROJECT	SHEET No.	TOTAL SHEETS
08	Riv	91	15.6/21.6	325	2028

REGISTERED CIVIL ENGINEER 10-28-11 DATE

4-25-11
PLANS APPROVAL DATE

REGISTERED PROFESSIONAL ENGINEER ALAN R. BISI No. C62808 Exp. 6-30-12 CIVIL STATE OF CALIFORNIA

THE STATE OF CALIFORNIA OR ITS OFFICERS OR AGENTS SHALL NOT BE RESPONSIBLE FOR THE ACCURACY OR COMPLETENESS OF SCANNED COPIES OF THIS PLAN SHEET.

1

NOTE:

1. FOR COMPLETE RIGHT OF WAY AND ACCURATE ACCESS DATA, SEE RIGHT OF WAY MAPS AT DISTRICT OFFICE.
2. SEE DRAINAGE DETAIL 55 FOR SPILLWAY INFORMATION.
3. SEE DRAINAGE DETAIL 42 & 28 FOR WATER QYALITY RISER AND MAINTENANCE VALVE NFORMATION.

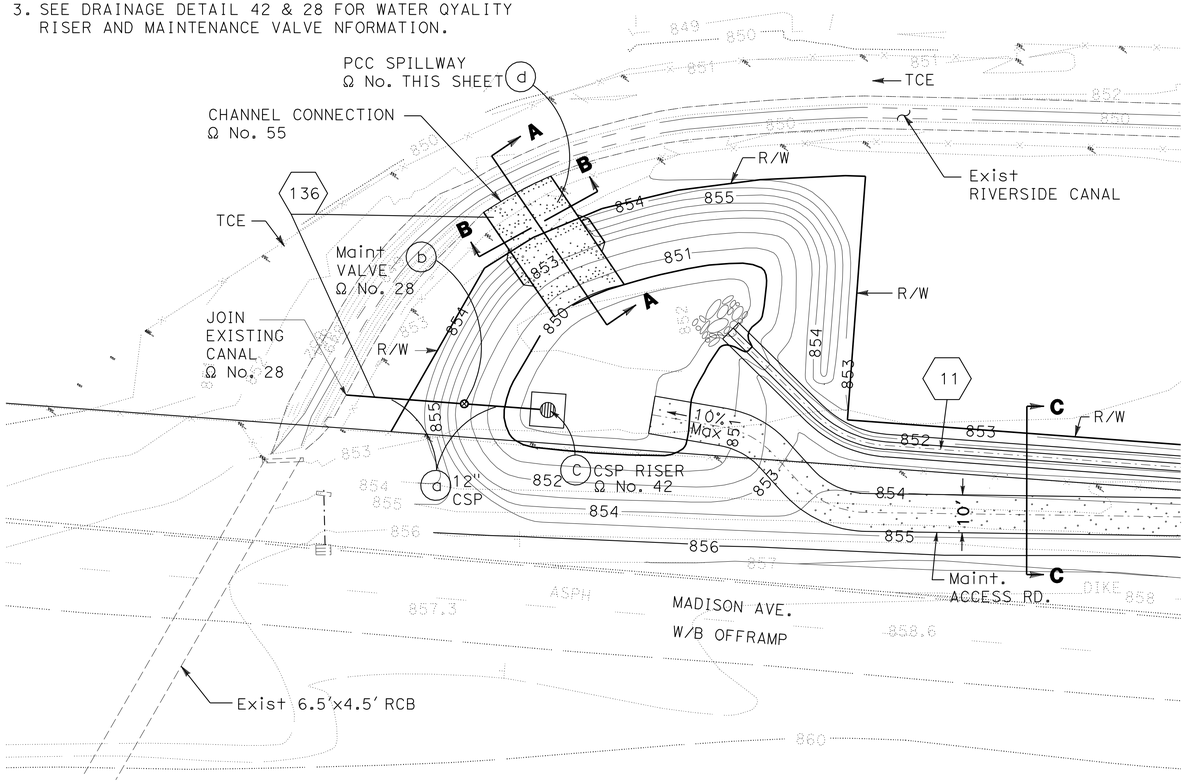

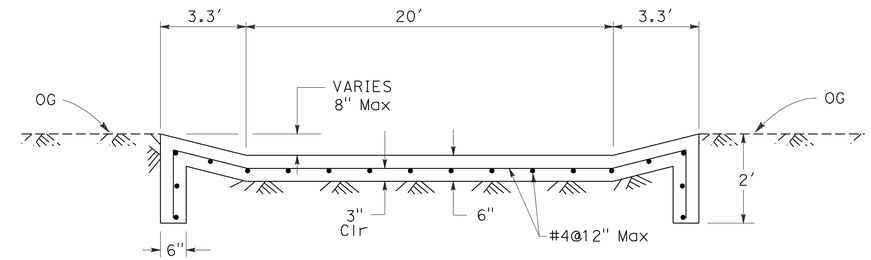

SECTION B-B
NTS

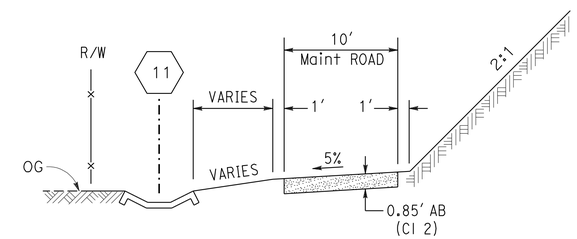

SECTION C-C
NTS

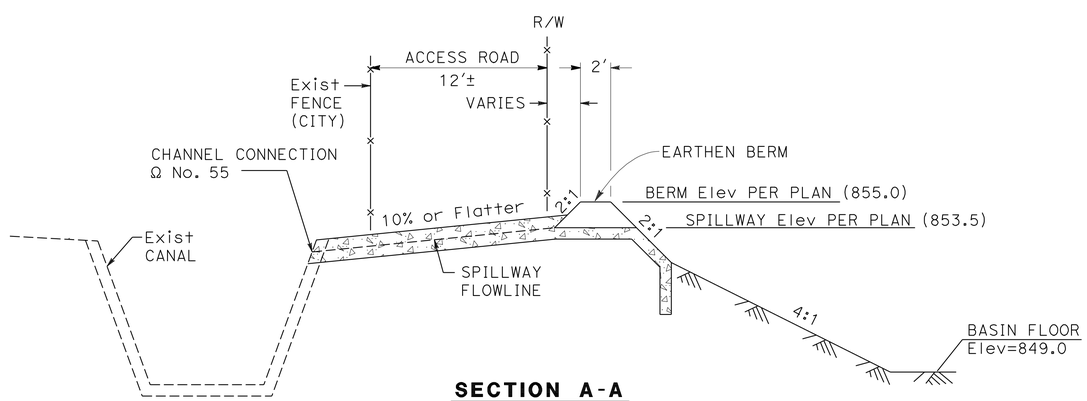

SECTION A-A
NTS

BASIN No. 2 DETAIL

Lt Sta 202+00 "F3" LINE

1 **REVISED PER ADDENDUM No. 1 DATED NOVEMBER 8, 2011**

THIS PLAN ACCURATE FOR DRAINAGE WORK ONLY.

DRAINAGE DETAILS

SCALE: 1" = 20'

DD-52

STATE OF CALIFORNIA - DEPARTMENT OF TRANSPORTATION
Caltrans
DESIGN

FUNCTIONAL SUPERVISOR: MARK PERTILE
CALCULATED-DESIGNED BY: MOHAMMAD ABDRABOH
CHECKED BY: ALAN R. BISI
REVISED BY
DATE REVISED

LAST REVISION 10-20-11
DATE PLOTTED => 08-NOV-2011
TIME PLOTTED => 11:21

Dist	COUNTY	ROUTE	POST MILES TOTAL PROJECT	SHEET No.	TOTAL SHEETS
08	Riv	91	15.6/21.6	328	2028

REGISTERED CIVIL ENGINEER 10-28-11 DATE

4-25-11
PLANS APPROVAL DATE

REGISTERED PROFESSIONAL ENGINEER ALAN R. BISI No. C62808 Exp. 6-30-12 CIVIL STATE OF CALIFORNIA

THE STATE OF CALIFORNIA OR ITS OFFICERS OR AGENTS SHALL NOT BE RESPONSIBLE FOR THE ACCURACY OR COMPLETENESS OF SCANNED COPIES OF THIS PLAN SHEET.

1

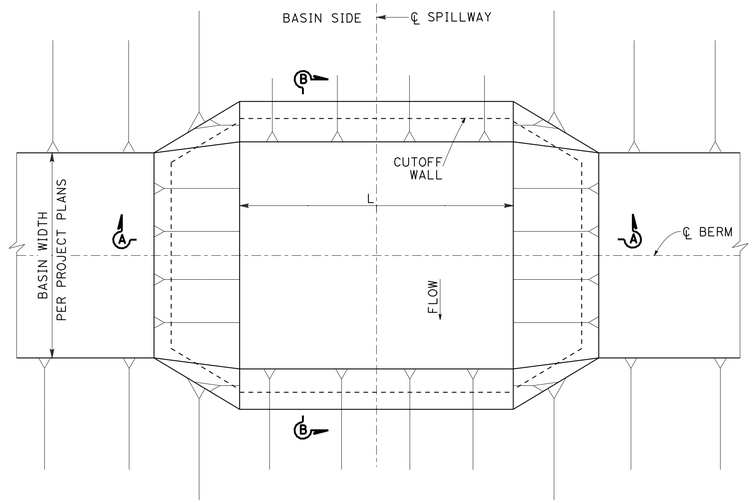

PLAN

DESIGN DATA

REINFORCED CONCRETE:
Minor Concrete
F_y = 60,000 psi

SPILLWAY DIMENSION TABLE

LOCATION	L	H	SPILLWAY ELEV.	Z
Basin # 1, see note 1 Lt Sta 193+00 "GE1"	N/A	N/A	840.0	N/A
Basin # 2 Lt Sta 202+00 "GE1"	20′	1.5′	853.5	2
Basin # 3 Rt Sta 254+00 "GE1"	20′	1.0′	865.0	2
Basin # 4 Lt Sta 291+50 "GE1"	N/A	N/A	N/A	N/A

NOTE:

1. Maint. Access Rd will also serve as Emergency SpillWay
2. "H" is measured from weir invert to top of berm

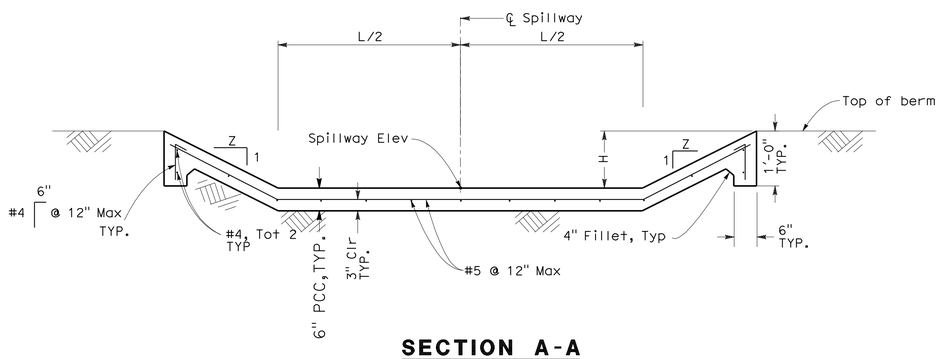

SECTION A-A

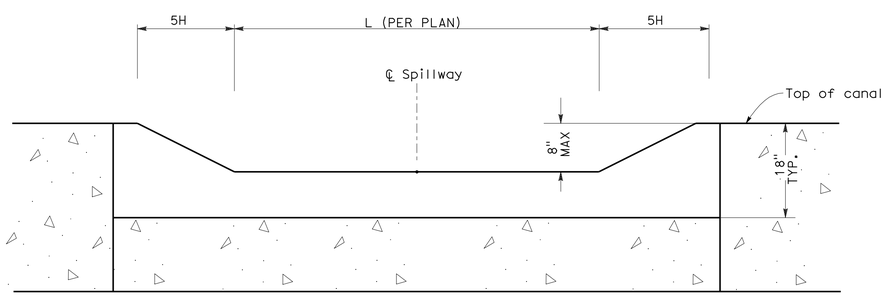

CONCRETE TRAPEZOIDAL DITCH TO CANAL LINING BASIN No. 2

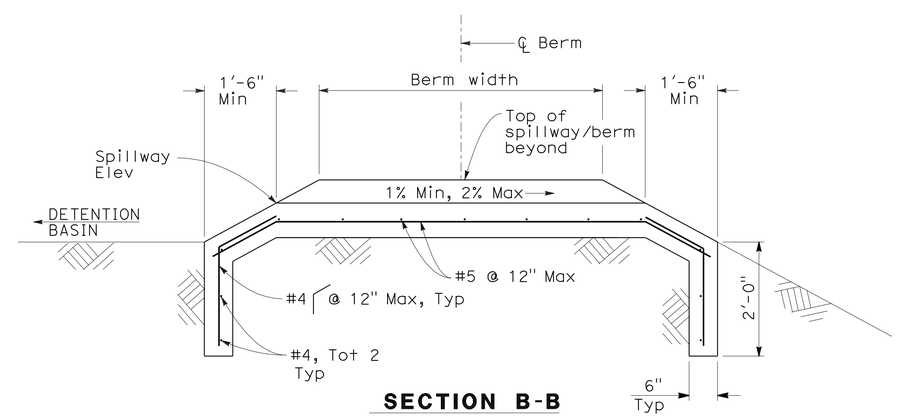

SECTION B-B

OVERFLOW SPILLWAY

BASIN SPILLWAY

1 **REVISED PER ADDENDUM No. 1 DATED NOVEMBER 8, 2011**

THIS PLAN ACCURATE FOR DRAINAGE WORK ONLY.

DRAINAGE DETAILS

NO SCALE

DD-55

STATE OF CALIFORNIA - DEPARTMENT OF TRANSPORTATION
Caltrans
DESIGN

FUNCTIONAL SUPERVISOR: MARK PERTILE
CALCULATED-DESIGNED BY: MOHAMMAD ABDRABOH
CHECKED BY: ALAN R. BISI
REVISED BY
DATE REVISED

LAST REVISION 10-20-11
DATE PLOTTED => 08-NOV-2011
TIME PLOTTED => 11:21

Dist	COUNTY	ROUTE	POST MILES TOTAL PROJECT	SHEET No.	TOTAL SHEETS
08	Riv	91	15.6/21.6	352	2028

REGISTERED CIVIL ENGINEER 10-28-11 DATE

4-25-11
PLANS APPROVAL DATE

REGISTERED PROFESSIONAL ENGINEER ALAN R. BISI No. C62808 Exp. 6-30-12 CIVIL STATE OF CALIFORNIA

THE STATE OF CALIFORNIA OR ITS OFFICERS OR AGENTS SHALL NOT BE RESPONSIBLE FOR THE ACCURACY OR COMPLETENESS OF SCANNED COPIES OF THIS PLAN SHEET.

ALTERNATIVE PIPE ALLOWABLE PIPE MATERIAL AND PROTECTION

DESIGNATION	RCP	CSP (2-2/3"x½")			SSRP (3/4"x1" @ 11-1/2" PITCH)			PPC(C)	PPC(D,S)
	SIZE (INCH)	SIZE (INCH)	BITUM. COAT. THICKNESS	PA/PS THICKNESS	SIZE (INCH)	BITUM. COAT. THICKNESS	PA/PS THICKNESS	SIZE (INCH)	SIZE (INCH)
6" APC									6
12" APC TYPE A		12	0.064"	0.052"				12	
12" APC TYPE B					12	0.064"	0.052"		12
12" APC TYPE C	12				12	0.064"	0.052"		12
18" APC TYPE A	18	18	0.064"	0.052"	18	0.064"	0.052"		
18" APC TYPE B	18	18	0.064"	0.052"				18	
18" APC TYPE C		18	0.064"	0.052"				18	
18" APC TYPE D	18				18	0.064"	0.052"		
18" APC TYPE E	18	18	0.064"	0.052"				18	18
18" APC TYPE F	18								18
24" APC		24	0.079"	0.064"				24	
30" APC	30				30	0.079"	0.064"		30
30"x10" ARCH		30x10	0.079"	0.064"	30x10	0.079"	0.064"		
48" APC		48	0.079"	0.064"					

LEGENDS AND ABBREVIATIONS

S - STANDARD JOINT TYPE
P - POSITIVE JOINT TYPE
D - DOWNDRAIN JOINT TYPE
RCP - REINFORCED CONCRETE PIPE
PPC(C) - PASTIC PIPE CULVERT, TYPE C (CORRUGATED INTERIOR WALL)
PPC(D,S) - PLASTIC PIPE CULVERT, TYPE D OR S (SMOOTH INTERIOR WALL)
CSP - CORRUGATED STEEL PIPE
SSRP - STEEL SPIRAL RIBBED PIPE
GA. - GAUGE
BITUM. - BITUMINOUS
PA - POLYMERIZED ASPHALT
PS - POLYMERIC SHEET
w/ - WITH
Ω - SEE DRAINAGE DETAIL

1

Notes:

1. SUFFICIENT SPACE WAS NOT AVALABLE TO LIST ALL DRAINAGE ITEMS WITHIN A SINGLE TABLE ON A SHEET BORDER, THEREFORE THE LISTING OF THE FIRST GROUPING OF DRAINAGE ITEMS ARE REPEATED ON THE ODD NUMBERED ID CODE SHEETS (DQ-1, DQ-3, ETC.) AND THE LISTINGS OF THE REMAINING GROUP OF DRAINAGE ITEMS ARE REPEATED ON THE EVEN NUMBERED ID CODE SHEETS (DQ-2, DQ-4, ETC.).
2. THE PRECISE DETERMINATION OF THE FOLLOWING ITEMS WILL BE MADE BY THE ENGINEER IN THE FIELD: STATION, SKEW, LENGTH, FL ELEVATION, AND DEPTH OF STRUCTURE.
3. (N) - NOT A SEPARATE PAY ITEM; FOR INFORMATION ONLY.
4. * - SEE ROADWAY QUANTITIES FOR DRAINAGE ITEM TOTAL

DITCH EXCAVATION	CONCRETE (CHANNEL LINING)	STRUCTURAL CONCRETE, BOX CULVERT	MINOR CONCRETE (MINOR STRUCTURE)	MINOR CONCRETE (MISC. CONSTRUCTION)	CL. IV CONCRETE (BACKFILL) *	HMA-A *	PLACE AC (MISC. AREA) *	MISC. IRON AND STEEL	BAR REINFORCING STEEL	RSP: ¼-TON, METHOD B	RSP: FACING, METHOD B	RSP: NO. 2 BACKING, METHOD B	RSP: RSP FABRIC	FRAMES, GRATES AND COVERS: 24-12 (N)	24-13 (N)	¼" SOLID STEEL COVER (N)	12" X 12" PRECAST INLET	12" X 12" STEEL GRATE (TRAFFIC RATED)	DEBRIS RACK (N)	MANHOLE COVER (N)	MANHOLE COVER-PRESSURE LOCKING (N)	36" PRECAST MANHOLE SHAFT		MANHOLE SHAFT PIPE REDUCER	HEIGHT OF MANHOLE (N)	HEIGHT OF INLET "H" (N)	DRAINAGE INLET MARKER *	CONCRETE COLLAR (N)	RCP: 12" RCP	15" RCP	18" RCP	24" RCP	30" RCP	36" RCP	48" RCP	54" RCP	60" RCP (CL. V SPECIAL)	DESCRIPTION	STATION	DRAINAGE PLAN SHEET NO.	DRAINAGE SYSTEM NO. ⬡	DRAINAGE UNIT ◯
CY	CY	CY	CY	CY	CY	ton	yd²	lb	lb	CY	CY	CY	yd²	EA	EA	EA	EA	EA	EA	EA	EA	LF		EA	FT	FT	EA	EA	LF	LF	LF	LF	LF	LF	LF	LF	LF					
											9.3		19																									RSP		D-8	49	a
318.00	66.00																																					CONCRETE CHANNEL				b
																																		5.8			36" RCP				c
																																6.0					24" RCP		D-8	50	a
			2.60					263						1												7.8											TYPE G1 DI w/ Depression	87.00' LT 278+00 "GE1"			b
																																3.9					24" RCP				c
																												1									CONCRETE COLLAR	82.00' LT 278+00 "GE1"			d
		44.43						430	1401.3										1		1.0		1	9.2													MH No. 4 Ω 12	125.13' RT 279+39.03 "GE1"	D-8	51	a
																																				153.0	54" RCP x 176.8'				b
		5.14						430	193.9										1		9.5		1	6.5													MANHOLE No.2 Ω 14	126.64' RT 277+64.82 "GE1"			c
																																				297.0	54" RCP x 301.5'				d
		5.14						430	193.9										1		13.5		1	6.5													MANHOLE No.2 Ω 14	128.32' RT 274+69.68 "GE1"			e
																																				116.3	54" RCP x 118.9'				f
																												1									CONCRETE COLLAR	126.66' RT 273+57.28 "GE1"			g
										88.7			106.4																							RSP		D-8	52	a
457.00	43.00																																					CONCRETE DITCH				b
			13.00																																			JUNCTION STRUCTURE	95.00' RT 279+89 "GE1"	D-8	53	a
																																43.0					24" RCP				b
			1.50			0.60	1.80	800											1																		CMP Riser w/Debris Cage AND AC Apron				c
775.00	109.00	54.71	17.10			0.60	1.80	2353	1789.1	88.7	9.3		125.4	1					1	3		24		3				2				52.9		5.8		566.3		SHEET TOTALS				

1 **REVISED PER ADDENDUM No. 1 DATED NOVEMBER 8, 2011**

THIS PLAN ACCURATE FOR DRAINAGE WORK ONLY.

DRAINAGE QUANTITIES
DQ-23

REVISED BY | DATE REVISED

CALCULATED-DESIGNED BY: MOHAMMAD ABDRABOH
CHECKED BY: ALAN R. BISI
FUNCTIONAL SUPERVISOR: MARK PERTILE

STATE OF CALIFORNIA - DEPARTMENT OF TRANSPORTATION
Caltrans
DESIGN

LAST REVISION 10-20-11 | DATE PLOTTED => 08-NOV-2011 | TIME PLOTTED => 11:21

Dist	COUNTY	ROUTE	POST MILES TOTAL PROJECT	SHEET No.	TOTAL SHEETS
08	Riv	91	15.6/21.6	353	2028

REGISTERED CIVIL ENGINEER 10-28-11 DATE

4-25-11
PLANS APPROVAL DATE

REGISTERED PROFESSIONAL ENGINEER ALAN R. BISI No. C62808 Exp. 6-30-12 CIVIL STATE OF CALIFORNIA

THE STATE OF CALIFORNIA OR ITS OFFICERS OR AGENTS SHALL NOT BE RESPONSIBLE FOR THE ACCURACY OR COMPLETENESS OF SCANNED COPIES OF THIS PLAN SHEET.

ALTERNATIVE PIPE ALLOWABLE PIPE MATERIAL AND PROTECTION

DESIGNATION	RCP	CSP (2-2/3"x½")			SSRP (3/4"x1" @ 11-1/2" PITCH)			PPC(C)	PPC(D,S)
	SIZE (INCH)	SIZE (INCH)	BITUM. COAT. THICKNESS	PA/PS THICKNESS	SIZE (INCH)	BITUM. COAT. THICKNESS	PA/PS THICKNESS	SIZE (INCH)	SIZE (INCH)
6" APC									6
12" APC TYPE A		12	0.064"	0.052"				12	
12" APC TYPE B					12	0.064"	0.052"		12
12" APC TYPE C	12				12	0.064"	0.052"		12
18" APC TYPE A	18	18	0.064"	0.052"	18	0.064"	0.052"		
18" APC TYPE B	18	18	0.064"	0.052"				18	
18" APC TYPE C		18	0.064"	0.052"				18	
18" APC TYPE D	18				18	0.064"	0.052"		
18" APC TYPE E	18	18	0.064"	0.052"				18	18
18" APC TYPE F	18								18
24" APC		24	0.079"	0.064"				24	
30" APC	30				30	0.079"	0.064"		30
30"x10" ARCH		30x10	0.079"	0.064"	30x10	0.079"	0.064"		
48" APC		48	0.079"	0.064"					

LEGENDS AND ABBREVIATIONS

S - STANDARD JOINT TYPE
P - POSITIVE JOINT TYPE
D - DOWNDRAIN JOINT TYPE
RCP - REINFORCED CONCRETE PIPE
PPC(C) - PASTIC PIPE CULVERT, TYPE C (CORRUGATED INTERIOR WALL)
PPC(D,S) - PLASTIC PIPE CULVERT, TYPE D OR S (SMOOTH INTERIOR WALL)
CSP - CORRUGATED STEEL PIPE
CAP - CORRUGATED ALUMINUM PIPE
SSRP - STEEL SPIRAL RIBBED PIPE
GA. - GAUGE
BITUM. - BITUMINOUS
PA - POLYMERIZED ASPHALT
PS - POLYMERIC SHEET
w/ - WITH
Ω - SEE DRAINAGE DETAIL

1

Notes:

1. SUFFICIENT SPACE WAS NOT AVALABLE TO LIST ALL DRAINAGE ITEMS WITHIN A SINGLE TABLE ON A SHEET BORDER, THEREFORE THE LISTING OF THE FIRST GROUPING OF DRAINAGE ITEMS ARE REPEATED ON THE ODD NUMBERED ID CODE SHEETS (DQ-1, DQ-3, ETC.) AND THE LISTINGS OF THE REMAINING GROUP OF DRAINAGE ITEMS ARE REPEATED ON THE EVEN NUMBERED ID CODE SHEETS (DQ-2, DQ-4, ETC.).
2. THE PRECISE DETERMINATION OF THE FOLLOWING ITEMS WILL BE MADE BY THE ENGINEER IN THE FIELD: STATION, SKEW, LENGTH, FL ELEVATION, AND DEPTH OF STRUCTURE.
3. (N) - NOT A SEPARATE PAY ITEM; FOR INFORMATION ONLY.
4. * - SEE ROADWAY QUANTITIES FOR DRAINAGE ITEM TOTAL

CSP 12" (14 GA.) LF	CSP 18" (14 GA.) LF	CSP 36" (10 GA.) LF	CSP 12" RISER (14 GA.) LF	CSP 48" RISER (10 GA.) LF	CSP 18" SLOTTED PIPE (14 GA.) LF	CSP 21" SLOTTED PIPE (14 GA.) LF	CSP 24" SLOTTED PIPE (14 GA.) LF	ALTERNATIVE PIPE 6" AP (TYPE __) LF	ALTERNATIVE PIPE 12" AP (TYPE __) LF	ALTERNATIVE PIPE 18" AP (TYPE __) LF	ALTERNATIVE PIPE 24" AP (TYPE __) LF	ALTERNATIVE PIPE 30" AP (TYPE __) LF	ALTERNATIVE PIPE 48" AP (TYPE __) LF	ALTERNATIVE PIPE 30" X 10" AP ARCH PIPE (TYPE __) LF	MAXIMUM COVER (N) FT	ELBOW (N) EA	PIPE JOINT CLASSIFICATION	8" GALVANIZED STEEL PIPE LF	8" GATE VALVE w/ SLEEVE & COVER EA	AFES 12" AFES EA	PIPE RISER 8" AP SLIPJOINT (N) EA	PIPE RISER 12" AP SLIPJOINT (N) EA	CABLE RAILING LF	ADJUST INLET EA	MODIFY INLET EA	REMOVAL/ABANDON PAY ITEMS REMOVE CONCRETE CY	REMOVE PIPE LF	REMOVE INLET EA	ABANDON INLET EA	ABANDON PIPE LF	SAND BACKFILL CY	CAP RISER EA	CAP INLET EA	DESCRIPTION	STATION	DRAINAGE PLAN SHEET NO.	DRAINAGE SYSTEM NO. ⬡	DRAINAGE UNIT ◯
																																RSP		D-8	49	a
																																CONCRETE CHANNEL				b
															1.5		S															36" RCP				c
															1.0		S															24" RCP		D-8	50	a
																																TYPE G1 DI w/ Depression	87.00' LT 278+00 "GE1"			b
																	S															24" RCP				c
																																CONCRETE COLLAR	82.00' LT 278+00 "GE1"			d
																																MH No. 4 Ω 12	125.13' RT 279+39.03 "GE1"	D-8	51	a
															14.0		S															54" RCP x 176.8'				b
																																MANHOLE No.2 Ω 14	126.64' RT 277+64.82 "GE1"			c
															18.0		S															54" RCP x 301.5'				d
																																MANHOLE No.2 Ω 14	128.32' RT 274+69.68 "GE1"			e
															18.0		S															54" RCP x 118.9'				f
																																CONCRETE COLLAR	126.66' RT 273+57.28 "GE1"			g
																																RSP		D-8	52	a
																																CONCRETE DITCH				b
																																JUNCTION STRUCTURE	95.00' RT 279+89 "GE1"	D-8	53	a
															7.0		S															24" RCP				b
				6.0																												CMP Riser w/Debris Cage AND AC Apron				c
				6.0																												SHEET TOTALS				

1 **REVISED PER ADDENDUM No. 1 DATED NOVEMBER 8, 2011**

THIS PLAN ACCURATE FOR DRAINAGE WORK ONLY.

DRAINAGE QUANTITIES DQ-24

REVISED BY | DATE REVISED

CALCULATED-DESIGNED BY: MOHAMMAD ABDRABOH
CHECKED BY: ALAN R. BISI
FUNCTIONAL SUPERVISOR: MARK PERTILE

STATE OF CALIFORNIA - DEPARTMENT OF TRANSPORTATION
Caltrans DESIGN

LAST REVISION 10-20-11 | DATE PLOTTED => 08-NOV-2011 | TIME PLOTTED => 11:21

Dist	COUNTY	ROUTE	POST MILES TOTAL PROJECT	SHEET No.	TOTAL SHEETS
08	Riv	91	15.6/21.6	396	2028

REGISTERED CIVIL ENGINEER 10-28-11 DATE

4-25-11
PLANS APPROVAL DATE

REGISTERED PROFESSIONAL ENGINEER ALAN R. BISI No. C62808 Exp. 6-30-12 CIVIL STATE OF CALIFORNIA

THE STATE OF CALIFORNIA OR ITS OFFICERS OR AGENTS SHALL NOT BE RESPONSIBLE FOR THE ACCURACY OR COMPLETENESS OF SCANNED COPIES OF THIS PLAN SHEET.

ALTERNATIVE PIPE
ALLOWABLE PIPE MATERIAL AND PROTECTION

DESIGNATION	RCP	CSP (2-2/3"x1/2")			SSRP (3/4"x1" @ 11-1/2" PITCH)			PPC(C)	PPC(D,S)
	SIZE (INCH)	SIZE (INCH)	BITUM. COAT. THICKNESS	PA/PS THICKNESS	SIZE (INCH)	BITUM. COAT. THICKNESS	PA/PS THICKNESS	SIZE (INCH)	SIZE (INCH)
6" APC									6
12" APC TYPE A		12	0.064"	0.052"				12	
12" APC TYPE B					12	0.064"	0.052"		12
12" APC TYPE C	12				12	0.064"	0.052"		12
18" APC TYPE A	18	18	0.064"	0.052"	18	0.064"	0.052"		
18" APC TYPE B	18	18	0.064"	0.052"				18	
18" APC TYPE C		18	0.064"	0.052"				18	
18" APC TYPE D	18				18	0.064"	0.052"		
18" APC TYPE E	18	18	0.064"	0.052"				18	18
18" APC TYPE F	18								18
24" APC		24	0.079"	0.064"				24	
30" APC	30				30	0.079"	0.064"		30
30"x10" ARCH		30x10	0.079"	0.064"	30x10	0.079"	0.064"		
48" APC		48	0.079"	0.064"					

LEGENDS AND ABBREVIATIONS

S - STANDARD JOINT TYPE
P - POSITIVE JOINT TYPE
D - DOWNDRAIN JOINT TYPE
RCP - REINFORCED CONCRETE PIPE
PPC(C) - PASTIC PIPE CULVERT, TYPE C (CORRUGATED INTERIOR WALL)
PPC(D,S) - PLASTIC PIPE CULVERT, TYPE D OR S (SMOOTH INTERIOR WALL)
CSP - CORRUGATED STEEL PIPE
SSRP - STEEL SPIRAL RIBBED PIPE
GA. - GAUGE
BITUM. - BITUMINOUS
PA - POLYMERIZED ASPHALT
PS - POLYMERIC SHEET
w/ - WITH
Ω - SEE DRAINAGE DETAIL

1

Notes:

1. SUFFICIENT SPACE WAS NOT AVALABLE TO LIST ALL DRAINAGE ITEMS WITHIN A SINGLE TABLE ON A SHEET BORDER, THEREFORE THE LISTING OF THE FIRST GROUPING OF DRAINAGE ITEMS ARE REPEATED ON THE ODD NUMBERED ID CODE SHEETS (DQ-1, DQ-3, ETC.) AND THE LISTINGS OF THE REMAINING GROUP OF DRAINAGE ITEMS ARE REPEATED ON THE EVEN NUMBERED ID CODE SHEETS (DQ-2, DQ-4, ETC.).
2. THE PRECISE DETERMINATION OF THE FOLLOWING ITEMS WILL BE MADE BY THE ENGINEER IN THE FIELD: STATION, SKEW, LENGTH, FL ELEVATION, AND DEPTH OF STRUCTURE.
3. (N) - NOT A SEPARATE PAY ITEM; FOR INFORMATION ONLY.
4. * - SEE ROADWAY QUANTITIES FOR DRAINAGE ITEM TOTAL

DITCH EXCAVATION	CONCRETE (CHANNEL LINING)	STRUCTURAL CONCRETE, BOX CULVERT	MINOR CONCRETE (MINOR STRUCTURE)	MINOR CONCRETE (MISC. CONSTRUCTION)	CL. IV CONCRETE (BACKFILL) *	HMA-A *	PLACE AC (MISC. AREA) *	MISC. IRON AND STEEL	BAR REINFORCING STEEL	RSP: 1/4-TON, METHOD B	RSP: FACING, METHOD B	RSP: NO. 2 BACKING, METHOD B	RSP: RSP FABRIC	FRAMES, GRATES AND COVERS: 24-12 (N)	24-13 (N)	1/4" SOLID STEEL COVER (N)	12" X 12" PRECAST INLET	12" X 12" STEEL GRATE (TRAFFIC RATED)	DEBRIS RACK (N)	MANHOLE COVER (N)	MANHOLE COVER-PRESSURE LOCKING (N)	36" PRECAST MANHOLE SHAFT		MANHOLE SHAFT PIPE REDUCER	HEIGHT OF MANHOLE (N)	HEIGHT OF INLET "H" (N)	DRAINAGE INLET MARKER *	CONCRETE COLLAR (N)	RCP: 12" RCP	15" RCP	18" RCP	24" RCP	30" RCP	36" RCP	48" RCP	54" RCP	60" RCP (CL. V SPECIAL)	DESCRIPTION	STATION	DRAINAGE PLAN SHEET NO.	DRAINAGE SYSTEM NO. ⬡	DRAINAGE UNIT ◯
CY	CY	CY	CY	CY	CY	ton	yd²	lb	lb	CY	CY	CY	yd²	EA	EA	EA	EA	EA	EA	EA	EA	LF		EA	FT	FT	EA	EA	LF	LF	LF	LF	LF	LF	LF	LF	LF					
																																						SYSTEM NOT USED		D-18	125	
																																						SYSTEM NOT USED		D-18	126	
										89		99.1																										RSP		D-13	127	a
																																						12" METAL FES	104.1' Rt. "PMT1" 72+53.23			b
																																						12" CSP CULVERT				c
																																						12" CSP RISER				d
			0.40					486								1										4.0												TYPE OMP DI	76.54' LT "PMT1" 72+53.18			e
			2.40	2.00					123.2																													SLOPE PAVING				f
																																						SYSTEM NOT USED			128	
			0.95					326						1												2.0												TYPE G1 DI	1.30' LT "GE1" 342+85.12	D-13	129	a
																																						18" SLOTTED CSP CULVERT				b
			3.75	2.00				812	123.2		89		99.1	1		1																						SHEET TOTALS				

1 **REVISED PER ADDENDUM No. 1 DATED NOVEMBER 8, 2011**

THIS PLAN ACCURATE FOR DRAINAGE WORK ONLY.

DRAINAGE QUANTITIES
DQ-67

REVISED BY | DATE REVISED

CALCULATED-DESIGNED BY: MOHAMMAD ABDRABOH
CHECKED BY: ALAN R. BISI
FUNCTIONAL SUPERVISOR: MARK PERTILE

STATE OF CALIFORNIA - DEPARTMENT OF TRANSPORTATION
Caltrans
DESIGN

LAST REVISION 10-20-11 | DATE PLOTTED => 08-NOV-2011 | TIME PLOTTED => 11:21

Dist	COUNTY	ROUTE	POST MILES TOTAL PROJECT	SHEET No.	TOTAL SHEETS
08	Riv	91	15.6/21.6	397	2028

REGISTERED CIVIL ENGINEER 10-28-11 DATE

4-25-11
PLANS APPROVAL DATE

REGISTERED PROFESSIONAL ENGINEER ALAN R. BISI No. C62808 Exp. 6-30-12 CIVIL STATE OF CALIFORNIA

THE STATE OF CALIFORNIA OR ITS OFFICERS OR AGENTS SHALL NOT BE RESPONSIBLE FOR THE ACCURACY OR COMPLETENESS OF SCANNED COPIES OF THIS PLAN SHEET.

ALTERNATIVE PIPE ALLOWABLE PIPE MATERIAL AND PROTECTION

DESIGNATION	RCP	CSP (2-2/3"x½")			SSRP (3/4"x1" @ 11-1/2" PITCH)			PPC(C)	PPC(D,S)
	SIZE (INCH)	SIZE (INCH)	BITUM. COAT. THICKNESS	PA/PS THICKNESS	SIZE (INCH)	BITUM. COAT. THICKNESS	PA/PS THICKNESS	SIZE (INCH)	SIZE (INCH)
6" APC									6
12" APC TYPE A		12	0.064"	0.052"				12	
12" APC TYPE B					12	0.064"	0.052"		12
12" APC TYPE C	12				12	0.064"	0.052"		12
18" APC TYPE A	18	18	0.064"	0.052"	18	0.064"	0.052"		
18" APC TYPE B	18	18	0.064"	0.052"				18	
18" APC TYPE C		18	0.064"	0.052"				18	
18" APC TYPE D	18				18	0.064"	0.052"		
18" APC TYPE E	18	18	0.064"	0.052"				18	18
18" APC TYPE F	18								18
24" APC		24	0.079"	0.064"				24	
30" APC	30				30	0.079"	0.064"		30
30"x10" ARCH		30x10	0.079"	0.064"	30x10	0.079"	0.064"		
48" APC		48	0.079"	0.064"					

LEGENDS AND ABBREVIATIONS

S - STANDARD JOINT TYPE
P - POSITIVE JOINT TYPE
D - DOWNDRAIN JOINT TYPE
RCP - REINFORCED CONCRETE PIPE
PPC(C) - PASTIC PIPE CULVERT, TYPE C (CORRUGATED INTERIOR WALL)
PPC(D,S) - PLASTIC PIPE CULVERT, TYPE D OR S (SMOOTH INTERIOR WALL)
CSP - CORRUGATED STEEL PIPE
CAP - CORRUGATED ALUMINUM PIPE
SSRP - STEEL SPIRAL RIBBED PIPE
GA. - GAUGE
BITUM. - BITUMINOUS
PA - POLYMERIZED ASPHALT
PS - POLYMERIC SHEET
w/ - WITH
Ω - SEE DRAINAGE DETAIL

1

Notes:

1. SUFFICIENT SPACE WAS NOT AVALABLE TO LIST ALL DRAINAGE ITEMS WITHIN A SINGLE TABLE ON A SHEET BORDER, THEREFORE THE LISTING OF THE FIRST GROUPING OF DRAINAGE ITEMS ARE REPEATED ON THE ODD NUMBERED ID CODE SHEETS (DQ-1, DQ-3, ETC.) AND THE LISTINGS OF THE REMAINING GROUP OF DRAINAGE ITEMS ARE REPEATED ON THE EVEN NUMBERED ID CODE SHEETS (DQ-2, DQ-4, ETC.).
2. THE PRECISE DETERMINATION OF THE FOLLOWING ITEMS WILL BE MADE BY THE ENGINEER IN THE FIELD: STATION, SKEW, LENGTH, FL ELEVATION, AND DEPTH OF STRUCTURE.
3. (N) - NOT A SEPARATE PAY ITEM; FOR INFORMATION ONLY.
4. * - SEE ROADWAY QUANTITIES FOR DRAINAGE ITEM TOTAL

CSP								ALTERNATIVE PIPE													AFES	PIPE RISER							REMOVAL/ABANDON PAY ITEMS														
12" (14 GA.)	18" (14 GA.)	36" (10 GA.)	12" RISER (14 GA.)	48" RISER (10 GA.)	18" SLOTTED PIPE (14 GA.)	21" SLOTTED PIPE (14 GA.)	24" SLOTTED PIPE (14 GA.)	6" AP (TYPE __)	12" AP (TYPE __)	18" AP (TYPE __)	24" AP (TYPE __)	30" AP (TYPE __)	48" AP (TYPE __)	30" X 10" AP ARCH PIPE (TYPE __)	MAXIMUM COVER (N)	ELBOW (N)	PIPE JOINT CLASSIFICATION	8" GALVANIZED STEEL PIPE	8" GATE VALVE w/ SLEEVE & COVER	12" AFES	8" AP SLIPJOINT (N)	12" AP SLIPJOINT (N)	CABLE RAILING	ADJUST INLET	MODIFY INLET	REMOVE CONCRETE	REMOVE PIPE	REMOVE INLET	ABANDON INLET	ABANDON PIPE	SAND BACKFILL	CAP RISER	CAP INLET	DESCRIPTION	STATION	DRAINAGE PLAN SHEET NO.	DRAINAGE SYSTEM NO. ⬡	DRAINAGE UNIT ◯
LF	LF	LF	LF	LF	LF	LF	LF	LF	LF	LF	LF	LF	LF	LF	FT	EA		LF	EA	EA	EA	EA	LF	EA	EA	CY	LF	EA	EA	LF	CY	EA	EA					
																																		SYSTEM NOT USED		D-18	125	
																																		SYSTEM NOT USED		D-18	126	
																																		RSP		D-13	127	a
																				1														12" METAL FES	104.1' Rt. "PMT1" 72+53.23			b
29.4															2.4		S																	12" CSP CULVERT				c
			14.0													1																		12" CSP RISER				d
		4.0																																TYPE OMP DI	76.54' LT "PMT1" 72+53.18			e
																																		SLOPE PAVING				f
																																		SYSTEM NOT USED			128	
					229.0												S																	TYPE G1 DI	1.30' LT "GE1" 342+85.12	D-13	129	a
																																		18" SLOTTED CSP CULVERT				b
29.4		4.0	14.0		229.0											1				1														SHEET TOTALS				

1 **REVISED PER ADDENDUM No. 1 DATED NOVEMBER 8, 2011**

THIS PLAN ACCURATE FOR DRAINAGE WORK ONLY.

DRAINAGE QUANTITIES
DQ-68

REVISED BY | DATE REVISED

CALCULATED-DESIGNED BY: MOHAMMAD ABDRABOH
CHECKED BY: ALAN R. BISI
FUNCTIONAL SUPERVISOR: MARK PERTILE

STATE OF CALIFORNIA - DEPARTMENT OF TRANSPORTATION
Caltrans® DESIGN

LAST REVISION 10-20-11 | DATE PLOTTED => 08-NOV-2011 | TIME PLOTTED => 11:21

Dist	COUNTY	ROUTE	POST MILES TOTAL PROJECT	SHEET No.	TOTAL SHEETS
08	Riv	91	15.6/21.6	400	2028

REGISTERED CIVIL ENGINEER — DATE 10-28-11

4-25-11
PLANS APPROVAL DATE

REGISTERED PROFESSIONAL ENGINEER — ALAN R. BISI — No. C62808 — Exp. 6-30-12 — CIVIL — STATE OF CALIFORNIA

THE STATE OF CALIFORNIA OR ITS OFFICERS OR AGENTS SHALL NOT BE RESPONSIBLE FOR THE ACCURACY OR COMPLETENESS OF SCANNED COPIES OF THIS PLAN SHEET.

ALTERNATIVE PIPE
ALLOWABLE PIPE MATERIAL AND PROTECTION

DESIGNATION	RCP	CSP (2-2/3"x½")			SSRP (3/4"x1" @ 11-1/2" PITCH)			PPC(C)	PPC(D,S)
	SIZE (INCH)	SIZE (INCH)	BITUM. COAT. THICKNESS	PA/PS THICKNESS	SIZE (INCH)	BITUM. COAT. THICKNESS	PA/PS THICKNESS	SIZE (INCH)	SIZE (INCH)
6" APC									6
12" APC TYPE A		12	0.064"	0.052"				12	
12" APC TYPE B					12	0.064"	0.052"		12
12" APC TYPE C	12				12	0.064"	0.052"		12
18" APC TYPE A	18	18	0.064"	0.052"	18	0.064"	0.052"		
18" APC TYPE B	18	18	0.064"	0.052"				18	
18" APC TYPE C		18	0.064"	0.052"				18	
18" APC TYPE D	18				18	0.064"	0.052"		
18" APC TYPE E	18	18	0.064"	0.052"				18	18
18" APC TYPE F	18								18
24" APC		24	0.079"	0.064"				24	
30" APC	30				30	0.079"	0.064"		30
30"x10" ARCH		30x10	0.079"	0.064"	30x10	0.079"	0.064"		
48" APC		48	0.079"	0.064"					

LEGENDS AND ABBREVIATIONS

S - STANDARD JOINT TYPE
P - POSITIVE JOINT TYPE
D - DOWNDRAIN JOINT TYPE
RCP - REINFORCED CONCRETE PIPE
PPC(C) - PLASTIC PIPE CULVERT, TYPE C (CORRUGATED INTERIOR WALL)
PPC(D,S) - PLASTIC PIPE CULVERT, TYPE D OR S (SMOOTH INTERIOR WALL)
CSP - CORRUGATED STEEL PIPE
SSRP - STEEL SPIRAL RIBBED PIPE
GA. - GAUGE
BITUM. - BITUMINOUS
PA - POLYMERIZED ASPHALT
PS - POLYMERIC SHEET
w/ - WITH
Ω - SEE DRAINAGE DETAIL

1

Notes:

1. SUFFICIENT SPACE WAS NOT AVAILABLE TO LIST ALL DRAINAGE ITEMS WITHIN A SINGLE TABLE ON A SHEET BORDER, THEREFORE THE LISTING OF THE FIRST GROUPING OF DRAINAGE ITEMS ARE REPEATED ON THE ODD NUMBERED ID CODE SHEETS (DQ-1, DQ-3, ETC.) AND THE LISTINGS OF THE REMAINING GROUP OF DRAINAGE ITEMS ARE REPEATED ON THE EVEN NUMBERED ID CODE SHEETS (DQ-2, DQ-4, ETC.).
2. THE PRECISE DETERMINATION OF THE FOLLOWING ITEMS WILL BE MADE BY THE ENGINEER IN THE FIELD: STATION, SKEW, LENGTH, FL ELEVATION, AND DEPTH OF STRUCTURE.
3. (N) - NOT A SEPARATE PAY ITEM; FOR INFORMATION ONLY.
4. * - SEE ROADWAY QUANTITIES FOR DRAINAGE ITEM TOTAL

DITCH EXCAVATION	CONCRETE (CHANNEL LINING)	STRUCTURAL CONCRETE, BOX CULVERT	MINOR CONCRETE (MINOR STRUCTURE)	MINOR CONCRETE (MISC. CONSTRUCTION)	CL. IV CONCRETE (BACKFILL) *	HMA-A *	PLACE AC (MISC. AREA) *	MISC. IRON AND STEEL	BAR REINFORCING STEEL	RSP: ¼-TON, METHOD B	RSP: FACING, METHOD B	RSP: NO. 2 BACKING, METHOD B	RSP: RSP FABRIC	FRAMES, GRATES AND COVERS: 24-12 (N)	24-13 (N)	¼" SOLID STEEL COVER (N)	12" X 12" PRECAST INLET	12" X 12" STEEL GRATE (TRAFFIC RATED)	DEBRIS RACK (N)	MANHOLE COVER (N)	MANHOLE COVER-PRESSURE LOCKING (N)	36" PRECAST MANHOLE SHAFT		MANHOLE SHAFT PIPE REDUCER	HEIGHT OF MANHOLE (N)	HEIGHT OF INLET "H" (N)	DRAINAGE INLET MARKER *	CONCRETE COLLAR (N)	RCP: 12" RCP	15" RCP	18" RCP	24" RCP	30" RCP	36" RCP	48" RCP	54" RCP	60" RCP (CL. V SPECIAL)	DESCRIPTION	STATION	DRAINAGE PLAN SHEET NO.	DRAINAGE SYSTEM NO. ⬡	DRAINAGE UNIT ◯
CY	CY	CY	CY	CY	CY	ton	yd²	lb	lb	CY	CY	CY	yd²	EA	EA	EA	EA	EA	EA	EA	EA	LF		EA	FT	FT	EA	EA	LF	LF	LF	LF	LF	LF	LF	LF	LF					
			1.00					235												1																		Parkway Drain	30' RT LIME ST. 21+75	D-16	133	a
			1.00					235												1																		Parkway Drain	53.3' RT. LIME ST. 26+35	D-17	134	a
			0.90					600								1																						Parkway Drain	40.13' RT UNIVERSITY AVE 3+98.4	D-17	135	a
																																						12" CSP		D-3	136	a
																																						MAIN VALVE	167' Lt 201+73.00 "GE1"			b
			5.10					342											1																			CSP RISER	164' Lt. 202+02.00 "GE1"			c
			16.70																																			Conc SPILLWAY	210' Lt 202+00.00 "GE1"			d
			1.70																																			Junction Structure	202' Lt 191+75.74 "GE1"	D-2	137	a
																																						MAIN VALVE				b
																																						12" CSP	206' Lt 192+60.00 "GE1"			c
			5.10					342											1																			CSP RISER				d
											22.2		33.3																									RSP	112' Lt 192+65.00 "GE1"			e
			40.30																																			Conc SPILLWAY	122' Lt 192+65.00 "GE1"			f
																																						ABANDON INLET				g
			71.80					1754			22.2		33.3			1			2	2																		SHEET TOTALS				
5729.65	687.47	1365.96	738.71	102.97	60.73	11.81	69.71	59924	308837.2	144.4	193.4	54.5	862.6	127	2	11	2	2	8	29	3	90		13			16	43	566.5	67.4	3387.5	2586.5	237.1	530.0	115.0	566.3	118.2	GRAND TOTALS				

1 **REVISED PER ADDENDUM No. 1 DATED NOVEMBER 8, 2011**

THIS PLAN ACCURATE FOR DRAINAGE WORK ONLY.

DRAINAGE QUANTITIES
DQ-71

REVISED BY | DATE REVISED

CALCULATED-DESIGNED BY: MOHAMMAD ABDRABOH
CHECKED BY: ALAN R. BISI
FUNCTIONAL SUPERVISOR: MARK PERTILE

STATE OF CALIFORNIA - DEPARTMENT OF TRANSPORTATION
Caltrans® DESIGN

LAST REVISION 10-20-11 | DATE PLOTTED => 08-NOV-2011 | TIME PLOTTED => 11:21

Dist	COUNTY	ROUTE	POST MILES TOTAL PROJECT	SHEET No.	TOTAL SHEETS
08	Riv	91	15.6/21.6	401	2028

REGISTERED CIVIL ENGINEER 10-28-11 DATE

4-25-11
PLANS APPROVAL DATE

REGISTERED PROFESSIONAL ENGINEER ALAN R. BISI No. C62808 Exp. 6-30-12 CIVIL STATE OF CALIFORNIA

THE STATE OF CALIFORNIA OR ITS OFFICERS OR AGENTS SHALL NOT BE RESPONSIBLE FOR THE ACCURACY OR COMPLETENESS OF SCANNED COPIES OF THIS PLAN SHEET.

ALTERNATIVE PIPE ALLOWABLE PIPE MATERIAL AND PROTECTION

DESIGNATION	RCP	CSP (2-2/3"x½")			SSRP (3/4"x1" @ 11-1/2" PITCH)			PPC(C)	PPC(D,S)
	SIZE (INCH)	SIZE (INCH)	BITUM. COAT. THICKNESS	PA/PS THICKNESS	SIZE (INCH)	BITUM. COAT. THICKNESS	PA/PS THICKNESS	SIZE (INCH)	SIZE (INCH)
6" APC									6
12" APC TYPE A		12	0.064"	0.052"				12	
12" APC TYPE B					12	0.064"	0.052"		12
12" APC TYPE C	12				12	0.064"	0.052"		12
18" APC TYPE A	18	18	0.064"	0.052"	18	0.064"	0.052"		
18" APC TYPE B	18	18	0.064"	0.052"				18	
18" APC TYPE C		18	0.064"	0.052"				18	
18" APC TYPE D	18				18	0.064"	0.052"		
18" APC TYPE E	18	18	0.064"	0.052"				18	18
18" APC TYPE F	18								18
24" APC		24	0.079"	0.064"				24	
30" APC	30				30	0.079"	0.064"		30
30"x10" ARCH		30x10	0.079"	0.064"	30x10	0.079"	0.064"		
48" APC		48	0.079"	0.064"					

LEGENDS AND ABBREVIATIONS

S - STANDARD JOINT TYPE
P - POSITIVE JOINT TYPE
D - DOWNDRAIN JOINT TYPE
RCP - REINFORCED CONCRETE PIPE
PPC(C) - PLASTIC PIPE CULVERT, TYPE C (CORRUGATED INTERIOR WALL)
PPC(D,S) - PLASTIC PIPE CULVERT, TYPE D OR S (SMOOTH INTERIOR WALL)
CSP - CORRUGATED STEEL PIPE
CAP - CORRUGATED ALUMINUM PIPE
SSRP - STEEL SPIRAL RIBBED PIPE
GA. - GAUGE
BITUM. - BITUMINOUS
PA - POLYMERIZED ASPHALT
PS - POLYMERIC SHEET
w/ - WITH
Ω - SEE DRAINAGE DETAIL

1

Notes:

1. SUFFICIENT SPACE WAS NOT AVAILABLE TO LIST ALL DRAINAGE ITEMS WITHIN A SINGLE TABLE ON A SHEET BORDER, THEREFORE THE LISTING OF THE FIRST GROUPING OF DRAINAGE ITEMS ARE REPEATED ON THE ODD NUMBERED ID CODE SHEETS (DQ-1, DQ-3, ETC.) AND THE LISTINGS OF THE REMAINING GROUP OF DRAINAGE ITEMS ARE REPEATED ON THE EVEN NUMBERED ID CODE SHEETS (DQ-2, DQ-4, ETC.).
2. THE PRECISE DETERMINATION OF THE FOLLOWING ITEMS WILL BE MADE BY THE ENGINEER IN THE FIELD: STATION, SKEW, LENGTH, FL ELEVATION, AND DEPTH OF STRUCTURE.
3. (N) - NOT A SEPARATE PAY ITEM; FOR INFORMATION ONLY.
4. * - SEE ROADWAY QUANTITIES FOR DRAINAGE ITEM TOTAL

CSP								ALTERNATIVE PIPE													AFES	PIPE RISER							REMOVAL/ABANDON PAY ITEMS								DESCRIPTION	STATION	DRAINAGE PLAN SHEET NO.	DRAINAGE SYSTEM NO. ⬡	DRAINAGE UNIT ◯
12" (14 GA.)	18" (14 GA.)	36" (10 GA.)	12" RISER (14 GA.)	48" RISER (10 GA.)	18" SLOTTED PIPE (14 GA.)	21" SLOTTED PIPE (14 GA.)	24" SLOTTED PIPE (14 GA.)	6" AP (TYPE __)	12" AP (TYPE __)	18" AP (TYPE __)	24" AP (TYPE __)	30" AP (TYPE __)	48" AP (TYPE __)	30" X 10" AP ARCH PIPE (TYPE __)	MAXIMUM COVER (N)	ELBOW (N)	PIPE JOINT CLASSIFICATION	8" GALVANIZED STEEL PIPE	8" GATE VALVE w/ SLEEVE & COVER	12" AFES	8" AP SLIPJOINT (N)	12" AP SLIPJOINT (N)	CABLE RAILING	ADJUST INLET	MODIFY INLET	REMOVE CONCRETE	REMOVE PIPE	REMOVE INLET	ABANDON INLET	ABANDON PIPE	SAND BACKFILL	CAP RISER	CAP INLET					
LF	LF	LF	LF	LF	LF	LF	LF	LF	LF	LF	LF	LF	LF	LF	FT	EA		LF	EA	EA	EA	EA	LF	EA	EA	CY	LF	EA	EA	LF	CY	EA	EA					
																																		Parkway Drain	30' RT LIME ST. 21+75	D-16	133	a
																																		Parkway Drain	53.3' RT. LIME ST. 26+35	D-17	134	a
																																		Parkway Drain	40.13' RT UNIVERSITY AVE 3+98.4	D-17	135	a
57.0															5.0		S																	12" CSP		D-3	136	a
																			1															MAIN VALVE	167' Lt 201+73.00 "GE1"			b
				3.0																														CSP RISER	164' Lt. 202+02.00 "GE1"			c
																																		Conc SPILLWAY	210' Lt 202+00.00 "GE1"			d
																																		Junction Structure	202' Lt 191+75.74 "GE1"	D-2	137	a
																			1															MAIN VALVE				b
82.4															5.0		S																	12" CSP	206' Lt 192+60.00 "GE1"			c
				3.0																														CSP RISER				d
																																		RSP	112' Lt 192+65.00 "GE1"			e
																																		Conc SPILLWAY	122' Lt 192+65.00 "GE1"			f
																													1					ABANDON INLET				g
133.4				6.0															2										1					SHEET TOTALS				
274.8	116.6	36.0	93.7	23.0	360.0	465.0	234	22.2	726.1	1743.6	167.5	758.7	67.1	56.0		17		460.00	4	3	2	10	697.0	1		454.95	1931.8	48	12	3773.9	365.77		8	GRAND TOTALS				

1 **REVISED PER ADDENDUM No. 1 DATED NOVEMBER 8, 2011**

THIS PLAN ACCURATE FOR DRAINAGE WORK ONLY.

DRAINAGE QUANTITIES
DQ-72

REVISED BY | DATE REVISED

CALCULATED-DESIGNED BY: MOHAMMAD ABDRABOH
CHECKED BY: ALAN R. BISI
FUNCTIONAL SUPERVISOR: MARK PERTILE

STATE OF CALIFORNIA - DEPARTMENT OF TRANSPORTATION
Caltrans DESIGN

LAST REVISION 10-20-11
DATE PLOTTED => 08-NOV-2011
TIME PLOTTED => 11:22

Dist	COUNTY	ROUTE	POST MILES TOTAL PROJECT	SHEET No.	TOTAL SHEETS
08	Riv	91	15.6/21.6	439	2028

W E Wasser 10-28-11
REGISTERED CIVIL ENGINEER DATE

4-25-11
PLANS APPROVAL DATE

REGISTERED PROFESSIONAL ENGINEER W.E.WASSER No. 37378 Exp. 06-30-12 CIVIL STATE OF CALIFORNIA

THE STATE OF CALIFORNIA OR ITS OFFICERS OR AGENTS SHALL NOT BE RESPONSIBLE FOR THE ACCURACY OR COMPLETENESS OF SCANNED COPIES OF THIS PLAN SHEET.

1

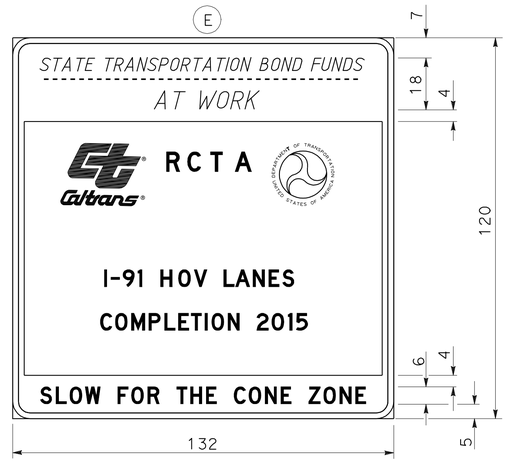

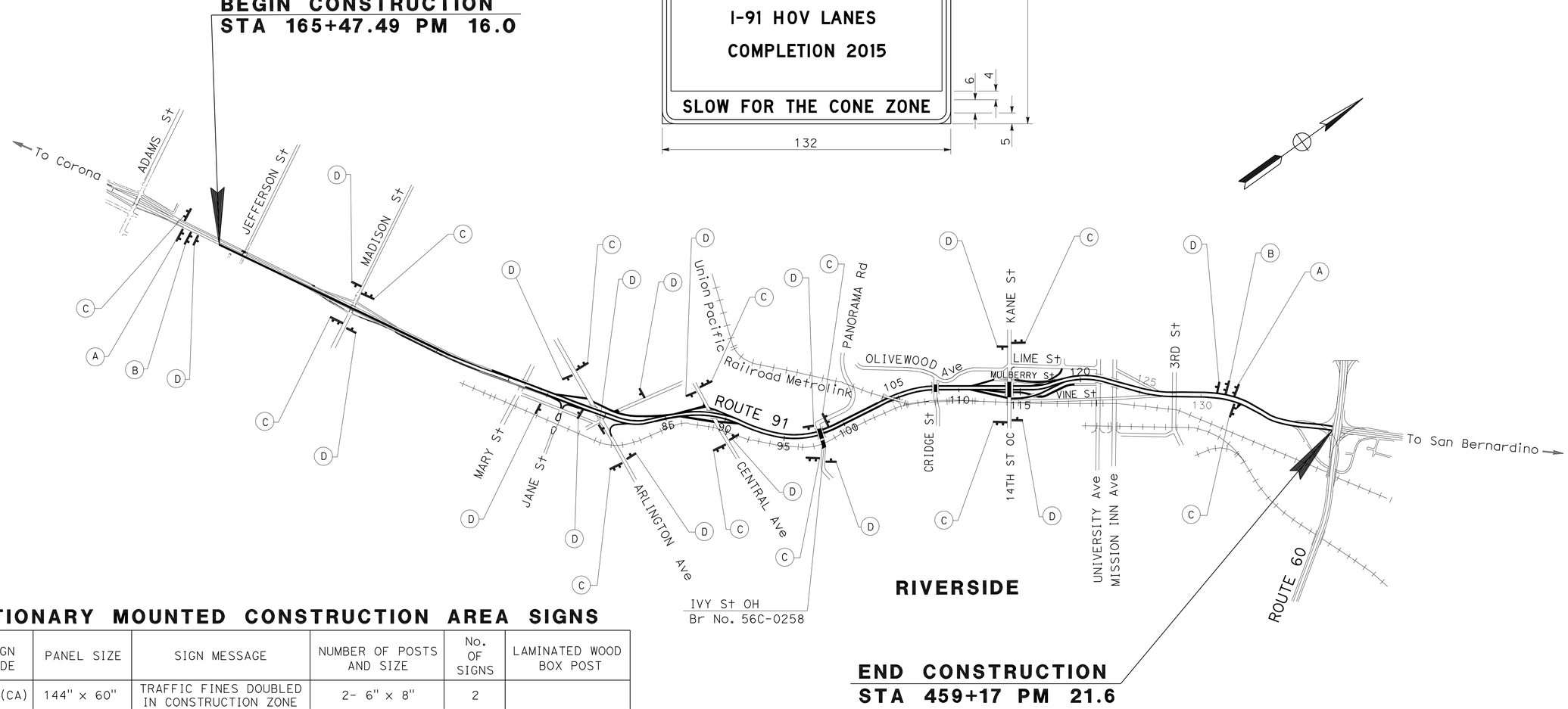

STATIONARY MOUNTED CONSTRUCTION AREA SIGNS

SIGN No. (X)	SIGN CODE	PANEL SIZE	SIGN MESSAGE	NUMBER OF POSTS AND SIZE	No. OF SIGNS	LAMINATED WOOD BOX POST
A	C40(CA)	144" x 60"	TRAFFIC FINES DOUBLED IN CONSTRUCTION ZONE	2- 6" x 8"	2	
B	G20-1	90" x 48"	ROAD CONSTRUCTION NEXT 6 MILES	2- 6" x 6"	2	
C	G20-2	48" x 24"	END ROAD WORK	2- 4" x 4"	12	
D	W20-1	48" x 48"	ROAD WORK AHEAD	1- 6" x 6"	16	
E	1-B	132" x 120"			2	4-25' LONG

NOTE:

LOCATION OF CONSTRUCTION AREA SIGNS SHOWN ON THE PLAN ARE APPROXIMATE.
EXACT LOCATIONS SHALL BE DETERMINED BY THE ENGINEER

1 **REVISED PER ADDENDUM No. 1 DATED NOVEMBER 8, 2011**

THIS PLAN ACCURATE FOR CONSTRUCTION AREA SIGN WORK ONLY

CONSTRUCTION AREA SIGNS

NO SCALE

CS-1

STATE OF CALIFORNIA - DEPARTMENT OF TRANSPORTATION
Caltrans TRAFFIC DESIGN

FUNCTIONAL SUPERVISOR: W.E.WASSER
CALCULATED-DESIGNED BY: DEAN TO
CHECKED BY: PATTI BARTOLI
REVISED BY / DATE REVISED

LAST REVISION 10-13-11 | DATE PLOTTED => 08-NOV-2011 | TIME PLOTTED => 11:22

Dist	COUNTY	ROUTE	POST MILES TOTAL PROJECT	SHEET No.	TOTAL SHEETS
08	Riv	91	15.6/21.6	440	2028

Mark Pertile 10-28-11
REGISTERED CIVIL ENGINEER DATE

4-25-11
PLANS APPROVAL DATE

REGISTERED PROFESSIONAL ENGINEER MARK PERTILE No. 50395 Exp. 6/30/11 CIVIL STATE OF CALIFORNIA

THE STATE OF CALIFORNIA OR ITS OFFICERS OR AGENTS SHALL NOT BE RESPONSIBLE FOR THE ACCURACY OR COMPLETENESS OF SCANNED COPIES OF THIS PLAN SHEET.

1

LEGEND:
- ROAD WORK & TEMPORARY PAVEMENT
- STRUCTURE WORK
- ROAD CLOSE
- DIRECTION OF TRAFFIC

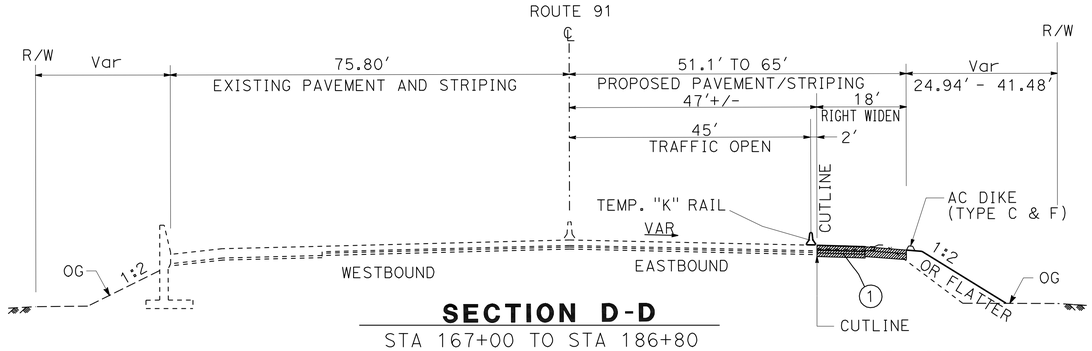

SECTION D-D
STA 167+00 TO STA 186+80

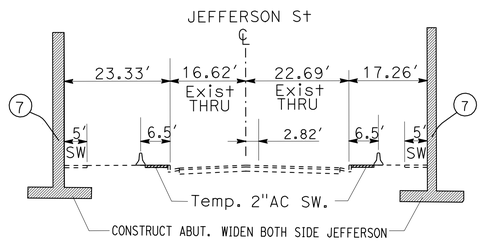

SECTION C-C

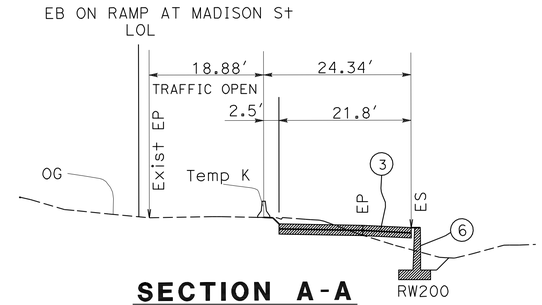

SECTION A-A

GENERAL NOTE FOR BRIDGE SEQUENCE CONSTRUCTION:

STAGE 1 CONSTRUCTION:

1. CONSTRUCT ABUT. WIDEN PORTION AT CENTRAL Ave
2. CONSTRUCT ABUT. WIDEN PORTION AT JEFFERSON, CONSTRUCT DECK AT CENTRAL AND SHOOFLY R.R. AT PACHAPPA.
3. CONSTRUCT ABUT. WIDEN PORTION AT MADISON AND CONSTRUCT DECK AT JEFFERSON
4. REMOVE EASTSIDE HALF OF 14 St AND RECONSTRUCT. CONSTRUCT TWO BRAIDED RAMPS. ABUT WIDEN PORTION AT BROCKTON AND DECK AT MADISON.
5. CONSTRUCT ABUT WIDEN PORTION AT ARLINGTON AND AND DECK AT BROCKTON.
6. CONSTRUCT DECK AT ARLINGTON.

NOTE:

INSTALL TEMPORARY DETECTION SYSTEM SEE "E-70"

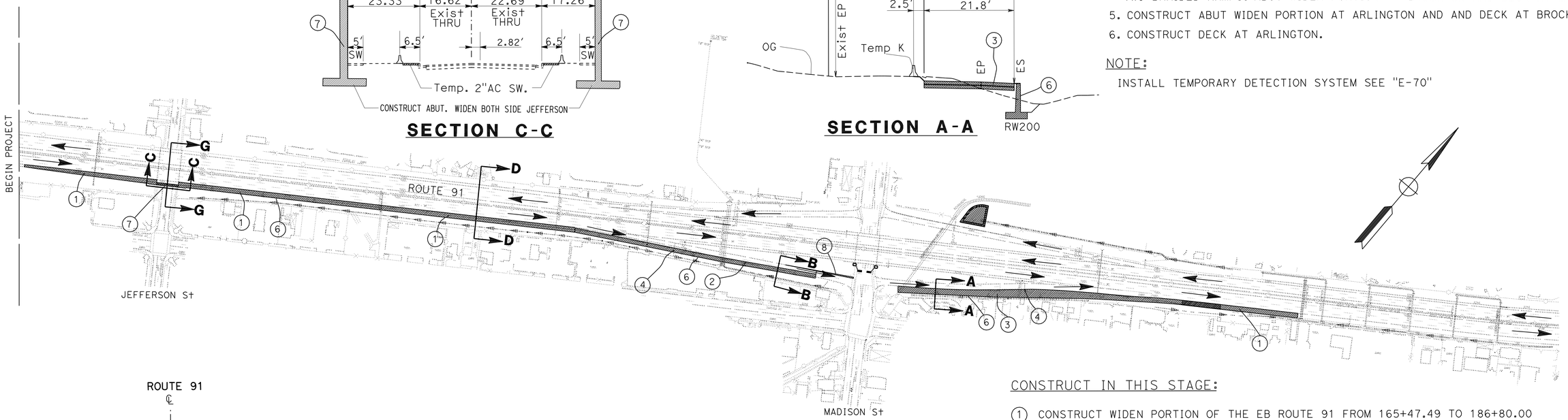

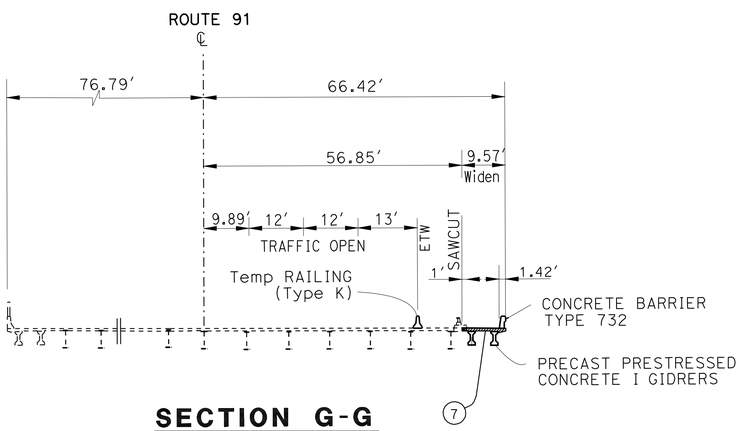

SECTION G-G

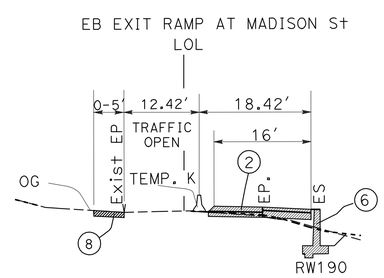

SECTION B-B

CONSTRUCT IN THIS STAGE:

1. CONSTRUCT WIDEN PORTION OF THE EB ROUTE 91 FROM 165+47.49 TO 186+80.00 AND FROM 210+30.00 TO 215+00.00
2. RECONSTRUCT WIDEN PORTION OF THE EB MADISON OFF RAMP
3. RECONSTRUCT WIDEN PORTION OF THE EB MADISON ON RAMP
4. CONSTRUCT PORTION OF DRAINAGE SYSTEM 5 10
6. CONSTRUCT RETAINING WALL NUMBER 172, 190 and 200
7. CONSTRUCT THE WIDEN PORTION OF THE BRIDGE AT JEFFERSON.
8. CONSTRUCT TEMPORARY PAVEMENT WITH 4" AC.

STAGE 1 PHASE 1

STAGE CONSTRUCTION

NO SCALE

SC-1

1 **REVISED PER ADDENDUM No. 1 DATED NOVEMBER 8, 2011**

THIS PLAN ACCURATE FOR STAGE CONSTRUCTION ONLY.

STATE OF CALIFORNIA - DEPARTMENT OF TRANSPORTATION
DESIGN
Caltrans

FUNCTIONAL SUPERVISOR: MARK PERTILE
CALCULATED-DESIGNED BY: KENT NGUYEN
CHECKED BY: MARK PERTILE
REVISED BY
DATE REVISED

LAST REVISION 10-13-11
DATE PLOTTED => 08-NOV-2011
TIME PLOTTED => 11:22

Dist	COUNTY	ROUTE	POST MILES TOTAL PROJECT	SHEET No.	TOTAL SHEETS
08	Riv	91	15.6/21.6	441	2028

Mark Pertile 10-28-11
REGISTERED CIVIL ENGINEER DATE

4-25-11
PLANS APPROVAL DATE

REGISTERED PROFESSIONAL ENGINEER MARK PERTILE No. 50395 Exp. 6/30/11 CIVIL STATE OF CALIFORNIA

THE STATE OF CALIFORNIA OR ITS OFFICERS OR AGENTS SHALL NOT BE RESPONSIBLE FOR THE ACCURACY OR COMPLETENESS OF SCANNED COPIES OF THIS PLAN SHEET.

1

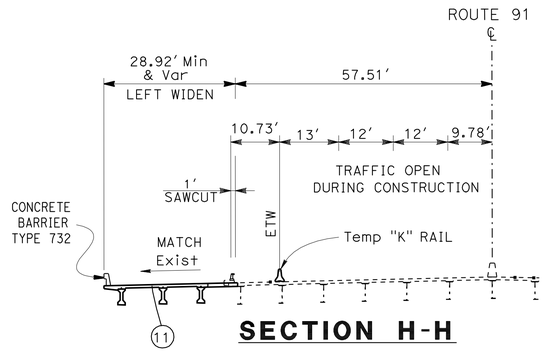

SECTION H-H

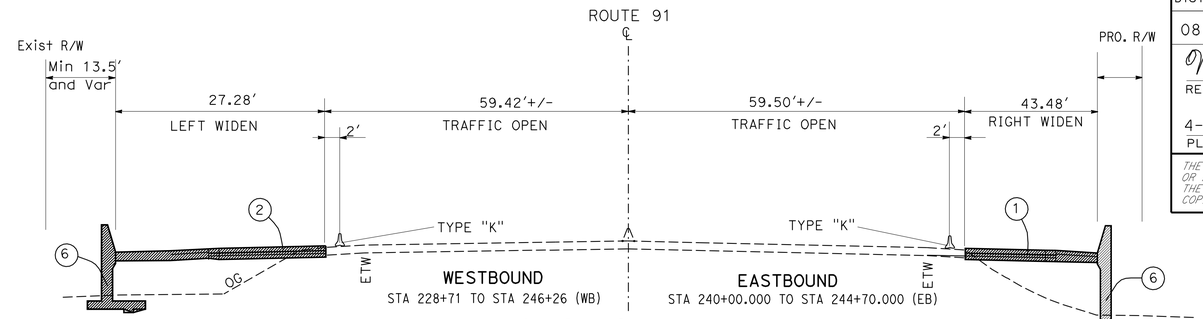

SECTION E-E
(TYPICAL)

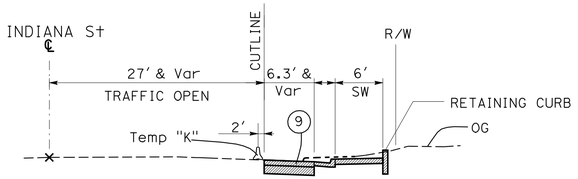

SECTION D-D

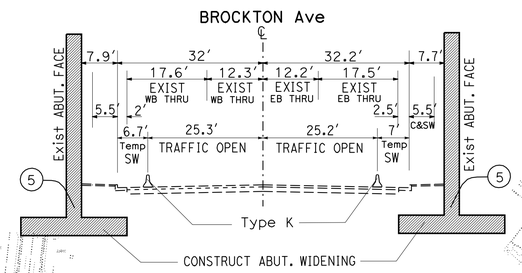

SECTION G-G

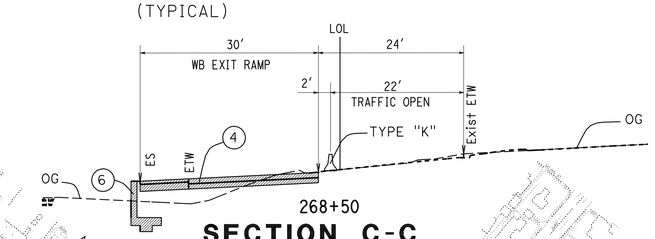

SECTION C-C

SEE SHEET "SC-19" FOR MORE DETAIL

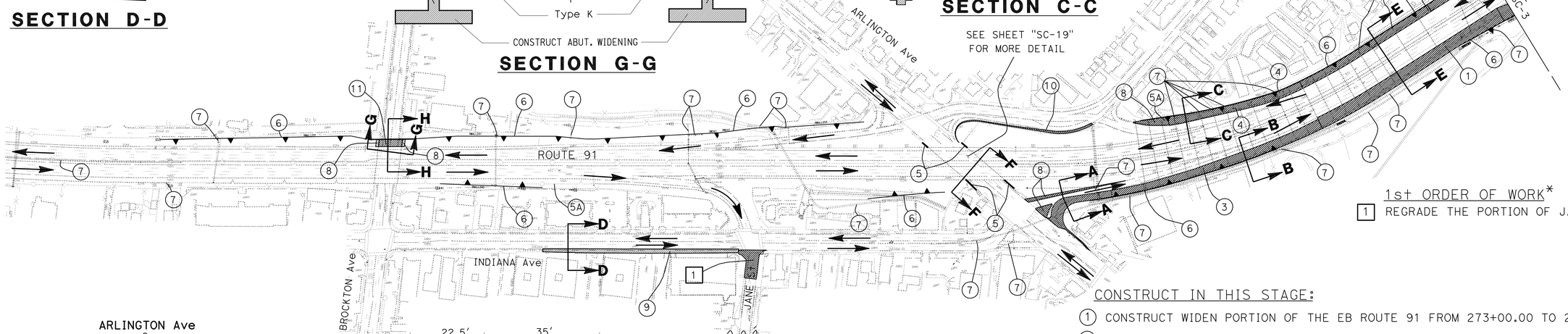

1st ORDER OF WORK*

1 REGRADE THE PORTION OF JANE St.

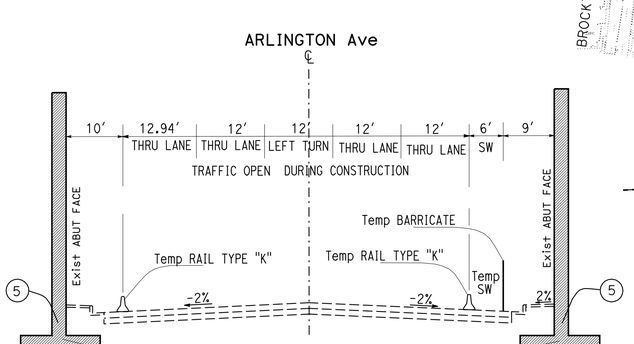

SECTION F-F

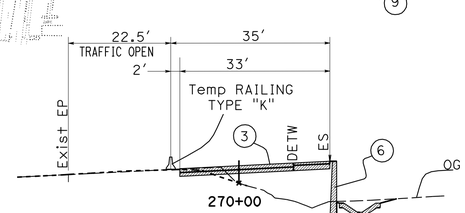

SECTION B-B

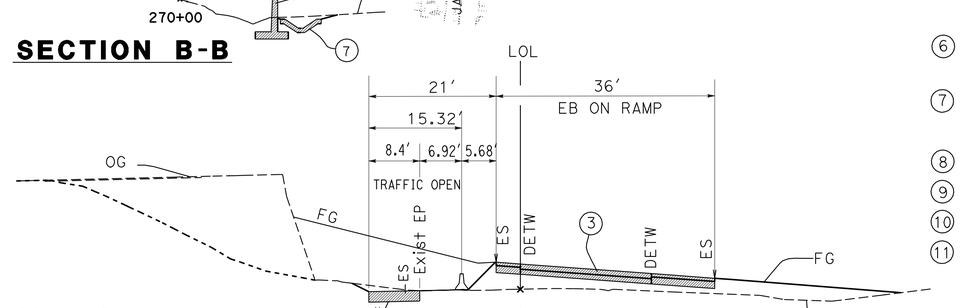

SECTION A-A

THIS PLAN ACCURATE FOR STAGE CONSTRUCTION ONLY.

CONSTRUCT IN THIS STAGE:

1. CONSTRUCT WIDEN PORTION OF THE EB ROUTE 91 FROM 273+00.00 TO 280+60.00
2. CONSTRUCT WIDEN PORTION OF THE WB ROUTE 91 FROM 271+00.00 TO 278+60.00
3. RECONSTRUCT THE EB ARLINGTON ON RAMP PORTION.
4. RECONSTRUCT THE WB ARLINGTON OFF RAMP PORTION.
5. CONSTRUCT WIDEN PORTION ABUT. OF THE ARLINGTON BRIDGE.
5A. REMOVE EXISTING WALL AT:
RIGHT OF "GE1" LINE FROM 241+00 TO 246+50
LEFT OF "GE1" LINE FROM 266+25 TO 269+80
6. CONSTRUCT RETAINING WALL NUMBER :
231, 240, 241, 247, 253, 254, 261, 266, 267, 280, 281, AND 287
7. CONSTRUCT DRAINAGE SYSTEM NUMBER:
18 20 22 25 28 33 34 41 42 46 51 53
8. REMOVE AND CONSTRUCT TEMPORARY PAVEMENT 4" AC. SEE SHEET SCD-1
9. CONSTRUCT WIDEN PORTION INDIANA Ave
10. CONSTRUCT WIDEN PORTION OF RIVERSIDE Ave
11. CONSTRUCT WIDEN PORTION OF THE BROCKTON BRIDGE.

DETOUR IN THIS STAGE:

JANE St WILL BE CLOSE AT (RAIL CROSSING)

1 **REVISED PER ADDENDUM No. 1 DATED NOVEMBER 8, 2011**

STAGE 1 PHASE 1
STAGE CONSTRUCTION
NO SCALE

SC-2

STATE OF CALIFORNIA - DEPARTMENT OF TRANSPORTATION
DESIGN
Caltrans®

FUNCTIONAL SUPERVISOR: MARK PERTILE
CALCULATED-DESIGNED BY: KENT NGUYEN
CHECKED BY: MARK PERTILE
REVISED BY
DATE REVISED

LAST REVISION 10-13-11
DATE PLOTTED => 08-NOV-2011
TIME PLOTTED => 11:22

Dist	COUNTY	ROUTE	POST MILES TOTAL PROJECT	SHEET No.	TOTAL SHEETS
08	Riv	91	15.6/21.6	443	2028

Mark Pertile 10-28-11
REGISTERED CIVIL ENGINEER DATE

4-25-11
PLANS APPROVAL DATE

REGISTERED PROFESSIONAL ENGINEER MARK PERTILE No. 50395 Exp. 6/30/11 CIVIL STATE OF CALIFORNIA

THE STATE OF CALIFORNIA OR ITS OFFICERS OR AGENTS SHALL NOT BE RESPONSIBLE FOR THE ACCURACY OR COMPLETENESS OF SCANNED COPIES OF THIS PLAN SHEET.

NOTE:

INSTALL TEMPORARY FIBER OPTIC CONNECTION FOR METROLINK CABINET SEE "E-69".

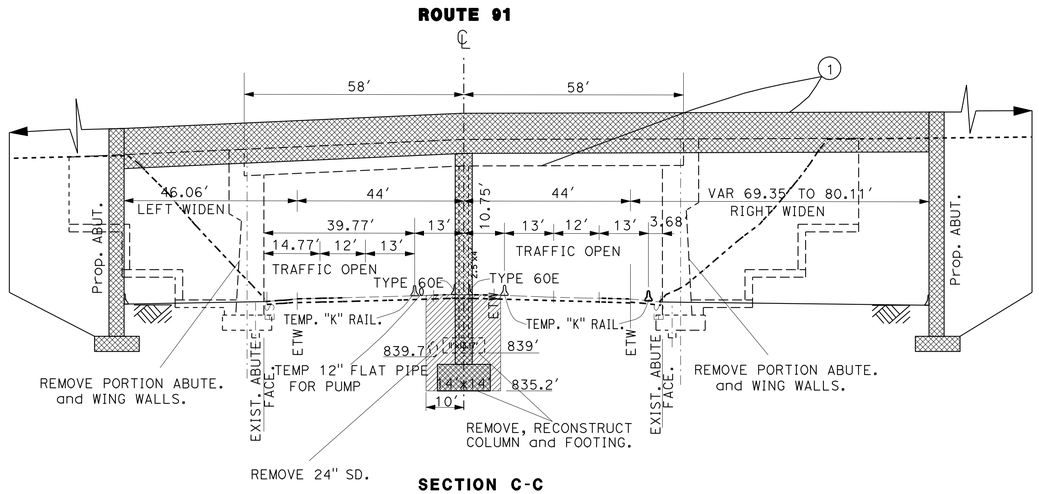

SECTION C-C

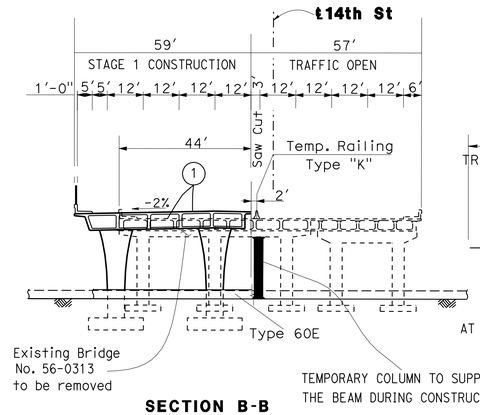

SECTION B-B

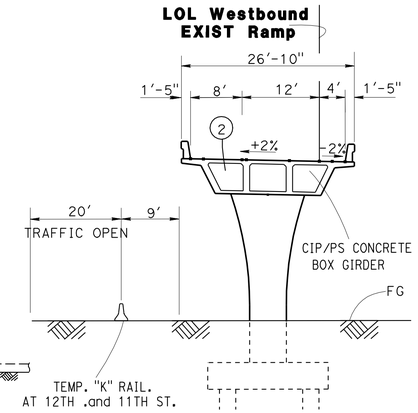

SECTION D-D

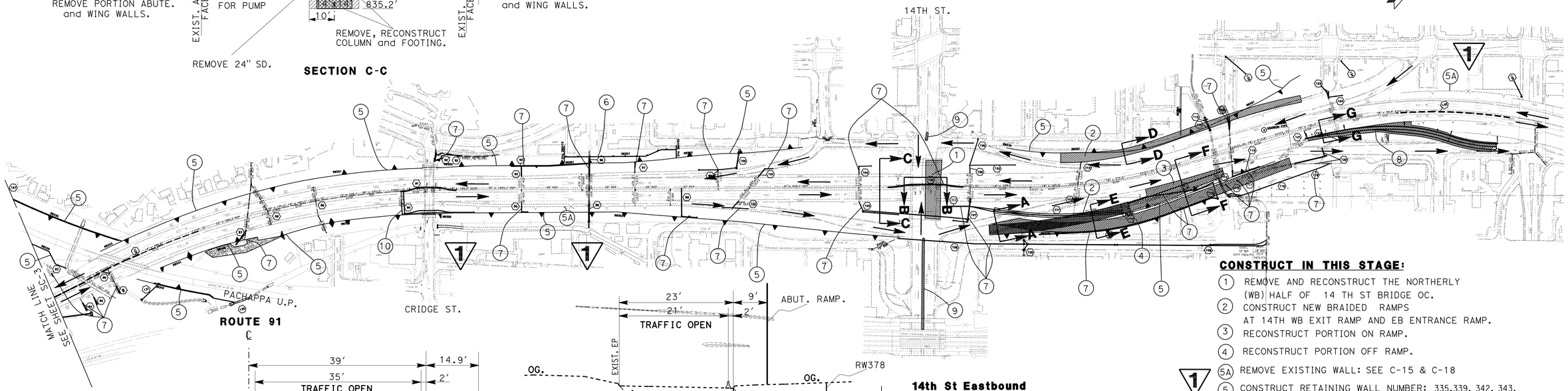

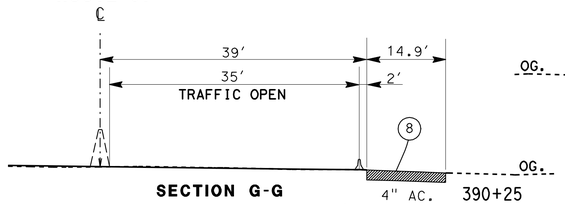

SECTION G-G

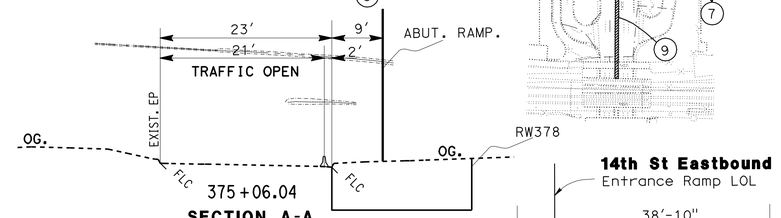

SECTION A-A

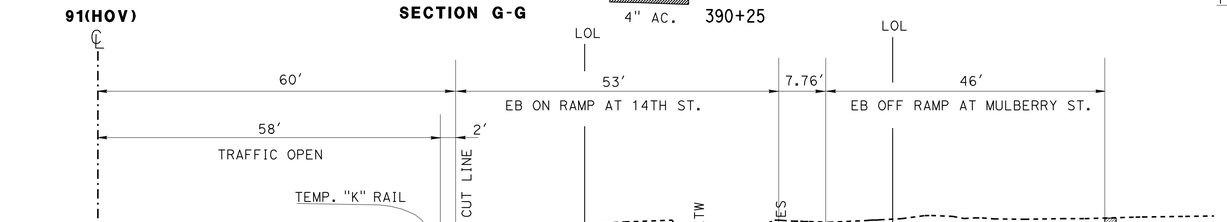

SECTION F-F

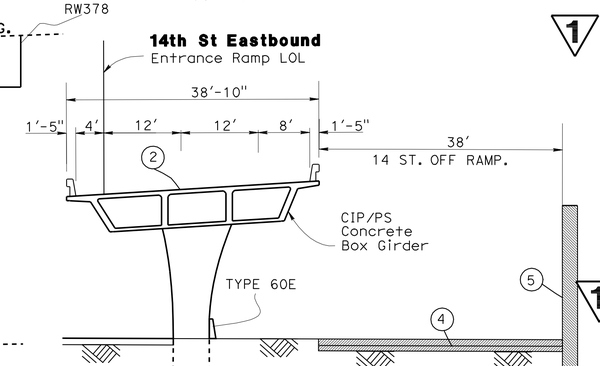

SECTION E-E

CONSTRUCT IN THIS STAGE:

1. REMOVE AND RECONSTRUCT THE NORTHERLY (WB) HALF OF 14 TH ST BRIDGE OC.
2. CONSTRUCT NEW BRAIDED RAMPS AT 14TH WB EXIT RAMP AND EB ENTRANCE RAMP.
3. RECONSTRUCT PORTION ON RAMP.
4. RECONSTRUCT PORTION OFF RAMP.
5A. REMOVE EXISTING WALL: SEE C-15 & C-18
5. CONSTRUCT RETAINING WALL NUMBER: 335,339, 342, 343, 344, 346, 348,351, 355, 356, 362, 378, 379, 381, 382, AND 387.
6. CONSTRUCT SOUND WALL NUMBER: 357
7. CONSTRUCT PORTION OF THE DRAINAGE SYSTEM 87 93 94 95 96 97 99 100 103 104 105 106 107 111 114 119 123 124
8. CONSTRUCT TEMPORARY PAVEMENT FOR EB OFF RAMP WITH 4" AC. SEE SHEET SCD-2
9. REMOVE MEDIAN CURB ISLAND AND OVERLAY TEMPORARY PAVEMENT WITH 4" AC.
10. CONSTRUCT TRAVEL-WAY PORTION OF THE DRAINAGE SYSTEM 90 DURING 14TH ST. OC REMOVAL. USE RAPID SET CONCRETE.
11. INSTALL TEMPORARY FIBER OPTIC CONNECTION FOR METROLINK. SEE E-68 and E-69

1 **REVISED PER ADDENDUM No. 1 DATED NOVEMBER 8, 2011**

THIS PLAN ACCURATE FOR STAGE CONSTRUCTION ONLY.

STAGE 1 PHASE 1
STAGE CONSTRUCTION
NO SCALE

SC-4

REVISED BY	DATE REVISED
KENT NGUYEN	MARK PERTILE
CALCULATED-DESIGNED BY	CHECKED BY
FUNCTIONAL SUPERVISOR	MARK PERTILE

STATE OF CALIFORNIA - DEPARTMENT OF TRANSPORTATION
Caltrans® DESIGN

LAST REVISION 10-13-11 DATE PLOTTED => 08-NOV-2011 TIME PLOTTED => 11:22

Dist	COUNTY	ROUTE	POST MILES TOTAL PROJECT	SHEET No.	TOTAL SHEETS
08	Riv	91	15.6/21.6	447	2028

Mark Pertile 10-28-11
REGISTERED CIVIL ENGINEER DATE

4-25-11
PLANS APPROVAL DATE

REGISTERED PROFESSIONAL ENGINEER MARK PERTILE No. 50395 Exp. 6/30/11 CIVIL STATE OF CALIFORNIA

THE STATE OF CALIFORNIA OR ITS OFFICERS OR AGENTS SHALL NOT BE RESPONSIBLE FOR THE ACCURACY OR COMPLETENESS OF SCANNED COPIES OF THIS PLAN SHEET.

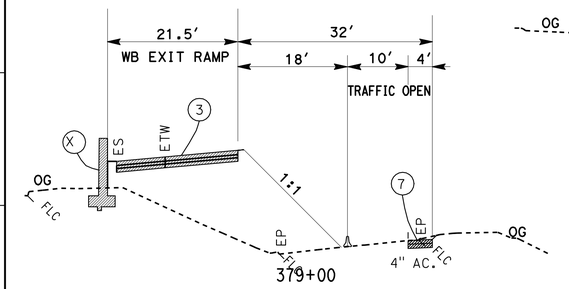

SECTION F-F

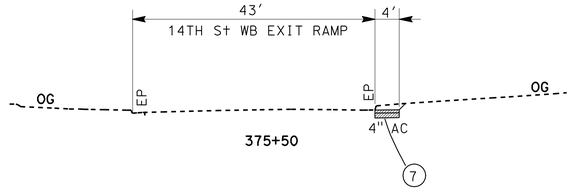

SECTION G-G

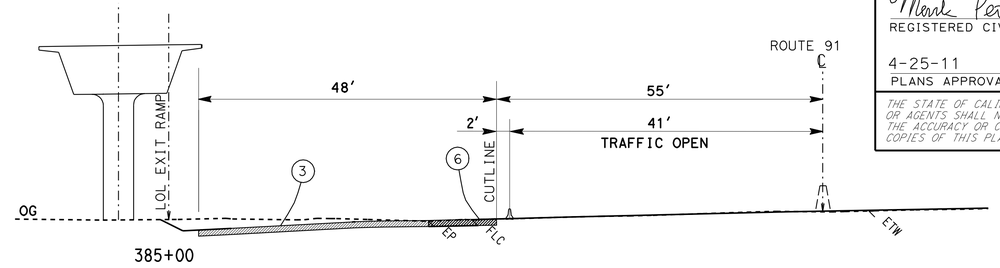

SECTION E-E

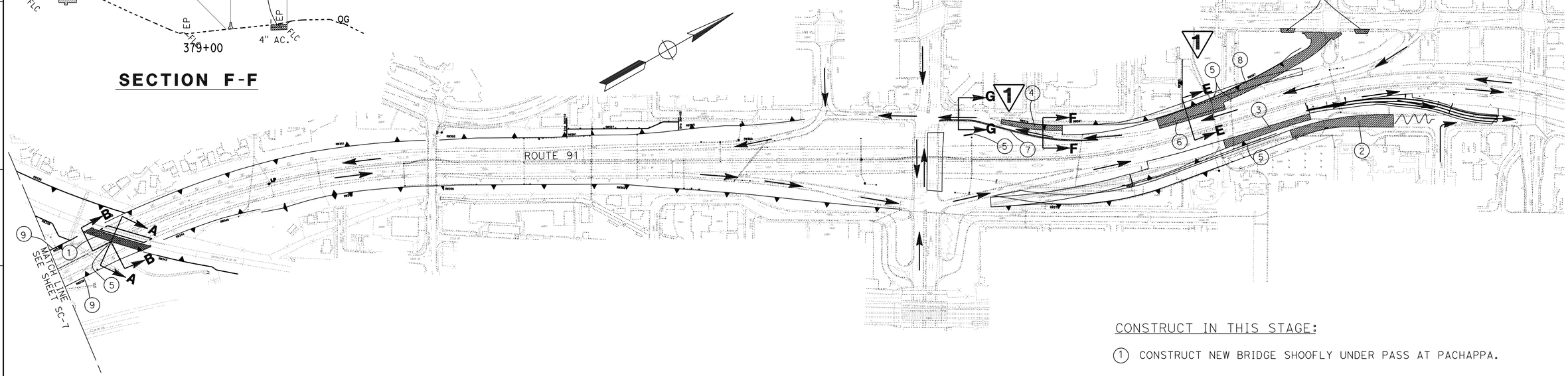

CONSTRUCT IN THIS STAGE:

1. CONSTRUCT NEW BRIDGE SHOOFLY UNDER PASS AT PACHAPPA.
2. RECONSTRUCT PORTION THE 14TH St EB EXIT RAMP.
3. RECONSTRUCT THE 14th St EB ENTRANCE RAMP.
4. RECONSTRUCT THE 14th St. WB EXIT RAMP.
5. CONSTRUCT PORTION OF DRAINAGE SYSTEM 15 19 20 29 30
6. CONSTRUCT WIDEN PORTION OF WB ROUTE 91.
7. CONSTRUCT TEMPORARY PAVEMENT AT 14TH St ENTRANCE RAMP WITH 4"AC. SEE SHEET SCD-1
8. CONSTRUCT 10th ST. WB ENTRANCE RAMP
9. CONSTRUCT RETAINING WALL NUMBER 337 AND 338
10. CONSTRUCT TEMPORARY DRIVEWAY FOR PARKING SEE SHEET SCD-1

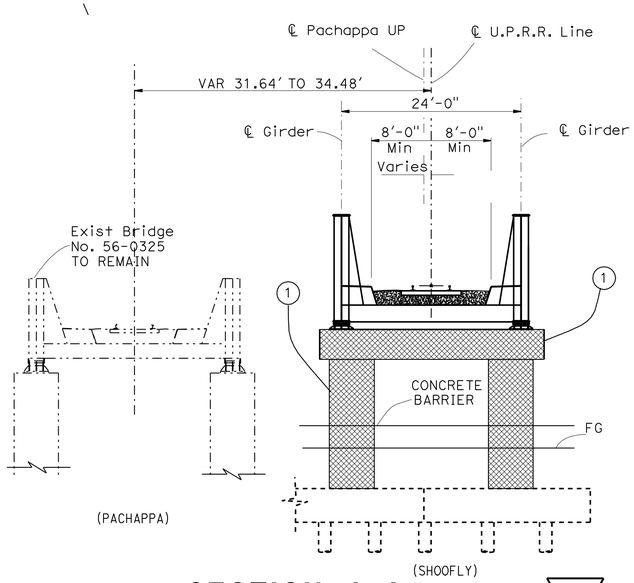

SECTION A-A

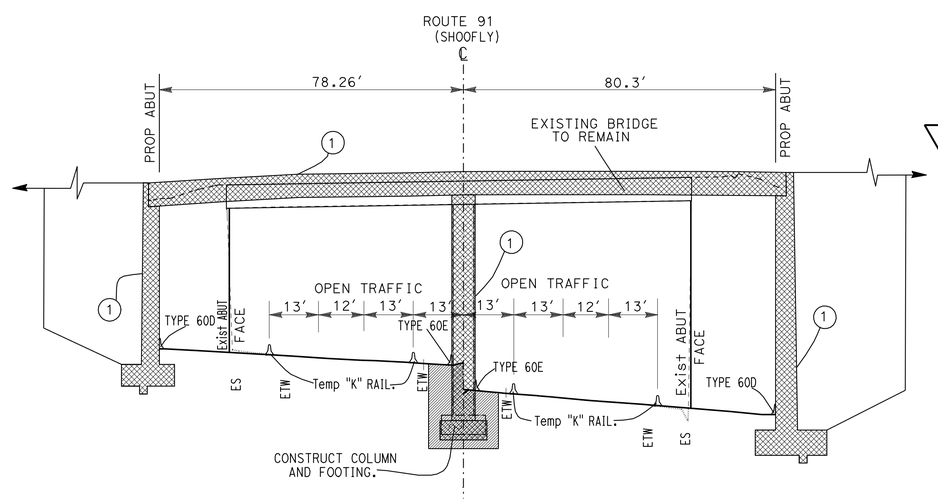

SECTION B-B

1 REVISED PER ADDENDUM No. 1 DATED NOVEMBER 8, 2011

THIS PLAN ACCURATE FOR STAGE CONSTRUCTION ONLY.

STAGE 1 PHASE 2
STAGE CONSTRUCTION
NO SCALE
SC-8

REVISED BY	DATE REVISED
KENT NGUYEN	MARK PERTILE
CALCULATED-DESIGNED BY	CHECKED BY
FUNCTIONAL SUPERVISOR	MARK PERTILE

STATE OF CALIFORNIA - DEPARTMENT OF TRANSPORTATION
Caltrans® DESIGN

LAST REVISION 10-13-11 | DATE PLOTTED => 08-NOV-2011 | TIME PLOTTED => 11:23

Dist	COUNTY	ROUTE	POST MILES TOTAL PROJECT	SHEET No.	TOTAL SHEETS
08	Riv	91	15.6/21.6	449	2028

Mark Pertile 10-28-11
REGISTERED CIVIL ENGINEER DATE

4-25-11
PLANS APPROVAL DATE

REGISTERED PROFESSIONAL ENGINEER MARK PERTILE No. 50395 Exp. 6/30/11 CIVIL STATE OF CALIFORNIA

THE STATE OF CALIFORNIA OR ITS OFFICERS OR AGENTS SHALL NOT BE RESPONSIBLE FOR THE ACCURACY OR COMPLETENESS OF SCANNED COPIES OF THIS PLAN SHEET.

1

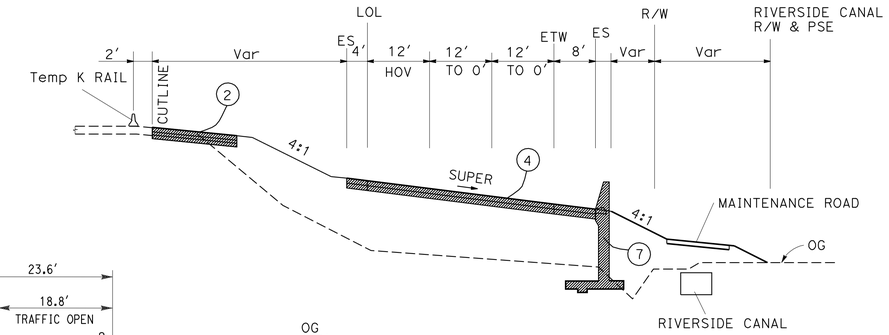

SECTION J-J

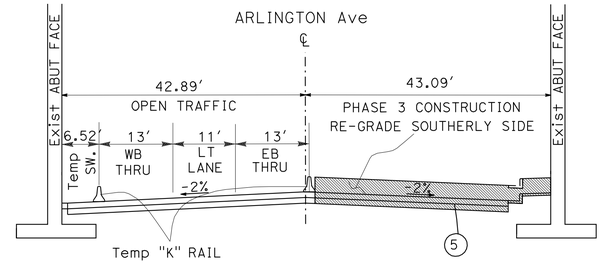

SECTION F-F

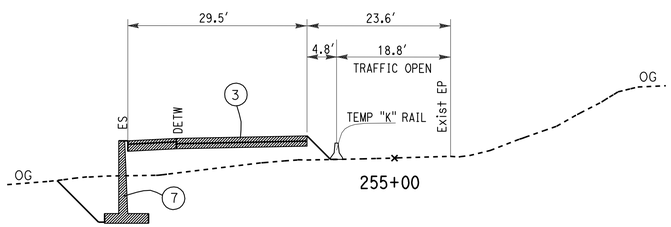

SECTION A-A

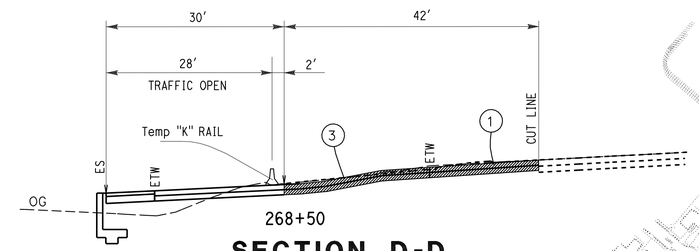

SECTION D-D

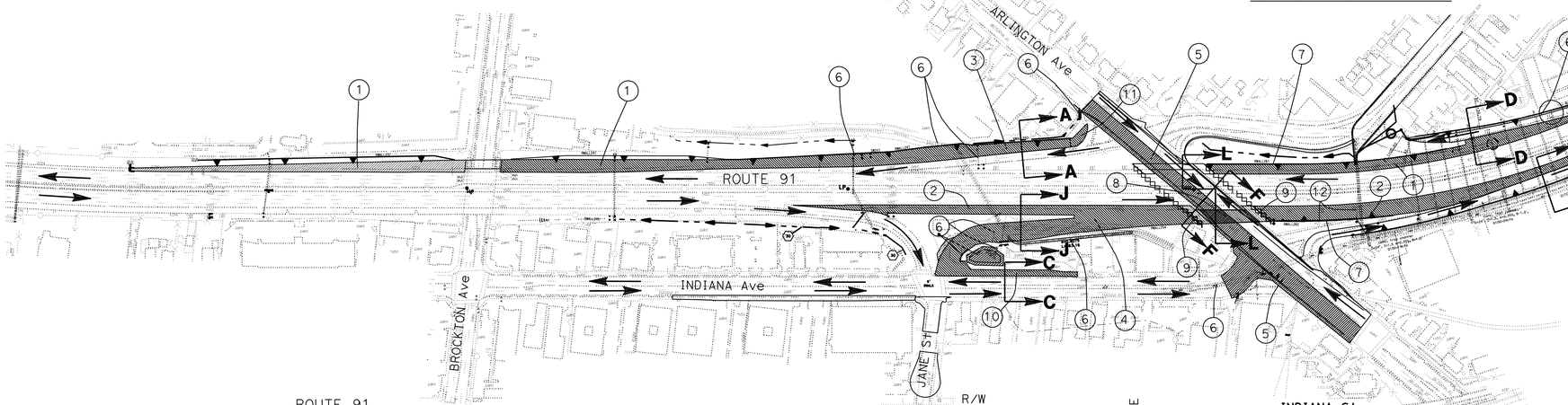

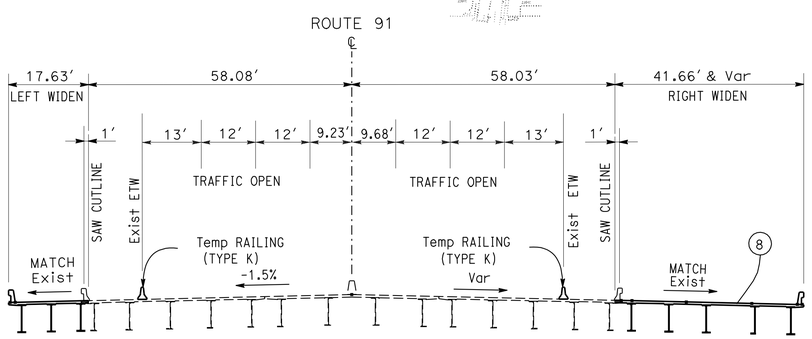

SECTION L-L

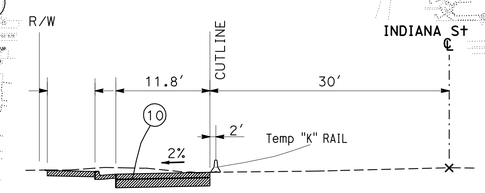

SECTION C-C

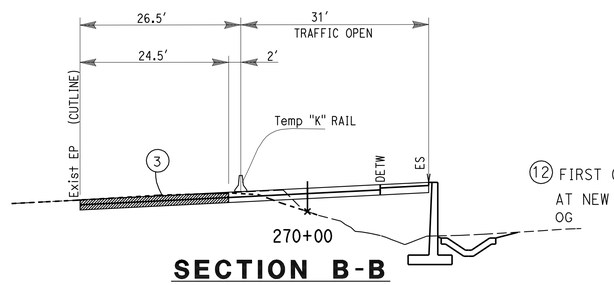

SECTION B-B

CONSTRUCT IN THIS STAGE:

1. CONSTRUCT THE WIDENING PORTION OF THE WB ROUTE 91 FROM STA. 228+75.00 TO STA. 246+26.45
2. CONSTRUCT THE WIDENING PORTION OF THE EB ROUTE 91 FROM STA. 250+00.00 TO STA. 273+00.00
3. RECONTRUCT PORTION OF THE WB ARLINGTON ENTRANCE RAMP.
4. CONSTRUCT NEW EB ARLINGTON HOOK ENTRANCE RAMP.
5. RE-GRADE THE SOUTHERLY HALF OF ARLINGTON Ave. FROM STA. 30+10.00 TO STA. 40+60.00 RE-GRADE THE PORTION OF THE INDIANA AVENUE
6. CONSTRUCT PORTION OF DRAINAGE SYSTEM : 25 31 33 34 37 38 46
7. CONSTRUCT RETAINNING WALL NUMBER: 262.
8. CONSTRUCT THE WIDEN PORTION OF THE RIGHT ARLINGTON BRIDGE.
9. CONSTRUCT APROACH SLAB
10. CONSTRUCT WIDEN PORTION OF THE INDIANA Ave.
11. CONSTRUCT TEMPORARY PAVEMENT WB ENTRANCE RAMP AT ARLINGTON Ave SEE SHEET SCD-1
12. FIRST CONSTRUCT THE WIDENING PORTION OF DRAINAGE SYSTEM 39, SECOND SHIFT TRAFFIC OUTSIDE AT NEW WIDEN THEN CONSTRUCT THE REMAIN PORTION OF DRAINAGE SYSTEM 39 USE RAPID SET CONCRETE

1 REVISED PER ADDENDUM No. 1
DATED NOVEMBER 8, 2011

THIS PLAN ACCURATE FOR STAGE CONSTRUCTION ONLY.

STAGE 1 PHASE 3
STAGE CONSTRUCTION
NO SCALE

SC-10

STATE OF CALIFORNIA - DEPARTMENT OF TRANSPORTATION
Caltrans DESIGN

FUNCTIONAL SUPERVISOR: MARK PERTILE
CALCULATED-DESIGNED BY: KENT NGUYEN
CHECKED BY: MARK PERTILE
REVISED BY
DATE REVISED

LAST REVISION 10-13-11
DATE PLOTTED => 08-NOV-2011
TIME PLOTTED => 11:23

Dist	COUNTY	ROUTE	POST MILES TOTAL PROJECT	SHEET No.	TOTAL SHEETS
08	Riv	91	15.6/21.6	450	2028

Mark Pertile 10-28-11
REGISTERED CIVIL ENGINEER DATE

4-25-11
PLANS APPROVAL DATE

REGISTERED PROFESSIONAL ENGINEER MARK PERTILE No. 50395 Exp. 6/30/11 CIVIL STATE OF CALIFORNIA

THE STATE OF CALIFORNIA OR ITS OFFICERS OR AGENTS SHALL NOT BE RESPONSIBLE FOR THE ACCURACY OR COMPLETENESS OF SCANNED COPIES OF THIS PLAN SHEET.

CONSTRUCT IN THIS STAGE:

1. INSTALL BY OTHERS THE TEMPORARY RAILROAD TRACK AT SHOOFLY UP BRIDGE.

   SEE RAIL ROAD TRAFFIC HANDLING PLANS, SEE SHEET C-109 TO C-122

1 3. CONSTRUCT THE DRAINAGE SYSTEM 66 67 68 70

4. CONTRUCTION THE WIDENING PORTION OF WB ROUTE 91 FROM STA. 278+50.00 TO STA. 285+90.00

5. CONTRUCTION THE WIDENING PORTION OF EB ROUTE 91 FROM STA. 280+50.00 TO STA. 287+45.00

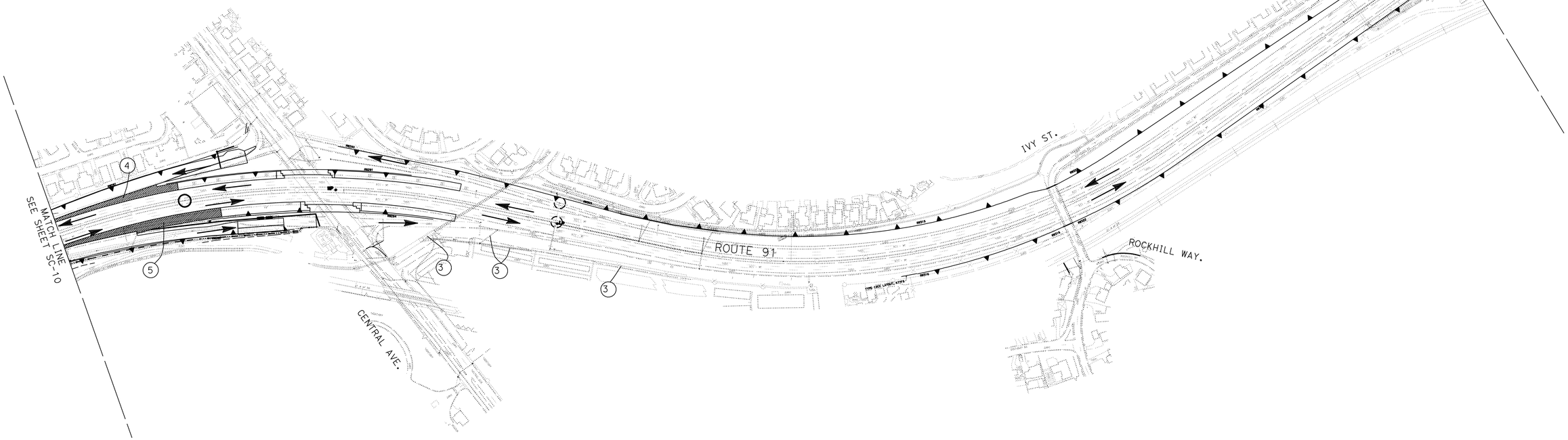

1 REVISED PER ADDENDUM No. 1 DATED NOVEMBER 8, 2011

THIS PLAN ACCURATE FOR STAGE CONSTRUCTION ONLY.

STAGE 1 PHASE 3
STAGE CONSTRUCTION
NO SCALE
SC-11

STATE OF CALIFORNIA - DEPARTMENT OF TRANSPORTATION
Caltrans
DESIGN

FUNCTIONAL SUPERVISOR: MARK PERTILE
CALCULATED-DESIGNED BY: KENT NGUYEN
CHECKED BY: MARK PERTILE
REVISED BY
DATE REVISED

LAST REVISION 10-13-11
DATE PLOTTED => 08-NOV-2011
TIME PLOTTED => 11:23

Dist	COUNTY	ROUTE	POST MILES TOTAL PROJECT	SHEET No.	TOTAL SHEETS
08	Riv	91	15.6/21.6	451	2028

Mark Pertile 10-28-11
REGISTERED CIVIL ENGINEER DATE

4-25-11
PLANS APPROVAL DATE

REGISTERED PROFESSIONAL ENGINEER
MARK PERTILE
No. 50395
Exp. 6/30/11
CIVIL
STATE OF CALIFORNIA

THE STATE OF CALIFORNIA OR ITS OFFICERS OR AGENTS SHALL NOT BE RESPONSIBLE FOR THE ACCURACY OR COMPLETENESS OF SCANNED COPIES OF THIS PLAN SHEET.

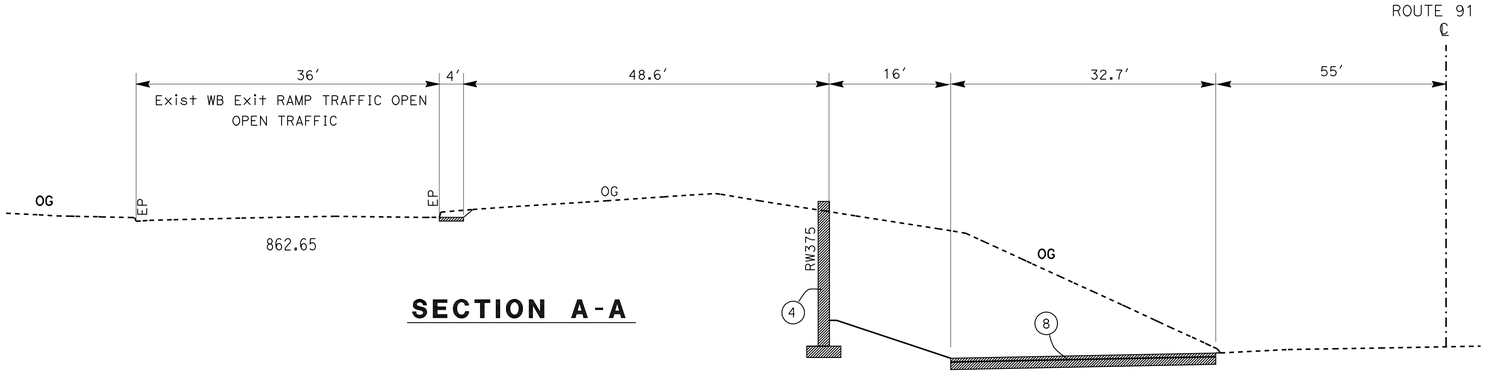

SECTION A-A

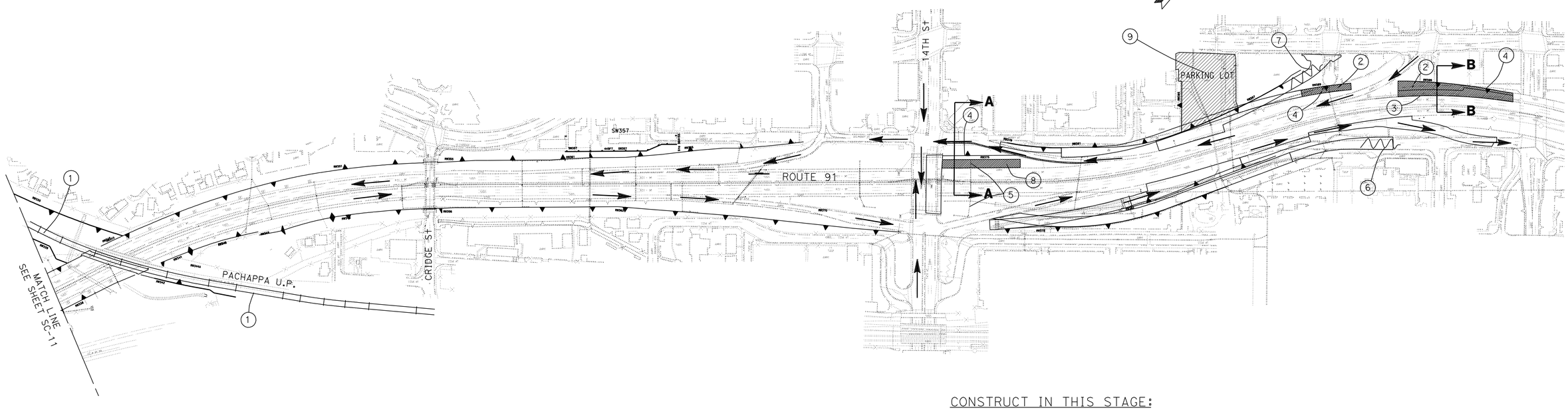

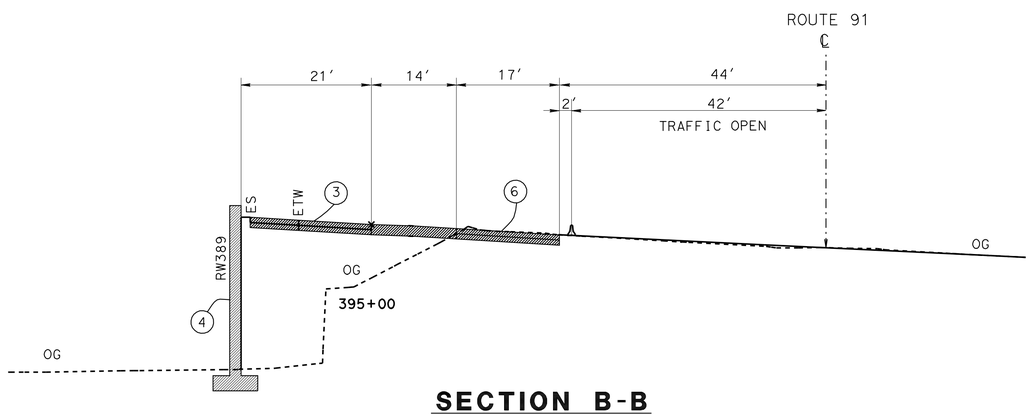

SECTION B-B

CONSTRUCT IN THIS STAGE:

1. (1) INSTALL BY OTHERS THE TEMPORARY RAILROAD TRACK AT SHOOFLY UP BRIDGE.
   SEE RAILROAD TRAFFIC HANDLING PLANS, SEE SHEET C-111 AND C-112
2. (2) RECONSTRUCT THE PORTION OF 14TH St WB EXIT RAMP.
3. (3) CONSTRUCT THE WIDENING PORTION OF WB ROUTE 91 FROM STA. 393+50.00 TO STA. 398+05.00
4. (4) CONSTRUCT PORTION OF RETAINING WALL NUMBER: 375 AND 389.
5. (5) CONSTRUCT PORTION OF DRAINAGE SYSTEM (107)
6. (6) CLOSE MULBERRY St EXIT RAMP.
7. (7) CLOSE 10th St WB ENTRANCE RAMP.
8. (8) CONSTRUCT THE WIDENING PORTION OF WB ROUTE 91 FROM STA. 375+00.00 TO STA. 378+20.00
9. (9) CONSTRUCT RETAINING WALL NUMBER: 385; REGRADE PARKING LOT.

1 REVISED PER ADDENDUM No. 1 DATED NOVEMBER 8, 2011

THIS PLAN ACCURATE FOR STAGE CONSTRUCTION ONLY.

STAGE 1 PHASE 3
STAGE CONSTRUCTION
NO SCALE
SC-12

STATE OF CALIFORNIA - DEPARTMENT OF TRANSPORTATION
Caltrans®
DESIGN

FUNCTIONAL SUPERVISOR: MARK PERTILE
CALCULATED-DESIGNED BY: KENT NGUYEN
CHECKED BY: MARK PERTILE
REVISED BY
DATE REVISED

LAST REVISION 10-13-11
DATE PLOTTED => 08-NOV-2011
TIME PLOTTED => 11:23

Dist	COUNTY	ROUTE	POST MILES TOTAL PROJECT	SHEET No.	TOTAL SHEETS
08	Riv	91	15.6/21.6	452	2028

Mark Pertile 10-28-11
REGISTERED CIVIL ENGINEER DATE

4-25-11
PLANS APPROVAL DATE

REGISTERED PROFESSIONAL ENGINEER MARK PERTILE No. 50395 Exp. 6/30/11 CIVIL STATE OF CALIFORNIA

THE STATE OF CALIFORNIA OR ITS OFFICERS OR AGENTS SHALL NOT BE RESPONSIBLE FOR THE ACCURACY OR COMPLETENESS OF SCANNED COPIES OF THIS PLAN SHEET.

1

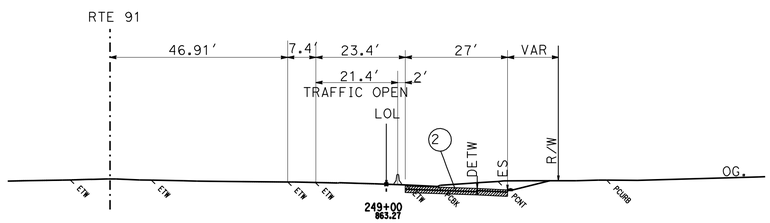

INDIANA AVE EASTBOUND EXIT RAMP

SECTION A-A

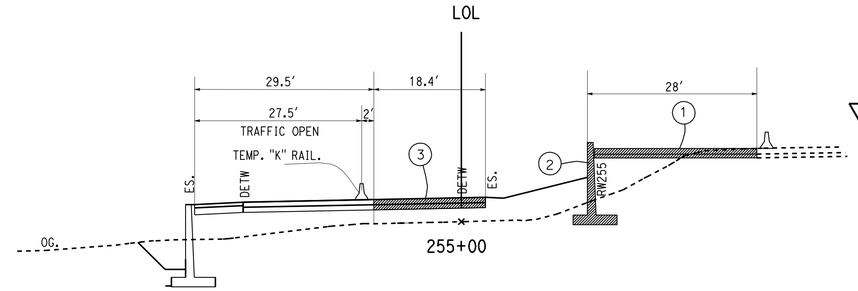

SECTION B-B

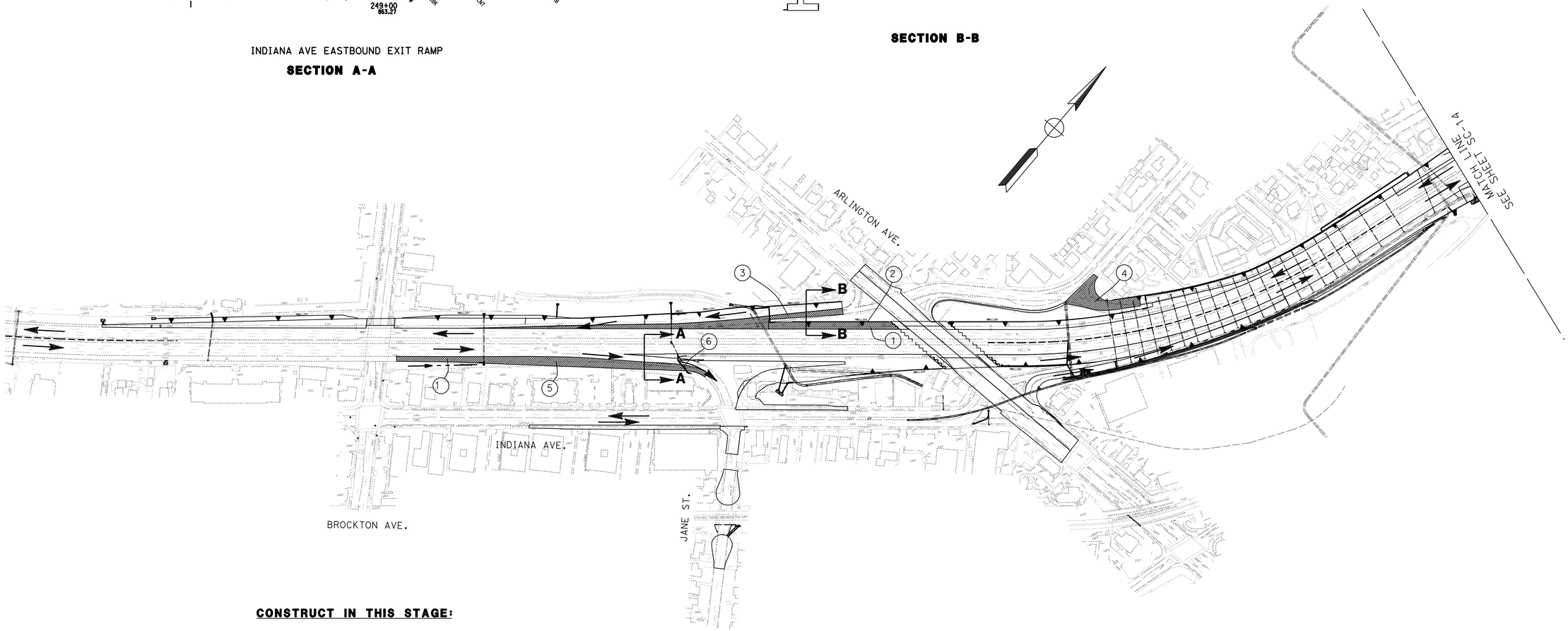

CONSTRUCT IN THIS STAGE:

1. CONSTRUCT THE WIDENING PORTION OF THE WB ROUTE 91 FROM STA. 240+20.00 TO STA. 258+59.00
   CONSTRUCT THE WIDENING PORTION OF THE EB ROUTE 91 FROM STA. 241+00.00 TO STA. 244+80.00
2. CONSTRUCT THE RETAINING WALL NUMBER 255
3. RECONSTRUCT THE PORTION OF WB ON RAMP AT ARLINGTON AVE.
4. CONSTRUCT THE REMAINING PORTION OF THE WB OFF RAMP AT ARLINGTON AVE. BY TEN DAY CLOSURE
5. CONSTRUCT THE WIDENING PORTION OF EB OFF RAMP AT INDIANA ST.
6. CONSTRUCT PORTION OF DRAINAGE SYSTEM 29

1 **REVISED PER ADDENDUM No. 1 DATED NOVEMBER 8, 2011**

THIS PLAN ACCURATE FOR STAGE CONSTRUCTION ONLY.

STAGE 1 PHASE 4
STAGE CONSTRUCTION
NO SCALE

SC-13

STATE OF CALIFORNIA - DEPARTMENT OF TRANSPORTATION
Caltrans®
DESIGN

FUNCTIONAL SUPERVISOR: MARK PERTILE
CALCULATED-DESIGNED BY: KENT NGUYEN
CHECKED BY: MARK PERTILE
REVISED BY
DATE REVISED

LAST REVISION 10-13-11
DATE PLOTTED => 08-NOV-2011
TIME PLOTTED => 11:23

Dist	COUNTY	ROUTE	POST MILES TOTAL PROJECT	SHEET No.	TOTAL SHEETS
08	Riv	91	15.6/21.6	457	2028

Mark Pertile 10-28-11
REGISTERED CIVIL ENGINEER DATE

4-25-11
PLANS APPROVAL DATE

REGISTERED PROFESSIONAL ENGINEER MARK PERTILE No. 50395 Exp. 6/30/11 CIVIL STATE OF CALIFORNIA

THE STATE OF CALIFORNIA OR ITS OFFICERS OR AGENTS SHALL NOT BE RESPONSIBLE FOR THE ACCURACY OR COMPLETENESS OF SCANNED COPIES OF THIS PLAN SHEET.

CONSTRUCT IN THIS STAGE:

1 ① CONSTRUCT THE REMAINING PORTION 14TH St WB EXIT RAMP.

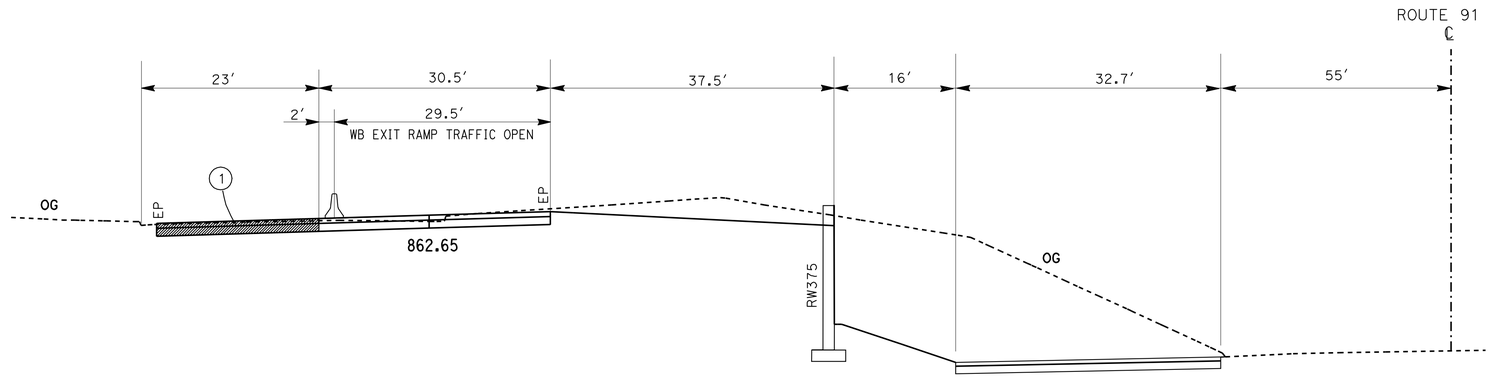

SECTION A-A

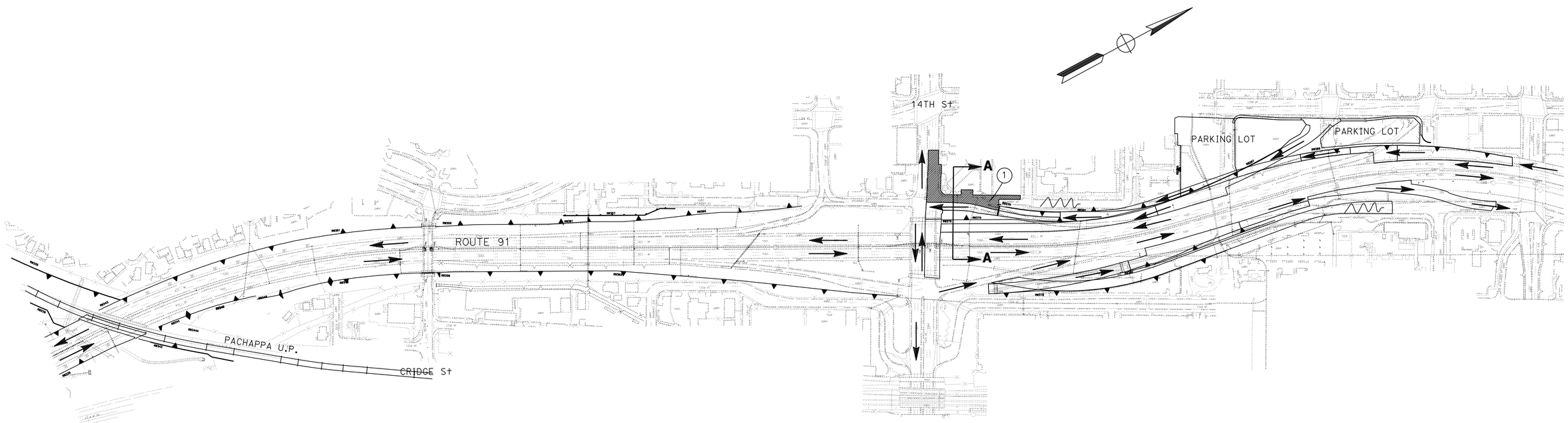

1 REVISED PER ADDENDUM No. 1 DATED NOVEMBER 8, 2011

THIS PLAN ACCURATE FOR STAGE CONSTRUCTION ONLY.

STAGE 1 PHASE 6
STAGE CONSTRUCTION
NO SCALE
SC-18

STATE OF CALIFORNIA - DEPARTMENT OF TRANSPORTATION
Caltrans DESIGN

FUNCTIONAL SUPERVISOR: MARK PERTILE
CALCULATED-DESIGNED BY: KENT NGUYEN
CHECKED BY: MARK PERTILE
REVISED BY / DATE REVISED

LAST REVISION 10-13-11
DATE PLOTTED => 08-NOV-2011
TIME PLOTTED => 11:24

Dist	COUNTY	ROUTE	POST MILES TOTAL PROJECT	SHEET No.	TOTAL SHEETS
08	Riv	91	15.6/21.6	459	2028

Mark Pertile 10-28-11
REGISTERED CIVIL ENGINEER DATE

4-25-11
PLANS APPROVAL DATE

REGISTERED PROFESSIONAL ENGINEER MARK PERTILE No. 50395 Exp. 6/30/11 CIVIL STATE OF CALIFORNIA

THE STATE OF CALIFORNIA OR ITS OFFICERS OR AGENTS SHALL NOT BE RESPONSIBLE FOR THE ACCURACY OR COMPLETENESS OF SCANNED COPIES OF THIS PLAN SHEET.

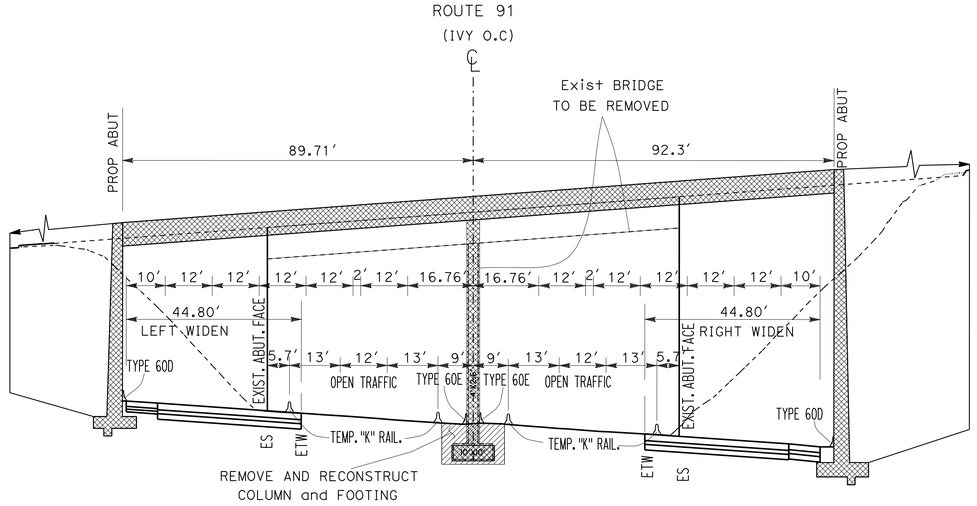

SECTION B-B

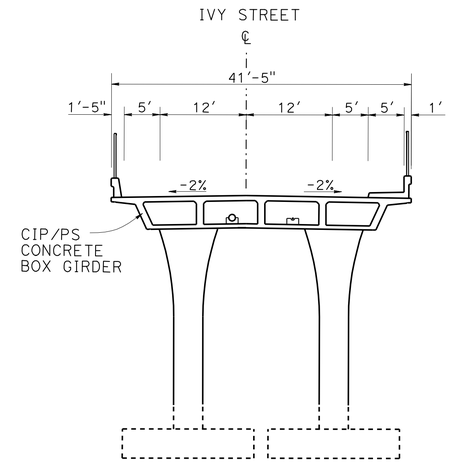

SECTION A-A

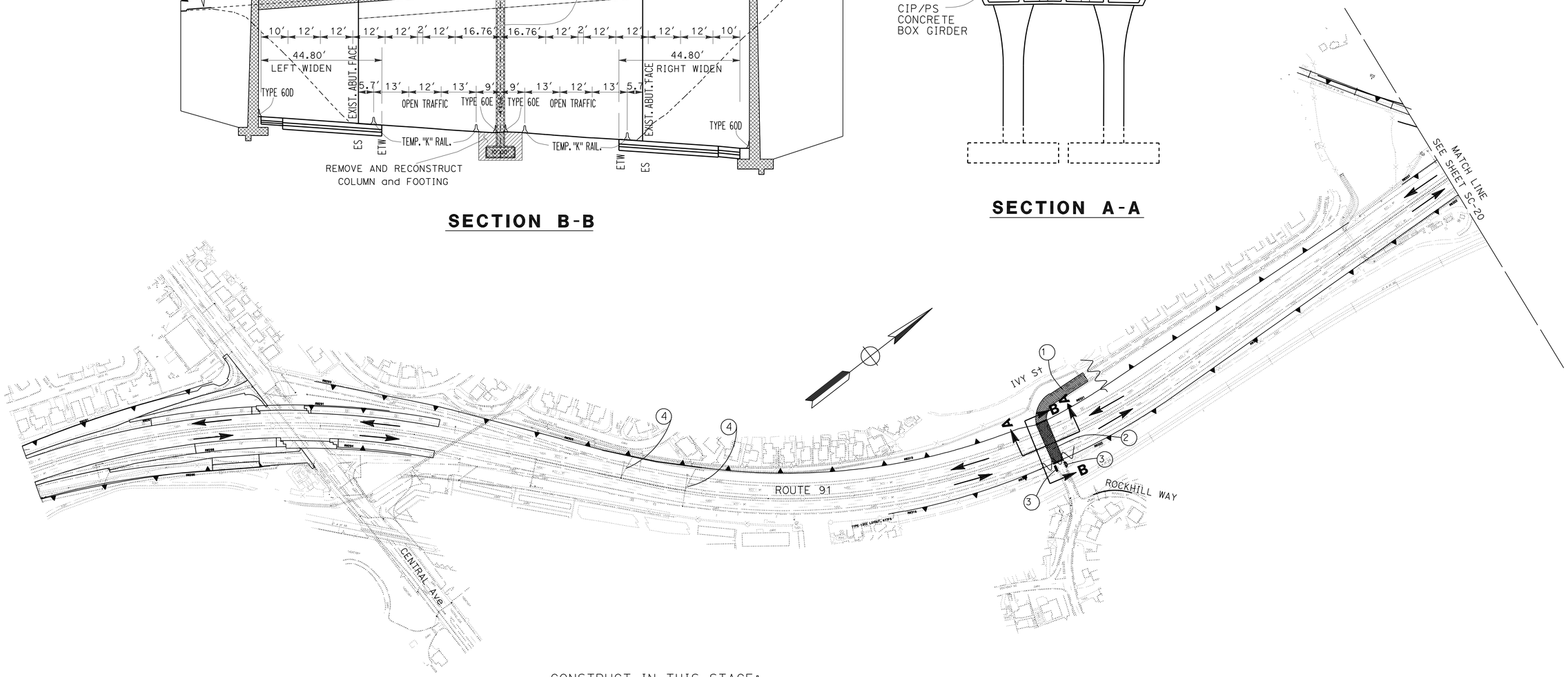

GENERAL NOTE FOR BRIDGE SEQUENCE CONSTRUCTION:

STAGE 2 CONSTRUCTION:

1- REMOVE WESTSIDE HALF OF 14 St AND RECONSTRUCT.
2- REMOVE AND REPLACE IVY OC.
3- REMOVE AND REPLACE IVY OH.
4- REMOVE AND REPLACE CRIDGE OC.
5- REMOVE AND REPLACE PACHAPPA RR.

CONSTRUCT IN THIS STAGE:

1. RECONSTRUCT THE PORTION OF IVY St.
2. REMOVE AND REPLACE IVY OC. BRIDGE.
3. REGRADE THE ACCESS RAMPS FOR CITY PUMP STATION.
4. CONSTRUCT MEDIAN/TRAVEL-WAY PORTION OF DRAINAGE SYSTEM

1 74 75 DURING BRIDGE DEMOLITION.

1 REVISED PER ADDENDUM No. 1 DATED NOVEMBER 8, 2011

THIS PLAN ACCURATE FOR STAGE CONSTRUCTION ONLY.

STAGE 2 PHASE 1
STAGE CONSTRUCTION
NO SCALE
SC-20

STATE OF CALIFORNIA - DEPARTMENT OF TRANSPORTATION
Caltrans® DESIGN

FUNCTIONAL SUPERVISOR: MARK PERTILE
CALCULATED-DESIGNED BY: KENT NGUYEN
CHECKED BY: MARK PERTILE
REVISED BY
DATE REVISED

LAST REVISION 10-13-11
DATE PLOTTED => 08-NOV-2011
TIME PLOTTED => 11:24

Dist	COUNTY	ROUTE	POST MILES TOTAL PROJECT	SHEET No.	TOTAL SHEETS
08	Riv	91	15.6/21.6	460	2028

Mark Pertile 10-28-11
REGISTERED CIVIL ENGINEER DATE

4-25-11
PLANS APPROVAL DATE

REGISTERED PROFESSIONAL ENGINEER MARK PERTILE No. 50395 Exp. 6/30/11 CIVIL STATE OF CALIFORNIA

THE STATE OF CALIFORNIA OR ITS OFFICERS OR AGENTS SHALL NOT BE RESPONSIBLE FOR THE ACCURACY OR COMPLETENESS OF SCANNED COPIES OF THIS PLAN SHEET.

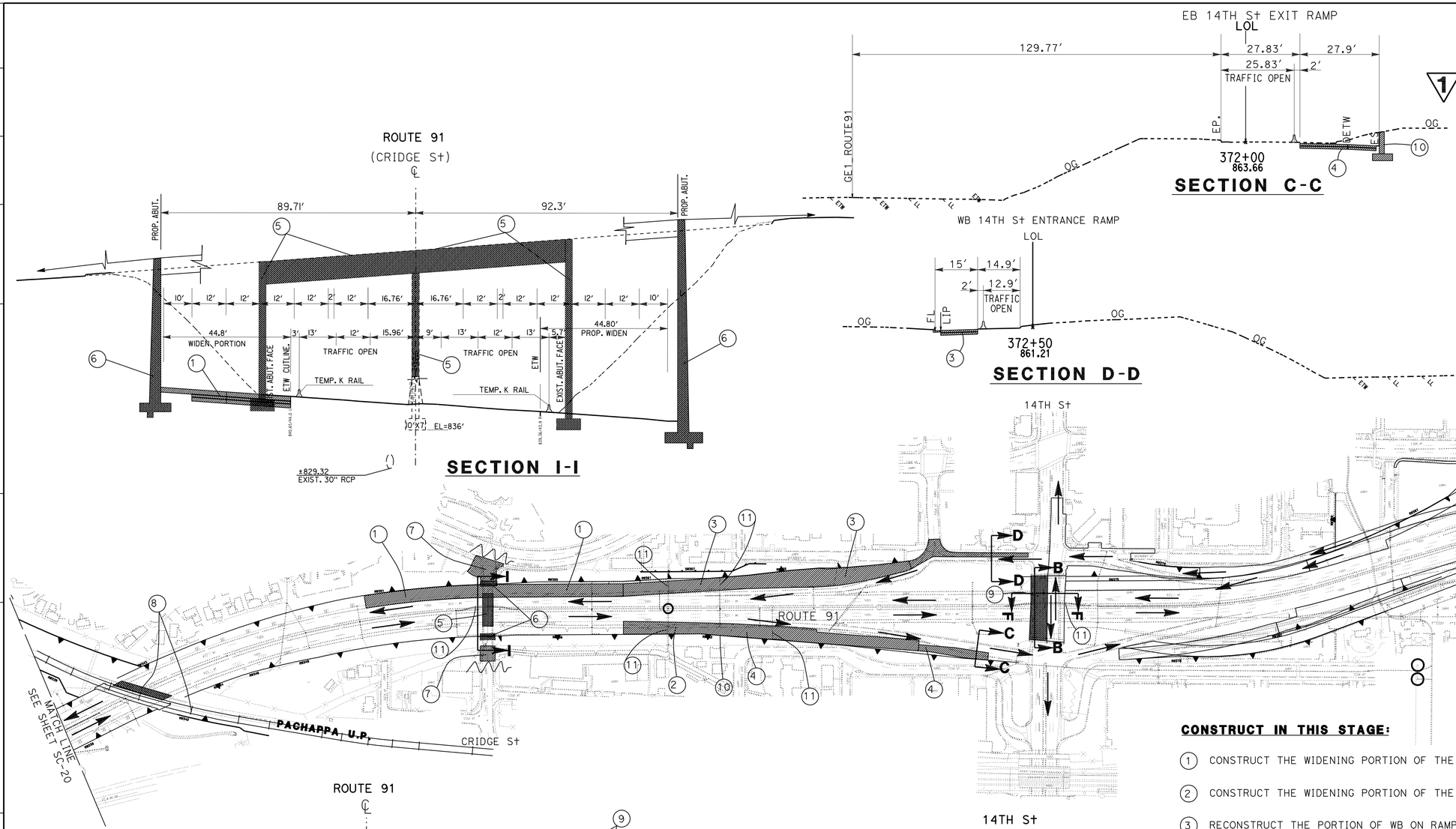

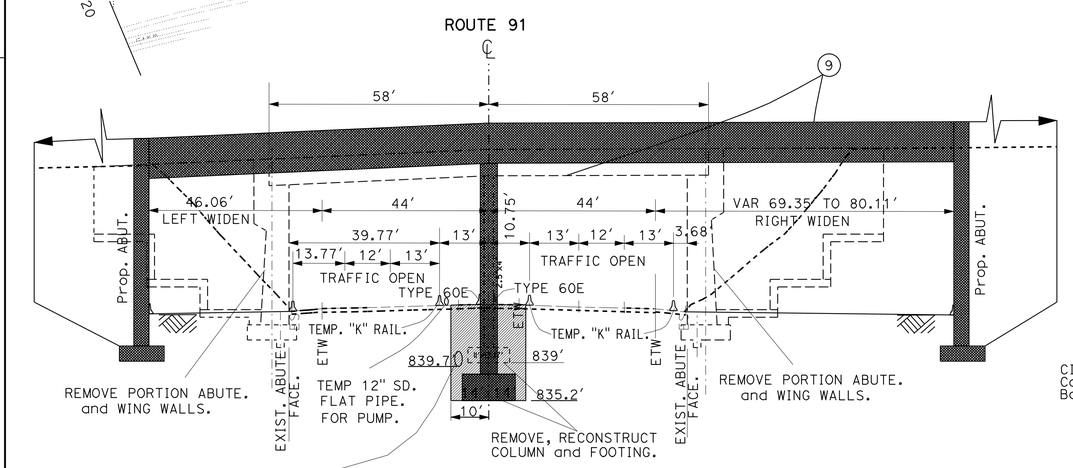

SECTION B-B

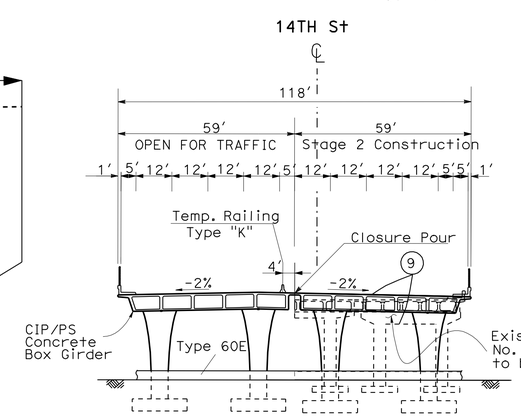

SECTION F-F

CONSTRUCT IN THIS STAGE:

1. CONSTRUCT THE WIDENING PORTION OF THE WB ROUTE 91 FROM STA.350+45.00 TO STA.359+50.00
2. CONSTRUCT THE WIDENING PORTION OF THE EB ROUTE 91 FROM STA.359+50.00 TO STA. 363+50.00
3. RECONSTRUCT THE PORTION OF WB ON RAMP AT 14TH ST.
4. RECONSTRUCT THE PORTION OF EB OFF RAMP AT 14TH ST.
5. REMOVE THE DECK, ABUTMENT ON BOTH SIDE, AND PORTION OF MEDIAN COLUMN AT CRIDGE.
6. RECONSTRUCT THE ABUTTMENT ON BOTH SIDES.
7. REGRADE THE PORTION OF CRIDGE ST. (CRIDGE ST. WILL BE CLOSE.)
8. REMOVE EXISTING PACHAPPA RAILROAD UP BRIDGE. AND SWITCH THE TRAIN TO TEMPORARY TRACK.
9. DIRECT TRAFFIC TO NORTHLY HALF OF 14TH ST. OC. AND REMOVE AND RECONSTRUCT THE SOUTHERLY HALF OF THE 14TH ST. BRIDGE.
10. CONSTRUCT THE RETAINING WALL NUMBER: 361,362
11. REMOVE AND RECONSTRUCT THE PORTION DRAINAGE SYSTEM NUMBER: 90 96 98 100 105

1 **REVISED PER ADDENDUM No. 1 DATED NOVEMBER 8, 2011**

THIS PLAN ACCURATE FOR STAGE CONSTRUCTION ONLY.

STAGE 2 PHASE 1
STAGE CONSTRUCTION
NO SCALE

SC-21

STATE OF CALIFORNIA - DEPARTMENT OF TRANSPORTATION
DESIGN
FUNCTIONAL SUPERVISOR: MARK PERTILE
CALCULATED-DESIGNED BY: KENT NGUYEN
CHECKED BY: MARK PERTILE
REVISED BY
DATE REVISED

LAST REVISION 10-13-11
DATE PLOTTED => 08-NOV-2011
TIME PLOTTED => 11:24

Dist	COUNTY	ROUTE	POST MILES TOTAL PROJECT	SHEET No.	TOTAL SHEETS
08	Riv	91	15.6/21.6	461	2028

Mark Pertile 10-28-11
REGISTERED CIVIL ENGINEER DATE

4-25-11
PLANS APPROVAL DATE

REGISTERED PROFESSIONAL ENGINEER
MARK PERTILE
No. 50395
Exp. 6/30/11
CIVIL
STATE OF CALIFORNIA

THE STATE OF CALIFORNIA OR ITS OFFICERS OR AGENTS SHALL NOT BE RESPONSIBLE FOR THE ACCURACY OR COMPLETENESS OF SCANNED COPIES OF THIS PLAN SHEET.

CONSTRUCT IN THIS STAGE:

1. REMOVE AND RECONSTRUCT IVY OH BRIDGE.
2. RECONSTRUCT THE PORTION OF IVY St.
3. CONSTRUCT DRAINAGE SYSTEM NUMBER 76 77 78

1

NOTE:

KEEP THE ACCESS ROAD OPEN TO THE CITY PUMP STATION

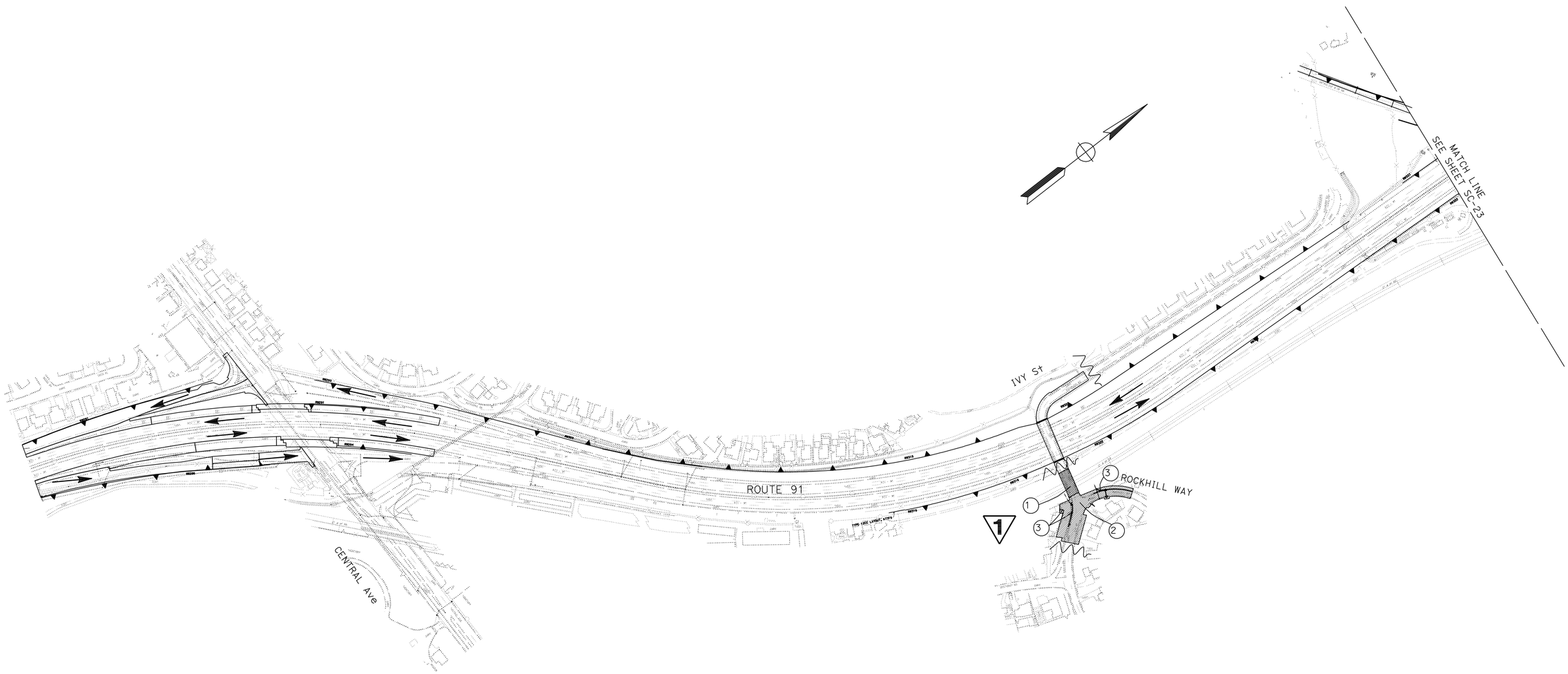

1 REVISED PER ADDENDUM No. 1 DATED NOVEMBER 8, 2011

THIS PLAN ACCURATE FOR STAGE CONSTRUCTION ONLY.

STAGE 2 PHASE 2
STAGE CONSTRUCTION
NO SCALE

SC-22

STATE OF CALIFORNIA - DEPARTMENT OF TRANSPORTATION
Caltrans
DESIGN

FUNCTIONAL SUPERVISOR: MARK PERTILE
CALCULATED-DESIGNED BY: KENT NGUYEN
CHECKED BY: MARK PERTILE
REVISED BY
DATE REVISED

LAST REVISION 10-13-11
DATE PLOTTED => 08-NOV-2011
TIME PLOTTED => 11:24

BORDER LAST REVISED 4/11/2008
RELATIVE BORDER SCALE IS IN INCHES 0 1 2 3
USERNAME => s121614
DGN FILE => 844840ma022.add
CU 08227
EA 448401

Dist	COUNTY	ROUTE	POST MILES TOTAL PROJECT	SHEET No.	TOTAL SHEETS
08	Riv	91	15.6/21.6	466	2028

Mark Pertile 10-28-11
REGISTERED CIVIL ENGINEER DATE

4-25-11
PLANS APPROVAL DATE

REGISTERED PROFESSIONAL ENGINEER
MARK PERTILE
No. 50395
Exp. 6/30/11
CIVIL
STATE OF CALIFORNIA

THE STATE OF CALIFORNIA OR ITS OFFICERS OR AGENTS SHALL NOT BE RESPONSIBLE FOR THE ACCURACY OR COMPLETENESS OF SCANNED COPIES OF THIS PLAN SHEET.

CONSTRUCT IN THIS STAGE:

1

1. INSTALL PERMANENT TRACK AND REMOVE TEMPORARY TRACK BY OTHERS, SEE SHEETS C-112I TO C-112L.
   REMOVE RW339 AND RW342 AND SUPERSTRUCTURE OF SHOOFLY BRIDGE, SEE SHEETS C-112M AND C-112N
2. CONSTRUCT THE PORTION OF 14TH ST. AND EB ON RAMP WITH TEN DAY CLOSURE.
3. CONSTRUCT THE PORTION OF OFF RAMP AT UNIVERSITY ST. WITH TEN DAY CLOSURE.
4. CONSTRUCT THE PORTION OF THE RETAINING WALL NUMBER: 376 WITH IN TEN DAY CLOSURE.
5. CONSTRUCT THE PORTION OF DRAINAGE SYSTEM NUMBER: 111
6. CONSTRUCT THE WIDENING PORTION OF WB ROUTE 91 WITH RAPID SET CONCRETE BY OVER NIGHT LANE CLOSURE, FROM Sta 375+00.00 TO Sta 386+60.00
7. CONSTRUCT THE WIDENING PORTION OF EB ROUTE 91 WITH RAPID SET CONCRETE BY OVER NIGHT LANE CLOSURE, FROM Sta 383+00.00 TO Sta 389+70.00
8. CONSTRUCT THE WIDENING PORTION OF EB ROUTE 91 WITH RAPID SET CONCRETE FROM Sta 389+80.00 TO 395+40.00 BY TEN DAY CLOSURE.
9. TEMPORAY RAMP WILL BE REMOVE.
10. CONSTRUCT THE WIDENING PORTION OF WB ROUTE 91 FROM Sta 386+70.00 TO Sta 392+70.00

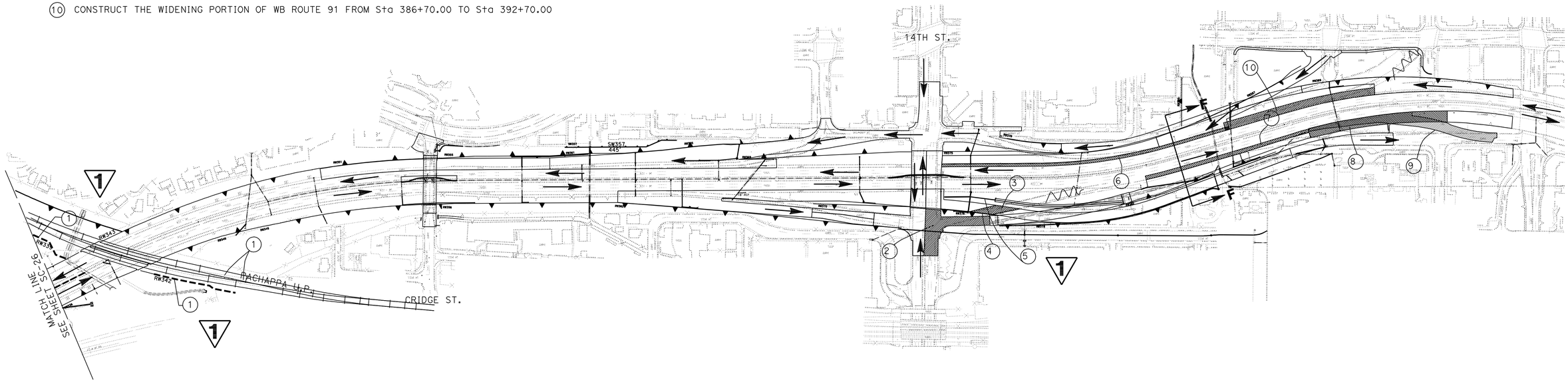

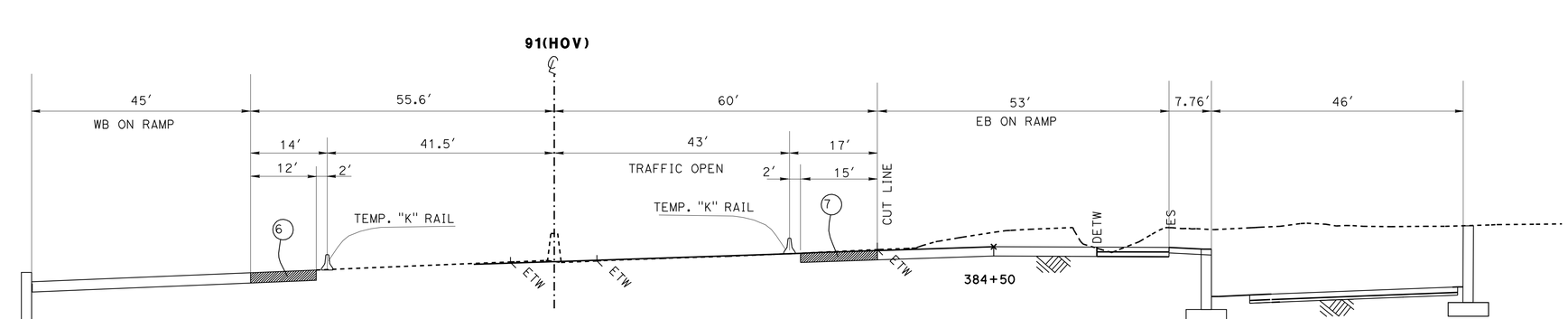

SECTION F-F

1 **REVISED PER ADDENDUM No. 1 DATED NOVEMBER 8, 2011**

THIS PLAN ACCURATE FOR STAGE CONSTRUCTION ONLY.

STAGE 2 PHASE 4
STAGE CONSTRUCTION
NO SCALE
SC-27

REVISED BY | DATE REVISED
KENT NGUYEN | MARK PERTILE
CALCULATED-DESIGNED BY | CHECKED BY
FUNCTIONAL SUPERVISOR
MARK PERTILE

STATE OF CALIFORNIA - DEPARTMENT OF TRANSPORTATION
Caltrans
DESIGN

LAST REVISION 10-13-11 | DATE PLOTTED => 08-NOV-2011 | TIME PLOTTED => 11:24

Dist	COUNTY	ROUTE	POST MILES TOTAL PROJECT	SHEET No.	TOTAL SHEETS
08	Riv	91	15.6/21.6	469	2028

Mark Pertile 10-28-11
REGISTERED CIVIL ENGINEER DATE

4-25-11
PLANS APPROVAL DATE

REGISTERED PROFESSIONAL ENGINEER MARK PERTILE No. 50395 Exp. 6/30/11 CIVIL STATE OF CALIFORNIA

THE STATE OF CALIFORNIA OR ITS OFFICERS OR AGENTS SHALL NOT BE RESPONSIBLE FOR THE ACCURACY OR COMPLETENESS OF SCANNED COPIES OF THIS PLAN SHEET.

LEGEND:
- ROAD WORK
- STRUCTURE WORK
- TEMPORARY PAVEMENT
- ROAD CLOSE
- DIRECTION OF TRAFFIC

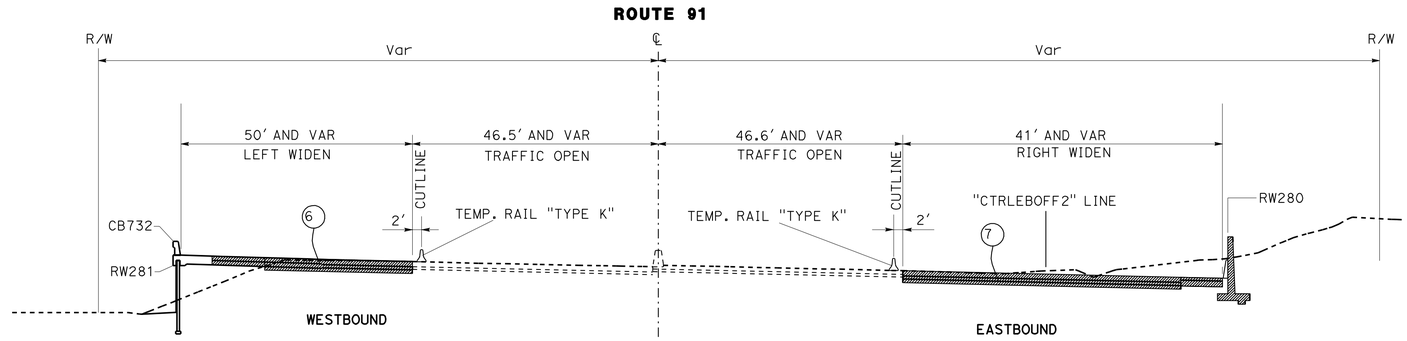

SECTION Q-Q
(TYPICAL)

SECTION B-B

SECTION D-D

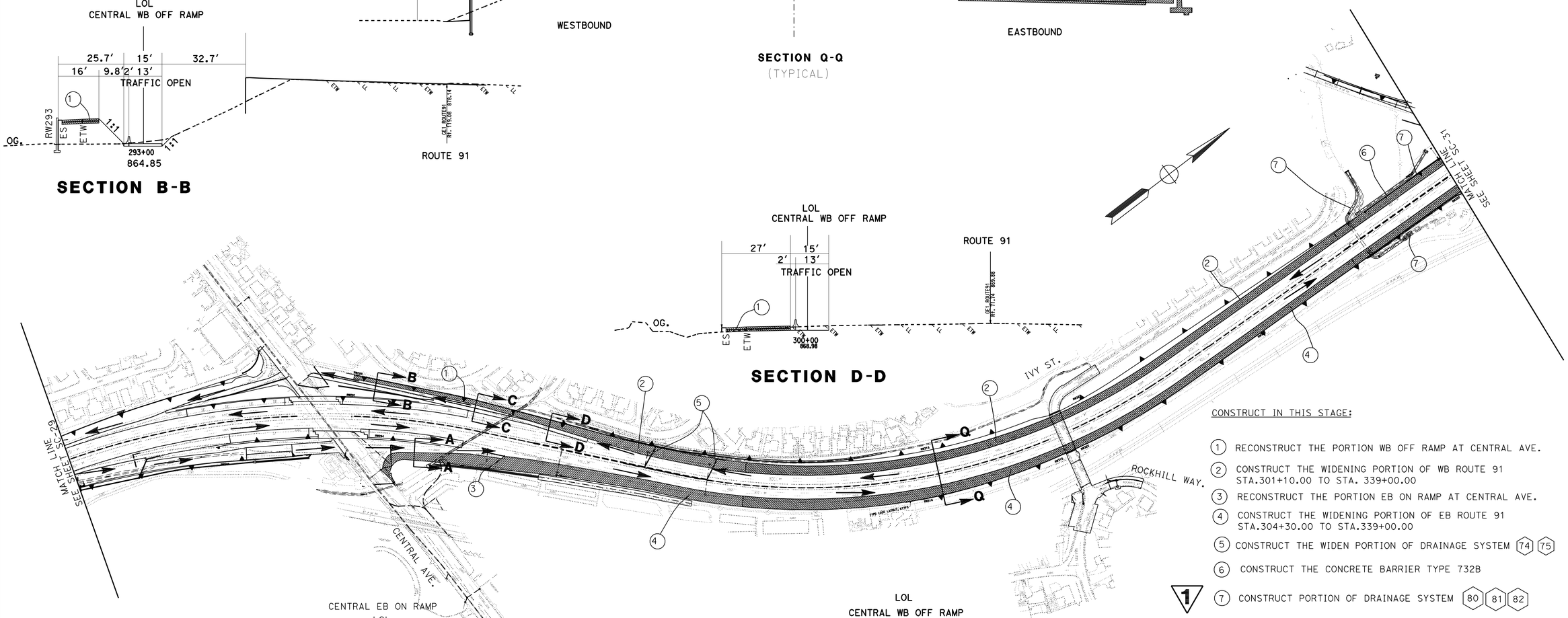

CONSTRUCT IN THIS STAGE:

1. RECONSTRUCT THE PORTION WB OFF RAMP AT CENTRAL AVE.
2. CONSTRUCT THE WIDENING PORTION OF WB ROUTE 91 STA.301+10.00 TO STA. 339+00.00
3. RECONSTRUCT THE PORTION EB ON RAMP AT CENTRAL AVE.
4. CONSTRUCT THE WIDENING PORTION OF EB ROUTE 91 STA.304+30.00 TO STA.339+00.00
5. CONSTRUCT THE WIDEN PORTION OF DRAINAGE SYSTEM 74 75
6. CONSTRUCT THE CONCRETE BARRIER TYPE 732B
7. CONSTRUCT PORTION OF DRAINAGE SYSTEM 80 81 82

1

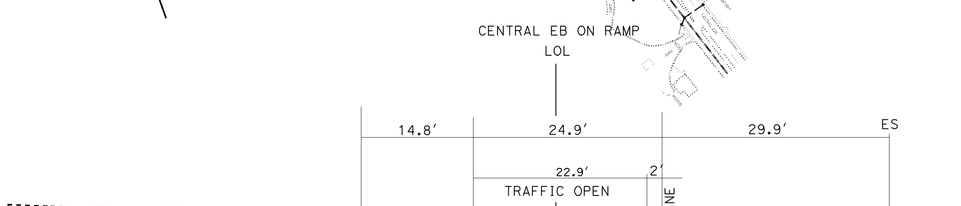

SECTION A-A

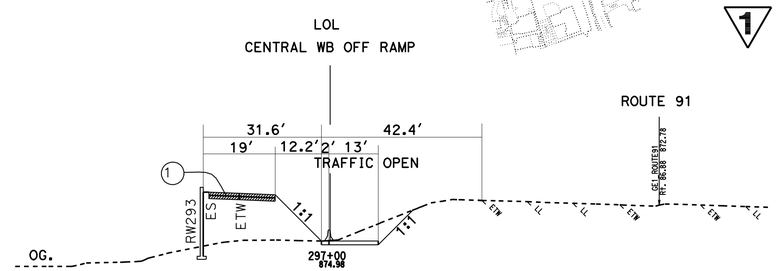

SECTION C-C

1 REVISED PER ADDENDUM No. 1
DATED NOVEMBER 8, 2011

THIS PLAN ACCURATE FOR STAGE CONSTRUCTION ONLY.

STAGE 3 PHASE 2
STAGE CONSTRUCTION
NO SCALE
SC-30

STATE OF CALIFORNIA - DEPARTMENT OF TRANSPORTATION
DESIGN
FUNCTIONAL SUPERVISOR: MARK PERTILE
CALCULATED-DESIGNED BY: KENT NGUYEN
CHECKED BY: MARK PERTILE
REVISED BY
DATE REVISED

LAST REVISION 10-13-11
DATE PLOTTED => 08-NOV-2011
TIME PLOTTED => 11:25

Dist	COUNTY	ROUTE	POST MILES TOTAL PROJECT	SHEET No.	TOTAL SHEETS
08	Riv	91	15.6/21.6	473	2028

Mark Pertile 10-28-11
REGISTERED CIVIL ENGINEER DATE

4-25-11
PLANS APPROVAL DATE

REGISTERED PROFESSIONAL ENGINEER
MARK PERTILE
No. 50395
Exp. 6/30/11
CIVIL
STATE OF CALIFORNIA

THE STATE OF CALIFORNIA OR ITS OFFICERS OR AGENTS SHALL NOT BE RESPONSIBLE FOR THE ACCURACY OR COMPLETENESS OF SCANNED COPIES OF THIS PLAN SHEET.

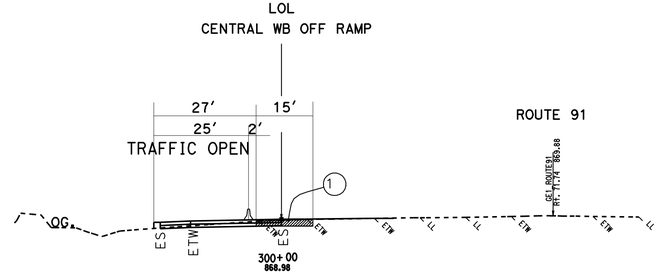

SECTION D-D

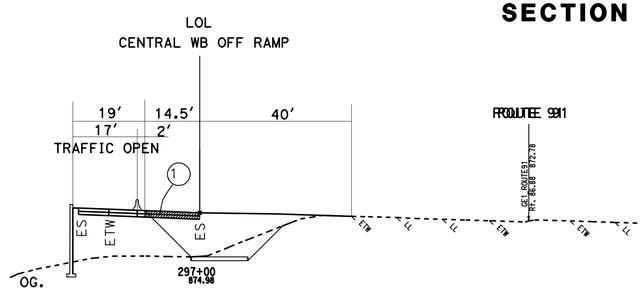

SECTION C-C

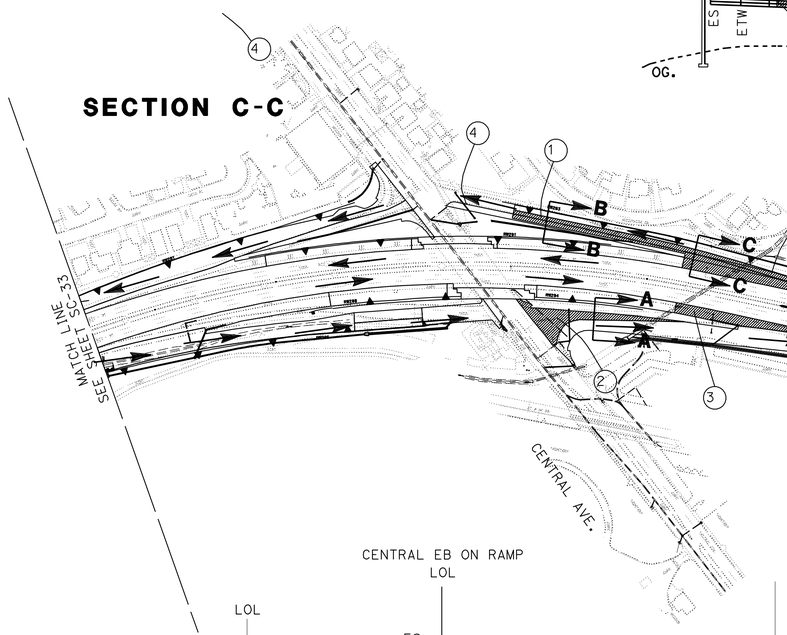

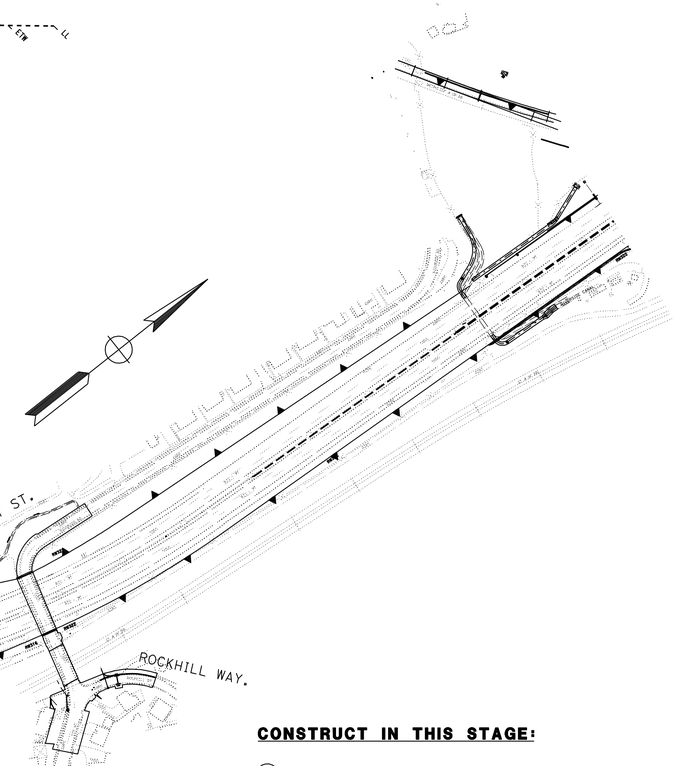

CONSTRUCT IN THIS STAGE:

1. RECONSTRUCT THE REMAINING PORTION WB OFF-RAMP AT CENTRAL Ave.
2. RECONSTRUCT THE REMAINING PORTION EB ON-RAMP AT CENTRAL Ave.
3. CONSTRUCT THE WIDENING PORTION EB ROUTE 91 FROM Sta 296+80.00 TO Sta 298+60.00
4. TEMPORARY PAVEMENT AT WB CENTRAL OFF RAMP NEED TO BE REMOVE.
5. CONSTRUCT MEDIAN DRAINAGE TIE-INS FOR DAINAGE SYSTEM 74 75

1

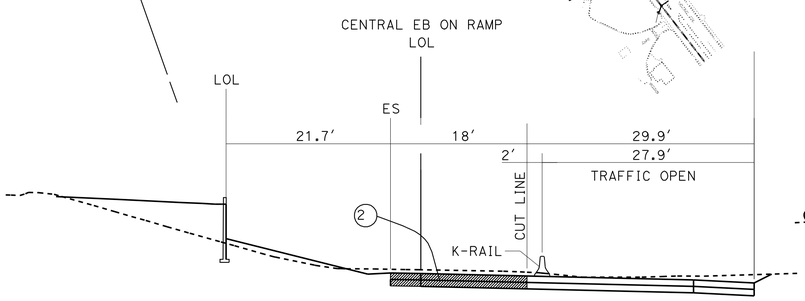

SECTION A-A

CTRALEB_ONRAMP (295+00)

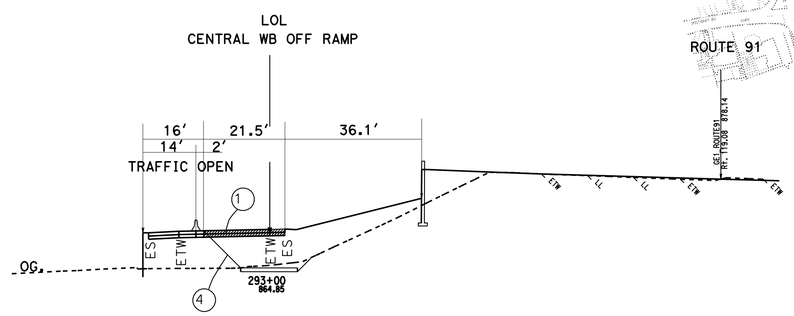

SECTION B-B

1 **REVISED PER ADDENDUM No. 1 DATED NOVEMBER 8, 2011**

THIS PLAN ACCURATE FOR STAGE CONSTRUCTION ONLY.

STAGE 3 PHASE 3
STAGE CONSTRUCTION
NO SCALE
SC-34

STATE OF CALIFORNIA - DEPARTMENT OF TRANSPORTATION
Caltrans
DESIGN

FUNCTIONAL SUPERVISOR: MARK PERTILE
CALCULATED-DESIGNED BY: KENT NGUYEN
CHECKED BY: MARK PERTILE
REVISED BY
DATE REVISED

LAST REVISION 10-13-11
DATE PLOTTED => 08-NOV-2011
TIME PLOTTED => 11:25

Dist	COUNTY	ROUTE	POST MILES TOTAL PROJECT	SHEET No.	TOTAL SHEETS
08	Riv	91	15.6/21.6	633	2028

W E Wasser 10-28-11
REGISTERED CIVIL ENGINEER DATE

4-25-11
PLANS APPROVAL DATE

REGISTERED PROFESSIONAL ENGINEER W.E.WASSER No. 37378 Exp. 06-30-12 CIVIL STATE OF CALIFORNIA

THE STATE OF CALIFORNIA OR ITS OFFICERS OR AGENTS SHALL NOT BE RESPONSIBLE FOR THE ACCURACY OR COMPLETENESS OF SCANNED COPIES OF THIS PLAN SHEET.

1

CONSTRUCTION AREA SIGNS

SHEET No.	SIGN No.	SIGN CODE	PANEL SIZE (IN X IN)	SIGN MESSAGE	No. OF POST & POST SIZE (IN X IN)
TH-78	78-1	R11-2	48 X 30	ROAD CLOSED	ON 3 TYPE III BARRICADE
		R11-2	48 X 30	ROAD CLOSED	ON 3 TYPE III BARRICADE
	78-2	R11-2	48 X 30	ROAD CLOSED	ON 3 TYPE III BARRICADE
		R11-2	48 X 30	ROAD CLOSED	ON 3 TYPE III BARRICADE
TH-80	80-1	G85(CA)	72 X 48	14TH Street ↗	2 - 6 X 6
	80-1	R11-2	48 X 30	ROAD CLOSED	ON 3 TYPE III BARRICADE
		R11-2	48 X 30	ROAD CLOSED	ON 3 TYPE III BARRICADE
TH-81	81-1	C30(CA)	30 X 30	RAMP CLOSED	ON 1 TYPE III BARRICADE
TH-83	83-1	G85(CA)	72 X 48	14TH Street ↗	2 - 6 X 6
TH-84	84-1	C30(CA)	30 X 30	RAMP CLOSED	ON 1 TYPE III BARRICADE
TH-90	90-1	C30(CA)	30 X 30	RAMP CLOSED	ON 1 TYPE III BARRICADE
	90-2	R18A(CA)	66 X 48	RIGHT LANE MUST EXIT	2 - 4 X 6
	90-3	G85(CA)	90 X 48	Arlington Ave ↗	2 - 6 X 6
TH-97	97-1	C30(CA)	30 X 30	RAMP CLOSED	ON 1 TYPE III BARRICADE
	97-2	C30(CA)	30 X 30	RAMP CLOSED	ON 1 TYPE III BARRICADE
	97-3	G85(CA)	72 X 48	14TH Street ↗	2 - 6 X 6
TH-98	98-1	R18A(CA)	66 X 48	RIGHT LANE MUST EXIT	2 - 4 X 6
	98-2	C30(CA)	30 X 30	RAMP CLOSED	ON 1 TYPE III BARRICADE
	98-3	C30(CA)	30 X 30	RAMP CLOSED	ON 1 TYPE III BARRICADE
	98-4	G85(CA)	96 X 48	University Ave ↗↗	2 - 6 X 6
	98-5	C30(CA)	30 X 30	RAMP CLOSED	ON 1 TYPE III BARRICADE
TH-100	100-1	G85(CA)	72 X 48	14TH Street ↗	2 - 6 X 6
	100-2	R18A(CA)	66 X 48	RIGHT LANE MUST EXIT	2 - 4 X 6
TH-105	105-1	W4-2(LT)	36 X 36	LANE ENDS	1 - 4 X 6
TH-107	107-1	G85(CA)	78 X 48	Central Ave ↗	2 - 6 X 6
	107-2	R18A(CA)	66 X 48	RIGHT LANE MUST EXIT	2 - 4 X 6
	107-3	W4-2(LT)	36 X 36	LANE ENDS	1 - 4 X 6

1 REVISED PER ADDENDUM No. 1 DATED NOVEMBER 8, 2011

TRAFFIC HANDLING QUANTITIES

THQ-48

REVISED BY | DATE REVISED
JAMES LIANG | DEAN TO
CALCULATED-DESIGNED BY | CHECKED BY
FUNCTIONAL SUPERVISOR
W.E.WASSER

STATE OF CALIFORNIA - DEPARTMENT OF TRANSPORTATION
Caltrans
TRAFFIC DESIGN

LAST REVISION 10-13-11 | DATE PLOTTED => 08-NOV-2011 | TIME PLOTTED => 11:25

Dist	COUNTY	ROUTE	POST MILES TOTAL PROJECT	SHEET No.	TOTAL SHEETS
08	Riv	91	15.6/21.6	707	2028

W E Wasser 4-11-10
REGISTERED CIVIL ENGINEER DATE

4-25-11
PLANS APPROVAL DATE

REGISTERED PROFESSIONAL ENGINEER W.E.WASSER No. 37378 Exp. 06-30-12 CIVIL STATE OF CALIFORNIA

THE STATE OF CALIFORNIA OR ITS OFFICERS OR AGENTS SHALL NOT BE RESPONSIBLE FOR THE ACCURACY OR COMPLETENESS OF SCANNED COPIES OF THIS PLAN SHEET.

LEGEND:

- ROADSIDE SIGN - SINGLE POST
- ROADSIDE SIGN - TWO POST
- OVERHEAD SIGN STRUCTURE
- RESET ROADSIDE SIGN
- REMOVE ROADSIDE SIGN OR OVERHEAD SIGN STRUCTURE
- REMOVE SIGN PANEL
- RELOCATE ROADSIDE SIGN
- METAL POST (WALL MOUNTED SIGN)
- SIGN TO REMAIN
- INSTALL SIGN (STRAP AND SADDLE BRACKET METHOD)
- 1-1 ROADSIDE SIGN (WITH SHEET NUMBER AND NUMBER)
- 1-A OVERHEAD SIGN STRUCTURE (WITH SHEET NUMBER AND LETTER)
- MILEPOST MARKER
- SPEC SPECIAL SIGN DESIGN

NOTE:

1. FOR ACCURATE RIGHT OF WAY AND ACCESS DATA, CONTACT RIGHT OF WAY ENGINEERING AT THE DISTRICT OFFICE.
2. FOR MORE DETAILS OF OVERHEAD SIGNS, BRIDGE MOUNTED SIGNS, RAMP METERING SIGNALS AND CHANGEABLE MESSAGE SIGNS, SEE SHEETS SDS-1 TO SDS-25.

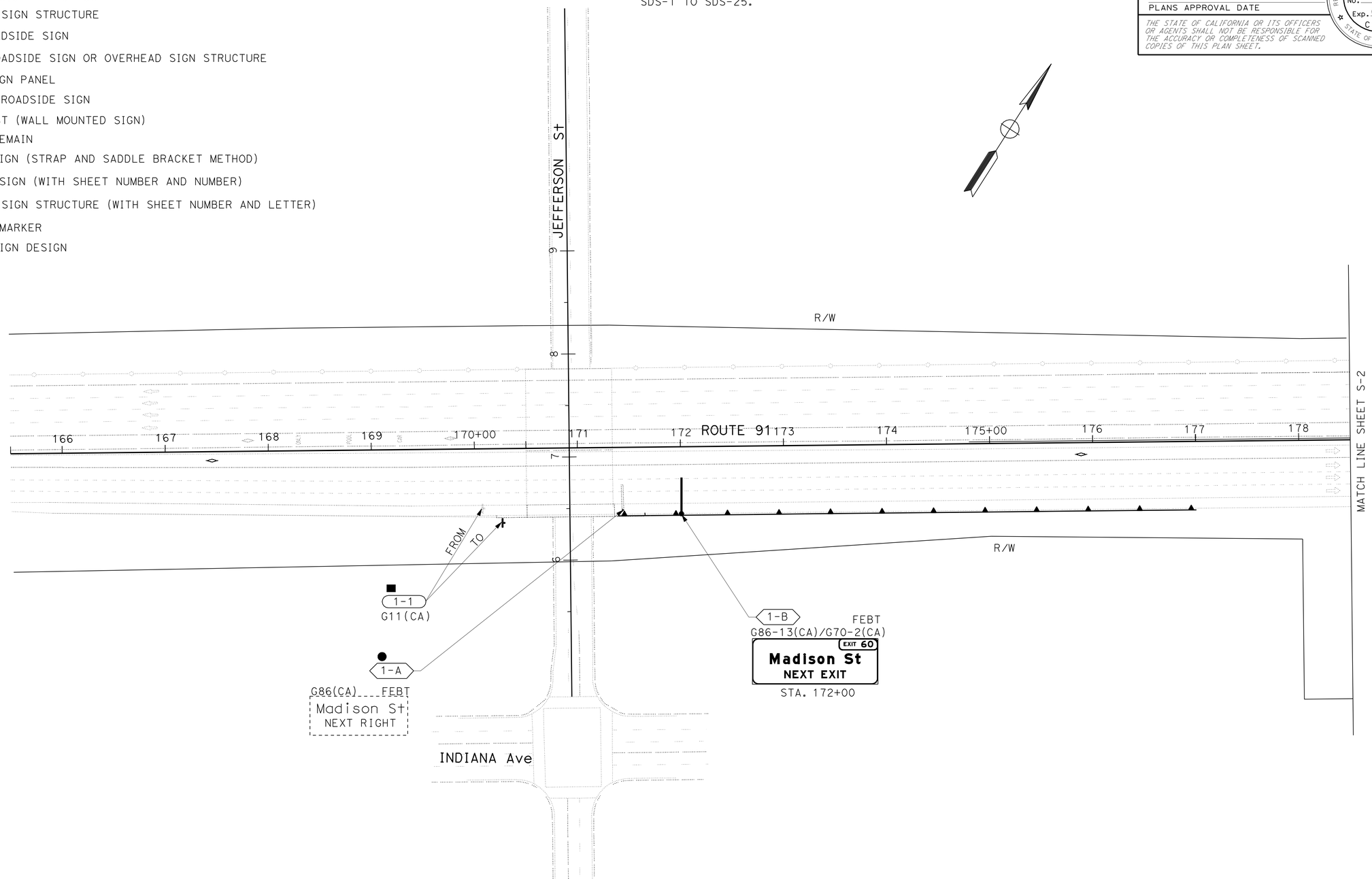

1 REVISED PER ADDENDUM No. 1 DATED NOVEMBER 8, 2011

THIS PLAN ACCURATE FOR SIGN WORK ONLY

SIGN PLAN

SCALE: 1"=50'

S-1

STATE OF CALIFORNIA - DEPARTMENT OF TRANSPORTATION
Caltrans
TRAFFIC DESIGN

FUNCTIONAL SUPERVISOR: W.E.WASSER
CALCULATED-DESIGNED BY: DEAN TO
CHECKED BY: PATTI BARTOLI
REVISED BY
DATE REVISED

LAST REVISION 04-11-11
DATE PLOTTED => 08-NOV-2011
TIME PLOTTED => 11:25

Dist	COUNTY	ROUTE	POST MILES TOTAL PROJECT	SHEET No.	TOTAL SHEETS
08	Riv	91	15.6/21.6	757	2028

W E Wasser 10-28-11
REGISTERED CIVIL ENGINEER DATE

4-25-11
PLANS APPROVAL DATE

REGISTERED PROFESSIONAL ENGINEER W.E.WASSER No. 37378 Exp. 06-30-12 CIVIL STATE OF CALIFORNIA

THE STATE OF CALIFORNIA OR ITS OFFICERS OR AGENTS SHALL NOT BE RESPONSIBLE FOR THE ACCURACY OR COMPLETENESS OF SCANNED COPIES OF THIS PLAN SHEET.

1

ROADSIDE SIGN QUANTITIES

SIGN No.	SIGN CODE	SIGN SIZE L x D IN x IN	POST LENGTH LT	POST LENGTH RT	OBJECT MARKER CA TYPE N-2	POST SIZE 4 x 4	POST SIZE 4 x 6	POST SIZE 6 x 6	POST SIZE 6 x 8	INSTALL ROADSIDE SIGN (LAMINATED WOOD BOX POST) L	INSTALL ROADSIDE SIGN (LAMINATED WOOD BOX POST) M	ROADSIDE SIGN ONE POST	ROADSIDE SIGN TWO POST	ROADSIDE SIGN ● REMOVE	ROADSIDE SIGN ○ RESET	ROADSIDE SIGN ■ RELOCATE	■■ METAL POST (WALL MOUNTED SIGN)	INSTALL SIGN PANEL ON EXIST. POST	INSTALL SIGN PANEL ON EXIST. FRAME	▲▲ INSTALL SIGN (STRAP AND SADDLE BRACKET METHOD)	REMARKS
			LF	LF	EA	IN x IN				EA		EA	EA	EA	EA	EA	EA	EA	EA	EA	
7-48	G92(CA)	48 x 30		18				x				1									FREEWAY ENTRANCE
	G28-2(CA)(91)	24 x 25																			STATE ROUTE MARKER (91)
	M3-4	21 x 9																			WEST
	G43(CA)(DOWN)	21 x 15																			DIRECTIONAL ARROW AUXILIARY
7-49	I-5	30 x 30		18				x				1									AIRPORT SYMBOL
	M6-3	21 x 15																			DIRECTIONAL ARROW AUXILIARY (UP)
7-50	G20-5(CA)	84 x 54	18	18				x					1								91, EAST, SAN BERNARDINO, LEFT LANE
7-51	S32(CA)	Exist.																			ADOPT A HIGHWAY
7-52	G11-4.1(CA)	44 x 18		12		x						1									MADISON AVE UC, BR. 56-384
7-53	SIGN DELETED																				
7-54	R5-10c	24 x 12		16				x				1									PEDESTRIANS PROHIBITED
7-55	R5-10a	48 x 54		16				x				1									PEDESTRIANS BICYCLES MOTOR-DRIVEN CYCLES PROHIBITED
7-56	G11-4.1(CA)	Exist.													1						INVENTORY MARKER - MADISON AVE UC
7-57	G92(CA)	48 x 30		18				x				1									FREEWAY ENTRANCE
	G28-2(CA)(91)	24 x 25																			STATE ROUTE MARKER (91)
	M3-2	21 x 9																			EAST
	G43(CA)(DOWN)	21 x 15																			DIRECTIONAL ARROW AUXILIARY
7-58	R3-1	Exist.												1							NO RIGHT TURN
7-59	R5-1	36 x 36		16			x					1									DO NOT ENTER
	R5-1a	36 x 21																			WRONG WAY
7-60	G92(CA)	Exist.												1							FREEWAY ENTRANCE
	G28-2(CA)(91)	Exist.																			STATE ROUTE MARKER (91)
	M3-4	Exist.																			WEST
	G43(CA)(DOWN)	Exist.																			DIRECTIONAL ARROW AUXILIARY
*7-61	W4-1	48 x 48		16				x				1									MERGE SYMBOL
9-1	G92(CA)	Exist.												1							FREEWAY ENTRANCE
	G28-2(CA)(91)	Exist.																			STATE ROUTE MARKER (91)
	M3-2	Exist.																			EAST
	G43(CA)(DOWN)	Exist.																			DIRECTIONAL ARROW AUXILIARY
9-2	G92(CA)	Exist.												1							FREEWAY ENTRANCE
	G28-2(CA)(91)	Exist.																			STATE ROUTE MARKER (91)
	M3-2	Exist.																			EAST
	G43(CA)(DOWN)	Exist.																			DIRECTIONAL ARROW AUXILIARY
9-3	G77(CA)	Exist.												1							INTERCHANGE GUIDE
	G92(CA)	Exist.																			FREEWAY ENTRANCE
	G28-2(CA)(91)	Exist.																			STATE ROUTE MARKER (91)
	M3-2	Exist.																			EAST
	G43(CA)(DOWN)	Exist.																			DIRECTIONAL ARROW AUXILIARY
9-4	R1-2	Exist.												1							YIELD
9-5	R5-10a	Exist.												1							PEDESTRIANS BICYCLES MOTOR-DRIVEN CYCLES PROHIBITED
9-6	W4-3	48 x 48		16				x				1									LANE ADDED
						SQ-4 SHEET TOTAL				0	0	11	1	8	1	0	0			0	

* Refer to Sheet SQ-11 for additional sign quantities found on Sheet S-7.

1 REVISED PER ADDENDUM No. 1 DATED NOVEMBER 8, 2011

SIGN QUANTITIES
SQ-4

STATE OF CALIFORNIA - DEPARTMENT OF TRANSPORTATION
Caltrans® TRAFFIC DESIGN

FUNCTIONAL SUPERVISOR: W.E.WASSER
CALCULATED-DESIGNED BY: PATTI BARTOLI
CHECKED BY: DEAN TO
REVISED BY
DATE REVISED

LAST REVISION 10-13-11
DATE PLOTTED => 08-NOV-2011
TIME PLOTTED => 11:25

Dist	COUNTY	ROUTE	POST MILES TOTAL PROJECT	SHEET No.	TOTAL SHEETS
08	Riv	91	15.6/21.6	777	2028

W E Wasser 12-1-10
REGISTERED CIVIL ENGINEER DATE

4-25-11
PLANS APPROVAL DATE

REGISTERED PROFESSIONAL ENGINEER W.E.WASSER No. 37378 Exp. 06-30-12 CIVIL STATE OF CALIFORNIA

THE STATE OF CALIFORNIA OR ITS OFFICERS OR AGENTS SHALL NOT BE RESPONSIBLE FOR THE ACCURACY OR COMPLETENESS OF SCANNED COPIES OF THIS PLAN SHEET.

OVERHEAD SIGN QUANTITIES

SIGN No	SIGN CODE	LOCATION	FURNISH SIGN STRUCTURE (TRUSS)	INSTALL SIGN STRUCTURE (TRUSS)	FURNISH SIGN STRUCTURE (BRIDGE MOUNTED)	INSTALL SIGN STRUCTURE (BRIDGE MOUNTED)	CIDH CONCRETE PILE (SIGN FOUNDATION) PILE DEPTH 54"	CIDH CONCRETE PILE (SIGN FOUNDATION) PILE DEPTH 60"	REMOVE SIGN STRUCTURE	RELOCATE SIGN PANEL	INSTALL SIGN PANEL OVERLAY	REMOVE SIGN PANEL	REMARKS
			LB	LB	LB	LB	LF	LF	EA	EA	SQFT	EA	
11-A	G83(CA)	STA. 297+43							1				EXIST. SIGN STRUCTURE
11-B	G86-13(CA)	STA. 286+90	17,990	17,990				23					POST TYPE VIII
12-A	G85SPEC(CA)	STA. 302+80	15,550	15,550				25					POST TYPE VIII
12-B	G85(CA)	STA. 304+65							1				EXIST. SIGN STRUCTURE
12-C	G83-5(CA)	STA. 307+20	54,000	54,000				57					CMS STRUCTURE
12-D	G23-1(CA)												
13-A	G83SPEC(CA)	STA. 314+75	16,440	16,440				25					POST TYPE IX
14-A	G23-1(CA)	STA. 334+00									7.7		"3/4" OVERLAY MESSAGE
15-A	G83SPEC(CA)	STA. 350+90	15,180	15,180				25					POST TYPE VIII
16-A	G83SPEC(CA)	STA. 354+47			4,999	4,999							CRIDGE ST. OVERCROSSING
	G83SPEC(CA)												CRIDGE ST. OVERCROSSING
16-B	G85SPEC(CA)	STA. 362+25	15,690	15,690				23					POST TYPE VII
16-C	G85(CA)	STA. 362+49							1				EXIST. TRUSS SIGN STRUCTURE
17-A	G85SPEC(CA)	STA. 369+90	13,880	13,880				25					POST TYPE VIII
17-B	G83SPEC(CA)	STA. 374+92							1				EXIST. BRIDGE MOUNTED SIGN STR.
17-C	G83(CA)	STA. 373+90							1				EXIST. BRIDGE MOUNTED SIGN STR.
17-D	G83SPEC(CA)	STA. 375+07			3,107	3,107							14 ST. OVERCROSSING
17-E	R87-1(CA)	STA. 373+84			2,377	2,377							14 ST. OVERCROSSING
17-F	G77(CA)	STA. 5+81							1				EXIST. SIGN STRUCTURE ON 14 ST.
17-G	R61(CA)	STA. 373+40							1				EXIST. SIGN STRUCTURE ON EXIT RAMP
17-H	R61(CA)	STA. 375+63							1				EXIST. SIGN STRUCTURE ON EXIT RAMP
17-I	G77(CA)	STA. 9+83							1				EXIST. SIGN STRUCTURE ON 14 ST.
18-A	G85(CA)	STA. 385+73							1				EXIST. TRUSS SIGN STRUCTURE
18-B	G85(CA)	STA. 384+47							1				EXIST. TRUSS SIGN STRUCTURE
19-A	G23(CA)	STA. 393+03							1				EXIST. TUBULAR SIGN STRUCTURE
19-B	G85-11(CA)	STA. 398+10	16,570	16,570				32					POST TYPE VII
20-A	W-SPEC(CA)	STA. 412+95										1	EXIST. TUBULAR SIGN STRUCTURE
21-A	G23(CA)	STA. 436+06									7.7		"1/2" OVERLAY MESSAGE
	SQ-24 SHEET TOTAL		165,300	165,300	10,483	10,483	0	235	12	0	15.4	1	
	GRAND TOTAL		316,850	316,850	10,483	10,483	38	~~437~~ 439	22	3	15.4	1	

1 REVISED PER ADDENDUM No. 1 DATED NOVEMBER 8, 2011

(CONTRACTOR FURNISHED)
SIGN QUANTITIES
SQ-24

STATE OF CALIFORNIA - DEPARTMENT OF TRANSPORTATION
Caltrans TRAFFIC DESIGN

FUNCTIONAL SUPERVISOR: W.E.WASSER
CALCULATED-DESIGNED BY: PATTI BARTOLI
CHECKED BY: DEAN TO
REVISED BY
DATE REVISED

LAST REVISION 12-01-10 | DATE PLOTTED => 08-NOV-2011 | TIME PLOTTED => 11:25

Dist	COUNTY	ROUTE	POST MILES TOTAL PROJECT	SHEET No.	TOTAL SHEETS
08	Riv	91	15.6/21.6	778	2028

REGISTERED CIVIL ENGINEER — DATE 10-28-11

4-25-11
PLANS APPROVAL DATE

REGISTERED PROFESSIONAL ENGINEER THOMAS HIEN NGO No. 68383 Exp. 9/30/11 CIVIL STATE OF CALIFORNIA

THE STATE OF CALIFORNIA OR ITS OFFICERS OR AGENTS SHALL NOT BE RESPONSIBLE FOR THE ACCURACY OR COMPLETENESS OF SCANNED COPIES OF THIS PLAN SHEET.

1

ROADWAY QUANTITIES

DIRECTION WB	DIRECTION EB	LOCATION	SEAL PAVEMENT JOINT	SEAL LONGITUDINAL ISOLATION JOINT	JOINTED PLAIN CONCRETE PAVEMENT	HOT MIXED ASPHALT (TYPE A)	LEAN CONCRETE BASE	CLASS 2 AGGREGATE BASE	CLASS 2 AGGREGATE SUBBASE	HOT MIXED ASPHALT (TYPE A, BOND BREAKER)	ASPHALTIC EMULSION (PAINT BINDER)	PLACE HMA (MISC. AREA)	COLD PLANE HMA PAVEMENT (2" MAX)	GRIND EXISTING CONCRETE PAVEMENT	CONCRETE PAVEMENT (RAPID STRENGTH CONCRETE)
WB	EB		LF	LF	YD^3	TON	YD^3	YD^3	YD^3	TON	TON	YD^2	YD^2	YD^2	YD^3
	X	"GE1" 165+56.00 TO 259+50.00 MAINLINE	5800	6570	2640		924		1848	535				2190	
	X	"GE1" 165+56.00 TO 259+50.00 SHOULDER				1542		1592			3.8				
X		"GE1" 228+72.00 TO 259+50.00 MAINLINE	8080	2980	2037		713		1426	413				993	
X		"GE1" 228+72.00 TO 259+50.00 SHOULDER				683		705			1.7				
	X	"GE1" 260+60.00 TO 398+06.00 MAINLINE	55300	13200	13968		4889		9778	2829				4400	
	X	"GE1" 260+60.00 TO 398+06.00 SHOULDER				3807		3930			9.4				
X		"GE1" 260+60.00 TO 398+06.00 MAINLINE	48100	14000	12670		4435		8869	2566				4667	
X		"GE1" 260+60.00 TO 398+06.00 SHOULDER				3124		3226			7.7				
	X	MADISON ST. ON-RAMP AND GORE AREA				3305		1632			7.9				
	X	MADISON ST. OFF-RAMP AND GORE AREA				1695		837			4.1				
	X	MADISON ST. OFF-RAMP TERMINI	1119						129						237
		MADISON ST 04+82.80 TO 08+29.31				266					1.1		2364		
		JANE ST 28+40.4 TO 29+81.05				60					0.2		533		
		JANE ST 29+81.05 TO 29+94.20				28		22			0.1				
		RIV. CANAL MAINT ROAD 254+53.3 TO 260+52.1				131		90			0.4				
		INDIANA AVE 29+64.07 TO 37+79.6, 38+49.7 TO 42+00				412		329			0.9				
		INDIANA AVE 29+64.07 TO 42+00				758					3.1		6737		
		INDIANA AVE 29+64.07 TO 37+79.6				401					0.6		1272		
		ARLINGTON AVE 36+52.6 TO 38+67.5 LEFT				590					1.2		1310		
		ARLINGTON AVE 30+10.6 TO 32+89.6, 38+67.5 TO 39+78.7				417					1.7		3705		
		ARLINGTON AVE 33+48 TO 36+20 LEFT				198	33				0.5				
		ARLINGTON AVE 32+89.6 TO 38+67.5				3411					8.4				
		RIVERSIDE AVE 259+32 TO 264+92 RIGHT				800					2.0				
		RIVERSIDE AVE 260+00 TO 266+25				1014					3.1		3743		
X		ARLINGTON AVE. ON-RAMP AND GORE AREA				3387		1673			8.1				
X		ARLINGTON AVE. OFF-RAMP AND GORE AREA				1673		826			4.0				
	X	ARLINGTON AVE. ON-RAMP AND GORE AREA				2096		1035			5.0				
	X	INDIANA ON-RAMP AND GORE AREA				2680		1324			6.4				
	X	INDIANA OFF-RAMP AND GORE AREA				1802		890			4.3				
	X	INDIANA OFF-RAMP TERMINI	846						161						296
X		CENTRAL AVE. ON-RAMP AND GORE AREA				3102		1532			7.4				
X		CENTRAL AVE. OFF-RAMP AND GORE AREA				2291		1131			5.5				
X		CENTRAL AVE. OFF-RAMP TERMINI	1065						194						356
	X	CENTRAL AVE. ON-RAMP AND GORE AREA				3469		1713			8.3				
	X	CENTRAL AVE. OFF-RAMP AND GORE AREA				2561		1265			6.1				
	X	CENTRAL AVE. OFF-RAMP TERMINI	1440						188						345
		SUB TOTAL	121750	36750	31316	45703	10993	23753	22594	6341	113		19663	12250	1234

1 **REVISED PER ADDENDUM No. 1 DATED NOVEMBER 8, 2011**

SUMMARY OF QUANTITIES

Q-1

REVISED BY | DATE REVISED
THAI VAN HGUYEN | THOMAS HIEN NGO
CALCULATED-DESIGNED BY | CHECKED BY
FUNCTIONAL SUPERVISOR: MARK PERTILE

STATE OF CALIFORNIA - DEPARTMENT OF TRANSPORTATION
Caltrans®
DESIGN

LAST REVISION 10-13-11 | DATE PLOTTED => 08-NOV-2011 | TIME PLOTTED => 11:25

Dist	COUNTY	ROUTE	POST MILES TOTAL PROJECT	SHEET No.	TOTAL SHEETS
08	Riv	91	15.6/21.6	779	2028

REGISTERED CIVIL ENGINEER — DATE 10-28-11

4-25-11
PLANS APPROVAL DATE

REGISTERED PROFESSIONAL ENGINEER THOMAS HIEN NGO No. 68383 Exp. 9/30/11 CIVIL STATE OF CALIFORNIA

THE STATE OF CALIFORNIA OR ITS OFFICERS OR AGENTS SHALL NOT BE RESPONSIBLE FOR THE ACCURACY OR COMPLETENESS OF SCANNED COPIES OF THIS PLAN SHEET.

1

ROADWAY QUANTITIES (Cont)

DESCRIPTION WB	DESCRIPTION EB	LOCATION	SEAL PAVEMENT JOINT	SEAL LONGITUDINAL ISOLATION JOINT	JOINTED PLAIN CONCRETE PAVEMENT	HOT MIXED ASPHALT (TYPE A)	LEAN CONCRETE BASE	CLASS 2 AGGREGATE BASE	CLASS 2 AGGREGATE SUBBASE	HOT MIXED ASPHALT (TYPE A, BOND BREAKER)	ASPHALTIC EMULSION (PAINT BINDER)	PLACE HMA (MISC. AREA)	COLD PLANE HMA PAVEMENT (2" MAX)	GRIND EXISTING CONCRETE PAVEMENT	CONCRETE PAVEMENT (RAPID STRENGTH CONCRETE)
WB	EB		LF	LF	YD^3	TON	YD^3	YD^3	YD^3	TON	TON	YD^2	YD^2	YD^2	YD^3
X		14TH ST. ON-RAMP AND GORE AREA				3308		1634			7.9				
X		14TH ST. OFF-RAMP AND GORE AREA				1039		513			2.5				
X		14TH ST. OFF-RAMP TERMINI	1200						185						339
	X	14TH ST. ON-RAMP AND GORE AREA				2070		1022			5.0				
	X	14TH ST. OFF-RAMP AND GORE AREA				2368		1170			5.7				
	X	14TH ST OFF RAMP TERMINI	1160						184						337
X		10TH ST ON RAMP AND GORE AREA				2319		1145			5.6				
	X	UNIVERSITY AVE OFF RAMP AND GORE AREA				5541		2736			13.3				
	X	UNIVERSITY AVE OFF RAMP (CONNECT TO MULBERRY ST)				116					0.5		1033		
X	X	CENTRAL AVE				580					2.4		5156		
X		PARCEL 20423				37		29			0.1				
X		PARCEL 20423				74					0.3		661		
X	X	14TH ST				1518		1211			3.2				
X	X	14TH ST				280					1.1		2490		
X		MULBERRY ST				1504		1200			3.1				
X		LIME ST AND 9TH ST				555		443			1.2				
X		LIME ST AND 9TH ST				786					3.2		6991		
	X	VINE ST				678					2.8		6030		
		MAINTENANCE ACCESS ROAD				293		202			1				
X	X	PLACE 4" HMA-A MISC. AREA: MAINLINE,MVP,DRAINAGE AREA				1305					4.2	4598			
		RAPID STRENGTH CONCRETE													
X		WB ROUTE 91 STA. 273+00.00 TO STA 278+70.00													330
	X	EB ROUTE 91 STA. 273+00.00 TO STA 280+60.00													483
X		WB ROUTE 91 STA. 375+00.00 TO STA. 386+60.00													699
	X	EB ROUTE 91 STA. 373+00.00 TO STA. 389+70.00													488
X		WB ROUTE 91 STA. 378+20.00 TO STA. 384+00.00													953
	X	EB ROUTE 91 STA. 389+80.00 TO STA. 393+01.11													1086
		DS39 - STA. 265+00													60
		DS74 - STA. 304+00													45
		DS75 - STA. 306+00													60
		DS90 - STA. 353+50													135
		DS98 - STA. 364+90													122
		SUBTOTAL	2360	0	0	24372	0	11305	369	0	63	4598	22361	0	5136
		SUBTOTAL FROM Q1	121750	36750	31316	45703	10993	23753	22594	6341	113	0	19663	12250	1234
		GRAND TOTAL	124110	36750	31316	70075	10993	33058	22963	6341	176	4598	42024	12250	6370

1 REVISED PER ADDENDUM No. 1 DATED NOVEMBER 8, 2011

SUMMARY OF QUANTITIES

Q-2

STATE OF CALIFORNIA - DEPARTMENT OF TRANSPORTATION
Caltrans® DESIGN

FUNCTIONAL SUPERVISOR: MARK PERTILE
CALCULATED-DESIGNED BY: THAI VAN HGUYEN
CHECKED BY: THOMAS HIEN NGO
REVISED BY
DATE REVISED

LAST REVISION 10-13-11 | DATE PLOTTED => 08-NOV-2011 | TIME PLOTTED => 11:26

Dist	COUNTY	ROUTE	POST MILES TOTAL PROJECT	SHEET No.	TOTAL SHEETS
08	Riv	91	15.6/21.6	781	2028

REGISTERED CIVIL ENGINEER 12-1-10 DATE

4-25-11
PLANS APPROVAL DATE

REGISTERED PROFESSIONAL ENGINEER THOMAS HIEN NGO No. 68383 Exp. 9/30/11 CIVIL STATE OF CALIFORNIA

THE STATE OF CALIFORNIA OR ITS OFFICERS OR AGENTS SHALL NOT BE RESPONSIBLE FOR THE ACCURACY OR COMPLETENESS OF SCANNED COPIES OF THIS PLAN SHEET.

METAL BEAM GUARD RAIL 1

LOCATION					MBGR	TERMINAL SYSTEM		END TREA	CRASH CUSHION		CONC ANCHOR BLOCK (N)	END CAP TYPE A	TRANSITION RAILING (TYPE WB)	LAYOUT TYPE	MINOR * CONCRETE (MINOR STRUCTURE) 1
STATION		LINE	SIDE		NEW	AFTS	AITS	SFT	CAT	(CAT) BACKUP					
FROM	TO		LEFT	RIGHT	ft	EA	EA	EA	EA	EA	EA	EA	EA		CY
169+21.030	170+21.030	F3		X	25		1							12A	
179+25.000	180+21.890	F3	X		25	1					1		1	12B	2.5
185+77.010	186+64.510	F3		X	50	1		1						16B	
189+62.500	190+50.000	MADOF1		X	25	1								12B	
191+75.280	192+75.280	F3		X	25		1							12A	
198+95.180	199+95.180	F3	X		25		1						1	12A	
199+12.500	200+50.000	MAD2		X	75	1							1	12B	
251+22.469	252+78.354	INOFF1	X		125	1		1						16B	
255+50.300	256+49.950	INDION1		X	25		1						1	12A	
263+16.680	264+00.046	ARLON4		X	38	1							1	12B	
267+60.996	268+39.411	GE1	X		50		1						1	12A	
271+30.699	280+84.012	GE1		X	950		1					1	1	12D	
286+51.000	287+0.210	CTRLEBOFF2	X		50		1						1	12A	
294+89.770	296+09.660	GE1	X		50		1						1	12A	
298+74.480	307+28.700	GE1		X	1200	1		1						16B	
299+98.179	301+48.179	CTRALWBOF1	X		125						1		1	12D	2.5
313+77.207	314+71.691	GE1		X	25		1				1		1	12A	2.5
314+63.487	315+66.698	GE1	X		50		1	1						16A	
367+83.690	373+71.193	14EBOFF1	X		538		1	1						11A	
375+59.653	376+59.320	14EBON2		X	25		1						1	12A	
375+90.493	377+36.249	GE1		X	150			1	1	1				15A	
375+86.658	382+49.778	14EBOFF2	X		663			1						15A	
377+21.853	378+72.463	14EBOFF2		X	125							1	1	12D	
387+86.165	390+45.599	GE1	X		225	1		1						16B	
387+77.996	390+40.135	10WBON1		X	225	1		1						16B	
390+53.570	391+53.780	14WBOFF1		X	25		1						1	12A	
TOTAL					4914	9	13	9	1	1	3	2	14		7.5

1 (N) - NOT A SEPARATE PAY ITEM, FOR INFORMATION ONLY.
* - FOR ADDITIONAL QUANTITIES, SEE SHEETS Q-21 AND DQ-71

1 REVISED PER ADDENDUM No. 1 DATED NOVEMBER 8, 2011

SUMMARY OF QUANTITIES

Q-4

STATE OF CALIFORNIA - DEPARTMENT OF TRANSPORTATION
Caltrans DESIGN

FUNCTIONAL SUPERVISOR: MARK PERTILE
CALCULATED-DESIGNED BY: THAI VAN HGUYEN
CHECKED BY: THOMAS HIEN NGO
REVISED BY / DATE REVISED

LAST REVISION 12-01-10 | DATE PLOTTED => 08-NOV-2011 | TIME PLOTTED => 11:26

Dist	COUNTY	ROUTE	POST MILES TOTAL PROJECT	SHEET No.	TOTAL SHEETS
08	Riv	91	15.6/21.6	785	2028

REGISTERED CIVIL ENGINEER 10-28-11 DATE

4-25-11
PLANS APPROVAL DATE

REGISTERED PROFESSIONAL ENGINEER THOMAS HIEN NGO No. 68383 Exp. 9/30/11 CIVIL STATE OF CALIFORNIA

THE STATE OF CALIFORNIA OR ITS OFFICERS OR AGENTS SHALL NOT BE RESPONSIBLE FOR THE ACCURACY OR COMPLETENESS OF SCANNED COPIES OF THIS PLAN SHEET.

TEMPORARY CHAIN LINK FENCE QUANTITIES

LOCATION STATION TO STATION	TEMPORARY CHAIN LINK FENCE (TYPE CL-6) ft
203+00.00 "F3" EB TO 205+00.00 "F3" EB	200
202+32.00 "GE1" EB TO 209+00.00 "GE1" EB	670
242+30.00 "GE1" EB TO 249+00.00 "GE1" EB	720
251+35.00 "GE1" EB TO 261+00.00 "GE1" EB	1490
263+75.00 "GE1" EB TO 292+00.00 "GE1" EB	3450
294+00.00 "GE1" EB TO 308+50.00 "GE1" EB	1495
321+20.00 "GE1" EB TO 345+26.00 "GE1" EB	3085
344+25.00 "GE1" EB TO 356+40.00 "GE1" EB	2440
363+25.00 "GE1" EB TO 367+80.00 "GE1" EB	475
378+66.00 "GE1" EB TO 393+16.00 "GE1" EB	1670
191+15.00 "F3" WB TO 193+70.00 "F3" WB	590
200+75.00 "F3" WB TO 209+82.00 "F3" WB	1045
230+11.00 "F3" WB TO 238+75.00 "GE1" WB	870
250+00.00 "GE1" WB TO 257+00.00 "GE1" WB	770
267+50.00 "GE1" WB TO 269+50.00 "GE1" WB	200
294+00.00 "GE1" WB TO 296+50.00 "GE1" WB	275
304+15.00 "GE1" WB TO 307+45.00 "GE1" WB	345
334+00.00 "GE1" WB TO 343+00.00 "GE1" WB	2060
367+00.00 "GE1" WB TO 370+15.00 "GE1" WB	385
385+00.00 "GE1" WB TO 398+30.00 "GE1" WB	1890
TOTAL	24125

EARTHWORK/SUBBALLAST/ GEOTEXTILE REINFORCEMENT QUANTITIES

1

ALIGNMENT	DESCRIPTION	ROADWAY EXCAVATION Yd^3	EMBANKMENT (N) Yd^3	SUBBALLAST Yd^3	GEOTEXTILE REINFORCEMENT (N) Yd^2
F3	Rte 91 165+50.00 to 215+00.000	6552	3208		
GE1	Rte 91 230+16.59 to 272+00.000	10227	24685		
MADOF1	MADISON EB OFF-RAMP	2241	439		
MAD2	MADISON EB ON-RAMP	3753	644		
INOFF2	INDIANA EB OFF-RAMP	1468	364		
INDION1	INDIANA ON-RAMP	1158	12218		
MDWY3	CITY RIVERSIDE MAINTENACE ACCESS ROAD	66	3363		
ARLON4	ARLINGTON EB ON-RAMP	218	8105		
ARLON1	ARLINGTON WB ON-RAMP	1315	4264		
RIVOFF2	ARLINGTON WB OFF-RAMP	1302	642		
INDI1	INDIANA STREET	749	0		
RIV2	RIVERSIDE STREET	1182	366		
ARLT1	ARLINGTON AVE	4214	1412		
GE1	Rte 91 272+00.00 to 400+00.00	192700	8600		
CTRLEBOFF2	CENTRAL EB OFF-RAMP	4150	3500		
CTRALEBON1	CENTRAL EB O- RAMP	3400	850		
CTRALWBOF1	CENTRAL WB OFF-RAMP	1050	10400		
CTRALWBON1	CENTRAL WB ON-RAMP	2000	6000		
14EBOFF1	14ST EB OFF-RAMP	19000	10		
14EBOFF2	UNIVERSITY Ave EB OFF-RAMP	70300	1200		
14EBON2	14ST EB ON-RAMP	3700	800		
14WBOFF1	14ST WB OFF-RAMP	750	12600		
14WBON1	14ST WB ON-RAMP	30500	650		
10WBON1	10ST WB ON-RAMP	3600	3500		
IVY3	IVY STREET	1050	2900		
RKHILL1	ROCKHILL WAY	200	1100		
IMT2	PACHAPPA UP (INTERIM)	3000	31000	2500	4420
PMT1	PACHAPPA UP (FINAL)	8210	720	2840	
CRIDGE2	CRIDGE STREET	1200	250		
MULB1	MULBERRY STREET	100	300		
LIME1	LIME STREET	1000	250		
D14ST2	14TH STREET	100	520		
DWAY1	MAINT. ROAD	60	1560		
DWAY2	MAINT. ROAD TO CITY PUMP FACILITIES	210	650		
	GRAND TOTAL	380725	147070	5340	4420

(N) NOT A SEPARATE PAY ITEM, FOR INFORMATION ONLY.

1 REVISED PER ADDENDUM No. 1 DATED NOVEMBER 8, 2011

SUMMARY OF QUANTITIES

Q-8

STATE OF CALIFORNIA - DEPARTMENT OF TRANSPORTATION
Caltrans DESIGN
FUNCTIONAL SUPERVISOR MARK PERTILE
CALCULATED-DESIGNED BY THAI VAN HGUYEN
CHECKED BY THOMAS HIEN NGO
REVISED BY DATE REVISED

LAST REVISION 10-13-11 DATE PLOTTED => 08-NOV-2011 TIME PLOTTED => 11:26

Dist	COUNTY	ROUTE	POST MILES TOTAL PROJECT	SHEET No.	TOTAL SHEETS
08	Riv	91	15.6/21.6	786	2028

REGISTERED CIVIL ENGINEER 10-28-11 DATE

4-25-11
PLANS APPROVAL DATE

REGISTERED PROFESSIONAL ENGINEER THOMAS HIEN NGO No. 68383 Exp. 9/30/11 CIVIL STATE OF CALIFORNIA

THE STATE OF CALIFORNIA OR ITS OFFICERS OR AGENTS SHALL NOT BE RESPONSIBLE FOR THE ACCURACY OR COMPLETENESS OF SCANNED COPIES OF THIS PLAN SHEET.

1

MINOR CONCRETE

LOCATION STATION TO STATION	SIDEWALK yd^3	CURB RAMP yd^3	DRIVEWAY yd^3	CURB & GUTTER yd^3	CROSS GUTTER yd^3
6+35.3 35.11′ LT "JEFF1" TO 6+63.9 35.11′ LT "JEFF1"	1.8			1.8	
6+35.3 35.05′ RT "JEFF1" TO 6+63.9 35.05′ RT "JEFF1"	1.7			1.8	
5+12.5 29.97′ LT "MADI1" TO 6+63.7 29.85′ LT "MADI1"	10.6	1.7		3.5	16.4
5+01.4 42.92′ RT "MADI1" TO 6+63.7 30.01′ RT "MADI1"	9.0	1.7		3.3	18.3
13+33.3 29.97′ LT "BROK1" TO 13+73.7 30.02′ LT "BROK1"	3.9			2.5	
13+40.5 30.04′ RT "BROK1" TO 13+84.3 30.11′ RT "BROK1"	3.8			2.8	
29+64.1 30.13′ RT "INDI1" TO 29+20.0 16.18′ LT "JANE1"	51.8	2.2	21.6	44.4	
36+76.4 31.29′ RT "INDI1" TO 37+79.7 29.65′ RT "INDI1"	3.2	0.9			25.5
36+33.2 30.44′ LT "INDI1" TO 36+67.6 59.44′ LT "INDI1"	3.1	1.8		2.8	
37+20.7 41.43′ LT "INDI1" TO 37+40.5 41.46′ LT "INDI1"	1.1			2.3	
38+28.1 109.56′ LT "INDI1" TO 42+01.0 29.82′ LT "INDI1"	33.4	1.1		25.7	
252+60.2 71.00′ LT "GE1" TO 254+07.9 87.14′ LT "GE1"				14.5	
30+10.6 48.03′ RT "ARLT1" TO 46+01.8 53.62′ LT "INDI1"	45.0	3.4	0.5	44.8	18.8
6+03.9 24.01′ RT "INDI1" TO 38+67.5 51.91′ RT "ARLT1"	16.1	1.1	6.8	14.8	
37+58.9 13.70′ RT "ARLT1" TO 38+67.5 8.59′ RT "ARLT1"				14.1	
33+61.9 39.09′ LT "ARLT1" TO 37+88.3 58.84′ LT "ARLT1"				28.4	
38+15.9 91.53′ LT "ARLT1" TO 39+78.5 48.19′ LT "ARLT1"				11.4	
33+61.9 39.22′ LT "ARLT1" TO 260+66.4 154.95′ LT "GE1"				10.2	
260+66.1 152.42′ LT "GE1" TO 264+83.14 135.11′ LT "GE1"				10.9	
264+81.3 "RIV2" TO 265+43.1 "RIV2"				3.5	
266+11.5 222.35′ LT "GE1" TO 266+66.8 125.4′ LT "GE1"				8.2	
266+13.1 104.73′ RT "GE1" TO 266+43.5 89.20′ RT "GE1"				13.7	
18+90.0 48′RT "CENTRAL1" TO 19+70.2 136.55′RT "CENTRAL1"	7.2	1.1		9.5	
19+72.7 36.85′RT "CENTRAL1" TO 20+27.2 36.39′RT "CENTRAL1"	3.5			11.0	
20+71.7 47.03′RT "CENTRAL1" TO 21+71.3 35.89′RT "CENTRAL1"	4.6	2.6		8.1	
22+97.3 35.86′RT "CENTRAL1" TO 23+54.2 49.71′RT "CENTRAL1"	2.5	1.4		4.4	
290+32.7 152.19′ RT "GE1" TO 24+38.0 36.45′ RT "GE1"	0.7	1.3		11.4	
20+13.2 47.57′LT "CENTRAL1" TO 20+76.3 71.84′LT "CENTRAL1"	6.5	1.1		5.2	
21+15.1 48.39′LT "CENTRAL1" TO 22+39.3 35.52′LT "CENTRAL1"	6.2	2.9		8.6	
SUB TOTAL	215.7	24.3	28.9	324	79

1 REVISED PER ADDENDUM No. 1 DATED NOVEMBER 8, 2011

SUMMARY OF QUANTITIES

Q-9

STATE OF CALIFORNIA - DEPARTMENT OF TRANSPORTATION
Caltrans DESIGN
FUNCTIONAL SUPERVISOR MARK PERTILE
CALCULATED-DESIGNED BY THAI VAN HGUYEN
CHECKED BY THOMAS HIEN NGO
REVISED BY
DATE REVISED

LAST REVISION 10-13-11
DATE PLOTTED => 08-NOV-2011
TIME PLOTTED => 11:26

Dist	COUNTY	ROUTE	POST MILES TOTAL PROJECT	SHEET No.	TOTAL SHEETS
08	Riv	91	15.6/21.6	787	2028

REGISTERED CIVIL ENGINEER 12-1-10 DATE

4-25-11
PLANS APPROVAL DATE

REGISTERED PROFESSIONAL ENGINEER THOMAS HIEN NGO No. 68383 Exp. 9/30/11 CIVIL STATE OF CALIFORNIA

THE STATE OF CALIFORNIA OR ITS OFFICERS OR AGENTS SHALL NOT BE RESPONSIBLE FOR THE ACCURACY OR COMPLETENESS OF SCANNED COPIES OF THIS PLAN SHEET.

1

MINOR CONCRETE

LOCATION STATION TO STATION	SIDEWALK	CURB RAMP	DRIVEWAY	CURB & GUTTER	CROSS GUTTER	MINOR CONCRETE MINOR STRUCTURE
	yd^3	yd^3	yd^3	yd^3	yd^3	yd^3
31+23.85 41.42′RT "INDI1" TO 3706+13 65.4′ RT "INDI1"						37.06
23+55.1 35.50′LT "CENTRAL1" TO 293+95.4 108.47′ RT "JEFF1"	7.3	0.9		12.9		
24+82.4 38.58′LT "CENTRAL1" TO 25+61.8 37.53′ LT "CENTRAL1"	5.6			11.8		
24+82.4 38.58′LT "CENTRAL1" TO 25+61.8 37.53′ LT "CENTRAL1"				1.7		
25+85.4 139.22′LT"CENTRAL1" TO 26+41.58 44.83′ LT"CENTRAL1"	1.8	1.2		10.3		
05+84.1 20.31′ LT "IVY3" TO 07+65.2 15.17′ LT "IVY3"	2.4		2.1	11.1		
08+81.2 17.00′ LT "IVY3" TO 09+03.3 17.00′ LT "IVY3"			2.7			
10+76.2 15.17′ LT "IVY3" TO 13+01.9 15.17′ LT "IVY3"	17.6			15.6		
05+84.1 16.97′ RT "IVY3" TO 09+50.0 10.17′ RT "RKHILL1"			7.4	21.0		
07+72.4 16.40′ RT "IVY3" TO 09+50.0 10.17′ LT "RKHILL1"			3.9	14.4		
08+81.2 17.00′ RT "IVY3" TO 09+03.2 17.00′ RT "IVY3"			2.3			
10+85.6 15.17′ RT "IVY3" TO 13+01.9 15.17′ RT "IVY3"				12.8		
05+02.1 45.82′ RT "CRIDGE2" TO 05+90.5 18.17′ RT "CRIDGE2"	4.1	1.5	6.2	6.5		
08+09.3 18.22′ RT "CRIDGE2" TO 08+76.0 18.11′ RT "CRIDGE2"	18.7			4.3		
05+34.1 70.62′ LT "CRIDGE2" TO 05+89.4 18.17′ LT "CRIDGE2"	8.6	0.7		7.9		
08+09.3 18.22′ LT "CRIDGE2" TO 08+76.0 18.11′ LT "CRIDGE2"	5.2			4.3		
365+38.4 74.76′ LT "GE1" TO 367+00 75.45′ LT "GE1"				18.0		
02+58.1 17.97′ RT "KANE1" TO 369+57.6 160′ LT "GE1"				7.9		
370+23.7 147.32′ LT "GE1" TO 370+87.7 156.71′ LT "GE1"				6.1		
370+23.7 147.32′ LT "GE1" TO 370+87.7 156.71′ LT "GE1"				3.3		
05+17.06 38.62′ RT "D14ST2" TO 372+68.5 187.80′ LT "GE1"	7.4	1.4	15.3	14.9		
06+26.7 62.13′ RT "D14ST2" TO 06+68.4 43.50′ RT "D14ST2"	3.4	0.6		4.0		
09+02.1 43.45′ RT "D14ST2" TO 09+27.1 63.51′ RT "D14ST2"	2.1	1.1		2.2		
09+70.6 108.75′ RT "D14ST2" TO 11+00 42.38′ RT "D14ST2"	7.7	1.9		27.9		
05+39.9 43.22′ LT "D14ST2" TO 377+51.2 183.61′ LT "GE1"	17.8	1.1	19.9	22.3		
06+21.3 73.90′ LT "D14ST2" TO 06+67.9 58.50′ LT "D14ST2"	3.8	0.8		3.1		
09+02.2 58.50′ LT "D14ST2" TO 09+31.2 68.65′ LT "D14ST2"	0.4	1.1	0.5	2.7		
09+62.7 105.70′ LT "D14ST2" TO 11+00 54.52′ LT "D14ST2"	10.8	1.1		10.6		
0+55.5 3.20′ RT "MULBERY1" TO 1+41.2 3.20′ RT "MULBERY1"				6.2		
5+26.4 14.68′ RT "MULBERY1" TO 5+96.4 14.99′ RT "MULBERY1"				5.8		
21+52.9 41.58′ RT "LIME1" TO 29+91.2 142.08′ RT "LIME1"	62	4.9	6.9	53.3	30.7	
386+11.2 166.94′ RT "GE1" TO 389+83.7 144.42′ RT "GE1"				23.9		
SUB TOTAL	186.8	18.3	67.2	347	30.7	37.06
SUB TOTAL FROM Q-9	215.7	24.3	28.9	324	79	
TOTAL	402.5	42.6	96.1	671	109.7	37.06

1 **REVISED PER ADDENDUM No. 1 DATED NOVEMBER 8, 2011**

SUMMARY OF QUANTITIES
Q-10

STATE OF CALIFORNIA - DEPARTMENT OF TRANSPORTATION
Caltrans® DESIGN

FUNCTIONAL SUPERVISOR: MARK PERTILE
CALCULATED-DESIGNED BY: THAI VAN HGUYEN
CHECKED BY: THOMAS HIEN NGO
REVISED BY
DATE REVISED

LAST REVISION 10-13-11
DATE PLOTTED => 08-NOV-2011
TIME PLOTTED => 11:26

Dist	COUNTY	ROUTE	POST MILES TOTAL PROJECT	SHEET No.	TOTAL SHEETS
08	Riv	91	15.6/21.6	791	2028

REGISTERED CIVIL ENGINEER 10-28-11 DATE

4-25-11
PLANS APPROVAL DATE

REGISTERED PROFESSIONAL ENGINEER CUONG LE TRAN No. C60436 Exp. 6/30/12 CIVIL STATE OF CALIFORNIA

THE STATE OF CALIFORNIA OR ITS OFFICERS OR AGENTS SHALL NOT BE RESPONSIBLE FOR THE ACCURACY OR COMPLETENESS OF SCANNED COPIES OF THIS PLAN SHEET.

1

REMOVE CONCRETE

SHEET NO.	STATION TO STATION	LOCATION	REMOVE CONCRETE GUTTER	REMOVE CONCRETE CURB	REMOVE CONCRETE CURB & GUTTER	REMOVE CONCRETE CURB & SIDEWALK	REMOVE CONCRETE CURB & GUTTER AND SIDEWALK	REMOVE RETAINING WALL
			YD^3	YD^3	YD^3	YD^3	YD^3	YD^3
C-16	374+88.07 96.9′ R+ TO 374+02.21 154.1′ R+ "GE 1"	R+				4.89		
C-16	374+02.21 154.1′ R+ TO 376+68.21 126.8′ R+ "GE 1"	R+			10.22			
C-16	374+88.99 89.4′ L+ TO 375+05.56 61.8′ L+ "GE 1"	L+			4.73	4.18		
C-16	375+05.56 61.8′ L+ TO 376+41.69 152.8′ L+ "GE 1"	L+			8.17			
C-16	377+43.85 147.8′ L+ TO 375+22.78 61.8′ L+ "GE 1"	L+			10.65			
C-16	375+08.05 229.3′ L+ TO 375+22.78 61.8′ L+ "GE 1"	L+			20.84	9.86		
C-16	375+08.05 229.3′ L+ TO 375+22.78 61.8′ L+ "GE 1"	L+				2.95		
C-16	375+08.05 229.3′ L+ TO 375+22.78 61.8′ L+ "GE 1"	L+				7.52		
C-16	375+08.05 229.3′ L+ TO 375+22.78 61.8′ L+ "GE 1"	L+				4.82		
C-16	375+08.05 229.3′ L+ TO 375+22.78 61.8′ L+ "GE 1"	L+				0.45		
C-16	372+83.22 159.6′ L+ TO 373+86.19 88.8′ L+ "GE 1"	L+			10.66	8.45		
C-16	372+68.59 93.6′ L+ TO 374+17.43 260.5′ L+ "GE 1"	L+				24.45		
C-16	372+68.59 93.6′ L+ TO 374+17.43 260.5′ L+ "GE 1"	L+				3.37		
C-16	372+68.59 93.6′ L+ TO 374+17.43 260.5′ L+ "GE 1"	L+				3.65		
C-17	385+13.80 66′ L+ TO 389+84.11 63.5′ L+ "GE 1"	L+			28.22	37.16		
C-17	379+49.84 50′ R+ TO 380+05.01 44.7′ R+ "GE 1"	R+			3.31			
C-17	389+63.74 81.8′ R+ TO 392+49.89 131.2′ R+ "GE 1"	R+			17.17			
C-17	366+56.10 392.4′ L+ TO 386+87.23 77.9′ L+ "GE 1"	L+			17.94	55.75		
C-17	387+43.34 363.3′ L+ TO 387+33.97 231.05′ L+ GE 1"	L+			40.09	109.72		
C-17	387+43.34 363.3′ L+ TO 387+33.97 231.05′ L+ GE 1"	L+			13.44	33.19		
C-18	392+49.89 234′ L+ TO 393+94.57 189.6′ L+ "GE 1"	L+			11.72	14.42		
C-18	349+28.0 179′ L+ TO 394+91.16 110.7′ L+ "GE 1"	L+			8.84			
C-18	394+60 204′ L+ TO 394+91.16 222′ L+ "GE 1"	L+				3.63		
C-18	394+37.86 217.8′ L+ TO394+37.86 217.8′ L+ "GE 1"	L+			7.62	4.56		
C-18	392+49.89 66.39′ R+ TO 394+89.4 129.6′ R+ "GE1"	R+			12.38	1.35		
C-18	392+49.89 127.3′ R+ TO 393+16.35 163.7′ R+ "GE1"	R+			3.76			
C-8	266+25 221′ L+ TO 269+80 120′ L+ "GE1"	L+						137
C-15	355+14 54′ R+ TO 364+10 66′ R+ "GE1"	R+						400
G-15 & G-16	72+98.92 46.21′ R+ TO 76+53.64 67.04′ R+ "PMT1"	R+						797
G-15 & G-17	79+72.56 49.32′ R+ TO 83+03 51.79′ R+ "PMT1"	R+						1129
C-18	393+75 80.6′ L+ TO 398+30 91.6′ L+ "GE1"	L+						530
	SUBTOTAL				229.76	334.37		2633
	TOTAL (Q-12 TO Q-13)		1401.77	477.97	815.93	352.37	7.80	
	GRAND TOTAL		6253					

1 REVISED PER ADDENDUM No. 1 DATED NOVEMBER 8, 2011

SUMMARY OF QUANTITIES

Q-14

STATE OF CALIFORNIA - DEPARTMENT OF TRANSPORTATION
Caltrans
DESIGN

FUNCTIONAL SUPERVISOR: MARK PERTILE
CALCULATED-DESIGNED BY: CUONG LE TRAN
CHECKED BY: ANNABELL WANG
REVISED BY
DATE REVISED

LAST REVISION 10-13-11
DATE PLOTTED => 08-NOV-2011
TIME PLOTTED => 11:26

Dist	COUNTY	ROUTE	POST MILES TOTAL PROJECT	SHEET No.	TOTAL SHEETS
08	Riv	91	15.6/21.6	796	2028

REGISTERED CIVIL ENGINEER 10-28-11 DATE

4-25-11
PLANS APPROVAL DATE

REGISTERED PROFESSIONAL ENGINEER CUONG LE TRAN No. C60436 Exp 6/30/12 CIVIL STATE OF CALIFORNIA

THE STATE OF CALIFORNIA OR ITS OFFICERS OR AGENTS SHALL NOT BE RESPONSIBLE FOR THE ACCURACY OR COMPLETENESS OF SCANNED COPIES OF THIS PLAN SHEET.

1

RETAINING WALL QUANTITIES

RW No.	STATION TO STATION LOL RETAINING WALL (UNLESS OTHERWISE SHOWN)	STRUCTURAL CONCRETE (RETAINING WALL)	BAR REINFORCING STEEL (RETAINING WALL)	STRUCTURAL EXCAVATION (RETAINING WALL)	STRUCTURAL BACKFILL (RETAINING WALL)	PERVIOUS BACKFILL MATERIAL (RETAINING WALL)	CONCRETE BARRIER (TYPE 60D MOD)	CONCRETE BARRIER (TYPE 732A)	CONCRETE BARRIER (TYPE 736 MOD)	CABLE RAILING	CHAIN LINK FENCE (TYPE CL-3FT)	CHAIN LINK FENCE (TYPE CL-6FT)	MINOR CONCRETE (GUTTER)	FURNISH PILING (CLASS 90) (ALTERNATIVE X)	DRIVE PILE (CLASS 90) (ALTERNATIVE X)	(N) PLASTIC PIPE	(N) WATERSTOP
		CY	LB	CY	CY	CY	LF	LF	LF	LF	LF	LF	LF	LF	EA	LF	LF
172	171+38.72 TO 177+00.03	403.80	33792	1276.11	913.55	47.20		561.31								38.70	107.44
190	190+50.00 TO 195+75.54	337.60	32737	900.2	664.4	32.4		525.54								28.00	62.10
194	192+75.00 TO 197+43.60	314.60	26098	886.46	622.69	30.09		468.60								27.68	58.75
198	198+88.00 TO 200+99.91	147.20	15062	446.98	305.00	13.36		211.91						225.20	8	9.21	41.52
200	200+50.00 TO 204+50.07	274.23	22797	696.19	911.89	25.76		400.07								19.31	36.80
231	231+00.00 TO 238+69.00	869.10	100379	734.65	1008.19	66.97		769.00			300.00					52.63	178.00
240	240+94.94 TO 247+23.56	708.20	89815	2946.33	2751.8	227.24		628.62			273.97					41.62	153.37
241	239+63.16 TO 244+73.80	804.80	105023	1287.72	2453.62	205.39		510.64								138.61	42.81
253	254+06.80 TO 255+82.80	164.30	11164	318.30	378.60	9.80		176.00								11.32	28.63
254	256+50.00 TO 260+32.68	467.90	58427	448.45	1342.11	129.00		382.68								28.90	113.30
255	254+50.00 TO 258+50.37	500.60	57124	1223.90	1289.80	109.60		400.37								32.22	119.74
262	262+03.21 TO 266+12.40	559.90	62485	1118.28	1453.95	69.40		409.19								24.81	69.19
266	263+83.13 TO 271+13.50	1006.80	121042	1792.60	2844.40	223.60		730.37								56.60	173.17
267	266+85.20 TO 278+68.74	563.40	50615	1487.54	1313.40	10.61			683.54							29.96	76.28
280	281+25.00 TO 286+80.00	456.00	32817	1581.80	1106.90	60.50	555.00			555.00			555.00			31.79	93.16
286	286+80.00 TO 289+89.54	146.90	13253	396.60	283.70	2.40		309.54								11.62	29.83
287	286+00.80 TO 290+26.86	706.90	99069	2184.60	2119.40	153.40		426.06								38.50	232.64
288	287+48.23 TO 291+15.74	548.50	73996	1075.98	1744.86	132.50		367.51								24.94	63.21
291	291+45.52 TO 294+95.85	711.00	98633	2163.73	2400.36	151.47		350.33								33.07	172.92
293	292+03.15 TO 299+48.40	1054.20	123321	1927.05	3154.33	223.77		104.00	641.25							59.51	248.75
294	292+65.79 TO 295+86.40	373.70	45293	1016.32	1127.42	76.17		320.61								20.91	120.00
303	302+92.00 TO 314+62.55	1672.30	274974	13300.78	9334.61	713.12	1170.55			1170.55			250.55			101.74	389.07
321	321+03.10 TO 334+82.65	2656.20	356924	13132.05	7959.71	633.97	1379.55			1379.55			1379.55			125.38	586.67
322	320+98.57 TO 339+02.89	1824.20	171004	8266.20	4312.70	336.92	1804.32	751.43		1052.89		751.43	614.90			124.54	515.88
335	09+71.88 TO 16+91.00	1343.40	270453	2532.76	4222.92	321.17				716.75			716.75			62.82	313.38
337	337+80.10 TO 339+87.95	201.20	18196	599.96	594.01	27.01		207.85								12.40	89.20
338	338+88.00 TO 342+32.79	445.30	48146	1163.90	1289.97	71.74		344.79						327.00	12	25.50	121.06
346	345+75.00 TO 347+54.98	157.30	14092	367.19	401.59	19.92		179.98								9.71	59.27
348	350+85.34 TO 354+22.70	827.60	122092	4822.89	2605.55	194.95	337.36			337.36			337.36			38.96	161.97
361	360+10.00 TO 369+87.00	2450.00	345520	18640.00	9312.24	694.21	957.00			977.00			977.00			105.54	439.40
362	360+98.12 TO 373+30.00	2896.80	503027	26958.86	21490.07	1534.48	1231.88			1231.88			1231.88			129.70	412.00
375A	375+09.46 TO 378+00.00	449.20	56510	2444.86	1364.92	118.11	290.54	290.54								24.72	113.83
378	377+32.05 TO 386+50.00	1604.80	213012	9243.50	4843.60	425.60	917.95			765.00		152.95				77.72	285.72
379	377+72.00 TO 380+06.62	139.10	11659	309.84	295.61	9.92		234.62								10.18	18.77
381	380+23.46 TO 384+81.01	452.40	34901	2023.50	1092.70	67.20	457.55			457.55			457.55			31.32	92.40
382	382+13.92 TO 386+41.50	514.50	62317	3619.72	1609.45	112.82	432.00	432.00								28.21	56.37
385	01+50.00 TO 03+49.00	1063.10	19756	363.70	410.70	33.70				199.00						13.87	34.87
387	385+01.52 TO 389+81.48	343.70	28585	847.66	716.55	52.45		479.96						113.76	8	29.07	65.40
	SUB-TOTAL	30,160.73	3,824,110	134,547.16	102,055.03	7,367.92	9,533.70	10,973.52	1,324.79	8,842.53	573.97		6,520.54	665.96	28	1,711.29	5,976.87
	FROM RW (SOUND WALL) SUB-TOTAL	282.20	28,923	487.49	495.68	13.41			230.60							17.92	33.00
	GRAND TOTAL	30,442.93	3,853033	135,034.65	102,550.71	7,381.33	9,533.70	10,973.52	1,555.39	8,842.53	573.97	904.38	6,520.54	665.96	28	1,729.21	6,009.87

(N) NOT A SEPARATE PAY ITEM, FOR INFORMATION ONLY.

RETAINING WALL 389

TIRE SHRED EXCAVATION (REMOVAL ON EXISTING WALL, RW 91 - 119)	WASTE TRANSPORTATION AND DISPOSAL (TIRE SHRED MATERIALS)
CY	CY
760	760

1 REVISED PER ADDENDUM No. 1 DATED NOVEMBER 8, 2011

RETAINING WALL SUMMARY OF QUANTITIES

Q-19

STATE OF CALIFORNIA - DEPARTMENT OF TRANSPORTATION
Caltrans DESIGN
FUNCTIONAL SUPERVISOR MARK PERTILE
CALCULATED-DESIGNED BY CUONG LE TRAN
CHECKED BY ANNABELL WANG
REVISED BY
DATE REVISED

LAST REVISION 10-24-11 DATE PLOTTED => 08-NOV-2011 TIME PLOTTED => 11:26

Dist	COUNTY	ROUTE	POST MILES TOTAL PROJECT	SHEET No.	TOTAL SHEETS
08	Riv	91	15.6/21.6	798A	2028

Ike J. Maatubang 10-28-11
REGISTERED CIVIL ENGINEER DATE

4-25-11
PLANS APPROVAL DATE

REGISTERED PROFESSIONAL ENGINEER IKE MAATUBANG No. C55065 Exp 6/30/04 CIVIL STATE OF CALIFORNIA

THE STATE OF CALIFORNIA OR ITS OFFICERS OR AGENTS SHALL NOT BE RESPONSIBLE FOR THE ACCURACY OR COMPLETENESS OF SCANNED COPIES OF THIS PLAN SHEET.

1

LOCATIONS OF SURVEY MONUMENTS

SURVEY MONUMENT

DESCRIPTION	LOCATION	EA
Std Disk, stamped "RIV91-15.6 GPS 2003"	at Adams St IC (pm15.6)	1
Std Disk, stamped "RIV91-15.86 LS 5679 1990"	near shoulder EB Rte 91 (pm15.9)	1
Std Disk, stamped "RIV91-16.12 LS 5679 1990"	near shoulder EB Rte 91 (pm16.1)	1
Std Disk, stamped "RIV91-16.38 LS 5679 1990"	near shoulder EB Rte 91 (pm16.4)	1
Std Disk, stamped "RIV91-16.65 LS 5679 1990"	at Madison Ave IC (pm16.7)	1
Std Disk, stamped "RIV91-16.9 GPS 2003"	near shoulder EB Rte 91 (pm16.9)	1
Std Disk, stamped "RIV91-17.2 GPS 2003"	near shoulder EB Rte 91 (pm17.2)	1
Std Disk, stamped "RIV91-17.44 LS 5679 1990"	at Brockton Ave Bridge (pm17.4)	1
Std Disk, stamped "RIV91-17.50 LS 5679 1990"	near shoulder WB Rte 91 (pm17.5)	1
Std Disk, stamped "RIV91-17.85 LS 5679 1990"	near shoulder WB Rte 91 (pm17.85)	1
Std Disk, stamped "RIV91-18.01 LS 5679 1990"	near shoulder EB Rte 91 (pm18.0)	1
Std Disk, stamped "RIV91-18.24 LS 5679 1990"	near shoulder WB Rte 91 (pm18.2)	1
Std Disk, stamped "RIV91-18.44 LS 5679 1990"	at Central Ave IC (pm18.4)	1
Std Disk, stamped "RIV91-18.63 LS 5679 1990"	near shoulder EB Rte 91 (pm18.6)	1
Std Disk, stamped "RIV91-18.98 LS 5679 1990"	at Ivy Street Bridge (pm19.0)	1
Std Disk, stamped "RIV91-19.17 LS 5679 1990"	near shoulder EB Rte 91 (pm19.2)	1
Std Disk, stamped "RIV91-19.39 LS 5679 1990"	In Railroad Bridge (pm19.4)	1
Std Disk, stamped "RIV91-19.54 LS 5679 1990"	near shoulder WB Rte 91 (pm19.5)	1
Std Disk, stamped "RIV91-19.63 LS 5679 1990"	near Cridge St Bridge (pm19.6)	1
Std Disk, stamped "RIV91-19.68 LS 5679 1990"	on Olivewood Ave (pm19.7)	1
Std Disk, stamped "RIV91-19.90 LS 5679 1990"	EB at 14th St Off-Ramp (pm19.9)	1
Std Disk, stamped "RIV91-20.13 LS 5679 1990"	WB at 14th St Off-Ramp (pm20.1)	1
Std Disk, stamped "RIV91-20.43 2007"	on WB shldr Rte 91 at Univ Ave (pm20.4)	1
Std Disk, stamped "RIV91-20.45 LS 5679 1990"	at University Ave Bridge (pm20.5)	1
Spike, no head	at CL Indiana Ave, ± 685′ nw′ly of Jane St	1
11/2" I.P., Tagged "City of Riv Eng"	at CL Indiana Ave & Barbara Court (vacated)	1
11/2" I.P., Tagged "City of Riv Eng"	at CL Indiana Ave & Laguna Court (vacated)	1
¾" Copperweld	at CL Indiana Ave & Jane St	1
PK Nail w/"City of Riverside" washer	at CL Indiana Ave & Arlington Ave	1
CDH Disk, in Well	at PI Arlington Ave & Riverside Ave 141.94′ LT STA 258+45.65 CL IMP SR-91	1
PK nail w/"RIV CITY ENGR", Washer, flush	at P.I. Arlington Ave & Mount Diablo Ave	1
Std Disk, in Well, stamped "22+70.41"	at CL Riverside Ave BC	1
Std Disk	at CL Central Ave, Sec¼ 34/35 T2S R5W	1
PK nail w/"RIV CITY ENGR", Washer	at PI Central Ave & Olivewood Ave	1
Nail & Tag "RP CMEA", flush	at PI Ivy Street near Rockhill Way	1
TOTAL		35

NOTE: POST MILES SHOWN FOR MONUMENTS LISTED ARE APPROXIMATE ONLY

SURVEY MONUMENT

DESCRIPTION	LOCATION	EA
Std Disk, in Well, stamped "0+32.02 BC"	at Ivy Street BC	1
Std Disk, in Well, stamped "0+58.21 EC"	at Ivy Street EC	1
Std Disk, stamped "1+37.18=320+81.66 POC IVY CL IMP"	in Ivy St Bridge Deck	1
Std Disk, in Well, stamped "2+05.93 BC"	at Ivy Street BC	1
Std Disk, in Well, stamped "3+11.81 EC"	at Ivy Street EC	1
PK Nail w/Caltrans Washer	at CL Cridge St & CL Date St (Olivewood Ave)	1
Chiseled "X", top of curb, raised island	at PI Mulberry Street & Kane Street	1
Std Disk, in Well	at PI 14th Street & Mulberry Street	1
Std Disk, in top of s′ly median curb, stamped "4′ RT CL 14th Street 121+30.00 POT"	at 14th Street & Vine Street	1
Std Disk, flush, stamped "CL Vine Street 12+85.47 BC"	n′ly of 14th Street	1
Std Disk, flush, stamped "CL Vine Street 11+59.47 EC"	n′ly of 14th Street	1
Std Disk, flush, stamped "CL Vine Street 12+85.47 BC"	n′ly of 14th Street	1
¾′ I.P., flush, w/"RIV CITY ENGR" Tag	at CL Lime Street & 10th Street	1
Std Disk, in Well, stamped "CL 10th Street"	±148′ se′ly of Lime Street	1
Std Disk, in Well, stamped "MULB-10TH PI"	at 10th Street & Mulberry Street	1
Std Disk, in Well, no stamping cited	at CL 9th Street,±126′ se′ly of Lime Street	1
1" I.P., Tagged "LS 5491"	at PI Mulberry Street & 9th Street	1
1" I.P., Tagged "LS 5491"	at CL Mulberry Street, ±43′ ne′ly of 9th St	1
Spike w/"RIV CITY ENGR" Tag	at PI University Ave & Mulberry Street(sw′ly)	1
Spike w/"RIV CITY ENGR" Tag	at PI University Ave & Mulberry Street(ne′ly)	1
Spike w/"RIV CITY ENGR" Tag	at PI University Ave & Lime Street	1
TOTAL		21
SUB-TOTAL		35
GRAND TOTAL		56

1 ADDED PER ADDENDUM No. 1 DATED NOVEMBER 8, 2011

SUMMARY OF QUANTITIES

Q-21A

STATE OF CALIFORNIA - DEPARTMENT OF TRANSPORTATION
Caltrans DESIGN
FUNCTIONAL SUPERVISOR MARK PERTILE
CALCULATED-DESIGNED BY IKE MAATUBANG
CHECKED BY
REVISED BY
DATE REVISED

LAST REVISION 10-18-11
DATE PLOTTED => 08-NOV-2011
TIME PLOTTED => 11:26

Dist	COUNTY	ROUTE	POST MILES TOTAL PROJECT	SHEET No.	TOTAL SHEETS
08	Riv	91	15.6/21.6	926	2028

REGISTERED CIVIL ENGINEER — DATE 10-28-11

4-25-11
PLANS APPROVAL DATE

REGISTERED PROFESSIONAL ENGINEER — CUONG LE TRAN — No. C60436 — Exp. 6-30-12 — CIVIL — STATE OF CALIFORNIA

THE STATE OF CALIFORNIA OR ITS OFFICERS OR AGENTS SHALL NOT BE RESPONSIBLE FOR THE ACCURACY OR COMPLETENESS OF SCANNED COPIES OF THIS PLAN SHEET.

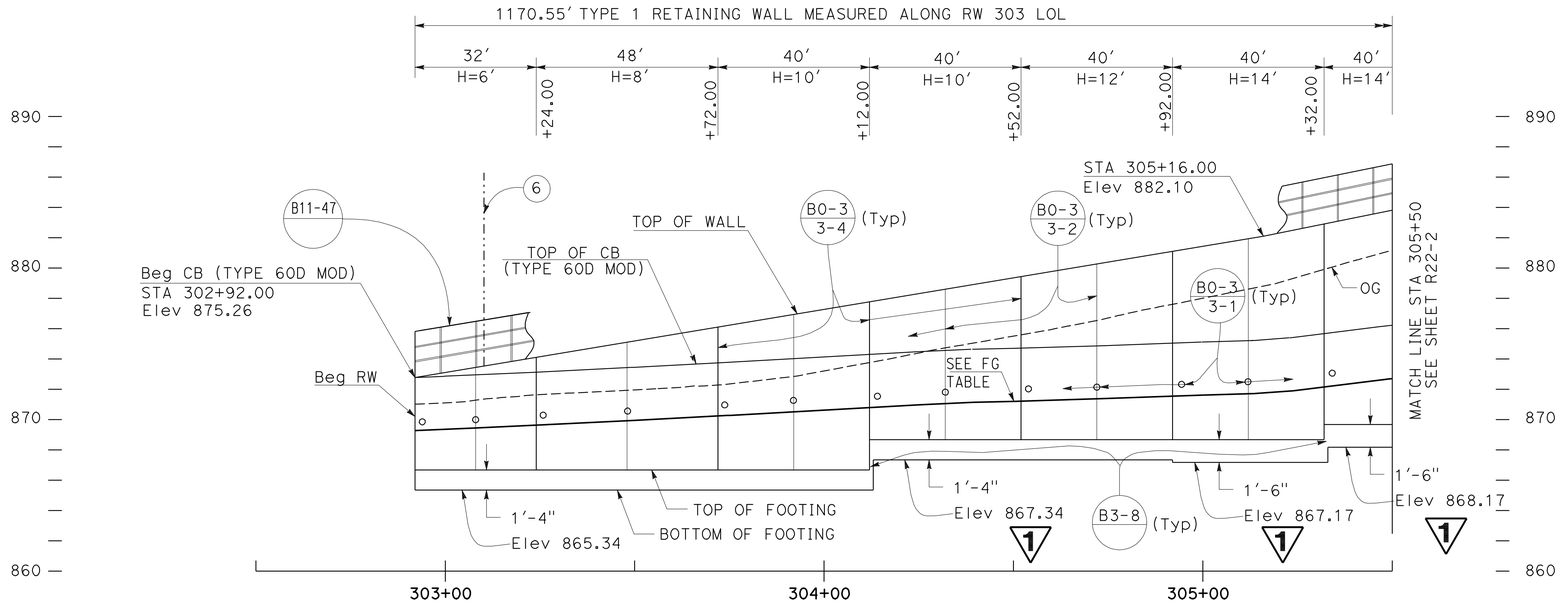

ELEVATION

SCALE Horiz 1"=20'
Vert 1"=5'

QUANTITIES

STRUCTURAL CONCRETE (RETAINING WALL)	1672.30	CY
BAR REINFORCING STEEL (RETAINING WALL)	274974	LB
STRUCTURAL EXCAVATION (RETAINING WALL)	13300.78	CY
STRUCTURAL BACKFILL (RETAINING WALL)	9334.61	CY
PERVIOUS BACKFILL MATERIAL (RETAINING WALL)	713.12	CY
CONCRETE BARRIER (TYPE 60D MOD)	1170.55	LF
CABLE RAILING	1170.55	LF
MINOR CONCRETE (GUTTER)	250.55	LF
PLASTIC PIPE (N)	101.74	LF
WATERSTOP (N)	389.07	LF
ARCHITECTURAL SURFACE (TEXTURED CONCRETE)	13400.52	SF

(N) = NOT A SEPARATE PAY ITEM, FOR INFORMATION ONLY

NOTES:

1. ARCHITECTURAL TREATMENT SHOULD EXTEND 6 IN BELOW FG OR 6 IN BELOW TOP CB (TYPE 60D MOD)
2. FOR STRUCTURAL SECTIONS, SEE ROADWAY PLANS
3. FOR POST ANCHORAGE DETAILS, SEE B11-52
4. FOR ROUNDING DETAILS, SEE ARCHITECTURAL TREATMENT PLANS
5. CONCRETE DITCH, SEE DRAINAGE PLANS
6. OVERHEAD SIGN, SEE OVERHEAD SIGN PLANS

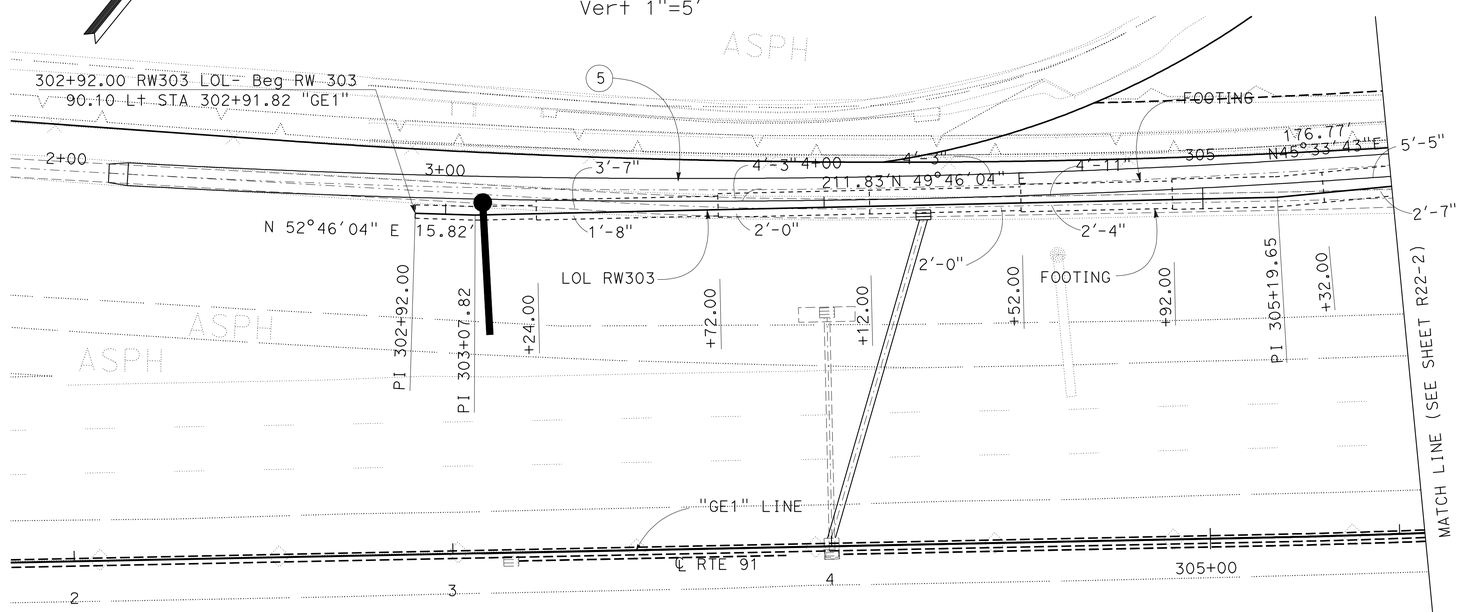

PLAN

SCALE: 1" = 20'

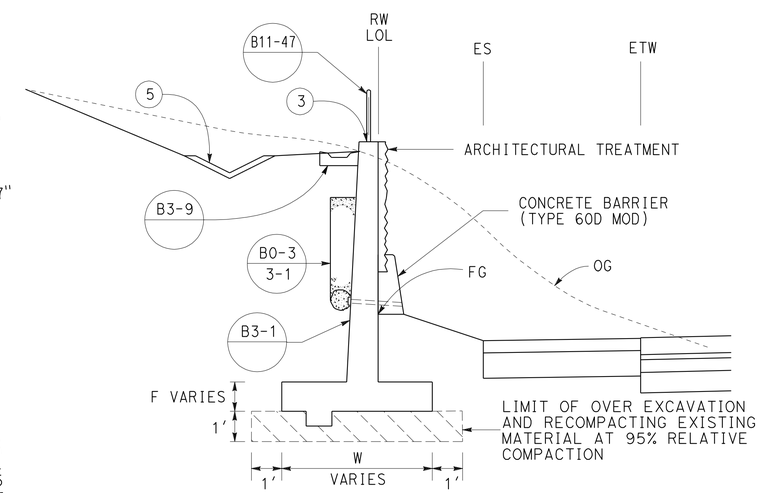

TYPICAL SECTION

NO SCALE
FROM STA 302+92.00 TO STA 314+62.55

1 REVISED PER ADDENDUM No. 1 DATED NOVEMBER 8, 2011

THIS PLAN ACCURATE FOR RETAINING WALL WORK ONLY.

RETAINING WALL PLAN
RETAINING WALL No. 303

SCALE AS SHOWN

R22-1

STATE OF CALIFORNIA - DEPARTMENT OF TRANSPORTATION
Caltrans
DESIGN
FUNCTIONAL SUPERVISOR: MARK PERTILE
CALCULATED-DESIGNED BY: ANNABELL WANG
CHECKED BY: CUONG LE TRAN
REVISED BY
DATE REVISED

LAST REVISION 10-13-11
DATE PLOTTED => 08-NOV-2011
TIME PLOTTED => 11:27

Dist	COUNTY	ROUTE	POST MILES TOTAL PROJECT	SHEET No.	TOTAL SHEETS
08	Riv	91	15.6/21.6	1000	2028

REGISTERED CIVIL ENGINEER — DATE 10-28-11

4-25-11
PLANS APPROVAL DATE

REGISTERED PROFESSIONAL ENGINEER — CUONG LE TRAN — No. C60436 — Exp. 6-30-12 — CIVIL — STATE OF CALIFORNIA

THE STATE OF CALIFORNIA OR ITS OFFICERS OR AGENTS SHALL NOT BE RESPONSIBLE FOR THE ACCURACY OR COMPLETENESS OF SCANNED COPIES OF THIS PLAN SHEET.

1

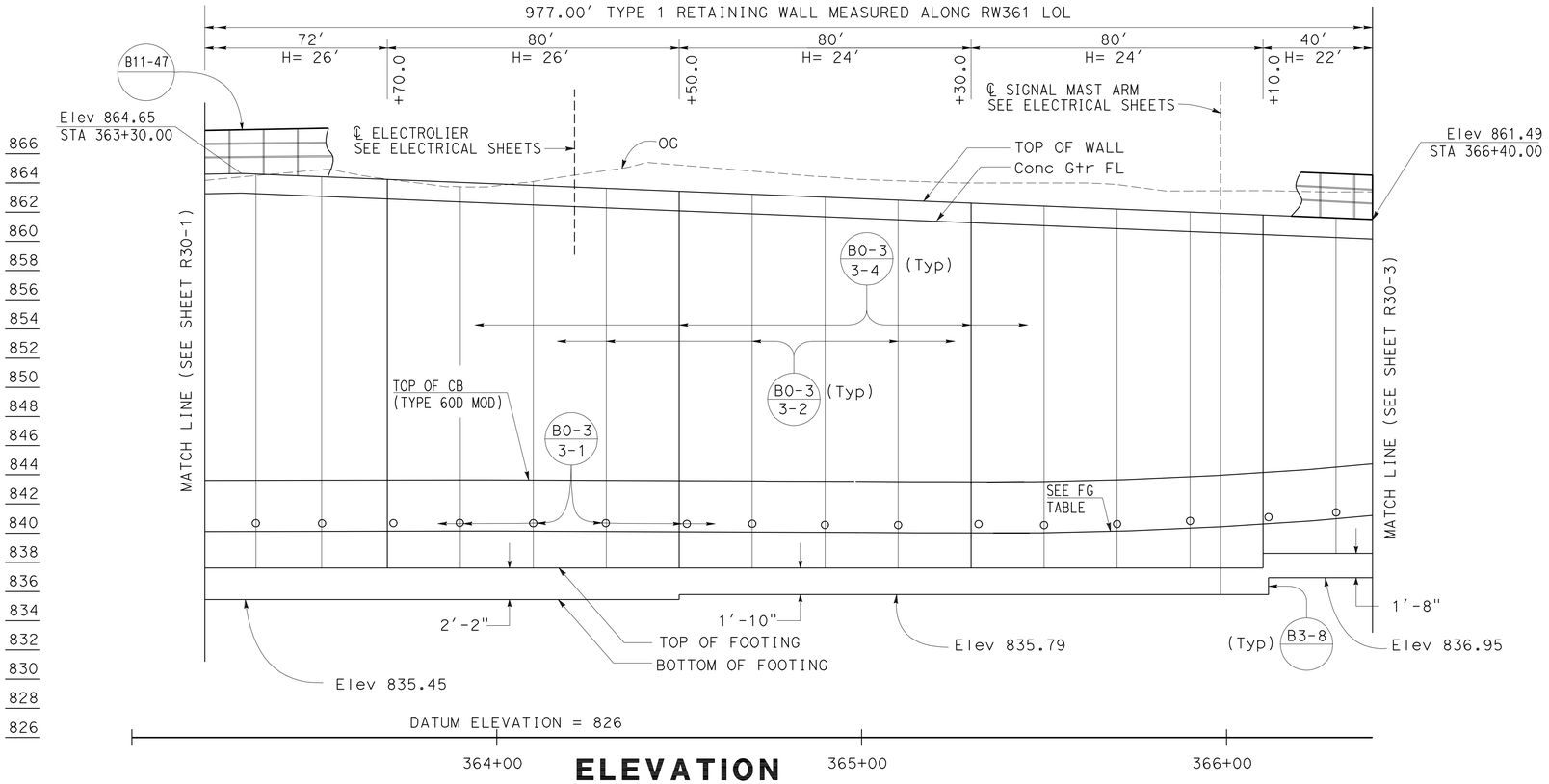

ELEVATION

SCALE Horiz 1"=20'
Vert 1"=5'

FINISH GRADE (FG) TABLE			
STATION	ELEVATION	STATION	ELEVATION
360+10.0	839.71		
360+25.0	839.71	365+25.0	840.02
360+50.0	839.67	365+50.0	840.04
360+75.0	839.63	365+75.0	840.18
361+00.0	839.61	366+00.0	840.47
361+25.0	839.68	366+25.0	840.54
361+50.0	839.76	366+50.0	841.46
361+75.0	839.84	366+75.0	842.24
362+00.0	839.93	367+00.0	843.14
362+25.0	840.01	367+25.0	844.12
362+50.0	840.09	367+50.0	845.19
362+75.0	840.10	367+75.0	846.28
363+00.0	840.11	368+00.0	847.51
363+25.0	880.12	368+25.0	848.86
363+50.0	880.13	368+50.0	850.33
363+75.0	880.14	368+75.0	851.85
364+00.0	840.15	369+00.0	853.24
364+25.0	840.13	369+25.0	854.60
364+50.0	840.10	369+50.0	856.04
364+75.0	840.07	369+70.0	858.08
365+00.0	840.05	369+87.0	860.99

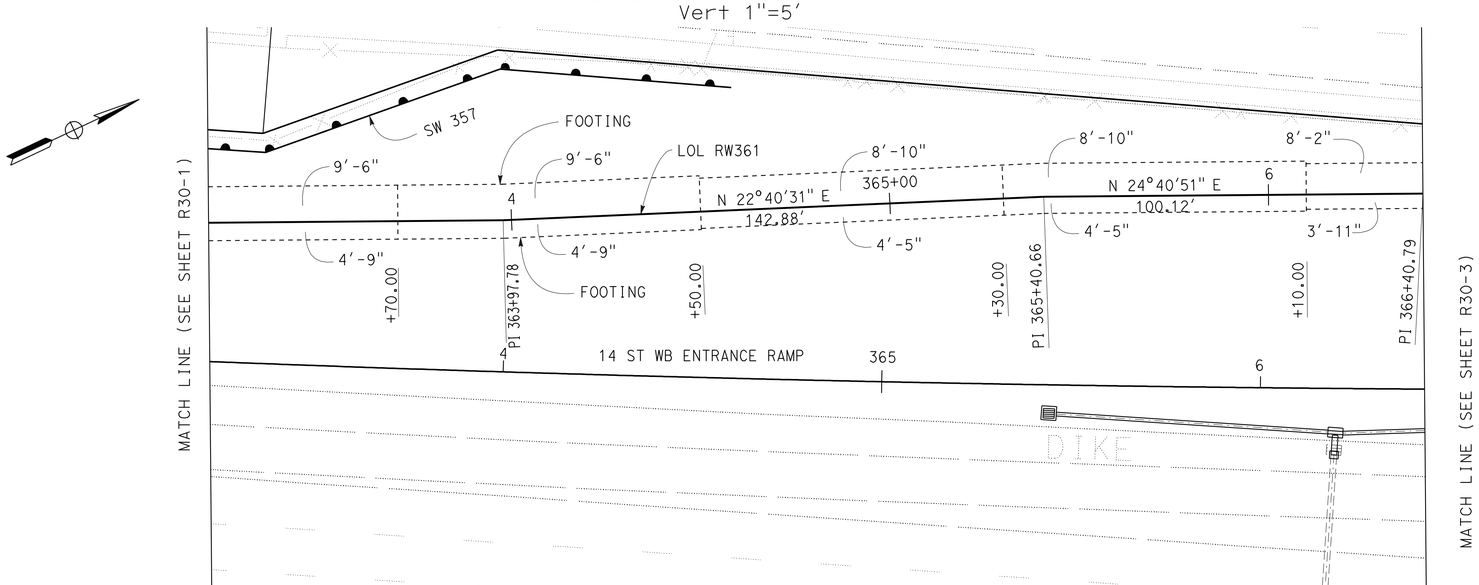

PLAN

SCALE: 1"=20'

THIS PLAN ACCURATE FOR RETAINING WALL WORK ONLY.

QUANTITIES

STRUCTURAL CONCRETE (RETAINING WALL)	2450.00	CY
BAR REINFORCING STEEL (RETAINING WALL)	345520	LB
STRUCTURAL EXCAVATION (RETAINING WALL)	18640.00	CY
STRUCTURAL BACKFILL (RETAINING WALL)	9320.00	CY
PERVIOUS BACKFILL MATERIAL (RETAINING WALL)	694.21	CY
CONCRETE BARRIER (TYPE 60D MOD)	957.00	LF
CABLE RAILING	977.00	LF
MINOR CONCRETE (GUTTER)	977.00	LF
PLASTIC PIPE (N)	105.54	LF
WATERSTOP (N)	439.40	LF
ARCHITECTURAL SURFACE (TEXTURED CONCRETE)	16121.17	SF

(N) = NOT A SEPARATE PAY ITEM, FOR INFORMATION ONLY

1 **REVISED PER ADDENDUM No. 1 DATED NOVEMBER 8, 2011**

RETAINING WALL PLAN
RETAINING WALL No. 361

SCALE AS SHOWN

R30-2

REVISED BY | DATE REVISED
ANNABELL WANG | CUONG LE TRAN
CALCULATED-DESIGNED BY | CHECKED BY
FUNCTIONAL SUPERVISOR: MARK PERTILE

STATE OF CALIFORNIA - DEPARTMENT OF TRANSPORTATION
Caltrans® DESIGN

LAST REVISION 10-19-11 | DATE PLOTTED => 08-NOV-2011 | TIME PLOTTED => 11:27

Dist	COUNTY	ROUTE	POST MILES TOTAL PROJECT	SHEET No.	TOTAL SHEETS
08	Riv	91	15.6/21.6	1001	2028

REGISTERED CIVIL ENGINEER — DATE 10-28-11

4-25-11
PLANS APPROVAL DATE

REGISTERED PROFESSIONAL ENGINEER — CUONG LE TRAN — No. C60436 — Exp. 6-30-12 — CIVIL — STATE OF CALIFORNIA

THE STATE OF CALIFORNIA OR ITS OFFICERS OR AGENTS SHALL NOT BE RESPONSIBLE FOR THE ACCURACY OR COMPLETENESS OF SCANNED COPIES OF THIS PLAN SHEET.

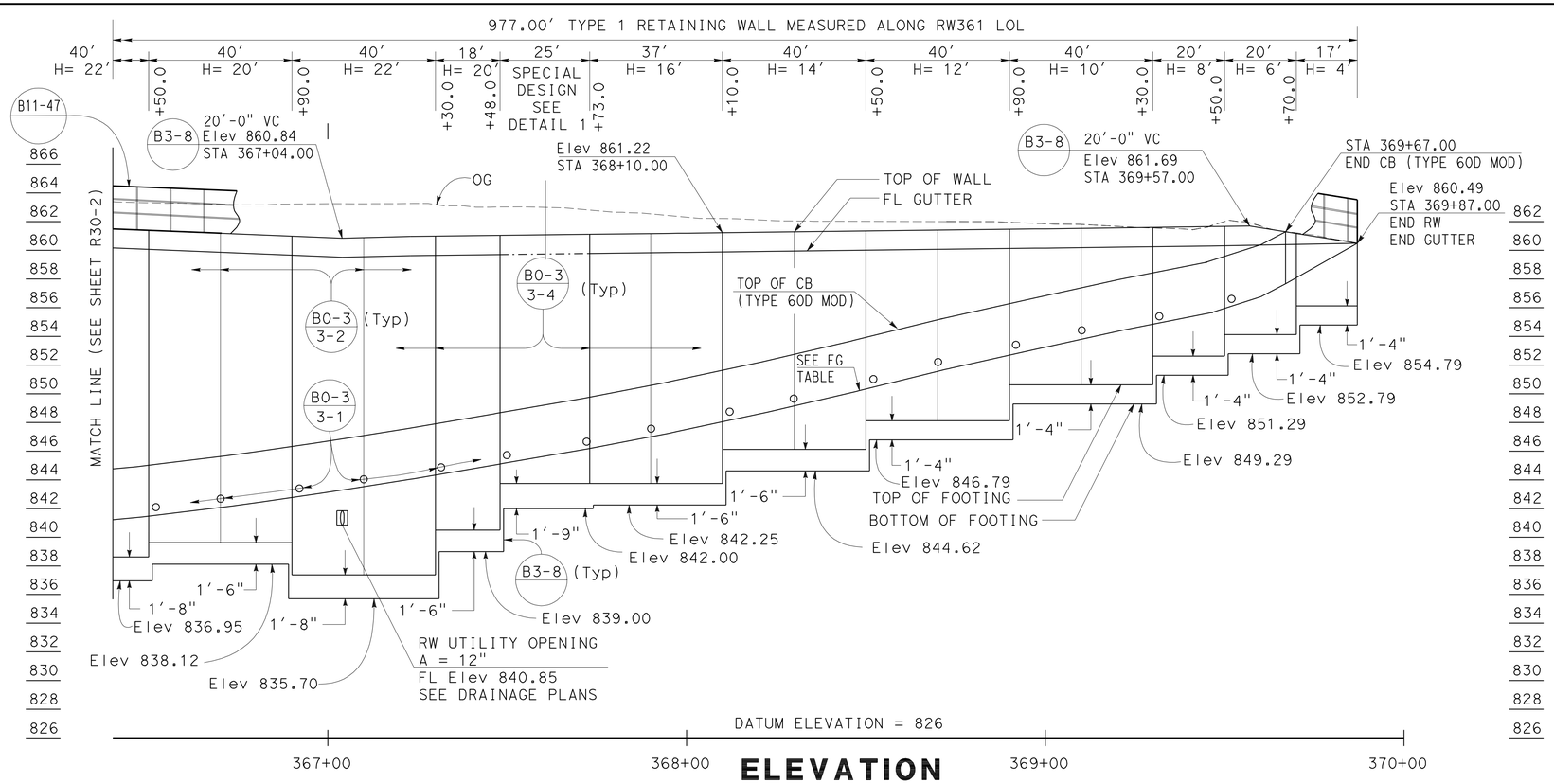

ELEVATION

SCALE Horiz 1"=20'
Vert 1"=5'

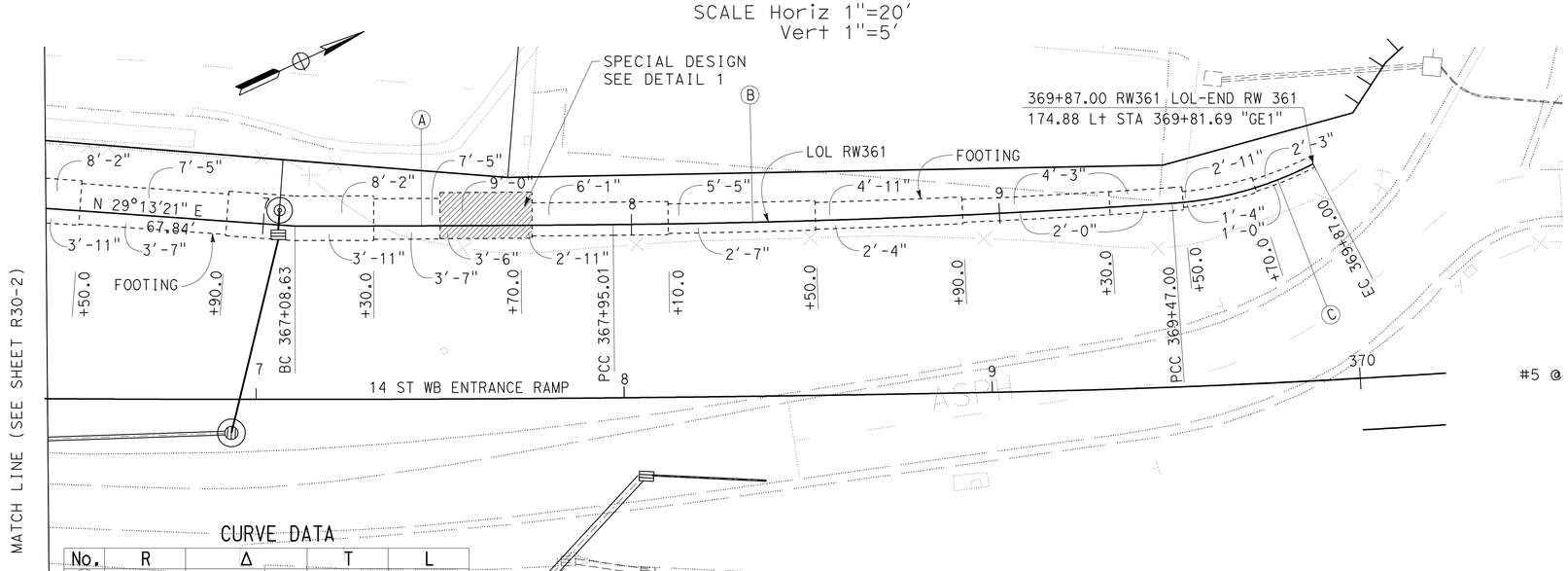

CURVE DATA

No.	R	Δ	T	L
A	9772.97'	0°30'23"	43.19'	86.38'
B	2652.97'	3°16'57"	76.02'	151.99'
C	97.00'	23°37'39"	20.29'	40.00'

PLAN

SCALE: 1"=20'

NOTES:

1. For details not shown and drainage notes see B3-8 B3-9
2. For wall stem joint details, see B0-3 3-3 and B0-3 3-4

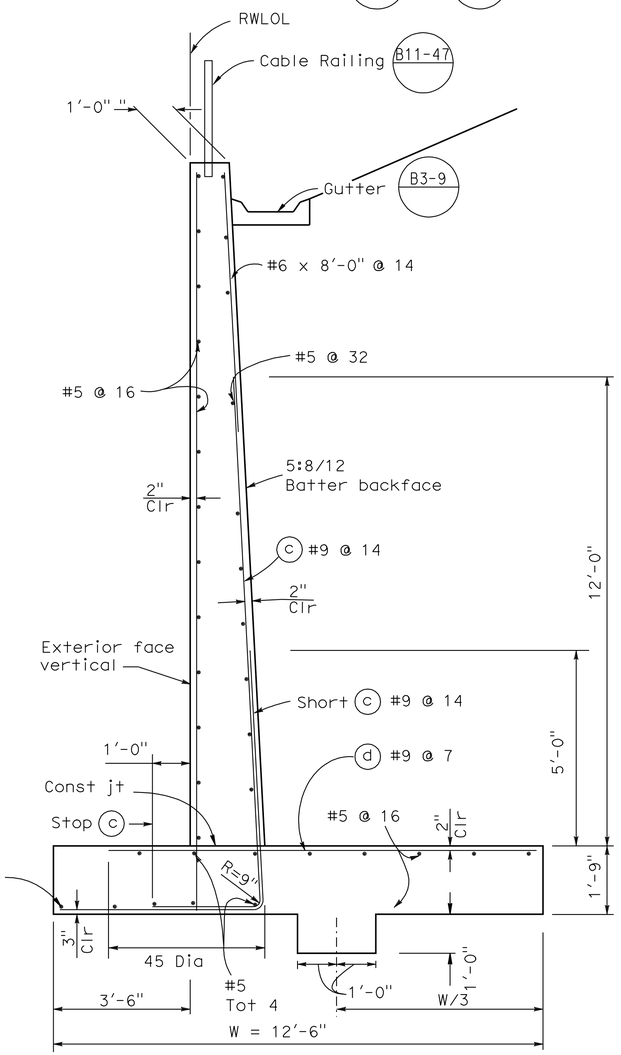

DETAIL 1

1 REVISED PER ADDENDUM No. 1 DATED NOVEMBER 8, 2011

THIS PLAN ACCURATE FOR RETAINING WALL WORK ONLY.

RETAINING WALL PLAN
RETAINING WALL No. 361

SCALE AS SHOWN

R30-3

STATE OF CALIFORNIA - DEPARTMENT OF TRANSPORTATION — DESIGN

FUNCTIONAL SUPERVISOR: MARK PERTILE

CALCULATED-DESIGNED BY: ANNABELL WANG — CHECKED BY: CUONG LE TRAN

REVISED BY — DATE REVISED

LAST REVISION 10-19-11 — DATE PLOTTED => 08-NOV-2011 — TIME PLOTTED => 11:27

Dist	COUNTY	ROUTE	POST MILES TOTAL PROJECT	SHEET No.	TOTAL SHEETS
08	Riv	91	15.6/21.6	1044	2028

REGISTERED CIVIL ENGINEER 10-28-11 DATE

4-25-11
PLANS APPROVAL DATE

REGISTERED PROFESSIONAL ENGINEER CUONG LE TRAN No. C60436 Exp. 6-30-12 CIVIL STATE OF CALIFORNIA

THE STATE OF CALIFORNIA OR ITS OFFICERS OR AGENTS SHALL NOT BE RESPONSIBLE FOR THE ACCURACY OR COMPLETENESS OF SCANNED COPIES OF THIS PLAN SHEET.

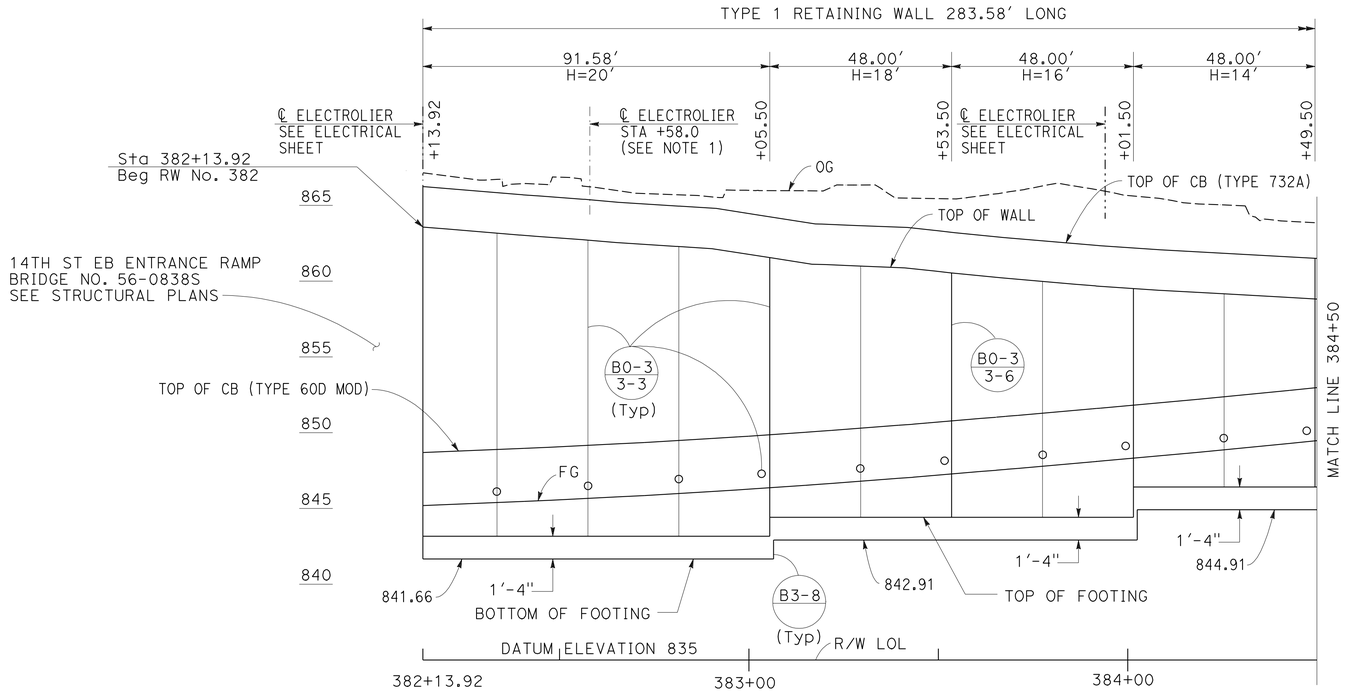

ELEVATION

SCALE Horiz 1"=20'
Vert 1"=5'

NOTE:

1. FOR ELECTROLIER DETAILS, SEE ELECTRICAL DETAIL SHEETS.
2. ARCHITECTURAL TREATMENT SHOULD EXTEND 6 IN BELOW FG
3. FOR STRUCTURAL SECTIONS, SEE ROADWAY PLANS
4. WATERSTOP IN EXPANSION JOINT SHALL BE EXTEND 6 IN INTO THE BARRIER

1

QUANTITIES

STRUCTURAL CONCRETE (RETAINING WALL)	514.50	CY
BAR REINFORCING STEEL (RETAINING WALL)	62317	LB
STRUCTURAL EXCAVATION (RETAINING WALL)	3619.72	CY
STRUCTURAL BACKFILL (RETAINING WALL)	1609.45	CY
PERVIOUS BACKFILL MATERIAL (RETAINING WALL)	112.82	CY
CONCRETE BARRIER (TYPE 732A)	432.00	LF
PLASTIC PIPE (N)	28.21	LF
WATERSTOP (N)	56.37	LF
ARCHITECTURAL SURFACES (TEXTURED CONCRETE)	4700.80	SF
CONCRETE BARRIER (TYPE 60D MOD)	432.00	LF

(N) = NOT A SEPARATE PAY ITEM, FOR INFORMATION ONLY

STATION	FG	TOP OF WALL
382+25	845.30	863.34
382+50	845.57	862.85
382+75	845.89	862.39
383+00	846.27	861.77
383+25	846.71	841.04
383+50	847.20	860.64
383+75	847.73	860.04
384+00	848.28	859.54
384+25	848.86	859.17
384+50	849.49	858.81
384+75	850.50	858.44
385+00	850.85	858.11
385+25	851.60	857.88
385+50	852.39	857.80
385+75	853.23	857.79
386+00	854.11	857.82
386+25	855.02	857.93
386+50	855.91	858.09
386+75	856.76	858.29
387+00	857.56	858.53
387+25	858.32	858.81
387+50	859.02	859.11
387+75	859.68	859.45
388+00	860.29	859.85
388+25	860.86	860.25

CURVE DATA

No.	R	Δ	T	L
1	1238.09'	8°13'50"	89.08'	177.85'

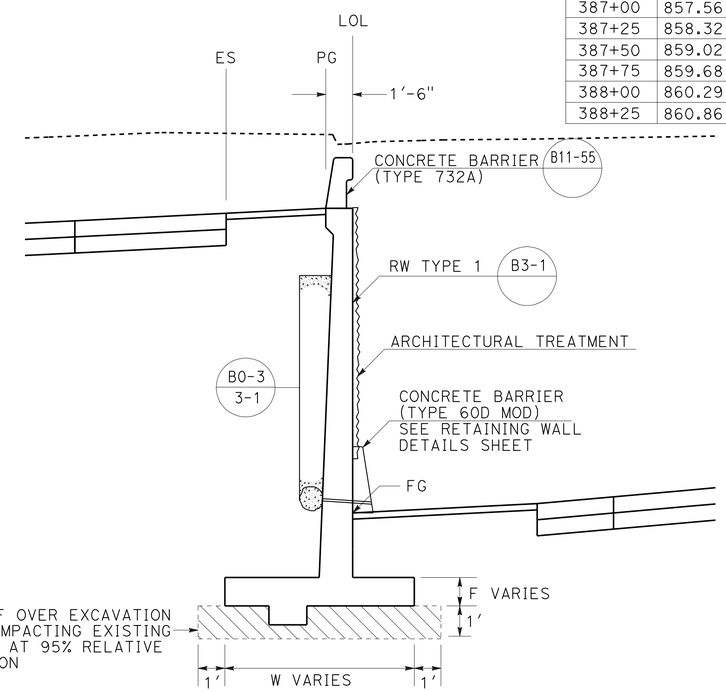

TYPICAL SECTION

FROM STA 382+09.50 TO STA 384+97.50
NO SCALE

1 **REVISED PER ADDENDUM No. 1 DATED NOVEMBER 8, 2011**

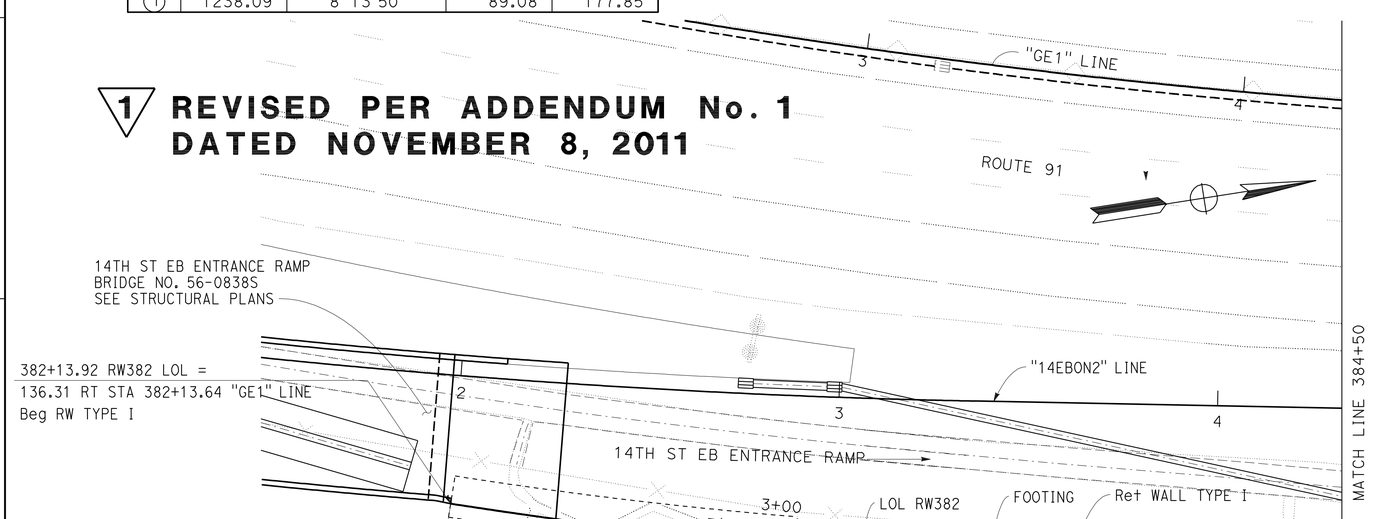

PLAN

SCALE 1"=20'

THIS PLAN ACCURATE FOR RETAINING WALL WORK ONLY.

RETAINING WALL PLAN
RETAINING WALL No. 382

SCALE AS SHOWN

R36-1

STATE OF CALIFORNIA - DEPARTMENT OF TRANSPORTATION
Caltrans® DESIGN

FUNCTIONAL SUPERVISOR: MARK PERTILE
CALCULATED-DESIGNED BY: ANNABELL WANG
CHECKED BY: CUONG LE TRAN
REVISED BY / DATE REVISED

LAST REVISION 10-18-11
DATE PLOTTED => 08-NOV-2011
TIME PLOTTED => 11:27

Dist	COUNTY	ROUTE	POST MILES TOTAL PROJECT	SHEET No.	TOTAL SHEETS
08	Riv	91	15.6/21.6	1164	2028

REGISTERED ELECTRICAL ENGINEER — DATE 10-28-11

4-25-11
PLANS APPROVAL DATE

REGISTERED PROFESSIONAL ENGINEER — FERDINAND DE LA CRUZ — No. E 17215 — Exp. 6-30-12 — ELECTRICAL — STATE OF CALIFORNIA

THE STATE OF CALIFORNIA OR ITS OFFICERS OR AGENTS SHALL NOT BE RESPONSIBLE FOR THE ACCURACY OR COMPLETENESS OF SCANNED COPIES OF THIS PLAN SHEET.

1

PROJECT NOTE THIS SHEET ONLY:

A EXISTING 120/240 V, TYPE III-CF SERVICE EQUIPMENT ENCLOSURE

METER A: 100 A, 240 V, 2P CB (main)
30 A, 240 V, 2P CB (sign)
30 A, 240 V, 2P CB (ltg)
15 A, 120 V, 1P CB (sign control)

ADD: 15 A, 120 V, 1P CB (LTG CONTROL)

METER B: 100 A, 240 V, 2P CB (main)
20 A, 120 V, 1P, CB (cctv)
20 A, 120 V, 1P CB (spare)

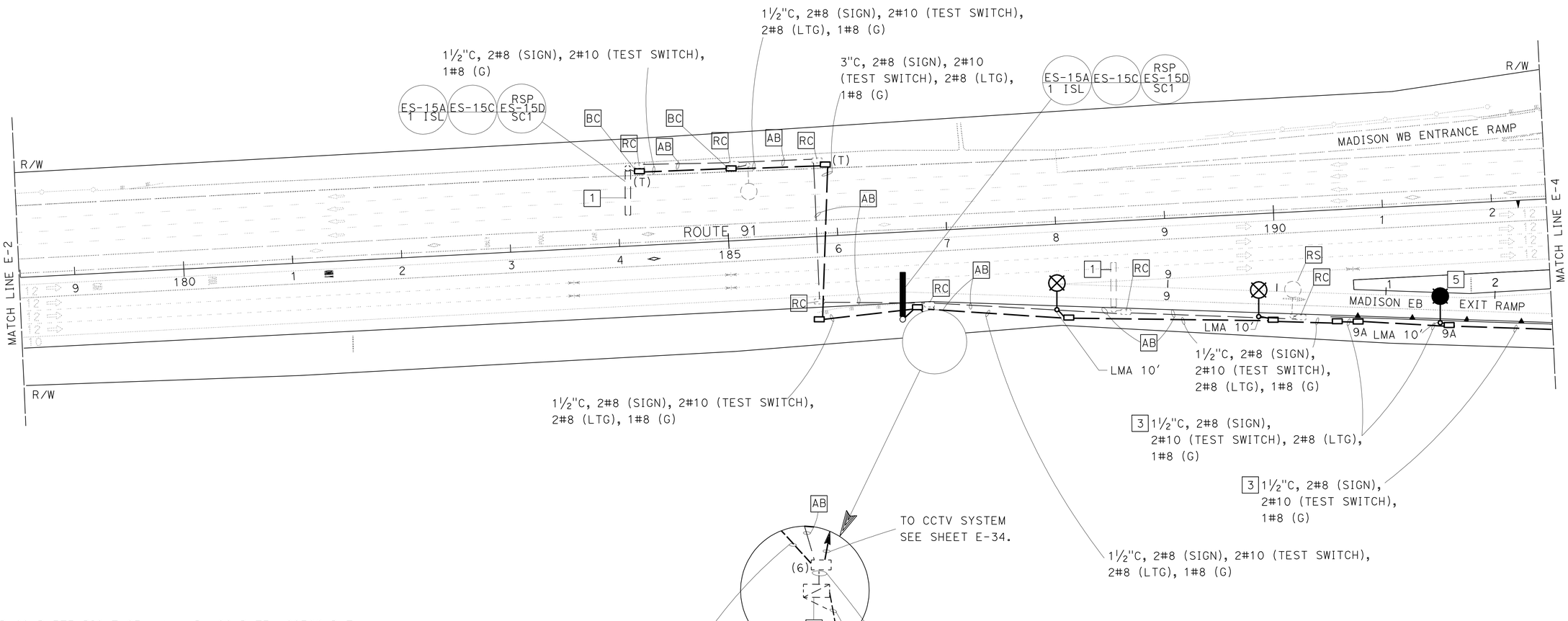

NOTE: FOR COMPLETE RIGHT OF WAY AND ACCURATE ACCESS DATA, SEE RIGHT OF WAY RECORD MAPS AT DISTRICT OFFICE.

1 **REVISED PER ADDENDUM No. 1 DATED NOVEMBER 8 2011**

THIS PLAN IS ACCURATE FOR ELECTRICAL WORK ONLY.

MODIFY LIGHTING AND SIGN ILLUMINATION

SCALE: 1" = 50'

E-3

STATE OF CALIFORNIA - DEPARTMENT OF TRANSPORTATION
Caltrans® ELECTRICAL DESIGN B

FUNCTIONAL SUPERVISOR: FERDINAND DE LA CRUZ
CALCULATED-DESIGNED BY: LUIS PENALOZA, JR.
CHECKED BY: FERDINAND DE LA CRUZ
REVISED BY
DATE REVISED

LAST REVISION 02-07-11
DATE PLOTTED => 08-NOV-2011
TIME PLOTTED => 11:49

Dist	COUNTY	ROUTE	POST MILES TOTAL PROJECT	SHEET No.	TOTAL SHEETS
08	Riv	91	15.6/21.6	1165	2028

REGISTERED ELECTRICAL ENGINEER — DATE 10-28-11

4-25-11
PLANS APPROVAL DATE

REGISTERED PROFESSIONAL ENGINEER — FERDINAND DE LA CRUZ — No. E 17215 — Exp. 6-30-12 — ELECTRICAL — STATE OF CALIFORNIA

THE STATE OF CALIFORNIA OR ITS OFFICERS OR AGENTS SHALL NOT BE RESPONSIBLE FOR THE ACCURACY OR COMPLETENESS OF SCANNED COPIES OF THIS PLAN SHEET.

1

PROJECT NOTE THIS SHEET ONLY:

A INSTALL 120/240 V TYPE III-CF SERVICE EQUIPMENT ENCLOSURE

METER A:

100 A, 240 V, 2P, CB (MAIN)
30 A, 240 V, 2P, CB (SIGN)
30 A, 240 V, 2P, CB (FUTURE)
15 A, 120 V, 1P, CB (FUTURE)
15 A, 120 V, 1P, CB (SIGN CONTROL)

ADDRESS: (3421A MADISON)
CALTRANS ID No. (CTID): 08-56-091-0-016.800-M

METER B:

100 A, 240 V, 2P, CB (MAIN)
30 A, 120 V, 1P, CB (RAMP METER)
30 A, 120V, IP, CB (TOS)

ADDRESS: (3421B MADISON)
CALTRANS ID No. (CTID): 08-56-091-0-016.801-M

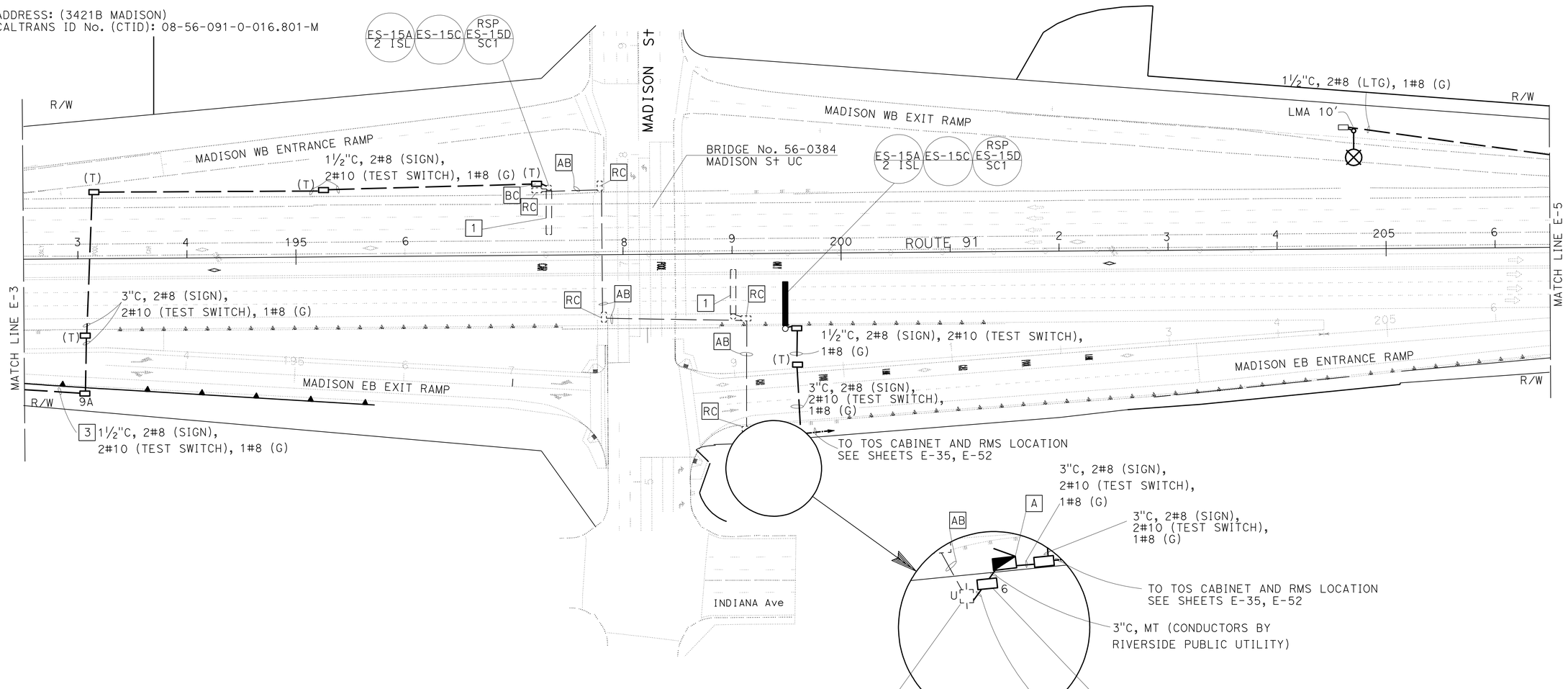

NOTE: FOR COMPLETE RIGHT OF WAY AND ACCURATE ACCESS DATA, SEE RIGHT OF WAY RECORD MAPS AT DISTRICT OFFICE.

1 **REVISED PER ADDENDUM No. 1 DATED NOVEMBER 8, 2011**

THIS PLAN IS ACCURATE FOR ELECTRICAL WORK ONLY.

MODIFY LIGHTING AND SIGN ILLUMINATION

SCALE: 1" = 50'

E-4

STATE OF CALIFORNIA - DEPARTMENT OF TRANSPORTATION
Caltrans ELECTRICAL DESIGN B

FUNCTIONAL SUPERVISOR: FERDINAND DE LA CRUZ
CALCULATED-DESIGNED BY: LUIS PENALOZA, JR.
CHECKED BY: FERDINAND DE LA CRUZ
REVISED BY
DATE REVISED

LAST REVISION 02-07-11
DATE PLOTTED => 08-NOV-2011
TIME PLOTTED => 11:27

Dist	COUNTY	ROUTE	POST MILES TOTAL PROJECT	SHEET No.	TOTAL SHEETS
08	Riv	91	15.6/21.6	1166	2028

REGISTERED ELECTRICAL ENGINEER — DATE 10-28-11

4-25-11
PLANS APPROVAL DATE

REGISTERED PROFESSIONAL ENGINEER — FERDINAND DE LA CRUZ — No. E 17215 — Exp. 6-30-12 — ELECTRICAL — STATE OF CALIFORNIA

THE STATE OF CALIFORNIA OR ITS OFFICERS OR AGENTS SHALL NOT BE RESPONSIBLE FOR THE ACCURACY OR COMPLETENESS OF SCANNED COPIES OF THIS PLAN SHEET.

NOTE: THIS SHEET ONLY

A EXISTING 120/240 V, TYPE III-CF SERVICE EQUIPMENT ENCLOSURE.

METER A:

Exist: 100 A, 240 V, 2P, CB (main)
30 A, 240 V, 2P, CB (sign)
30 A, 240 V, 2P, CB (ltg)
15 A, 120 V, 1P, CB (ltg control)

ADD: 15 A, 120 V, 1P (SIGN CONTROL)

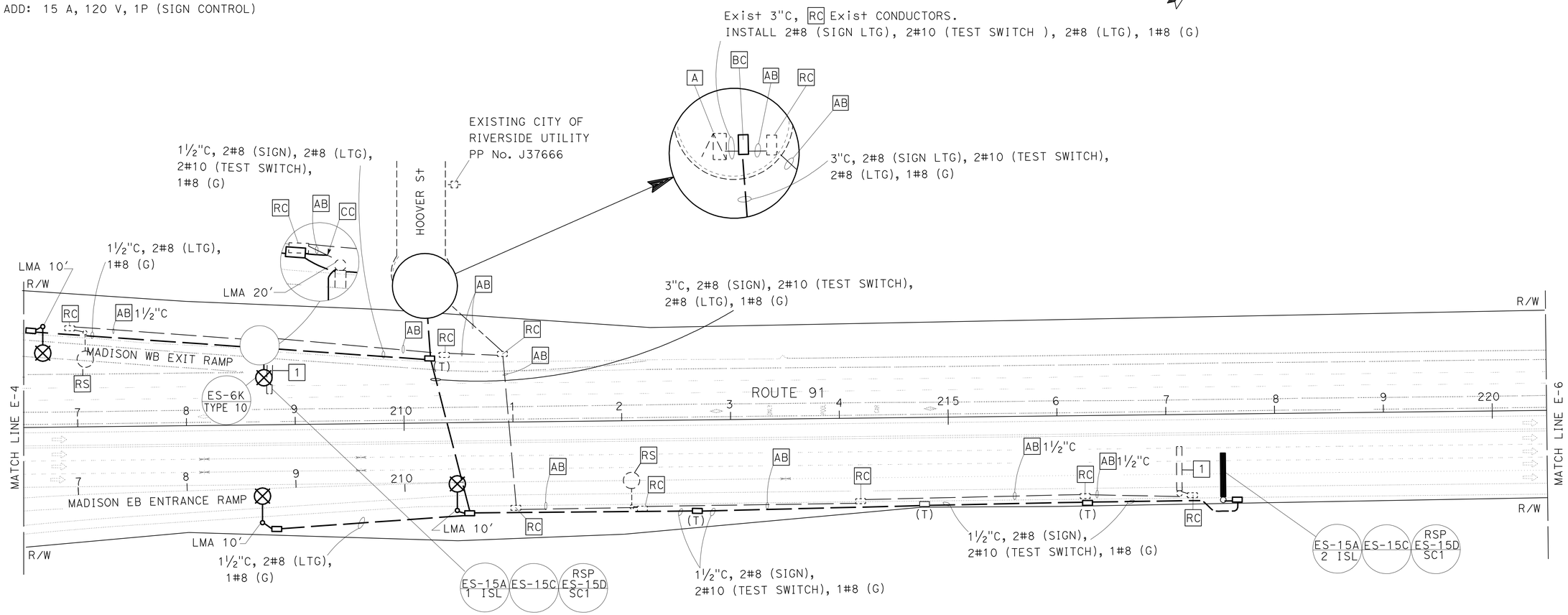

NOTE: FOR ACCURATE RIGHT OF WAY AND ACCESS DATA,
CONTACT RIGHT OF WAY ENGINEERING AT THE DISTRICT OFFICE.

1 **REVISED PER ADDENDUM No. 1 DATED NOVEMBER 8, 2011**

THIS PLAN IS ACCURATE FOR ELECTRICAL WORK ONLY.

MODIFY LIGHTING AND SIGN ILLUMINATION

SCALE: 1" = 50'

E-5

REVISED BY | DATE REVISED
LUIS PENALOZA, JR. | FERDINAND DE LA CRUZ
CALCULATED-DESIGNED BY | CHECKED BY
FUNCTIONAL SUPERVISOR | FERDINAND DE LA CRUZ

STATE OF CALIFORNIA - DEPARTMENT OF TRANSPORTATION
Caltrans® ELECTRICAL DESIGN B

LAST REVISION 10-27-11 | DATE PLOTTED => 08-NOV-2011 | TIME PLOTTED => 11:27

Dist	COUNTY	ROUTE	POST MILES TOTAL PROJECT	SHEET No.	TOTAL SHEETS
08	Riv	91	15.6/21.6	1167	2028

REGISTERED ELECTRICAL ENGINEER — DATE 10-28-11

4-25-11
PLANS APPROVAL DATE

REGISTERED PROFESSIONAL ENGINEER — FERDINAND DE LA CRUZ — No. E 17215 — Exp. 6-30-12 — ELECTRICAL — STATE OF CALIFORNIA

THE STATE OF CALIFORNIA OR ITS OFFICERS OR AGENTS SHALL NOT BE RESPONSIBLE FOR THE ACCURACY OR COMPLETENESS OF SCANNED COPIES OF THIS PLAN SHEET.

PROJECT NOTE THIS SHEET ONLY:

A EXISTING 120/240 V, TYPE III-CF SERVICE EQUIPMENT ENCLOSURE

METER A:

100 A, 240 V, 2P, CB (main)
30 A, 240 V, 2P, CB (sign)
30 A, 240 V, 2P, CB (l+g)
15 A, 120 V, 1P, CB (sign control)

ADD: 15 A, 120 V, 1P, CB (LTG CONTROL)

METER B:

100 A, 240 V, 2P, CB (main)
20 A, 120 V, 1P, CB (cctv +vds)

ADD:
20 A, 120 V, 1P, CB (VDS, LOCATION 2)

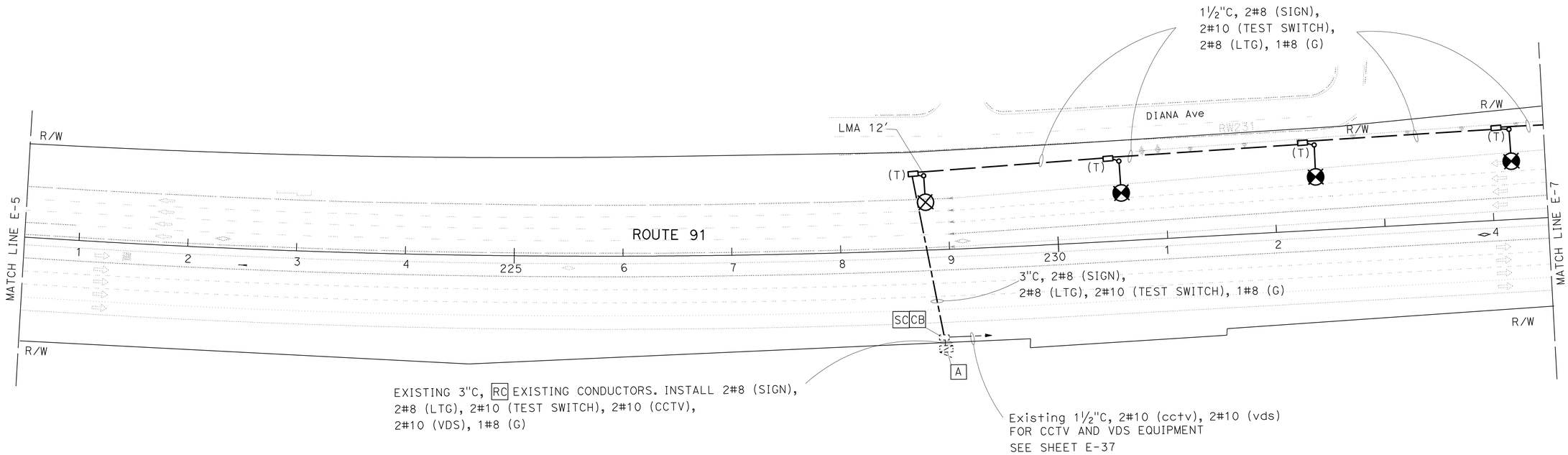

NOTE: FOR ACCURATE RIGHT OF WAY AND ACCESS DATA,
CONTACT RIGHT OF WAY ENGINEERING AT THE DISTRICT OFFICE.

1 REVISED PER ADDENDUM No. 1 DATED NOVEMBER 8, 2011

THIS PLAN IS ACCURATE FOR ELECTRICAL WORK ONLY.

MODIFY LIGHTING AND SIGN ILLUMINATION

SCALE: 1" = 50'

E-6

STATE OF CALIFORNIA - DEPARTMENT OF TRANSPORTATION
Caltrans ELECTRICAL DESIGN B

FUNCTIONAL SUPERVISOR: FERDINAND DE LA CRUZ
CALCULATED-DESIGNED BY: LUIS PENALOZA, JR.
CHECKED BY: FERDINAND DE LA CRUZ
REVISED BY / DATE REVISED

LAST REVISION 02-07-11
DATE PLOTTED => 08-NOV-2011
TIME PLOTTED => 11:27

Dist	COUNTY	ROUTE	POST MILES TOTAL PROJECT	SHEET No.	TOTAL SHEETS
08	Riv	91	15.6/21.6	1168	2028

REGISTERED ELECTRICAL ENGINEER — DATE 10-28-11

4-25-11
PLANS APPROVAL DATE

FERDINAND DE LA CRUZ No. E 17215 Exp. 6-30-12 ELECTRICAL — REGISTERED PROFESSIONAL ENGINEER — STATE OF CALIFORNIA

THE STATE OF CALIFORNIA OR ITS OFFICERS OR AGENTS SHALL NOT BE RESPONSIBLE FOR THE ACCURACY OR COMPLETENESS OF SCANNED COPIES OF THIS PLAN SHEET.

PROJECT NOTE: THIS SHEET ONLY

A INSTALL 120/240 V, TYPE III-CF SERVICE EQUIPMENT ENCLOSURE

B FOR ELECTRIC SERVICE IRRIGATION DETAILS, SEE SHEET E-74.

METER A:
100 A, 240 V, 2P, CB (MAIN)
30 A, 240 V, 2P, CB (SIGN)
30 A, 240 V, 2P, CB (LTG)
15 A, 120 V, 1P, CB (SIGN CONTROL)
15 A, 120 V, 1P, CB (LTG CONTROL)

ADDRESS: 7192A BROCKTON AVENUE
CALTRANS ID No. (CTID): 08-56-091-0-17.439-M

METER B:
100 A, 240 V, 2P, CB (MAIN)
METER NOT TO BE INSTALLED ON THIS PROJECT
CALTRANS ID No. (CTID): 08-56-091-0-14.440-M
ADDRESS: 7192B BROCKTON AVENUE

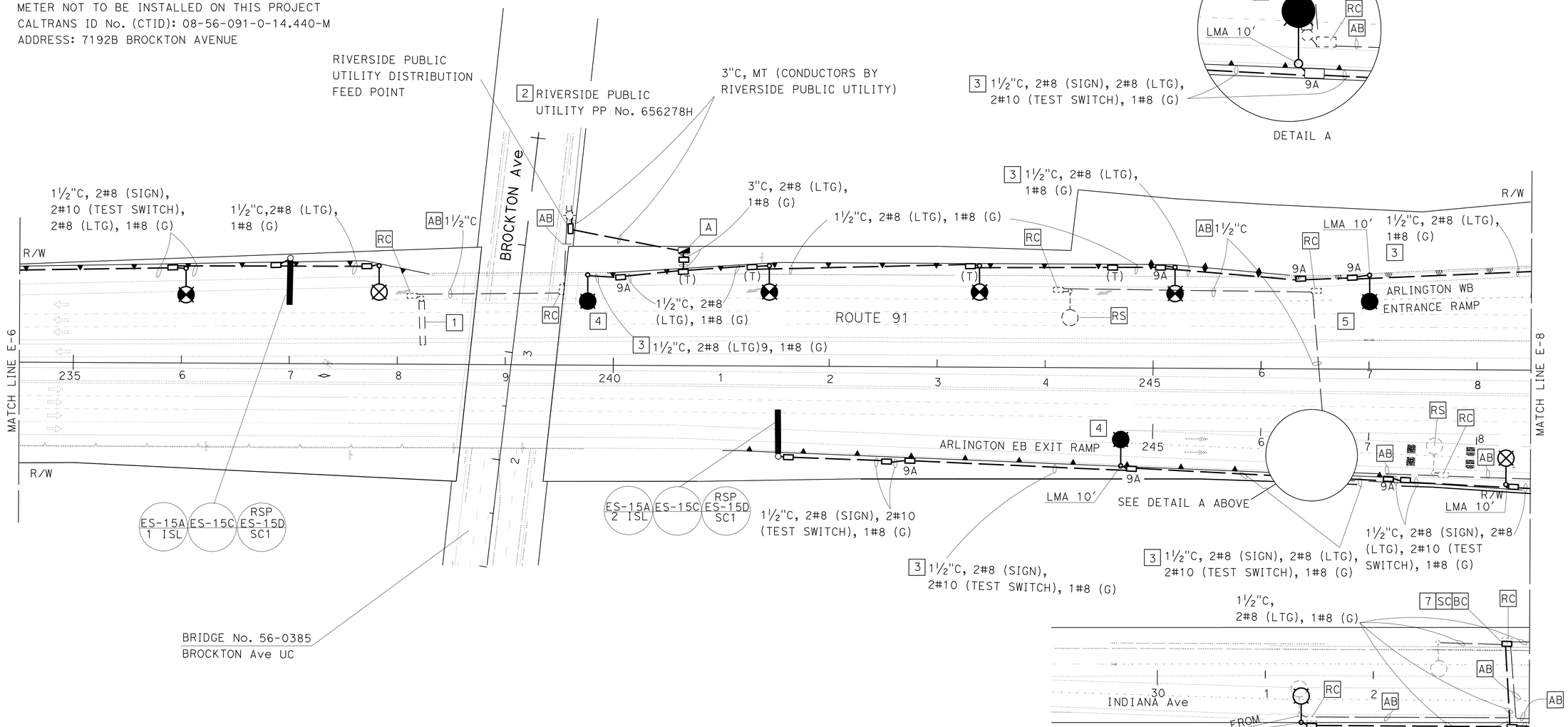

NOTE:

FOR ACCURATE RIGHT OF WAY AND ACCESS DATA, CONTACT RIGHT OF WAY ENGINEERING AT THE DISTRICT OFFICE.

1 REVISED PER ADDENDUM No. 1 DATED NOVEMBER 8, 2011

THIS PLAN IS ACCURATE FOR ELECTRICAL WORK ONLY.

MODIFY LIGHTING AND SIGN ILLUMINATION
MODIFY LIGHTING (CITY)

SCALE: 1" = 50′

E-7

STATE OF CALIFORNIA - DEPARTMENT OF TRANSPORTATION
Caltrans ELECTRICAL DESIGN B

FUNCTIONAL SUPERVISOR	CALCULATED-DESIGNED BY	CHECKED BY	REVISED BY	DATE REVISED
FERDINAND DE LA CRUZ	LUIS PENALOZA, JR.	FERDINAND DE LA CRUZ	LPJ	09-20-10

LAST REVISION 02-07-11 | DATE PLOTTED => 08-NOV-2011 | TIME PLOTTED => 11:28

Dist	COUNTY	ROUTE	POST MILES TOTAL PROJECT	SHEET No.	TOTAL SHEETS
08	Riv	91	15.6/21.6	1169	2028

REGISTERED ELECTRICAL ENGINEER — DATE 10-28-11

4-25-11
PLANS APPROVAL DATE

FERDINAND DE LA CRUZ No. E 17215 Exp. 6-30-12 ELECTRICAL — REGISTERED PROFESSIONAL ENGINEER — STATE OF CALIFORNIA

THE STATE OF CALIFORNIA OR ITS OFFICERS OR AGENTS SHALL NOT BE RESPONSIBLE FOR THE ACCURACY OR COMPLETENESS OF SCANNED COPIES OF THIS PLAN SHEET.

1

NOTE:

FOR ACCURATE RIGHT OF WAY AND ACCESS DATA, CONTACT RIGHT OF WAY ENGINEERING AT THE DISTRICT OFFICE.

PROJECT NOTES: THIS SHEET ONLY

A INSTALL 120/240 V, TYPE III-CF SERVICE EQUIPMENT ENCLOSURE

METER A:
100 A, 240 V, 2P, CB (MAIN)
30 A, 240 V, 2P, CB (LTG)
30 A, 240 V, 2P, CB (SIGN)
15 A, 120 V, 1P, CB (SIGN CONTROL)
15 A, 120 V, 1P, CB (LTG CONTROL)

ADDRESS: (3400C JANE STREET)
CALTRANS ID# (CTID): 08-56-091-0-17.682-M

METER B:
100 A, 240 V, 2P, CB (MAIN)
30 A, 120 V, 1P, CB (RMS)
20 A, 120 V, 1P, CB (CCTV)

ADDRESS: (3400D JANE STREET)
CALTRANS ID# (CTID): 08-56-091-0-17.683-M

B EXISTING INTERCONNECT AND DETECTOR EQUIPMENT. SEE SHEETS E-99 AND E-100 FOR STREET SIGNAL PLANS.

C SEE SHEET E-26 FOR SOFFIT LIGHTING INSTALLATION

D EXISTING INTERCONNECT AND DETECTOR EQUIPMENT. SEE SHEETS E-99 AND E-100 FOR STREET SIGNAL PLANS.

E RC EXISTING ELECTRICAL

F INSTALLED IN SIDEWALK AREA

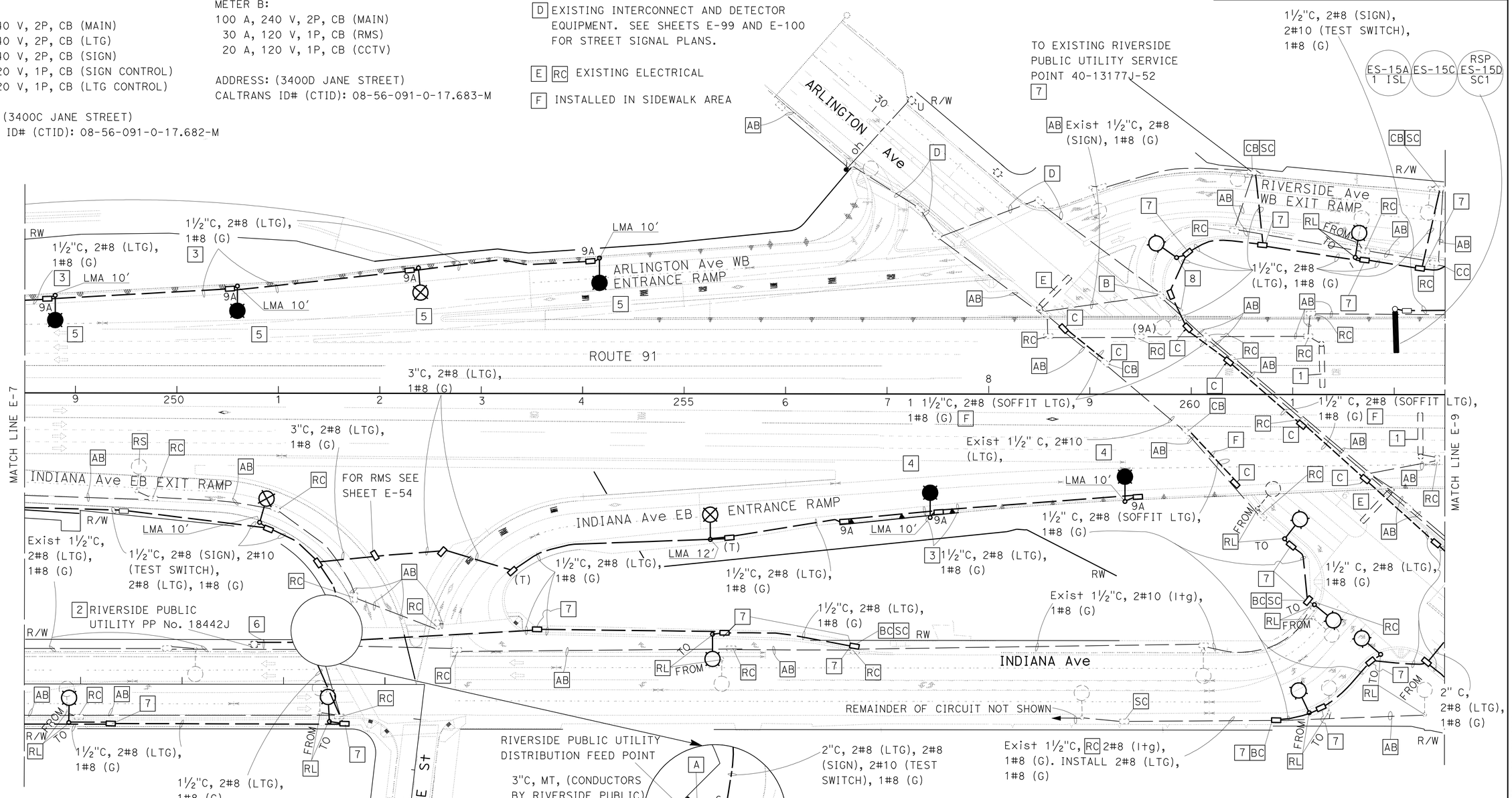

THIS PLAN IS ACCURATE FOR ELECTRICAL WORK ONLY.

1 **REVISED PER ADDENDUM No. 1 DATED NOVEMBER 8, 2011**

MODIFY LIGHTING AND SIGN ILLUMINATION MODIFY LIGHTING (CITY)

SCALE 1" = 50'

E-8

LPJ	09-30-10	LUIS PENALOZA, JR.	FERDINAND DE LA CRUZ
REVISED BY	DATE REVISED	CALCULATED-DESIGNED BY	CHECKED BY
FUNCTIONAL SUPERVISOR	FERDINAND DE LA CRUZ		

STATE OF CALIFORNIA - DEPARTMENT OF TRANSPORTATION
Caltrans ELECTRICAL DESIGN B

LAST REVISION 10-27-11 | DATE PLOTTED => 08-NOV-2011 | TIME PLOTTED => 11:49

Dist	COUNTY	ROUTE	POST MILES TOTAL PROJECT	SHEET No.	TOTAL SHEETS
08	Riv	91	15.6/21.6	1170	2028

REGISTERED ELECTRICAL ENGINEER — DATE 10-28-11

4-25-11
PLANS APPROVAL DATE

REGISTERED PROFESSIONAL ENGINEER — FERDINAND DE LA CRUZ — No. E 17215 — Exp. 6-30-12 — ELECTRICAL — STATE OF CALIFORNIA

THE STATE OF CALIFORNIA OR ITS OFFICERS OR AGENTS SHALL NOT BE RESPONSIBLE FOR THE ACCURACY OR COMPLETENESS OF SCANNED COPIES OF THIS PLAN SHEET.

PROJECT NOTES THIS SHEET ONLY:

[A] INSTALL 120/240 V, TYPE III-CF SERVICE EQUIPMENT ENCLOSURE
METER A:
100 A, 240 V, 2P, CB (MAIN)
30 A, 240 V, 2P, CB (SIGN)
30 A, 240 V, 2P, CB (LTG)
15 A, 120 V, 1P, CB (SIGN CONTROL)
15 A, 120 V, 1P, CB (LTG CONTROL)

ADDRESS: 6496A RIVERSIDE:
CALTRANS ID# (CTID) No. 08-56-091-0-018.100-M

METER B:

100 A, 240 V, 2P, CB (MAIN)-FUTURE
METER NOT TO BE INSTALLED ON THIS PROJECT

ADDRESS: (6496B RIVERSIDE):
CALTRANS ID# (CTID) No. 08-56-091-0-018.100-M

[B] INSTALL 120/240 V, TYPE III-CF SERVICE EQUIPMENT ENCLOSURE

CALTRANS ID No. 08-56-091-018.000-M

METER A, (ADDRESS: 3492A ARLINGTON):

100 A, 240 V, 2P, CB (MAIN)
30 A, 240 V, 2P, CB (SIGN)
30 A, 240 V, 2P, CB (LTG)
15 A, 120 V, 1P, CB (SIGN CONTROL)
15 A, 120 V, 1P, CB (LTG CONTROL)

CALTRANS ID No. 08-56-091-018.001-M

METER A, (ADDRESS: 3492B ARLINGTON):

100 A, 240 V, 2P, CB (MAIN)
30 A, 120 V, 1P, CB (RMS)
20 A, 120 V, 1P, CB (FUTURE)

CONDUCTOR AND CONDUIT SCHEDULE

AWG	CONDUCTOR RUN	1	2	3
#8	SIGN	2	2	2
#10	TEST SWITCH	2	2	2
#8	LIGHTING	2		
#8	GROUND	1	1	1
CONDUIT SIZE		3"	3"	1½"

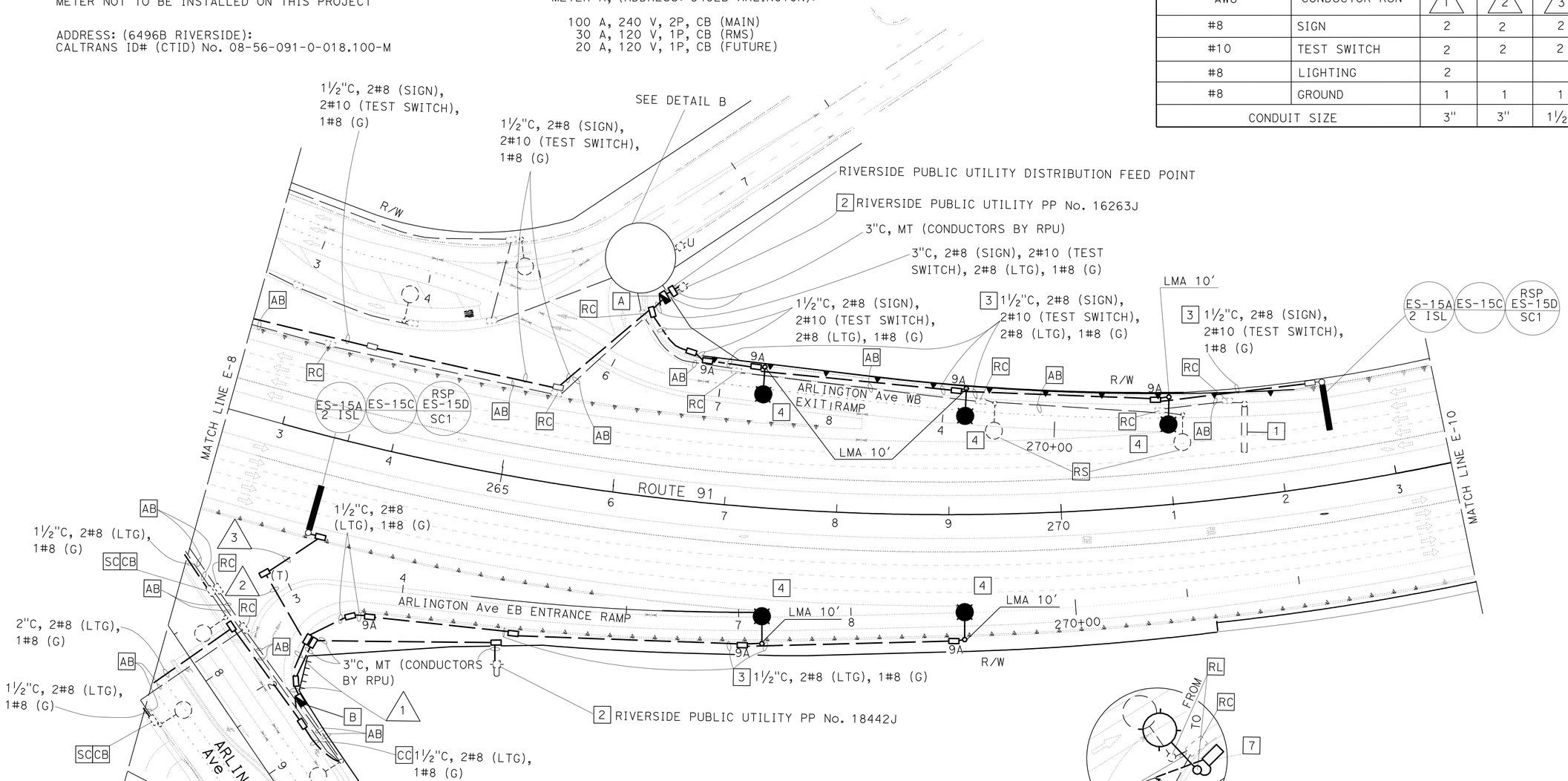

NOTE: FOR ACCURATE RIGHT OF WAY AND ACCESS DATA, CONTACT RIGHT OF WAY ENGINEERING AT THE DISTRICT OFFICE.

1 REVISED PER ADDENDUM No. 1 DATED NOVEMBER 8, 2011

THIS PLAN IS ACCURATE FOR ELECTRICAL WORK ONLY.

MODIFY LIGHTING AND SIGN ILLUMINATION

SCALE: 1" = 50'

E-9

STATE OF CALIFORNIA - DEPARTMENT OF TRANSPORTATION
Caltrans ELECTRICAL DESIGN B

FUNCTIONAL SUPERVISOR: FERDINAND DE LA CRUZ
CALCULATED-DESIGNED BY: LUIS PENALOZA, JR.
CHECKED BY: FERDINAND DE LA CRUZ
REVISED BY: LPJ
DATE REVISED: 09-20-10

LAST REVISION DATE PLOTTED => 08-NOV-2011
TIME PLOTTED => 11:49
10-27-11

BORDER LAST REVISED 4/11/2008
RELATIVE BORDER SCALE IS IN INCHES 0 1 2 3
USERNAME => s121614
DGN FILE => 844840ua009.add
CU 08396
EA 448401

Dist	COUNTY	ROUTE	POST MILES TOTAL PROJECT	SHEET No.	TOTAL SHEETS
08	Riv	91	15.6/21.6	1171	2028

REGISTERED ELECTRICAL ENGINEER 10-28-11 DATE

4-25-11
PLANS APPROVAL DATE

REGISTERED PROFESSIONAL ENGINEER
FERDINAND DE LA CRUZ
No. E 17215
Exp. 6-30-12
ELECTRICAL
STATE OF CALIFORNIA

THE STATE OF CALIFORNIA OR ITS OFFICERS OR AGENTS SHALL NOT BE RESPONSIBLE FOR THE ACCURACY OR COMPLETENESS OF SCANNED COPIES OF THIS PLAN SHEET.

NOTE: FOR ACCURATE RIGHT OF WAY AND ACCESS DATA,
CONTACT RIGHT OF WAY ENGINEERING AT THE DISTRICT OFFICE.

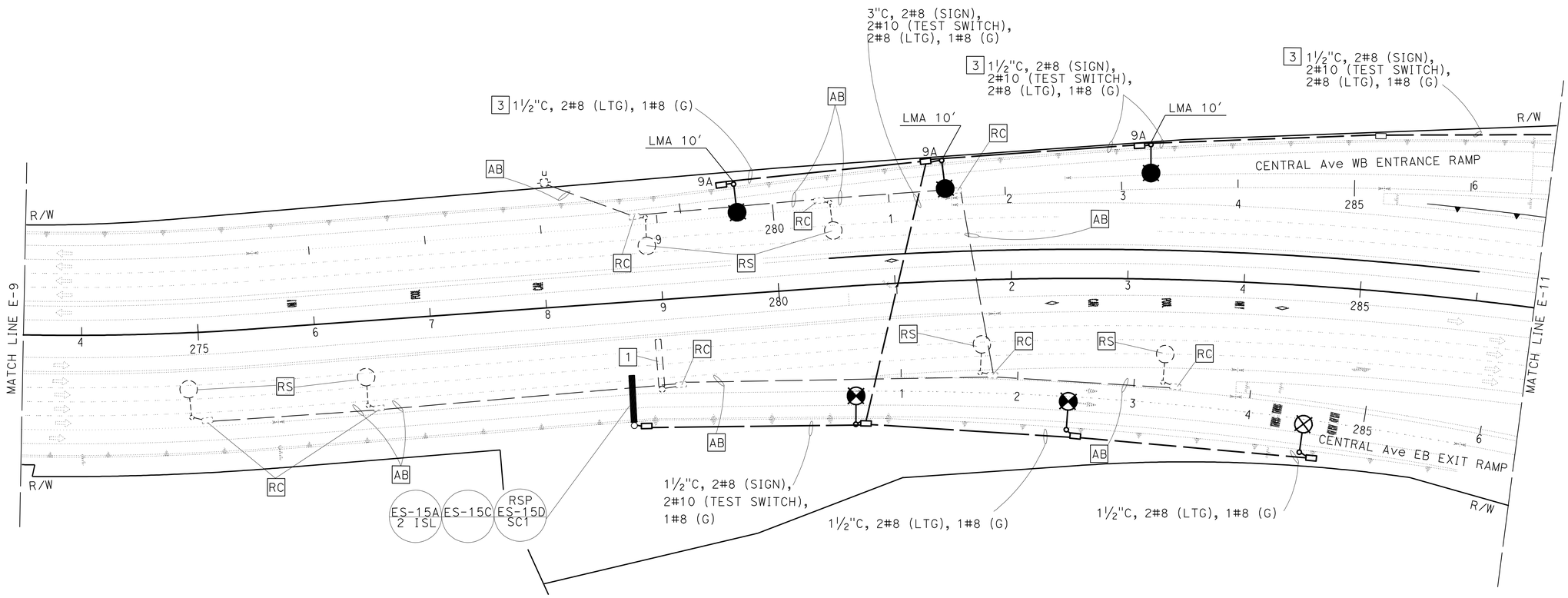

1 REVISED PER ADDENDUM No. 1 DATED NOVEMBER 8, 2011

THIS PLAN IS ACCURATE FOR ELECTRICAL WORK ONLY.

MODIFY LIGHTING AND SIGN ILLUMINATION

SCALE: 1" = 50′

E-10

STATE OF CALIFORNIA - DEPARTMENT OF TRANSPORTATION
Caltrans ELECTRICAL DESIGN B

FUNCTIONAL SUPERVISOR: FERDINAND DE LA CRUZ
CALCULATED-DESIGNED BY: LUIS PENALOZA, JR.
CHECKED BY: FERDINAND DE LA CRUZ
REVISED BY: LPJ
DATE REVISED: 09-20-10

LAST REVISION 02-07-11
DATE PLOTTED => 08-NOV-2011
TIME PLOTTED => 11:28

Dist	COUNTY	ROUTE	POST MILES TOTAL PROJECT	SHEET No.	TOTAL SHEETS
08	Riv	91	15.6/21.6	1172	2028

1

REGISTERED ELECTRICAL ENGINEER 10-28-11 DATE

4-25-11
PLANS APPROVAL DATE

REGISTERED PROFESSIONAL ENGINEER FERDINAND DE LA CRUZ No. E 17215 Exp. 6-30-12 ELECTRICAL STATE OF CALIFORNIA

THE STATE OF CALIFORNIA OR ITS OFFICERS OR AGENTS SHALL NOT BE RESPONSIBLE FOR THE ACCURACY OR COMPLETENESS OF SCANNED COPIES OF THIS PLAN SHEET.

PROJECT NOTES: THIS SHEET ONLY

A INSTALL 120/240 V, TYPE III-CF SERVICE EQUIPMENT ENCLOSURE
METER A:
100 A, 240 V, 2P, CB (MAIN AND SIGN)
30 A, 240 V, 2P, CB (LTG)
15 A, 120 V, 1P, CB (LTG CONTROL)
30 A, 240 V, 2P, CB (SIGN)
15 A, 120 V, 1P, CB (SIGN CONTROL)

ADDRESS: (3438C CENTRAL AVENUE):
CALTRANS ID# (CTID): 08-56-091-0-18.418-M

METER B:
100 A, 240 V, 2P, CB (MAIN)
30 A, 120 V, 1P, CB (RMS)
20 A, 120 V, 1P, CB (SPARE)

ADDRESS: (3438D CENTRAL AVENUE):
CALTRANS ID# (CTID): 08-56-091-0-18.418-M

C INSTALL 120/240 V, TYPE III-BF
SERVICE EQUIPMENT ENCLOSURE

100 A, 240 V, 2P, CB (MAIN)
30 A, 240 V, 2P, CB (SOFFIT LTG)
ADDRESS: (3438E CENTRAL AVENUE):

10 TO PENDANT LIGHTING. SEE SHEET E-27
FOR PENDANT LIGHTING DETAILS.

11 TO EXISTING PENDANT LIGHTING. SEE SHEET E-27
FOR EXISTING PENDANT LIGHTING DETAILS.

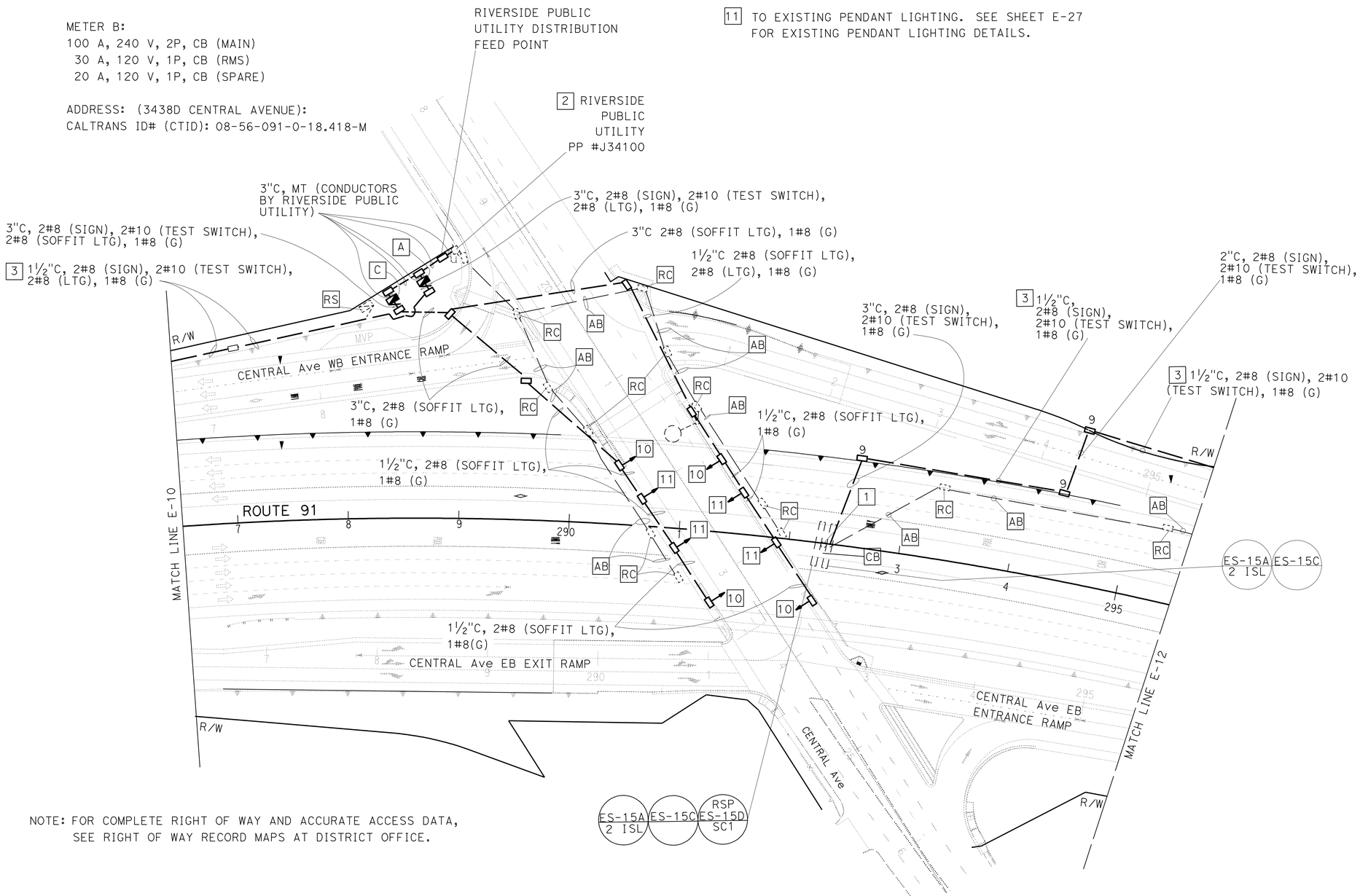

NOTE: FOR COMPLETE RIGHT OF WAY AND ACCURATE ACCESS DATA, SEE RIGHT OF WAY RECORD MAPS AT DISTRICT OFFICE.

1 **REVISED PER ADDENDUM No. 1 DATED NOVEMBER 8, 2011**

THIS PLAN IS ACCURATE FOR ELECTRICAL WORK ONLY.

MODIFY LIGHTING AND SIGN ILLUMINATION

SCALE: 1" = 50'

E-11

STATE OF CALIFORNIA - DEPARTMENT OF TRANSPORTATION
Caltrans ELECTRICAL DESIGN B

FUNCTIONAL SUPERVISOR: FERDINAND DE LA CRUZ
CALCULATED-DESIGNED BY: LUIS PENALOZA, JR.
CHECKED BY: FERDINAND DE LA CRUZ
REVISED BY: LPJ
DATE REVISED: 09-07-10

LAST REVISION: 10-27-11
DATE PLOTTED => 08-NOV-2011
TIME PLOTTED => 11:28

BORDER LAST REVISED 4/11/2008
RELATIVE BORDER SCALE IS IN INCHES 0 1 2 3
USERNAME => s121614
DGN FILE => 844840ua011.add
CU 08396
EA 448401

Dist	COUNTY	ROUTE	POST MILES TOTAL PROJECT	SHEET No.	TOTAL SHEETS
08	Riv	91	15.6/21.6	1176	2028

Ferdinand De La Cruz 10-28-11
REGISTERED ELECTRICAL ENGINEER DATE

4-25-11
PLANS APPROVAL DATE

REGISTERED PROFESSIONAL ENGINEER
FERDINAND DE LA CRUZ
No. E 17215
Exp. 6-30-12
ELECTRICAL
STATE OF CALIFORNIA

THE STATE OF CALIFORNIA OR ITS OFFICERS OR AGENTS SHALL NOT BE RESPONSIBLE FOR THE ACCURACY OR COMPLETENESS OF SCANNED COPIES OF THIS PLAN SHEET.

1

PROJECT NOTES (THIS SHEET ONLY):

A Exist 120/240 V, TYPE III-CF SERVICE EQUIPMENT ENCLOSURE
METER A: 100 A, 240 V, 2P, CB-MAIN
30 A, 240 V, 2P, CB-SIGN
15 A, 120 V, 1P, CB-SIGN CONTROL
30 A, 240 V, 2P, SPARE

METER B: 100 A, 240 V, 2P, CB-MAIN
20 A, 120 V, 1P, CB-VDS
20 A, 120 V, 1P, CB-CCTV
20 A, 120 V, 1P, (FUTURE)

(DISCONNECT VDS2 FROM 20 A, CB AND KEEP THE CB FOR FUTURE USE. LABLE VDS1 AS VDS LOCATION 3).

B RC EXISTING LIGHT FIXTURE AND INSTALL NEW ISL.

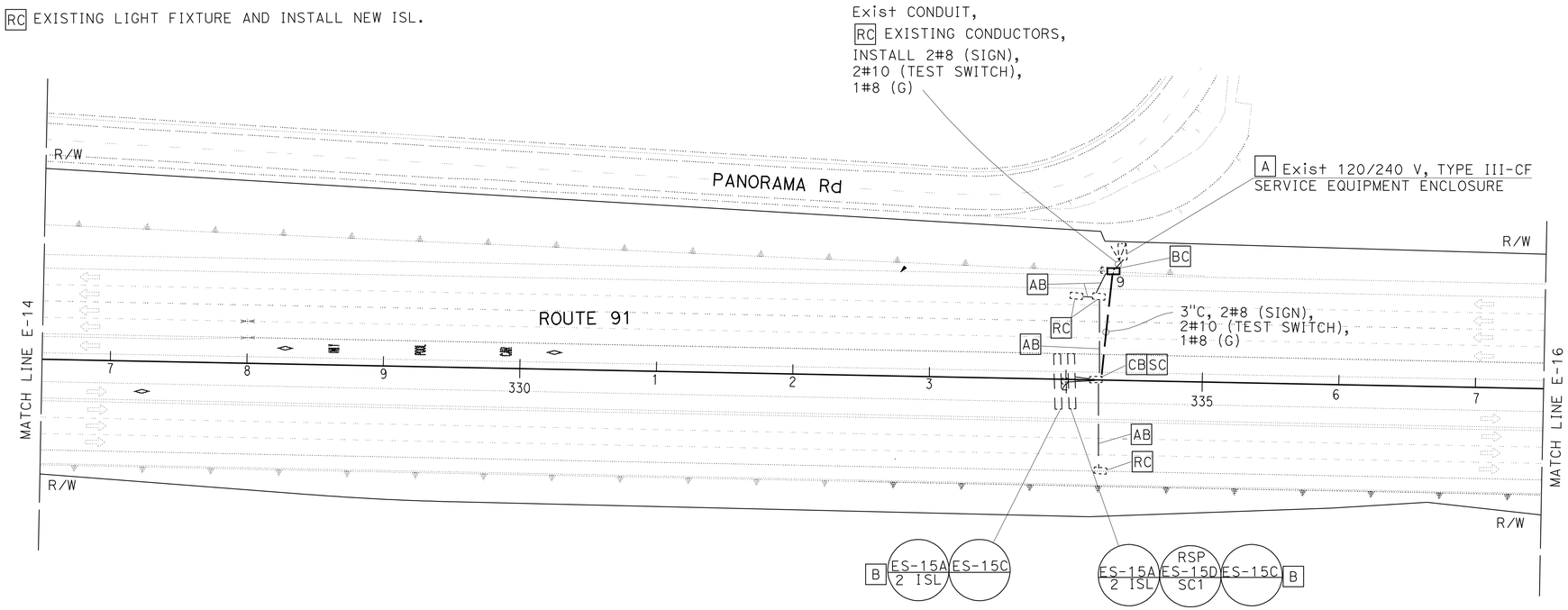

NOTE:
FOR ACCURATE RIGHT OF WAY AND ACCESS DATA,
CONTACT RIGHT OF WAY ENGINEERING AT THE DISTRICT OFFICE.

1 **REVISED PER ADDENDUM No. 1 DATED NOVEMBER 8, 2011**

NOTE: THIS PLAN IS ACCURATE FOR ELECTRICAL WORK ONLY.

MODIFY LIGHTING AND SIGN ILLUMINATION

SCALE: 1" = 50'

E-15

STATE OF CALIFORNIA - DEPARTMENT OF TRANSPORTATION
Caltrans ELECTRICAL DESIGN B

FUNCTIONAL SUPERVISOR: FERDINAND DE LA CRUZ
CALCULATED-DESIGNED BY: SANDY TUNG
CHECKED BY: FERDINAND DE LA CRUZ
REVISED BY: ST, ST
DATE REVISED: 02/10, 07/10

LAST REVISION 02-07-11
DATE PLOTTED => 08-NOV-2011
TIME PLOTTED => 11:28

BORDER LAST REVISED 4/11/2008
RELATIVE BORDER SCALE IS IN INCHES 0 1 2 3
USERNAME => s121614
DGN FILE => 844840ua015.add
CU 08396
EA 448401

Dist	COUNTY	ROUTE	POST MILES TOTAL PROJECT	SHEET No.	TOTAL SHEETS
08	Riv	91	15.6/21.6	1178	2028

REGISTERED ELECTRICAL ENGINEER 10-28-11 DATE

4-25-11
PLANS APPROVAL DATE

REGISTERED PROFESSIONAL ENGINEER
FERDINAND DE LA CRUZ
No. E 17215
Exp. 6-30-12
ELECTRICAL
STATE OF CALIFORNIA

THE STATE OF CALIFORNIA OR ITS OFFICERS OR AGENTS SHALL NOT BE RESPONSIBLE FOR THE ACCURACY OR COMPLETENESS OF SCANNED COPIES OF THIS PLAN SHEET.

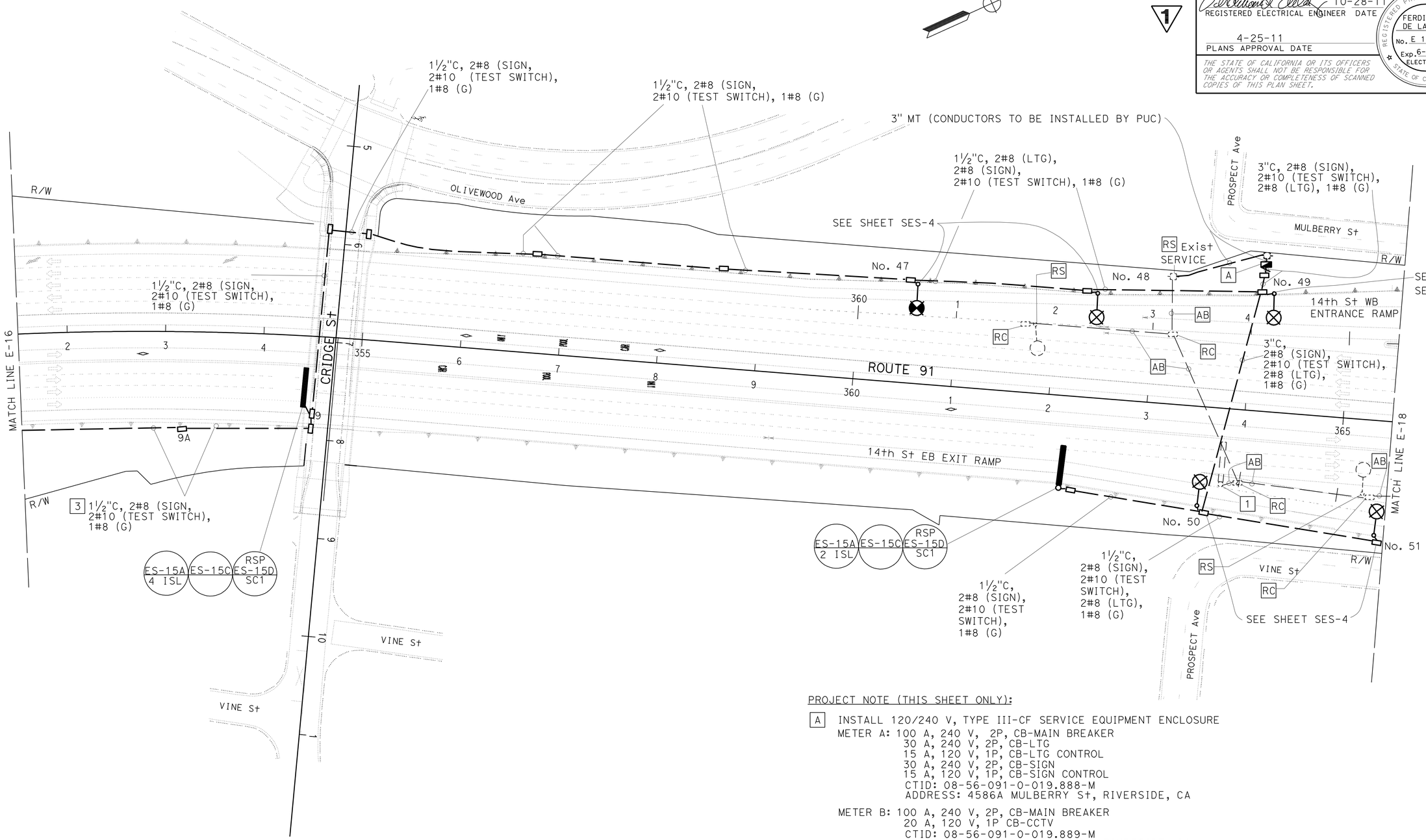

PROJECT NOTE (THIS SHEET ONLY):

A INSTALL 120/240 V, TYPE III-CF SERVICE EQUIPMENT ENCLOSURE
METER A: 100 A, 240 V, 2P, CB-MAIN BREAKER
30 A, 240 V, 2P, CB-LTG
15 A, 120 V, 1P, CB-LTG CONTROL
30 A, 240 V, 2P, CB-SIGN
15 A, 120 V, 1P, CB-SIGN CONTROL
CTID: 08-56-091-0-019.888-M
ADDRESS: 4586A MULBERRY St, RIVERSIDE, CA

METER B: 100 A, 240 V, 2P, CB-MAIN BREAKER
20 A, 120 V, 1P CB-CCTV
CTID: 08-56-091-0-019.889-M
ADDRESS: 4586B MULBERRY St, RIVERSIDE, CA

NOTE:

FOR ACCURATE RIGHT OF WAY AND ACCESS DATA, CONTACT RIGHT OF WAY ENGINEERING AT THE DISTRICT OFFICE.

1 REVISED PER ADDENDUM No. 1 DATED NOVEMBER 8, 2011

NOTE: THIS PLAN IS ACCURATE FOR ELECTRICAL WORK ONLY.

MODIFY LIGHTING AND SIGN ILLUMINATION

SCALE: 1" = 50'

E-17

		ST	ST	SANDY TUNG	STATE OF CALIFORNIA - DEPARTMENT OF TRANSPORTATION
		02/11	02/10	FERDINAND DE LA CRUZ	Caltrans ELECTRICAL DESIGN B
		DATE REVISED	REVISED BY	FUNCTIONAL SUPERVISOR	
CALCULATED-DESIGNED BY				FERDINAND DE LA CRUZ	
CHECKED BY					

LAST REVISION 02-07-11 | DATE PLOTTED => 08-NOV-2011 TIME PLOTTED => 11:28

Dist	COUNTY	ROUTE	POST MILES TOTAL PROJECT	SHEET No.	TOTAL SHEETS
08	Riv	91	15.6/21.6	1179	2028

REGISTERED ELECTRICAL ENGINEER 10-28-11 DATE

4-25-11
PLANS APPROVAL DATE

REGISTERED PROFESSIONAL ENGINEER FERDINAND DE LA CRUZ No. E 17215 Exp. 6-30-12 ELECTRICAL STATE OF CALIFORNIA

THE STATE OF CALIFORNIA OR ITS OFFICERS OR AGENTS SHALL NOT BE RESPONSIBLE FOR THE ACCURACY OR COMPLETENESS OF SCANNED COPIES OF THIS PLAN SHEET.

PROJECT NOTE (THIS SHEET ONLY):

A INSTALL 120/240 V, TYPE III-CF SERVICE EQUIPMENT ENCLOSURE

METER A: 100 A, 240V, 2P, CB-MAIN BREAKER
30 A, 240 V, 2P, CB-SIGN
15 A, 120 V, 1P, CB-SIGN CONTROL
CTID: 08-56-091-0-020.013-M
ADDRESS: 3298A 14TH St, RIVERSIDE, CA

METER B: 100 A, 240 V, 2P, CB-MAIN
20 A, 120 V, 1P, CB-IRRIGATION
80 A, 240 V, 2P, CB-PUMP
CTID: 08-56-091-0-020.014-M
ADDRESS: 3298B 14TH St, RIVERSIDE, CA

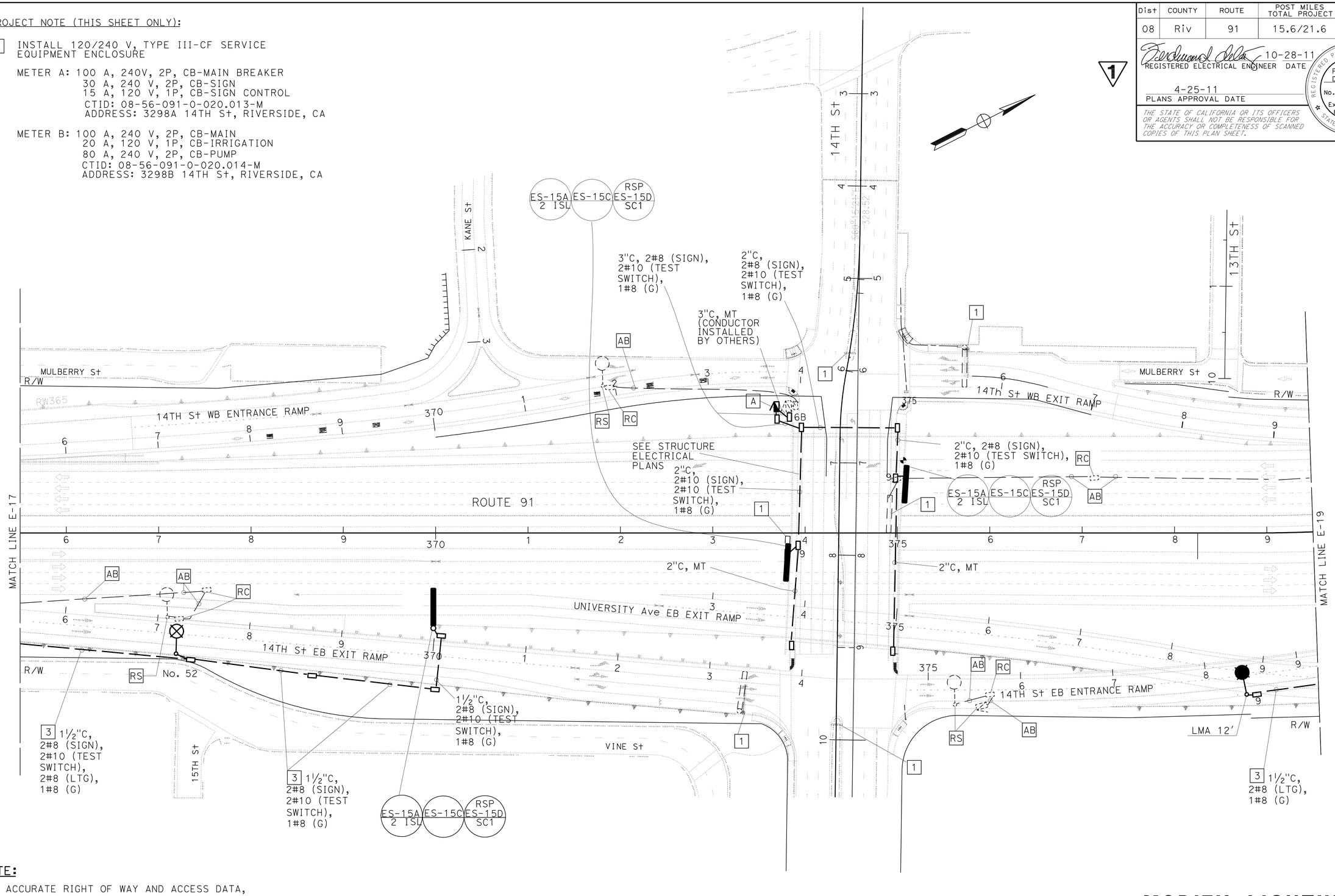

NOTE:

FOR ACCURATE RIGHT OF WAY AND ACCESS DATA, CONTACT RIGHT OF WAY ENGINEERING AT THE DISTRICT OFFICE.

1 REVISED PER ADDENDUM No. 1 DATED NOVEMBER 8, 2011

NOTE: THIS PLAN IS ACCURATE FOR ELECTRICAL WORK ONLY.

MODIFY LIGHTING AND SIGN ILLUMINATION

SCALE: 1" = 50'

E-18

STATE OF CALIFORNIA - DEPARTMENT OF TRANSPORTATION
Caltrans ELECTRICAL DESIGN B

FUNCTIONAL SUPERVISOR: FERDINAND DE LA CRUZ
CALCULATED-DESIGNED BY: SANDY TUNG
CHECKED BY: FERDINAND DE LA CRUZ
REVISED BY: ST ST
DATE REVISED: 02/10 02/11

LAST REVISION 02-07-11
DATE PLOTTED => 08-NOV-2011
TIME PLOTTED => 11:29

BORDER LAST REVISED 4/11/2008
RELATIVE BORDER SCALE IS IN INCHES 0 1 2 3
USERNAME => s121614
DGN FILE => 844840ua018.add
CU 08396
EA 448401

Dist	COUNTY	ROUTE	POST MILES TOTAL PROJECT	SHEET No.	TOTAL SHEETS
08	Riv	91	15.6/21.6	1180	2028

REGISTERED ELECTRICAL ENGINEER 10-28-11 DATE

4-25-11
PLANS APPROVAL DATE

REGISTERED PROFESSIONAL ENGINEER FERDINAND DE LA CRUZ No. E 17215 Exp. 6-30-12 ELECTRICAL STATE OF CALIFORNIA

THE STATE OF CALIFORNIA OR ITS OFFICERS OR AGENTS SHALL NOT BE RESPONSIBLE FOR THE ACCURACY OR COMPLETENESS OF SCANNED COPIES OF THIS PLAN SHEET.

PROJECT NOTE (THIS SHEET ONLY):

A INSTALL 120/240 V, TYPE III-CF SERVICE EQUIPMENT ENCLOSURE
METER A: 100 A, 240 V, 2P, CB-MAIN
30 A, 240 V, 2P, CB-SIGN
30 A, 240 V, 2P, CB-LIGHTING
15 A, 120 V, 1P, CB-SIGN CONTROL
15 A, 120 V, 1P, CB-LIGHT CONTROL
CTID: 08-56-091-0-020.273-M
ADDRESS: 3962A MULBERRY, RIVERSIDE, CA

METER B: 100 A, 240 V, 2P, CB-MAIN
METER NOT INSTALLED IN THIS PROJECT
CTID: 08-56-091-0-020.274-M
ADDRESS: 3962B MULBERRY, RIVERSIDE, CA

B INSTALL 120/240 V, TYPE III-CF SERVICE EQUIPMENT ENCLOSURE
METER 1: 100 A, 240 V, 2P, CB-MAIN
30 A, 240 V, 2P, CB-LIGHTING
15 A, 120 V, 1P, CB-LIGHT CONTROL
CTID: 08-56-091-0-020.263-M
ADDRESS: 3390A 10TH St, RIVERSIDE, CA

METER 2: 100 A, 240 V, 2P, CB-MAIN
30 A, 120 V, 1P, CB-RAMP METER
20 A, 120 V, 1P, CB SPARE
CTID: 08-56-091-0-020.264-M
ADDRESS: 3390B 10TH St, RIVERSIDE, CA

1

NOTE:

FOR ACCURATE RIGHT OF WAY AND ACCESS DATA,
CONTACT RIGHT OF WAY ENGINEERING AT THE DISTRICT OFFICE.

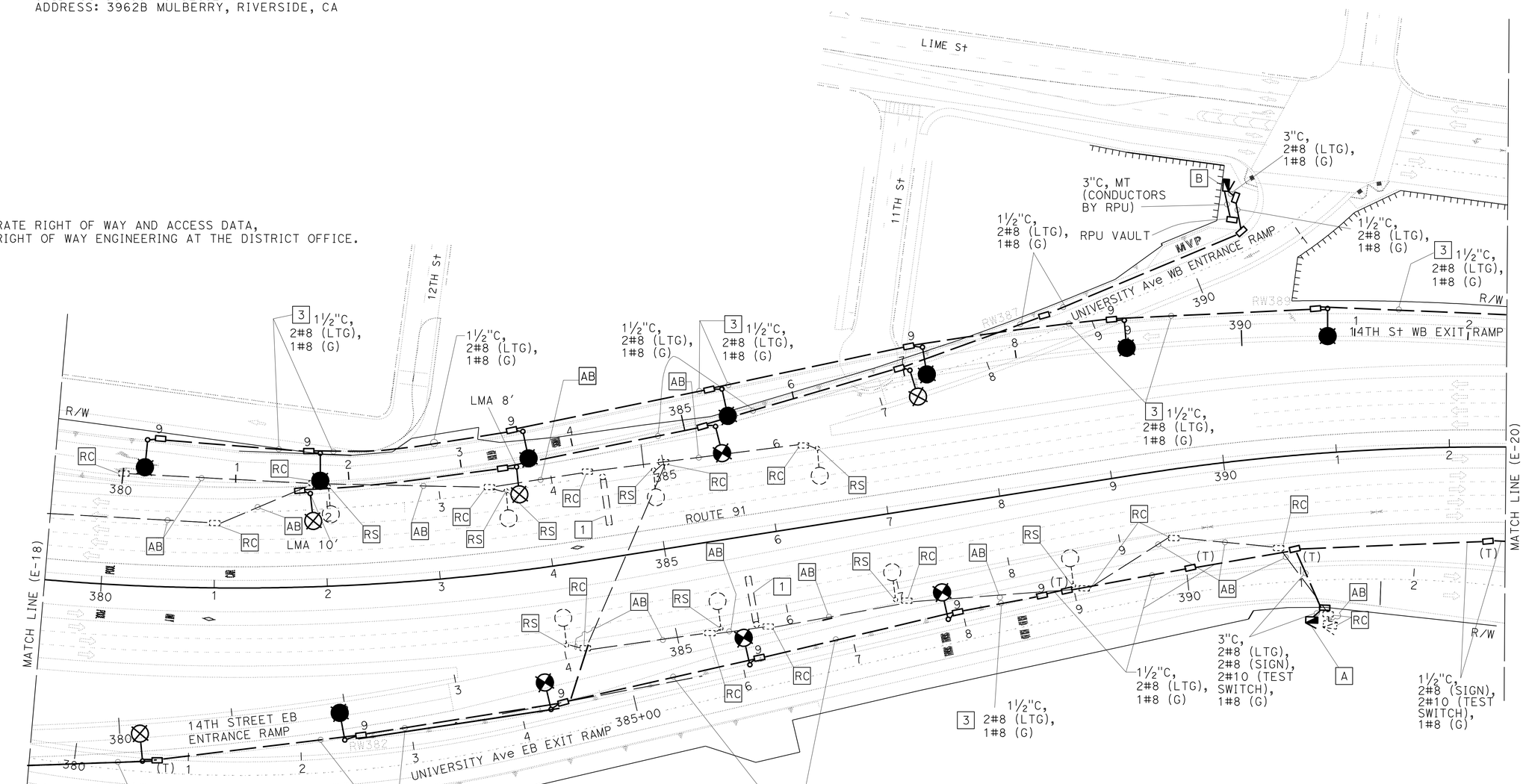

1 REVISED PER ADDENDUM No. 1 DATED NOVEMBER 8, 2011

NOTE: THIS PLAN IS ACCURATE FOR ELECTRICAL WORK ONLY.

MODIFY LIGHTING AND SIGN ILLUMINATION

SCALE: 1" = 50'

E-19

STATE OF CALIFORNIA - DEPARTMENT OF TRANSPORTATION
Caltrans ELECTRICAL DESIGN B

FUNCTIONAL SUPERVISOR: FERDINAND DE LA CRUZ

CALCULATED-DESIGNED BY: SANDY TUNG
CHECKED BY: FERDINAND DE LA CRUZ

REVISED BY / DATE REVISED:
ST 02/10
ST 08/10

LAST REVISION 02-07-11
DATE PLOTTED => 08-NOV-2011
TIME PLOTTED => 11:29

Dist	COUNTY	ROUTE	POST MILES TOTAL PROJECT	SHEET No.	TOTAL SHEETS
08	Riv	91	15.6/21.6	1182	2028

REGISTERED ELECTRICAL ENGINEER 10-28-11 DATE

4-25-11
PLANS APPROVAL DATE

REGISTERED PROFESSIONAL ENGINEER
FERDINAND DE LA CRUZ
No. E 17215
Exp. 6-30-12
ELECTRICAL
STATE OF CALIFORNIA

THE STATE OF CALIFORNIA OR ITS OFFICERS OR AGENTS SHALL NOT BE RESPONSIBLE FOR THE ACCURACY OR COMPLETENESS OF SCANNED COPIES OF THIS PLAN SHEET.

NOTE:

FOR ACCURATE RIGHT OF WAY AND ACCESS DATA,
CONTACT RIGHT OF WAY ENGINEERING AT THE DISTRICT OFFICE.

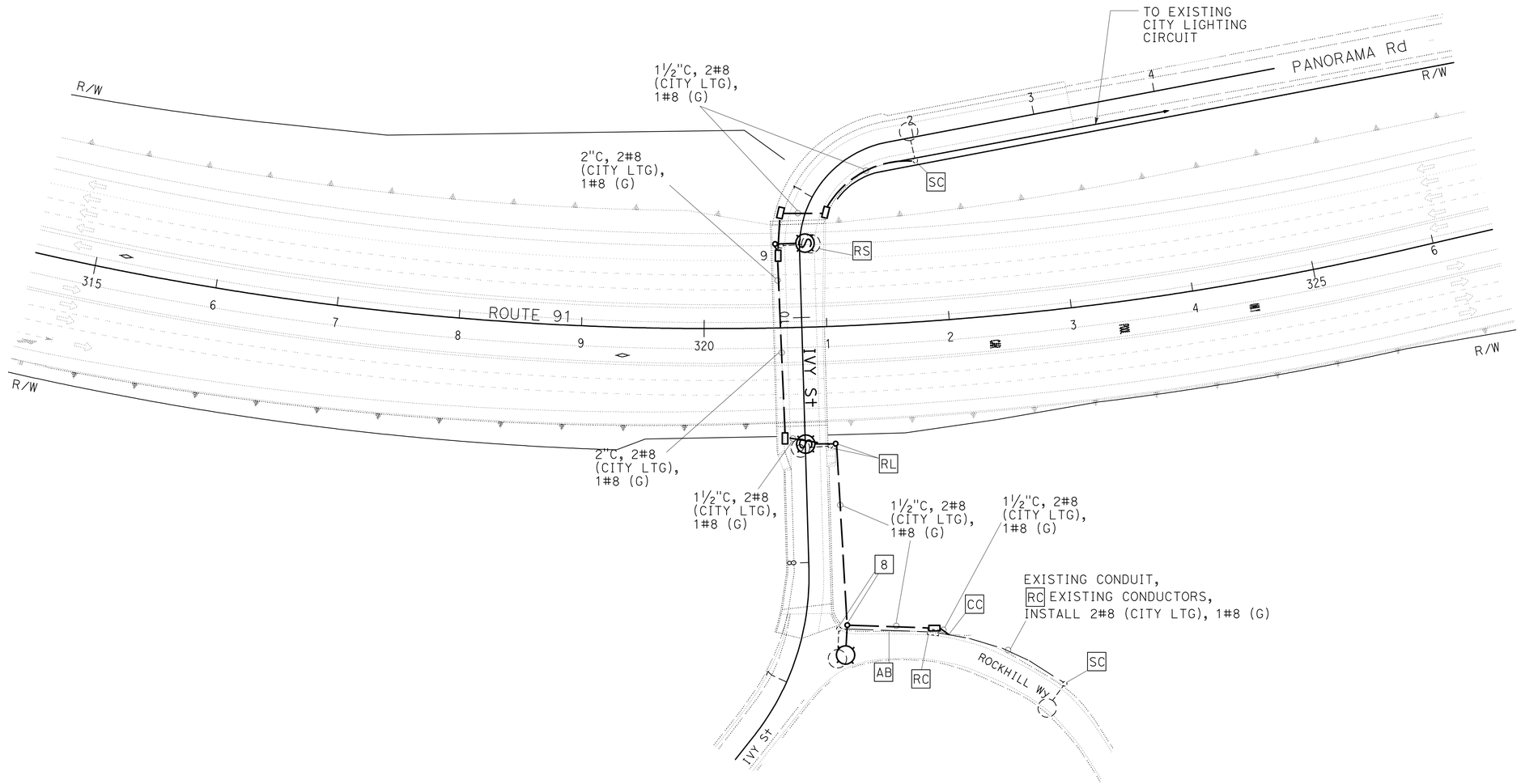

1 REVISED PER ADDENDUM No. 1 DATED NOVEMBER 8, 2011

THIS PLAN IS ACCURATE FOR ELECTRICAL WORK ONLY.

MODIFY LIGHTING (CITY)

SCALE: 1" = 50'

E-21

ST	02/11		
ST	02/10		
REVISED BY	DATE REVISED		
SANDY TUNG	FERDINAND DE LA CRUZ		
CALCULATED-DESIGNED BY	CHECKED BY		
FUNCTIONAL SUPERVISOR	FERDINAND DE LA CRUZ		

STATE OF CALIFORNIA - DEPARTMENT OF TRANSPORTATION
Caltrans ELECTRICAL DESIGN B

LAST REVISION 02-07-11 | DATE PLOTTED => 08-NOV-2011 | TIME PLOTTED => 11:29

Dist	COUNTY	ROUTE	POST MILES TOTAL PROJECT	SHEET No.	TOTAL SHEETS
08	Riv	91	15.6/21.6	1184	2028

REGISTERED ELECTRICAL ENGINEER 10-28-11 DATE

4-25-11
PLANS APPROVAL DATE

REGISTERED PROFESSIONAL ENGINEER
FERDINAND DE LA CRUZ
No. E 17215
Exp. 6-30-12
ELECTRICAL
STATE OF CALIFORNIA

THE STATE OF CALIFORNIA OR ITS OFFICERS OR AGENTS SHALL NOT BE RESPONSIBLE FOR THE ACCURACY OR COMPLETENESS OF SCANNED COPIES OF THIS PLAN SHEET.

NOTE:

FOR ACCURATE RIGHT OF WAY AND ACCESS DATA, CONTACT RIGHT OF WAY ENGINEERING AT THE DISTRICT OFFICE.

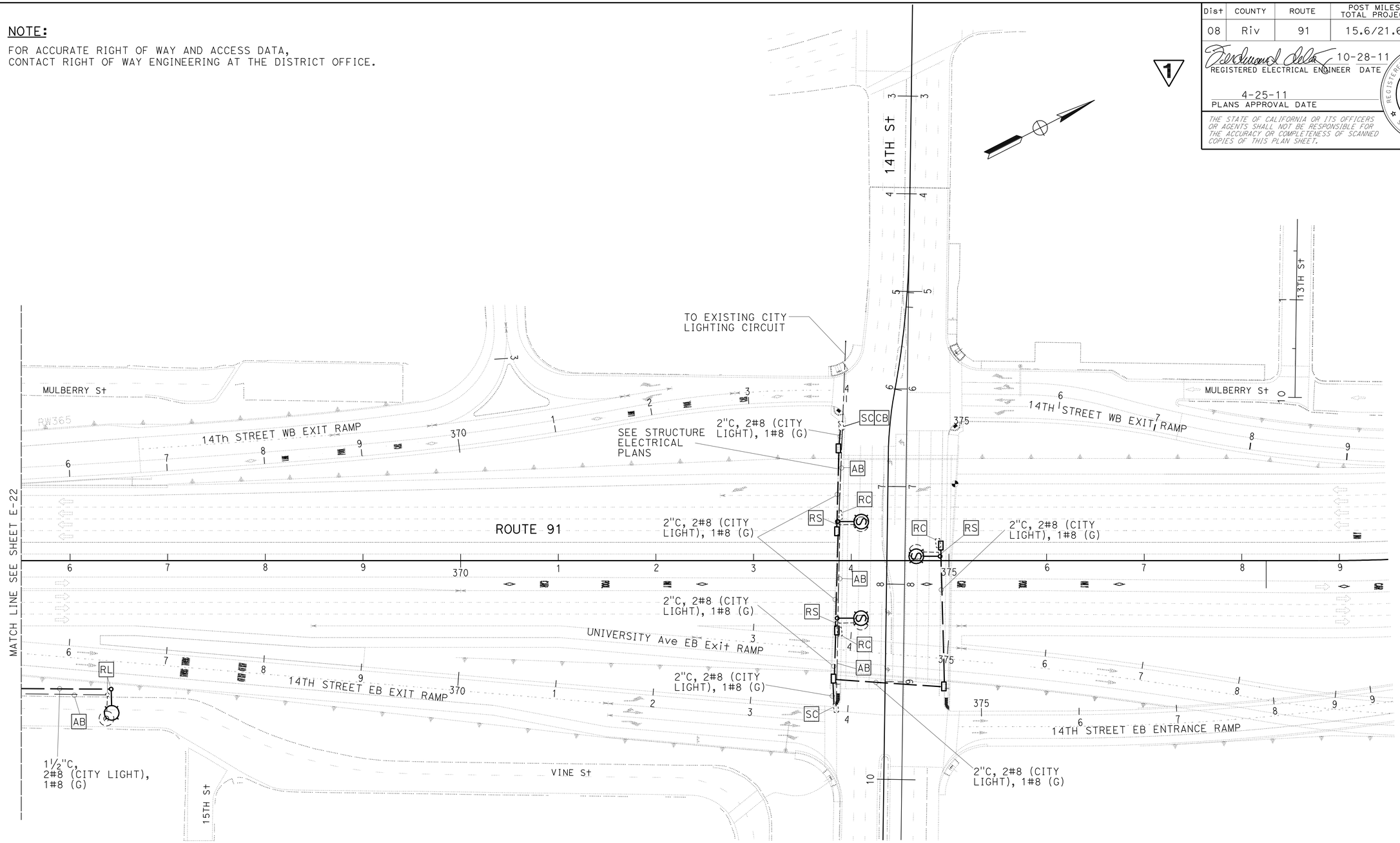

1 **REVISED PER ADDENDUM No. 1 DATED NOVEMBER 8, 2011**

THIS PLAN IS ACCURATE FOR ELECTRICAL WORK ONLY.

MODIFY LIGHTING (CITY)

SCALE: 1" = 50'

E-23

STATE OF CALIFORNIA - DEPARTMENT OF TRANSPORTATION
Caltrans® **ELECTRICAL DESIGN B**

FUNCTIONAL SUPERVISOR: FERDINAND DE LA CRUZ
CALCULATED-DESIGNED BY: SANDY TUNG
CHECKED BY: FERDINAND DE LA CRUZ
REVISED BY: ST ST
DATE REVISED: 02/10 02/11

LAST REVISION 02-07-11
DATE PLOTTED => 08-NOV-2011
TIME PLOTTED => 11:29

BORDER LAST REVISED 4/11/2008
RELATIVE BORDER SCALE IS IN INCHES 0 1 2 3
USERNAME => s121614
DGN FILE => 844840ua023.add
CU 08396
EA 448401

Dist	COUNTY	ROUTE	POST MILES TOTAL PROJECT	SHEET No.	TOTAL SHEETS
08	Riv	91	15.6/21.6	1187	2028

REGISTERED ELECTRICAL ENGINEER 10-28-11 DATE

4-25-11
PLANS APPROVAL DATE

REGISTERED PROFESSIONAL ENGINEER FERDINAND DE LA CRUZ No. E 17215 Exp. 6-30-12 ELECTRICAL STATE OF CALIFORNIA

THE STATE OF CALIFORNIA OR ITS OFFICERS OR AGENTS SHALL NOT BE RESPONSIBLE FOR THE ACCURACY OR COMPLETENESS OF SCANNED COPIES OF THIS PLAN SHEET.

1

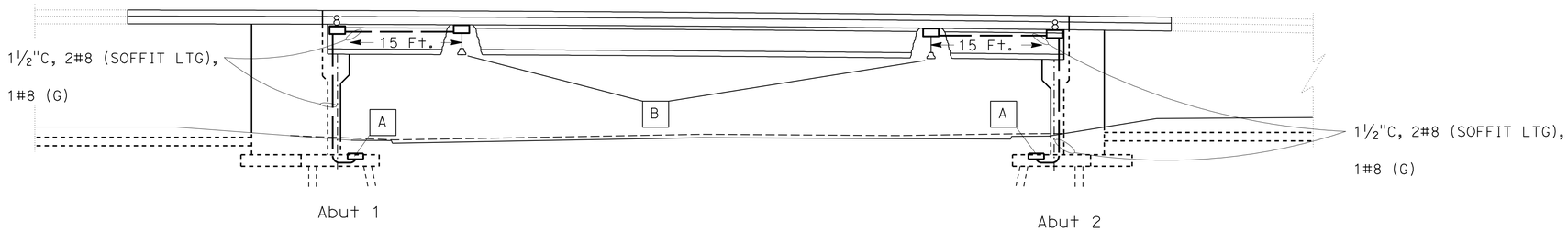

PROJECT NOTES: (THIS SHEET ONLY)

A = TO PULL BOX IN SIDEWALK. SEE SHEET E-8 FOR DETAILS.

B = SEE ES-9E, DETAIL B FOR DETAILS

NOTE:

1. SEE SHEET E-8 FOR SOFFIT LIGHTING CIRCUIT

LEGEND:

= EXISTING PENDANT SOFFIT LIGHTING

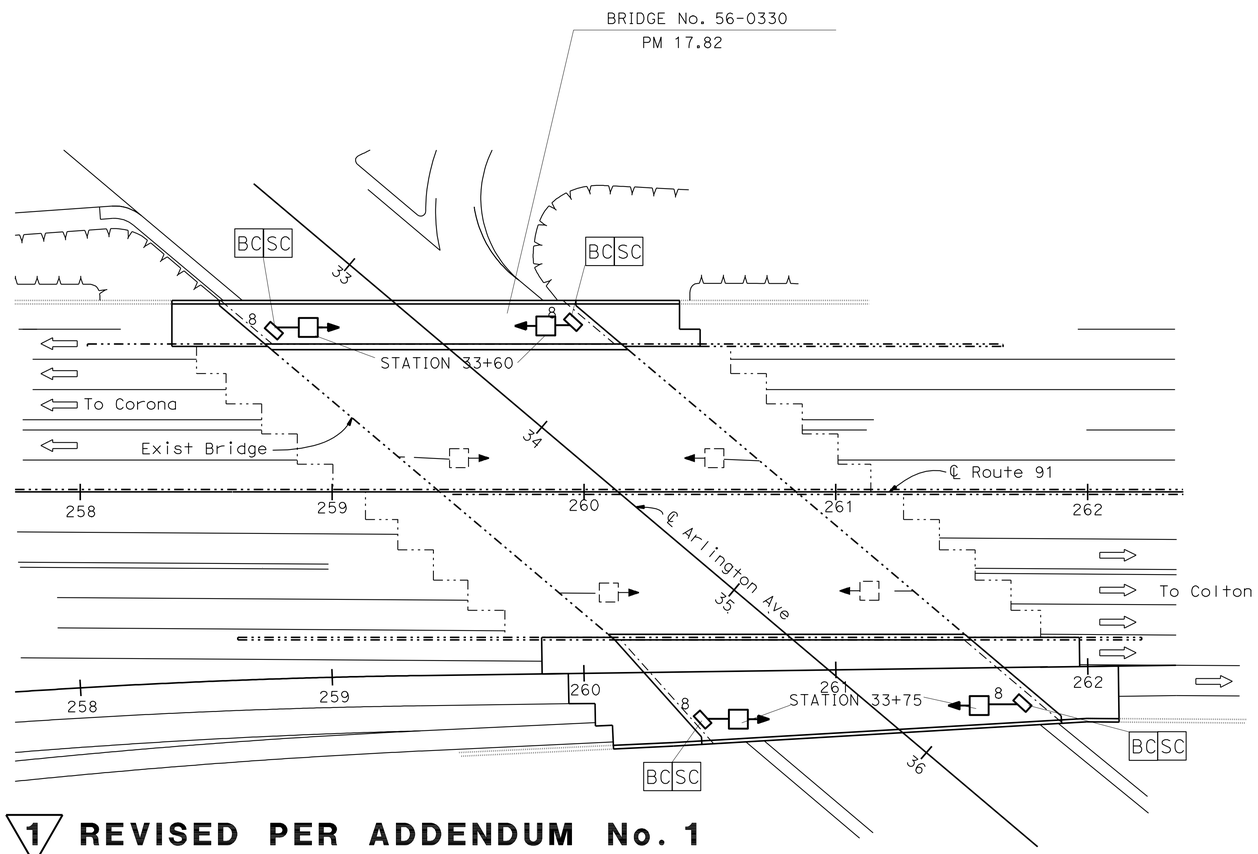

1 **REVISED PER ADDENDUM No. 1 DATED NOVEMBER 8, 2011**

CITY OF RIVERSIDE PUBLIC UTILITIES

STREET LIGHT STANDARD DETAILS — UGS

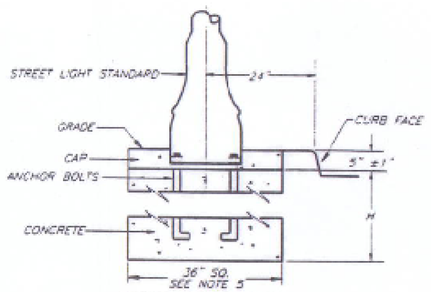

TYPICAL BASE DETAIL

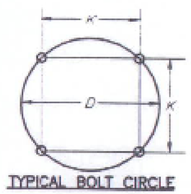

TYPICAL BOLT CIRCLE

ITEM SCHEDULE

Item No.	Manufacturer	Cat No.	Dimension H	Anchor Bolt	D	K	Luminaire Mounting Height
S1	Pumco	45D4	48"	1" x 36" x 4"	17"	12"	26'-3"
	Ameron	4-C1-23-P4	48"	1" x 36" x 4"	17"	12"	26'-3"
S2	Pumco	45D8	48"	1" x 36" x 4"	17"	12"	27'-8"
	Ameron	4-B1-24-F8	48"	1" x 36" x 4"	17"	12"	27'-9"
S3	Pumco	46D8	48"	1" x 36" x 4"	17"	12"	30'-2"
	Ameron	4-B1-27-F8	48"	1" x 36" x 4"	17"	12"	30'-3"
S4	Pumco	68J10	48"	1" x 36" x 4"	21"	14 7/8"	30'-10"
	Ameron	4-C1-25-B10	48"	1" x 36" x 4"	21"	14 7/8"	30'-10"
S5	Pumco	TC7010	60"	1 1/4" x 44" x 4"	17"	12"	33'-6"
	Ameron						
S7	Pumco	1214T	30"	3/4" x 28" x 3"	14 1/2"	10 1/4"	15'-4"
	Ameron	7-C2-13	30"	3/4" x 28" x 3"	14 1/2"	10 1/4"	14'-3"
S8	Pumco	68D8	48"	1" x 36" x 4"	21"	14 7/8"	34'-9"
	Ameron	6-C1-28-F8	48"	1" x 36" x 4"	21"	14 7/8"	34'-9"
S9	Pumco	68S10	48"	1" x 36" x 4"	21"	14 7/8"	32'-8"
	Ameron	6-C1-28-G10	48"	1" x 36" x 4"	21"	14 7/8"	32'-8"
S11							
	Ameron	20CT15-853	36"	3/4" x 24" x 4"	22"	15 9/16"	16'

Notes :

1. Shaded areas are no longer installed but for reference only.
2. See specifications for conduit entrances, bonding and foundation requirements.
3. Set anchor bolts level with top of curb.
4. Confirm bolt circle dimensions with manufacturer.
5. Foundation for item S7 is 24" square.
6. Streetlight door opening to face sidewalk.

REVISION: Updated Catalog Numbers S2, S3 DATE: 11/1/07 Revision

APPROVAL: Gene Redding DATE: 11/1/07

UNDERGROUND STRUCTURES STANDARDS — Issued: 11/07 Rev: 3 — Page 1 of 1 — UGS-801

MODIFY LIGHTING (CITY)
(STRUCTURE ELECTRICAL)
ARLINGTON BRIDGE UC (WIDEN)
(BRIDGE No. 56-0330)

NO SCALE

E-26

THIS PLAN IS ACCURATE FOR ELECTRICAL WORK ONLY.

STATE OF CALIFORNIA - DEPARTMENT OF TRANSPORTATION — Caltrans — ELECTRICAL DESIGN B

CALCULATED-DESIGNED BY: LUIS PENALOZA, JR. — CHECKED BY: FERDINAND DE LA CRUZ

REVISED BY: LPJ — DATE REVISED: 02-03-11

FUNCTIONAL SUPERVISOR: FERDINAND DE LA CRUZ

LAST REVISION 10-27-11 — DATE PLOTTED => 08-NOV-2011 — TIME PLOTTED => 11:29

Dist	COUNTY	ROUTE	POST MILES TOTAL PROJECT	SHEET No.	TOTAL SHEETS
08	Riv	91	15.6/21.6	1188	2028

REGISTERED ELECTRICAL ENGINEER 10-28-11 DATE

PLANS APPROVAL DATE 4-25-11

REGISTERED PROFESSIONAL ENGINEER FERDINAND DE LA CRUZ No. E 17215 Exp. 6-30-12 ELECTRICAL STATE OF CALIFORNIA

THE STATE OF CALIFORNIA OR ITS OFFICERS OR AGENTS SHALL NOT BE RESPONSIBLE FOR THE ACCURACY OR COMPLETENESS OF SCANNED COPIES OF THIS PLAN SHEET.

1

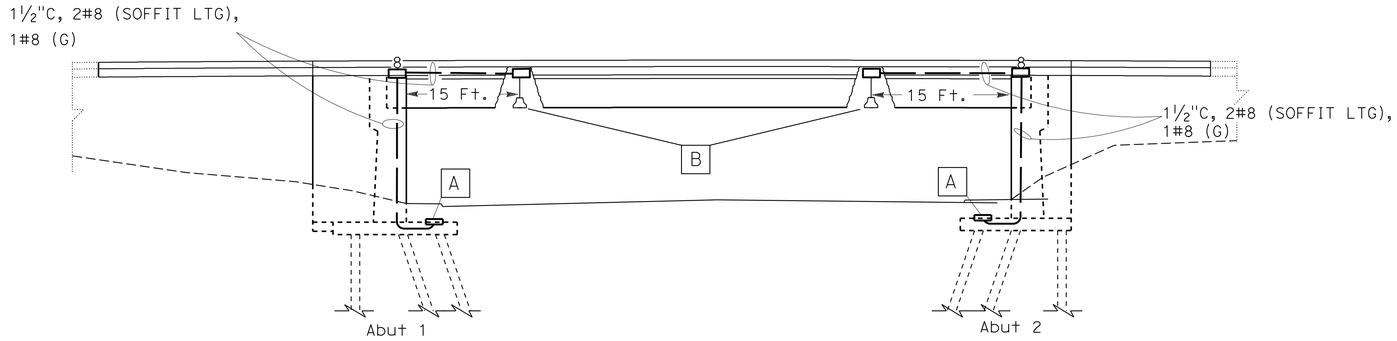

NOTES:

A = TO PULL BOX IN SIDEWALK. SEE SHEET E-11 FOR DETAILS.

B = SEE ES-9E, DETAIL P FOR DETAILS.

LEGEND:

= EXISTING PENDANT SOFFIT LIGHTING

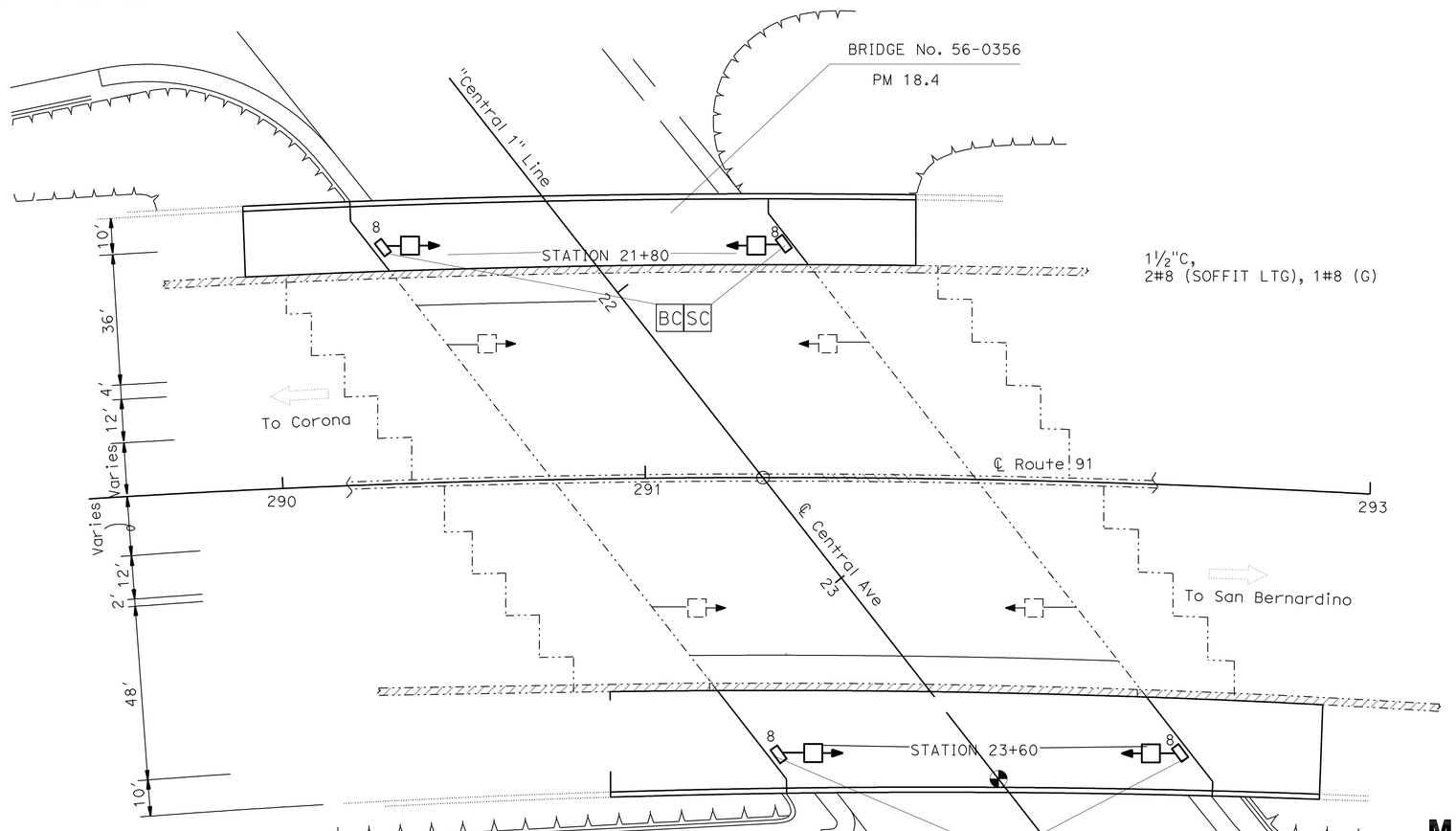

1 **REVISED PER ADDENDUM No. 1 DATED NOVEMBER 8, 2011**

THIS PLAN IS ACCURATE FOR ELECTRICAL WORK ONLY.

MODIFY LIGHTING (CITY)
(STRUCTURE ELECTRICAL)
CENTRAL BRIDGE UC (WIDEN)
(BRIDGE No. 56-0356)

NO SCALE

E-27

STATE OF CALIFORNIA - DEPARTMENT OF TRANSPORTATION
Caltrans® ELECTRICAL DESIGN B

FUNCTIONAL SUPERVISOR: FERDINAND DE LA CRUZ

CALCULATED-DESIGNED BY: LUIS PENALOZA, JR.
CHECKED BY: FERDINAND DE LA CRUZ

REVISED BY: LPJ
DATE REVISED: 02-03-11

LAST REVISION DATE PLOTTED => 08-NOV-2011
TIME PLOTTED => 11:29

Dist	COUNTY	ROUTE	POST MILES TOTAL PROJECT	SHEET No.	TOTAL SHEETS
08	Riv	91	15.6/21.6	1240	2028

REGISTERED ELECTRICAL ENGINEER 2-7-11 DATE

4-25-11
PLANS APPROVAL DATE

REGISTERED PROFESSIONAL ENGINEER MICHAEL APANTE No. E 17164 Exp. 9-30-11 ELECTRICAL STATE OF CALIFORNIA

THE STATE OF CALIFORNIA OR ITS OFFICERS OR AGENTS SHALL NOT BE RESPONSIBLE FOR THE ACCURACY OR COMPLETENESS OF SCANNED COPIES OF THIS PLAN SHEET.

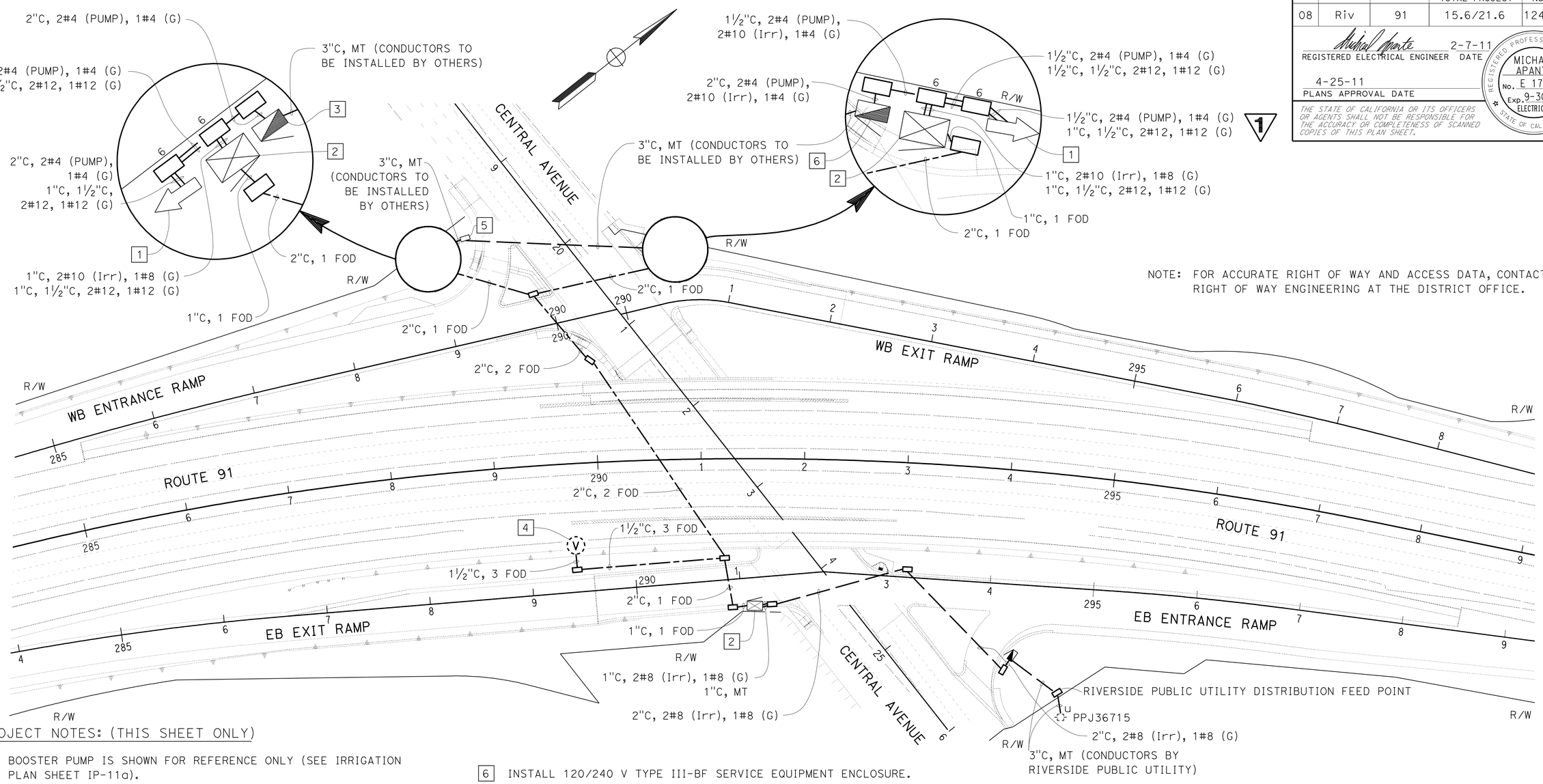

NOTE: FOR ACCURATE RIGHT OF WAY AND ACCESS DATA, CONTACT RIGHT OF WAY ENGINEERING AT THE DISTRICT OFFICE.

PROJECT NOTES: (THIS SHEET ONLY)

1. BOOSTER PUMP IS SHOWN FOR REFERENCE ONLY (SEE IRRIGATION PLAN SHEET IP-11a).

2. IRRIGATION CONTROLLER CABINET IS SHOWN FOR REFERENCE ONLY (SEE LANDSCAPE PLAN SHEET IP-11a).

3. INSTALL 120/240 V TYPE III-BF SERVICE EQUIPMENT ENCLOSURE.

   METER: 100 A, 240 V, 2P, CB (MAIN)
   20 A, 120 V, 1P, CB (IRRIGATION)
   80 A, 240 V, 2P, CB (PUMP)

   3438E CENTRAL AVENUE, RIVERSIDE
   CALTRANS ID# (CTID): 08-56-091-0-18.274-M

4. SPLICE VAULT IS SHOWN FOR REFERENCE ONLY. (SEE SHEET E-42).

5. PROPOSED PULL BOX FOR RIVERSIDE PUBLIC UTILITY FEED POINT DISTRIBUTION IS SHOWN FOR REFERENCE ONLY . SEE SHEET E-11.

6. INSTALL 120/240 V TYPE III-BF SERVICE EQUIPMENT ENCLOSURE.

   METER: 100 A, 240 V, 2P, CB (MAIN)
   20 A, 120 V, 1P, CB (IRRIGATION)
   30 A, 240 V, 2P, CB (PUMP)

   3439C CENTRAL AVENUE, RIVERSIDE
   CALTRANS ID# (CTID): 08-56-091-0-18.593-M

B. 120/240 V, TYPE III-CF
   SERVICE EQUIPMENT ENCLOSURE
   SEE MODIFY ELECTRICAL SERVICE (IRRIGATION)
   CENTRAL AVENUE FOR DETAILS

   METER A:
   100 A, 240 V, 2P, CB (MAIN)
   20 A, 120 V, 1P, CB (IRRIGATION)

   ADDRESS: (3430C CENTRAL AVENUE):
   CALTRANS ID# (CTID): 08-56-091-018.268-M

   METER B: (FUTURE)
   100 A, 240 V, 2P, CB (MAIN)
   30 A, 240 V, 2P, CB (SPARE)
   15 A, 120 V, 1P, CB (SPARE)

   ADDRESS: (3430D CENTRAL AVENUE):
   CALTRANS ID# (CTID): 08-56-091-018.267-M

1 **REVISED PER ADDENDUM No. 1 DATED NOVEMBER 8, 2011**

THIS PLAN IS ACCURATE FOR ELECTRICAL WORK ONLY.

MODIFY FIBER OPTIC COMMUNICATION SYSTEM
MODIFY ELECTRIC SERVICE (IRRIGATION)
(CENTRAL AVENUE)

SCALE 1" = 50'

E-79

STATE OF CALIFORNIA - DEPARTMENT OF TRANSPORTATION
Caltrans® ELECTRICAL DESIGN A

FUNCTIONAL SUPERVISOR: DAVID A GONZALEZ
CALCULATED-DESIGNED BY: MICHAEL APANTE
CHECKED BY: DILARA ZAMAN
REVISED BY / DATE REVISED

LAST REVISION 02-07-11
DATE PLOTTED => 08-NOV-2011
TIME PLOTTED => 11:49

DIST	COUNTY	ROUTE	POST MILES TOTAL PROJECT	SHEET No	TOTAL SHEETS
08	Riv	91	15.6/21.6	1487	2028

REGISTERED CIVIL ENGINEER 11/12/10 DATE

4-25-11
PLANS APPROVAL DATE

REGISTERED PROFESSIONAL ENGINEER Minh Thuong Vo No. C59297 Exp. 6/30/2011 CIVIL STATE OF CALIFORNIA

The State of California or its officers or agents shall not be responsible for the accuracy or completeness of electronic copies of this plan sheet.

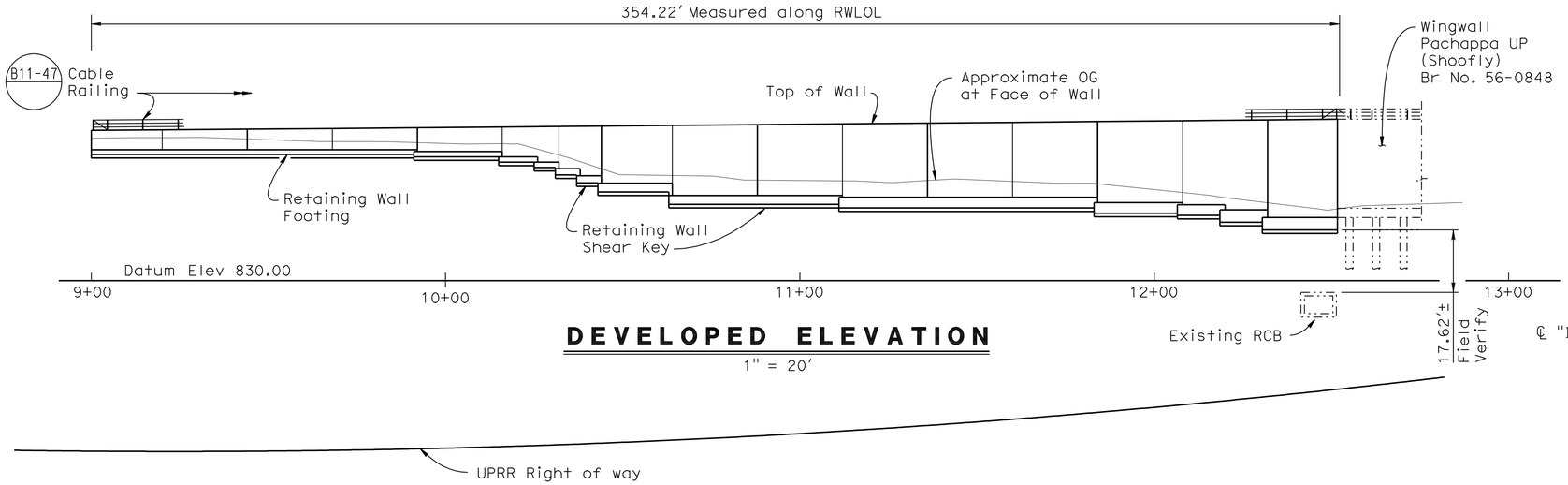

DEVELOPED ELEVATION

1" = 20'

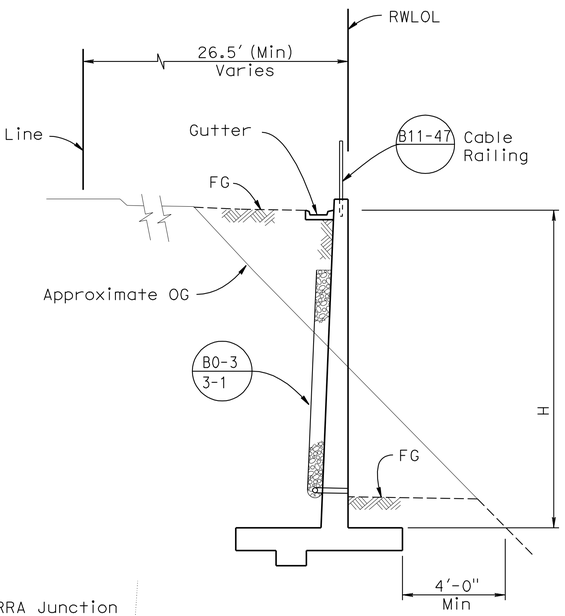

TYPICAL SECTION 1

No Scale

1 REVISED PER ADDENDUM No. 1 DATED NOVEMBER 8, 2011

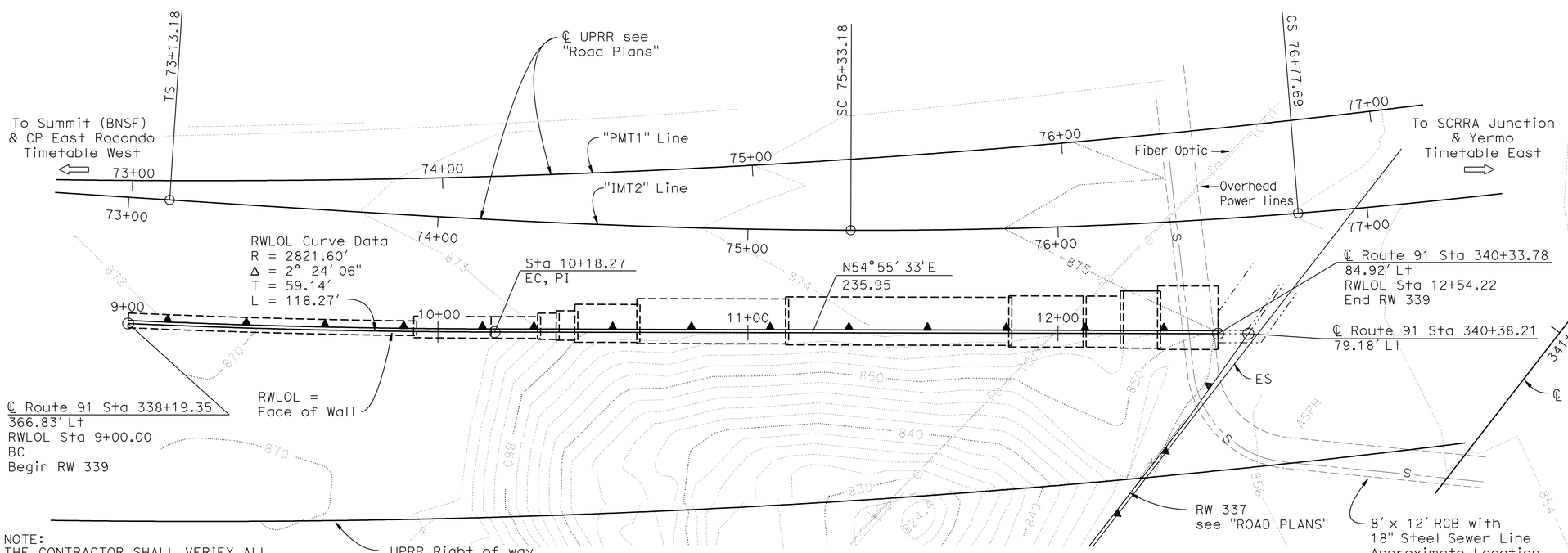

NOTE:
THE CONTRACTOR SHALL VERIFY ALL CONTROLLING FIELD DIMENSIONS BEFORE ORDERING OR FABRICATING ANY MATERIAL.

PLAN

1" = 20'

NOTES: 1

1. Applicant shall be responsible for identification, location and protection of existing utilities.
2. Call the following number at least 48 hours prior to commencing work to determine location of fiber optics:
   UPRR "Call Before You Dig" 1-800-336-9193

Daniel T. Adams
DESIGN ENGINEER

	BY	CHECKED			
DESIGN	M. Vo	R. Stiltz	LOAD FACTOR DESIGN	LIVE LOADING: HIGHWAY COOPER E80	
DETAILS	R. Kirkland	R. Stiltz	LAYOUT: M. Vo		CHECKED R. Stiltz
QUANTITIES	R. Stiltz	M. Vo	SPECIFICATIONS: Dave Klein		PLANS AND SPECS COMPARED Dave Klein

ORIGINAL SCALE IN INCHES FOR REDUCED PLANS 0 1 2 3

STATE OF CALIFORNIA
DEPARTMENT OF TRANSPORTATION

DIVISION OF ENGINEERING SERVICES
STRUCTURE DESIGN
DESIGN BRANCH 10

CU 08
EA 448401

BRIDGE NO. 56 E0068
POST MILE 19.3

RETAINING WALL NO. 339
GENERAL PLAN

DISREGARD PRINTS BEARING EARLIER REVISION DATES

REVISION DATES: 4/26/10 8/05/10 10/29/10 3/14/11 5/16/11 10-25-11

SHEET 1 OF 10

STRUCTURES DESIGN GENERAL PLAN SHEET (ENGLISH) (REV.07-24-06)

FILE => 56e0068agp01.add

USERNAME => s126614 DATE PLOTTED => 08-NOV-2011 TIME PLOTTED => 11:30

DIST	COUNTY	ROUTE	POST MILES TOTAL PROJECT	SHEET No	TOTAL SHEETS
08	Riv	91	15.6/21.6	1488	2028

REGISTERED CIVIL ENGINEER 11/12/10 DATE

4-25-11
PLANS APPROVAL DATE

REGISTERED PROFESSIONAL ENGINEER Minh Thuong Vo No. C59297 Exp. 6/30/2011 CIVIL STATE OF CALIFORNIA

The State of California or its officers or agents shall not be responsible for the accuracy or completeness of electronic copies of this plan sheet.

1

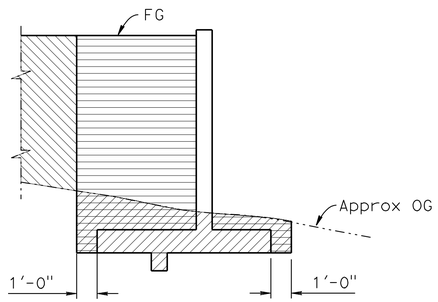

EXCAVATION & BACKFILL

NO SCALE

LEGEND:

- Structure Excavation
- Structure Backfill
- Roadway Backfill see "ROAD PLANS"

DESIGN DATA

DESIGN: American Railroad Engineering and Maintenance-of-Way Association (2010)

LIVE LOADING: Highway; Cooper E80

REINFORCED CONCRETE: Load Factor Design
f'c = 3,600 psi
fy = 60,000 psi

SOIL PARAMETERS: (for determination of design lateral earth pressure)
Ø = 34° γ = 120 pcf

INDEX TO PLANS

Sheet No.	Title
1	GENERAL PLAN
2	INDEX TO PLANS
3	RETAINING WALL LAYOUT NO. 1
4	RETAINING WALL LAYOUT NO. 2
5	RETAINING WALL LAYOUT NO. 3
6	RETAINING WALL DETAILS
7	LOG OF TEST BORINGS 1 OF 4
8	LOG OF TEST BORINGS 2 OF 4
9	LOG OF TEST BORINGS 3 OF 4
10	LOG OF TEST BORINGS 4 OF 4

STANDARD PLANS DATED MAY 2006

A10A	ACRONYMS AND ABBREVIATIONS (SHEET 1 OF 2)
A10B	ACRONYMS AND ABBREVIATIONS (SHEET 2 OF 2)
A10C	SYMBOLS (SHEET 1 OF 2)
A10D	SYMBOLS (SHEET 2 OF 2)
A62B	LIMITS OF PAYMENT FOR EXCAVATION AND BACKFILL BRIDGE SURCHARGE AND WALL
B0-3	BRIDGE DETAILS
B3-8	RETAINING WALL DETAILS NO. 1
B3-9	RETAINING WALL DETAILS NO. 2
B11-47	Cable Railing

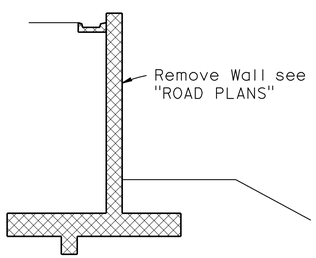

WALL REMOVAL AT STAGE 3 CONSTRUCTION

NO SCALE

QUANTITIES

STRUCTURE EXCAVATION (RETAINING WALL)	1,300 ~~1,223~~	CY
STRUCTURE BACKFILL (RETAINING WALL)	770 ~~2,295~~	CY
PERVIOUS BACKFILL MATERIAL (RETAINING WALL)	106	CY
STRUCTURAL CONCRETE, RETAINING WALL	797	CY
BAR REINFORCING STEEL (RETAINING WALL)	130,300 ~~119,149~~	LB
MINOR CONCRETE (GUTTER)	355	LF
CABLE RAILING	355	LF

STANDARD PLAN SHEET NO.

DETAIL NO.

NOTE:
THE CONTRACTOR SHALL VERIFY ALL CONTROLLING FIELD DIMENSIONS BEFORE ORDERING OR FABRICATING ANY MATERIAL.

1 REVISED PER ADDENDUM No. 1 DATED NOVEMBER 8, 2011

	BY	CHECKED
DESIGN	M. Vo	R. Stiltz
DETAILS	R. Kirkland	R. Stiltz
QUANTITIES	R. Stiltz	M. Vo

STATE OF CALIFORNIA
DEPARTMENT OF TRANSPORTATION

DIVISION OF ENGINEERING SERVICES
STRUCTURE DESIGN
DESIGN BRANCH 10

BRIDGE NO. 56 E0068
POST MILE 19.3

RETAINING WALL NO. 339
INDEX TO PLANS

STRUCTURES DESIGN DETAIL SHEET (ENGLISH) (REV. 10/25/05)

ORIGINAL SCALE IN INCHES FOR REDUCED PLANS 0 1 2 3

CU 08
EA 448401

DISREGARD PRINTS BEARING EARLIER REVISION DATES

REVISION DATES: 4/26/10 8/05/10 10/29/10 3/14/11 5/18/11 10-25-11

SHEET 2 OF 10

FILE => 56e0068aitp02.add

USERNAME => s12614 DATE PLOTTED => 08-NOV-2011 TIME PLOTTED => 11:30

DIST	COUNTY	ROUTE	POST MILES TOTAL PROJECT	SHEET No	TOTAL SHEETS
08	Riv	91	15.6/21.6	1489	2028

REGISTERED CIVIL ENGINEER 11/12/10 DATE

4-25-11
PLANS APPROVAL DATE

REGISTERED PROFESSIONAL ENGINEER Minh Thuong Vo No. C59297 Exp. 6/30/2011 CIVIL STATE OF CALIFORNIA

The State of California or its officers or agents shall not be responsible for the accuracy or completeness of electronic copies of this plan sheet.

1

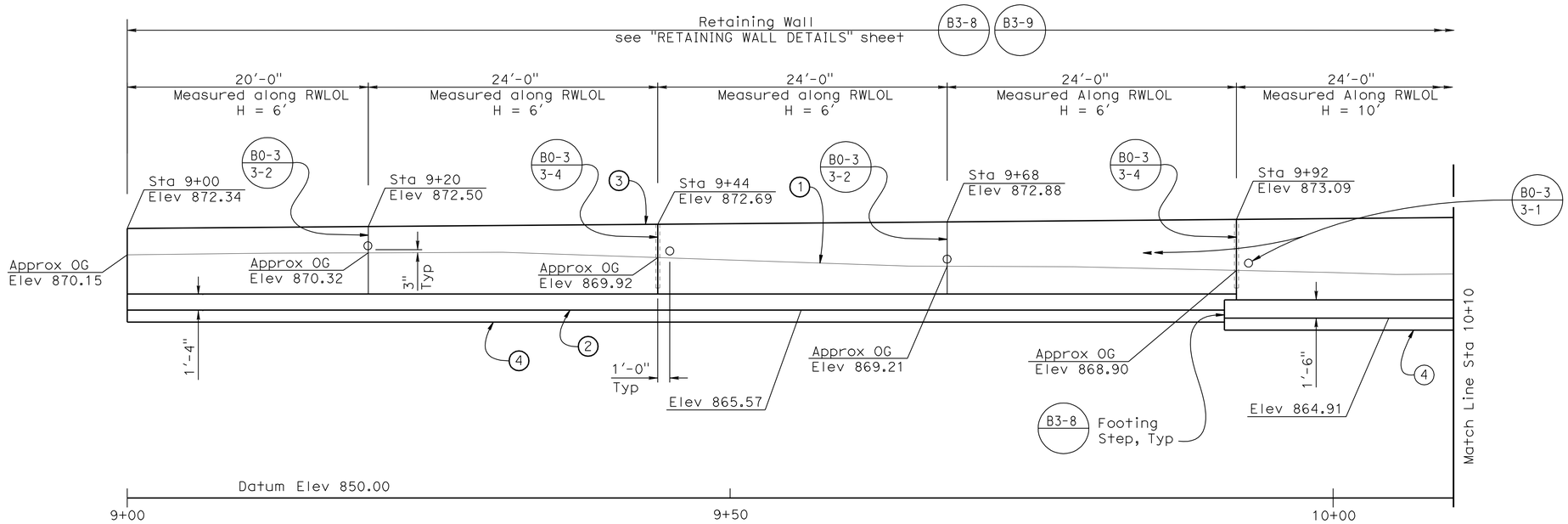

DEVELOPED ELEVATION

3/16" = 1'-0"

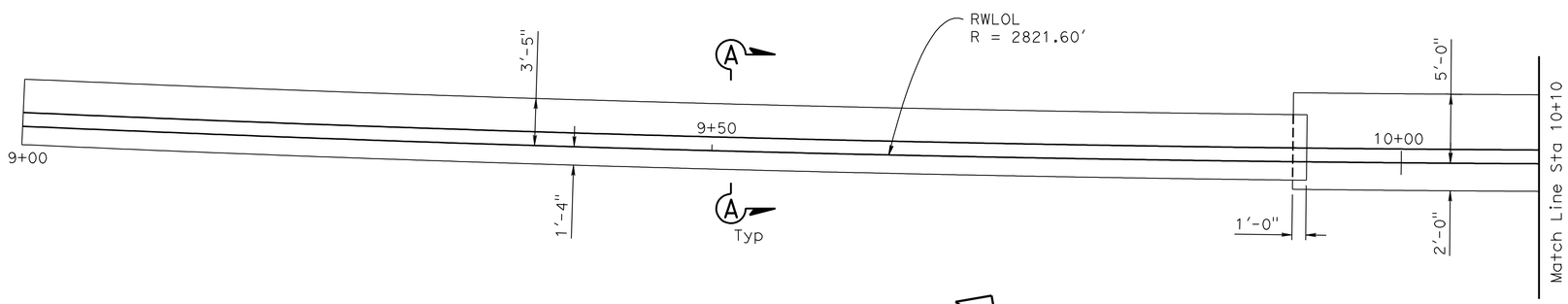

FOOTING PLAN

3/16" = 1'-0"

NOTES:

1. For Utility Information, see "Road Plans".
2. For Section A-A, see "RETAINING WALL DETAILS" sheet.

LEGEND:

1. Approximate OG at Face of Wall
2. Bottom of Retaining Wall Footing
3. Top of Wall
4. Key

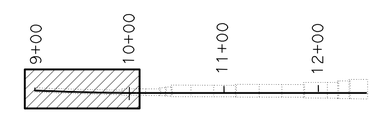

KEY PLAN

NOTE:
THE CONTRACTOR SHALL VERIFY ALL CONTROLLING FIELD DIMENSIONS BEFORE ORDERING OR FABRICATING ANY MATERIAL.

1 REVISED PER ADDENDUM No. 1 DATED NOVEMBER 8, 2011

DESIGN	BY M. Vo	CHECKED R. Stiltz
DETAILS	BY R. Kirkland	CHECKED R. Stiltz
QUANTITIES	BY R. Stiltz	CHECKED M. Vo

STATE OF CALIFORNIA
DEPARTMENT OF TRANSPORTATION

DIVISION OF ENGINEERING SERVICES
STRUCTURE DESIGN
DESIGN BRANCH 10

BRIDGE NO. 56 E0068
POST MILE 19.3

RETAINING WALL NO. 339
RETAINING WALL LAYOUT NO. 1

STRUCTURES DESIGN DETAIL SHEET (ENGLISH) (REV. 10/25/05)

ORIGINAL SCALE IN INCHES FOR REDUCED PLANS 0 1 2 3

CU 08
EA 448401

DISREGARD PRINTS BEARING EARLIER REVISION DATES

REVISION DATES: 4/25/10 8/05/10 10/28/10 3/14/11 5/16/11 10-25-11

SHEET 3 OF 10

FILE => 56e0068csp03.add

USERNAME => s121614 DATE PLOTTED => 08-NOV-2011 TIME PLOTTED => 11:30

DIST	COUNTY	ROUTE	POST MILES TOTAL PROJECT	SHEET No	TOTAL SHEETS
08	Riv	91	15.6/21.6	1490	2028

REGISTERED CIVIL ENGINEER 11/12/10 DATE

4-25-11
PLANS APPROVAL DATE

REGISTERED PROFESSIONAL ENGINEER Minh Thuong Vo No. C59297 Exp. 6/30/2011 CIVIL STATE OF CALIFORNIA

The State of California or its officers or agents shall not be responsible for the accuracy or completeness of electronic copies of this plan sheet.

1

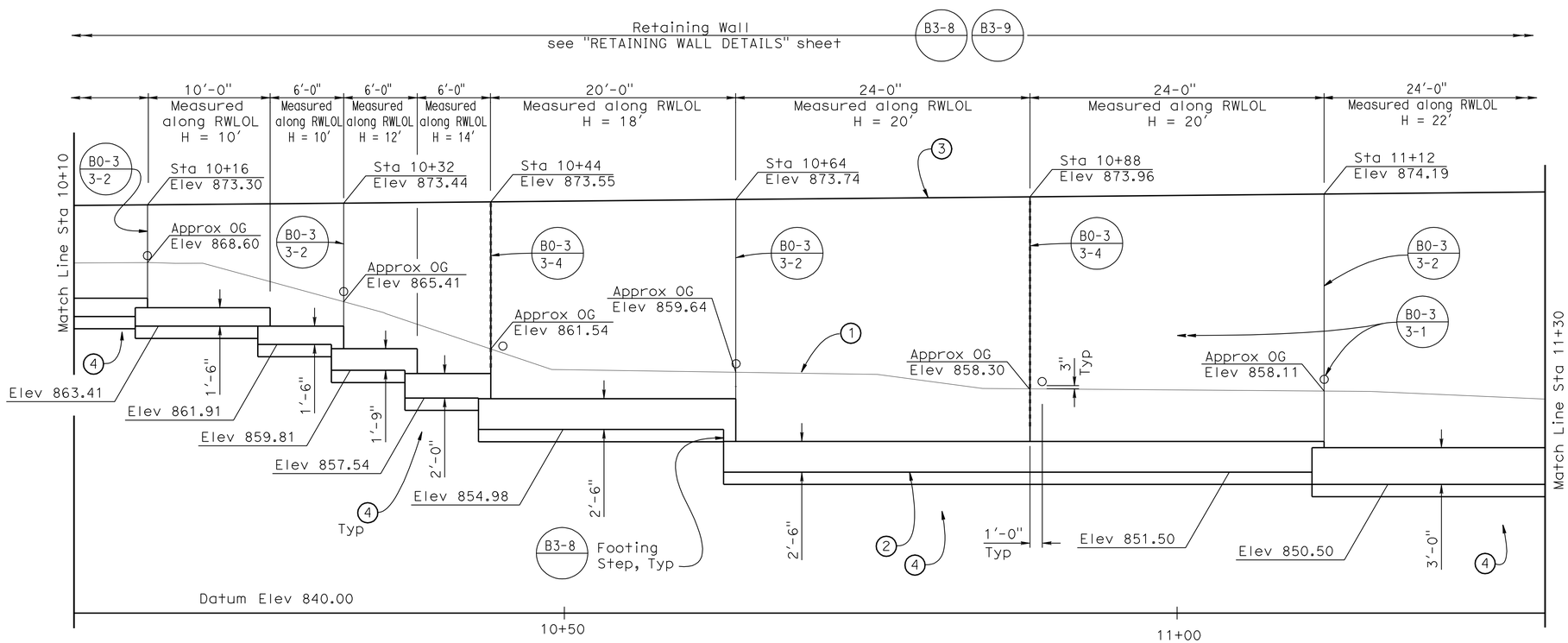

DEVELOPED ELEVATION

3/16" = 1'-0"

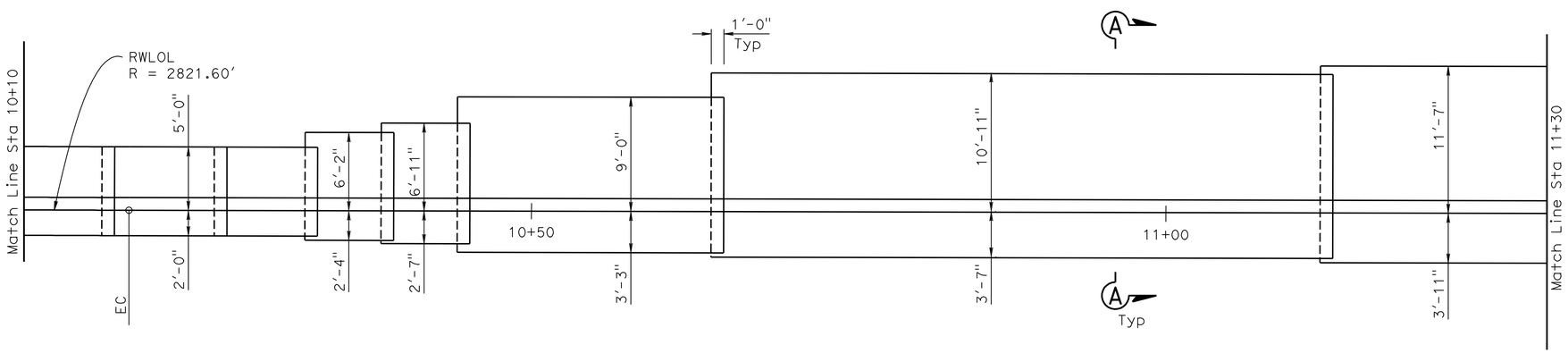

FOOTING PLAN

3/16" = 1'-0"

NOTES:

1. For Utility Information, see "Road Plans".
2. For Section A-A, see "RETAINING WALL DETAILS" sheet.

LEGEND:

1. Approximate OG at Face of Wall
2. Bottom of Retaining Wall Footing
3. Top of Wall
4. Key

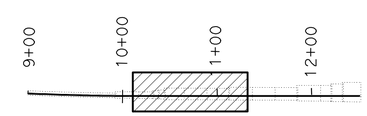

KEY PLAN

NOTE:
THE CONTRACTOR SHALL VERIFY ALL CONTROLLING FIELD DIMENSIONS BEFORE ORDERING OR FABRICATING ANY MATERIAL.

1 **REVISED PER ADDENDUM No. 1 DATED NOVEMBER 8, 2011**

	BY	CHECKED
DESIGN	M. Vo	R. Stiltz
DETAILS	R. Kirkland	R. Stiltz
QUANTITIES	R. Stiltz	M. Vo

STATE OF CALIFORNIA
DEPARTMENT OF TRANSPORTATION

DIVISION OF ENGINEERING SERVICES
STRUCTURE DESIGN
DESIGN BRANCH 10

BRIDGE NO. 56 E0068
POST MILE 19.3

RETAINING WALL NO. 339
RETAINING WALL LAYOUT NO. 2

STRUCTURES DESIGN DETAIL SHEET (ENGLISH) (REV. 10/25/05)

ORIGINAL SCALE IN INCHES FOR REDUCED PLANS 0 1 2 3

CU 08
EA 448401

DISREGARD PRINTS BEARING EARLIER REVISION DATES

REVISION DATES: 4/26/10 8/05/10 10/29/10 3/14/11 5/18/11 10-25-11

SHEET 4 OF 10

FILE => 56e0068csp04.add

USERNAME => s121614 DATE PLOTTED => 08-NOV-2011 TIME PLOTTED => 11:30

DIST	COUNTY	ROUTE	POST MILES TOTAL PROJECT	SHEET No	TOTAL SHEETS
08	Riv	91	15.6/21.6	1491	2028

REGISTERED CIVIL ENGINEER 11/12/10 DATE

4-25-11
PLANS APPROVAL DATE

The State of California or its officers or agents shall not be responsible for the accuracy or completeness of electronic copies of this plan sheet.

REGISTERED PROFESSIONAL ENGINEER Minh Thuong Vo No. C59297 Exp. 6/30/2011 CIVIL STATE OF CALIFORNIA

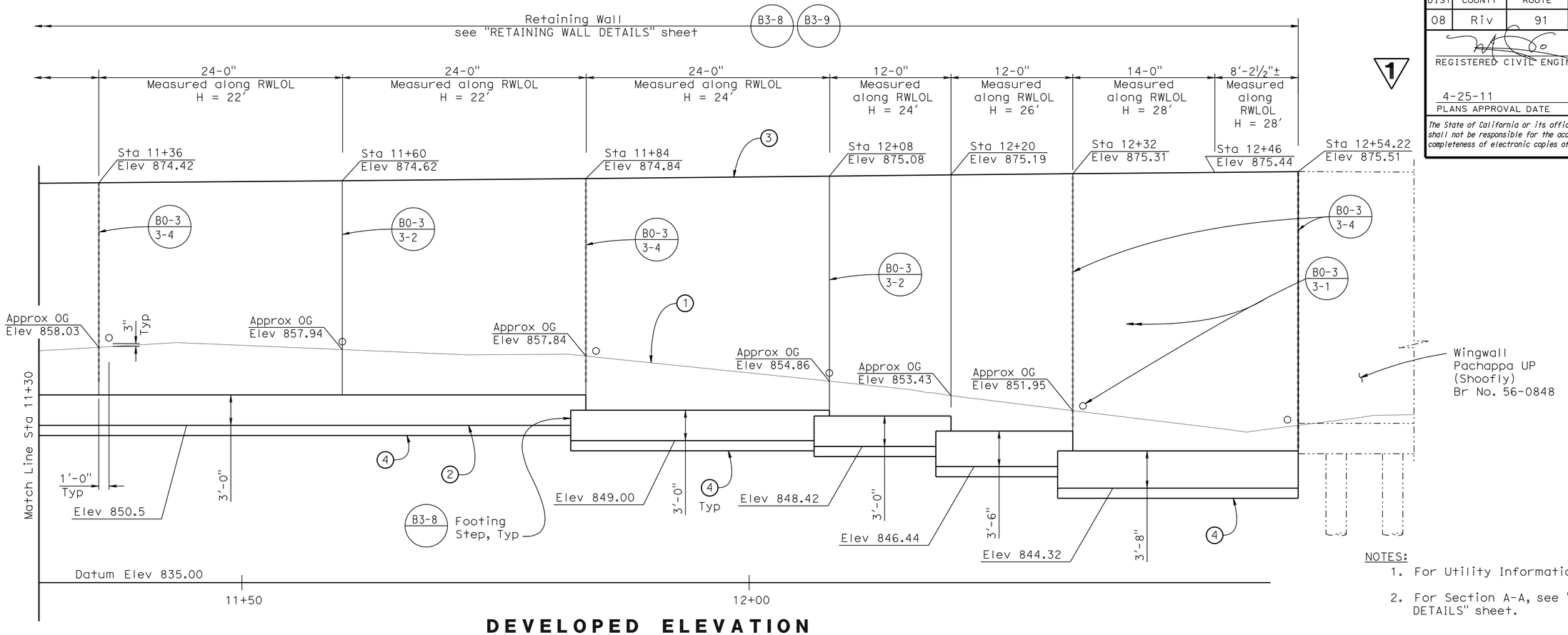

DEVELOPED ELEVATION

3/16" = 1'-0"

NOTES:

1. For Utility Information, see "Road Plans".
2. For Section A-A, see "RETAINING WALL DETAILS" sheet.

LEGEND:

1. Approximate OG at Face of Wall
2. Bottom of Retaining Wall Footing
3. Top of Wall
4. Key

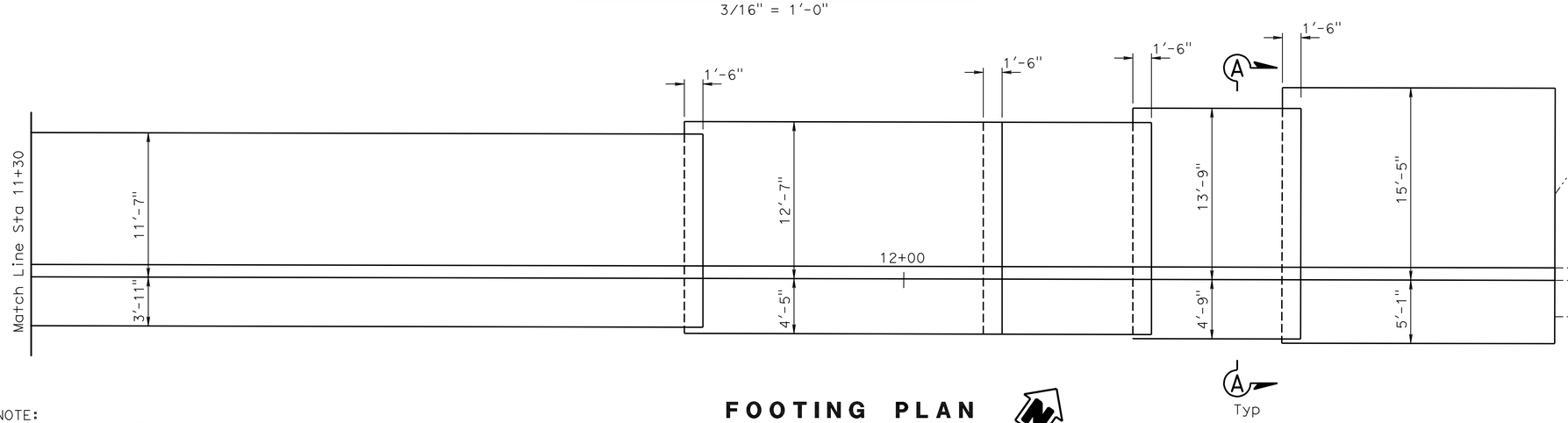

FOOTING PLAN

3/16" = 1'-0"

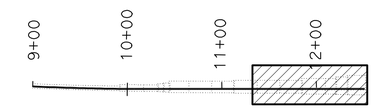

KEY PLAN

NOTE:
THE CONTRACTOR SHALL VERIFY ALL CONTROLLING FIELD DIMENSIONS BEFORE ORDERING OR FABRICATING ANY MATERIAL.

1 REVISED PER ADDENDUM No. 1 DATED NOVEMBER 8, 2011

	BY	CHECKED
DESIGN	M. Vo	R. Stiltz
DETAILS	R. Kirkland	R. Stiltz
QUANTITIES	R. Stiltz	M. Vo

STATE OF CALIFORNIA
DEPARTMENT OF TRANSPORTATION

DIVISION OF ENGINEERING SERVICES
STRUCTURE DESIGN
DESIGN BRANCH 10

BRIDGE NO. 56 E0068
POST MILE 19.3

RETAINING WALL NO. 339
RETAINING WALL LAYOUT NO. 3

STRUCTURES DESIGN DETAIL SHEET (ENGLISH) (REV. 10/25/05)

ORIGINAL SCALE IN INCHES FOR REDUCED PLANS 0 1 2 3

CU 08
EA 448401

DISREGARD PRINTS BEARING EARLIER REVISION DATES

REVISION DATES: 4-25-10 8-05-10 10-29-10 3-14-11 5-16-11 10-25-11

SHEET 5 OF 10

FILE => 56e0068csp05.add

USERNAME => s12161d DATE PLOTTED => 08-NOV-2011 TIME PLOTTED => 11:30

DIST	COUNTY	ROUTE	POST MILES TOTAL PROJECT	SHEET No	TOTAL SHEETS
08	Riv	91	15.6/21.6	1492	2028

REGISTERED CIVIL ENGINEER 11/12/10 DATE

4-25-11
PLANS APPROVAL DATE

The State of California or its officers or agents shall not be responsible for the accuracy or completeness of electronic copies of this plan sheet.

REGISTERED PROFESSIONAL ENGINEER Minh Thuong Vo No. C59297 Exp. 6/30/2011 CIVIL STATE OF CALIFORNIA

1

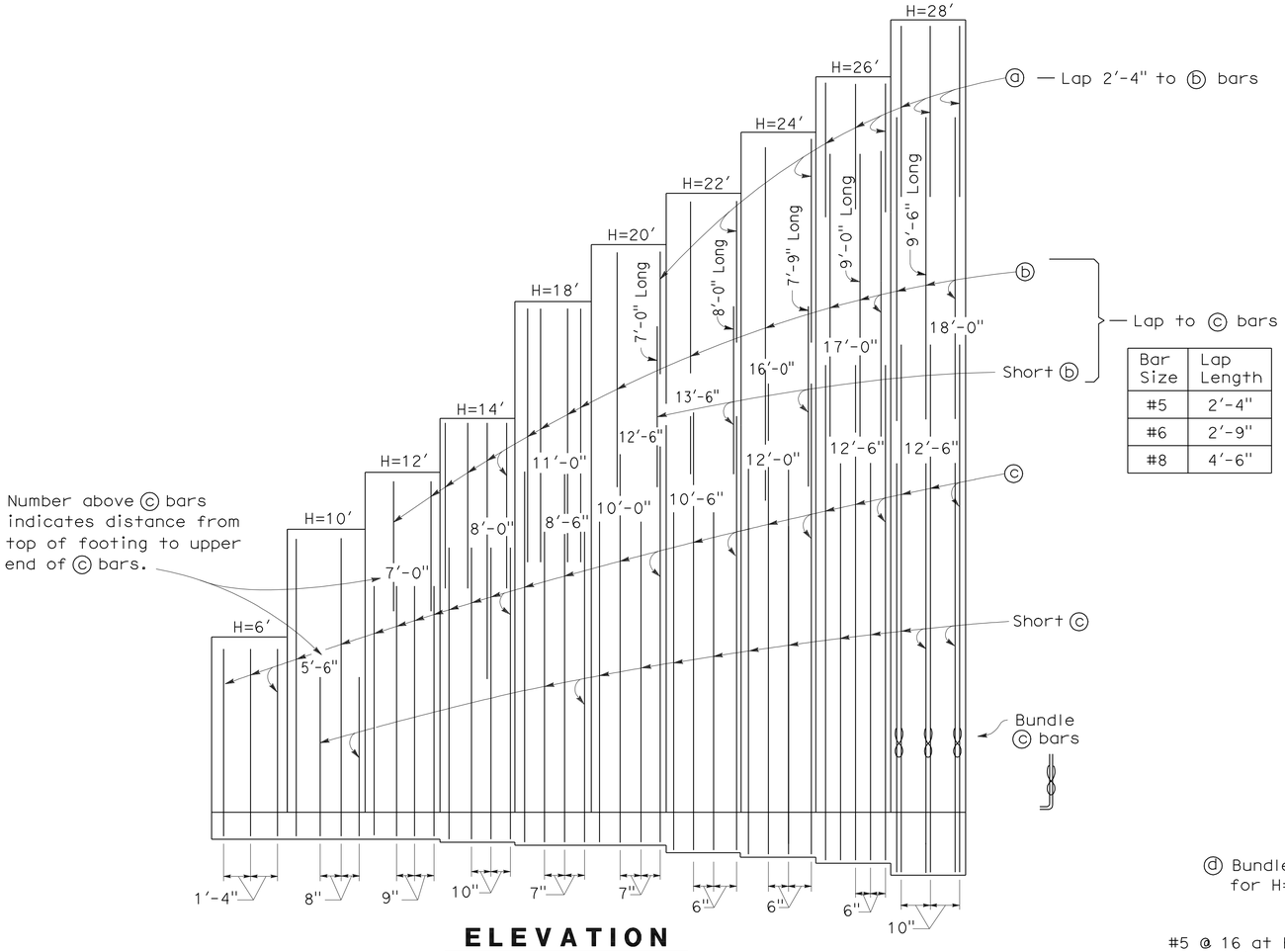

Bar Size	Lap Length
#5	2′-4"
#6	2′-9"
#8	4′-6"

ELEVATION

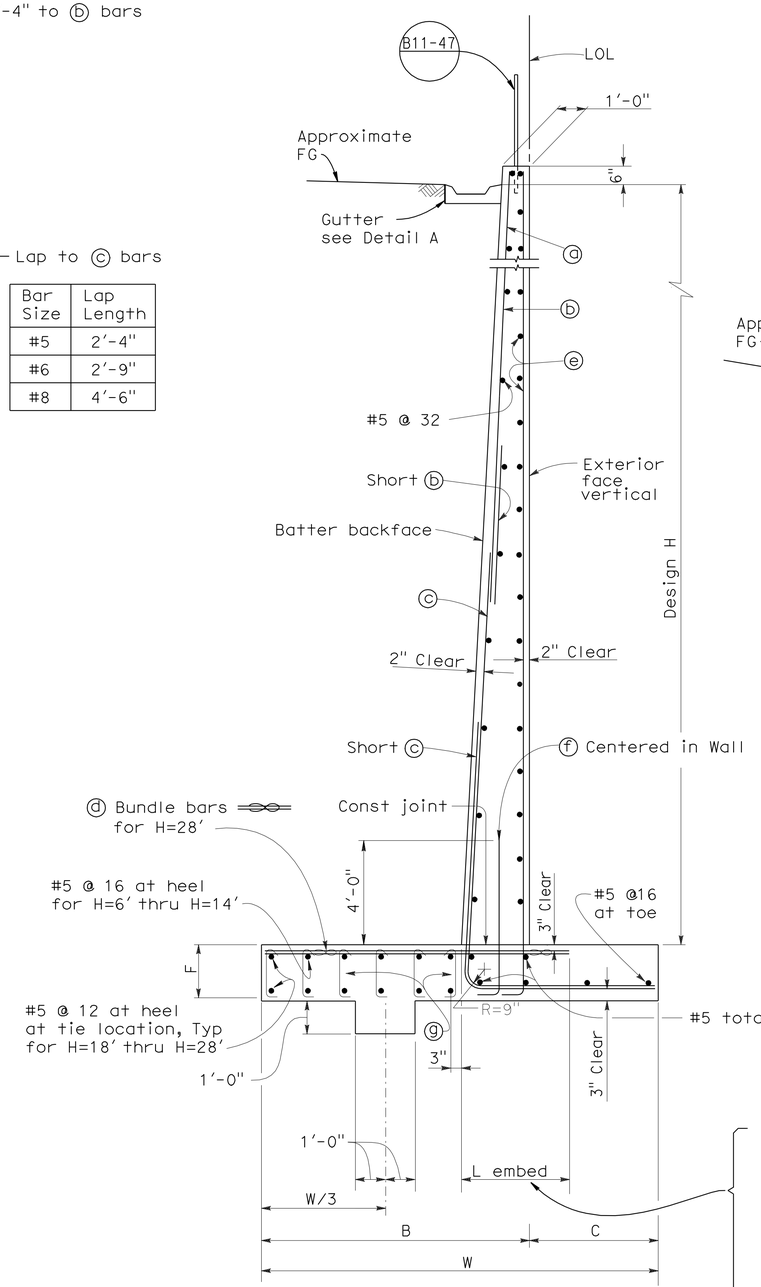

SECTION A-A

No Scale

Bar Size	L embed
#5	1′-10"
#6	2′-3"
#8	3′-0"
#9	3′-9"
#10	4′-9"
#11	5′-10"

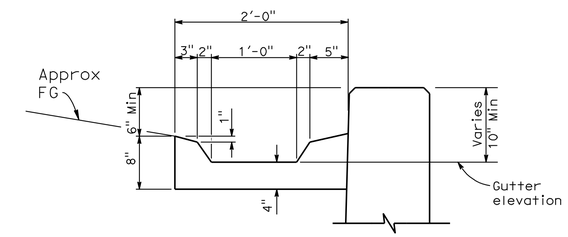

DETAIL A

1" = 1′-0"

NOTE:
For Details not shown see B3-9

TABLE OF REINFORCING STEEL DIMENSIONS AND DATA

Design H	6′	10′	12′	14′	18′	20′	22′	24′	26′	28′
W	4′-9"	7′-0"	8′-6"	9′-6"	12′-3"	14′-6"	15′-6"	17′-0"	18′-6"	20′-6"
C	1′-4"	2′-0"	2′-4"	2′-7"	3′-3"	3′-7"	3′-11"	4′-5"	4′-9"	5′-1"
B	3′-5"	5′-0"	6′-2"	6′-11"	9′-0"	10′-11"	11′-7"	12′-7"	13′-9"	15′-5"
F	1′-4"	1′-6"	1′-9"	2′-0"	2′-6"	2′-6"	3′-0"	3′-0"	3′-6"	3′-8"
Batter	1/2:12	1/2:12	1/2:12	1/2:12	1/2:12	5/8:12	5/8:12	3/4:12	1:12	1:12
ⓐ bars	——	——	——	——	——	#5 @ 28	#5 @ 24	#5 @ 24	#5 @ 12	#5 @ 10
ⓑ bars	——	——	#5 @ 18	#5 @ 10	#6 @ 7	#8 @ 14	#8 @ 12	#8 @ 12	#8 @ 12	#8 @ 10
ⓒ bars	#5 @ 16	#6 @ 8	#8 @ 9	#9 @ 10	#10 @ 7	#11 @ 7	#11 @ 7	#11 @ 6	#11 @ 6	#11 @ 10 ℄
ⓓ bars	#5 @ 16	#6 @ 8	#8 @ 9	#9 @ 10	#10 @ 7	#11 @ 7	#11 @ 6	#11 @ 6	#11 @ 6	#11 @ 10 ℄
ⓔ bars	#5 @ 12	#5 @ 12	#5 @ 12	#5 @ 12	#5 @ 12	#5 @ 12	#5 @ 12	#5 @ 12	#5 @ 12	#5 @ 12
ⓕ bars	——	——	#6 @ 12	#6 @ 12	#6 @ 8	#6 @ 6	#7 @ 6	#7 @ 6	#7 @ 6	#8 @ 6
ⓖ bars	——	——	——	——	#5 @ 12 each way	#5 @ 12 each way	#5 @ 12 each way	#5 @ 12 each way	#5 @ 12 each way	#5 @ 12 each way

℄ Denotes a bundle of 2 bars

1 REVISED PER ADDENDUM No. 1 DATED NOVEMBER 8, 2011

DESIGN	BY M. Vo	CHECKED R. Stiltz	
DETAILS	BY R. Kirkland	CHECKED R. Stiltz	
QUANTITIES	BY R. Stiltz	CHECKED M. Vo	

STATE OF CALIFORNIA
DEPARTMENT OF TRANSPORTATION

DIVISION OF ENGINEERING SERVICES
STRUCTURE DESIGN
DESIGN BRANCH 10

BRIDGE NO. 56 E0068
POST MILE 19.3

RETAINING WALL NO. 339
RETAINING WALL DETAILS

STRUCTURES DESIGN DETAIL SHEET (ENGLISH) (REV. 10/25/05)

ORIGINAL SCALE IN INCHES FOR REDUCED PLANS 0 1 2 3

CU 08
EA 448401

DISREGARD PRINTS BEARING EARLIER REVISION DATES

REVISION DATES: 4/25/10 8/05/10 10/29/10 3/14/11 5/18/11 10-25-11

SHEET 06 OF 10

FILE => 56e0068grwdt06.add

USERNAME => s6121614 DATE PLOTTED => 08-NOV-2011 TIME PLOTTED => 11:31

DIST	COUNTY	ROUTE	POST MILES TOTAL PROJECT	SHEET No	TOTAL SHEETS
08	Riv	91	15.6/21.6	1497	2028

REGISTERED CIVIL ENGINEER 11/12/10 DATE

4-25-11
PLANS APPROVAL DATE

REGISTERED PROFESSIONAL ENGINEER HUAN VU No. 60696 Exp. 12-31-10 CIVIL STATE OF CALIFORNIA

The State of California or its officers or agents shall not be responsible for the accuracy or completeness of electronic copies of this plan sheet.

1

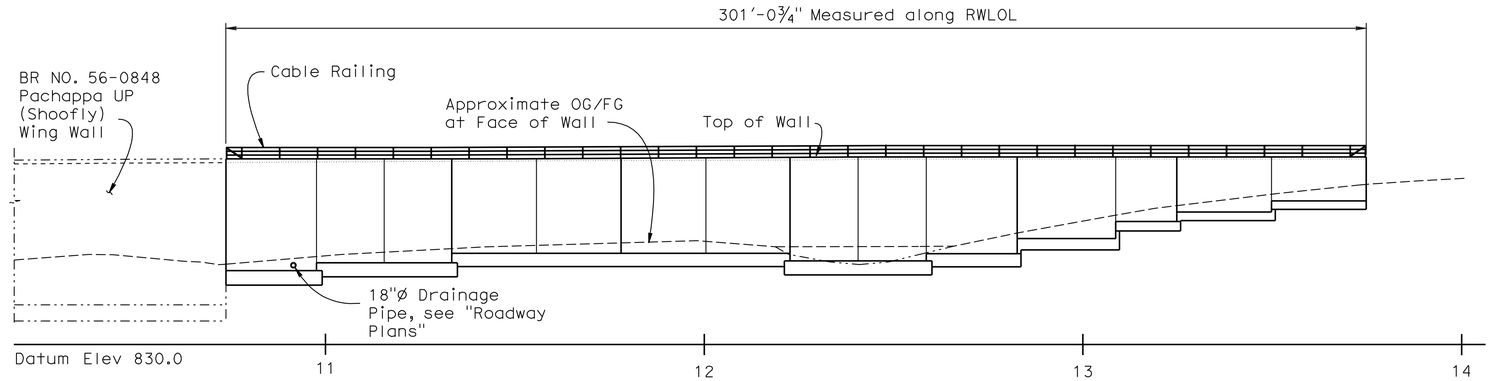

DEVELOPED ELEVATION

1" = 20'

QUANTITIES

STRUCTURE EXCAVATION (RETAINING WALL)	1,850	~~1,748~~	CY
STRUCTURE BACKFILL (RETAINING WALL)	3,450	~~4,075~~	CY
PERVIOUS BACKFILL MATERIAL (RETAINING WALL)	180	~~193~~	CY
STRUCTURAL CONCRETE, RETAINING WALL	1,265	~~1,129~~	CY
BAR REINFORCING STEEL (RETAINING WALL)	127,000	~~125,346~~	LB
MINOR CONCRETE (GUTTER)	302		LF
CABLE RAILING	302		LF

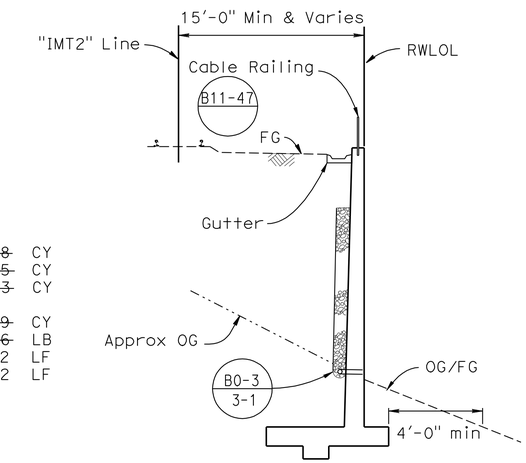

TYPICAL SECTION

No Scale

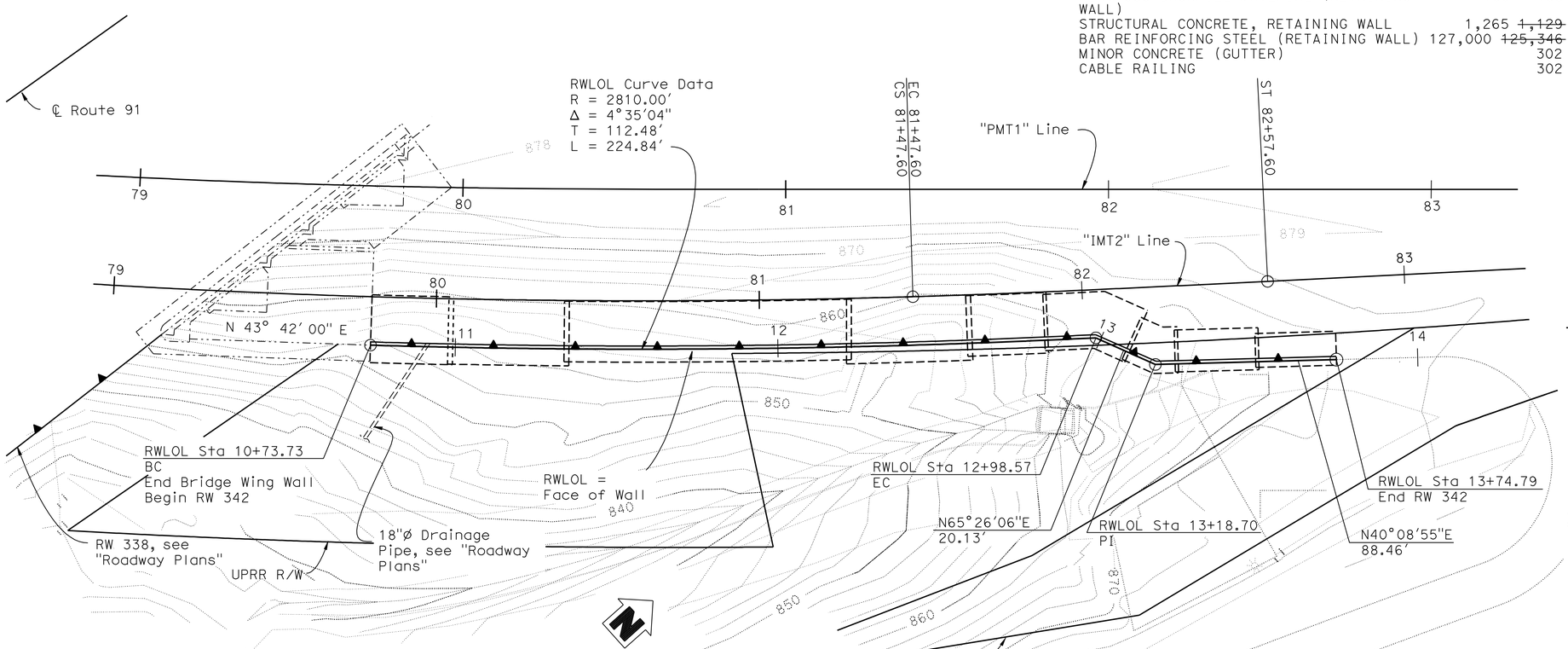

PLAN

1" = 20'

INDEX TO PLANS

Sheet No.	Title
1	GENERAL PLAN
2	RETAINING WALL LAYOUT NO. 1
3	RETAINING WALL LAYOUT NO. 2
4	RETAINING WALL LAYOUT NO. 3
5	RETAINING WALL DETAILS
6	LOG OF TEST BORINGS 1 OF 3
7	LOG OF TEST BORINGS 2 OF 3
8	LOG OF TEST BORINGS 3 OF 3

STANDARD PLANS DATED MAY 2006

A10A	ACRONYMS AND ABBREVIATIONS (SHEET 1 OF 2)
A10B	ACRONYMS AND ABBREVIATIONS (SHEET 2 OF 2)
A10C	SYMBOLS (SHEET 1 OF 2)
A10D	SYMBOLS (SHEET 2 OF 2)
A62B	LIMITS OF PAYMENT FOR EXCAVATION AND BACKFILL BRIDGE SURCHARGE AND WALL
B0-3	BRIDGE DETAILS
B3-8	RETAINING WALL DETAILS NO. 1
B3-9	RETAINING WALL DETAILS NO. 2
B11-47	CABLE RAILING

STANDARD PLAN SHEET NO.

DETAIL NO.

NOTES:
1. CONTRACTOR SHALL VERIFY ALL CONTROLLING FIELD DIMENSIONS BEFORE ORDERING OR FABRICATING ANY MATERIAL.
2. CALL THE FOLLWING NUMBER BEFORE COMMENCING WORK UPRR "CALL BEFORE YOU DIG" 1-800-336-9193

1 **REVISED PER ADDENDUM No. 1 DATED NOVEMBER 8, 2011**

DANIEL T. ADAMS
DESIGN ENGINEER

	BY	CHECKED
DESIGN	H. Vu	R. Stiltz
DETAILS	R. Kirkland/D.Wooten	R. Stiltz
QUANTITIES	H. Vu	J. Szabo

LOAD FACTOR DESIGN — LIVE LOADING: COOPER E-80
LAYOUT — BY H. Vu — CHECKED R. Stiltz
SPECIFICATIONS — BY D. Klein — PLANS AND SPECS COMPARED D. Klein

ORIGINAL SCALE IN INCHES FOR REDUCED PLANS 0 1 2 3

STATE OF CALIFORNIA
DEPARTMENT OF TRANSPORTATION

DIVISION OF ENGINEERING SERVICES
STRUCTURE DESIGN
DESIGN BRANCH 10

CU 08
EA 448401

BRIDGE NO. 56E0069
POST MILE 19.40

RETAINING WALL NO. 342
GENERAL PLAN

DISREGARD PRINTS BEARING EARLIER REVISION DATES
REVISION DATES: 2-18-10 5-05-10 8-19-10 10-04-10 11-04-10 10-25-11

SHEET 1 OF 8

STRUCTURES DESIGN GENERAL PLAN SHEET (ENGLISH) (REV.07-24-06)

FILE => 56e0069agp01.add

USERNAME => s121614 DATE PLOTTED => 08-NOV-2011 TIME PLOTTED => 11:31

DIST	COUNTY	ROUTE	POST MILES TOTAL PROJECT	SHEET No	TOTAL SHEETS
08	Riv	91	15.6/21.6	1498	2028

REGISTERED CIVIL ENGINEER 11/12/10 DATE

4-25-11
PLANS APPROVAL DATE

The State of California or its officers or agents shall not be responsible for the accuracy or completeness of electronic copies of this plan sheet.

REGISTERED PROFESSIONAL ENGINEER HUAN VU No. 60696 Exp. 12-31-10 CIVIL STATE OF CALIFORNIA

1

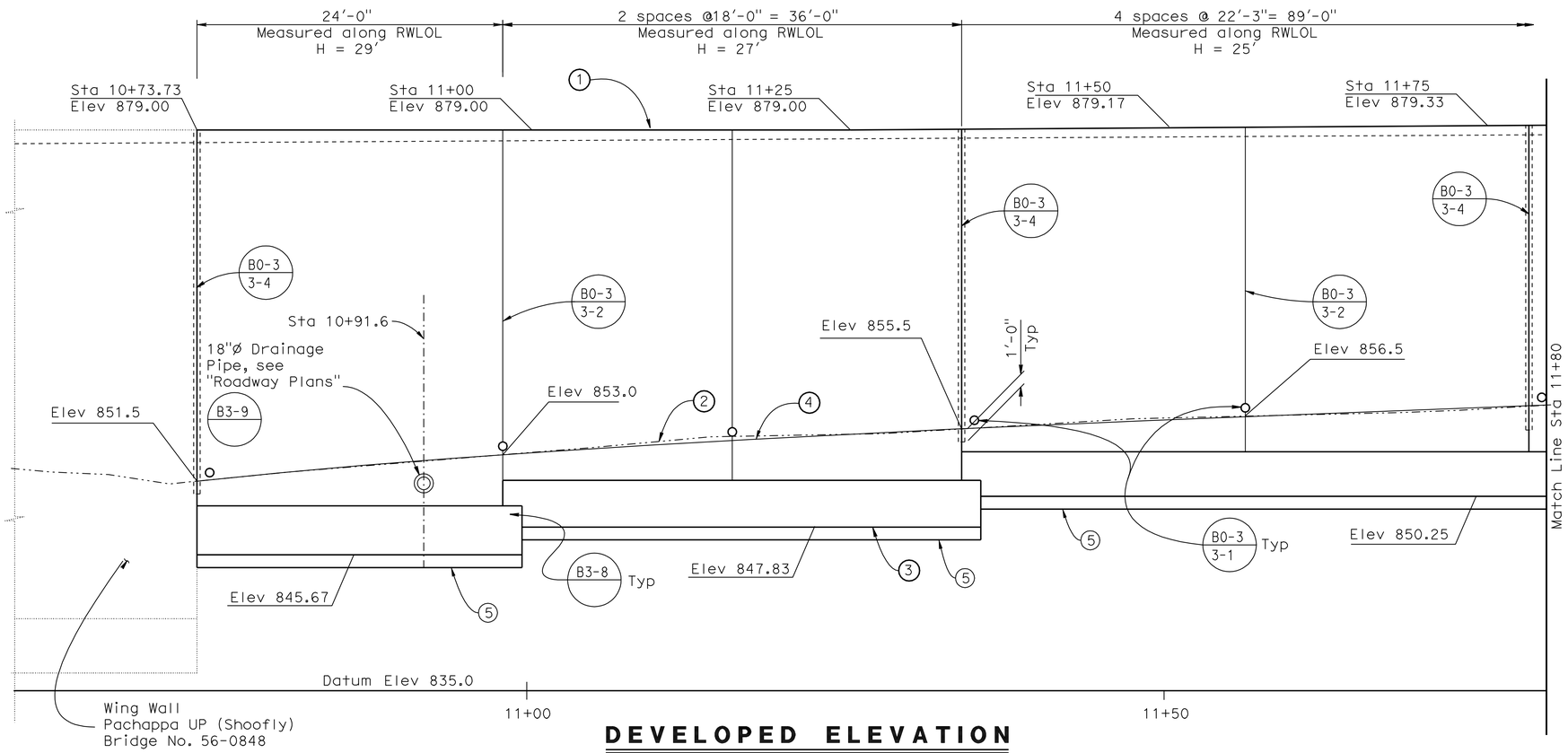

DEVELOPED ELEVATION

3/16" = 1'-0"

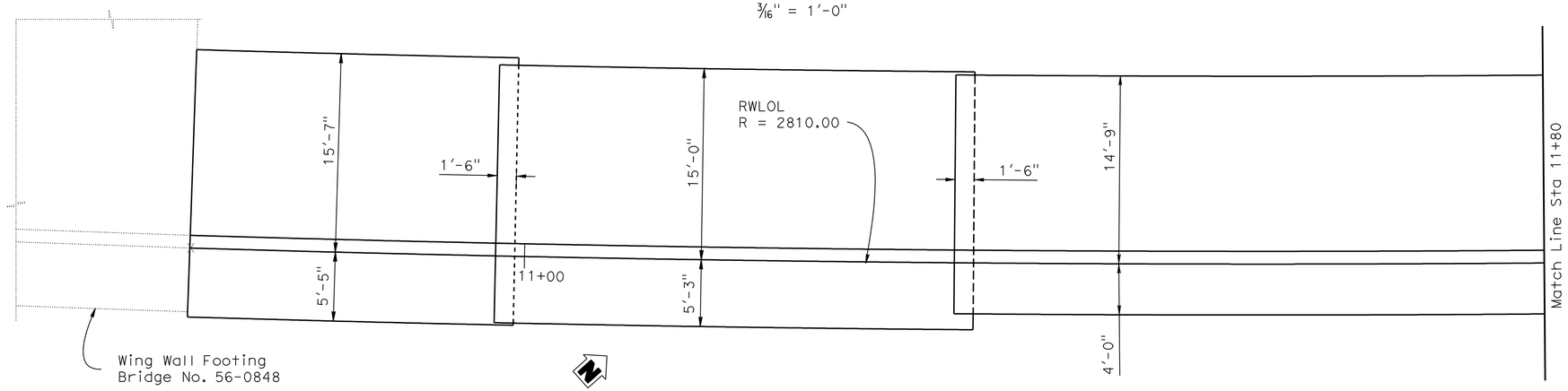

NOTES:

1. For Section see "RETAINING WALL DETAILS" sheet.
2. Cable Railing not shown for clarity.

LEGEND:

1. Top of Wall
2. Approximate OG at Face of Wall
3. Bottom of Retaining Wall Footing
4. FG at Face of Wall
5. Key

NOTE:
THE CONTRACTOR SHALL VERIFY ALL CONTROLLING FIELD DIMENSIONS BEFORE ORDERING OR FABRICATING ANY MATERIAL.

FOOTING PLAN

3/16" = 1'-0"

1 REVISED PER ADDENDUM No. 1 DATED NOVEMBER 8, 2011

	BY	CHECKED
DESIGN	H. Vu	R. Stiltz
DETAILS	R. Kirkland/D. Wooten	R. Stiltz
QUANTITIES	H. Vu	J. Szabo

STATE OF CALIFORNIA
DEPARTMENT OF TRANSPORTATION

DIVISION OF ENGINEERING SERVICES
STRUCTURE DESIGN
DESIGN BRANCH 10

BRIDGE NO. 56E0069
POST MILE 19.40

RETAINING WALL NO. 342
RETAINING WALL LAYOUT NO. 1

STRUCTURES DESIGN DETAIL SHEET (ENGLISH) (REV. 10/25/05)

ORIGINAL SCALE IN INCHES FOR REDUCED PLANS 0 1 2 3

CU 08
EA 448401

DISREGARD PRINTS BEARING EARLIER REVISION DATES

REVISION DATES: 7-16-10 7-23-10 8-16-10 10-25-11

SHEET 2 OF 8

FILE => 56e0069csp02.add

USERNAME => s12614 DATE PLOTTED => 08-NOV-2011 TIME PLOTTED => 11:31

DIST	COUNTY	ROUTE	POST MILES TOTAL PROJECT	SHEET No	TOTAL SHEETS
08	Riv	91	15.6/21.6	1499	2028

REGISTERED CIVIL ENGINEER 11/12/10 DATE

4-25-11
PLANS APPROVAL DATE

REGISTERED PROFESSIONAL ENGINEER Huan Vu No. 60696 Exp. 12/31/10 CIVIL STATE OF CALIFORNIA

The State of California or its officers or agents shall not be responsible for the accuracy or completeness of electronic copies of this plan sheet.

1

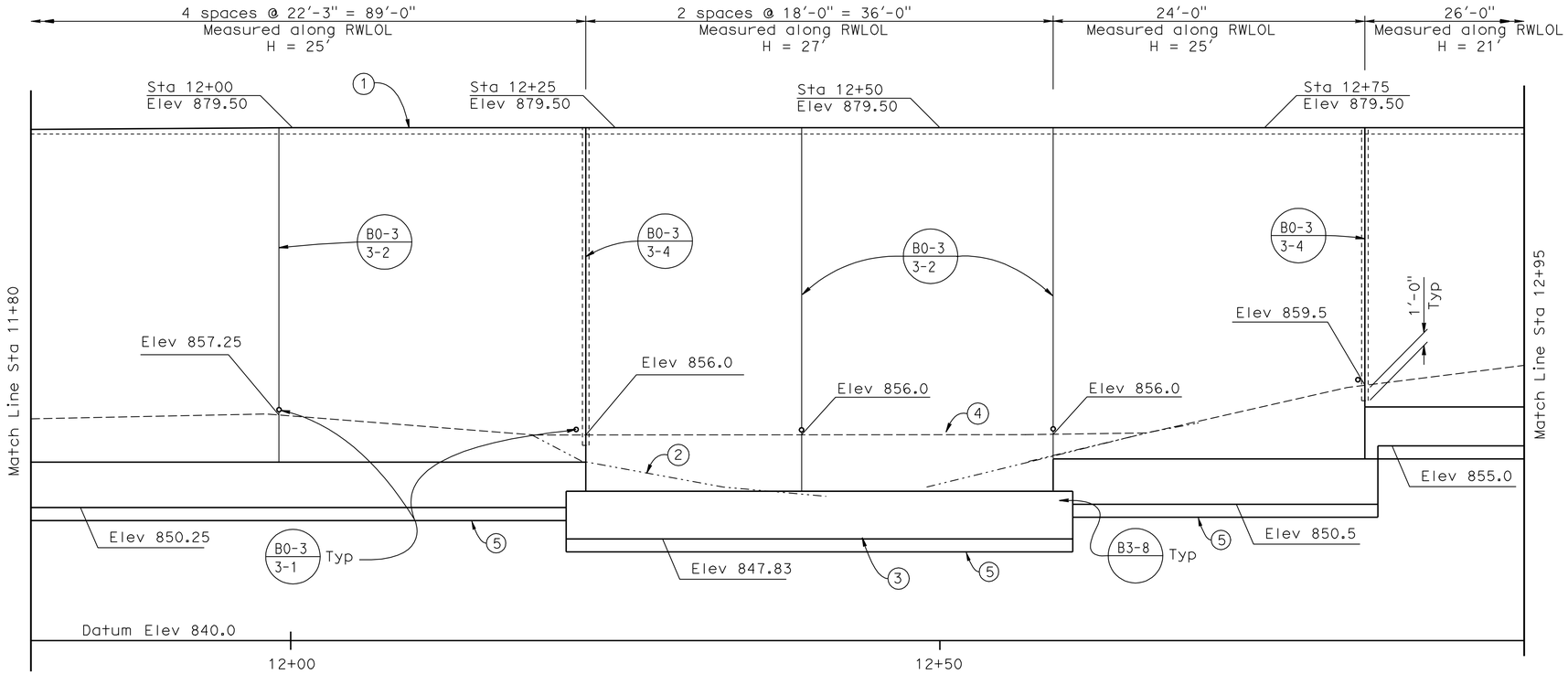

DEVELOPED ELEVATION

3/16" = 1'-0"

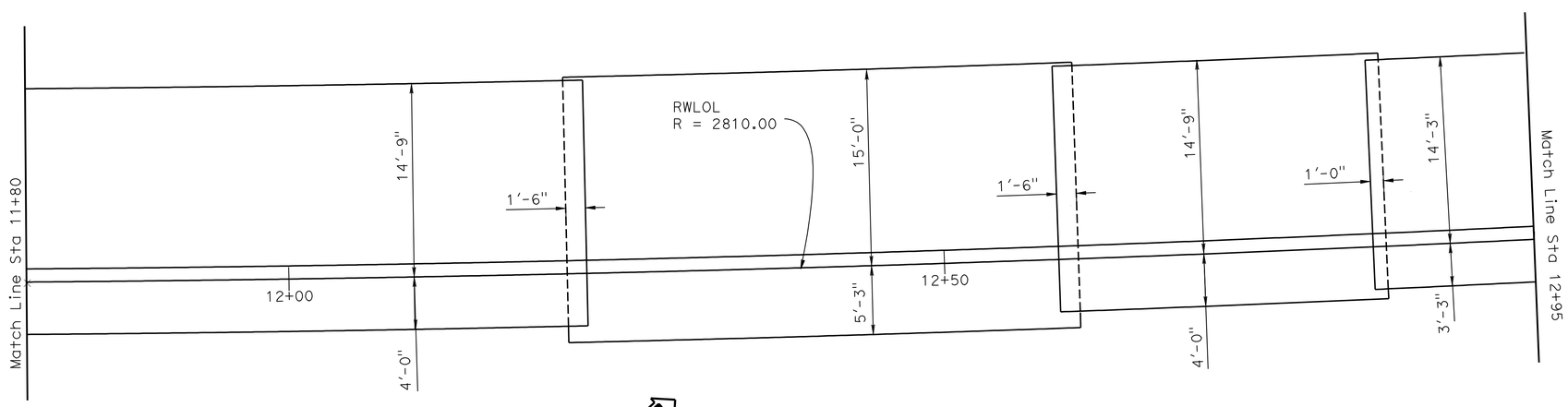

FOOTING PLAN

3/16" = 1'-0"

NOTES:

1. For Section see "RETAINING WALL DETAILS" sheet.
2. Cable Railing not shown for clarity.

LEGEND:

1. Top of Wall
2. Approximate OG at Face of Wall
3. Bottom of Retaining Wall Footing
4. FG at Face of Wall
5. Key

NOTE:
THE CONTRACTOR SHALL VERIFY ALL CONTROLLING FIELD DIMENSIONS BEFORE ORDERING OR FABRICATING ANY MATERIAL.

1 **REVISED PER ADDENDUM No. 1 DATED NOVEMBER 8, 2011**

	BY	CHECKED
DESIGN	H. Vu	R. Stiltz
DETAILS	R. Kirkland/D. Wooten	R. Stiltz
QUANTITIES	H. Vu	J. Szabo

STATE OF CALIFORNIA
DEPARTMENT OF TRANSPORTATION

DIVISION OF ENGINEERING SERVICES
STRUCTURE DESIGN
DESIGN BRANCH 10

BRIDGE NO. 56E0069
POST MILE 19.40

RETAINING WALL NO. 342
RETAINING WALL LAYOUT NO. 2

STRUCTURES DESIGN DETAIL SHEET (ENGLISH) (REV. 10/25/05)

ORIGINAL SCALE IN INCHES FOR REDUCED PLANS 0 1 2 3

CU 08
EA 448401

DISREGARD PRINTS BEARING EARLIER REVISION DATES

REVISION DATES: 2-18-10 5-05-10 8-19-10 10-25-11

SHEET 3 OF 8

FILE => 56e0069csp03.add

USERNAME => s121614 DATE PLOTTED => 08-NOV-2011 TIME PLOTTED => 11:31

DIST	COUNTY	ROUTE	POST MILES TOTAL PROJECT	SHEET No	TOTAL SHEETS
08	Riv	91	151.6/21.6	1500	2028

REGISTERED CIVIL ENGINEER 11/12/10 DATE

4-25-11
PLANS APPROVAL DATE

REGISTERED PROFESSIONAL ENGINEER HUAN VU No. 60696 Exp. 12/31/10 CIVIL STATE OF CALIFORNIA

The State of California or its officers or agents shall not be responsible for the accuracy or completeness of electronic copies of this plan sheet.

1

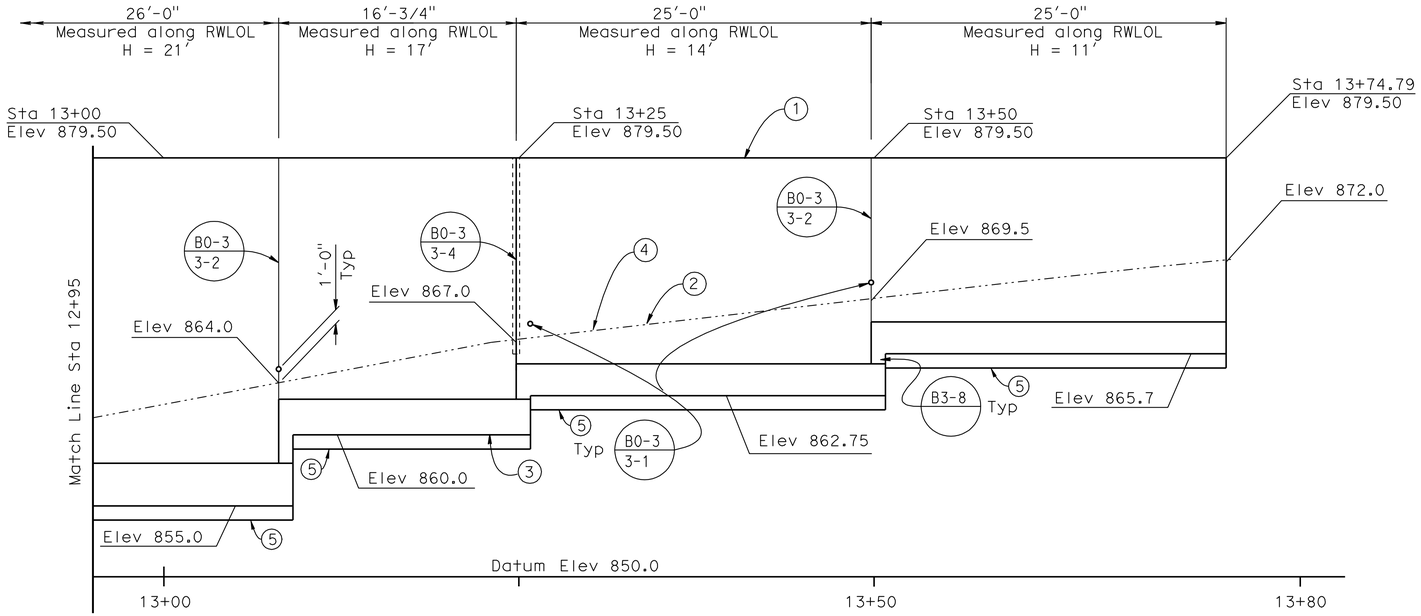

DEVELOPED ELEVATION

3/16" = 1'-0"

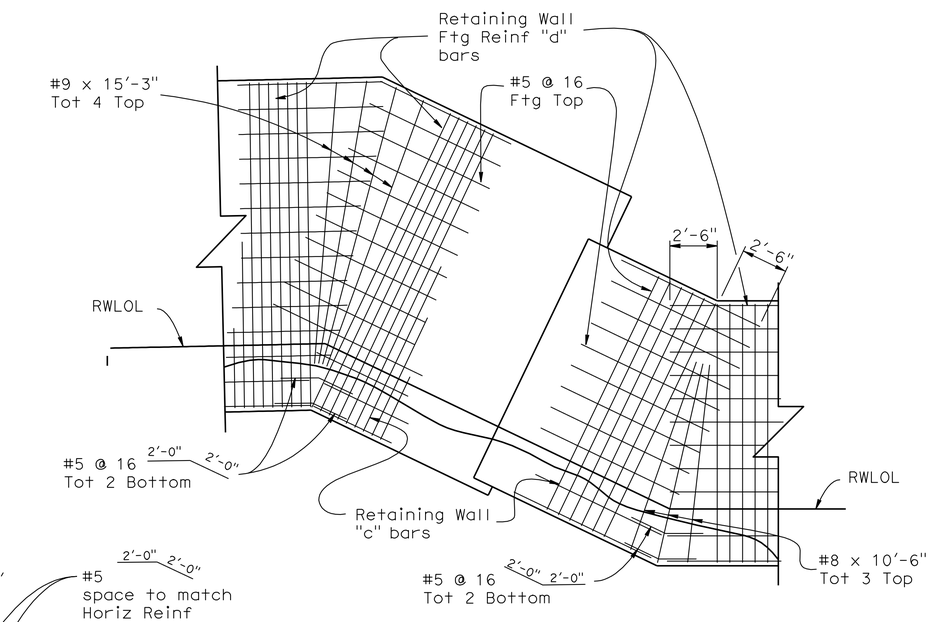

FOOTING REINFORCEMENT

1/4" = 1'-0"

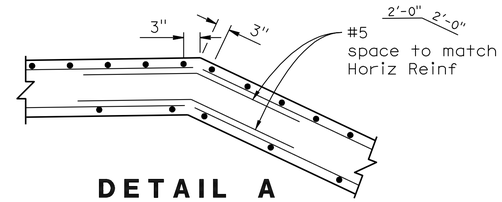

DETAIL A

3/4" = 1'-0"

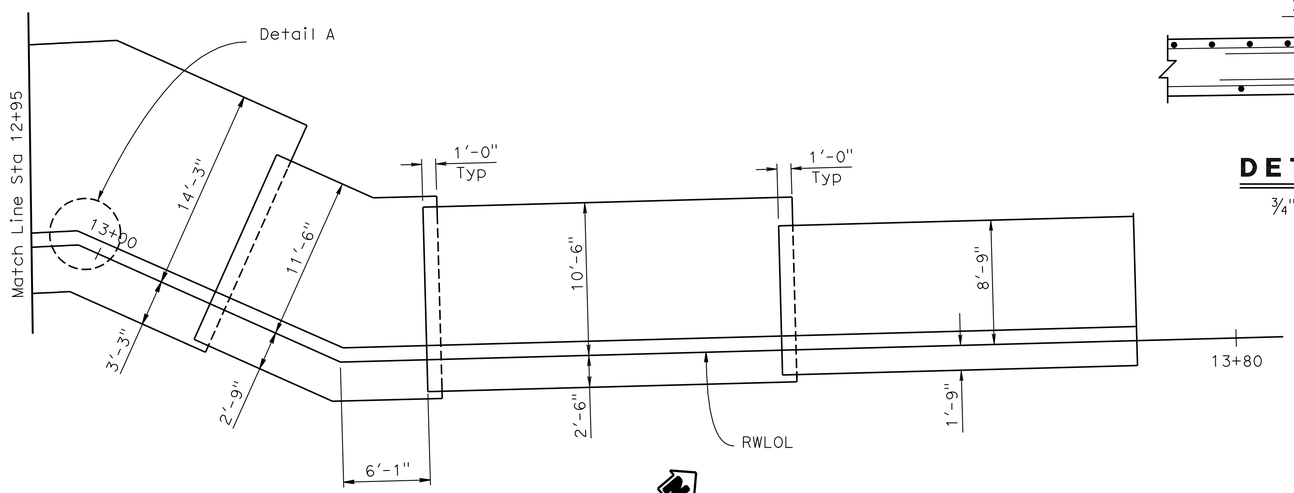

FOOTING PLAN

3/16" = 1'-0"

NOTES:

1. For Section see "RETAINING WALL DETAILS" sheet.
2. Cable Railing not shown for clarity.

LEGEND:

1. Top of Wall
2. Approximate OG at Face of Wall
3. Bottom of Retaining Wall Footing
4. FG at Face of Wall
5. Key

NOTE:
THE CONTRACTOR SHALL VERIFY ALL CONTROLLING FIELD DIMENSIONS BEFORE ORDERING OR FABRICATING ANY MATERIAL.

1 **REVISED PER ADDENDUM No. 1 DATED NOVEMBER 8, 2011**

	BY	CHECKED
DESIGN	H. Vu	R. Stiltz
DETAILS	R. Kirkland/D. Wooten	R. Stiltz
QUANTITIES	H. Vu	J. Szabo

STATE OF CALIFORNIA
DEPARTMENT OF TRANSPORTATION

DIVISION OF ENGINEERING SERVICES
STRUCTURE DESIGN
DESIGN BRANCH 10

BRIDGE NO. 56E0069
POST MILE 19.40

RETAINING WALL NO. 342
RETAINING WALL LAYOUT NO. 3

STRUCTURES DESIGN DETAIL SHEET (ENGLISH) (REV. 10/25/05)

ORIGINAL SCALE IN INCHES FOR REDUCED PLANS 0 1 2 3

CU 08
EA 448401

DISREGARD PRINTS BEARING EARLIER REVISION DATES

REVISION DATES: 2-18-10 5-03-10 8-17-10 10-04-10 10-25-11

SHEET 4 OF 8

FILE => 56e0069csp04.add

USERNAME => s6121614 DATE PLOTTED => 08-NOV-2011 TIME PLOTTED => 11:31

DIST	COUNTY	ROUTE	POST MILES TOTAL PROJECT	SHEET No	TOTAL SHEETS
08	Riv	91	15.6/21.6	1501	2028

REGISTERED CIVIL ENGINEER 11/12/10 DATE

4-25-11
PLANS APPROVAL DATE

REGISTERED PROFESSIONAL ENGINEER HUAN VU No. 60696 Exp. 12-31-10 CIVIL STATE OF CALIFORNIA

The State of California or its officers or agents shall not be responsible for the accuracy or completeness of electronic copies of this plan sheet.

1

DESIGN DATA

DESIGN: "Manual for Railroad Engineering" A.R.E.M.A. 2010 Edition

LIVE LOAD: Cooper E-80

REINFORCED CONCRETE: Load Factor Design
f'_c = 3,600 psi
fy = 60,000 psi

Soil: Equivalent Fluid pressure = 34 pcf

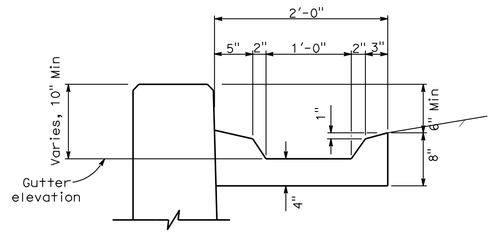

GUTTER DETAIL

1" = 1'-0"

NOTES:

1. For details not shown and drainage notes see B3-8 B3-9
2. For wall stem joint details, see B0-3 3-3 and B0-3 3-4
3. Length of lap splices shall be based on smaller bar joined as follows:

Bar size	#5	#7	#8
Lap length	2'-4"	3'-5"	4'-6"

TABLE OF REINFORCING STEEL, DIMENSIONS AND DATA

Design H	29'	27'	25'	21'	17'	14'	11'
W	21'-0"	20'-3"	18'-9"	17'-6"	14'-3"	13'-0"	10'-6"
C	5'-5"	5'-3"	4'-0"	3'-3"	2'-9"	2'-6"	1'-9"
B	15'-7"	15'-0"	14'-9"	14'-3"	11'-6"	10'-6"	8'-9"
F	3'-10"	3'-8"	3'-6"	3'-0"	2'-6"	2'-3"	2'-3"
Batter	1-1/4:12	1-1/4:12	1-1/4:12	1-1/4:12	3/4:12	1/2:12	1/2:12
ⓐ bars	#5 @ 18	#5 @ 18	#5 @ 12	_	_	_	_
ⓑ bars	#8 @ 9	#7 @ 9	#8 @ 12	#5 @ 14	#5 @ 14	#5 @ 18	#5 @ 16
ⓒ bars	#10 @ 9 ∞	#9 @ 9 ∞	#10 @ 6	#9 @ 7	#8 @ 7	#8 @ 9	#6 @ 8
ⓓ bars	#10 @ 7 ∞	#9 @ 8 ∞	#10 @ 6	#10 @ 6	#9 @ 7	#8 @ 6	#6 @ 6

∞ Denotes a bundle of 2 bars.

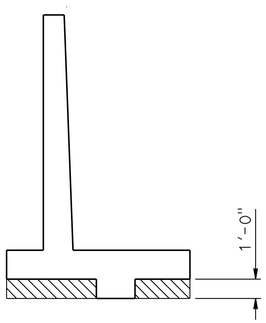

LIMIT OF OVER EXCAVATION

No Scale

Indicates limits of over excavation 1'-0" below bottom of footing and recompaction to 95 % relative compaction

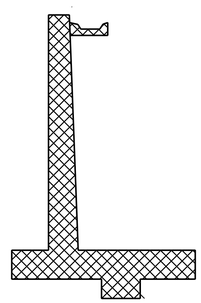

LIMIT OF WALL REMOVAL (STAGE 3 CONSTRUCTION)

No Scale

Indicates limits of wall removal in stage 3 construction, see "Road Plans"

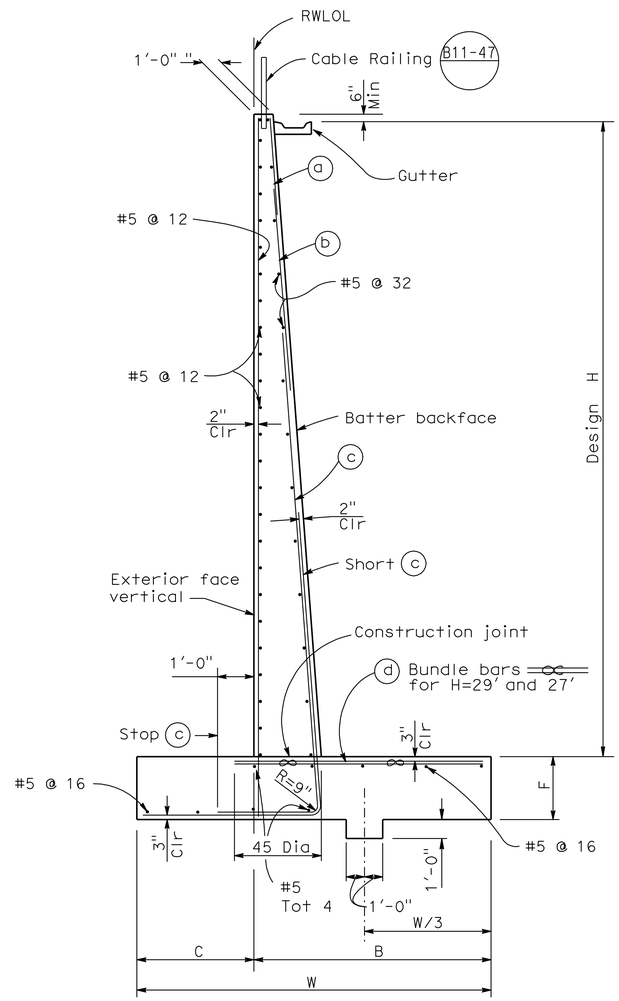

SECTION

Not to Scale

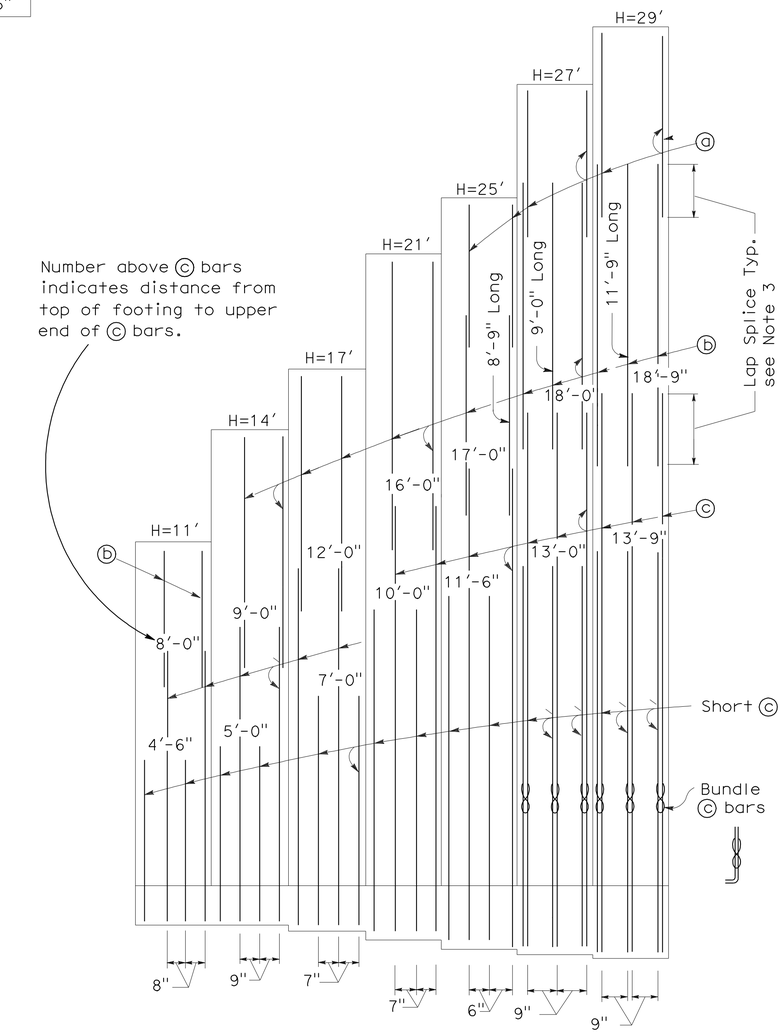

ELEVATION

Not to Scale

1 REVISED PER ADDENDUM No. 1 DATED NOVEMBER 8, 2011

	BY	CHECKED
DESIGN	H. Vu	R. Stiltz
DETAILS	D. Wooten	R. Stiltz
QUANTITIES	H. Vu	J. Szabo

STATE OF CALIFORNIA DEPARTMENT OF TRANSPORTATION

DIVISION OF ENGINEERING SERVICES STRUCTURE DESIGN DESIGN BRANCH 10

BRIDGE NO. 56E0069
POST MILE 19.40

RETAINING WALL NO. 342
RETAINING WALL DETAILS

STRUCTURES DESIGN DETAIL SHEET (ENGLISH) (REV. 10/25/05)

ORIGINAL SCALE IN INCHES FOR REDUCED PLANS 0 1 2 3

CU 08
EA 448401

DISREGARD PRINTS BEARING EARLIER REVISION DATES

REVISION DATES: 2-18-10 5-05-10 8-19-10 11-04-10 10-25-11

SHEET 5 OF 8

FILE => 56e0069grwdt05.add

USERNAME => s12161d DATE PLOTTED => 08-NOV-2011 TIME PLOTTED => 11:31

DIST	COUNTY	ROUTE	POST MILES TOTAL PROJECT	SHEET No	TOTAL SHEETS
08	Riv	91	15.6/21.6	1684	2028

REGISTERED CIVIL ENGINEER 11-30-10 DATE

4-25-11
PLANS APPROVAL DATE

The State of California or its officers or agents shall not be responsible for the accuracy or completeness of electronic copies of this plan sheet.

REGISTERED PROFESSIONAL ENGINEER HUAN VU No. 60696 Exp. 12-31-10 CIVIL STATE OF CALIFORNIA

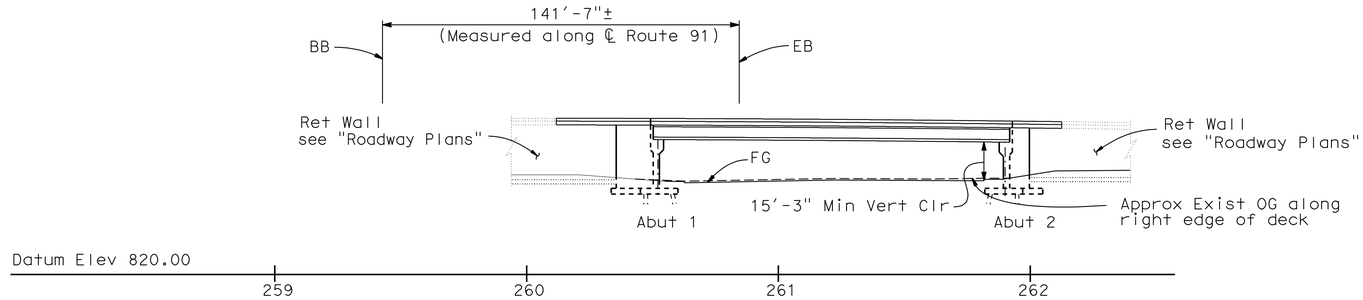

ELEVATION
1"=30'

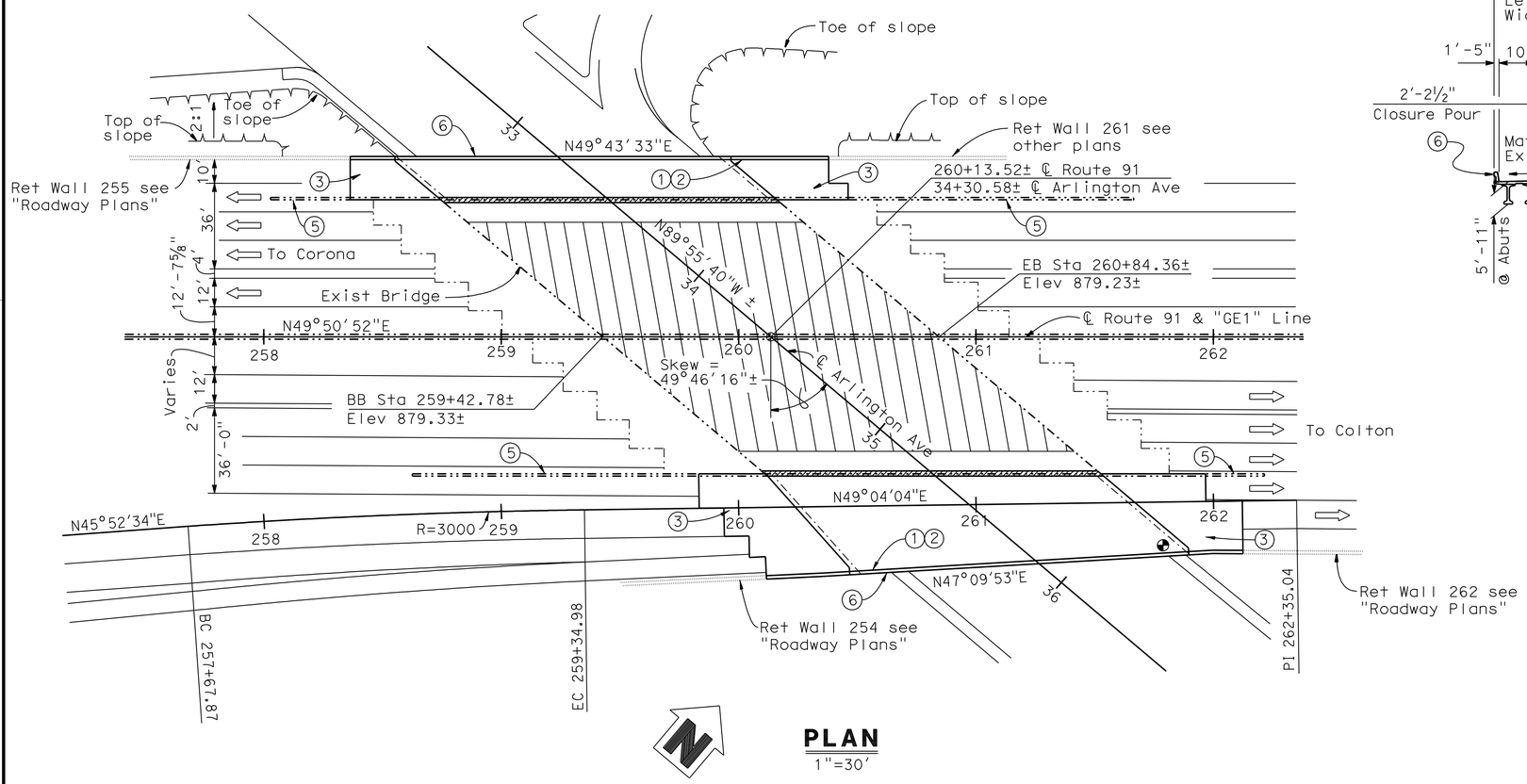

PLAN
1"=30'

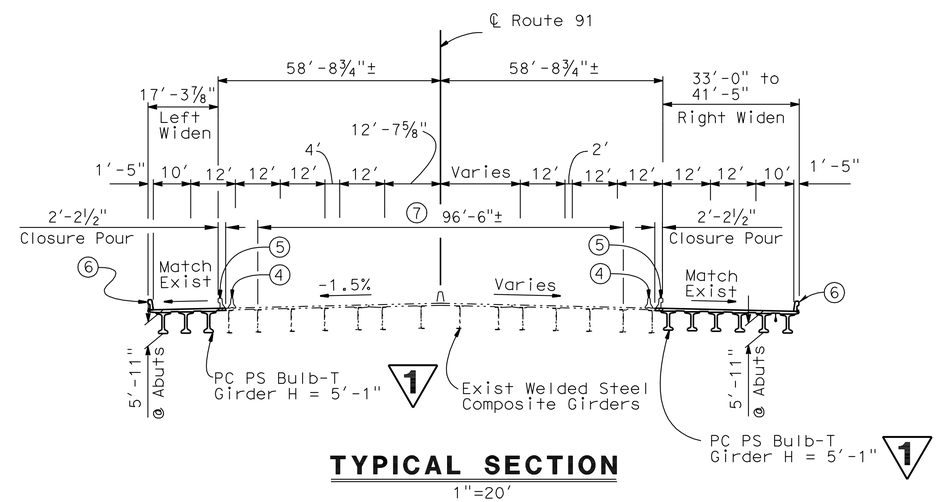

TYPICAL SECTION
1"=20'

LEGEND:

1. Paint "BRIDGE NO. 56-0330"
2. Paint "ARLINGTON AVENUE UC"
3. Structure Approach Type N (30S)
4. Temporary Railing (Type K), see "Roadway Plans"
5. Remove Exist Concrete Barrier (Type 25)
6. Concrete Barrier Type 732 (Mod)
7. Clean and treat bridge deck with methcrylate Prior to bridge deck treatment, remove unsound concrete and patch with rapid setting concrete
8. 4" Dia communication conduit, see "Roadway Plans"

- - - - Indicates existing structure
——— Indicates new construction
⇨ Indicates direction of traffic flow
◕ Indicates point of minimum Vert clearance
▨ Indicates limit of concrete removal
▥ Indicates limit of clean and treat deck

NOTE:
THE CONTRACTOR SHALL VERIFY ALL CONTROLLING FIELD DIMENSIONS BEFORE ORDERING OR FABRICATING ANY MATERIAL.

1 REVISED PER ADDENDUM No. 1 DATED NOVEMBER 8, 2011

Note: For Index to Plans, General Notes, Quantities and Pile Data, see "INDEX TO PLANS" sheet

DESIGN	BY A. Salimi	CHECKED F. Chen	LOAD & RESISTANCE FACTOR DESIGN	LIVE LOADING: HL93 W/"LOW-BOY"; PERMIT DESIGN VEHICLE		
DETAILS	BY Y. Tang	CHECKED F. Chen	LAYOUT	BY A. Salimi	CHECKED F. Chen	
QUANTITIES	BY J. Szabo	CHECKED A. McPhee	SPECIFICATIONS	BY D.Klein	PLANS AND SPECS COMPARED D.Klein	

DANIEL T. ADAMS
DESIGN ENGINEER

STATE OF CALIFORNIA
DEPARTMENT OF TRANSPORTATION

DIVISION OF ENGINEERING SERVICES
STRUCTURE DESIGN
DESIGN BRANCH 10

BRIDGE NO. 56-0330
POST MILE 17.82

ARLINGTON AVE UC (WIDEN)
GENERAL PLAN

STRUCTURES DESIGN GENERAL PLAN SHEET (ENGLISH) (REV. 10/25/05)

ORIGINAL SCALE IN INCHES FOR REDUCED PLANS 0 1 2 3

CU 08
EA 448401

DISREGARD PRINTS BEARING EARLIER REVISION DATES

REVISION DATES: 6-26-08 10-02-08 2-26-10 5-18-10 10-25-11

SHEET 1 OF 24

FILE => 560330agp01.add

STRUCTURES DESIGN GENERAL PLAN SHEET (ENGLISH) (REV.07-24-06)

USERNAME => s121614 DATE PLOTTED => 08-NOV-2011 TIME PLOTTED => 11:32

DIST	COUNTY	ROUTE	POST MILES TOTAL PROJECT	SHEET No	TOTAL SHEETS
08	Riv	91	15.6/21.6	1685	2028

REGISTERED CIVIL ENGINEER 11-30-10 DATE

4-25-11
PLANS APPROVAL DATE

REGISTERED PROFESSIONAL ENGINEER HUAN VU No. 60696 Exp. 12-31-10 CIVIL STATE OF CALIFORNIA

The State of California or its officers or agents shall not be responsible for the accuracy or completeness of electronic copies of this plan sheet.

INDEX TO PLANS

Sheet No.	Title
1	GENERAL PLAN
2	INDEX TO PLANS
3	FOUNDATION PLAN
4	ABUTMENT NO.1 LAYOUT
5	ABUTMENT NO.2 LAYOUT
6	ABUTMENT DETAILS No. 1
7	ABUTMENT DETAILS No. 2
8	ABUTMENT DETAILS No. 3
9	ABUTMENT DETAILS No. 4
10	ABUTMENT DETAILS No. 5
11	TYPICAL SECTION
12	GIRDER LAYOUT NO.1
13	GIRDER LAYOUT NO.2
14	PRESTRESSED BULB-TEE GIRDER (HARPED STRANDS)
15	PRESTRESSED BULB-TEE GIRDER (MISCELLANEOUS DETAILS)
16	DECK DRAIN DETAILS
17	STRUCTURE APPROACH DRAINAGE DETAILS
18	STRUCTURE APPROACH TYPE N (30S)
19	MISCELLANEOUS DETAILS
20	ARCHITECTURAL DETAILS
21	LOG OF TEST BORINGS (1 OF 4)
22	LOG OF TEST BORINGS (2 OF 4)
23	LOG OF TEST BORINGS (3 OF 4)
24	LOG OF TEST BORINGS (4 OF 4)

QUANTITIES

REMOVE UNSOUND CONCRETE	17	CF
CLEAN BRIDGE DECK	13,663	SQFT
BRIDGE REMOVAL (PORTION), LOCATION D	LUMP	SUM
STRUCTURE EXCAVATION (BRIDGE)	626	CY
STRUCTURE BACKFILL (BRIDGE)	1,017	CY
FURNISH PILING (CLASS 90) (ALTERNATIVE V)	289	LF
DRIVE PILE (CLASS 90) (ALTERNATIVE V)	10	EA
FURNISH PILING (CLASS 140) (ALTERNATIVE V)	2,603	LF
DRIVE PILE (CLASS 140) (ALTERNATIVE V)	92	EA
STRUCTURAL CONCRETE, BRIDGE FOOTING	228	CY
STRUCTURAL CONCRETE, BRIDGE	794	CY
STRUCTURAL CONCRETE, APPROACH SLAB (TYPE N)	121	CY
ARCHITECTURAL SURFACE(TEXTURED CONCRETE) SPLIT SLATE TEXTURE	1,328	SQFT
DRILL AND BOND DOWEL	45	LF
RAPID SETTING CONCRETE (PATCH)	17	CF
FURNISH PRECAST PRESTRESSED CONCRETE BULB-TEE GIRDER (130'-140')	9	EA
ERECT PRECAST PRESTRESSED CONCRETE GIRDER	9	EA
JOINT SEAL (MR 1")	165	LF
BAR REINFORCING STEEL (BRIDGE)	155,198	LB
TREAT BRIDGE DECK	13,663	SQFT
PUBLIC SAFETY PLAN	LUMP	SUM
FURNISH BRIDGE DECK TREATMENT MATERIAL	152	GAL
WELDED STEEL PIPE CASING (BRIDGE)	40	LF
BRIDGE DECK DRAINAGE SYSTEM	1,611	LB
CONCRETE BARRIER (TYPE 732 MODIFIED)	341	LF

NOTE:
THE CONTRACTOR SHALL VERIFY ALL CONTROLLING FIELD DIMENSIONS BEFORE ORDERING OR FABRICATING ANY MATERIAL.

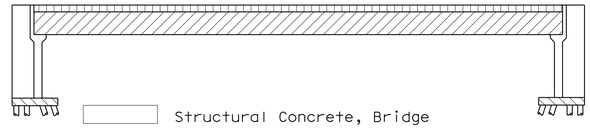

Structural Concrete, Bridge
Structural Concrete, Bridge (5500 psi @ 28 days) 1
Structural Concrete, Bridge Footing
Indicates PC/PS Bulb-Tee Girders

CONCRETE STRENGTH AND TYPE LIMITS

NO SCALE

STANDARD PLANS DATED MAY 2006

	A10A	ACRONYMS AND ABBREVIATIONS (SHEET 1 OF 2)
	A10B	ACRONYMS AND ABBREVIATIONS (SHEET 2 OF 2)
	A10C	SYMBOLS (SHEET 1 OF 2)
	A10D	SYMBOLS (SHEET 2 OF 2)
	A62-C	LIMITS OF PAYMENT FOR EXCAVATION AND BACKFILL - BRIDGE
	BO-1	BRIDGE DETAILS
	BO-3	BRIDGE DETAILS
	BO-5	BRIDGE DETAILS
	BO-13	BRIDGE DETAILS
	B2-5	PILE DETAILS CLASS 90 AND CLASS 140
	B3-1	RETAINING WALL TYPE 1 H=4' THROUGH 30'
	B3-8	RETAINING WALL DETAILS No. 1
	B6-10	UTILITY OPENINGS, T-BEAM
RSP	B6-21	JOINT SEALS (MAXIMUM MOVEMENT RATING = 2")
	B7-8	DECK DRAINAGE DETAILS
	B11-55	CONCRETE BARRIER TYPE 732

STANDARD PLAN SHEET NO.
DETAIL NO.

PILE DATA TABLE

Location	Pile Type	Nominal Resistance (kips)		Design Tip Elevation (ft)	Specified Tip Elevation (ft)	Nominal Driving Resistance Required (Kips)
		Compression	Tension			
Abut 1 (Right)	Class 140 Alt. V	280	0	825.0 (a)	825.0	280
Abut 2 (Right)	Class 140 Alt. V	280	0	820.0 (a)	820.0	280
Abut 1 & 2 (Left)	Class 140 Alt. V	280	0	825.0 (a)	825.0	280
Abut 2 WW (Left)	Class 90 Alt. V	180	0	835.0 (a)	835.0	180

Notes:

1. Design Tip Elev is controlled by (a) Compression

GENERAL NOTES
LOAD AND RESISTANCE FACTOR DESIGN

DESIGN: AASHTO LRFD BRIDGE DESIGN SPECIFICATIONS, 3rd Edition with 2006 Interims and CALTRANS Amendments, V3.06.01. Except for footing foundations are designed using CALTRANS BRIDGE DESIGN SPECIFICATIONS LFD Version April 2000 (1996 AASHTO with Interims and Revisions by CALTRANS)

SEISMIC DESIGN: Caltrans Seismic Design Criteria (SDC) Version 1.4, July, 2006.

DEAD LOAD: Includes 35 Psf for future wearing surface.

LIVE LOADING: HL93 with "Low Boy"and permit design load.

SEISMIC LOADING: CALTRANS SDC Acceleration Response Spectrum for Soil Profile Type D (M = 6.75±0.25), (Peak Rock Acceleration = 0.4g).

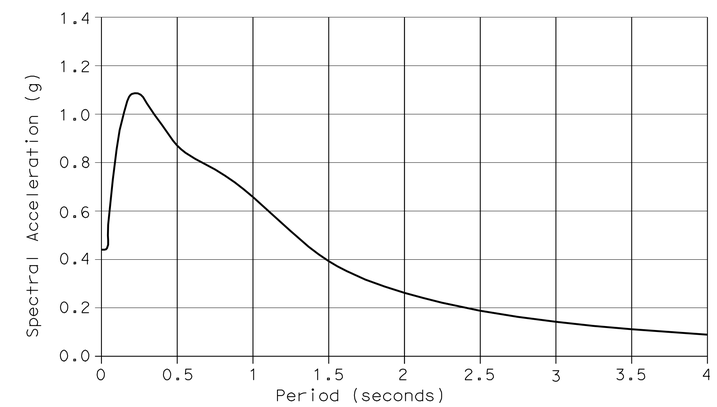

Modified CALTRANS SDC ARS Curve:
Type D Soil Profile, Magnitude Mw=6.75, 5% Damping

ACCELERATION RESPONSE SPECTRUM

REINFORCED CONCRETE: f_y = 60 ksi
f'_c = 4000 psi, unless otherwise noted
n = 9

PRESTRESSED CONCRETE: See "Prestressing Notes" on "PRESTRESSED BULB-TEE GIRDER" sheet.

1 REVISED PER ADDENDUM No. 1 DATED NOVEMBER 8, 2011

	BY	CHECKED
DESIGN	A. Salimi	F. Chen
DETAILS	D.Wooten	F. Chen
QUANTITIES	J. Szabo	A. McPhee

STATE OF CALIFORNIA
DEPARTMENT OF TRANSPORTATION

DIVISION OF ENGINEERING SERVICES
STRUCTURE DESIGN
DESIGN BRANCH 10

BRIDGE NO. 56-0330
POST MILE 17.82

ARLINGTON AVE UC (WIDEN)
INDEX TO PLANS

STRUCTURES DESIGN DETAIL SHEET (ENGLISH) (REV. 10/25/05)

ORIGINAL SCALE IN INCHES FOR REDUCED PLANS 0 1 2 3

CU 08
EA 448401

DISREGARD PRINTS BEARING EARLIER REVISION DATES
REVISION DATES: 2-26-10 6-08-10 9-20-10 11-02-11

SHEET 2 OF 24

FILE => 560330aitp02.add

USERNAME => s121614 DATE PLOTTED => 08-NOV-2011 TIME PLOTTED => 11:32

DIST	COUNTY	ROUTE	POST MILES TOTAL PROJECT	SHEET No	TOTAL SHEETS
08	Riv	91	15.6/21.6	1696	2028

REGISTERED CIVIL ENGINEER 11-30-10 DATE

4-25-11
PLANS APPROVAL DATE

The State of California or its officers or agents shall not be responsible for the accuracy or completeness of electronic copies of this plan sheet.

REGISTERED PROFESSIONAL ENGINEER HUAN VU No. 60696 Exp. 12-31-10 CIVIL STATE OF CALIFORNIA

NOTE:
THE CONTRACTOR SHALL VERIFY ALL CONTROLLING FIELD DIMENSIONS BEFORE ORDERING OR FABRICATING ANY MATERIAL.

1

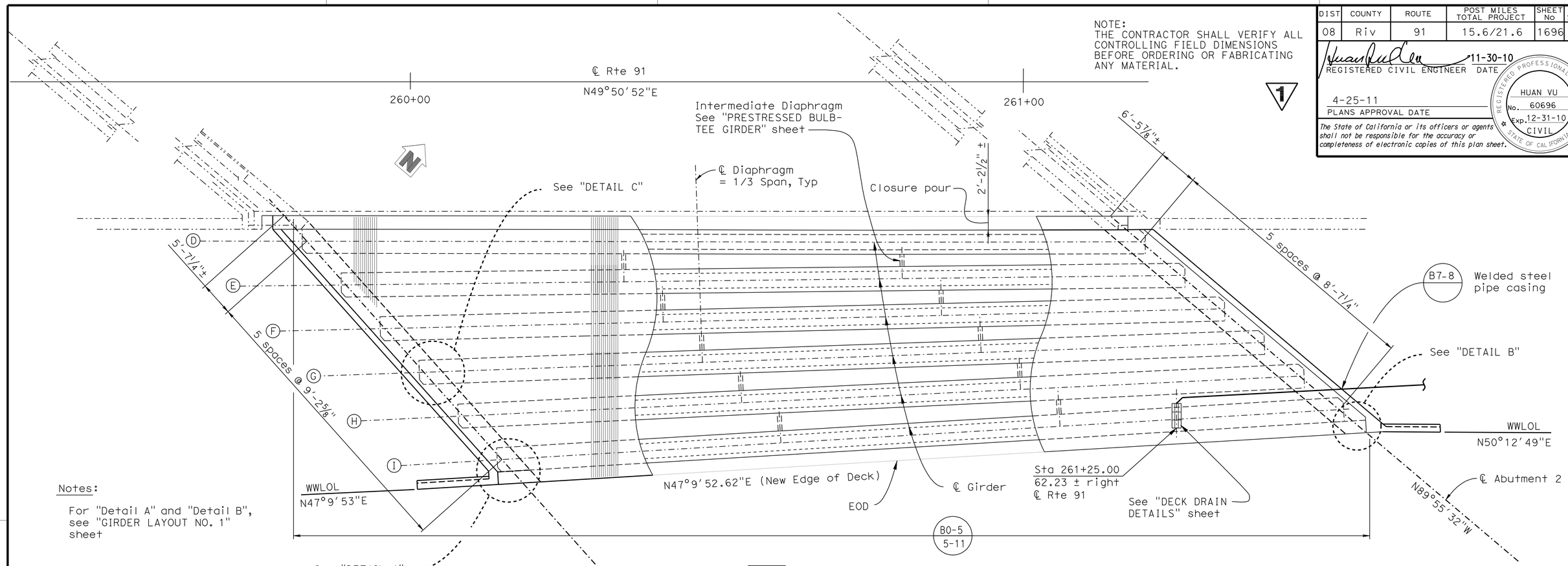

Notes:

For "Detail A" and "Detail B", see "GIRDER LAYOUT NO. 1" sheet

1 **REVISED PER ADDENDUM No. 1 DATED NOVEMBER 8, 2011**

GIRDER LAYOUT RIGHT WIDENING

1/8"=1'-0"

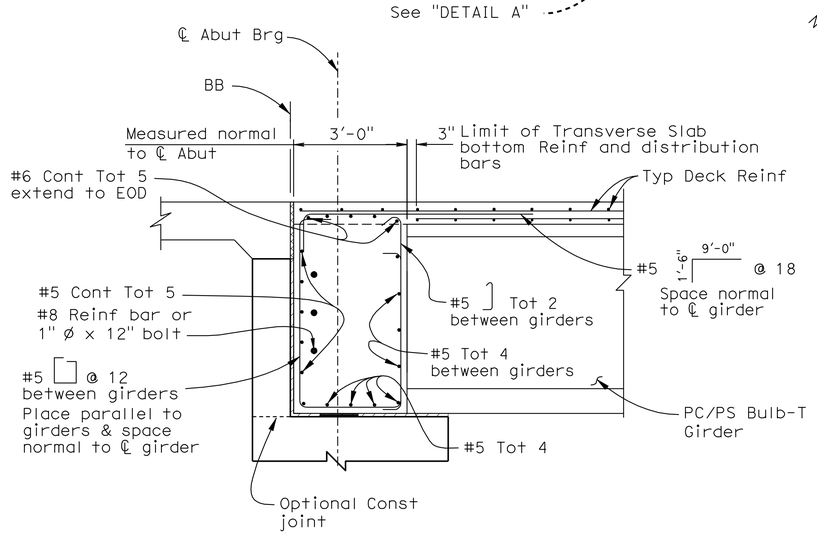

END DIAPHRAGM

1/2"=1'-0"

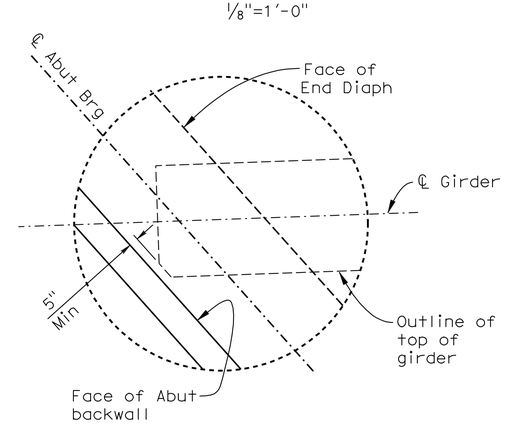

DETAIL "C"

3/8" = 1'-0"

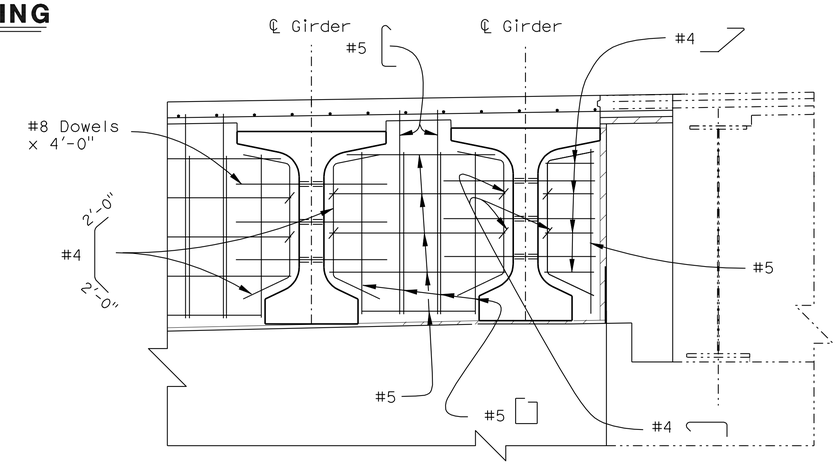

SECTION C-C

1/2"=1'-0"

DESIGN	BY A. Salimi	CHECKED F. Chen	
DETAILS	BY D. Wooten	CHECKED F. Chen	
QUANTITIES	BY J. Szabo	CHECKED A. McPhee	

STATE OF CALIFORNIA
DEPARTMENT OF TRANSPORTATION

DIVISION OF ENGINEERING SERVICES
STRUCTURE DESIGN
DESIGN BRANCH 10

BRIDGE NO. 56-0330
POST MILE 17.82

ARLINGTON AVE UC (WIDEN)
GIRDER LAYOUT NO. 2

STRUCTURES DESIGN DETAIL SHEET (ENGLISH) (REV. 10/25/05)

ORIGINAL SCALE IN INCHES FOR REDUCED PLANS 0 1 2 3

CU 08
EA 448401

DISREGARD PRINTS BEARING EARLIER REVISION DATES

REVISION DATES: 2-26-10 6-08-10 10-25-11

SHEET 13 OF 24

FILE => 5603301g_1o213.add

USERNAME => s121614 DATE PLOTTED => 08-NOV-2011 TIME PLOTTED => 11:32

DIST.	COUNTY	ROUTE	POST MILES TOTAL PROJECT	SHEET NO.	TOTAL SHEETS
08	Riv	91	15.6/21.6	1697	2028

REGISTERED ENGINEER - CIVIL 11-30-10

4-25-11
PLANS APPROVAL DATE

REGISTERED PROFESSIONAL ENGINEER HUAN VU No. 60696 Exp. 12-31-10 CIVIL STATE OF CALIFORNIA

The State of California or its officers or agents shall not be responsible for the accuracy or completeness of electronic copies of this plan sheet.

1

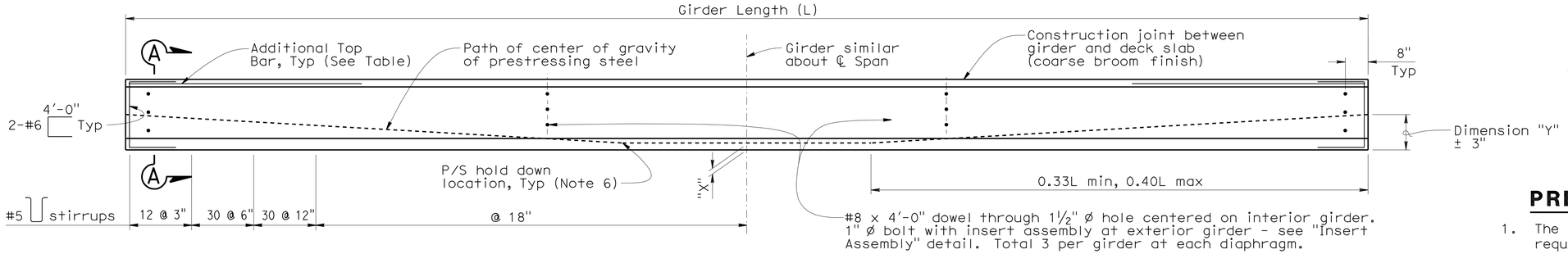

Note

Girder ends to be cast such that a level surface is provided at bearing pads.

GIRDER ELEVATION

Location	Girder Length (ft)	"D" (in)	"X" (in)	Jacking Force (P) (Kips)	As, min (in^2)	"Y" (in)	Concrete Strength (ksi) f'ci	Concrete Strength (ksi) f'c	Midspan Dead Load Deflection (ft) Deck	Midspan Dead Load Deflection (ft) Rail	Additional Top Bar (each end)
Girder A	137.00	61.00	4	2050	10.5	20.0	6.0	6.5	0.46	0.03	N/A
			6	2150	11.0						
Girder B & C	137.00	61.00	4	1650	N/A	18.0	5.5	6.0	0.42	0.03	N/A
			6	1700	N/A						
Girder D	137.50	61.00	4	1800	N/A	18.0	5.5	6.0	0.42	0.03	N/A
			6	1900	N/A						
Girder E	138.00	61.00	4	1810	N/A	18.0	5.5	6.0	0.42	0.03	N/A
			6	1900	N/A						
Girder F	138.50	61.00	4	1850	N/A	18.0	6.0	6.5	0.44	0.03	N/A
			6	1950	N/A						
Girder G	139.00	61.00	4	1900	N/A	18.0	6.0	6.5	0.43	0.03	N/A
			6	2000	N/A						
Girder H	139.50	61.00	4	1900	N/A	18.0	6.0	6.5	0.44	0.03	N/A
			6	2000	N/A						
Girder I	140.00	61.00	4	2150	11.0	18.0	6.5	7.0	0.46	0.03	N/A
			6	2250	11.9						

PRESTRESSING NOTES

1. The Jacking Force (P) is the jacking force required at the point of control along the span. The jacking force does not include any fabrication specific losses.
2. The maximum tensile stress in the prestressing steel upon release shall not exceed 75% of the specified minimum ultimate tensile strength of the prestressing steel.
3. The maximum temporary tensile stress (jacking stress) in the prestressing steel shall not exceed 80% of the specified minimum ultimate tensile strength of the prestressing steel.
4. Concrete strength:
   f'ci is at time of initial stressing.
   f'c is at 28 days.
5. Deflection components are informational and will be used to set screed line elevations.
6. Screed line elevations for deck concrete will be determined by the Engineer.
7. Contractor may interpolate "P" and "X" values between the limits shown, as approved by the Engineer.
8. There shall be a minimum of two hold downs per girder for the prestressing.
9. Prestressing strand shall be 270 ksi low relaxation.
10. As, Min is the minimum area required of prestressing steel.

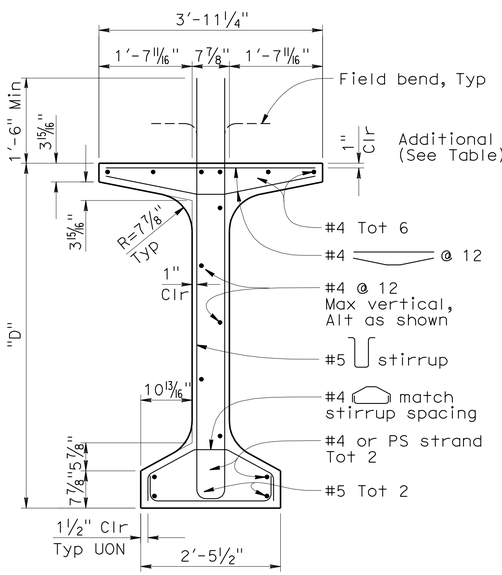

TYPICAL GIRDER SECTION

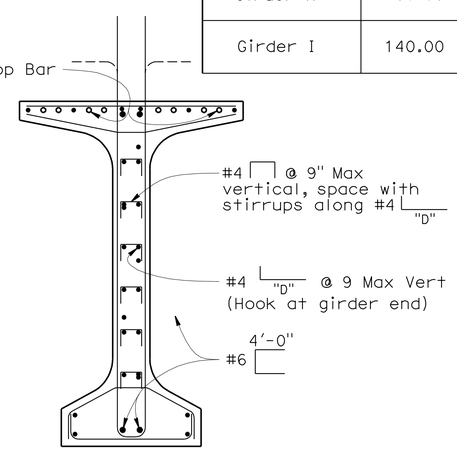

Note: For details shown but not noted, see "Typical Girder Section" detail.

SECTION A-A

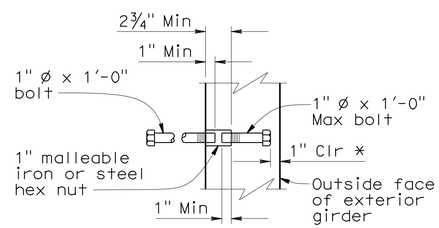

* Dimension may be increased when insert assembly is used at end block

INSERT ASSEMBLY

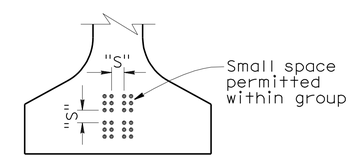

CLEARANCES FOR PRETENSIONED STRANDS

NOTES

1. Strands may be bundled in groups consisting of 3 vertically, 2 horizontally, and separated at the ends.
2. The minimum distance "S" between groups or individual strands is 1¾" for 0.5" ø strand and 2" for 0.6" ø strand.
3. "S" is measured between centers of adjacent strands.
4. Approval by Engineer is required for deviation.

Note: For "WELDED WIRE REINFORCEMENT (WWR) ALTERNATIVE, see "PC/PS BULB-TEE GIRDER (MISCELLANEOUS DETAILS)" sheet.

1 **REVISED PER ADDENDUM No. 1 DATED NOVEMBER 8, 2011**

NO SCALE

STANDARD DRAWING

FILE NO. xs1-122-1

APPROVED BY Jim Ma — RESPONSIBLE TECHNICAL SPECIALIST
APPROVAL DATE 01-03-11

RELEASED BY Susan Hida — RESPONSIBLE OFFICE CHIEF
RELEASE DATE 01-03-11

STATE OF CALIFORNIA DEPARTMENT OF TRANSPORTATION

DIVISION OF ENGINEERING SERVICES

BRIDGE NO. 56-0330
POST MILE 18.40

ARLINGTON AVE UC (WIDEN)

PC/PS BULB-TEE GIRDER (HARPED STRANDS)

DS OSD 2147A (ENGLISH STANDARD DRAWING "XS" BORDER REV. 01/11/08)

ORIGINAL SCALE IN INCHES FOR REDUCED PLANS 0 1 2 3

CU 08
EA 448401

DISREGARD PRINTS BEARING EARLIER REVISION DATES 10-25-11

REVISION DATES (PRELIMINARY STAGE ONLY)

SHEET 14 OF 24

USERNAME => s121614

5603301gdt14.dgn

DATE PLOTTED => 08-NOV-2011 TIME PLOTTED => 11:32

DIST	COUNTY	ROUTE	POST MILES TOTAL PROJECT	SHEET No	TOTAL SHEETS
08	Riv	91	15.6/21.6	1708	2028

REGISTERED CIVIL ENGINEER 11-30-10 DATE

4-25-11
PLANS APPROVAL DATE

REGISTERED PROFESSIONAL ENGINEER HUAN VU No. 60696 Exp. 12-31-10 CIVIL STATE OF CALIFORNIA

The State of California or its officers or agents shall not be responsible for the accuracy or completeness of electronic copies of this plan sheet.

LEGEND:
- Indicates existing structure
- Indicates new construction
- Indicates direction of traffic flow
- Indicates point of minimum vert clr
- Indicates limits of bridge removal
- Indicates Limits of Clean and Treat Bridge Deck with Methacrylate

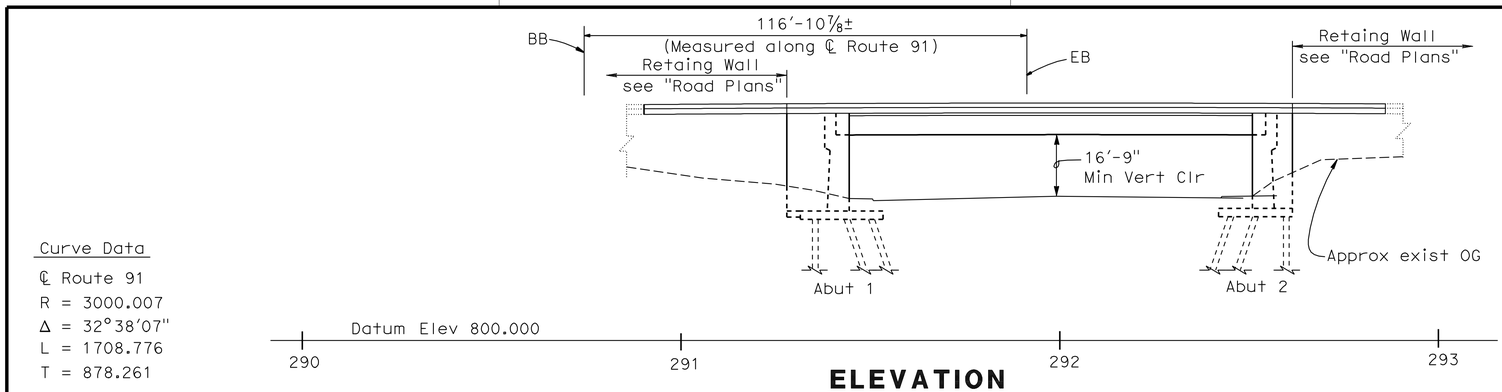

ELEVATION
1"=20'

Curve Data
℄ Route 91
R = 3000.007
Δ = 32°38'07"
L = 1708.776
T = 878.261

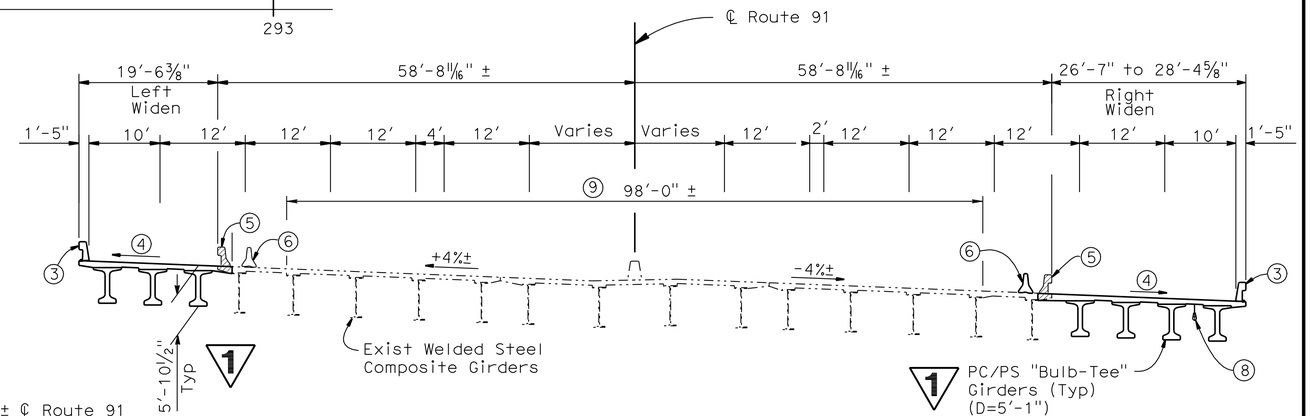

TYPICAL SECTION
3/32"=1'-0"

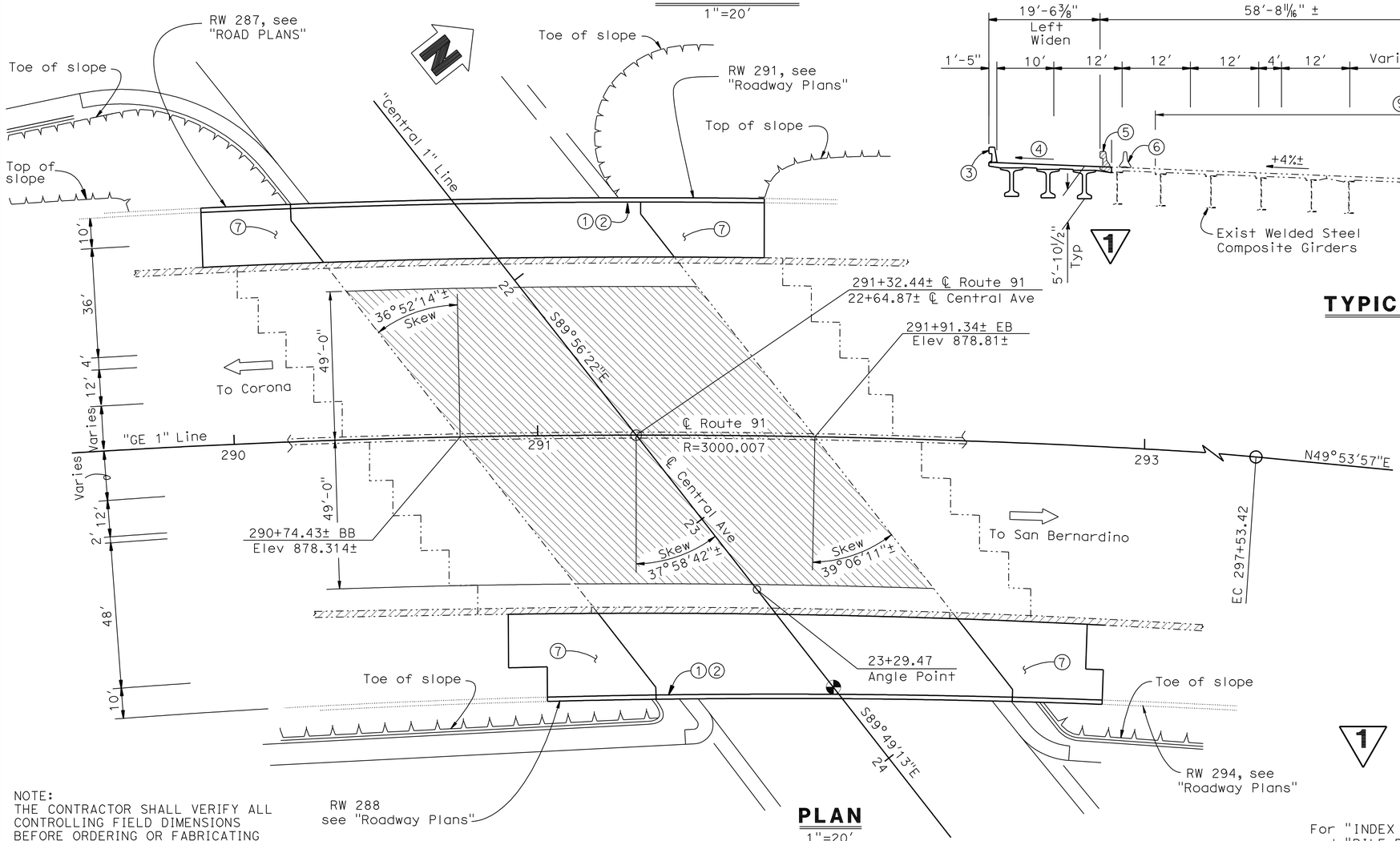

PLAN
1"=20'

NOTES:
1. Paint "BRIDGE NO. 56-0356"
2. Paint "CENTRAL AVENUE UC"
3. Concrete Barrier Type 732 (Mod)
4. Match Existing Grade and Cross Slope
5. Remove Concrete Barrier Type 25
6. Temporary K-Rail, see "Road Plans"
7. Structure Approach Type N (30S)
8. 4" ø Communication Conduit, see "ROAD PLANS"
9. Clean and treat bridge deck with methcrylate Prior to bridge deck treatment, remove unsound concrete and patch with rapid setting concrete

NOTE:
THE CONTRACTOR SHALL VERIFY ALL CONTROLLING FIELD DIMENSIONS BEFORE ORDERING OR FABRICATING ANY MATERIAL

1 REVISED PER ADDENDUM No. 1 DATED NOVEMBER 8, 2011

For "INDEX TO PLANS", "GENERAL NOTES", "QUANTITIES and "PILE DATA", see "INDEX TO PLANS" sheet

DANIEL T. ADAMS
DESIGN ENGINEER

	BY	CHECKED
DESIGN	F. Chen	M. Crete
DETAILS	Y. Tang, R. Kirkland	M. Crete
QUANTITIES	F. Chen	M. Crete

LOAD & RESISTANCE FACTOR DESIGN — LIVE LOADING: HL93 W/"LOW-BOY"; PERMIT DESIGN VEHICLE
LAYOUT BY H. Vu CHECKED F. Chen
SPECIFICATIONS BY PLANS AND SPECS COMPARED

STATE OF CALIFORNIA
DEPARTMENT OF TRANSPORTATION

DIVISION OF ENGINEERING SERVICES
STRUCTURE DESIGN
DESIGN BRANCH 10

BRIDGE NO. 56-0356
POST MILE 18.40

CENTRAL AVENUE UC (WIDEN)
GENERAL PLAN

ORIGINAL SCALE IN INCHES FOR REDUCED PLANS 0 1 2 3

CU 08
EA 448401

DISREGARD PRINTS BEARING EARLIER REVISION DATES

REVISION DATES: 7-18-08 8-21-08 10-1-08 06-10-09 09-03-09 7-09-10 8-04-10 10-25-11

SHEET 1 OF 26

STRUCTURES DESIGN GENERAL PLAN SHEET (ENGLISH) (REV.07-24-06)

FILE => 560356agp01.dgn

USERNAME => s812614 DATE PLOTTED => 08-NOV-2011 TIME PLOTTED => 11:32

DIST	COUNTY	ROUTE	POST MILES TOTAL PROJECT	SHEET No	TOTAL SHEETS
08	Riv	91	15.6/21.6	1723	2028

REGISTERED CIVIL ENGINEER 11-30-10 DATE

4-25-11
PLANS APPROVAL DATE

REGISTERED PROFESSIONAL ENGINEER HUAN VU No. 60696 Exp. 12-31-10 CIVIL STATE OF CALIFORNIA

The State of California or its officers or agents shall not be responsible for the accuracy or completeness of electronic copies of this plan sheet.

Legend:

Indicates new construction

Indicates existing structure

Indicates limits of Bridge removal (Portion)

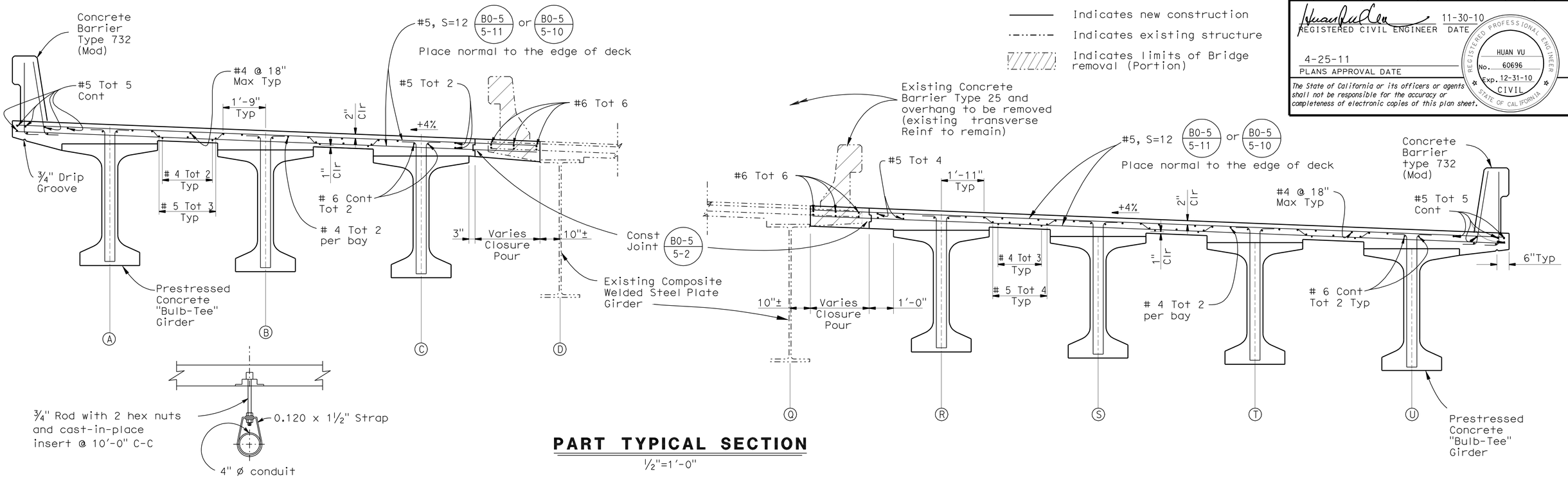

PART TYPICAL SECTION

½"=1'-0"

CONDUIT HANGER SUPPORT DETAIL

NO SCALE

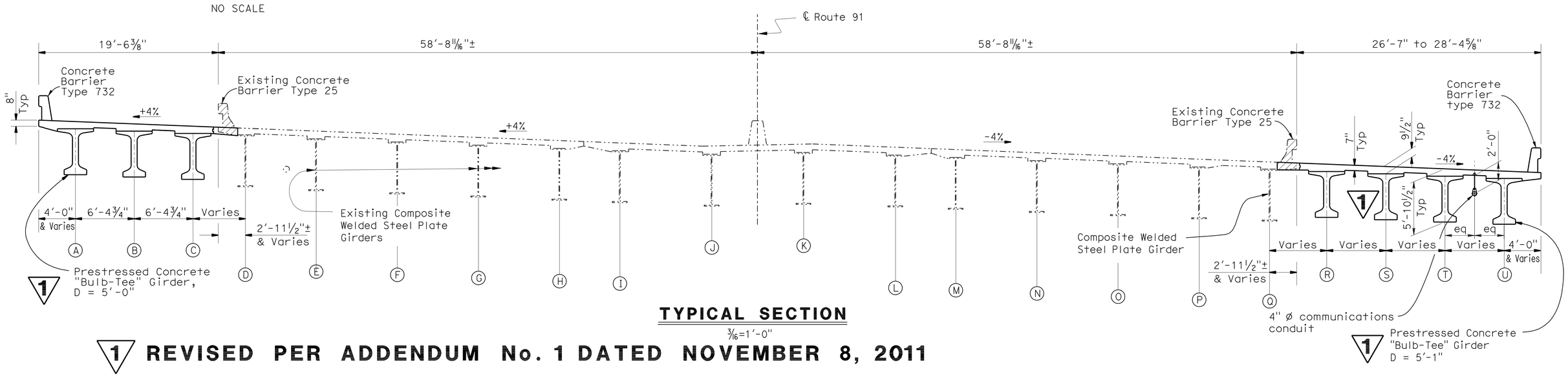

TYPICAL SECTION

3/16=1'-0"

1 REVISED PER ADDENDUM No. 1 DATED NOVEMBER 8, 2011

	BY	CHECKED
DESIGN	F.Chen	M. Crete
DETAILS	D.Wooten/Y. Tang	M. Crete
QUANTITIES	F. Chen	M. Crete

STATE OF CALIFORNIA DEPARTMENT OF TRANSPORTATION

DIVISION OF ENGINEERING SERVICES STRUCTURE DESIGN DESIGN BRANCH 10

BRIDGE NO. 56-0356

POST MILE 18.40

CENTRAL AVENUE UC (WIDEN)

TYPICAL SECTION

STRUCTURES DESIGN DETAIL SHEET (ENGLISH) (REV. 10/25/05)

ORIGINAL SCALE IN INCHES FOR REDUCED PLANS 0 1 2 3

CU 08
EA 448401

DISREGARD PRINTS BEARING EARLIER REVISION DATES

REVISION DATES: 06-10-09 | 07-22-09 | 2-08-10 | 4-08-10 | 7-09-10 | 10-25-11

SHEET 16 OF 26

FILE => 560356kts16.add

USERNAME => s12614 DATE PLOTTED => 08-NOV-2011 TIME PLOTTED => 11:33

DIST.	COUNTY	ROUTE	POST MILES TOTAL PROJECT	SHEET NO.	TOTAL SHEETS
08	Riv	91	15.6/21.6	1725	2028

REGISTERED ENGINEER - CIVIL 11-30-10

4-25-11
PLANS APPROVAL DATE

REGISTERED PROFESSIONAL ENGINEER HUAN VU No. 60696 Exp. 12-31-10 CIVIL STATE OF CALIFORNIA

The State of California or its officers or agents shall not be responsible for the accuracy or completeness of electronic copies of this plan sheet.

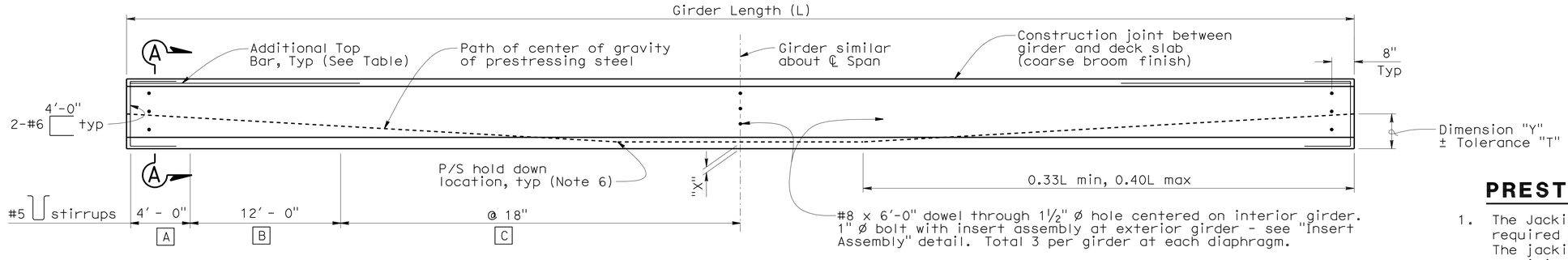

GIRDER ELEVATION

Location	A	B	C
Girder A, B, C	#5 @ 6"	#5 @ 12"	#5 @ 18"
Girder R, S, T, U	#5 @ 6"	#5 @ 12"	#5 @ 18"

Note

Girder ends to be cast such that a level surface is provided at bearing pads.

1

Location Location	Girder Length (ft)	1 "D" (ft)	"X" (in)	Jacking Force (P) (kips)	"Y" (in)	"T" (in)	Concrete Strength (ksi) f'ci	Concrete Strength (ksi) f'c	Midspan Dead Load Deflection (in) Deck	Midspan Dead Load Deflection (in) Rail	Additional Top Bar (each end)
Girder A, B, C	112.480	5'-1"	4	1100	20.0	±3	5.0	5.5	2.23	0.54	N/A
			6	1170							
Girder R	115.640	5'-1"	4	1530	20.0	±3	5.0	5.5	2.85	0.58	N/A
			6	1600							
Girder S	115.325	5'-1"	4	1530	20.0	±3	5.0	5.5	2.85	0.58	N/A
			6	1600							
Girder T	115.013	5'-1"	4	1530	20.0	±3	5.0	5.5	2.85	0.58	N/A
			6	1600							
Girder U	114.702	5'-1"	4	1430	20.0	±3	5.0	5.5	2.76	0.56	N/A
			6	1500							

PRESTRESSING NOTES

1. The Jacking Force (P) is the jacking force required at the point of control along the span. The jacking force does not include any fabrication specific losses.
2. The maximum tensile stress in the prestressing steel upon release shall not exceed 75% of the specified minimum ultimate tensile strength of the prestressing steel.
3. The maximum temporary tensile stress (jacking stress) in the prestressing steel shall not exceed 80% of the specified minimum ultimate tensile strength of the prestressing steel.
4. Concrete strength:
   f'ci is at time of initial stressing.
   f'c is at 28 days.
5. Deflection components are informational and will be used to set screed line elevations.
6. Screed line elevations for deck concrete will be determined by the Engineer.
7. Contractor may interpolate "P" and "X" values between the limits shown, as approved by the Engineer.
8. There shall be a minimum of two hold downs per girder for the prestressing.
9. Prestressing strand shall be 270 ksi low relaxation.

2

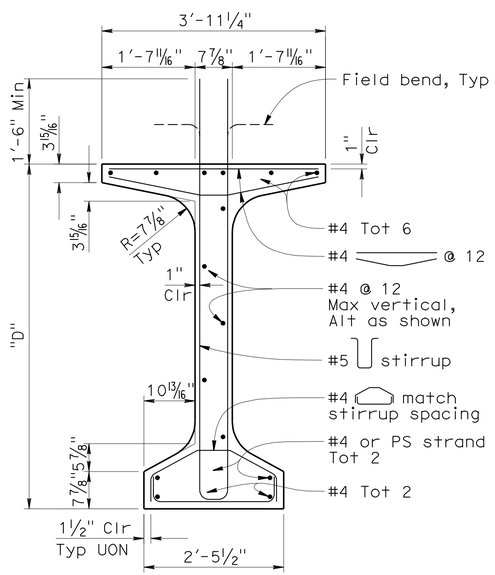

TYPICAL GIRDER SECTION

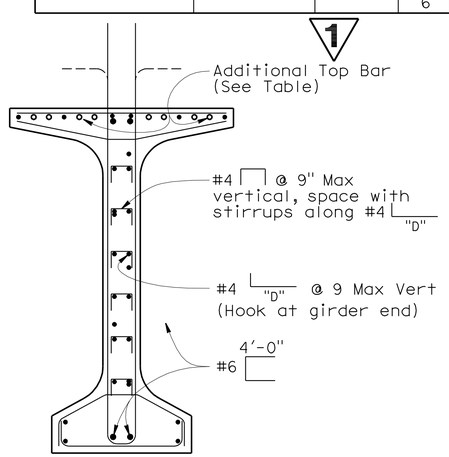

Note: For details shown but not noted, see "Typical Girder Section" detail.

SECTION A-A

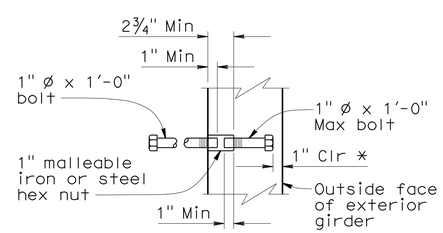

* Dimension may be increased when insert assembly is used at end block

INSERT ASSEMBLY

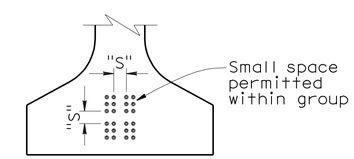

CLEARANCES FOR PRETENSIONED STRANDS

NOTES

1. Strands may be bundled in groups consisting of 3 vertically, 2 horizontally, and separated at the ends.
2. The minimum distance "S" between groups or individual strands is 1¾" for 0.5" ø strand and 2" for 0.6" ø strand.
3. "S" is measured between centers of adjacent strands.
4. Approval by Engineer is required for deviation.

Note: For "WELDED WIRE REINFORCEMENT (WWR) ALTERNATIVE, see "PC/PS BULB-TEE GIRDER (MISCELLANEOUS DETAILS" sheet.

1 **REVISED PER ADDENDUM No. 1 DATED NOVEMBER 8, 2011**

NO SCALE

STANDARD DRAWING

FILE NO. xs1-122-1

APPROVED BY Jim Ma — RESPONSIBLE TECHNICAL SPECIALIST
APPROVAL DATE 01-03-11

RELEASED BY Susan Hida — RESPONSIBLE OFFICE CHIEF
RELEASE DATE 01-03-11

1 Revised chart
2 Revised Prestessing Notes

STATE OF CALIFORNIA DEPARTMENT OF TRANSPORTATION

DIVISION OF ENGINEERING SERVICES

BRIDGE NO. 56-0356
POST MILE 18.40

CENTRAL AVENUE UC (WIDEN)

PC/PS BULB-TEE GIRDER (HARPED STRANDS)

DS OSD 2147A (ENGLISH STANDARD DRAWING "XS" BORDER REV. 01/11/08)

ORIGINAL SCALE IN INCHES FOR REDUCED PLANS 0 1 2 3

CU 08
EA 448401

DISREGARD PRINTS BEARING EARLIER REVISION DATES

REVISION DATES (PRELIMINARY STAGE ONLY) 12/22/08 05/11/09 06/19/09 7-15-10 10-25-11

SHEET 18 OF 26

USERNAME => s121614

560356lgdt18.dgn

DATE PLOTTED => 08-NOV-2011 TIME PLOTTED => 11:33

DIST	COUNTY	ROUTE	POST MILES TOTAL PROJECT	SHEET No	TOTAL SHEETS
08	Riv	91	15.6/21.6	1816	2028

REGISTERED CIVIL ENGINEER 11-30-10 DATE

4-25-11
PLANS APPROVAL DATE

REGISTERED PROFESSIONAL ENGINEER HUAN VU No. 60696 Exp. 12-31-10 CIVIL STATE OF CALIFORNIA

The State of California or its officers or agents shall not be responsible for the accuracy or completeness of electronic copies of this plan sheet.

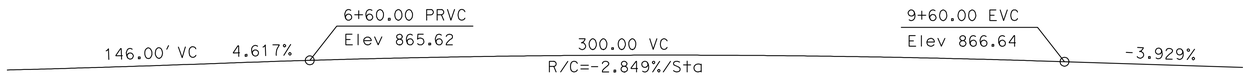

PROFILE GRADE

1"=30'

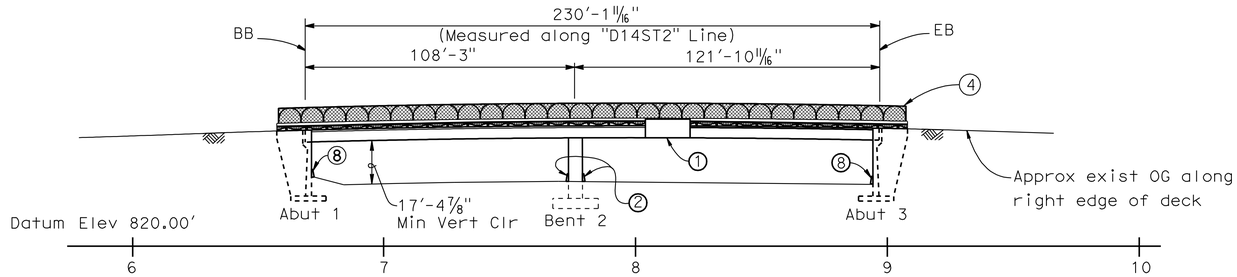

ELEVATION

1"=30'

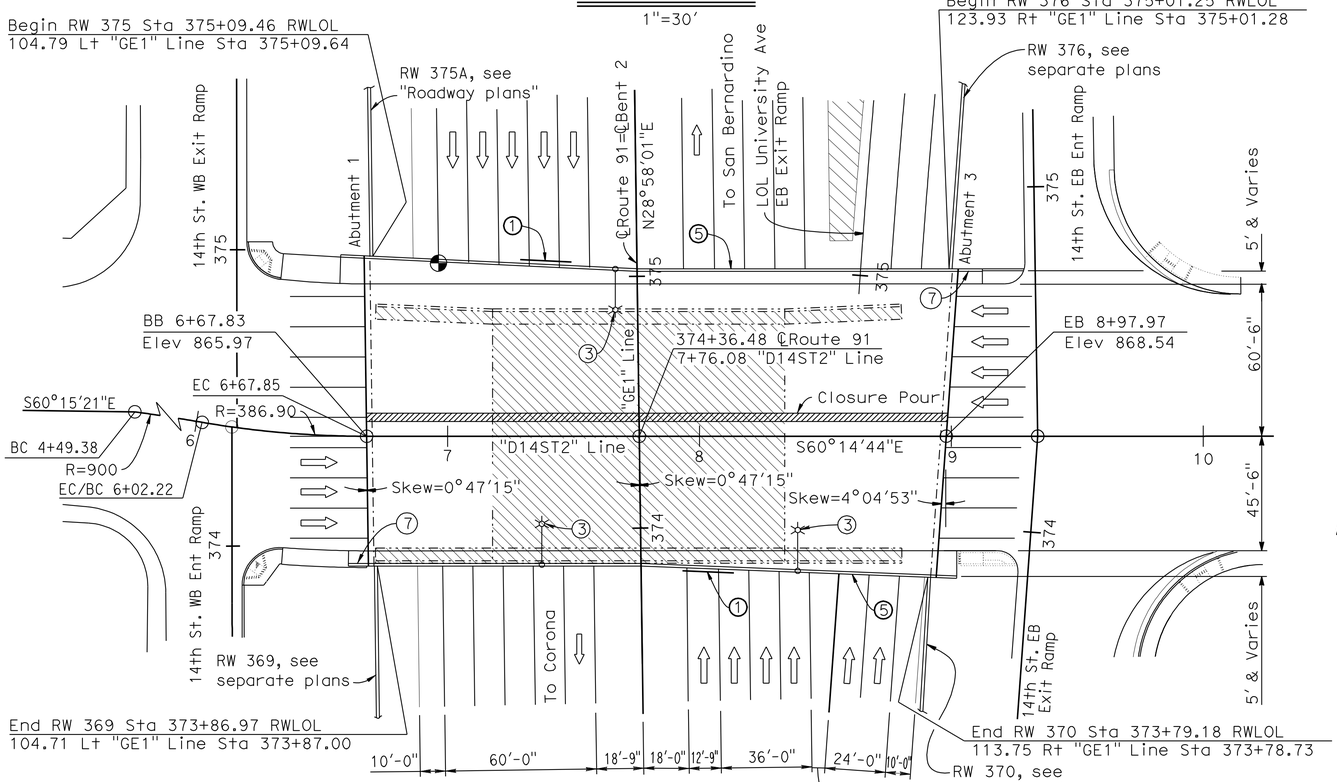

CURVE DATA

R=900	R=386.90
Δ=9°43'48"	Δ=9°43'11"
T=76.6	T=32.90
L=152.84	L=65.63

PLAN

1"=30'

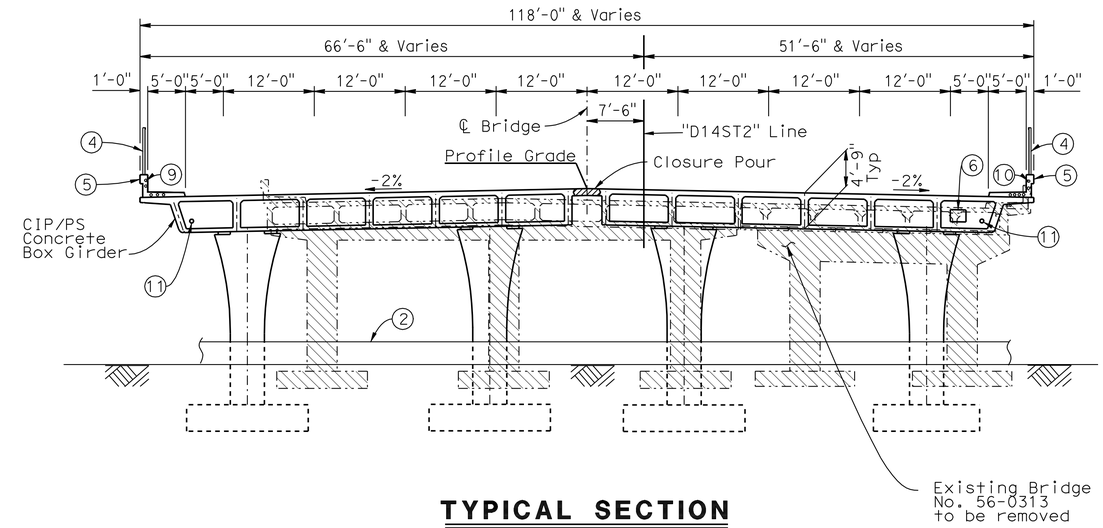

TYPICAL SECTION

1" = 10'-0"

NOTES:

1. Bridge mounted traffic sign, see "Roadway Plans".
2. Concrete Barrier, Type 60E, see "Roadway Plans".
3. Electrolier, see "Roadway Plans".
4. Chain link railing Type 6
5. Concrete Barrier, Type 26 (Mod)
6. 24" x 24" Utility Opening
7. Paint "BR. NO. 56-0836" and Name "14TH STREET OC".
8. Concrete Barrier Type 60D (Mod).
9. 5 - 2"Ø Electrical Conduits, see "Roadway Plans".
10. 6 - 2"Ø Electrical Conduits, see "Roadway Plans".
11. 3"Ø Irrigation Line, see "Roadway Plans".

LEGEND:

- Indicates new construction
- Indicates existing structure
- Indicates direction of traffic flow
- Indicates point of minimum Vert Clr
- Indicates existing bridge to be removed
- Indicates Deck Closure Pour

For "General Notes", "Index to Plans", "Standard Plans", "Quantities", and "Spread Footing Data Table", see "INDEX TO PLANS" Sheet.

1 **REVISED PER ADDENDUM No. 1 DATED NOVEMBER 8, 2011**

DANIEL T. ADAMS
DESIGN ENGINEER

	BY	CHECKED
DESIGN	H. Vu	L. Wu
DETAILS	Tang/Wooten/Hallstrom	L. Wu
QUANTITIES	H. Vu	L. Wu

LOAD & RESISTANCE FACTOR DESIGN — LIVE LOADING: HL93 AND PERMIT DESIGN VEHICLE

	BY	CHECKED
LAYOUT	H. Vu	L. Wu
SPECIFICATIONS	D. Klein	PLANS AND SPECS COMPARED D. Klein

ORIGINAL SCALE IN INCHES FOR REDUCED PLANS 0 1 2 3

STATE OF CALIFORNIA
DEPARTMENT OF TRANSPORTATION

DIVISION OF ENGINEERING SERVICES
STRUCTURE DESIGN
DESIGN BRANCH 10

CU 08
EA 448401

BRIDGE NO. 56-0836
POST MILE 20.0

14TH STREET OC (REPLACE)
GENERAL PLAN NO. 1

DISREGARD PRINTS BEARING EARLIER REVISION DATES

REVISION DATES: 7-18-08 9-26-10 11-30-10 11-01-11 8-25-09 9-18-09 2-11-10 8-05-10 8-23-10

SHEET 1 OF 28

USERNAME => s12614 DATE PLOTTED => 08-NOV-2011 TIME PLOTTED => 11:33

STRUCTURES DESIGN GENERAL PLAN SHEET (ENGLISH) (REV.07-24-06)

FILE => 560836agp01.add

DIST	COUNTY	ROUTE	POST MILES TOTAL PROJECT	SHEET No	TOTAL SHEETS
08	Riv	91	15.6/21.6	1817	2028

REGISTERED CIVIL ENGINEER — DATE 11-30-10

4-25-11
PLANS APPROVAL DATE

REGISTERED PROFESSIONAL ENGINEER — HUAN VU — No. 60696 — Exp. 12-31-10 — CIVIL — STATE OF CALIFORNIA

The State of California or its officers or agents shall not be responsible for the accuracy or completeness of electronic copies of this plan sheet.

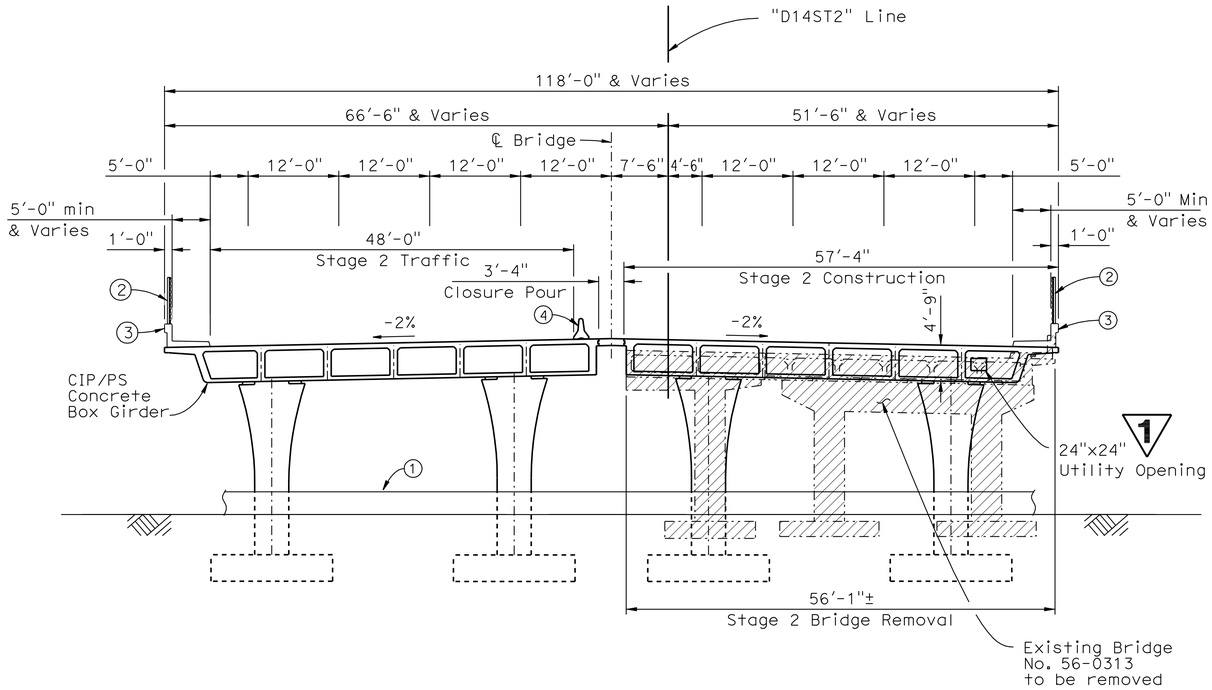

STAGE 2 CONSTRUCTION

TYPICAL SECTION

1"=10'

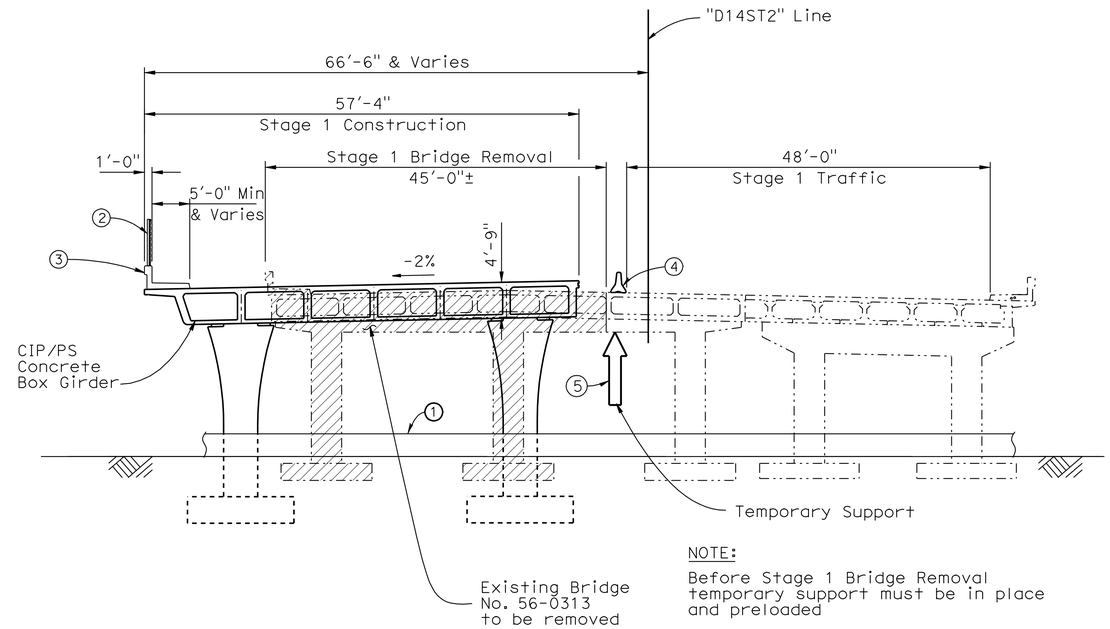

NOTE:

Before Stage 1 Bridge Removal temporary support must be in place and preloaded

STAGE 1 CONSTRUCTION

TYPICAL SECTION

1"=10'

NOTES:

1 - Concrete Barrier, Type 60E, see "Roadway Plans"
2 - Chain Link Railing Type 6
3 - Concrete Barrier, Type 26 (Mod)
4 - Temporary Railing (Type K) see "Roadway Plans"
5 - Minimum temporary support vertical service load, DL=131 kips and LL=70 kips.

LEGEND:

—— Indicates new construction
-··- Indicates existing structure
▨ Indicates concrete removal

1 REVISED PER ADDENDUM No. 1 DATED NOVEMBER 8, 2011

	BY	CHECKED
DESIGN	H.Vu	L. Wu
DETAILS	D.Wooten	L. Wu
QUANTITIES	H.Vu	L. Wu

STATE OF CALIFORNIA
DEPARTMENT OF TRANSPORTATION

DIVISION OF ENGINEERING SERVICES
STRUCTURE DESIGN
DESIGN BRANCH 10

BRIDGE NO. 56-0836
POST MILE 20.0

14TH STREET OC (REPLACE)
GENERAL PLAN NO. 2

STRUCTURES DESIGN DETAIL SHEET (ENGLISH) (REV. 10/25/05)

ORIGINAL SCALE IN INCHES FOR REDUCED PLANS 0 1 2 3

CU 08
EA 448401

DISREGARD PRINTS BEARING EARLIER REVISION DATES

REVISION DATES: 8-21-08 10-02-08 3-18-09 7-2-09 8-24-09 8-31-09 8-05-10 11-30-10 11-02-11

SHEET 2 OF 28

FILE => 560836agp02.add

USERNAME => s12614 DATE PLOTTED => 08-NOV-2011 TIME PLOTTED => 11:33

DIST	COUNTY	ROUTE	POST MILES TOTAL PROJECT	SHEET No	TOTAL SHEETS
08	Riv	91	15.6/21.6	1826	2028

REGISTERED CIVIL ENGINEER 11-30-10 DATE

4-25-11
PLANS APPROVAL DATE

REGISTERED PROFESSIONAL ENGINEER HUAN VU No. 60696 Exp. 12-31-10 CIVIL STATE OF CALIFORNIA

The State of California or its officers or agents shall not be responsible for the accuracy or completeness of electronic copies of this plan sheet.

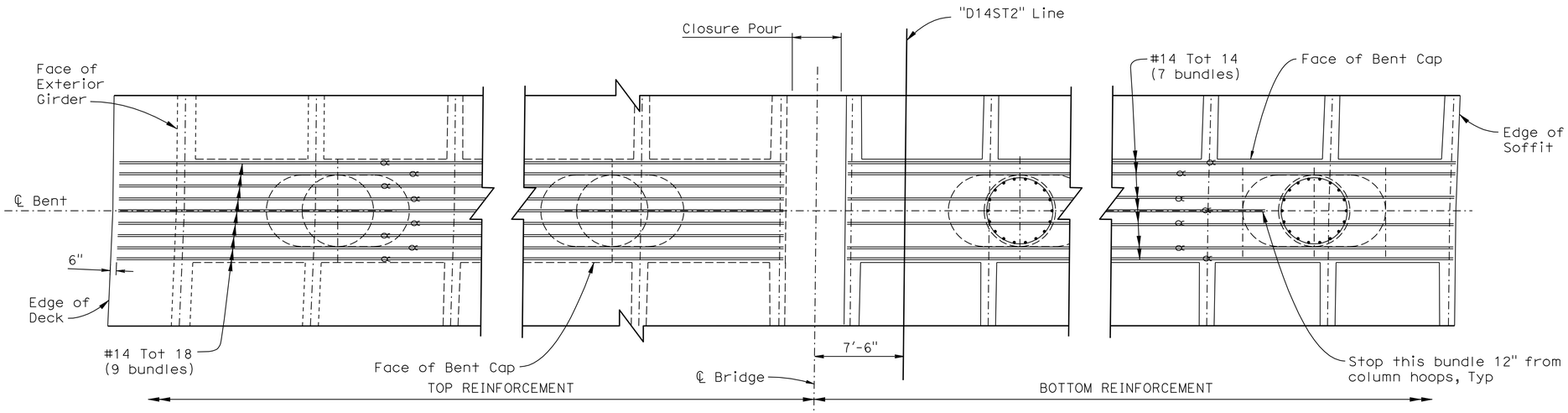

PLAN

1/4"=1'-0"

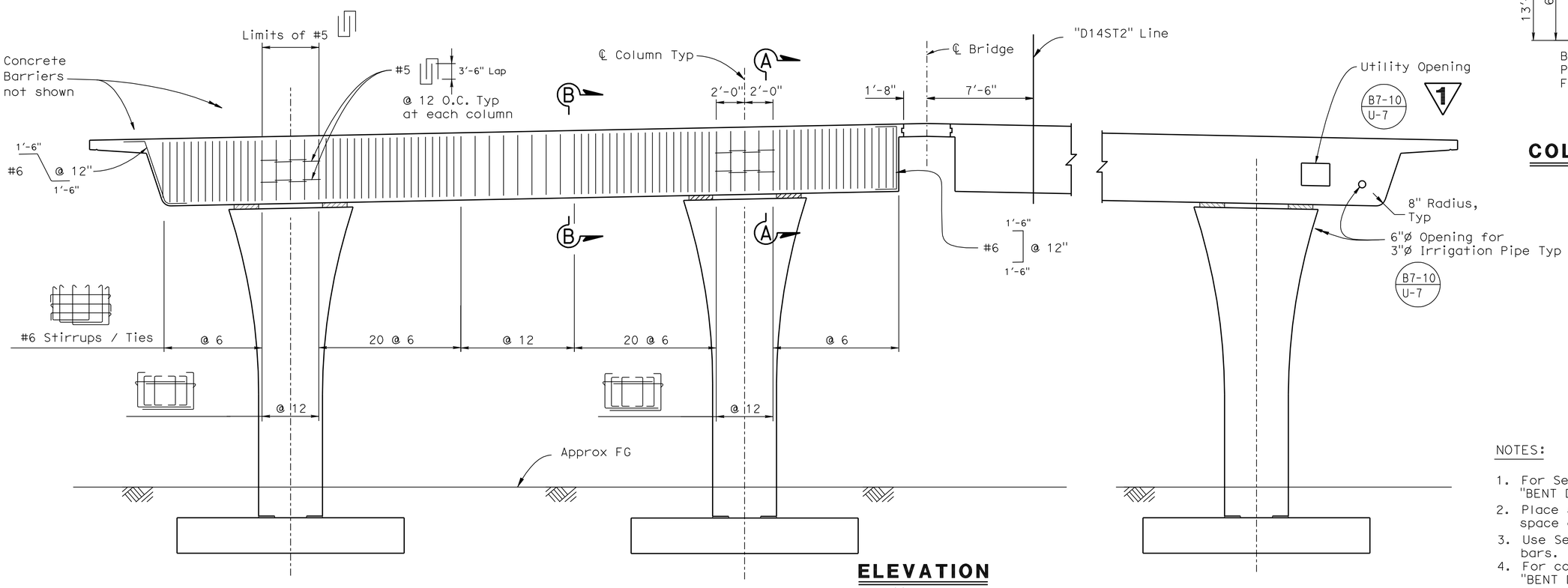

ELEVATION

1/4"=1'-0"

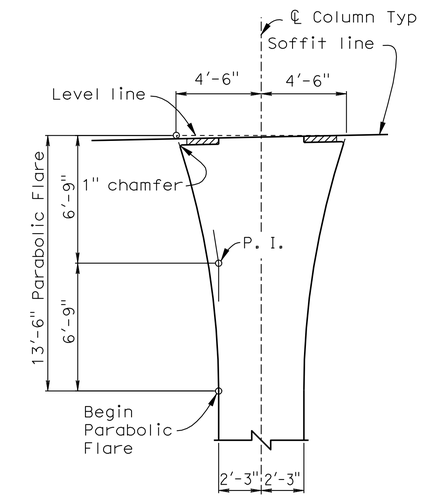

COLUMN GEOMETRICS

1/4"=1'-0"

NOTES:

1. For Section A-A and Section B-B, see "BENT DETAILS NO. 2" sheet.
2. Place stirrups normal to ℄ Bent and space along ℄ Bent.
3. Use Service Splices for bent cap main bars.
4. For column and footing details, see "BENT DETAILS NO. 1" sheet.

Indicates bundled rebar

1 REVISED PER ADDENDUM No. 1 DATED NOVEMBER 8, 2011

	BY	CHECKED
DESIGN	H.Vu	L. Wu
DETAILS	D.Wooten/G.Hallstrom	L. Wu
QUANTITIES	H.Vu	L. Wu

STATE OF CALIFORNIA
DEPARTMENT OF TRANSPORTATION

DIVISION OF ENGINEERING SERVICES
STRUCTURE DESIGN
DESIGN BRANCH 10

BRIDGE NO. 56-0836
POST MILE 20.0

14TH STREET OC (REPLACE)
BENT LAYOUT

STRUCTURES DESIGN DETAIL SHEET (ENGLISH) (REV. 10/25/05)

ORIGINAL SCALE IN INCHES FOR REDUCED PLANS 0 1 2 3

CU 08
EA 448401

DISREGARD PRINTS BEARING EARLIER REVISION DATES

REVISION DATES: 7-08-09 9-08-09 2-19-10 3-26-10 10-04-10 11-30-10 11-01-11

SHEET 11 OF 28

FILE => 560836hb2_lo11.add

USERNAME => s12614 DATE PLOTTED => 08-NOV-2011 TIME PLOTTED => 11:33

DIST	COUNTY	ROUTE	POST MILES TOTAL PROJECT	SHEET No	TOTAL SHEETS
08	Riv	91	15.6/21.6	1829	2028

REGISTERED CIVIL ENGINEER 11-30-10 DATE

4-25-11
PLANS APPROVAL DATE

The State of California or its officers or agents shall not be responsible for the accuracy or completeness of electronic copies of this plan sheet.

REGISTERED PROFESSIONAL ENGINEER HUAN VU No. 60696 Exp. 12-31-10 CIVIL STATE OF CALIFORNIA

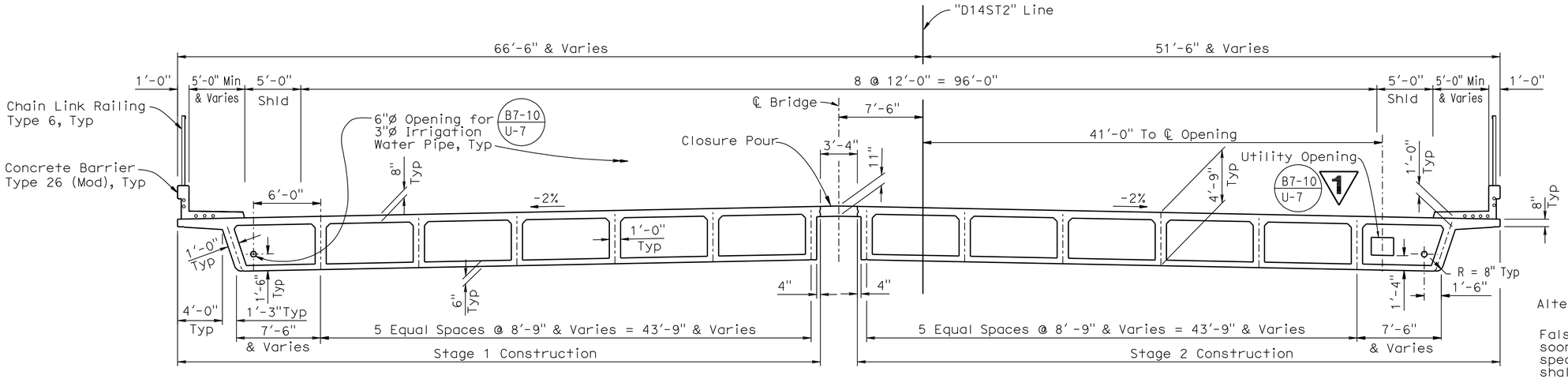

TYPICAL SECTION

3/16" = 1'-0"

FALSEWORK RELEASE (STAGE 2)

Alternative 1:

Falsework shall be released as soon as permitted by the specifications. Closure pour shall not be placed sooner than 60 days after the falsework had been released.

Alternative 2:

Falsework shall not be released less than 28 days after the last concrete has been placed. Closure pour shall not be placed sooner than 14 days after the falsework has been released.

When Falsework Release Alternative 2 is used, camber values are 0.75 times those shown.

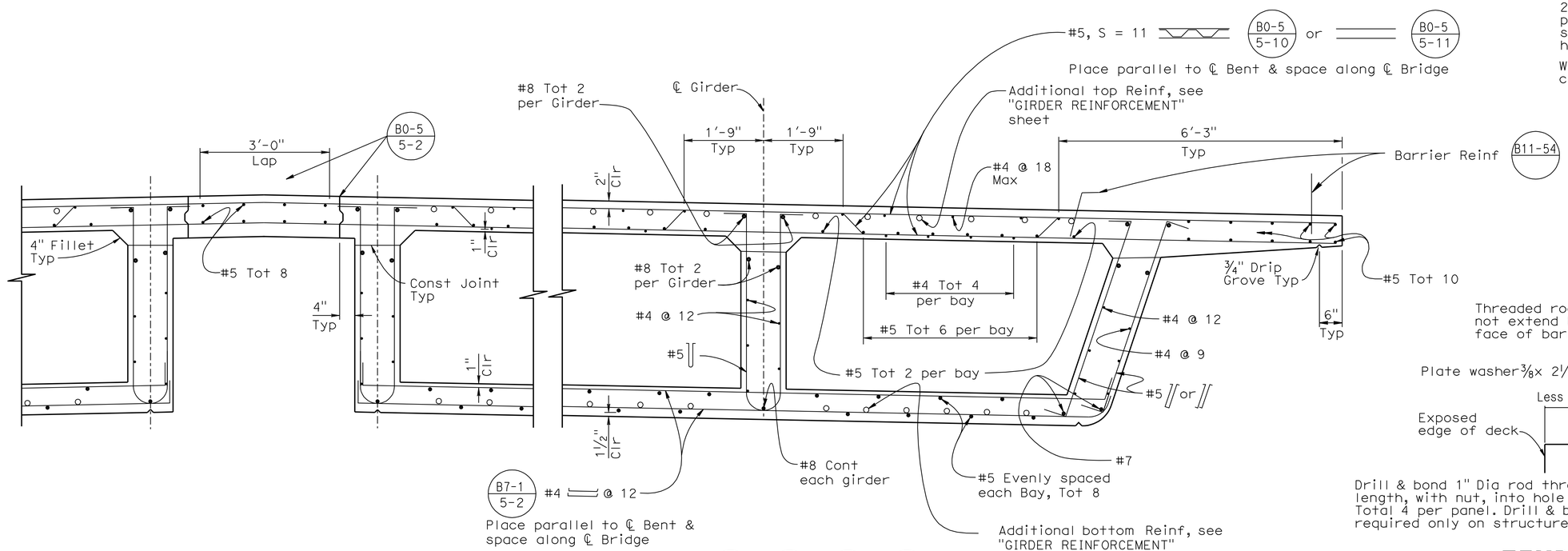

PART TYPICAL SECTION

B0-5 B7-1 B8-5 B11-54

3/4" = 1'-0"

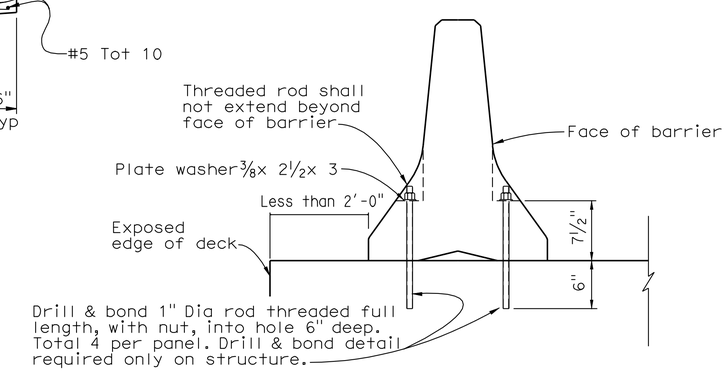

TEMPORARY RAILING TYPE 'K' ATTACHMENT DETAIL

No Scale

See "Temporary Railing (Type K)" for details not shown.

1 REVISED PER ADDENDUM No. 1 DATED NOVEMBER 8, 2011

	BY	CHECKED
DESIGN	H.Vu	L. Wu
DETAILS	R. Kirkland/G. Hallstrom	L. Wu
QUANTITIES	H.Vu	L. Wu

STATE OF CALIFORNIA
DEPARTMENT OF TRANSPORTATION

DIVISION OF ENGINEERING SERVICES
STRUCTURE DESIGN
DESIGN BRANCH 10

BRIDGE NO. 56-0836
POST MILE 20.0

14TH STREET OC (REPLACE)
TYPICAL SECTION

STRUCTURES DESIGN DETAIL SHEET (ENGLISH) (REV. 10/25/05)

ORIGINAL SCALE IN INCHES FOR REDUCED PLANS 0 1 2 3

CU 08
EA 448401

DISREGARD PRINTS BEARING EARLIER REVISION DATES

REVISION DATES: 7-08-09 8-18-09 9-08-09 3-29-10 10-04-10 11-02-11

SHEET 14 OF 28

FILE => 560836kts14.dgn

USERNAME => s6121614 DATE PLOTTED => 08-NOV-2011 TIME PLOTTED => 11:33

DIST	COUNTY	ROUTE	POST MILES TOTAL PROJECT	SHEET No	TOTAL SHEETS
08	Riv	91	15.6/21.6	1912	2028

REGISTERED CIVIL ENGINEER 11-30-10 DATE

4-25-11
PLANS APPROVAL DATE

REGISTERED PROFESSIONAL ENGINEER HUAN D. VU No. C60696 Exp. 12/31/10 CIVIL STATE OF CALIFORNIA

The State of California or its officers or agents shall not be responsible for the accuracy or completeness of electronic copies of this plan sheet.

NOTE:
THE CONTRACTOR SHALL VERIFY ALL CONTROLLING FIELD DIMENSIONS BEFORE ORDERING OR FABRICATING ANY MATERIAL.

1

INDEX TO PLANS

Sheet No.	Title
1.	GENERAL PLAN
2.	INDEX TO PLANS
3.	FOUNDATION PLAN NO. 1
4.	FOUNDATION PLAN NO. 2
5.	ABUTMENT 1 LAYOUT
6.	ABUTMENT 3 LAYOUT
7.	ABUTMENT DETAILS NO. 1
8.	ABUTMENT DETAILS NO. 2
9.	ABUTMENT 1 FOOTING DETAILS
10.	ABUTMENT 3 FOOTING DETAILS
11.	APRON SLAB DETAILS
12.	WING WALL ABUT 1 NORTH
13.	WING WALL ABUT 3 NORTH
14.	WING WALL DETAILS NO.1
15.	WING WALL DETAILS NO.2
16.	BENT LAYOUT
17.	BENT DETAILS
18.	SHEAR KEY BEAM LAYOUT
19.	SHEAR KEY BEAM DETAILS
20.	TYPICAL SECTION
21.	GIRDER LAYOUT NO. 1
22.	GIRDER LAYOUT NO. 2
23.	GIRDER DETAILS NO. 1
24.	GIRDER DETAILS NO. 2
25.	GIRDER DETAILS NO. 3
26.	GIRDER DETAILS NO. 4
27.	GIRDER DETAILS NO. 5
28.	GIRDER DETAILS NO. 6
29.	GIRDER DETAILS NO. 7
30.	DECK PLATING AND SIDEWALK LAYOUT
31.	DECK PLATING AND SIDEWALK DETAILS NO. 1
32.	DECK PLATING AND SIDEWALK DETAILS NO. 2
33.	ARCHITECTURAL DETAILS NO. 1
34.	ARCHITECTURAL DETAILS NO. 2
35.	ARCHITECTURAL DETAILS NO. 3
36.	PTFE/SPHERICAL EXPANSION BEARING DETAILS
37.	PTFE/SPHERICAL FIXED BEARING DETAILS
38.	PTFE/SPHERICAL ANCHORAGE DETAILS
39.	DECK DRAINAGE LAYOUT AND DETAILS
40.	BRIDGE REMOVAL
41.	BRIDGE REMOVAL (PORTION)
42.	LOG OF TEST BORINGS SHEET 1 OF 3
43.	LOG OF TEST BORINGS SHEET 2 OF 3
44.	LOG OF TEST BORINGS SHEET 3 OF 3

STANDARD PLANS DATED MAY 2006

A10A	ACRONYMS AND ABBREVIATIONS (SHEET 1 OF 2)
A10B	ACRONYMS AND ABBREVIATIONS (SHEET 2 OF 2)
A10C	SYMBOLS (SHEET 1 OF 2)
A10D	SYMBOLS (SHEET 2 OF 2)
A62B	LIMITS OF PAYMENT FOR EXCAVATION AND BACKFILL-BRIDGE SURCHARGE AND WALL
A62C	LIMITS OF PAYMENT FOR EXCAVATION AND BACKFILL-BRIDGE
BO-3	BRIDGE DETAILS
B3-1	RETAINING WALL TYPE 1-H=4′ THROUGH 30′
B3-2	RETAINING WALL TYPE 1-H=32′ THROUGH 36′
B3-8	RETAINING WALL DETAILS NO. 1
B3-9	RETAINING WALL DETAILS NO. 2
B7-6	DECK DRAINS TYPES D-1 AND D-2
B11-47	CABLE RAILING
B11-57	CONCRETE BARRIER TYPE 742

QUANTITIES

BRIDGE REMOVAL (PORTION), LOCATION K	LUMP	SUM
BRIDGE REMOVAL, LOCATION J	LUMP	SUM
STRUCTURE EXCAVATION (BRIDGE)	6,823	CY
STRUCTURE BACKFILL (BRIDGE)	5,087	CY
PERVIOUS BACKFILL MATERIAL	184	CY
FURNISH STEEL PILING (HP 14 X 89)	15,190	LF
DRIVE STEEL PILE (HP 14 X 89)	215	EA
STRUCTURAL CONCRETE, BRIDGE FOOTING	932	CY
STRUCTURAL CONCRETE, BRIDGE	1,772	CY
STRUCTURAL CONCRETE, APRON SLAB	57	CY
ARCHITECTURAL SURFACE(TEXTURED CONCRETE) FRACTURED RIB TEXTURE	620	SQFT
ARCHITECTURAL SURFACE(TEXTURED CONCRETE) FRACTURED RIB SPLIT SLATE TEXTURE	9,550	SQFT
PTFE SPHERICAL BEARING	8	EA
BAR REINFORCING STEEL (BRIDGE)	444,000	LB
WATERPROOFING AND COVER	5,820	SQFT
FURNISH STRUCTURAL STEEL (BRIDGE)	1,103,755	LB
ERECT STRUCTURAL STEEL (BRIDGE)	1,103,755	LB
CLEAN AND PAINT STRUCTURAL STEEL	LUMP	SUM
MINOR CONCRETE (GUTTER)	126	LF
MISCELLANEOUS METAL (BRIDGE)	3,442	LB
BRIDGE DECK DRAINAGE SYSTEM	2,518	LB
CABLE RAILING	147	LF
CONCRETE BARRIER (TYPE 742)	126	LF
CONCRETE BARRIER (TYPE 60D MODIFIED)	371	LF

GENERAL NOTES

DESIGN:
1. "MANUAL FOR RAILWAY ENGINEERING" A.R.E.M.A 2010 EDITION.
2. BNSF RAILWAY-UNION PACIFIC RAILROAD, "GUIDELINES FOR RAILROAD GRADE SEPARATION PROJECTS" - 2007
3. STEEL CONSTRUCTION MANUAL - AISC 13th EDITION.
4. BRIDGE WELDING CODE AWS D1.5-2008
5. BRIDGE DESIGN SPECIFICATIONS" LFD VERSION, APRIL 2000 (1996 16th Edition AASHTO with Interims and Revisions by CALTRANS)

SEISMIC DESIGN: AREMA Chapter 9, Seismic Design for Railway Structures

LIVE LOADING: COOPER E-80 with Diesel Impact and Alternate Live Load

SHORING: All Shoring shall conform to UPRR Guidelines for Temporary Shoring

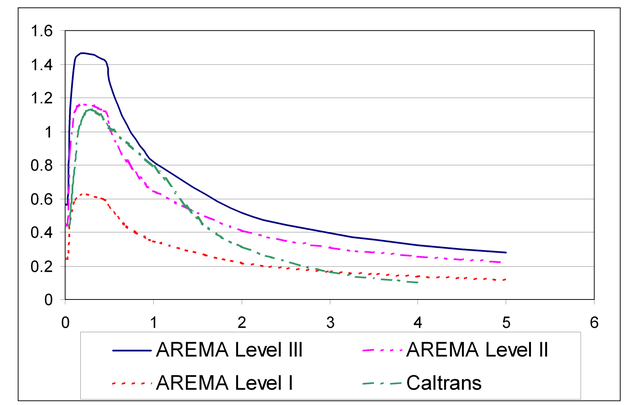

REINFORCED CONCRETE:
Load Factor Design
f_y = 60,000 psi n = 8.04

STRUCTURAL STEEL:
Service Load Design
1. All main member structural steel shall be ASTM A709 Grade 50. Other structural steel may be ASTM A572 Grade 50, except sidewalk checkered plates and flashing which may be ASTM A36 galvanized steel, and deck plates, which shall be ASTM A709 Grade 36. Anchor Rods shall conform to ASTM F1554; and shall be galvanized per ASTM A123. Anchor Rod Washers shall be zinc coated per ASTM A153.
2. Unless noted otherwise, HS bolts, including nuts and washers shall be ⅞" Ø ASTM A325X for slip critical connections "SC Class B" Type 1 Bolts with bolt heads toward the outside or the underside of the bridge.
3. The bottom flanges and lower half portions of the webs of through plate girders, all floor beams, and end floor beams shall meet the requirements for fracture critical members. Through plate girders, all floor beams, and end floor beams are considered "main" members. Primary components of "main" members are flanges, webs, transverse stiffeners, bearing stiffeners, gussets, shear tabs, and floor beam hangers. All members not designated as FCM or Main Members are considered Secondary Members.
4. For SMAW welding process, electrodes shall be E70XX unless noted otherwise. Minimum size of fillet weld shall be based on AWSD 1.5.

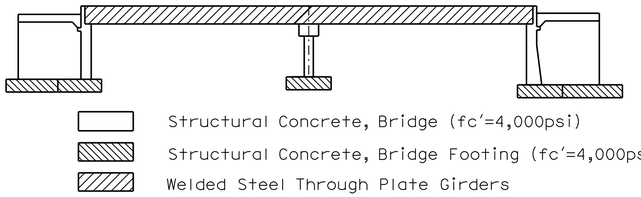

CONCRETE STRENGTH AND TYPE LIMITS

No Scale

PILE DATA TABLE

	Location	Pile Type	Nominal Resistance		Cut-off Elevations (ft)	Design Tip Elevation (ft)	Specified Tip Elevation (ft)
			Compression	Tension			
	Abut 1	HP14x89	400 kips	0	847.1	777 (1)	777 (3)
	Bent 2	HP14x89	315 kips	205 Kips	843.5	783.5(1) 771.5(2)	771.5 (3)
✳	Abut 3	HP14x89	400 kips	0	837.8	768 (1)	768 (3)
	Abut 3 Wingwall	HP14x89	330 kips	0	834.5	769.5 (1)	769.5 (3)

NOTE: Design tip elevations are controlled by the following demands:
(1) Compression
(2) Tension
(3) Specified tip elevation shall not be raised above the design tip elevations.

✳ Piles at bent shall be ASTM A572 Grade 50

1 REVISED PER ADDENDUM No. 1 DATED NOVEMBER 8, 2011

	BY	CHECKED
DESIGN	B. Addlespurger	G. Slocum
DETAILS	G. Hallstrom	G. Slocum
QUANTITIES	T. Sanderson	R. Anderson

STATE OF CALIFORNIA
DEPARTMENT OF TRANSPORTATION

DIVISION OF ENGINEERING SERVICES
STRUCTURE DESIGN
DESIGN BRANCH 10

BRIDGE NO. 56-0839
POST MILE 19.39

PACHAPPA UP (REPLACE)
INDEX TO PLANS

STRUCTURES DESIGN DETAIL SHEET (ENGLISH) (REV. 10/25/05)

ORIGINAL SCALE IN INCHES FOR REDUCED PLANS 0 1 2 3

CU 08
EA 448401

DISREGARD PRINTS BEARING EARLIER REVISION DATES

REVISION DATES: 06-01-10 7-08-10 9-07-10 9-29-10 11-04-10 6-14-11 10-25-11

SHEET 2 OF 44

FILE => 560839aitp02.add

USERNAME => s126614 DATE PLOTTED => 08-NOV-2011 TIME PLOTTED => 11:34

DIST	COUNTY	ROUTE	POST MILES TOTAL PROJECT	SHEET No	TOTAL SHEETS
08	Riv	91	15.6/21.6	1921	2028

REGISTERED CIVIL ENGINEER 11-30-10 DATE

4-25-11
PLANS APPROVAL DATE

The State of California or its officers or agents shall not be responsible for the accuracy or completeness of electronic copies of this plan sheet.

REGISTERED PROFESSIONAL ENGINEER HUAN D. VU No. C60696 Exp. 12/31/10 CIVIL STATE OF CALIFORNIA

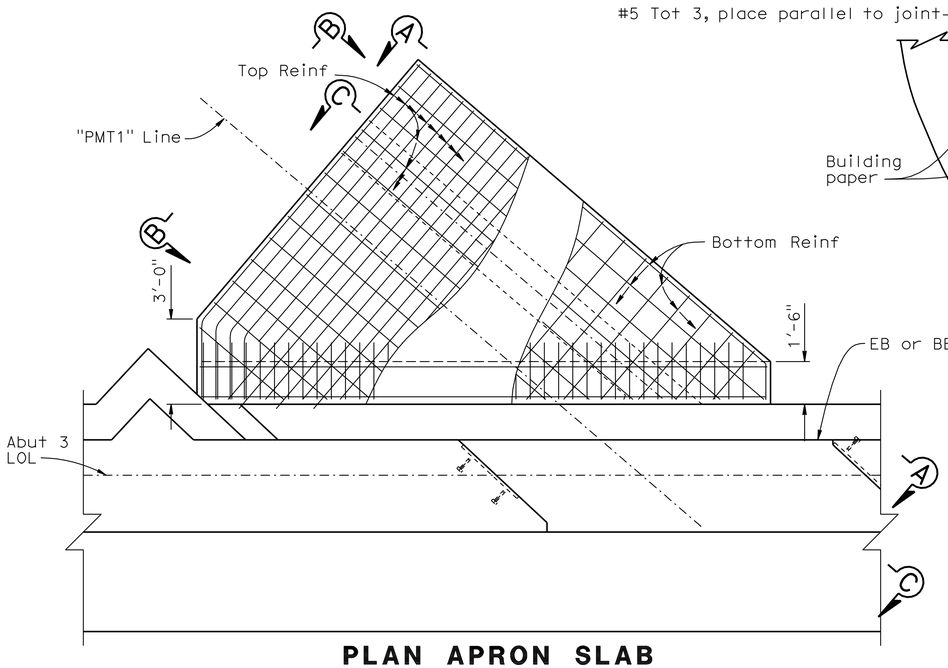

PLAN APRON SLAB

3/8" = 1'-0"

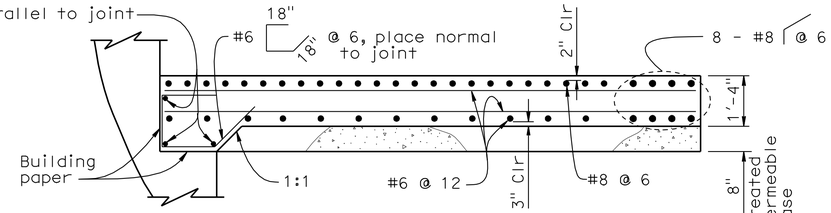

PART VIEW A-A

1/2" = 1'-0"

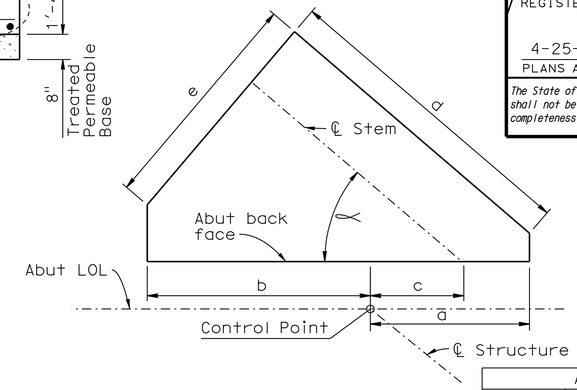

APRON SLAB LAYOUT

NO SCALE

APRON SLAB LAYOUT TABLE						
Location	a	b	c	d	e	∝
Abut 1	8.25	12.01	3.28	16.60	12.00	44°10'02"
Abut 3	5.30	17.18	-0.20	19.35	12.00	39°23'34"

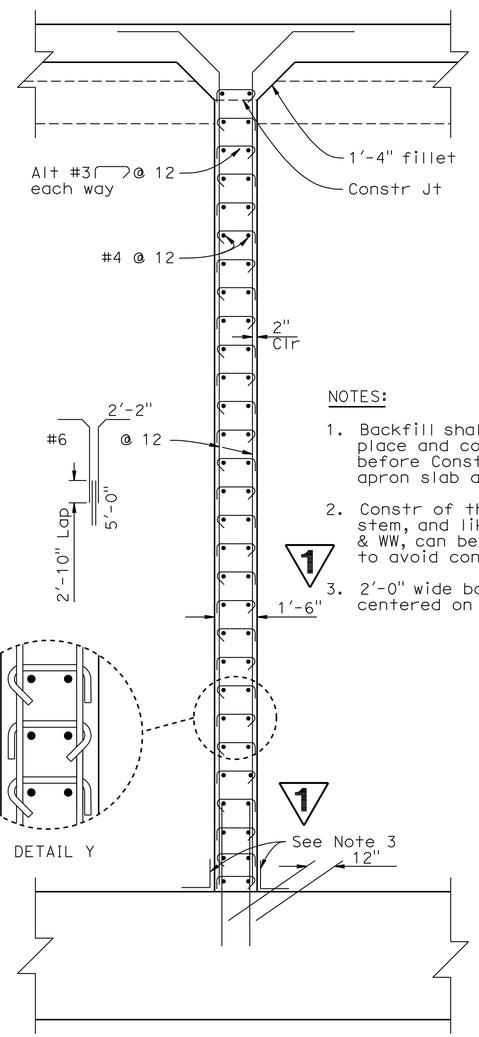

SECTION B-B

3/8" = 1'-0"

NOTES:

1. Backfill shall be in place and compacted before Constr the apron slab and fillet.
2. Constr of the Apron slab stem, and likely the Abut & WW, can be done in lifts, to avoid confined spaces.
3. 2'-0" wide band of dampproofing centered on the joint.

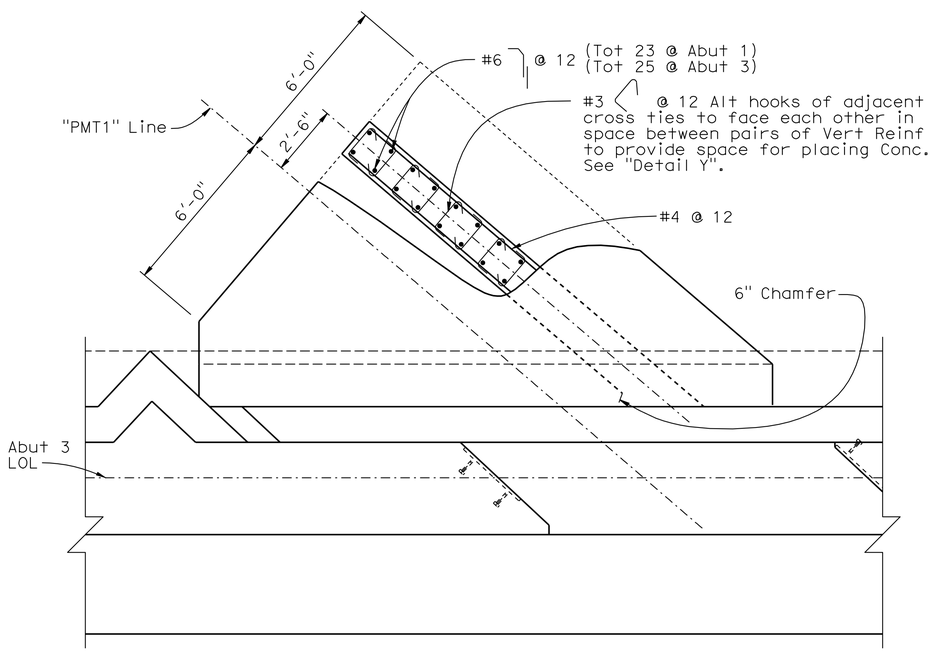

PLAN LAYOUT AND STEM

3/8" = 1'-0"

Abut 3 shown, Abut 1 similar

NOTE:
THE CONTRACTOR SHALL VERIFY ALL CONTROLLING FIELD DIMENSIONS BEFORE ORDERING OR FABRICATING ANY MATERIAL.

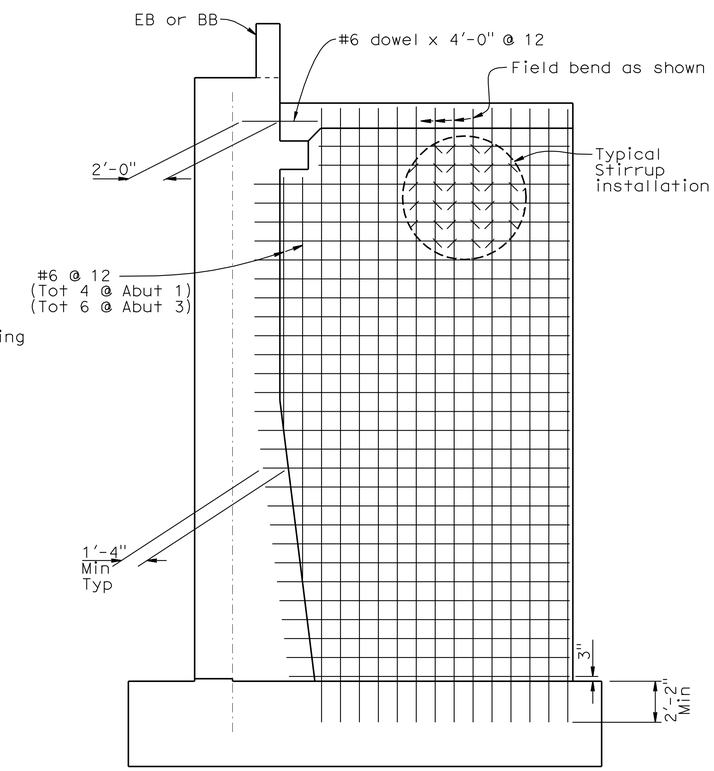

VIEW C-C

1/4" = 1'-0"

Abut 3 shown, Abut 1 similar

1 REVISED PER ADDENDUM No. 1 DATED NOVEMBER 8, 2011

	BY	CHECKED
DESIGN	B. Addlespurger	G. Slocum
DETAILS	J. Yang	G. Slocum
QUANTITIES	T. Sanderson	R. Anderson

STATE OF CALIFORNIA
DEPARTMENT OF TRANSPORTATION

DIVISION OF ENGINEERING SERVICES
STRUCTURE DESIGN
DESIGN BRANCH 10

BRIDGE NO. 56-0839
POST MILE 19.39

PACHAPPA UP (REPLACE)
APRON SLAB DETAILS

STRUCTURES DESIGN DETAIL SHEET (ENGLISH) (REV. 10/25/05)

ORIGINAL SCALE IN INCHES FOR REDUCED PLANS 0 1 2 3

CU 08
EA 448401

DISREGARD PRINTS BEARING EARLIER REVISION DATES 03-05-10 03-12-09 10-25-11

REVISION DATES

SHEET 11 OF 44

FILE => 560839gasdt11.add

USERNAME => s126614 DATE PLOTTED => 08-NOV-2011 TIME PLOTTED => 11:34

DIST	COUNTY	ROUTE	POST MILES TOTAL PROJECT	SHEET No	TOTAL SHEETS
08	Riv	91	15.6/21.6	1926	2028

REGISTERED CIVIL ENGINEER 11-30-10 DATE

4-25-11
PLANS APPROVAL DATE

REGISTERED PROFESSIONAL ENGINEER HUAN D. VU No. C60696 Exp. 12/31/10 CIVIL STATE OF CALIFORNIA

The State of California or its officers or agents shall not be responsible for the accuracy or completeness of electronic copies of this plan sheet.

NOTES:

1. For Section B-B and Pier Wall Cap Details see "BENT DETAILS" sheet.
2. The placement of horizontal reinforcement shall clear any construction joint by 2" Min.
3. For "Detail X" see "BENT DETAILS" sheet.
4. For elevations see "PTFE/ SPHERICAL ANCHORAGE DETAILS" sheet.
5. For Insert Plate details see "SHEAR KEY BEAM DETAILS" sheet.
6. Reinf is Sym to ℄ structure. Not all Reinf shown for clarity.
7. Recess to match fit Shear Key Beam, see "SHEAR KEY BEAM LAYOUT" sheet.

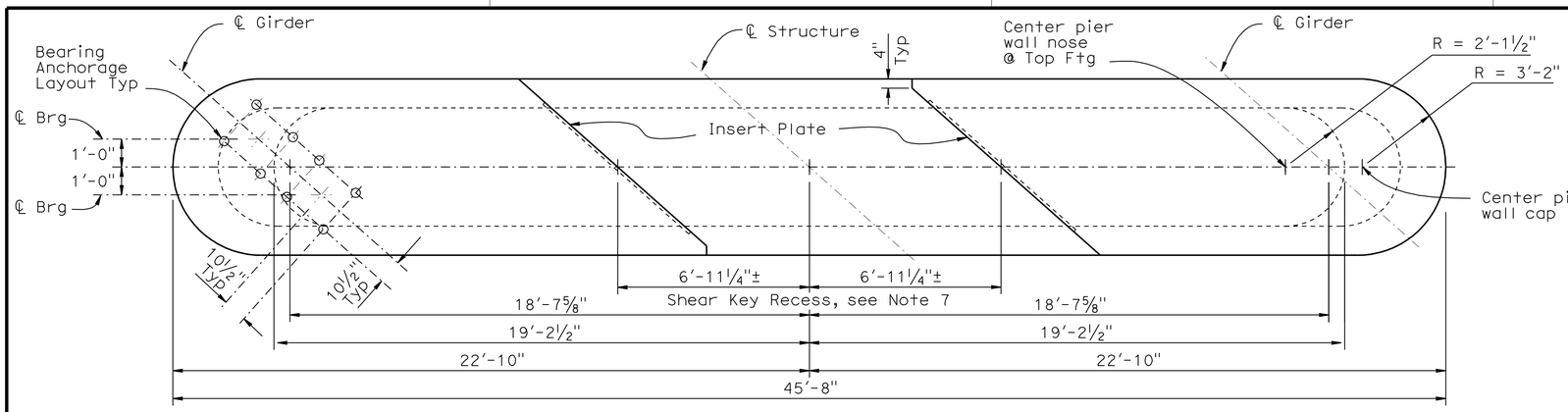

PLAN

⅜" = 1'-0"

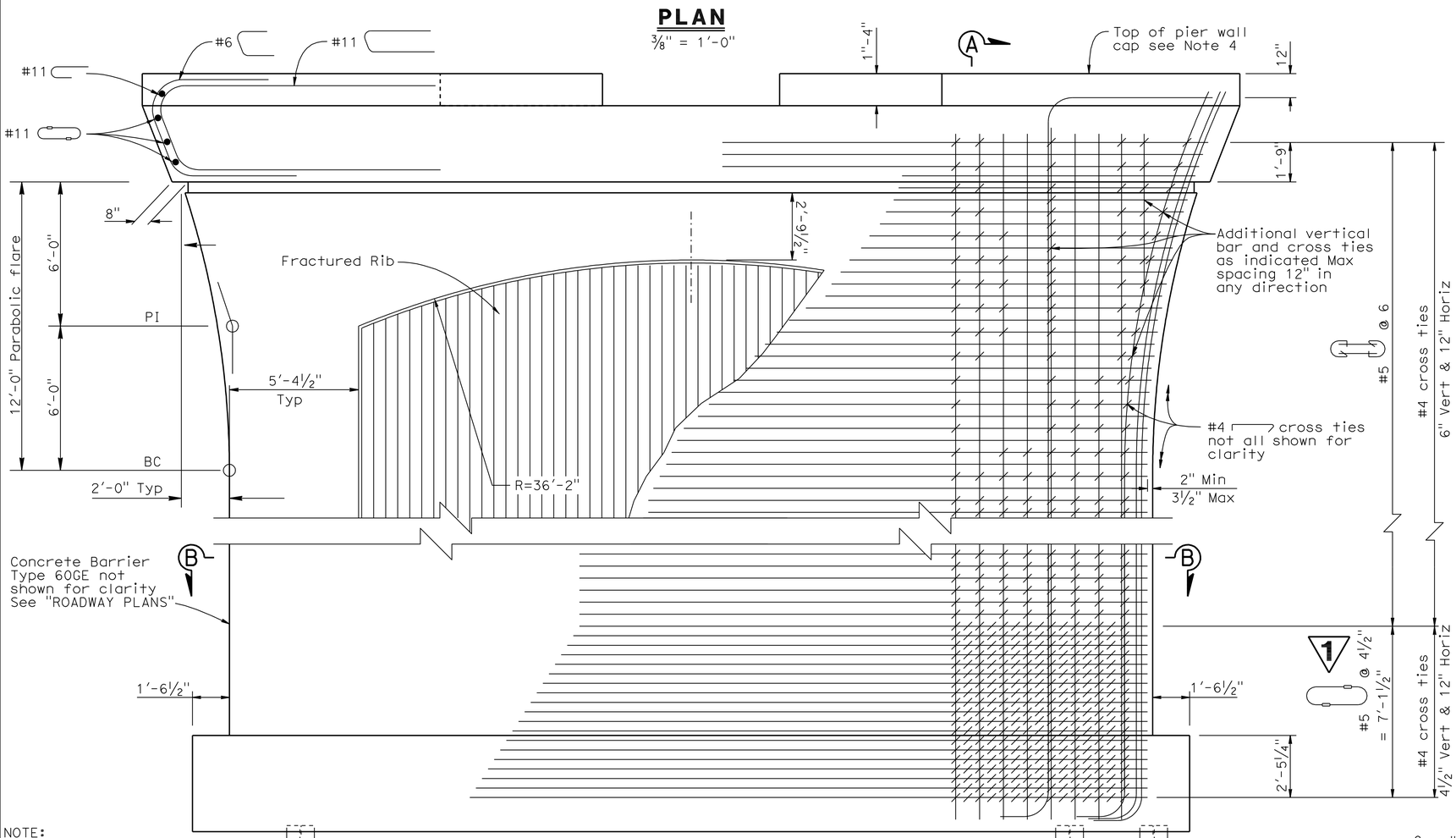

NOTE:
THE CONTRACTOR SHALL VERIFY ALL CONTROLLING FIELD DIMENSIONS BEFORE ORDERING OR FABRICATING ANY MATERIAL.

ELEVATION

⅜" = 1'

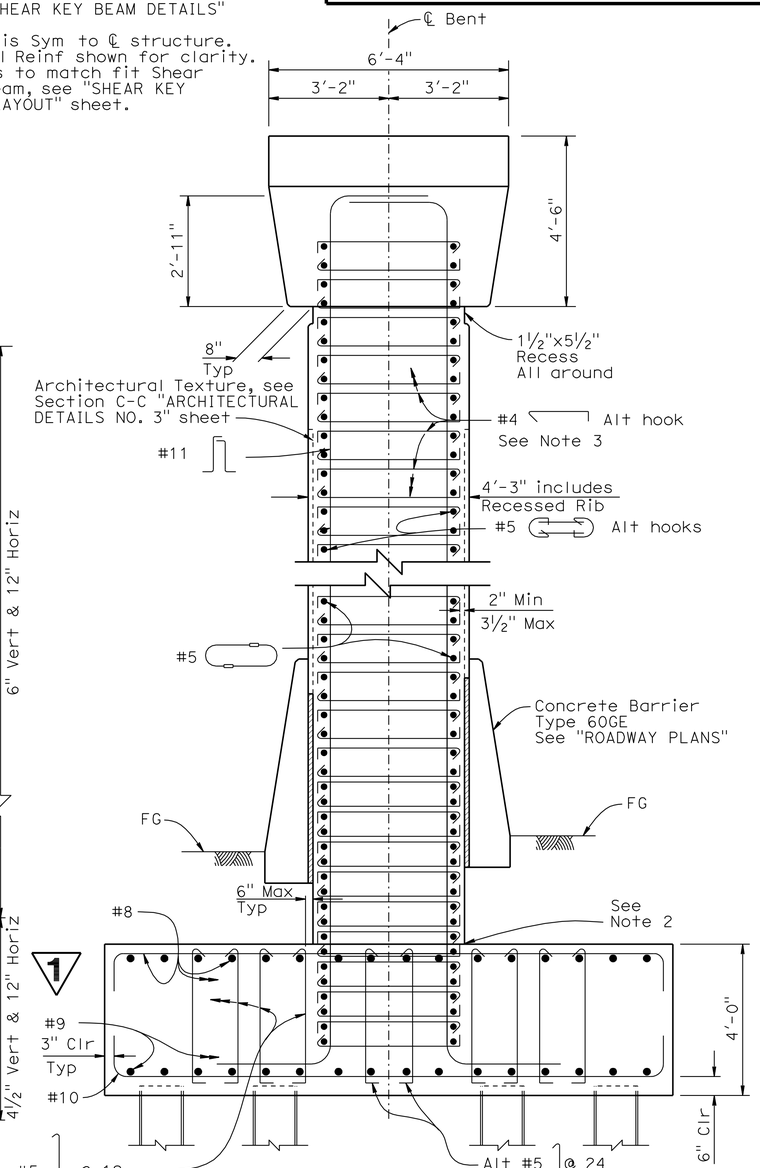

SECTION A-A

½" = 1'

1 REVISED PER ADDENDUM No. 1 DATED NOVEMBER 8, 2011

	BY	CHECKED
DESIGN	B. Addlespurger	G. Slocum
DETAILS	J. Yang	G. Slocum
QUANTITIES	T. Sanderson	R. Anderson

STATE OF CALIFORNIA
DEPARTMENT OF TRANSPORTATION

DIVISION OF ENGINEERING SERVICES
STRUCTURE DESIGN
DESIGN BRANCH 10

BRIDGE NO. 56-0839
POST MILE 19.39

PACHAPPA UP (REPLACE)
BENT LAYOUT

STRUCTURES DESIGN DETAIL SHEET (ENGLISH) (REV. 10/25/05)

ORIGINAL SCALE IN INCHES FOR REDUCED PLANS 0 1 2 3

CU 08
EA 448401

DISREGARD PRINTS BEARING EARLIER REVISION DATES

REVISION DATES: 01-11-10 05-12-10 6-04-10 8-30-10 9-28-10 10-25-11

SHEET 16 OF 44

FILE => 560839hb_lo16.add

USERNAME => s6121614 DATE PLOTTED => 08-NOV-2011 TIME PLOTTED => 11:34

DIST	COUNTY	ROUTE	POST MILES TOTAL PROJECT	SHEET No	TOTAL SHEETS
08	Riv	91	15.6/21.6	1927	2028

REGISTERED CIVIL ENGINEER 11-30-10 DATE

4-25-11
PLANS APPROVAL DATE

REGISTERED PROFESSIONAL ENGINEER HUAN D. VU No. C60696 Exp. 12/31/10 CIVIL STATE OF CALIFORNIA

The State of California or its officers or agents shall not be responsible for the accuracy or completeness of electronic copies of this plan sheet.

NOTES:

1. For location of "Section B-B" and other details, see "BENT LAYOUT" sheet.
2. Adjust location to accommodate bearing anchorage.
3. Reinf is Sym to ℄ Structure. Not all Reinf shown for clarity.
4. All ties at bar intersections to hook all bars. All bars to be adjusted for positive contact and snug fit.
5. Steel pile anchor shown on "Abutment 1 Footing Details" sheet.
6. One additional Bar to be placed at the last pile rows.
7. Ten additional Bars to be placed within 8'-9" from end of footing. Bundle the end footing bar.

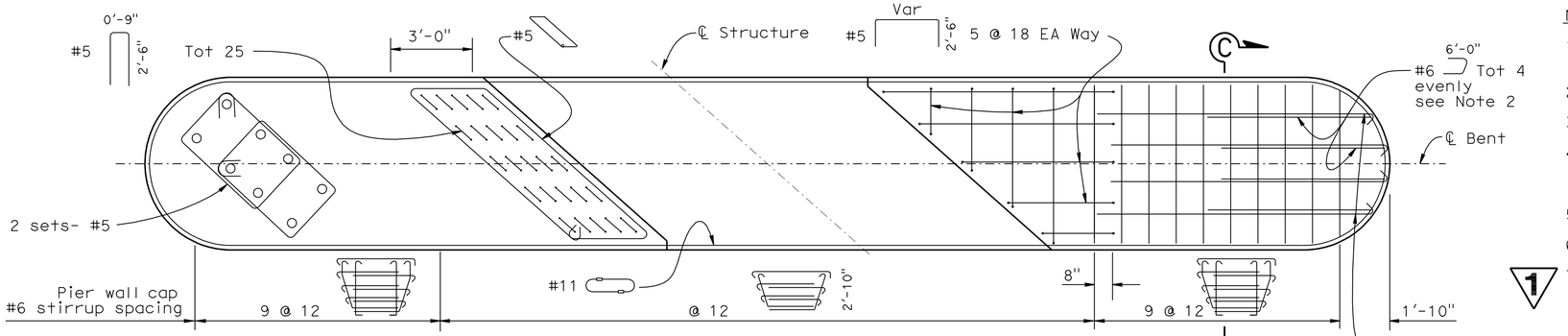

SECTION AT PIER WALL CAP

3/8" = 1'-0"

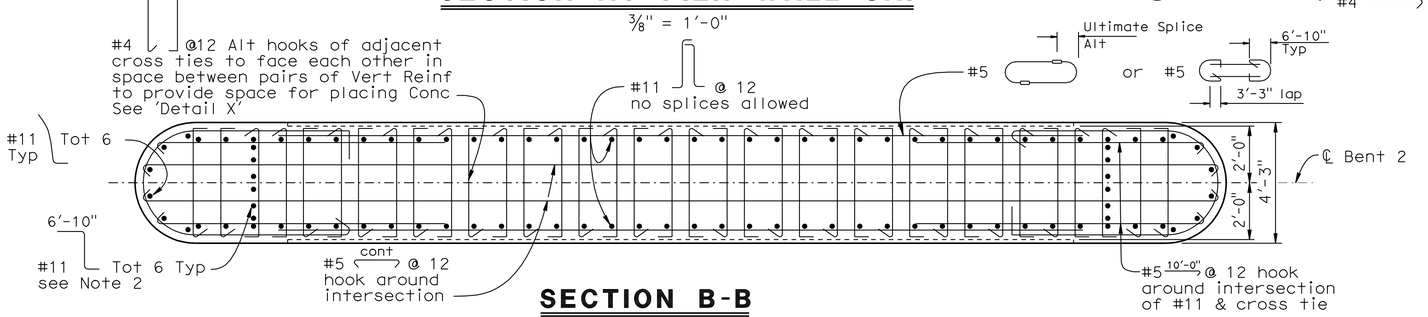

SECTION B-B

3/8" = 1'-0"

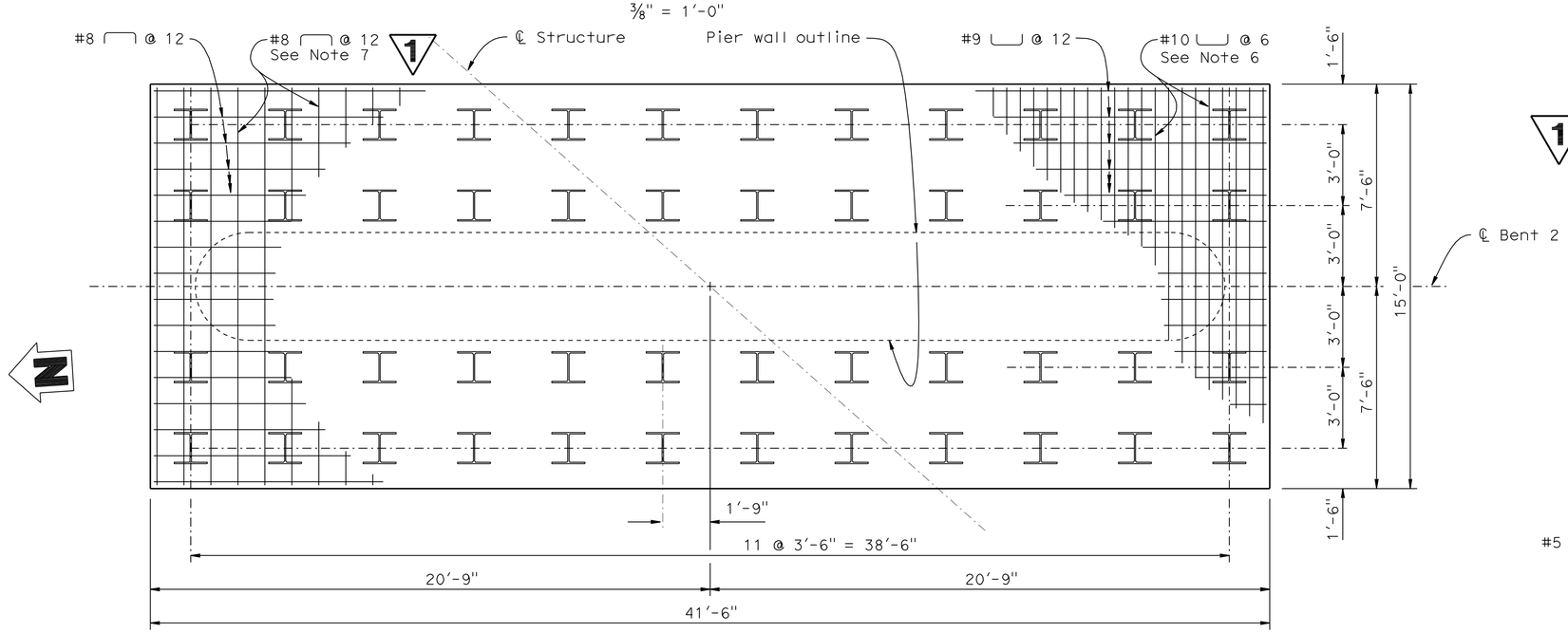

TOP MAT REINFORCEMENT

FOOTING PLAN

3/8" = 1'-0"

BOTTOM MAT REINFORCEMENT

NOTE:
THE CONTRACTOR SHALL VERIFY ALL CONTROLLING FIELD DIMENSIONS BEFORE ORDERING OR FABRICATING ANY MATERIAL.

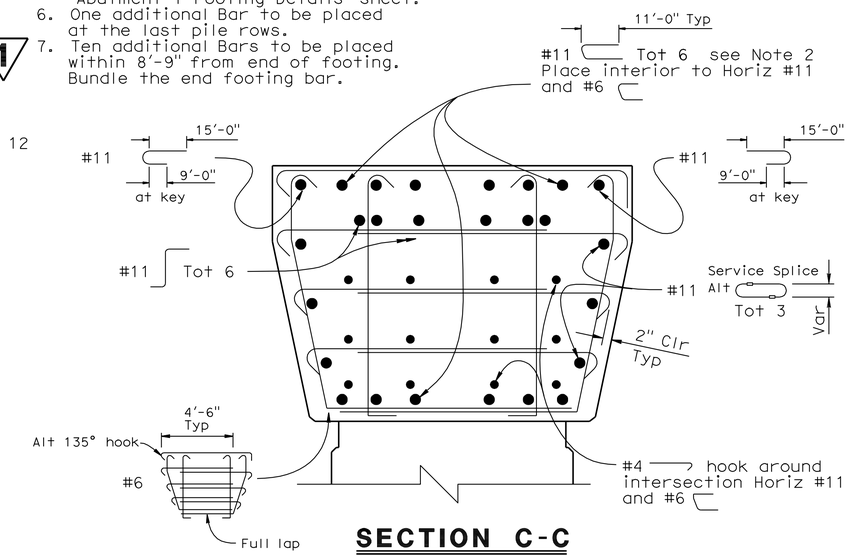

SECTION C-C

3/4" = 1'-0"

1 REVISED PER ADDENDUM No. 1 DATED NOVEMBER 8, 2011

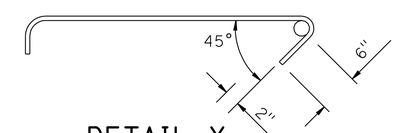

DETAIL X

NO SCALE

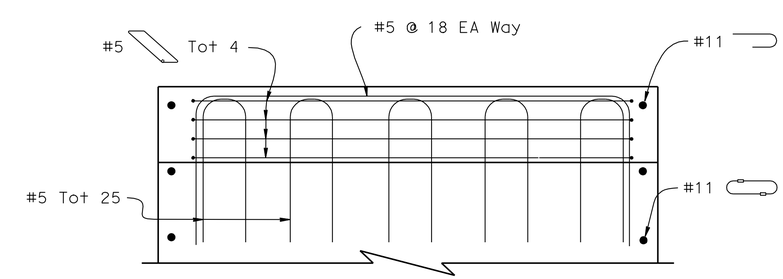

KEY SECTION

3/4" = 1'-0"

DESIGN	BY B. Addlespurger	CHECKED G. Slocum	
DETAILS	BY J. Yang	CHECKED G. Slocum	
QUANTITIES	BY T. Sanderson	CHECKED R. Anderson	

STATE OF CALIFORNIA
DEPARTMENT OF TRANSPORTATION

DIVISION OF ENGINEERING SERVICES
STRUCTURE DESIGN
DESIGN BRANCH 10

BRIDGE NO. 56-0839
POST MILE 19.39

PACHAPPA UP (REPLACE)
BENT DETAILS

STRUCTURES DESIGN DETAIL SHEET (ENGLISH) (REV. 10/25/05)

ORIGINAL SCALE IN INCHES FOR REDUCED PLANS 0 1 2 3

CU 08
EA 448401

DISREGARD PRINTS BEARING EARLIER REVISION DATES

REVISION DATES: 01-11-10 6-04-10 9-28-10 10-25-11

SHEET 17 OF 44

FILE => 560839hbdt17.add

USERNAME => s12614 DATE PLOTTED => 08-NOV-2011 TIME PLOTTED => 11:34

DIST	COUNTY	ROUTE	POST MILES TOTAL PROJECT	SHEET No	TOTAL SHEETS
08	Riv	91	15.6/21.6	1941	2028

REGISTERED CIVIL ENGINEER 11-30-10 DATE

4-25-11
PLANS APPROVAL DATE

The State of California or its officers or agents shall not be responsible for the accuracy or completeness of electronic copies of this plan sheet.

REGISTERED PROFESSIONAL ENGINEER HUAN D. VU No. C60696 Exp. 12/31/10 CIVIL STATE OF CALIFORNIA

NOTE: EPDM=Ethylene-propylene-diene-monomer

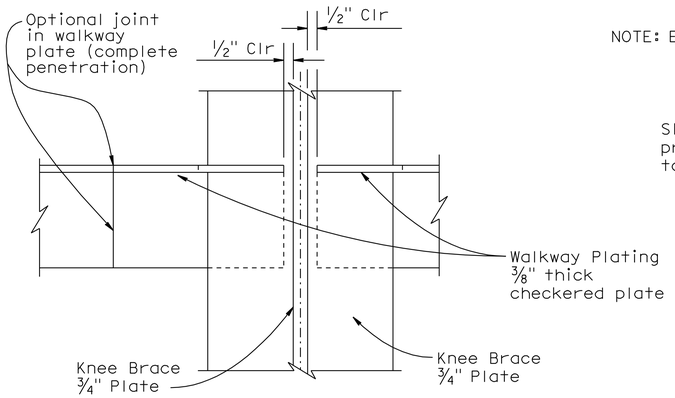

SECTION E-E
3"=1'-0"

NOTES:

1. Weld all around with ⅜" fillet weld in 1"Ø hole in plate. Space holes @ 1'-3" Max
2. For location of "Section A-A" thru "Section D-D", see "DECK PLATING & SIDEWALK LAYOUT" sheet.

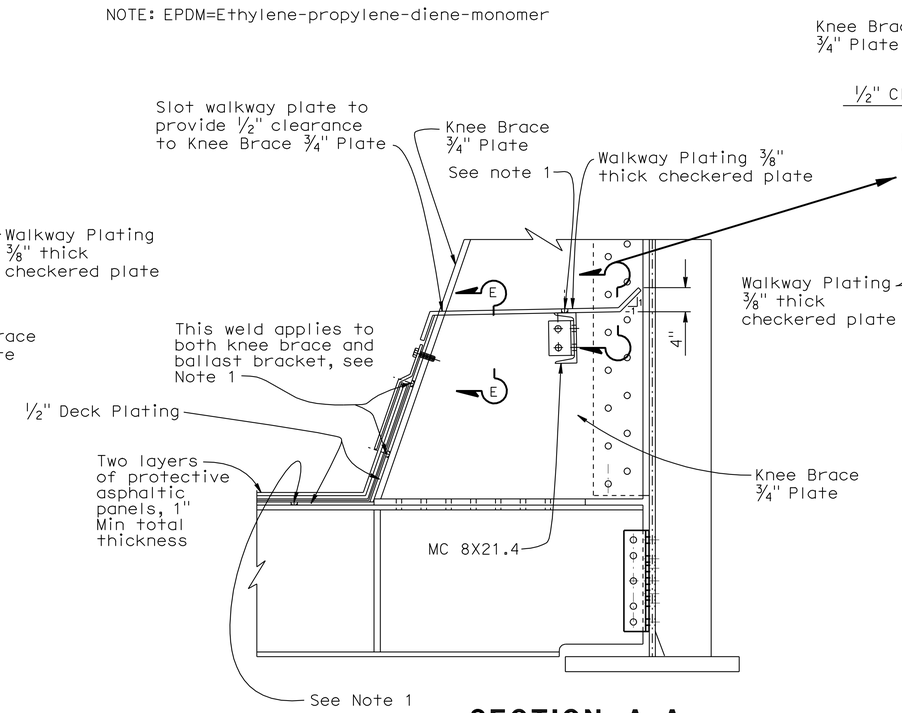

SECTION A-A
1"=1'-0"

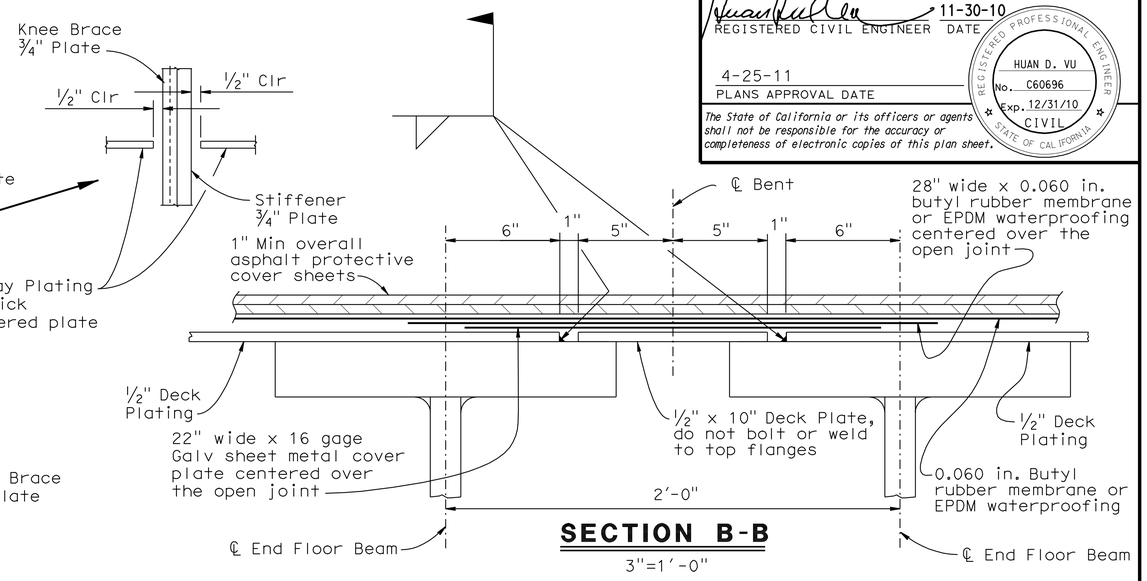

SECTION B-B
3"=1'-0"

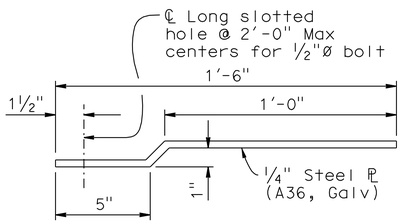

CURB FLASHING DETAIL
3"=1'-0"

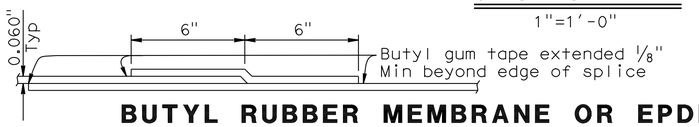

BUTYL RUBBER MEMBRANE OR EPDM WATERPROOFING SPLICE DETAIL
NO SCALE

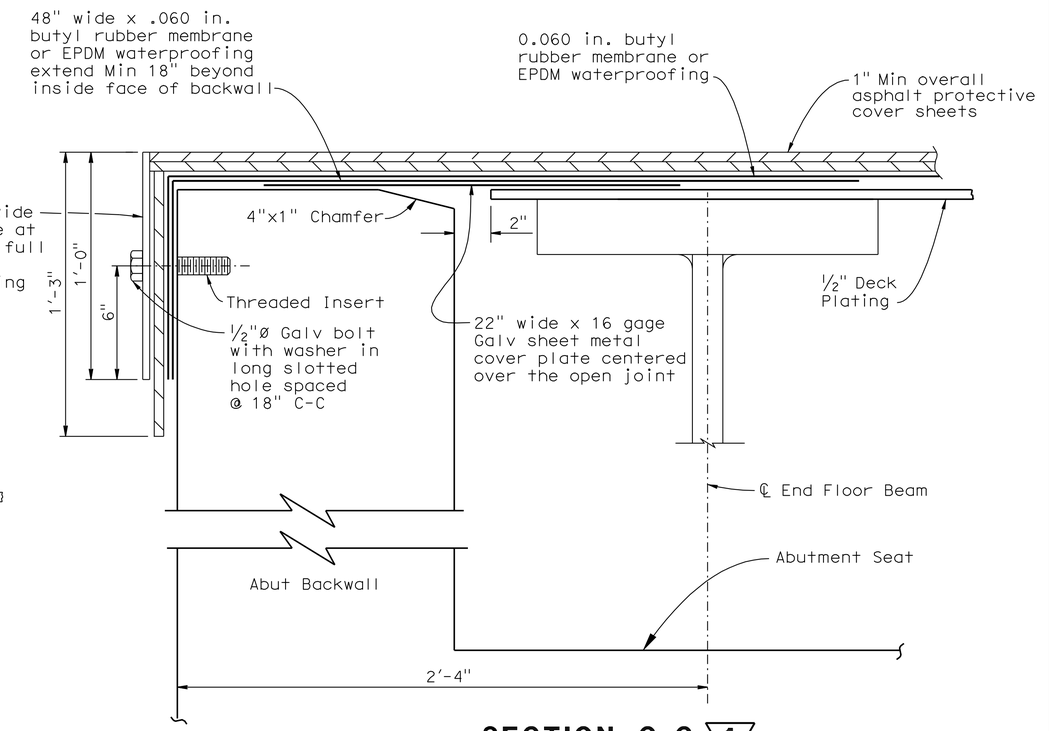

SECTION C-C 1
3"=1'-0"

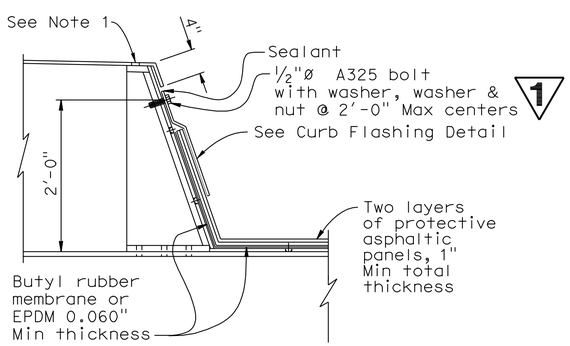

DECK SECTION
1"=1'-0"

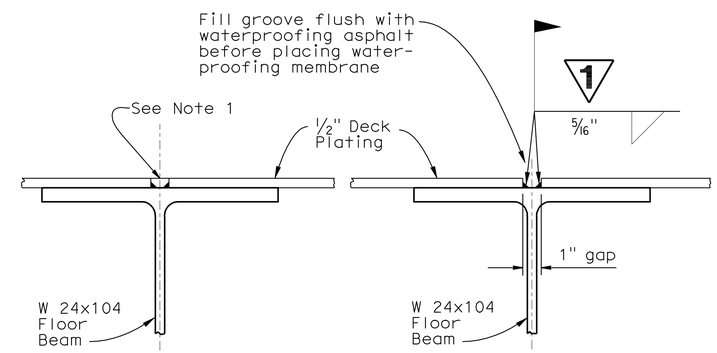

DECK PLATE CONTINUOUS SPLICE IN DECK PLATE

SECTION D-D
3"=1'-0"

NOTE:
THE CONTRACTOR SHALL VERIFY ALL CONTROLLING FIELD DIMENSIONS BEFORE ORDERING OR FABRICATING ANY MATERIAL.

1 REVISED PER ADDENDUM No. 1 DATED NOVEMBER 8, 2011

	BY	CHECKED
DESIGN	B. Addlespurger	G. Slocum
DETAILS	G. Hallstrom	G. Slocum
QUANTITIES	T. Sanderson	R. Anderson

STATE OF CALIFORNIA
DEPARTMENT OF TRANSPORTATION

DIVISION OF ENGINEERING SERVICES
STRUCTURE DESIGN
DESIGN BRANCH 10

BRIDGE NO. 56-0839
POST MILE 19.39

PACHAPPA UP (REPLACE)
DECK PLATING & SIDEWALK DETAILS NO. 1

STRUCTURES DESIGN DETAIL SHEET (ENGLISH) (REV. 10/25/05)

ORIGINAL SCALE IN INCHES FOR REDUCED PLANS 0 1 2 3

CU 08
EA 448401

DISREGARD PRINTS BEARING EARLIER REVISION DATES

REVISION DATES: 12-09-09, 3-11-10, 5-04-10, 5-26-10, 6-08-10, 7-16-10, 9-29-10, 10-25-11

SHEET 31 OF 44

FILE => 5608391gdtdecksidedt31.dgn

USERNAME => s121614 DATE PLOTTED => 08-NOV-2011 TIME PLOTTED => 11:34

DIST	COUNTY	ROUTE	POST MILES TOTAL PROJECT	SHEET No	TOTAL SHEETS
08	Riv	91	15.6/21.6	1983	2028

REGISTERED CIVIL ENGINEER 11-30-10 DATE

4-25-11
PLANS APPROVAL DATE

The State of California or its officers or agents shall not be responsible for the accuracy or completeness of electronic copies of this plan sheet.

REGISTERED PROFESSIONAL ENGINEER HUAN D. VU No. C60696 Exp. 12/31/10 CIVIL STATE OF CALIFORNIA

INDEX TO PLANS

Sheet No.	Title
1.	GENERAL PLAN
2.	INDEX TO PLANS
3.	FOUNDATION PLAN
4.	ABUTMENT 1 LAYOUT
5.	ABUTMENT 3 LAYOUT
6.	ABUTMENT DETAILS NO. 1
7.	ABUTMENT DETAILS NO. 2
8.	ABUTMENT DETAILS NO. 3
9.	ABUTMENT 1 FOOTING DETAILS
10.	ABUTMENT 3 FOOTING DETAILS
11.	APRON SLAB DETAILS
12.	ABUTMENT 1 WING WALL SOUTH
13.	BENT LAYOUT
14.	BENT DETAILS
15.	SHEAR KEY BEAM LAYOUT
16.	SHEAR KEY BEAM DETAILS
17.	TYPICAL SECTION
18.	GIRDER LAYOUT NO. 1
19.	GIRDER LAYOUT NO. 2
20.	GIRDER DETAILS NO. 1
21.	GIRDER DETAILS NO. 2
22.	GIRDER DETAILS NO. 3
23.	GIRDER DETAILS NO. 4
24.	GIRDER DETAILS NO. 5
25.	GIRDER DETAILS NO. 6
26.	GIRDER DETAILS NO. 7
27.	DECK PLATING AND SIDEWALK LAYOUT
28.	DECK PLATING AND SIDEWALK DETAILS NO. 1
29.	DECK PLATING AND SIDEWALK DETAILS NO. 2
30.	ARCHITECTURAL DETAILS NO. 1
31.	ARCHITECTURAL DETAILS NO. 2
32.	ARCHITECTURAL DETAILS NO. 3
33.	PTFE/SPHERICAL EXPANSION BEARING DETAILS
34.	PTFE/SPHERICAL FIXED BEARING DETAILS
35.	PTFE/SPHERICAL ANCHORAGE DETAILS
36.	DECK DRAINAGE LAYOUT AND DETAILS
37.	LOG OF TEST BORINGS SHEET 1 OF 3
38.	LOG OF TEST BORINGS SHEET 2 OF 3
39.	LOG OF TEST BORINGS SHEET 3 OF 3

STANDARD PLANS DATED MAY 2006

A10A	ACRONYMS AND ABBREVIATIONS (SHEET 1 OF 2)
A10B	ACRONYMS AND ABBREVIATIONS (SHEET 2 OF 2)
A10C	SYMBOLS (SHEET 1 OF 2)
A10D	SYMBOLS (SHEET 2 OF 2)
A62B	LIMITS OF PAYMENT FOR EXCAVATION AND BACKFILL-BRIDGE SURCHARGE AND WALL
A62C	LIMITS OF PAYMENT FOR EXCAVATION AND BACKFILL-BRIDGE
BO-3	BRIDGE DETAILS
B3-1	RETAINING WALL TYPE 1-H=4′ THROUGH 30′
B3-8	RETAINING WALL DETAILS NO. 1
B3-9	RETAINING WALL DETAILS NO. 2
B7-6	DECK DRAINS TYPES D-1 AND D-2
B11-47	CABLE RAILING

NOTE:
THE CONTRACTOR SHALL VERIFY ALL CONTROLLING FIELD DIMENSIONS BEFORE ORDERING OR FABRICATING ANY MATERIAL.

1

QUANTITIES

STRUCTURE EXCAVATION (BRIDGE)	2,821	CY
STRUCTURE BACKFILL (BRIDGE)	2,089	CY
PERVIOUS BACKFILL MATERIAL	162	CY
FURNISH STEEL PILING (HP 14 X 89)	17,311	LF
DRIVE STEEL PILE (HP 14 X 89)	243	EA
STRUCTURAL CONCRETE, BRIDGE FOOTING	590	CY
STRUCTURAL CONCRETE, BRIDGE	1,173	CY
STRUCTURAL CONCRETE, APRON SLAB	54	CY
ARCHITECTURAL SURFACE(TEXTURED CONCRETE) FRACTURED RIB TEXTURE	520	SQFT
ARCHITECTURAL SURFACE(TEXTURED CONCRETE) FRACTURED RIB SPLIT SLATE TEXTURE	5,861	SQFT
DRILL AND BOND DOWEL	7	LF
PTFE SPHERICAL BEARING	8	EA
BAR REINFORCING STEEL (BRIDGE)	301,766	LB
WATERPROOFING AND COVER	5,682	SQFT
FURNISH STRUCTURAL STEEL (BRIDGE)	1,064,660	LB
ERECT STRUCTURAL STEEL (BRIDGE)	1,064,660	LB
CLEAN AND PAINT STRUCTURAL STEEL	LUMP	SUM
MINOR CONCRETE (GUTTER)	142	LF
MISCELLANEOUS METAL (BRIDGE)	3,378	LB
BRIDGE DECK DRAINAGE SYSTEM	2,454	LB
CABLE RAILING	162	LF
CONCRETE BARRIER (TYPE 60D MODIFIED)	114	LF

GENERAL NOTES

DESIGN:
1. "MANUAL FOR RAILWAY ENGINEERING" A.R.E.M.A 2010 EDITION
2. BNSF RAILWAY-UNION PACIFIC RAILROAD, "GUIDELINES FOR RAILROAD GRADE SEPARATION PROJECTS" - 2007
3. STEEL CONSTRUCTION MANUAL-AISC 13th EDITION
4. BRIDGE WELDING CODE AWS D1.5-2008
5. BRIDGE DESIGN SPECIFICATIONS" LFD VERSION, APRIL 2000 (1996 16th Edition AASHTO with Interims and Revisions by CALTRANS)

SEISMIC DESIGN: AREMA Chapter 9, Seismic design for railway Structures

LIVE LOADING: COOPER E-80 with Diesel Impact and Alternate Live Load

SHORING: All shoring shall conform to UPRR Guidelines for Temporary Shoring

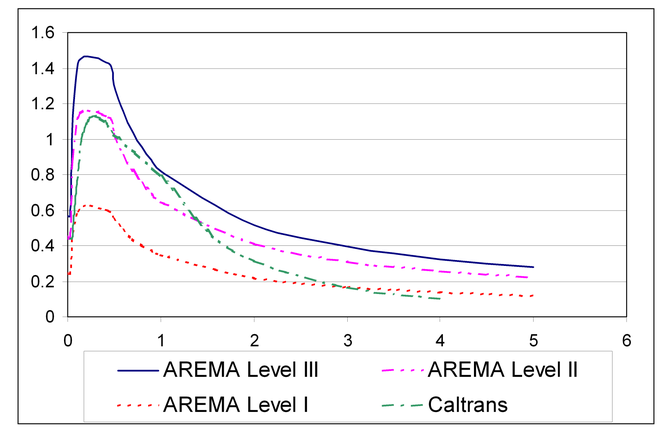

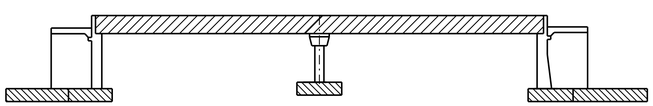

Structural Concrete, Bridge (fc′=4,000psi)

Structural Concrete, Bridge Footing (fc′=4,000psi)

Welded Steel Through Plate Girders

CONCRETE STRENGTH AND TYPE LIMITS

No Scale

REINFORCED CONCRETE: Load Factor Design
f_y = 60,000 psi n = 8.04

STRUCTURAL STEEL: Service Load Design

1. All main member structural steel shall be ASTM A709 Grade 50. Other structural steel may be ASTM A572 Grade 50, except sidewalk checkered plates and flashing which may be ASTM A36 galvanized steel, and deck plates, which shall be ASTM A709 Grade 36. Anchor Rods shall conform to ASTM F1554; and shall be galvanized per ASTM A123. Anchor Rod Washers shall be zinc coated per ASTM A153.
2. Unless noted otherwise, HS bolts, including nuts and washers shall be ⅞" Ø ASTM A325X for slip critical connections "SC Class B" Type 1 Bolts, with bolt heads toward the outside or the underside of the bridge.
3. The bottom flanges and lower half portions of the webs of through plate girders, all floor beams, and end floor beams shall meet the requirements for fracture critical members. Through plate girders, all floor beams, and end floor beams are considered "main" members. Primary components of "main" members are flanges, webs, transverse stiffeners, bearing stiffeners, gussets, shear tabs, and floor beam hangers. All members not designated as FCM or Main Members are considered Secondary Members.
4. For SMAW welding process, electrodes shall be E70XX unless noted otherwise. Minimum size of fillet weld shall be based on AWS D1.5.

PILE DATA TABLE

	Location	Pile Type	Nominal Resistance		Cut-off Elevations (ft)	Design Tip Elevation (ft)	Specified Tip Elevation (ft)
			Compression	Tension			
	Abut 1	HP14x89	400 kips	0	848.1	778 (1)	778 (3)
	Abut 1 Wing Wall South	HP14x89	180 kips	0	848.1	788 (1)	788
✳	Bent 2	HP14x89	315 kips	205 kips	844.8	784.8(1) 772.8(2)	772.8 (3)
	Abut 3	HP14x89	400 kips	0	837.8	768 (1)	768 (3)

NOTE: Design tip elevations are controlled by the following demands:
(1) Compression
(2) Tension
(3) Specified tip elevation shall not be raised above the design tip elevations.

✳ Piles at bent shall be ASTM A572 Grade 50

1 REVISED PER ADDENDUM No. 1 DATED NOVEMBER 8, 2011

	BY	CHECKED
DESIGN	B. Addlespurger	G. Slocum
DETAILS	G. Hallstrom	G. Slocum
QUANTITIES	T. Sanderson	R. Anderson

STATE OF CALIFORNIA DEPARTMENT OF TRANSPORTATION

DIVISION OF ENGINEERING SERVICES STRUCTURE DESIGN DESIGN BRANCH 10

BRIDGE NO. 56-0848
POST MILE 19.39

PACHAPPA UP (SHOOFLY)
INDEX TO PLANS

STRUCTURES DESIGN DETAIL SHEET (ENGLISH) (REV. 10/25/05)

ORIGINAL SCALE IN INCHES FOR REDUCED PLANS 0 1 2 3

CU 08
EA 448401

DISREGARD PRINTS BEARING EARLIER REVISION DATES

REVISION DATES: 11-16-09 11-14-10 6-04-10 7-16-10 8-18-10 9-08-10 9-30-10 11-04-10 6-14-11 10-25-11

SHEET 2 OF 39

FILE => 560848aitp02.add

USERNAME => s126614 DATE PLOTTED => 08-NOV-2011 TIME PLOTTED => 11:35

DIST	COUNTY	ROUTE	POST MILES TOTAL PROJECT	SHEET No	TOTAL SHEETS
08	Riv	91	15.6/21.6	1992	2028

REGISTERED CIVIL ENGINEER 11-30-10 DATE

4-25-11
PLANS APPROVAL DATE

The State of California or its officers or agents shall not be responsible for the accuracy or completeness of electronic copies of this plan sheet.

REGISTERED PROFESSIONAL ENGINEER HUAN D. VU No. C60696 Exp. 12/31/10 CIVIL STATE OF CALIFORNIA

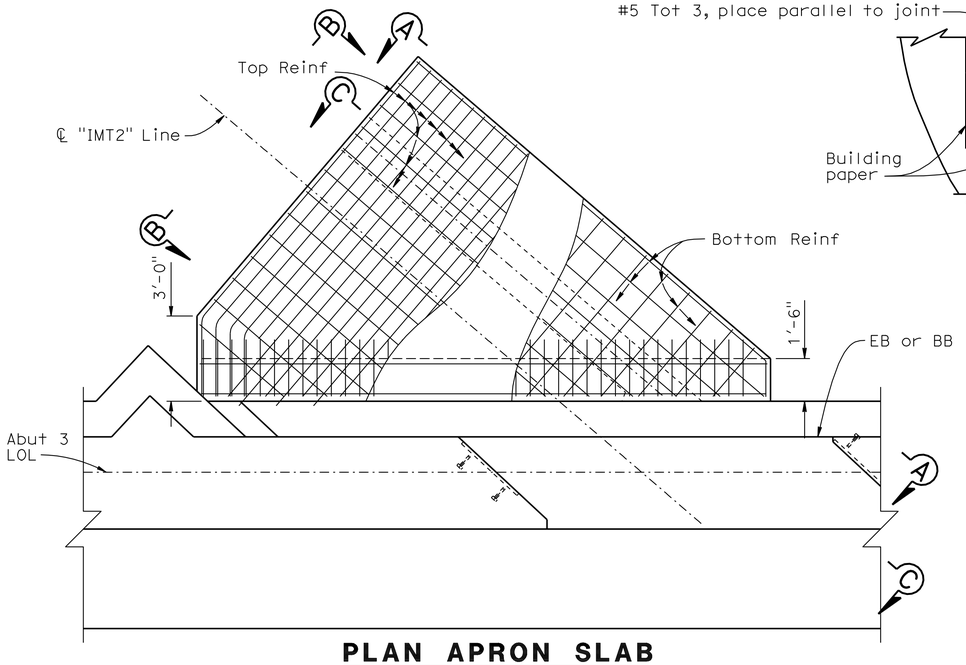

PLAN APRON SLAB

3/8" = 1'-0"

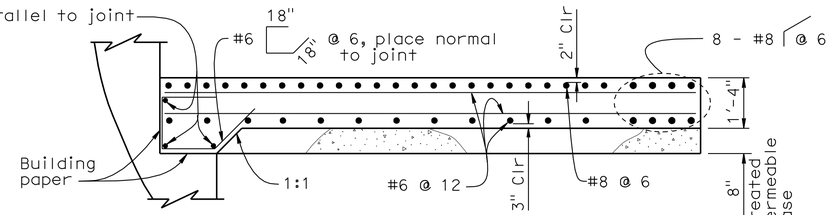

PART VIEW A-A

1/2" = 1'-0"

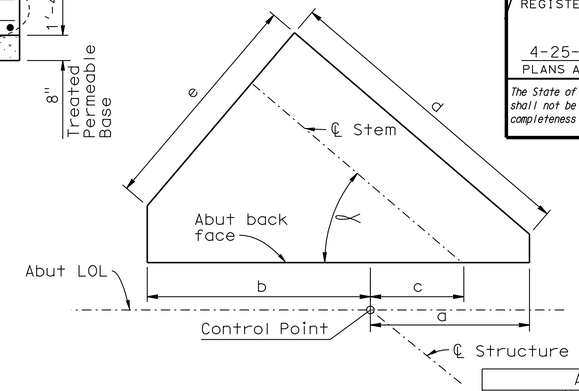

APRON SLAB LAYOUT

NO SCALE

APRON SLAB LAYOUT TABLE						
Location	a	b	c	d	e	∝
Abut 1	12.37	11.21	3.55	16.09	12.48	45°50'44"
Abut 3	4.91	16.66	-0.42	18.65	12.00	40°11'28"

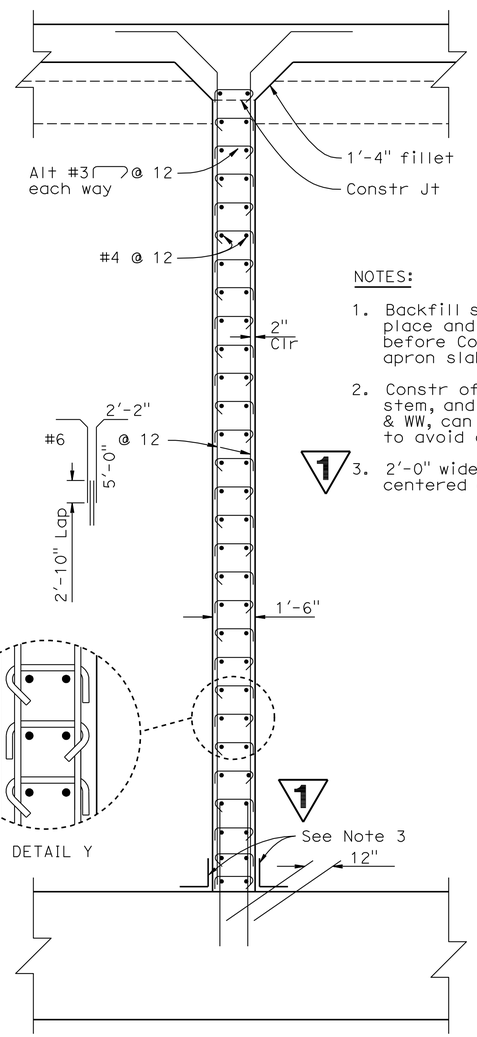

SECTION B-B

3/8" = 1'-0"

NOTES:

1. Backfill shall be in place and compacted before Constr the apron slab and fillet.
2. Constr of the Apron slab stem, and likely the Abut & WW, can be done in lifts, to avoid confined spaces.
3. 2'-0" wide band of dampproofing centered on the joint (1)

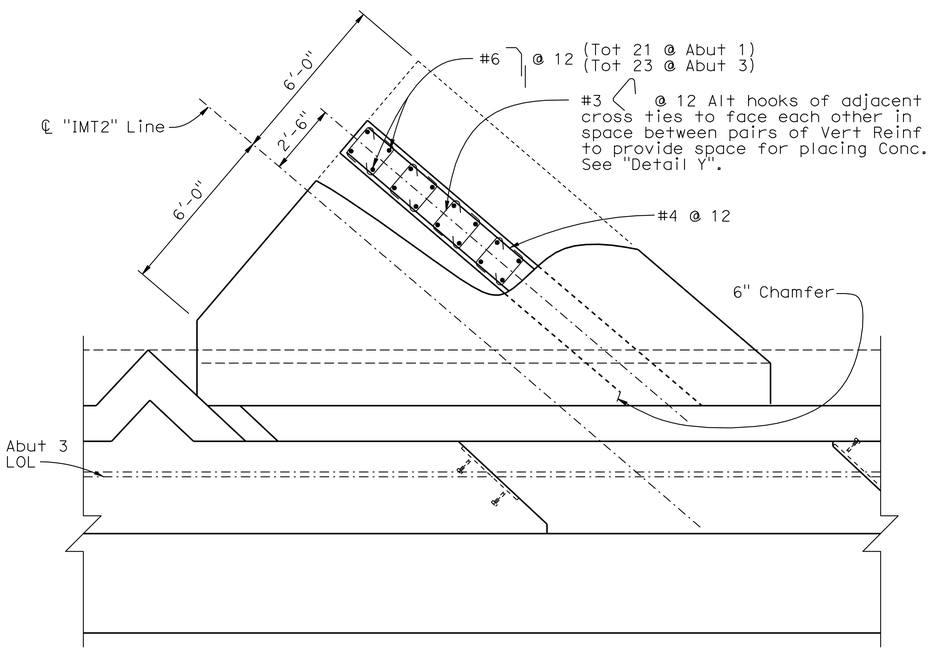

PLAN LAYOUT AND STEM

3/8" = 1'-0"
Abut 3 shown, Abut 1 similar

NOTE:
THE CONTRACTOR SHALL VERIFY ALL CONTROLLING FIELD DIMENSIONS BEFORE ORDERING OR FABRICATING ANY MATERIAL.

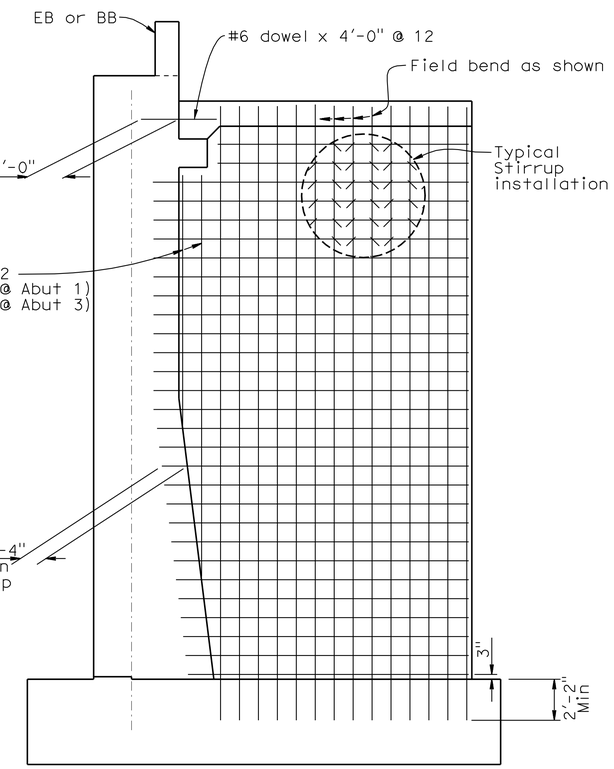

VIEW C-C

1/4" = 1'-0"
Abut 3 shown, Abut 1 similar

(1) **REVISED PER ADDENDUM No. 1 DATED NOVEMBER 8, 2011**

	BY	CHECKED
DESIGN	B. Addlespurger	G. Slocum
DETAILS	J. Yang	G. Slocum
QUANTITIES	T. Sanderson	R. Anderson

STATE OF CALIFORNIA
DEPARTMENT OF TRANSPORTATION

DIVISION OF ENGINEERING SERVICES
STRUCTURE DESIGN
DESIGN BRANCH 10

BRIDGE NO. 56-0848
POST MILE 19.39

PACHAPPA UP (SHOOFLY)
APRON SLAB DETAILS

STRUCTURES DESIGN DETAIL SHEET (ENGLISH) (REV. 10/25/05)

ORIGINAL SCALE IN INCHES FOR REDUCED PLANS 0 1 2 3

CU 08
EA 448401

DISREGARD PRINTS BEARING EARLIER REVISION DATES

REVISION DATES: 03-01-10 03-12-09 6-07-10 7-15-10 10-25-11

SHEET 11 OF 39

FILE => 560848grwdt11.add

USERNAME => s126614 DATE PLOTTED => 08-NOV-2011 TIME PLOTTED => 11:35

DIST	COUNTY	ROUTE	POST MILES TOTAL PROJECT	SHEET No	TOTAL SHEETS
08	Riv	91	15.6/21.6	1994	2028

REGISTERED CIVIL ENGINEER 11-30-10 DATE

4-25-11
PLANS APPROVAL DATE

The State of California or its officers or agents shall not be responsible for the accuracy or completeness of electronic copies of this plan sheet.

REGISTERED PROFESSIONAL ENGINEER HUAN D. VU No. C60696 Exp. 12/31/10 CIVIL STATE OF CALIFORNIA

NOTES:

1. For Section B-B and Pier Wall Cap Details see "BENT DETAILS" sheet.
2. The placement of horizontal reinforcement shall clear any construction joint by 2" Min.
3. See "Detail X" on "BENT DETAILS" sheet.
4. For elevations see "PTFE/ SPHERICAL ANCHORAGE DETAILS" sheet.
5. For Insert Plate details see "SHEAR KEY BEAM DETAILS" sheet.
6. Reinf is Sym to ℄ structure. Not all Reinf shown for clarity.
7. Recess to match fit Shear Key Beam, see "SHEAR KEY BEAM LAYOUT" sheet.

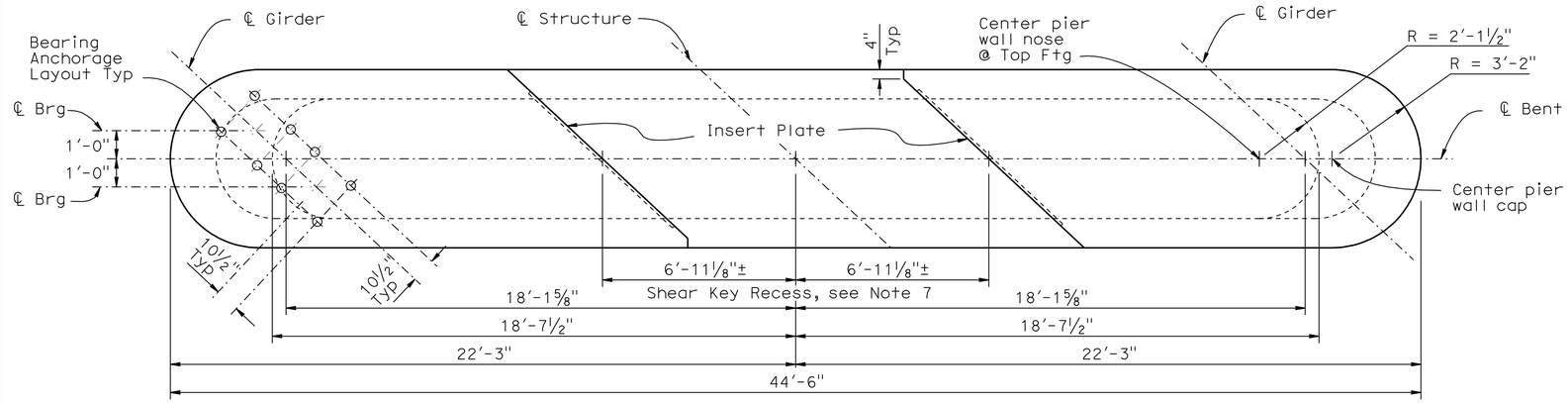

PLAN

⅜" = 1'-0"

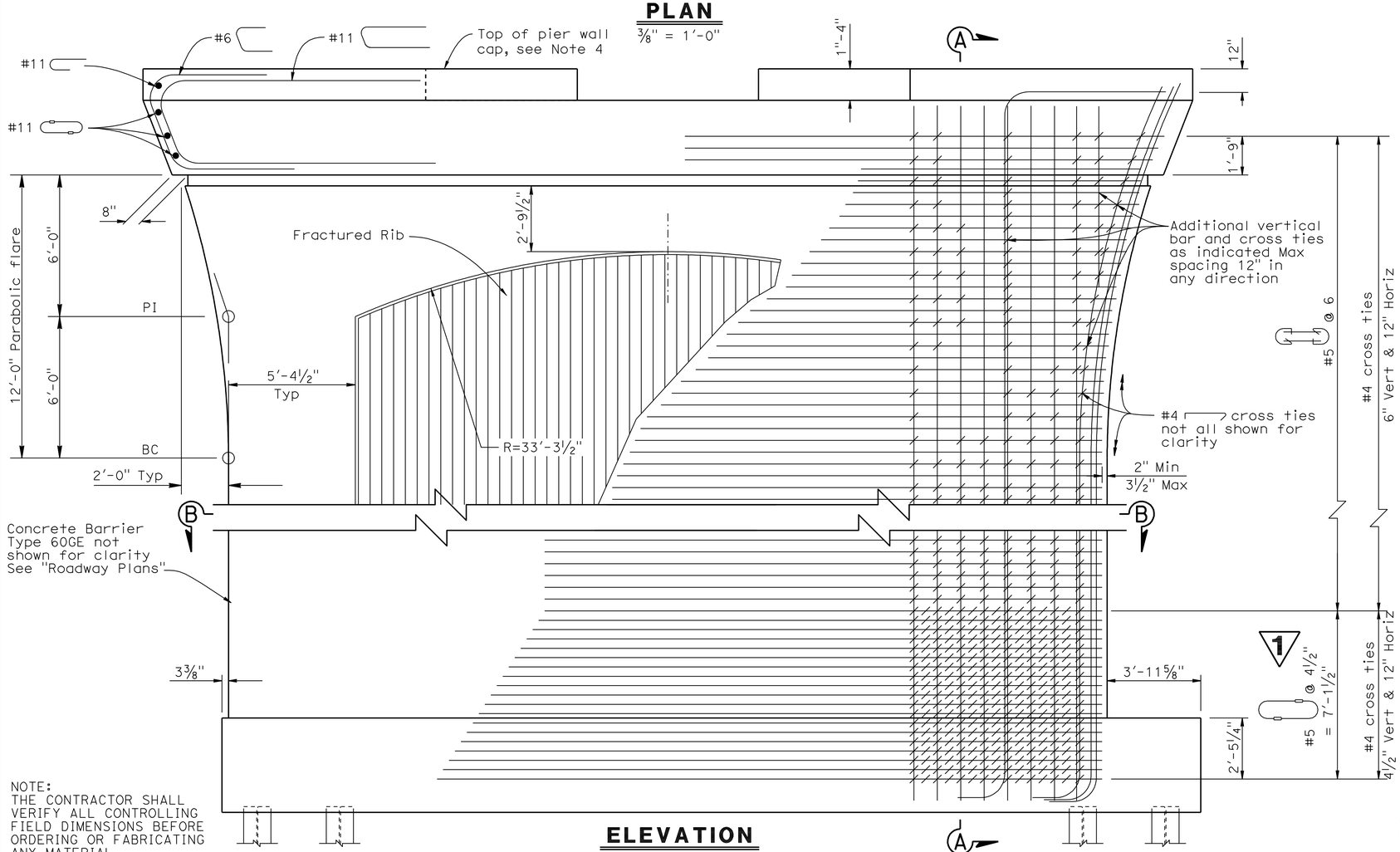

NOTE:
THE CONTRACTOR SHALL VERIFY ALL CONTROLLING FIELD DIMENSIONS BEFORE ORDERING OR FABRICATING ANY MATERIAL.

ELEVATION

⅜" = 1'-0"

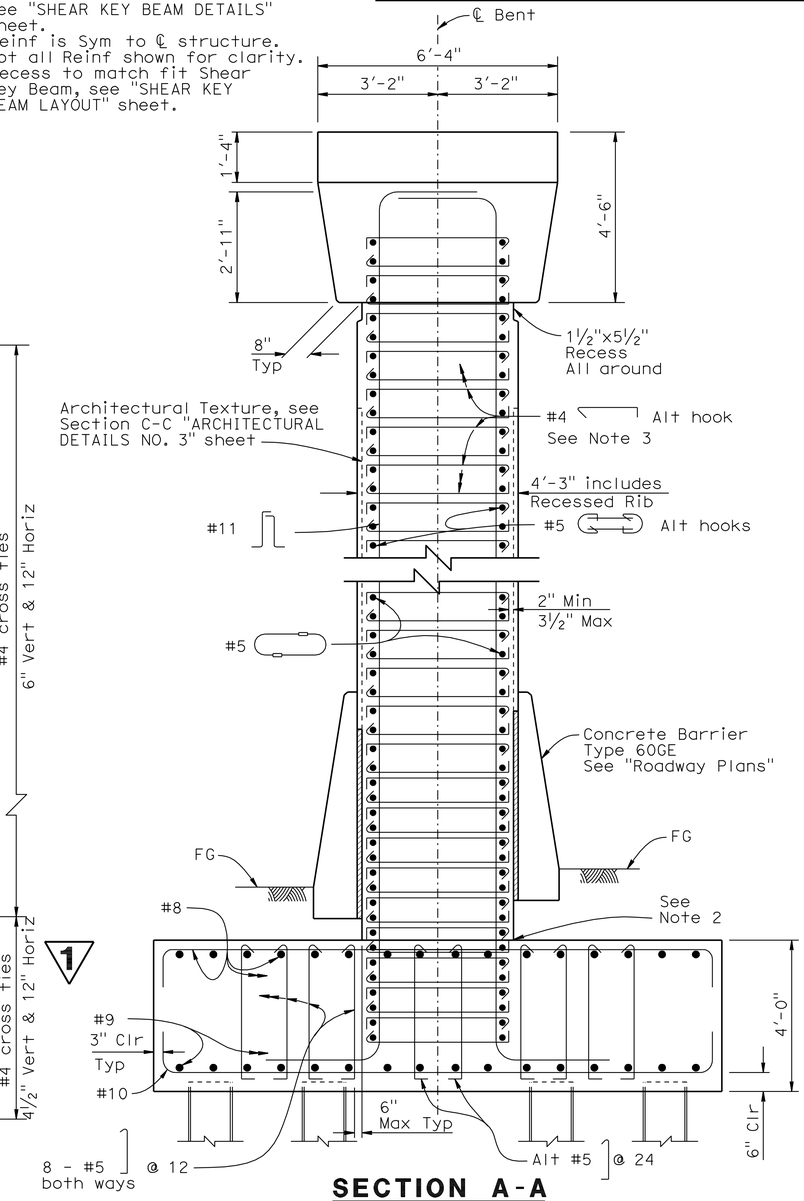

SECTION A-A

½" = 1'-0"

1 REVISED PER ADDENDUM No. 1 DATED NOVEMBER 8, 2011

	BY	CHECKED
DESIGN	B. Addlespurger	G. Slocum
DETAILS	J. Yang	G. Slocum
QUANTITIES	T. Sanderson	R. Anderson

STATE OF CALIFORNIA
DEPARTMENT OF TRANSPORTATION

DIVISION OF ENGINEERING SERVICES
STRUCTURE DESIGN
DESIGN BRANCH 10

BRIDGE NO. 56-0848
POST MILE 19.39

PACHAPPA UP (SHOOFLY)
BENT LAYOUT

STRUCTURES DESIGN DETAIL SHEET (ENGLISH) (REV. 10/25/05)

ORIGINAL SCALE IN INCHES FOR REDUCED PLANS 0 1 2 3

CU 08
EA 448401

DISREGARD PRINTS BEARING EARLIER REVISION DATES

REVISION DATES: 8-24-09 | 10-25-11 | 11-02-09 | 11-19-09 | 02-02-10 | 6-08-10 | 7-13-10 | 9-08-10 | 9-28-10

SHEET 13 OF 39

FILE => 560848hb_1o13.dds

USERNAME => s121614 DATE PLOTTED => 08-NOV-2011 TIME PLOTTED => 11:35

DIST	COUNTY	ROUTE	POST MILES TOTAL PROJECT	SHEET No	TOTAL SHEETS
08	Riv	91	15.6/21.6	1995	2028

REGISTERED CIVIL ENGINEER 11-30-10 DATE

4-25-11
PLANS APPROVAL DATE

The State of California or its officers or agents shall not be responsible for the accuracy or completeness of electronic copies of this plan sheet.

REGISTERED PROFESSIONAL ENGINEER HUAN D. VU No. C60696 Exp. 12/31/10 CIVIL STATE OF CALIFORNIA

NOTES:

1. For location of "Section B-B" and other details, see "BENT LAYOUT" sheet.
2. Adjust location to accommodate bearing anchorage.
3. Reinf is Sym to ℄ Structure. Not all Reinf shown for clarity.
4. All ties at bar intersections to hook all bars. All bars to be adjusted for positive contact and snug fit.
5. Steel pile anchor shown on "Abutment 1 Footing Details" sheet.
6. One additional Bar to be placed at the last pile rows.
7. Ten additional Bars to be placed within 8'-9" form end of footing. Bundle the end footing bar.

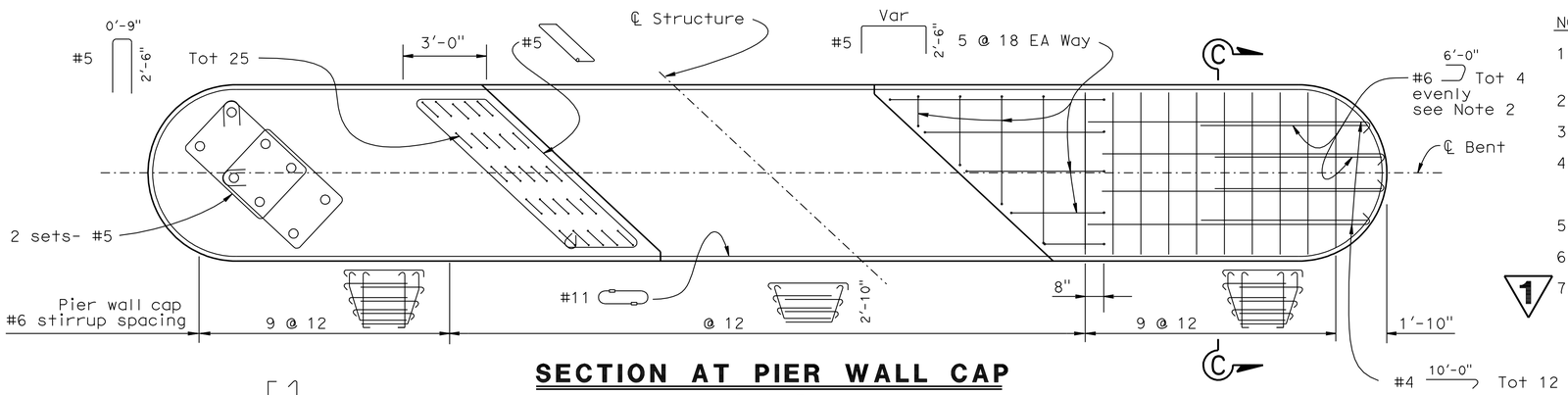

SECTION AT PIER WALL CAP

NO SCALE

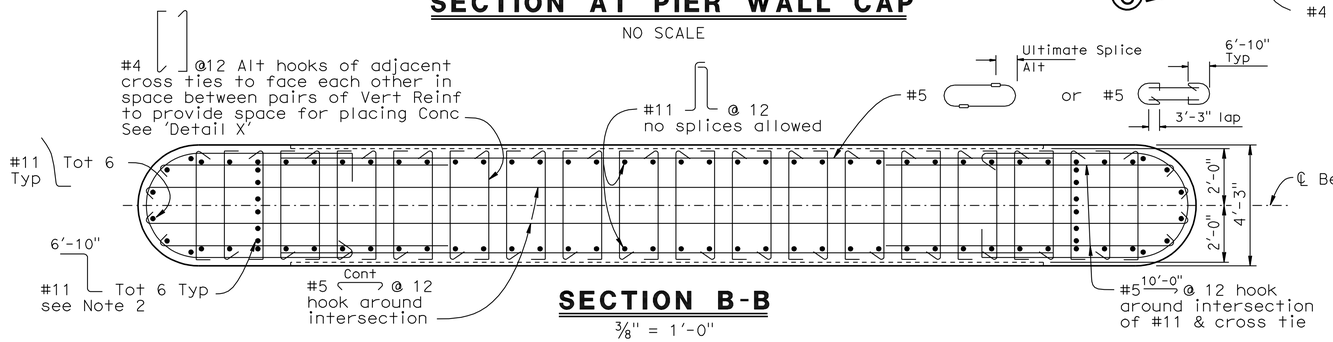

SECTION B-B

$\frac{3}{8}$" = 1'-0"

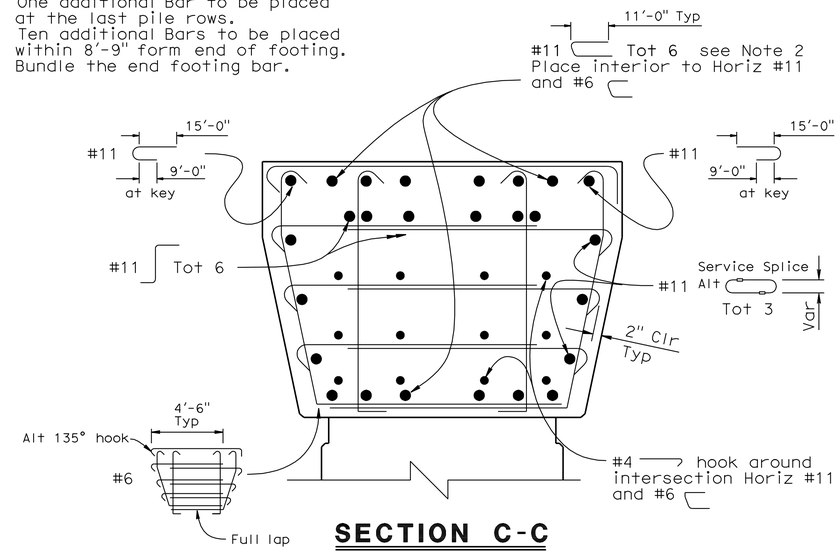

SECTION C-C

$\frac{3}{4}$" = 1'-0"

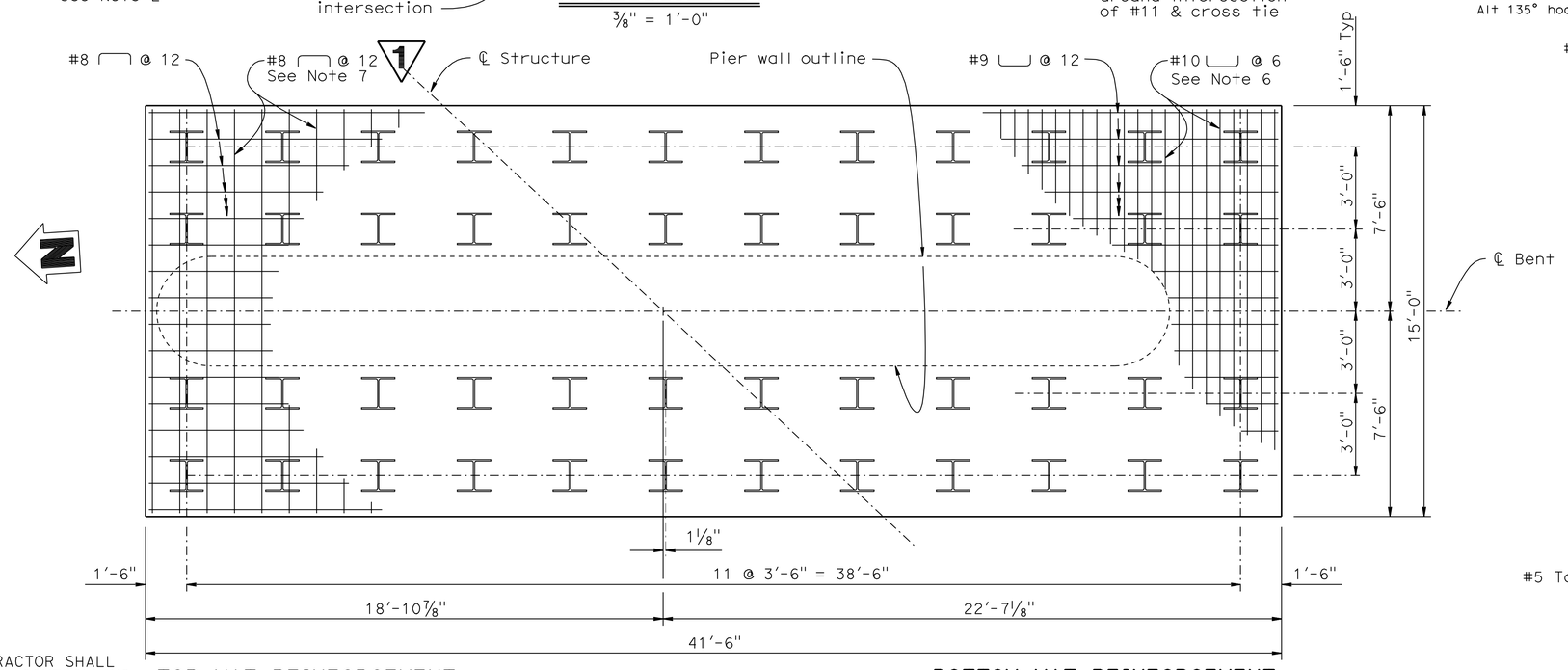

TOP MAT REINFORCEMENT

FOOTING PLAN

$\frac{3}{8}$" = 1'-0"

BOTTOM MAT REINFORCEMENT

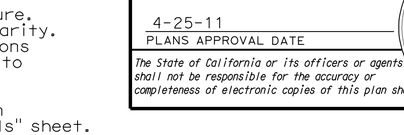

DETAIL X

NO SCALE

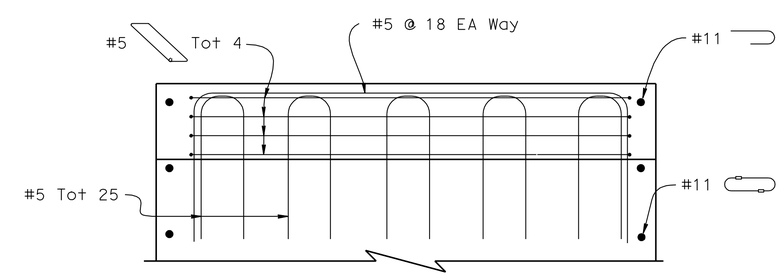

KEY SECTION

$\frac{3}{4}$" = 1'-0"

NOTE:
THE CONTRACTOR SHALL VERIFY ALL CONTROLLING FIELD DIMENSIONS BEFORE ORDERING OR FABRICATING ANY MATERIAL.

1 **REVISED PER ADDENDUM No. 1 DATED NOVEMBER 8, 2011**

	BY	CHECKED
DESIGN	B. Addlespurger	G. Slocum
DETAILS	J. Yang	G. Slocum
QUANTITIES	T. Sanderson	R. Anderson

STATE OF CALIFORNIA
DEPARTMENT OF TRANSPORTATION

DIVISION OF ENGINEERING SERVICES
STRUCTURE DESIGN
DESIGN BRANCH 10

BRIDGE NO. 56-0848
POST MILE 19.39

PACHAPPA UP (SHOOFLY)
BENT DETAILS

STRUCTURES DESIGN DETAIL SHEET (ENGLISH) (REV. 10/25/05)

ORIGINAL SCALE IN INCHES FOR REDUCED PLANS 0 1 2 3

CU 08
EA 448401

DISREGARD PRINTS BEARING EARLIER REVISION DATES

REVISION DATES: 9-08-09 | 10-25-11 | 10-13-09 | 11-02-09 | 11-19-09 | 02-02-10 | 05-12-10 | 6-08-10 | 9-28-10

SHEET 14 OF 39

FILE => 560848hbdt14.dds

USERNAME => s126614 DATE PLOTTED => 08-NOV-2011 TIME PLOTTED => 11:35

DIST	COUNTY	ROUTE	POST MILES TOTAL PROJECT	SHEET No	TOTAL SHEETS
08	Riv	91	15.6/21.6	2009	2028

REGISTERED CIVIL ENGINEER 11-30-10 DATE

4-25-11
PLANS APPROVAL DATE

The State of California or its officers or agents shall not be responsible for the accuracy or completeness of electronic copies of this plan sheet.

REGISTERED PROFESSIONAL ENGINEER HUAN D. VU No. C60696 Exp. 12/31/10 CIVIL STATE OF CALIFORNIA

NOTE: EPDM=Ethylene-propylene-diene-monomer

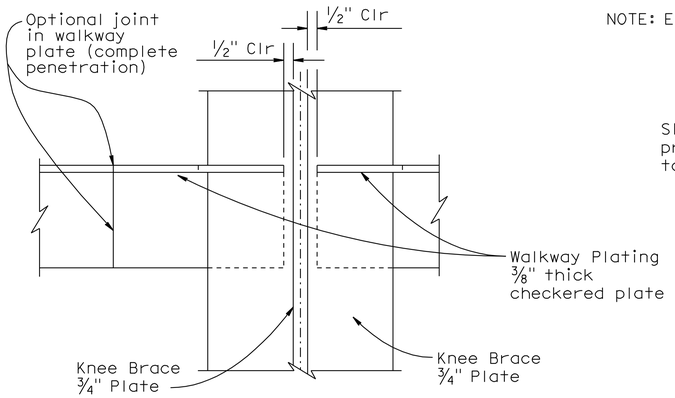

SECTION E-E
3"=1'-0"

NOTES:

1. Weld all around with ⅜" fillet weld in 1"Ø hole in plate. Space holes @ 1'-3" Max
2. For location of "Section A-A" thru "Section D-D", see "DECK PLATING & SIDEWALK LAYOUT" sheet.

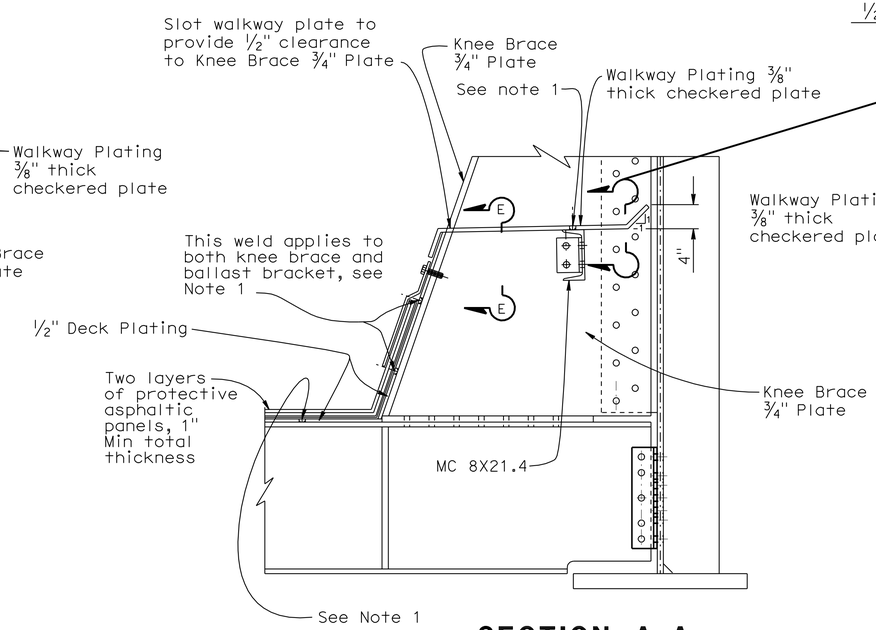

SECTION A-A
1"=1'-0"

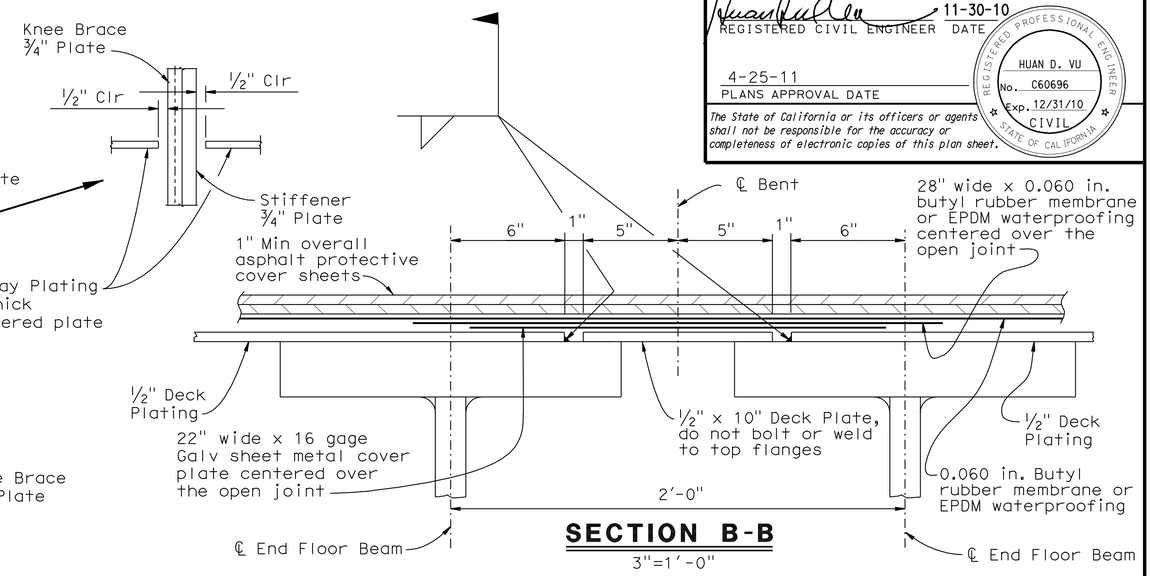

SECTION B-B
3"=1'-0"

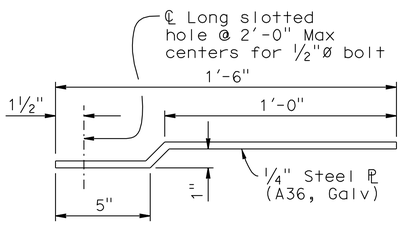

CURB FLASHING DETAIL
3"=1'-0"

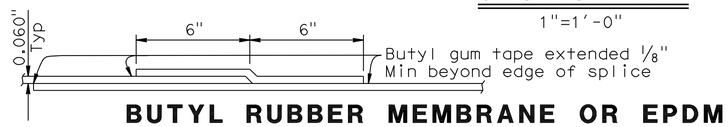

BUTYL RUBBER MEMBRANE OR EPDM WATERPROOFING SPLICE DETAIL
NO SCALE

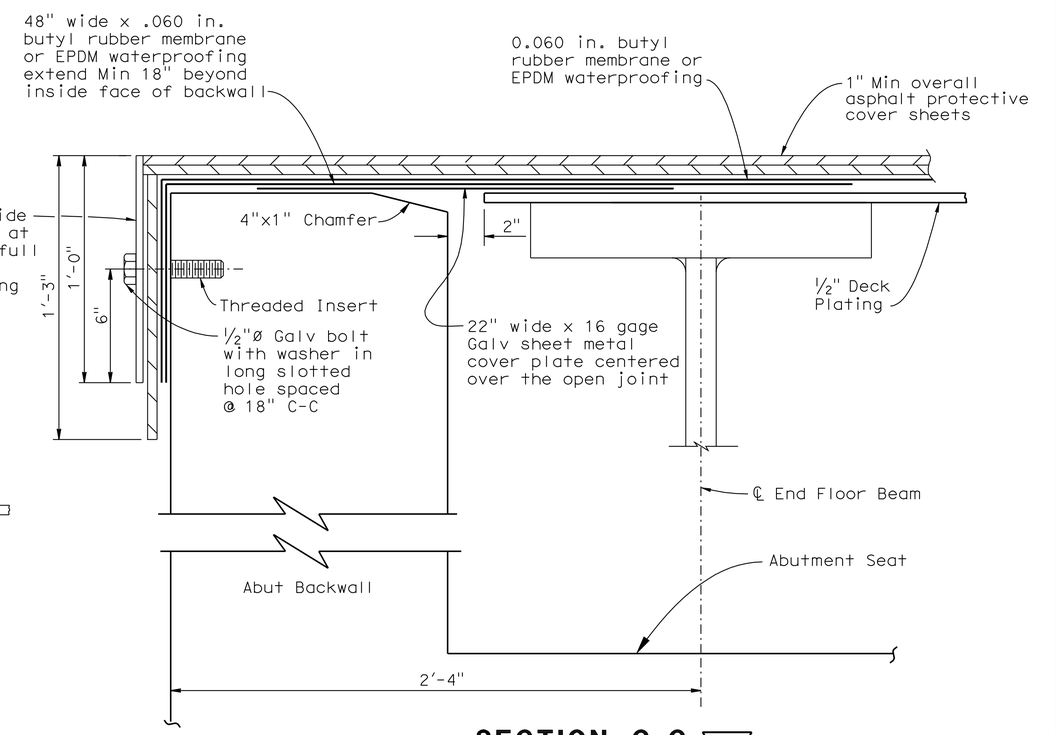

SECTION C-C
3"=1'-0"

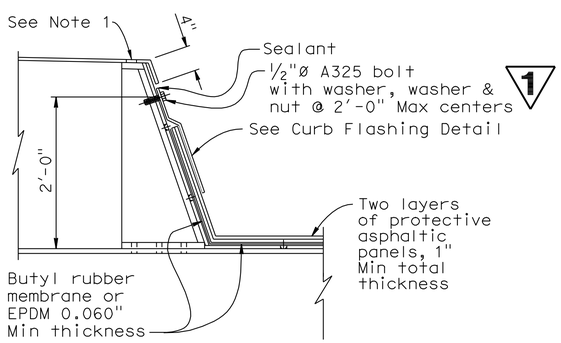

DECK SECTION
1"=1'-0"

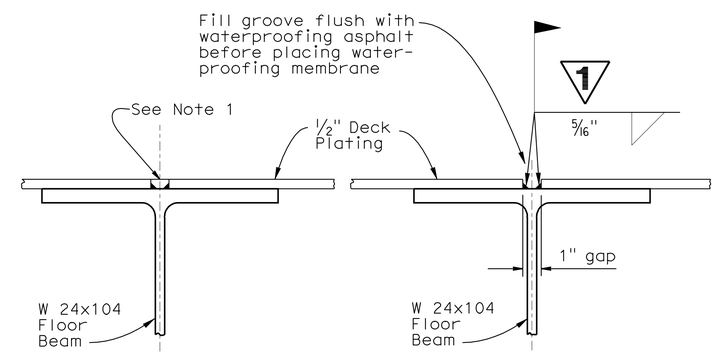

DECK PLATE CONTINUOUS

SPLICE IN DECK PLATE

SECTION D-D
3"=1'-0"

NOTE:
THE CONTRACTOR SHALL VERIFY ALL CONTROLLING FIELD DIMENSIONS BEFORE ORDERING OR FABRICATING ANY MATERIAL.

1 REVISED PER ADDENDUM No. 1 DATED NOVEMBER 8, 2011

	BY	CHECKED
DESIGN	B. Addlespurger	G. Slocum
DETAILS	G. Hallstrom	G. Slocum
QUANTITIES	T. Sanderson	R. Anderson

STATE OF CALIFORNIA
DEPARTMENT OF TRANSPORTATION

DIVISION OF ENGINEERING SERVICES
STRUCTURE DESIGN
DESIGN BRANCH 10

BRIDGE NO. 56-0848
POST MILE 19.39

PACHAPPA UP (SHOOFLY)
DECK PLATING & SIDEWALK DETAILS NO. 1

STRUCTURES DESIGN DETAIL SHEET (ENGLISH) (REV. 10/25/05)

ORIGINAL SCALE IN INCHES FOR REDUCED PLANS 0 1 2 3

CU 08
EA 448401

DISREGARD PRINTS BEARING EARLIER REVISION DATES

REVISION DATES: 12-09-09 3-11-10 5-04-10 6-04-10 9-09-10 9-29-10 10-25-11

SHEET 28 OF 39

FILE => 5608481gdtdecksidedt28.dgn

USERNAME => s8121614 DATE PLOTTED => 08-NOV-2011 TIME PLOTTED => 11:35