Dist	COUNTY	ROUTE	POST MILES TOTAL PROJECT	SHEET No.	TOTAL SHEETS
08	SBd	40	R18.0	1	17

INDEX OF PLANS

SHEET No.	DESCRIPTION
1	TITLE AND LOCATION MAP
2	LAYOUT
3-4	CONSTRUCTION DETAILS
5-6	TEMPORARY WATER POLLUTION CONTROL
7	CONSTRUCTION AREA SIGNS
8	DETOUR PLAN
9	SIGN DETAIL PLAN
10	SIGN QUANTITY PLAN
11	EROSION CONTROL PLAN
12-14	CREST WASH BRIDGE DETAILS
14-17	REVISED STANDARD PLANS

THE STANDARD PLANS LIST APPLICABLE TO THIS CONTRACT IS INCLUDED IN THE NOTICE TO BIDDERS AND SPECIAL PROVISIONS BOOK

STATE OF CALIFORNIA

DEPARTMENT OF TRANSPORTATION

PROJECT PLANS FOR CONSTRUCTION ON

STATE HIGHWAY

IN SAN BERNARDINO COUNTY
AT NEWBERRY SPRINGS
AT CREST WASH BRIDGE

TO BE SUPPLEMENTED BY STANDARD PLANS DATED 2010

LOCATION OF CONSTRUCTION

CREST WASH BRIDGE
Br. No. 54-0717 L/R PM R18.0

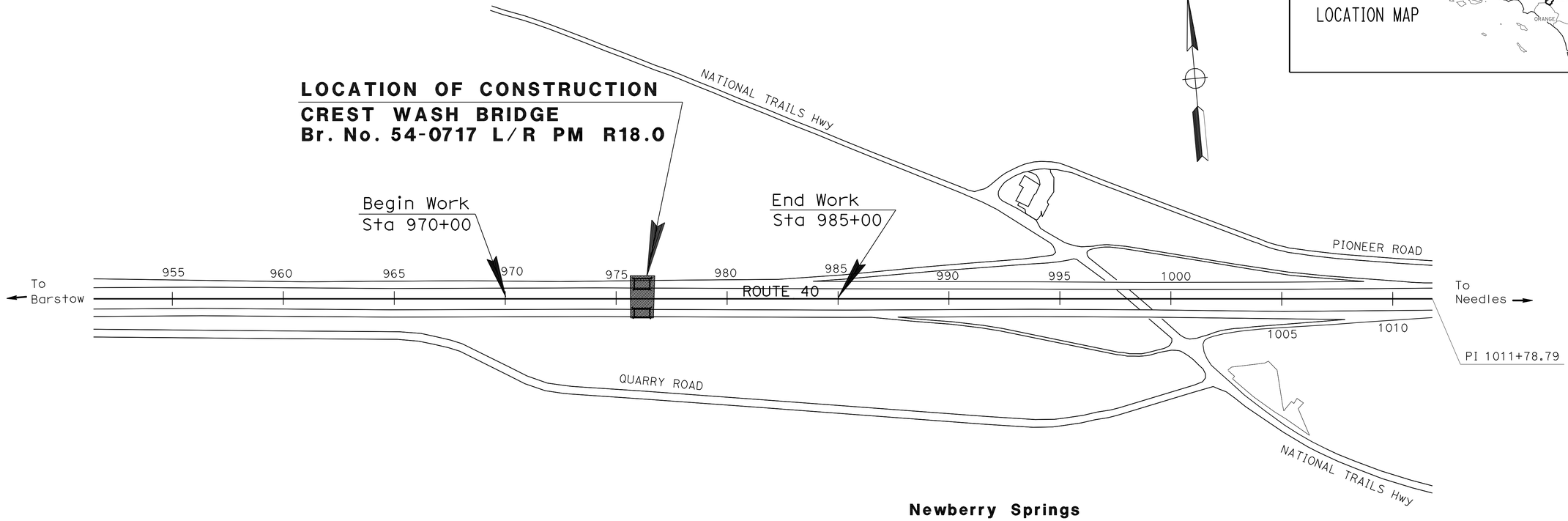

NO SCALE

PROJECT MANAGER: BACSON QUACH

DESIGN ENGINEER: RAFTAR SHARIA

8/26/13
PROJECT ENGINEER REGISTERED CIVIL ENGINEER — DATE

RAFTAR SHARIA
No. 72941
Exp. 12/31/14
CIVIL
REGISTERED PROFESSIONAL ENGINEER
STATE OF CALIFORNIA

August 26, 2013
PLANS APPROVAL DATE

THE STATE OF CALIFORNIA OR ITS OFFICERS OR AGENTS SHALL NOT BE RESPONSIBLE FOR THE ACCURACY OR COMPLETENESS OF SCANNED COPIES OF THIS PLAN SHEET.

THE CONTRACTOR SHALL POSSESS THE CLASS (OR CLASSES) OF LICENSE AS SPECIFIED IN THE "NOTICE TO BIDDERS."

CONTRACT No.	08-435414
PROJECT ID	0800020179

LAST REVISION 08-26-13 — DATE PLOTTED => 30-AUG-2013 — TIME PLOTTED => 14:40

BORDER LAST REVISED 9/30/2012 | CALTRANS WEB SITE IS: HTTP//WWW.DOT.CA.GOV/ | RELATIVE BORDER SCALE IS IN INCHES 0 1 2 3 | USERNAME => s110420 | DGN FILE => 0800020179ab001.dgn | UNIT 2259 | PROJECT NUMBER & PHASE 08000201791

NOTE:

FOR ACCURATE RIGHT OF WAY DATA, CONTACT
RIGHT OF WAY ENGINEERING AT THE DISTRICT OFFICE.

Dist	COUNTY	ROUTE	POST MILES TOTAL PROJECT	SHEET No.	TOTAL SHEETS
08	SBd	40	R18.03	2	17

8-26-13
REGISTERED CIVIL ENGINEER DATE

RAFTAR SHARIA
No. 72941
Exp 12/31/14
CIVIL
REGISTERED PROFESSIONAL ENGINEER
STATE OF CALIFORNIA

8-26-13
PLANS APPROVAL DATE

THE STATE OF CALIFORNIA OR ITS OFFICERS OR AGENTS SHALL NOT BE RESPONSIBLE FOR THE ACCURACY OR COMPLETENESS OF SCANNED COPIES OF THIS PLAN SHEET.

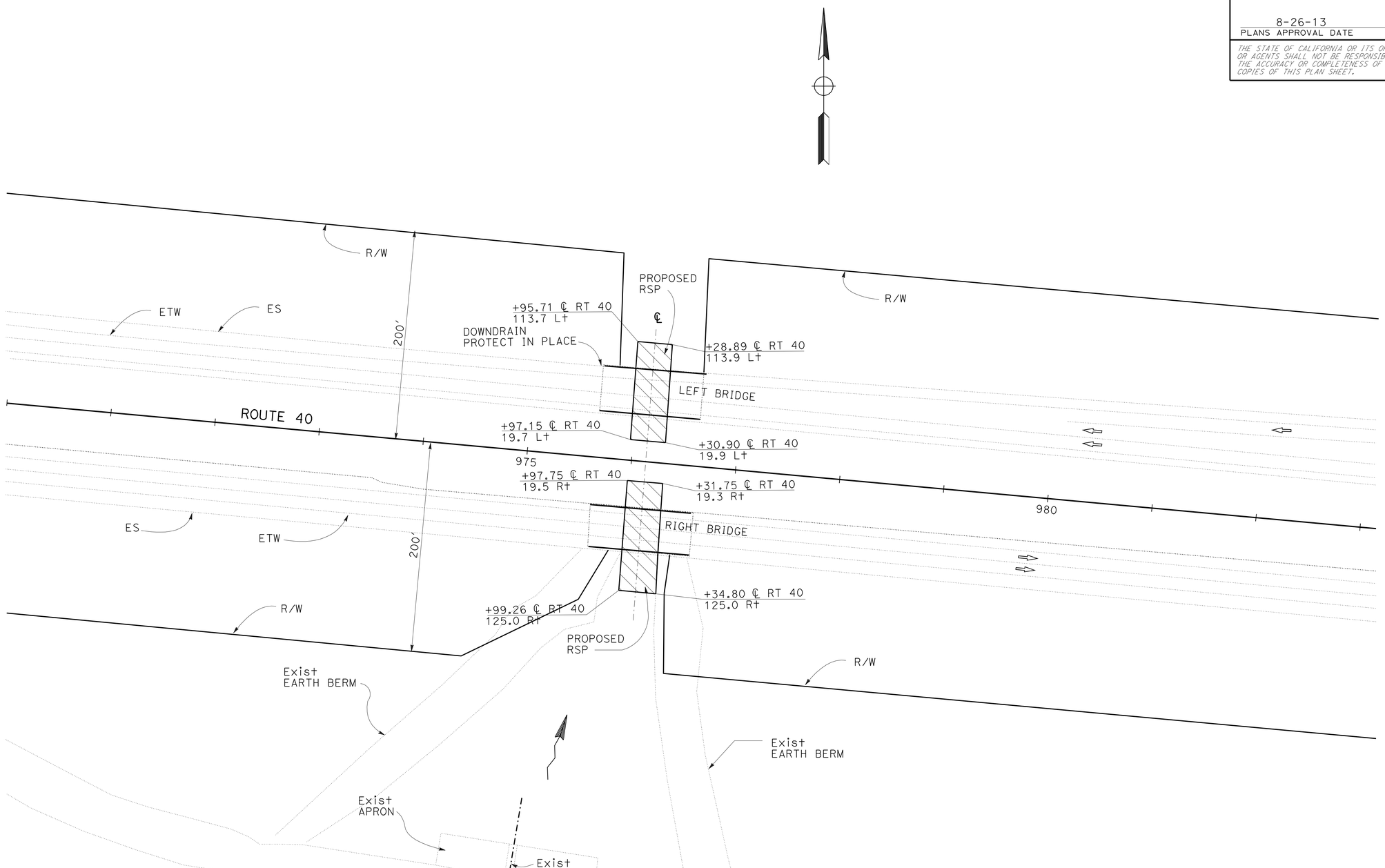

LAYOUT

SCALE: 1"=50'

L-1

STATE OF CALIFORNIA - DEPARTMENT OF TRANSPORTATION
DESIGN
FUNCTIONAL SUPERVISOR: JOHN M ROGERS
CALCULATED-DESIGNED BY: RAFTAR SHARIA
CHECKED BY: JOHN M ROGERS
REVISED BY
DATE REVISED

LAST REVISION DATE PLOTTED => 30-AUG-2013
08-26-13 TIME PLOTTED => 14:40

BORDER LAST REVISED 7/2/2010
USERNAME => s110420
DGN FILE => 0800020179ea001.dgn
RELATIVE BORDER SCALE IS IN INCHES 0 1 2 3
UNIT 2259
PROJECT NUMBER & PHASE 08000201791

Dist	COUNTY	ROUTE	POST MILES TOTAL PROJECT	SHEET No.	TOTAL SHEETS
08	SBd	40	R18.03	3	17

8-26-13
REGISTERED CIVIL ENGINEER DATE

RAFTAR SHARIA
No. 72941
Exp 12/31/14
CIVIL
REGISTERED PROFESSIONAL ENGINEER
STATE OF CALIFORNIA

8-26-13
PLANS APPROVAL DATE

THE STATE OF CALIFORNIA OR ITS OFFICERS OR AGENTS SHALL NOT BE RESPONSIBLE FOR THE ACCURACY OR COMPLETENESS OF SCANNED COPIES OF THIS PLAN SHEET.

NOTES:

1. TEMPORARY FENCE (TORTOISE FENCE) WILL BE INSTALLED ALONG TEMPORARY FENCE (TYPE ESA).
2. EXACT POSITION AND LENGTH OF TEMPORARY FENCE (TYPE ESA) AND (TORTOISE FENCE) AND SLIT FENCE TO BE DETERMINED BY THE ENGINEER.
3. NO ACCESS PERMITTED FROM QUARRY ROAD.
4. TEMPORARY FENCE (TYPE ESA) TO REMAIN IN PLACE.
5. FOR ACCURATE RIGHT OF WAY DATA, CONTACT RIGHT OF WAY ENGINEERING AT THE DISTRICT OFFICE.

LEGEND:

TEMPORARY FENCE (TORTOISE FENCE) AND (TYPE ESA).

TEMPORARY SILT FENCE.

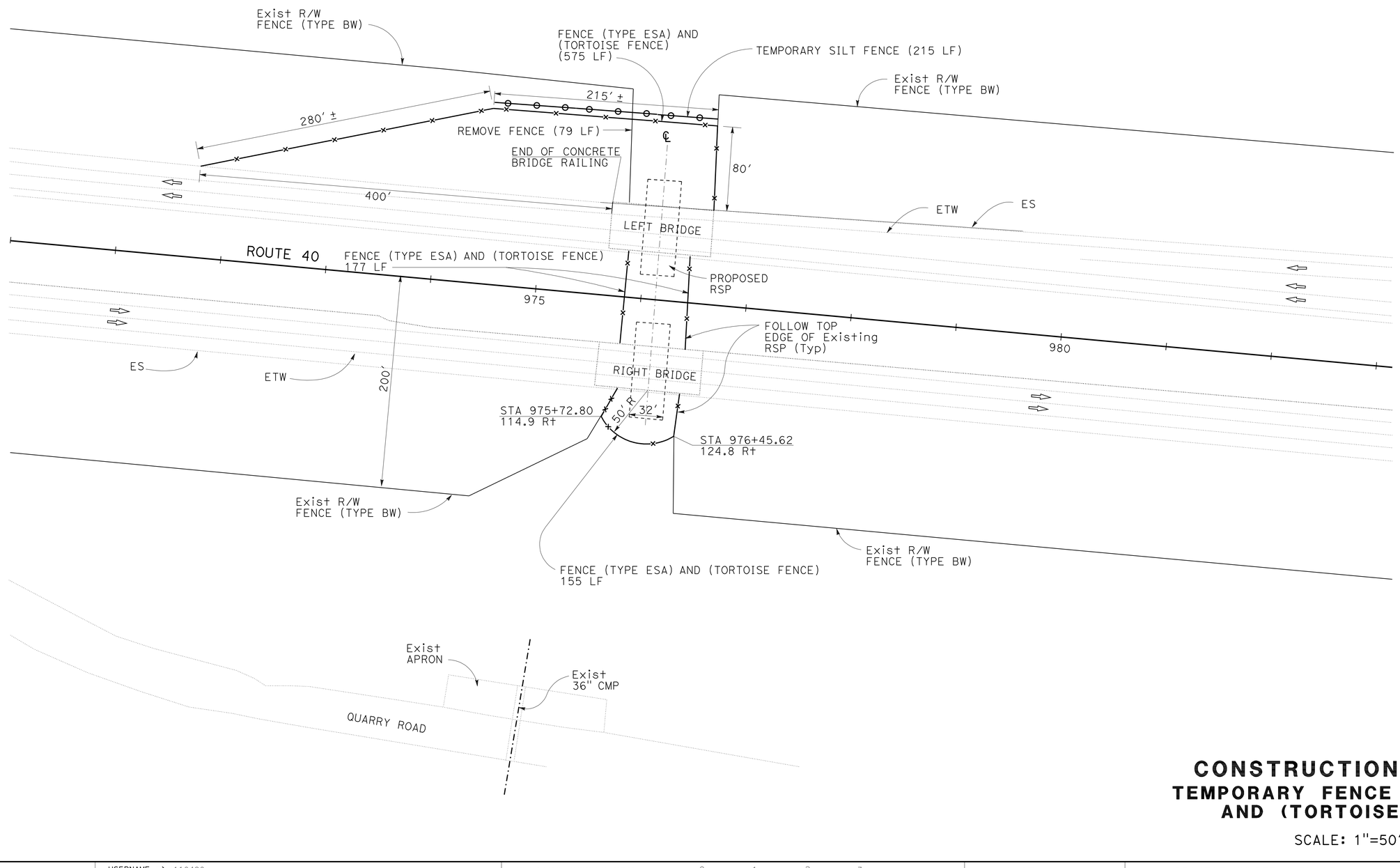

CONSTRUCTION DETAIL
TEMPORARY FENCE (TYPE ESA) AND (TORTOISE FENCE)

SCALE: 1"=50′

C-1

STATE OF CALIFORNIA - DEPARTMENT OF TRANSPORTATION
DESIGN
FUNCTIONAL SUPERVISOR: JOHN M ROGERS
CALCULATED-DESIGNED BY: RAFTAR SHARIA
CHECKED BY: JOHN M ROGERS
REVISED BY
DATE REVISED

LAST REVISION DATE PLOTTED => 30-AUG-2013
08-26-13 TIME PLOTTED => 14:40

BORDER LAST REVISED 7/2/2010
USERNAME => s110420
DGN FILE => 08000201791ga001.dgn
RELATIVE BORDER SCALE IS IN INCHES 0 1 2 3
UNIT 2259
PROJECT NUMBER & PHASE 08000201791

Dist	COUNTY	ROUTE	POST MILES TOTAL PROJECT	SHEET No.	TOTAL SHEETS
08	SBd	40	R18.03	4	17

8-26-13
REGISTERED CIVIL ENGINEER DATE

RAFTAR SHARIA
No. 72941
Exp 12/31/14
CIVIL
REGISTERED PROFESSIONAL ENGINEER
STATE OF CALIFORNIA

8-26-13
PLANS APPROVAL DATE

THE STATE OF CALIFORNIA OR ITS OFFICERS OR AGENTS SHALL NOT BE RESPONSIBLE FOR THE ACCURACY OR COMPLETENESS OF SCANNED COPIES OF THIS PLAN SHEET.

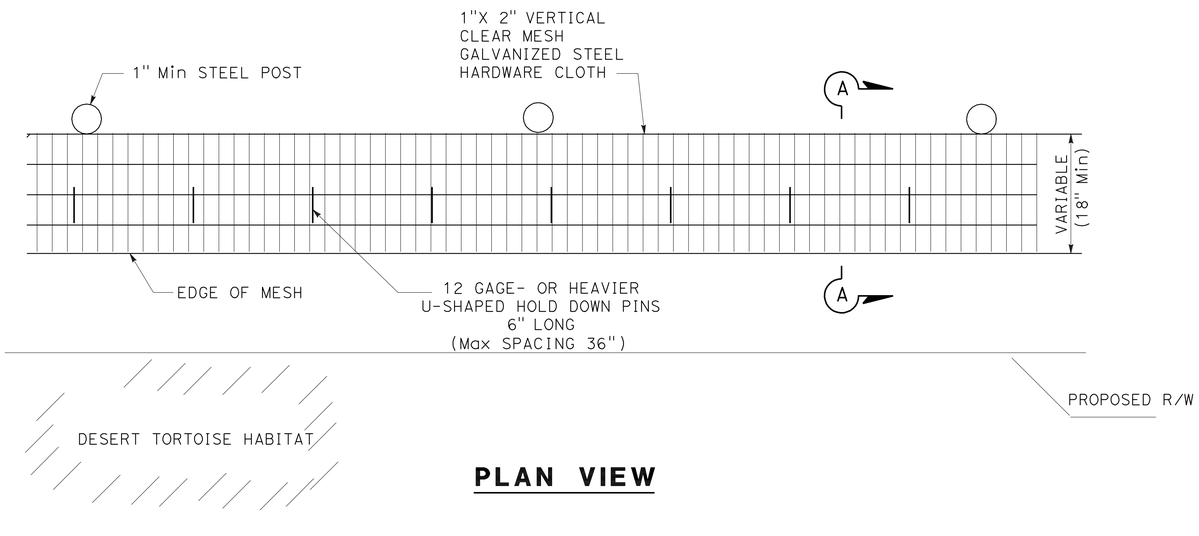

PLAN VIEW

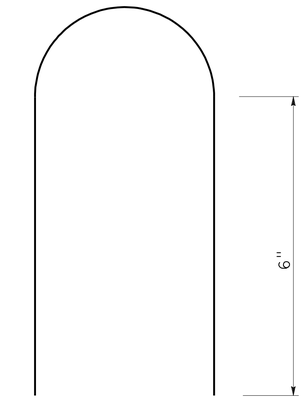

PIN DETAIL

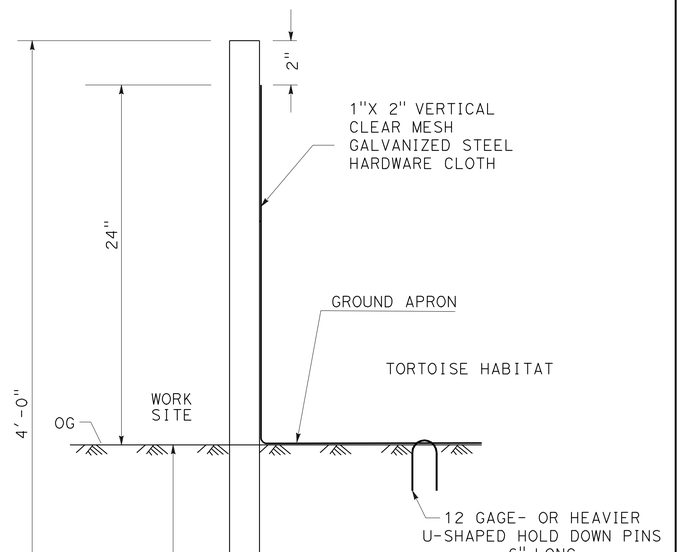

SECTION A-A

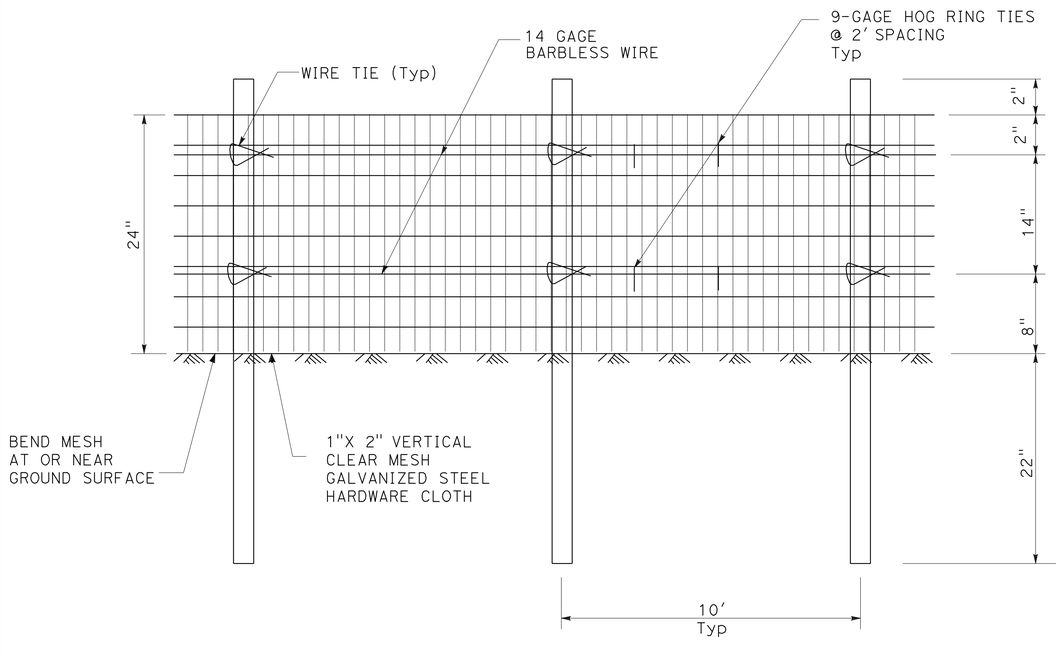

FRONT VIEW

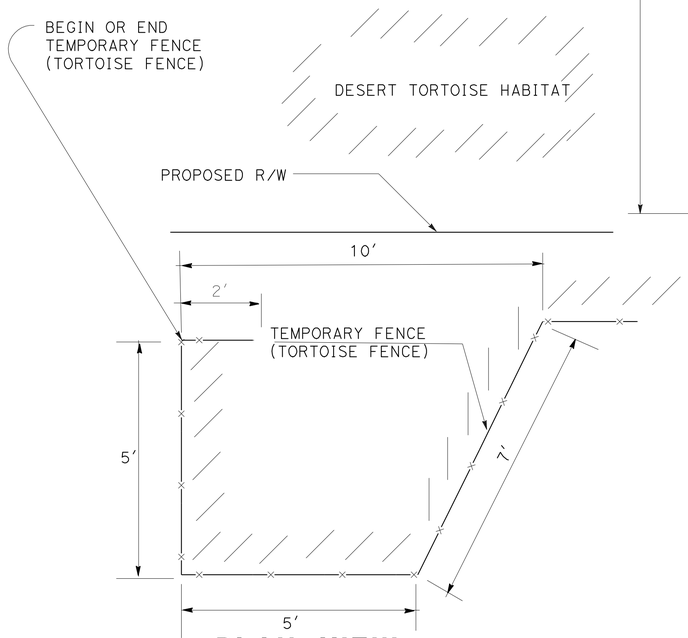

PLAN VIEW
REDIRECTIONAL CONFIGURATION

CONSTRUCTION DETAILS
TEMPORARY FENCE (TORTOISE FENCE)

NO SCALE

C-2

STATE OF CALIFORNIA - DEPARTMENT OF TRANSPORTATION
DESIGN
FUNCTIONAL SUPERVISOR: JOHN M ROGERS
CALCULATED-DESIGNED BY: RAFTAR SHARIA
CHECKED BY: JOHN M ROGERS
REVISED BY | DATE REVISED

LAST REVISION | DATE PLOTTED => 30-AUG-2013
TIME PLOTTED => 14:40
08-26-13

BORDER LAST REVISED 7/2/2010
USERNAME => s110420
DGN FILE => 0800020179ga002.dgn
RELATIVE BORDER SCALE IS IN INCHES 0 1 2 3
UNIT 2259
PROJECT NUMBER & PHASE 08000201791

Dist	COUNTY	ROUTE	POST MILES TOTAL PROJECT	SHEET No.	TOTAL SHEETS
08	SBd	40	R18.03	5	17

8-26-13
REGISTERED CIVIL ENGINEER DATE

RAFTAR SHARIA
No. 72941
Exp 12/31/14
CIVIL
REGISTERED PROFESSIONAL ENGINEER
STATE OF CALIFORNIA

8-26-13
PLANS APPROVAL DATE

THE STATE OF CALIFORNIA OR ITS OFFICERS OR AGENTS SHALL NOT BE RESPONSIBLE FOR THE ACCURACY OR COMPLETENESS OF SCANNED COPIES OF THIS PLAN SHEET.

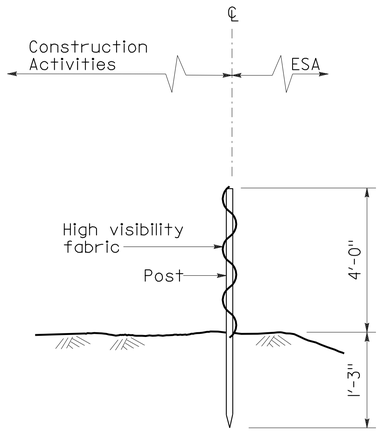

TEMPORARY FENCE (TYPE ESA)
SECTION

SIGN DETAIL

TEMPORARY WATER POLLUTION CONTROL DETAILS
TEMPORARY FENCE (TYPE ESA)

NO SCALE

WPC-1

STATE OF CALIFORNIA - DEPARTMENT OF TRANSPORTATION
DESIGN
FUNCTIONAL SUPERVISOR: JOHN M ROGERS
CALCULATED-DESIGNED BY: RAFTAR SHARIA
CHECKED BY: JOHN M ROGERS
REVISED BY
DATE REVISED

LAST REVISION DATE PLOTTED => 30-AUG-2013
08-26-13 TIME PLOTTED => 14:40

BORDER LAST REVISED 7/2/2010
USERNAME => s110420
DGN FILE => 0800020179gb001.dgn
RELATIVE BORDER SCALE IS IN INCHES 0 1 2 3
UNIT 2259
PROJECT NUMBER & PHASE 08000201791

Dist	COUNTY	ROUTE	POST MILES TOTAL PROJECT	SHEET No.	TOTAL SHEETS
08	SBd	40	R18.0	6	17

George Morhig 8-26-13
REGISTERED CIVIL ENGINEER DATE

8-26-13
PLANS APPROVAL DATE

REGISTERED PROFESSIONAL ENGINEER
GEORGE MORHIG
No. 50349
Exp 6/30/15
CIVIL
STATE OF CALIFORNIA

THE STATE OF CALIFORNIA OR ITS OFFICERS OR AGENTS SHALL NOT BE RESPONSIBLE FOR THE ACCURACY OR COMPLETENESS OF SCANNED COPIES OF THIS PLAN SHEET.

NOTES:

1. THE QUANTITIES OF CONSTRUCTION SITE BMPs SHOWN ON THIS QUANTITIY SHEET ARE INTENDED TO BE USED AS GUIDELINES ONLY.
2. FIELD CONDITIONS MAY NECESSITATE MODIFICATION OR RELOCATION OF BMPs. AND THEIR QUANTITIES AS PER ENGINEER.

TEMPORARY CONSTRUCTION SITE BMPs

TEMPORARY SILT FENCE	UNITS	QUANTITIES
TOTAL	LF	215

REVISED BY | DATE REVISED
TOUHIDA HAIDER | THOMAS MILES
CALCULATED-DESIGNED BY | CHECKED BY
FUNCTIONAL SUPERVISOR
GEORGE MORHIG

STATE OF CALIFORNIA - DEPARTMENT OF TRANSPORTATION
Caltrans®
DESIGN

TEMPORARY WATER POLLUTION CONTROL QUANTITIES

WPCQ-1

LAST REVISION DATE PLOTTED => 30-AUG-2013
08-26-13 TIME PLOTTED => 14:40

Dist	COUNTY	ROUTE	POST MILES TOTAL PROJECT	SHEET No.	TOTAL SHEETS
08	SBd	40	R18.0	7	17

Daryush Nami 8-26-13
REGISTERED CIVIL ENGINEER DATE

8-26-13
PLANS APPROVAL DATE

REGISTERED PROFESSIONAL ENGINEER
DARYUSH NAMI
No. 78890
Exp 3/31/14
CIVIL
STATE OF CALIFORNIA

THE STATE OF CALIFORNIA OR ITS OFFICERS OR AGENTS SHALL NOT BE RESPONSIBLE FOR THE ACCURACY OR COMPLETENESS OF SCANNED COPIES OF THIS PLAN SHEET.

NOTES:

1. LOCATIONS OF CONSTRUCTION AREA SIGNS AND PCMS ARE APROXIMATE. EXACT LOCATIONS WILL BE DETERMINED BY THE ENGINEER IN THE FIELD.

LEGEND:

CONSTRUCTION AREA

PORTABLE CHANGEABLE MESSAGE SIGN(PCMS)

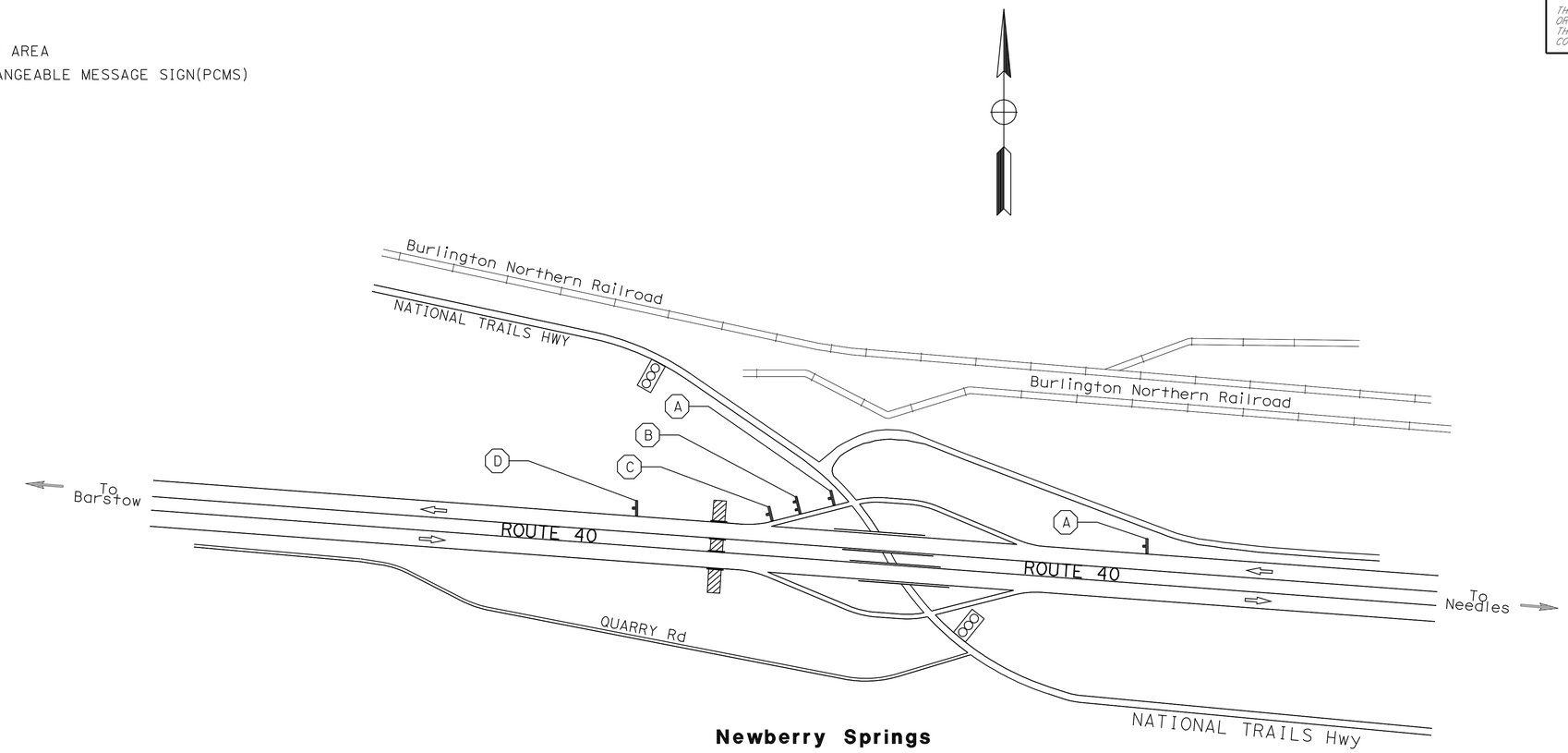

STATIONARY MOUNTED CONSTRUCTION AREA SIGNS

SIGN LETTER (X)	SIGN CODE		PANEL SIZE	SIGN MESSAGE	NUMBER OF POSTS AND SIZE	NUMBER OF SIGNS (N)
	FEDERAL	CALIFORNIA				
(A)	W20-1	C11(CA)	48" X 48"	ROAD WORK AHEAD	1-6"X6"	2
(B)		C40(CA)	108" X 42"	TRAFFIC FINES DOUBLED IN CONSTRUCTION ZONES	2-6"X6"	2
(C)		SC6-4(CA)	48" X 60"	RAMP CLOSED DATE/TIME	1-6"X6"	1
(D)	G20-2	C14(CA)	48" X 24"	END ROAD WORK	1-4"X6"	1

(N) NOT A SEPARATE PAY ITEM, FOR INFORMATION ONLY.

PORTABLE CHANGEABLE MESSAGE SIGNS (PCMS)

(EA)
2

APPROVED FOR CONSTRUCTION AREA SIGNS WORK ONLY

CONSTRUCTION AREA SIGNS

NO SCALE **CS-1**

REVISED BY	DATE REVISED

CALCULATED-DESIGNED BY: DARYUSH NAMI
CHECKED BY: TRAN HOANG
FUNCTIONAL SUPERVISOR: BILL WASSER

STATE OF CALIFORNIA - DEPARTMENT OF TRANSPORTATION
Caltrans®
TRAFFIC DESIGN

LAST REVISION | DATE PLOTTED => 30-AUG-2013
08-26-13 | TIME PLOTTED => 14:40

Dist	COUNTY	ROUTE	POST MILES TOTAL PROJECT	SHEET No.	TOTAL SHEETS
08	SBd	40	R18.0	8	17

Daryush Nami 8-26-13
REGISTERED CIVIL ENGINEER DATE

8-26-13
PLANS APPROVAL DATE

REGISTERED PROFESSIONAL ENGINEER
DARYUSH NAMI
No. 78890
Exp 3/31/14
CIVIL
STATE OF CALIFORNIA

THE STATE OF CALIFORNIA OR ITS OFFICERS OR AGENTS SHALL NOT BE RESPONSIBLE FOR THE ACCURACY OR COMPLETENESS OF SCANNED COPIES OF THIS PLAN SHEET.

NOTES:

1. LOCATIONS OF CONSTRUCTION AREA SIGNS AND PCMS ARE APPROXIMATE. EXACT LOCATIONS WILL BE DETERMINED BY THE ENGINEER IN THE FIELD.
2. DURING CLOSURE OF THE NATIONAL TRAILS Hwy TO WEST BOUND ROUTE 40 ENTRANCE RAMP, THE EXIT AND ENTRANCE RAMPS AT NEWBERRY RD SHALL NOT BE CLOSED.

LEGEND

(X) CONSTRUCTION AREA SIGN CODE

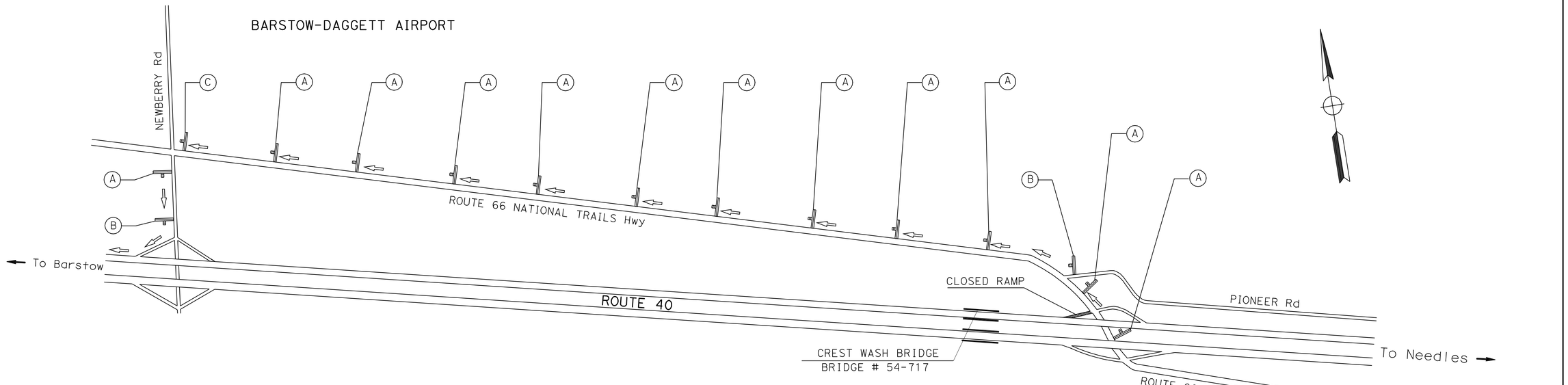

DETOUR PLAN FOR Newberry Road WESTBOUND ENTRANCE RAMP CLOSURE

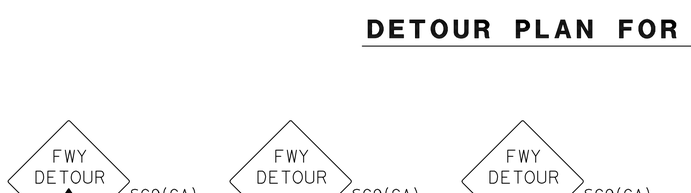

STATIONARY MOUNTED CONSTRUCTION AREA SIGNS

SIGN LETTER	SIGN CODE (CALIFORNIA)	PANEL SIZE	NUMBER OF POSTS AND SIZE	NUMBER OF SIGNS (N)	SIGN MESSAGE
(A)	SC9(CA)	36" X 36"	1 - 6" X 6"	12	FWY DETOUR/ARROW
	G27-2(CA)-40	36" X 36"			INTERSTATE CALIFORNIA 40
	G50(CA)	30" X 15"			WEST
(B)	SC9(CA) RIGHT	36" X 36"	1 - 6" X 6"	2	FWY DETOUR/ARROW(RIGHT)
	G27-2(CA)-40	36" X 36"			INTERSTATE CALIFORNIA 40
	G50(CA)	30" X 15"			WEST
(C)	SC9(CA) LEFT	36" X 36"	1 - 6" X 6"	1	FWY DETOUR/ARROW(LEFT)
	G27-2(CA)-40	36" X 36"			INTERSTATE CALIFORNIA 40
	G50(CA)	30" X 15"			WEST

(N) NOT A SEPARATE PAY ITEM, FOR INFORMATION ONLY.

APPROVED FOR CONSTRUCTION AREA SIGN WORK ONLY

DETOUR PLAN
NO SCALE **DE-1**

REVISED BY | DATE REVISED
DARYUSH NAMI | TRAN HOANG
CALCULATED-DESIGNED BY | CHECKED BY
FUNCTIONAL SUPERVISOR: BILL WASSER
STATE OF CALIFORNIA - DEPARTMENT OF TRANSPORTATION
TRAFFIC DESIGN
Caltrans

LAST REVISION | DATE PLOTTED => 30-AUG-2013
08-26-13 | TIME PLOTTED => 14:40

BORDER LAST REVISED 7/2/2010 | USERNAME => s110420 | DGN FILE => 0800020179mg001.dgn | RELATIVE BORDER SCALE IS IN INCHES 0 1 2 3 | UNIT 2285 | PROJECT NUMBER & PHASE 08000201791

Dist	COUNTY	ROUTE	POST MILES TOTAL PROJECT	SHEET No.	TOTAL SHEETS
08	SBd	40	R18.0	9	17

Daryush Nami 8-26-13
REGISTERED CIVIL ENGINEER DATE

8-26-13
PLANS APPROVAL DATE

REGISTERED PROFESSIONAL ENGINEER
DARYUSH NAMI
No. 78890
Exp 3/31/14
CIVIL
STATE OF CALIFORNIA

THE STATE OF CALIFORNIA OR ITS OFFICERS OR AGENTS SHALL NOT BE RESPONSIBLE FOR THE ACCURACY OR COMPLETENESS OF SCANNED COPIES OF THIS PLAN SHEET.

G11-4.1<CA> Riv 40, FEBT

1.5" Rad., 0.675" Border, Black on White;
[CREST WASH] 4"C;
[BRIDGE 54-0717R] 1¾" D; [40 SBd R18.03] 2½" D
INSTALL ROADSIDE SIGN (ONE POST)

G11-4.1<CA> Riv 40, FWBT

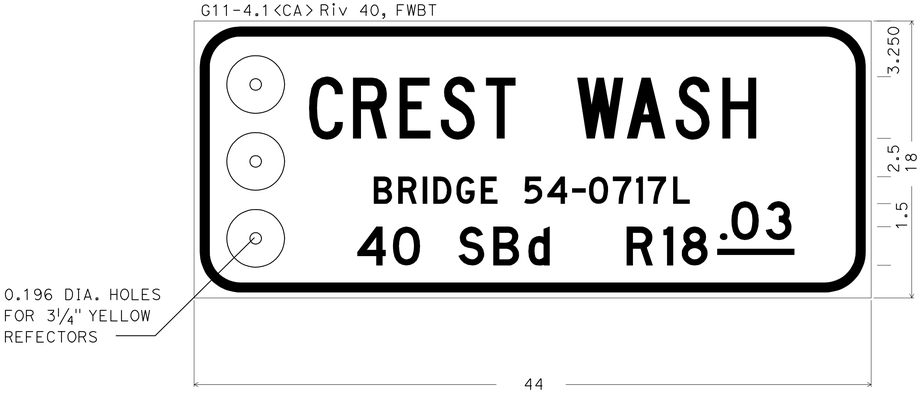

1.5" Rad., 0.675" Border, Black on White;
[CREST WASH] 4"C;
[BRIDGE 54-0717L] 1¾" D; [40 SBd R18.03] 2½" D
INSTALL ROADSIDE SIGN (ONE POST)

CREST WASH BRIDGE

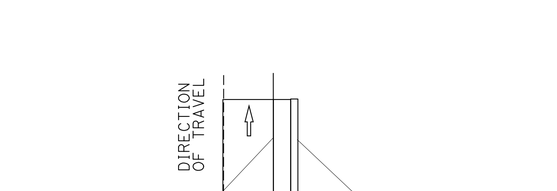

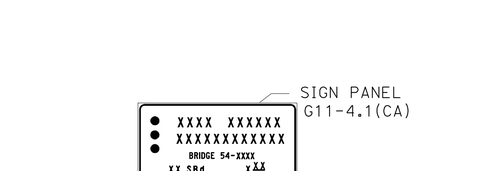

INCHES

A	B	C	D
2½	½	⅜	1

TYPICAL LOCATION AND INSTALLATION OF G11-4.1(CA) SIGN

TYPICAL DIMENSIONING FOR POSTMILE VALUE

APPROVED FOR SIGN WORK ONLY

SIGN DETAIL PLAN

NO SCALE **SD-1**

STATE OF CALIFORNIA - DEPARTMENT OF TRANSPORTATION
Caltrans®
TRAFFIC DESIGN
FUNCTIONAL SUPERVISOR: BILL WASSER
CALCULATED-DESIGNED BY: DARYUSH NAMI
CHECKED BY: TRAN HOANG
REVISED BY
DATE REVISED

LAST REVISION 08-26-13
DATE PLOTTED => 30-AUG-2013
TIME PLOTTED => 14:40

BORDER LAST REVISED 7/2/2010
USERNAME => s110420
DGN FILE => 08000201791ob001.dgn
RELATIVE BORDER SCALE IS IN INCHES 0 1 2 3
UNIT 2285
PROJECT NUMBER & PHASE 08000201791

NOTE:
CONTRACTOR SHALL VERIFY ALL FIELD CONDITIONS BEFORE SIGN FABRICATION AND SIGN INSTALLATION.

Dist	COUNTY	ROUTE	POST MILES TOTAL PROJECT	SHEET No.	TOTAL SHEETS
08	SBd	40	R18.0	10	17

Daryush Nami 8-26-13
REGISTERED CIVIL ENGINEER DATE

8-26-13
PLANS APPROVAL DATE

REGISTERED PROFESSIONAL ENGINEER
DARYUSH NAMI
No. 78890
Exp 3/31/14
CIVIL
STATE OF CALIFORNIA

THE STATE OF CALIFORNIA OR ITS OFFICERS OR AGENTS SHALL NOT BE RESPONSIBLE FOR THE ACCURACY OR COMPLETENESS OF SCANNED COPIES OF THIS PLAN SHEET.

SIGN PANEL MATERIAL SUMMARY

ROUTE	POST MILE	BRIDGE NUMBER	DIRECTION	SIGN CODE		PANEL SIZE L x D	SINGLE FACED	SIGN FACING MATERIAL					FURNISH SINGLE SHEET ALUMINUM SIGN		NAME OF BRIDGE
								BACKGROUND		LEGEND		PRO-TECTIVE FILM			
				FEDERAL	CALIFORNIA			SHEETING COLOR	RETROREFLECTIVE ASTM TYPE	SHEETING COLOR	RETROREFLECTIVE ASTM TYPE	PREMIUM	UNFRAMED 0.063" SQFT	UNFRAMED 0.080" SQFT	
40	R18.03	54-0717L	WB		G11-4.1<CA>	44" X 18"	X	WHITE	IV	BLACK		X	5.5		CREST WASH
40	R18.03	54-0717R	EB		G11-4.1<CA>	44" X 18"	X	WHITE	IV	BLACK		X	5.5		CREST WASH
												TOTAL	11.0		

SIGN PANEL MATERIAL SUMMARY

ROUTE	POST MILE	BRIDGE NUMBER	DIRECTION	SIGN CODE		PANEL SIZE L x D	POST SIZE AND LENGTH	ROADSIDE SIGN	NAME OF BRIDGE
							4" x 4"	ONE POST	
				FEDERAL	CALIFORNIA		LF	EACH	
40	R18.03	54-0717R	EB		G11-4.1<CA>	44" X 18"	7.5	1	CREST WASH
40	R18.03	54-0717L	WB		G11-4.1<CA>	44" X 18"	7.5	1	CREST WASH
							TOTAL	2	

APPROVED FOR SIGN WORK ONLY

SIGN QUANTITY PLAN

NO SCALE **SQ-1**

DATE REVISED | REVISED BY
TRAN HOANG | DARYUSH NAMI
CHECKED BY | CALCULATED-DESIGNED BY
BILL WASSER | FUNCTIONAL SUPERVISOR
STATE OF CALIFORNIA - DEPARTMENT OF TRANSPORTATION
Caltrans® TRAFFIC DESIGN

LAST REVISION 08-26-13
DATE PLOTTED => 30-AUG-2013
TIME PLOTTED => 14:41

BORDER LAST REVISED 7/2/2010
USERNAME => s110420
DGN FILE => 08000201791oc001.dgn
RELATIVE BORDER SCALE IS IN INCHES 0 1 2 3
UNIT 2285
PROJECT NUMBER & PHASE 08000201791

Dist	COUNTY	ROUTE	POST MILES TOTAL PROJECT	SHEET No.	TOTAL SHEETS
08	SBd	40	R18.0	11	17

John J. Stanton 8-26-13
LICENSED LANDSCAPE ARCHITECT

8-26-13
PLANS APPROVAL DATE

LICENSED LANDSCAPE ARCHITECT JOHN J. STANTON No. 5465 Signature 03-31-14 Renewal Date Date STATE OF CALIFORNIA

THE STATE OF CALIFORNIA OR ITS OFFICERS OR AGENTS SHALL NOT BE RESPONSIBLE FOR THE ACCURACY OR COMPLETENESS OF SCANNED COPIES OF THIS PLAN SHEET.

LEGEND:

EROSION CONTROL

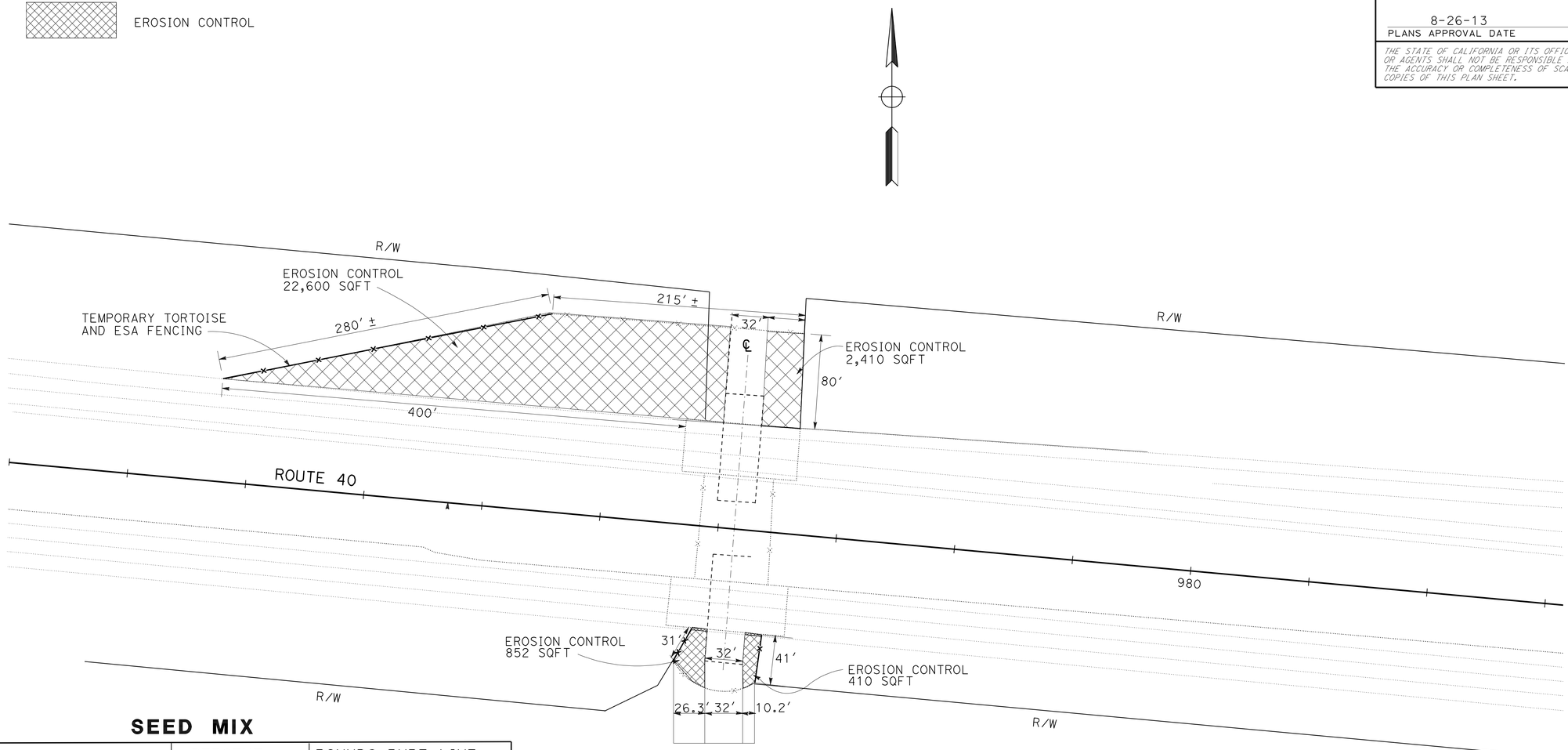

SEED MIX

SEED	BOTANICAL NAME (COMMON NAME)	PERCENT GERMINATION (MINIMUM)	POUNDS PURE LIVE SEED PER ACRE (SLOPE MEASUREMENT)
	Abronia villosum (Desert Sand Verbena)	15	1.00
	Achanatherum (Oryzopsis) hymenoides (Indian Rice Grass)	40	8.00
	Ambrosia dumosa (Burro Weed)	25	4.00
	Baileya multiradiata (Desert Marigold)	40	4.00
	Encelia farinosa (Brittlebush)	30	1.00
	Eriogonum fasciculatum var polifolium (Interior California Buckwheat)	30	1.00
	Larrea tridentata (Creosote Bush)	20	2.00
	TOTAL		21.00

EROSION CONTROL

SEQUENCE	ITEM	MATERIALS DESCRIPTION	MATERIALS TYPE	APPLICATION RATE	DEPTH	UNIT	QUANTITIES	NOTES
STEP 1	DUFF	SPECIFIED	–	SPECIFIED	–	AC	1.0	–
STEP 2	INCORPORATE MATERIALS	DUFF	–	–	6"	SQFT	26,272	
STEP 3	FIBER ROLLS	NATURAL FIBER MATERIALS	TYPE B	–	–	LF	975	INSTALL FIBER ROLLS AT PERIMETER OF EROSION CONTROL AREA AFTER INSTALLATION OF DUFF
STEP 4	HYDROSEED	SEED	MIX	21.00 LB PURE LIVE SEEDS/ACRE	–	SQFT	26,272	
		BFM FIBER	WOOD	3000 LB/AC	–			
		BFM TACKIFIER	ORGANIC					

EROSION CONTROL PLAN

NO SCALE

EC-1

APPROVED FOR EROSION CONTROL WORK ONLY

STATE OF CALIFORNIA - DEPARTMENT OF TRANSPORTATION
Caltrans® LANDSCAPE ARCHITECTURE
SENIOR LANDSCAPE ARCHITECT: RAY DESSELLE
CALCULATED-DESIGNED BY: MARY-ANN JOHNS
CHECKED BY: JOHN STANTON
REVISED BY
DATE REVISED

LAST REVISION 08-26-13
DATE PLOTTED => 30-AUG-2013
TIME PLOTTED => 14:41

DIST	COUNTY	ROUTE	POST MILES TOTAL PROJECT	SHEET No.	TOTAL SHEETS
08	SBd	40	R18.03	12	17

REGISTERED CIVIL ENGINEER — 11-6-12 DATE

8-26-13
PLANS APPROVAL DATE

REGISTERED PROFESSIONAL ENGINEER — Quang M. Vo — No. C 055211 — Exp. 6-30-14 — CIVIL — STATE OF CALIFORNIA

The State of California or its officers or agents shall not be responsible for the accuracy or completeness of electronic copies of this plan sheet.

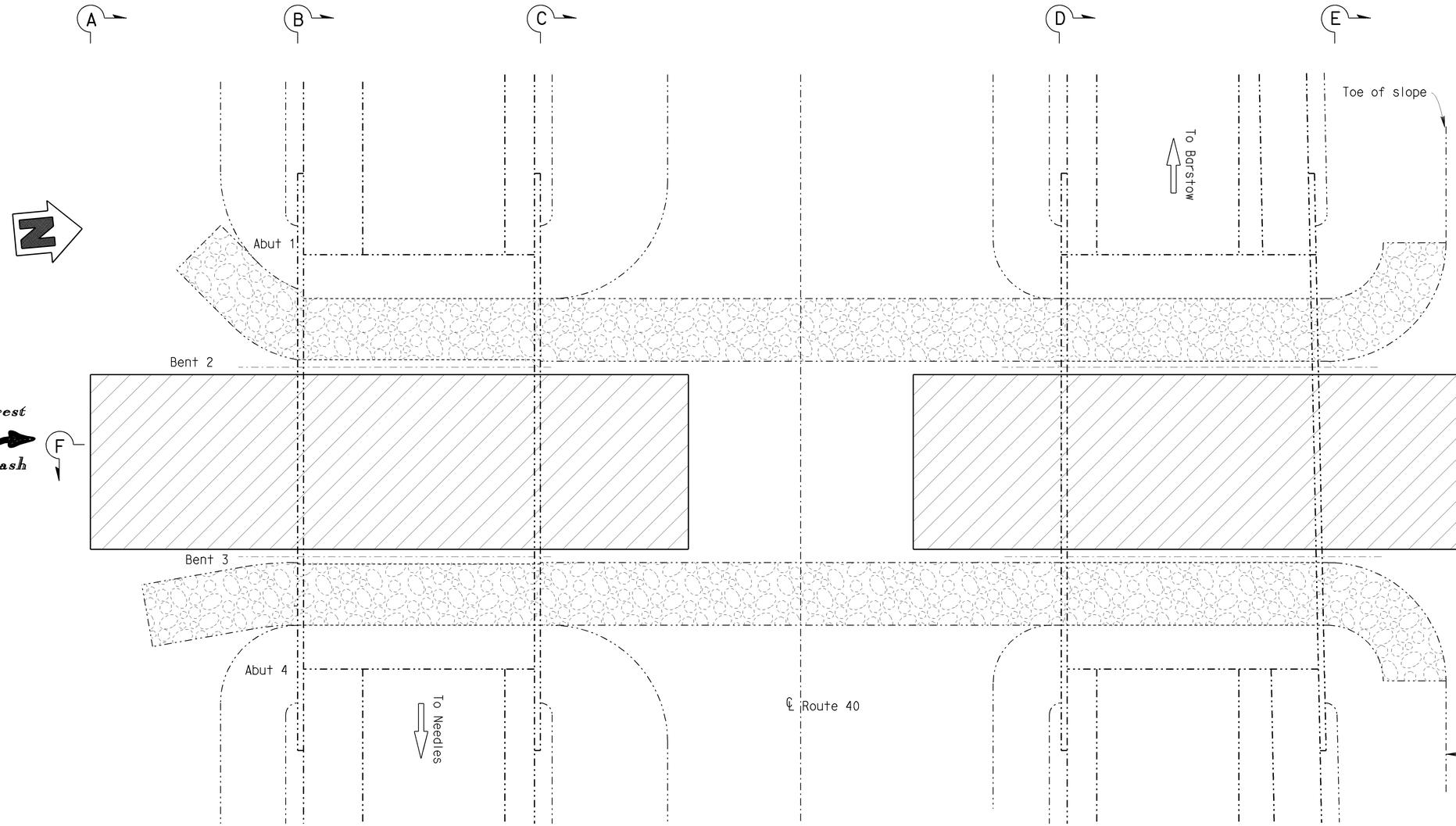

NOTES:

- Indicates existing structure
- Indicates existing rock slope protection.
- Indicates limits of rock slope protection.

For SECTIONS A-A, B-B, C-C, D-D, and E-E see DETAILS NO. 1 sheet.

For SECTIONS F-F see DETAILS NO. 1 sheet.

INDEX TO PLANS

SHEET NO.	TITLE
1	GENERAL PLAN
2	DETAILS NO. 1
3	DETAILS NO. 2

PLAN

1"=10'

EA 08-435411

CREST WASH — BRIDGE NO 54-0717L/R

QUANTITIES

STRUCTURE EXCAVATION (BRIDGE)	1,250 CY
BACKFILL (TORTOISE CROSSING)	53 CY
ROCK SLOPE PROTECTION (2T, METHOD A)	680 CY
ROCK SLOPE PROTECTION (1/4 T, METHOD B) (CY)	211 CY
ROCK SLOPE PROTECTION (NO. 3, METHOD B) (CY)	550 CY

NOTE:
THE CONTRACTOR SHALL VERIFY ALL CONTROLLING FIELD DIMENSIONS BEFORE ORDERING OR FABRICATING ANY MATERIAL.

STANDARD PLANS DATED MAY 2010

SHEET NO.	TITLE
A10A	ACRONYMS AND ABBREVIATIONS (SHEET 1 OF 2)
A10B	ACRONYMS AND ABBREVIATIONS (SHEET 2 OF 2)

Matthew Lee 10-10-12
DESIGN ENGINEER

	BY	CHECKED	LOAD FACTOR DESIGN	LIVE LOADING: HS20-44 AND ALTERNATIVE AND PERMIT DESIGN LOAD	
DESIGN	O. Vo	M. Lee			
DETAILS	N. Kelley	M. Lee	LAYOUT	N. Kelley	O. Vo
QUANTITIES	O. Vo	M. Lee	SPECIFICATIONS	Xiahong Li	PLANS AND SPECS COMPARED Xiahong Li

STATE OF CALIFORNIA
DEPARTMENT OF TRANSPORTATION

DIVISION OF MAINTENANCE
STRUCTURE MAINTENANCE DESIGN

BRIDGE NO. 54-0717L/R
POST MILE R29.0

CREST WASH
GENERAL PLAN

STRUCTURES MAINTENANCE GENERAL PLAN SHEET (ENGLISH) (REV. 09-01-10)

ORIGINAL SCALE IN INCHES FOR REDUCED PLANS 0 1 2 3

UNIT: 3488
PROJECT NUMBER & PHASE: 0000001635 CONTRACT NO.: 08-435411

DISREGARD PRINTS BEARING EARLIER REVISION DATES

REVISION DATES				SHEET	OF
2-8-12	12-27-12	1-2-13	5-14-13	1	3

FILE => 08_435411_agp.dgn

USERNAME => s1211116 DATE PLOTTED => 20-AUG-2013 TIME PLOTTED => 10:11

DIST	COUNTY	ROUTE	POST MILES TOTAL PROJECT	SHEET No.	TOTAL SHEETS
08	SBd	40	R18.03	13	17

REGISTERED CIVIL ENGINEER — 11-6-12 DATE

8-26-13
PLANS APPROVAL DATE

REGISTERED PROFESSIONAL ENGINEER — Quang M. Vo — No. C 055211 — Exp. 6-30-14 — CIVIL — STATE OF CALIFORNIA

The State of California or its officers or agents shall not be responsible for the accuracy or completeness of scanned copies of this plan sheet.

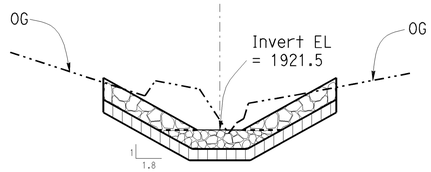

ELEVATION A-A

1"=10'

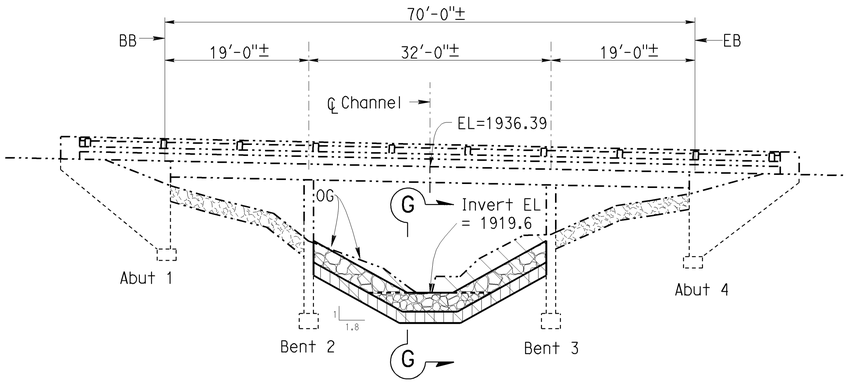

ELEVATION B-B

1"=10'

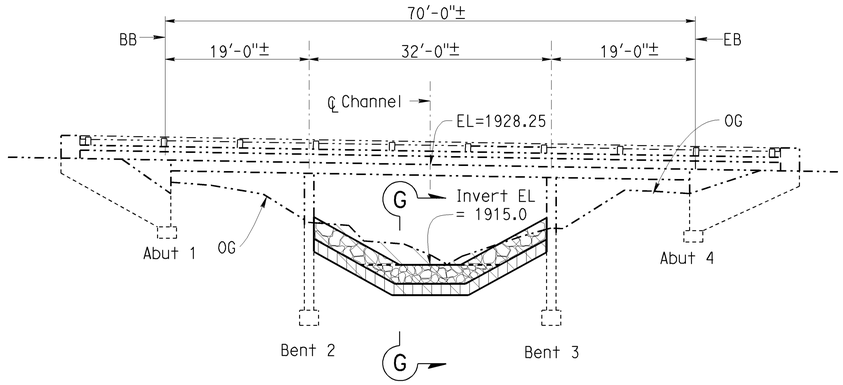

ELEVATION D-D

1"=10'

NOTES:

- Indicates existing structure
- Indicates limits of rock slope protection (No. 3, Method B).
- Indicates limits of structure excavation (bridge)
- Indicates existing rock slope protection.
- Indicates limits of rock slope protection 1/4 Ton.
- Indicates limits of Rock Slope Protection 2 Ton.

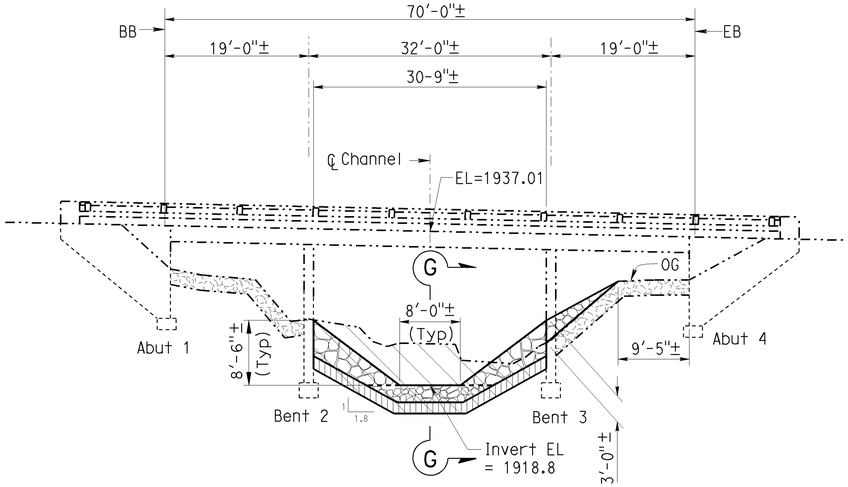

ELEVATION C-C

1"=10'

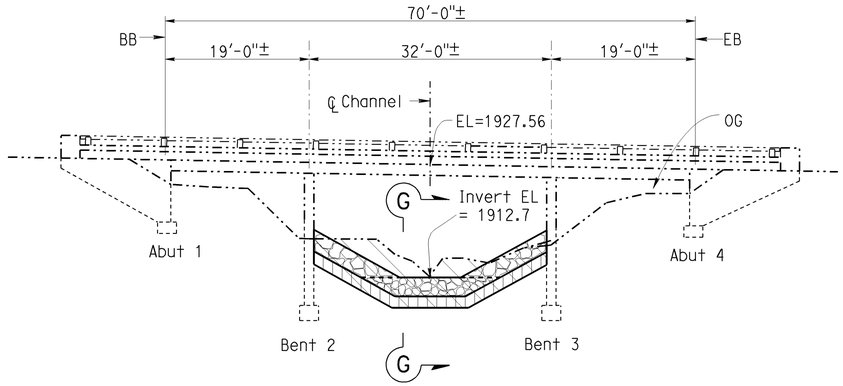

ELEVATION E-E

1"=10'

NOTE:
THE CONTRACTOR SHALL VERIFY ALL CONTROLLING FIELD DIMENSIONS BEFORE ORDERING OR FABRICATING ANY MATERIAL.

DESIGN	BY Q. Vo	CHECKED M. Lee	STATE OF CALIFORNIA DEPARTMENT OF TRANSPORTATION	DIVISION OF MAINTENANCE STRUCTURE MAINTENANCE DESIGN	BRIDGE NO. 54-0717L/R
DETAILS	BY N. Kelley	CHECKED M. Lee			POST MILE R29.0
QUANTITIES	BY Q. Vo	CHECKED M. Lee			

CREST WASH
DETAILS NO. 1

STRUCTURES MAINTENANCE DETAIL SHEET (ENGLISH) (REV. 09-01-10)

ORIGINAL SCALE IN INCHES FOR REDUCED PLANS 0 1 2 3

UNIT: 3488
PROJECT NUMBER & PHASE: 0000001635
CONTRACT NO.: 08-435411

DISREGARD PRINTS BEARING EARLIER REVISION DATES →

REVISION DATES				SHEET	OF
11-1-12	5-14-13	12-27-12	1-1-13	2	3

FILE => 08_435411_bdet_1.dgn

USERNAME => s121116 DATE PLOTTED => 20-AUG-2013 TIME PLOTTED => 10:12

DIST	COUNTY	ROUTE	POST MILES TOTAL PROJECT	SHEET No.	TOTAL SHEETS
08	SBd	40	R18.03	14	17

REGISTERED CIVIL ENGINEER — 11-6-12 DATE

8-26-13
PLANS APPROVAL DATE

REGISTERED PROFESSIONAL ENGINEER — Quang M. Vo, No. C 055211, Exp. 6-30-14, CIVIL, STATE OF CALIFORNIA

The State of California or its officers or agents shall not be responsible for the accuracy or completeness of scanned copies of this plan sheet.

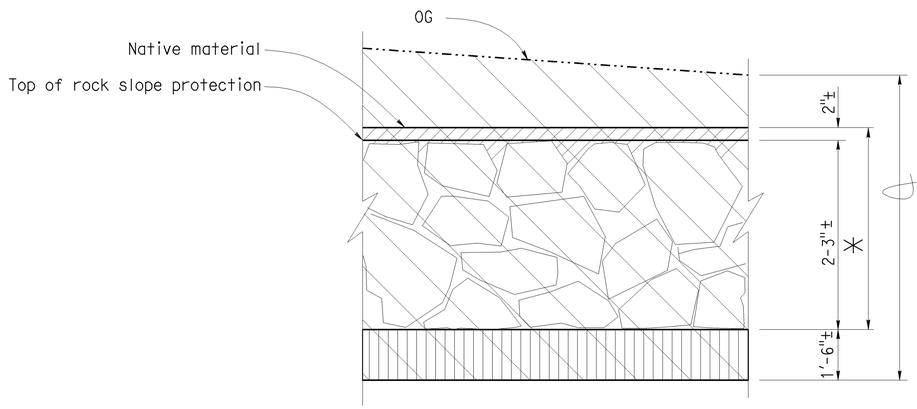

SECTION G-G

1"=1'

NOTES:

- Indicates existing structure
- Indicates limits of rock slope protection 1/4 Ton.
- Indicates limits of rock slope protection (No. 3, Method B).
- Indicates limits of structure excavation (bridge).
- ✳ Indicates limits of backfill (Tortise Crossing) with native material on top of and in voids of RSP at invert locations only (No compaction needed).

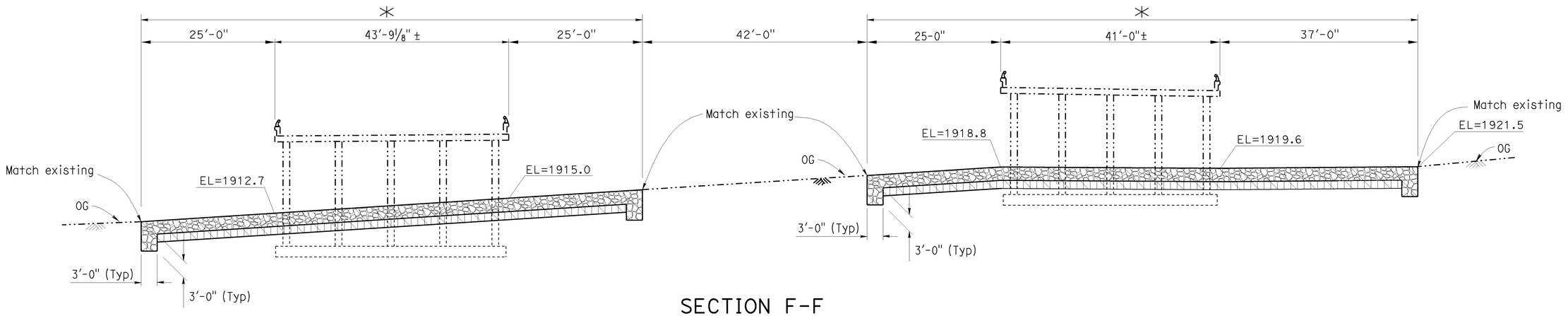

SECTION F-F

1"=10'

NOTE:
THE CONTRACTOR SHALL VERIFY ALL CONTROLLING FIELD DIMENSIONS BEFORE ORDERING OR FABRICATING ANY MATERIAL.

	BY	CHECKED
DESIGN	Q. Vo	M. Lee
DETAILS	N. Kelley	M. Lee
QUANTITIES	Q. Vo	M. Lee

STATE OF CALIFORNIA
DEPARTMENT OF TRANSPORTATION

DIVISION OF MAINTENANCE
STRUCTURE MAINTENANCE DESIGN

BRIDGE NO. 54-0717L/R
POST MILE R29.0

CREST WASH
DETAILS NO. 2

STRUCTURES MAINTENANCE DETAIL SHEET (ENGLISH) (REV. 09-01-10)

ORIGINAL SCALE IN INCHES FOR REDUCED PLANS 0 1 2 3

UNIT: 3488
PROJECT NUMBER & PHASE: 0000001635
CONTRACT NO.: 08-435411

DISREGARD PRINTS BEARING EARLIER REVISION DATES →

REVISION DATES				SHEET	OF
11-1-12	5-14-13	12-27-12	1-1-13	3	3

FILE => 08_435411_cdet_2.dgn

USERNAME => s162116 DATE PLOTTED => 20-AUG-2013 TIME PLOTTED => 10:12

Dist	COUNTY	ROUTE	POST MILES TOTAL PROJECT	SHEET No.	TOTAL SHEETS
08	SBd	40	R18.0	15	17

REGISTERED CIVIL ENGINEER

July 19, 2013
PLANS APPROVAL DATE

REGISTERED PROFESSIONAL ENGINEER
Gurinderpal Bhullar
No. C48815
Exp. 9-30-14
CIVIL
STATE OF CALIFORNIA

THE STATE OF CALIFORNIA OR ITS OFFICERS OR AGENTS SHALL NOT BE RESPONSIBLE FOR THE ACCURACY OR COMPLETENESS OF SCANNED COPIES OF THIS PLAN SHEET.

TO ACCOMPANY PLANS DATED 8-26-13

TABLE 1

TAPER LENGTH CRITERIA AND CHANNELIZING DEVICE SPACING

SPEED (S)	MINIMUM TAPER LENGTH * FOR WIDTH OF OFFSET 12 FEET (W)				MAXIMUM CHANNELIZING DEVICE SPACING		
					X	Y	Z **
	TANGENT 2L	MERGING L	SHIFTING L/2	SHOULDER L/3	TAPER	TANGENT	CONFLICT
mph	ft	ft	ft	ft	ft	ft	ft
20	160	80	40	27	20	40	10
25	250	125	63	42	25	50	12
30	360	180	90	60	30	60	15
35	490	245	123	82	35	70	17
40	640	320	160	107	40	80	20
45	1080	540	270	180	45	90	22
50	1200	600	300	200	50	100	25
55	1320	660	330	220	55	110	27
60	1440	720	360	240	60	120	30
65	1560	780	390	260	65	130	32
70	1680	840	420	280	70	140	35

* - For other offsets, use the following merging taper length formula for L:
For speed of 40 mph or less, $L = WS^2/60$
For speed of 45 mph or more, $L = WS$

Where: L = Taper length in feet
W = Width of offset in feet
S = Posted speed limit, off-peak 85th-percentile speed prior to work starting, or the anticipated operating speed in mph

** - Use for taper and tangent sections where there are no pavement markings or where there is a conflict between existing pavement markings and channelizers (CA).

TABLE 2

LONGITUDINAL BUFFER SPACE AND FLAGGER STATION SPACING

SPEED *	Min D **	DOWNGRADE Min D ***		
		-3%	-6%	-9%
mph	ft	ft	ft	ft
20	115	116	120	126
25	155	158	165	173
30	200	205	215	227
35	250	257	271	287
40	305	315	333	354
45	360	378	400	427
50	425	446	474	507
55	495	520	553	593
60	570	598	638	686
65	645	682	728	785
70	730	771	825	891

* - Speed is posted speed limit, off-peak 85th-percentile speed prior to work starting, or the anticipated operating speed in mph

** - Longitudinal buffer space or flagger station spacing

*** - Use on sustained downgrade steeper than -3 percent and longer than 1 mile.

TABLE 3

ADVANCE WARNING SIGN SPACING

ROAD TYPE	DISTANCE BETWEEN SIGNS *		
	A	B	C
	ft	ft	ft
URBAN - 25 mph OR LESS	100	100	100
URBAN - MORE THAN 25 mph TO 40 mph	250	250	250
URBAN - MORE THAN 40 mph	350	350	350
RURAL	500	500	500
EXPRESSWAY / FREEWAY	1000	1500	2640

* - The distances are approximate, are intended for guidance purposes only, and should be applied with engineering judgment. These distances should be adjusted by the Engineer for field conditions, if necessary, by increasing or decreasing the recommmended distances.

2010 REVISED STANDARD PLAN RSP T9

STATE OF CALIFORNIA
DEPARTMENT OF TRANSPORTATION

TRAFFIC CONTROL SYSTEM TABLES FOR LANE AND RAMP CLOSURES

NO SCALE

RSP T9 DATED JULY 19, 2013 SUPERSEDES RSP T9 DATED APRIL 19, 2013 THAT SUPPLEMENTS THE STANDARD PLANS BOOK DATED 2010.

REVISED STANDARD PLAN RSP T9

4-30-13

Dist	COUNTY	ROUTE	POST MILES TOTAL PROJECT	SHEET No.	TOTAL SHEETS
08	SBd	40	R18.0	16	17

REGISTERED CIVIL ENGINEER

April 19, 2013
PLANS APPROVAL DATE

REGISTERED PROFESSIONAL ENGINEER — Gurinderpal Bhullar — No. C48815 — Exp. 9-30-14 CIVIL — STATE OF CALIFORNIA

THE STATE OF CALIFORNIA OR ITS OFFICERS OR AGENTS SHALL NOT BE RESPONSIBLE FOR THE ACCURACY OR COMPLETENESS OF SCANNED COPIES OF THIS PLAN SHEET.

TO ACCOMPANY PLANS DATED 8-26-13

NOTES:

See Revised Standard Plan RSP T9 for tables.

Use cone spacing X for taper segment, Y for tangent segment or Z for conflict situations, as approriate, per Table 1, unless X, Y, or Z cone spacing is shown on this sheet.

Unless otherwise specified in the special provisions, all temporary warning signs shall have black legend on fluorescent orange background.

California codes are designated by (CA). Otherwise, Federal (MUTCD) codes are shown.

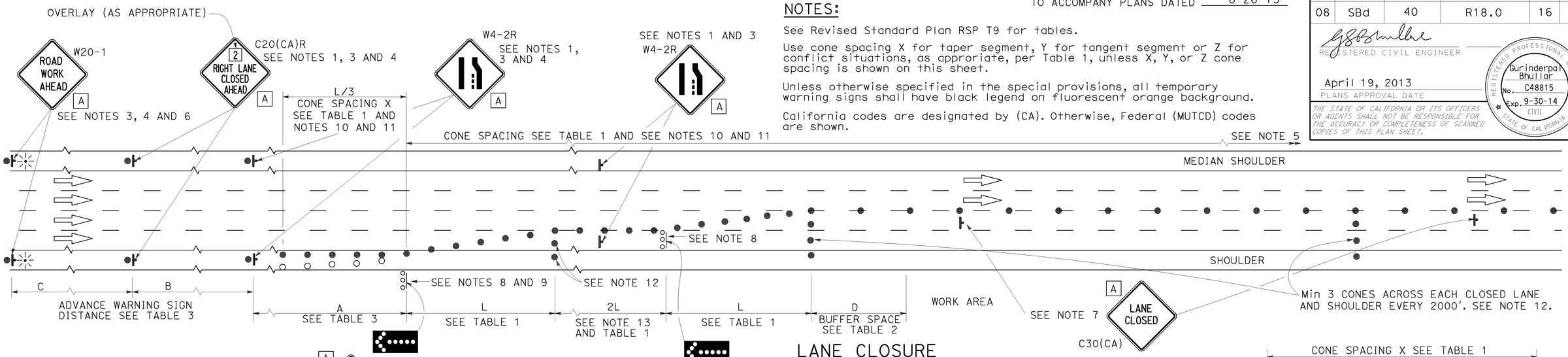

LANE CLOSURE

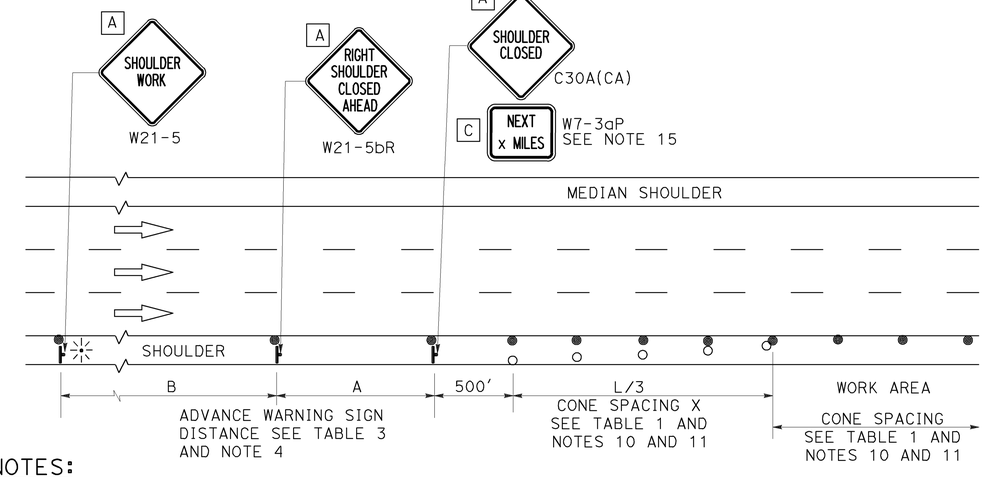

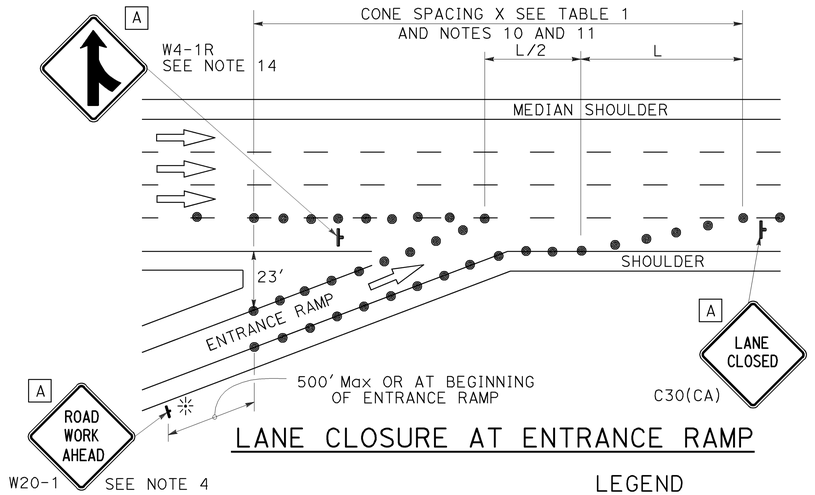

LANE CLOSURE AT ENTRANCE RAMP

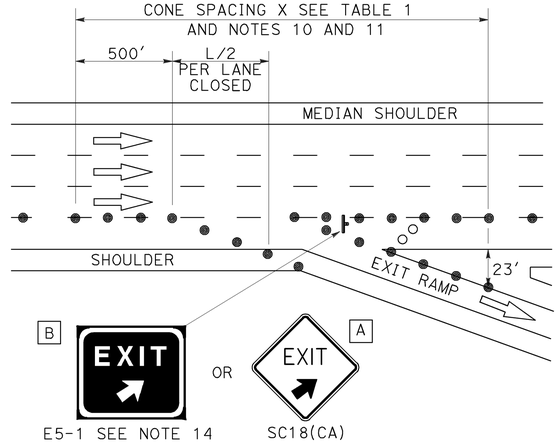

LANE CLOSURE AT EXIT RAMP

NOTES:

1. Median lane closures shall conform to the details as shown except that C20(CA)L and W4-2L signs shall be used.
2. At least one person shall be assigned to provide full time maintenance of traffic control devices for lane closures.
3. Duplicate sign installations are not required:
   a) On opposite shoulder if at least one-half of the available lanes remain open to traffic.
   b) In the median if the width of the median shoulder is less than 8' and the outside lanes are to be closed.
4. Each advance warning sign on each side of the roadway shall be equipped with at least two flags for daytime closure. Each flag shall be at least 16" x 16" in size and shall be orange or fluorescent red-orange in color. Flashing beacons shall be placed at the locations indicated for lane closure during hours of darkness.
5. A G20-2 "END ROAD WORK" sign, with minimum size of 48" x 24" as appropriate, shall be placed at the end of the lane closure unless the end of work area is obvious or ends within a larger project's limits.

SHOULDER CLOSURE

6. If the W20-1 sign would follow within 2000' of a stationary W20-1 or G20-1 "ROAD WORK NEXT _____ MILES", use a C20(CA) sign for the first advance warning sign.
7. Place a C30(CA) sign every 2000' throughout length of lane closure.
8. One flashing arrow sign for each lane closed. The flashing arrow signs shall be Type I.
9. A minimum 1500' of sight distance shall be provided where possible for vehicles approaching the first flashing arrow sign. Lane closures shall not begin at top of crest vertical curve or on a horizontal curve.
10. All cones used for lane closures during the hours of darkness shall be fitted with retroreflective bands (or sleeves) as specified in the specifications.
11. Portable delineators, placed at one-half the spacing indicated for traffic cones may be used instead of cones for daytime closures only.
12. Unless otherwise specified in the special provisions, a minimum of 3 cones shall be placed transversely across each closed lane and shoulder at each location where a taper across a traffic lane ends and every 2000' as shown on the "Lane Closure" detail. Two Type II barricades may be used instead of the 3 cones. The transverse alignment of the cones or barricades on the closed shoulder may be shifted from the transverse alignment to provide access to the work.
13. Unless otherwise specified in the special provisions, the 2L tangent shown along lane lines shall be used between the L tapers required for each closed traffic lane.
14. Unless otherwise specified in the special provisions, the E5-1 or SC18(CA) and W4-1 signs shall be used as shown.
15. A W7-3aP "NEXT___MILES" plaque must be used if theshoulder closure extends beyond the distance that can be perceived by road users.

LEGEND

- TRAFFIC CONE
- TRAFFIC CONE (OPTIONAL TAPER)
- TEMPORARY TRAFFIC CONTROL SIGN
- FLASHING ARROW SIGN (FAS)
- FAS SUPPORT OR TRAILER
- PORTABLE FLASHING BEACON

SIGN PANEL SIZE (Min)

A	48" x 48"
B	72" x 60"
C	36" x 30"

STATE OF CALIFORNIA
DEPARTMENT OF TRANSPORTATION

TRAFFIC CONTROL SYSTEM FOR LANE CLOSURE ON FREEWAYS AND EXPRESSWAYS

NO SCALE

RSP T10 DATED APRIL 19, 2013 SUPERSEDES STANDARD PLAN T10 DATED MAY 20, 2011 - PAGE 237 OF THE STANDARD PLANS BOOK DATED 2010.

REVISED STANDARD PLAN RSP T10

2010 REVISED STANDARD PLAN RSP T10

12-18-13

TYPICAL RAMP CLOSURES

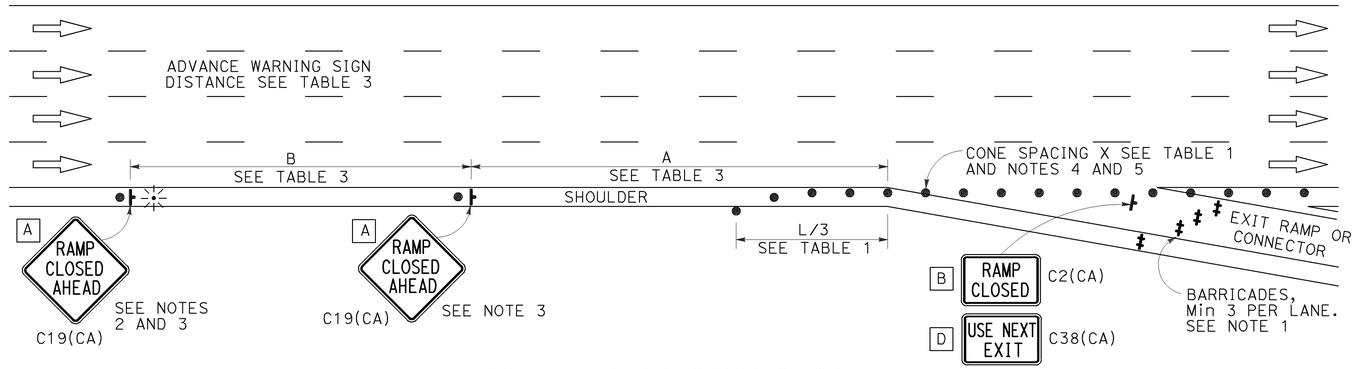

EXIT RAMP OR CONNECTOR

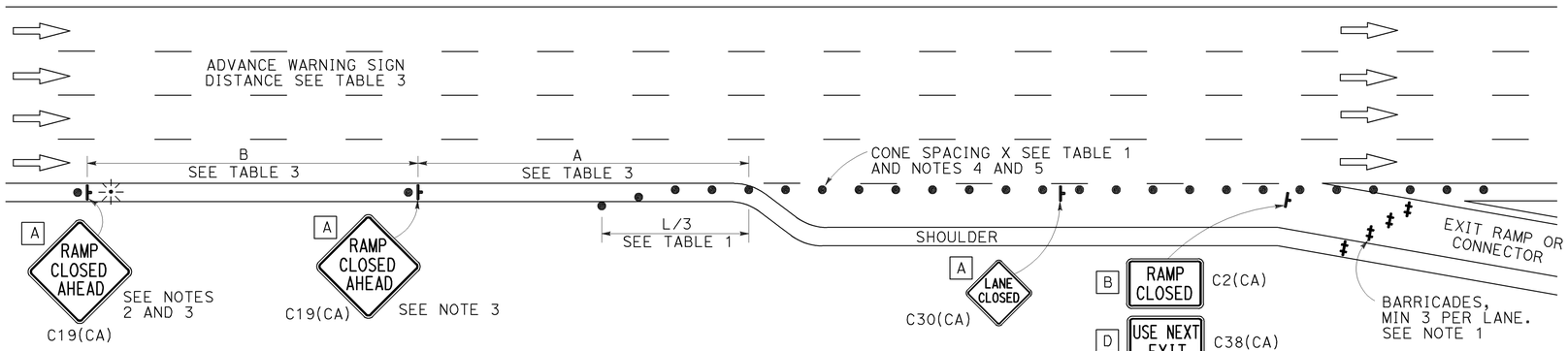

EXIT RAMP OR CONNECTOR WITH ADDITIONAL LANE

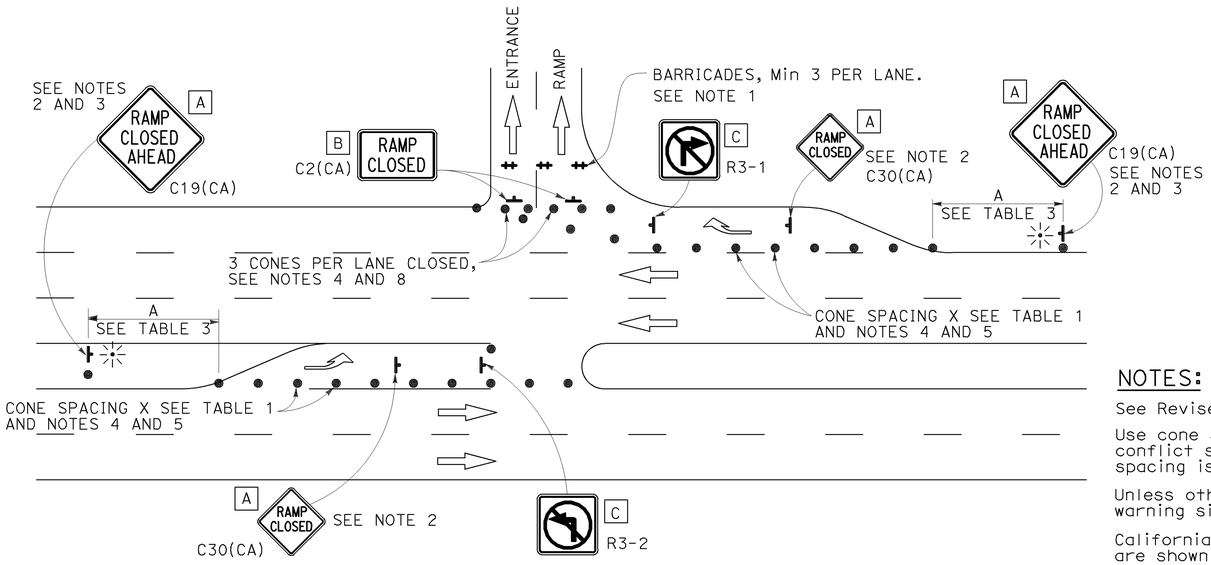

ENTRANCE RAMP WITH TURNING POCKETS

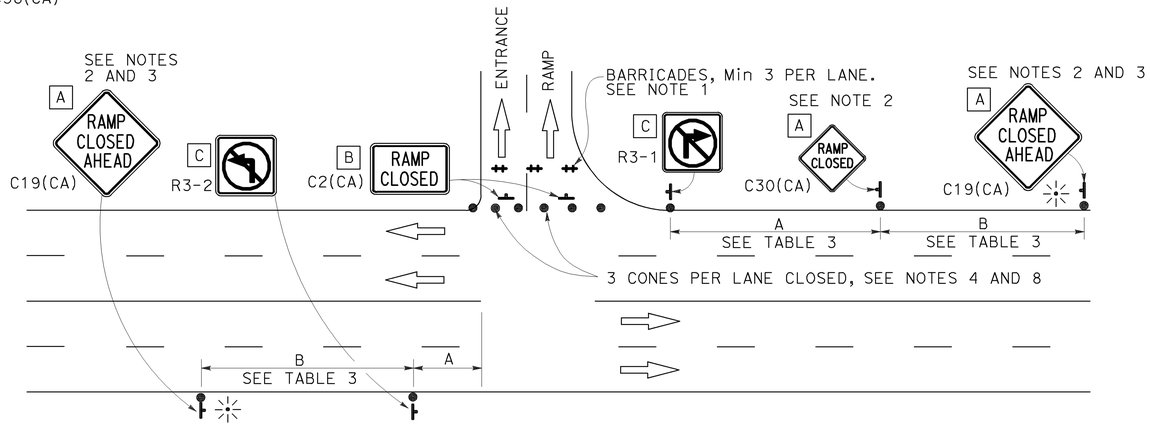

ENTRANCE RAMP WITHOUT TURNING POCKETS

SIGN PANEL SIZE (Min)

- A 48" × 48"
- B 48" × 30"
- C 36" × 36"
- D 48" × 36"

LEGEND

- ● TRAFFIC CONE
- ⊢ TEMPORARY TRAFFIC CONTROL SIGN
- ‡ BARRICADES
- ⁘ PORTABLE FLASHING BEACON

NOTES:

1. Barricades shall be Type I, II, or III for closures lasting one week or less and Type III for closures lasting longer than one week.
2. In addition to placing the C19(CA) "RAMP CLOSED AHEAD" and C30(CA) "RAMP CLOSED" signs, black on orange overlay plates with the word "CLOSED" may be mounted, as directed by the Engineer, on all guide signs that refer to the closed ramp. The letter size on the overlay shall be the same as the guide sign.
3. Each advance C19(CA) "RAMP CLOSED AHEAD" sign shall be equipped with at least two flags for daytime closure. Each flag shall be at least 16" × 16" in size and shall be orange or fluorescent red-orange in color. A flashing beacon shall be placed on top of the first C19(CA) sign during hours of darkness.
4. All cones used for ramp closures during the hours of darkness shall be fitted with retroreflective bands (or sleeves) as specified in the specifications.
5. Portable delineators, placed at one-half the spacing indicated for traffic cones, may be used instead of cones for daytime ramp closures only.
6. At least one person shall be assigned to provide full time maintenance of traffic control devices, unless otherwise directed by the Engineer.
7. The existing "EXIT" signs shall be covered during ramp closures.
8. A minimum of 3 cones shall be placed transversely across each closed lane and shoulder.

NOTES:

See Revised Standard Plan RSP T9 for tables.

Use cone spacing X for taper segment, Y for tangent segment or Z for conflict situations, as approriate, per Table 1, unless X, Y, or Z cone spacing is shown on this sheet.

Unless otherwise specified in the special provisions, all temporary warning signs shall have black legend on fluorescent orange background.

California codes are designated by (CA). Otherwise, Federal (MUTCD) codes are shown.

Dist	COUNTY	ROUTE	POST MILES TOTAL PROJECT	SHEET No.	TOTAL SHEETS
08	SBd	40	R18.0	17	17

REGISTERED CIVIL ENGINEER

April 19, 2013
PLANS APPROVAL DATE

REGISTERED PROFESSIONAL ENGINEER
Gurinderpal Bhullar
No. C48815
Exp. 9-30-14
CIVIL
STATE OF CALIFORNIA

THE STATE OF CALIFORNIA OR ITS OFFICERS OR AGENTS SHALL NOT BE RESPONSIBLE FOR THE ACCURACY OR COMPLETENESS OF SCANNED COPIES OF THIS PLAN SHEET.

TO ACCOMPANY PLANS DATED 8-26-13

STATE OF CALIFORNIA
DEPARTMENT OF TRANSPORTATION

TRAFFIC CONTROL SYSTEM FOR RAMP CLOSURE

NO SCALE

RSP T14 DATED APRIL 19, 2013 SUPERSEDES STANDARD PLAN T14
DATED MAY 20, 2011 - PAGE 242 OF THE STANDARD PLANS BOOK DATED 2010.

REVISED STANDARD PLAN RSP T14

2010 REVISED STANDARD PLAN RSP T14

12-18-12