DIST.	COUNTY	ROUTE	POST MILES TOTAL PROJECT	SHEET NO.	TOTAL SHEETS
08	SBd	15	177.3/181.1	501	710

Shervin Pahlavan 11-27-12
REGISTERED CIVIL ENGINEER DATE

REGISTERED PROFESSIONAL ENGINEER Shervin Pahlavan No. 44463 Exp. 3-31-14 CIVIL STATE OF CALIFORNIA

2-25-13
PLANS APPROVAL DATE

The State of California or its officers or agents shall not be responsible for the accuracy or completeness of electronic copies of this plan sheet.

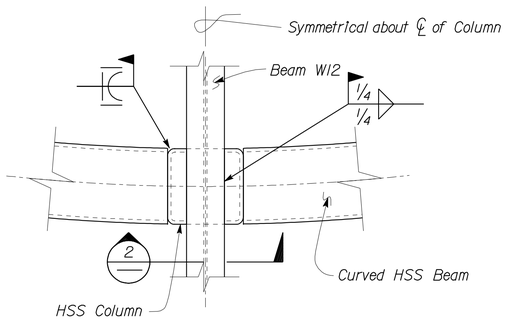

1 BEAM TO BEAM CONNECTION
Scale 1 1/2" = 1' - 0"

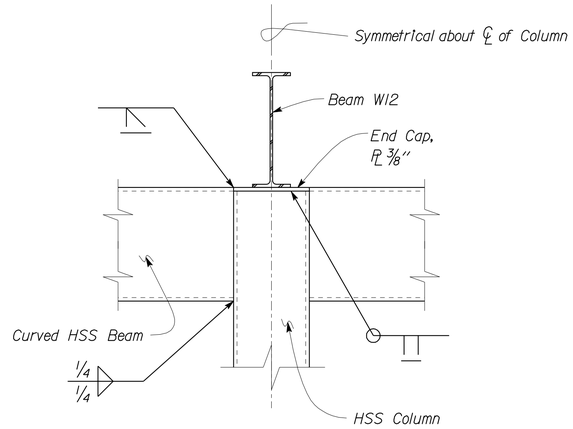

2 BEAM TO BEAM CONNECTION
Scale 1 1/2" = 1' - 0"

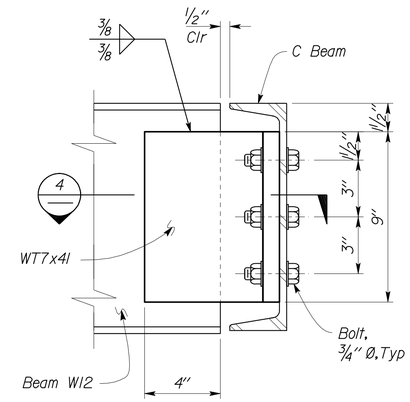

3 BEAM TO C BEAM DETAIL
Scale 3" = 1' - 0"

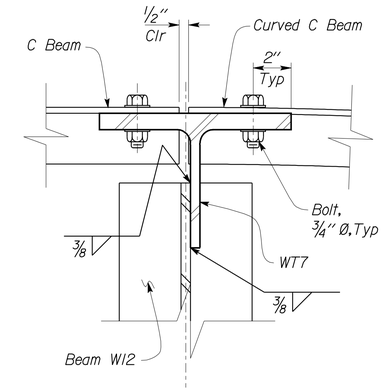

4 BEAM TO C BEAM SECTION
Scale 3" = 1' - 0"

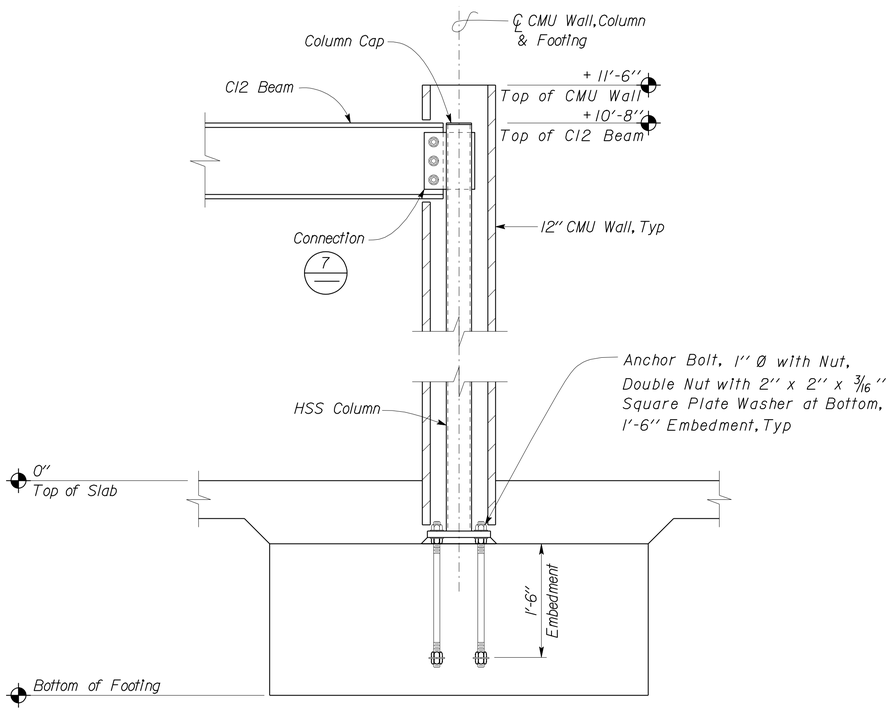

5 OBSERVATION ROOM FRAMING DETAIL
Scale 1" = 1' - 0"

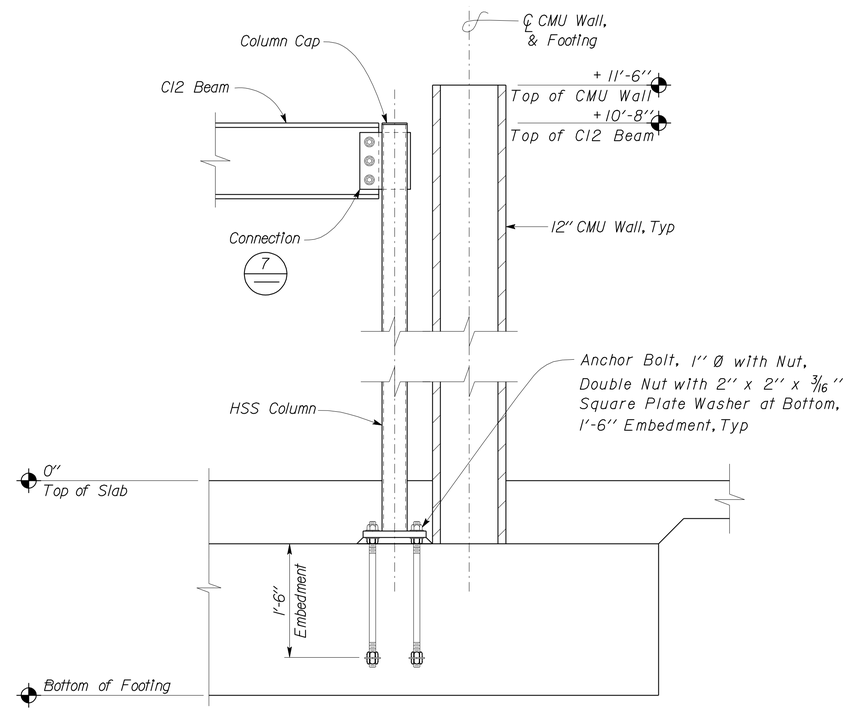

6 OBSERVATION ROOM FRAMING DETAIL
Scale 1" = 1' - 0"

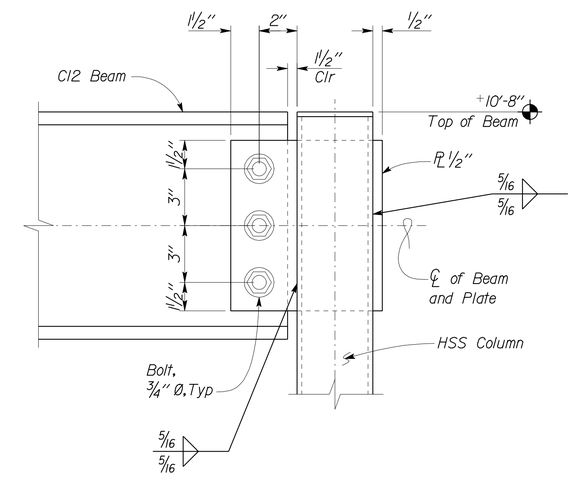

7 BEAM TO COLUMN CONNECTION
Scale 3" = 1' - 0"

DESIGN	BY Shervin Pahlavan	CHECKED Joseph Camilleri	
DETAILS	BY Andrew Lovato	CHECKED Shervin Pahlavan	
QUANTITIES	BY	CHECKED	

STATE OF CALIFORNIA DEPARTMENT OF TRANSPORTATION

DIVISION OF ENGINEERING SERVICES ARCHITECTURAL AND STRUCTURAL DESIGN

BRIDGE NO. 54-1216J
POST MILE 177.3/181.1

CVEF CHP OFFICE

MOUNTAIN PASS JPOE

OBSERVATION ROOM FRAMING DETAILS

SHEET ST7-51

TAEMWW Imperial Rev. 7/10

ORIGINAL SCALE IN INCHES FOR REDUCED PLANS 0 1 2 3

UNIT 3599
PROJECT NUMBER & PHASE 08000006281
EA 368501

DISREGARD PRINTS BEARING EARLIER REVISION DATES → 03-11-10 11-01-12 12-10-12

REVISION DATES (PRELIMINARY STAGE ONLY) SHEET OF

26-FEB-2013 10:43
D:\user\Projects\A Expedite Process Folder\st7_051.dgn

DIST.	COUNTY	ROUTE	POST MILES TOTAL PROJECT	SHEET NO.	TOTAL SHEETS
08	SBd	15	177.3/181.1	502	710

Shervin Pahlavan 11-27-12
REGISTERED CIVIL ENGINEER DATE

REGISTERED PROFESSIONAL ENGINEER Shervin Pahlavan No. 44463 Exp. 3-31-14 CIVIL STATE OF CALIFORNIA

2-25-13
PLANS APPROVAL DATE

The State of California or its officers or agents shall not be responsible for the accuracy or completeness of electronic copies of this plan sheet.

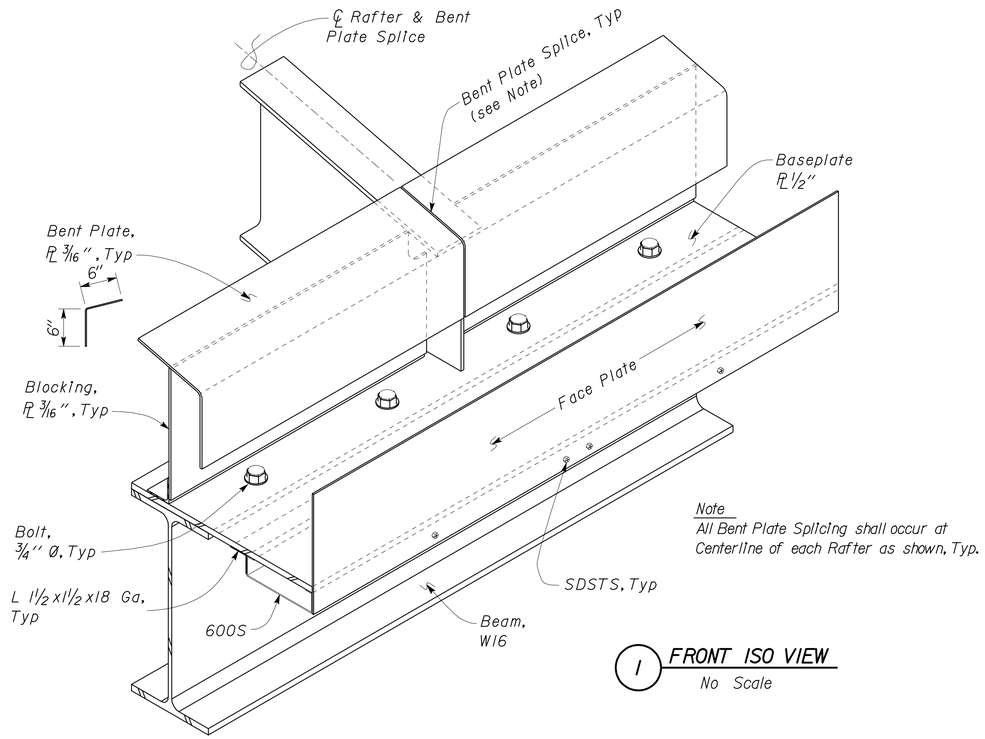

Note
All Bent Plate Splicing shall occur at Centerline of each Rafter as shown, Typ.

1 FRONT ISO VIEW
No Scale

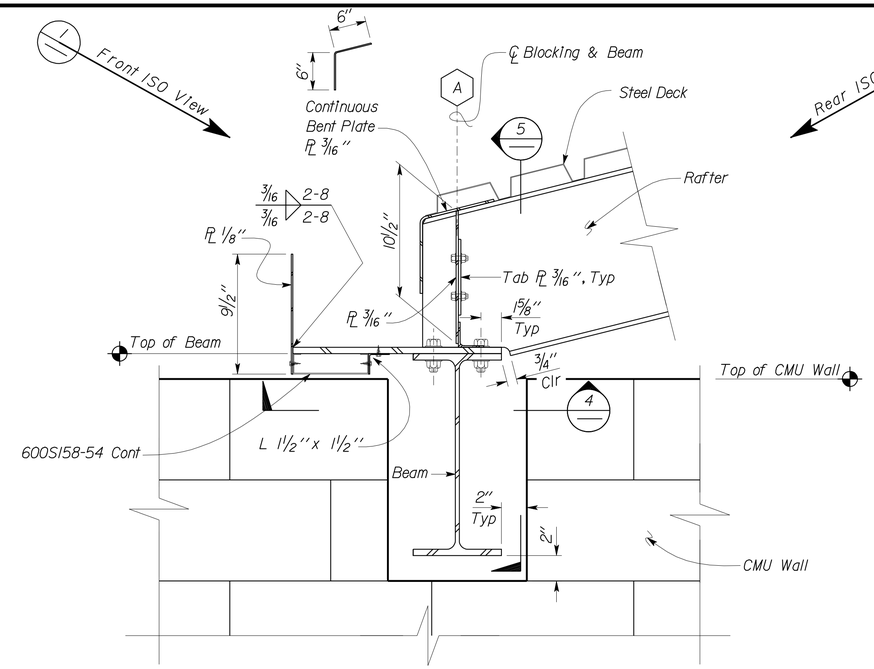

3 GUTTER SUPPORT DETAIL
Scale 2" = 1' - 0"

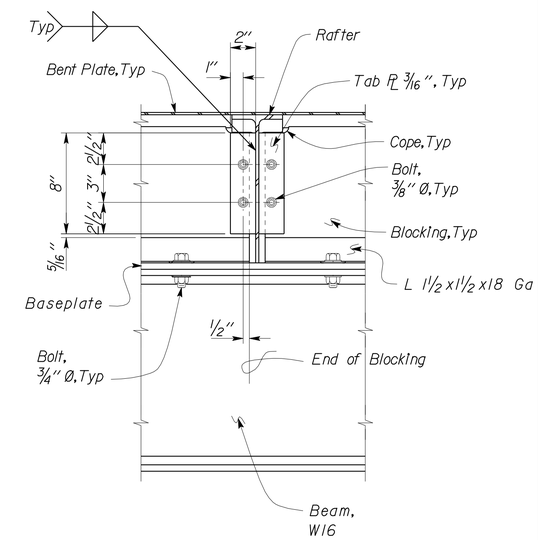

5 TAB AND BLOCKING DETAIL
Scale 2" = 1' - 0"

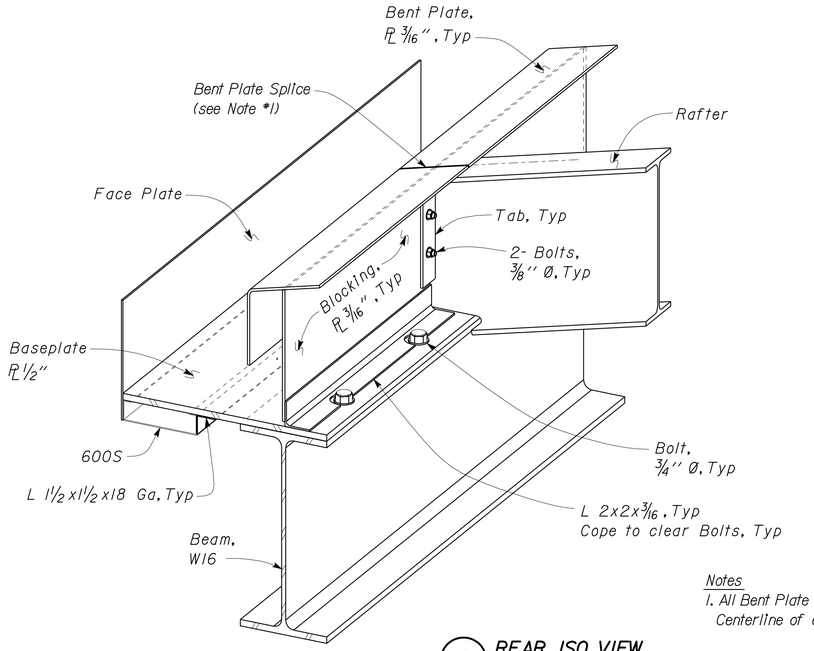

Notes
1. All Bent Plate Splicing shall occur at Centerline of each Rafter as shown, Typ.
2. Cope Blocking Plate at Rafters as required.

2 REAR ISO VIEW
No Scale

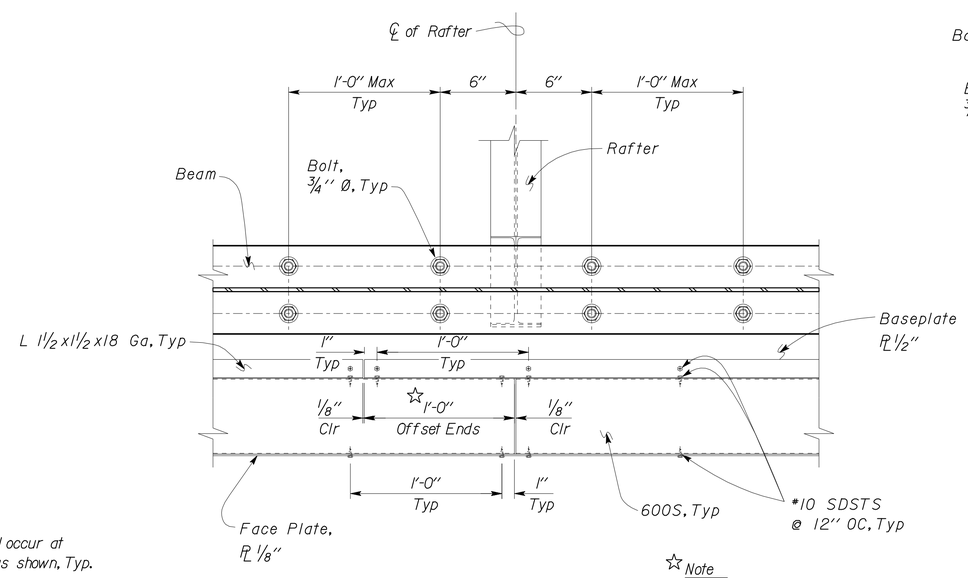

☆ Note
All Splices shall be Offset 1'-0" Min from other Splices, Typ.

4 GUTTER SUPPORT BOLT LAYOUT
Scale 2" = 1' - 0"

	BY	CHECKED
DESIGN	Shervin Pahlavan	Joseph Camilleri
DETAILS	Andrew Lovato	Shervin Pahlavan
QUANTITIES		

STATE OF CALIFORNIA
DEPARTMENT OF TRANSPORTATION

DIVISION OF ENGINEERING SERVICES
ARCHITECTURAL AND STRUCTURAL DESIGN

BRIDGE NO. 54-1216J
POST MILE 177.3/181.1
CVEF CHP OFFICE

MOUNTAIN PASS JPOE
GUTTER SUPPORT DETAILS

SHEET ST7-52

TAEMWW Imperial Rev. 7/10

ORIGINAL SCALE IN INCHES FOR REDUCED PLANS 0 1 2 3

UNIT 3599
PROJECT NUMBER & PHASE 08000006281
EA 368501

DISREGARD PRINTS BEARING EARLIER REVISION DATES
REVISION DATES (PRELIMINARY STAGE ONLY) SHEET OF
08-16-10 11-01-12 12-10-12

D:\user\Projects\A Expedite Process Folder\st7_052.dgn

26-FEB-2013 10:43

DIST.	COUNTY	ROUTE	POST MILES TOTAL PROJECT	SHEET NO.	TOTAL SHEETS
08	SBd	15	177.3/181.1	503	710

Shervin Pahlavan 11-27-12
REGISTERED CIVIL ENGINEER DATE

REGISTERED PROFESSIONAL ENGINEER
Shervin Pahlavan
No. 44463
Exp. 3-31-14
CIVIL
STATE OF CALIFORNIA

2-25-13
PLANS APPROVAL DATE

The State of California or its officers or agents shall not be responsible for the accuracy or completeness of electronic copies of this plan sheet.

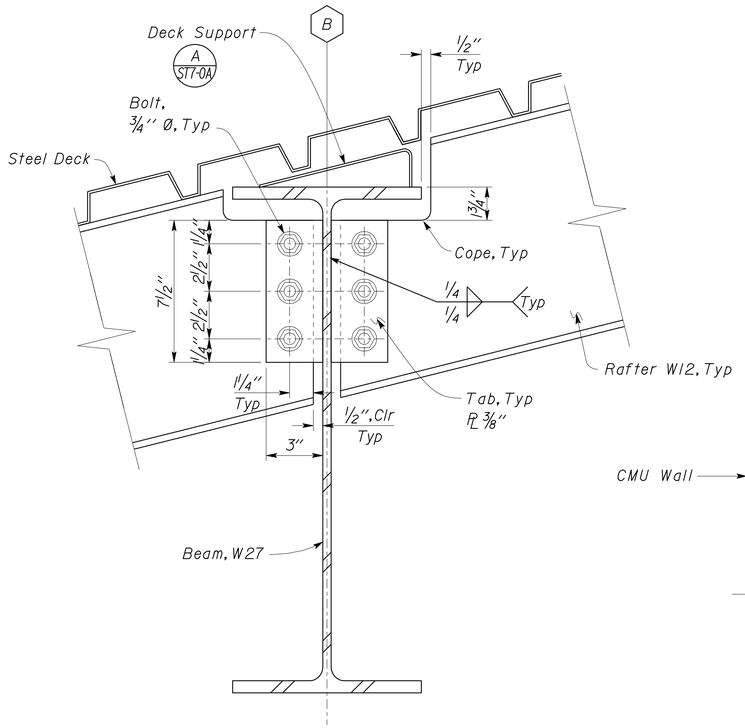

1 RAFTER TO BEAM CONNECTION
Scale 3" = 1'-0"

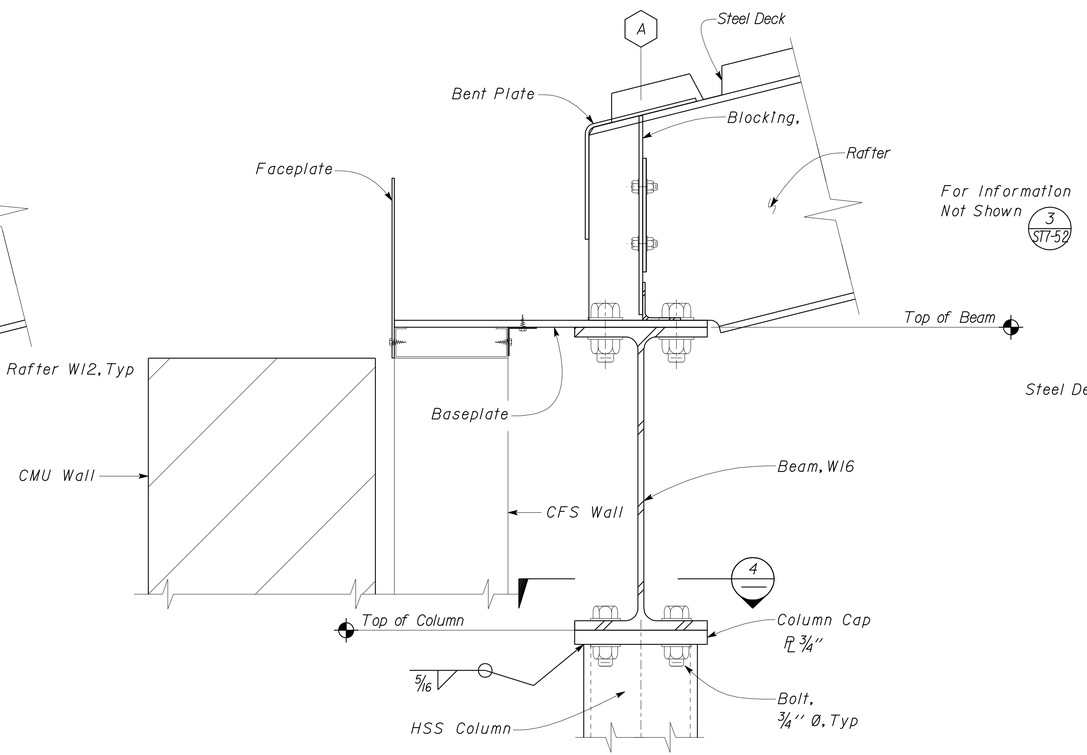

3 RAFTER TO BEAM CONNECTION
Scale 3" = 1'-0"

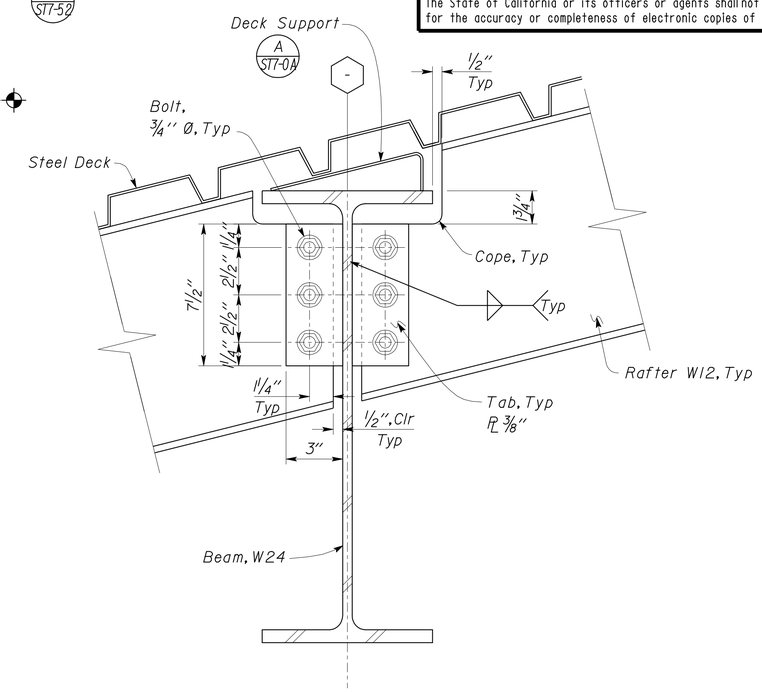

5 RAFTER TO BEAM CONNECTION
Scale 3" = 1'-0"

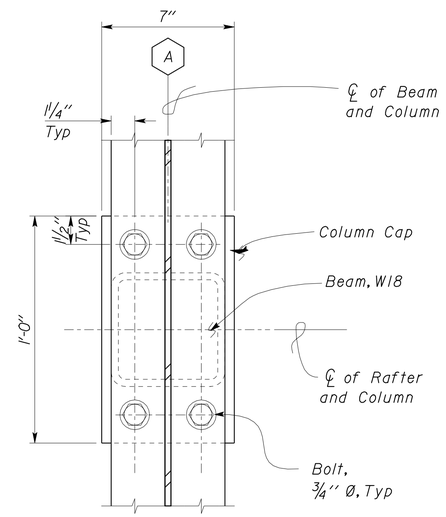

4 BEAM TO COLUMN CONNECTION
Scale 3" = 1'-0"

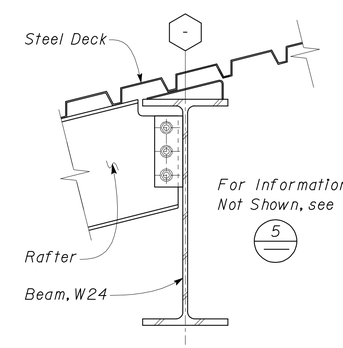

6 RAFTER TO BEAM CONNECTION
Scale 1 1/2" = 1'-0"

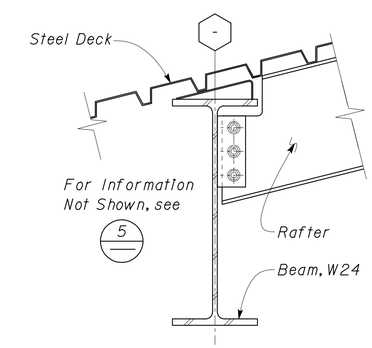

7 RAFTER TO BEAM CONNECTION
Scale 1 1/2" = 1'-0"

2 DETAIL OMITTED

DESIGN	BY Shervin Pahlavan	CHECKED Joseph Camilleri	
DETAILS	BY Andrew Lovato	CHECKED Shervin Pahlavan	
QUANTITIES	BY	CHECKED	

STATE OF CALIFORNIA
DEPARTMENT OF TRANSPORTATION

DIVISION OF ENGINEERING SERVICES
ARCHITECTURAL AND STRUCTURAL DESIGN

BRIDGE NO. 54-1216J
POST MILE 177.3/181.1
CVEF CHP OFFICE

MOUNTAIN PASS JPOE

ROOF CONNECTION DETAILS

SHEET ST7-53

TAEMWW Imperial Rev. 7/10

ORIGINAL SCALE IN INCHES FOR REDUCED PLANS 0 1 2 3

UNIT 3599
PROJECT NUMBER & PHASE 08000006281
EA 368501

DISREGARD PRINTS BEARING EARLIER REVISION DATES → 07-19-10 11-09-12 12-10-12

REVISION DATES (PRELIMINARY STAGE ONLY) SHEET OF

26-FEB-2013 10:44
D:\user\Projects\A Expedite Process Folder\st7_053.dgn

DIST.	COUNTY	ROUTE	POST MILES TOTAL PROJECT	SHEET NO.	TOTAL SHEETS
08	SBd	15	177.3/181.1	504	710

Shervin Pahlavan 11-27-12
REGISTERED CIVIL ENGINEER DATE

REGISTERED PROFESSIONAL ENGINEER Shervin Pahlavan No. 44463 Exp. 3-31-14 CIVIL STATE OF CALIFORNIA

2-25-13
PLANS APPROVAL DATE

The State of California or its officers or agents shall not be responsible for the accuracy or completeness of electronic copies of this plan sheet.

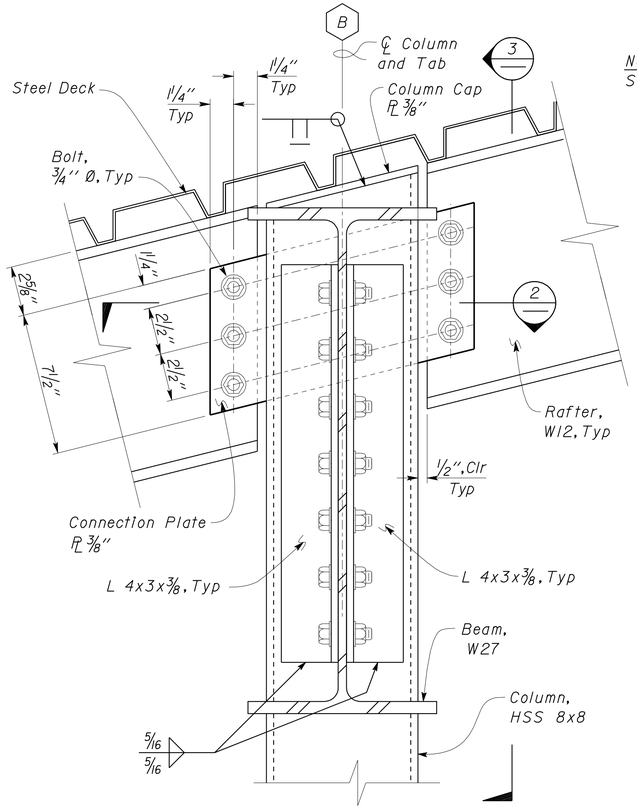

Note
Steel Deck Support not shown.

1 RAFTERS AND BEAM TO COLUMN DETAIL
Scale 3" = 1'-0"

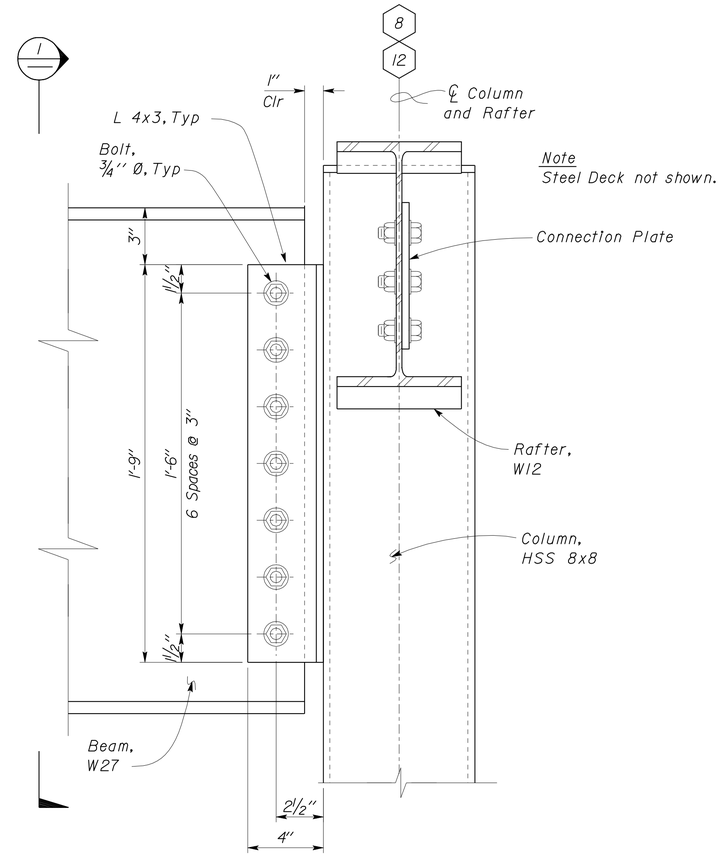

Note
Steel Deck not shown.

3 BEAM TO COLUMN
Scale 3" = 1'-0"

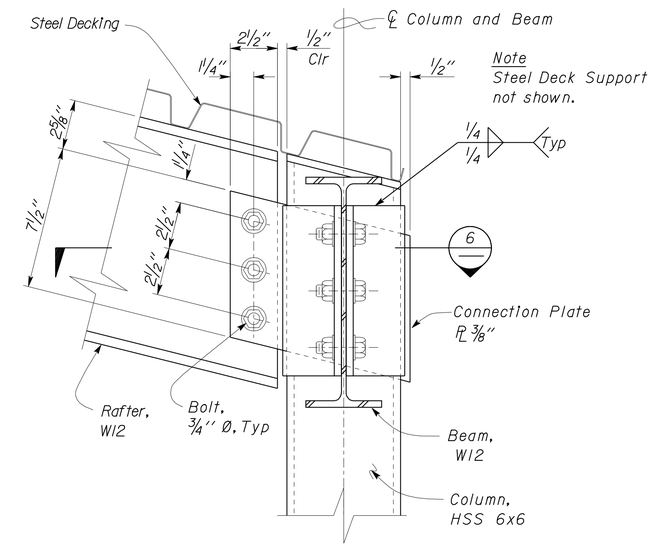

Note
Steel Deck Support not shown.

5 RAFTER TO COLUMN DETAIL
Scale 3" = 1'-0"

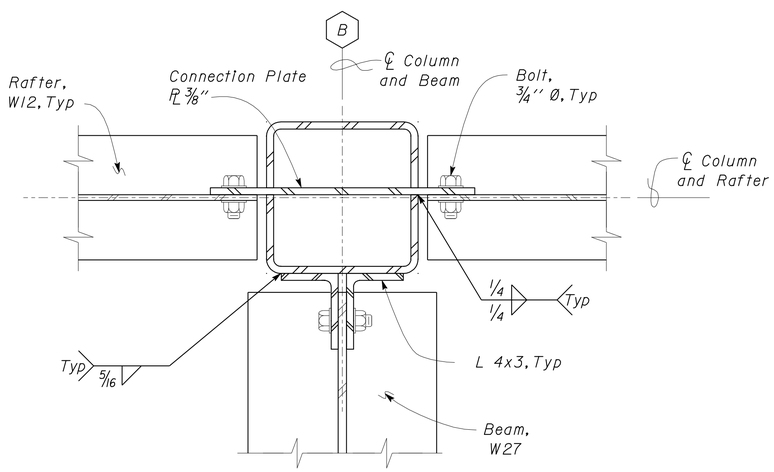

2 RAFTER AND BEAM TO COLUMN DETAIL
Scale 3" = 1'-0"

4 DETAIL OMITTED

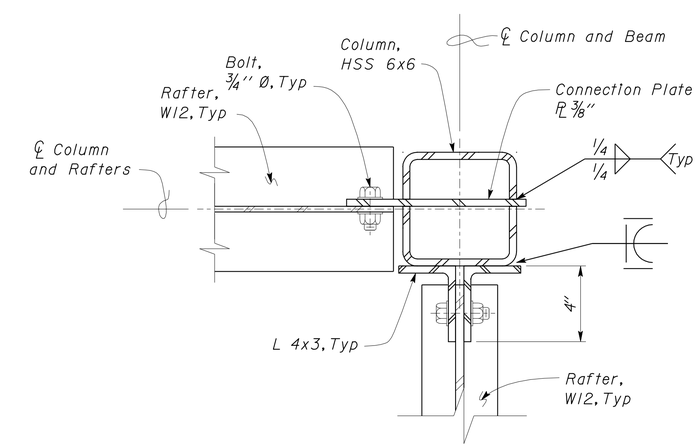

6 RAFTERS TO COLUMN SECTION
Scale 3" = 1'-0"

DESIGN	BY Shervin Pahlavan	CHECKED Joseph Camilleri	
DETAILS	BY Andrew Lovato	CHECKED Shervin Pahlavan	
QUANTITIES	BY	CHECKED	

STATE OF CALIFORNIA DEPARTMENT OF TRANSPORTATION

DIVISION OF ENGINEERING SERVICES
ARCHITECTURAL AND STRUCTURAL DESIGN

BRIDGE NO. 54-1216J
POST MILE 177.3/181.1

CVEF CHP OFFICE

MOUNTAIN PASS JPOE

ROOF CONNECTION DETAILS

SHEET **ST7-54**

TAEMWW Imperial Rev. 7/10

ORIGINAL SCALE IN INCHES FOR REDUCED PLANS 0 1 2 3

UNIT 3599
PROJECT NUMBER & PHASE 08000006281
EA 368501

DISREGARD PRINTS BEARING EARLIER REVISION DATES → 03-11-10 11-01-12 12-10-12

REVISION DATES (PRELIMINARY STAGE ONLY) SHEET OF

D:\user\Projects\A Expedite Process Folder\st7_054.dgn

26-FEB-2013 10:44

DIST.	COUNTY	ROUTE	POST MILES TOTAL PROJECT	SHEET NO.	TOTAL SHEETS
08	SBd	15	177.3/181.1	505	710

Shervin Pahlavan 11-27-12
REGISTERED CIVIL ENGINEER DATE

REGISTERED PROFESSIONAL ENGINEER Shervin Pahlavan No. 44463 Exp. 3-31-14 CIVIL STATE OF CALIFORNIA

2-25-13
PLANS APPROVAL DATE

The State of California or its officers or agents shall not be responsible for the accuracy or completeness of electronic copies of this plan sheet.

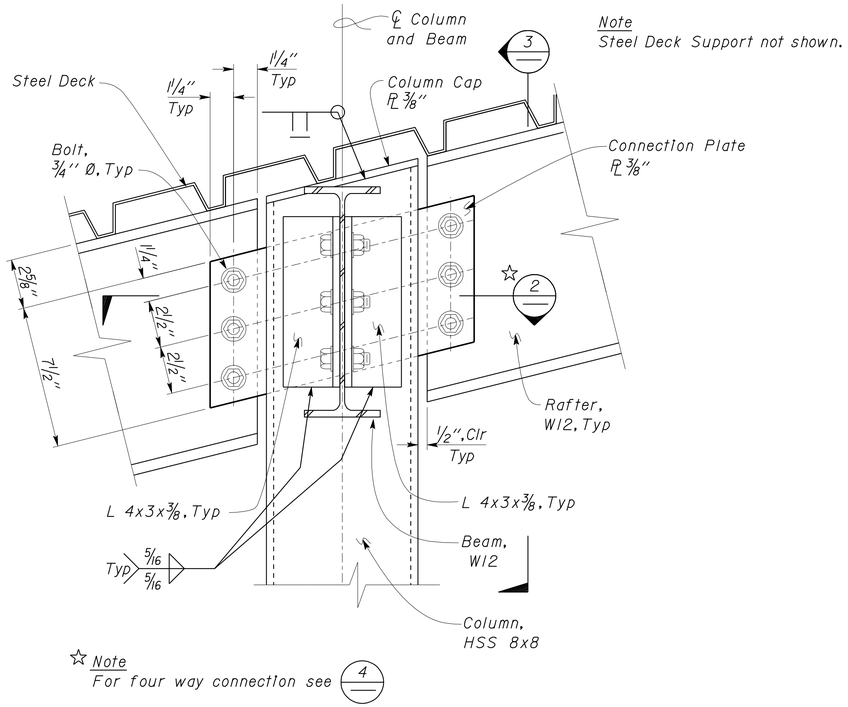

1 RAFTERS AND BEAM TO COLUMN DETAIL
Scale 3" = 1'-0"

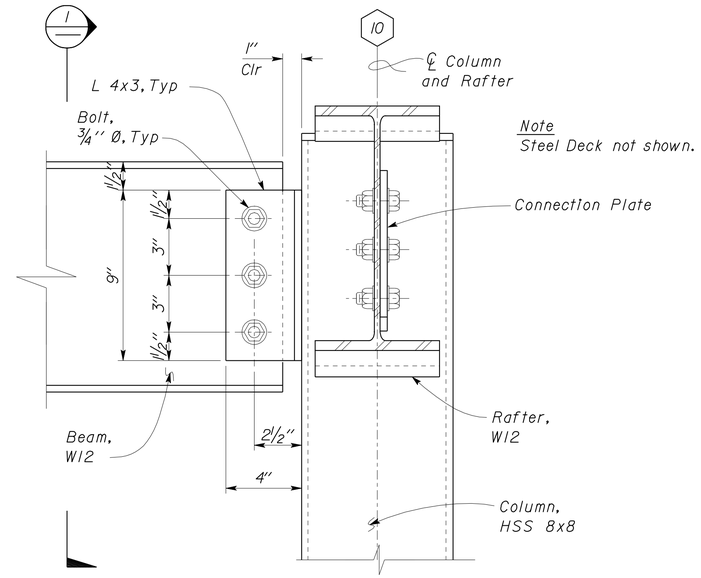

3 BEAM TO COLUMN
Scale 3" = 1'-0"

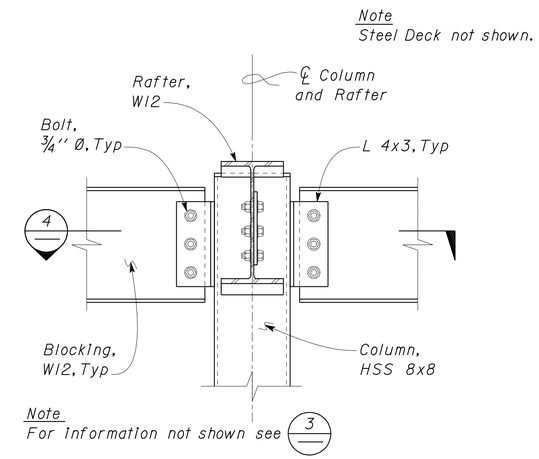

5 BLOCKING TO COLUMN
Scale 1½" = 1'-0"

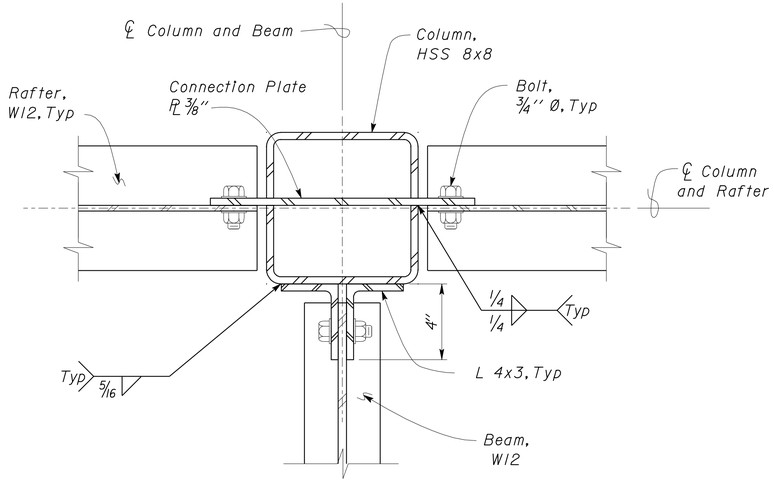

2 RAFTER AND BEAM TO COLUMN DETAIL
Scale 3" = 1'-0"

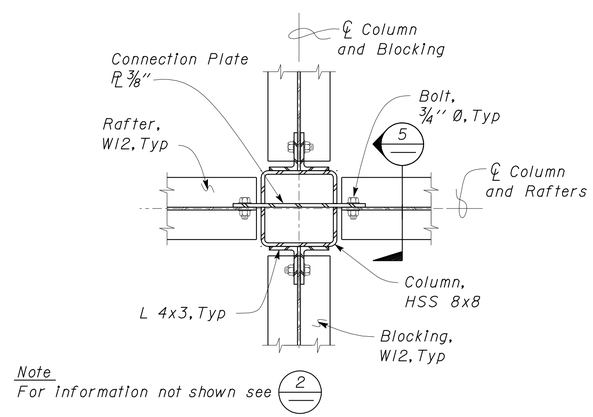

4 RAFTERS AND BLOCKING TO COLUMN DETAIL
Scale 1½" = 1'-0"

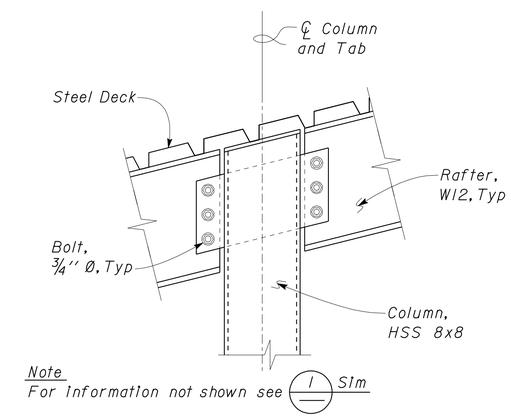

6 RAFTER TO COLUMN DETAIL
Scale 1½" = 1'-0"

DESIGN	BY Shervin Pahlavan	CHECKED Joseph Camilleri	
DETAILS	BY Andrew Lovato	CHECKED Shervin Pahlavan	
QUANTITIES	BY	CHECKED	

STATE OF CALIFORNIA
DEPARTMENT OF TRANSPORTATION

DIVISION OF ENGINEERING SERVICES
ARCHITECTURAL AND STRUCTURAL DESIGN

BRIDGE NO. 54-1216J
POST MILE 177.3/181.1

MOUNTAIN PASS JPOE
CVEF CHP OFFICE
ROOF CONNECTION DETAILS

SHEET ST7-55

TAEMWW Imperial Rev. 7/10

ORIGINAL SCALE IN INCHES FOR REDUCED PLANS 0 1 2 3

UNIT 3599
PROJECT NUMBER & PHASE 08000006281
EA 368501

DISREGARD PRINTS BEARING EARLIER REVISION DATES → 03-11-10 11-01-12 12-10-12

REVISION DATES (PRELIMINARY STAGE ONLY) SHEET OF

D:\user\Projects\A Expedite Process Folder\st7_055.dgn

26-FEB-2013 10:44

DIST.	COUNTY	ROUTE	POST MILES TOTAL PROJECT	SHEET NO.	TOTAL SHEETS
08	SBd	15	177.3/181.1	506	710

Shervin Pahlavan 11-27-12
REGISTERED CIVIL ENGINEER DATE

REGISTERED PROFESSIONAL ENGINEER Shervin Pahlavan No. 44463 Exp. 3-31-14 CIVIL STATE OF CALIFORNIA

2-25-13
PLANS APPROVAL DATE

The State of California or its officers or agents shall not be responsible for the accuracy or completeness of electronic copies of this plan sheet.

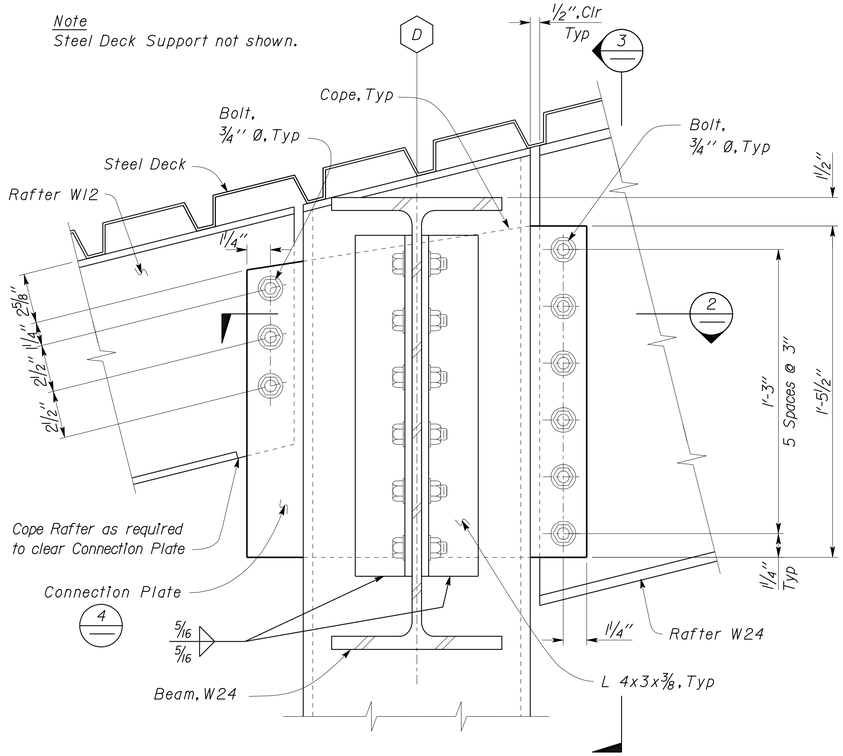

1 RAFTER TO BEAM CONNECTION
Scale 3" = 1'-0"

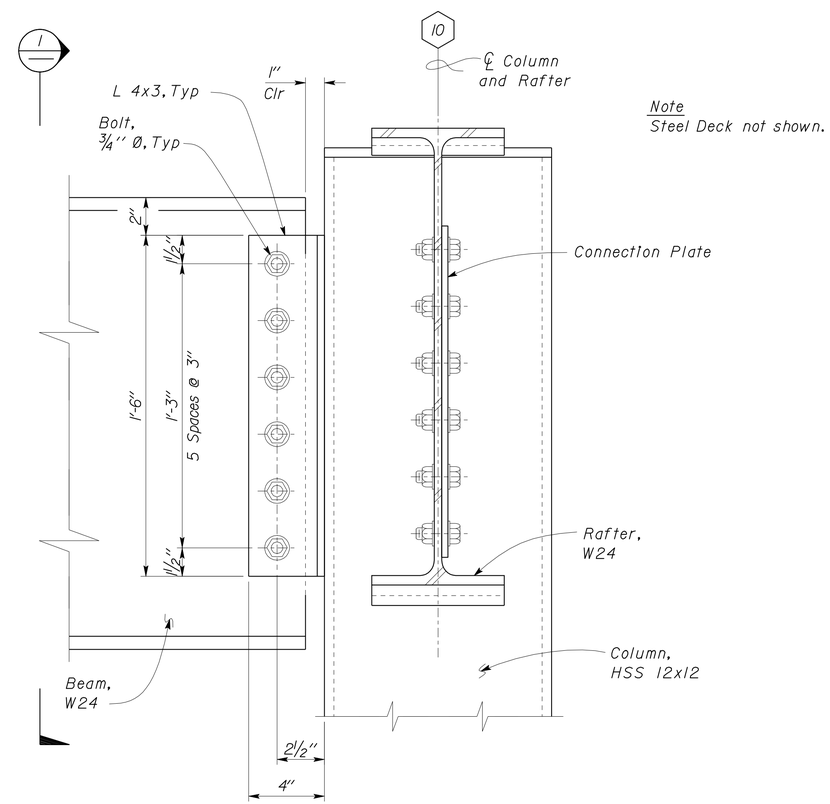

3 BEAM TO COLUMN
Scale 3" = 1'-0"

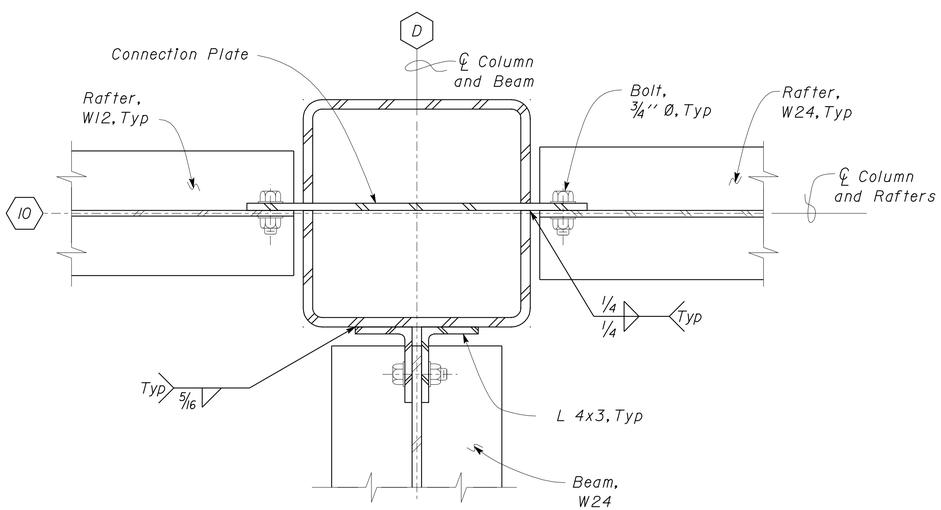

2 RAFTER AND BEAM TO COLUMN DETAIL
Scale 3" = 1'-0"

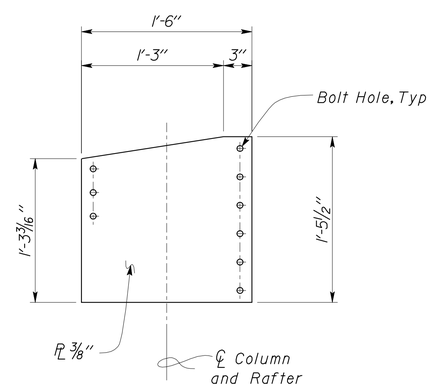

4 CONNECTION PLATE
Scale 1 1/2" = 1'-0"

DESIGN	BY Shervin Pahlavan	CHECKED Joseph Camilleri	
DETAILS	BY Andrew Lovato	CHECKED Shervin Pahlavan	
QUANTITIES	BY	CHECKED	

STATE OF CALIFORNIA
DEPARTMENT OF TRANSPORTATION

DIVISION OF ENGINEERING SERVICES
ARCHITECTURAL AND STRUCTURAL DESIGN

BRIDGE NO. 54-1216J
POST MILE 177.3/181.1
CVEF CHP OFFICE

MOUNTAIN PASS JPOE
ROOF CONNECTION DETAILS

SHEET ST7-56

TAEMWW Imperial Rev. 7/10

ORIGINAL SCALE IN INCHES FOR REDUCED PLANS 0 1 2 3

UNIT 3599
PROJECT NUMBER & PHASE 08000006281
EA 368501

DISREGARD PRINTS BEARING EARLIER REVISION DATES → REVISION DATES (PRELIMINARY STAGE ONLY) 03-11-10 11-01-12 12-10-12 SHEET OF

D:\user\Projects\A Expedite Process Folder\st7_056.dgn

26-FEB-2013 10:44

DIST.	COUNTY	ROUTE	POST MILES TOTAL PROJECT	SHEET NO.	TOTAL SHEETS
08	SBd	15	177.3/181.1	507	710

Shervin Pahlavan 11-27-12
REGISTERED CIVIL ENGINEER DATE

REGISTERED PROFESSIONAL ENGINEER Shervin Pahlavan No. 44463 Exp. 3-31-14 CIVIL STATE OF CALIFORNIA

2-25-13
PLANS APPROVAL DATE

The State of California or its officers or agents shall not be responsible for the accuracy or completeness of electronic copies of this plan sheet.

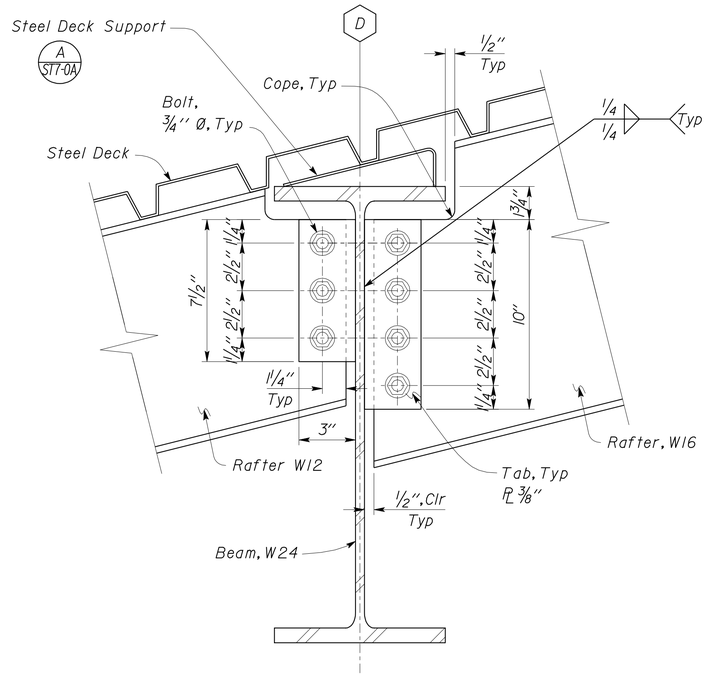

1 RAFTER TO BEAM CONNECTION
Scale 3" = 1' - 0"

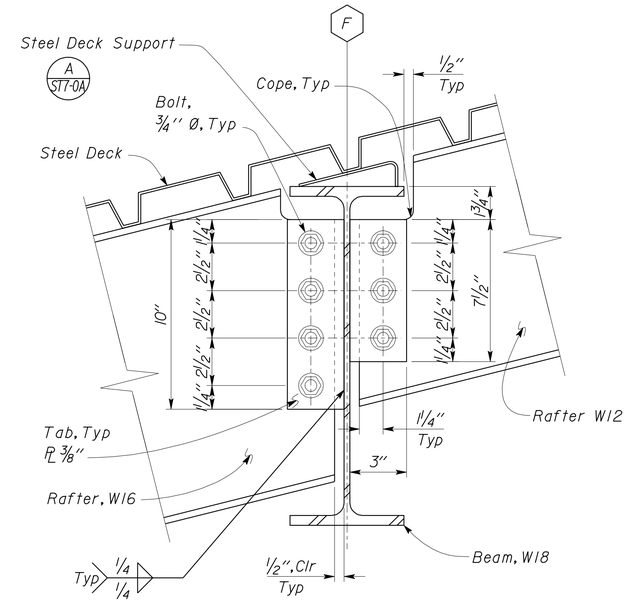

4 RAFTER TO BEAM CONNECTION
Scale 3" = 1' - 0"

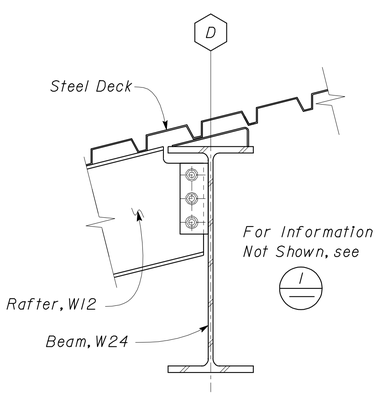

2 RAFTER TO BEAM CONNECTION
Scale 1 1/2" = 1' - 0"

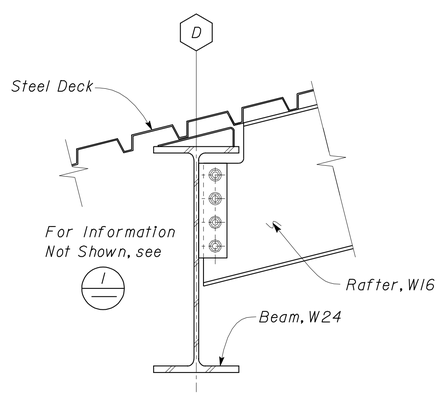

3 RAFTER TO BEAM CONNECTION
Scale 1 1/2" = 1' - 0"

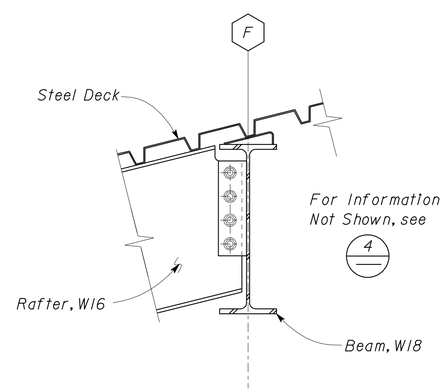

5 RAFTER TO BEAM CONNECTION
Scale 1 1/2" = 1' - 0"

	BY	CHECKED
DESIGN	Shervin Pahlavan	Joseph Camilleri
DETAILS	Andrew Lovato	Shervin Pahlavan
QUANTITIES		

STATE OF CALIFORNIA
DEPARTMENT OF TRANSPORTATION

DIVISION OF ENGINEERING SERVICES
ARCHITECTURAL AND STRUCTURAL DESIGN

BRIDGE NO. 54-1216J
POST MILE 177.3/181.1

CVEF CHP OFFICE

MOUNTAIN PASS JPOE

ROOF CONNECTION DETAILS

SHEET ST7-57

TAEMWW Imperial Rev. 7/10

ORIGINAL SCALE IN INCHES FOR REDUCED PLANS 0 1 2 3

UNIT 3599
PROJECT NUMBER & PHASE 08000006281
EA 368501

DISREGARD PRINTS BEARING EARLIER REVISION DATES → 07-19-10 11-01-12 12-10-12

REVISION DATES (PRELIMINARY STAGE ONLY) SHEET OF

26-FEB-2013 10:44
D:\user\Projects\A Expedite Process Folder\st7_057.dgn

DIST.	COUNTY	ROUTE	POST MILES TOTAL PROJECT	SHEET NO.	TOTAL SHEETS
08	SBd	15	177.3/181.1	508	710

Shervin Pahlavan 11-27-12
REGISTERED CIVIL ENGINEER DATE

REGISTERED PROFESSIONAL ENGINEER Shervin Pahlavan No. 44463 Exp. 3-31-14 CIVIL STATE OF CALIFORNIA

2-25-13
PLANS APPROVAL DATE

The State of California or its officers or agents shall not be responsible for the accuracy or completeness of electronic copies of this plan sheet.

Note
Steel Deck Support not shown.

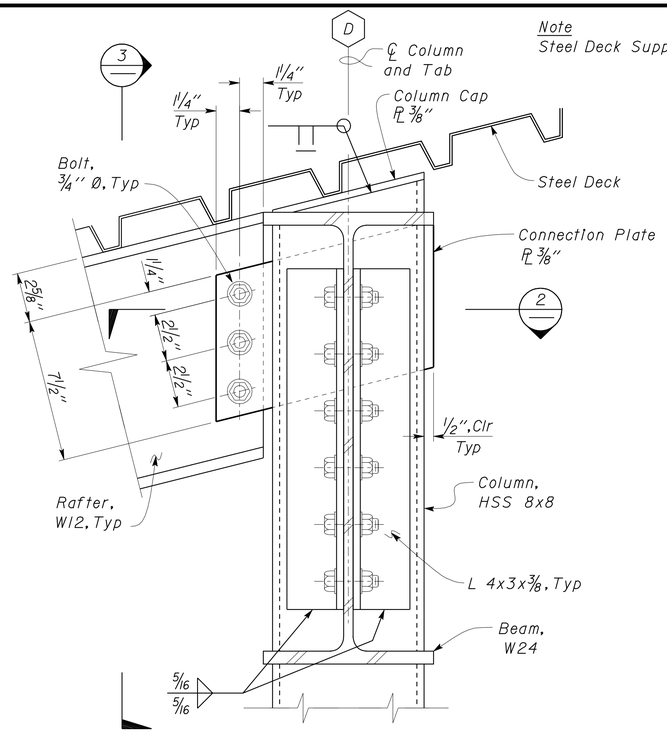

1 RAFTER AND BEAMS TO COLUMN DETAIL
Scale 3" = 1'-0"

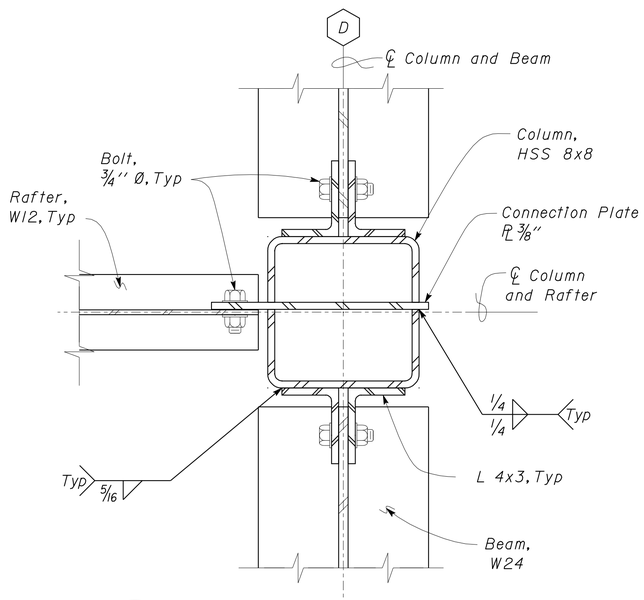

2 RAFTER AND BEAMS TO COLUMN DETAIL
Scale 3" = 1'-0"

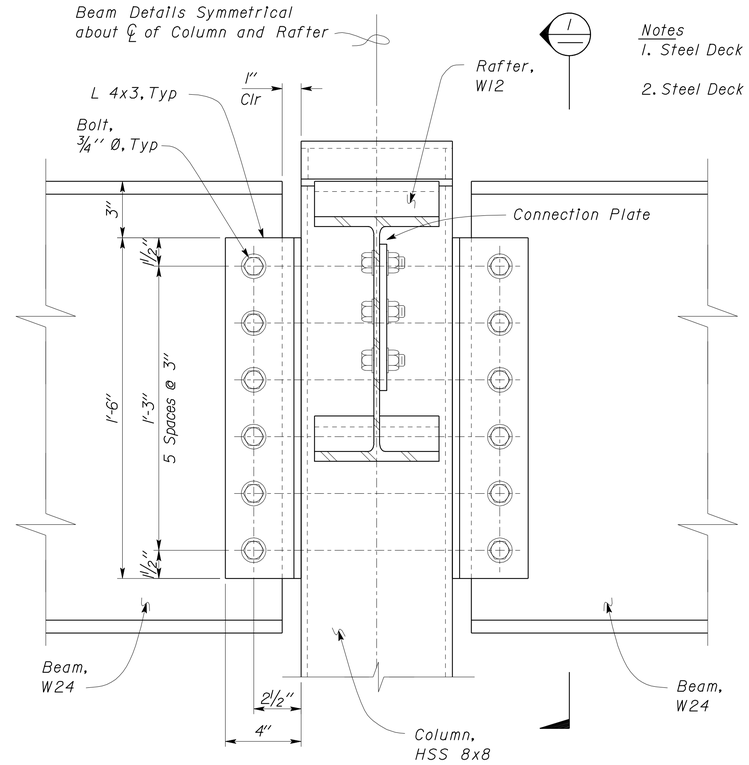

Notes
1. Steel Deck not shown.
2. Steel Deck Support not shown.

3 BEAMS TO COLUMN
Scale 3" = 1'-0"

	BY	CHECKED
DESIGN	Shervin Pahlavan	Joseph Camilleri
DETAILS	Andrew Lovato	Shervin Pahlavan
QUANTITIES		

STATE OF CALIFORNIA DEPARTMENT OF TRANSPORTATION

DIVISION OF ENGINEERING SERVICES ARCHITECTURAL AND STRUCTURAL DESIGN

BRIDGE NO. 54-1216J
POST MILE 177.3/181.1
CVEF CHP OFFICE

MOUNTAIN PASS JPOE
ROOF CONNECTION DETAILS

SHEET ST7-58

TAEMWW Imperial Rev. 7/10

ORIGINAL SCALE IN INCHES FOR REDUCED PLANS 0 1 2 3

UNIT 3599
PROJECT NUMBER & PHASE 08000006281
EA 368501

DISREGARD PRINTS BEARING EARLIER REVISION DATES → REVISION DATES (PRELIMINARY STAGE ONLY) 03-11-10 11-01-12 12-10-12

SHEET OF

26-FEB-2013 10:44
D:\user\Projects\A Expedite Process Folder\st7_058.dgn

DIST.	COUNTY	ROUTE	POST MILES TOTAL PROJECT	SHEET NO.	TOTAL SHEETS
08	SBd	15	177.3/181.1	509	710

Shervin Pahlavan 11-27-12
REGISTERED CIVIL ENGINEER DATE

REGISTERED PROFESSIONAL ENGINEER Shervin Pahlavan No. 44463 Exp. 3-31-14 CIVIL STATE OF CALIFORNIA

2-25-13
PLANS APPROVAL DATE

The State of California or its officers or agents shall not be responsible for the accuracy or completeness of electronic copies of this plan sheet.

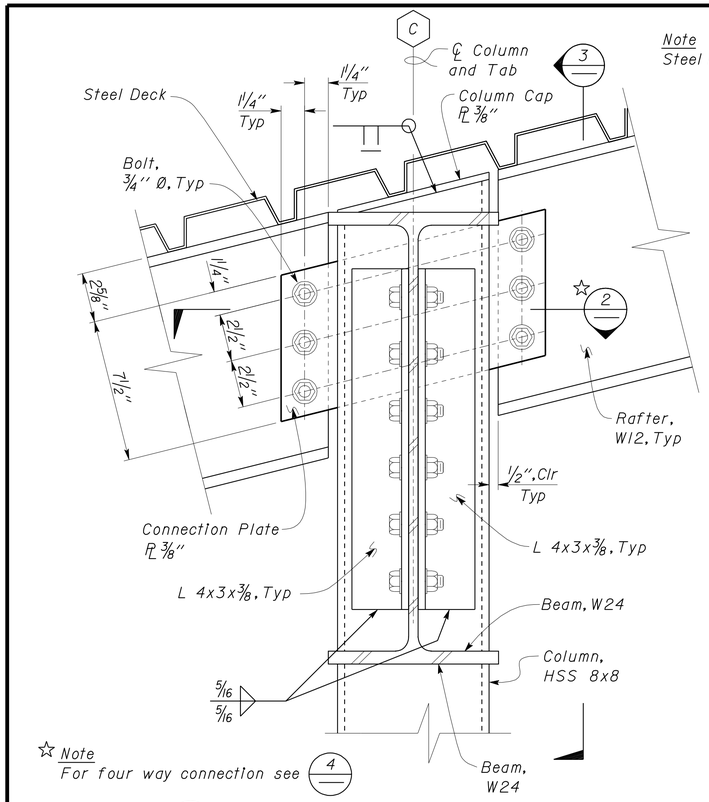

1 RAFTERS AND BEAM TO COLUMN DETAIL
Scale 3" = 1'-0"

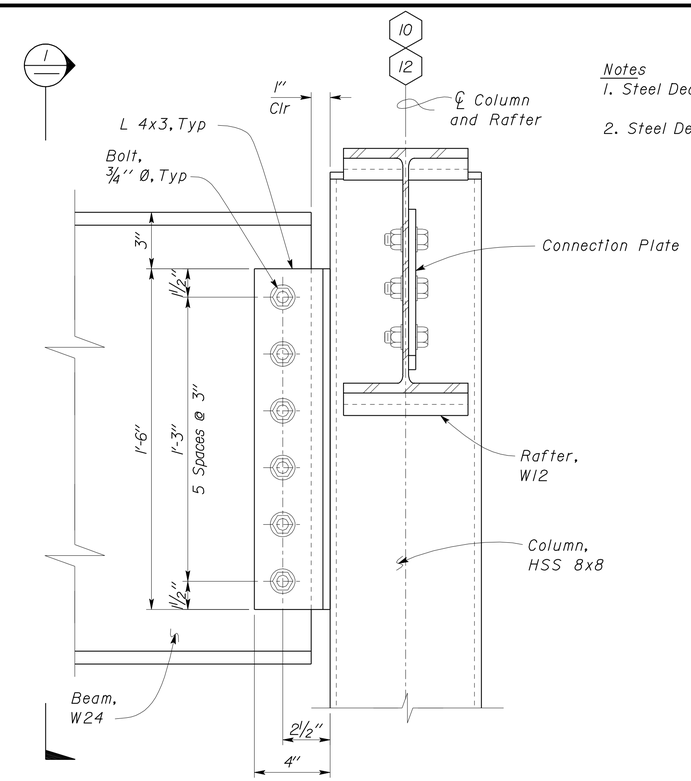

Notes
1. Steel Deck not shown.
2. Steel Deck Support not shown.

3 BEAM TO COLUMN
Scale 3" = 1'-0"

Notes
1. Steel Deck not shown.
2. Steel Deck Support not shown.

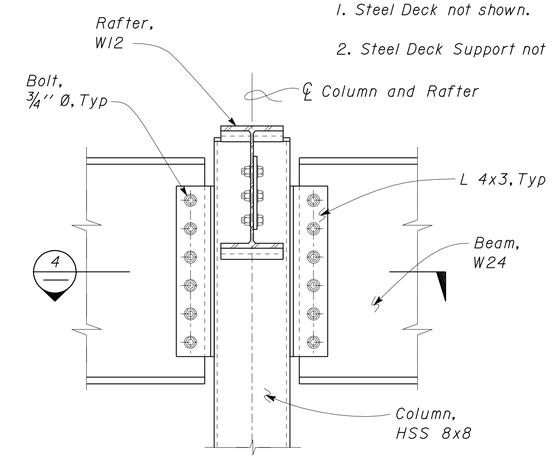

Note
For information not shown see 3

5 BEAMS TO COLUMN
Scale 1½" = 1'-0"

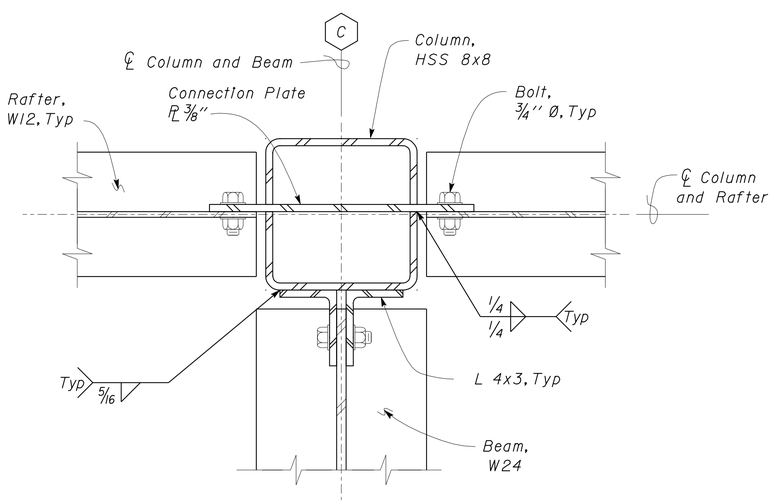

2 RAFTER AND BEAM TO COLUMN DETAIL
Scale 3" = 1'-0"

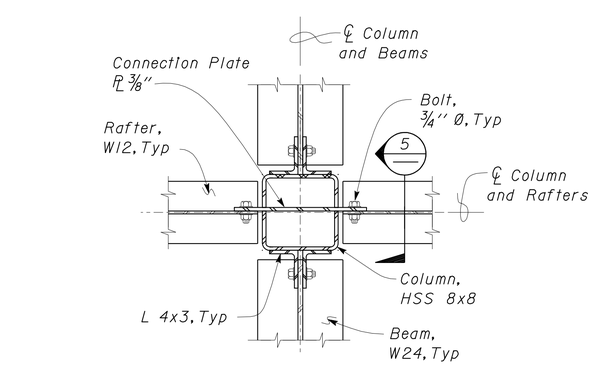

Note
For information not shown see 2

4 RAFTERS AND BEAMS TO COLUMN DETAIL
Scale 1½" = 1'-0"

DESIGN	BY Shervin Pahlavan	CHECKED Joseph Camilleri	
DETAILS	BY Andrew Lovato	CHECKED Shervin Pahlavan	
QUANTITIES	BY	CHECKED	

STATE OF CALIFORNIA DEPARTMENT OF TRANSPORTATION

DIVISION OF ENGINEERING SERVICES ARCHITECTURAL AND STRUCTURAL DESIGN

BRIDGE NO. 54-1216J
POST MILE 177.3/181.1
CVEF CHP OFFICE

MOUNTAIN PASS JPOE
ROOF CONNECTION DETAILS

SHEET ST7-59

TAEMWW Imperial Rev. 7/10

ORIGINAL SCALE IN INCHES FOR REDUCED PLANS 0 1 2 3

UNIT 3599
PROJECT NUMBER & PHASE 08000006281
EA 368501

DISREGARD PRINTS BEARING EARLIER REVISION DATES → 03-11-10 11-01-12 12-10-12

REVISION DATES (PRELIMINARY STAGE ONLY) SHEET OF

D:\user\Projects\A Expedite Process Folder\st7_059.dgn

26-FEB-2013 10:44

DIST.	COUNTY	ROUTE	POST MILES TOTAL PROJECT	SHEET NO.	TOTAL SHEETS
08	SBd	15	177.3/181.1	510	710

Shervin Pahlavan 11-27-12
REGISTERED CIVIL ENGINEER DATE

REGISTERED PROFESSIONAL ENGINEER
Shervin Pahlavan
No. 44463
Exp. 3-31-14
CIVIL
STATE OF CALIFORNIA

2-25-13
PLANS APPROVAL DATE

The State of California or its officers or agents shall not be responsible for the accuracy or completeness of electronic copies of this plan sheet.

Note
Steel Deck Support not shown.

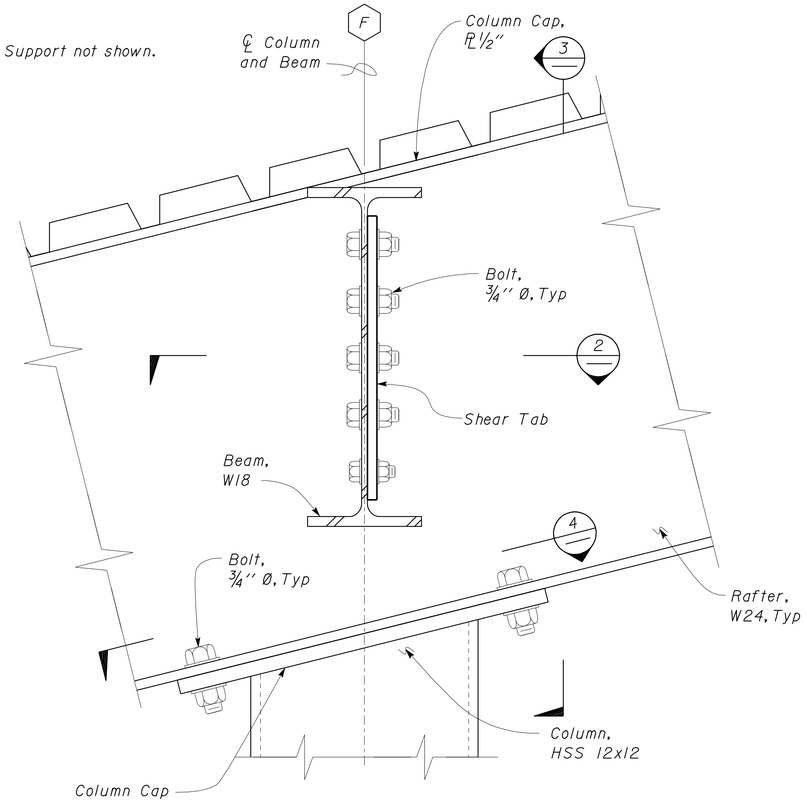

1 RAFTER TO COLUMN
Scale 3" = 1'-0"

Notes
1. Steel Deck not shown.
2. Steel Deck Support not shown.

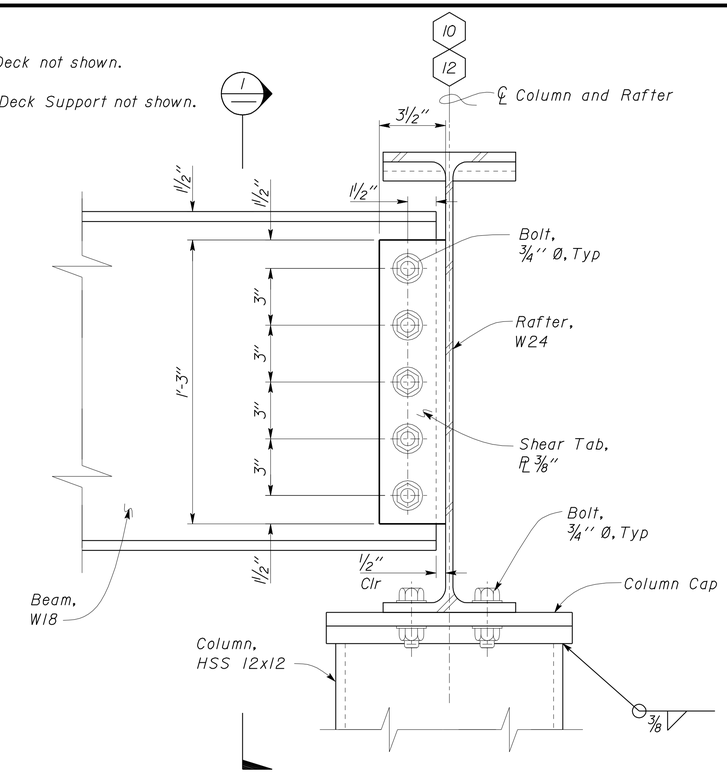

3 BEAM TO COLUMN
Scale 3" = 1'-0"

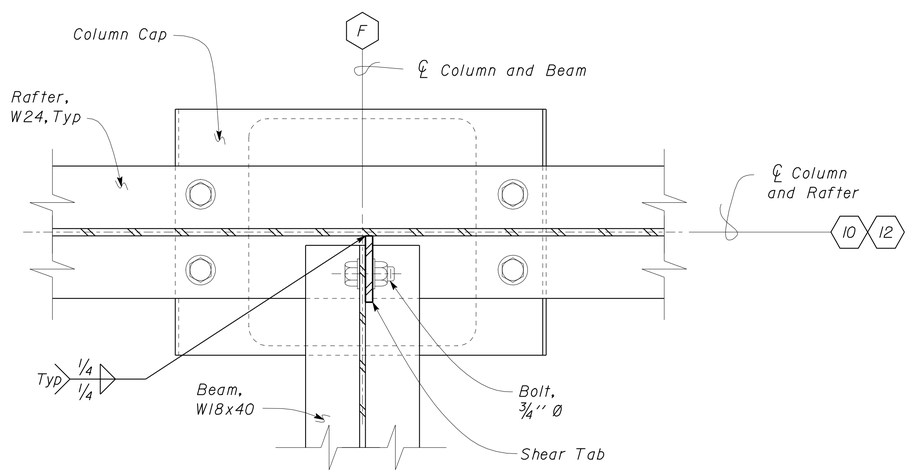

2 RAFTER TO COLUMN
Scale 3" = 1'-0"

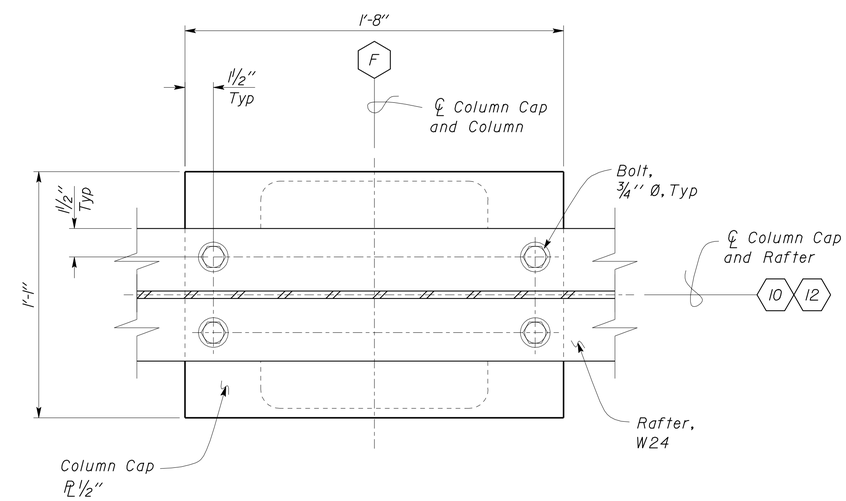

4 COLUMN CAP BOLT LAYOUT
Scale 3" = 1'-0"

DESIGN	BY Shervin Pahlavan	CHECKED Joseph Camilleri	
DETAILS	BY Andrew Lovato	CHECKED Shervin Pahlavan	
QUANTITIES	BY	CHECKED	

STATE OF CALIFORNIA
DEPARTMENT OF TRANSPORTATION

DIVISION OF ENGINEERING SERVICES
ARCHITECTURAL AND STRUCTURAL DESIGN

BRIDGE NO. 54-1216J
POST MILE 177.3/181.1
CVEF CHP OFFICE

MOUNTAIN PASS JPOE

ROOF CONNECTION DETAILS

SHEET ST7-60

TAEMWW Imperial Rev. 7/10

ORIGINAL SCALE IN INCHES FOR REDUCED PLANS 0 1 2 3

UNIT 3599
PROJECT NUMBER & PHASE 08000006281
EA 368501

DISREGARD PRINTS BEARING EARLIER REVISION DATES
REVISION DATES (PRELIMINARY STAGE ONLY) 03-11-10 11-01-12 12-10-12
SHEET OF

26-FEB-2013 10:44
D:\user\Projects\A Expedite Process Folder\st7_060.dgn

DIST.	COUNTY	ROUTE	POST MILES TOTAL PROJECT	SHEET NO.	TOTAL SHEETS
08	SBd	15	177.3/181.1	511	710

Shervin Pahlavan 11-27-12
REGISTERED CIVIL ENGINEER DATE

REGISTERED PROFESSIONAL ENGINEER Shervin Pahlavan No. 44463 Exp. 3-31-14 CIVIL STATE OF CALIFORNIA

2-25-13
PLANS APPROVAL DATE

The State of California or its officers or agents shall not be responsible for the accuracy or completeness of electronic copies of this plan sheet.

Note
Steel Deck Support not shown.

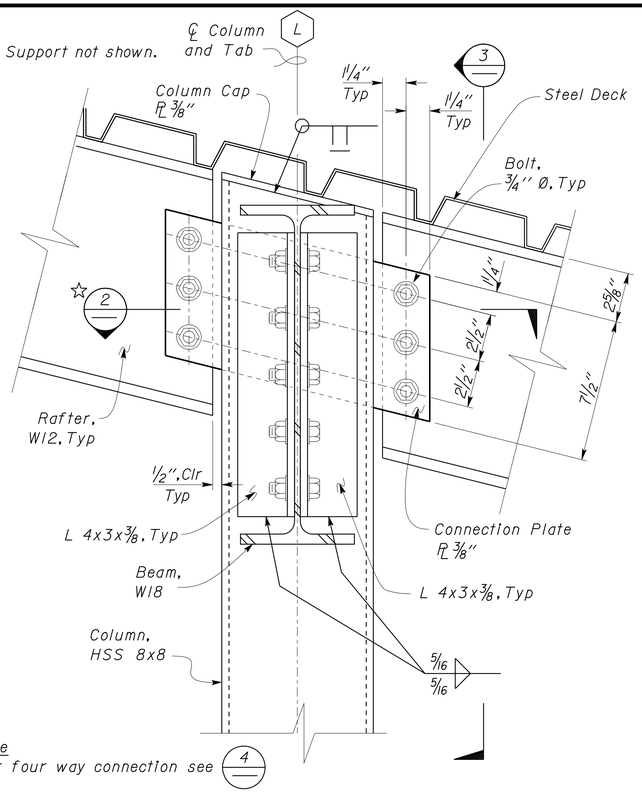

1 RAFTERS AND BEAM TO COLUMN DETAIL
Scale 3" = 1'-0"

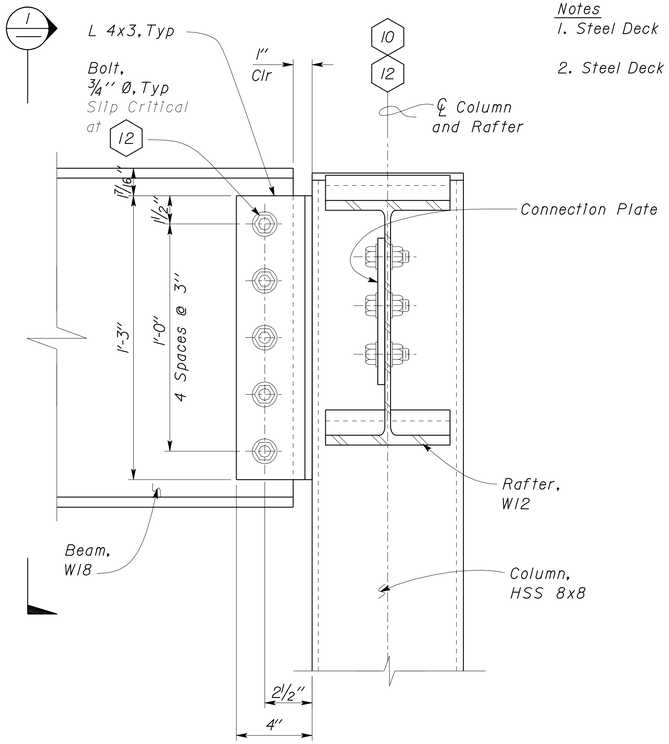

Notes
1. Steel Deck not shown.
2. Steel Deck Support not shown.

3 BEAM TO COLUMN
Scale 3" = 1'-0"

Note
Steel Deck not shown.

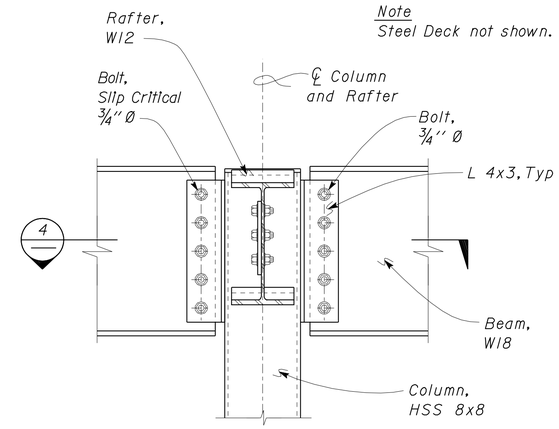

Note
For information not shown see 3

5 BEAMS TO COLUMN
Scale 1½" = 1'-0"

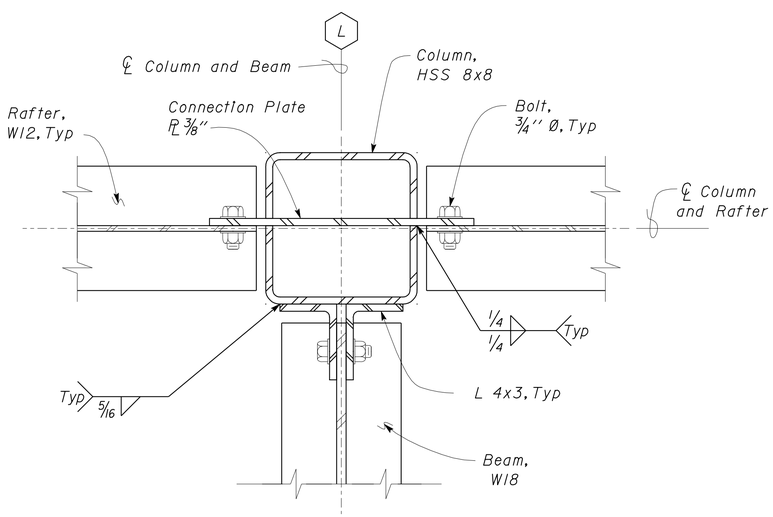

2 RAFTER AND BEAM TO COLUMN DETAIL
Scale 3" = 1'-0"

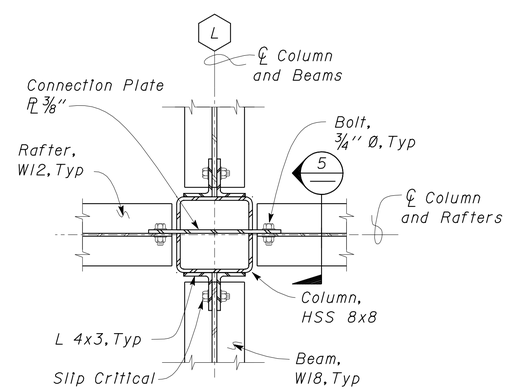

Note
For information not shown see 2

4 RAFTERS AND BEAMS TO COLUMN DETAIL
Scale 1½" = 1'-0"

DESIGN	BY Shervin Pahlavan	CHECKED Joseph Camilleri	
DETAILS	BY Andrew Lovato	CHECKED Shervin Pahlavan	
QUANTITIES	BY	CHECKED	

STATE OF CALIFORNIA DEPARTMENT OF TRANSPORTATION

DIVISION OF ENGINEERING SERVICES ARCHITECTURAL AND STRUCTURAL DESIGN

BRIDGE NO. 54-1216J
POST MILE 177.3/181.1

MOUNTAIN PASS JPOE

CVEF CHP OFFICE

ROOF CONNECTION DETAILS

SHEET ST7-61

TAEMWW Imperial Rev. 7/10

ORIGINAL SCALE IN INCHES FOR REDUCED PLANS 0 1 2 3

UNIT 3599
PROJECT NUMBER & PHASE 08000006281
EA 368501

DISREGARD PRINTS BEARING EARLIER REVISION DATES → 03-11-10 11-01-12 12-10-12

REVISION DATES (PRELIMINARY STAGE ONLY) SHEET OF

D:\user\Projects\A Expedite Process Folder\st7_061.dgn

26-FEB-2013 10:44

DIST.	COUNTY	ROUTE	POST MILES TOTAL PROJECT	SHEET NO.	TOTAL SHEETS
08	SBd	15	177.3/181.1	512	710

Shervin Pahlavan 11-27-12
REGISTERED CIVIL ENGINEER DATE

REGISTERED PROFESSIONAL ENGINEER Shervin Pahlavan No. 44463 Exp. 3-31-14 CIVIL STATE OF CALIFORNIA

2-25-13
PLANS APPROVAL DATE

The State of California or its officers or agents shall not be responsible for the accuracy or completeness of electronic copies of this plan sheet.

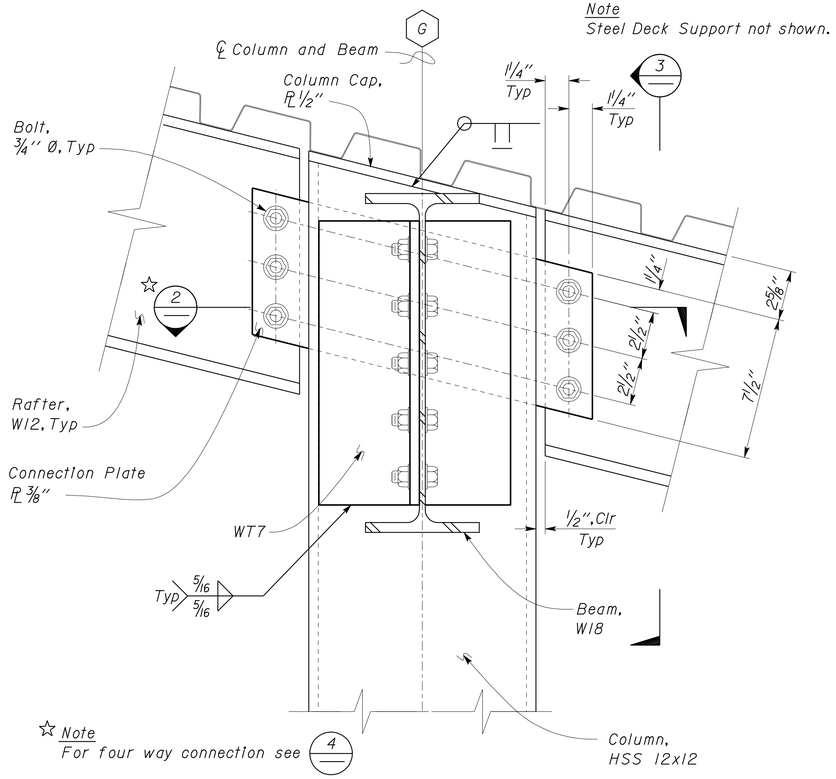

1 RAFTER TO COLUMN
Scale 3" = 1' - 0"

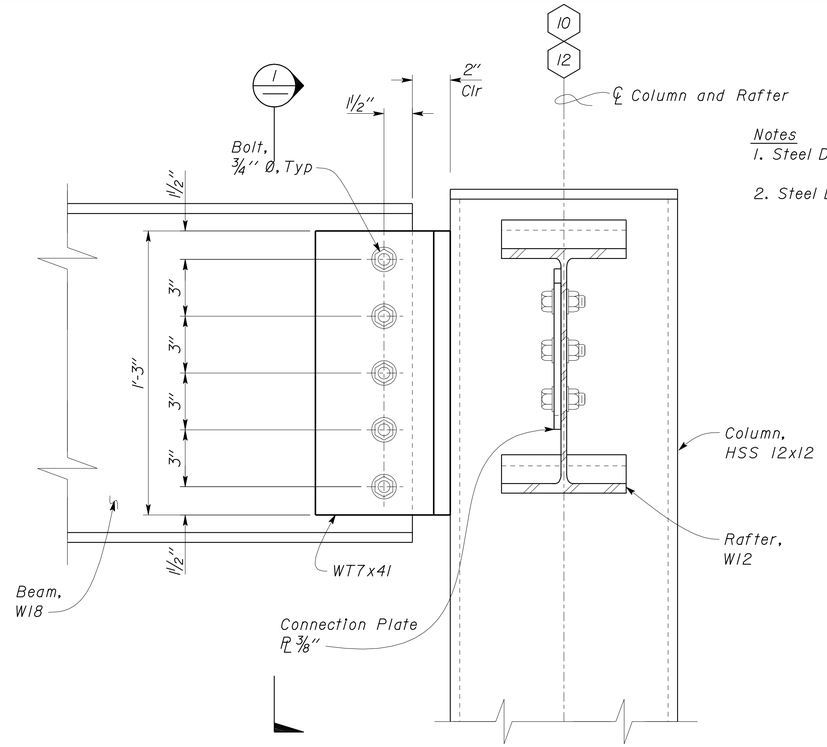

Notes
1. Steel Deck not shown.
2. Steel Deck Support not shown.

3 BEAM TO COLUMN
Scale 3" = 1' - 0"

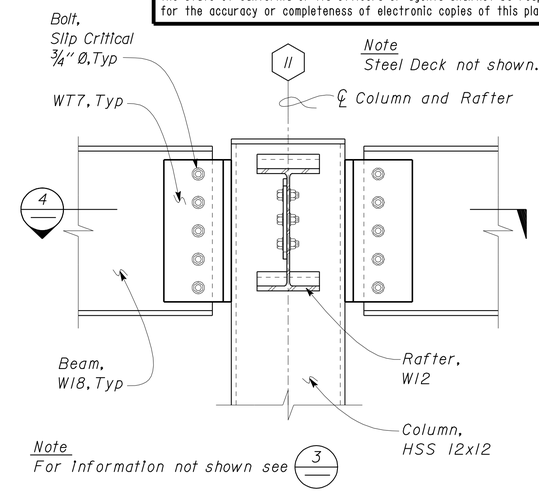

5 BEAM TO COLUMN
Scale 1 1/2" = 1' - 0"

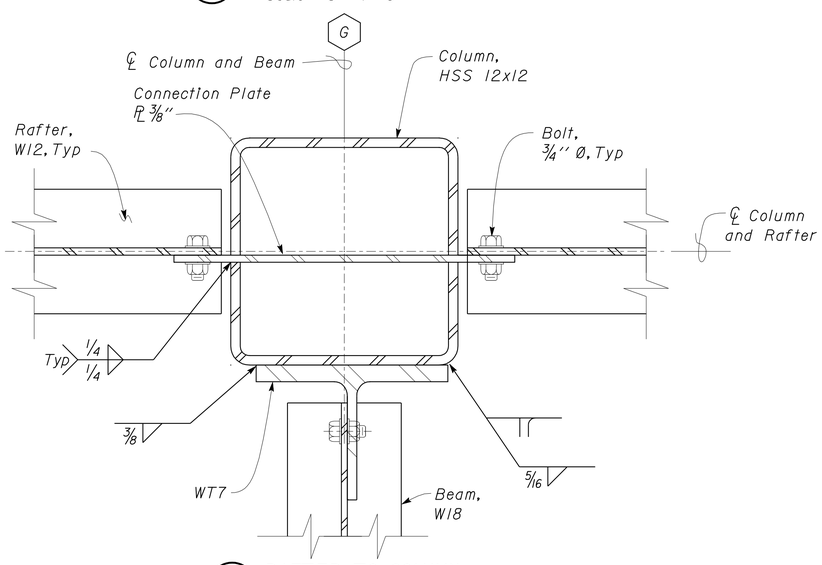

2 RAFTER TO COLUMN
Scale 3" = 1' - 0"

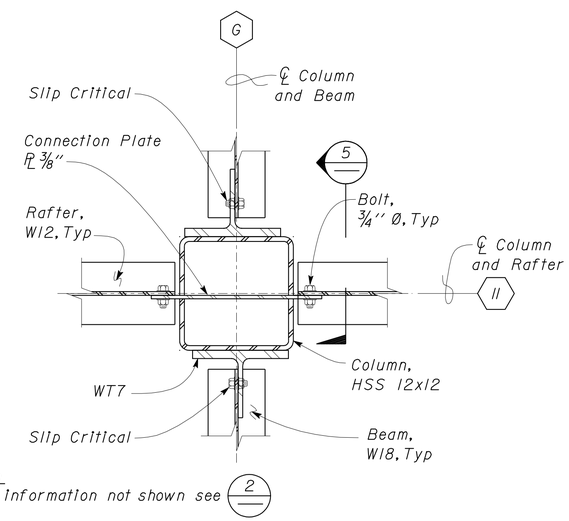

4 RAFTER TO COLUMN
Scale 1 1/2" = 1' - 0"

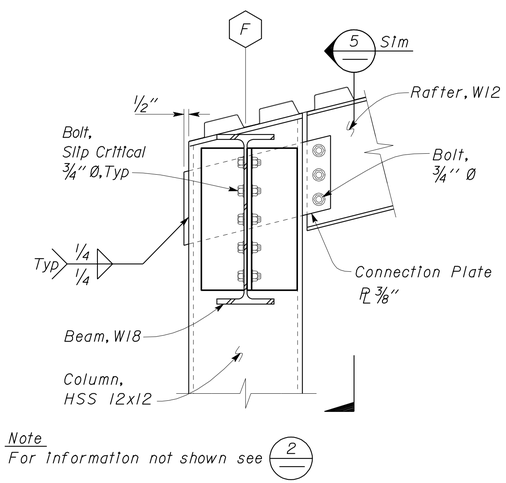

6 RAFTER TO COLUMN
Scale 1 1/2" = 1' - 0"

	BY	CHECKED
DESIGN	Shervin Pahlavan	Joseph Camilleri
DETAILS	Andrew Lovato	Shervin Pahlavan
QUANTITIES		

STATE OF CALIFORNIA DEPARTMENT OF TRANSPORTATION

DIVISION OF ENGINEERING SERVICES ARCHITECTURAL AND STRUCTURAL DESIGN

BRIDGE NO. 54-1216J
POST MILE 177.3/181.1

CVEF CHP OFFICE

MOUNTAIN PASS JPOE

ROOF CONNECTION DETAILS

SHEET ST7-62

TAEMWW Imperial Rev. 7/10

ORIGINAL SCALE IN INCHES FOR REDUCED PLANS 0 1 2 3

UNIT 3599
PROJECT NUMBER & PHASE 08000006281
EA 368501

DISREGARD PRINTS BEARING EARLIER REVISION DATES

REVISION DATES (PRELIMINARY STAGE ONLY) 03-11-10 11-01-12 12-10-12 SHEET OF

26-FEB-2013 10:44
D:\user\Projects\A Expedite Process Folder\st7_062.dgn

DIST.	COUNTY	ROUTE	POST MILES TOTAL PROJECT	SHEET NO.	TOTAL SHEETS
08	SBd	15	177.3/181.1	513	710

Shervin Pahlavan 11-27-12
REGISTERED CIVIL ENGINEER DATE

REGISTERED PROFESSIONAL ENGINEER Shervin Pahlavan No. 44463 Exp. 3-31-14 CIVIL STATE OF CALIFORNIA

2-25-13
PLANS APPROVAL DATE

The State of California or its officers or agents shall not be responsible for the accuracy or completeness of electronic copies of this plan sheet.

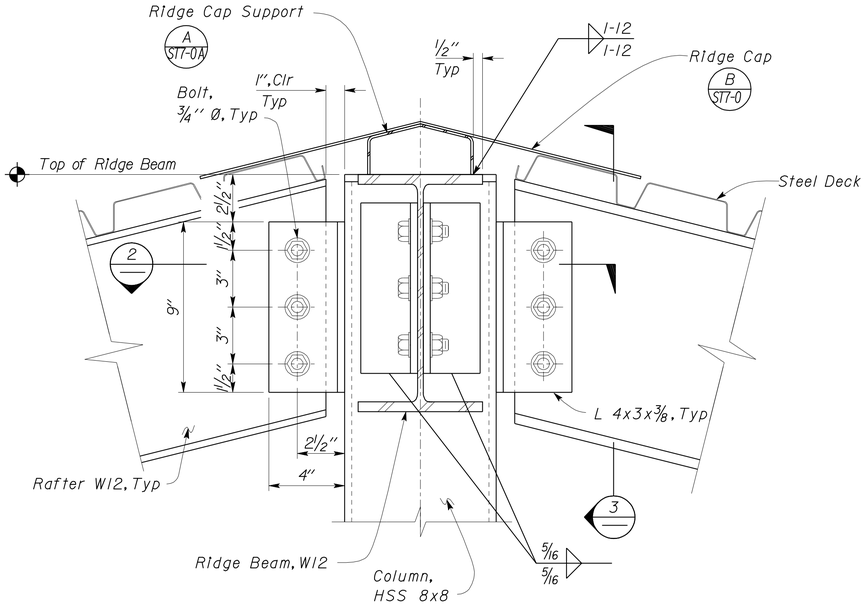

1 RAFTERS AND RIDGE BEAM TO COLUMN DETAIL
Scale 3" = 1' - 0"

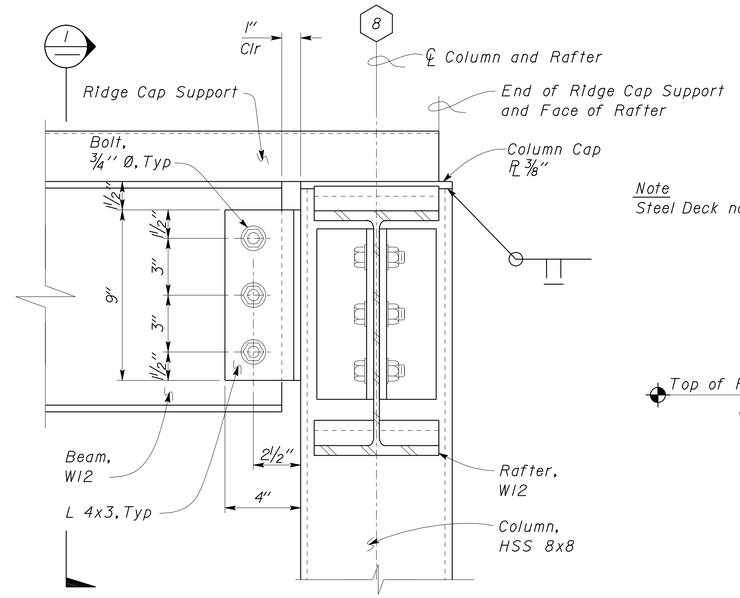

Note
Steel Deck not shown.

3 BEAM TO COLUMN
Scale 3" = 1' - 0"

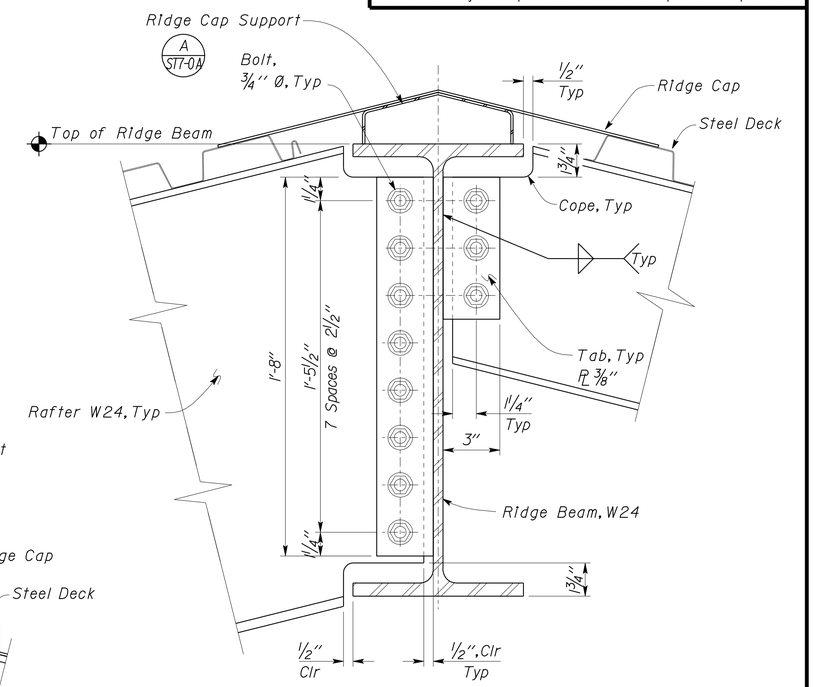

5 RAFTER TO RIDGE BEAM CONNECTION
Scale 3" = 1' - 0"

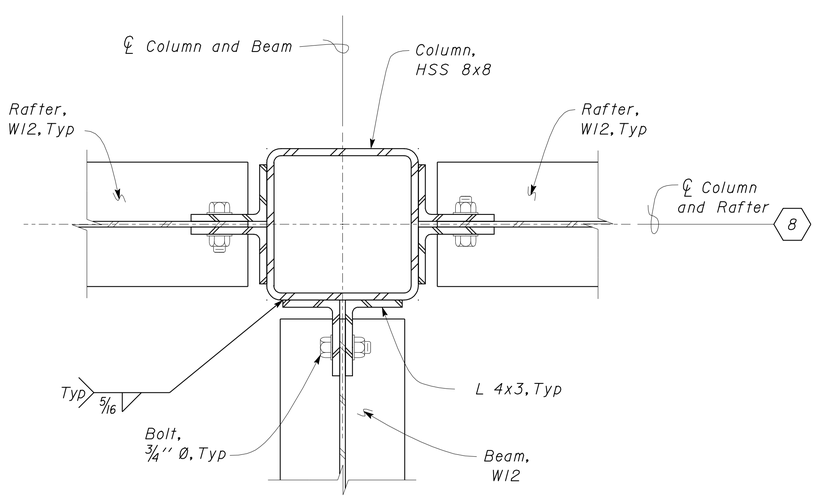

2 RAFTER AND BEAM TO COLUMN DETAIL
Scale 3" = 1' - 0"

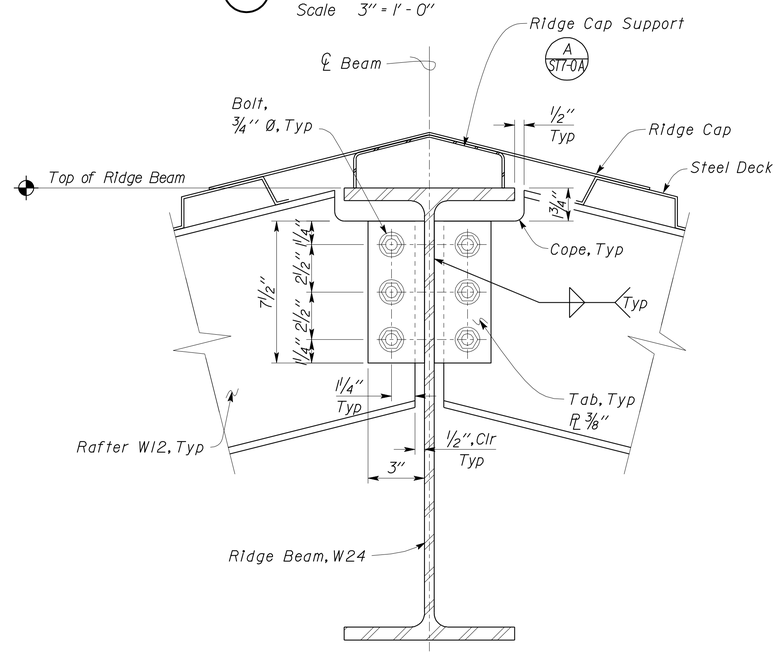

4 RAFTER TO RIDGE BEAM CONNECTION
Scale 3" = 1' - 0"

DESIGN	BY Shervin Pahlavan	CHECKED Joseph Camilleri	
DETAILS	BY Andrew Lovato	CHECKED Shervin Pahlavan	
QUANTITIES	BY	CHECKED	

STATE OF CALIFORNIA
DEPARTMENT OF TRANSPORTATION

DIVISION OF ENGINEERING SERVICES
ARCHITECTURAL AND STRUCTURAL DESIGN

BRIDGE NO. 54-1216J
POST MILE 177.3/181.1
CVEF CHP OFFICE

MOUNTAIN PASS JPOE

ROOF CONNECTION DETAILS

SHEET ST7-63

TAEMWW Imperial Rev. 7/10

ORIGINAL SCALE IN INCHES FOR REDUCED PLANS 0 1 2 3

UNIT 3599
PROJECT NUMBER & PHASE 08000006281
EA 368501

DISREGARD PRINTS BEARING EARLIER REVISION DATES
REVISION DATES (PRELIMINARY STAGE ONLY) 07-19-10 11-01-12 12-10-12
SHEET OF

26-FEB-2013 10:44
D:\user\Projects\A Expedite Process Folder\st7_063.dgn

DIST.	COUNTY	ROUTE	POST MILES TOTAL PROJECT	SHEET NO.	TOTAL SHEETS
08	SBd	15	177.3/181.1	514	710

Shervin Pahlavan 11-27-12
REGISTERED CIVIL ENGINEER DATE

REGISTERED PROFESSIONAL ENGINEER Shervin Pahlavan No. 44463 Exp. 3-31-14 CIVIL STATE OF CALIFORNIA

2-25-13
PLANS APPROVAL DATE

The State of California or its officers or agents shall not be responsible for the accuracy or completeness of electronic copies of this plan sheet.

Note
Steel Deck Support not shown.

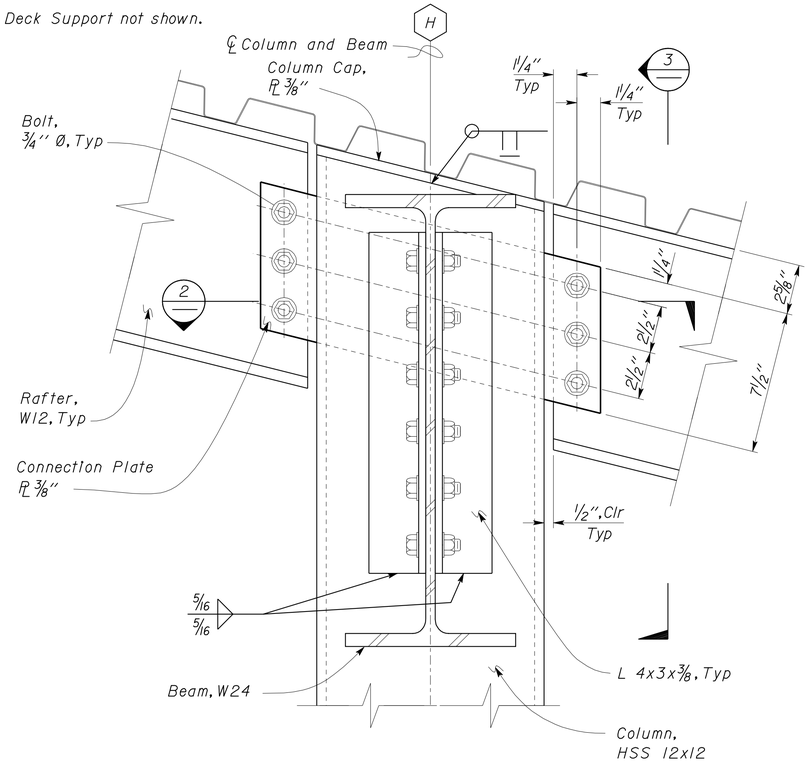

1 RAFTER TO COLUMN
Scale 3" = 1' - 0"

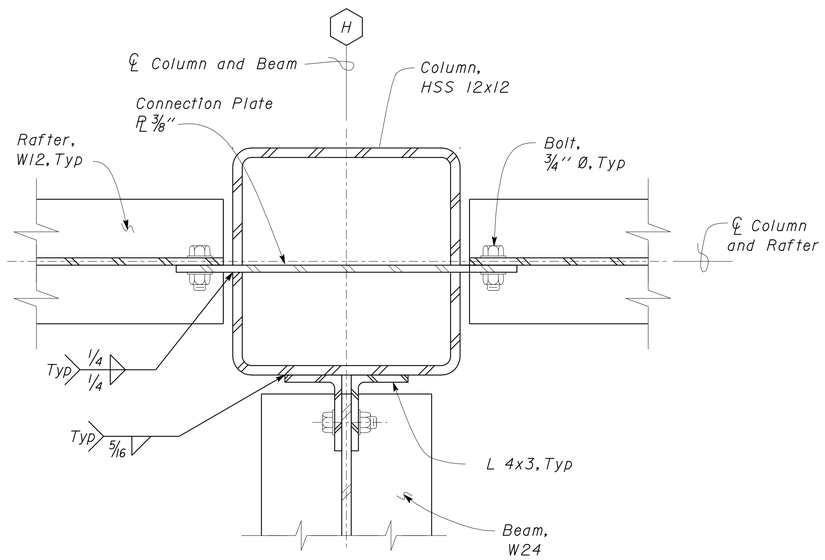

2 RAFTER TO COLUMN
Scale 3" = 1' - 0"

Notes
1. Steel Deck not shown.
2. Steel Deck Support not shown.

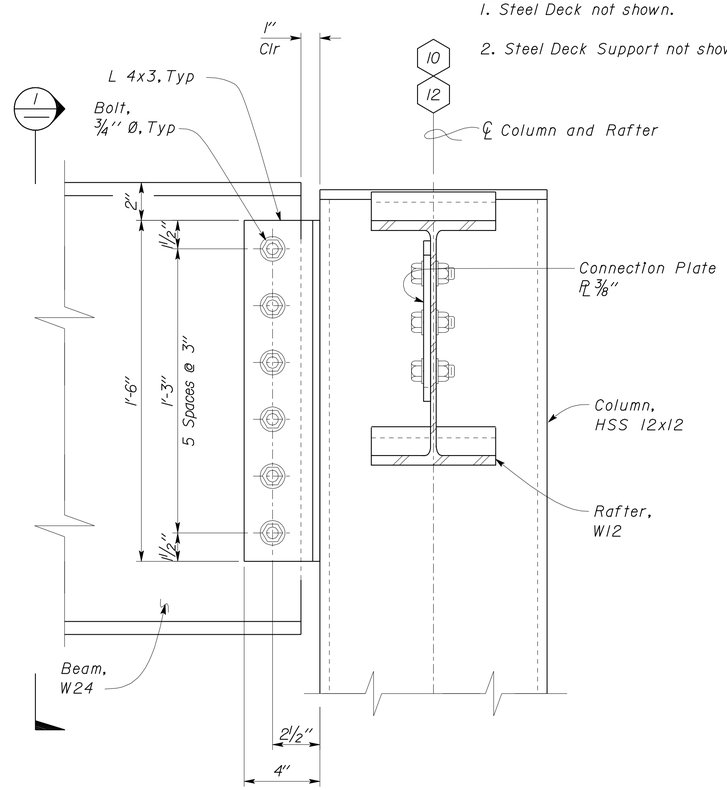

3 BEAM TO COLUMN
Scale 3" = 1' - 0"

DESIGN	BY Shervin Pahlavan	CHECKED Joseph Camilleri	
DETAILS	BY Andrew Lovato	CHECKED Shervin Pahlavan	
QUANTITIES	BY	CHECKED	

STATE OF CALIFORNIA
DEPARTMENT OF TRANSPORTATION

DIVISION OF ENGINEERING SERVICES
ARCHITECTURAL AND STRUCTURAL DESIGN

BRIDGE NO. 54-1216J
POST MILE 177.3/181.1
CVEF CHP OFFICE

MOUNTAIN PASS JPOE
ROOF CONNECTION DETAILS

SHEET ST7-64

TAEMWW Imperial Rev. 7/10

ORIGINAL SCALE IN INCHES FOR REDUCED PLANS 0 1 2 3

UNIT 3599
PROJECT NUMBER & PHASE 08000006281
EA 368501

DISREGARD PRINTS BEARING EARLIER REVISION DATES → 03-11-10 11-01-12 12-10-12

REVISION DATES (PRELIMINARY STAGE ONLY) SHEET OF

D:\user\Projects\A Expedite Process Folder\st7_064.dgn

26-FEB-2013 10:44

DIST.	COUNTY	ROUTE	POST MILES TOTAL PROJECT	SHEET NO.	TOTAL SHEETS
08	SBd	15	177.3/181.1	515	710

Shervin Pahlavan 11-27-12
REGISTERED CIVIL ENGINEER DATE

REGISTERED PROFESSIONAL ENGINEER Shervin Pahlavan No. 44463 Exp. 3-31-14 CIVIL STATE OF CALIFORNIA

2-25-13
PLANS APPROVAL DATE

The State of California or its officers or agents shall not be responsible for the accuracy or completeness of electronic copies of this plan sheet.

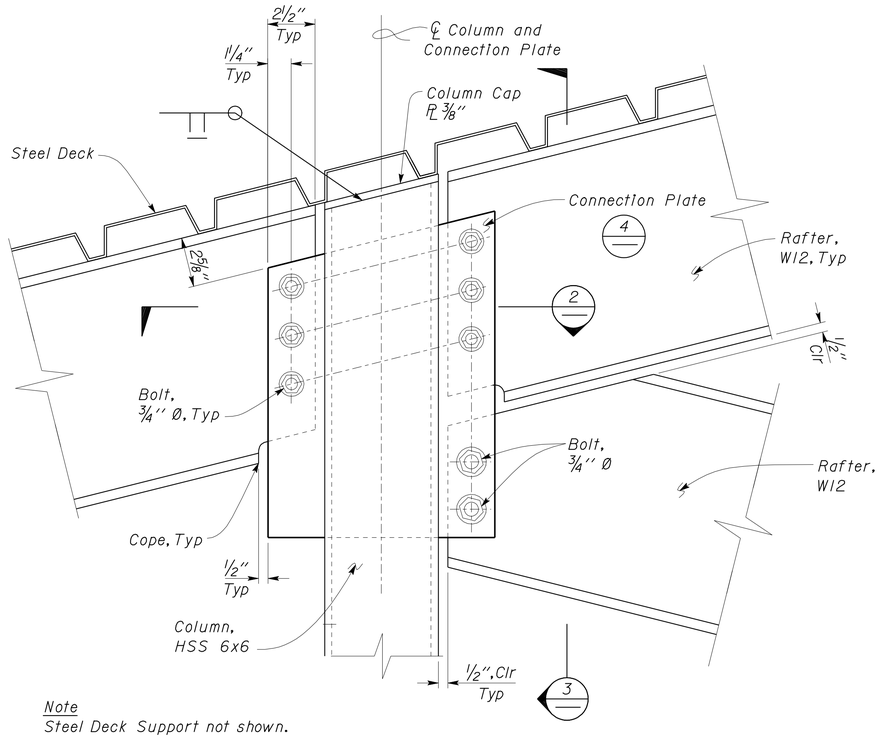

Note
Steel Deck Support not shown.

1 RAFTERS TO COLUMN DETAIL
Scale 3" = 1'-0"

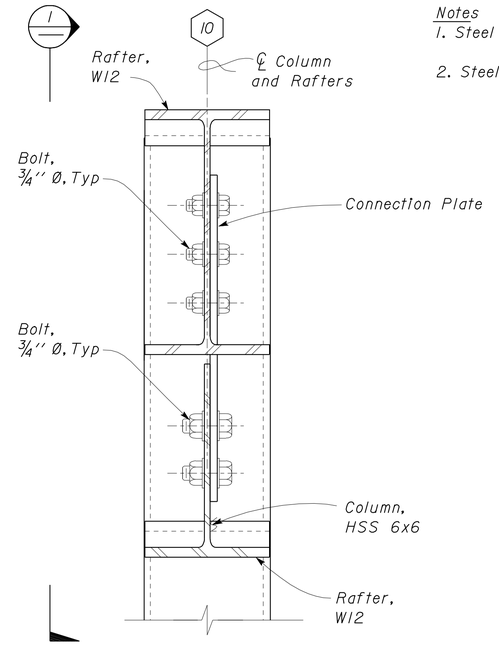

Notes
1. Steel Deck not shown.
2. Steel Deck Support not shown.

3 RAFTERS TO COLUMN
Scale 3" = 1'-0"

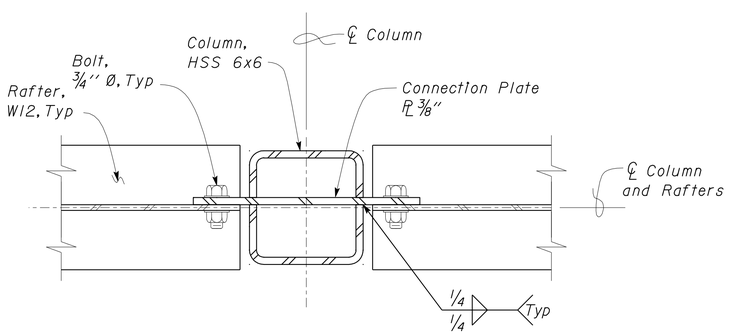

2 RAFTERS TO COLUMN SECTION
Scale 3" = 1'-0"

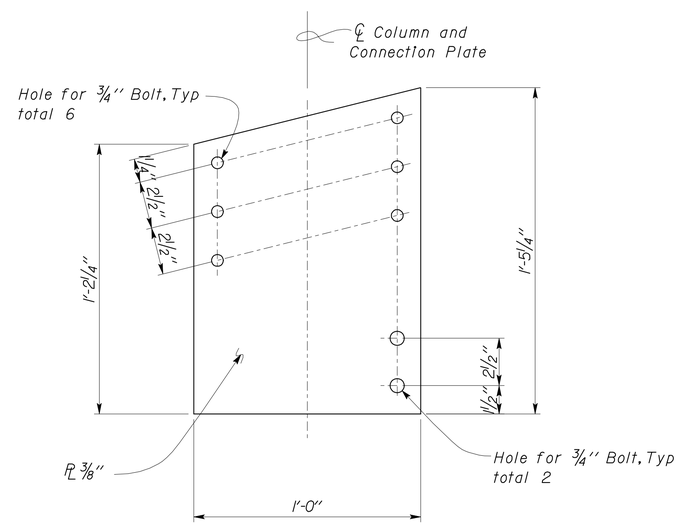

4 CONNECTION PLATE
Scale 3" = 1'-0"

DESIGN	BY Shervin Pahlavan	CHECKED Joseph Camilleri	
DETAILS	BY Andrew Lovato	CHECKED Shervin Pahlavan	
QUANTITIES	BY	CHECKED	

STATE OF CALIFORNIA DEPARTMENT OF TRANSPORTATION

DIVISION OF ENGINEERING SERVICES ARCHITECTURAL AND STRUCTURAL DESIGN

BRIDGE NO. 54-1216J
POST MILE 177.3/181.1
CVEF CHP OFFICE

MOUNTAIN PASS JPOE
ROOF CONNECTION DETAILS

SHEET ST7-65

TAEMWW Imperial Rev. 7/10

ORIGINAL SCALE IN INCHES FOR REDUCED PLANS 0 1 2 3

UNIT 3599
PROJECT NUMBER & PHASE 08000006281
EA 368501

DISREGARD PRINTS BEARING EARLIER REVISION DATES →
REVISION DATES (PRELIMINARY STAGE ONLY) 03-11-10 11-01-12 12-10-12
SHEET OF

26-FEB-2013 10:44
D:\user\Projects\A Expedite Process Folder\st7_065.dgn

DIST.	COUNTY	ROUTE	POST MILES TOTAL PROJECT	SHEET NO.	TOTAL SHEETS
08	SBd	15	177.3/181.1	516	710

Shervin Pahlavan 11-27-12
REGISTERED CIVIL ENGINEER DATE

REGISTERED PROFESSIONAL ENGINEER Shervin Pahlavan No. 44463 Exp. 3-31-14 CIVIL STATE OF CALIFORNIA

2-25-13
PLANS APPROVAL DATE

The State of California or its officers or agents shall not be responsible for the accuracy or completeness of electronic copies of this plan sheet.

Note
Steel Deck Support not shown.

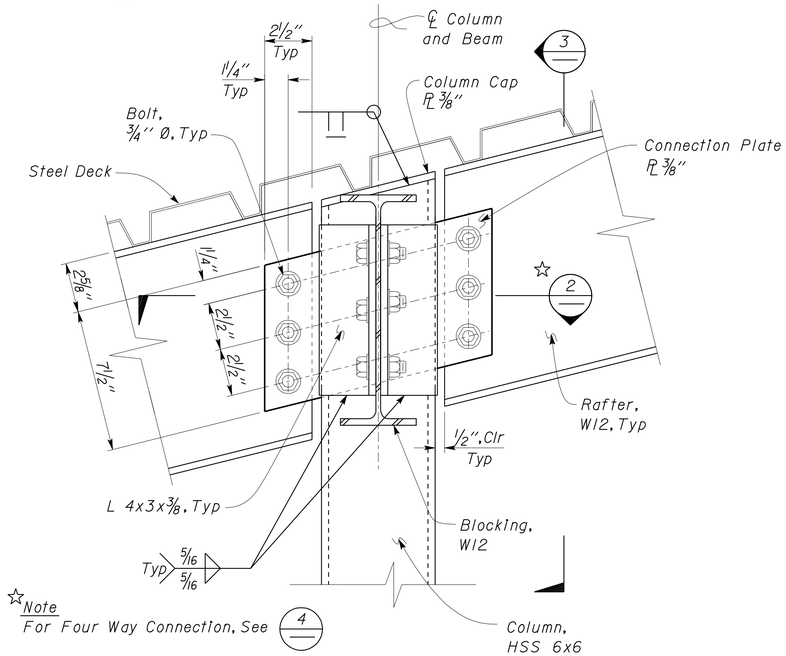

☆Note
For Four Way Connection, See 4

1 RAFTERS AND BEAM TO COLUMN DETAIL
Scale 3" = 1'-0"

Notes
1. Steel Deck not shown.
2. Steel Deck Support not shown.

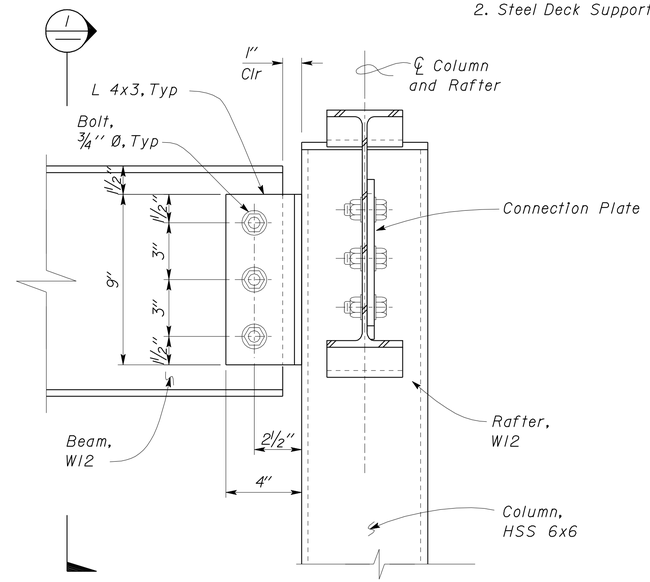

3 BEAM TO COLUMN
Scale 3" = 1'-0"

Notes
1. Steel Deck not shown.
2. Steel Deck Support not shown.

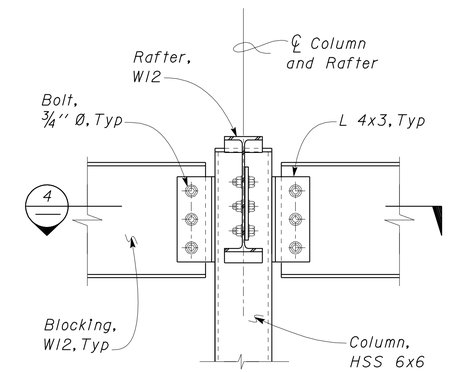

Note
For Information not shown see 3

5 BLOCKING TO COLUMN
Scale 1½" = 1'-0"

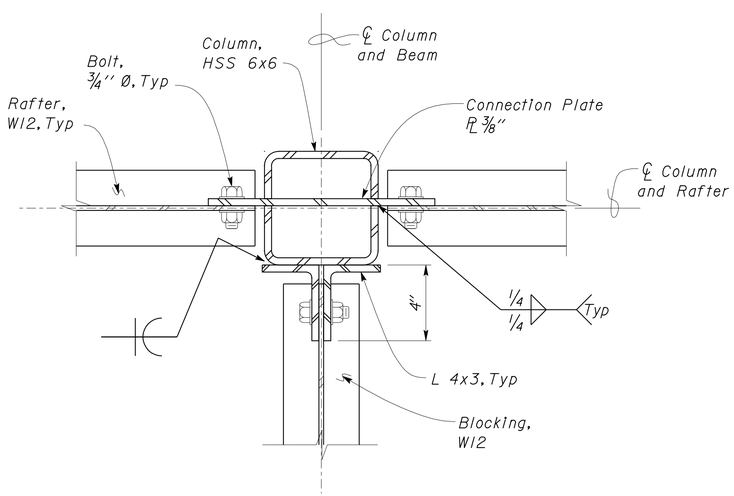

2 RAFTER AND BEAM TO COLUMN DETAIL
Scale 3" = 1'-0"

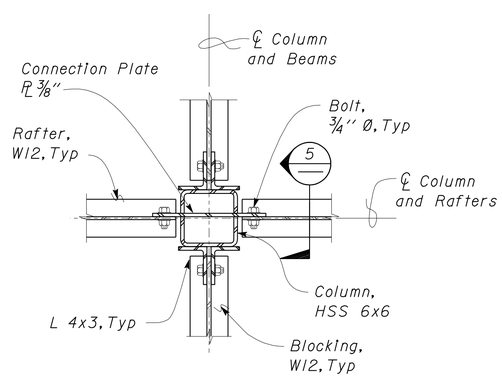

Note
For Information not shown see 2

4 RAFTERS AND BLOCKING TO COLUMN DETAIL
Scale 1½" = 1'-0"

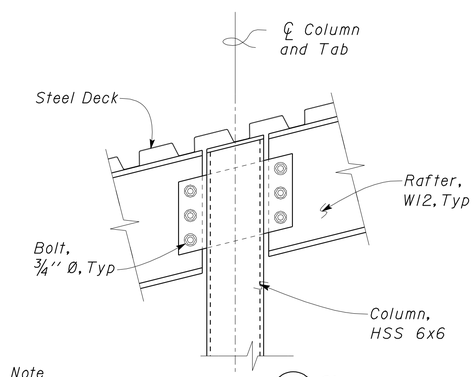

Note
For Information not shown see 1 Sim

6 RAFTER TO COLUMN DETAIL
Scale 1½" = 1'-0"

DESIGN	BY Shervin Pahlavan	CHECKED Joseph Camilleri	
DETAILS	BY Andrew Lovato	CHECKED Shervin Pahlavan	
QUANTITIES	BY	CHECKED	

STATE OF CALIFORNIA DEPARTMENT OF TRANSPORTATION

DIVISION OF ENGINEERING SERVICES
ARCHITECTURAL AND STRUCTURAL DESIGN

BRIDGE NO. 54-1216J
POST MILE 177.3/181.1

MOUNTAIN PASS JPOE
CVEF CHP OFFICE
ROOF CONNECTION DETAILS

SHEET ST7-66

TAEMWW Imperial Rev. 7/10

ORIGINAL SCALE IN INCHES FOR REDUCED PLANS 0 1 2 3

UNIT 3599
PROJECT NUMBER & PHASE 08000006281
EA 368501

DISREGARD PRINTS BEARING EARLIER REVISION DATES → 03-11-10 11-01-12 12-10-12

REVISION DATES (PRELIMINARY STAGE ONLY) SHEET OF

D:\user\Projects\A Expedite Process Folder\st7_066.dgn

26-FEB-2013 10:44

DIST.	COUNTY	ROUTE	POST MILES TOTAL PROJECT	SHEET NO.	TOTAL SHEETS
08	SBd	15	177.3/181.1	517	710

Shervin Pahlavan 11-27-12
REGISTERED CIVIL ENGINEER DATE

REGISTERED PROFESSIONAL ENGINEER
Shervin Pahlavan
No. 44463
Exp. 3-31-14
CIVIL
STATE OF CALIFORNIA

2-25-13
PLANS APPROVAL DATE

The State of California or its officers or agents shall not be responsible for the accuracy or completeness of electronic copies of this plan sheet.

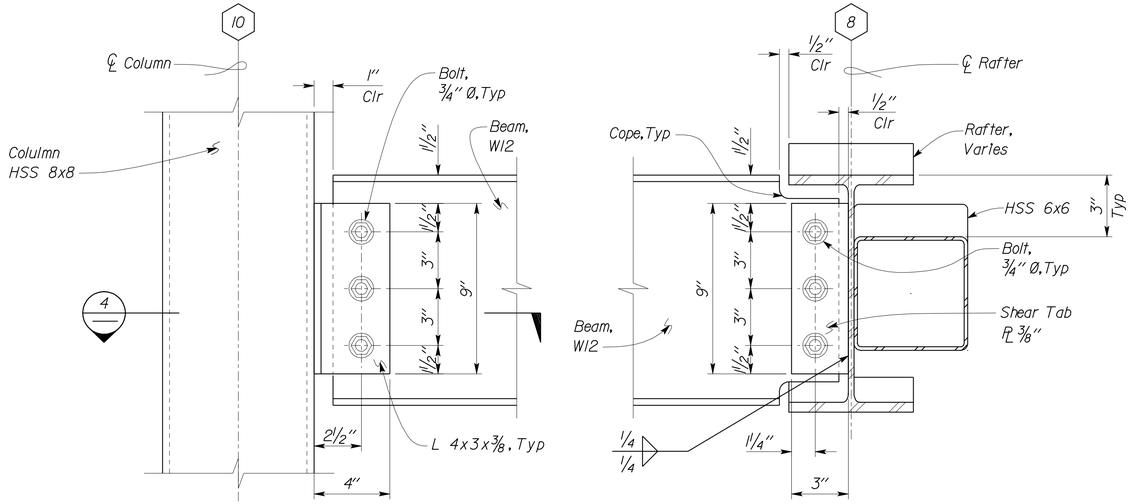

1 RAFTER AND COLUMN TO BEAM DETAIL
Scale 3" = 1' - 0"

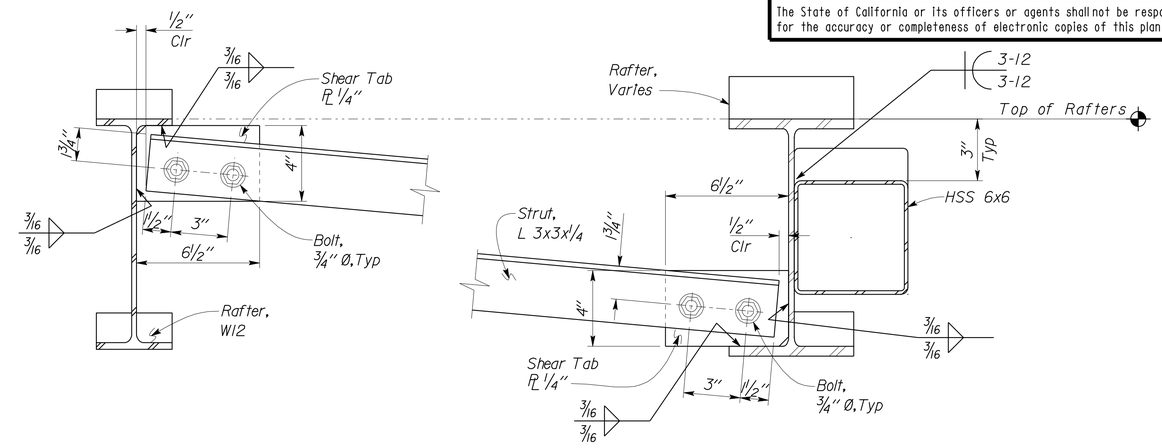

3 STRUT CONNECTION
Scale 3" = 1' - 0"

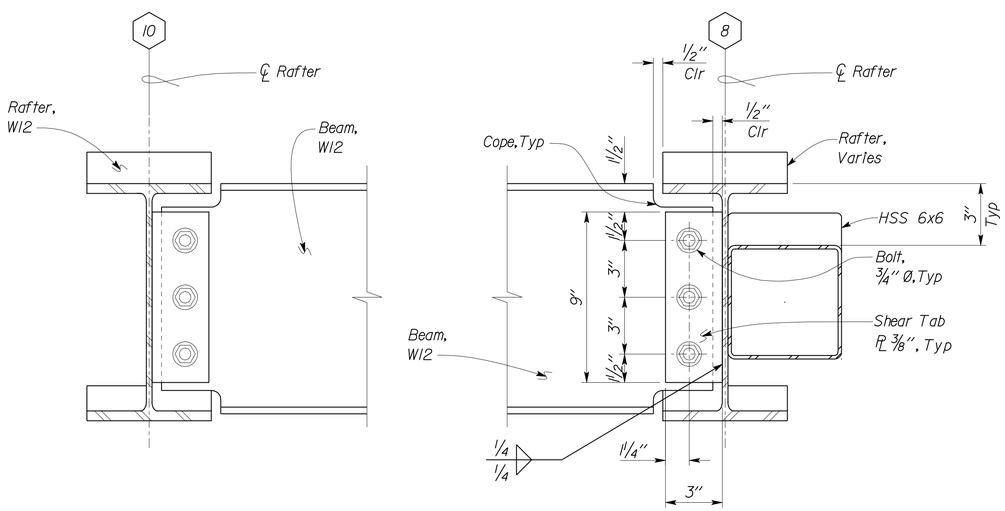

2 BEAM TO RAFTER CONNECTION
Scale 3" = 1' - 0"

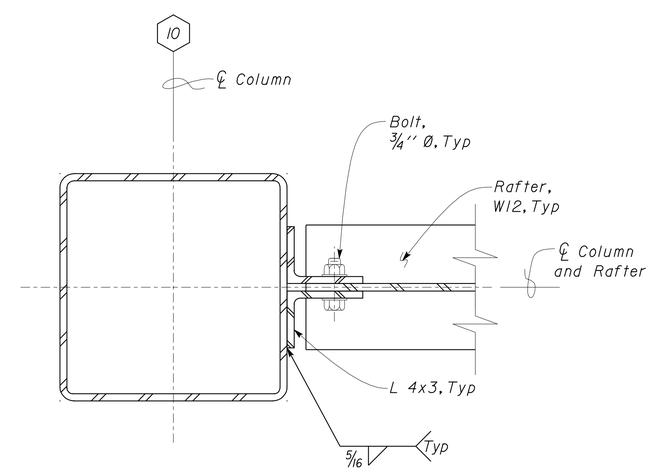

4 BEAM TO COLUMN
Scale 3" = 1' - 0"

	BY	CHECKED
DESIGN	Shervin Pahlavan	Joseph Camilleri
DETAILS	Andrew Lovato	Shervin Pahlavan
QUANTITIES		

STATE OF CALIFORNIA
DEPARTMENT OF TRANSPORTATION

DIVISION OF ENGINEERING SERVICES
ARCHITECTURAL AND STRUCTURAL DESIGN

BRIDGE NO. 54-1216J
POST MILE 177.3/181.1
CVEF CHP OFFICE

MOUNTAIN PASS JPOE

ROOF CONNECTION DETAILS

SHEET ST7-67

TAEMWW Imperial Rev. 7/10

ORIGINAL SCALE IN INCHES FOR REDUCED PLANS 0 1 2 3

UNIT 3599
PROJECT NUMBER & PHASE 08000006281
EA 368501

DISREGARD PRINTS BEARING EARLIER REVISION DATES →
REVISION DATES (PRELIMINARY STAGE ONLY) 03-11-10 11-01-12 12-10-12
SHEET OF

D:\user\Projects\A Expedite Process Folder\st7_067.dgn

26-FEB-2013 10:45

DIST.	COUNTY	ROUTE	POST MILES TOTAL PROJECT	SHEET NO.	TOTAL SHEETS
08	SBd	15	177.3/181.1	518	710

Shervin Pahlavan 11-27-12
REGISTERED CIVIL ENGINEER DATE

REGISTERED PROFESSIONAL ENGINEER
Shervin Pahlavan
No. 44463
Exp. 3-31-14
CIVIL
STATE OF CALIFORNIA

2-25-13
PLANS APPROVAL DATE

The State of California or its officers or agents shall not be responsible for the accuracy or completeness of electronic copies of this plan sheet.

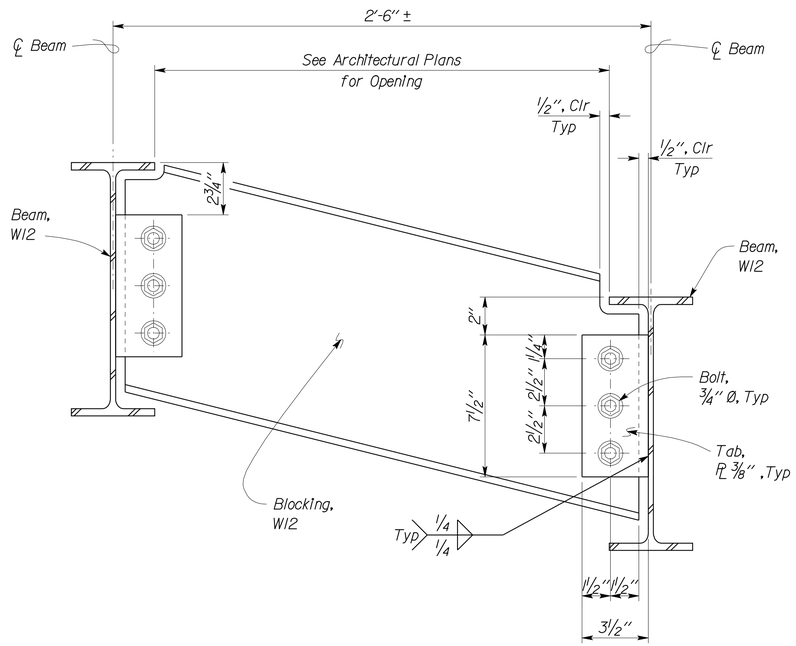

Note
Roof Decking not shown.

1 FRAMING DETAIL AT ROOF OPENING
Scale 3" = 1' - 0"

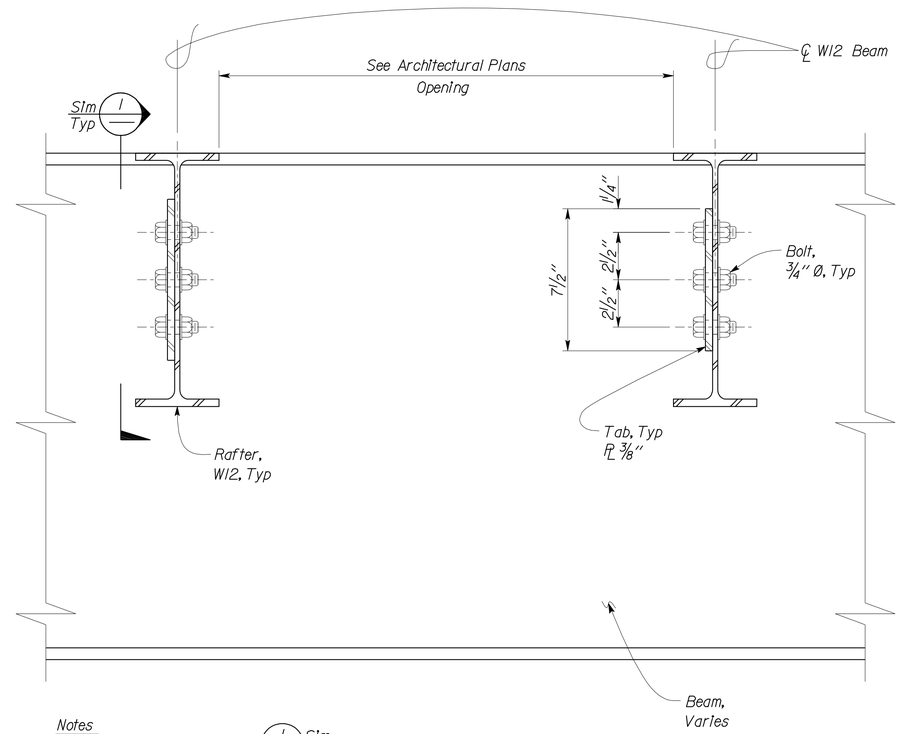

Notes
1. For Details not shown, see 1 Sim
2. Roof Decking not shown.

2 FRAMING DETAIL AT ROOF OPENING
Scale 3' = 1' - 0"

DESIGN	BY Shervin Pahlavan	CHECKED Joseph Camilleri	
DETAILS	BY Andrew Lovato	CHECKED Shervin Pahlavan	
QUANTITIES	BY	CHECKED	

STATE OF CALIFORNIA
DEPARTMENT OF TRANSPORTATION

DIVISION OF ENGINEERING SERVICES
ARCHITECTURAL AND STRUCTURAL DESIGN

BRIDGE NO. 54-1216J
POST MILE 177.3/181.1
CVEF CHP OFFICE

MOUNTAIN PASS JPOE
ROOF CONNECTION DETAILS

SHEET ST7-68

TAEMWW Imperial Rev. 7/10

ORIGINAL SCALE IN INCHES FOR REDUCED PLANS 0 1 2 3

UNIT 3599
PROJECT NUMBER & PHASE 08000006281
EA 368501

DISREGARD PRINTS BEARING EARLIER REVISION DATES
REVISION DATES (PRELIMINARY STAGE ONLY) 03-11-10 11-01-12 12-10-12
SHEET OF

D:\user\Projects\A Expedite Process Folder\st7_068.dgn

26-FEB-2013 10:45

DIST.	COUNTY	ROUTE	POST MILES TOTAL PROJECT	SHEET NO.	TOTAL SHEETS
08	SBd	15	177.3/181.1	519	710

Shervin Pahlavan 11-27-12
REGISTERED CIVIL ENGINEER DATE

REGISTERED PROFESSIONAL ENGINEER Shervin Pahlavan No. 44463 Exp. 3-31-14 CIVIL STATE OF CALIFORNIA

2-25-13
PLANS APPROVAL DATE

The State of California or its officers or agents shall not be responsible for the accuracy or completeness of electronic copies of this plan sheet.

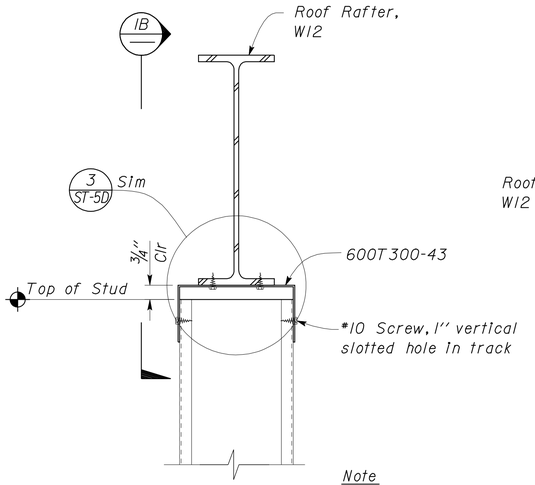

A SECTION

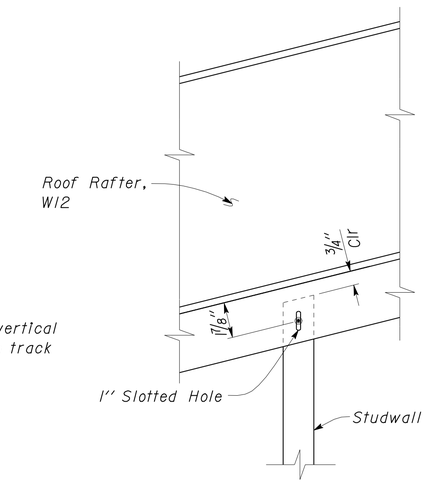

B SIDE VIEW

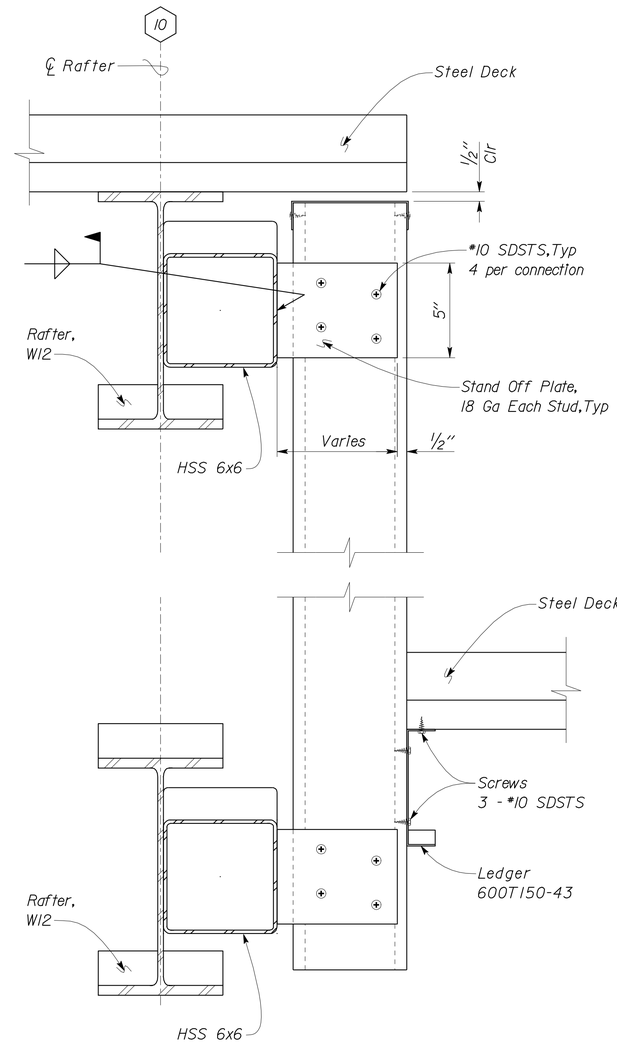

3 FRAMING DETAIL
Scale 3" = 1' - 0"

1 SLIP CONNECTION
Scale 3" = 1' - 0"

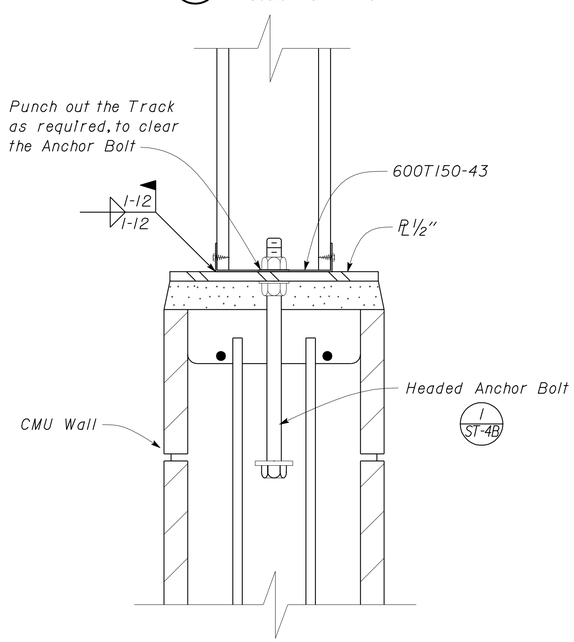

2 CMU TO STUD WALL CONNECTION
Scale 2" = 1' - 0"

DESIGN	BY Shervin Pahlavan	CHECKED Joseph Camilleri	STATE OF CALIFORNIA DEPARTMENT OF TRANSPORTATION	DIVISION OF ENGINEERING SERVICES ARCHITECTURAL AND STRUCTURAL DESIGN	BRIDGE NO. 54-1216J	MOUNTAIN PASS JPOE
DETAILS	BY Andrew Lovato	CHECKED Shervin Pahlavan			POST MILE 177.3/181.1	CVEF CHP OFFICE — WALL FRAMING DETAILS
QUANTITIES	BY	CHECKED				

SHEET ST7-69

TAEMWW Imperial Rev. 7/10

ORIGINAL SCALE IN INCHES FOR REDUCED PLANS 0 1 2 3

UNIT 3599
PROJECT NUMBER & PHASE 08000006281
EA 368501

DISREGARD PRINTS BEARING EARLIER REVISION DATES → 03-11-10 11-01-12 12-10-12

REVISION DATES (PRELIMINARY STAGE ONLY) SHEET OF

D:\user\Projects\A Expedite Process Folder\st7_069.dgn

26-FEB-2013 10:45

DIST.	COUNTY	ROUTE	POST MILES TOTAL PROJECT	SHEET NO.	TOTAL SHEETS
08	SBd	15	177.3/181.1	520	710

Shervin Pahlavan 11-27-12
REGISTERED CIVIL ENGINEER DATE

REGISTERED PROFESSIONAL ENGINEER Shervin Pahlavan No. 44463 Exp. 3-31-14 CIVIL STATE OF CALIFORNIA

2-25-13
PLANS APPROVAL DATE

The State of California or its officers or agents shall not be responsible for the accuracy or completeness of electronic copies of this plan sheet.

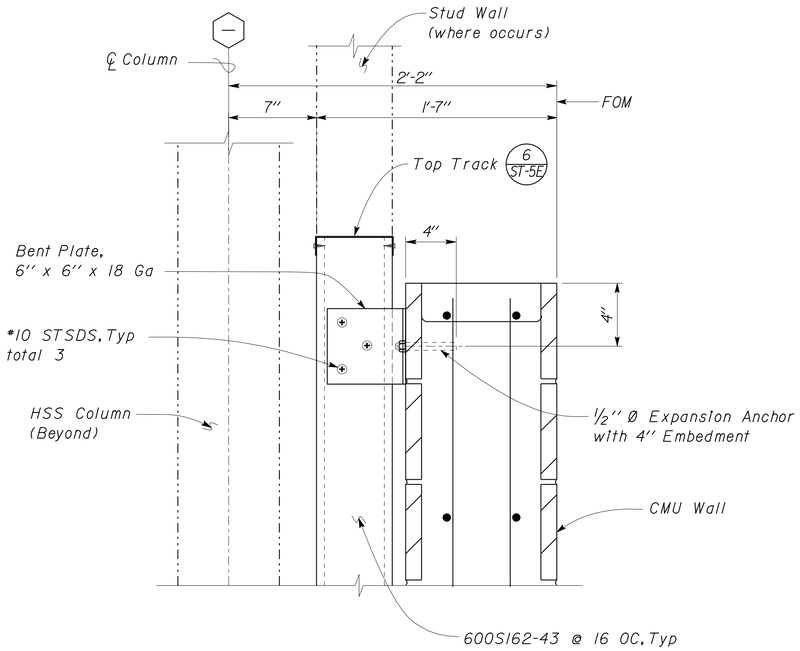

1 WALL DETAIL
Scale 2" = 1' - 0"

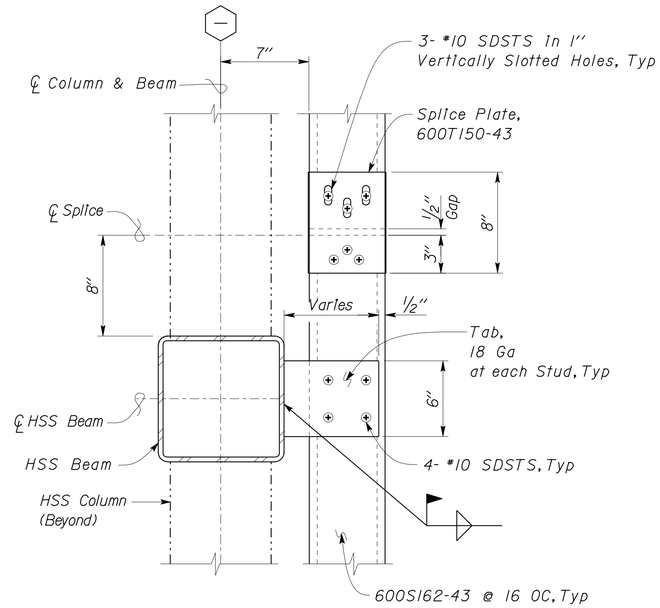

3 STUD SPLICE AT SUSPENDED STUDS
Scale 2" = 1' - 0"

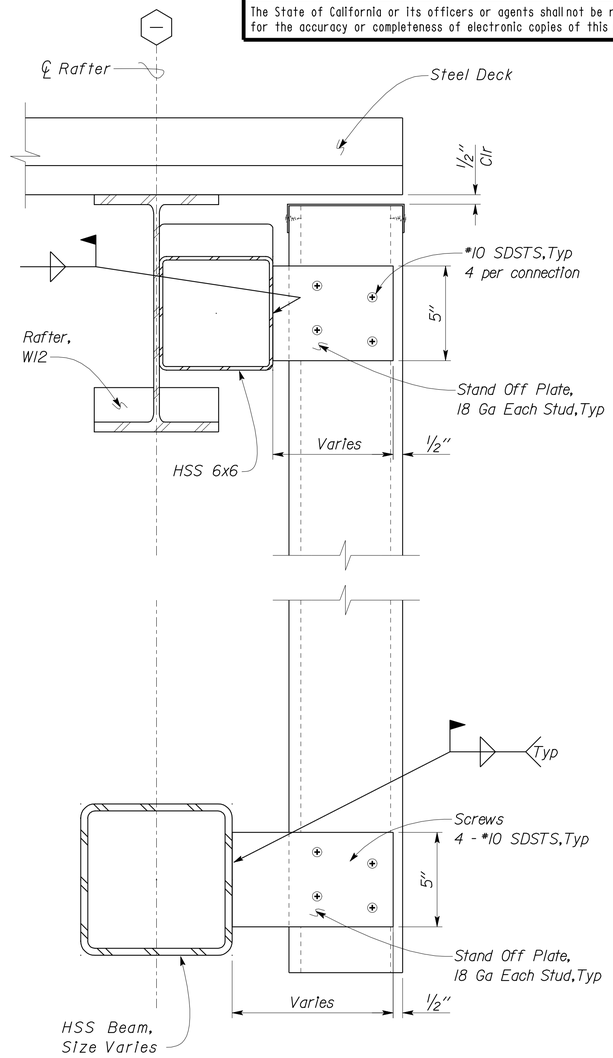

5 FRAMING DETAIL
Scale 3" = 1' - 0"

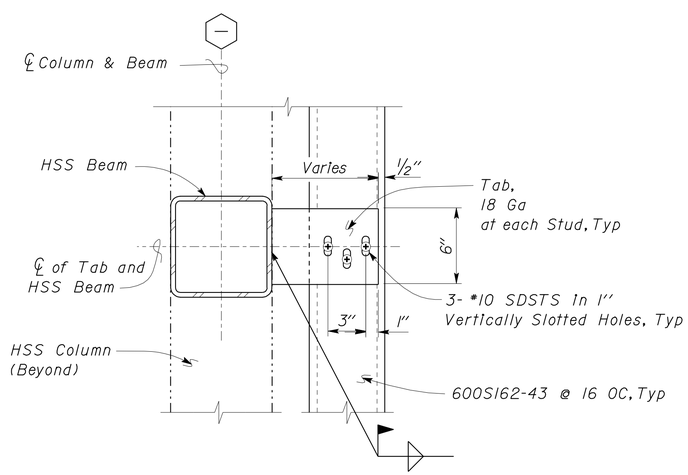

2 STUD/HSS BEAM CONNECTION
Scale 2" = 1' - 0"

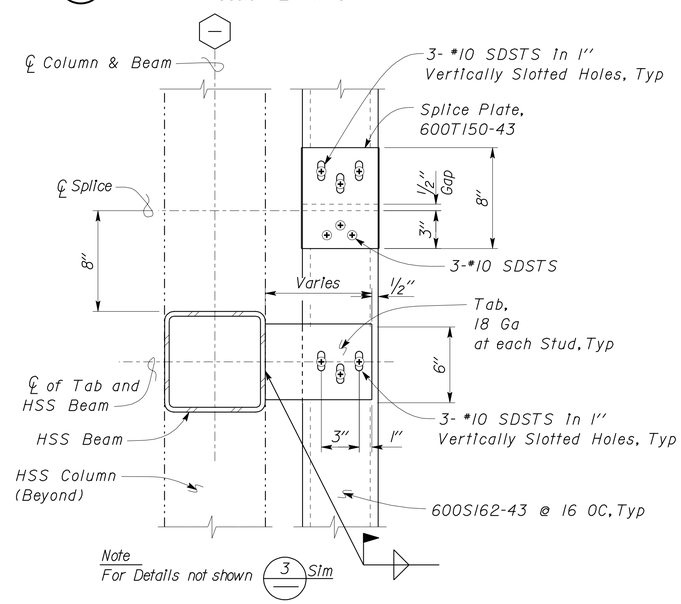

4 STUD SPLICE AT FULL-HEIGHT STUDS
Scale 2" = 1' - 0"

DESIGN	BY Shervin Pahlavan	CHECKED Joseph Camilleri	
DETAILS	BY Andrew Lovato	CHECKED Shervin Pahlavan	
QUANTITIES	BY	CHECKED	

STATE OF CALIFORNIA
DEPARTMENT OF TRANSPORTATION

DIVISION OF ENGINEERING SERVICES
ARCHITECTURAL AND STRUCTURAL DESIGN

BRIDGE NO. 54-1216J
POST MILE 177.3/181.1

CVEF CHP OFFICE

MOUNTAIN PASS JPOE

WALL FRAMING DETAILS

SHEET ST7-70

TAEMWW Imperial Rev. 7/10

ORIGINAL SCALE IN INCHES FOR REDUCED PLANS 0 1 2 3

UNIT 3599
PROJECT NUMBER & PHASE 08000006281
EA 368501

DISREGARD PRINTS BEARING EARLIER REVISION DATES → 07-19-10 11-01-12 12-10-12

REVISION DATES (PRELIMINARY STAGE ONLY) SHEET OF

D:\user\Projects\A Expedite Process Folder\st7_070.dgn

26-FEB-2013 10:45

DIST.	COUNTY	ROUTE	POST MILES TOTAL PROJECT	SHEET NO.	TOTAL SHEETS
08	SBd	15	177.3/181.1	521	710

Shervin Pahlavan 11-27-12
REGISTERED CIVIL ENGINEER DATE

REGISTERED PROFESSIONAL ENGINEER
Shervin Pahlavan
No. 44463
Exp. 3-31-14
CIVIL
STATE OF CALIFORNIA

2-25-13
PLANS APPROVAL DATE

The State of California or its officers or agents shall not be responsible for the accuracy or completeness of electronic copies of this plan sheet.

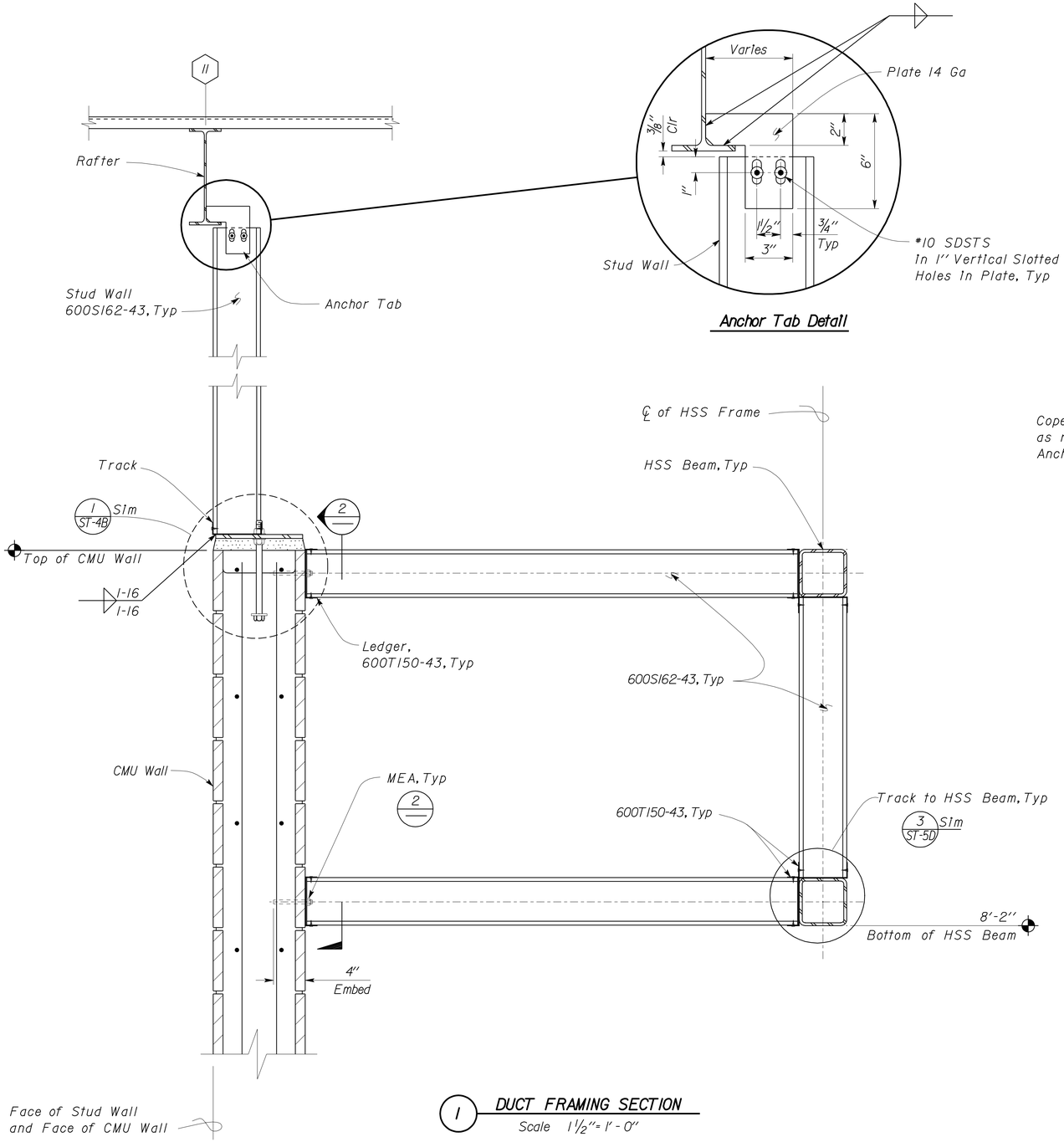

1 DUCT FRAMING SECTION
Scale 1 1/2" = 1'-0"

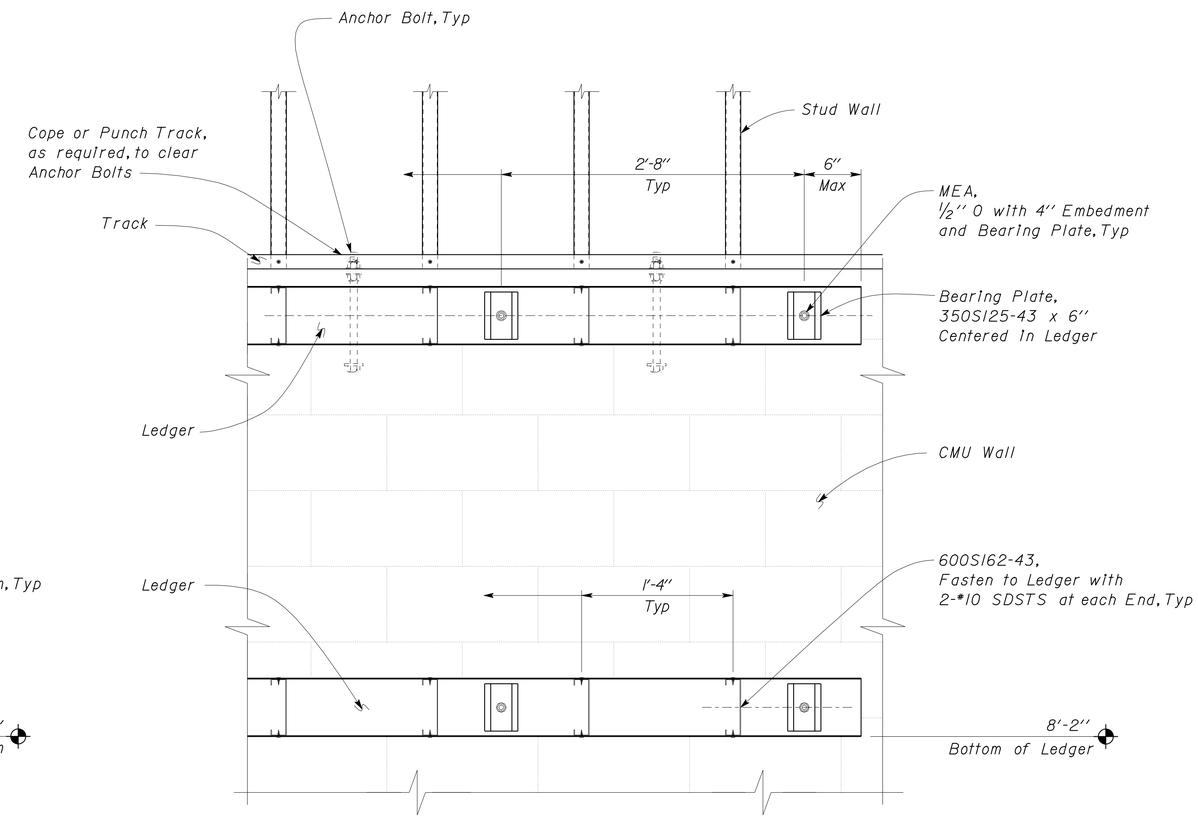

2 DUCT FRAMING DETAIL
Scale 1 1/2" = 1'-0"

	BY	CHECKED
DESIGN	Shervin Pahlavan	Joseph Camilleri
DETAILS	Andrew Lovato	Shervin Pahlavan
QUANTITIES		

STATE OF CALIFORNIA
DEPARTMENT OF TRANSPORTATION

DIVISION OF ENGINEERING SERVICES
ARCHITECTURAL AND STRUCTURAL DESIGN

BRIDGE NO. 54-1216J
POST MILE 177.3/181.1
CVEF CHP OFFICE

MOUNTAIN PASS JPOE
WALL FRAMING DETAILS

SHEET ST7-71

TAEMWW Imperial Rev. 7/10

ORIGINAL SCALE IN INCHES FOR REDUCED PLANS 0 1 2 3

UNIT 3599
PROJECT NUMBER & PHASE 08000006281
EA 368501

DISREGARD PRINTS BEARING EARLIER REVISION DATES
REVISION DATES (PRELIMINARY STAGE ONLY) 03-11-10 11-01-12 12-10-12
SHEET OF

D:\user\Projects\A Expedite Process Folder\st7_071.dgn

26-FEB-2013 10:45

DIST.	COUNTY	ROUTE	POST MILES TOTAL PROJECT	SHEET NO.	TOTAL SHEETS
08	SBd	15	177.3/181.1	522	710

Shervin Pahlavan 11-27-12
REGISTERED CIVIL ENGINEER DATE

REGISTERED PROFESSIONAL ENGINEER
Shervin Pahlavan
No. 44463
Exp. 3-31-14
CIVIL
STATE OF CALIFORNIA

2-25-13
PLANS APPROVAL DATE

The State of California or its officers or agents shall not be responsible for the accuracy or completeness of electronic copies of this plan sheet.

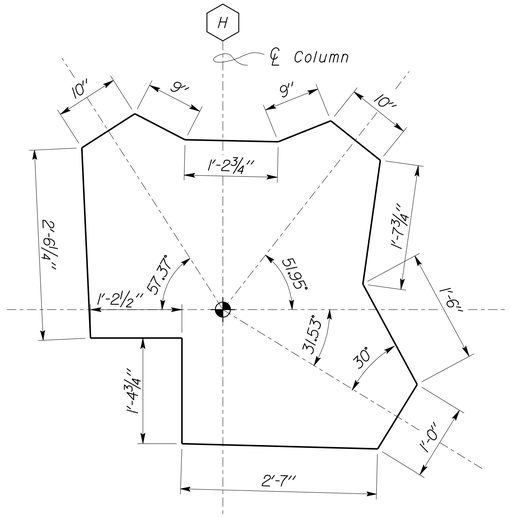

1 BRACED FRAME PLATE DETAIL
Scale 1" = 1' - 0"

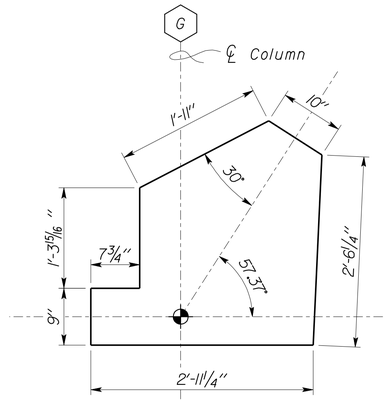

4 BRACED FRAME PLATE DETAIL
Scale 1" = 1' - 0"

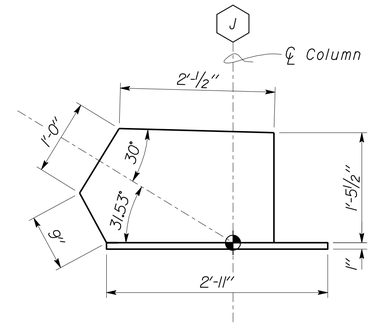

7 BRACED FRAME PLATE DETAIL
Scale 1" = 1' - 0"

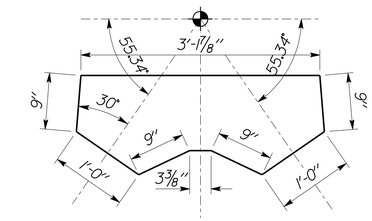

11 BRACED FRAME PLATE DETAIL
Scale 1" = 1' - 0"

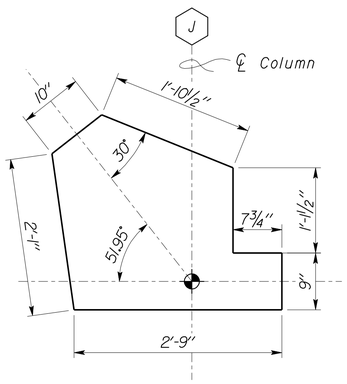

2 BRACED FRAME PLATE DETAIL
Scale 1" = 1' - 0"

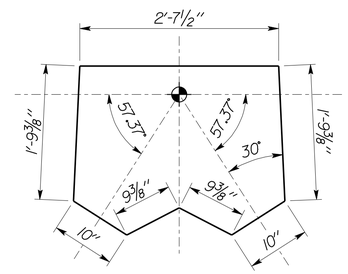

5 BRACED FRAME PLATE DETAIL
Scale 1" = 1' - 0"

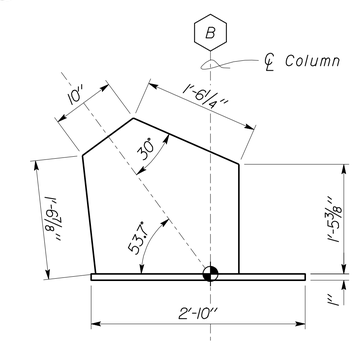

9 BRACED FRAME PLATE DETAIL
Scale 1" = 1' - 0"

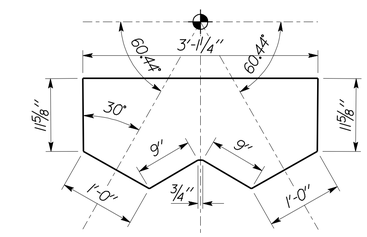

12 BRACED FRAME PLATE DETAIL
Scale 1" = 1' - 0"

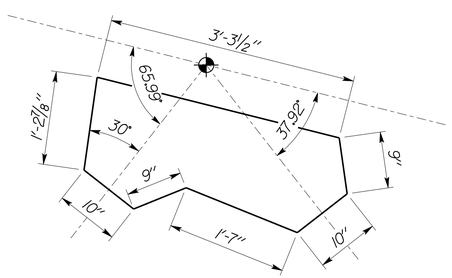

3 BRACED FRAME PLATE DETAIL
Scale 1" = 1' - 0"

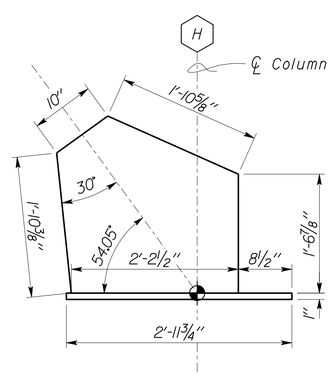

6 BRACED FRAME PLATE DETAIL
Scale 1" = 1' - 0"

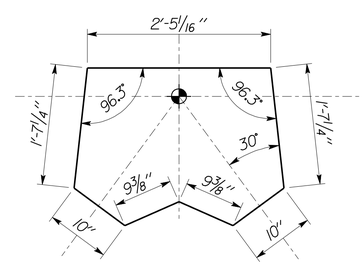

10 BRACED FRAME PLATE DETAIL
Scale 1" = 1' - 0"

	BY	CHECKED
DESIGN	Shervin Pahlavan	Joseph Camilleri
DETAILS	Andrew Lovato	Shervin Pahlavan
QUANTITIES		

STATE OF CALIFORNIA
DEPARTMENT OF TRANSPORTATION

DIVISION OF ENGINEERING SERVICES
ARCHITECTURAL AND STRUCTURAL DESIGN

BRIDGE NO. 54-1216J
POST MILE 177.3/181.1

MOUNTAIN PASS JPOE
CVEF CHP OFFICE
BRACE FRAME PLATE DETAILS

SHEET ST7-72

TAEMWW Imperial Rev. 7/10

ORIGINAL SCALE IN INCHES FOR REDUCED PLANS 0 1 2 3

UNIT 3599
PROJECT NUMBER & PHASE 08000006281
EA 368501

DISREGARD PRINTS BEARING EARLIER REVISION DATES
REVISION DATES (PRELIMINARY STAGE ONLY) 12-22-10 11-15-12 12-10-12
SHEET OF

26-FEB-2013 10:45
D:\user\Projects\A Expedite Process Folder\st7_072.dgn

DIST.	COUNTY	ROUTE	POST MILES TOTAL PROJECT	SHEET NO.	TOTAL SHEETS
08	SBd	15	177.3/181.1	523	710

Shervin Pahlavan 11-27-12
REGISTERED CIVIL ENGINEER DATE

REGISTERED PROFESSIONAL ENGINEER
Shervin Pahlavan
No. 44463
Exp. 3-31-14
CIVIL
STATE OF CALIFORNIA

2-25-13
PLANS APPROVAL DATE

The State of California or its officers or agents shall not be responsible for the accuracy or completeness of electronic copies of this plan sheet.

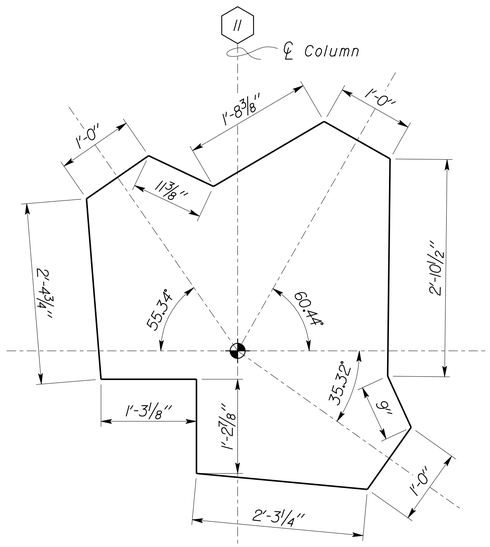

1 BRACED FRAME PLATE DETAIL
Scale 1" = 1' - 0"

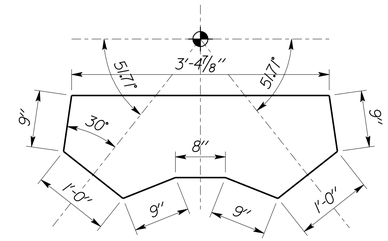

3 BRACED FRAME PLATE DETAIL
Scale 1" = 1' - 0"

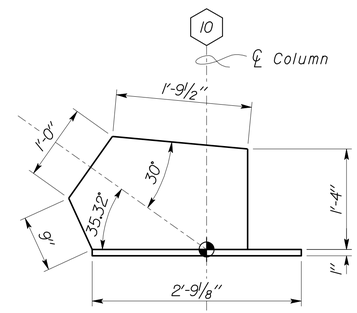

4 BRACED FRAME PLATE DETAIL
Scale 1" = 1' - 0"

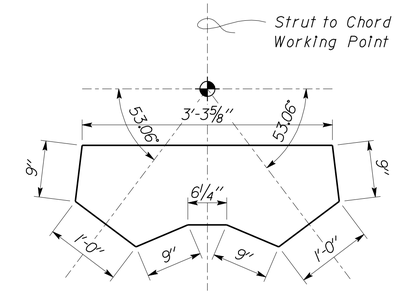

6 BRACED FRAME PLATE DETAIL
Scale 1" = 1' - 0"

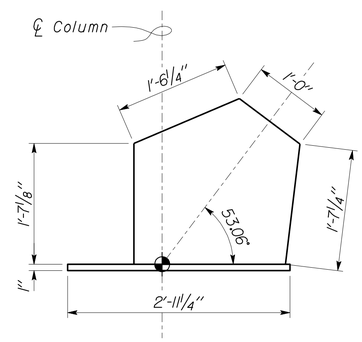

7 BRACED FRAME PLATE DETAIL
Scale 1" = 1' - 0"

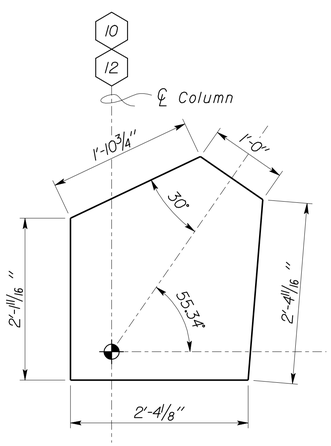

2 BRACED FRAME PLATE DETAIL
Scale 1" = 1' - 0"

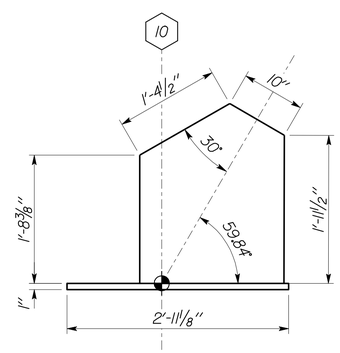

5 BRACED FRAME PLATE DETAIL
Scale 1" = 1' - 0"

DESIGN	BY Shervin Pahlavan	CHECKED Joseph Camilleri	
DETAILS	BY Andrew Lovato	CHECKED Shervin Pahlavan	
QUANTITIES	BY	CHECKED	

STATE OF CALIFORNIA
DEPARTMENT OF TRANSPORTATION

DIVISION OF ENGINEERING SERVICES
ARCHITECTURAL AND STRUCTURAL DESIGN

BRIDGE NO. 54-1216J
POST MILE 177.3/181.1
CVEF CHP OFFICE

MOUNTAIN PASS JPOE

BRACE FRAME PLATE DETAILS

SHEET ST7-73

TAEMWW Imperial Rev. 7/10

ORIGINAL SCALE IN INCHES FOR REDUCED PLANS 0 1 2 3

UNIT 3599
PROJECT NUMBER & PHASE 08000006281
EA 368501

DISREGARD PRINTS BEARING EARLIER REVISION DATES → 10-22-12 11-16-12 12-10-12

REVISION DATES (PRELIMINARY STAGE ONLY) SHEET OF

D:\user\Projects\A Expedite Process Folder\st7_073.dgn

26-FEB-2013 10:45

DIST.	COUNTY	ROUTE	POST MILES TOTAL PROJECT	SHEET NO.	TOTAL SHEETS
08	SBd	15	177.3/181.1	524	710

Shervin Pahlavan 11-27-12
REGISTERED CIVIL ENGINEER DATE

REGISTERED PROFESSIONAL ENGINEER
Shervin Pahlavan
No. 44463
Exp. 3-31-14
CIVIL
STATE OF CALIFORNIA

2-25-13
PLANS APPROVAL DATE

The State of California or its officers or agents shall not be responsible for the accuracy or completeness of electronic copies of this plan sheet.

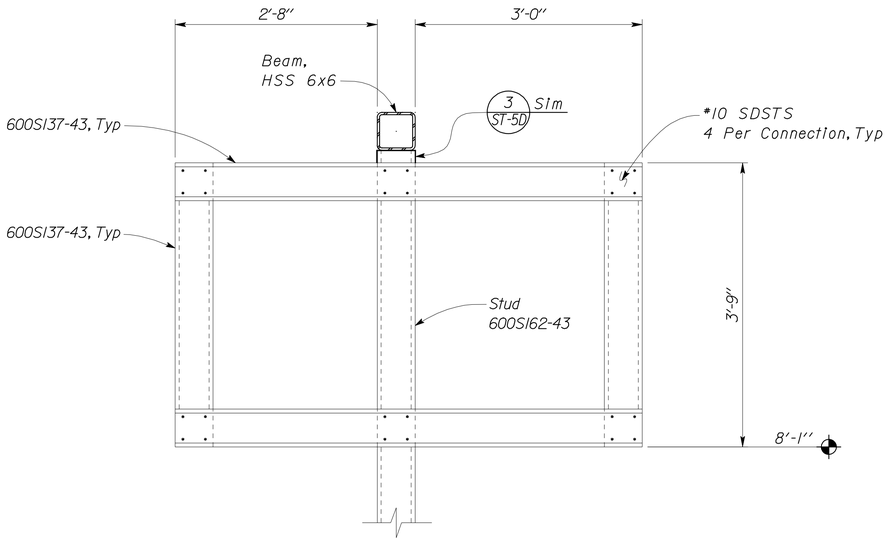

1 DUCT CHASE FAMING AT WALL
Scale 1" = 1' - 0"

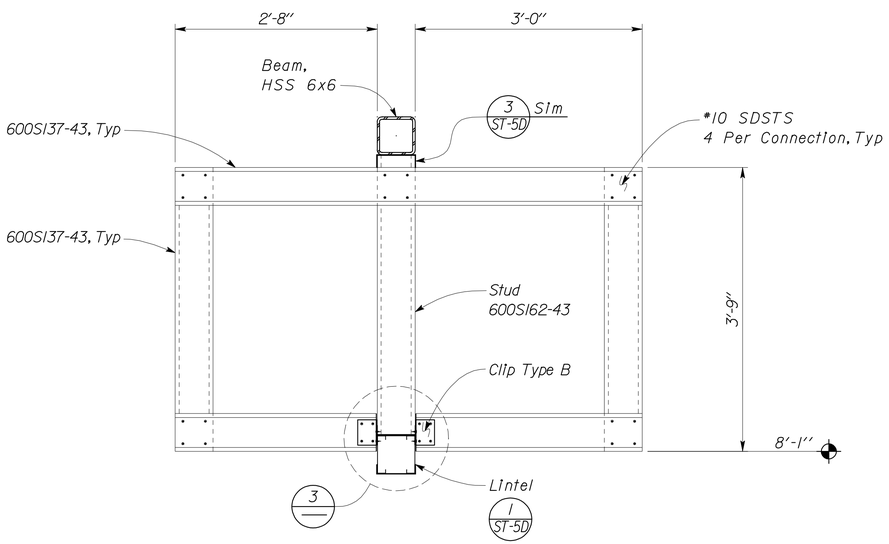

2 DUCT CHASE FAMING AT LINTEL
Scale 1" = 1' - 0"

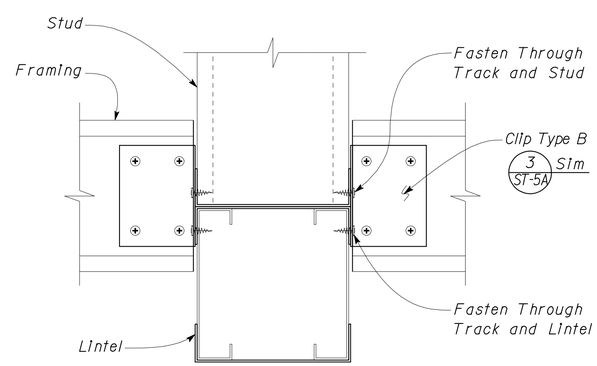

3 FRAMING CLIP DETAIL
Scale 4" = 1' - 0"

DESIGN	BY Shervin Pahlavan	CHECKED Joseph Camilleri	
DETAILS	BY Andrew Lovato	CHECKED Shervin Pahlavan	
QUANTITIES	BY	CHECKED	

STATE OF CALIFORNIA
DEPARTMENT OF TRANSPORTATION

DIVISION OF ENGINEERING SERVICES
ARCHITECTURAL AND STRUCTURAL DESIGN

BRIDGE NO. 54-1216J
POST MILE 177.3/181.1
CVEF CHP OFFICE

MOUNTAIN PASS JPOE
FRAMING DETAILS

SHEET ST7-74

TAEMWW Imperial Rev. 7/10

ORIGINAL SCALE IN INCHES FOR REDUCED PLANS 0 1 2 3

UNIT 3599
PROJECT NUMBER & PHASE 08000006281
EA 368501

DISREGARD PRINTS BEARING EARLIER REVISION DATES → 03-11-10 11-01-12 12-10-12

REVISION DATES (PRELIMINARY STAGE ONLY) SHEET OF

D:\user\Projects\A Expedite Process Folder\st7_074.dgn

26-FEB-2013 10:45

DIST.	COUNTY	ROUTE	POST MILES TOTAL PROJECT	SHEET NO.	TOTAL SHEETS
08	SBd	15	177.3/181.1	525	710

Shervin Pahlavan 11-27-12
REGISTERED CIVIL ENGINEER DATE

REGISTERED PROFESSIONAL ENGINEER
Shervin Pahlavan
No. 44463
Exp. 3-31-14
CIVIL
STATE OF CALIFORNIA

2-25-13
PLANS APPROVAL DATE

The State of California or its officers or agents shall not be responsible for the accuracy or completeness of electronic copies of this plan sheet.

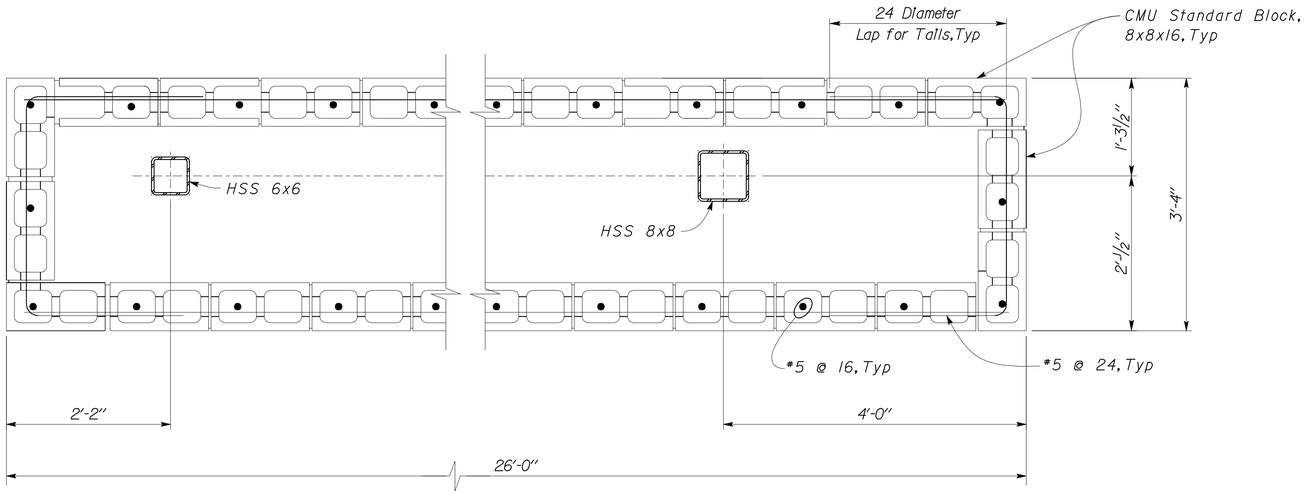

Note
Cut slots as required for Horizontal Reinforcement.

1B CMU LAYOUT B

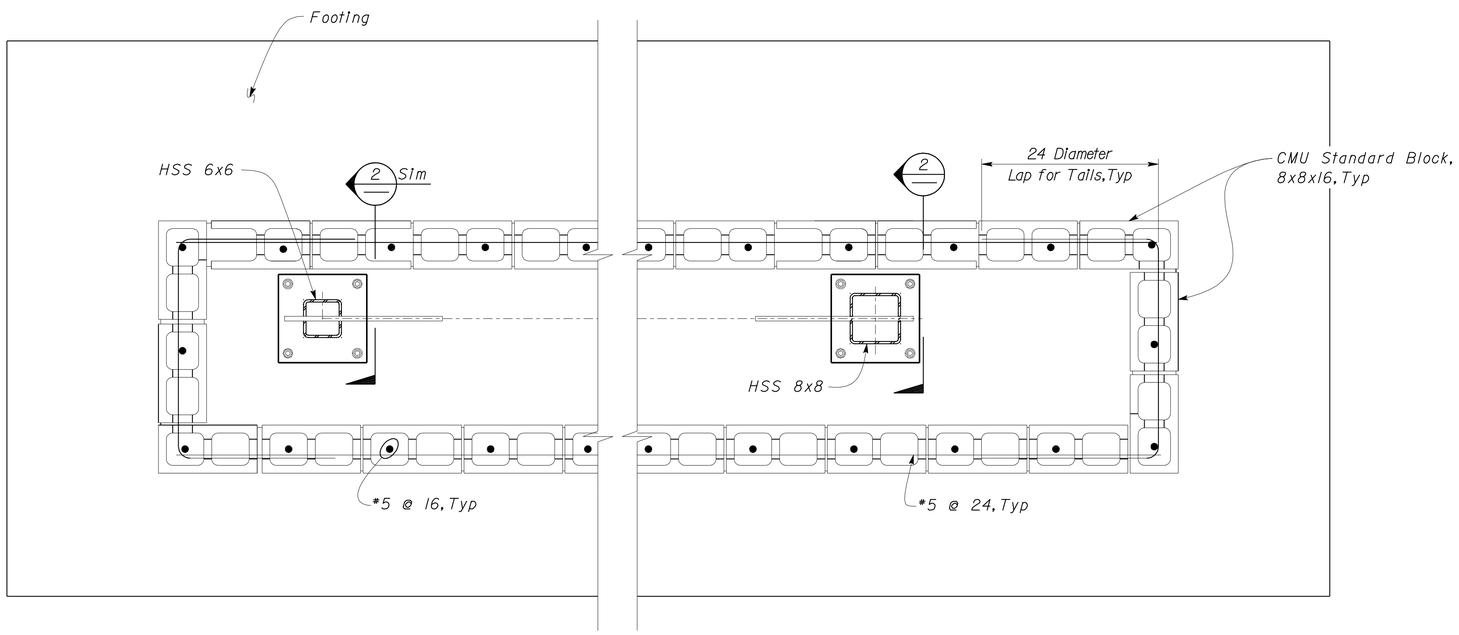

1A CMU LAYOUT A

Notes
1. The CMU Wall Enclosure consists of two (2) alternating courses of CMU blocks. See CMU Layout A, and CMU Layout B.

2. Cut slots as required for Horizontal Reinforcement.

1 CMU WALL ENCLOSURE LAYOUT DETAIL
Scale 1" = 1' - 0"

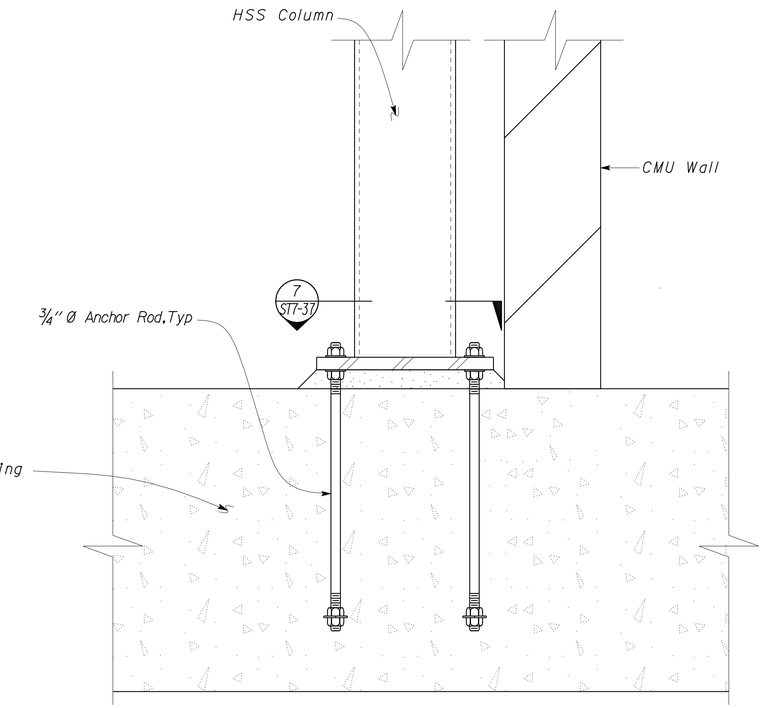

2 CMU WALL AT COLUMN BASE DETAIL
Scale 2" = 1' - 0"

DESIGN	BY Shervin Pahlavan	CHECKED Joseph Camilleri	STATE OF CALIFORNIA DEPARTMENT OF TRANSPORTATION	DIVISION OF ENGINEERING SERVICES ARCHITECTURAL AND STRUCTURAL DESIGN	BRIDGE NO. 54-1216J
DETAILS	BY Andrew Lovato	CHECKED Shervin Pahlavan			POST MILE 177.3/181.1
QUANTITIES	BY	CHECKED			

MOUNTAIN PASS JPOE
CVEF CHP OFFICE
CMU WALL ENCLOSURE DETAILS

SHEET ST7-75

TAEMWW Imperial Rev. 7/10

ORIGINAL SCALE IN INCHES FOR REDUCED PLANS 0 1 2 3

UNIT 3599
PROJECT NUMBER & PHASE 08000006281
EA 368501

DISREGARD PRINTS BEARING EARLIER REVISION DATES → 03-11-10 11-01-12 12-10-12

REVISION DATES (PRELIMINARY STAGE ONLY) SHEET OF

26-FEB-2013 10:45
D:\user\Projects\A Expedite Process Folder\st7_075.dgn

DIST.	COUNTY	ROUTE	POST MILES TOTAL PROJECT	SHEET NO.	TOTAL SHEETS
08	SBd	15	177.3/181.1	526	710

Shervin Pahlavan 11-27-12
REGISTERED CIVIL ENGINEER DATE

REGISTERED PROFESSIONAL ENGINEER
Shervin Pahlavan
No. 44463
Exp. 3-31-14
CIVIL
STATE OF CALIFORNIA

2-25-13
PLANS APPROVAL DATE

The State of California or its officers or agents shall not be responsible for the accuracy or completeness of electronic copies of this plan sheet.

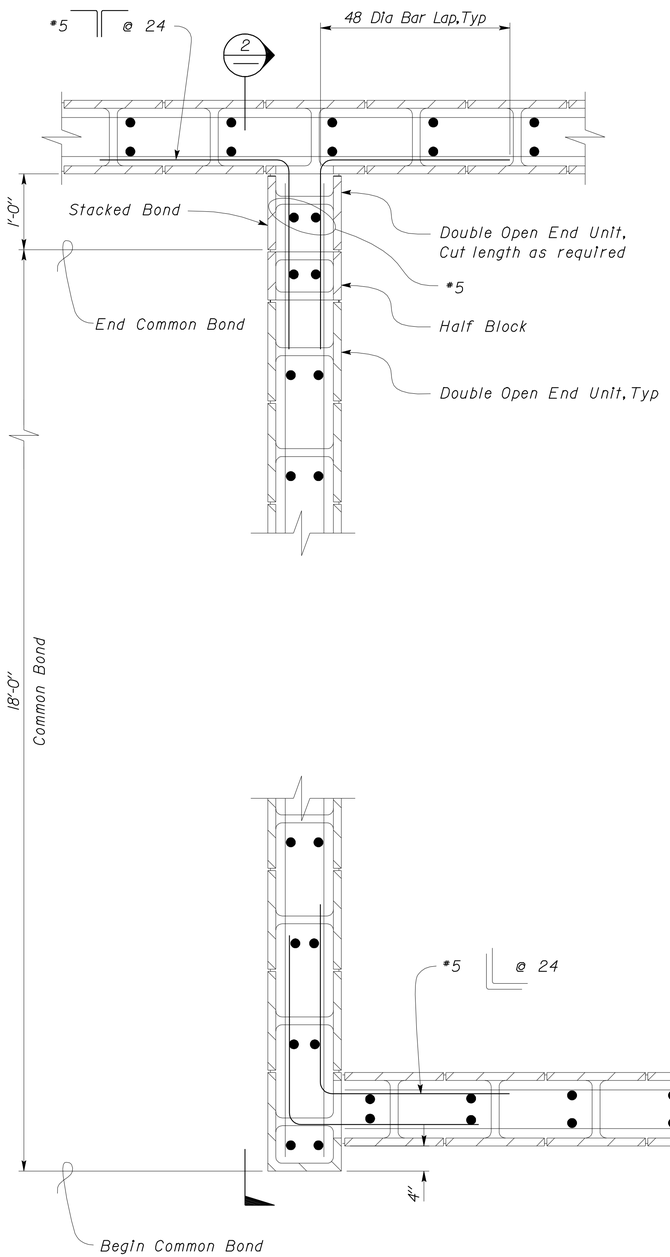

1A CMU LAYOUT A

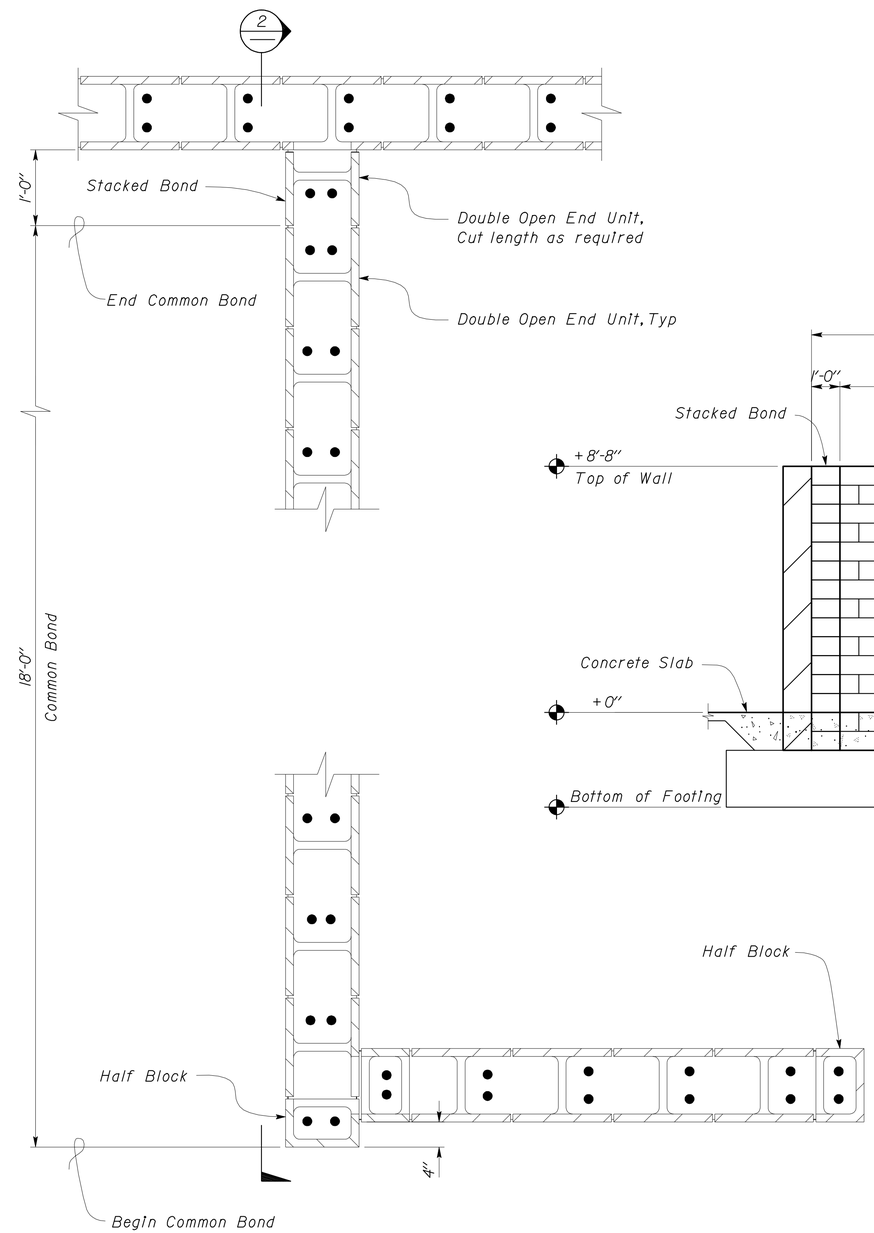

1B CMU LAYOUT B

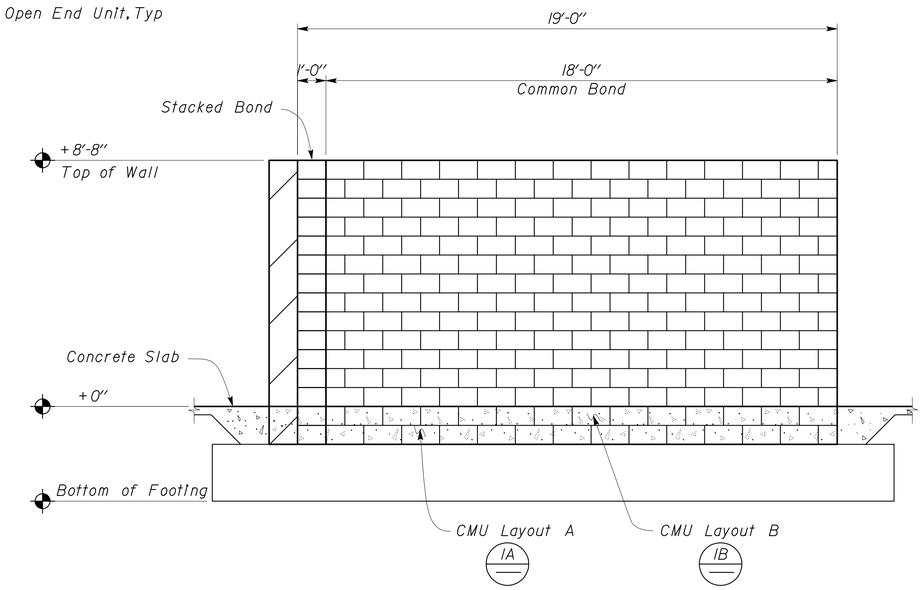

2 CMU WALL ELEVATION
Scale 3/8" = 1'-0"

Notes
1. Alternate Course A and B to achieve Common Bond Pattern as shown.
2. For CMU Wall Details not shown, see plans series ST-4.

1 CMU WALL LAYOUTS
Scale 1" = 1'-0"

DESIGN	BY Shervin Pahlavan	CHECKED Joseph Camilleri	
DETAILS	BY Andrew Lovato	CHECKED Shervin Pahlavan	
QUANTITIES	BY	CHECKED	

STATE OF CALIFORNIA
DEPARTMENT OF TRANSPORTATION

DIVISION OF ENGINEERING SERVICES
ARCHITECTURAL AND STRUCTURAL DESIGN

BRIDGE NO. 54-1216J
POST MILE 177.3/181.1

CVEF CHP OFFICE

MOUNTAIN PASS JPOE

CMU WALL LAYOUT AND ELEVATION

SHEET ST7-76

TAEMWW Imperial Rev. 7/10

ORIGINAL SCALE IN INCHES FOR REDUCED PLANS 0 1 2 3

UNIT 3599
PROJECT NUMBER & PHASE 08000006281
EA 368501

DISREGARD PRINTS BEARING EARLIER REVISION DATES → 03-11-10 11-01-12 12-10-12

REVISION DATES (PRELIMINARY STAGE ONLY) SHEET OF

D:\user\Projects\A Expedite Process Folder\st7_076.dgn

26-FEB-2013 12:40

DIST.	COUNTY	ROUTE	POST MILES TOTAL PROJECT	SHEET NO.	TOTAL SHEETS
08	SBd	15	177.3/181.1	527	710

Shervin Pahlavan 11-27-12
REGISTERED CIVIL ENGINEER DATE

REGISTERED PROFESSIONAL ENGINEER
Shervin Pahlavan
No. 44463
Exp. 3-31-14
CIVIL
STATE OF CALIFORNIA

2-25-13
PLANS APPROVAL DATE

The State of California or its officers or agents shall not be responsible for the accuracy or completeness of electronic copies of this plan sheet.

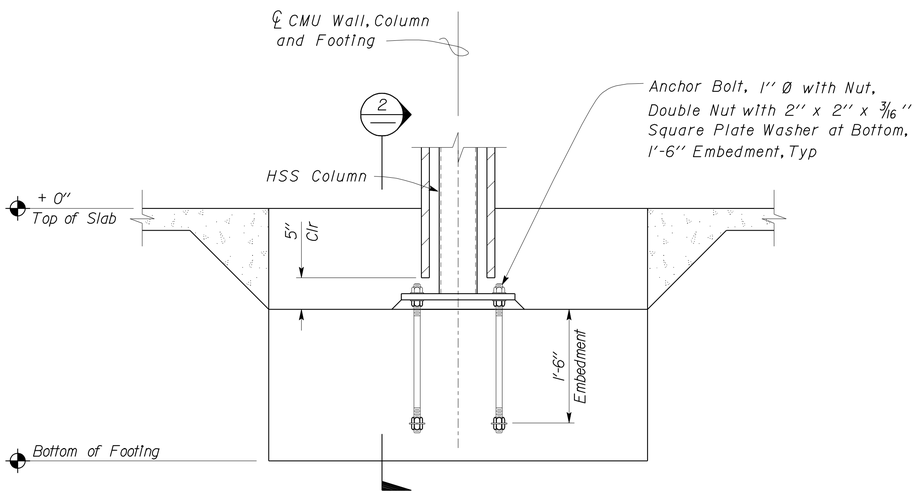

1 HSS 6X6 COLUMN IN CMU WALL DETAIL
Scale 1" = 1' - 0"

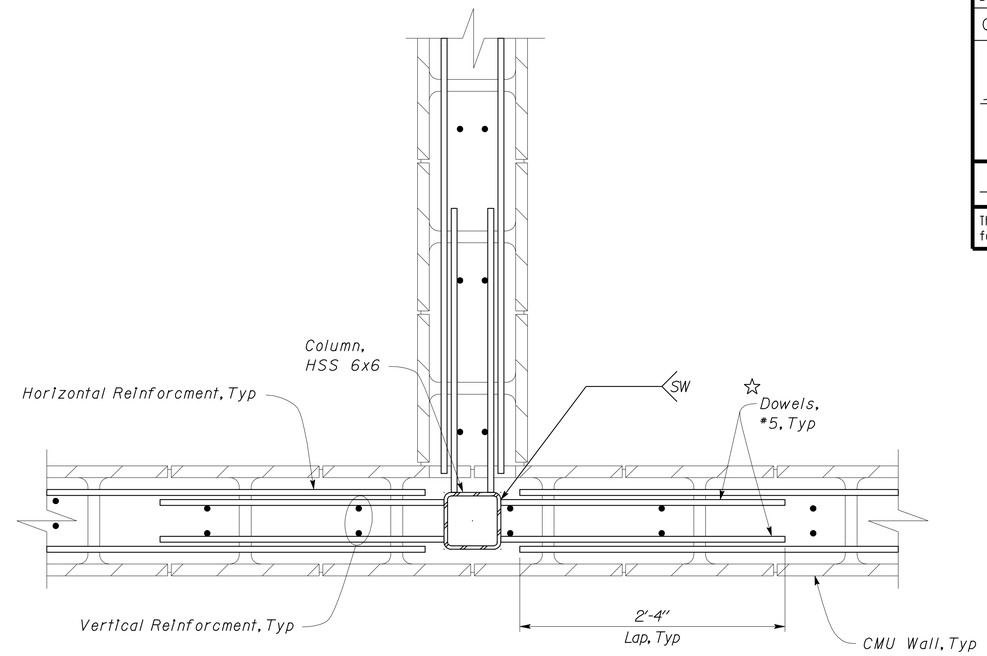

☆ Note
Dowels shall be placed to align with Horizontal CMU Wall Reinforcment.

3 HSS 6X6 COLUMN IN CMU WALL REINFORCEMENT DETAIL
Scale 1 1/2" = 1' - 0"

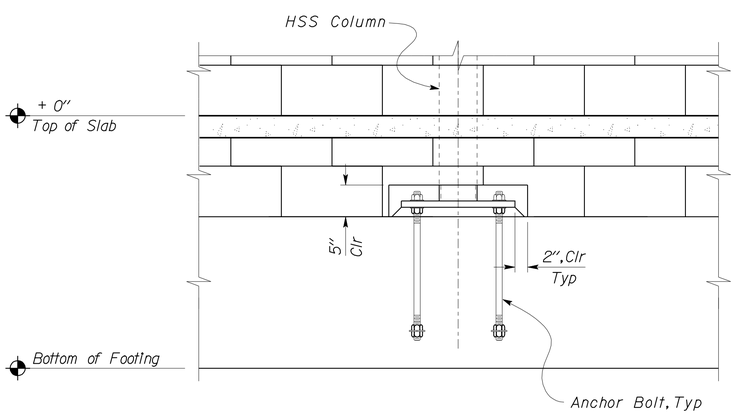

2 HSS 6X6 COLUMN IN CMU WALL DETAIL
Scale 1" = 1' - 0"

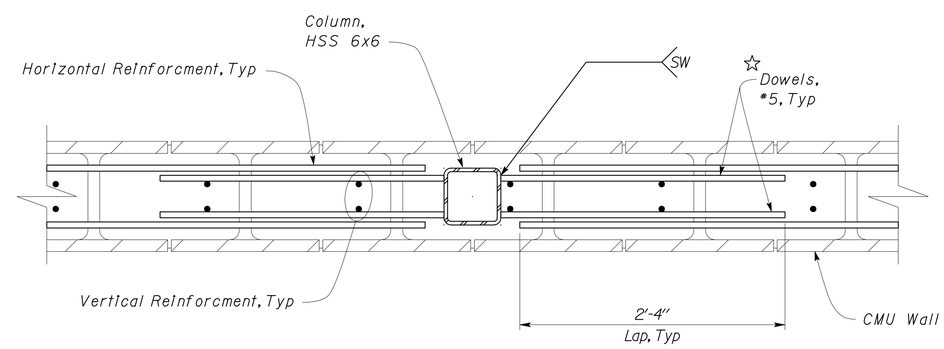

☆ Note
Dowels shall be placed to align with Horizontal CMU Wall Reinforcment.

4 HSS 6X6 COLUMN IN CMU WALL REINFORCEMENT DETAIL
Scale 1 1/2" = 1' - 0"

DESIGN	BY Shervin Pahlavan	CHECKED Joseph Camilleri	
DETAILS	BY Andrew Lovato	CHECKED Shervin Pahlavan	
QUANTITIES	BY	CHECKED	

STATE OF CALIFORNIA
DEPARTMENT OF TRANSPORTATION

DIVISION OF ENGINEERING SERVICES
ARCHITECTURAL AND STRUCTURAL DESIGN

BRIDGE NO. 54-1216J
POST MILE 177.3/181.1
CVEF CHP OFFICE

MOUNTAIN PASS JPOE
CMU WALL DETAILS

SHEET ST7-77

TAEMWW Imperial Rev. 7/10

ORIGINAL SCALE IN INCHES FOR REDUCED PLANS 0 1 2 3

UNIT 3599
PROJECT NUMBER & PHASE 08000006281
EA 368501

DISREGARD PRINTS BEARING EARLIER REVISION DATES → 03-11-10 11-01-12 12-10-12

REVISION DATES (PRELIMINARY STAGE ONLY) SHEET OF

26-FEB-2013 12:40
D:\user\Projects\A Expedite Process Folder\st7_077.dgn

DIST.	COUNTY	ROUTE	POST MILES TOTAL PROJECT	SHEET NO.	TOTAL SHEETS
08	SBd	15	177.3/181.1	528	710

Shervin Pahlavan 11-27-12
REGISTERED CIVIL ENGINEER DATE

REGISTERED PROFESSIONAL ENGINEER
Shervin Pahlavan
No. 44463
Exp. 3-31-14
CIVIL
STATE OF CALIFORNIA

2-25-13
PLANS APPROVAL DATE

The State of California or its officers or agents shall not be responsible for the accuracy or completeness of electronic copies of this plan sheet.

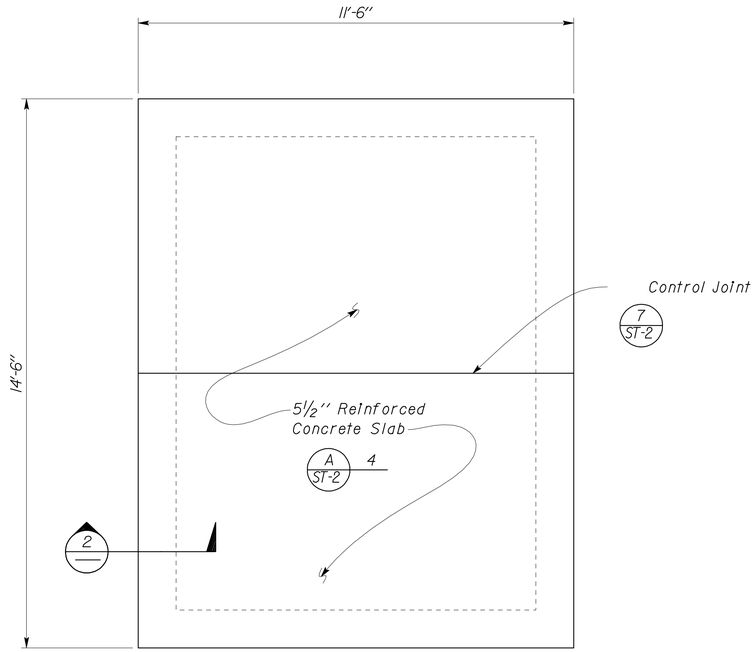

1 FOUNDATION PLAN
Scale 1/2" = 1' - 0"

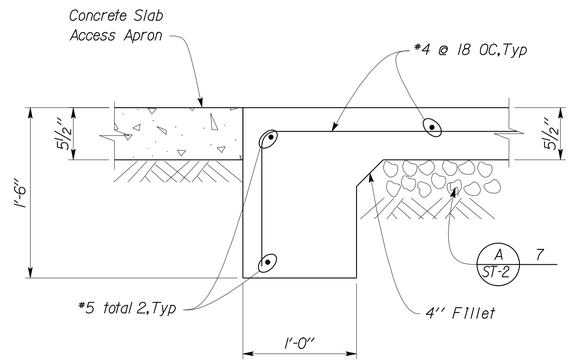

2 FOOTING DETAIL
Scale 1 1/2" = 1' - 0"

DESIGN	BY Shervin Pahlavan	CHECKED Joseph Camilleri	
DETAILS	BY Andrew Lovato	CHECKED Shervin Pahlavan	
QUANTITIES	BY	CHECKED	

STATE OF CALIFORNIA
DEPARTMENT OF TRANSPORTATION

DIVISION OF ENGINEERING SERVICES
ARCHITECTURAL AND STRUCTURAL DESIGN

BRIDGE NO. 54-1216J
POST MILE 177.3/181.1
CVEF CHP OFFICE

MOUNTAIN PASS JPOE
WATER WELL HOUSE FOUNDATION

SHEET ST7-78

TAEMWW Imperial Rev. 7/10

ORIGINAL SCALE IN INCHES FOR REDUCED PLANS 0 1 2 3

UNIT 3599
PROJECT NUMBER & PHASE 08000006281
EA 368501

DISREGARD PRINTS BEARING EARLIER REVISION DATES → 10-12-10 11-01-12 12-10-12

REVISION DATES (PRELIMINARY STAGE ONLY) SHEET OF

D:\user\Projects\A Expedite Process Folder\st7_078.dgn

26-FEB-2013 12:40

DIST.	COUNTY	ROUTE	POST MILES TOTAL PROJECT	SHEET NO.	TOTAL SHEETS
08	SBd	15	177.3/181.1	529	710

Shervin Pahlavan 11-27-12
REGISTERED CIVIL ENGINEER DATE

REGISTERED PROFESSIONAL ENGINEER
Shervin Pahlavan
No. 44463
Exp. 3-31-14
CIVIL
STATE OF CALIFORNIA

2-25-13
PLANS APPROVAL DATE

The State of California or its officers or agents shall not be responsible for the accuracy or completeness of electronic copies of this plan sheet.

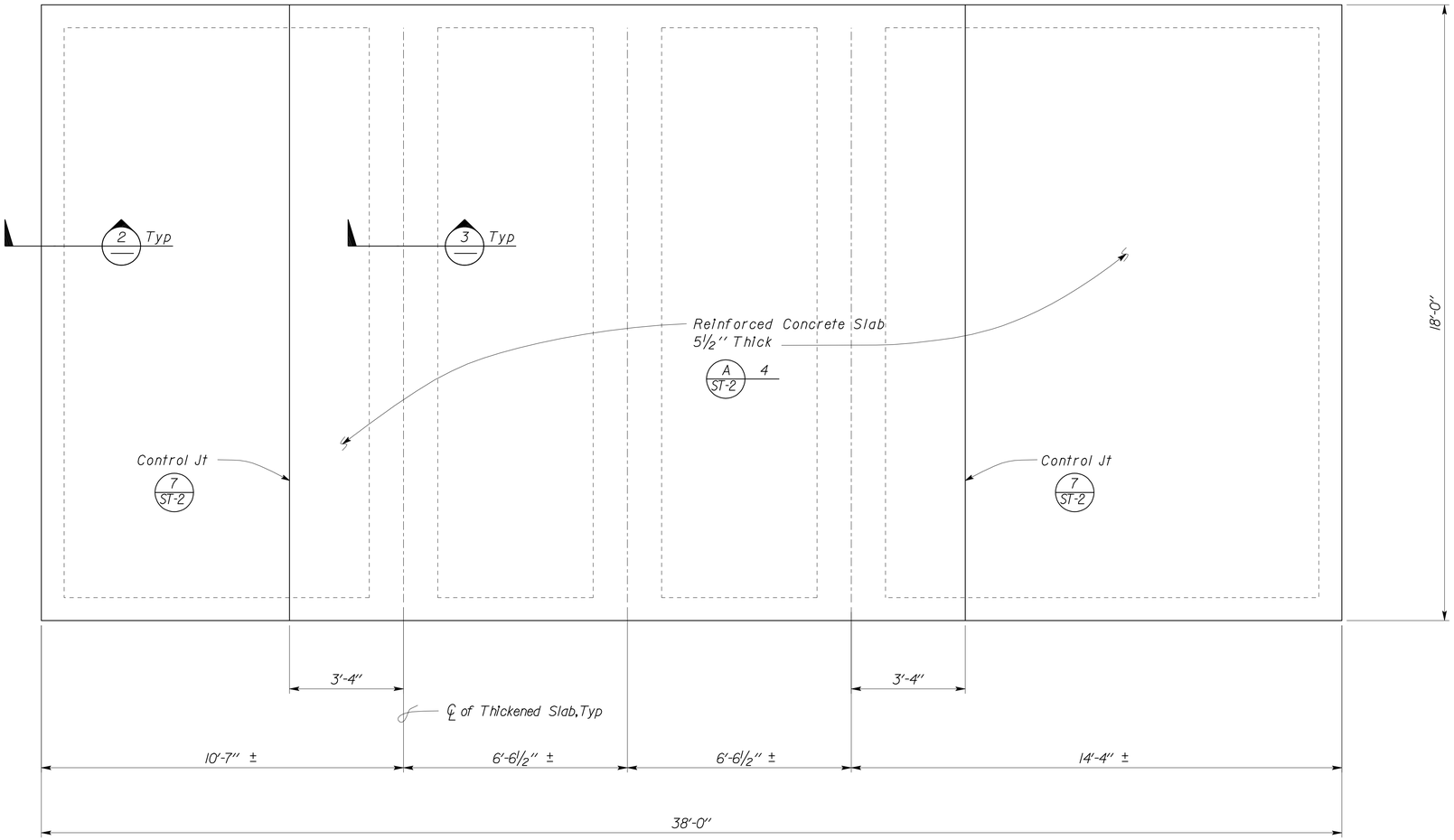

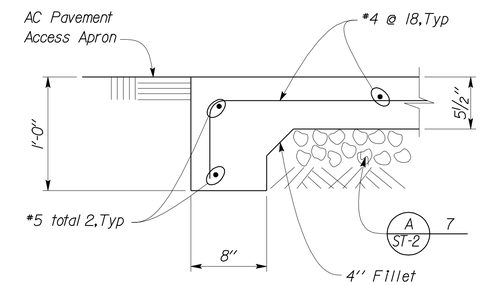

2 EXTERIOR FOOTING DETAIL
Scale 1½" = 1'-0"

Notes
1. Thickened Slab locations shown are approximate. Water Tank Supports shall be centered over the Thickened Slabs.

2. Verify dimensions of Water Tank Supports before locating Thickened Slabs.

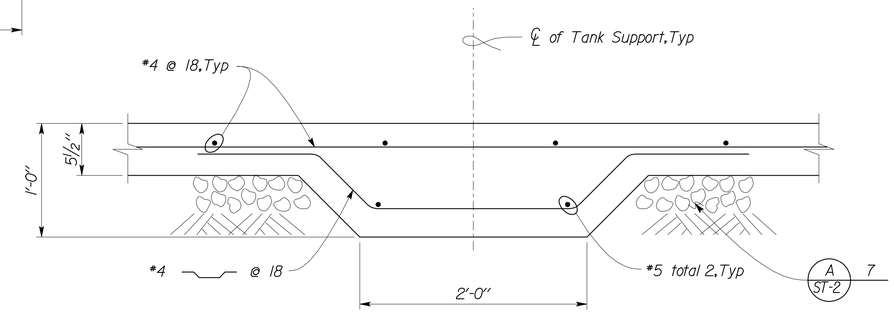

1 FOUNDATION PLAN
Scale ½" = 1'-0"

3 THICKENED SLAB DETAIL
Scale 1½" = 1'-0"

	BY	CHECKED
DESIGN	Shervin Pahlavan	Joseph Camilleri
DETAILS	Andrew Lovato	Shervin Pahlavan
QUANTITIES		

STATE OF CALIFORNIA
DEPARTMENT OF TRANSPORTATION

DIVISION OF ENGINEERING SERVICES
ARCHITECTURAL AND STRUCTURAL DESIGN

BRIDGE NO. 54-1216J
POST MILE 177.3/181.1
CVEF CHP OFFICE

MOUNTAIN PASS JPOE
WATER SUPPLY SYSTEM FOUNDATION

SHEET ST7-79

TAEMWW Imperial Rev. 7/10

ORIGINAL SCALE IN INCHES FOR REDUCED PLANS 0 1 2 3

UNIT 3599
PROJECT NUMBER & PHASE 08000006281
EA 368501

DISREGARD PRINTS BEARING EARLIER REVISION DATES
REVISION DATES (PRELIMINARY STAGE ONLY) 03-11-10 11-01-12 12-10-12
SHEET OF

D:\user\Projects\A Expedite Process Folder\st7_079.dgn
26-FEB-2013 12:40

DIST.	COUNTY	ROUTE	POST MILES TOTAL PROJECT	SHEET NO.	TOTAL SHEETS
08	SBd	15	177.3/181.1	530	710

Shervin Pahlavan 11-27-12
REGISTERED CIVIL ENGINEER DATE

REGISTERED PROFESSIONAL ENGINEER Shervin Pahlavan No. 44463 Exp. 3-31-14 CIVIL STATE OF CALIFORNIA

2-25-13
PLANS APPROVAL DATE

The State of California or its officers or agents shall not be responsible for the accuracy or completeness of electronic copies of this plan sheet.

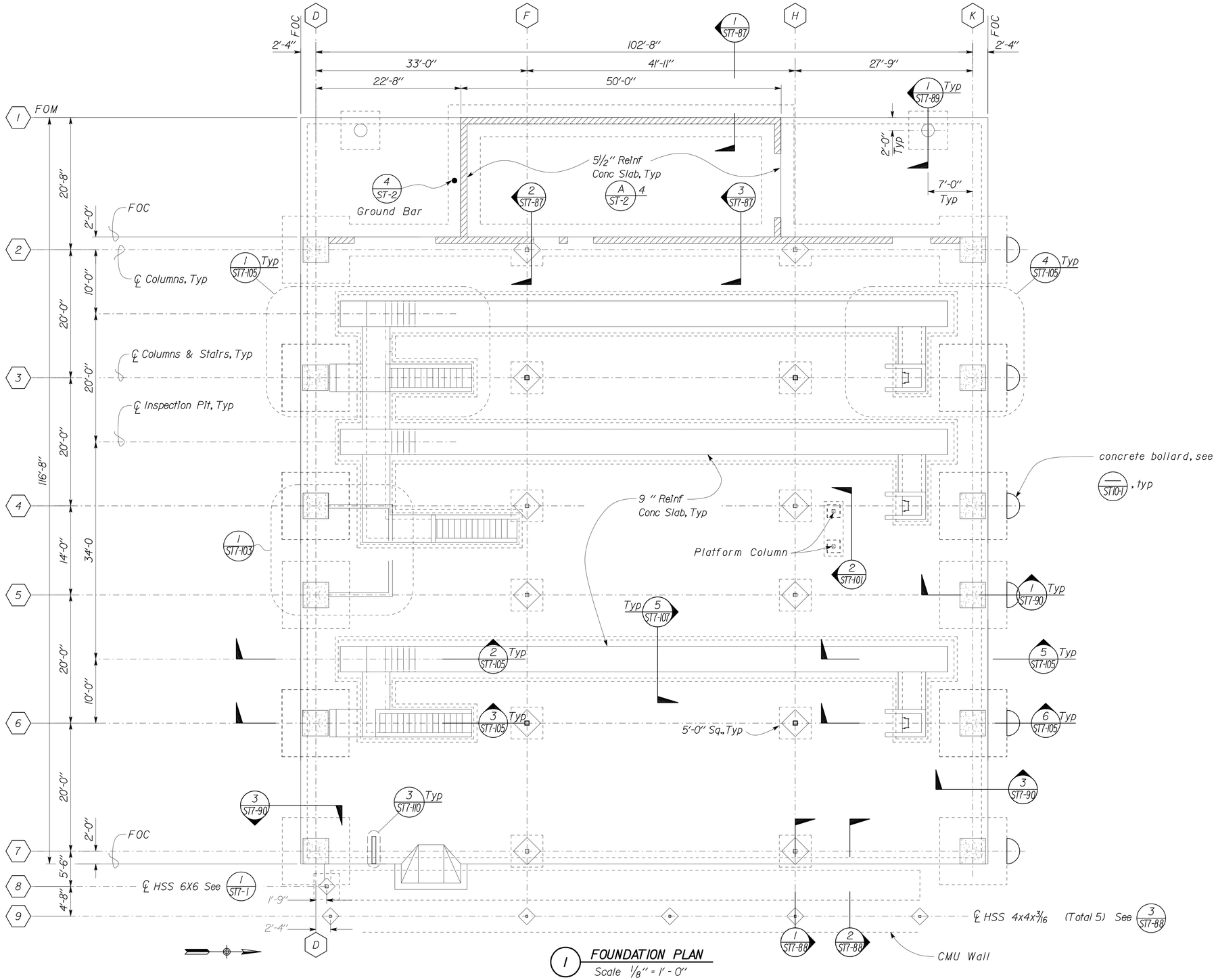

1 FOUNDATION PLAN
Scale 1/8" = 1'-0"

A FOUNDATION PLAN NOTES

1. Refer to Architectural plans for all Dimensions and Details not shown.
2. All Dimensions are to Face of Concrete (UON).
3. □ Indicates HSS 8x8x1/4 Columns, Typ (UON).
4. All Bottom of Concrete Masonry Wall Footings at Datum -3'-4".
5. All Bottom HSS Column Footings at Datum -3'-4".

Note
For Limits of Structural Excavation and Structural Backfill, see 1 ST-6B

DESIGN	BY Shervin Pahlavan	CHECKED Joseph Camilleri	
DETAILS	BY Andrew Lovato	CHECKED Shervin Pahlavan	
QUANTITIES	BY	CHECKED	

STATE OF CALIFORNIA
DEPARTMENT OF TRANSPORTATION

DIVISION OF ENGINEERING SERVICES
ARCHITECTURAL AND STRUCTURAL DESIGN

BRIDGE NO. 54-1216J
POST MILE 177.3/181.1

CVEF TRUCK INSPECTION BUILDING

MOUNTAIN PASS JPOE
FOUNDATION PLAN

SHEET ST7-80

TAEMWW Imperial Rev. 7/10

ORIGINAL SCALE IN INCHES FOR REDUCED PLANS 0 1 2 3

UNIT 3599
PROJECT NUMBER & PHASE 08000006281
EA 368501

DISREGARD PRINTS BEARING EARLIER REVISION DATES
REVISION DATES (PRELIMINARY STAGE ONLY) 09-09-10 11-13-12 12-10-12 SHEET OF

26-FEB-2013 12:40
D:\user\Projects\A Expedite Process Folder\st7_080.dgn

DIST.	COUNTY	ROUTE	POST MILES TOTAL PROJECT	SHEET NO.	TOTAL SHEETS
08	SBd	15	177.3/181.1	531	710

Shervin Pahlavan 11-27-12
REGISTERED CIVIL ENGINEER DATE

REGISTERED PROFESSIONAL ENGINEER Shervin Pahlavan No. 44463 Exp. 3-31-14 CIVIL STATE OF CALIFORNIA

2-25-13
PLANS APPROVAL DATE

The State of California or its officers or agents shall not be responsible for the accuracy or completeness of electronic copies of this plan sheet.

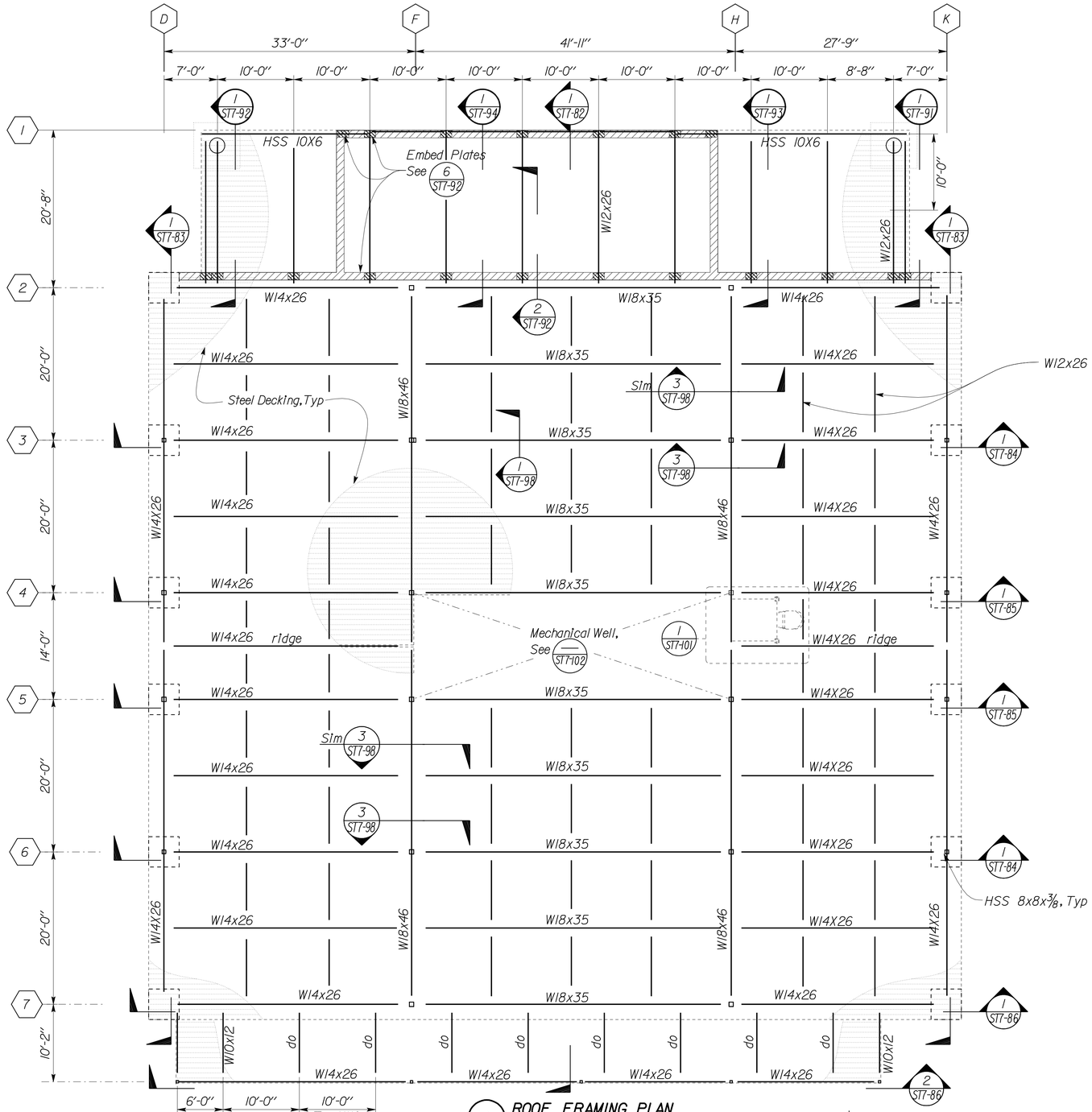

1 ROOF FRAMING PLAN
Scale 1/8" = 1'-0"

STEEL DECK MINIMUM SECTION PROPERTIES

Deck Type	Depth & Gage	Moment of Inertia	Positive Section Modulus	Negative Section Modulus	Minimum Yield Strength
Steel Decking	3" x 16 Ga Type N	1.745 in^4/ft	0.893 in^3/ft	0.944 in^3/ft	33 Ksi

FASTENER SCHEDULE and STEEL DECK PROFILE

Steel Deck Profile	Self-Drilling Self-Tapping Screws			Diaphragm Shear Capacity
	Perpendicular Supports and Panel Ends	Parallel Supports	Side Laps	
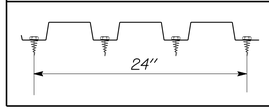	4 - #12 SDSTS Per Support	#12 @ 10" OC	#10 @ 10" OC	639 lb/ft

Note
Minimum 3 Span Condition

A STEEL DECK NOTES

DESIGN	BY Shervin Pahlavan	CHECKED Joseph Camilleri	
DETAILS	BY Andrew Lovato	CHECKED Shervin Pahlavan	
QUANTITIES	BY	CHECKED	

STATE OF CALIFORNIA
DEPARTMENT OF TRANSPORTATION

DIVISION OF ENGINEERING SERVICES
ARCHITECTURAL AND STRUCTURAL DESIGN

BRIDGE NO. 54-1216J
POST MILE 177.3/181.1

CVEF TRUCK INSPECTION BUILDING

MOUNTAIN PASS JPOE

ROOF FRAMING PLAN

SHEET ST7-81

TAEMWW Imperial Rev. 7/10

ORIGINAL SCALE IN INCHES FOR REDUCED PLANS 0 1 2 3

UNIT 3599
PROJECT NUMBER & PHASE 08000006281
EA 368501

DISREGARD PRINTS BEARING EARLIER REVISION DATES → 09-09-10 11-13-12 12-10-12

REVISION DATES (PRELIMINARY STAGE ONLY) SHEET OF

D:\user\Projects\A Expedite Process Folder\st7_081.dgn

26-FEB-2013 12:40

DIST.	COUNTY	ROUTE	POST MILES TOTAL PROJECT	SHEET NO.	TOTAL SHEETS
08	SBd	15	177.3/181.1	532	710

Shervin Pahlavan 11-27-12
REGISTERED CIVIL ENGINEER DATE

REGISTERED PROFESSIONAL ENGINEER
Shervin Pahlavan
No. 44463
Exp. 3-31-14
CIVIL
STATE OF CALIFORNIA

2-25-13
PLANS APPROVAL DATE

The State of California or its officers or agents shall not be responsible for the accuracy or completeness of electronic copies of this plan sheet.

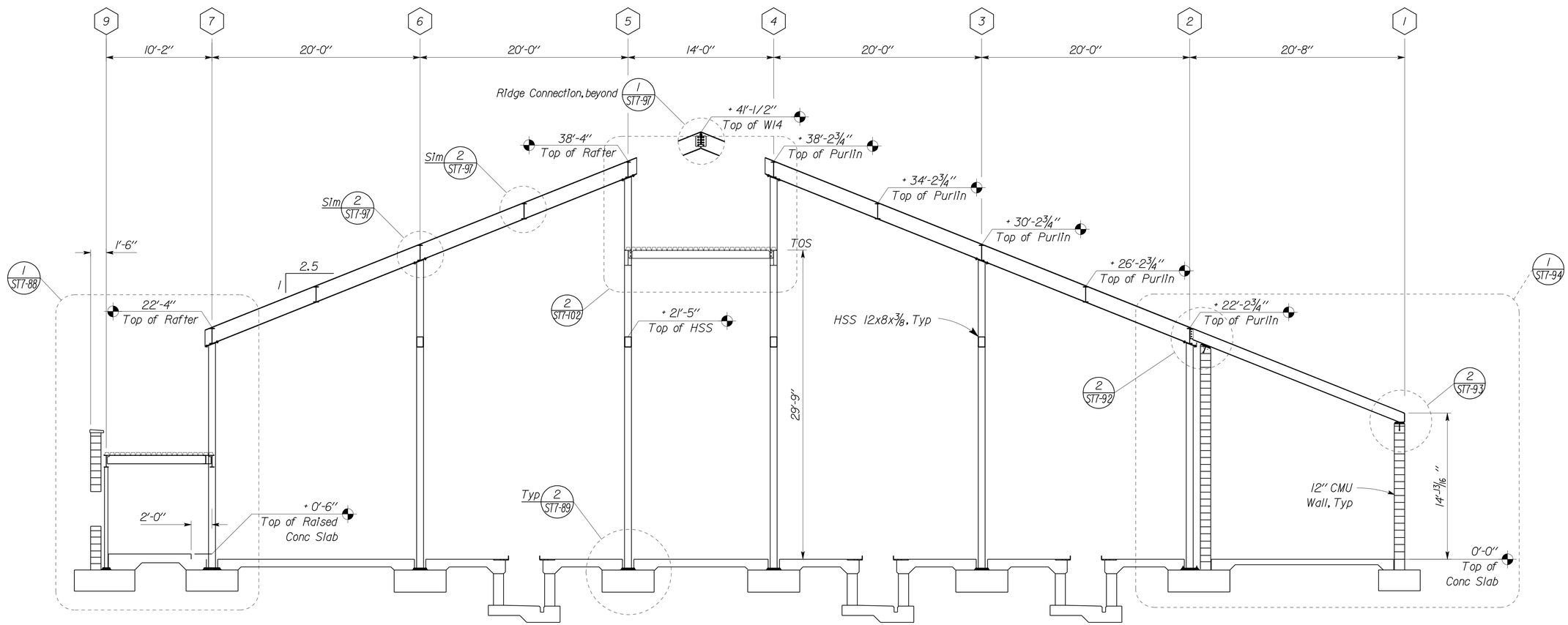

1 BUILDING SECTION
Scale 3/16" = 1'-0"

DESIGN	BY Shervin Pahlavan	CHECKED Joseph Camilleri	
DETAILS	BY Andrew Lovato	CHECKED Shervin Pahlavan	
QUANTITIES	BY	CHECKED	

STATE OF CALIFORNIA
DEPARTMENT OF TRANSPORTATION

DIVISION OF ENGINEERING SERVICES
ARCHITECTURAL AND STRUCTURAL DESIGN

BRIDGE NO. 54-1216J
POST MILE 177.3/181.1

CVEF TRUCK INSPECTION BUILDING

MOUNTAIN PASS JPOE

BUILDING SECTION

SHEET ST7-82

TAEMWW Imperial Rev. 7/10

ORIGINAL SCALE IN INCHES FOR REDUCED PLANS 0 1 2 3

UNIT 3599
PROJECT NUMBER & PHASE 08000006281
EA 368501

DISREGARD PRINTS BEARING EARLIER REVISION DATES → 03-11-10 11-01-12 12-10-12

REVISION DATES (PRELIMINARY STAGE ONLY) SHEET OF

D:\user\Projects\A Expedite Process Folder\st7_082.dgn

26-FEB-2013 12:40

DIST.	COUNTY	ROUTE	POST MILES TOTAL PROJECT	SHEET NO.	TOTAL SHEETS
08	SBd	15	177.3/181.1	533	710

Shervin Pahlavan 11-27-12
REGISTERED CIVIL ENGINEER DATE

REGISTERED PROFESSIONAL ENGINEER
Shervin Pahlavan
No. 44463
Exp. 3-31-14
CIVIL
STATE OF CALIFORNIA

2-25-13
PLANS APPROVAL DATE

The State of California or its officers or agents shall not be responsible for the accuracy or completeness of electronic copies of this plan sheet.

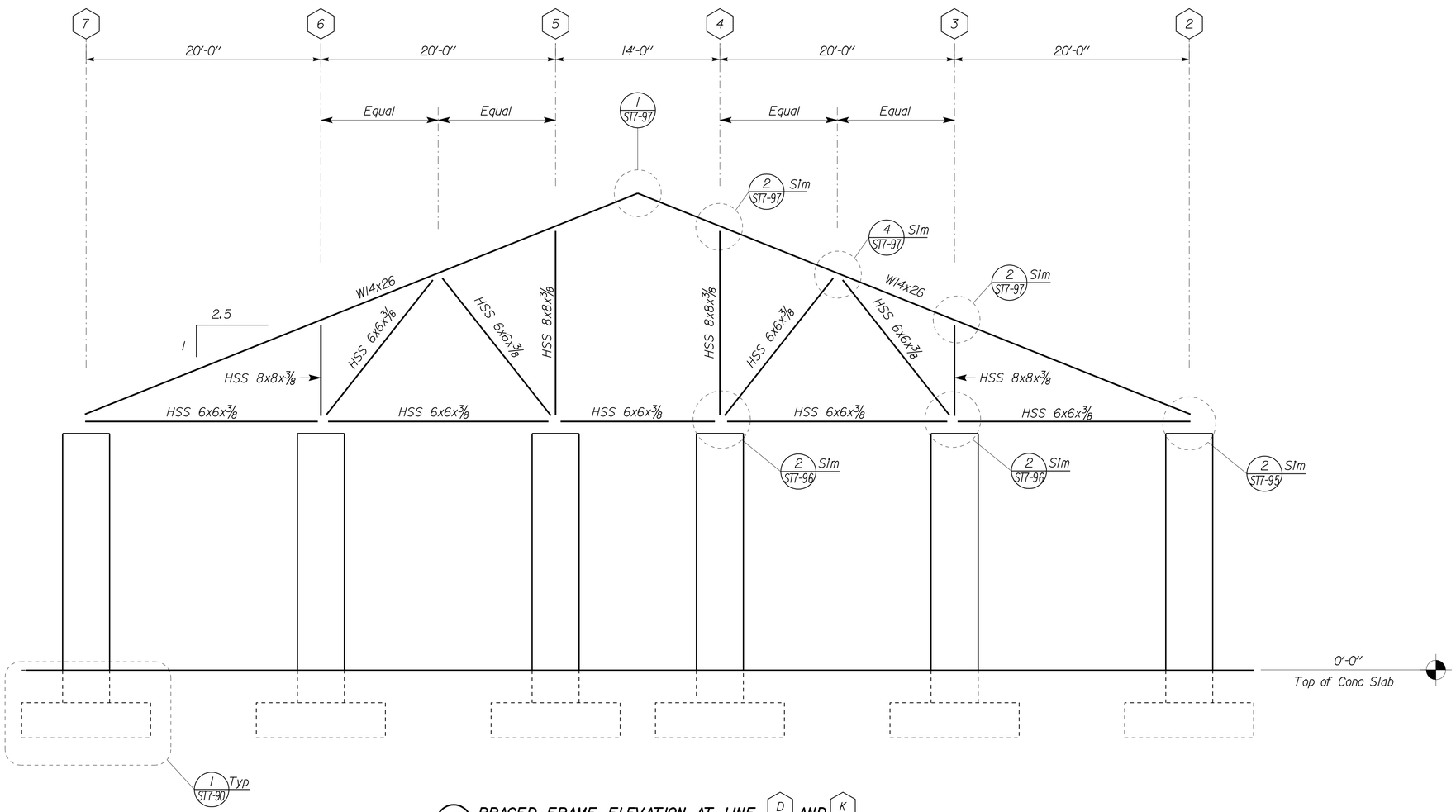

1 BRACED FRAME ELEVATION AT LINE D AND K

Scale 3/16" = 1'-0"

DESIGN	BY Shervin Pahlavan	CHECKED Joseph Camilleri	
DETAILS	BY Andrew Lovato	CHECKED Shervin Pahlavan	
QUANTITIES	BY	CHECKED	

STATE OF CALIFORNIA
DEPARTMENT OF TRANSPORTATION

DIVISION OF ENGINEERING SERVICES
ARCHITECTURAL AND STRUCTURAL DESIGN

BRIDGE NO. 54-1216J
POST MILE 177.3/181.1

CVEF TRUCK INSPECTION BUILDING

MOUNTAIN PASS JPOE

FRAME ELEVATION 1

SHEET ST7-83

TAEMWW Imperial Rev. 7/10

ORIGINAL SCALE IN INCHES FOR REDUCED PLANS 0 1 2 3

UNIT 3599
PROJECT NUMBER & PHASE 08000006281
EA 368501

DISREGARD PRINTS BEARING EARLIER REVISION DATES → 03-11-10 11-01-12 12-10-12

REVISION DATES (PRELIMINARY STAGE ONLY) SHEET OF

D:\user\Projects\A Expedite Process Folder\st7_083.dgn

26-FEB-2013 12:40

DIST.	COUNTY	ROUTE	POST MILES TOTAL PROJECT	SHEET NO.	TOTAL SHEETS
08	SBd	15	177.3/181.1	534	710

Shervin Pahlavan 11-27-12
REGISTERED CIVIL ENGINEER DATE

REGISTERED PROFESSIONAL ENGINEER
Shervin Pahlavan
No. 44463
Exp. 3-31-14
CIVIL
STATE OF CALIFORNIA

2-25-13
PLANS APPROVAL DATE

The State of California or its officers or agents shall not be responsible for the accuracy or completeness of electronic copies of this plan sheet.

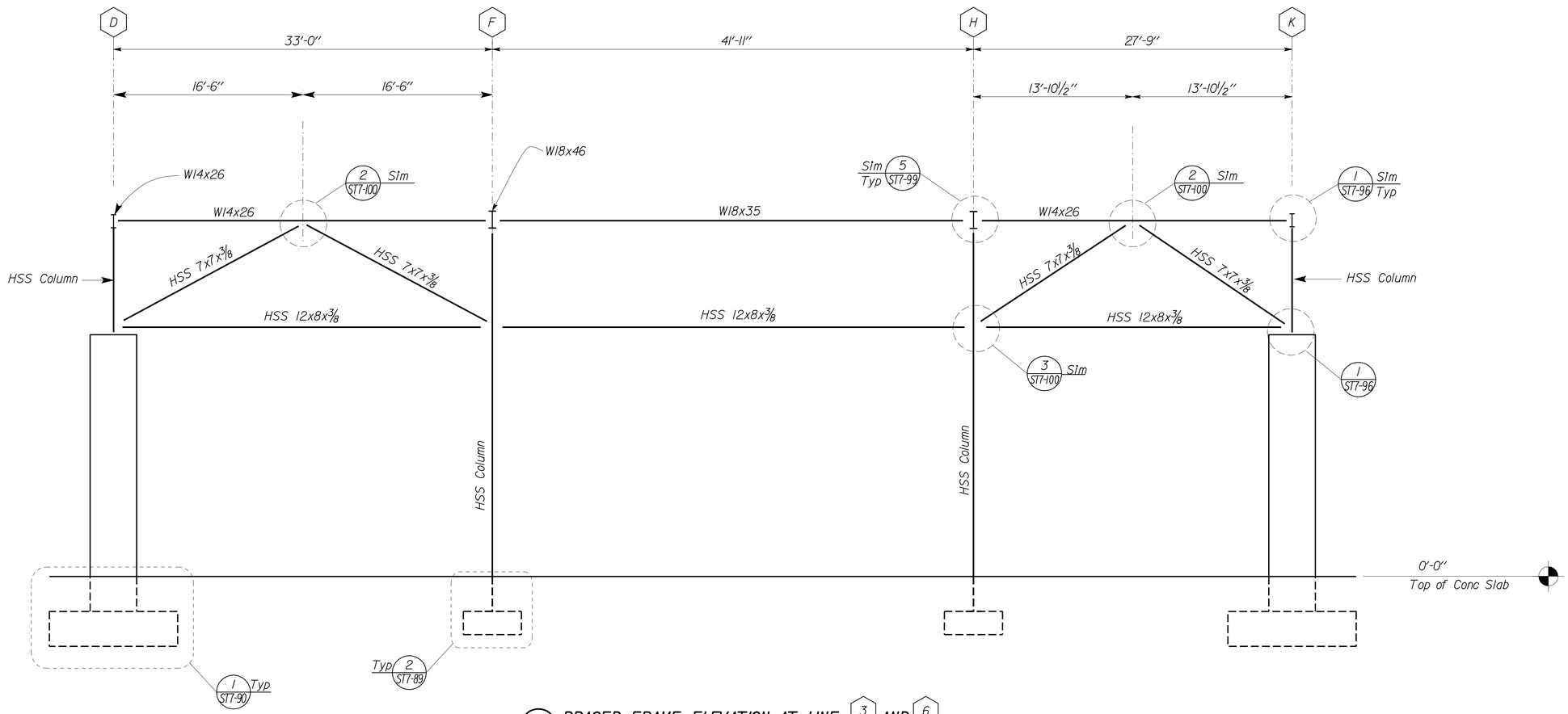

1 BRACED FRAME ELEVATION AT LINE 3 AND 6
Scale 3/16" = 1'-0"

DESIGN	BY Shervin Pahlavan	CHECKED Joseph Camilleri	
DETAILS	BY Andrew Lovato	CHECKED Shervin Pahlavan	
QUANTITIES	BY	CHECKED	

STATE OF CALIFORNIA
DEPARTMENT OF TRANSPORTATION

DIVISION OF ENGINEERING SERVICES
ARCHITECTURAL AND STRUCTURAL DESIGN

BRIDGE NO. 54-1216J
POST MILE 177.3/181.1

CVEF TRUCK INSPECTION BUILDING

MOUNTAIN PASS JPOE

FRAME ELEVATION 2

SHEET **ST7-84**

TAEMWW Imperial Rev. 7/10

ORIGINAL SCALE IN INCHES FOR REDUCED PLANS 0 1 2 3

UNIT 3599
PROJECT NUMBER & PHASE 08000006281
EA 368501

DISREGARD PRINTS BEARING EARLIER REVISION DATES → 03-11-10 11-01-12 12-10-12

REVISION DATES (PRELIMINARY STAGE ONLY) SHEET OF

D:\user\Projects\A Expedite Process Folder\st7_084.dgn

26-FEB-2013 12:40

DIST.	COUNTY	ROUTE	POST MILES TOTAL PROJECT	SHEET NO.	TOTAL SHEETS
08	SBd	15	177.3/181.1	535	710

Shervin Pahlavan 11-27-12
REGISTERED CIVIL ENGINEER DATE

REGISTERED PROFESSIONAL ENGINEER
Shervin Pahlavan
No. 44463
Exp. 3-31-14
CIVIL
STATE OF CALIFORNIA

2-25-13
PLANS APPROVAL DATE

The State of California or its officers or agents shall not be responsible for the accuracy or completeness of electronic copies of this plan sheet.

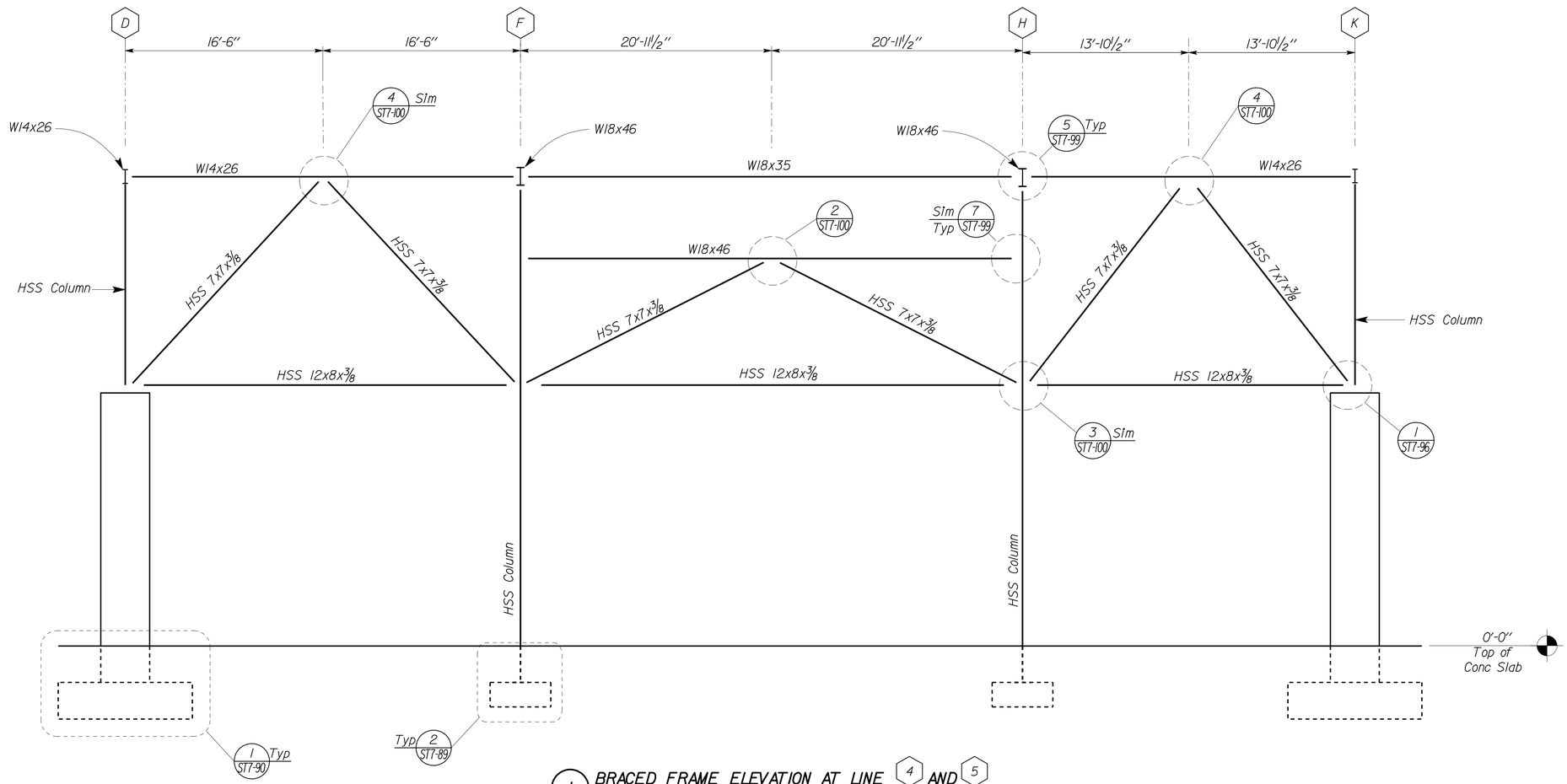

1 BRACED FRAME ELEVATION AT LINE 4 AND 5

Scale 3/16" = 1'-0"

DESIGN	BY Shervin Pahlavan	CHECKED Joseph Camilleri	
DETAILS	BY Andrew Lovato	CHECKED Shervin Pahlavan	
QUANTITIES	BY	CHECKED	

STATE OF CALIFORNIA
DEPARTMENT OF TRANSPORTATION

DIVISION OF ENGINEERING SERVICES
ARCHITECTURAL AND STRUCTURAL DESIGN

BRIDGE NO. 54-1216J
POST MILE 177.3/181.1

CVEF TRUCK INSPECTION BUILDING

MOUNTAIN PASS JPOE

FRAME ELEVATION 3

SHEET ST7-85

TAEMWW Imperial Rev. 7/10

ORIGINAL SCALE IN INCHES FOR REDUCED PLANS 0 1 2 3

UNIT 3599
PROJECT NUMBER & PHASE 08000006281
EA 368501

DISREGARD PRINTS BEARING EARLIER REVISION DATES → 03-11-10 11-01-12 12-10-12

REVISION DATES (PRELIMINARY STAGE ONLY) SHEET OF

D:\user\Projects\A Expedite Process Folder\st7_085.dgn

26-FEB-2013 12:40

DIST.	COUNTY	ROUTE	POST MILES TOTAL PROJECT	SHEET NO.	TOTAL SHEETS
08	SBd	15	177.3/181.1	536	710

Shervin Pahlavan 11-27-12
REGISTERED CIVIL ENGINEER DATE

REGISTERED PROFESSIONAL ENGINEER
Shervin Pahlavan
No. 44463
Exp. 3-31-14
CIVIL
STATE OF CALIFORNIA

2-25-13
PLANS APPROVAL DATE

The State of California or its officers or agents shall not be responsible for the accuracy or completeness of electronic copies of this plan sheet.

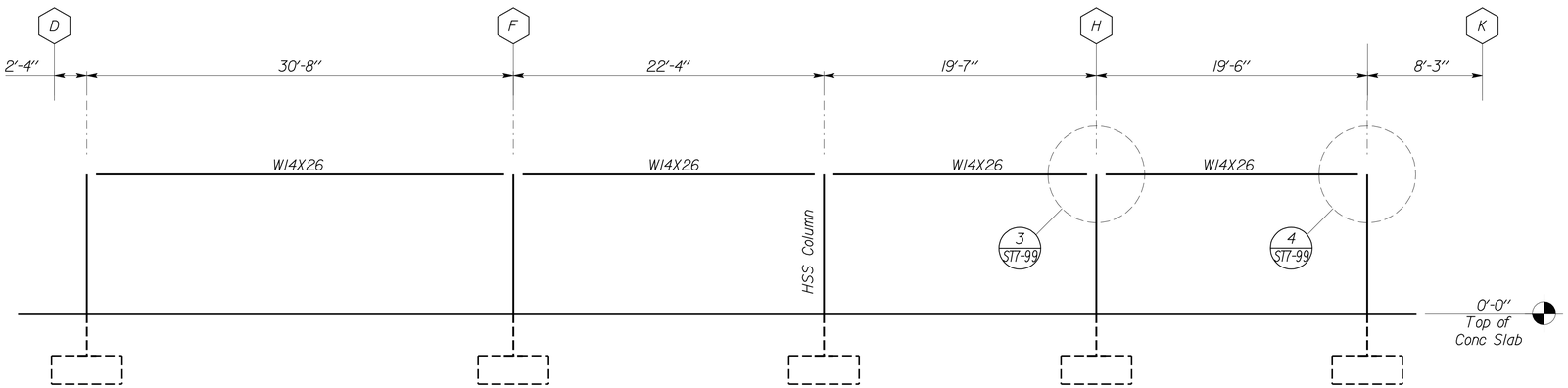

2 BRACED FRAME ELEVATION AT LINE 9
Scale 3/16" = 1'-0"

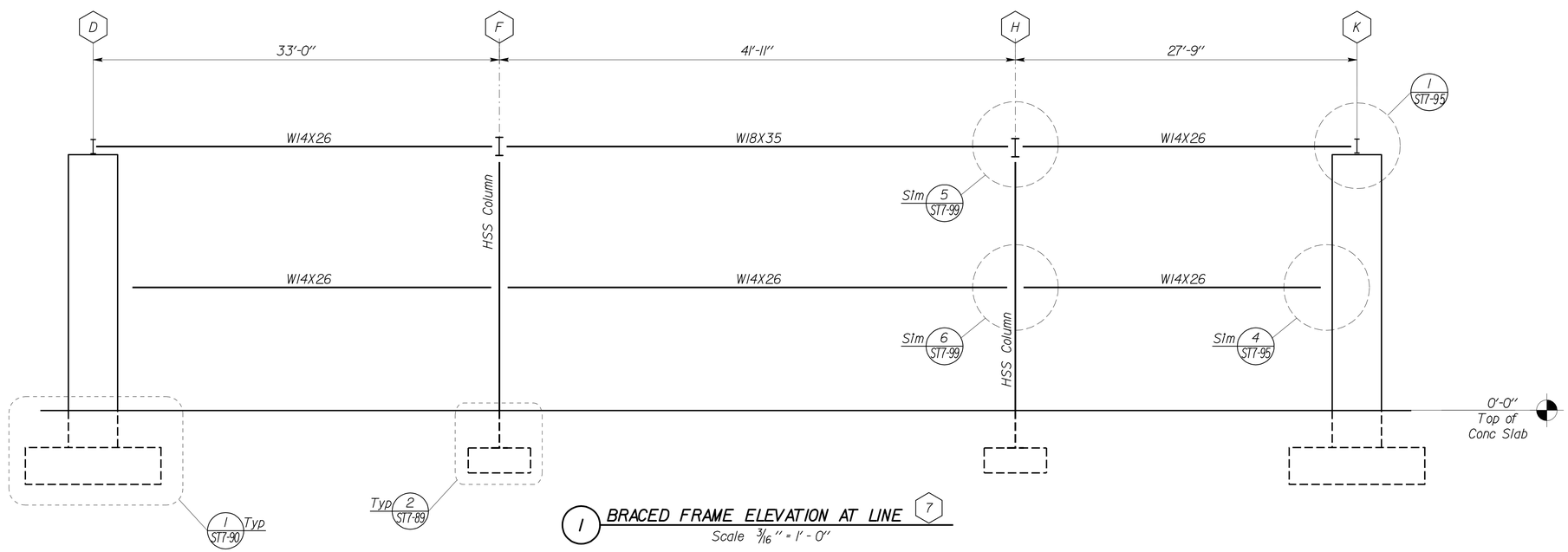

1 BRACED FRAME ELEVATION AT LINE 7
Scale 3/16" = 1'-0"

DESIGN	BY Shervin Pahlavan	CHECKED Joseph Camilleri	
DETAILS	BY Andrew Lovato	CHECKED Shervin Pahlavan	
QUANTITIES	BY	CHECKED	

STATE OF
CALIFORNIA
DEPARTMENT OF TRANSPORTATION

DIVISION OF ENGINEERING SERVICES
ARCHITECTURAL
AND
STRUCTURAL DESIGN

BRIDGE NO. 54-1216J
POST MILE 177.3/181.1
CVEF TRUCK INSPECTION BUILDING

MOUNTAIN PASS JPOE
FRAME ELEVATION 4

SHEET ST7-86

TAEMWW Imperial Rev. 7/10

ORIGINAL SCALE IN INCHES FOR REDUCED PLANS 0 1 2 3

UNIT 3599
PROJECT NUMBER & PHASE 08000006281
EA 368501

DISREGARD PRINTS BEARING EARLIER REVISION DATES →
REVISION DATES (PRELIMINARY STAGE ONLY) 07-19-10 11-01-12 12-10-12
SHEET OF

26-FEB-2013 12:40
D:\user\Projects\A Expedite Process Folder\st7_086.dgn

DIST.	COUNTY	ROUTE	POST MILES TOTAL PROJECT	SHEET NO.	TOTAL SHEETS
08	SBd	15	177.3/181.1	537	710

Shervin Pahlavan 11-27-12
REGISTERED CIVIL ENGINEER DATE

REGISTERED PROFESSIONAL ENGINEER
Shervin Pahlavan
No. 44463
Exp. 3-31-14
CIVIL
STATE OF CALIFORNIA

2-25-13
PLANS APPROVAL DATE

The State of California or its officers or agents shall not be responsible for the accuracy or completeness of electronic copies of this plan sheet.

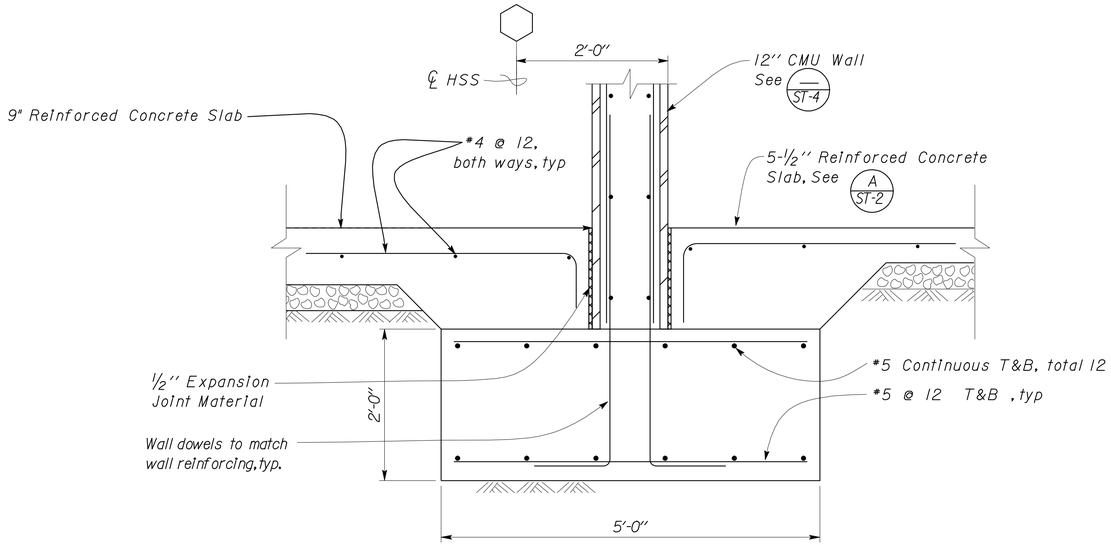

3 FOOTING DETAIL
Scale 1" = 1' - 0"

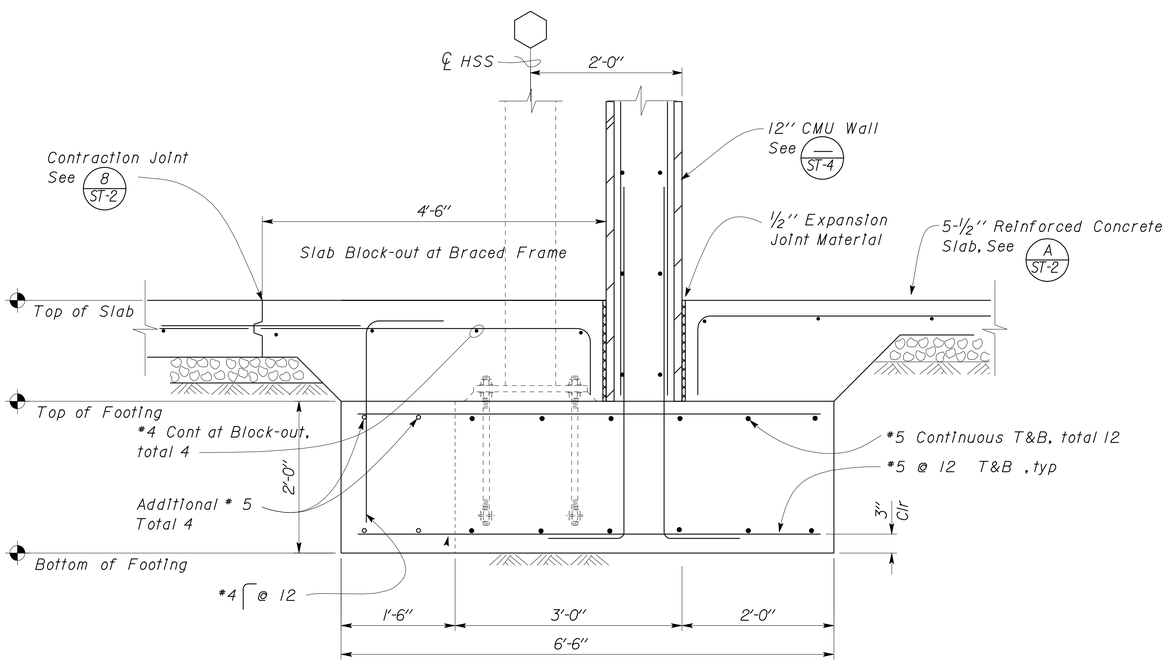

2 FOOTING DETAIL
Scale 1" = 1' - 0"

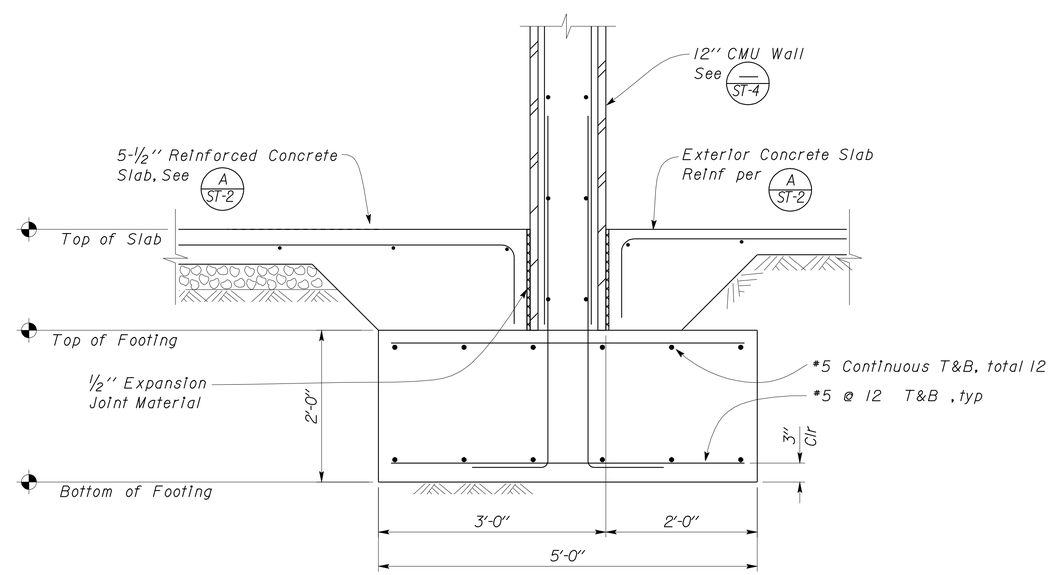

1 FOOTING DETAIL
Scale 1" = 1' - 0"

DESIGN	BY Shervin Pahlavan	CHECKED Joseph Camilleri	
DETAILS	BY Andrew Lovato	CHECKED Shervin Pahlavan	
QUANTITIES	BY	CHECKED	

STATE OF CALIFORNIA
DEPARTMENT OF TRANSPORTATION

DIVISION OF ENGINEERING SERVICES
ARCHITECTURAL AND STRUCTURAL DESIGN

BRIDGE NO. 54-1216J
POST MILE 177.3/181.1
CVEF TRUCK INSPECTION BUILDING

MOUNTAIN PASS JPOE
FOOTING DETAILS I

SHEET ST7-87

TAEMWW Imperial Rev. 7/10

ORIGINAL SCALE IN INCHES FOR REDUCED PLANS 0 1 2 3

UNIT 3599
PROJECT NUMBER & PHASE 08000006281
EA 368501

DISREGARD PRINTS BEARING EARLIER REVISION DATES → 03-11-10 11-01-12 12-10-12

REVISION DATES (PRELIMINARY STAGE ONLY) SHEET OF

D:\user\Projects\A Expedite Process Folder\st7_087.dgn

26-FEB-2013 10:38

DIST.	COUNTY	ROUTE	POST MILES TOTAL PROJECT	SHEET NO.	TOTAL SHEETS
08	SBd	15	177.3/181.1	538	710

Shervin Pahlavan 11-27-12
REGISTERED CIVIL ENGINEER DATE

REGISTERED PROFESSIONAL ENGINEER
Shervin Pahlavan
No. 44463
Exp. 3-31-14
CIVIL
STATE OF CALIFORNIA

2-25-13
PLANS APPROVAL DATE

The State of California or its officers or agents shall not be responsible for the accuracy or completeness of electronic copies of this plan sheet.

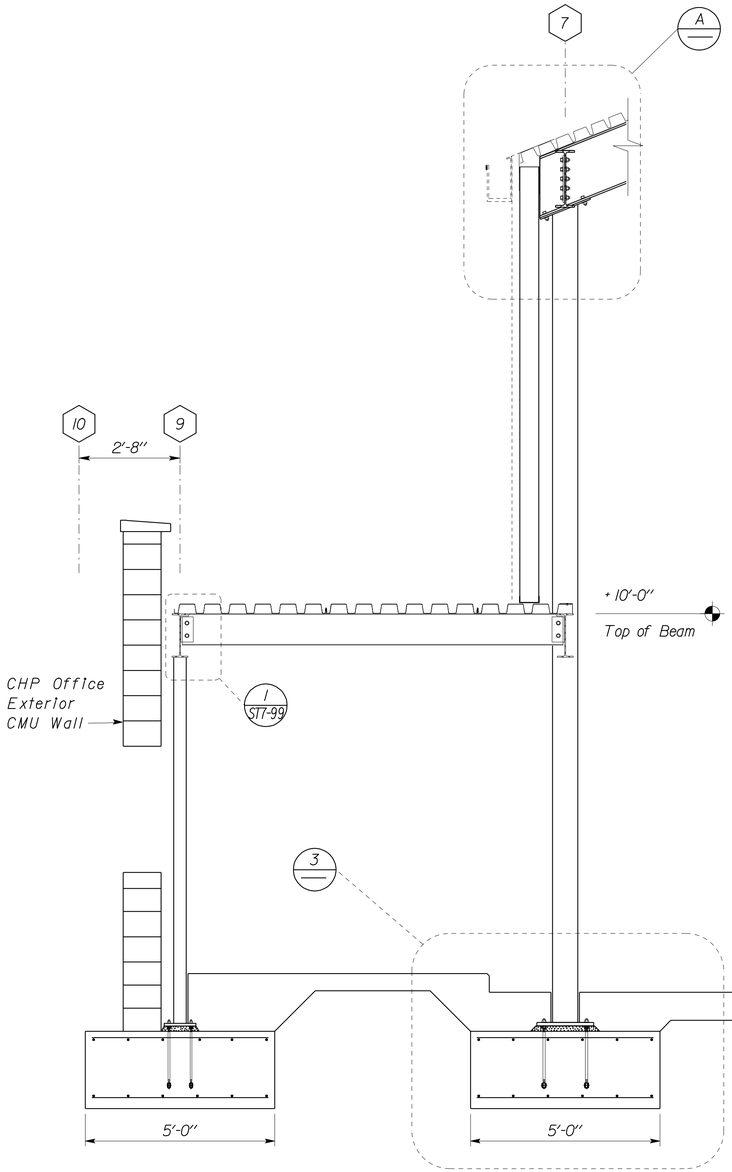

1 FOOTING DETAIL
Scale 1/2" = 1' - 0"

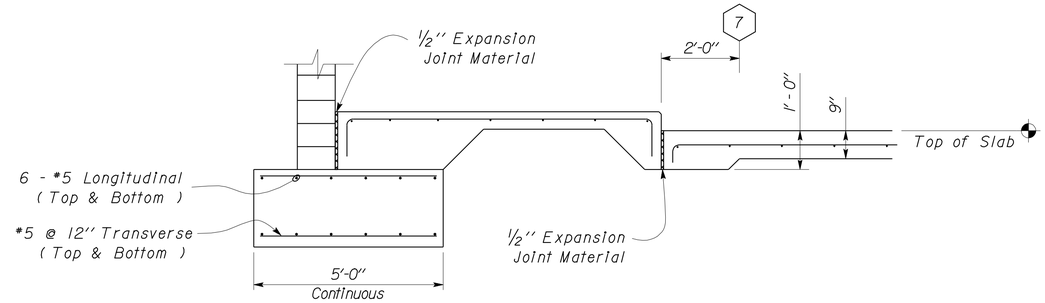

2 FOOTING DETAIL
Scale 1/2" = 1' - 0"

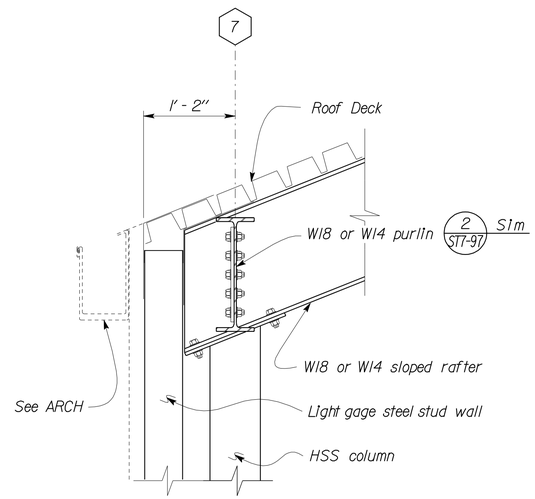

A ROOF FRAMING DETAIL

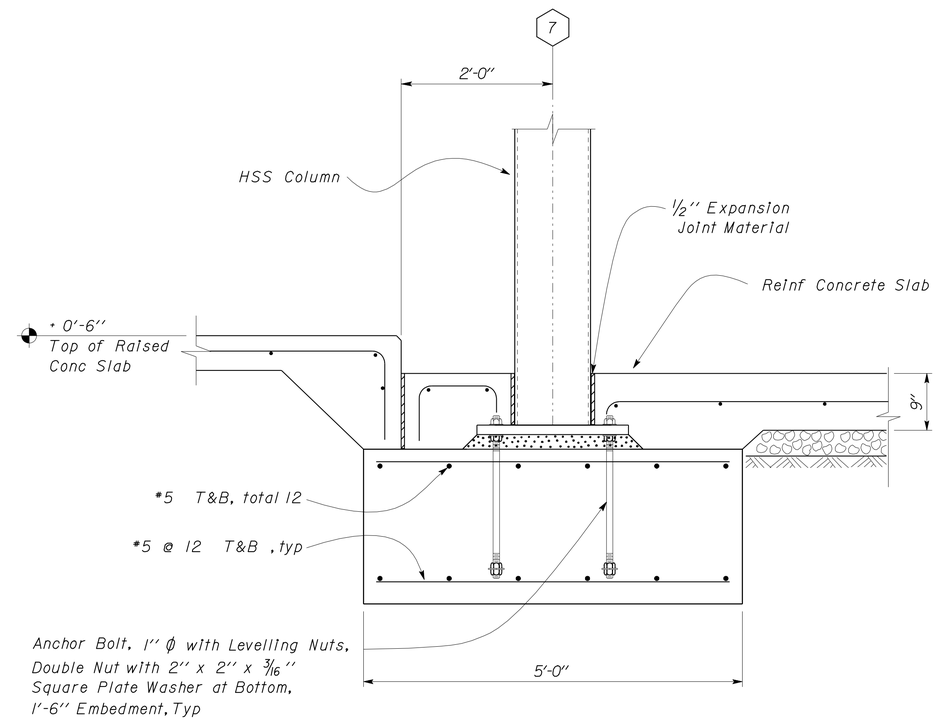

3 FOOTING DETAIL
Scale 1" = 1' - 0"

	BY	CHECKED
DESIGN	Shervin Pahlavan	Joseph Camilleri
DETAILS	Andrew Lovato	Shervin Pahlavan
QUANTITIES		

STATE OF CALIFORNIA
DEPARTMENT OF TRANSPORTATION

DIVISION OF ENGINEERING SERVICES
ARCHITECTURAL AND STRUCTURAL DESIGN

BRIDGE NO. 54-1216J
POST MILE 177.3/181.1
CVEF TRUCK INSPECTION BUILDING

MOUNTAIN PASS JPOE
FOOTING DETAILS 2

SHEET ST7-88

TAEMWW Imperial Rev. 7/10

ORIGINAL SCALE IN INCHES FOR REDUCED PLANS 0 1 2 3

UNIT 3599
PROJECT NUMBER & PHASE 08000006281
EA 368501

DISREGARD PRINTS BEARING EARLIER REVISION DATES → 03-11-10 11-13-12 12-10-12

REVISION DATES (PRELIMINARY STAGE ONLY) SHEET OF

26-FEB-2013 10:38
D:\user\Projects\A Expedite Process Folder\st7_088.dgn

DIST.	COUNTY	ROUTE	POST MILES TOTAL PROJECT	SHEET NO.	TOTAL SHEETS
08	SBd	15	177.3/181.1	539	710

Shervin Pahlavan 11-27-12
REGISTERED CIVIL ENGINEER DATE

REGISTERED PROFESSIONAL ENGINEER Shervin Pahlavan No. 44463 Exp. 3-31-14 CIVIL STATE OF CALIFORNIA

2-25-13
PLANS APPROVAL DATE

The State of California or its officers or agents shall not be responsible for the accuracy or completeness of electronic copies of this plan sheet.

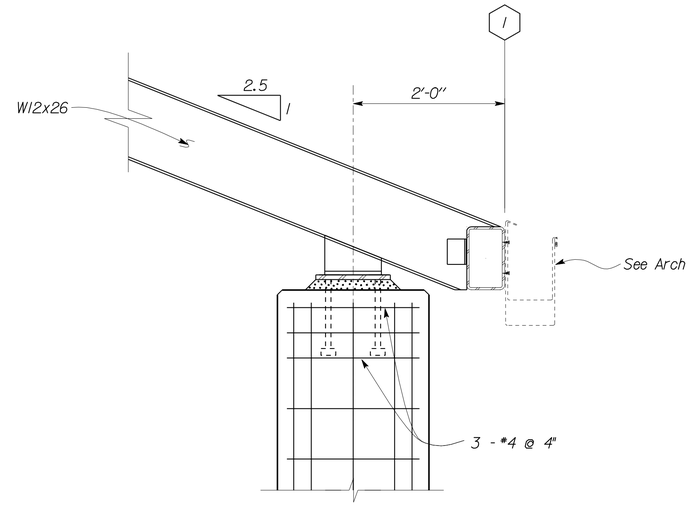

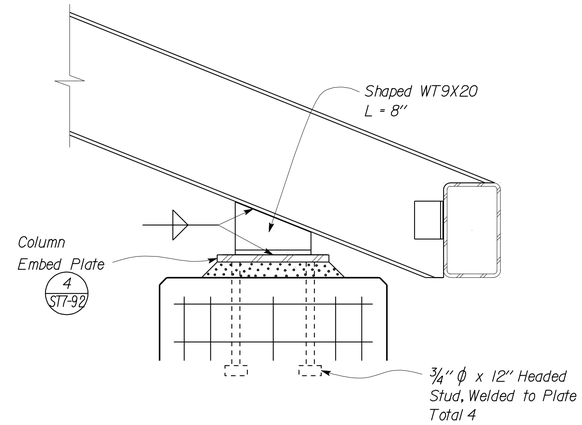

3 COLUMN RAFTER CONNECTION
Scale 1 1/2" = 1' - 0"

A COLUMN SECTION
Scale 1" = 1' - 0"

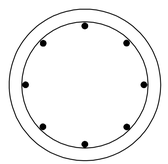

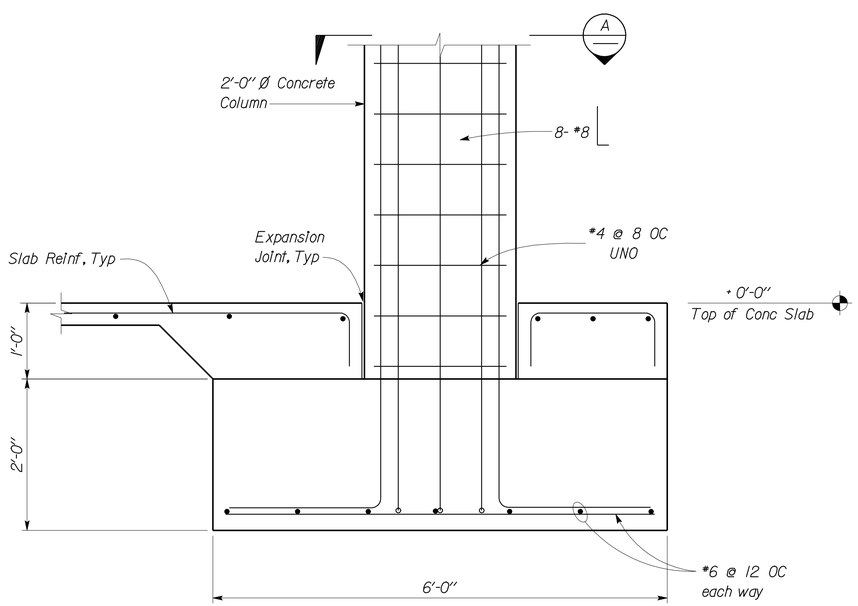

1 COLUMN SECTION
Scale 1" = 1' - 0"

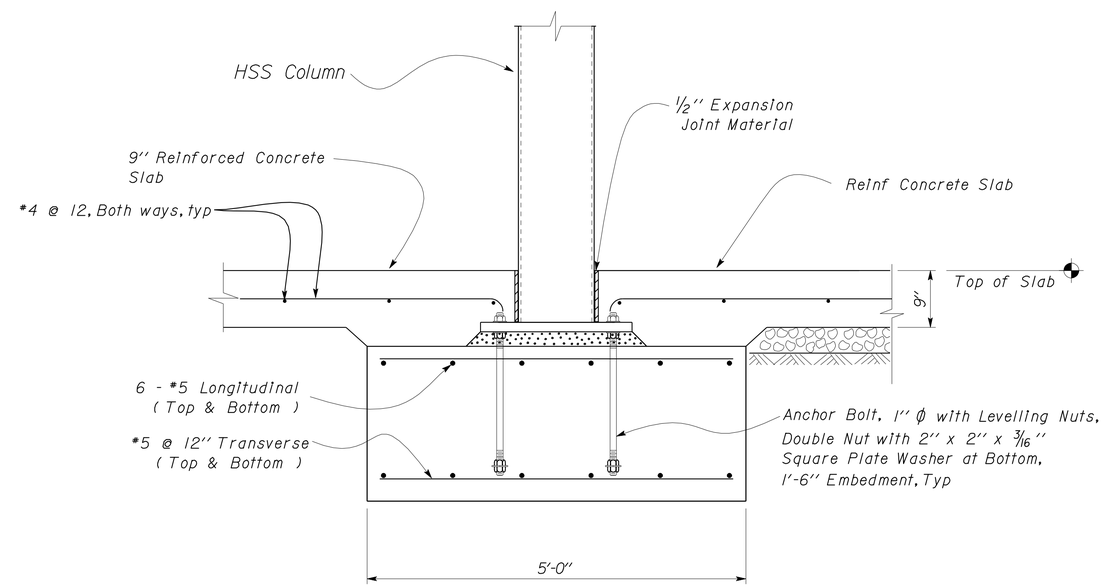

2 FOOTING DETAIL
Scale 1" = 1' - 0"

DESIGN	BY Shervin Pahlavan	CHECKED Joseph Camilleri	
DETAILS	BY Andrew Lovato	CHECKED Shervin Pahlavan	
QUANTITIES	BY	CHECKED	

STATE OF CALIFORNIA
DEPARTMENT OF TRANSPORTATION

DIVISION OF ENGINEERING SERVICES
ARCHITECTURAL AND STRUCTURAL DESIGN

BRIDGE NO. 54-1216J
POST MILE 177.3/181.1

MOUNTAIN PASS JPOE
CVEF TRUCK INSPECTION BUILDING
FOOTING DETAILS 3

SHEET ST7-89

TAEMWW Imperial Rev. 7/10

ORIGINAL SCALE IN INCHES FOR REDUCED PLANS 0 1 2 3

UNIT 3599
PROJECT NUMBER & PHASE 08000006281
EA 368501

DISREGARD PRINTS BEARING EARLIER REVISION DATES
REVISION DATES (PRELIMINARY STAGE ONLY) 07-19-10 11-01-12 12-10-12
SHEET OF

D:\user\Projects\A Expedite Process Folder\st7_089.dgn

26-FEB-2013 10:38

DIST.	COUNTY	ROUTE	POST MILES TOTAL PROJECT	SHEET NO.	TOTAL SHEETS
08	SBd	15	177.3/181.1	540	710

Shervin Pahlavan 11-27-12
REGISTERED CIVIL ENGINEER DATE

REGISTERED PROFESSIONAL ENGINEER Shervin Pahlavan No. 44463 Exp. 3-31-14 CIVIL STATE OF CALIFORNIA

2-25-13
PLANS APPROVAL DATE

The State of California or its officers or agents shall not be responsible for the accuracy or completeness of electronic copies of this plan sheet.

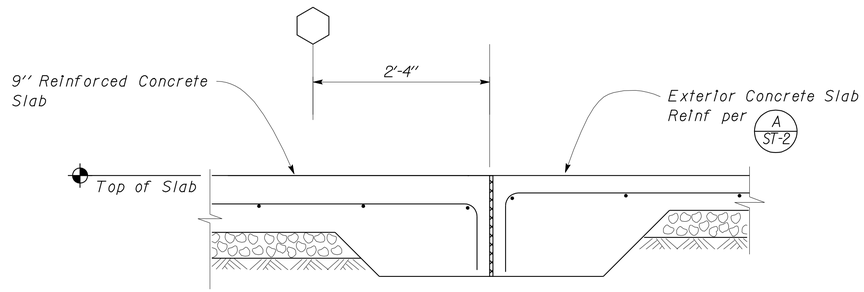

3 FOOTING DETAIL

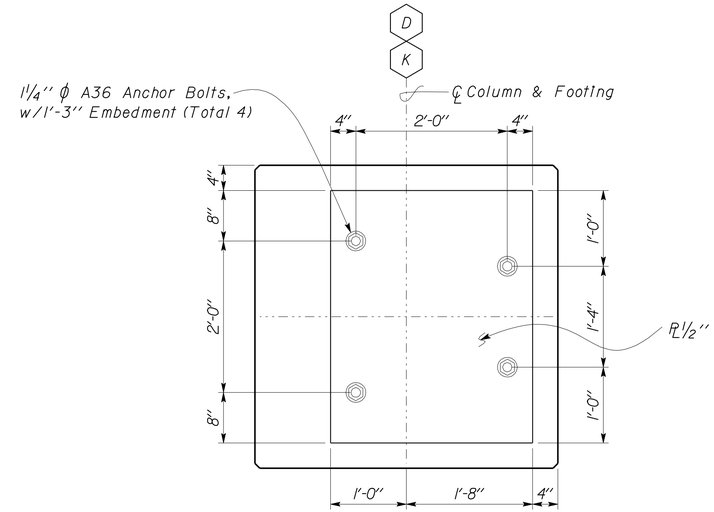

4 EMBED PLATE DETAIL
Scale 1'' = 1' - 0''

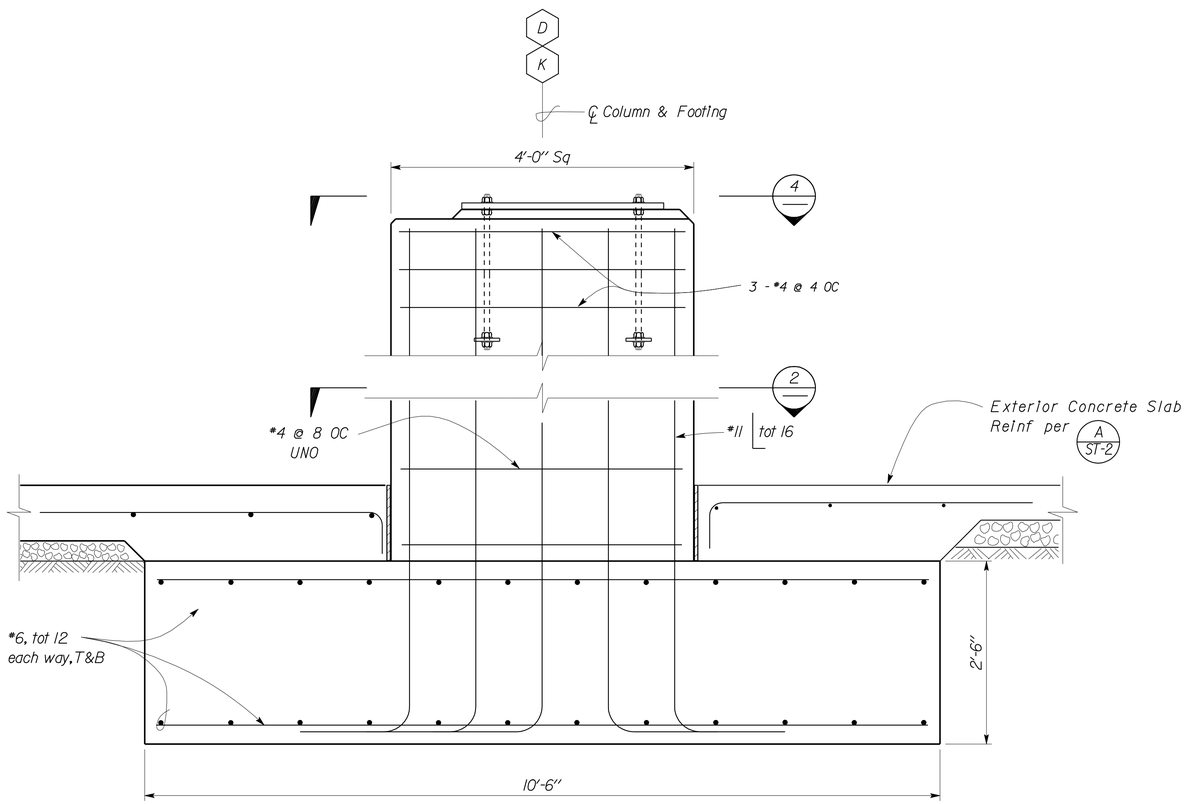

1 CONCRETE COLUMN DETAIL
Scale 1'' = 1' - 0''

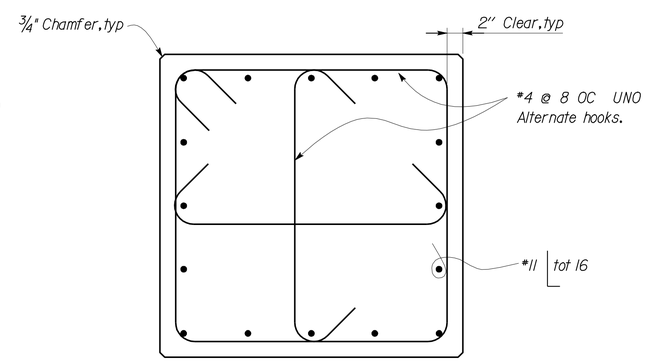

2 CONCRETE COLUMN SECTION
Scale 1'' = 1' - 0''

	BY	CHECKED
DESIGN	Shervin Pahlavan	Joseph Camilleri
DETAILS	Andrew Lovato	Shervin Pahlavan
QUANTITIES		

STATE OF CALIFORNIA
DEPARTMENT OF TRANSPORTATION

DIVISION OF ENGINEERING SERVICES
ARCHITECTURAL AND STRUCTURAL DESIGN

BRIDGE NO. 54-1216J
POST MILE 177.3/181.1
CVEF TRUCK INSPECTION BUILDING

MOUNTAIN PASS JPOE

CONCRETE COLUMN DETAILS

SHEET ST7-90

TAEMWW Imperial Rev. 7/10

ORIGINAL SCALE IN INCHES FOR REDUCED PLANS 0 1 2 3

UNIT 3599
PROJECT NUMBER & PHASE 08000006281
EA 368501

DISREGARD PRINTS BEARING EARLIER REVISION DATES → 03-11-10 11-01-12 12-10-12

REVISION DATES (PRELIMINARY STAGE ONLY) SHEET OF

D:\user\Projects\A Expedite Process Folder\st7_090.dgn

26-FEB-2013 10:38

DIST.	COUNTY	ROUTE	POST MILES TOTAL PROJECT	SHEET NO.	TOTAL SHEETS
08	SBd	15	177.3/181.1	541	710

Shervin Pahlavan 11-27-12
REGISTERED CIVIL ENGINEER DATE

REGISTERED PROFESSIONAL ENGINEER
Shervin Pahlavan
No. 44463
Exp. 3-31-14
CIVIL
STATE OF CALIFORNIA

2-25-13
PLANS APPROVAL DATE

The State of California or its officers or agents shall not be responsible for the accuracy or completeness of electronic copies of this plan sheet.

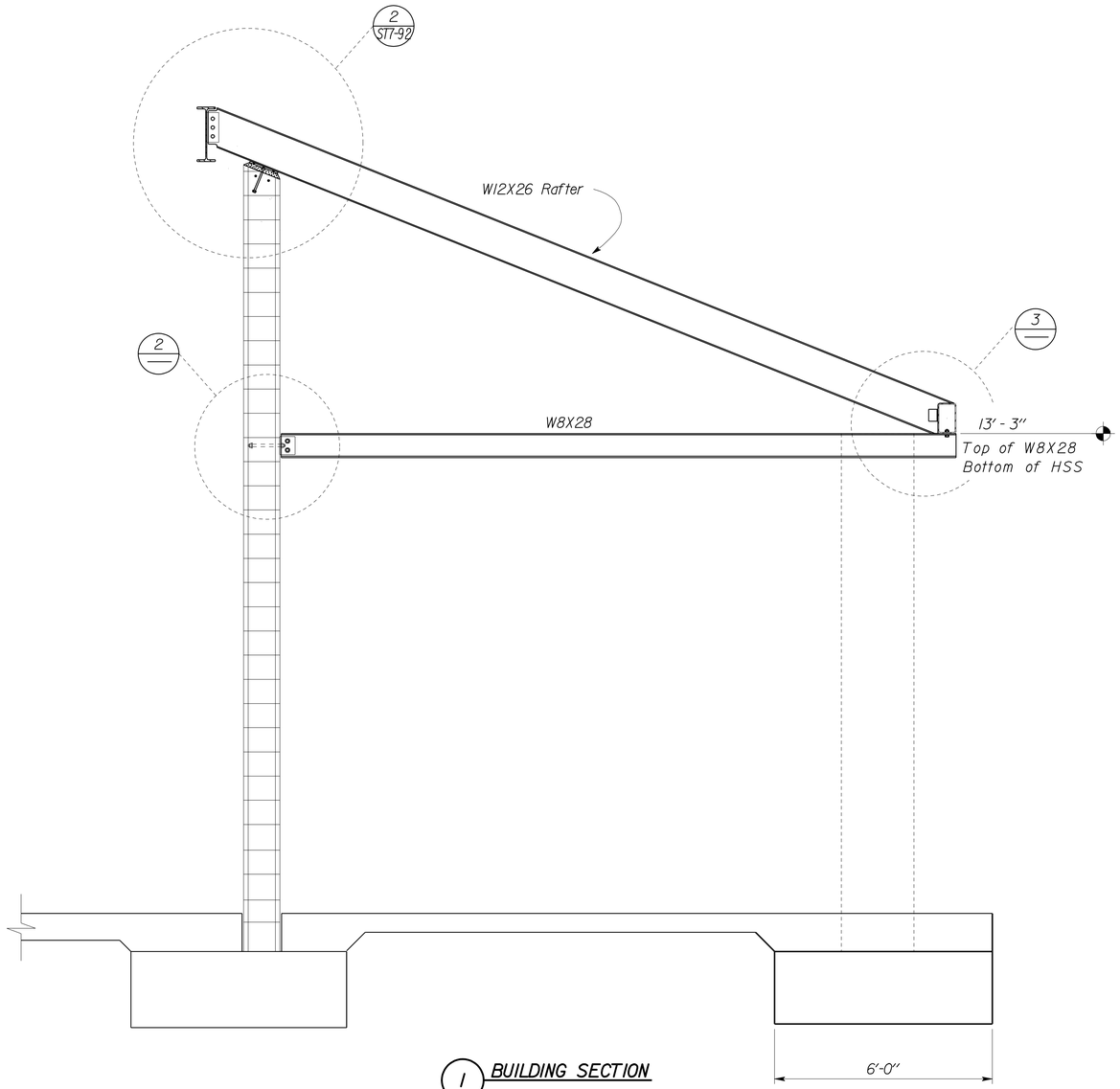

1 BUILDING SECTION

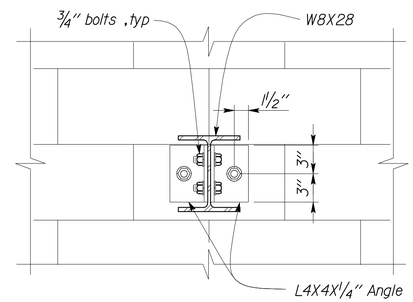

4 BEAM SUPPORT ELEVATION
Scale 1 1/2" = 1'-0"

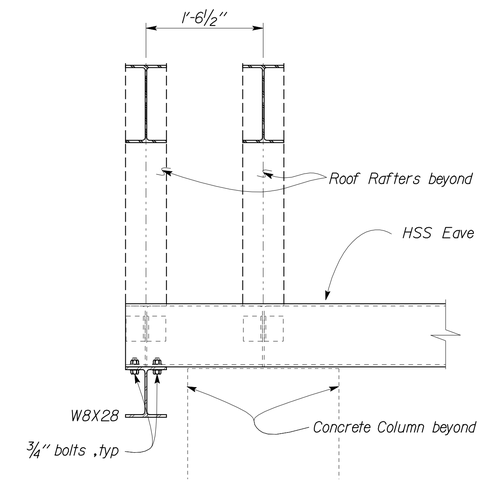

5 EAVE DETAIL
Scale 1" = 1'-0"

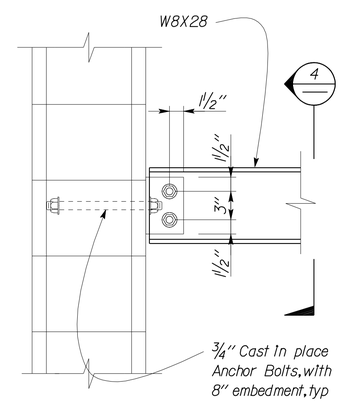

2 BEAM SUPPORT ELEVATION
Scale 1 1/2" = 1'-0"

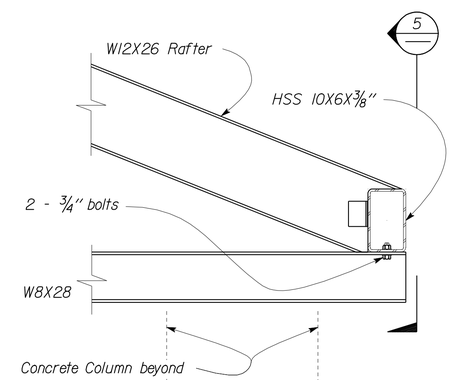

3 EAVE DETAIL
Scale 1" = 1'-0"

DESIGN	BY Shervin Pahlavan	CHECKED Joseph Camilleri	
DETAILS	BY Andrew Lovato	CHECKED Shervin Pahlavan	
QUANTITIES	BY	CHECKED	

STATE OF CALIFORNIA
DEPARTMENT OF TRANSPORTATION

DIVISION OF ENGINEERING SERVICES
ARCHITECTURAL AND STRUCTURAL DESIGN

BRIDGE NO. 54-1216J
POST MILE 177.3/181.1

MOUNTAIN PASS JPOE
CVEF TRUCK INSPECTION BUILDING
PARTIAL BUILDING SECTION I

SHEET ST7-91

TAEMWW Imperial Rev. 7/10

ORIGINAL SCALE IN INCHES FOR REDUCED PLANS 0 1 2 3

UNIT 3599
PROJECT NUMBER & PHASE 08000006281
EA 368501

DISREGARD PRINTS BEARING EARLIER REVISION DATES → 03-11-10 11-01-12 12-10-12

REVISION DATES (PRELIMINARY STAGE ONLY) SHEET OF

26-FEB-2013 10:38
D:\user\Projects\A Expedite Process Folder\st7_091.dgn

DIST.	COUNTY	ROUTE	POST MILES TOTAL PROJECT	SHEET NO.	TOTAL SHEETS
08	SBd	15	177.3/181.1	542	710

Shervin Pahlavan 11-27-12
REGISTERED CIVIL ENGINEER DATE

REGISTERED PROFESSIONAL ENGINEER
Shervin Pahlavan
No. 44463
Exp. 3-31-14
CIVIL
STATE OF CALIFORNIA

2-25-13
PLANS APPROVAL DATE

The State of California or its officers or agents shall not be responsible for the accuracy or completeness of electronic copies of this plan sheet.

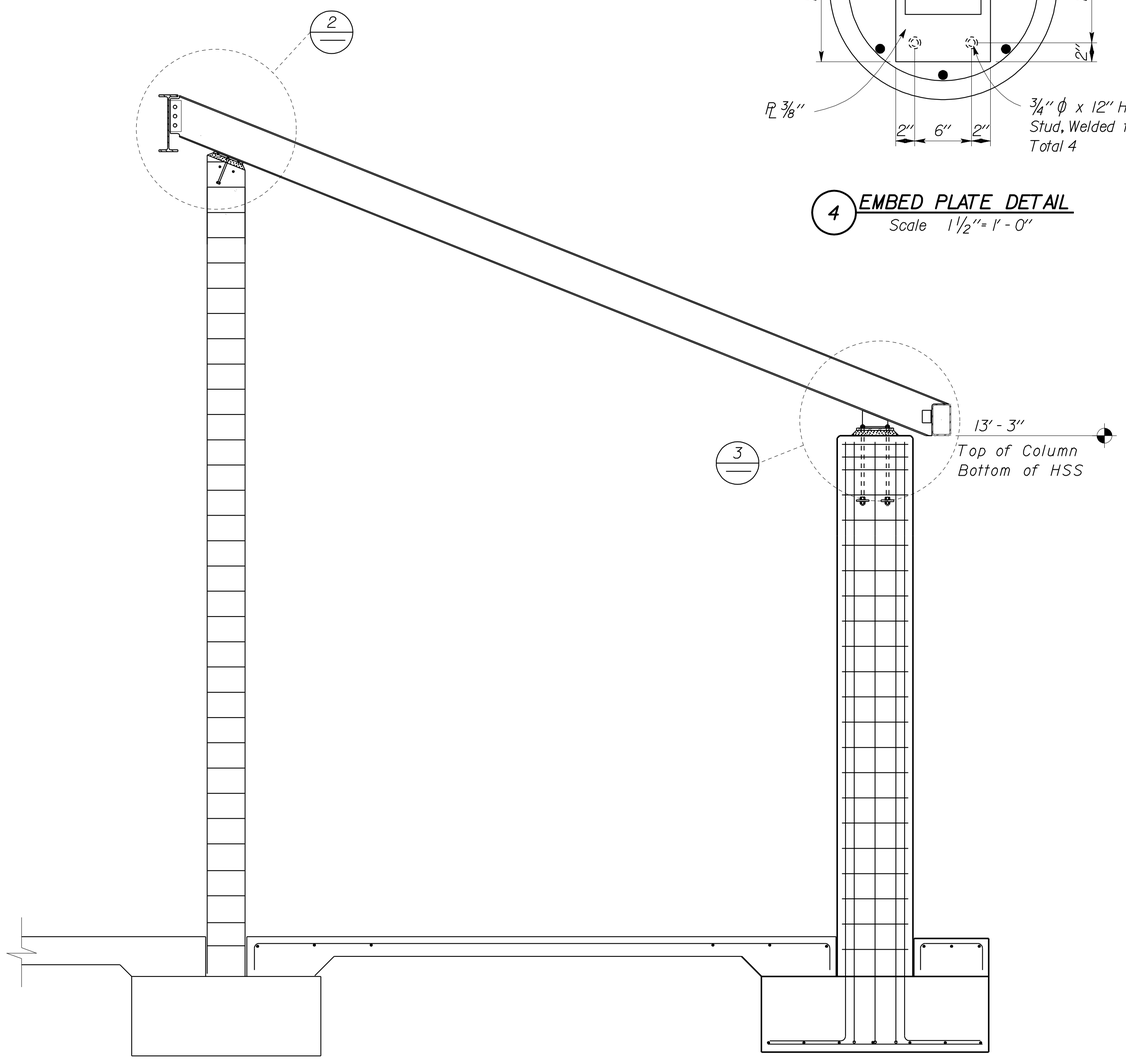

1 BUILDING SECTION
Scale 3/16" = 1' - 0"

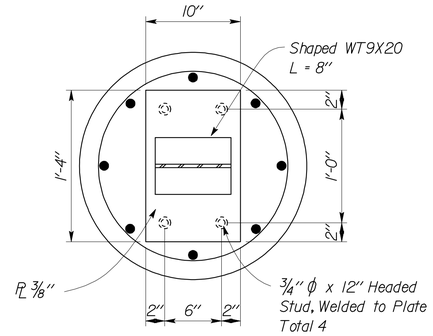

4 EMBED PLATE DETAIL
Scale 1 1/2" = 1' - 0"

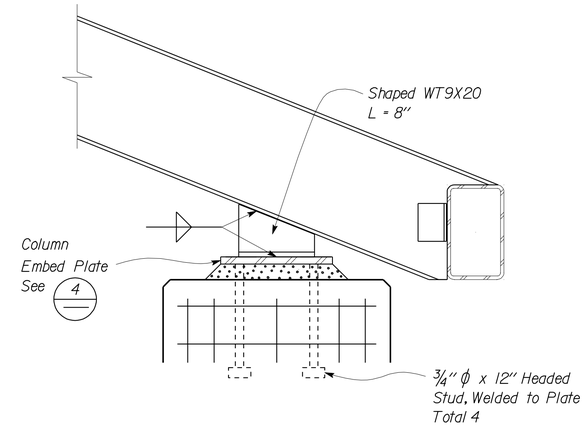

3 COLUMN RAFTER CONNECTION
Scale 1 1/2" = 1' - 0"

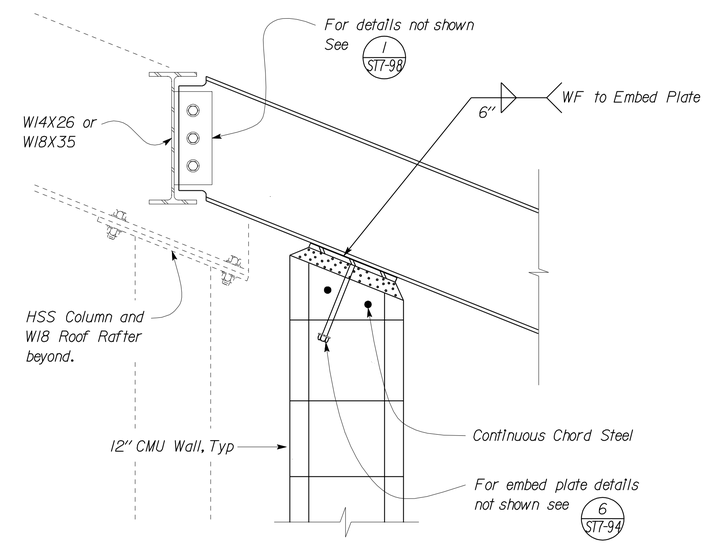

2 ROOF DETAIL
Scale 1 1/2" = 1' - 0"

	BY	CHECKED
DESIGN	Shervin Pahlavan	Joseph Camilleri
DETAILS	Andrew Lovato	Shervin Pahlavan
QUANTITIES		

STATE OF CALIFORNIA
DEPARTMENT OF TRANSPORTATION

DIVISION OF ENGINEERING SERVICES
ARCHITECTURAL AND STRUCTURAL DESIGN

BRIDGE NO. 54-1216J
POST MILE 177.3/181.1

CVEF TRUCK INSPECTION BUILDING

MOUNTAIN PASS JPOE

PARTIAL BUILDING SECTION 2

SHEET ST7-92

TAEMWW Imperial Rev. 7/10

ORIGINAL SCALE IN INCHES FOR REDUCED PLANS 0 1 2 3

UNIT 3599
PROJECT NUMBER & PHASE 08000006281
EA 368501

DISREGARD PRINTS BEARING EARLIER REVISION DATES → 07-19-10 11-01-12 12-10-12

REVISION DATES (PRELIMINARY STAGE ONLY) SHEET OF

26-FEB-2013 10:38
D:\user\Projects\A Expedite Process Folder\st7_092.dgn

DIST.	COUNTY	ROUTE	POST MILES TOTAL PROJECT	SHEET NO.	TOTAL SHEETS
08	SBd	15	177.3/181.1	543	710

Shervin Pahlavan 11-27-12
REGISTERED CIVIL ENGINEER DATE

REGISTERED PROFESSIONAL ENGINEER
Shervin Pahlavan
No. 44463
Exp. 3-31-14
CIVIL
STATE OF CALIFORNIA

2-25-13
PLANS APPROVAL DATE

The State of California or its officers or agents shall not be responsible for the accuracy or completeness of electronic copies of this plan sheet.

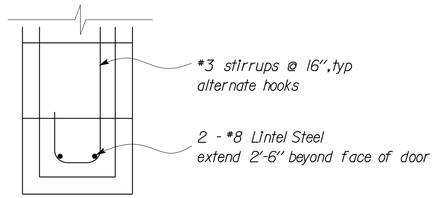

A LINTEL SECTION
Scale 1 1/2" = 1' - 0"

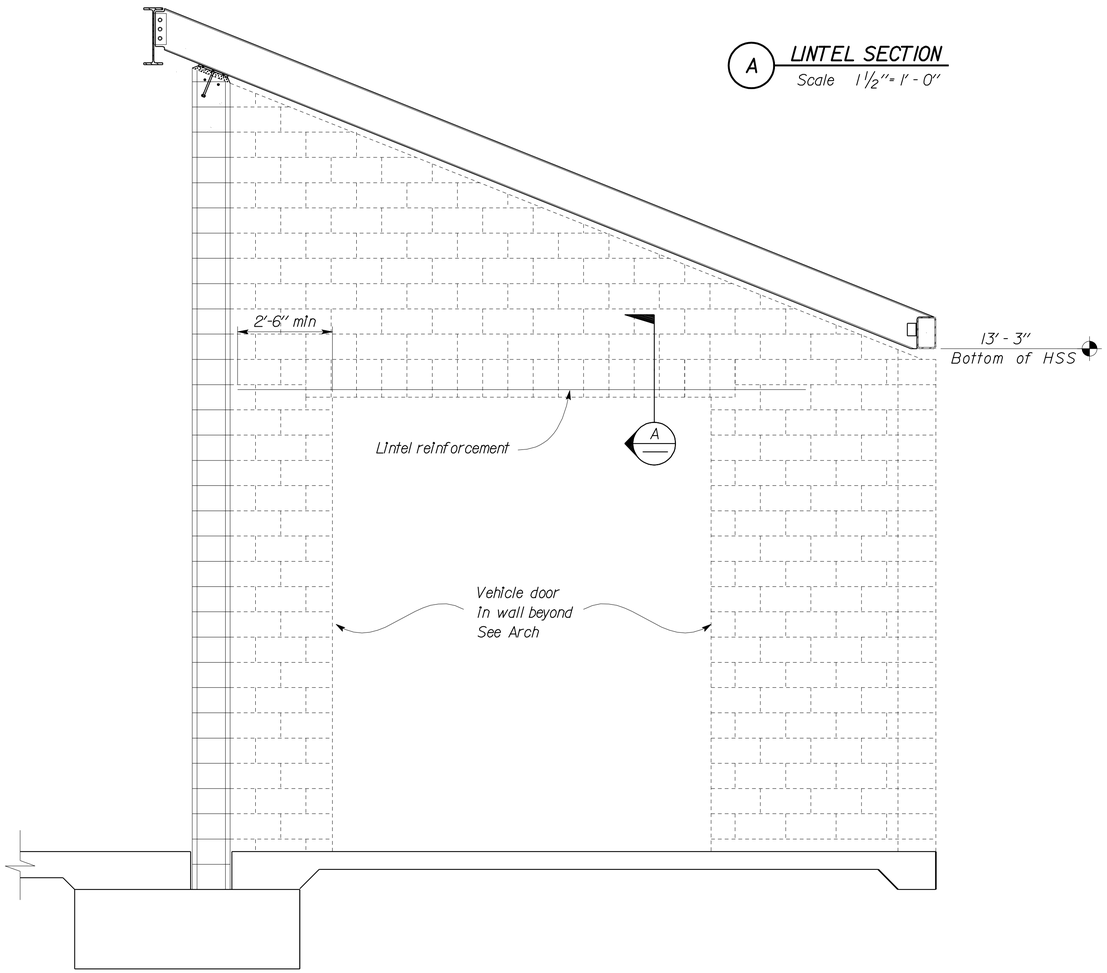

1 BUILDING SECTION
Scale 1/2" = 1' - 0"

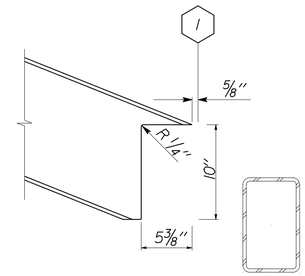

3 COPING AT HSS
Scale 1 1/2" = 1' - 0"

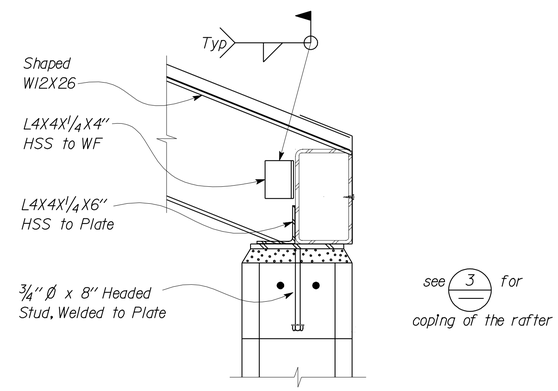

Note: Extend the HSS to WF Roof Rafter.

2 CONNECTION AT HSS
Scale 1 1/2" = 1' - 0"

DESIGN	BY Shervin Pahlavan	CHECKED Joseph Camilleri	
DETAILS	BY Andrew Lovato	CHECKED Shervin Pahlavan	
QUANTITIES	BY	CHECKED	

STATE OF CALIFORNIA
DEPARTMENT OF TRANSPORTATION

DIVISION OF ENGINEERING SERVICES
ARCHITECTURAL AND STRUCTURAL DESIGN

BRIDGE NO. 54-1216J
POST MILE 177.3/181.1
CVEF TRUCK INSPECTION BUILDING

MOUNTAIN PASS JPOE
PARTIAL BUILDING SECTION 3

SHEET ST7-93

TAEMWW Imperial Rev. 7/10

ORIGINAL SCALE IN INCHES FOR REDUCED PLANS 0 1 2 3

UNIT 3599
PROJECT NUMBER & PHASE 08000006281
EA 368501

DISREGARD PRINTS BEARING EARLIER REVISION DATES
REVISION DATES (PRELIMINARY STAGE ONLY) 03-11-10 11-01-12 12-10-12
SHEET OF

D:\user\Projects\A Expedite Process Folder\st7_093.dgn

26-FEB-2013 10:38

DIST.	COUNTY	ROUTE	POST MILES TOTAL PROJECT	SHEET NO.	TOTAL SHEETS
08	SBd	15	177.3/181.1	544	710

Shervin Pahlavan 11-27-12
REGISTERED CIVIL ENGINEER DATE

REGISTERED PROFESSIONAL ENGINEER
Shervin Pahlavan
No. 44463
Exp. 3-31-14
CIVIL
STATE OF CALIFORNIA

2-25-13
PLANS APPROVAL DATE

The State of California or its officers or agents shall not be responsible for the accuracy or completeness of electronic copies of this plan sheet.

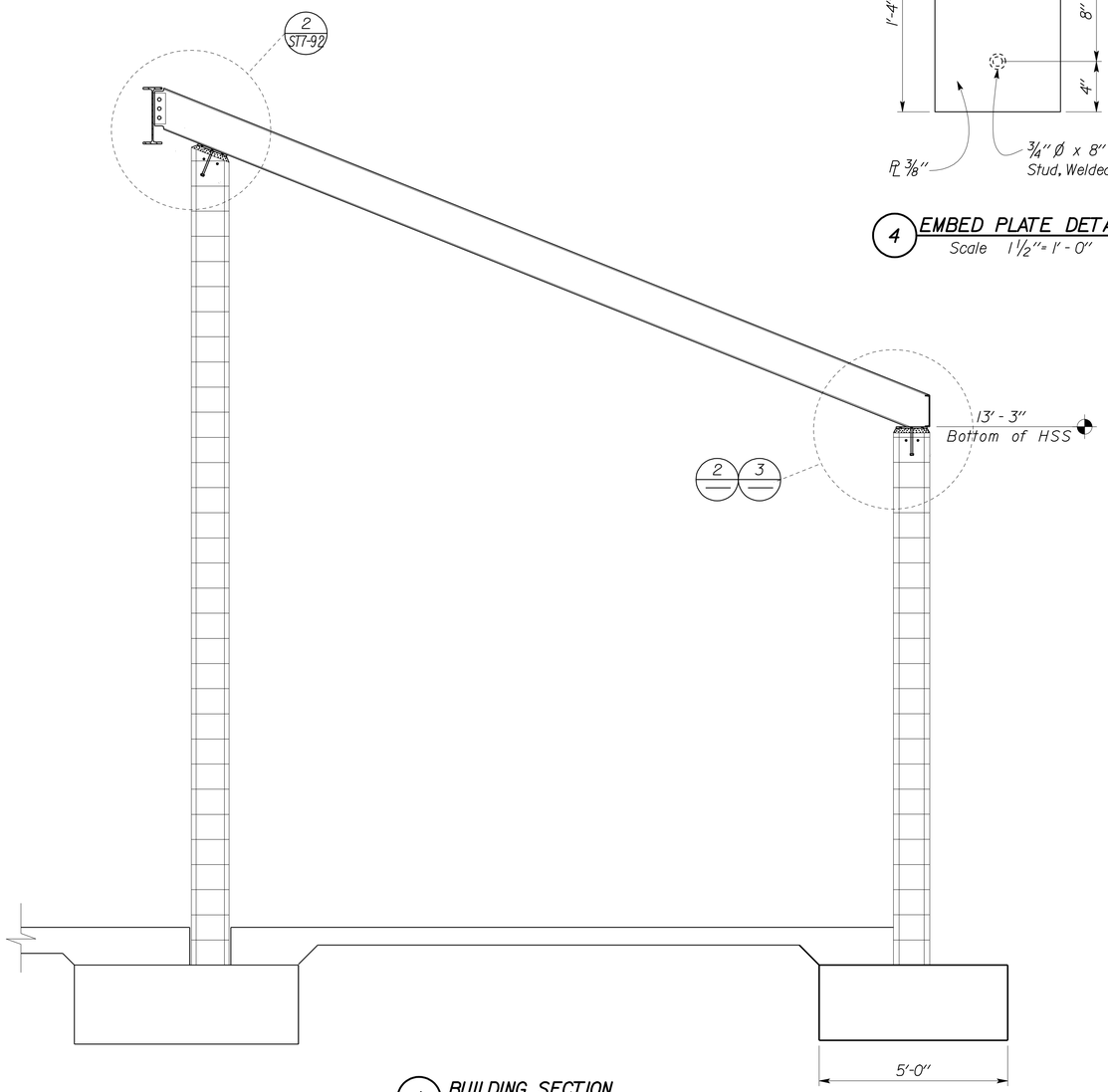

1 BUILDING SECTION
Scale 1/2" = 1'-0"

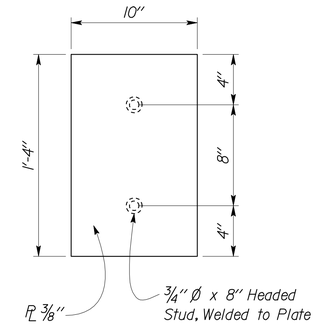

4 EMBED PLATE DETAIL
Scale 1 1/2" = 1'-0"

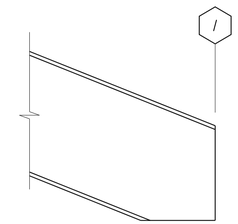

3 SHAPING AT CMU WALL
Scale 1 1/2" = 1'-0"

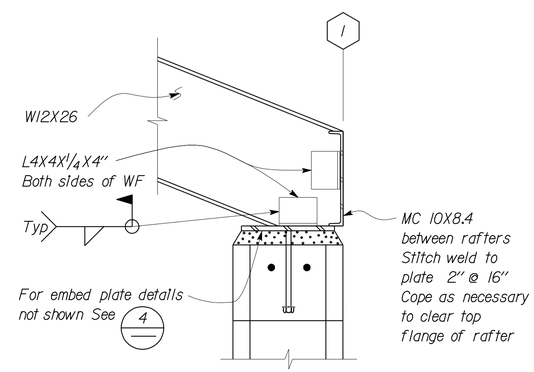

2 CONNECTION AT CHANNEL
Scale 1 1/2" = 1'-0"

DESIGN	BY Shervin Pahlavan	CHECKED Joseph Camilleri	
DETAILS	BY Andrew Lovato	CHECKED Shervin Pahlavan	
QUANTITIES	BY	CHECKED	

STATE OF CALIFORNIA
DEPARTMENT OF TRANSPORTATION

DIVISION OF ENGINEERING SERVICES
ARCHITECTURAL AND STRUCTURAL DESIGN

BRIDGE NO. 54-1216J
POST MILE 177.3/181.1

CVEF TRUCK INSPECTION BUILDING

MOUNTAIN PASS JPOE
PARTIAL BUILDING SECTION 4

SHEET ST7-94

TAEMWW Imperial Rev. 7/10

ORIGINAL SCALE IN INCHES FOR REDUCED PLANS 0 1 2 3

UNIT 3599
PROJECT NUMBER & PHASE 08000006281
EA 368501

DISREGARD PRINTS BEARING EARLIER REVISION DATES → 03-11-10 11-09-12 12-10-12

REVISION DATES (PRELIMINARY STAGE ONLY) SHEET OF

26-FEB-2013 10:38
D:\user\Projects\A Expedite Process Folder\st7_094.dgn

DIST.	COUNTY	ROUTE	POST MILES TOTAL PROJECT	SHEET NO.	TOTAL SHEETS
08	SBd	15	177.3/181.1	545	710

Shervin Pahlavan 11-27-12
REGISTERED CIVIL ENGINEER DATE

REGISTERED PROFESSIONAL ENGINEER
Shervin Pahlavan
No. 44463
Exp. 3-31-14
CIVIL
STATE OF CALIFORNIA

2-25-13
PLANS APPROVAL DATE

The State of California or its officers or agents shall not be responsible for the accuracy or completeness of electronic copies of this plan sheet.

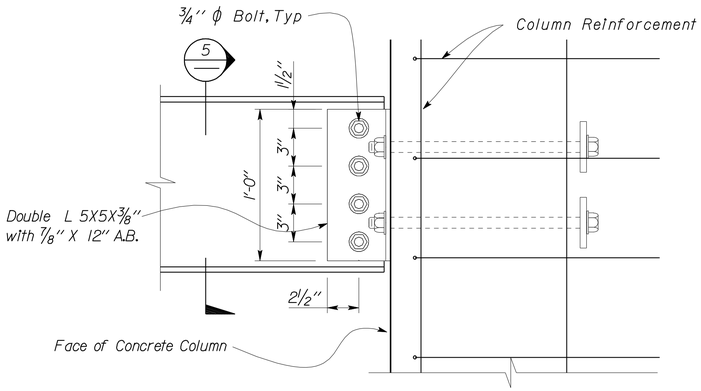

4 WF BEAM TO COLUMN
Scale 2" = 1' - 0"

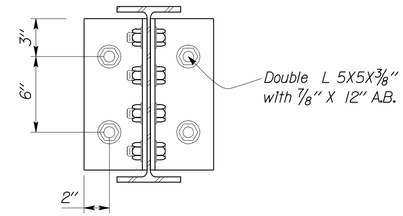

5 WF BEAM TO COLUMN
Scale 2" = 1' - 0"

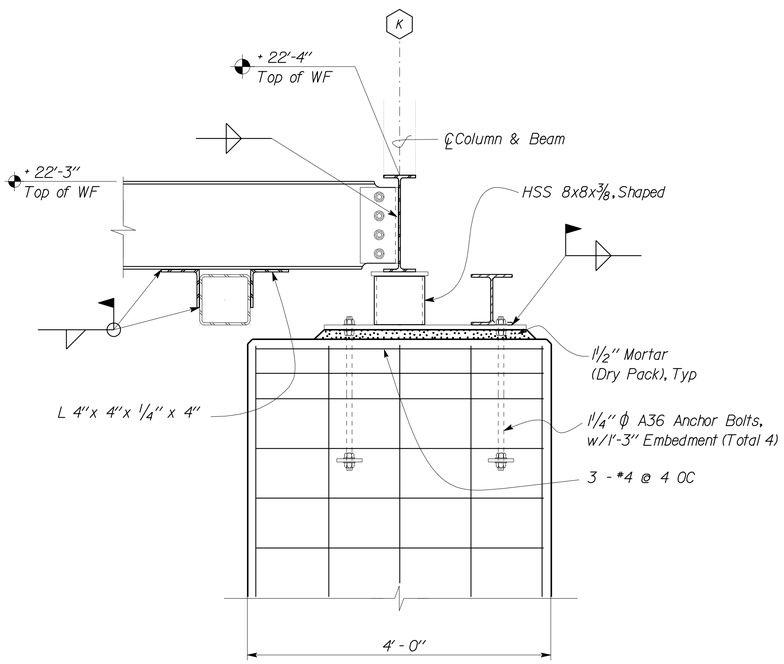

Note: Fascia framing not shown for clarity.

see 1/ST7-117

1 BRACING / COLUMN CONNECTION
Scale 1" = 1' - 0"

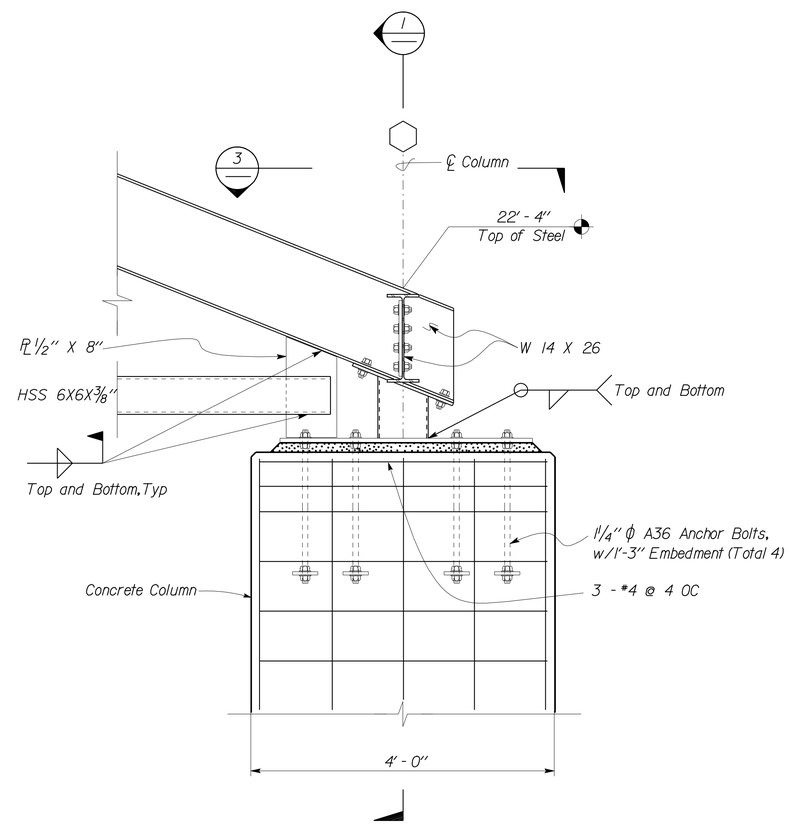

2 BRACING / COLUMN CONNECTION
Scale 1" = 1' - 0"

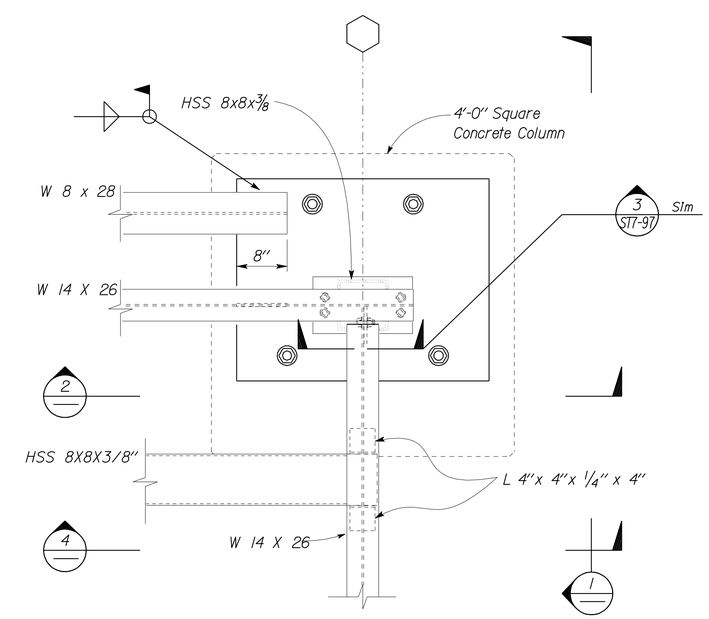

3 BRACING / COLUMN PLAN
Scale 1" = 1' - 0"

DESIGN	BY Shervin Pahlavan	CHECKED Joseph Camilleri	STATE OF CALIFORNIA DEPARTMENT OF TRANSPORTATION	DIVISION OF ENGINEERING SERVICES ARCHITECTURAL AND STRUCTURAL DESIGN	BRIDGE NO. 54-1216J; POST MILE 177.3/181.1
DETAILS	BY Andrew Lovato	CHECKED Shervin Pahlavan			CVEF TRUCK INSPECTION BUILDING
QUANTITIES	BY	CHECKED			

MOUNTAIN PASS JPOE
FRAME/COLUMN CONNECTION DETAILS I

SHEET ST7-95

TAEMWW Imperial Rev. 7/10

ORIGINAL SCALE IN INCHES FOR REDUCED PLANS 0 1 2 3

UNIT 3599
PROJECT NUMBER & PHASE 08000006281
EA 368501

DISREGARD PRINTS BEARING EARLIER REVISION DATES → 03-11-10 11-01-12 12-10-12

REVISION DATES (PRELIMINARY STAGE ONLY) SHEET OF

D:\user\Projects\A Expedite Process Folder\st7_095.dgn

26-FEB-2013 10:39

DIST.	COUNTY	ROUTE	POST MILES TOTAL PROJECT	SHEET NO.	TOTAL SHEETS
08	SBd	15	177.3/181.1	546	710

Shervin Pahlavan 11-27-12
REGISTERED CIVIL ENGINEER DATE

REGISTERED PROFESSIONAL ENGINEER Shervin Pahlavan No. 44463 Exp. 3-31-14 CIVIL STATE OF CALIFORNIA

2-25-13
PLANS APPROVAL DATE

The State of California or its officers or agents shall not be responsible for the accuracy or completeness of electronic copies of this plan sheet.

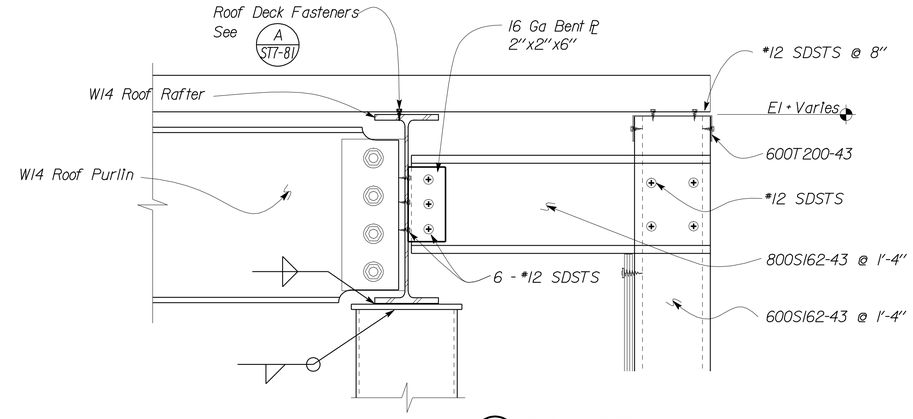

4 FASCIA DETAIL
Scale 2" = 1' - 0"

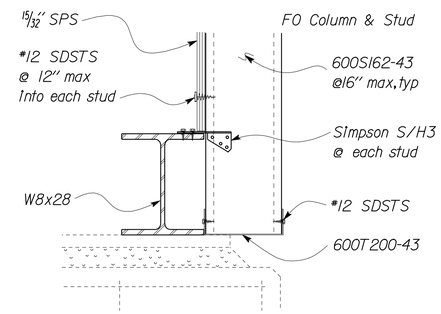

5 FASCIA DETAIL
Scale 2" = 1' - 0"

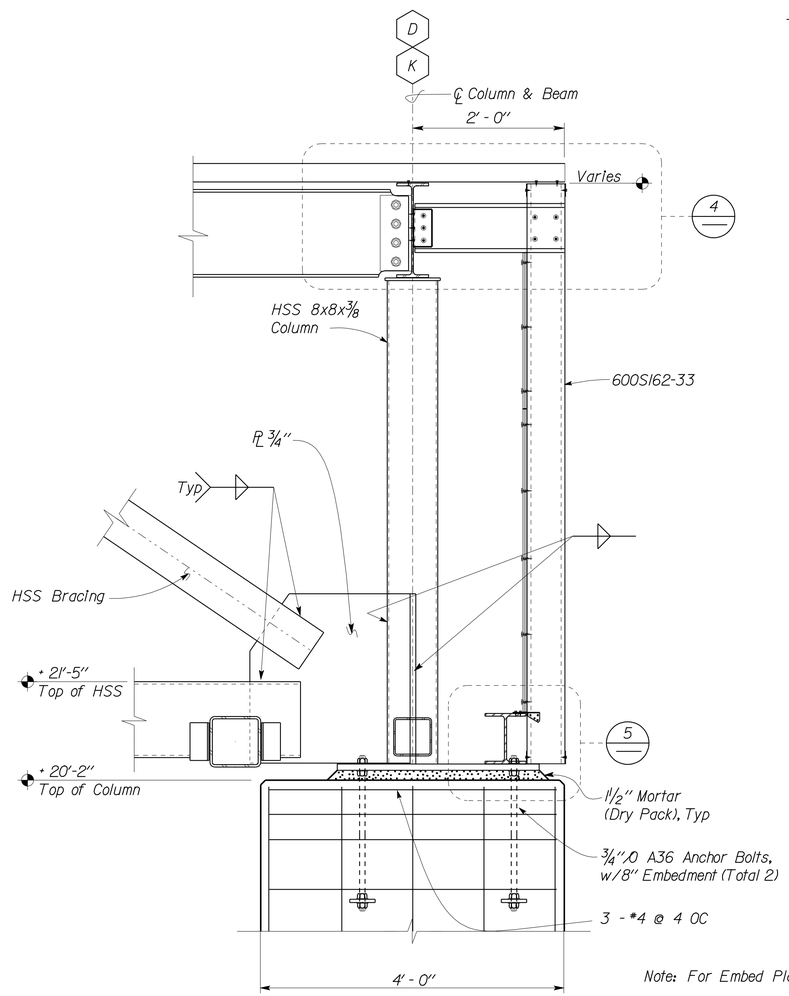

1 BRACING / COLUMN CONNECTION
Scale 1" = 1' - 0"

Note: For Embed Plate Details, See 4 ST7-90

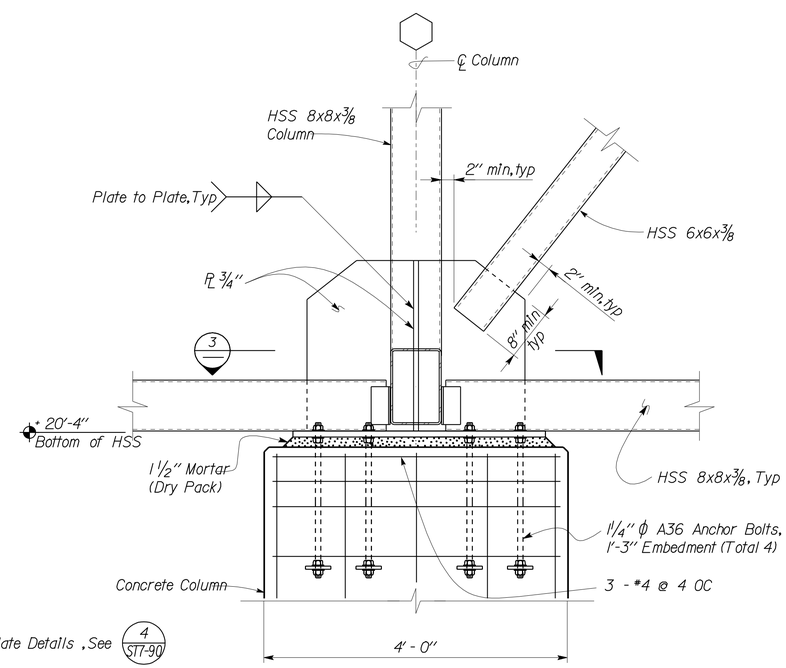

2 BRACING / COLUMN CONNECTION
Scale 1" = 1' - 0"

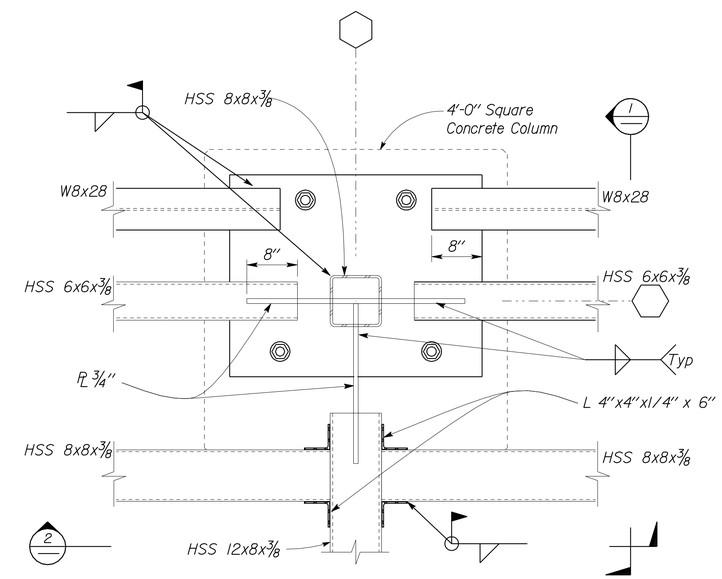

3 BRACING / COLUMN PLAN
Scale 1" = 1' - 0"

	BY	CHECKED
DESIGN	Shervin Pahlavan	Joseph Camilleri
DETAILS	Andrew Lovato	Shervin Pahlavan
QUANTITIES		

STATE OF CALIFORNIA DEPARTMENT OF TRANSPORTATION

DIVISION OF ENGINEERING SERVICES ARCHITECTURAL AND STRUCTURAL DESIGN

BRIDGE NO. 54-1216J
POST MILE 177.3/181.1

MOUNTAIN PASS JPOE
CVEF TRUCK INSPECTION BUILDING
FRAME/COLUMN CONNECTION DETAILS 2

SHEET ST7-96

TAEMWW Imperial Rev. 7/10

ORIGINAL SCALE IN INCHES FOR REDUCED PLANS 0 1 2 3

UNIT 3599
PROJECT NUMBER & PHASE 08000006281
EA 368501

DISREGARD PRINTS BEARING EARLIER REVISION DATES
REVISION DATES (PRELIMINARY STAGE ONLY) 07-18-10 11-01-12 12-10-12
SHEET OF

D:\user\Projects\A Expedite Process Folder\st7_096.dgn

26-FEB-2013 10:39

DIST.	COUNTY	ROUTE	POST MILES TOTAL PROJECT	SHEET NO.	TOTAL SHEETS
08	SBd	15	177.3/181.1	547	710

Shervin Pahlavan 11-27-12
REGISTERED CIVIL ENGINEER DATE

REGISTERED PROFESSIONAL ENGINEER Shervin Pahlavan No. 44463 Exp. 3-31-14 CIVIL STATE OF CALIFORNIA

2-25-13
PLANS APPROVAL DATE

The State of California or its officers or agents shall not be responsible for the accuracy or completeness of electronic copies of this plan sheet.

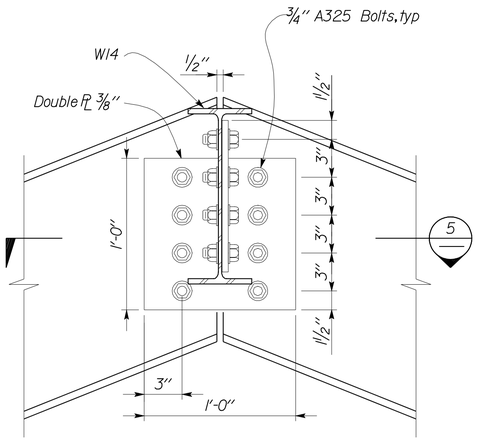

1 CONNECTION DETAIL
Scale 2" = 1' - 0"

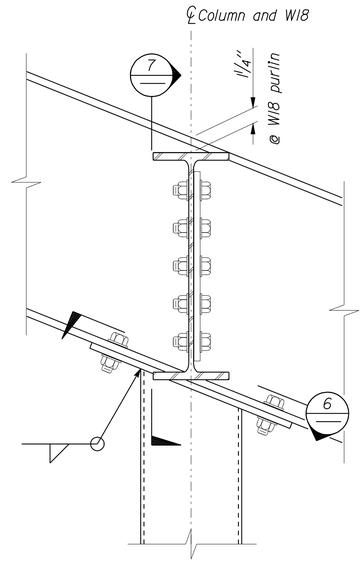

2 CONNECTION DETAIL
Scale 2" = 1' - 0"

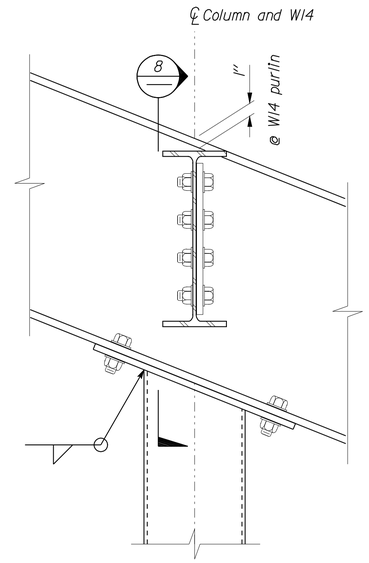

3 CONNECTION DETAIL
Scale 2" = 1' - 0"

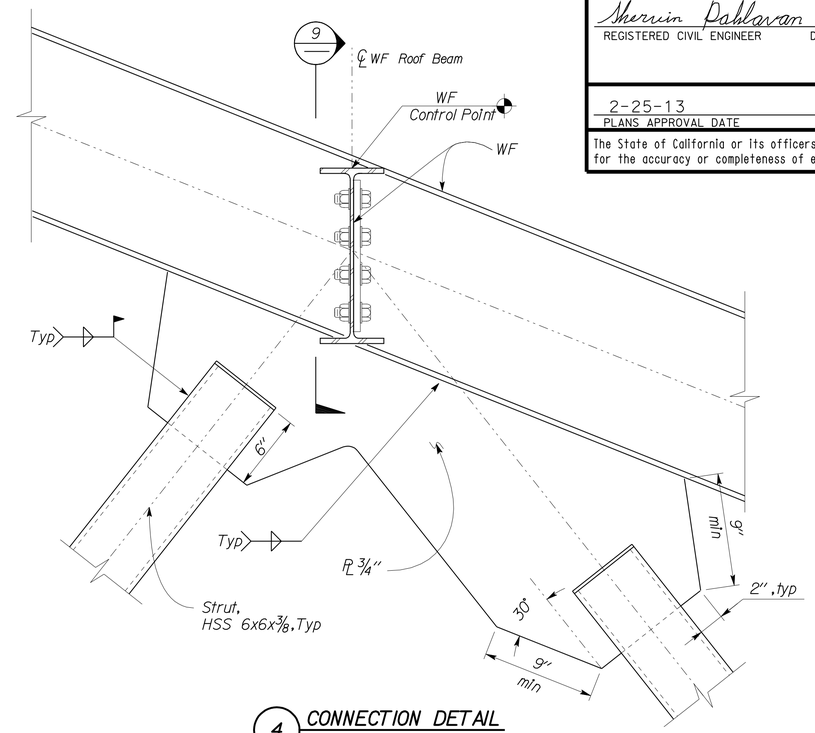

4 CONNECTION DETAIL
Scale 2" = 1' - 0"

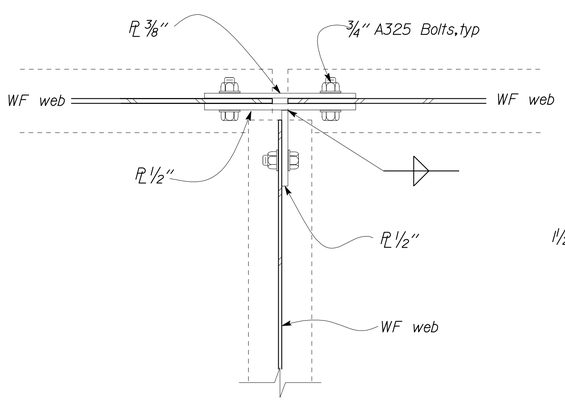

5 CONNECTION DETAIL
Scale 2" = 1' - 0"

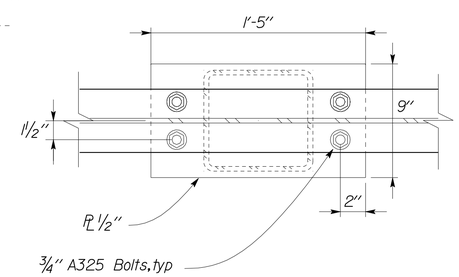

6 CONNECTION DETAIL
Scale 2" = 1' - 0"

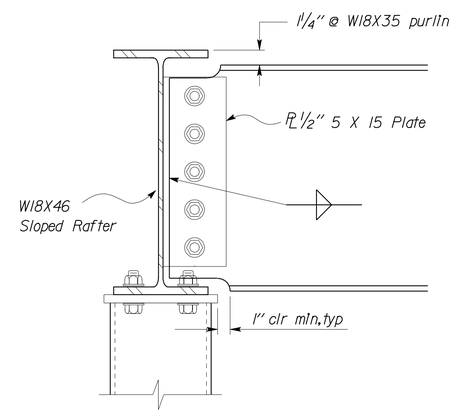

7 CONNECTION DETAIL
Scale 2" = 1' - 0"

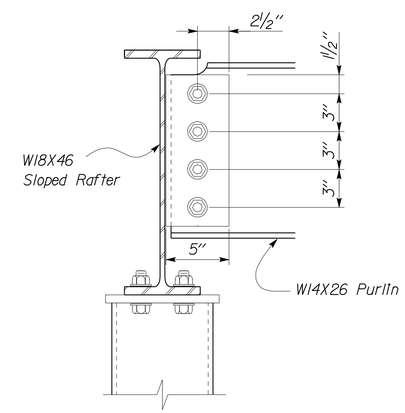

8 CONNECTION DETAIL
Scale 2" = 1' - 0"

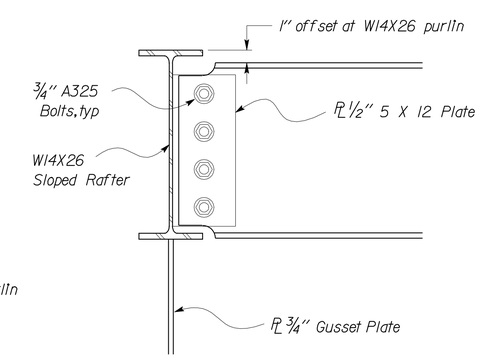

9 CONNECTION DETAIL
Scale 2" = 1' - 0"

DESIGN	BY Shervin Pahlavan	CHECKED Joseph Camilleri	
DETAILS	BY Andrew Lovato	CHECKED Shervin Pahlavan	
QUANTITIES	BY	CHECKED	

STATE OF CALIFORNIA
DEPARTMENT OF TRANSPORTATION

DIVISION OF ENGINEERING SERVICES
ARCHITECTURAL AND STRUCTURAL DESIGN

BRIDGE NO. 54-1216J
POST MILE 177.3/181.1
CVEF TRUCK INSPECTION BUILDING

MOUNTAIN PASS JPOE

ROOF FRAMING DETAILS I

SHEET ST7-97

TAEMWW Imperial Rev. 7/10

ORIGINAL SCALE IN INCHES FOR REDUCED PLANS 0 1 2 3

UNIT 3599
PROJECT NUMBER & PHASE 08000006281
EA 368501

DISREGARD PRINTS BEARING EARLIER REVISION DATES → 03-11-10 11-01-12 12-10-12

REVISION DATES (PRELIMINARY STAGE ONLY) SHEET OF

D:\user\Projects\A Expedite Process Folder\st7_097.dgn

26-FEB-2013 10:39

DIST.	COUNTY	ROUTE	POST MILES TOTAL PROJECT	SHEET NO.	TOTAL SHEETS
08	SBd	15	177.3/181.1	548	710

Shervin Pahlavan 11-27-12
REGISTERED CIVIL ENGINEER DATE

REGISTERED PROFESSIONAL ENGINEER
Shervin Pahlavan
No. 44463
Exp. 3-31-14
CIVIL
STATE OF CALIFORNIA

2-25-13
PLANS APPROVAL DATE

The State of California or its officers or agents shall not be responsible for the accuracy or completeness of electronic copies of this plan sheet.

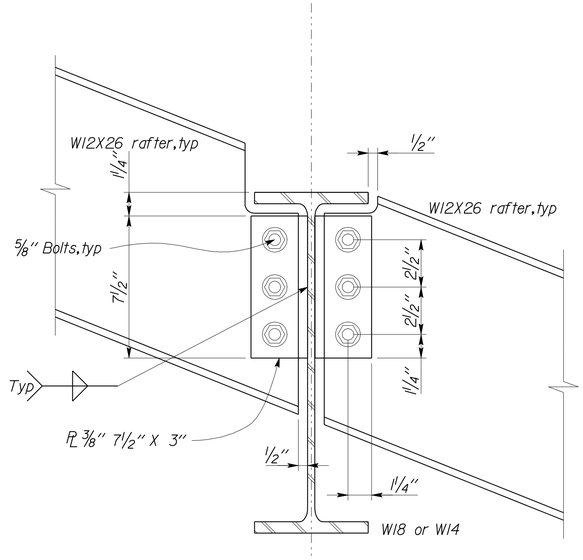

1 Rafter Connection Section
Scale 3" = 1' - 0"

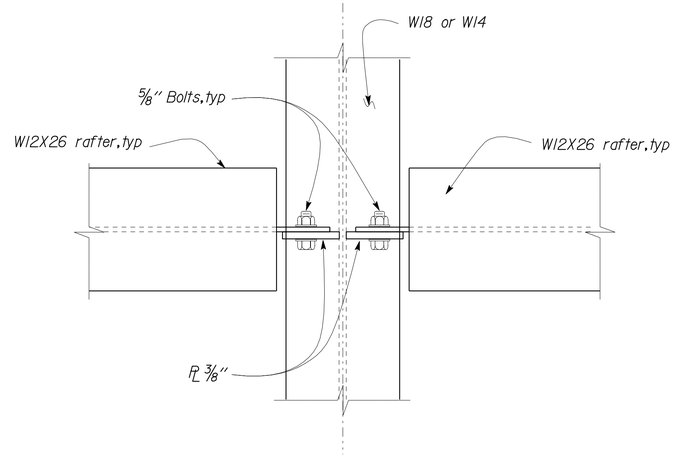

2 Rafter Connection Plan
Scale 3" = 1' - 0"

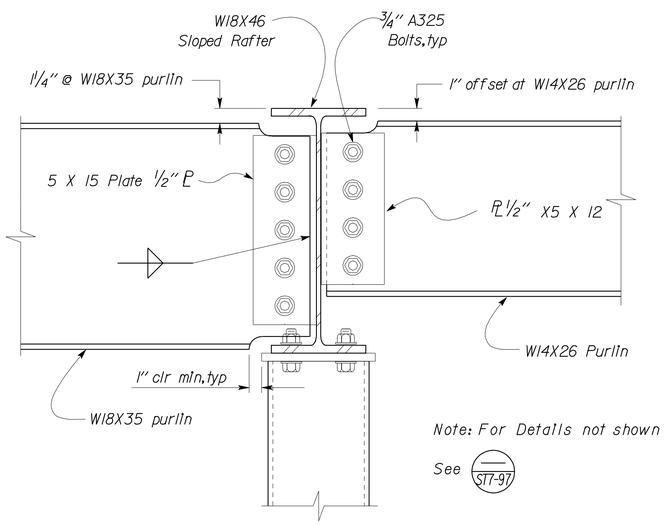

Note: For Details not shown
See ST7-97

3 CONNECTION DETAIL
Scale 2" = 1' - 0"

DESIGN	BY Shervin Pahlavan	CHECKED Joseph Camilleri	
DETAILS	BY Andrew Lovato	CHECKED Shervin Pahlavan	
QUANTITIES	BY	CHECKED	

STATE OF CALIFORNIA
DEPARTMENT OF TRANSPORTATION

DIVISION OF ENGINEERING SERVICES
ARCHITECTURAL AND STRUCTURAL DESIGN

BRIDGE NO. 54-1216J
POST MILE 177.3/181.1
CVEF TRUCK INSPECTION BUILDING

MOUNTAIN PASS JPOE
ROOF FRAMING DETAILS 2

SHEET ST7-98

TAEMWW Imperial Rev. 7/10

ORIGINAL SCALE IN INCHES FOR REDUCED PLANS 0 1 2 3

UNIT 3599
PROJECT NUMBER & PHASE 08000006281
EA 368501

DISREGARD PRINTS BEARING EARLIER REVISION DATES
REVISION DATES (PRELIMINARY STAGE ONLY) 03-11-10 11-01-12 12-10-12
SHEET OF

D:\user\Projects\A Expedite Process Folder\st7_098.dgn

26-FEB-2013 10:39

DIST.	COUNTY	ROUTE	POST MILES TOTAL PROJECT	SHEET NO.	TOTAL SHEETS
08	SBd	15	177.3/181.1	549	710

Shervin Pahlavan 11-27-12
REGISTERED CIVIL ENGINEER DATE

REGISTERED PROFESSIONAL ENGINEER Shervin Pahlavan No. 44463 Exp. 3-31-14 CIVIL STATE OF CALIFORNIA

2-25-13
PLANS APPROVAL DATE

The State of California or its officers or agents shall not be responsible for the accuracy or completeness of electronic copies of this plan sheet.

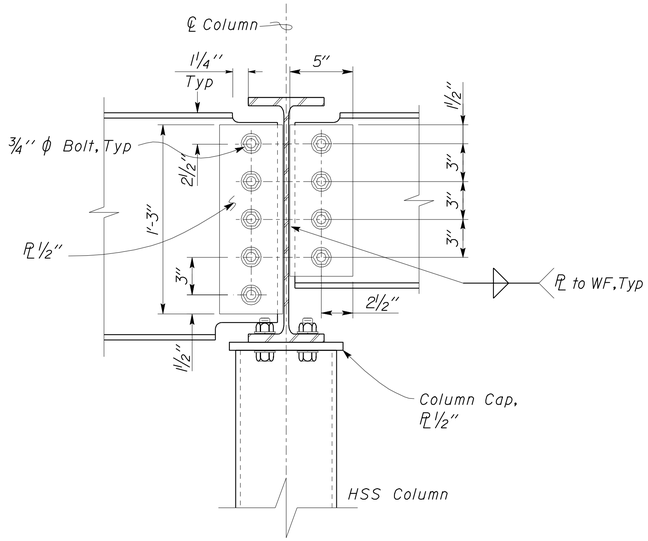

5 COLUMN TO FRAME LINK
Scale 2" = 1' - 0"

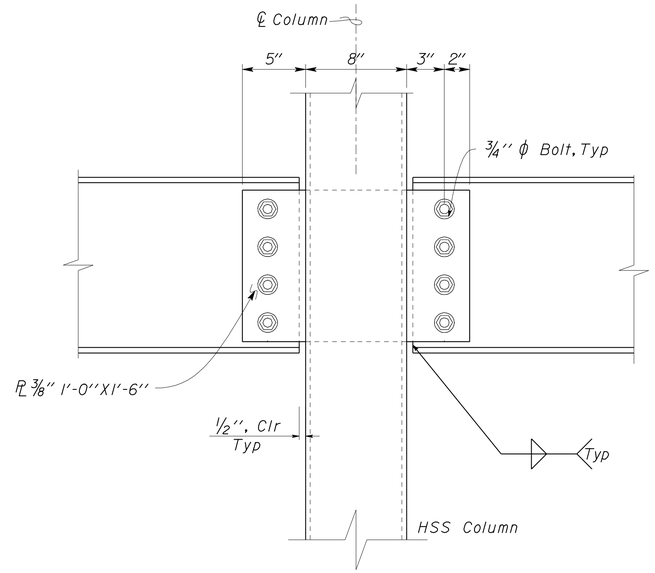

6 COLUMN TO FRAME LINK
Scale 2" = 1' - 0"

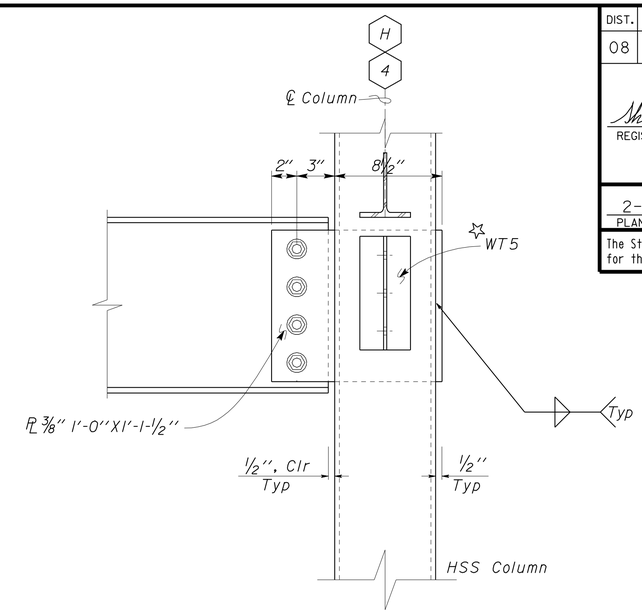

☆ Note
For WT5 connection details see 1 / ST7-101.2

7 COLUMN TO FRAME LINK
Scale 2" = 1' - 0"

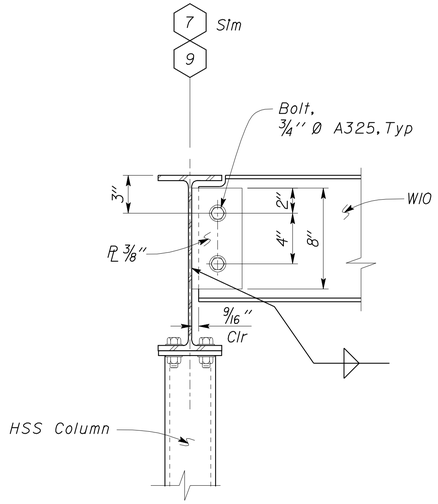

1 Beam Connection
Scale 2" = 1' - 0"

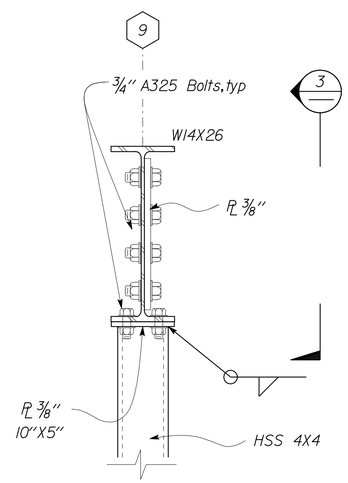

2 Beam Connection
Scale 2" = 1' - 0"

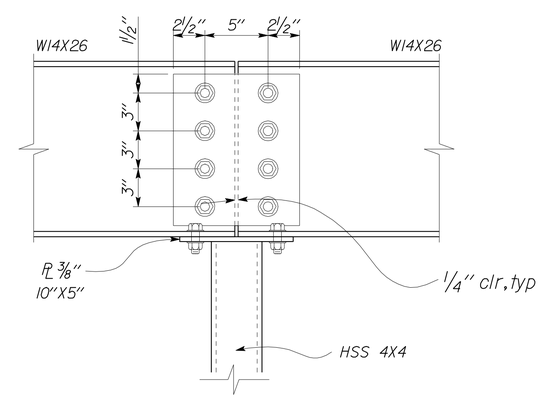

3 Beam Connection
Scale 2" = 1' - 0"

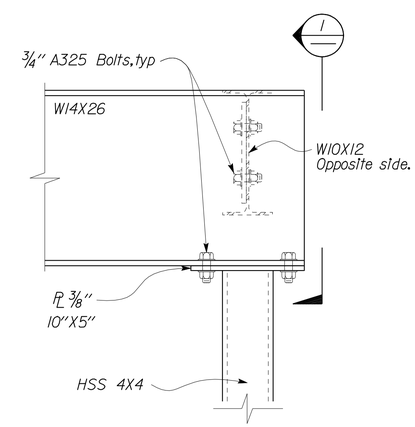

4 Beam Connection
Scale 2" = 1' - 0"

DESIGN	BY Shervin Pahlavan	CHECKED Joseph Camilleri	
DETAILS	BY Andrew Lovato	CHECKED Shervin Pahlavan	
QUANTITIES	BY	CHECKED	

STATE OF CALIFORNIA
DEPARTMENT OF TRANSPORTATION

DIVISION OF ENGINEERING SERVICES
ARCHITECTURAL AND STRUCTURAL DESIGN

UNIT 3599
PROJECT NUMBER & PHASE 08000006281
EA 368501

BRIDGE NO. 54-1216J
POST MILE 177.3/181.1

CVEF TRUCK INSPECTION BUILDING

MOUNTAIN PASS JPOE

STEEL FRAMING DETAILS I

SHEET ST7-99

TAEMWW Imperial Rev. 7/10

ORIGINAL SCALE IN INCHES FOR REDUCED PLANS 0 1 2 3

DISREGARD PRINTS BEARING EARLIER REVISION DATES → REVISION DATES (PRELIMINARY STAGE ONLY) 09-09-10 11-01-12 12-10-12 SHEET OF

26-FEB-2013 10:39
D:\user\Projects\A Expedite Process Folder\st7_099.dgn

DIST.	COUNTY	ROUTE	POST MILES TOTAL PROJECT	SHEET NO.	TOTAL SHEETS
08	SBd	15	177.3/181.1	550	710

Shervin Pahlavan 11-27-12
REGISTERED CIVIL ENGINEER DATE

REGISTERED PROFESSIONAL ENGINEER Shervin Pahlavan No. 44463 Exp. 3-31-14 CIVIL STATE OF CALIFORNIA

2-25-13
PLANS APPROVAL DATE

The State of California or its officers or agents shall not be responsible for the accuracy or completeness of electronic copies of this plan sheet.

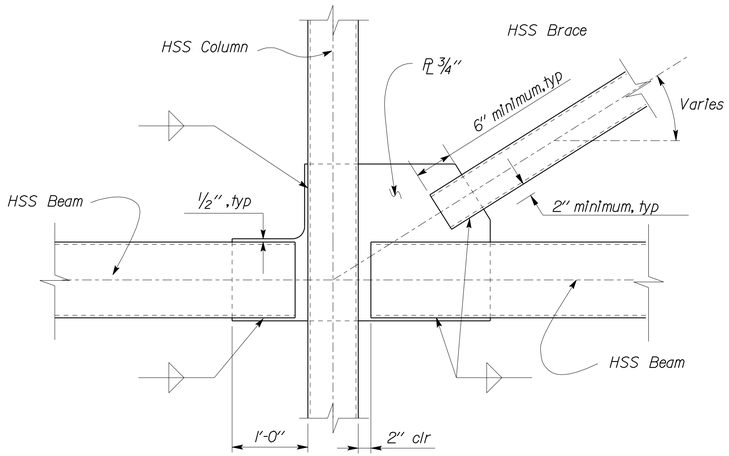

1 BRACED FRAME DETAILS
Scale 1" = 1'-0"

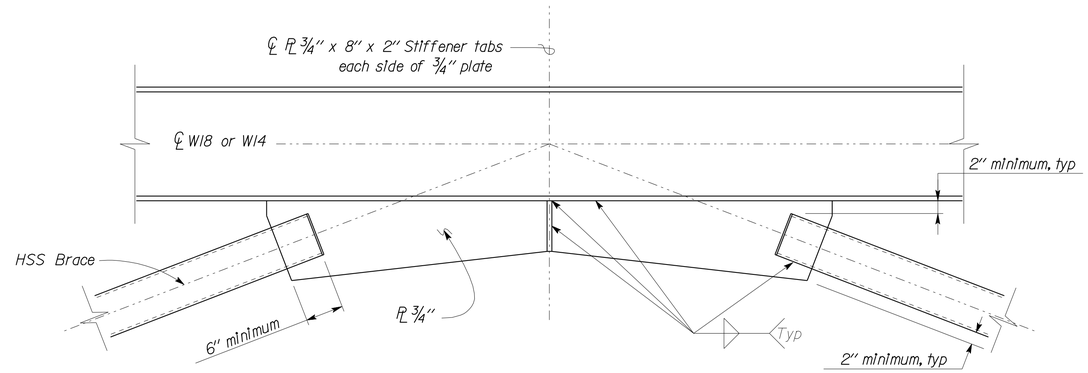

2 BRACED FRAME DETAILS
Scale 1" = 1'-0"

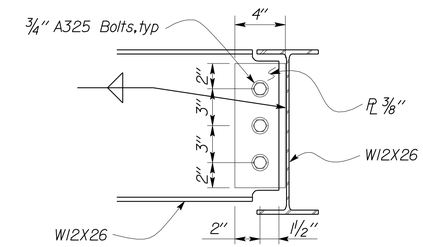

6 Beam Connection
Scale 2" = 1'-0"

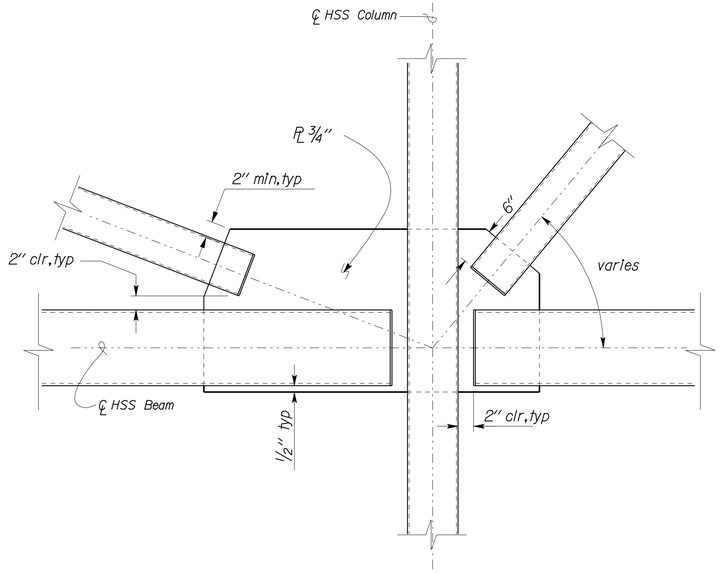

3 BRACED FRAME DETAILS
Scale 1" = 1'-0"

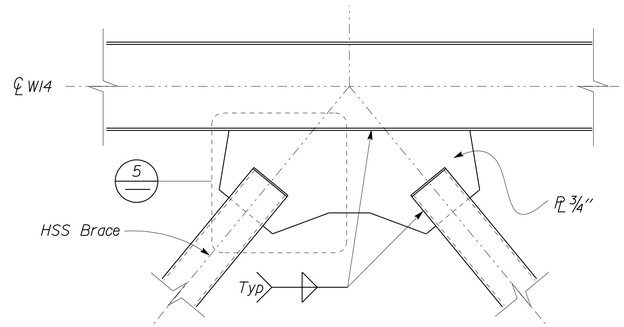

4 BRACED FRAME DETAILS
Scale 1" = 1'-0"

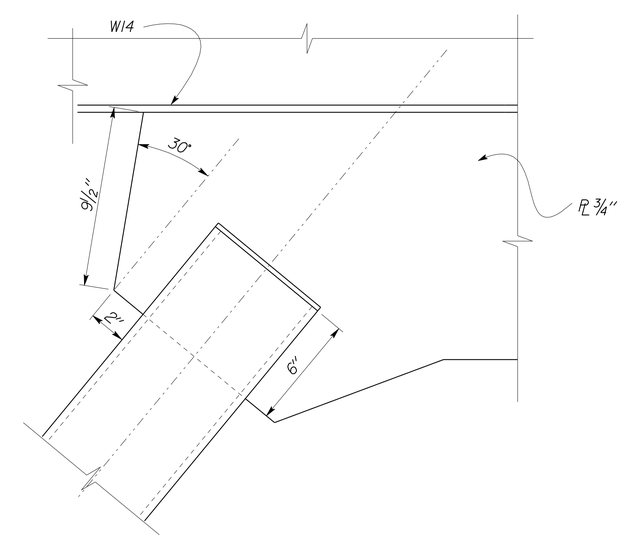

5 GUSSET PLATE DETAILS
Scale 3" = 1'-0"

	BY	CHECKED
DESIGN	Shervin Pahlavan	Joseph Camilleri
DETAILS	Andrew Lovato	Shervin Pahlavan
QUANTITIES		

STATE OF CALIFORNIA
DEPARTMENT OF TRANSPORTATION

DIVISION OF ENGINEERING SERVICES
ARCHITECTURAL AND STRUCTURAL DESIGN

BRIDGE NO. 54-1216J
POST MILE 177.3/181.1

CVEF TRUCK INSPECTION BUILDING

MOUNTAIN PASS JPOE

STEEL FRAMING DETAILS 2

SHEET ST7-100

TAEMWW Imperial Rev. 7/10

ORIGINAL SCALE IN INCHES FOR REDUCED PLANS 0 1 2 3

UNIT 3599
PROJECT NUMBER & PHASE 08000006281
EA 368501

DISREGARD PRINTS BEARING EARLIER REVISION DATES → 03-11-10 11-01-12 12-10-12

REVISION DATES (PRELIMINARY STAGE ONLY) SHEET OF

D:\user\Projects\A Expedite Process Folder\st7_100.dgn

26-FEB-2013 10:39

DIST.	COUNTY	ROUTE	POST MILES TOTAL PROJECT	SHEET NO.	TOTAL SHEETS
08	SBd	15	177.3/181.1	551	710

Shervin Pahlavan 11-27-12
REGISTERED CIVIL ENGINEER DATE

REGISTERED PROFESSIONAL ENGINEER Shervin Pahlavan No. 44463 Exp. 3-31-14 CIVIL STATE OF CALIFORNIA

2-25-13
PLANS APPROVAL DATE

The State of California or its officers or agents shall not be responsible for the accuracy or completeness of electronic copies of this plan sheet.

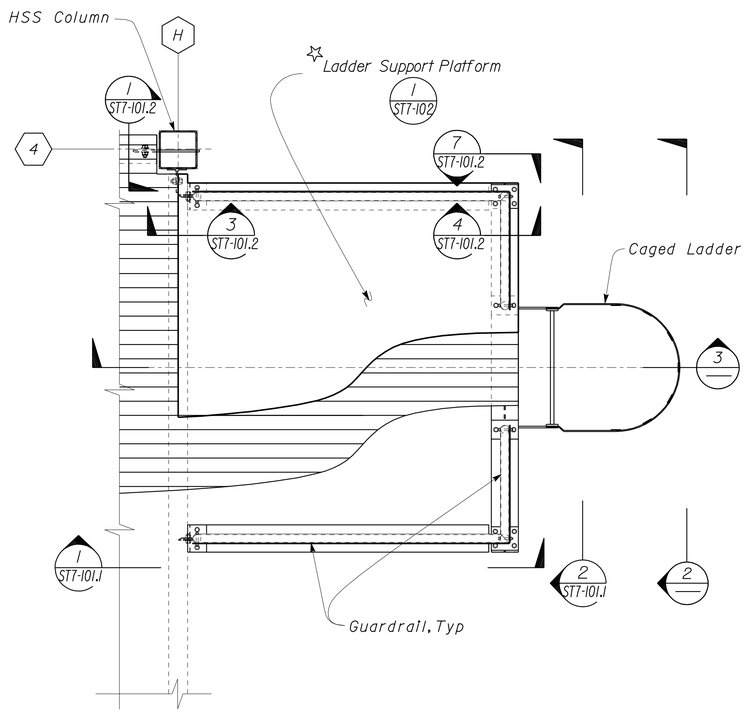

☆ Notes
1. Notch Ladder Support Platform Steel Deck, and SPS as required; to clear the Guardrail Posts.
2. SPS 15/32" CDX Exposure 1 with 32/16 Span Rating. #10 SDSTS @ 12, boundry and field.
3. For Limits of SPS see Architectural Plans.

1 CAGED LADDER PLATFORM FRAME PLAN
Scale 3/4" = 1'-0"

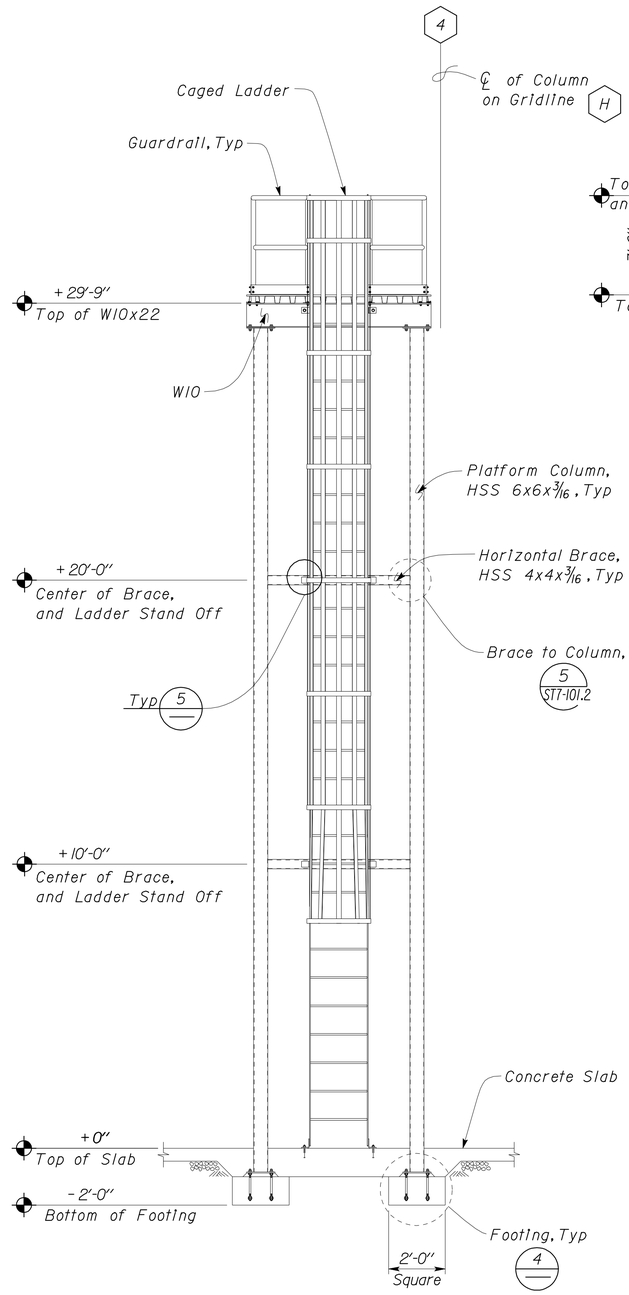

2 CAGED LADDER SUPPORT ELEVATION
Scale 3/8" = 1'-0"

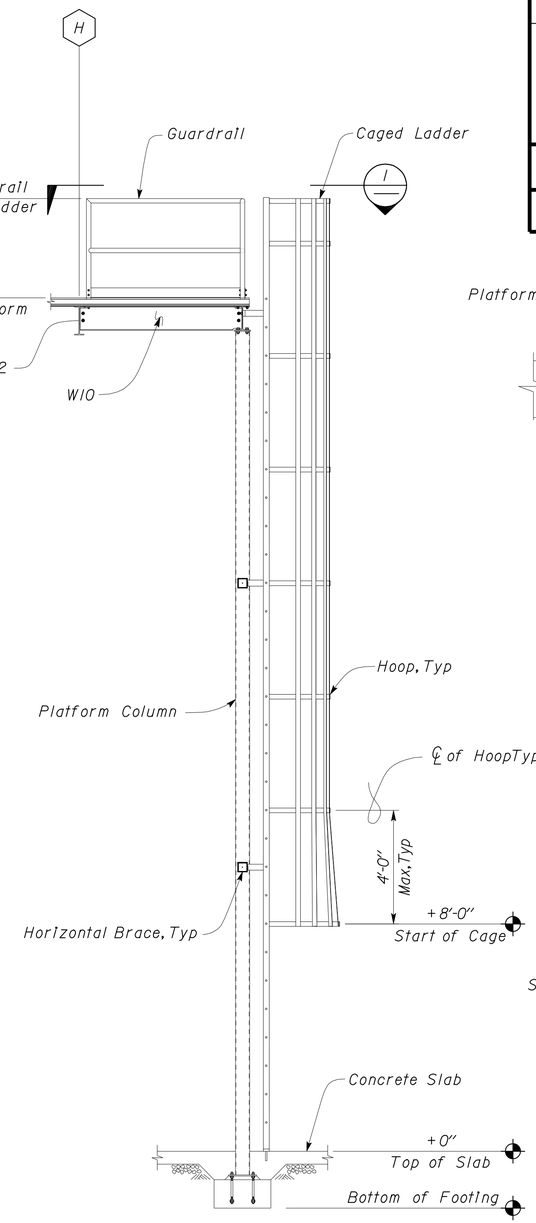

3 CAGED LADDER SUPPORT SECTION
Scale 3/8" = 1'-0"

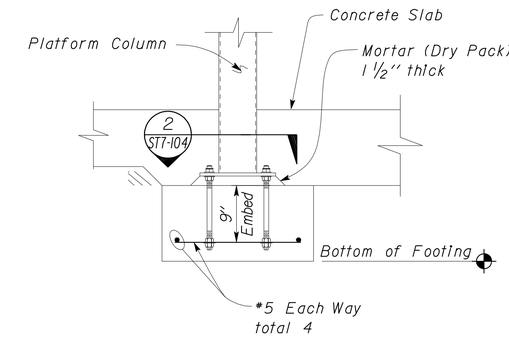

4 PLATFORM FOOTING DETAIL
Scale 1" = 1'-0"

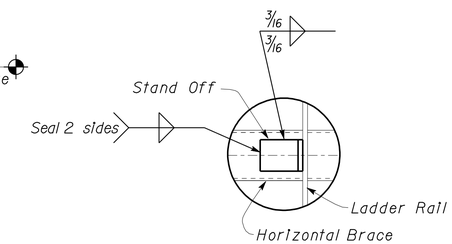

5 WELDED LADDER STAND OFF
No Scale

DESIGN	BY Shervin Pahlavan	CHECKED Joseph Camilleri	
DETAILS	BY Andrew Lovato	CHECKED Shervin Pahlavan	
QUANTITIES	BY	CHECKED	

STATE OF CALIFORNIA
DEPARTMENT OF TRANSPORTATION

DIVISION OF ENGINEERING SERVICES
ARCHITECTURAL AND STRUCTURAL DESIGN

BRIDGE NO. 54-1216J
POST MILE 177.3/181.1
CVEF TRUCK INSPECTION BUILDING

MOUNTAIN PASS JPOE
CAGED LADDER SUPPORT PLAN, ELEVATION, AND SECTION

SHEET ST7-101

TAEMWW Imperial Rev. 7/10

ORIGINAL SCALE IN INCHES FOR REDUCED PLANS 0 1 2 3

UNIT 3599
PROJECT NUMBER & PHASE 08000006281
EA 368501

DISREGARD PRINTS BEARING EARLIER REVISION DATES → 09-13-10 11-01-12 12-10-12

REVISION DATES (PRELIMINARY STAGE ONLY) SHEET OF

26-FEB-2013 11:29
D:\user\Projects\A Expedite Process Folder\st7_101.dgn

DIST.	COUNTY	ROUTE	POST MILES TOTAL PROJECT	SHEET NO.	TOTAL SHEETS
08	SBd	15	177.3/181.1	552	710

Shervin Pahlavan 11-27-12
REGISTERED CIVIL ENGINEER DATE

REGISTERED PROFESSIONAL ENGINEER Shervin Pahlavan No. 44463 Exp. 3-31-14 CIVIL STATE OF CALIFORNIA

2-25-13
PLANS APPROVAL DATE

The State of California or its officers or agents shall not be responsible for the accuracy or completeness of electronic copies of this plan sheet.

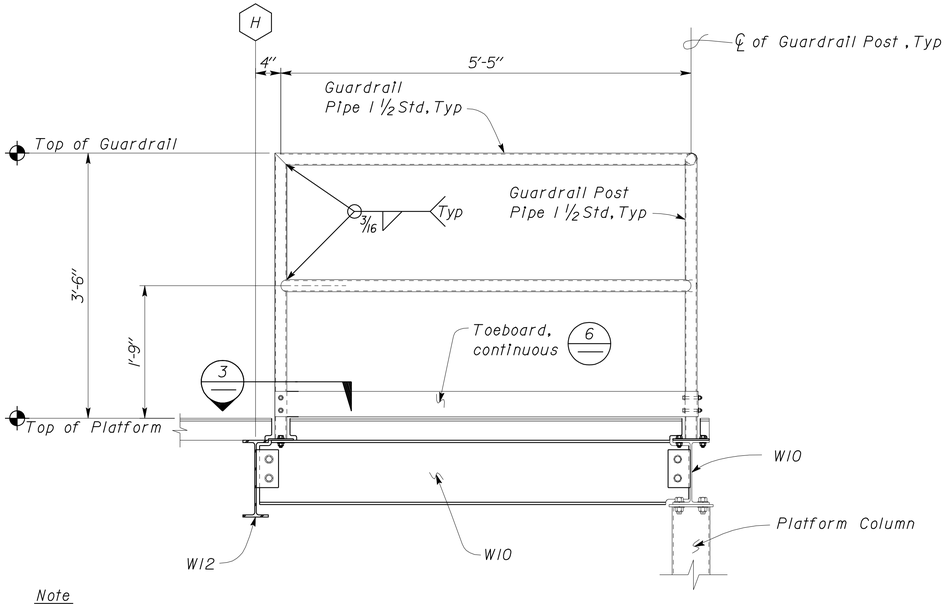

Note
Notch Steel Deck and SPS approximately 1/2" from Guardrail Post and Post Base, as required.

1 GUARDRAIL SIDE ELEVATION
Scale 1" = 1'-0"

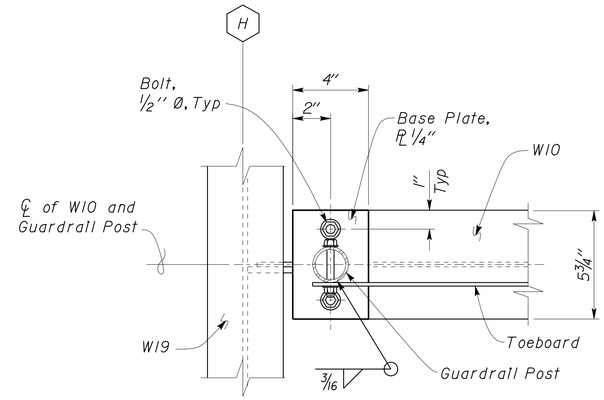

Note
Steel Deck and SPS not shown.

3 POST BASE 'A' PLAN
Scale 3" = 1'-0"

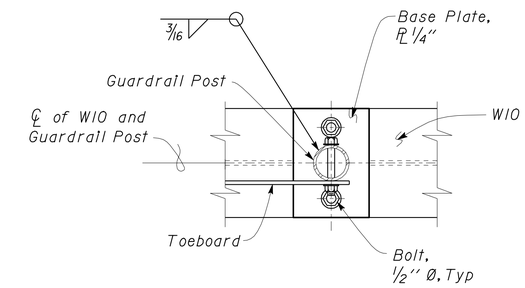

Notes
1. Steel Deck and SPS not shown.
2. For dimensions not shown 3

5 POST BASE 'C' PLAN
Scale 3" = 1'-0"

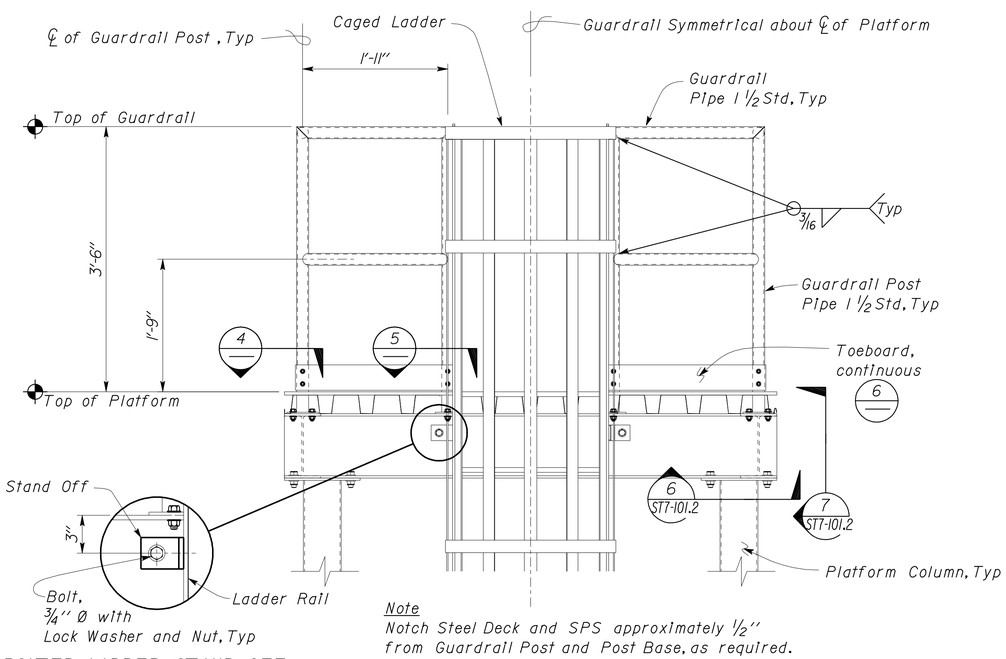

BOLTED LADDER STAND OFF

Note
Notch Steel Deck and SPS approximately 1/2" from Guardrail Post and Post Base, as required.

2 GUARDRAIL FRONT ELEVATION
Scale 1" = 1'-0"

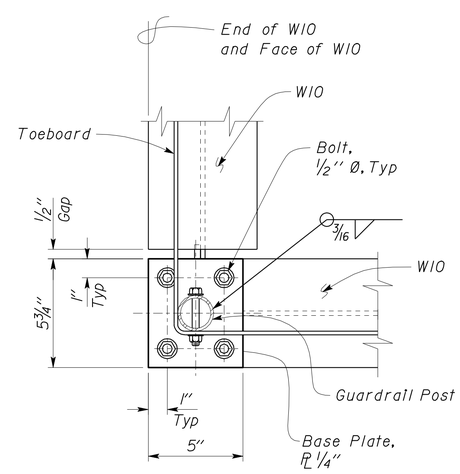

Note
Steel Deck and SPS not shown.

4 POST BASE 'B' PLAN
Scale 3" = 1'-0"

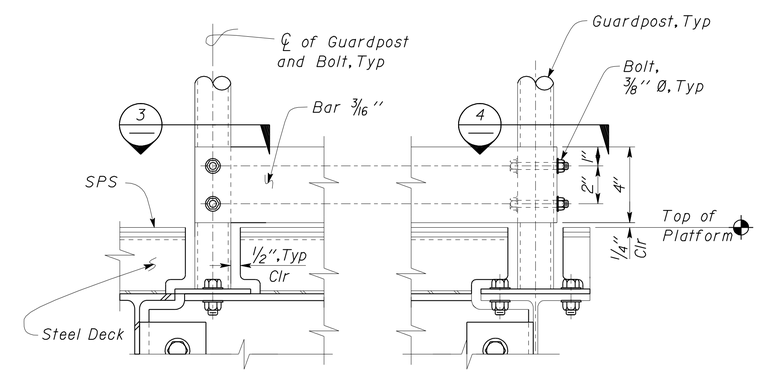

6 TOEBOARD DETAIL
Scale 3" = 1'-0"

DESIGN	BY Shervin Pahlavan	CHECKED Joseph Camilleri	
DETAILS	BY Andrew Lovato	CHECKED Shervin Pahlavan	
QUANTITIES	BY	CHECKED	

STATE OF CALIFORNIA
DEPARTMENT OF TRANSPORTATION

DIVISION OF ENGINEERING SERVICES
ARCHITECTURAL AND STRUCTURAL DESIGN

BRIDGE NO. 54-1216J
POST MILE 177.3/181.1

CVEF TRUCK INSPECTION BUILDING

MOUNTAIN PASS JPOE
CAGED LADDER SUPPORT PLATFORM GUARDRAIL DETAILS

SHEET ST7-101.1

TAEMWW Imperial Rev. 7/10

ORIGINAL SCALE IN INCHES FOR REDUCED PLANS 0 1 2 3

UNIT 3599
PROJECT NUMBER & PHASE 08000006281
EA 368501

DISREGARD PRINTS BEARING EARLIER REVISION DATES → 09-13-10 11-01-12 12-10-12

REVISION DATES (PRELIMINARY STAGE ONLY) SHEET OF

D:\user\Projects\A Expedite Process Folder\st7_101_1.dgn

26-FEB-2013 11:29

DIST.	COUNTY	ROUTE	POST MILES TOTAL PROJECT	SHEET NO.	TOTAL SHEETS
08	SBd	15	177.3/181.1	553	710

Shervin Pahlavan 11-27-12
REGISTERED CIVIL ENGINEER DATE

REGISTERED PROFESSIONAL ENGINEER Shervin Pahlavan No. 44463 Exp. 3-31-14 CIVIL STATE OF CALIFORNIA

2-25-13
PLANS APPROVAL DATE

The State of California or its officers or agents shall not be responsible for the accuracy or completeness of electronic copies of this plan sheet.

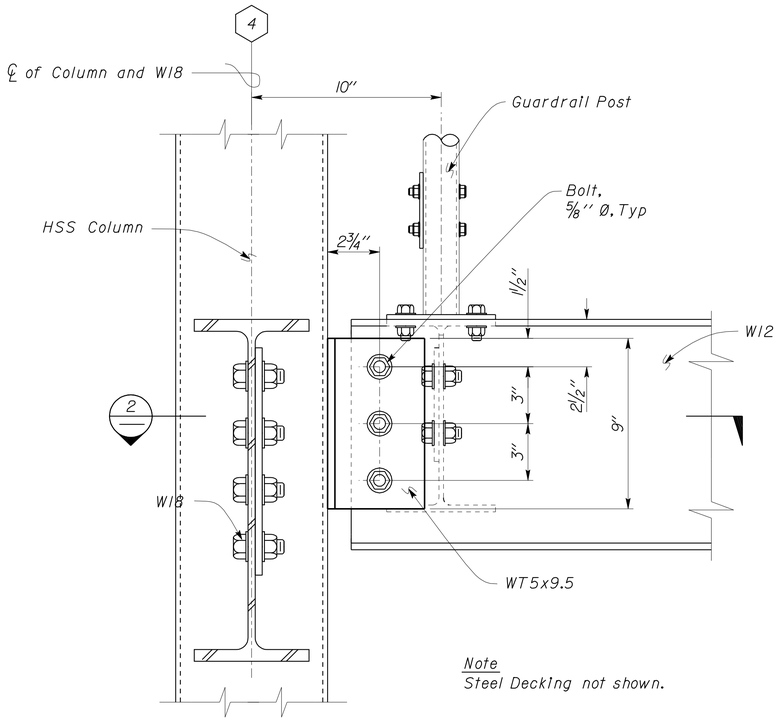

Note
Steel Decking not shown.

1 WI2 TO HSS COLUMN DETAIL
Scale 3" = 1'-0"

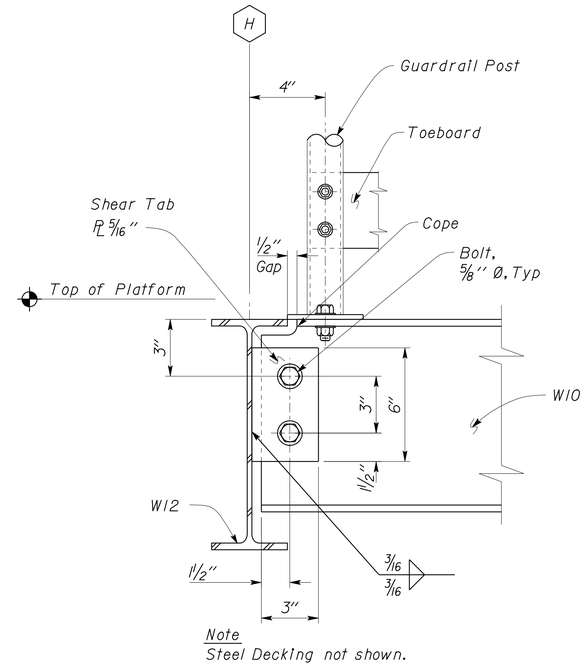

Note
Steel Decking not shown.

3 PLATFORM SUPPORT TO WI2
Scale 3" = 1'-0"

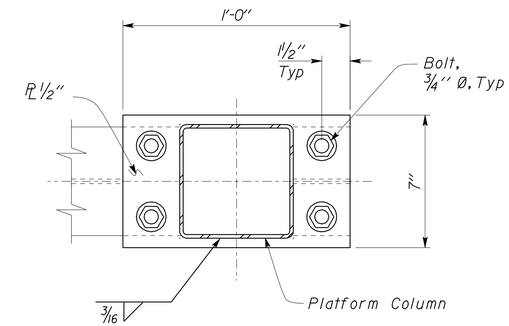

6 PLATFORM COLUMN CAP PLAN
Scale 3" = 1'-0"

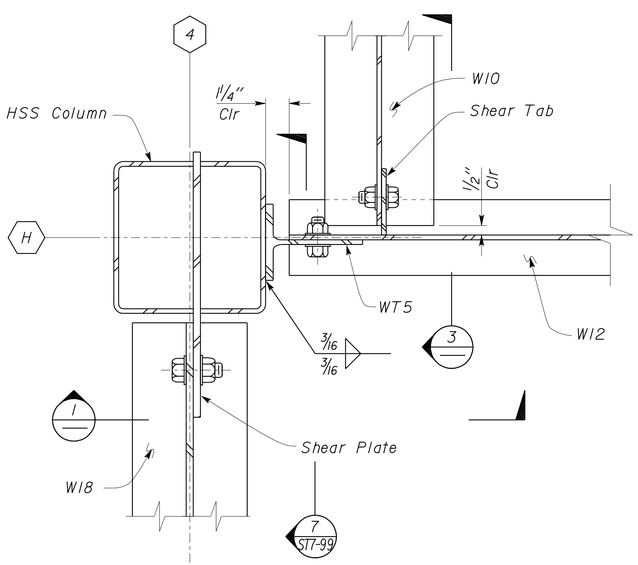

2 WI8 AND WI0 TO HSS COLUMN LAYOUT
Scale 3" = 1'-0"

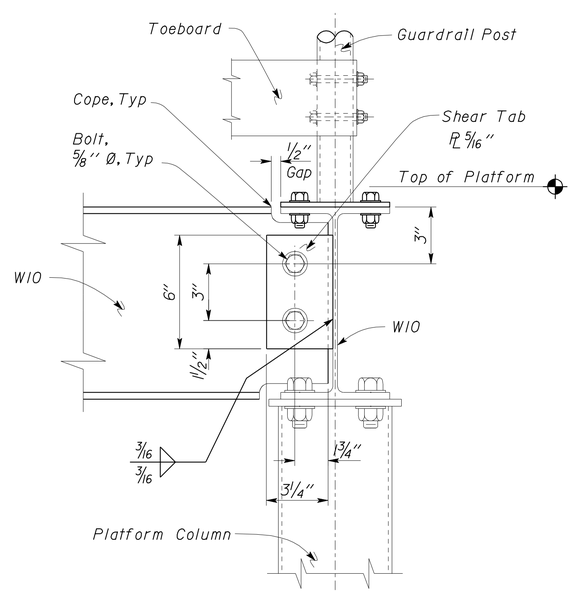

4 WI0 TO WI0 CONNECTION
Scale 3" = 1'-0"

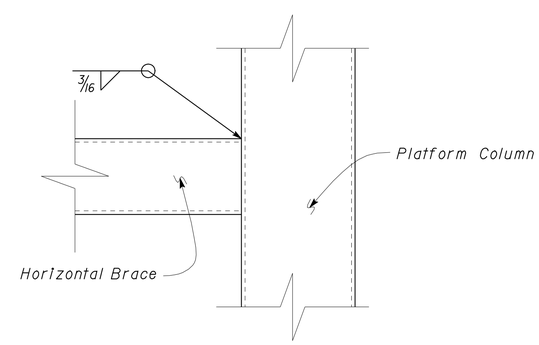

5 HORIZONTAL BRACE TO PLATFORM COLUMN DETAIL
Scale 2" = 1'-0"

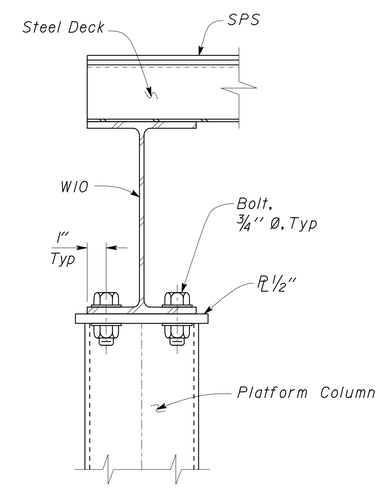

7 PLATFORM COLUMN CAP ELEVATION
Scale 3" = 1'-0"

	BY	CHECKED
DESIGN	Shervin Pahlavan	Joseph Camilleri
DETAILS	Andrew Lovato	Shervin Pahlavan
QUANTITIES		

STATE OF CALIFORNIA
DEPARTMENT OF TRANSPORTATION

DIVISION OF ENGINEERING SERVICES
ARCHITECTURAL AND STRUCTURAL DESIGN

BRIDGE NO. 54-1216J
POST MILE 177.3/181.1

CVEF TRUCK INSPECTION BUILDING

MOUNTAIN PASS JPOE

CAGED LADDER SUPPORT
PLATFORM FRAMING DETAILS

SHEET ST7-101.2

TAEMWW Imperial Rev. 7/10

ORIGINAL SCALE IN INCHES FOR REDUCED PLANS 0 1 2 3

UNIT 3599
PROJECT NUMBER & PHASE 08000006281
EA 368501

DISREGARD PRINTS BEARING EARLIER REVISION DATES → 09-09-10 11-01-12 12-10-12

REVISION DATES (PRELIMINARY STAGE ONLY) SHEET OF

D:\user\Projects\A Expedite Process Folder\st7_101_2.dgn

26-FEB-2013 11:29

DIST.	COUNTY	ROUTE	POST MILES TOTAL PROJECT	SHEET NO.	TOTAL SHEETS
08	SBd	15	177.3/181.1	554	710

Shervin Pahlavan 11-27-12
REGISTERED CIVIL ENGINEER DATE

REGISTERED PROFESSIONAL ENGINEER Shervin Pahlavan No. 44463 Exp. 3-31-14 CIVIL STATE OF CALIFORNIA

2-25-13
PLANS APPROVAL DATE

The State of California or its officers or agents shall not be responsible for the accuracy or completeness of electronic copies of this plan sheet.

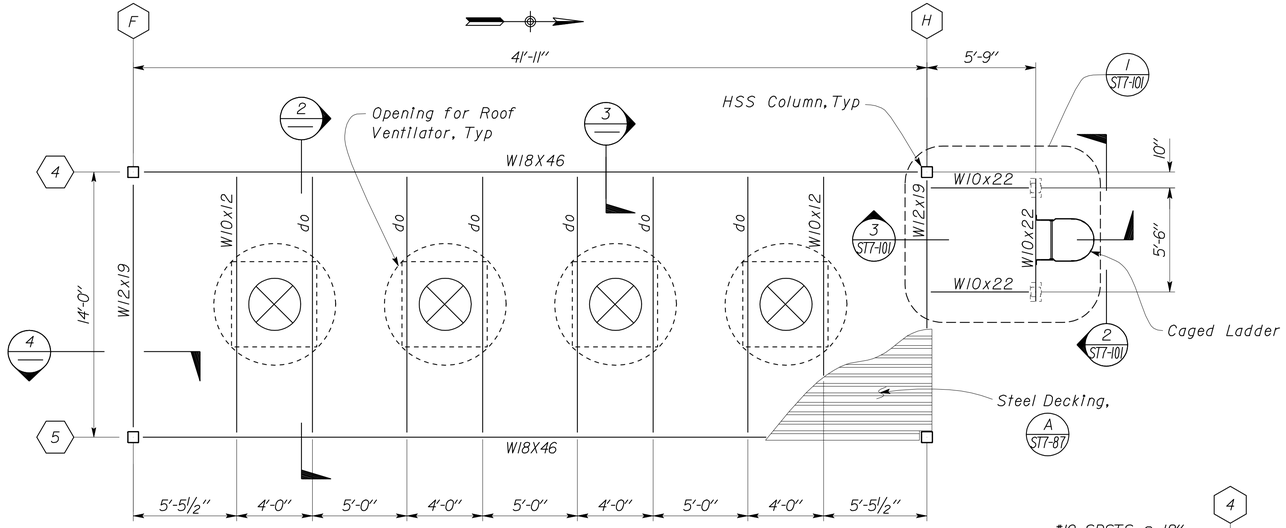

1 MECHANICAL WELL FLOOR FRAMING PLAN
Scale 1/4" = 1' - 0"

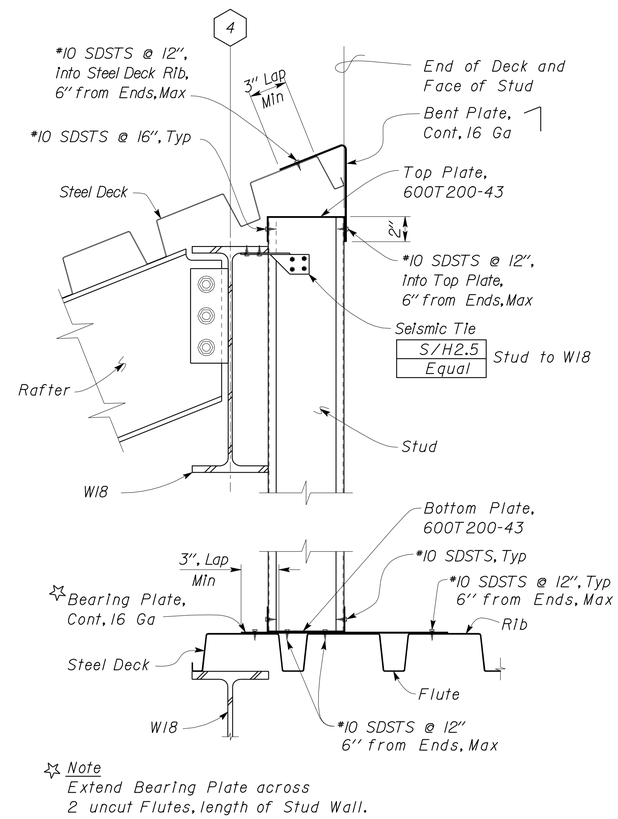

Note
Extend Bearing Plate across 2 uncut Flutes, length of Stud Wall.

3 PARTIAL ROOF SECTION
Scale 2" = 1' - 0"

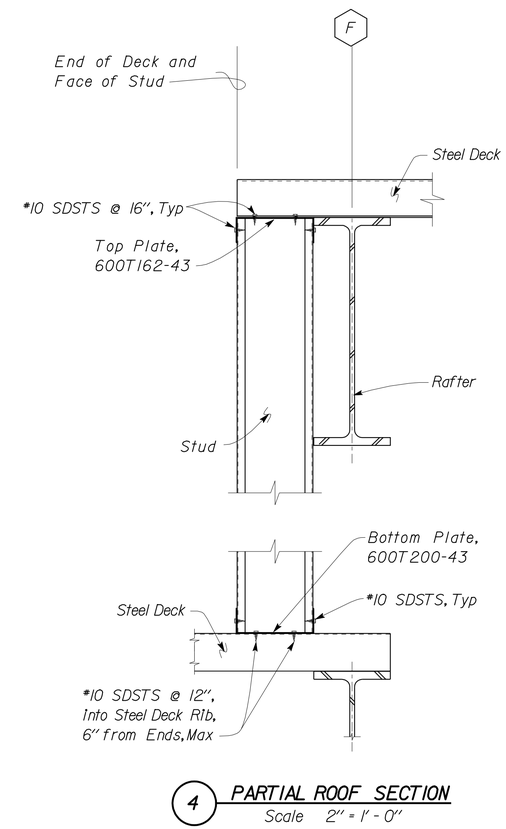

4 PARTIAL ROOF SECTION
Scale 2" = 1' - 0"

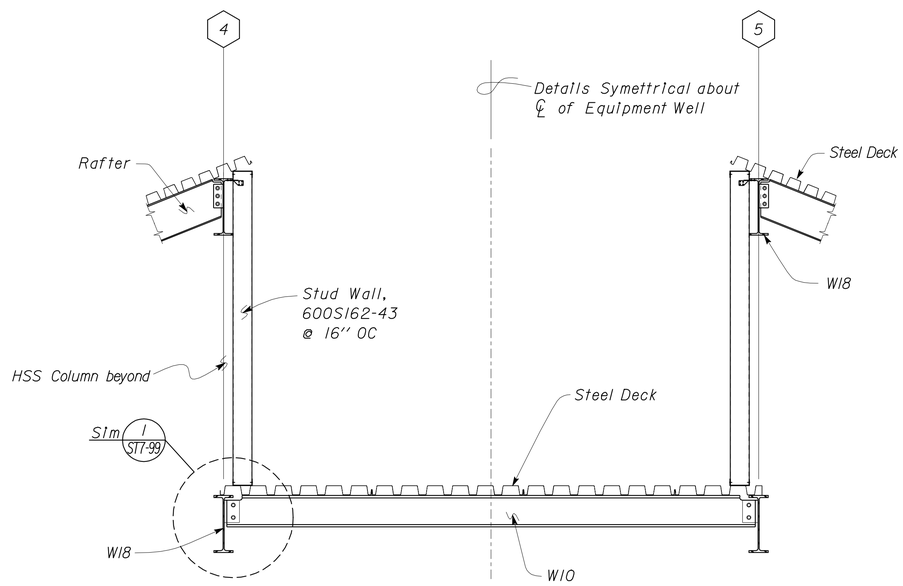

2 MECHANICAL WELL SECTION
Scale 1/2" = 1' - 0"

DESIGN	BY Shervin Pahlavan	CHECKED Joseph Camilleri	
DETAILS	BY Andrew Lovato	CHECKED Shervin Pahlavan	
QUANTITIES	BY	CHECKED	

STATE OF CALIFORNIA
DEPARTMENT OF TRANSPORTATION

DIVISION OF ENGINEERING SERVICES
ARCHITECTURAL AND STRUCTURAL DESIGN

BRIDGE NO. 54-1216J
POST MILE 177.3/181.1

MOUNTAIN PASS JPOE
CVEF TRUCK INSPECTION BUILDING
MECHANICAL WELL DETAILS

SHEET ST7-102

TAEMWW Imperial Rev. 7/10

ORIGINAL SCALE IN INCHES FOR REDUCED PLANS 0 1 2 3

UNIT 3599
PROJECT NUMBER & PHASE 08000006281
EA 368501

DISREGARD PRINTS BEARING EARLIER REVISION DATES → 09-13-10 11-01-12 12-10-12

REVISION DATES (PRELIMINARY STAGE ONLY) SHEET OF

26-FEB-2013 11:29
D:\user\Projects\A Expedite Process Folder\st7_102.dgn

DIST.	COUNTY	ROUTE	POST MILES TOTAL PROJECT	SHEET NO.	TOTAL SHEETS
08	SBd	15	177.3/181.1	555	710

Shervin Pahlavan 11-27-12
REGISTERED CIVIL ENGINEER DATE

REGISTERED PROFESSIONAL ENGINEER
Shervin Pahlavan
No. 44463
Exp. 3-31-14
CIVIL
STATE OF CALIFORNIA

2-25-13
PLANS APPROVAL DATE

The State of California or its officers or agents shall not be responsible for the accuracy or completeness of electronic copies of this plan sheet.

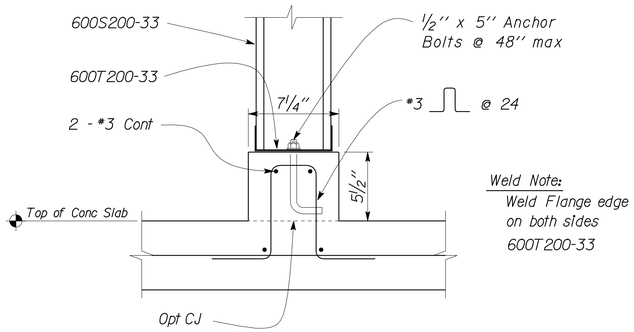

4 CURB SECTION
No Scale

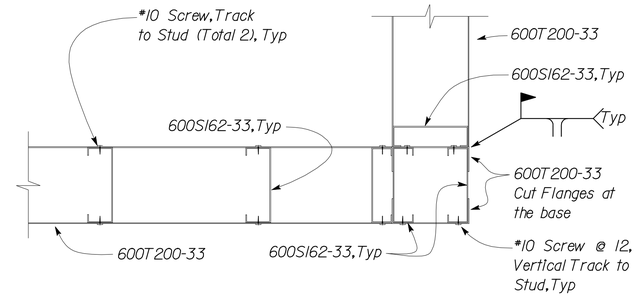

3 WALL FRAMING PLAN
No Scale

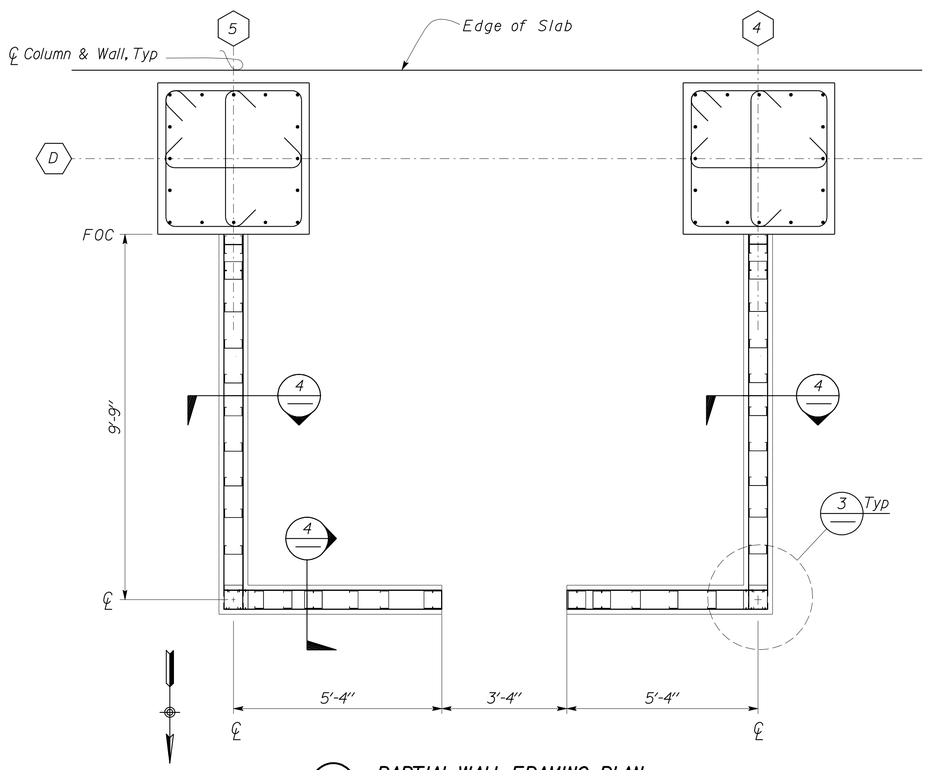

1 PARTIAL WALL FRAMING PLAN
No Scale

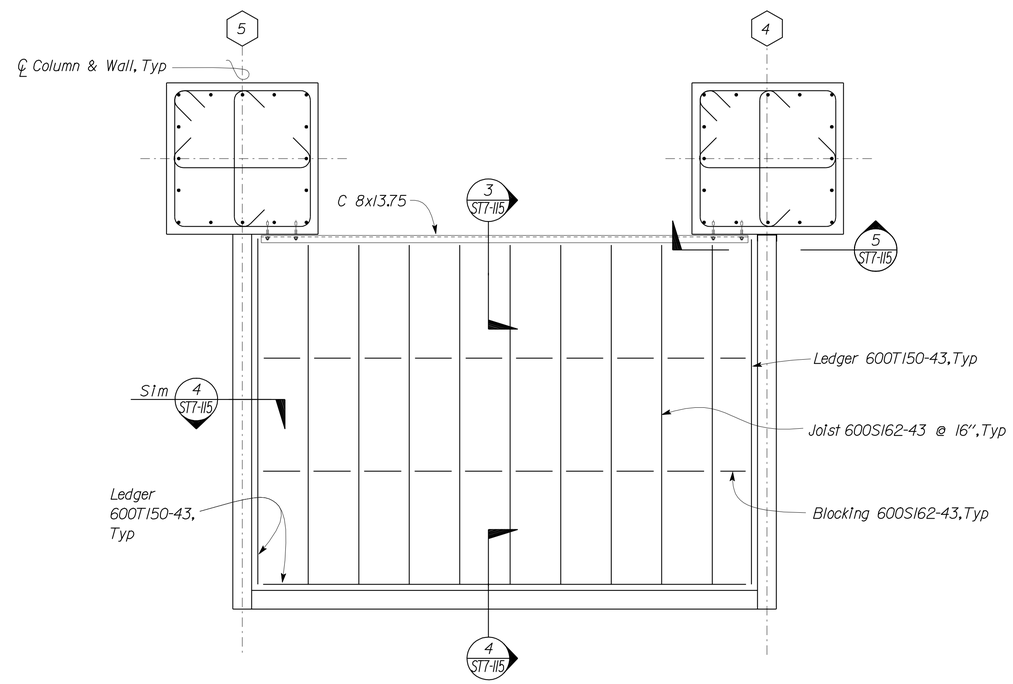

2 CEILING FRAMING PLAN
No Scale

DESIGN	BY Shervin Pahlavan	CHECKED Joseph Camilleri	
DETAILS	BY Andrew Lovato	CHECKED Shervin Pahlavan	
QUANTITIES	BY	CHECKED	

STATE OF CALIFORNIA
DEPARTMENT OF TRANSPORTATION

DIVISION OF ENGINEERING SERVICES
ARCHITECTURAL AND STRUCTURAL DESIGN

BRIDGE NO. 54-1216J
POST MILE 177.3/181.1

CVEF TRUCK INSPECTION BUILDING

MOUNTAIN PASS JPOE

OFFICE DETAILS

SHEET ST7-103

TAEMWW Imperial Rev. 7/10

ORIGINAL SCALE IN INCHES FOR REDUCED PLANS 0 1 2 3

UNIT 3599
PROJECT NUMBER & PHASE 08000006281
EA 368501

DISREGARD PRINTS BEARING EARLIER REVISION DATES →

REVISION DATES (PRELIMINARY STAGE ONLY) 07-19-10 11-01-12 12-10-12

SHEET OF

D:\user\Projects\A Expedite Process Folder\st7_103.dgn

26-FEB-2013 11:30

DIST.	COUNTY	ROUTE	POST MILES TOTAL PROJECT	SHEET NO.	TOTAL SHEETS
08	SBd	15	177.3/181.1	556	710

Shervin Pahlavan 11-27-12
REGISTERED CIVIL ENGINEER DATE

REGISTERED PROFESSIONAL ENGINEER
Shervin Pahlavan
No. 44463
Exp. 3-31-14
CIVIL
STATE OF CALIFORNIA

2-25-13
PLANS APPROVAL DATE

The State of California or its officers or agents shall not be responsible for the accuracy or completeness of electronic copies of this plan sheet.

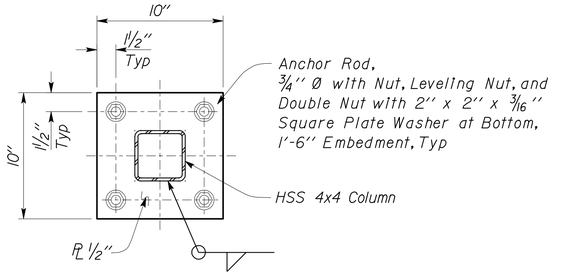

1 HSS 4x4 COLUMN BASEPLATE
Scale 2" = 1' - 0"

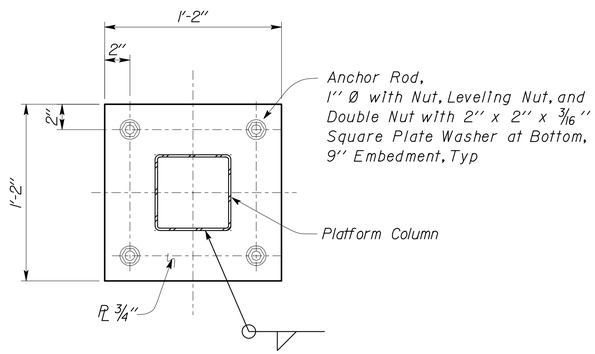

2 HSS 6x6 COLUMN BASEPLATE
Scale 2" = 1' - 0"

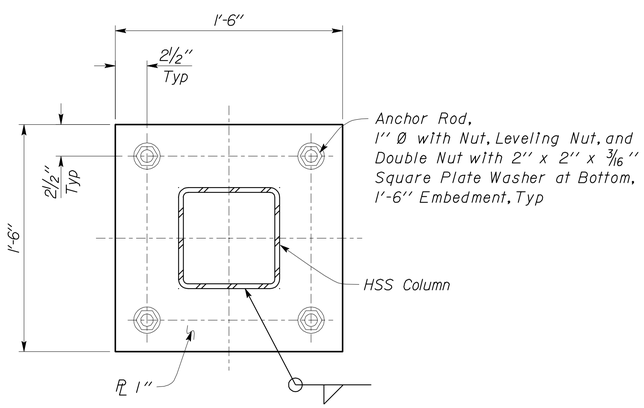

3 HSS 8x8 COLUMN BASEPLATE
Scale 2" = 1' - 0"

DESIGN	BY Shervin Pahlavan	CHECKED Joseph Camilleri
DETAILS	BY Andrew Lovato	CHECKED Shervin Pahlavan
QUANTITIES	BY	CHECKED

STATE OF CALIFORNIA
DEPARTMENT OF TRANSPORTATION

DIVISION OF ENGINEERING SERVICES
ARCHITECTURAL AND STRUCTURAL DESIGN

BRIDGE NO. 54-1216J
POST MILE 177.3/181.1

CVEF TRUCK INSPECTION BUILDING

MOUNTAIN PASS JPOE

BASE PLATE DETAILS

SHEET ST7-104

TAEMWW Imperial Rev. 7/10

ORIGINAL SCALE IN INCHES FOR REDUCED PLANS 0 1 2 3

UNIT 3599
PROJECT NUMBER & PHASE 08000006281
EA 368501

DISREGARD PRINTS BEARING EARLIER REVISION DATES

REVISION DATES (PRELIMINARY STAGE ONLY) 09-09-10 11-01-12 12-10-12

SHEET OF

D:\user\Projects\A Expedite Process Folder\st7_104.dgn

26-FEB-2013 11:30

DIST.	COUNTY	ROUTE	POST MILES TOTAL PROJECT	SHEET NO.	TOTAL SHEETS
08	SBd	15	177.3/181.1	557	710

Shervin Pahlavan 11-27-12
REGISTERED CIVIL ENGINEER DATE

REGISTERED PROFESSIONAL ENGINEER
Shervin Pahlavan
No. 44463
Exp. 3-31-14
CIVIL
STATE OF CALIFORNIA

2-25-13
PLANS APPROVAL DATE

The State of California or its officers or agents shall not be responsible for the accuracy or completeness of electronic copies of this plan sheet.

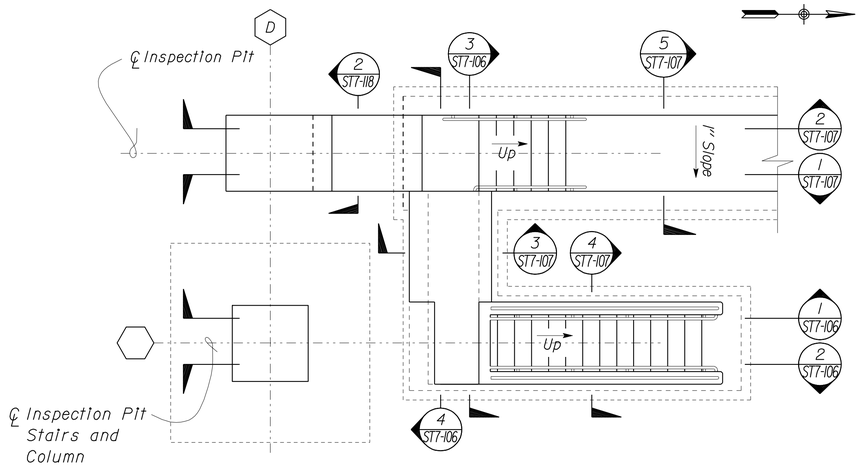

1 INSPECTION PIT STAIRS PLAN
No Scale

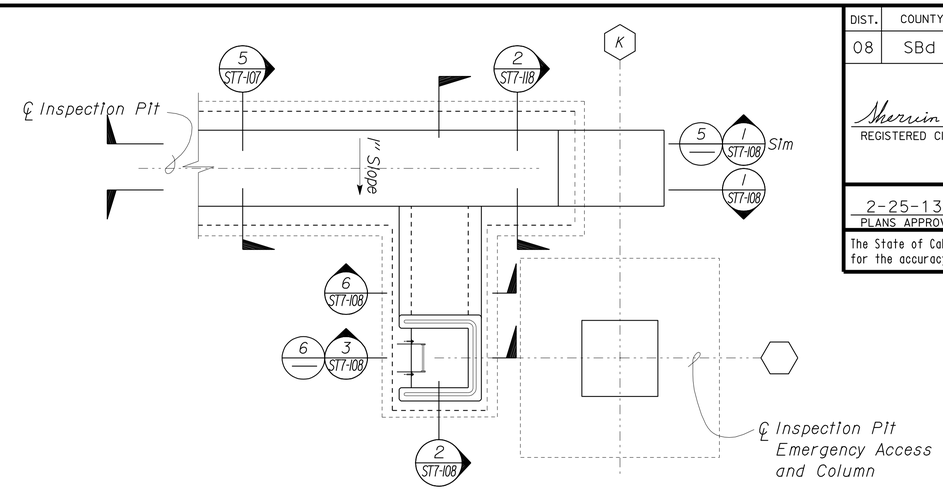

4 INSPECTION PIT EMERGENCY ACCESS
No Scale

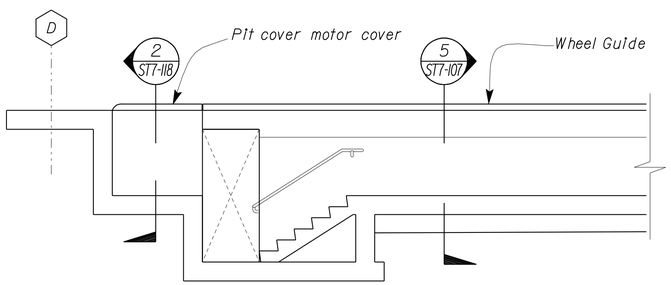

2 INSPECTION PIT STAIRS SECTION
No Scale

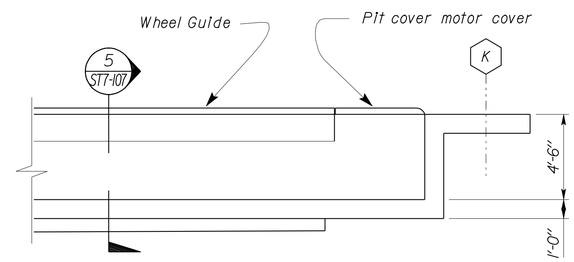

5 INSPECTION PIT EMERGENCY ACCESS
No Scale

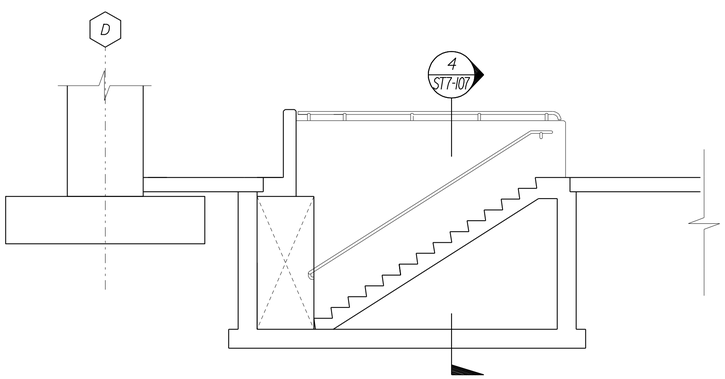

3 INSPECTION PIT STAIRS SECTION
No Scale

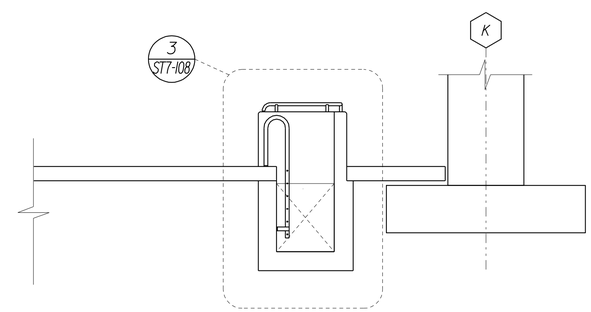

6 INSPECTION PIT EMERGENCY ACCESS
No Scale

	BY	CHECKED
DESIGN	Shervin Pahlavan	Joseph Camilleri
DETAILS	Andrew Lovato	Shervin Pahlavan
QUANTITIES		

STATE OF CALIFORNIA
DEPARTMENT OF TRANSPORTATION

DIVISION OF ENGINEERING SERVICES
ARCHITECTURAL AND STRUCTURAL DESIGN

BRIDGE NO. 54-1216J
POST MILE 177.3/181.1

CVEF TRUCK INSPECTION BUILDING

MOUNTAIN PASS JPOE

INSPECTION PIT PLAN AND SECTIONS

SHEET **ST7-105**

TAEMWW Imperial Rev. 7/10

ORIGINAL SCALE IN INCHES FOR REDUCED PLANS 0 1 2 3

UNIT 3599
PROJECT NUMBER & PHASE 08000006281
EA 368501

DISREGARD PRINTS BEARING EARLIER REVISION DATES → 03-11-10 11-09-12 12-10-12

REVISION DATES (PRELIMINARY STAGE ONLY) SHEET OF

D:\user\Projects\A Expedite Process Folder\st7_105.dgn

26-FEB-2013 11:30

DIST.	COUNTY	ROUTE	POST MILES TOTAL PROJECT	SHEET NO.	TOTAL SHEETS
08	SBd	15	177.3/181.1	558	710

Shervin Pahlavan 11-27-12
REGISTERED CIVIL ENGINEER DATE

REGISTERED PROFESSIONAL ENGINEER Shervin Pahlavan No. 44463 Exp. 3-31-14 CIVIL STATE OF CALIFORNIA

2-25-13
PLANS APPROVAL DATE

The State of California or its officers or agents shall not be responsible for the accuracy or completeness of electronic copies of this plan sheet.

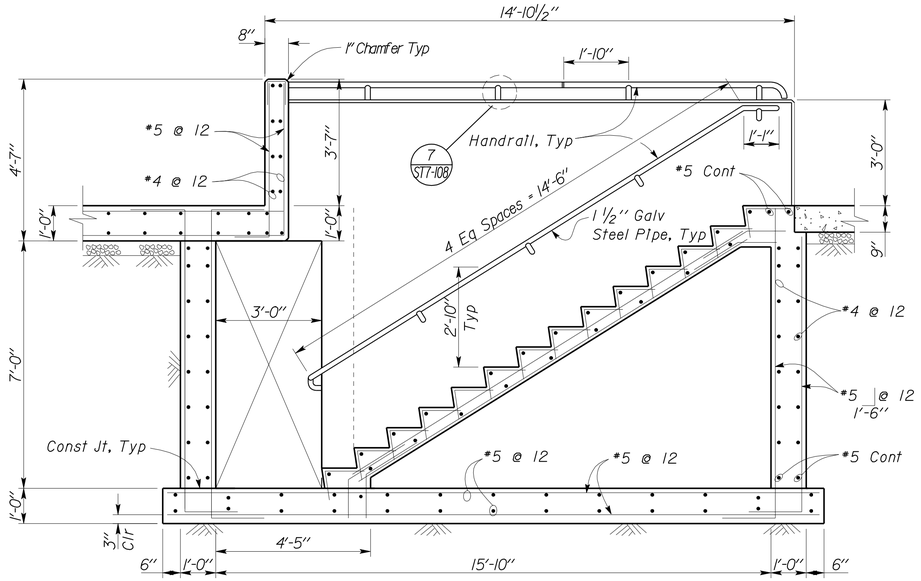

NOTE:
For Details not Shown, See 2

1 PIT ACCESS STAIR SECTION
No Scale

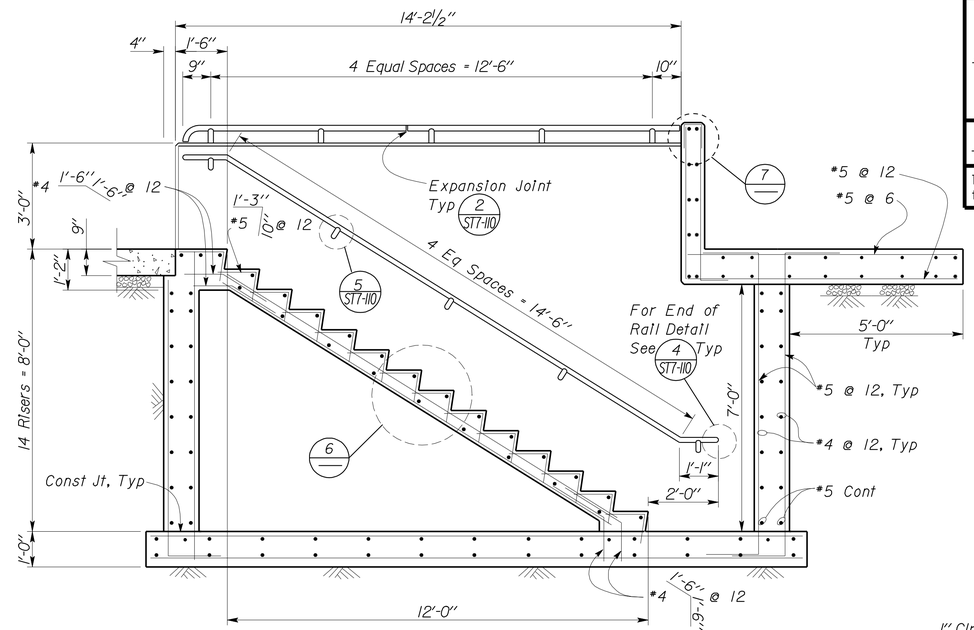

NOTE:
For Details not Shown, See 1

2 PIT ACCESS STAIR SECTION
No Scale

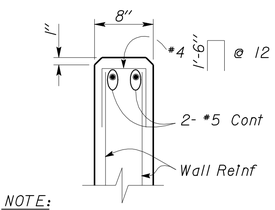

NOTE:
Rail & Post Pocket not Shown for Clarity, See 7 ST7-108

7 TOP OF CONCRETE WALL
No Scale

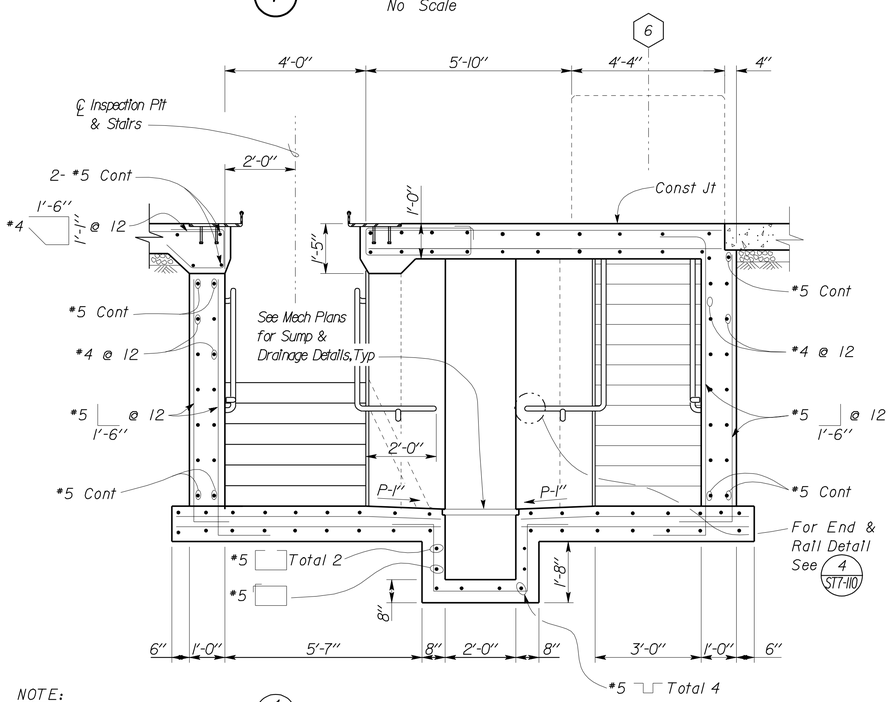

NOTE:
For Details not Shown, See 4

3 PIT TUNNEL SECTION
No Scale

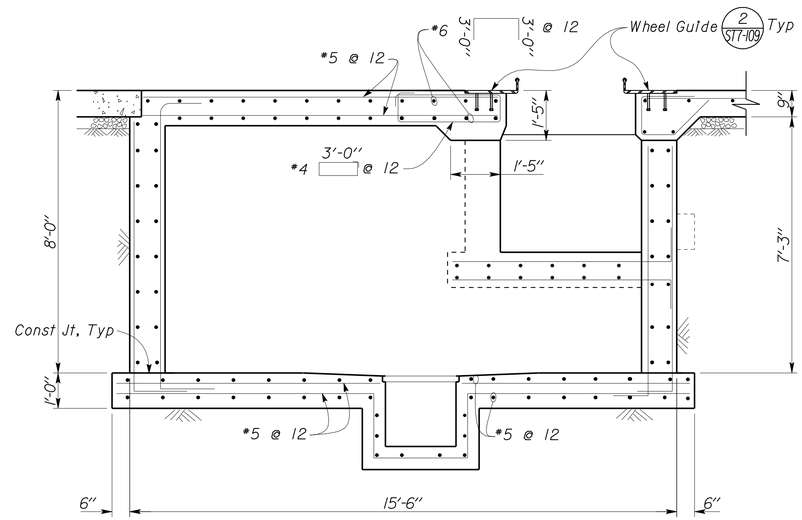

NOTE:
For Details not Shown, See 3

4 PIT TUNNEL SECTION
No Scale

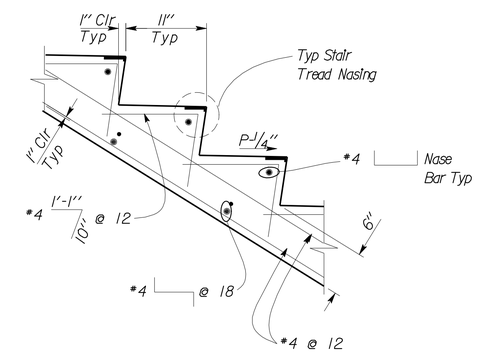

6 TYPICAL STAIR DETAIL
No Scale

	BY	CHECKED
DESIGN	Shervin Pahlavan	Joseph Camilleri
DETAILS	Andrew Lovato	Shervin Pahlavan
QUANTITIES		

STATE OF CALIFORNIA
DEPARTMENT OF TRANSPORTATION

DIVISION OF ENGINEERING SERVICES
ARCHITECTURAL AND STRUCTURAL DESIGN

BRIDGE NO. 54-1216J
POST MILE 177.3/181.1

CVEF TRUCK INSPECTION BUILDING

MOUNTAIN PASS JPOE
INSPECTION PIT PLAN AND SECTIONS

SHEET ST7-106

TAEMWW Imperial Rev. 7/10

ORIGINAL SCALE IN INCHES FOR REDUCED PLANS 0 1 2 3

UNIT 3599
PROJECT NUMBER & PHASE 08000006281
EA 368501

DISREGARD PRINTS BEARING EARLIER REVISION DATES → 03-11-10 11-01-12 12-10-12

REVISION DATES (PRELIMINARY STAGE ONLY) SHEET OF

D:\user\Projects\A Expedite Process Folder\st7_106.dgn

26-FEB-2013 11:30

DIST.	COUNTY	ROUTE	POST MILES TOTAL PROJECT	SHEET NO.	TOTAL SHEETS
08	SBd	15	177.3/181.1	559	710

Shervin Pahlavan 11-27-12
REGISTERED CIVIL ENGINEER DATE

REGISTERED PROFESSIONAL ENGINEER Shervin Pahlavan No. 44463 Exp. 3-31-14 CIVIL STATE OF CALIFORNIA

2-25-13
PLANS APPROVAL DATE

The State of California or its officers or agents shall not be responsible for the accuracy or completeness of electronic copies of this plan sheet.

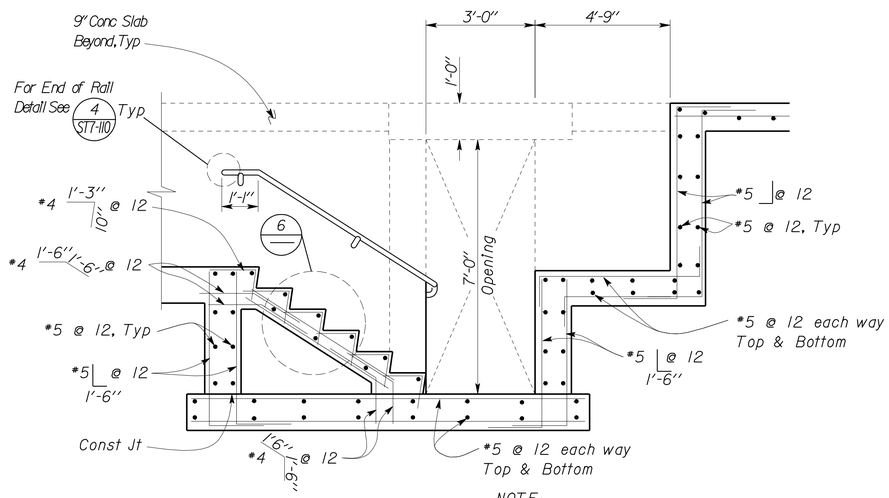

NOTE:
For Details not Shown See 2

1 INSPECTION PIT ACCESS STAIR SECTION
No Scale

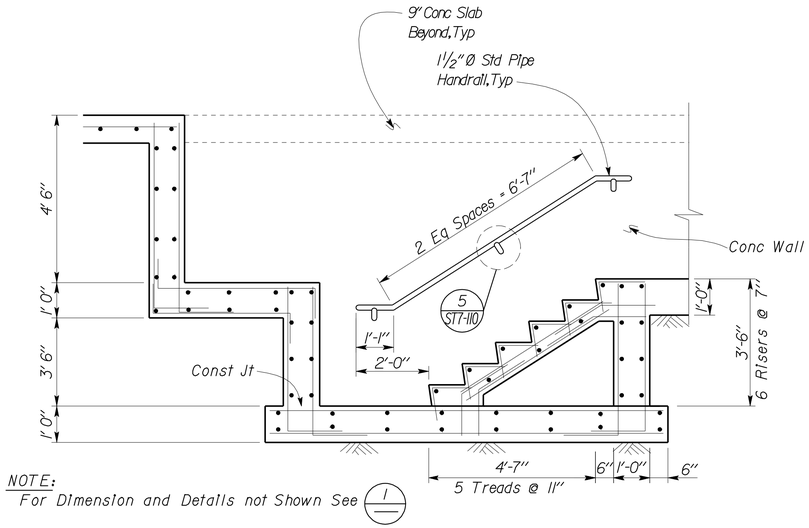

NOTE:
For Dimension and Details not Shown See 1

2 INSPECTION PIT ACCESS STAIR SECTION
No Scale

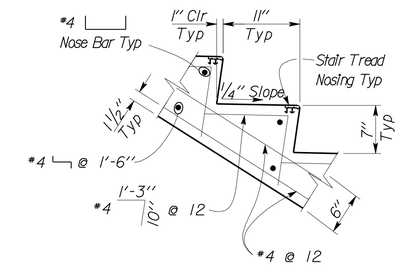

6 STAIR DETAIL
No Scale

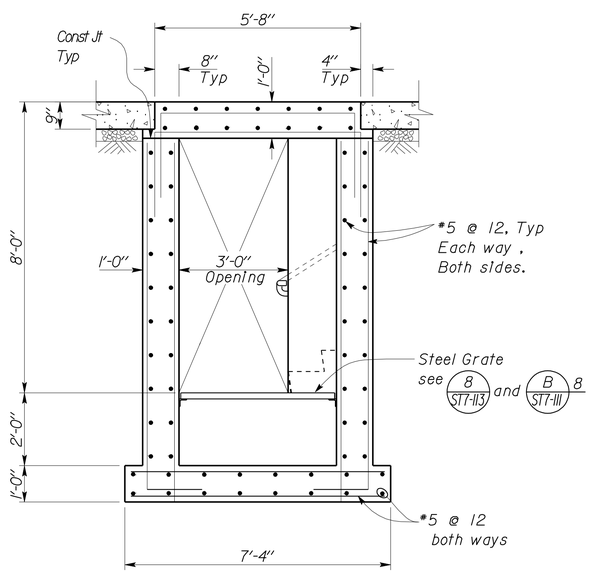

3 INSPECTION PIT TUNNEL SECTION
No Scale

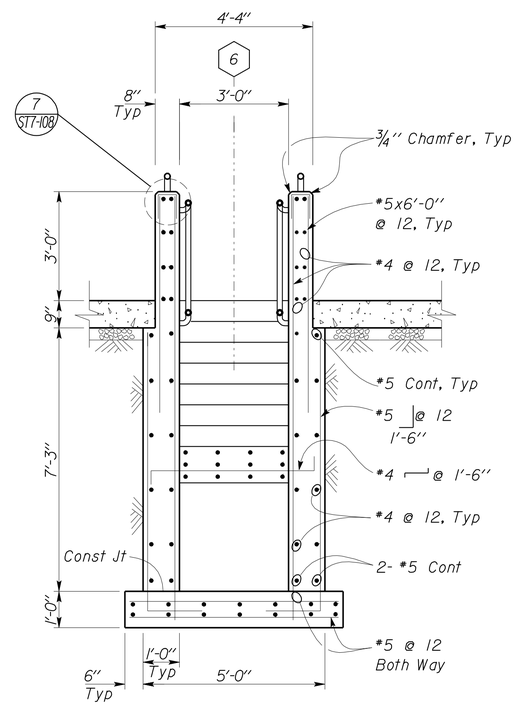

4 INSPECTION PIT ACCESS STAIR SECTION
No Scale

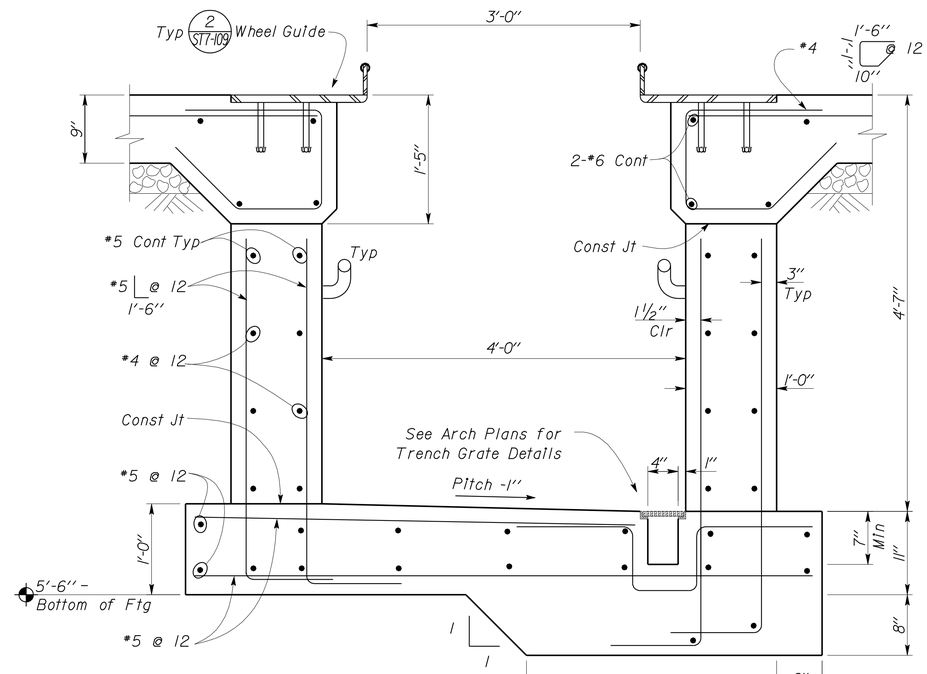

5 INSPECTION PIT SECTION
No Scale

	BY	CHECKED
DESIGN	Shervin Pahlavan	Joseph Camilleri
DETAILS	Andrew Lovato	Shervin Pahlavan
QUANTITIES		

STATE OF CALIFORNIA
DEPARTMENT OF TRANSPORTATION

DIVISION OF ENGINEERING SERVICES
ARCHITECTURAL AND STRUCTURAL DESIGN

BRIDGE NO. 54-1216J
POST MILE 177.3/181.1

CVEF TRUCK INSPECTION BUILDING

MOUNTAIN PASS JPOE

INSPECTION PIT SECTIONS AND DETAILS 2

SHEET ST7-107

TAEMWW Imperial Rev. 7/10

ORIGINAL SCALE IN INCHES FOR REDUCED PLANS 0 1 2 3

UNIT 3599
PROJECT NUMBER & PHASE 08000006281
EA 368501

DISREGARD PRINTS BEARING EARLIER REVISION DATES
REVISION DATES (PRELIMINARY STAGE ONLY) 03-11-10 11-01-12 12-10-12
SHEET OF

D:\user\Projects\A Expedite Process Folder\st7_107.dgn

26-FEB-2013 11:30

DIST.	COUNTY	ROUTE	POST MILES TOTAL PROJECT	SHEET NO.	TOTAL SHEETS
08	SBd	15	177.3/181.1	560	710

Shervin Pahlavan 11-27-12
REGISTERED CIVIL ENGINEER DATE

REGISTERED PROFESSIONAL ENGINEER Shervin Pahlavan No. 44463 Exp. 3-31-14 CIVIL STATE OF CALIFORNIA

2-25-13
PLANS APPROVAL DATE

The State of California or its officers or agents shall not be responsible for the accuracy or completeness of electronic copies of this plan sheet.

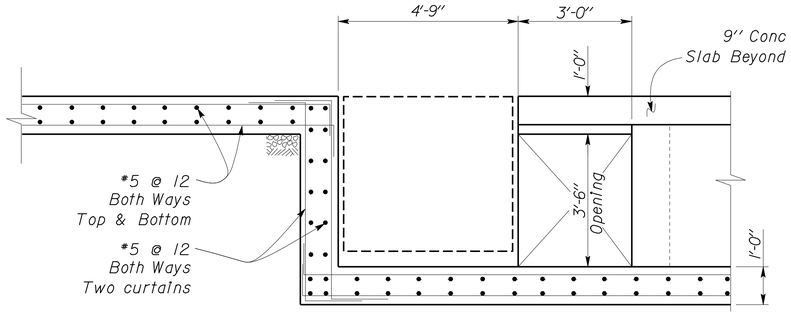

1 INSPECTION PIT END SECTION
No Scale

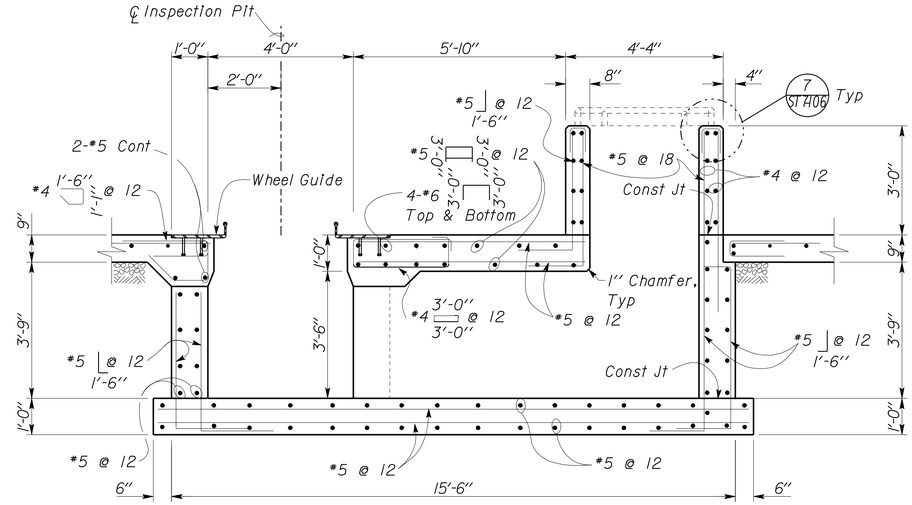

2 INSPECTION PIT ACCESS SECTION
No Scale

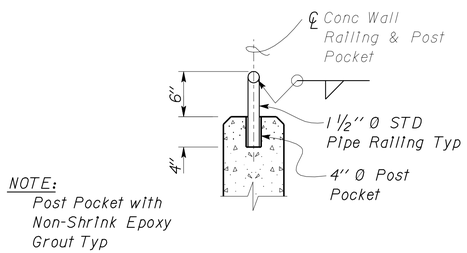

7 POST POCKET DETAIL
No Scale

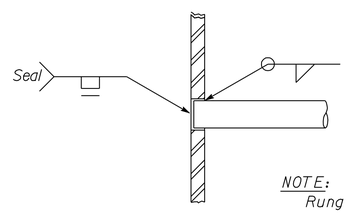

8 RUNG DETAIL
No Scale

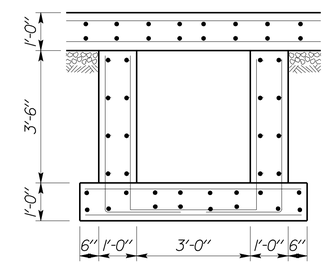

6 EMERGENCY ACCESS SECTION
No Scale

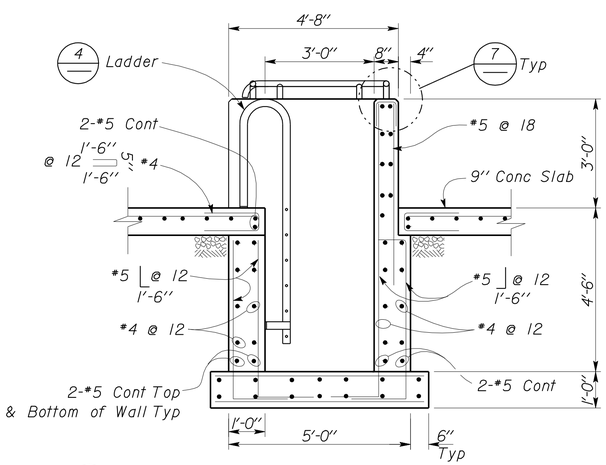

3 INSPECTION PIT ACCESS LADDER SECTION
No Scale

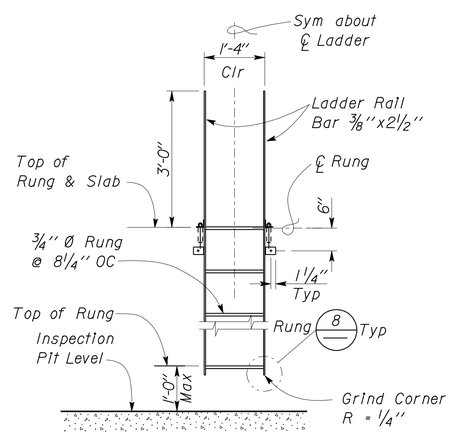

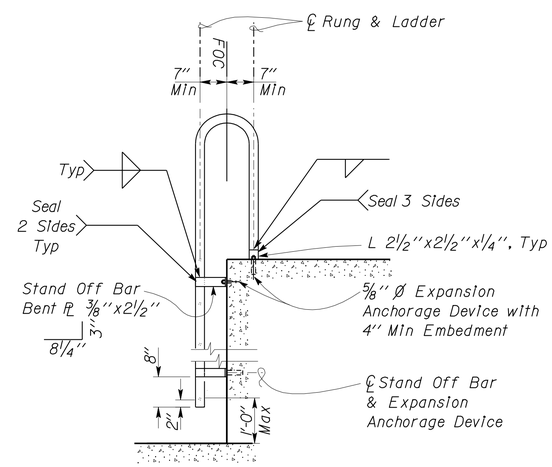

4 LADDER DETAILS
No Scale

5 NOT USED

DESIGN	BY Shervin Pahlavan	CHECKED Joseph Camilleri	
DETAILS	BY Andrew Lovato	CHECKED Shervin Pahlavan	
QUANTITIES	BY	CHECKED	

STATE OF CALIFORNIA DEPARTMENT OF TRANSPORTATION

DIVISION OF ENGINEERING SERVICES ARCHITECTURAL AND STRUCTURAL DESIGN

BRIDGE NO. 54-1216J
POST MILE 177.3/181.1

CVEF TRUCK INSPECTION BUILDING

MOUNTAIN PASS JPOE

INSPECTION PIT SECTIONS AND DETAILS 3

SHEET ST7-108

TAEMWW Imperial Rev. 7/10

ORIGINAL SCALE IN INCHES FOR REDUCED PLANS 0 1 2 3

UNIT 3599
PROJECT NUMBER & PHASE 08000006281
EA 368501

DISREGARD PRINTS BEARING EARLIER REVISION DATES

REVISION DATES (PRELIMINARY STAGE ONLY) 03-11-10 11-01-12 12-10-12

SHEET OF

D:\user\Projects\A Expedite Process Folder\st7_108.dgn

26-FEB-2013 11:30

DIST.	COUNTY	ROUTE	POST MILES TOTAL PROJECT	SHEET NO.	TOTAL SHEETS
08	SBd	15	177.3/181.1	561	710

Shervin Pahlavan 11-27-12
REGISTERED CIVIL ENGINEER DATE

REGISTERED PROFESSIONAL ENGINEER
Shervin Pahlavan
No. 44463
Exp. 3-31-14
CIVIL
STATE OF CALIFORNIA

2-25-13
PLANS APPROVAL DATE

The State of California or its officers or agents shall not be responsible for the accuracy or completeness of electronic copies of this plan sheet.

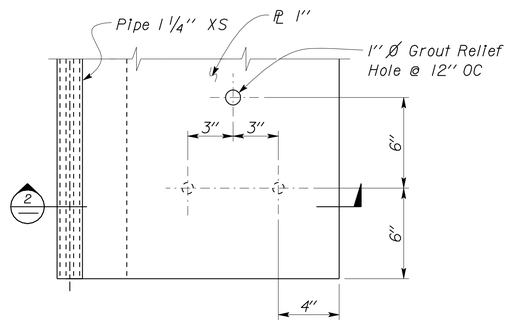

1 **WHEEL PLATE PARTIAL PLAN**
No Scale

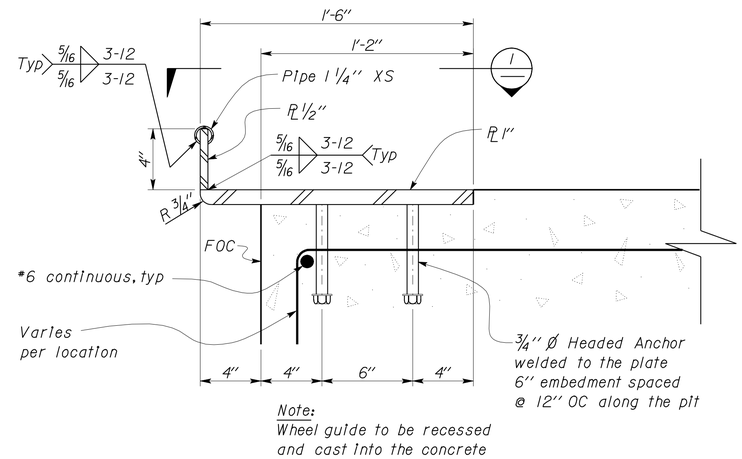

2 **WHEEL GUIDE SECTION**
No Scale

DESIGN	BY Shervin Pahlavan	CHECKED Joseph Camilleri	
DETAILS	BY Andrew Lovato	CHECKED Shervin Pahlavan	
QUANTITIES	BY	CHECKED	

STATE OF CALIFORNIA
DEPARTMENT OF TRANSPORTATION

DIVISION OF ENGINEERING SERVICES
ARCHITECTURAL AND STRUCTURAL DESIGN

BRIDGE NO. 54-1216J
POST MILE 177.3/181.1

CVEF TRUCK INSPECTION BUILDING

MOUNTAIN PASS JPOE

INSPECTION PIT DETAILS I

SHEET **ST7-109**

TAEMWW Imperial Rev. 7/10

ORIGINAL SCALE IN INCHES FOR REDUCED PLANS 0 1 2 3

UNIT 3599
PROJECT NUMBER & PHASE 08000006281
EA 368501

DISREGARD PRINTS BEARING EARLIER REVISION DATES →

REVISION DATES (PRELIMINARY STAGE ONLY) 03-11-10 11-01-12 12-10-12

SHEET OF

D:\user\Projects\A Expedite Process Folder\st7_109.dgn

26-FEB-2013 11:30

DIST.	COUNTY	ROUTE	POST MILES TOTAL PROJECT	SHEET NO.	TOTAL SHEETS
08	SBd	15	177.3/181.1	562	710

Shervin Pahlavan 11-27-12
REGISTERED CIVIL ENGINEER DATE

REGISTERED PROFESSIONAL ENGINEER Shervin Pahlavan No. 44463 Exp. 3-31-14 CIVIL STATE OF CALIFORNIA

2-25-13
PLANS APPROVAL DATE

The State of California or its officers or agents shall not be responsible for the accuracy or completeness of electronic copies of this plan sheet.

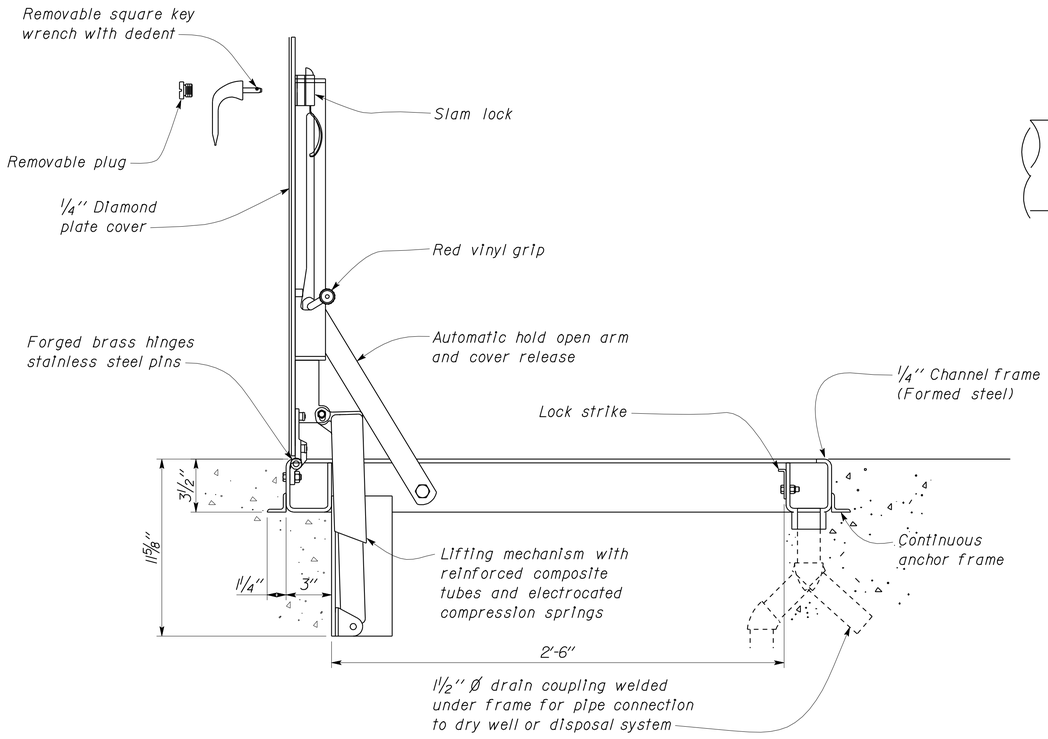

1 SIDEWALK DOOR DETAIL
No Scale

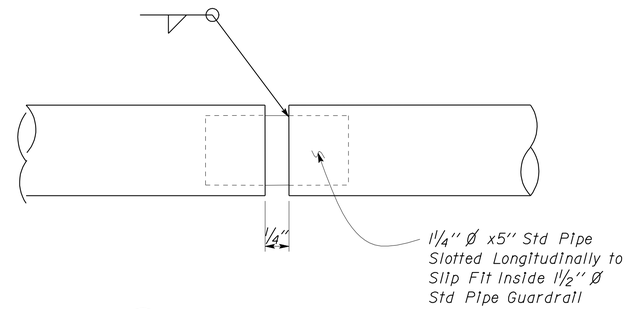

2 EXPANSION JOINT DETAIL
No Scale

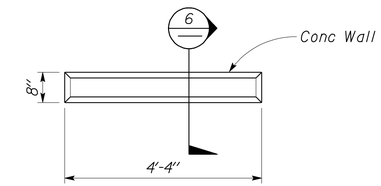

3 PLAN
No Scale

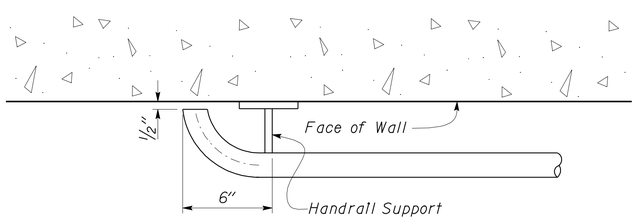

4 HANDRAIL RETURN AT DOOR
No Scale

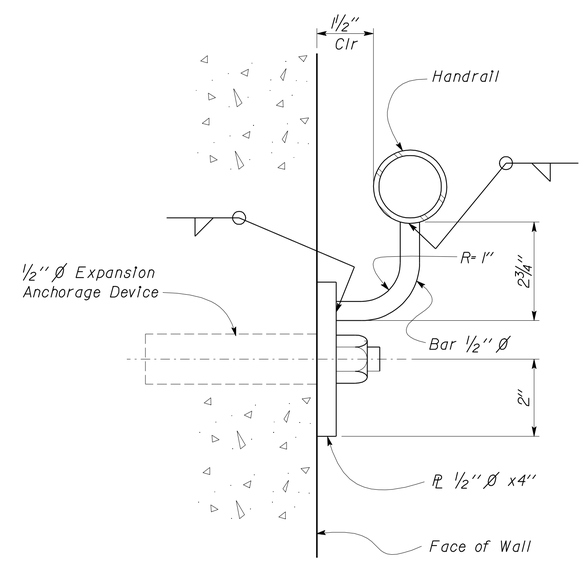

5 HANDRAIL SUPPORT DETAIL
No Scale

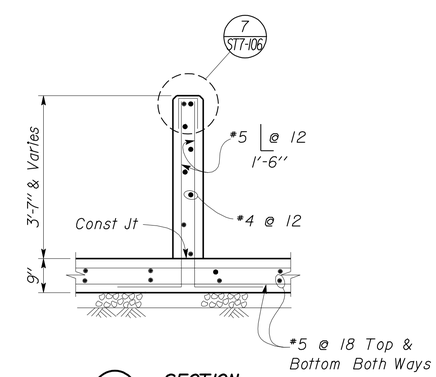

6 SECTION
No Scale

DESIGN	BY Shervin Pahlavan	CHECKED Joseph Camilleri	
DETAILS	BY Andrew Lovato	CHECKED Shervin Pahlavan	
QUANTITIES	BY	CHECKED	

STATE OF CALIFORNIA DEPARTMENT OF TRANSPORTATION

DIVISION OF ENGINEERING SERVICES
ARCHITECTURAL AND STRUCTURAL DESIGN

BRIDGE NO. 54-1216J
POST MILE 177.3/181.1

CVEF TRUCK INSPECTION BUILDING

MOUNTAIN PASS JPOE

INSPECTION PIT DETAILS 2

SHEET **ST7-110**

TAEMWW Imperial Rev. 7/10

ORIGINAL SCALE IN INCHES FOR REDUCED PLANS 0 1 2 3

UNIT 3599
PROJECT NUMBER & PHASE 08000006281
EA 368501

DISREGARD PRINTS BEARING EARLIER REVISION DATES → 03-11-10 11-09-12 12-10-12

REVISION DATES (PRELIMINARY STAGE ONLY) SHEET OF

D:\user\Projects\A Expedite Process Folder\st7_110.dgn

26-FEB-2013 11:30

DIST.	COUNTY	ROUTE	POST MILES TOTAL PROJECT	SHEET NO.	TOTAL SHEETS
08	SBd	15	177.3/181.1	563	710

Shervin Pahlavan 11-27-12
REGISTERED CIVIL ENGINEER DATE

REGISTERED PROFESSIONAL ENGINEER Shervin Pahlavan No. 44463 Exp. 3-31-14 CIVIL STATE OF CALIFORNIA

2-25-13
PLANS APPROVAL DATE

The State of California or its officers or agents shall not be responsible for the accuracy or completeness of electronic copies of this plan sheet.

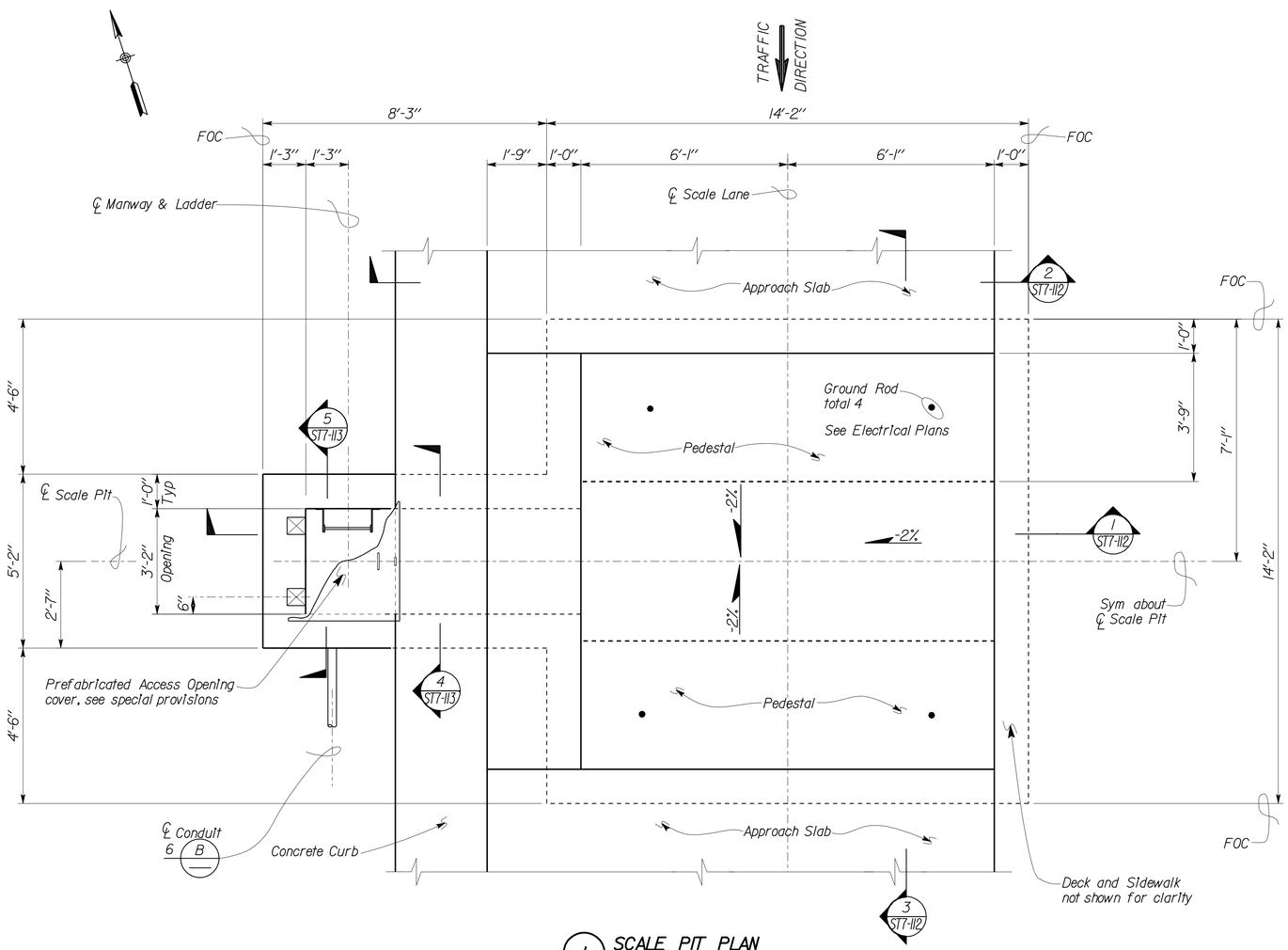

1 SCALE PIT PLAN
No Scale

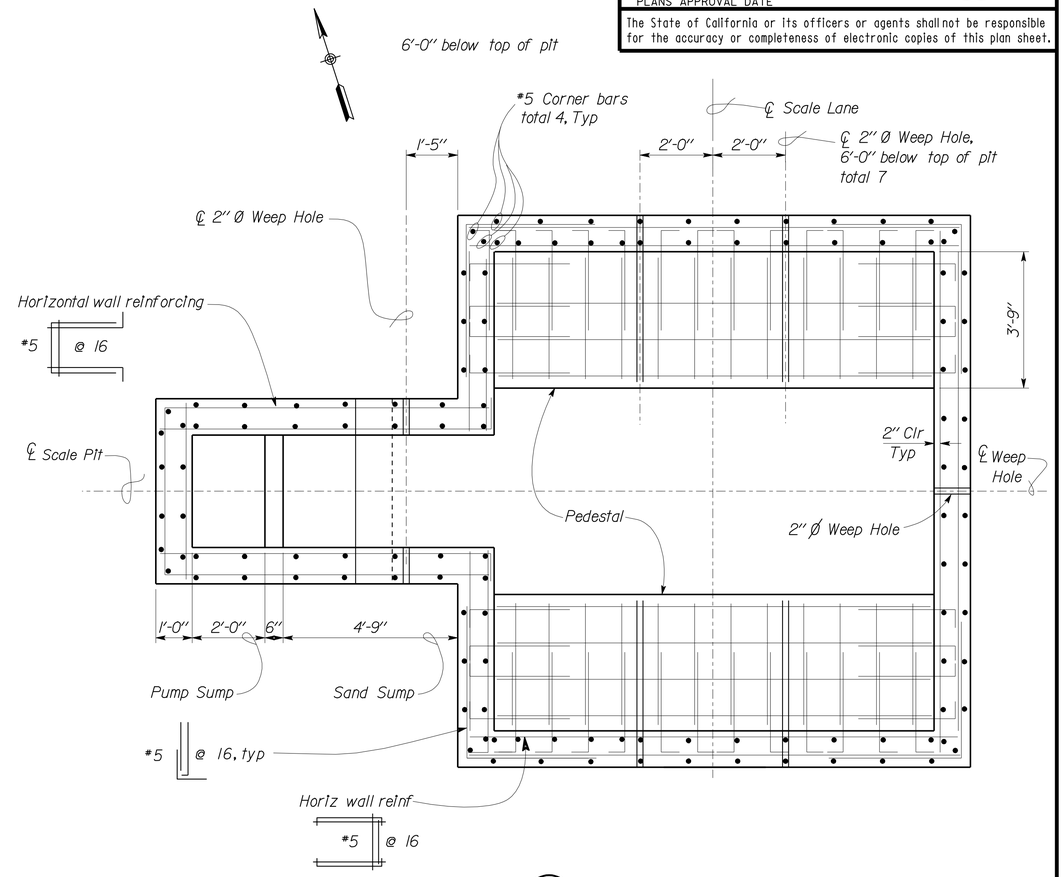

2 SCALE PIT SECTION
No Scale

A STATIC SCALE PIT/WEIGHBRIDGE DESIGN NOTES

Design: Bridge Design Specifications AASHTO with interims and revisions by Caltrans.

1. Loads: HS 20-44 (AASHTO) 30% Impact
   50 kips Tandem Axle with 8 Tires per Axle
   and 30% Impact Equivalent Fluid Pressure = 60 lb/ft 3
2. Reinforced Concrete:
   Scale Pit: f'_c = 3 ksi
   f_y = 60 ksi
   n = 9
   Weighbridge: (Allowable Stress Design)
   f_c = 1.2 ksi
   f_y = 20 ksi
   n = 9
3. Structural Steel: f_y = 36 ksi
4. Foundation :
   Allowable Soil Pressure Dead Load + Live Load = 2000 PSF
   For soil classification see Log of Test Borings sheets.

1. The Weighbridge Assembly Reinforced Concrete Deck shall be in full bearing with the wide flange beams and connected to the wide flange beams with headed stud anchors.
2. Pedestals may be increased in size, per the Engineers approval, to accommodate load cells and restrainer assemblies. Pedestals shall not inhibit access into Scale Pit nor inhibit drainage.
3. Lateral Load Restrainer Assembly Bracket dimensions shown are minimum. Bracket locations and dimensions may be adjusted, per the Engineers approval, to accomodate the particular load cells supplied.

B DETAIL NOTES

4. All steel to steel bolted connections shall utilize A325 High Strength Bolts with oversize holes.
5. All miscellaneous metal except structural steel beams supporting the scale deck, shall be hot-dipped galvanized after fabrication. Structural steel beams supporting the scale deck shall be shop primed with finish coats applied in the field.
6. For electrical conduit and other details, see Mechanical and Electrical plans.
7. Expansion Anchorage Devices shall be 5/8" Ø and have 4" min embedment, 3'-0" max spacing and 6" max from ends two min per connection, unless otherwise shown.
8. Welded Steel Grate :
   Bearing Bars 1 1/4" x 3/16" @ 1 3/16"
   Cross Bars 4" C-C
   Trim Bars 1 1/4" x 3/16"
   (fillet welded to ends of Bearing Bars).

   Grate shall be anchored to supports with 1/4" Ø threaded stud and "Saddle Clip" type fastener as recommended by the manufacturer. Fasteners shall be installed 6" max from ends, and 3" min per Fixed Grate.

	BY	CHECKED
DESIGN	Shervin Pahlavan	Joseph Camilleri
DETAILS	Andrew Lovato	Shervin Pahlavan
QUANTITIES		

STATE OF CALIFORNIA DEPARTMENT OF TRANSPORTATION

DIVISION OF ENGINEERING SERVICES
ARCHITECTURAL AND STRUCTURAL DESIGN

BRIDGE NO. 54-1216J
POST MILE 177.3/181.1

CVEF TRUCK INSPECTION BUILDING

MOUNTAIN PASS JPOE

STATIC SCALE PIT DETAILS 1

SHEET ST7-111

TAEMWW Imperial Rev. 7/10

ORIGINAL SCALE IN INCHES FOR REDUCED PLANS 0 1 2 3

UNIT 3599
PROJECT NUMBER & PHASE 08000006281
EA 368501

DISREGARD PRINTS BEARING EARLIER REVISION DATES → 07-19-10 11-09-12 12-10-12

REVISION DATES (PRELIMINARY STAGE ONLY) SHEET OF

D:\user\Projects\A Expedite Process Folder\st7_111.dgn

26-FEB-2013 11:31

DIST.	COUNTY	ROUTE	POST MILES TOTAL PROJECT	SHEET NO.	TOTAL SHEETS
08	SBd	15	177.3/181.1	564	710

Shervin Pahlavan 11-27-12
REGISTERED CIVIL ENGINEER DATE

REGISTERED PROFESSIONAL ENGINEER Shervin Pahlavan No. 44463 Exp. 3-31-14 CIVIL STATE OF CALIFORNIA

2-25-13
PLANS APPROVAL DATE

The State of California or its officers or agents shall not be responsible for the accuracy or completeness of electronic copies of this plan sheet.

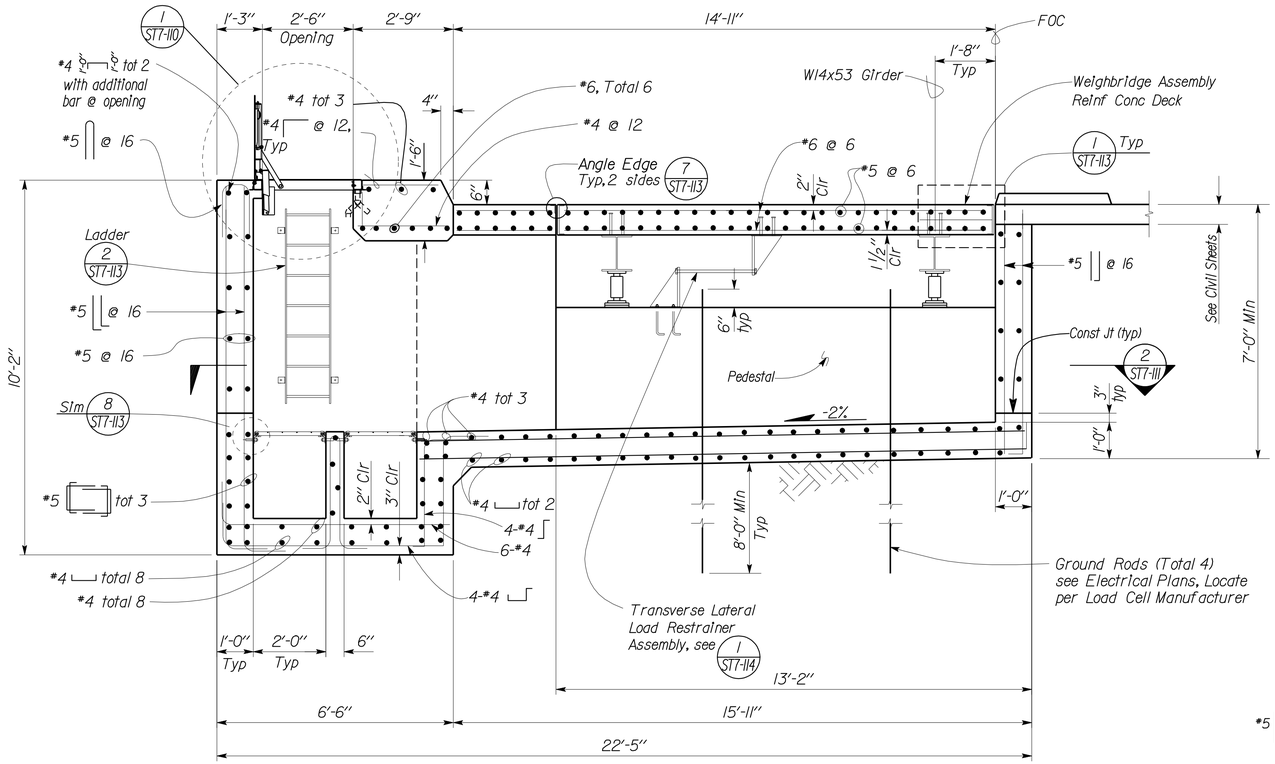

Note
See Civil plans for sidewalk details.

1 SCALE PIT SECTION
No Scale

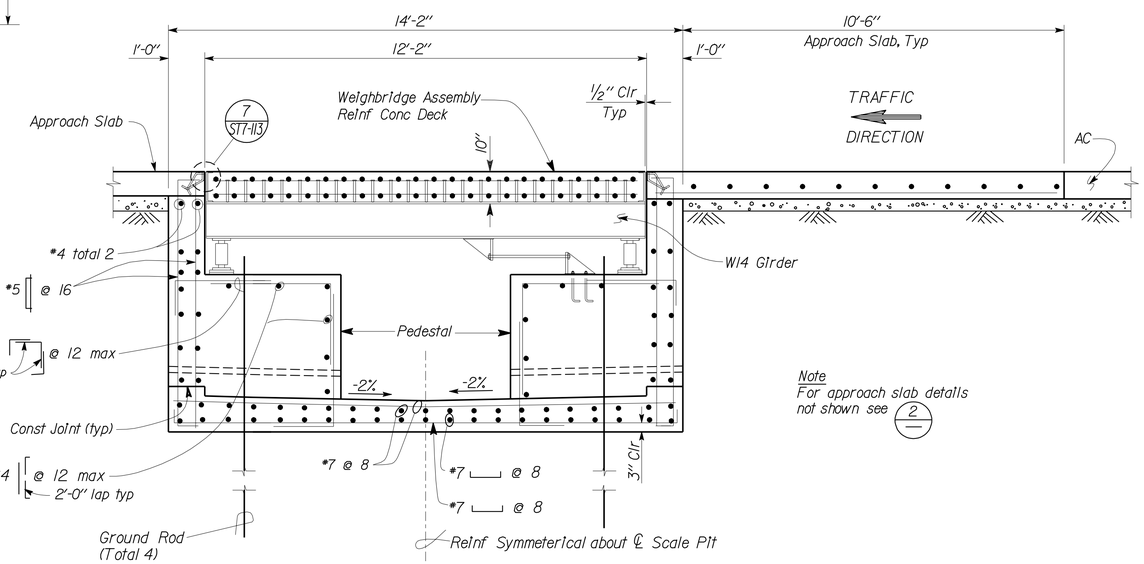

Note
For approach slab details not shown see 2/—

3 SCALE PIT SECTION
No Scale

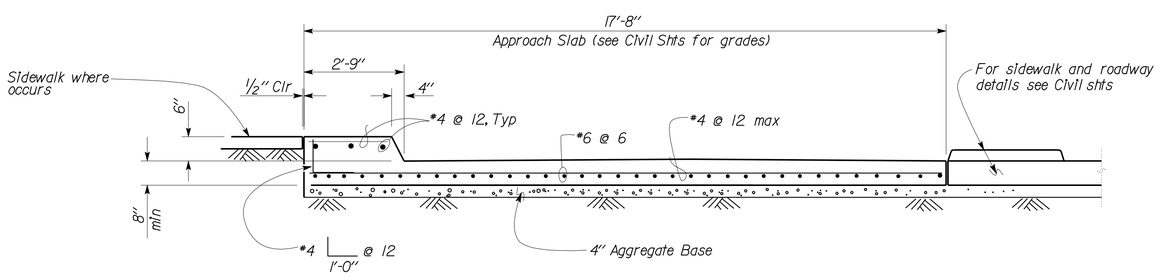

2 APPROACH SLAB SECTION
No Scale

DESIGN	BY Shervin Pahlavan	CHECKED Joseph Camilleri	
DETAILS	BY Andrew Lovato	CHECKED Shervin Pahlavan	
QUANTITIES	BY	CHECKED	

STATE OF CALIFORNIA
DEPARTMENT OF TRANSPORTATION

DIVISION OF ENGINEERING SERVICES
ARCHITECTURAL AND STRUCTURAL DESIGN

BRIDGE NO. 54-1216J
POST MILE 177.3/181.1

CVEF TRUCK INSPECTION BUILDING

MOUNTAIN PASS JPOE

STATIC SCALE PIT DETAILS 2

SHEET ST7-112

TAEMWW Imperial Rev. 7/10

ORIGINAL SCALE IN INCHES FOR REDUCED PLANS 0 1 2 3

UNIT 3599
PROJECT NUMBER & PHASE 08000006281
EA 368501

DISREGARD PRINTS BEARING EARLIER REVISION DATES → 07-19-10 11-01-12 12-10-12

REVISION DATES (PRELIMINARY STAGE ONLY) SHEET OF

D:\user\Projects\A Expedite Process Folder\st7_112.dgn

26-FEB-2013 11:31

DIST.	COUNTY	ROUTE	POST MILES TOTAL PROJECT	SHEET NO.	TOTAL SHEETS
08	SBd	15	177.3/181.1	565	710

Shervin Pahlavan 11-27-12
REGISTERED CIVIL ENGINEER DATE

REGISTERED PROFESSIONAL ENGINEER Shervin Pahlavan No. 44463 Exp. 3-31-14 CIVIL STATE OF CALIFORNIA

2-25-13
PLANS APPROVAL DATE

The State of California or its officers or agents shall not be responsible for the accuracy or completeness of electronic copies of this plan sheet.

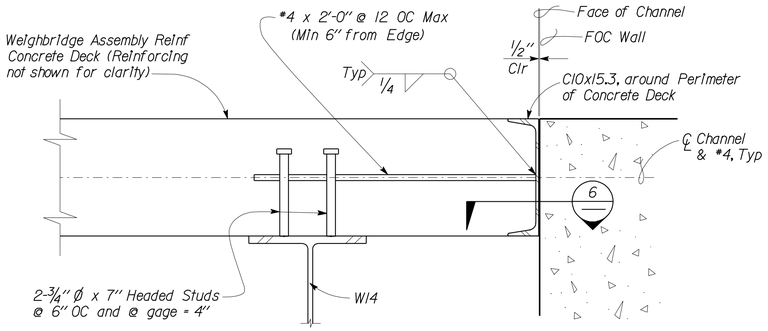

1 CHANNEL EDGE ANCHORAGE DETAIL
No Scale

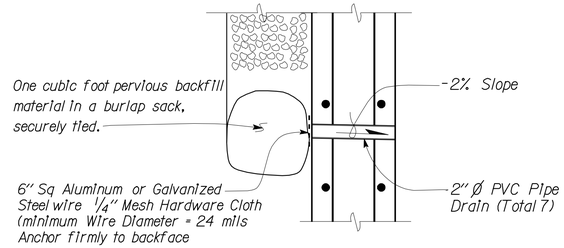

3 WEEP HOLE DETAIL
No Scale

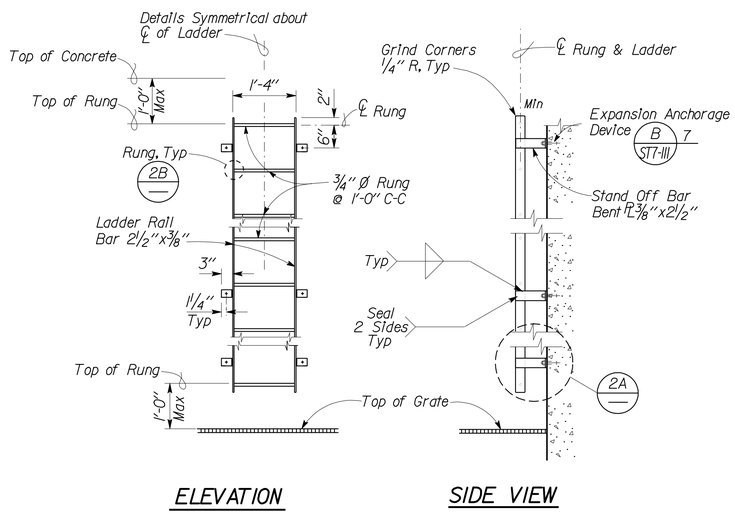

2 LADDER DETAILS
No Scale

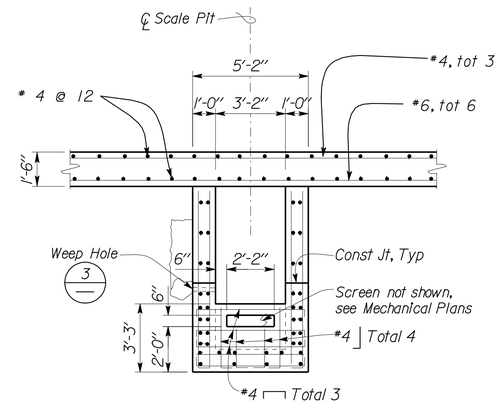

NOTE:
For Reinforcement Details not shown, see 1 ST7-112

4 DEBRIS SUMP DETAIL
No Scale

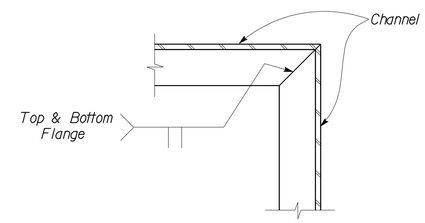

6 CHANNEL MITERED CORNER DETAIL
No Scale

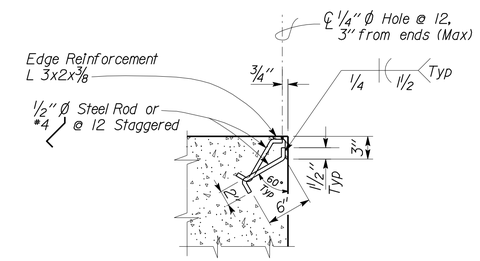

NOTE:
Concrete Reinforcing not shown for clarity.

7 EDGE REINFORCING ANGLE DETAIL
No Scale

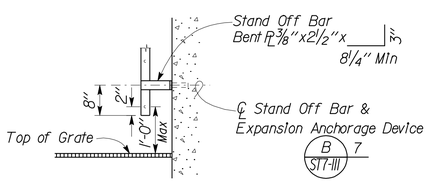

2A BOTTOM OF LADDER
No Scale

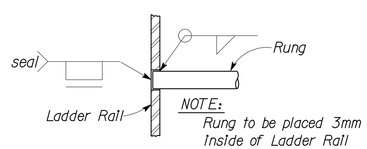

2B RUNG DETAIL
No Scale

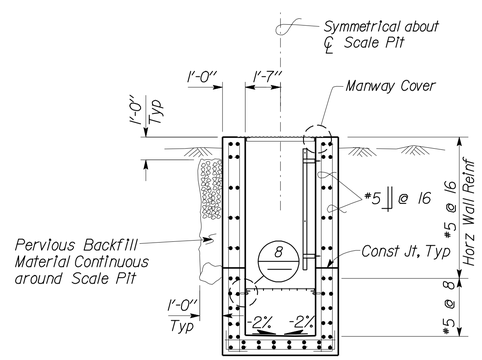

5 MANWAY SECTION
No Scale

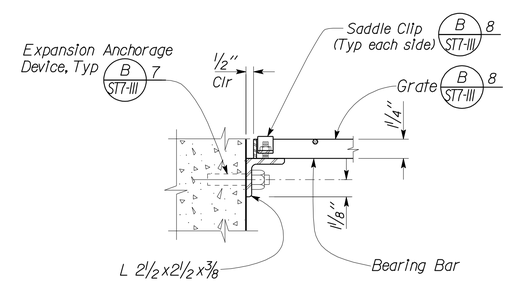

8 GRATE SUPPORT
No Scale

DESIGN	BY Shervin Pahlavan	CHECKED Joseph Camilleri	
DETAILS	BY Andrew Lovato	CHECKED Shervin Pahlavan	
QUANTITIES	BY	CHECKED	

STATE OF CALIFORNIA
DEPARTMENT OF TRANSPORTATION

DIVISION OF ENGINEERING SERVICES
ARCHITECTURAL AND STRUCTURAL DESIGN

BRIDGE NO. 54-1216J
POST MILE 177.3/181.1

CVEF TRUCK INSPECTION BUILDING

MOUNTAIN PASS JPOE

STATIC SCALE PIT DETAILS 3

SHEET ST7-113

TAEMWW Imperial Rev. 7/10

ORIGINAL SCALE IN INCHES FOR REDUCED PLANS 0 1 2 3

UNIT 3599
PROJECT NUMBER & PHASE 08000006281
EA 368501

DISREGARD PRINTS BEARING EARLIER REVISION DATES

REVISION DATES (PRELIMINARY STAGE ONLY) 07-19-10 11-01-12 12-10-12

SHEET OF

D:\user\Projects\A Expedite Process Folder\st7_113.dgn

26-FEB-2013 11:31

DIST.	COUNTY	ROUTE	POST MILES TOTAL PROJECT	SHEET NO.	TOTAL SHEETS
08	SBd	15	177.3/181.1	566	710

Shervin Pahlavan 11-27-12
REGISTERED CIVIL ENGINEER DATE

REGISTERED PROFESSIONAL ENGINEER Shervin Pahlavan No. 44463 Exp. 3-31-14 CIVIL STATE OF CALIFORNIA

2-25-13
PLANS APPROVAL DATE

The State of California or its officers or agents shall not be responsible for the accuracy or completeness of electronic copies of this plan sheet.

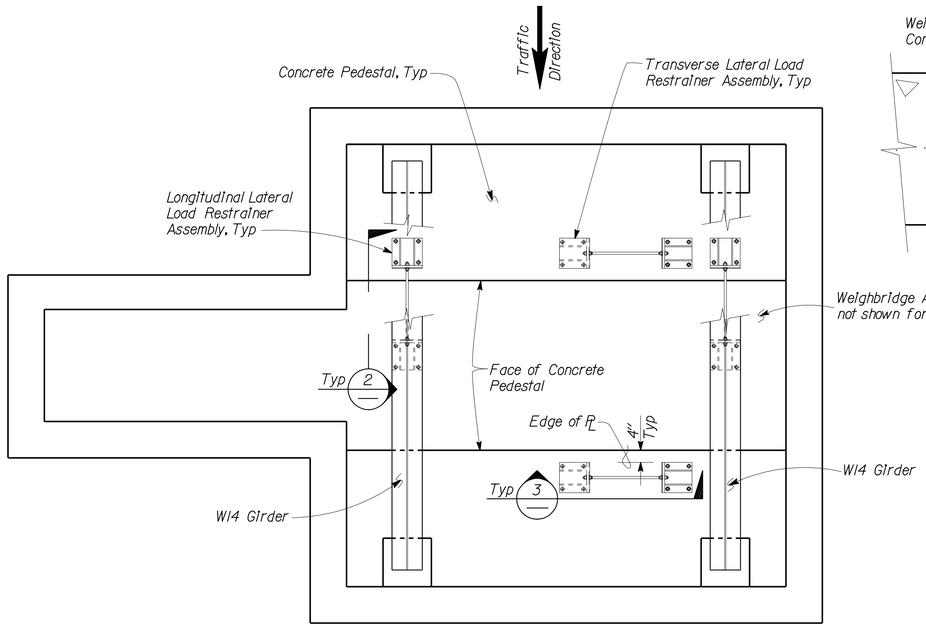

NOTE:
Center-to-Center spacing between Anchor Bolts of adjacent Concrete Anchorage Plates shall be 8" minimun.

1 RESTRAINER ASSEMBLY PLAN
No Scale

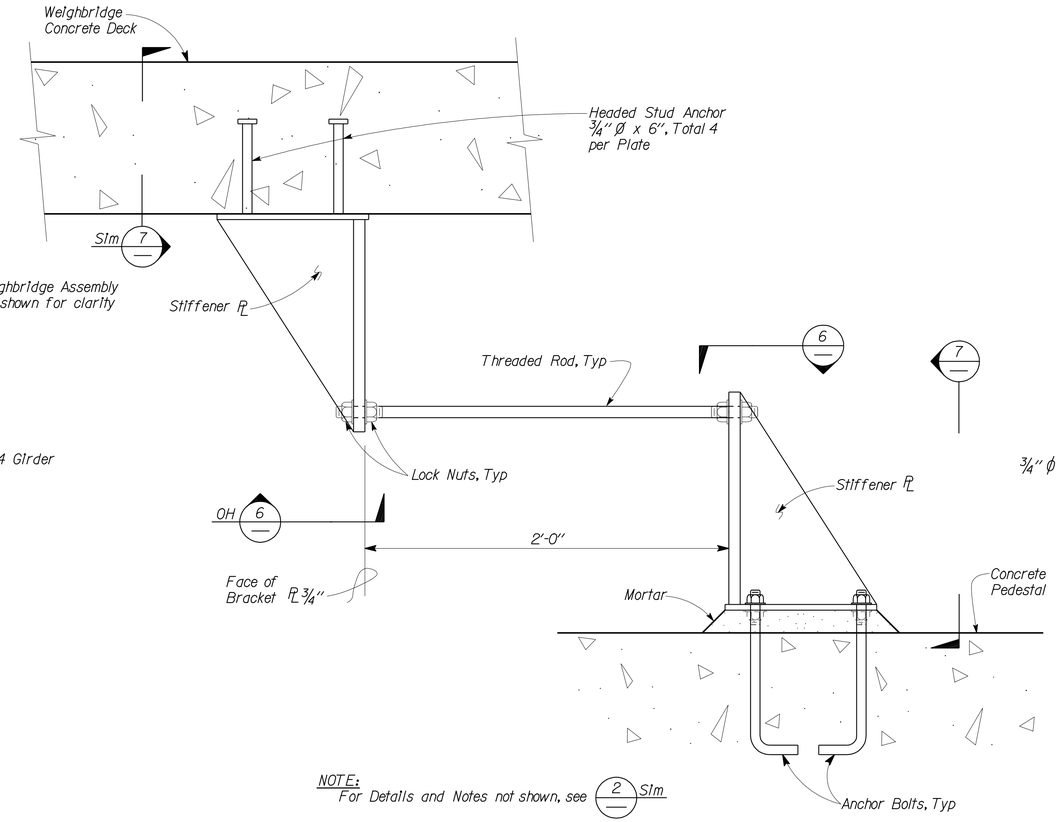

NOTE:
For Details and Notes not shown, see 2 Sim

3 TRANSVERSE RESTRAINER ASSEMBLY SECTION
No Scale

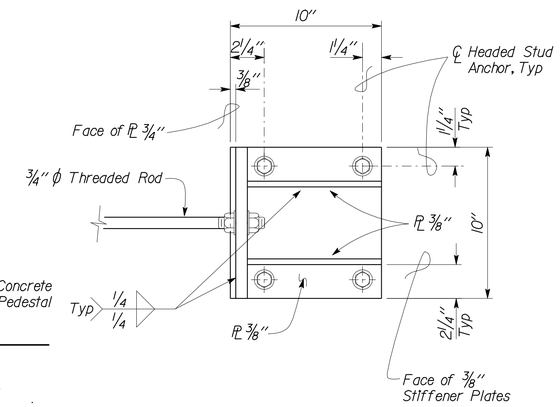

6 TRANSVERSE BRACKET PLAN
No Scale

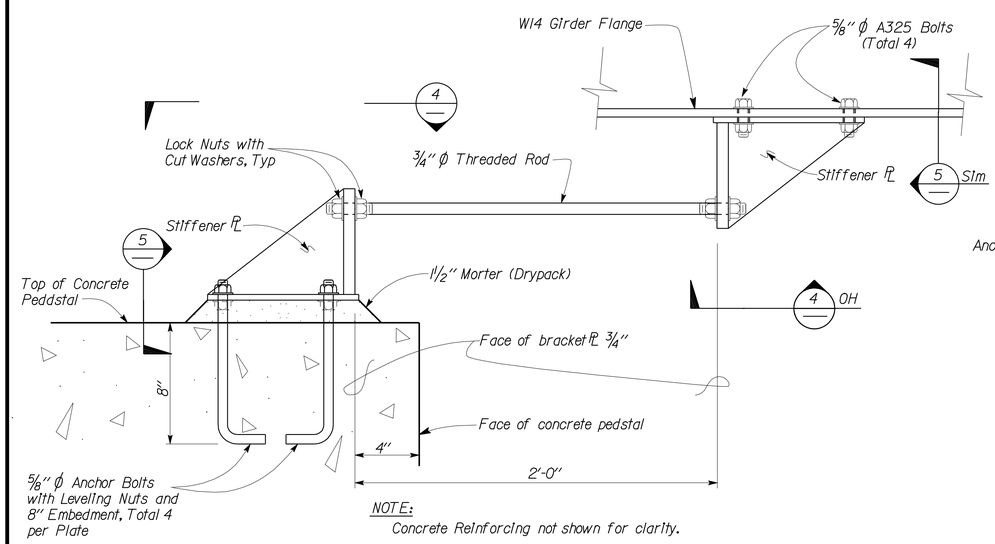

NOTE:
Concrete Reinforcing not shown for clarity.

2 LONGITUDINAL RESTRAINER ASSEMBLY SECTION
No Scale

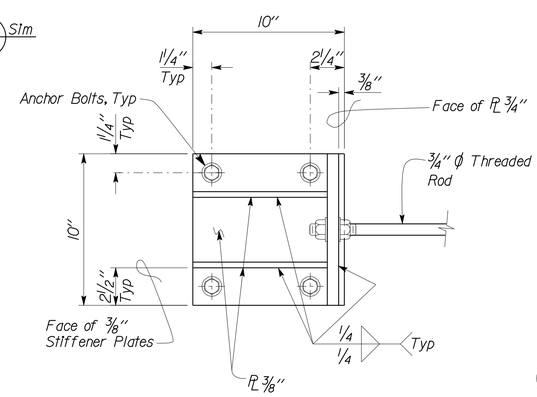

4 LONGITUDINAL BRACKET PLAN
No Scale

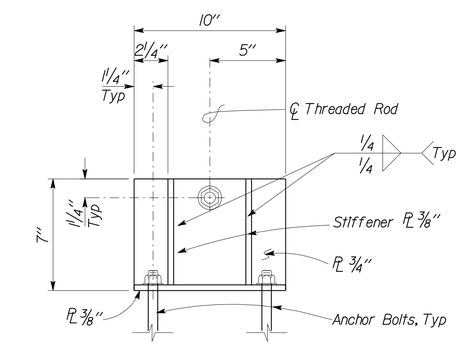

5 LONGITUDINAL BRACKET ELEVATION
No Scale

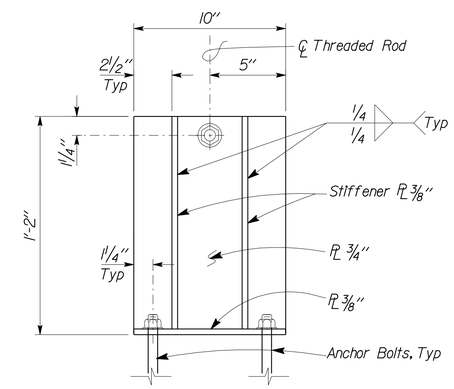

7 TRANSVERSE BRACKET ELEVATION
No Scale

DESIGN	BY Shervin Pahlavan	CHECKED Joseph Camilleri	
DETAILS	BY Andrew Lovato	CHECKED Shervin Pahlavan	
QUANTITIES	BY	CHECKED	

STATE OF CALIFORNIA
DEPARTMENT OF TRANSPORTATION

DIVISION OF ENGINEERING SERVICES
ARCHITECTURAL AND STRUCTURAL DESIGN

BRIDGE NO. 54-1216J
POST MILE 177.3/181.1
CVEF TRUCK INSPECTION BUILDING

MOUNTAIN PASS JPOE
STATIC SCALE PIT DETAILS 4

SHEET ST7-114

TAEMWW Imperial Rev. 7/10

ORIGINAL SCALE IN INCHES FOR REDUCED PLANS 0 1 2 3

UNIT 3599
PROJECT NUMBER & PHASE 08000006281
EA 368501

DISREGARD PRINTS BEARING EARLIER REVISION DATES → 03-11-10 11-09-12 12-10-12

REVISION DATES (PRELIMINARY STAGE ONLY) SHEET OF

D:\user\Projects\A Expedite Process Folder\st7_114.dgn

26-FEB-2013 11:31

DIST.	COUNTY	ROUTE	POST MILES TOTAL PROJECT	SHEET NO.	TOTAL SHEETS
08	SBd	15	177.3/181.1	567	710

Shervin Pahlavan 11-27-12
REGISTERED CIVIL ENGINEER DATE

REGISTERED PROFESSIONAL ENGINEER
Shervin Pahlavan
No. 44463
Exp. 3-31-14
CIVIL
STATE OF CALIFORNIA

2-25-13
PLANS APPROVAL DATE

The State of California or its officers or agents shall not be responsible for the accuracy or completeness of electronic copies of this plan sheet.

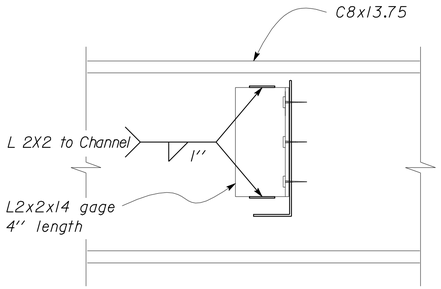

1 FRAMING CLIP WELD

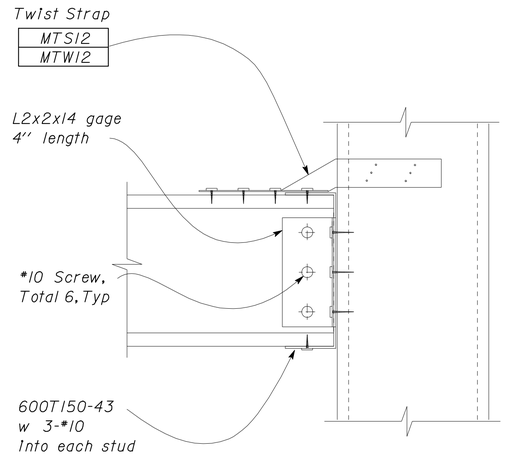

2 ROOF FRAMING SECTION DETAIL
Scale 4'' = 1' - 0''

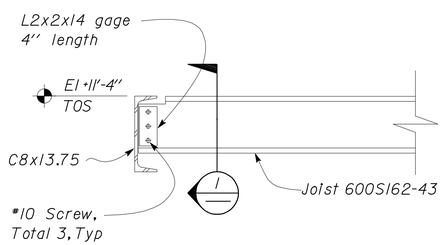

3 JOIST TO C8 DETAIL
Scale 1 1/2'' = 1' - 0''

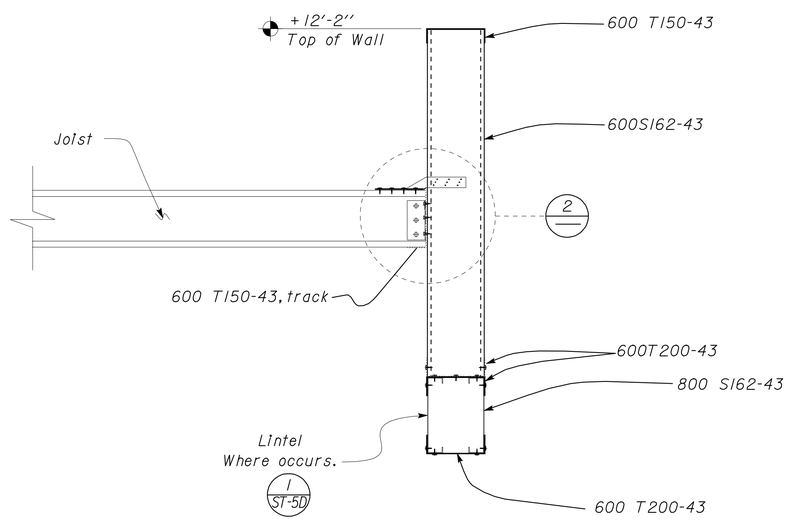

4 JOIST TO WALL CONNECTION DETAIL
Scale 1 1/2'' = 1' - 0''

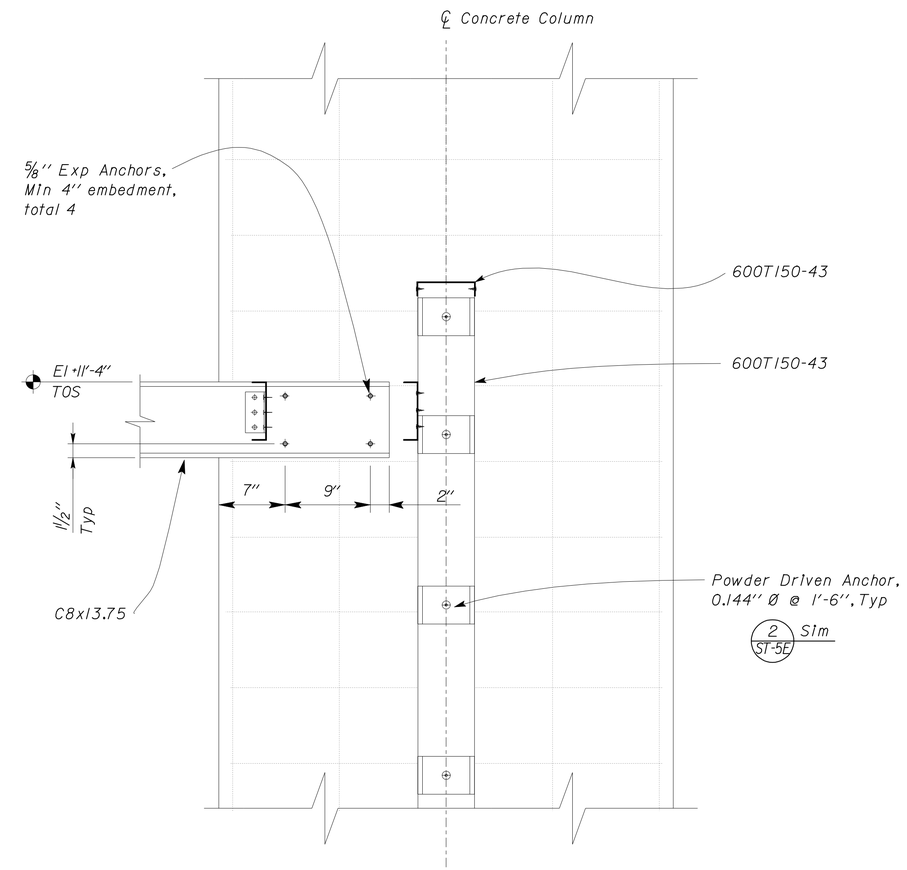

5 C8 TO COLUMN DETAIL
Scale 1 1/2'' = 1' - 0''

	BY	CHECKED
DESIGN	Shervin Pahlavan	Joseph Camilleri
DETAILS	Andrew Lovato	Shervin Pahlavan
QUANTITIES		

STATE OF CALIFORNIA
DEPARTMENT OF TRANSPORTATION

DIVISION OF ENGINEERING SERVICES
ARCHITECTURAL AND STRUCTURAL DESIGN

BRIDGE NO. 54-1216J
POST MILE 177.3/181.1

CVEF TRUCK INSPECTION BUILDING

MOUNTAIN PASS JPOE

MISCELLANEOUS FRAMING DETAILS

SHEET ST7-115

TAEMWW Imperial Rev. 7/10

ORIGINAL SCALE IN INCHES FOR REDUCED PLANS 0 1 2 3

UNIT 3599
PROJECT NUMBER & PHASE 08000006281
EA 368501

DISREGARD PRINTS BEARING EARLIER REVISION DATES

REVISION DATES (PRELIMINARY STAGE ONLY) 03-11-10 11-01-12 12-10-12

SHEET OF

26-FEB-2013 11:31
D:\user\Projects\A Expedite Process Folder\st7_115.dgn

DIST.	COUNTY	ROUTE	POST MILES TOTAL PROJECT	SHEET NO.	TOTAL SHEETS
08	SBd	15	177.3/181.1	568	710

Shervin Pahlavan 11-27-12
REGISTERED CIVIL ENGINEER DATE

REGISTERED PROFESSIONAL ENGINEER
Shervin Pahlavan
No. 44463
Exp. 3-31-14
CIVIL
STATE OF CALIFORNIA

2-25-13
PLANS APPROVAL DATE

The State of California or its officers or agents shall not be responsible for the accuracy or completeness of electronic copies of this plan sheet.

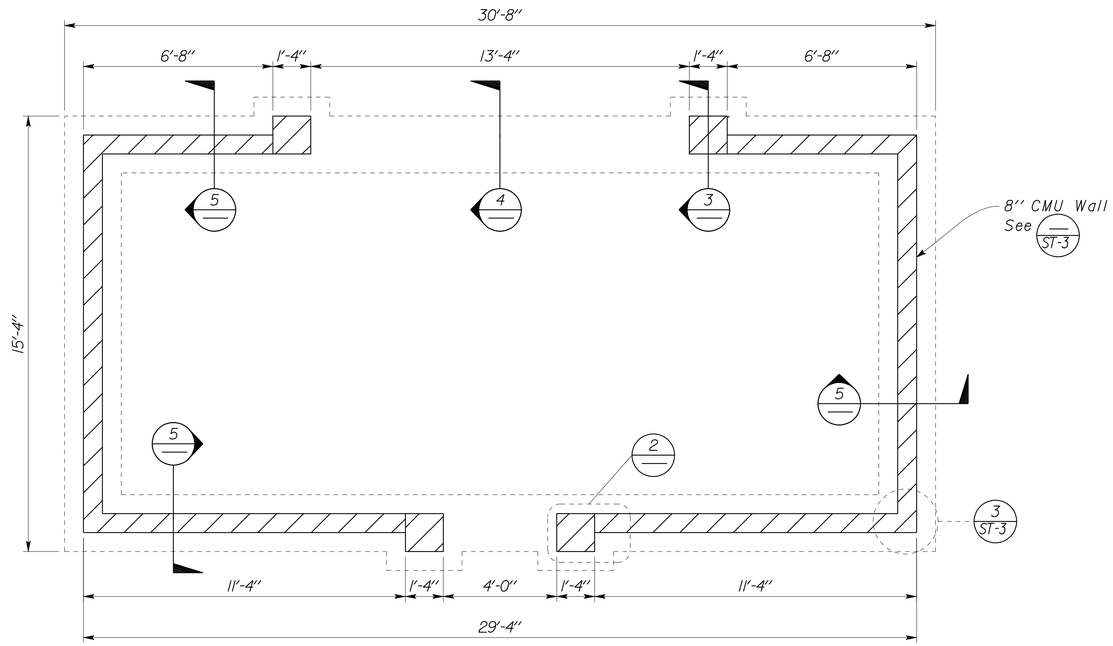

1 TRASH BIN ENCLOSURE PLAN
Scale 3/8" = 1' - 0"

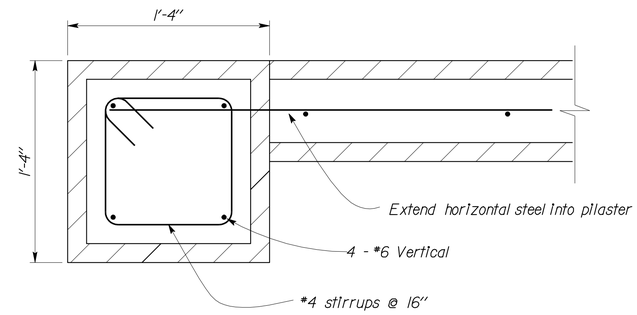

2 PILASTER SECTION
Scale 2" = 1' - 0"

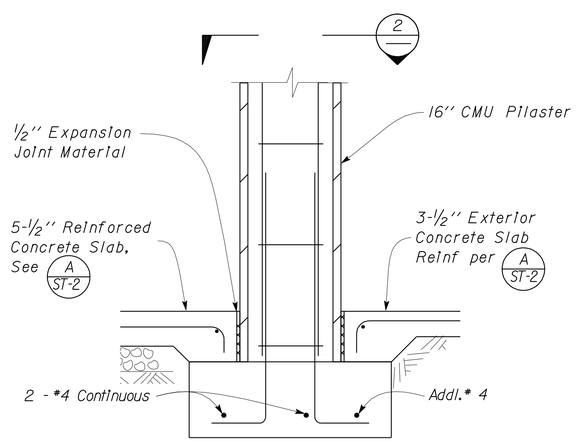

3 FOOTING DETAIL
Scale 1" = 1' - 0"

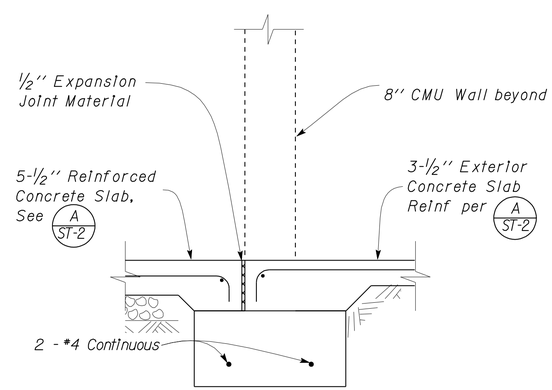

4 FOOTING DETAIL
Scale 1" = 1' - 0"

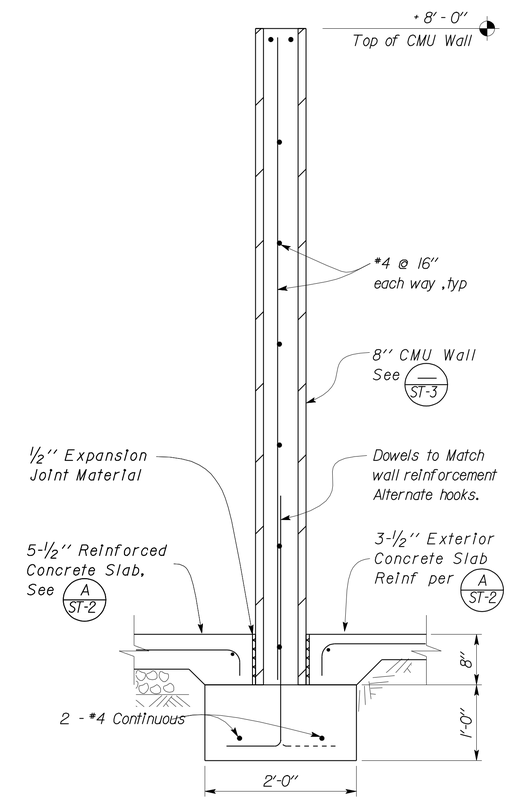

5 FOOTING DETAIL
Scale 1" = 1' - 0"

	BY	CHECKED
DESIGN	Shervin Pahlavan	Joseph Camilleri
DETAILS	Andrew Lovato	Shervin Pahlavan
QUANTITIES		

STATE OF CALIFORNIA
DEPARTMENT OF TRANSPORTATION

DIVISION OF ENGINEERING SERVICES
ARCHITECTURAL AND STRUCTURAL DESIGN

BRIDGE NO. 54-1216J
POST MILE 177.3/181.1
CVEF TRUCK INSPECTION BUILDING

MOUNTAIN PASS JPOE

TRASH ENCLOSURE DETAILS

SHEET **ST7-116**

TAEMWW Imperial Rev. 7/10

ORIGINAL SCALE IN INCHES FOR REDUCED PLANS 0 1 2 3

UNIT 3599
PROJECT NUMBER & PHASE 08000006281
EA 368501

DISREGARD PRINTS BEARING EARLIER REVISION DATES
REVISION DATES (PRELIMINARY STAGE ONLY) SHEET OF
07-19-10 11-01-12 12-10-12

D:\user\Projects\A Expedite Process Folder\st7_116.dgn

26-FEB-2013 11:31

DIST.	COUNTY	ROUTE	POST MILES TOTAL PROJECT	SHEET NO.	TOTAL SHEETS
08	SBd	15	177.3/181.1	569	710

Shervin Pahlavan 11-27-12
REGISTERED CIVIL ENGINEER DATE

REGISTERED PROFESSIONAL ENGINEER
Shervin Pahlavan
No. 44463
Exp. 3-31-14
CIVIL
STATE OF CALIFORNIA

2-25-13
PLANS APPROVAL DATE

The State of California or its officers or agents shall not be responsible for the accuracy or completeness of electronic copies of this plan sheet.

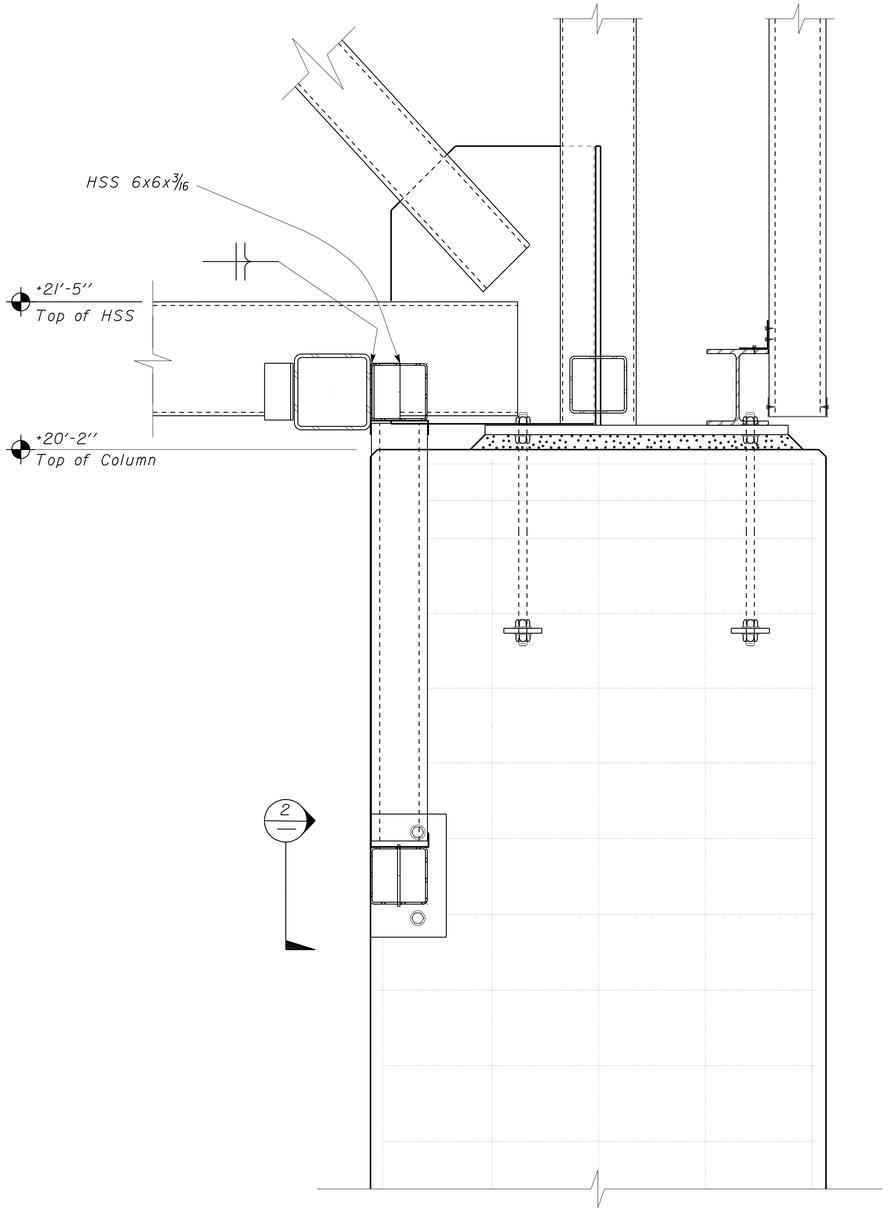

1 FASCIA SUPPORT DETAIL
Scale 1 1/2" = 1'-0"

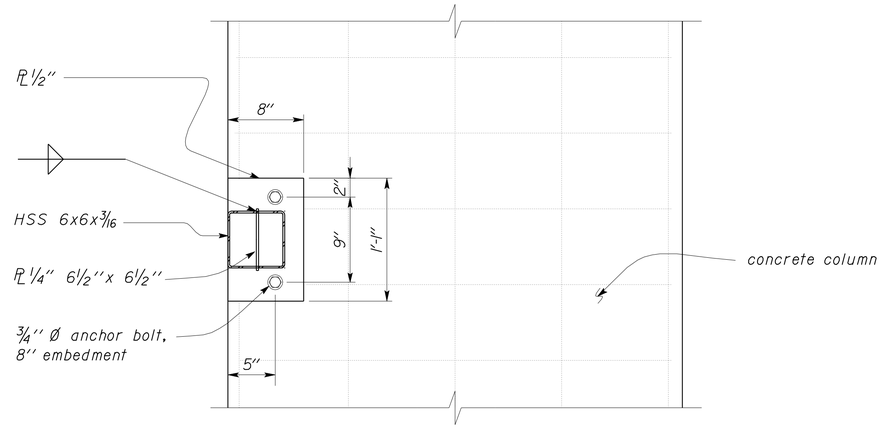

3 FASCIA SUPPORT SECTION
Scale 1 1/2" = 1'-0"

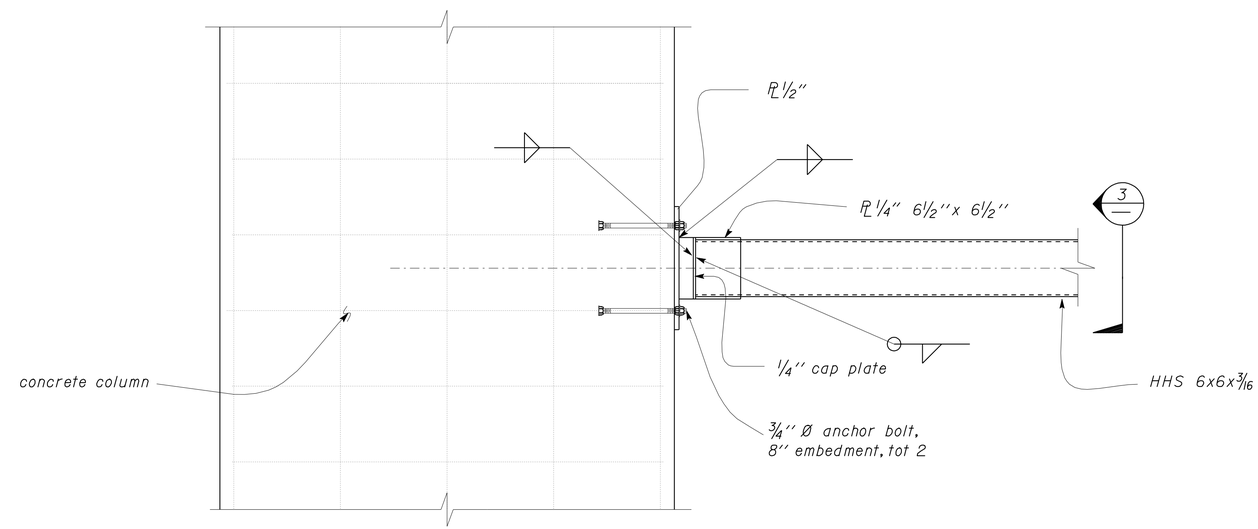

2 FASCIA SUPPORT ELEVATION
Scale 1 1/2" = 1'-0"

DESIGN	BY Shervin Pahlavan	CHECKED Joseph Camilleri
DETAILS	BY Andrew Lovato	CHECKED Shervin Pahlavan
QUANTITIES	BY	CHECKED

STATE OF CALIFORNIA
DEPARTMENT OF TRANSPORTATION

DIVISION OF ENGINEERING SERVICES
ARCHITECTURAL AND STRUCTURAL DESIGN

BRIDGE NO. 54-1216J
POST MILE 177.3/181.1

CVEF TRUCK INSPECTION BUILDING

MOUNTAIN PASS JPOE

INSPECTION BUILDING FASCIA FRAMING

SHEET ST7-117

TAEMWW Imperial Rev. 7/10

ORIGINAL SCALE IN INCHES FOR REDUCED PLANS 0 1 2 3

UNIT 3599
PROJECT NUMBER & PHASE 08000006281
EA 368501

DISREGARD PRINTS BEARING EARLIER REVISION DATES → 03-11-10 11-01-12 12-10-12

REVISION DATES (PRELIMINARY STAGE ONLY) SHEET OF

D:\user\Projects\A Expedite Process Folder\st7_117.dgn

26-FEB-2013 11:31

DIST.	COUNTY	ROUTE	POST MILES TOTAL PROJECT	SHEET NO.	TOTAL SHEETS
08	SBd	15	177.3/181.1	570	710

Shervin Pahlavan 11-27-12
REGISTERED CIVIL ENGINEER DATE

REGISTERED PROFESSIONAL ENGINEER Shervin Pahlavan No. 44463 Exp. 3-31-14 CIVIL STATE OF CALIFORNIA

2-25-13
PLANS APPROVAL DATE

The State of California or its officers or agents shall not be responsible for the accuracy or completeness of electronic copies of this plan sheet.

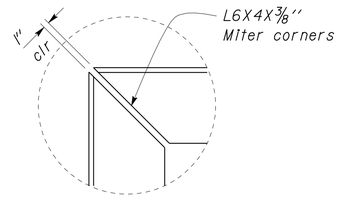

A L6X4 ANGLE MITERING
Scale 2" = 1' - 0"

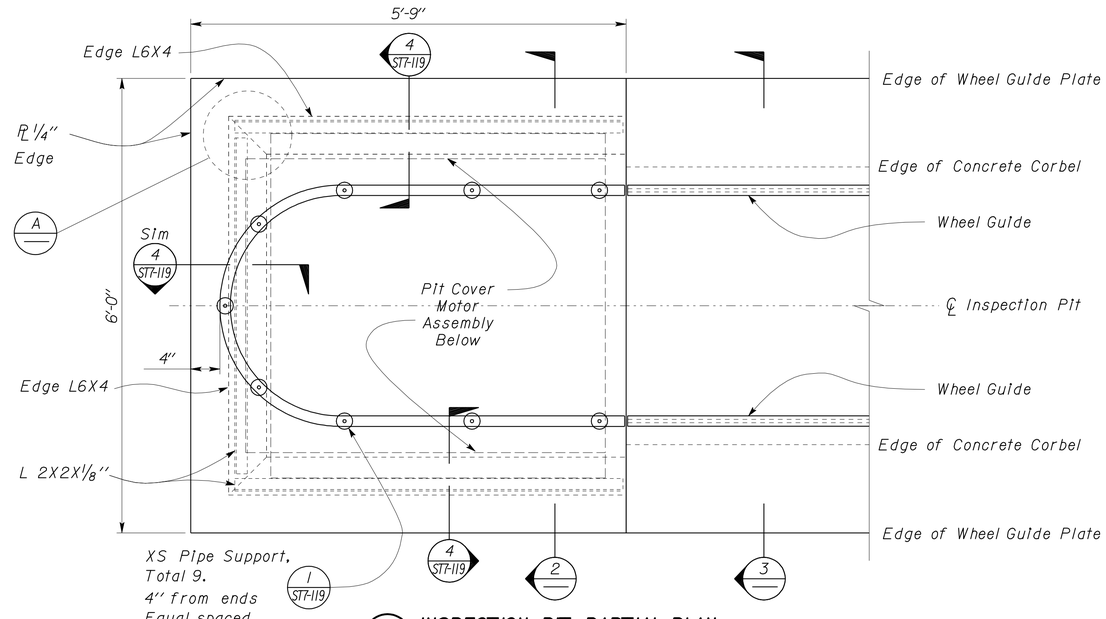

1 INSPECTION PIT PARTIAL PLAN
Scale 1" = 1' - 0"

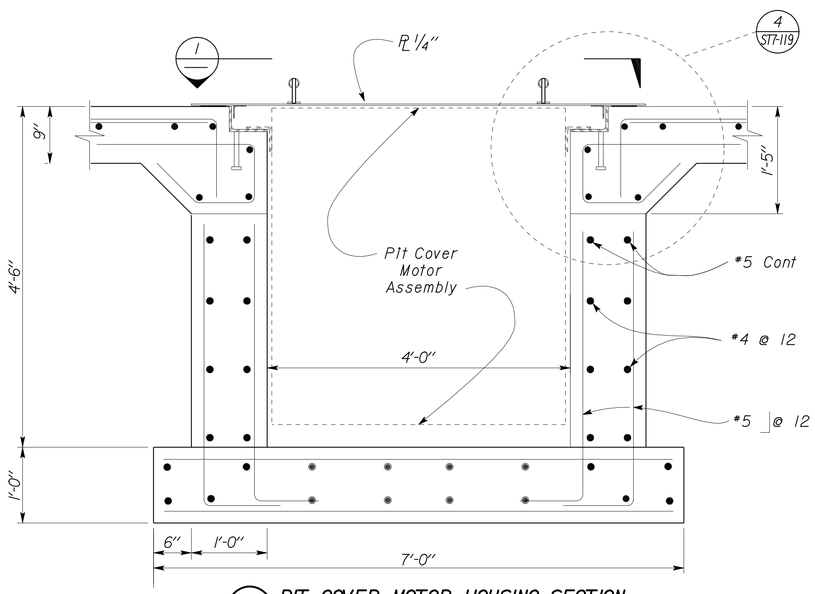

2 PIT COVER MOTOR HOUSING SECTION
Scale 1" = 1' - 0"

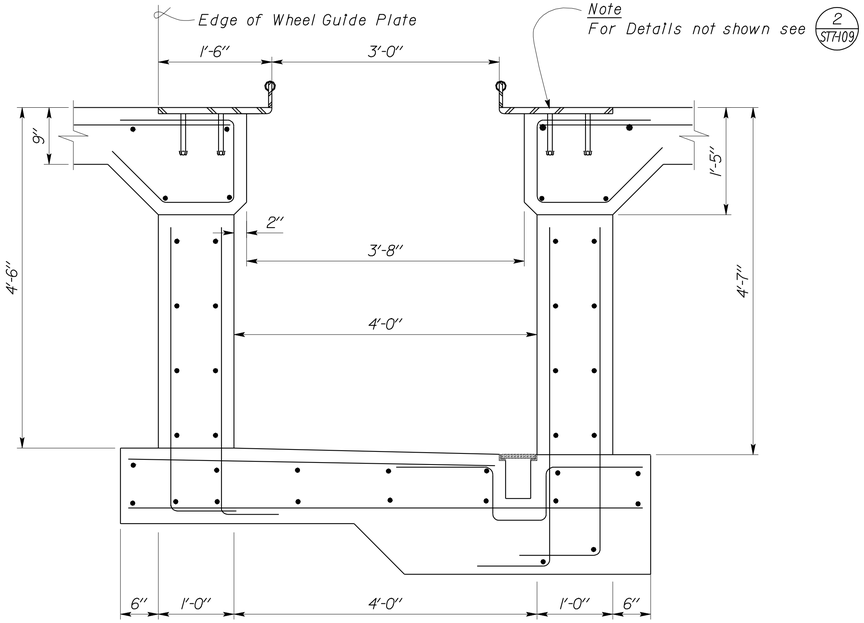

3 INSPECTION PIT TYPICAL SECTION
Scale 1" = 1' - 0"

	BY	CHECKED
DESIGN	Shervin Pahlavan	Joseph Camilleri
DETAILS	Andrew Lovato	Shervin Pahlavan
QUANTITIES		

STATE OF CALIFORNIA
DEPARTMENT OF TRANSPORTATION

DIVISION OF ENGINEERING SERVICES
ARCHITECTURAL AND STRUCTURAL DESIGN

BRIDGE NO. 54-1216J
POST MILE 177.3/181.1

CVEF TRUCK INSPECTION BUILDING

MOUNTAIN PASS JPOE

INSPECTION PIT SECTION AND COVER DETAILS

SHEET ST7-118

TAEMWW Imperial Rev. 7/10

ORIGINAL SCALE IN INCHES FOR REDUCED PLANS 0 1 2 3

UNIT 3599
PROJECT NUMBER & PHASE 08000006281
EA 368501

DISREGARD PRINTS BEARING EARLIER REVISION DATES → 03-11-10 11-01-12 12-10-12

REVISION DATES (PRELIMINARY STAGE ONLY) SHEET OF

D:\user\Projects\A Expedite Process Folder\st7_118.dgn

26-FEB-2013 11:31

DIST.	COUNTY	ROUTE	POST MILES TOTAL PROJECT	SHEET NO.	TOTAL SHEETS
08	SBd	15	177.3/181.1	571	710

Shervin Pahlavan 11-27-12
REGISTERED CIVIL ENGINEER DATE

REGISTERED PROFESSIONAL ENGINEER Shervin Pahlavan No. 44463 Exp. 3-31-14 CIVIL STATE OF CALIFORNIA

2-25-13
PLANS APPROVAL DATE

The State of California or its officers or agents shall not be responsible for the accuracy or completeness of electronic copies of this plan sheet.

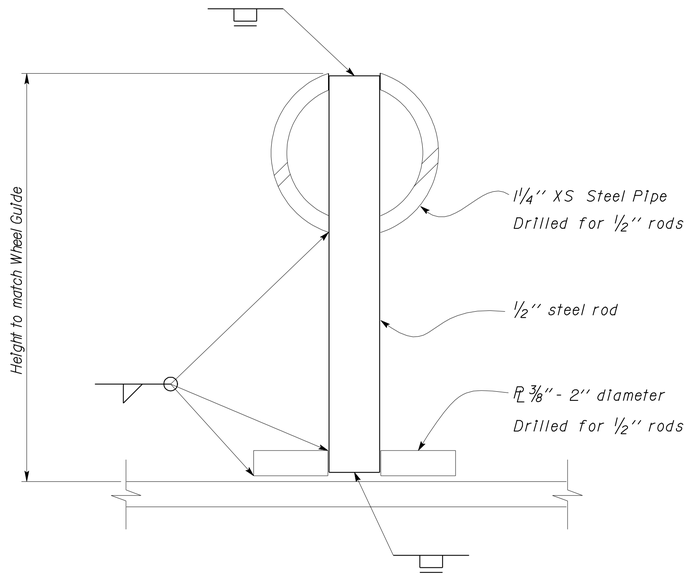

1 XS PIPE SUPPORT DETAIL
No Scale

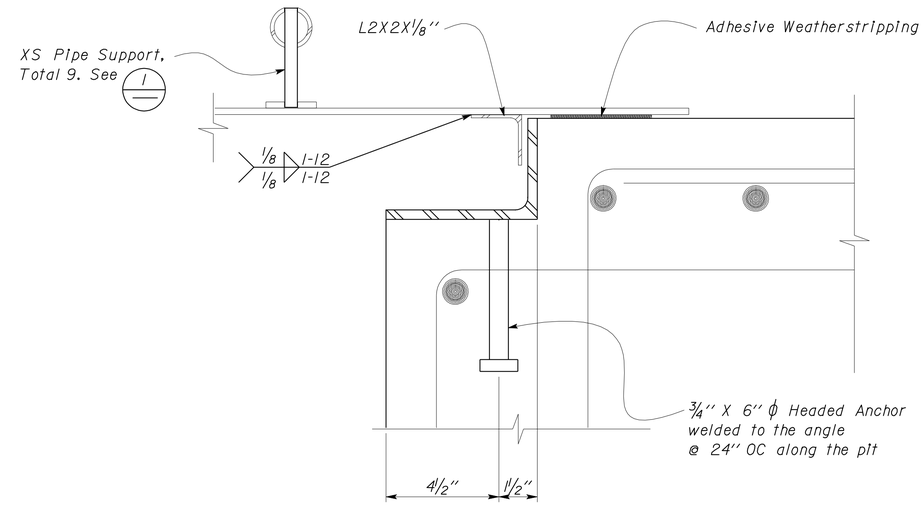

3 PIT COVER MOTOR CORBEL DETAIL
Scale 4'' = 1' - 0''

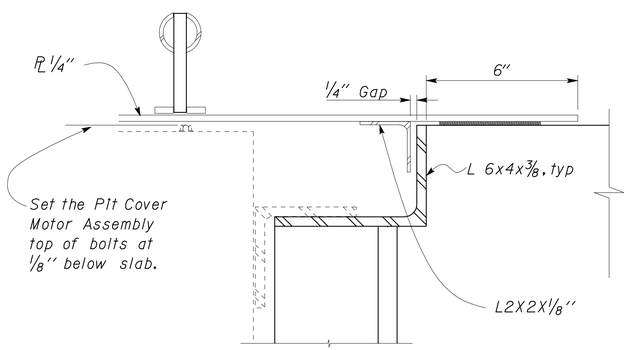

2 PIT COVER MOTOR HOUSING CLEARANCES
Scale 4'' = 1' - 0''

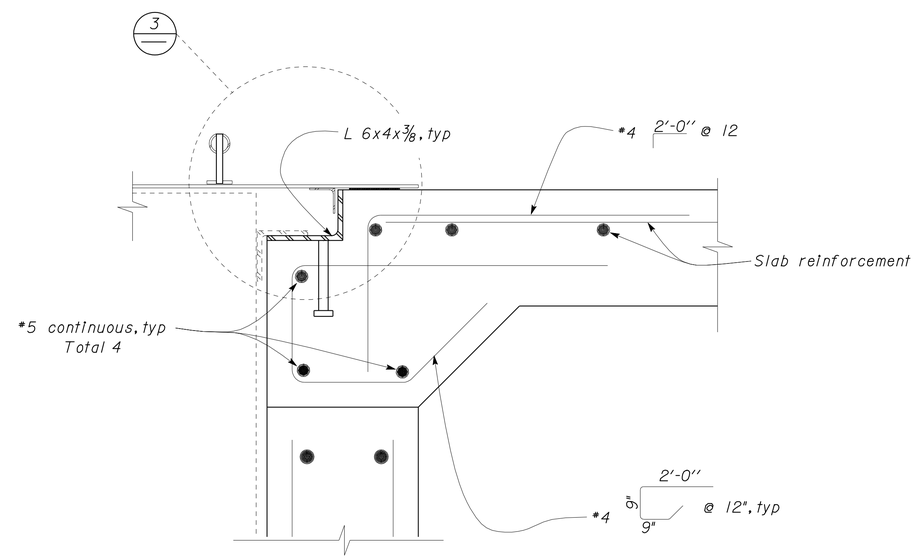

4 PIT COVER MOTOR CORBEL DETAIL
Scale 2'' = 1' - 0''

DESIGN	BY Shervin Pahlavan	CHECKED Joseph Camilleri	
DETAILS	BY Andrew Lovato	CHECKED Shervin Pahlavan	
QUANTITIES	BY	CHECKED	

STATE OF CALIFORNIA DEPARTMENT OF TRANSPORTATION

DIVISION OF ENGINEERING SERVICES ARCHITECTURAL AND STRUCTURAL DESIGN

BRIDGE NO. 54-1216J
POST MILE 177.3/181.1

CVEF TRUCK INSPECTION BUILDING

MOUNTAIN PASS JPOE

INSPECTION PIT SECTION AND COVER DETAILS

SHEET ST7-119

TAEMWW Imperial Rev. 7/10

ORIGINAL SCALE IN INCHES FOR REDUCED PLANS 0 1 2 3

UNIT 3599
PROJECT NUMBER & PHASE 08000006281
EA 368501

DISREGARD PRINTS BEARING EARLIER REVISION DATES → REVISION DATES (PRELIMINARY STAGE ONLY) 03-11-10 11-01-12 12-10-12

SHEET OF

26-FEB-2013 11:31
D:\user\Projects\A Expedite Process Folder\st7_119.dgn

PROJECT DESIGN CRITERIA

The building work on this project has been designed to conform to the 2007 California Building Code (2006 IBC).

LOADS

SEISMIC: Occupancy Factor = II

Importance Factor = 1.0

Site Soil Class = D

S_S = 0.356 S_{DS} = 0.360

S_1 = 0.174 S_{D1} = 0.245

Seismic Design Category = D

Seismic Force-Resisting System:

Cantilevered Column System

North - South

Ordinary steel moment frames.

R = 1.25 C_S = 0.2880

Cantilevered Column System

East - West

Ordinary steel moment frames.

R = 1.25 C_S = 0.2880

WIND: Importance Factor = 1.0

Basic Wind Speed = 85 mph

Exposure C

Internal Pressure Coefficient GC_{pi} = ± 0.00

Wind Pressure on Components and Cladding = 22 psf

Windward Parapet GC_{pi} = +1.50

Leeward Parapet GC_{pn} = -1.00

LIVE LOAD: Roof = 20 psf

MATERIALS

REINFORCED CONCRETE: (Ultimate Strength Design):

f'c = 3,000 psi

f_y = 60,000 psi

FOUNDATION:

Soils report dated : Jun 26, 2002

Allowable Soil Pressure (DL + LL) : = 2,000 psf

For Soil Classification, see Log of Test Boring Sheets.

STRUCTURAL STEEL: (Allowable Strength Design):

Wide Flange F_y = 50 ksi

Channels, Angles & Misc. Shapes F_y = 36 ksi

Plates F_y = 36 ksi

Hollow Structural Steel (HSS) F_y = 46 ksi

COLD FORMED STEEL: shall be F_y = 33 ksi

DETAIL NOTES

1. All bolts shall be hex head A325 High Strength Bolts, unless otherwise noted.
2. All miscellaneous metal shall be hot-dipped galvanized after fabrication.

DIST.	COUNTY	ROUTE	POST MILES TOTAL PROJECT	SHEET NO.	TOTAL SHEETS
08	SBd	15	177.3/181.1	572	710

Shervin Pahlavan 11-27-12
REGISTERED CIVIL ENGINEER DATE

REGISTERED PROFESSIONAL ENGINEER Shervin Pahlavan No. 44463 Exp. 3-31-14 CIVIL STATE OF CALIFORNIA

2-25-13
PLANS APPROVAL DATE

The State of California or its officers or agents shall not be responsible for the accuracy or completeness of electronic copies of this plan sheet.

	BY	CHECKED
DESIGN	Shervin Pahlavan	Thomas Tong
DETAILS	Andrew Lovato	Shervin Pahlavan
QUANTITIES		

STATE OF CALIFORNIA DEPARTMENT OF TRANSPORTATION

DIVISION OF ENGINEERING SERVICES ARCHITECTURAL AND STRUCTURAL DESIGN

BRIDGE NO. 54-1216J

POST MILE 177.3/181.1

AIR RESOURCE BOARD CANOPY

MOUNTAIN PASS JPOE

DESIGN CRITERIA AND DETAIL NOTES

SHEET ST9-0

DOES SD Imperial Rev. 9/02

ORIGINAL SCALE IN INCHES FOR REDUCED PLANS 0 1 2 3

UNIT 3599

PROJECT NUMBER & PHASE 08000006281

EA 368501

DISREGARD PRINTS BEARING EARLIER REVISION DATES → 11-27-12 12-10-12

REVISION DATES (PRELIMINARY STAGE ONLY) SHEET OF

26-FEB-2013 11:32

st9_00.dgn

DIST.	COUNTY	ROUTE	POST MILES TOTAL PROJECT	SHEET NO.	TOTAL SHEETS
08	SBd	15	177.3/181.1	573	710

Shervin Pahlavan 11-27-12
REGISTERED CIVIL ENGINEER DATE

REGISTERED PROFESSIONAL ENGINEER
Shervin Pahlavan
No. 44463
Exp. 3-31-14
CIVIL
STATE OF CALIFORNIA

2-25-13
PLANS APPROVAL DATE

The State of California or its officers or agents shall not be responsible for the accuracy or completeness of electronic copies of this plan sheet.

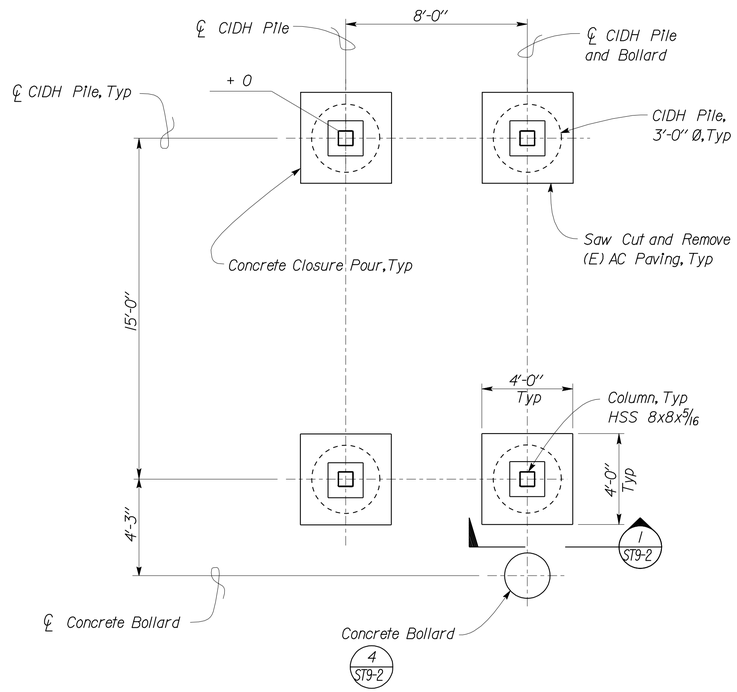

1 FOUNDATION PLAN
No Scale

PILE DATA - CIDH PILE

LOCATION	DIAMETER	DESIGN LOADING (Service Load)	CUT-OFF ELEVATION	TIP ELEVATION
Air Resources Board Canopy	3'-0"	9000 kips	- 1'-0"	- 9'-0"

Note: For details and dimensions not shown, see Architectural Plans.

Elevation @ Top of (E) AC Paving as shown = Datum 0 mm

DESIGN	BY Shervin Pahlavan	CHECKED Thomas Tong	
DETAILS	BY Andrew Lovato	CHECKED Shervin Pahlavan	
QUANTITIES	BY	CHECKED	

DESIGN ENGINEER

STATE OF CALIFORNIA
DEPARTMENT OF TRANSPORTATION

DIVISION OF ENGINEERING SERVICES
ARCHITECTURAL AND STRUCTURAL DESIGN

BRIDGE NO. 54-1216J
POST MILE 177.3/181.1

MOUNTAIN PASS JPOE
AIR RESOURCE BOARD CANOPY
FOUNDATION PLAN

SHEET ST9-1

DOES SD Imperial Rev. 9/02

ORIGINAL SCALE IN INCHES FOR REDUCED PLANS 0 1 2 3

UNIT 3599
PROJECT NUMBER & PHASE 08000006281
EA 368501

DISREGARD PRINTS BEARING EARLIER REVISION DATES → 11-27-12 12-10-12

REVISION DATES (PRELIMINARY STAGE ONLY) SHEET OF

st9_01.dgn

26-FEB-2013 11:32

DIST.	COUNTY	ROUTE	POST MILES TOTAL PROJECT	SHEET NO.	TOTAL SHEETS
08	SBd	15	177.3/181.1	574	710

Shervin Pahlavan 11-27-12
REGISTERED CIVIL ENGINEER DATE

REGISTERED PROFESSIONAL ENGINEER
Shervin Pahlavan
No. 44463
Exp. 3-31-14
CIVIL
STATE OF CALIFORNIA

2-25-13
PLANS APPROVAL DATE

The State of California or its officers or agents shall not be responsible for the accuracy or completeness of electronic copies of this plan sheet.

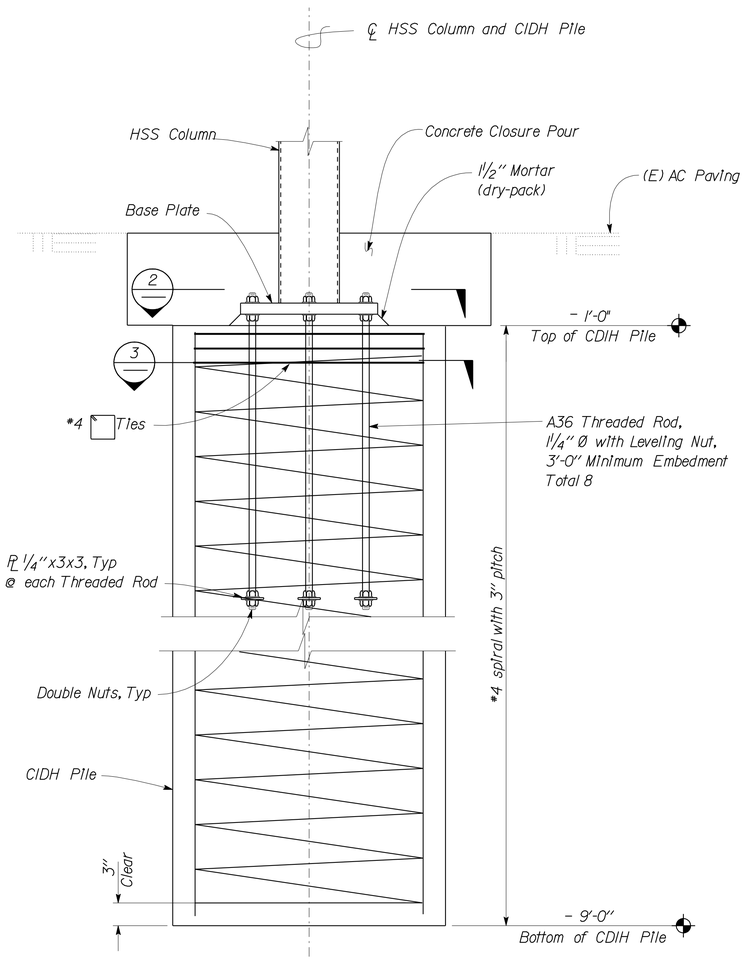

1 CIDH PILE DETAIL
No Scale

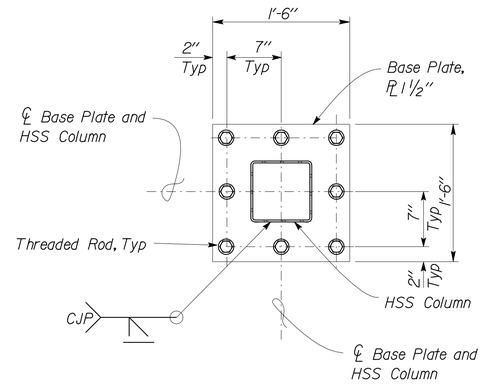

2 BASE PLATE DETAIL
No Scale

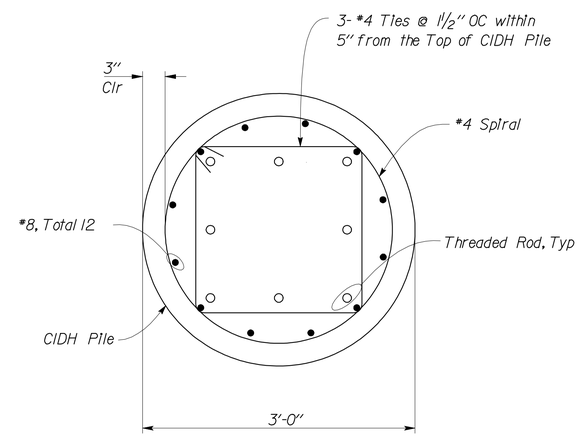

3 CIDH PILE DETAIL
No Scale

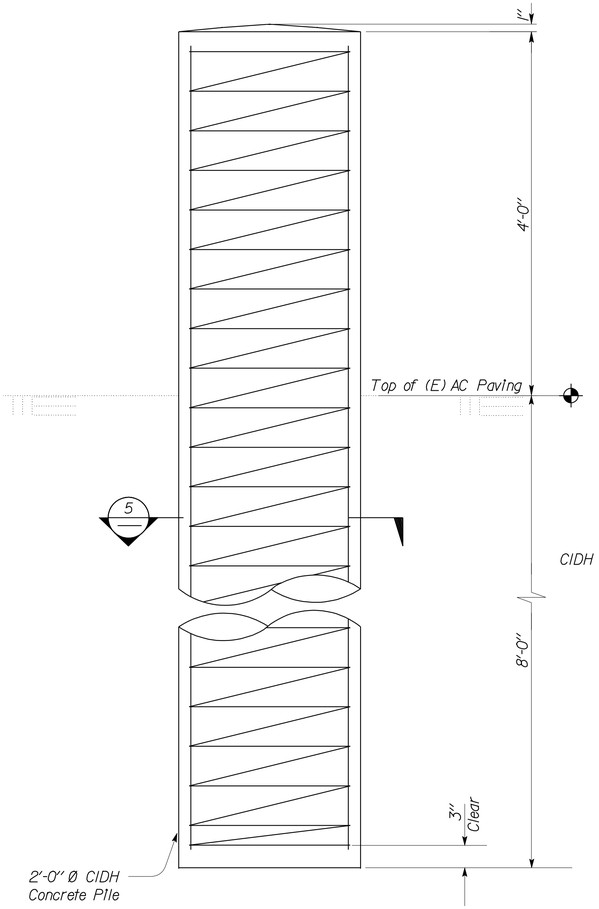

4 CONCRETE BOLLARD
No Scale

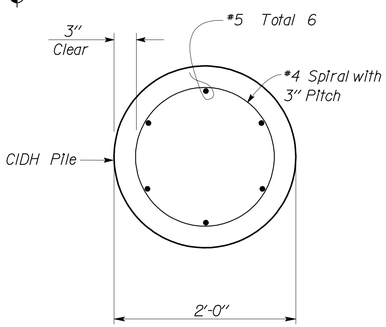

5 BOLLARD SECTION
No Scale

DESIGN	BY Shervin Pahlavan	CHECKED Thomas Tong	STATE OF CALIFORNIA DEPARTMENT OF TRANSPORTATION	DIVISION OF ENGINEERING SERVICES ARCHITECTURAL AND STRUCTURAL DESIGN	BRIDGE NO. 54-1216J
DETAILS	BY Andrew Lovato	CHECKED Shervin Pahlavan			POST MILE 177.3/181.1
QUANTITIES	BY	CHECKED			

MOUNTAIN PASS JPOE
AIR RESOURCE BOARD CANOPY
FOUNDATION DETAILS
SHEET ST9-2

DOES SD Imperial Rev. 9/02

ORIGINAL SCALE IN INCHES FOR REDUCED PLANS 0 1 2 3

UNIT 3599
PROJECT NUMBER & PHASE 08000006281
EA 368501

DISREGARD PRINTS BEARING EARLIER REVISION DATES
REVISION DATES (PRELIMINARY STAGE ONLY) 11-27-12 12-10-12
SHEET OF

26-FEB-2013 11:32
st9_02.dgn

DIST.	COUNTY	ROUTE	POST MILES TOTAL PROJECT	SHEET NO.	TOTAL SHEETS
08	SBd	15	177.3/181.1	575	710

Shervin Pahlavan 11-27-12
REGISTERED CIVIL ENGINEER DATE

REGISTERED PROFESSIONAL ENGINEER
Shervin Pahlavan
No. 44463
Exp. 3-31-14
CIVIL
STATE OF CALIFORNIA

2-25-13
PLANS APPROVAL DATE

The State of California or its officers or agents shall not be responsible for the accuracy or completeness of electronic copies of this plan sheet.

Caltrans now has a web site.
To get to the web site go to http://www.dot.ca.gov

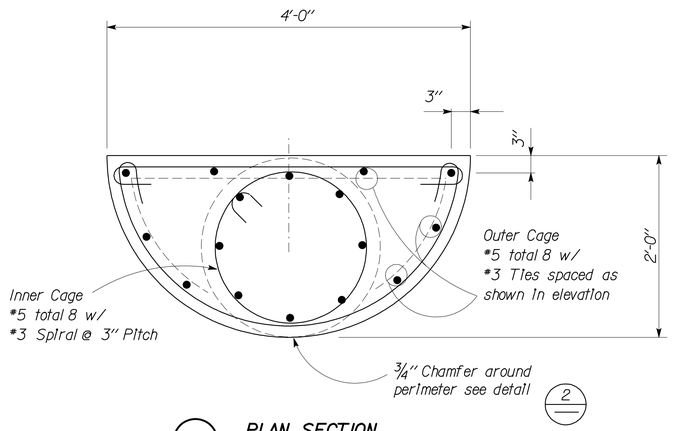

1 PLAN SECTION
No Scale

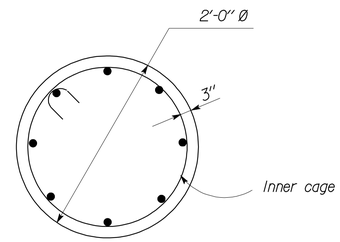

3 PLAN SECTION
No Scale

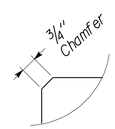

2 CHAMFER DETAIL
No Scale

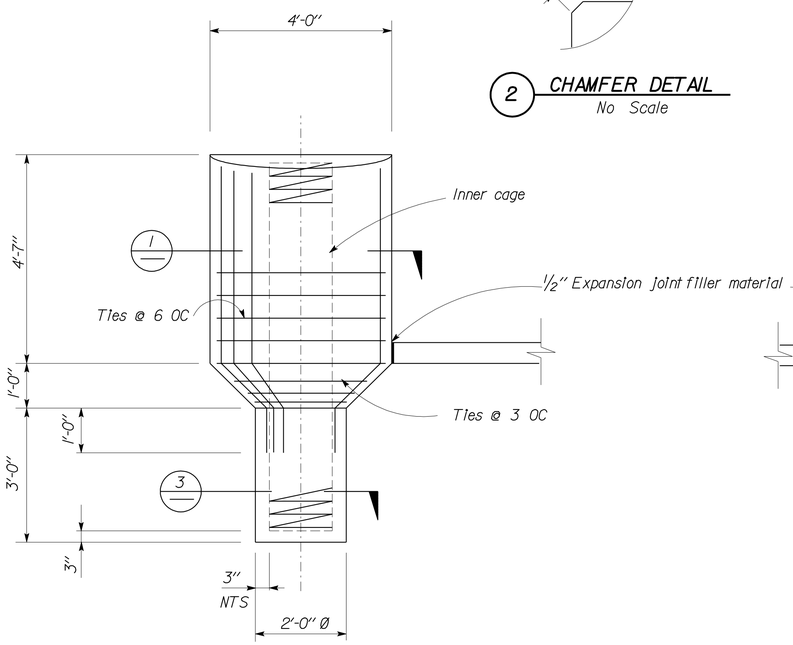

5 BOLLARD ELEVATION
No Scale

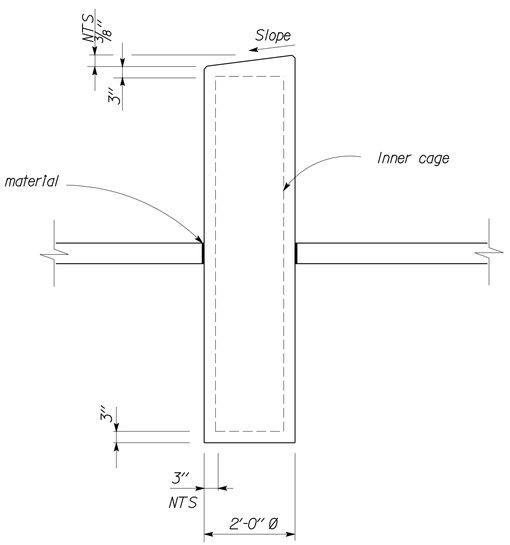

6 SIDE ELEVATION
No Scale

	BY	CHECKED
DESIGN	Shervin Pahlavan	Thomas Tong
DETAILS	Andrew Lovato	Shervin Pahlavan
QUANTITIES		

STATE OF CALIFORNIA
DEPARTMENT OF TRANSPORTATION

DIVISION OF ENGINEERING SERVICES
ARCHITECTURAL AND STRUCTURAL DESIGN

BRIDGE NO. 54-1216J
POST MILE 87.1/87.5

MOUNTAIN PASS JPOE
MISCELLANEOUS DETAILS
MISCELLANEOUS DETAILS

SHEET ST10-1

DOES SD Imperial Rev. 9/02

ORIGINAL SCALE IN INCHES FOR REDUCED PLANS 0 1 2 3

UNIT 3599
PROJECT NUMBER & PHASE 08000006281
EA 368501

DISREGARD PRINTS BEARING EARLIER REVISION DATES
REVISION DATES (PRELIMINARY STAGE ONLY) 11-27-12 12-10-12
SHEET OF

26-FEB-2013 11:32
st10_01.dgn

DIST.	COUNTY	ROUTE	POST MILES TOTAL PROJECT	SHEET NO.	TOTAL SHEETS
08	SBd	15	177.3/181.1	576	710

Shervin Pahlavan 11-27-12
REGISTERED CIVIL ENGINEER DATE

REGISTERED PROFESSIONAL ENGINEER
Shervin Pahlavan
No. 44463
Exp. 3-31-14
CIVIL
STATE OF CALIFORNIA

2-25-13
PLANS APPROVAL DATE

The State of California or its officers or agents shall not be responsible for the accuracy or completeness of electronic copies of this plan sheet.

Caltrans now has a web site.
To get to the web site go to http://www.dot.ca.gov

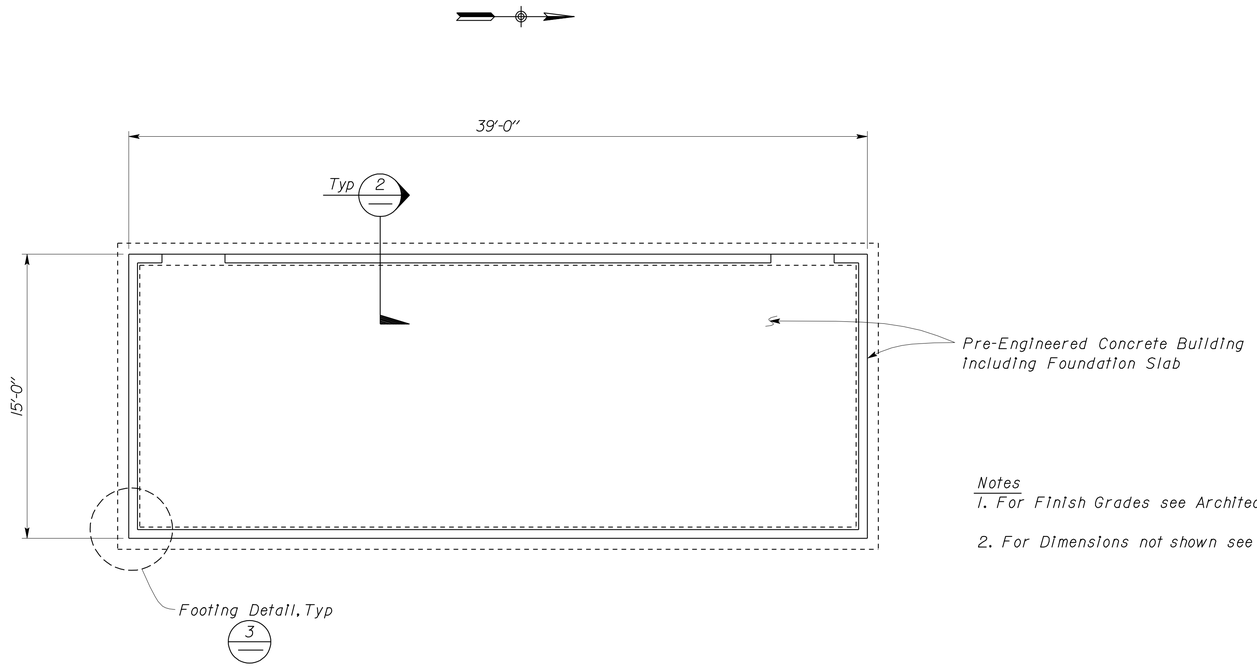

Notes
1. For Finish Grades see Architectural Plans.
2. For Dimensions not shown see Architectural Plans.

1 COMMUNICATION BUILDING FOUNDATION PLAN
Scale 1/4" = 1' - 0"

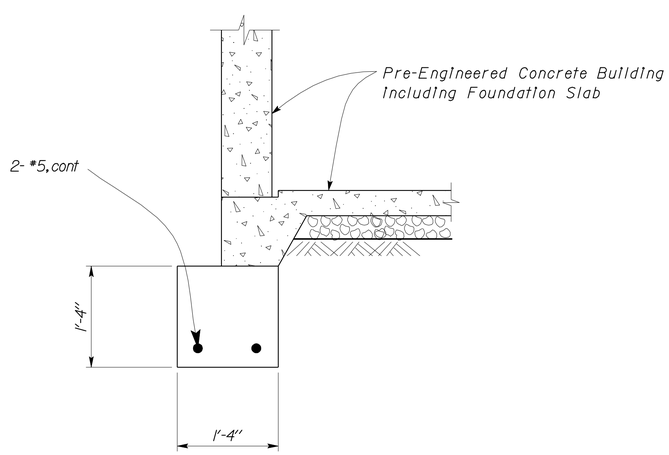

2 FOOTING SECTION
Scale 1" = 1' - 0"

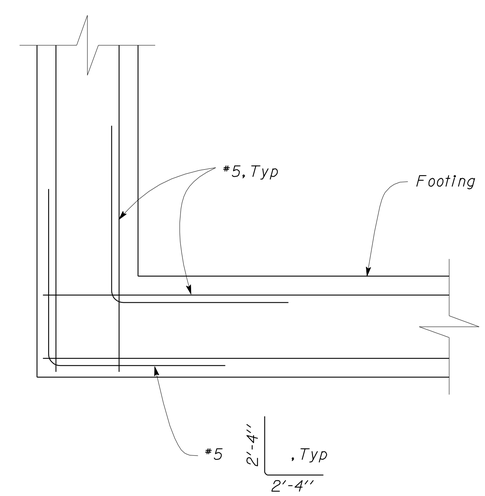

3 FOOTING CORNER DETAIL
Scale 1" = 1' - 0"

DESIGN	BY Shervin Pahlavan	CHECKED Thomas Tong	
DETAILS	BY Andrew Lovato	CHECKED Shervin Pahlavan	
QUANTITIES	BY	CHECKED	

STATE OF CALIFORNIA
DEPARTMENT OF TRANSPORTATION

DIVISION OF ENGINEERING SERVICES
ARCHITECTURAL AND STRUCTURAL DESIGN

BRIDGE NO. 54-1216J
POST MILE 87.1/87.5

MISCELLANEOUS DETAILS

MOUNTAIN PASS JPOE

PRECAST BUILDING FOOTING

SHEET **ST10-2**

DOES SD Imperial Rev. 9/02

ORIGINAL SCALE IN INCHES FOR REDUCED PLANS 0 1 2 3

UNIT 3599
PROJECT NUMBER & PHASE 08000006281
EA 368501

DISREGARD PRINTS BEARING EARLIER REVISION DATES →

REVISION DATES (PRELIMINARY STAGE ONLY) 03-11-10 11-27-12 12-10-12

SHEET OF

26-FEB-2013 11:32
st10_02.dgn

DIST	COUNTY	ROUTE	POST MILES TOTAL PROJECT	SHEET No	TOTAL SHEETS
08	SBd	15	177.3/181.1	577	710

F. Gerami 7-28-08
CERTIFIED ENGINEERING GEOLOGIST

2-25-13
PLANS APPROVAL DATE

PROFESSIONAL GEOLOGIST Faramarz Gerami No. 2340 Exp. 4-30-09 CERTIFIED ENGINEERING GEOLOGIST STATE OF CALIFORNIA

The State of California or its officers or agents shall not be responsible for the accuracy or completeness of electronic copies of this plan sheet.

BENCH MARK

SURVEY CONTROL

PHHV 66

Fnd C-Nail Set in Target
81.324 Rt. ℄ Rte 15
Sta. 9472+08.887
N 2 384 018.123
E 7 326 468.174
Elev. = 2754.624

PRHV 1794

Fnd 1" IP @ SE about
92.153' Rt. ℄ Rte 15
Sta.9460+41.637
N 2 382 903.533
E 7 326 121.361
Elev. = 2778.466

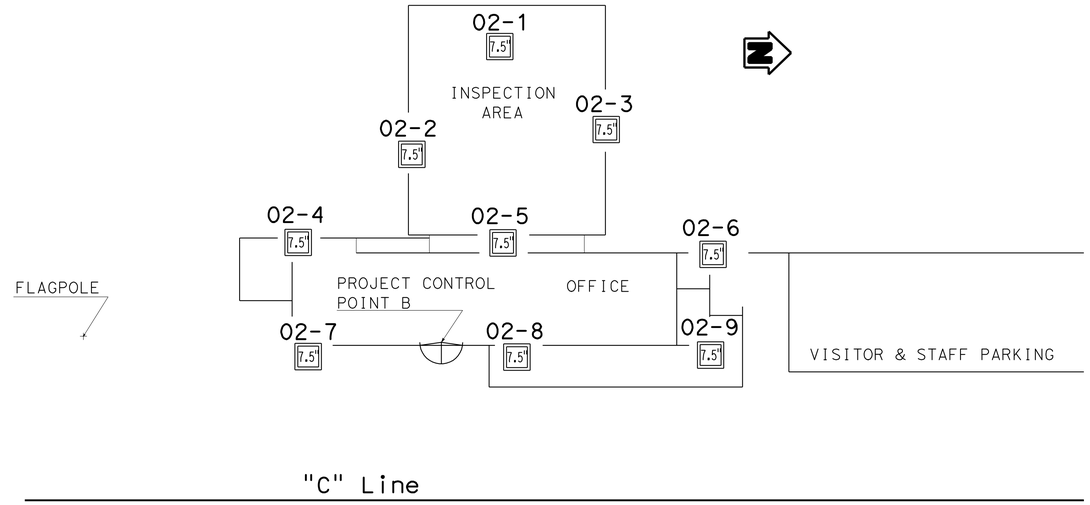

PLAN

Not to Scale

Notes:

1. E= Blow count for 1' penetration extrapolated from blow count for less than 1' penetration (typically due to change in material or hard driving).
2. CME automatic hammer was used to advance the sampler using a 140 lb hammer with a 30" drop.
3. No ground water encountered during field investigation.

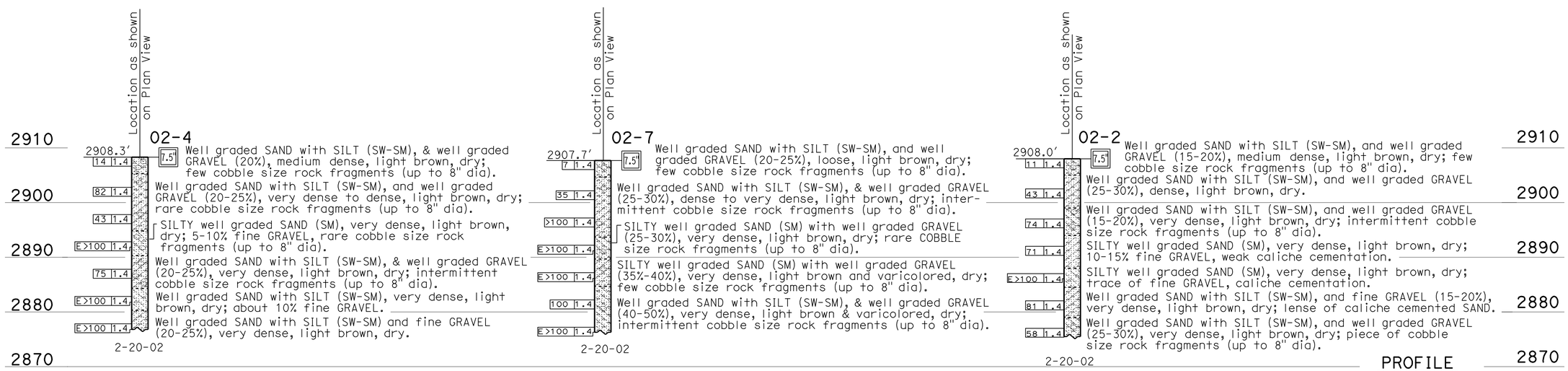

PROFILE

HOR: Not to Scale
VER: 1" = 10'

LEGEND OF BORING OPERATIONS

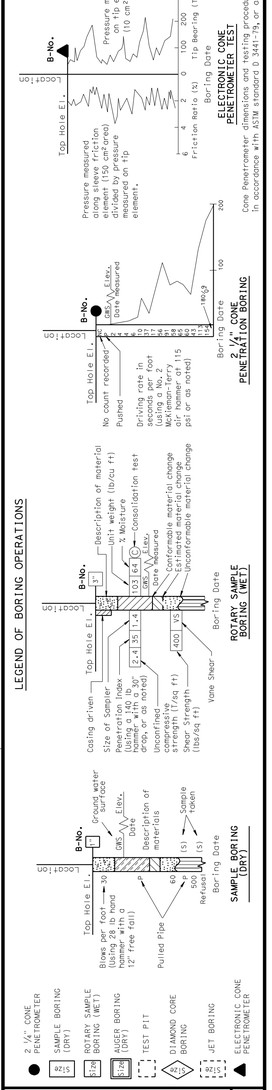

LEGEND OF EARTH MATERIALS

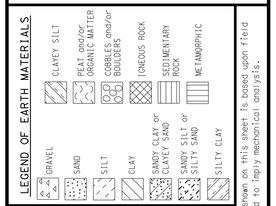

CONSISTENCY CLASSIFICATION FOR SOILS

According to the Standard Penetration Test

SPT N-Value (Blows/ Foot)	Granular	SPT N-Value (Blows/ Foot)	Cohesive
0-4	Very Loose	<2	Very Soft
5-10	Loose	2-4	Soft
11-30	Medium Dense	5-8	Medium stiff
31-50	Dense	9-15	Stiff
>50	Very Dense	16-30	Very Stiff
		31-60	Hard
		>60	Very Hard

NOTE: Classification of earth material as shown on this sheet is based upon field inspection and is not to be construed to imply mechanical analysis.

ENGINEERING SERVICES	GEOTECHNICAL SERVICES
DRAWN BY	I. G-Remmen
CHECKED BY	F. Gerami

FIELD INVESTIGATION BY: F. Gerami

STATE OF CALIFORNIA
DEPARTMENT OF TRANSPORTATION

DIVISION OF ENGINEERING SERVICES
STRUCTURE DESIGN
DESIGN BRANCH

CU 08224
EA 368501

BRIDGE NO. 54-1216J
POST MILE 177.3/181.1

MOUNTAIN PASS JPOE

LOG OF TEST BORINGS 1 OF 3

ORIGINAL SCALE IN INCHES FOR REDUCED PLANS 0 1 2 3

DISREGARD PRINTS BEARING EARLIER REVISION DATES

REVISION DATES (PRELIMINARY STAGE ONLY) 07-09-08 SHEET OF

OGS LOG OF TEST BORINGS SHEET (ENGLISH) (REV. 5/25/07)

FILE => st_Log_CVEF_1_of_3.dgn

D:\user\Projects\A Expedite Process Folder\st_Log_CVEF_1_of_3.dgn

USERNAME => s709858 DATE PLOTTED => 26-FEB-2013 TIME PLOTTED => 11:32

DIST	COUNTY	ROUTE	POST MILES TOTAL PROJECT	SHEET No	TOTAL SHEETS
08	SBd	15	177.3/181.1	578	710

F. Gerami 7-28-08
CERTIFIED ENGINEERING GEOLOGIST

2-25-13
PLANS APPROVAL DATE

PROFESSIONAL GEOLOGIST Faramarz Gerami No. 2340 Exp. 4-30-09 CERTIFIED ENGINEERING GEOLOGIST STATE OF CALIFORNIA

The State of California or its officers or agents shall not be responsible for the accuracy or completeness of electronic copies of this plan sheet.

LEGEND OF BORING OPERATIONS

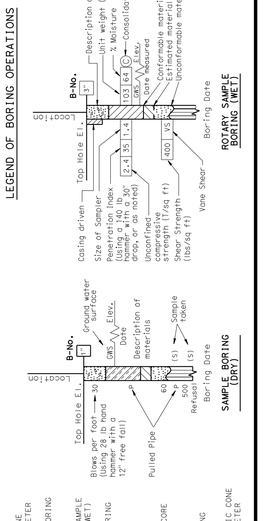

LEGEND OF EARTH MATERIALS

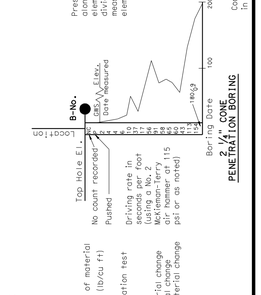

CONSISTENCY CLASSIFICATION FOR SOILS

According to the Standard Penetration Test

SPT N-Value (Blows/Foot)	Granular	SPT N-Value (Blows/Foot)	Cohesive
0-4	Very Loose	<2	Very Soft
5-10	Loose	2-4	Soft
11-30	Medium Dense	5-8	Medium stiff
31-50	Dense	9-15	Stiff
>50	Very Dense	16-30	Very Stiff
		31-60	Hard
		>60	Very Hard

NOTE: Classification of earth material as shown on this sheet is based upon field inspection and is not to be construed to imply mechanical analysis.

FOR PLAN VIEW, SEE
"LOG OF TEST BORINGS 1 OF 3"

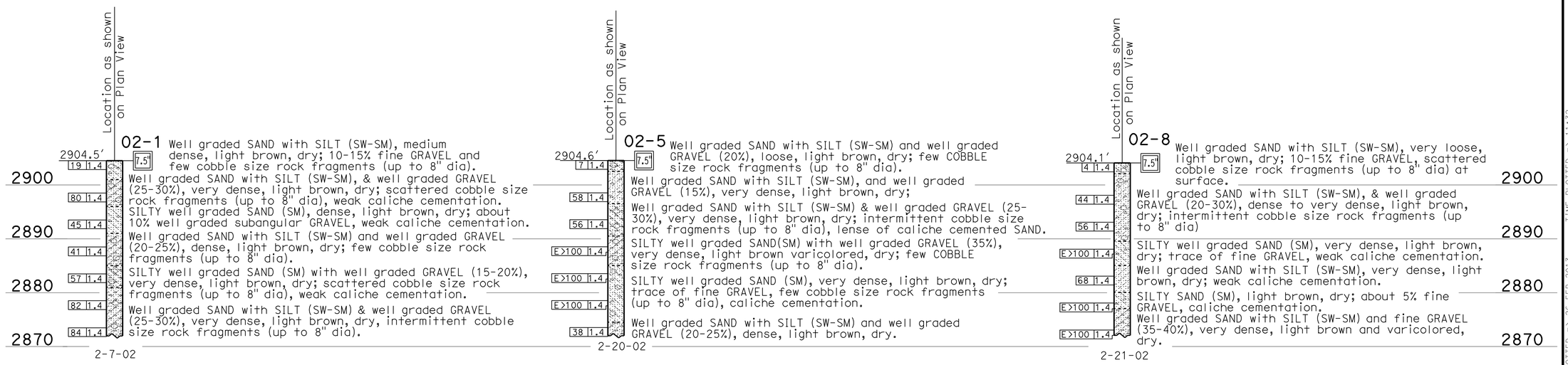

PROFILE

HOR: Not to Scale
VER: 1" = 10'

ENGINEERING SERVICES	GEOTECHNICAL SERVICES
DRAWN BY	I. G-Remmen
CHECKED BY	F. Gerami

FIELD INVESTIGATION BY: F. Gerami

STATE OF CALIFORNIA
DEPARTMENT OF TRANSPORTATION

DIVISION OF ENGINEERING SERVICES
STRUCTURE DESIGN
DESIGN BRANCH

BRIDGE NO. 54-1216J
POST MILE 177.3/181.1

MOUNTAIN PASS JPOE
LOG OF TEST BORINGS 2 OF 3

OGS LOG OF TEST BORINGS SHEET (ENGLISH) (REV. 5/25/07)

ORIGINAL SCALE IN INCHES FOR REDUCED PLANS 0 1 2 3

CU 08224
EA 368501

DISREGARD PRINTS BEARING EARLIER REVISION DATES 07-09-08

REVISION DATES (PRELIMINARY STAGE ONLY) SHEET OF

FILE => st_Log_CVEF_2_of_3.dgn

D:\user\Projects\A Expedite Process Folder\st_Log_CVEF_2_of_3.dgn

USERNAME => s109858 DATE PLOTTED => 26-FEB-2013 TIME PLOTTED => 11:32

DIST	COUNTY	ROUTE	POST MILES TOTAL PROJECT	SHEET No	TOTAL SHEETS
08	SBd	15	177.3/181.1	579	710

CERTIFIED ENGINEERING GEOLOGIST 7-28-08

2-25-13
PLANS APPROVAL DATE

PROFESSIONAL GEOLOGIST Faramarz Gerami No. 2340 Exp. 4-30-09 CERTIFIED ENGINEERING GEOLOGIST STATE OF CALIFORNIA

The State of California or its officers or agents shall not be responsible for the accuracy or completeness of electronic copies of this plan sheet.

LEGEND OF BORING OPERATIONS

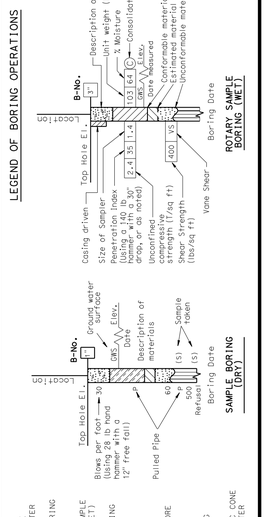

LEGEND OF EARTH MATERIALS

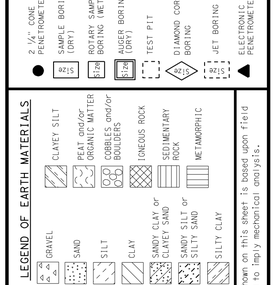

CONSISTENCY CLASSIFICATION FOR SOILS

According to the Standard Penetration Test

SPT N-Value (Blows/Foot)	Granular	SPT N-Value (Blows/Foot)	Cohesive
0-4	Very Loose	<2	Very Soft
5-10	Loose	2-4	Soft
11-30	Medium Dense	5-8	Medium stiff
31-50	Dense	9-15	Stiff
>50	Very Dense	16-30	Very Stiff
		31-60	Hard
		>60	Very Hard

NOTE: Classification of earth material as shown on this sheet is based upon field Inspection and is not to be construed to imply mechanical analysis.

FOR PLAN VIEW, SEE
"LOG OF TEST BORINGS 1 OF 3"

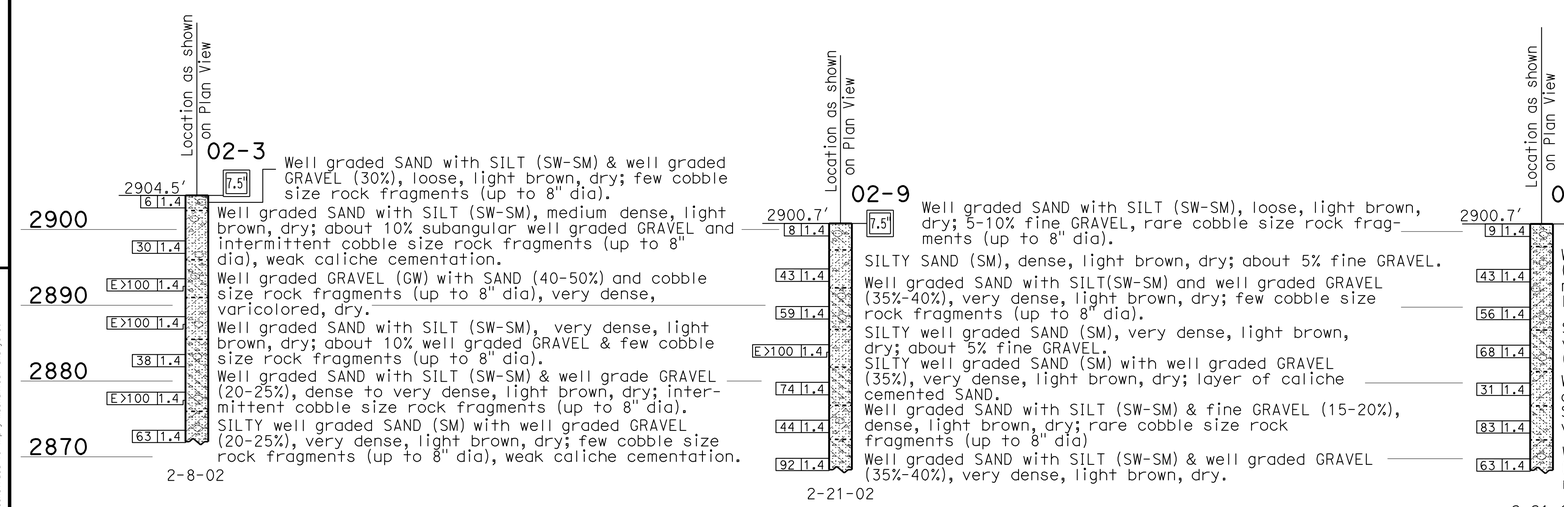

PROFILE

HOR: Not to Scale
VER: 1" = 10'

ENGINEERING SERVICES	GEOTECHNICAL SERVICES
DRAWN BY	I. G-Remmen
CHECKED BY	F. Gerami

FIELD INVESTIGATION BY: F. Gerami

STATE OF CALIFORNIA DEPARTMENT OF TRANSPORTATION

DIVISION OF ENGINEERING SERVICES STRUCTURE DESIGN DESIGN BRANCH

BRIDGE NO. 54-1216J
POST MILE 177.3/181.1

MOUNTAIN PASS JPOE

LOG OF TEST BORINGS 3 OF 3

CU 08224
EA 368501

ORIGINAL SCALE IN INCHES FOR REDUCED PLANS 0 1 2 3

DISREGARD PRINTS BEARING EARLIER REVISION DATES 07-09-08

REVISION DATES (PRELIMINARY STAGE ONLY) SHEET OF

OGS LOG OF TEST BORINGS SHEET (ENGLISH) (REV. 5/25/07)

FILE => st_Log_CVEF_3_of_3.dgn

D:\user\Projects\A Expedite Process Folder\st_Log_CVEF_3_of_3.dgn

USERNAME => s109858 DATE PLOTTED => 26-FEB-2013 TIME PLOTTED => 11:32

DIST.	COUNTY	ROUTE	POST MILES TOTAL PROJECT	SHEET NO.	TOTAL SHEETS
08	SBd	15	177.3/181.1	580	710

REGISTERED MECHANICAL ENGINEER — 11-30-12 DATE

REGISTERED PROFESSIONAL ENGINEER — C. BYLINSKI — No. M20878 — Exp. 06-30-13 — MECH — STATE OF CALIFORNIA

2-25-13
PLANS APPROVAL DATE

The State of California or its officers or agents shall not be responsible for the accuracy or completeness of scanned copies of this plan sheet.

CALIFORNIA STATE FIRE MARSHAL APPROVED

Approval of this plan does not authorize or approve any omission or deviation from applicable regulations. Final approval is subject to field inspection. One set of approved plans shall be available on the project site at all times.

Reviewed by: G. ANDERSEN
Approval date: 01-20-2011

PLUMBING

- Cold Water
- A — Compressed Air
- G — Gas
- D — Equipment Drain
- F — Fire Water
- Hot Water
- Hot Water Return
- LPG — Liquified Petroleum Gas
- R — Relief Valve Discharge Pipe
- SS — Sanitary Sewer
- Sanitary Sewer (above grade)
- Sanitary Sewer (below grade)
- Sanitary Sewer Vent

PIPE FITTINGS AND VALVES

- Cap ,Threaded
- Elbow,Turned Down
- Elbow,Turned Up
- Reducer,Concentric
- Pressure Gauge (with Valve and Snubber)
- Strainer
- Union
- Union,Insulating
- Valve,Ball
- Valve,Check
- Valve,Gas
- Valve,Gate
- Valve,Safety Relief
- Valve,Pressure Reducing
- Valve,Pressure/Temperature Relief
- Water Hammer Arrestor

HEATING, VENTILATING AND AIR CONDITIONING

- Balance Damper
- Flexible Duct
- EA — Exhaust Air
- RA — Return Air
- SA — Supply Air
- ER or CFM/ER CFM — Exhaust Register
- or SIZE CFM — Return Register
- or SIZE CFM — Supply Diffuser
- T# — Thermostat *, refers to associated fancoil unit
- TS — Time Switch
- Anode Test Station
- Three Wire Test Station
- F — Exhaust Fan
- FE — Fire Extinguisher

MISCELLANEOUS

- L — Angle
- ℄ — Centerline
- Ø — Diameter
- Section / Elevation Letter
- Sheet Number
- Detail Number
- Sheet Number
- Fire and Smoke Damper

MECHANICAL ABBREVIATIONS:

A/C	Air Conditioning
ABS	Acrylonitrile Butadiene Styrene
AC	Asphalt Concrete
AD	Air Drop
AP	Alternative Pipe
ATF	Automatic Transmission Fluid
AWG	American Wire Gauge
BFP	Backflow Preventer
BLDG	Building
BTU	British Thermal Unit
BTUH	British Thermal Unit Per Hour
BV	Balancing Valve
C	Conduit
CD	Ceiling Diffuser
CFM	Cubic Feet Per Minute
CI	Cast-Iron
CO	Cleanout
COTF	Cleanout Through Floor
COTG	Cleanout Through Grade
COTW	Cleanout To Wall
CV	Check Valve
CW	Cold Water
D	Depth
DB	Dry Bulb
DF	Drinking Fountain
DH	Duct Heater
DIA	Diameter
(E)	Existing
EA	Exhaust Air
EEW	Emergency Eyewash
EEWS	Emergency Eyewash And Shower
EF	Exhaust Fan
EH	Exhaust Hood
EL	Elevation
EWC	Electric Water Cooler
EWH	Electric Water Heater
F	Fan
FC	Flexible Connection
FD	Floor Drain
FDC	Fire Department Connection
FE	Fire Extinguisher
FG	Finish Grade
FH	Fire Hydrant
FL	Flow Line
FM	Forced Main
FS	Flow Switch
GA	Gauge
gal.	Gallon
GALV	Galvanized
GLV	Globe Valve
GPM	Gallons Per Minute
GSP	Galvanized Steel Pipe
GV	Gate Valve
GWH	Gas Water Heater
GYP	Gypsum
H	Height
HB	Hydrant Box
H/C	Hot Water,High Pressure Cleaner
HF	Hose Faucet
HP	Horse Power
HVAC	Heating,Ventilating And Air Conditioning
HW	Hot Water
HZ	Hertz
ID	Inside Diameter
IE	Invert Elevation
IN	Inch
IPS	International Pipe Standard
KS	Kitchen Sink
LAV	Lavatory
LPG	Liquified Petroleum Gas
MAX	Maximum
MAN	Manhole
MIN	Minimum
NIC	Not In Contract
NO	Number
NPT	National Pipe Thread
NST	National Standard Thread
OA	Outside Air
OC	On Center
OD	Outside Diameter
OG	Original Ground
PC	Pit Cover Assemblies
PCC	Portland Cement Concrete
PH	Phase
PRV	Pressure Reducing Valve
PSI	Pounds Per Square Inch
PVC	Polyvinyl Chloride
R	Radius
REG	Register
RA	Return Air
RCP	Reinforced Concrete Pipe
REF	Refrigerator
REQ	Required
RH	Radiant Heater
RW	Raw Water
RV	Relief Valve
S/S	Service Sink
SA	Supply Air
SCH	Schedule
SDS	Sanitary Dump Station
SF	Supply Fan
SHR	Shower
SP	Static Pressure
SS	Sanitary Sewer
STA	Station
STD	Standard
TCV	Temperature Control Valve
TP	Trap Primer
TOT	Total
TS	Time Switch
TYP	Typical
UH	Unit Heater
URI	Urinal
V	Vent
VAC	Voltage,Alternating Current
VR	Vent Riser
VTR	Vent Thru Roof
W	Width
W/	With
W/O	Without
WB	Wet Bulb
WC	Water Closet
W.C.	Water Column
WH	Wall Heater
WHA	Water Hammer Arrestor
WLS	Water Level Switch
WP	Weatherproof
WS	Wash Sink
WSP	Welded Steel Pipe

THIS DRAWING ACCURATE FOR MECHANICAL WORK ONLY

	BY	CHECKED
DESIGN	Claude Bylinski	Seve Gutierrez
DETAILS	Kerry Geoffroy	Claude Bylinski
QUANTITIES	Claude Bylinski	Seve Gutierrez

STATE OF CALIFORNIA
DEPARTMENT OF TRANSPORTATION

DIVISION OF ENGINEERING SERVICES
ELECTRICAL-MECHANICAL-WATER AND WASTEWATER DESIGN

BRIDGE NO. 54-1216J
POST MILE 177.3/181.1

MOUNTAIN PASS JPOE

MECHANICAL ABBREVIATIONS AND DETAILS

SHEET **MO-1**

TAEMWW Imperial Rev. 7/10
FILE => m0_1.dgn
DATE PLOTTED => 27-FEB-2013 TIME PLOTTED => 08:51

ORIGINAL SCALE IN INCHES FOR REDUCED PLANS 0 1 2 3

UNIT 3615
PROJECT NUMBER & PHASE 08000006281
EA 368501

DISREGARD PRINTS BEARING EARLIER REVISION DATES → 08-11-10 11-30-12

REVISION DATES (PRELIMINARY STAGE ONLY) SHEET OF

USERNAME => s119571 DATE PLOTTED => 27-FEB-2013 TIME PLOTTED => 08:51

V|=|

DIST.	COUNTY	ROUTE	POST MILES TOTAL PROJECT	SHEET NO.	TOTAL SHEETS
08	SBd	15	177.3/181.1	581	710

Claude Bylinski — REGISTERED MECHANICAL ENGINEER — 11-30-12 DATE

REGISTERED PROFESSIONAL ENGINEER C. BYLINSKI No. M20878 Exp. 06-30-13 MECH STATE OF CALIFORNIA

2-25-13
PLANS APPROVAL DATE

The State of California or its officers or agents shall not be responsible for the accuracy or completeness of scanned copies of this plan sheet.

CERTIFICATE OF COMPLIANCE (Part 1 of 3) MECH-1-C

PROJECT NAME: MOUNTAIN PASS COMMERCIAL VEHICLE ENFORCEMENT FACILITY (CVEF)		DATE: 10/31/2008
PROJECT ADDRESS: ROUTE 15, SAN BERNADINO COUNTY		Building Permit #
PRINCIPAL DESIGNER-MECHANICAL: CLAUDE BYLINSKI	TELEPHONE: (916) 227-8148	
DOCUMENTATION AUTHOR: CLAUDE BYLINSKI	TELEPHONE: (916) 227-8148	Checked by/Date Enforcement Agency Use

GENERAL INFORMATION

DATE OF PLANS 10/31/2008 | BUILDING CONDITIONED FLOOR AREA 10,706 | CLIMATE ZONE 14

BUILDING TYPE ☑ NONRESIDENTIAL ☐ HIGH RISE RESIDENTIAL ☐ HOTEL/MOTEL GUEST ROOM

PHASE OF CONSTRUCTION ☑ NEW CONSTRUCTION ☐ ADDITION ☐ ALTERATION ☐ UNCONDITIONED (File affidavit)

STATEMENT OF COMPLIANCE

This Certificate of Compliance lists the building features and performance specifications needed to comply with Title 24, Parts 1 and 6 of the California Code of Regulations. This certificate applies only to building mechanical requirements.

The documentation preparer hereby certifies that the documentation is accurate and complete.

DOCUMENTATION AUTHOR	SIGNATURE	DATE
CLAUDE BYLINSKI	Claude Bylinski	10/31/2008

The Principal Mechanical Designer hereby certifies that the proposed building design represented in this set of construction documents is consistent with the other compliance forms and worksheets, with the specifications, and with any other calculations submitted with this permit application. The proposed building has been designed to meet the mechanical requirements contained in the applicable parts of Sections 100, 101, 102, 110 through 115, 120 through 125, 142, 144 and 145.

☑ The plans & specifications meet the requirements of Part 1 (Sections 10-103a).

☐ The installation certificates meet the requirements of Part 1 (10-103a 3).

☐ The operation & maintenance information meets the requirements of Part 1 (10-103c).

Please check one: (These sections of the Business and Professions Code are printed in full in the Nonresidential Manual.)

☑ I hereby affirm that I am eligible under the provisions of Division 3 of the Business and Professions Code to sign this document as the person responsible for its preparation; and that I am licensed in the State of California as a civil engineer or mechanical engineer, or I am a licensed architect.

☐ I affirm that I am eligible under the provisions of Division 3 of the Business and Professions Code by section 5537.2 or 6737.3 to sign this document as the person responsible for its preparation; and that I am a licensed contractor performing this work.

☐ I affirm that I am eligible under Division 3 of the Business and Professions Code to sign this document because it pertains to a structure or type of work described as exempt pursuant to Business and Professions Code Sections 5537, 5538 and 6737.1.

PRINCIPAL MECHANICAL DESIGNER-NAME	SIGNATURE	DATE	LIC.#
CLAUDE BYLINSKI	Claude Bylinski	10/31/2008	M20878

MECHANICAL MANDATORY MEASURES

INSTRUCTIONS TO APPLICANT MECHANICAL COMPLIANCE & WORKSHEETS (Check box if worksheet is included)		
☑	MECH-1-C	Certificate of Compliance. Part 1 of 3, 2 of 3, 3 of 3 are required on plans for all submittals. See note.
☐	MECH-2-C	Air/Water/Service/Water Pools Requirements. Part 1 of 3, 2 of 3, 3 of 3 are required for all submittals, but may be on plans.
☐	MECH-3-C	Mechanical Ventilation and Reheat is required for all submittals with mechanical ventilation, but may be on plans.
☐	MECH-4-C	HVAC Misc. Prescriptive Requirements is required for all prescriptive submittals, but may be on plans.

2005 Nonresidential Compliance Forms — *January 2006*

CERTIFICATE OF COMPLIANCE (Part 1 of 2) ENV-1-C

PROJECT NAME: MOUNTAIN PASS COMMERCIAL VEHICLE ENFORCEMENT FACILITY (CVEF)		DATE: 10/31/2008
PROJECT ADDRESS: ROUTE 15, SAN BERNADINO COUNTY		Building Permit #
PRINCIPAL DESIGNER-ENVELOPE: DOUG LOWE	TELEPHONE: (916) 227-8290	
DOCUMENTATION AUTHOR: CLAUDE BYLINSKI	TELEPHONE: (916) 227-8148	Checked by/Date Enforcement Agency Use

GENERAL INFORMATION

DATE OF PLANS 10/31/2008 | BUILDING CONDITIONED FLOOR AREA 10,706 | CLIMATE ZONE 14

BUILDING TYPE ☑ NONRESIDENTIAL ☐ HIGH RISE RESIDENTIAL ☐ HOTEL/MOTEL GUEST ROOM

☐ RELOCATABLE - Indicate: ☐ Specific climate - list _____, or ☐ all climates

PHASE OF CONSTRUCTION ☑ NEW CONSTRUCTION ☐ ADDITION ☐ ALTERATION ☐ UNCONDITIONED (File affidavit)

METHOD OF ENVELOPE COMPLIANCE ☑ COMPONENT ☐ OVERALL ENVELOPE

SUPPORTING FORMS SUBMITTED ☐ ENV-2-C (Component) ☐ ENV-3-C (Overall Envelope) ☐ ENV-4-C (Skylight Worksheet)

STATEMENT OF COMPLIANCE

This Certificate of Compliance lists the building features and performance specifications needed to comply with Title 24, Parts 1 and 6 of the California Code of Regulations. This certificate applies only to building envelope requirements.

The documentation preparer hereby certifies that the documentation is accurate and complete.

DOCUMENTATION AUTHOR	SIGNATURE	DATE
CLAUDE BYLINSKI	Claude Bylinski	10/31/2008

The Principal Envelope Designer hereby certifies that the proposed building design represented in this set of construction documents is consistent with the other compliance forms and worksheets, with the specifications, and with any other calculations submitted with this permit application. The proposed building has been designed to meet the envelope requirements contained in Sections 110, 116 through 118, and 140, 142, 143 or 149 of Title 24, Part 6. **Please check one:**

☑ I hereby affirm that I am eligible under the provisions of Division 3 of the Business and Professions Code to sign this document as the person responsible for its preparation; and that I am licensed in the State of California as a civil engineer or mechanical engineer, or I am a licensed architect.

☐ I affirm that I am eligible under the provisions of Division 3 of the Business and Professions Code by section 5537.2 or 6737.3 to sign this document as the person responsible for its preparation; and that I am a licensed contractor performing this work.

☐ I affirm that I am eligible under Division 3 of the Business and Professions Code to sign this document because it pertains to a structure or type of work described as exempt pursuant to Business and Professions Code Sections 5537, 5538 and 6737.1.

(These sections of the Business and Professions Code are printed in full in the Nonresidential Manual.)

PRINCIPAL ENVELOPE DESIGNER-NAME	SIGNATURE	DATE	LIC.#
DOUG LOWE	DOUG LOWE	10/31/2008	C-15341

ENVELOPE MANDATORY MEASURES

☐ Indicate location on plans of Note Block for Mandatory Measures X

INSTRUCTIONS TO APPLICANT ENVELOPE COMPLIANCE & WORKSHEETS (Check box if worksheet is included)		
For detailed instructions on the use of this and all Energy Efficiency Standards compliance forms, please refer to the Nonresidential Manual published by the California Energy Commission.		
☑	ENV-1-C	Certificate of Compliance. Required on plans for all submittals. Part 2 may be incorporated in schedules on plans.
☐	ENV-2-C	Use with the Envelope Component compliance method.
☐	ENV-3-C	Use with the Overall Envelope compliance method.
☐	ENV-4-C	Optional. Use for the minimum skylight requirements for large enclosed spaces.

2005 Nonresidential Compliance Forms — *January 2006*

CALIFORNIA STATE FIRE MARSHAL APPROVED
Approval of this plan does not authorize or approve any omission or deviation from applicable regulations. Final approval is subject to field inspection. One set of approved plans shall be available on the project site at all times.
Reviewed by: G. ANDERSEN
Approval date: 01-20-2011

THIS DRAWING ACCURATE FOR MECHANICAL WORK ONLY

	BY	CHECKED
DESIGN	Claude Bylinski	Seve Gutierrez
DETAILS	Kerry Geoffroy	Claude Bylinski
QUANTITIES	Claude Bylinski	Seve Gutierrez

STATE OF CALIFORNIA DEPARTMENT OF TRANSPORTATION

DIVISION OF ENGINEERING SERVICES ELECTRICAL-MECHANICAL-WATER AND WASTEWATER DESIGN

BRIDGE NO. 54-1216J
POST MILE 177.3/181.1

MOUNTAIN PASS JPOE
CVEF — CERTIFICATE OF COMPLIANCE FORMS

SHEET **M7-0.0**

TAEMWW Imperial Rev. 7/10
FILE => m7_0_0.dgn
DATE PLOTTED => 27-FEB-2013 TIME PLOTTED => 08:51

ORIGINAL SCALE IN INCHES FOR REDUCED PLANS 0 1 2 3

UNIT 3615
PROJECT NUMBER & PHASE 08000006281
EA 368501

DISREGARD PRINTS BEARING EARLIER REVISION DATES → 08-11-10 11-30-12

REVISION DATES (PRELIMINARY STAGE ONLY) SHEET OF

USERNAME => s119571 DATE PLOTTED => 27-FEB-2013 TIME PLOTTED => 08:51

V|=|

DIST.	COUNTY	ROUTE	POST MILES TOTAL PROJECT	SHEET NO.	TOTAL SHEETS
08	SBd	15	177.3/181.1	582	710

REGISTERED MECHANICAL ENGINEER — 11-30-12 DATE

REGISTERED PROFESSIONAL ENGINEER — C. BYLINSKI — No. M20878 — Exp. 06-30-13 — MECH — STATE OF CALIFORNIA

2-25-13
PLANS APPROVAL DATE

The State of California or its officers or agents shall not be responsible for the accuracy or completeness of scanned copies of this plan sheet.

CALIFORNIA STATE FIRE MARSHAL APPROVED

Approval of this plan does not authorize or approve any omission or deviation from applicable regulations. Final approval is subject to field inspection. One set of approved plans shall be available on the project site at all times.

Reviewed by: G. ANDERSEN

Approval date: 01-20-2011

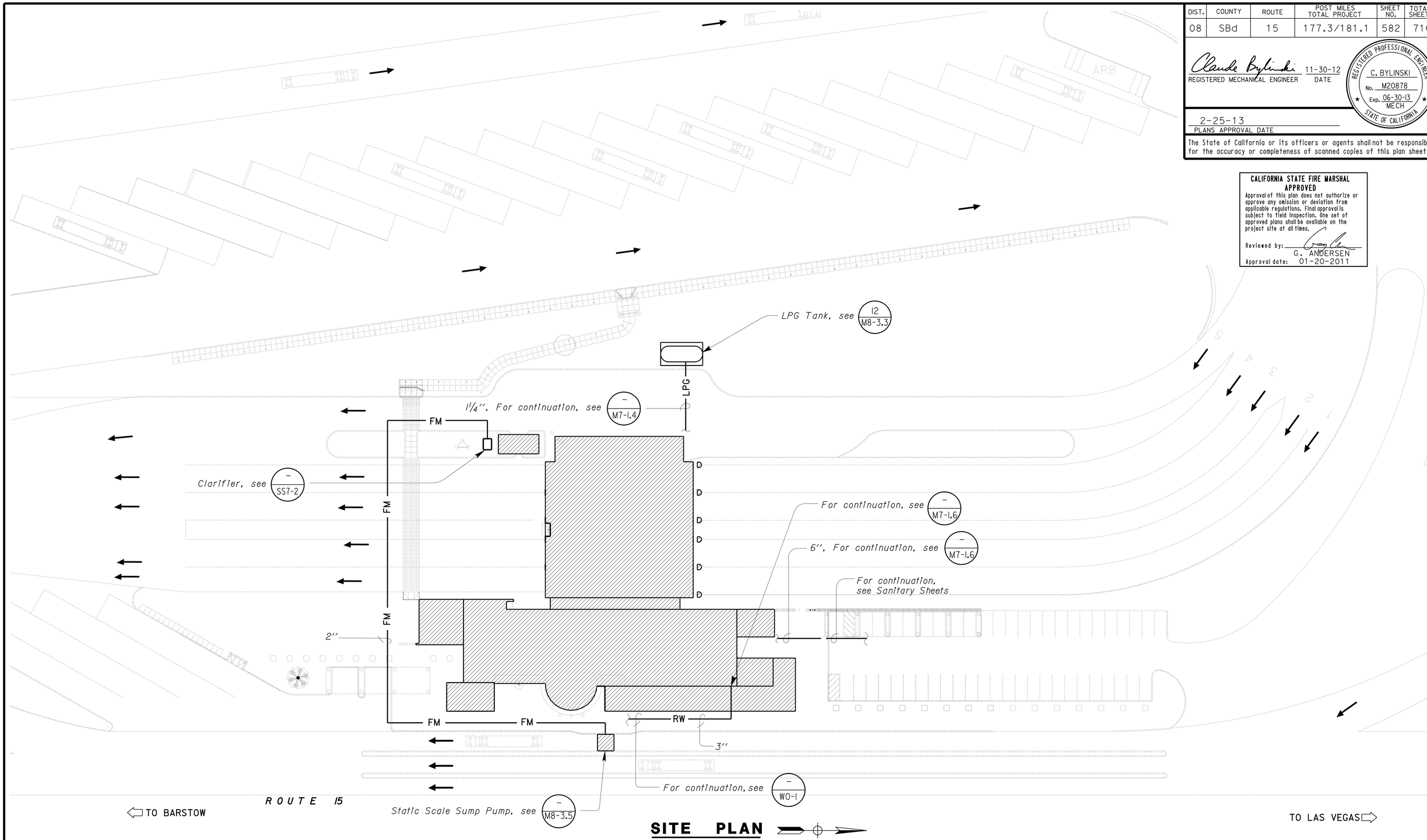

SITE PLAN

1/32"=1'-0"

THIS DRAWING ACCURATE FOR MECHANICAL WORK ONLY

	BY	CHECKED
DESIGN	Claude Bylinski	Seve Gutierrez
DETAILS	Kerry Geoffroy	Claude Bylinski
QUANTITIES	Claude Bylinski	Seve Gutierrez

STATE OF CALIFORNIA
DEPARTMENT OF TRANSPORTATION

DIVISION OF ENGINEERING SERVICES
ELECTRICAL-MECHANICAL-WATER AND WASTEWATER DESIGN

BRIDGE NO. 54-1216J
POST MILE 177.3/181.1

CVEF

MOUNTAIN PASS JPOE

MECHANICAL SITE PLAN

SHEET **M7-0.1**

TAEMWW Imperial Rev. 7/10

FILE => m7_0_1.dgn
DATE PLOTTED => 14-MAY-2013 TIME PLOTTED => 06:43

ORIGINAL SCALE IN INCHES FOR REDUCED PLANS 0 1 2 3

UNIT 3615
PROJECT NUMBER & PHASE 08000006281
EA 368501

DISREGARD PRINTS BEARING EARLIER REVISION DATES → 08-11-10 11-30-12

REVISION DATES (PRELIMINARY STAGE ONLY) SHEET OF

USERNAME => s121614 DATE PLOTTED => 14-MAY-2013 TIME PLOTTED => 06:43

V1=1

DIST.	COUNTY	ROUTE	POST MILES TOTAL PROJECT	SHEET NO.	TOTAL SHEETS
08	SBd	15	177.3/181.1	583	710

REGISTERED MECHANICAL ENGINEER — 11-30-12 DATE

REGISTERED PROFESSIONAL ENGINEER — C. BYLINSKI — No. M20878 — Exp. 06-30-13 MECH — STATE OF CALIFORNIA

2-25-13
PLANS APPROVAL DATE

The State of California or its officers or agents shall not be responsible for the accuracy or completeness of scanned copies of this plan sheet.

CALIFORNIA STATE FIRE MARSHAL APPROVED
Approval of this plan does not authorize or approve any omission or deviation from applicable regulations. Final approval is subject to field inspection. One set of approved plans shall be available on the project site at all times.
Reviewed by: G. ANDERSEN
Approval date: 01-20-2011

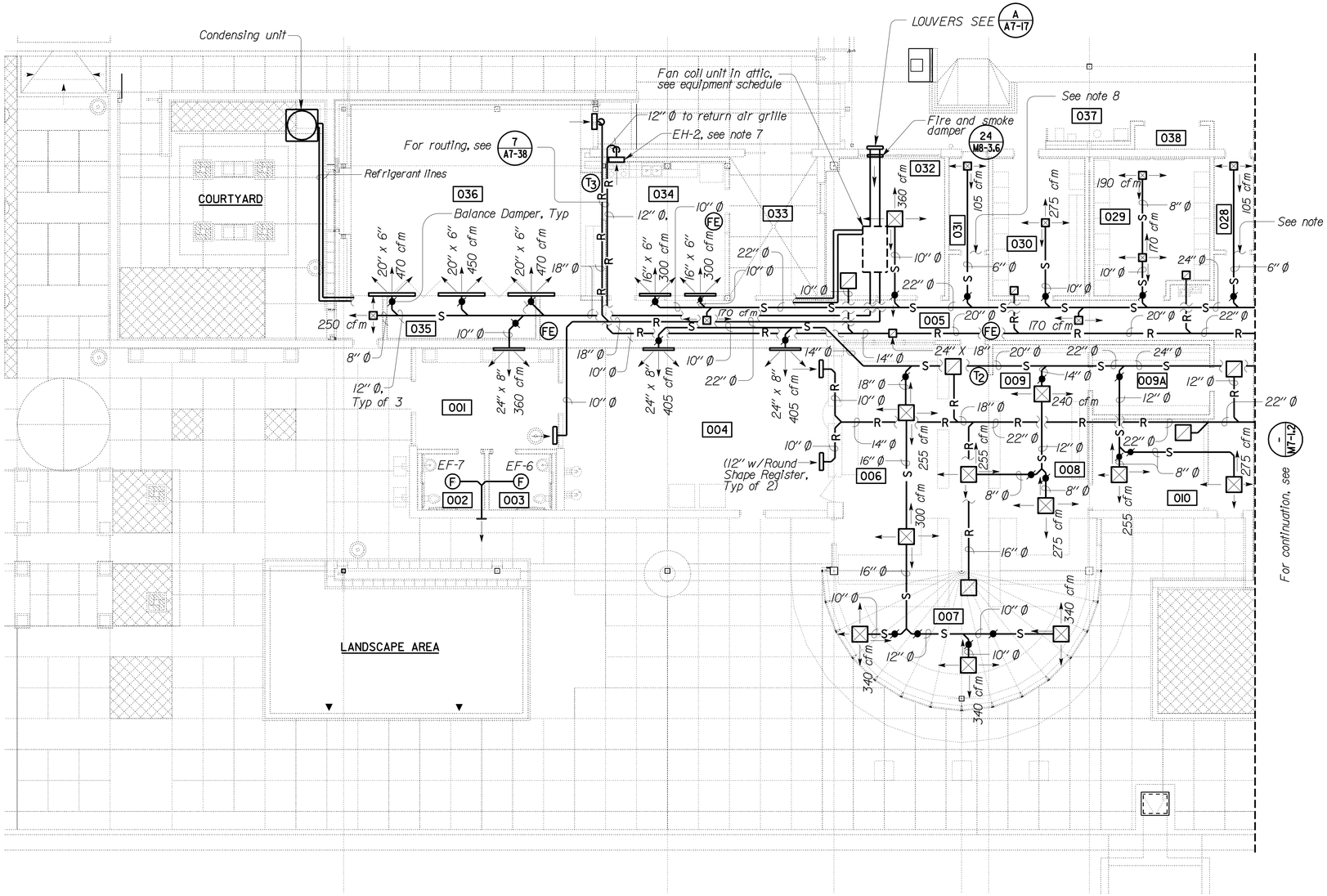

PARTIAL PLAN

1/8"=1'-0"

ROOM NAMES:

001	ENTRY LOBBY
002	WOMEN
003	MEN
004	LOBBY
005	HALLWAY
006	OPEN OFFICE
007	OBSERVATION ROOM
008	CLERICAL WORK AREA
009	CLERICAL STORAGE AND WORK AREA
010	LIEUTENANT OFFICE
028	VESTIBULE 2
029	EMERGENCY MEDICAL TECHNICIAN
030	UNIFORM
031	VESTIBULE 3
032	SERGEANT OFFICE B
033	COURT
034	BREAK ROOM
035	STORAGE 1
036	MULTIPURPOSE ROOM
037	WALKWAY
038	STORAGE 2

NOTES:

1. For coordination of all ceiling and elevation of wall mounted items, see Architectural sheets.
2. Install thermostats at 3'-4" above finish floor.
3. Fire extinguisher cabinet shall be semi-recessed and fire extinguisher shall be 3A:40B:C. See Architectural sheets for mounting height.
4. Air supply diffusers and return registers except in T-Bar ceiling shall be 12" x 12" with neck size to match the branch. Supply diffusers shall have OBDS. T-Bar diffusers and registers to be 24" x 24" drop-in type.
5. Install balance dampers at all branch ducts leading to supply air diffusers.
6. The resident engineer may approve the replacement of shown rigid ducts for flexible ducts at locations where the installation of rigid ducts is impossible due to the structural conditions.
7. Route hood exhaust out thru wall, see G/A7-16
8. Install 12" X 12" non-vision door grilles.
9. Fire and smoke damper shall be State Fire Marshal appoved and installed strictly per manufacturer's printed instructions.

THIS DRAWING ACCURATE FOR MECHANICAL WORK ONLY

	BY	CHECKED
DESIGN	Claude Bylinski	Seve Gutierrez
DETAILS	Kerry Geoffroy	Claude Bylinski
QUANTITIES	Claude Bylinski	Seve Gutierrez

STATE OF CALIFORNIA DEPARTMENT OF TRANSPORTATION

DIVISION OF ENGINEERING SERVICES
ELECTRICAL-MECHANICAL-WATER AND WASTEWATER DESIGN

BRIDGE NO. 54-1216J
POST MILE 177.3/181.1

MOUNTAIN PASS JPOE
CVEF — HVAC PLAN NO. 1

SHEET **M7-1.1**

TAEMWW Imperial Rev. 7/10
FILE => m7_1_1.dgn
DATE PLOTTED => 27-FEB-2013 TIME PLOTTED => 09:05
ORIGINAL SCALE IN INCHES FOR REDUCED PLANS 0 1 2 3
UNIT 3615
PROJECT NUMBER & PHASE 08000006281
EA 368501
DISREGARD PRINTS BEARING EARLIER REVISION DATES → 08-11-10 11-30-12
REVISION DATES (PRELIMINARY STAGE ONLY) SHEET OF

USERNAME => s1216l4 DATE PLOTTED => 27-FEB-2013 TIME PLOTTED => 09:05
VI=1

DIST.	COUNTY	ROUTE	POST MILES TOTAL PROJECT	SHEET NO.	TOTAL SHEETS
08	SBd	15	177.3/181.1	584	710

REGISTERED MECHANICAL ENGINEER — 11-30-12 DATE

REGISTERED PROFESSIONAL ENGINEER C. BYLINSKI No. M20878 Exp. 06-30-13 MECH STATE OF CALIFORNIA

2-25-13
PLANS APPROVAL DATE

The State of California or its officers or agents shall not be responsible for the accuracy or completeness of scanned copies of this plan sheet.

CALIFORNIA STATE FIRE MARSHAL APPROVED
Approval of this plan does not authorize or approve any omission or deviation from applicable regulations. Final approval is subject to field inspection. One set of approved plans shall be available on the project site at all times.
Reviewed by: G. ANDERSEN
Approval date: 01-20-2011

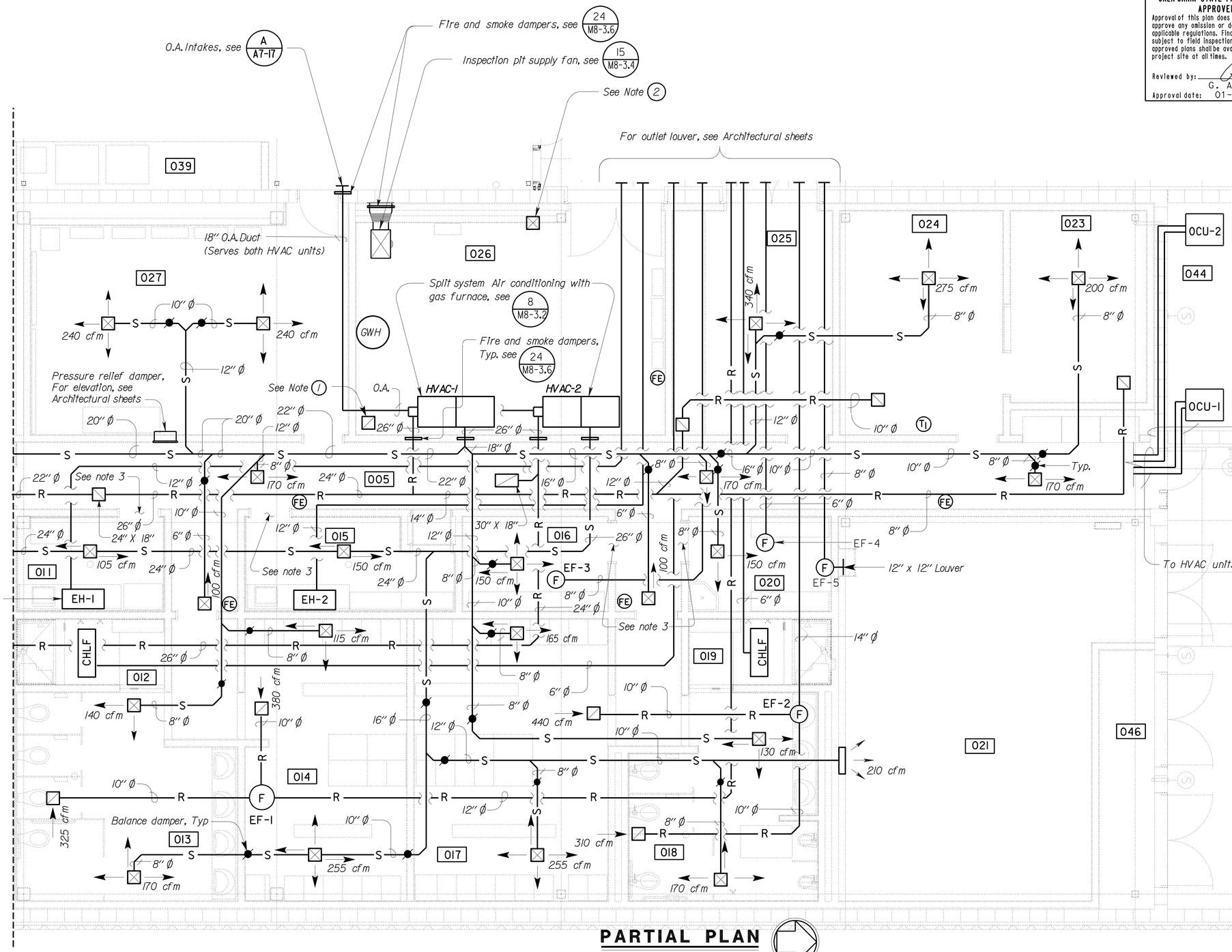

PARTIAL PLAN

1/4"=1'-0"

Notes:

1. 12" x 12" x 30 GA Combustion air duct. Terminate at 12" above floor. Extend air duct in the attic at 12" above the top of the ceiling joist.
2. 12" x 12" Ventilation Air Grille in the ceiling. Install 30 GA sheet metal duct extension, secure to the grille and extend 12" above top of the ceiling joist.
3. Install 12" X 12" Non-vision door grilles.
4. Fire extinguisher cabinet shall be semi-recessed and fire extinguisher shall be 3A:40B:C. See Architectural sheets for mounting height.
5. Fire and smoke damper shall be State Fire Marshal appoved and installed strictly per manufacturer's printed instructions.
6. Install thermostats at 3'-4" above finish floor.

ROOM NAMES:

005	HALLWAY
011	ARMORY
012	SHOWER 1
013	STAFF WOMEN
014	WOMEN LOCKER
015	EVIDENCE
016	JANITOR 1
017	MEN LOCKER
018	STAFF MEN
019	SHOWER 2
020	JANITOR 2
021	WATER TREATMENT
023	SERGANT OFFICE A
024	ROAD CREW OFFICE
025	AIR RESOURCE BOARD STORAGE
026	MECHANICAL
027	ELECTRICAL
039	STORAGE 3
044	TRANSFORMER AREA
045	EXTERIOR GENERATOR AREA
046	ELECTRICAL CLOSET

Note:
For equipment schedule, see M7-1.3

THIS DRAWING ACCURATE FOR MECHANICAL WORK ONLY

	BY	CHECKED
DESIGN	Claude Bylinski	Seve Gutierrez
DETAILS	Kerry Geoffroy	Claude Bylinski
QUANTITIES	Claude Bylinski	Seve Gutierrez

STATE OF CALIFORNIA DEPARTMENT OF TRANSPORTATION

DIVISION OF ENGINEERING SERVICES
ELECTRICAL-MECHANICAL-WATER AND WASTEWATER DESIGN

BRIDGE NO. 54-1216J
POST MILE 177.3/181.1

MOUNTAIN PASS JPOE
CVEF — HVAC PLAN NO. 2

SHEET **M7-1.2**

TAEMWW Imperial Rev. 7/10
FILE => m7_1_2.dgn
DATE PLOTTED => 27-FEB-2013 TIME PLOTTED => 08:51

ORIGINAL SCALE IN INCHES FOR REDUCED PLANS 0 1 2 3

UNIT 3615
PROJECT NUMBER & PHASE 08000006281
EA 368501

DISREGARD PRINTS BEARING EARLIER REVISION DATES
REVISION DATES (PRELIMINARY STAGE ONLY) 08-11-10 11-30-12 SHEET OF

USERNAME => s119571 DATE PLOTTED => 27-FEB-2013 TIME PLOTTED => 08:51

V|=|

DIST.	COUNTY	ROUTE	POST MILES TOTAL PROJECT	SHEET NO.	TOTAL SHEETS
08	SBd	15	177.3/181.1	585	710

REGISTERED MECHANICAL ENGINEER — 11-30-12 DATE

REGISTERED PROFESSIONAL ENGINEER C. BYLINSKI No. M20878 Exp. 06-30-13 MECH STATE OF CALIFORNIA

2-25-13
PLANS APPROVAL DATE

The State of California or its officers or agents shall not be responsible for the accuracy or completeness of scanned copies of this plan sheet.

CALIFORNIA STATE FIRE MARSHAL APPROVED
Approval of this plan does not authorize or approve any omission or deviation from applicable regulations. Final approval is subject to field inspection. One set of approved plans shall be available on the project site at all times.
Reviewed by: G. ANDERSEN
Approval date: 01-20-2011

EQUIPMENT SCHEDULE

EQUIPMENT	TOTAL COOLING NOMINAL (MBTUH)	OUTDOOR AIR TEMP. ENT. °F-DB	INDOOR AIR TEMP. ENT °F-DB/WB	FAN CAPACITY NOMINAL (CFM)	ESP (In)	HEATING CAPACITY GAS INPUT (NOMINAL) (BTUH)	ELECTRIC DATA VOLT	PHASE	Hz
Gas Water heater (LPG)				100 Gal.		200,000	-	-	-
Outside Condensing Unit-1	150	108				50,160	480	3	60
Outside Condensing Unit-2	150	108				50,160	480	3	60
HVAC-1	150		81/68	5,000	.60	154,000	120	1	60
HVAC-2	150		81/68	5,000	.60	154,000	120	1	60
Exhaust Fan EF-1 (2 speed motor)				705	.25		120	1	60
Exhaust Fan EF-2 (2 speed motor)				750	.25		120	1	60
Exhaust Fan, EF-3				150	.25		120	1	60
Exhaust Fan EF-4, EF-6, EF-7				150	.25		120	1	60
Exhaust Fan EF-5				210	.25		120	1	60
Exhaust Hood EH-1, EH-2				450		(2) 20 Watt Halogen Lamps	120	1	60
Combination Heat Lamp/Light / Fan (CHLF)				75	.12	Electric Heat 250 Watt Infrared Lamp	120	1	60
Water Chiller	0.58					-	120	1	60
Instantaneous Water Heater				210		18 kW Element	208	1	60
Pressure Washer	Portable gasoline-powered, cold water. 2.3 gpm @ 2,400 psi, 3,400 rpm, 3/8" x 50'-0" hose, 35" X 21" X 24" nominal size, 130 lbs.								
Fan Coil Unit	56	108		2,000					
Condensing Unit	56	108							

THIS DRAWING ACCURATE FOR MECHANICAL WORK ONLY

	BY	CHECKED
DESIGN	Claude Bylinski	Seve Gutierrez
DETAILS	Kerry Geoffroy	Claude Bylinski
QUANTITIES	Claude Bylinski	Seve Gutierrez

STATE OF CALIFORNIA DEPARTMENT OF TRANSPORTATION

DIVISION OF ENGINEERING SERVICES
ELECTRICAL-MECHANICAL-WATER AND WASTEWATER DESIGN

BRIDGE NO. 54-1216J
POST MILE 177.3/181.1

MOUNTAIN PASS JPOE
CVEF — HVAC - EQUIPMENT SCHEDULE

SHEET **M7-1.3**

TAEMWW Imperial Rev. 7/10
FILE => m7_1_3.dgn
DATE PLOTTED => 27-FEB-2013 TIME PLOTTED => 08:51

ORIGINAL SCALE IN INCHES FOR REDUCED PLANS 0 1 2 3

UNIT 3615
PROJECT NUMBER & PHASE 08000006281
EA 368501

DISREGARD PRINTS BEARING EARLIER REVISION DATES → 08-11-10 11-30-12

REVISION DATES (PRELIMINARY STAGE ONLY) SHEET OF

USERNAME => s119571 DATE PLOTTED => 27-FEB-2013 TIME PLOTTED => 08:51

VI=1

DIST.	COUNTY	ROUTE	POST MILES TOTAL PROJECT	SHEET NO.	TOTAL SHEETS
08	SBd	15	177.3/181.1	586	710

Claude Bylinski — REGISTERED MECHANICAL ENGINEER — 11-30-12 DATE

REGISTERED PROFESSIONAL ENGINEER — C. BYLINSKI — No. M20878 — Exp. 06-30-13 — MECH — STATE OF CALIFORNIA

2-25-13
PLANS APPROVAL DATE

The State of California or its officers or agents shall not be responsible for the accuracy or completeness of scanned copies of this plan sheet.

CALIFORNIA STATE FIRE MARSHAL APPROVED

Approval of this plan does not authorize or approve any omission or deviation from applicable regulations. Final approval is subject to field inspection. One set of approved plans shall be available on the project site at all times.

Reviewed by: G. ANDERSEN
Approval date: 01-20-2011

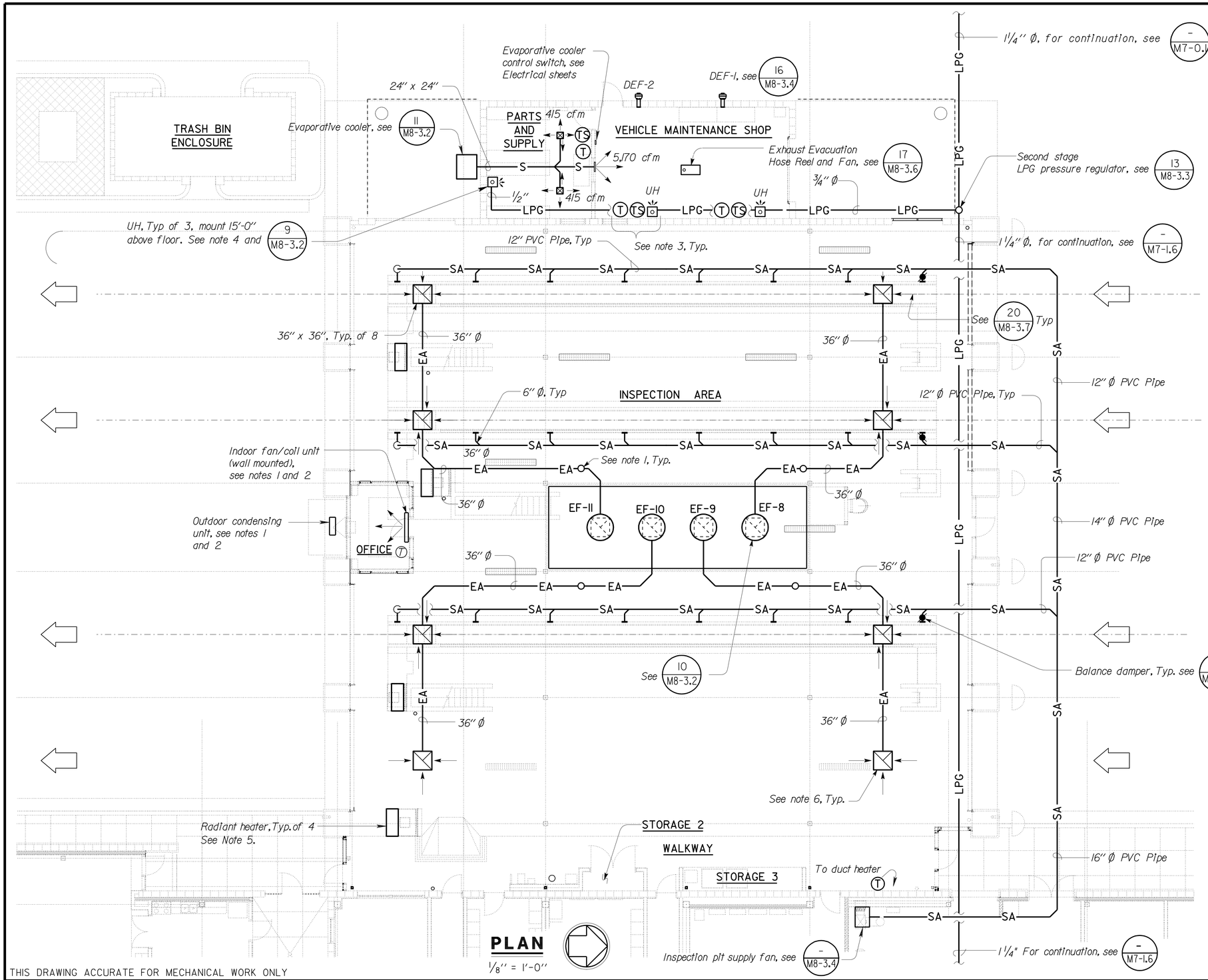

PLAN
1/8" = 1'-0"

THIS DRAWING ACCURATE FOR MECHANICAL WORK ONLY

EQUIPMENT SCHEDULE

Equipment	Fan Capacity Nominal (CFM)	Power Nominal (Min) (HP)	S.P. In water	Electrical Data		Nominal Sound Rating Sones
				Volts	Phase	
EF-8, EF-9	15,000	3	.3	480	3	10
EF-10, EF-11	19,000	2	.3	480	3	10
DEF-1/DEF-2	640	.25	.25	208	3	9.5
Evaporative Cooler	6,000	1.0	.3	208	3	-
Exhaust Evacuation System	600	1.0	-	120	1	-
Inspection Pit Supply Air Fan with Duct Heater	1,900	1.0 + 2KW HTR	.25	480	3	10
Radiant Heater	-	2KW	-	208	1	

Notes:

1. Heat pump (ductless) for the office shall be 20,500 Btuh air flow 600 cfm, cooling/heating, with auxiliary heater rated 8.0 kW, 208 V, 3 phase.
2. Heat pump (ductless) for the office, shall be installed as per manufacturer recommendations. Piping for condensate drain shall be installed along outside wall, concealed, down to 6" above drywall.
3. Install thermostats and time switches at 3'-4" above finish floor.
4. Unit heater shall have a nominal heating capacity of 75,000 Btuh (gas input), fan capacity of 975 cfm and 120 volt motor, LPG.
5. Mount radiant heater on column @ 10'-0" in height.
6. Minimum height = roll-up door height. Transition from 36" round duct to 60" X 57" return air register.
7. Run 10" Ø duct from top of trunk to within 12" of bottom of roof. Install with balance damper. Balance @ 700 CFM each.

DESIGN	BY Claude Bylinski	CHECKED Seve Gutierrez	
DETAILS	BY Kerry Geoffroy	CHECKED Claude Bylinski	
QUANTITIES	BY Claude Bylinski	CHECKED Seve Gutierrez	

STATE OF CALIFORNIA
DEPARTMENT OF TRANSPORTATION

DIVISION OF ENGINEERING SERVICES
ELECTRICAL-MECHANICAL-WATER AND WASTEWATER DESIGN

UNIT 3615
PROJECT NUMBER & PHASE 08000006281
EA 368501

BRIDGE NO. 54-1216J
POST MILE 177.3/181.1

MOUNTAIN PASS JPOE
CVEF — HVAC PLAN NO. 3

SHEET **M7-1.4**

TAEMWW Imperial Rev. 7/10
FILE => m7_1_4.dgn
DATE PLOTTED => 27-FEB-2013 TIME PLOTTED => 09:08

ORIGINAL SCALE IN INCHES FOR REDUCED PLANS 0 1 2 3

DISREGARD PRINTS BEARING EARLIER REVISION DATES → 08-11-10 11-30-12

REVISION DATES (PRELIMINARY STAGE ONLY) SHEET OF

USERNAME => s6121614 DATE PLOTTED => 27-FEB-2013 TIME PLOTTED => 09:08

VI=1

DIST.	COUNTY	ROUTE	POST MILES TOTAL PROJECT	SHEET NO.	TOTAL SHEETS
08	SBd	15	177.3/181.1	587	710

Claude Bylinski 11-30-12
REGISTERED MECHANICAL ENGINEER DATE

REGISTERED PROFESSIONAL ENGINEER C. BYLINSKI No. M20878 Exp. 06-30-13 MECH STATE OF CALIFORNIA

2-25-13
PLANS APPROVAL DATE

The State of California or its officers or agents shall not be responsible for the accuracy or completeness of scanned copies of this plan sheet.

CALIFORNIA STATE FIRE MARSHAL APPROVED
Approval of this plan does not authorize or approve any omission or deviation from applicable regulations. Final approval is subject to field inspection. One set of approved plans shall be available on the project site at all times.
Reviewed by: G. ANDERSEN
Approval date: 01-20-2011

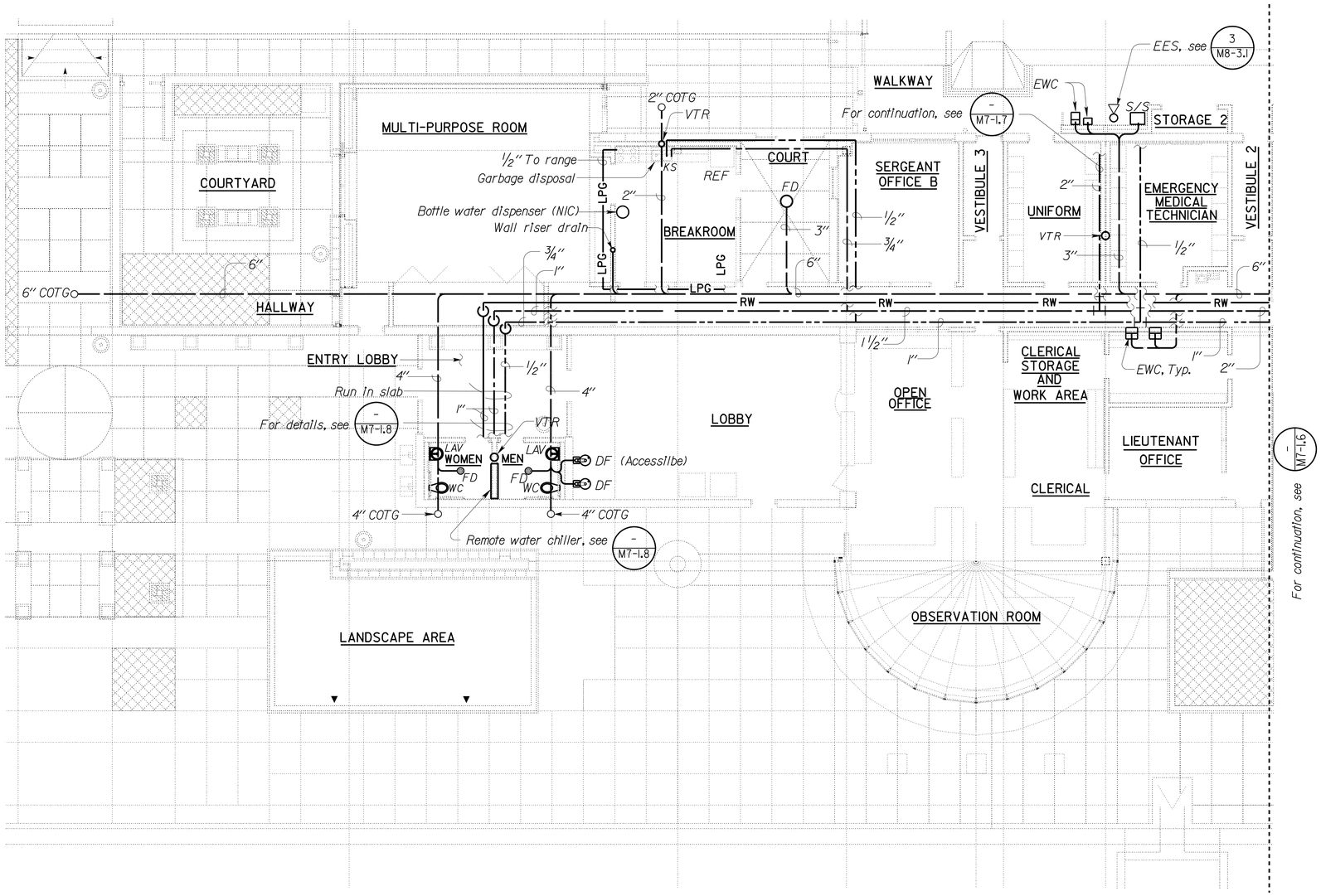

PARTIAL PLAN

1/8"=1'-0"

THIS DRAWING ACCURATE FOR MECHANICAL WORK ONLY

DESIGN	BY Claude Bylinski	CHECKED Seve Gutierrez	
DETAILS	BY Kerry Geoffroy	CHECKED Claude Bylinski	
QUANTITIES	BY Claude Bylinski	CHECKED Seve Gutierrez	

STATE OF CALIFORNIA
DEPARTMENT OF TRANSPORTATION

DIVISION OF ENGINEERING SERVICES
ELECTRICAL-MECHANICAL-WATER AND WASTEWATER DESIGN

BRIDGE NO. 54-1216J
POST MILE 177.3/181.1

MOUNTAIN PASS JPOE
CVEF
MECHANICAL PLAN NO. 1

SHEET **M7-1.5**

TAEMWW Imperial Rev. 7/10
FILE => m7_1_5.dgn
DATE PLOTTED => 14-MAY-2013 TIME PLOTTED => 06:43

ORIGINAL SCALE IN INCHES FOR REDUCED PLANS 0 1 2 3

UNIT 3615
PROJECT NUMBER & PHASE 08000006281
EA 368501

DISREGARD PRINTS BEARING EARLIER REVISION DATES → 08-11-10 11-30-12

REVISION DATES (PRELIMINARY STAGE ONLY) SHEET OF

USERNAME => s121614 DATE PLOTTED => 14-MAY-2013 TIME PLOTTED => 06:43

V1=1

DIST.	COUNTY	ROUTE	POST MILES TOTAL PROJECT	SHEET NO.	TOTAL SHEETS
08	SBd	15	177.3/181.1	588	710

REGISTERED MECHANICAL ENGINEER — 11-30-12 DATE

REGISTERED PROFESSIONAL ENGINEER — C. BYLINSKI — No. M20878 — Exp. 06-30-13 — MECH — STATE OF CALIFORNIA

2-25-13
PLANS APPROVAL DATE

The State of California or its officers or agents shall not be responsible for the accuracy or completeness of scanned copies of this plan sheet.

CALIFORNIA STATE FIRE MARSHAL APPROVED
Approval of this plan does not authorize or approve any omission or deviation from applicable regulations. Final approval is subject to field inspection. One set of approved plans shall be available on the project site at all times.
Reviewed by: G. ANDERSEN
Approval date: 01-20-2011

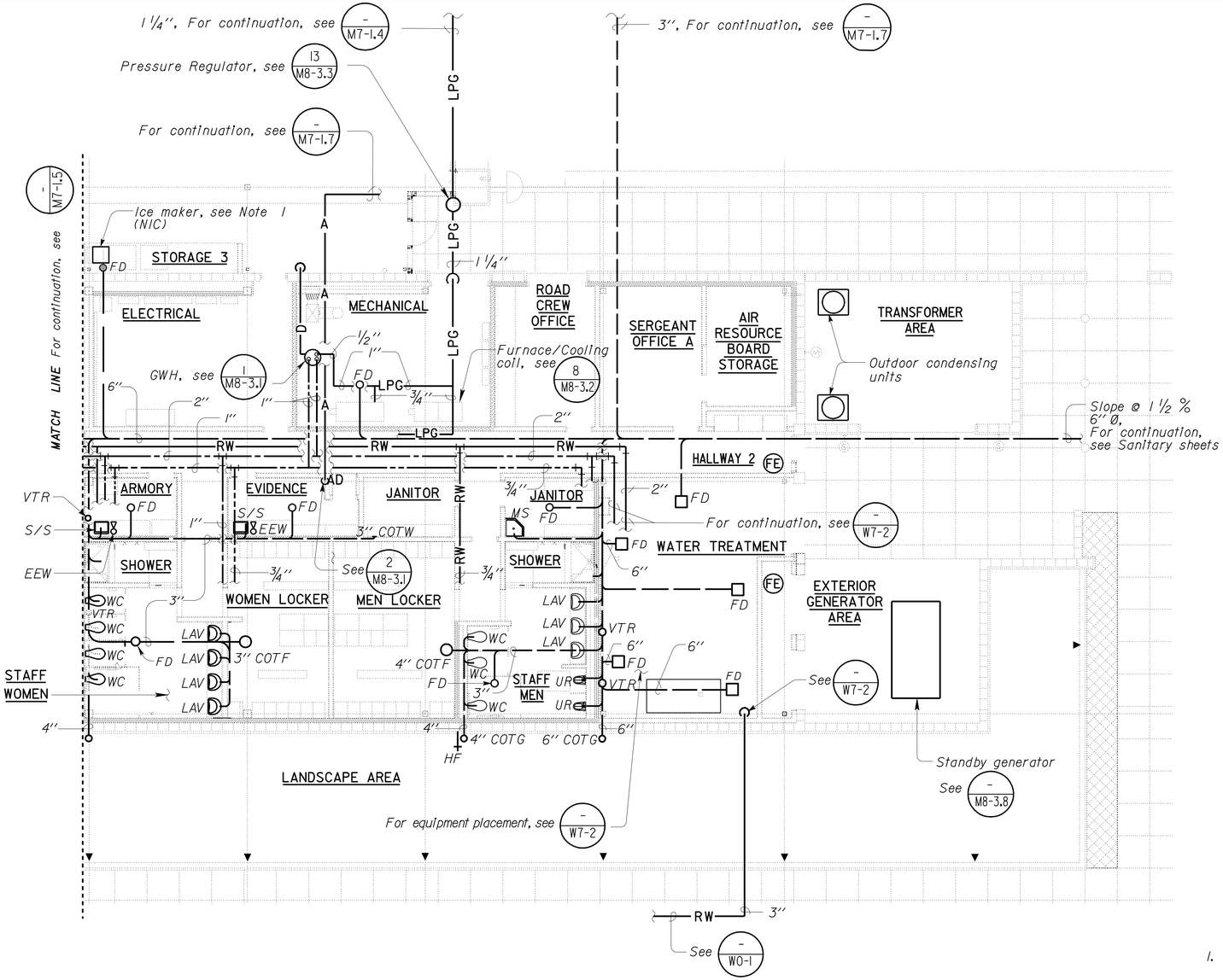

PARTIAL PLAN

1/8"=1'-0"

Note:

1. Ice Maker drain shall be an indirect discharge through an air break into floor drain as per California Code 2007.
2. Install LPG piping in gas tight #5 conduit when below building or structure.
3. Fire Extinguisher shall be bracket mounted and shall be 2A:40 BC. For mounting, see Architectural Sheets.

THIS DRAWING ACCURATE FOR MECHANICAL WORK ONLY

DESIGN	BY Claude Bylinski	CHECKED Seve Gutierrez	
DETAILS	BY Kerry Geoffroy	CHECKED Claude Bylinski	
QUANTITIES	BY Claude Bylinski	CHECKED Seve Gutierrez	

STATE OF CALIFORNIA DEPARTMENT OF TRANSPORTATION

DIVISION OF ENGINEERING SERVICES
ELECTRICAL-MECHANICAL-WATER AND WASTEWATER DESIGN

BRIDGE NO. 54-1216J
POST MILE 177.3/181.1

MOUNTAIN PASS JPOE
CVEF — MECHANICAL PLAN NO. 2

SHEET **M7-1.6**

TAEMWW Imperial Rev. 7/10
FILE => m7_1_6.dgn
DATE PLOTTED => 27-FEB-2013 TIME PLOTTED => 07:40
ORIGINAL SCALE IN INCHES FOR REDUCED PLANS 0 1 2 3
UNIT 3615
PROJECT NUMBER & PHASE 08000006281
EA 368501
DISREGARD PRINTS BEARING EARLIER REVISION DATES
REVISION DATES (PRELIMINARY STAGE ONLY) 06-11-10 11-30-12
SHEET OF

USERNAME => s124496 DATE PLOTTED => 27-FEB-2013 TIME PLOTTED => 07:40

DIST.	COUNTY	ROUTE	POST MILES TOTAL PROJECT	SHEET NO.	TOTAL SHEETS
08	SBd	15	177.3/181.1	589	710

Claude Bylinski 11-30-12
REGISTERED MECHANICAL ENGINEER DATE

REGISTERED PROFESSIONAL ENGINEER C. BYLINSKI No. M20878 Exp. 06-30-13 MECH STATE OF CALIFORNIA

2-25-13
PLANS APPROVAL DATE

The State of California or its officers or agents shall not be responsible for the accuracy or completeness of scanned copies of this plan sheet.

CALIFORNIA STATE FIRE MARSHAL APPROVED
Approval of this plan does not authorize or approve any omission or deviation from applicable regulations. Final approval is subject to field inspection. One set of approved plans shall be available on the project site at all times.
Reviewed by: G. ANDERSEN
Approval date: 01-20-2011

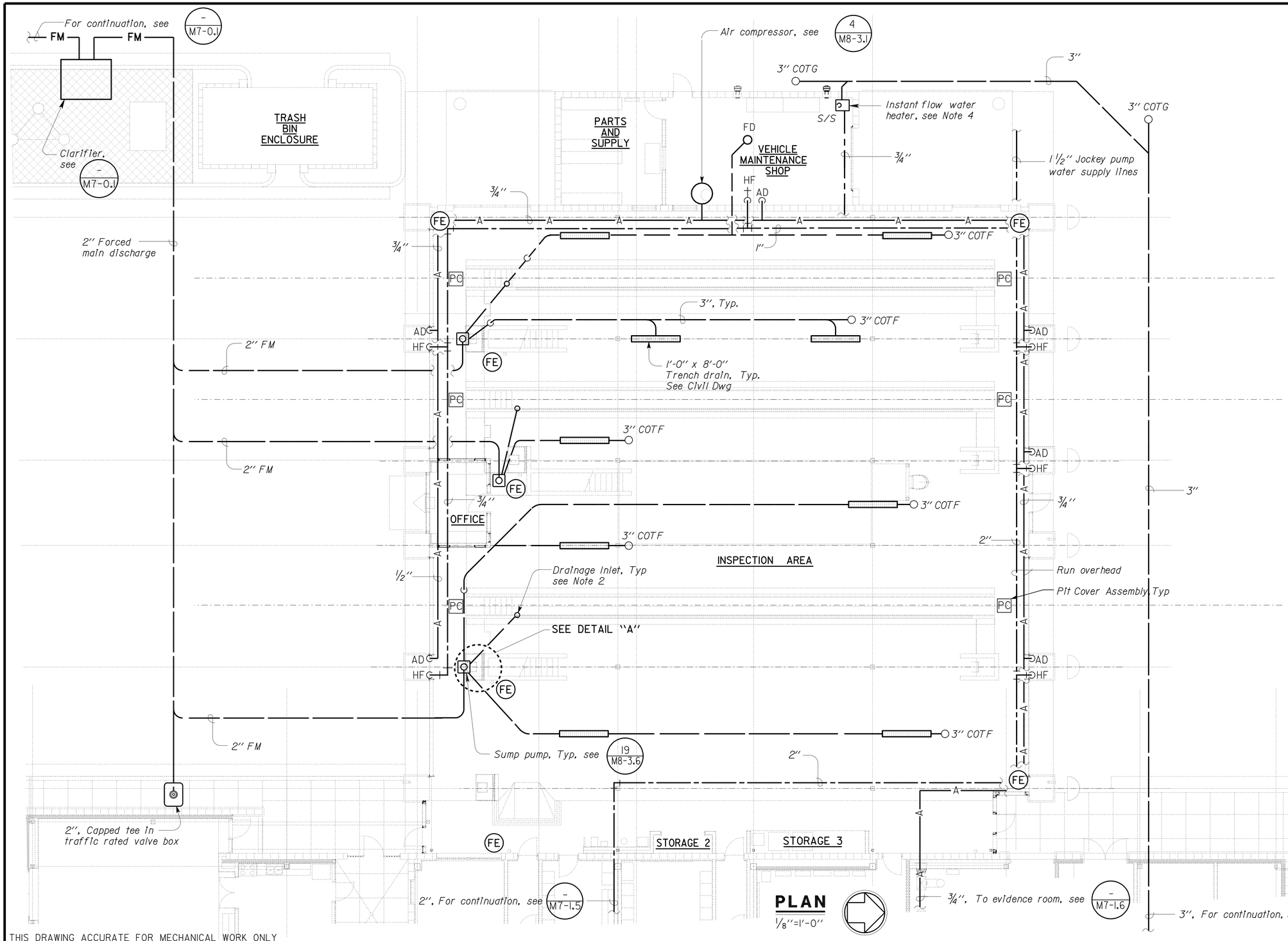

PLAN
1/8"=1'-0"

THIS DRAWING ACCURATE FOR MECHANICAL WORK ONLY

N O T E S :

1. Fire Extinguisher shall be bracket mounted and shall be 2A:40 BC. For mounting, see Architectural Sheets.
2. For floor drains and drainage inlets, see A7-0.18 & A7-4.
3. Air Compressor shall be tank mounted, vertical 5 HP, 208 V, 3 Phase 125 gallon tank.
4. Instant flow electric water heater shall be plumbed to service sink as per manufacturer's recommendations.

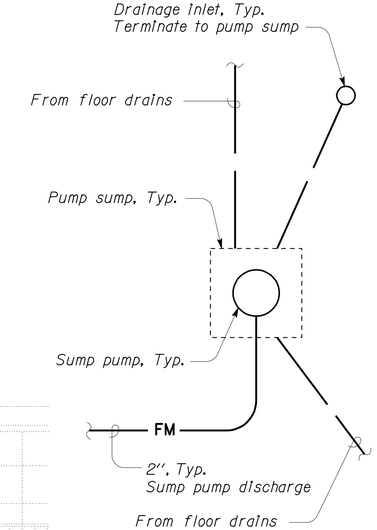

A DETAIL
No Scale

DESIGN	BY Claude Bylinski	CHECKED Seve Gutierrez	
DETAILS	BY Kerry Geoffroy	CHECKED Claude Bylinski	
QUANTITIES	BY Claude Bylinski	CHECKED Seve Gutierrez	

STATE OF CALIFORNIA
DEPARTMENT OF TRANSPORTATION

DIVISION OF ENGINEERING SERVICES
ELECTRICAL-MECHANICAL-WATER AND WASTEWATER DESIGN

BRIDGE NO. 54-1216J
POST MILE 177.3/181.1

MOUNTAIN PASS JPOE
CVEF
MECHANICAL PLAN NO. 3

SHEET **M7-1.7**

TAEMWW Imperial Rev. 7/10
FILE => m7_1_7.dgn
DATE PLOTTED => 27-FEB-2013 TIME PLOTTED => 09:16

ORIGINAL SCALE IN INCHES FOR REDUCED PLANS 0 1 2 3

UNIT 3615
PROJECT NUMBER & PHASE 08000006281
EA 368501

DISREGARD PRINTS BEARING EARLIER REVISION DATES → 08-11-10 11-30-12

REVISION DATES (PRELIMINARY STAGE ONLY) SHEET OF

USERNAME => s12614 DATE PLOTTED => 27-FEB-2013 TIME PLOTTED => 09:16

VI=1

DIST.	COUNTY	ROUTE	POST MILES TOTAL PROJECT	SHEET NO.	TOTAL SHEETS
08	SBd	15	177.3/181.1	590	710

Claude Bylinski 11-30-12
REGISTERED MECHANICAL ENGINEER DATE

REGISTERED PROFESSIONAL ENGINEER C. BYLINSKI No. M20878 Exp. 06-30-13 MECH STATE OF CALIFORNIA

2-25-13
PLANS APPROVAL DATE

The State of California or its officers or agents shall not be responsible for the accuracy or completeness of scanned copies of this plan sheet.

CALIFORNIA STATE FIRE MARSHAL APPROVED
Approval of this plan does not authorize or approve any omission or deviation from applicable regulations. Final approval is subject to field inspection. One set of approved plans shall be available on the project site at all times.
Reviewed by: G. ANDERSEN
Approval date: 01-20-2011

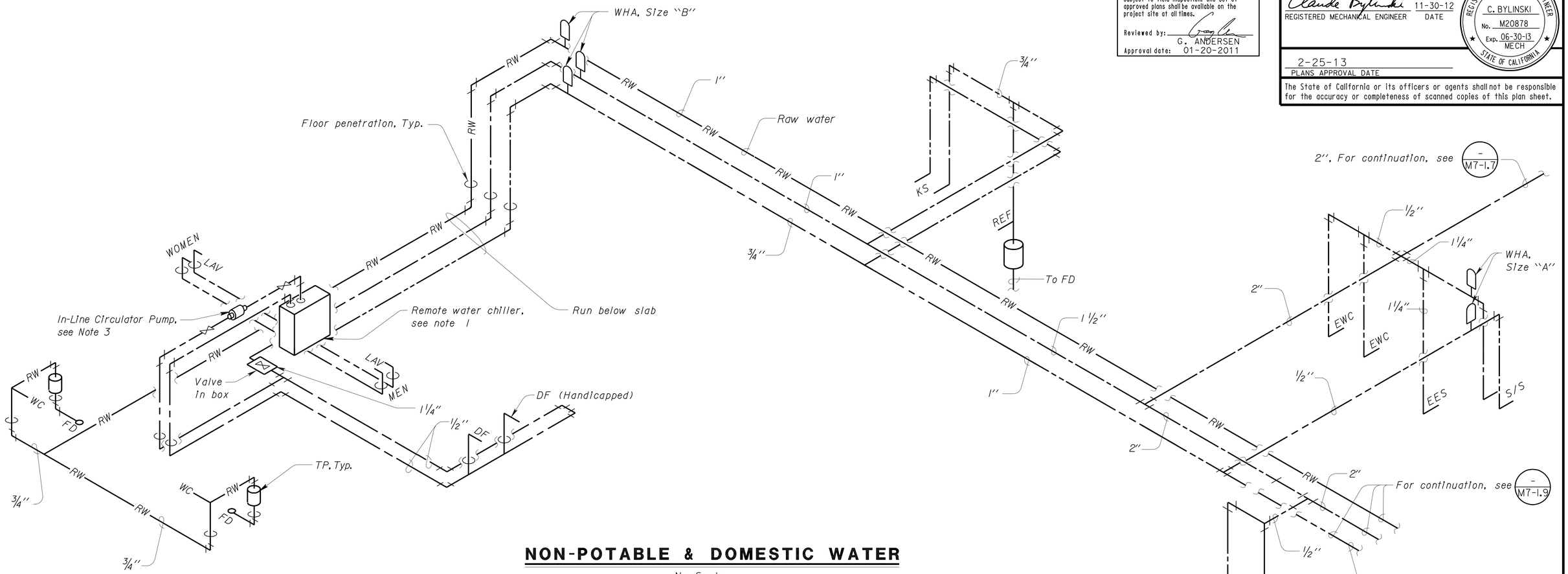

NON-POTABLE & DOMESTIC WATER

No Scale

PLUMBING SCHEDULE

Fixture	Drainage Rough-In	Trap Size	Vent Size	Cold Water Connection	Hot Water Connection
Lavatory	2"	1 1/2"	1 1/4"	1/2"	1/2"
Water Closet	3"	--	2"	1/2"	--
Urinal	2"	--	1 1/2"	1"	--
Shower	2"	2"	1 1/2"	1/2"	1/2"
Electric Water Cooler	1 1/2"	1 1/4"	1 1/2"	1/2"	--
Kitchen Sink	2"	1 1/2"	1 1/2"	1/2"	1/2"
Mop Sink / Service Sink	2"	2"	1 1/2"	1/2"	1/2"
Gas Water Heater	--	--	--	1"	1"
Floor Drain	2"	2"	1 1/2"		--
Emergency Eye Wash and Shower	--	--	--	1 1/4"	--

Notes:

1. The remote water chiller for fountains shall be installed on the loft of Men's public restroom. See M7-1.5 for location of remote water chiller.
2. The piping between remote water chiller and fountains shall be covered with ice-water type insulation.
3. The in-line circulator pump shall be 65 watt, 115 volt, 60 Hertz.

THIS DRAWING ACCURATE FOR MECHANICAL WORK ONLY

DESIGN	BY Claude Bylinski	CHECKED Seve Gutierrez
DETAILS	BY Kerry Geoffroy	CHECKED Claude Bylinski
QUANTITIES	BY Claude Bylinski	CHECKED Seve Gutierrez

STATE OF CALIFORNIA DEPARTMENT OF TRANSPORTATION

DIVISION OF ENGINEERING SERVICES
ELECTRICAL-MECHANICAL-WATER AND WASTEWATER DESIGN

BRIDGE NO. 54-1216J
POST MILE 177.3/181.1

MOUNTAIN PASS JPOE
CVEF DOMESTIC WATER NO. 1

SHEET **M7-1.8**

TAEMWW Imperial Rev. 7/10
FILE => m7_1_8.dgn
DATE PLOTTED => 27-FEB-2013 TIME PLOTTED => 07:41
ORIGINAL SCALE IN INCHES FOR REDUCED PLANS 0 1 2 3
UNIT 3615
PROJECT NUMBER & PHASE 08000006281
EA 368501
DISREGARD PRINTS BEARING EARLIER REVISION DATES → 08-11-10 11-30-12
REVISION DATES (PRELIMINARY STAGE ONLY) SHEET OF
USERNAME => s124496 DATE PLOTTED => 27-FEB-2013 TIME PLOTTED => 07:41
VI=1

DIST.	COUNTY	ROUTE	POST MILES TOTAL PROJECT	SHEET NO.	TOTAL SHEETS
08	SBd	15	177.3/181.1	591	710

Claude Bylinski 11-30-12
REGISTERED MECHANICAL ENGINEER DATE

REGISTERED PROFESSIONAL ENGINEER C. BYLINSKI No. M20878 Exp. 06-30-13 MECH STATE OF CALIFORNIA

2-25-13
PLANS APPROVAL DATE

The State of California or its officers or agents shall not be responsible for the accuracy or completeness of scanned copies of this plan sheet.

CALIFORNIA STATE FIRE MARSHAL APPROVED
Approval of this plan does not authorize or approve any omission or deviation from applicable regulations. Final approval is subject to field inspection. One set of approved plans shall be available on the project site at all times.
Reviewed by: G. ANDERSEN
Approval date: 01-20-2011

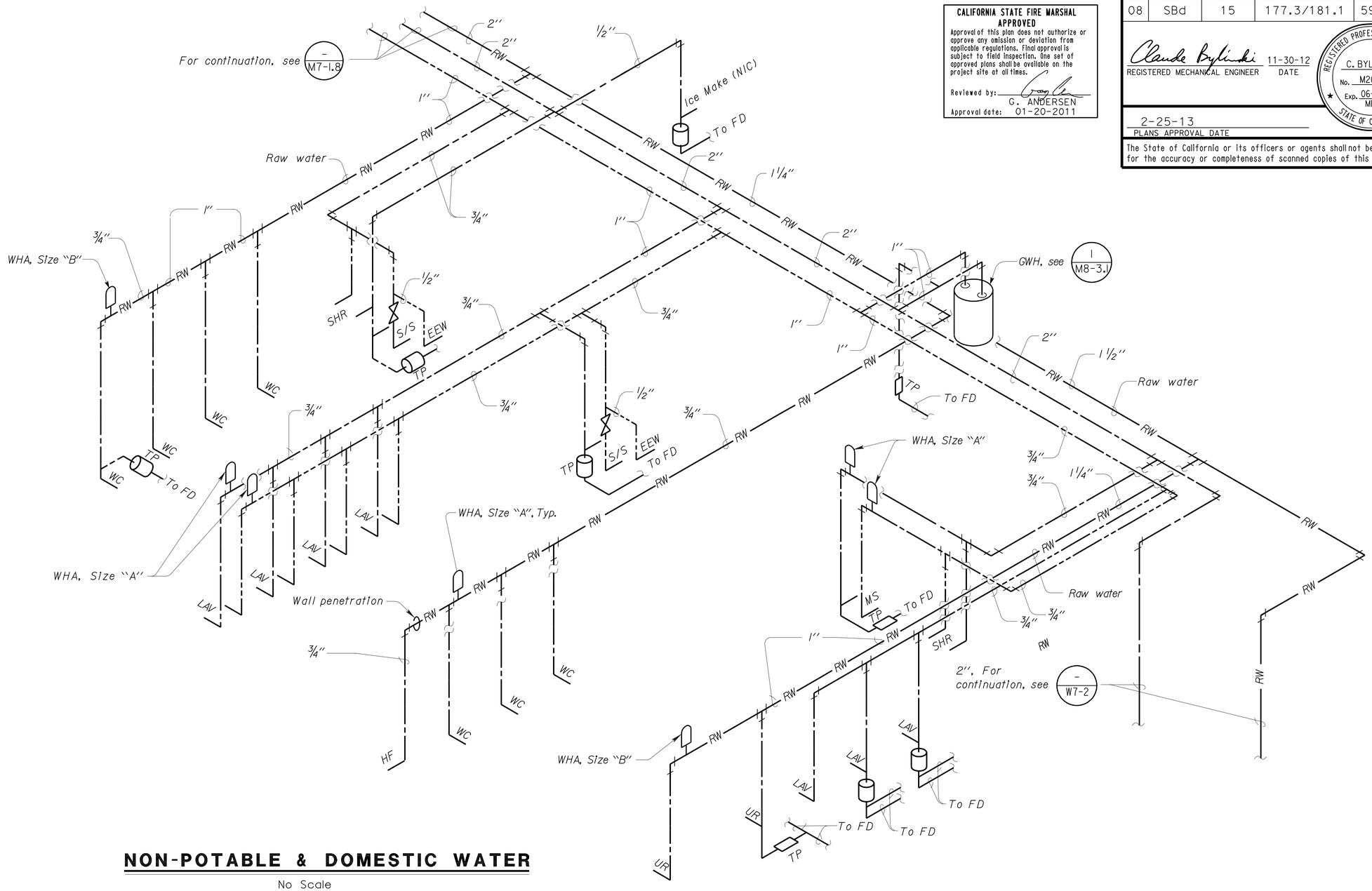

NON-POTABLE & DOMESTIC WATER

No Scale

THIS DRAWING ACCURATE FOR MECHANICAL WORK ONLY

	BY	CHECKED
DESIGN	Claude Bylinski	Seve Gutierrez
DETAILS	Kerry Geoffroy	Claude Bylinski
QUANTITIES	Claude Bylinski	Seve Gutierrez

STATE OF CALIFORNIA
DEPARTMENT OF TRANSPORTATION

DIVISION OF ENGINEERING SERVICES
ELECTRICAL-MECHANICAL-WATER AND WASTEWATER DESIGN

BRIDGE NO. 54-1216J
POST MILE 177.3/181.1

MOUNTAIN PASS JPOE
CVEF — DOMESTIC WATER NO. 2

SHEET **M7-1.9**

TAEMWW Imperial Rev. 7/10
FILE => m7_1_9.dgn
DATE PLOTTED => 27-FEB-2013 TIME PLOTTED => 07:41
ORIGINAL SCALE IN INCHES FOR REDUCED PLANS 0 1 2 3
UNIT 3615
PROJECT NUMBER & PHASE 08000006281
EA 368501
DISREGARD PRINTS BEARING EARLIER REVISION DATES → 08-11-10 11-30-12
REVISION DATES (PRELIMINARY STAGE ONLY) SHEET OF
USERNAME => s124496 DATE PLOTTED => 27-FEB-2013 TIME PLOTTED => 07:41
V1=1

DIST.	COUNTY	ROUTE	POST MILES TOTAL PROJECT	SHEET NO.	TOTAL SHEETS
08	SBd	15	177.3/181.1	592	710

REGISTERED MECHANICAL ENGINEER — 11-30-12 DATE

REGISTERED PROFESSIONAL ENGINEER C. BYLINSKI No. M20878 Exp. 06-30-13 MECH STATE OF CALIFORNIA

2-25-13
PLANS APPROVAL DATE

The State of California or its officers or agents shall not be responsible for the accuracy or completeness of scanned copies of this plan sheet.

CALIFORNIA STATE FIRE MARSHAL APPROVED
Approval of this plan does not authorize or approve any omission or deviation from applicable regulations. Final approval is subject to field inspection. One set of approved plans shall be available on the project site at all times.
Reviewed by: G. ANDERSEN
Approval date: 01-20-2011

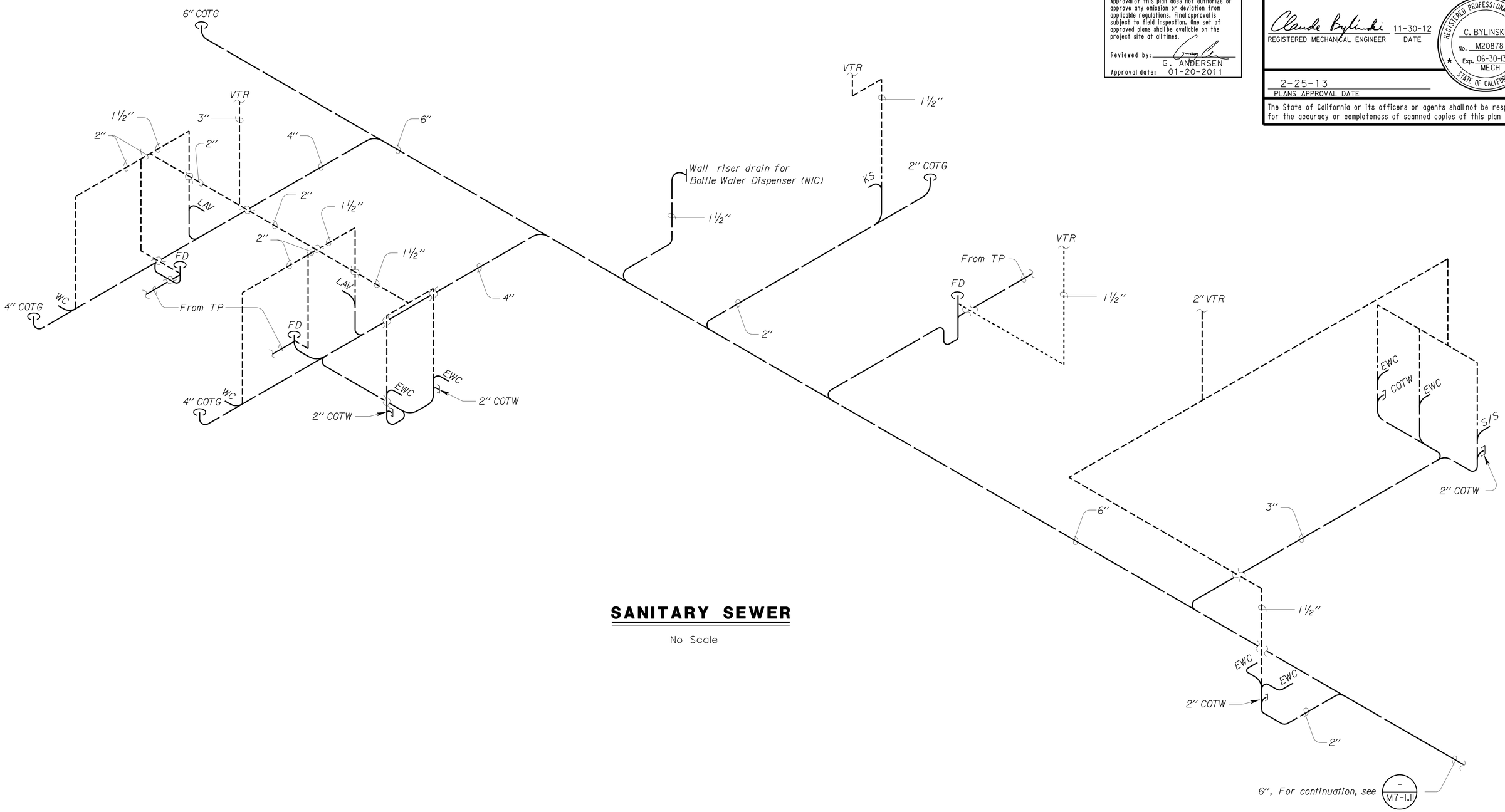

SANITARY SEWER

No Scale

THIS DRAWING ACCURATE FOR MECHANICAL WORK ONLY

DESIGN	BY Claude Bylinski	CHECKED Seve Gutierrez	
DETAILS	BY Kerry Geoffroy	CHECKED Claude Bylinski	
QUANTITIES	BY Claude Bylinski	CHECKED Seve Gutierrez	

STATE OF CALIFORNIA DEPARTMENT OF TRANSPORTATION

DIVISION OF ENGINEERING SERVICES
ELECTRICAL-MECHANICAL-WATER AND WASTEWATER DESIGN

BRIDGE NO. 54-1216J
POST MILE 177.3/181.1

MOUNTAIN PASS JPOE
CVEF — SANITARY SEWER NO. 1

SHEET **M7-1.10**

TAEMWW Imperial Rev. 7/10
FILE => m7_1_10.dgn
DATE PLOTTED => 27-FEB-2013 TIME PLOTTED => 07:41
ORIGINAL SCALE IN INCHES FOR REDUCED PLANS 0 1 2 3
UNIT 3615
PROJECT NUMBER & PHASE 08000006281
EA 368501
DISREGARD PRINTS BEARING EARLIER REVISION DATES → 08-11-10 11-30-12
REVISION DATES (PRELIMINARY STAGE ONLY) SHEET OF

USERNAME => s124496 DATE PLOTTED => 27-FEB-2013 TIME PLOTTED => 07:41

V|=1

DIST.	COUNTY	ROUTE	POST MILES TOTAL PROJECT	SHEET NO.	TOTAL SHEETS
08	SBd	15	177.3/181.1	593	710

REGISTERED MECHANICAL ENGINEER — 11-30-12 DATE

REGISTERED PROFESSIONAL ENGINEER — C. BYLINSKI — No. M20878 — Exp. 06-30-13 — MECH — STATE OF CALIFORNIA

2-25-13
PLANS APPROVAL DATE

The State of California or its officers or agents shall not be responsible for the accuracy or completeness of scanned copies of this plan sheet.

CALIFORNIA STATE FIRE MARSHAL APPROVED

Approval of this plan does not authorize or approve any omission or deviation from applicable regulations. Final approval is subject to field inspection. One set of approved plans shall be available on the project site at all times.

Reviewed by: G. ANDERSEN
Approval date: 01-20-2011

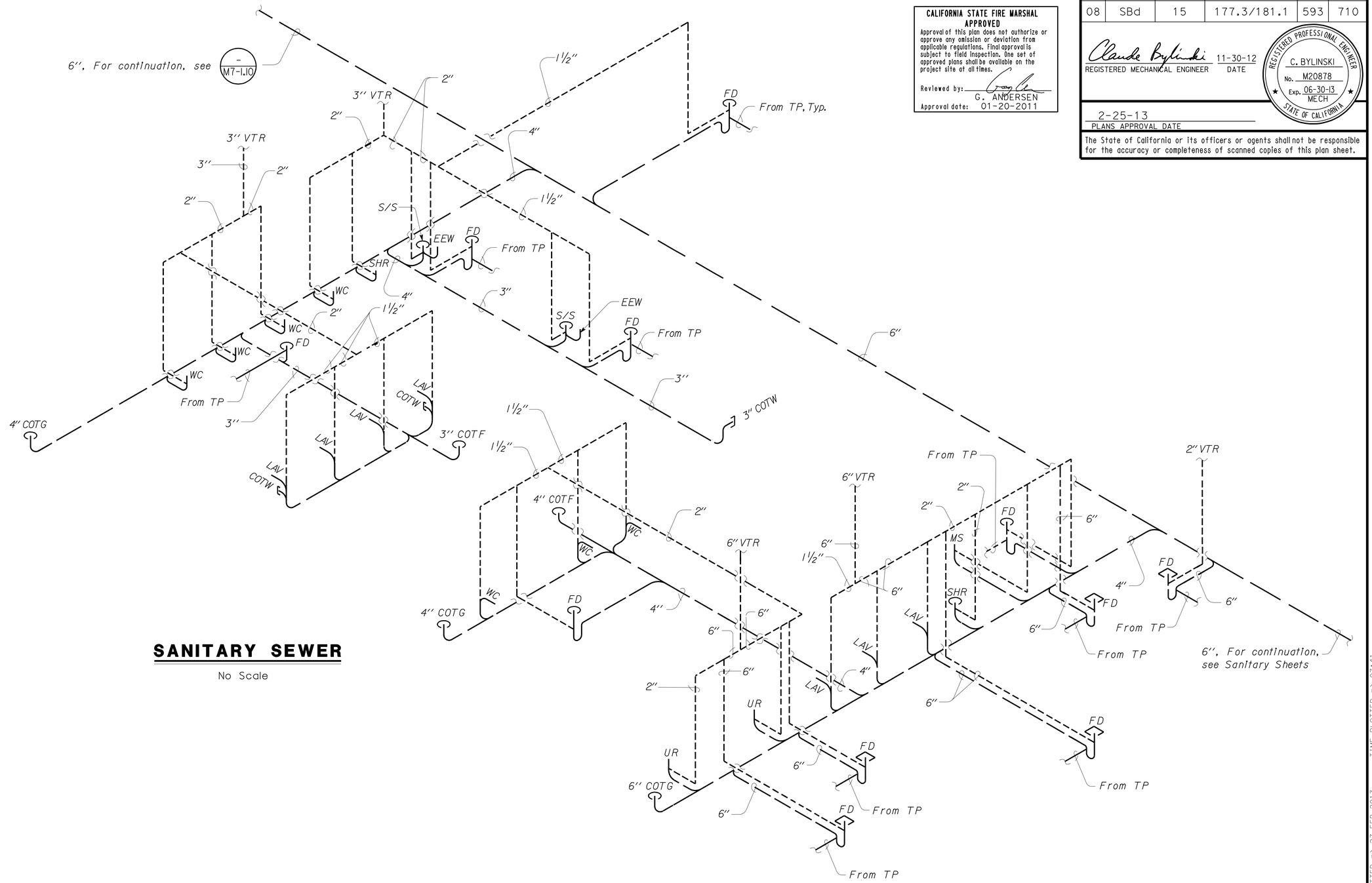

SANITARY SEWER

No Scale

THIS DRAWING ACCURATE FOR MECHANICAL WORK ONLY

DESIGN	BY Claude Bylinski	CHECKED Seve Gutierrez	
DETAILS	BY Kerry Geoffroy	CHECKED Claude Bylinski	
QUANTITIES	BY Claude Bylinski	CHECKED Seve Gutierrez	

STATE OF CALIFORNIA
DEPARTMENT OF TRANSPORTATION

DIVISION OF ENGINEERING SERVICES
ELECTRICAL-MECHANICAL-WATER AND WASTEWATER DESIGN

BRIDGE NO. 54-1216J
POST MILE 177.3/181.1

MOUNTAIN PASS JPOE
CVEF — SANITARY SEWER NO. 2

SHEET **M7-1.11**

TAEMWW Imperial Rev. 7/10
FILE => m7_1_11.dgn
DATE PLOTTED => 27-FEB-2013 TIME PLOTTED => 07:41

ORIGINAL SCALE IN INCHES FOR REDUCED PLANS 0 1 2 3

UNIT 3615
PROJECT NUMBER & PHASE 08000006281
EA 368501

DISREGARD PRINTS BEARING EARLIER REVISION DATES → 06-11-10 11-30-12

REVISION DATES (PRELIMINARY STAGE ONLY) SHEET OF

USERNAME => s124496 DATE PLOTTED => 27-FEB-2013 TIME PLOTTED => 07:41

V|=|

DIST.	COUNTY	ROUTE	POST MILES TOTAL PROJECT	SHEET NO.	TOTAL SHEETS
08	SBd	15	177.3/181.1	594	710

REGISTERED MECHANICAL ENGINEER — 11-30-12 DATE

REGISTERED PROFESSIONAL ENGINEER C. BYLINSKI No. M20878 Exp. 06-30-13 MECH STATE OF CALIFORNIA

2-25-13
PLANS APPROVAL DATE

The State of California or its officers or agents shall not be responsible for the accuracy or completeness of scanned copies of this plan sheet.

CALIFORNIA STATE FIRE MARSHAL APPROVED
Approval of this plan does not authorize or approve any omission or deviation from applicable regulations. Final approval is subject to field inspection. One set of approved plans shall be available on the project site at all times.
Reviewed by: G. ANDERSEN
Approval date: 01-20-2011

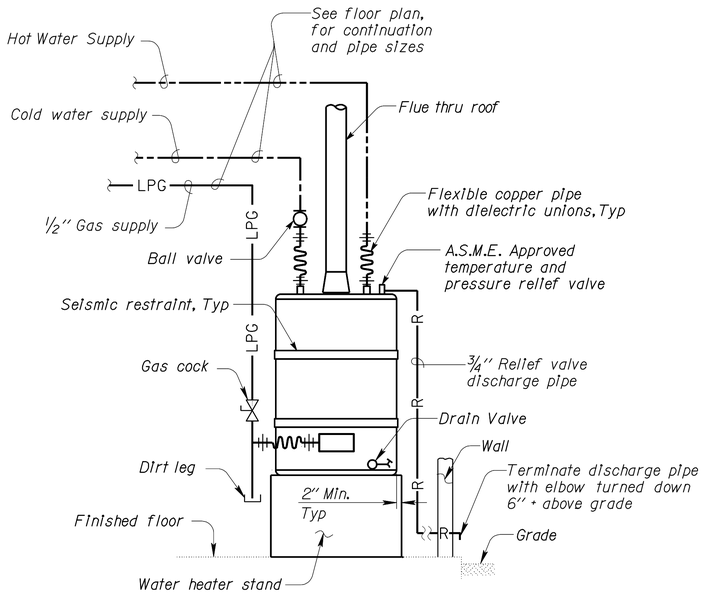

1 WATER HEATER (LPG)

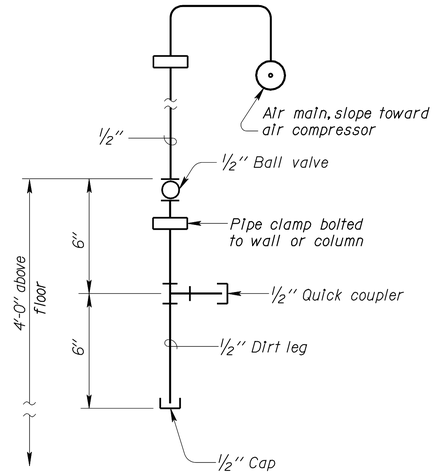

2 AIR DROP

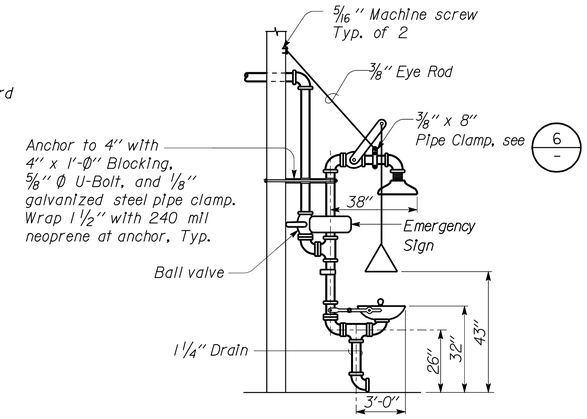

3 EMERGENCY EYEWASH AND SHOWER DETAIL

(DISABLED ACCESSIBLE)

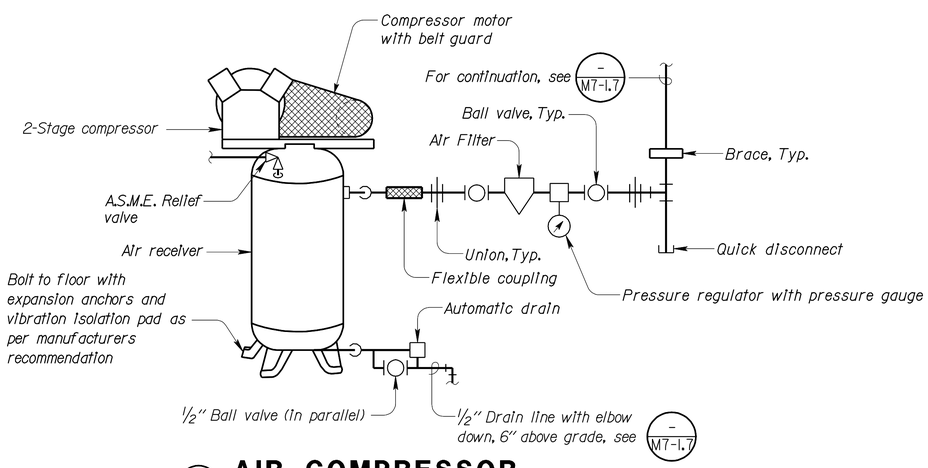

4 AIR COMPRESSOR

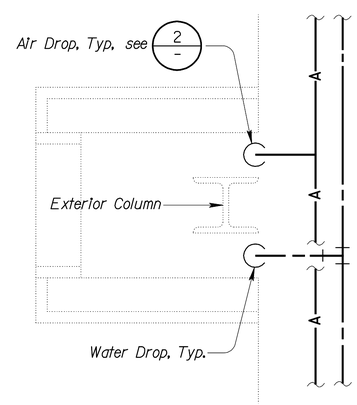

5 AIR/ WATER DROP

Support Air and Water Drops to column with C-Clamps, Typ.

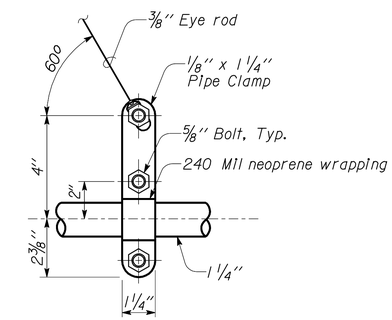

6 PIPE SUPPORT DETAIL

No Scale

THIS DRAWING ACCURATE FOR MECHANICAL WORK ONLY

	BY	CHECKED
DESIGN	Claude Bylinski	Seve Gutierrez
DETAILS	Kerry Geoffroy	Claude Bylinski
QUANTITIES	Claude Bylinski	Seve Gutierrez

STATE OF CALIFORNIA DEPARTMENT OF TRANSPORTATION

DIVISION OF ENGINEERING SERVICES
ELECTRICAL-MECHANICAL-WATER AND WASTEWATER DESIGN

BRIDGE NO. 54-1216J
POST MILE 177.3/181.1

MOUNTAIN PASS JPOE
CVEF — MECHANICAL DETAILS NO. 1

SHEET **M8-3.1**

TAEMWW Imperial Rev. 7/10
FILE => m8_3_1.dgn
DATE PLOTTED => 27-FEB-2013 TIME PLOTTED => 07:41
ORIGINAL SCALE IN INCHES FOR REDUCED PLANS 0 1 2 3
UNIT 3615
PROJECT NUMBER & PHASE 08000006281
EA 368501
DISREGARD PRINTS BEARING EARLIER REVISION DATES
REVISION DATES (PRELIMINARY STAGE ONLY) 08-11-10 11-30-12
SHEET OF

USERNAME => s124496 DATE PLOTTED => 27-FEB-2013 TIME PLOTTED => 07:41
V|=|

DIST.	COUNTY	ROUTE	POST MILES TOTAL PROJECT	SHEET NO.	TOTAL SHEETS
08	SBd	15	177.3/181.1	595	710

REGISTERED MECHANICAL ENGINEER — 11-30-12 DATE

REGISTERED PROFESSIONAL ENGINEER — C. BYLINSKI — No. M20878 — Exp. 06-30-13 — MECH — STATE OF CALIFORNIA

2-25-13
PLANS APPROVAL DATE

The State of California or its officers or agents shall not be responsible for the accuracy or completeness of scanned copies of this plan sheet.

CALIFORNIA STATE FIRE MARSHAL APPROVED
Approval of this plan does not authorize or approve any omission or deviation from applicable regulations. Final approval is subject to field inspection. One set of approved plans shall be available on the project site at all times.
Reviewed by: G. ANDERSEN
Approval date: 01-20-2011

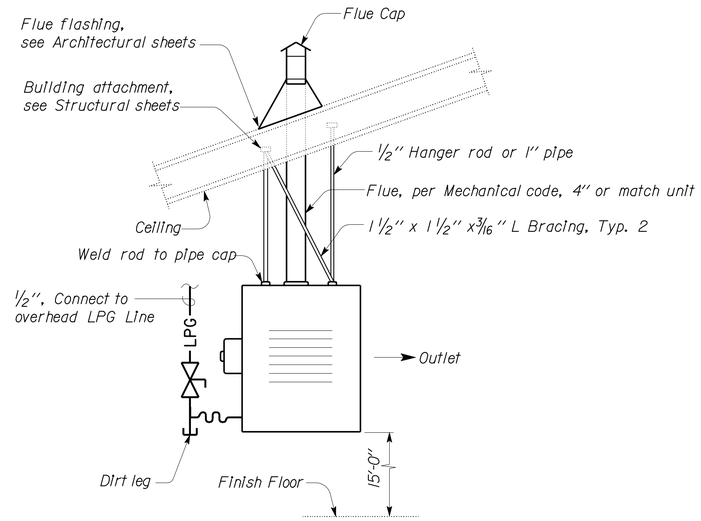

9 UNIT HEATER DETAIL

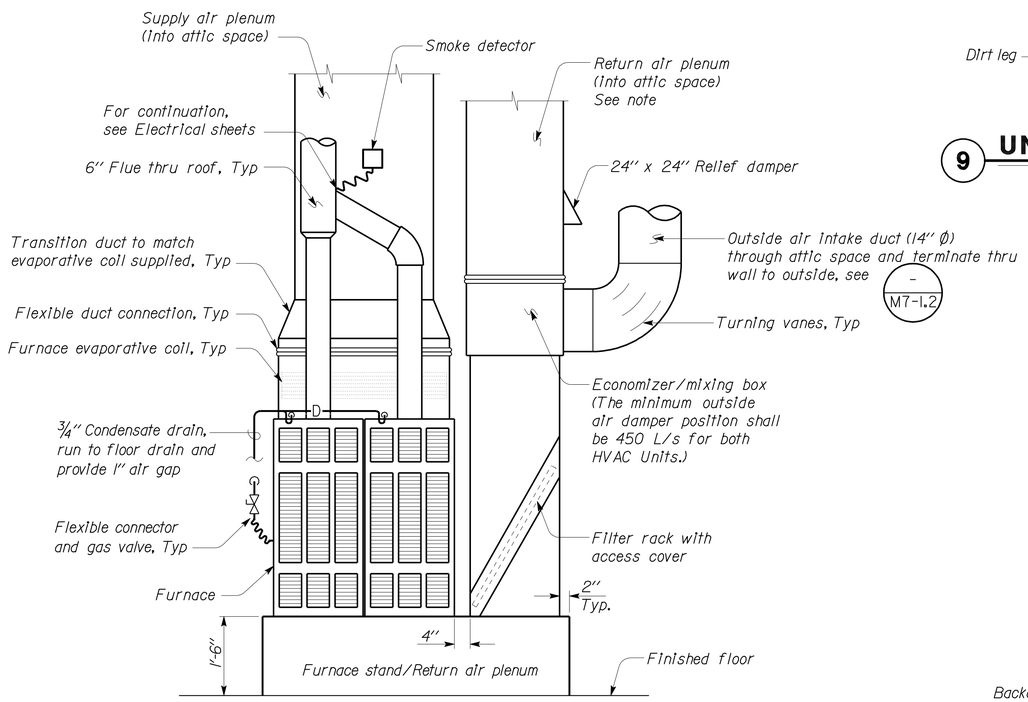

8 SPLIT SYSTEM AIR CONDITIONING WITH GAS FURNACE - ELEVATION

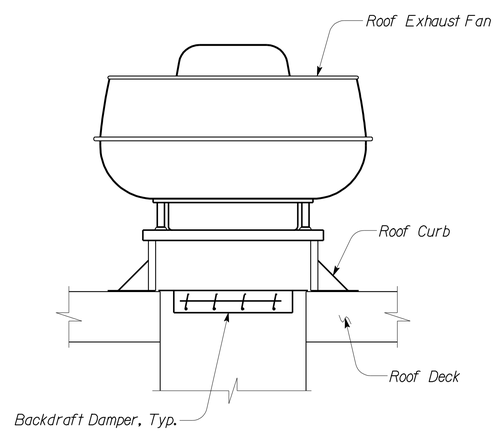

10 ROOF EXHAUST FAN

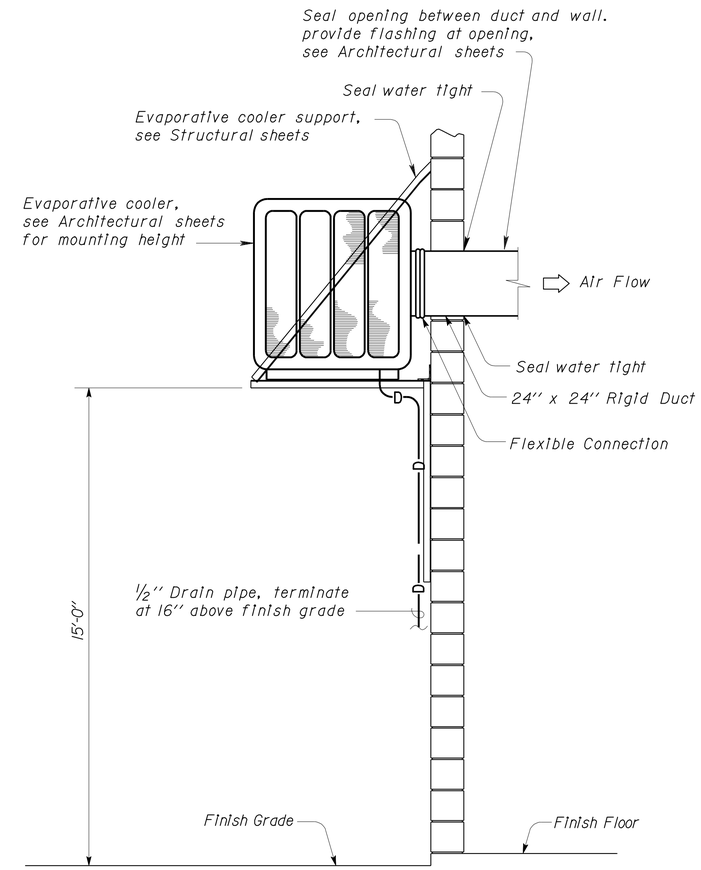

11 EVAPORATIVE COOLER-ELEVATION

No Scale

THIS DRAWING ACCURATE FOR MECHANICAL WORK ONLY

	BY	CHECKED
DESIGN	Claude Bylinski	Seve Gutierrez
DETAILS	Kerry Geoffroy	Claude Bylinski
QUANTITIES	Claude Bylinski	Seve Gutierrez

STATE OF CALIFORNIA DEPARTMENT OF TRANSPORTATION

DIVISION OF ENGINEERING SERVICES
ELECTRICAL-MECHANICAL-WATER AND WASTEWATER DESIGN

BRIDGE NO. 54-1216J
POST MILE 177.3/181.1

MOUNTAIN PASS JPOE
CVEF — MECHANICAL DETAILS NO. 2

SHEET **M8-3.2**

TAEMWW Imperial Rev. 7/10
FILE => m8_3_2.dgn
DATE PLOTTED => 27-FEB-2013 TIME PLOTTED => 07:41

ORIGINAL SCALE IN INCHES FOR REDUCED PLANS 0 1 2 3

UNIT 3615
PROJECT NUMBER & PHASE 08000006281
EA 368501

DISREGARD PRINTS BEARING EARLIER REVISION DATES → 08-11-10 11-30-12

REVISION DATES (PRELIMINARY STAGE ONLY) SHEET OF

USERNAME => s124936 DATE PLOTTED => 27-FEB-2013 TIME PLOTTED => 07:41

V|=|

DIST.	COUNTY	ROUTE	POST MILES TOTAL PROJECT	SHEET NO.	TOTAL SHEETS
08	SBd	15	177.3/181.1	596	710

CALIFORNIA STATE FIRE MARSHAL APPROVED
Approval of this plan does not authorize or approve any omission or deviation from applicable regulations. Final approval is subject to field inspection. One set of approved plans shall be available on the project site at all times.
Reviewed by: G. ANDERSEN
Approval date: 01-20-2011

Claude Bylinski 11-30-12
REGISTERED MECHANICAL ENGINEER DATE

REGISTERED PROFESSIONAL ENGINEER C. BYLINSKI No. M20878 Exp. 06-30-13 MECH STATE OF CALIFORNIA

2-25-13
PLANS APPROVAL DATE

The State of California or its officers or agents shall not be responsible for the accuracy or completeness of scanned copies of this plan sheet.

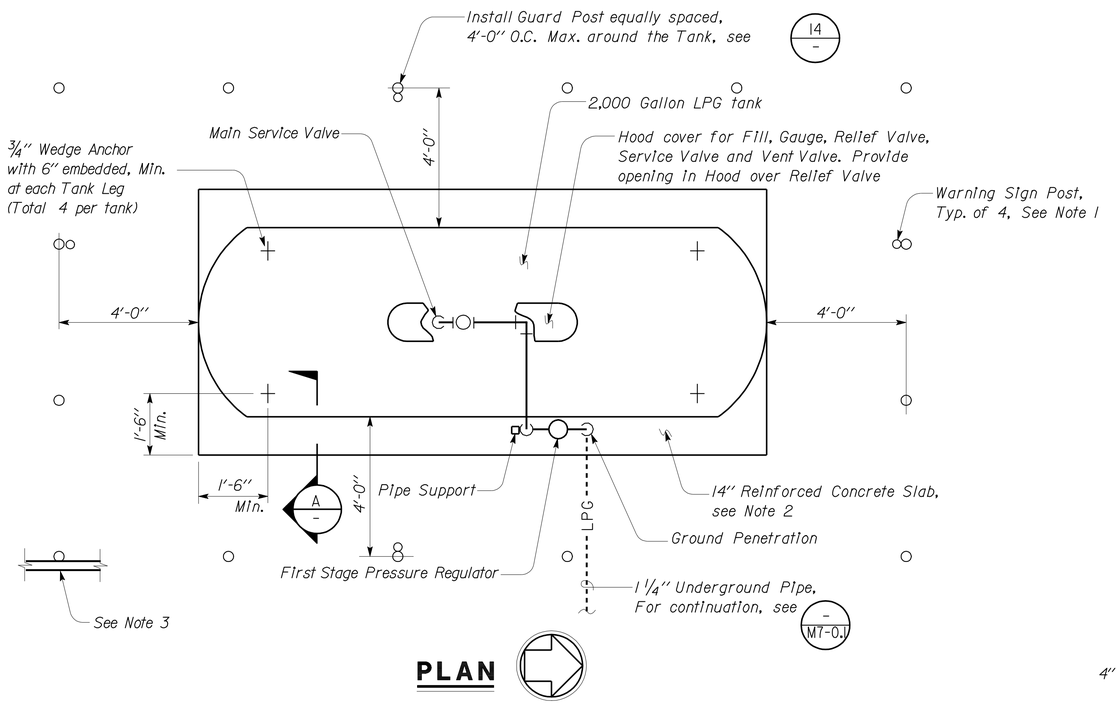

PLAN

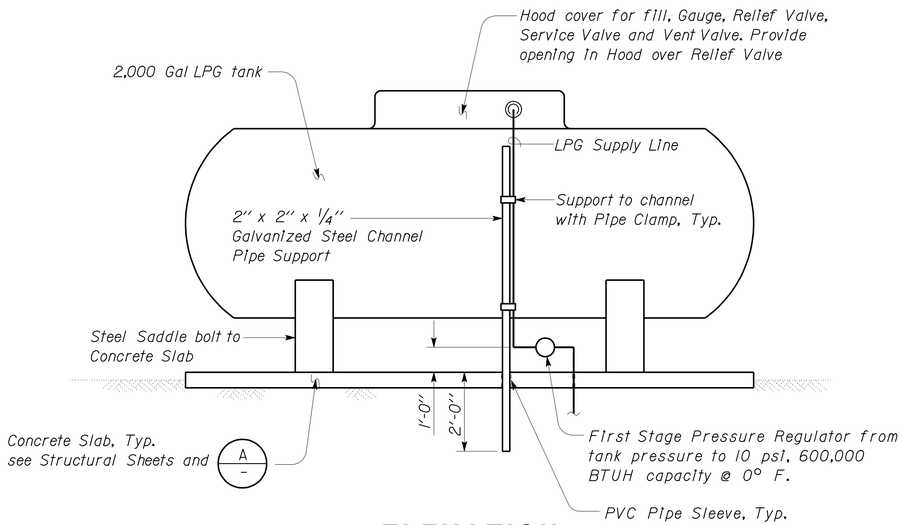

ELEVATION

12 LPG TANK

Notes:

1. Mount Warning Signs for LPG Tank on 2" O standard galvanized steel pipe at the height of 2" and clamp to the back of guard post with two stainless steel brackets at location as shown, per the 2009 California Code of Regulations, Title 8, Division 1, Chapter 4, subchapter 1, paragraph 489.
2. Approximate LPG tank slab dimensions shall be 22'-0" x 6'-0". Contractor shall verify tank dimensions before pouring slab.
3. Mount Fire Extinguisher Cabinet on 3" Ø galvanized steel pipe at the height of 4'-0" from finish grade to release mechanism of the extinguisher and clamp cabinet to the back of guard post with two stainless steel brackets at location as shown. Fire Extinguisher shall be 3A:40B:C.
4. Liquefied petroleum gas (LPG) tank shall be installed in accordance with the 2007 California Fire Code and NFPA 58, 2004 edition.
5. LPG Tank supplies fuel to water heaters and heating systems.

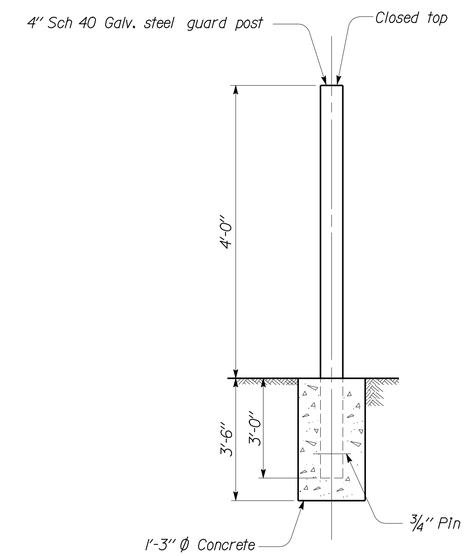

14 GUARD POST

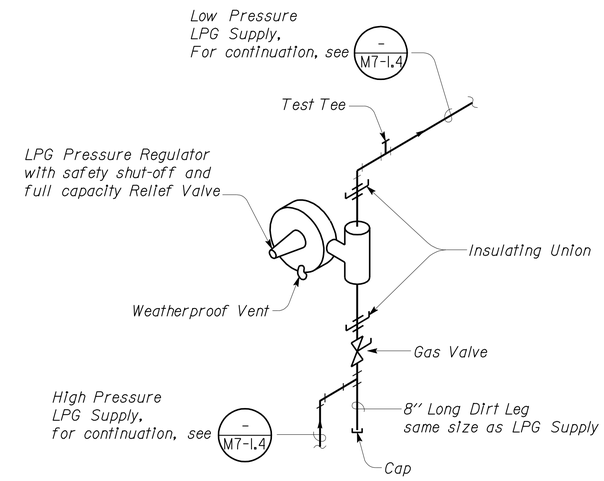

13 SECOND STAGE LPG PRESSURE REGULATOR

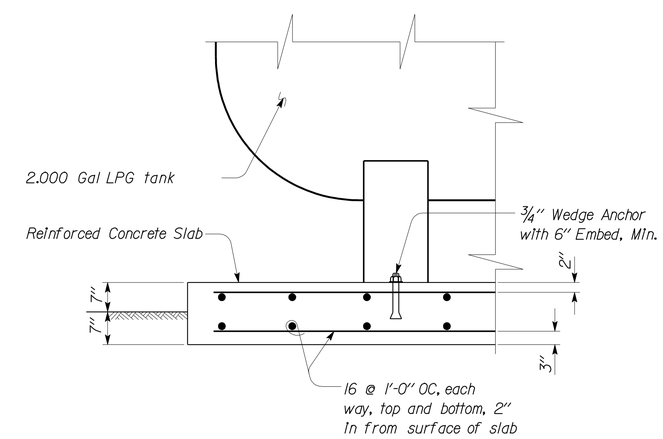

A LPG TANK SLAB-SECTION

No Scale

THIS DRAWING ACCURATE FOR MECHANICAL WORK ONLY

	BY	CHECKED
DESIGN	Claude Bylinski	Seve Gutierrez
DETAILS	Kerry Geoffroy	Claude Bylinski
QUANTITIES	Claude Bylinski	Seve Gutierrez

STATE OF CALIFORNIA DEPARTMENT OF TRANSPORTATION

DIVISION OF ENGINEERING SERVICES
ELECTRICAL-MECHANICAL-WATER AND WASTEWATER DESIGN

BRIDGE NO. 54-1216J
POST MILE 177.3/181.1

MOUNTAIN PASS JPOE
CVEF — LPG TANK AND DETAILS

SHEET **M3-3.3**

TAEMWW Imperial Rev. 7/10
FILE => m8_3_3.dgn
DATE PLOTTED => 27-FEB-2013 TIME PLOTTED => 07:41
ORIGINAL SCALE IN INCHES FOR REDUCED PLANS 0 1 2 3
UNIT 3615
PROJECT NUMBER & PHASE 08000006281
EA 368501
DISREGARD PRINTS BEARING EARLIER REVISION DATES 08-11-10 11-30-12
REVISION DATES (PRELIMINARY STAGE ONLY) SHEET OF
USERNAME => s124436 DATE PLOTTED => 27-FEB-2013 TIME PLOTTED => 07:41
V|=1

DIST.	COUNTY	ROUTE	POST MILES TOTAL PROJECT	SHEET NO.	TOTAL SHEETS
08	SBd	15	177.3/181.1	597	710

REGISTERED MECHANICAL ENGINEER — 11-30-12 DATE

REGISTERED PROFESSIONAL ENGINEER C. BYLINSKI No. M20878 Exp. 06-30-13 MECH STATE OF CALIFORNIA

2-25-13
PLANS APPROVAL DATE

The State of California or its officers or agents shall not be responsible for the accuracy or completeness of scanned copies of this plan sheet.

CALIFORNIA STATE FIRE MARSHAL APPROVED
Approval of this plan does not authorize or approve any omission or deviation from applicable regulations. Final approval is subject to field inspection. One set of approved plans shall be available on the project site at all times.
Reviewed by: G. ANDERSEN
Approval date: 01-20-2011

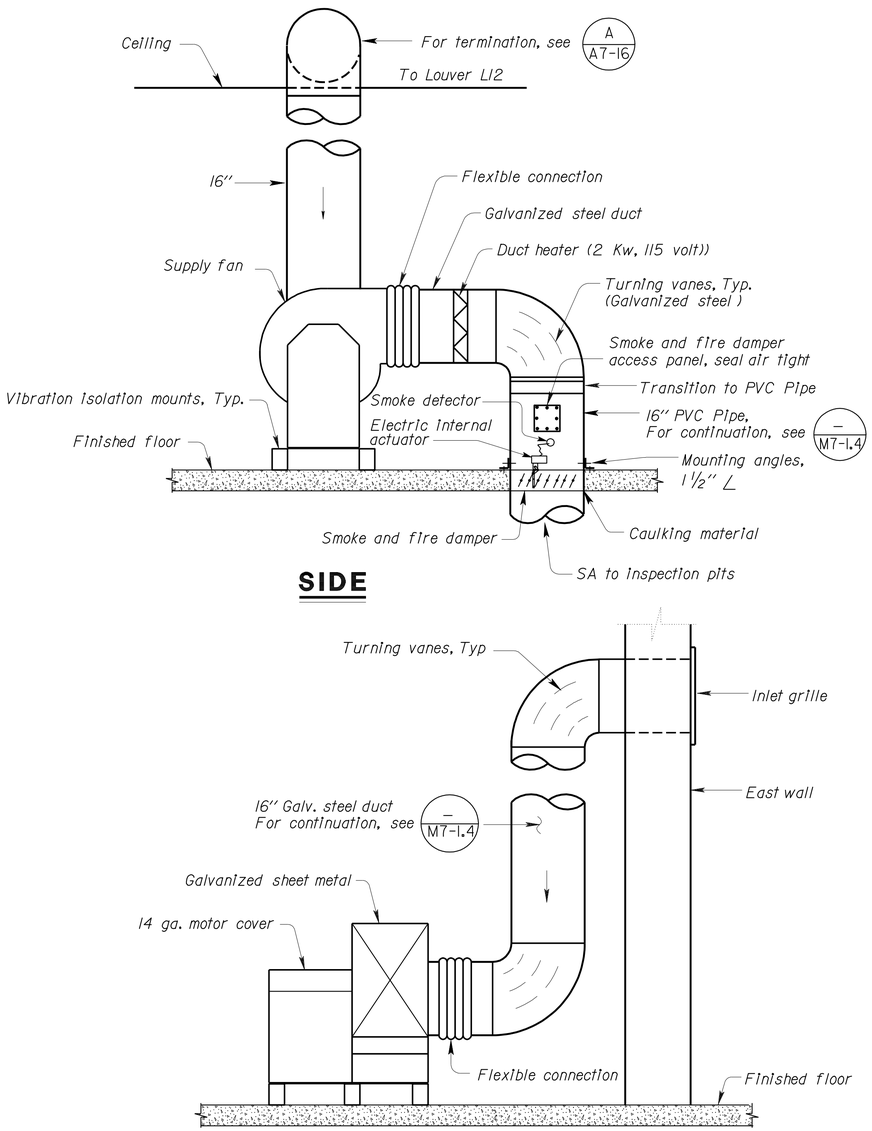

15 INSPECTION PIT SUPPLY FAN

No Scale

NOTES:

1. The intake air duct for Supply Fan shall be terminated to wall mounted louver as shown in Architectural plans. The intake air louver nominal size shall be 2'-0" x 3'-0".
2. Use 1/4" Ø sheet metal screw @ 6" O.C. to connect Discharge Duct to wall or blank sheet metal cover.
3. Flexible connection shall be connected to fan and duct transition by stainless steel hose clamp.

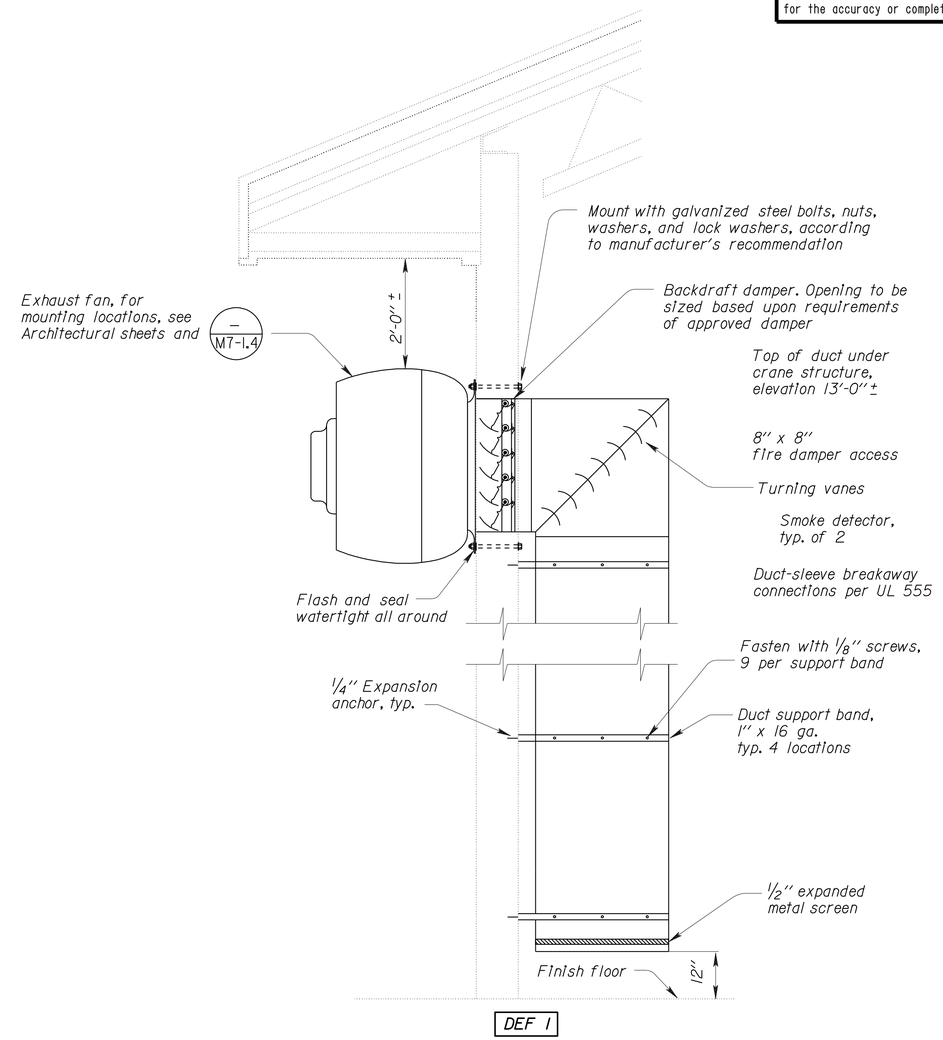

16 DECLASSIFICATION FAN DETAILS

No Scale

THIS DRAWING ACCURATE FOR MECHANICAL WORK ONLY

DESIGN	BY Claude Bylinski	CHECKED Seve Gutierrez	
DETAILS	BY Kerry Geoffroy	CHECKED Claude Bylinski	
QUANTITIES	BY Claude Bylinski	CHECKED Seve Gutierrez	

STATE OF CALIFORNIA DEPARTMENT OF TRANSPORTATION

DIVISION OF ENGINEERING SERVICES
ELECTRICAL-MECHANICAL-WATER AND WASTEWATER DESIGN

BRIDGE NO. 54-1216J
POST MILE 177.3/181.1

MOUNTAIN PASS JPOE
CVEF — INSPECTION PIT SUPPLY FAN

SHEET M8-3.4

TAEMWW Imperial Rev. 7/10
FILE => m8_3_4.dgn
DATE PLOTTED => 27-FEB-2013 TIME PLOTTED => 07:41
ORIGINAL SCALE IN INCHES FOR REDUCED PLANS 0 1 2 3
UNIT 3615
PROJECT NUMBER & PHASE 08000006281
EA 368501
DISREGARD PRINTS BEARING EARLIER REVISION DATES
REVISION DATES (PRELIMINARY STAGE ONLY) 08-11-10 11-30-12
SHEET OF

USERNAME => s124936 DATE PLOTTED => 27-FEB-2013 TIME PLOTTED => 07:41
V|=|

DIST.	COUNTY	ROUTE	POST MILES TOTAL PROJECT	SHEET NO.	TOTAL SHEETS
08	SBd	15	177.3/181.1	598	710

REGISTERED MECHANICAL ENGINEER — 11-30-12 DATE

REGISTERED PROFESSIONAL ENGINEER C. BYLINSKI No. M20878 Exp. 06-30-13 MECH STATE OF CALIFORNIA

2-25-13
PLANS APPROVAL DATE

The State of California or its officers or agents shall not be responsible for the accuracy or completeness of scanned copies of this plan sheet.

CALIFORNIA STATE FIRE MARSHAL APPROVED
Approval of this plan does not authorize or approve any omission or deviation from applicable regulations. Final approval is subject to field inspection. One set of approved plans shall be available on the project site at all times.
Reviewed by: G. ANDERSEN
Approval date: 01-20-2011

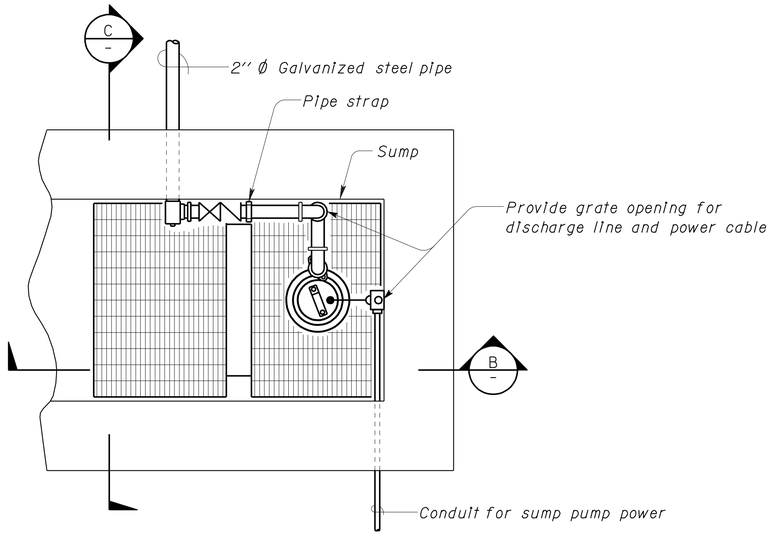

PLAN

Notes:

1. Sump Pump shall be 1/3 HP, 25 gpm pumping rate, at 15'-0" total head, 115 V, 60 Hz and 1750 RPM motor speed.

Materials:

Screen - 3 mesh 0.26 opening
0.072 Dia. Wire Steel
Frame - 0.135 thick steel

Tack weld screen to frame at 2" ± centers.

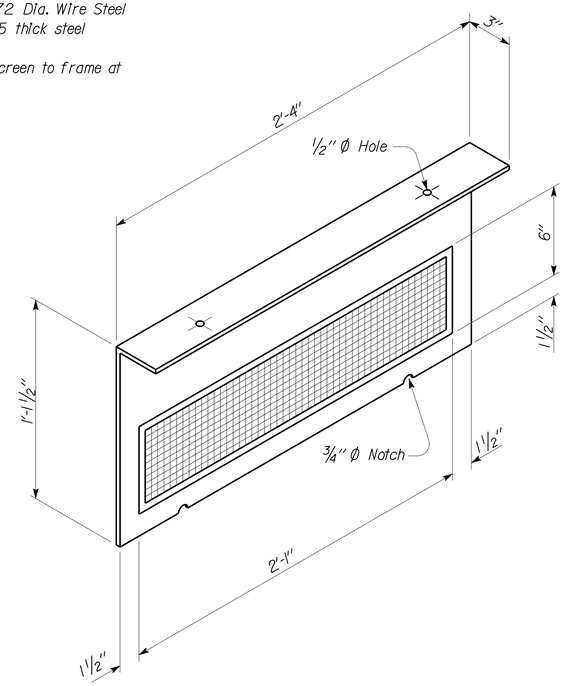

D TRASH SCREEN DETAIL

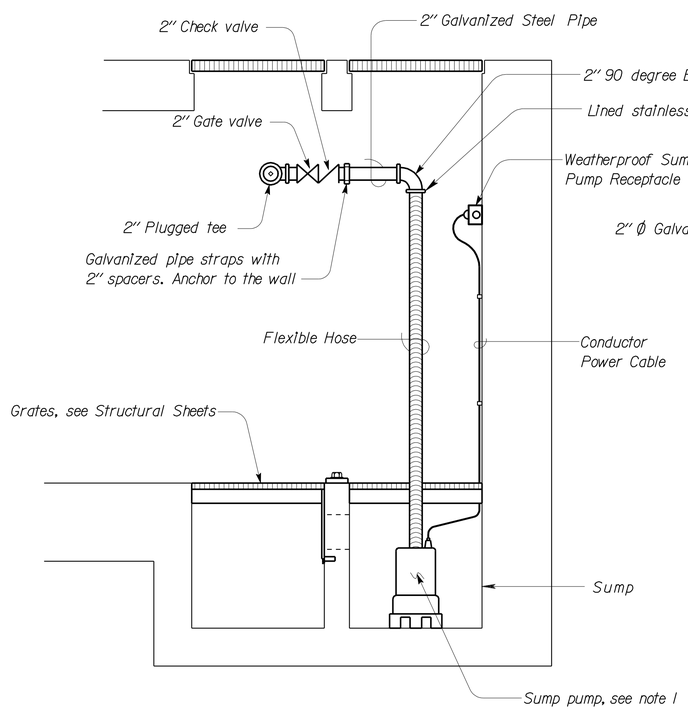

B SECTION

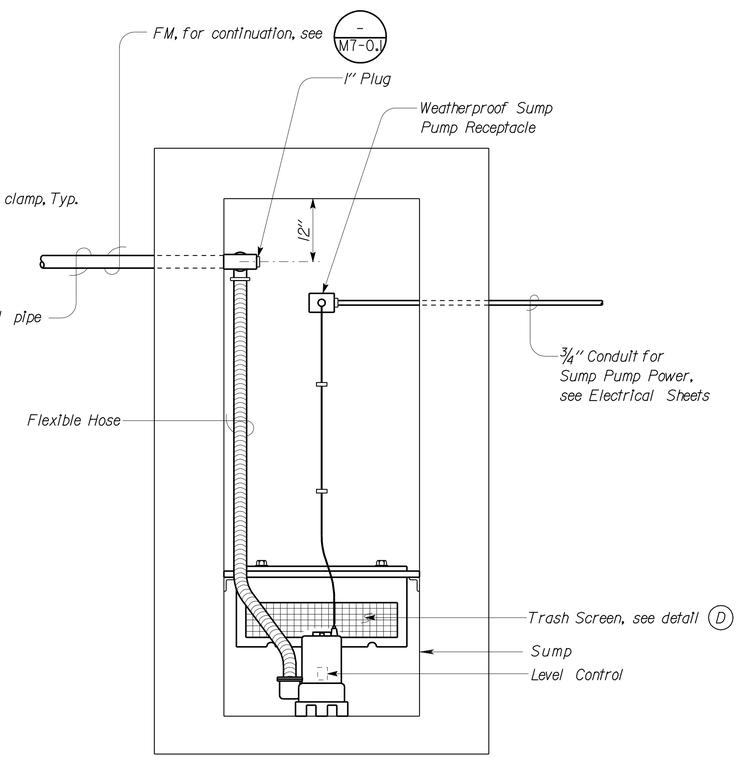

C SECTION

N O T E S :

1. Pipe, pipe fittings, bolts and nuts shall be galvanized
2. All fastener to concrete shall be expansion anchorage devices with hex nuts and flat washer.
3. The contractor shall verify all controlling dimensions in the field before ordering or fabricating any material.
4. See Structural Sheets for plans and detail of structural items.

THIS DRAWING ACCURATE FOR MECHANICAL WORK ONLY

DESIGN	BY Claude Bylinski	CHECKED Seve Gutierrez	
DETAILS	BY Kerry Geoffroy	CHECKED Claude Bylinski	
QUANTITIES	BY Claude Bylinski	CHECKED Seve Gutierrez	

STATE OF CALIFORNIA DEPARTMENT OF TRANSPORTATION

DIVISION OF ENGINEERING SERVICES
ELECTRICAL-MECHANICAL-WATER AND WASTEWATER DESIGN

BRIDGE NO. 54-1216J
POST MILE 177.3/181.1

MOUNTAIN PASS JPOE
CVEF — STATIC SCALE SUMP PUMP DETAILS

SHEET **M8-3.5**

TAEMWW Imperial Rev. 7/10
FILE => m8_3_5.dgn
DATE PLOTTED => 27-FEB-2013 TIME PLOTTED => 07:41
ORIGINAL SCALE IN INCHES FOR REDUCED PLANS 0 1 2 3
UNIT 3615
PROJECT NUMBER & PHASE 08000006281
EA 368501
DISREGARD PRINTS BEARING EARLIER REVISION DATES 06-11-10 11-30-12
REVISION DATES (PRELIMINARY STAGE ONLY) SHEET OF

USERNAME => s124496 DATE PLOTTED => 27-FEB-2013 TIME PLOTTED => 07:41

V|=|

DIST.	COUNTY	ROUTE	POST MILES TOTAL PROJECT	SHEET NO.	TOTAL SHEETS
08	SBd	15	177.3/181.1	599	710

REGISTERED MECHANICAL ENGINEER — 11-30-12 DATE

REGISTERED PROFESSIONAL ENGINEER C. BYLINSKI No. M20878 Exp. 06-30-13 MECH STATE OF CALIFORNIA

2-25-13
PLANS APPROVAL DATE

The State of California or its officers or agents shall not be responsible for the accuracy or completeness of scanned copies of this plan sheet.

CALIFORNIA STATE FIRE MARSHAL APPROVED
Approval of this plan does not authorize or approve any omission or deviation from applicable regulations. Final approval is subject to field inspection. One set of approved plans shall be available on the project site at all times.
Reviewed by: G. ANDERSEN
Approval date: 01-20-2011

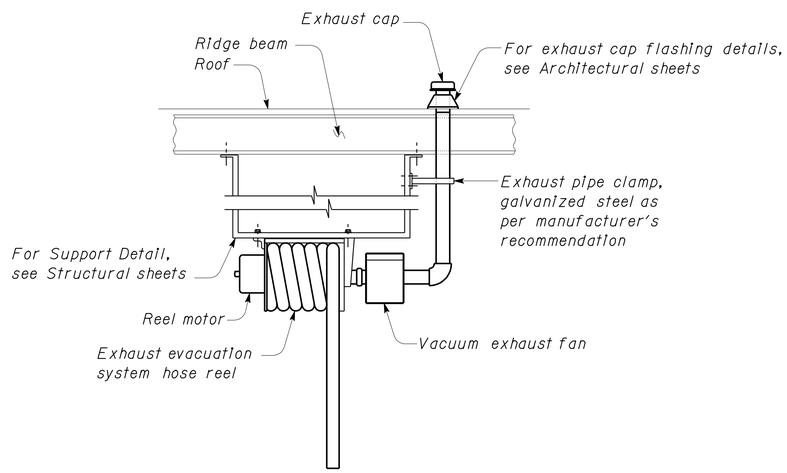

17 EXHAUST EVACUATION HOSE REEL AND FAN ELEVATION

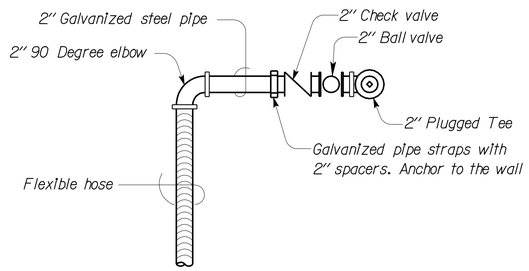

18 DETAIL

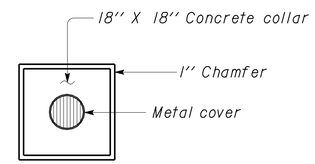

PLAN

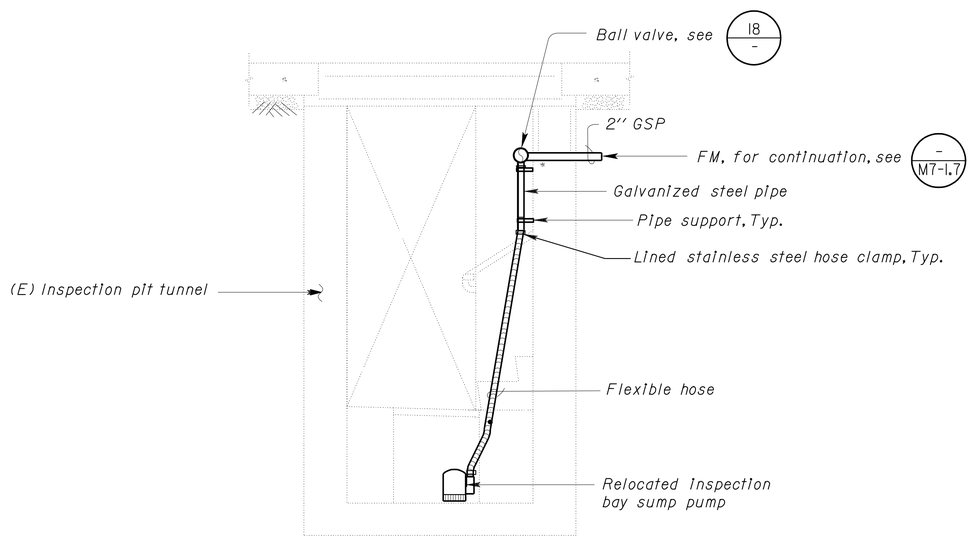

19 INSPECTION BAY SUMP PUMP DRAINAGE DETAIL

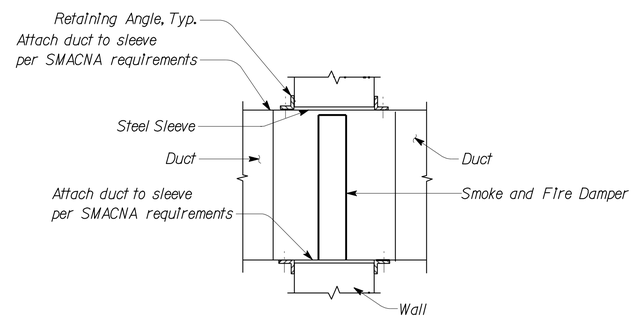

24 SMOKE/FIRE DAMPER DETAIL

Notes:

Fire damper and smoke damper details are for reference only.

Fire dampers and smoke dampers shall have an approved label or listing mark indicating the fire-protection rating, which is permanently affixed at the factory where fabrication and assembly are done. (2007 CBC 716.3)

Fire dampers and smoke dampers shall be State Fire Marshal approved and installed strictly per the manufacturer's printed instructions. (2007 CBC 716.2)

Manufacturer's installation instructions shall be made available to the inspecting authorities.

Access points shall be permanently identified on the exterior by a label with letters not less than ½ inch in height reading: "SMOKE DAMPER or FIRE DAMPER" (2007 CMC 606.5 and 2007 CBC 716.4)

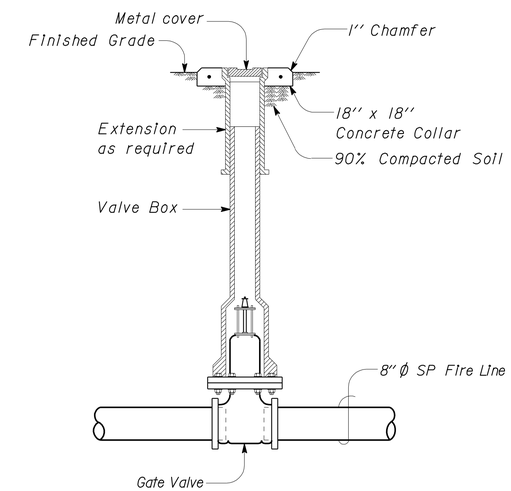

SECTION

VALVE BOX DETAIL AND PLAN

THIS DRAWING ACCURATE FOR MECHANICAL WORK ONLY

No Scale

DESIGN	BY Claude Bylinski	CHECKED Seve Gutierrez	
DETAILS	BY Kerry Geoffroy	CHECKED Claude Bylinski	
QUANTITIES	BY Claude Bylinski	CHECKED Seve Gutierrez	

STATE OF CALIFORNIA DEPARTMENT OF TRANSPORTATION

DIVISION OF ENGINEERING SERVICES
ELECTRICAL-MECHANICAL-WATER AND WASTEWATER DESIGN

UNIT 3615
PROJECT NUMBER & PHASE 08000006281
EA 368501

BRIDGE NO. 54-1216J
POST MILE 177.3/181.1

CVEF

MOUNTAIN PASS JPOE

MECHANICAL DETAILS NO. 3

SHEET **M8-3.6**

TAEMWW Imperial Rev. 7/10
FILE => m8_3_6.dgn
DATE PLOTTED => 27-FEB-2013 TIME PLOTTED => 07:41

ORIGINAL SCALE IN INCHES FOR REDUCED PLANS 0 1 2 3

DISREGARD PRINTS BEARING EARLIER REVISION DATES → 08-11-10 11-30-12

REVISION DATES (PRELIMINARY STAGE ONLY) SHEET OF

USERNAME => s124496 DATE PLOTTED => 27-FEB-2013 TIME PLOTTED => 07:41

V|=|

DIST.	COUNTY	ROUTE	POST MILES TOTAL PROJECT	SHEET NO.	TOTAL SHEETS
08	SBd	15	177.3/181.1	600	710

Claude Bylinski 11-30-12
REGISTERED MECHANICAL ENGINEER DATE

REGISTERED PROFESSIONAL ENGINEER C. BYLINSKI No. M20878 Exp. 06-30-13 MECH STATE OF CALIFORNIA

2-25-13
PLANS APPROVAL DATE

The State of California or its officers or agents shall not be responsible for the accuracy or completeness of scanned copies of this plan sheet.

CALIFORNIA STATE FIRE MARSHAL APPROVED
Approval of this plan does not authorize or approve any omission or deviation from applicable regulations. Final approval is subject to field inspection. One set of approved plans shall be available on the project site at all times.
Reviewed by: G. ANDERSEN
Approval date: 01-20-2011

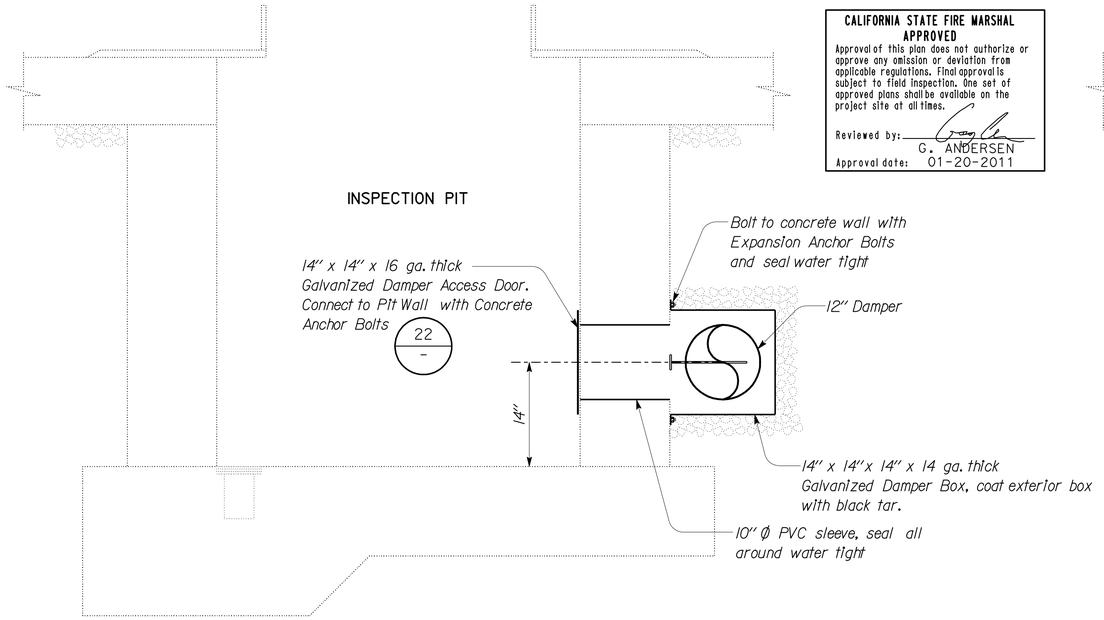

SECTION

20 BALANCE DAMPER

Note:
See Structural Plans for Structural Work

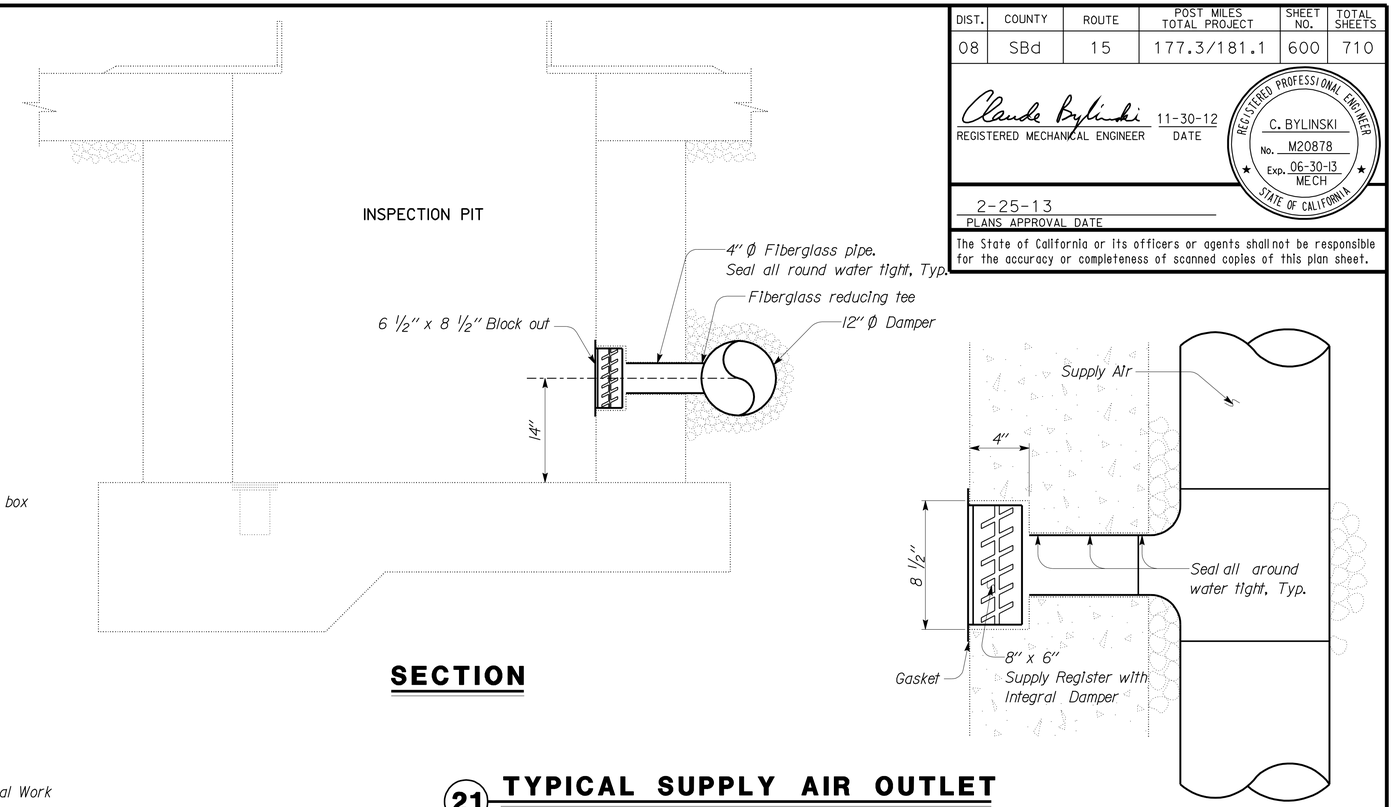

SECTION

PLAN

21 TYPICAL SUPPLY AIR OUTLET

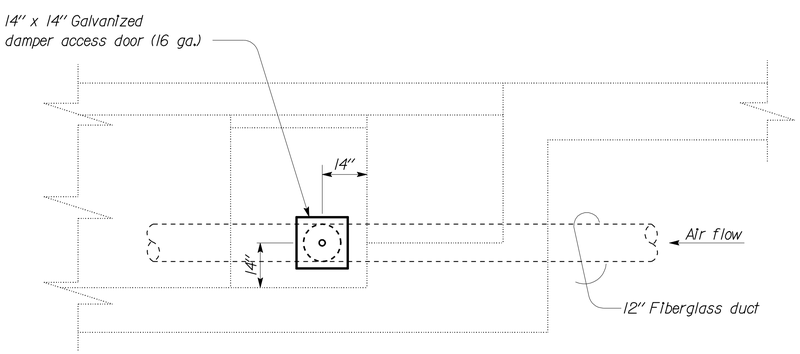

ELEVATION

22 BALANCE DAMPER ACCESS DOOR

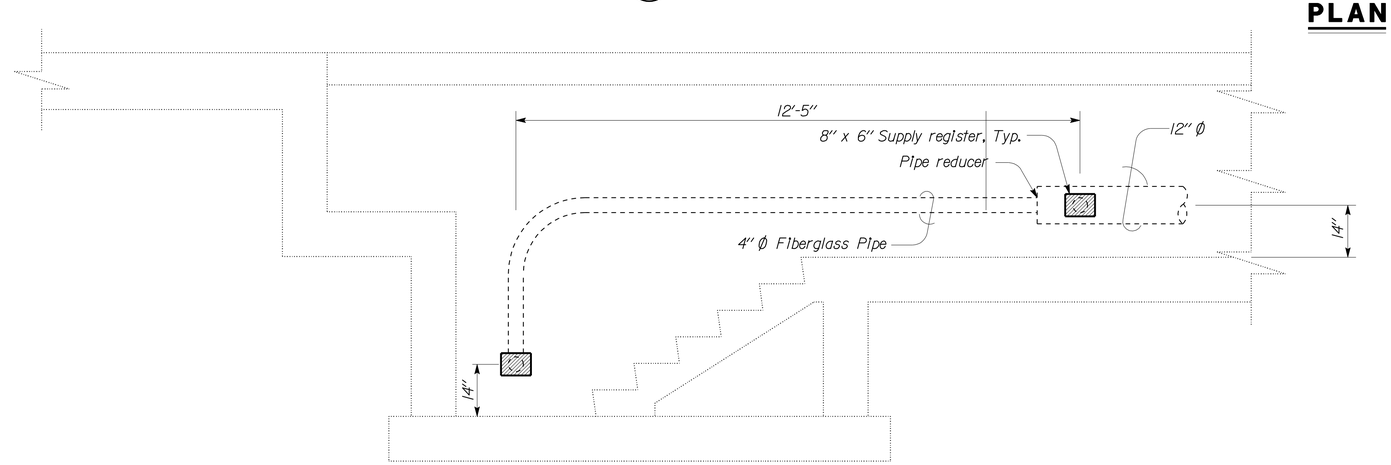

ELEVATION

23 SUPPLY AIR AT STAIR

THIS DRAWING ACCURATE FOR MECHANICAL WORK ONLY

No Scale

DESIGN	BY Claude Bylinski	CHECKED Seve Gutierrez	
DETAILS	BY Kerry Geoffroy	CHECKED Claude Bylinski	
QUANTITIES	BY Claude Bylinski	CHECKED Seve Gutierrez	

STATE OF CALIFORNIA DEPARTMENT OF TRANSPORTATION

DIVISION OF ENGINEERING SERVICES
ELECTRICAL-MECHANICAL-WATER AND WASTEWATER DESIGN

BRIDGE NO. 54-1216J
POST MILE 177.3/181.1

MOUNTAIN PASS JPOE
CVEF — INSPECTION PIT SUPPLY AIR SYSTEM

SHEET M8-3.7

TAEMWW Imperial Rev. 7/10
FILE => m8_3_7.dgn
DATE PLOTTED => 27-FEB-2013 TIME PLOTTED => 08:18
ORIGINAL SCALE IN INCHES FOR REDUCED PLANS 0 1 2 3
UNIT 3615
PROJECT NUMBER & PHASE 08000006281
EA 368501
DISREGARD PRINTS BEARING EARLIER REVISION DATES
REVISION DATES (PRELIMINARY STAGE ONLY) 08-11-10 11-30-12
SHEET OF

USERNAME => s109858 DATE PLOTTED => 27-FEB-2013 TIME PLOTTED => 08:18

V1=1