Dist	COUNTY	ROUTE	POST MILES TOTAL PROJECT	SHEET No.	TOTAL SHEETS
08	SBd	15	42.5/46.0	201	824

REGISTERED CIVIL ENGINEER 1-30-14 DATE

6-23-14
PLANS APPROVAL DATE

REGISTERED PROFESSIONAL ENGINEER HA VU No. C61359 Exp. 6-30-15 CIVIL STATE OF CALIFORNIA

THE STATE OF CALIFORNIA OR ITS OFFICERS OR AGENTS SHALL NOT BE RESPONSIBLE FOR THE ACCURACY OR COMPLETENESS OF SCANNED COPIES OF THIS PLAN SHEET.

NOTE:

1. REINFORCING STEEL BAR SIZES, SPACING, PATTERN AND COVER OVER THE STEEL SHALL BE THAT OF RCB SECTION.

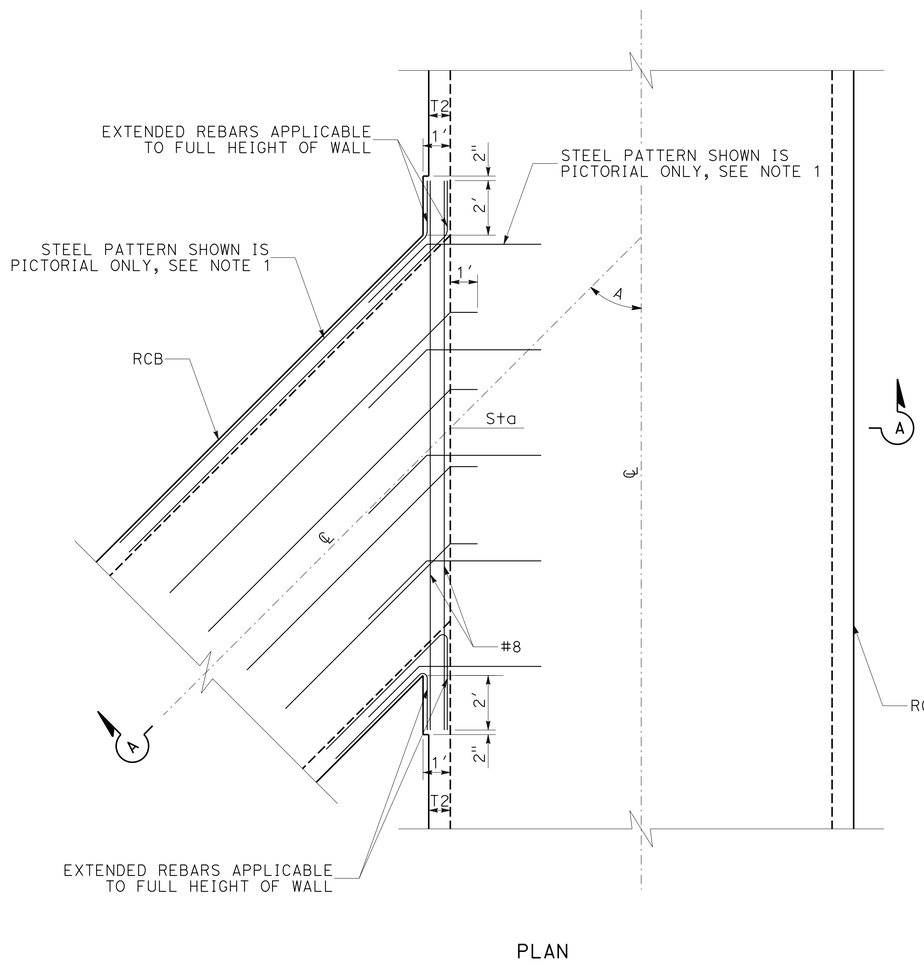

PLAN

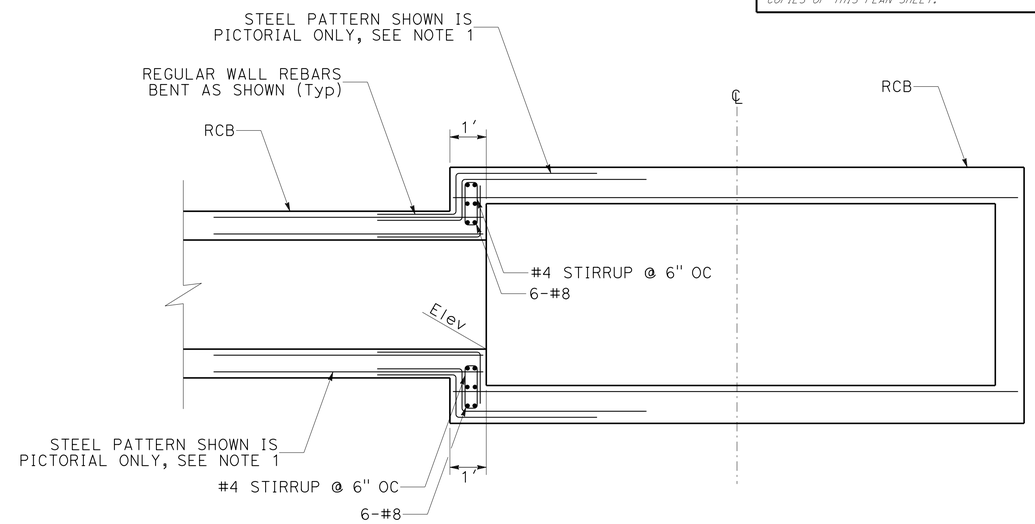

SECTION A-A (CASE 1)

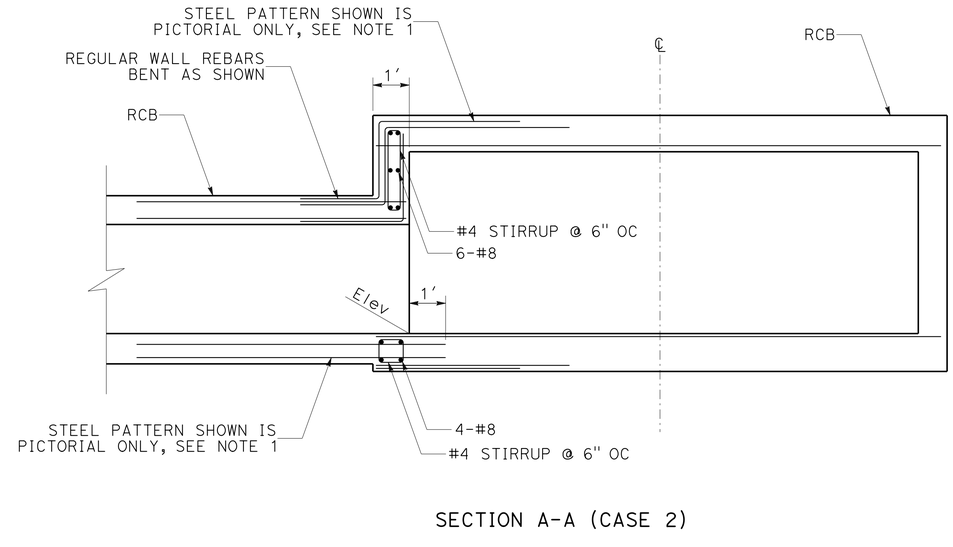

SECTION A-A (CASE 2)

JUNCTION STRUCTURE - RCB TO RCB

DRAINAGE DETAILS

NO SCALE

DD-11

STATE OF CALIFORNIA - DEPARTMENT OF TRANSPORTATION
Caltrans® DESIGN
FUNCTIONAL SUPERVISOR: GEORGE MORHIG
CALCULATED-DESIGNED BY: HA VU
CHECKED BY
REVISED BY: VU TRAN
DATE REVISED

LAST REVISION 01-30-14
DATE PLOTTED => 30-JUN-2014
TIME PLOTTED => 05:28

Dist	COUNTY	ROUTE	POST MILES TOTAL PROJECT	SHEET No.	TOTAL SHEETS
08	SBd	15	42.5/46.0	202	824

REGISTERED CIVIL ENGINEER 1-30-14 DATE

6-23-14
PLANS APPROVAL DATE

REGISTERED PROFESSIONAL ENGINEER HA VU No. C61359 Exp. 6-30-15 CIVIL STATE OF CALIFORNIA

THE STATE OF CALIFORNIA OR ITS OFFICERS OR AGENTS SHALL NOT BE RESPONSIBLE FOR THE ACCURACY OR COMPLETENESS OF SCANNED COPIES OF THIS PLAN SHEET.

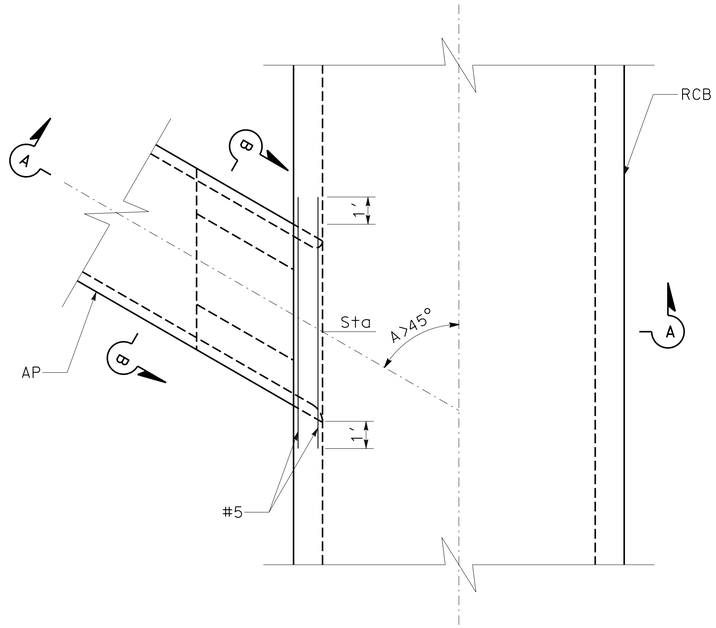

PLAN

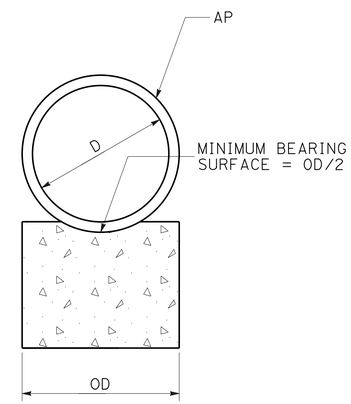

SECTION B-B

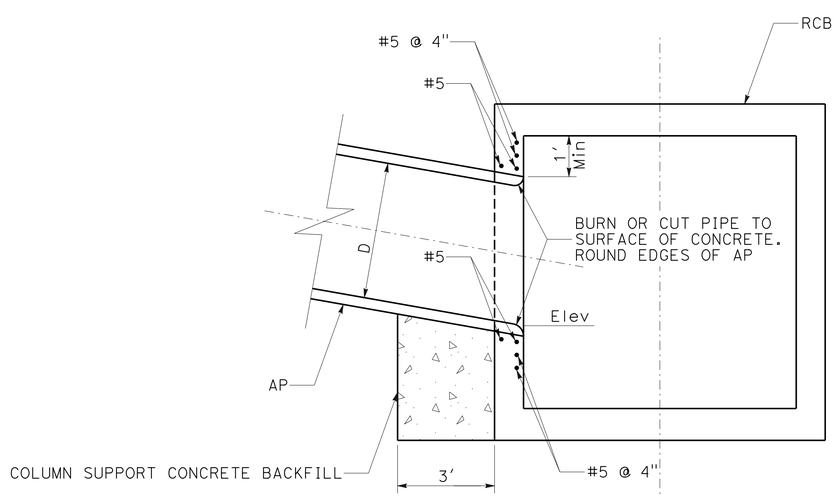

SECTION A-A

JUNCTION STRUCTURE - PIPE TO RCB (PIPE <= 30")

DRAINAGE DETAILS

NO SCALE

DD-12

STATE OF CALIFORNIA - DEPARTMENT OF TRANSPORTATION
Caltrans DESIGN

FUNCTIONAL SUPERVISOR: GEORGE MORHIG

CALCULATED-DESIGNED BY: VU TRAN
CHECKED BY: HA VU

REVISED BY | DATE REVISED

LAST REVISION 01-30-14 | DATE PLOTTED => 30-JUN-2014 | TIME PLOTTED => 05:28

Dist	COUNTY	ROUTE	POST MILES TOTAL PROJECT	SHEET No.	TOTAL SHEETS
08	SBd	15	42.5/46.0	203	824

REGISTERED CIVIL ENGINEER 1-30-14 DATE

6-23-14
PLANS APPROVAL DATE

REGISTERED PROFESSIONAL ENGINEER HA VU No. C61359 Exp. 6-30-15 CIVIL STATE OF CALIFORNIA

THE STATE OF CALIFORNIA OR ITS OFFICERS OR AGENTS SHALL NOT BE RESPONSIBLE FOR THE ACCURACY OR COMPLETENESS OF SCANNED COPIES OF THIS PLAN SHEET.

NOTES:

1. VALUES FOR A, B AND C SHALL BE SHOWN ON THE PROJECT DRAWINGS.
2. ALL STEEL SHALL TERMINATE 1½" CLEAR OF CONCRETE SURFACE UNLESS OTHERWISE SHOWN.
   a. W BARS ARE OF SIZE AND SPACING SPECIFIED FOR WALL STEEL ON PROJECT DRAWINGS, AND SHALL BE CUT IN CENTER OF OPENING AND BENT INTO TOP AND BOTTOM OF JUNCTION STRUCTURE.
   b. OMIT H BARS WHEN SOFFIT OF SPUR IS 12" OR LESS BELOW SOFFIT OF MAIN LINE, AND OMIT G BARS WHEN INVERT OF SPUR IS 12" OR LESS ABOVE FLOOR OF MAIN LINE.
3. JUNCTION STRUCTURE SHALL BE POURED MONOLITHICALLY WITH MAIN LINE, MANHOLE OR TRANSITION STRUCTURE.
4. FLOOR OF STRUCTURE SHALL BE STEEL-TROWELED TO THE SPRING LINE.
5. EMBEDMENT, P, SHALL BE 5" FOR B=96" OR LESS AND 8" FOR B GRATER THAN 96".
6. THE NEED FOR AN EDGE BEAM AND/OR ADDITIONAL REINFORCEMENT SHALL BE INVESTIGATED BY THE ENGINEER FOR ANY ONE OF THE FOLLOWING CONDITION:
   a. ANGLE A IS LESS THAN 30°
   b. TOP OF INLET PIPE IS LESS THAN 6" BELOW THE SOFFIT
   c. FLOW LINE OF INLET PIPE IS LESS THAN 7" ABOVE THE THE FLOOR OF THE RCB AT THE INSIDE FACE.

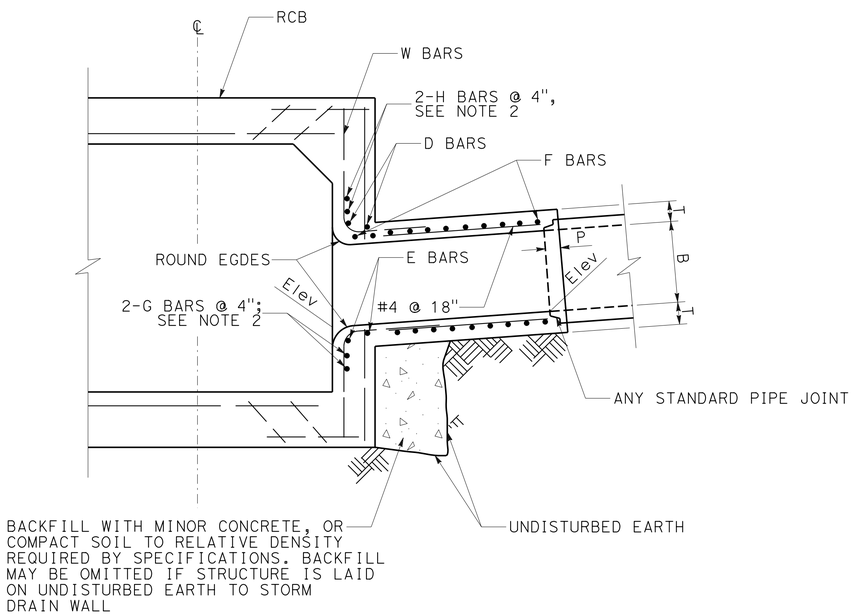

SECTION A-A

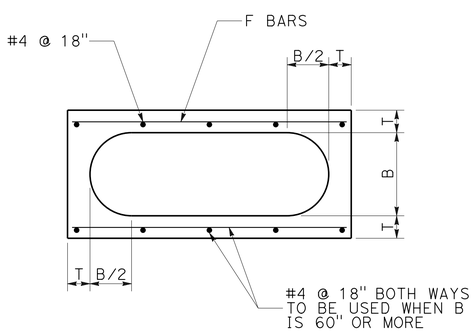

SECTION B-B

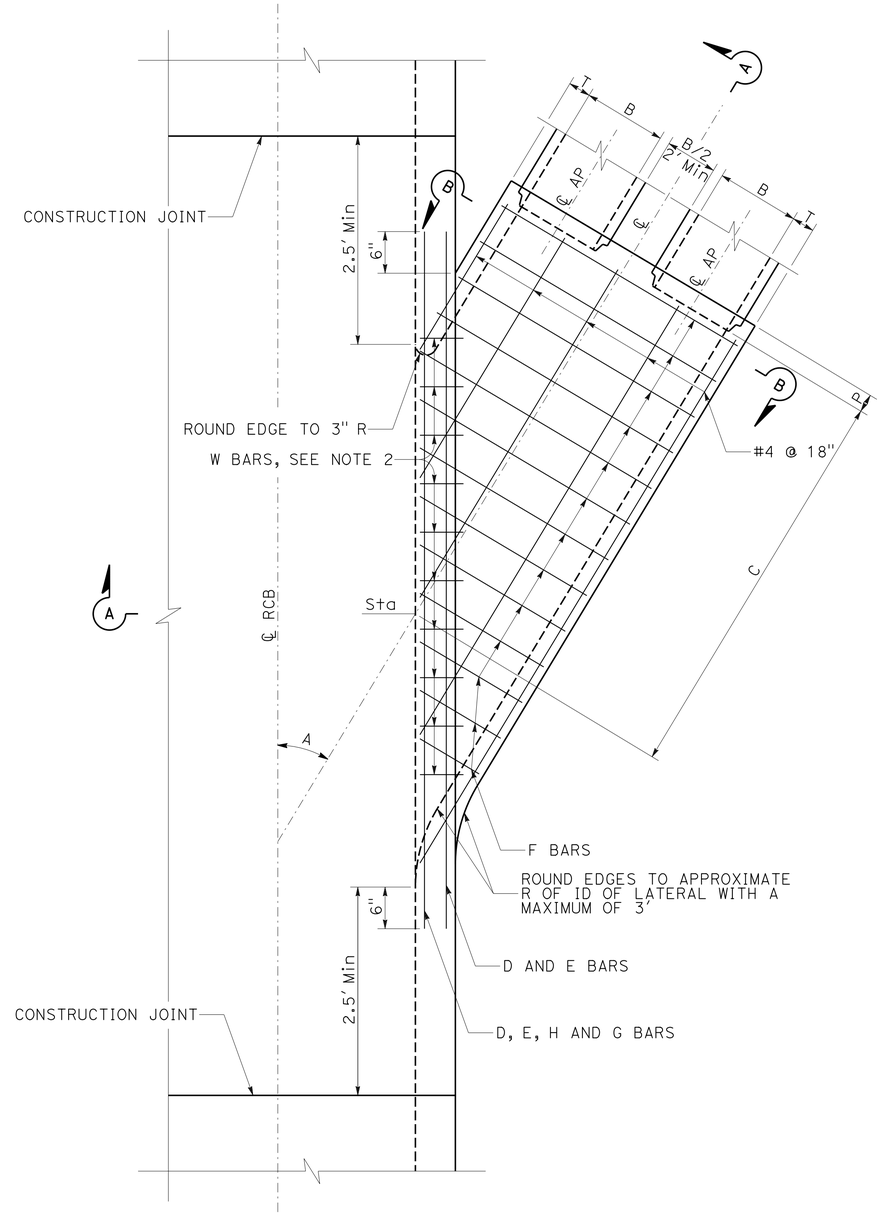

PLAN

B	T	D, E, H & G BARS	F BARS
12"	5"	#5	#4 @ 6" OC
15"	5"		
18"	5"		
21"	5"		
24"	5¼"		
27"	5½"		
30"	6"		
33"	6¼"		
36"	6½"		
39"	7"		
42"	7½"		
45"	7¾"		
48"	8"	#6	#5 @ 6" OC
51"	8½"		
54"	9"		
57"	9¼"		
60"	9½"		
63"	10"		
66"	10¼"		
69"	10¾"		
72"	11"		
78"	11¾"		
84"	12½"		
90"	13¼"	#7	#5 @ 6" OC
96"	14"		
102"	15½"		
108"	16"		
114"	16½"		
120"	17"		
126"	17"		
132"	17½"		

DRAINAGE DETAILS

NO SCALE

JUNCTION STRUCTURE - DOUBLE PIPES TO RCB

DD-13

STATE OF CALIFORNIA - DEPARTMENT OF TRANSPORTATION
Caltrans® DESIGN

FUNCTIONAL SUPERVISOR: GEORGE MORHIG
CALCULATED-DESIGNED BY: VU TRAN
CHECKED BY: HA VU
REVISED BY
DATE REVISED

LAST REVISION 01-30-14 | DATE PLOTTED => 30-JUN-2014 | TIME PLOTTED => 05:28

Dist	COUNTY	ROUTE	POST MILES TOTAL PROJECT	SHEET No.	TOTAL SHEETS
08	SBd	15	42.5/46.0	204	824

REGISTERED CIVIL ENGINEER 1-30-14 DATE

6-23-14
PLANS APPROVAL DATE

REGISTERED PROFESSIONAL ENGINEER HA VU No. C61359 Exp. 6-30-15 CIVIL STATE OF CALIFORNIA

THE STATE OF CALIFORNIA OR ITS OFFICERS OR AGENTS SHALL NOT BE RESPONSIBLE FOR THE ACCURACY OR COMPLETENESS OF SCANNED COPIES OF THIS PLAN SHEET.

NOTES:

1. ALL STEEL SHALL TERMINATE 1½" CLEAR OF CONCRETE SURFACE UNLESS OTHERWISE SHOWN.
2. LONGITUDINAL STEEL SHALL BE EXTENDED 1′ INTO ADJACENT RCB (SIDES AND BOTTOM).
3. DOWELS SHALL BE PROVIDED TO SIDES AND BOTTOM OF EXISTING CONCRETE CHANNEL.
4. 3" WEEPHOLES SHALL BE PROVIDED EVERY 10′ AS SHOWN ON THIS PLAN.
5. f'_c = 4000 PSI AT 28 DAYS AND THE CONCRETE SHALL BE THE SAME MIX AS THE ADJACENT RCB.
6. EXPANSION JIONTS, TRANSVERSELY SHALL BE PROVIDED EVERY 20′.

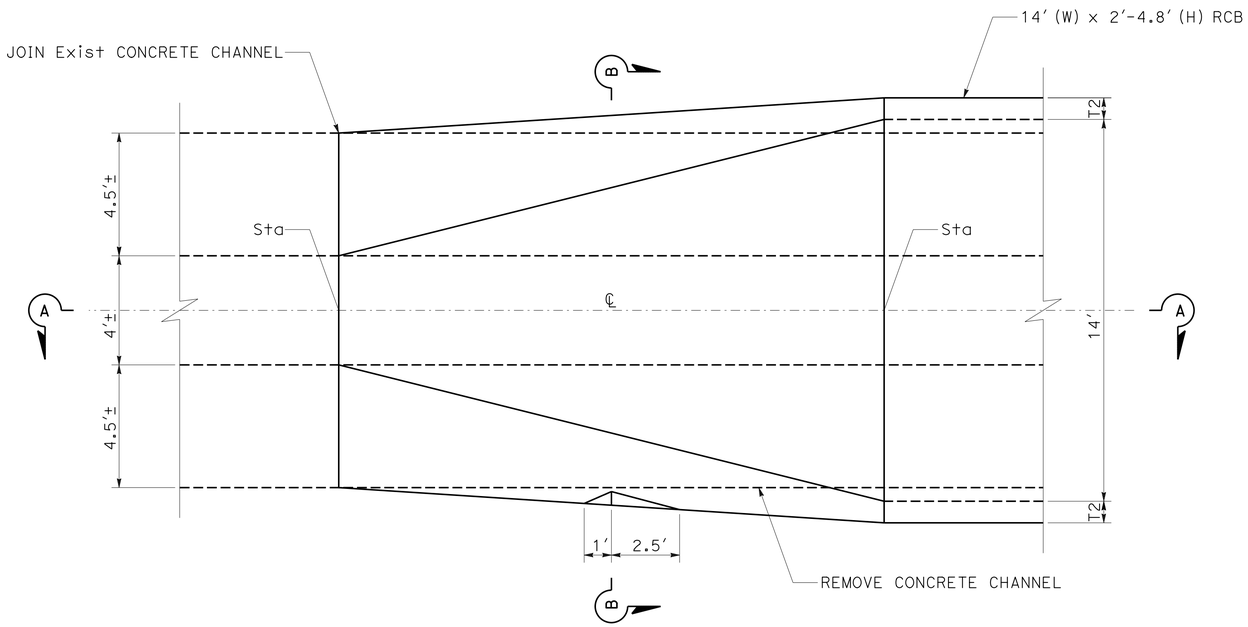

PLAN

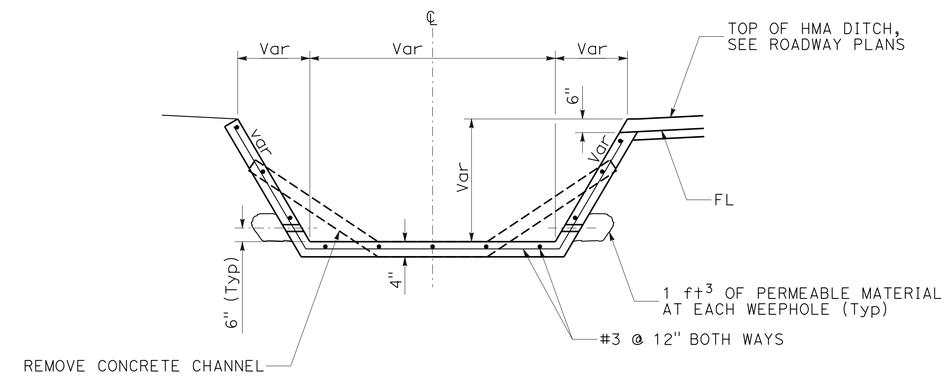

SECTION B-B

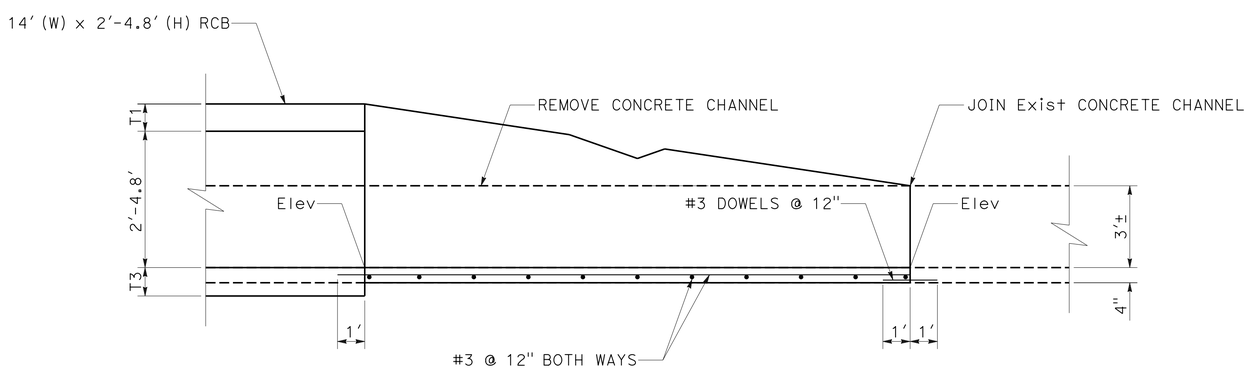

SECTION A-A

TRANSITION STRUCTURE - CHANNEL TO RCB 30 b e

DRAINAGE DETAILS

NO SCALE

DD-14

STATE OF CALIFORNIA - DEPARTMENT OF TRANSPORTATION
Caltrans® **DESIGN**

FUNCTIONAL SUPERVISOR: GEORGE MORHIG

CALCULATED-DESIGNED BY: HA VU
CHECKED BY: VU TRAN
REVISED BY
DATE REVISED

LAST REVISION 01-30-14
DATE PLOTTED => 30-JUN-2014
TIME PLOTTED => 05:28

Dist	COUNTY	ROUTE	POST MILES TOTAL PROJECT	SHEET No.	TOTAL SHEETS
08	SBd	15	42.5/46.0	205	824

REGISTERED CIVIL ENGINEER 1-30-14 DATE

6-23-14
PLANS APPROVAL DATE

REGISTERED PROFESSIONAL ENGINEER HA VU No. C61359 Exp. 6-30-15 CIVIL STATE OF CALIFORNIA

THE STATE OF CALIFORNIA OR ITS OFFICERS OR AGENTS SHALL NOT BE RESPONSIBLE FOR THE ACCURACY OR COMPLETENESS OF SCANNED COPIES OF THIS PLAN SHEET.

NOTE:

1. CROSS SECTION OF SLOPE DITCH MAY BE SEMICIRCULAR, VEE OR TRAPEZOIDAL.

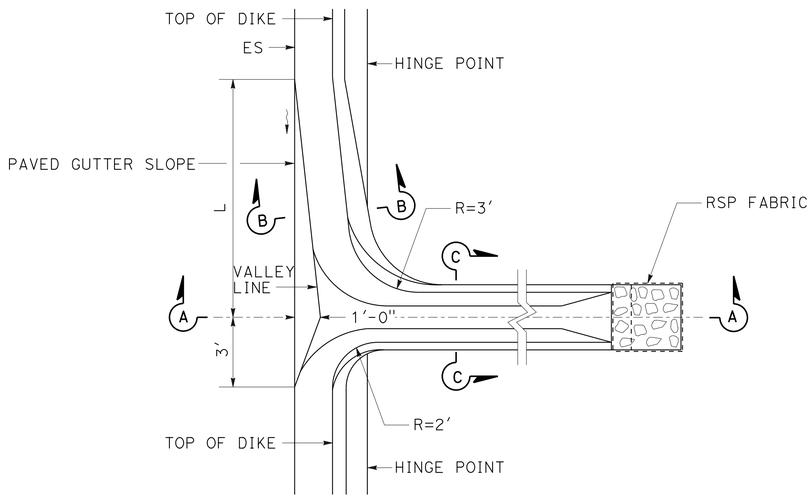

PLAN

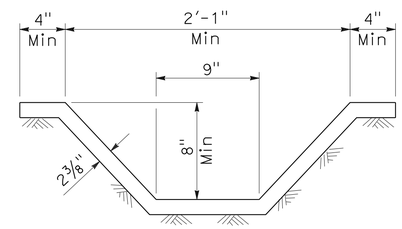

SECTION C-C

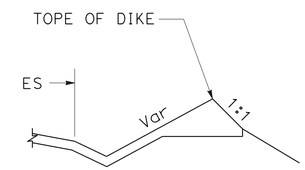

SECTION B-B

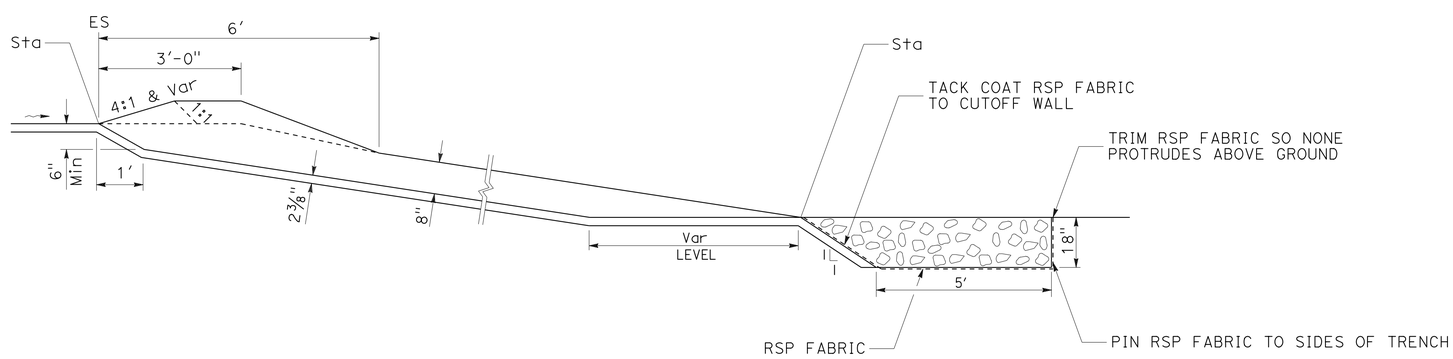

SECTION A-A

HMA OVERSIDE DRAIN

DRAINAGE DETAILS

NO SCALE

DD-15

STATE OF CALIFORNIA - DEPARTMENT OF TRANSPORTATION

Caltrans® **DESIGN**

FUNCTIONAL SUPERVISOR: GEORGE MORHIG

CALCULATED-DESIGNED BY: VU TRAN | CHECKED BY: HA VU | REVISED BY | DATE REVISED

LAST REVISION 01-30-14 | DATE PLOTTED => 30-JUN-2014 | TIME PLOTTED => 05:28

Dist	COUNTY	ROUTE	POST MILES TOTAL PROJECT	SHEET No.	TOTAL SHEETS
08	SBd	15	42.5/46.0	206	824

REGISTERED CIVIL ENGINEER 1-30-14 DATE

6-23-14
PLANS APPROVAL DATE

REGISTERED PROFESSIONAL ENGINEER HA VU No. C61359 Exp. 6-30-15 CIVIL STATE OF CALIFORNIA

THE STATE OF CALIFORNIA OR ITS OFFICERS OR AGENTS SHALL NOT BE RESPONSIBLE FOR THE ACCURACY OR COMPLETENESS OF SCANNED COPIES OF THIS PLAN SHEET.

NOTES:

1. FOR AFES DIMENSIONS, SEE STANDARD PLANS D94A AND D94B.
2. SQUARED-OFF EXCAVATION NOT REQUIRED.

LEGEND

D - DIAMETER OF PIPE
W - GRATEST OUTSIDE WIDTH OF FLARED END SECTION
L - LENGHT OF FLARED END SECTION

CLASS OF RSP	Z (TRENCH DEPTH)
FACING	1.5′
LIGHT	2.0′

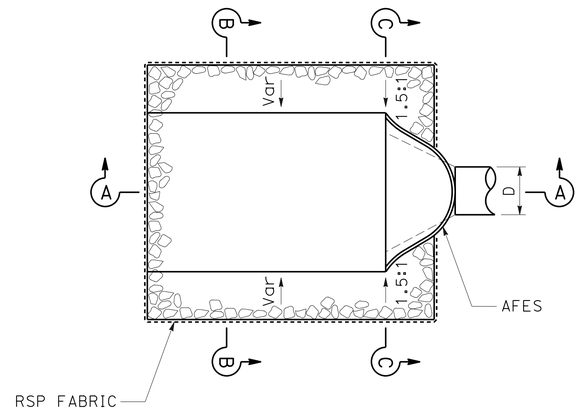

PLAN

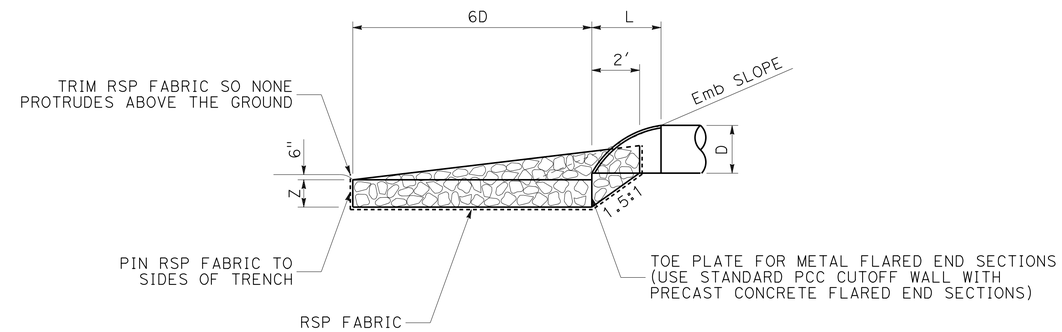

SECTION A-A

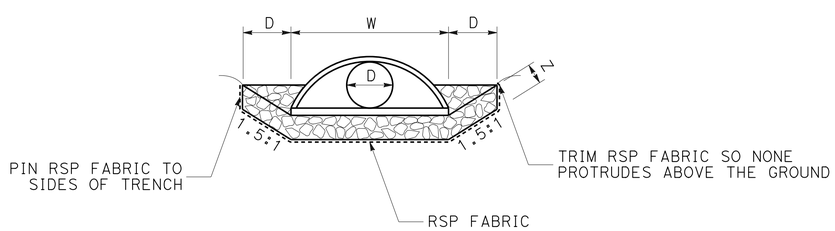

SECTION C-C

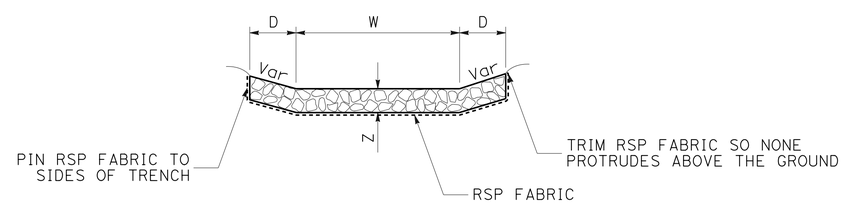

SECTION B-B

ROCK SLOPE PROTECTION FOR FLARED END SECTIONS

DRAINAGE DETAILS
NO SCALE
DD-16

STATE OF CALIFORNIA - DEPARTMENT OF TRANSPORTATION
Caltrans® **DESIGN**
FUNCTIONAL SUPERVISOR: GEORGE MORHIG
CALCULATED-DESIGNED BY: VU TRAN
CHECKED BY: HA VU
REVISED BY
DATE REVISED

LAST REVISION 01-30-14
DATE PLOTTED => 30-JUN-2014
TIME PLOTTED => 05:28

Dist	COUNTY	ROUTE	POST MILES TOTAL PROJECT	SHEET No.	TOTAL SHEETS
08	SBd	15	42.5/46.0	207	824

REGISTERED CIVIL ENGINEER 1-30-14 DATE

6-23-14
PLANS APPROVAL DATE

REGISTERED PROFESSIONAL ENGINEER HA VU No. C61359 Exp. 6-30-15 CIVIL STATE OF CALIFORNIA

THE STATE OF CALIFORNIA OR ITS OFFICERS OR AGENTS SHALL NOT BE RESPONSIBLE FOR THE ACCURACY OR COMPLETENESS OF SCANNED COPIES OF THIS PLAN SHEET.

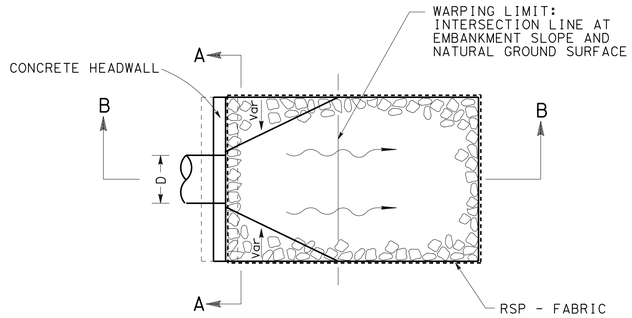

PLAN VIEW

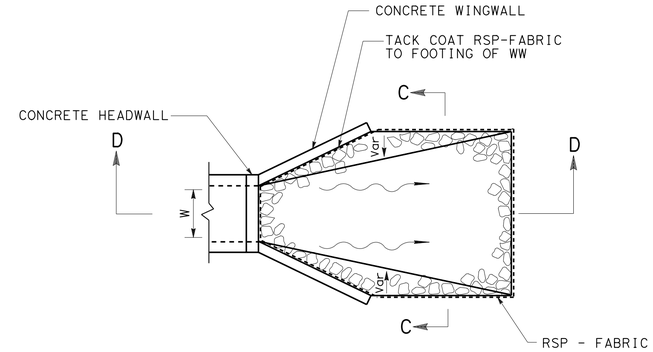

PLAN VIEW

CLASS OF RSP	Z (TRENCH DEPTH)
FACING	1.5′
LIGHT	2.0′
1/4 T	3.0′

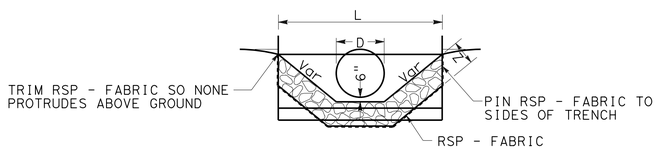

SECTION A-A

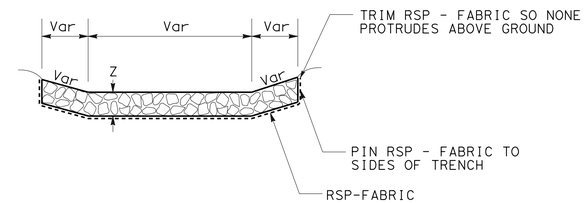

SECTION C-C

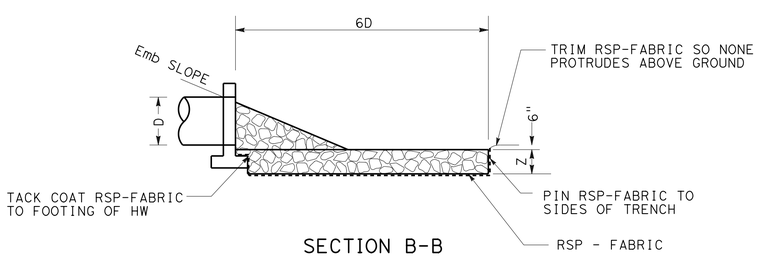

SECTION B-B

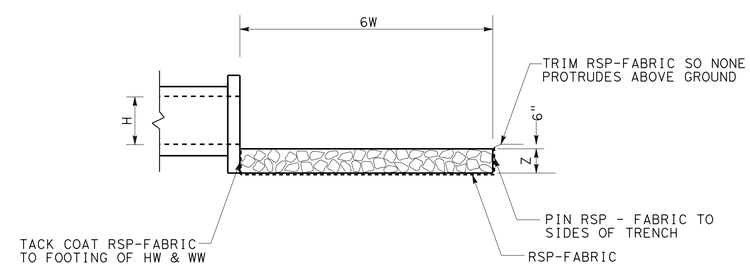

SECTION D-D

ROCK SLOPE PROTECTION AT PIPE OUTLETS

ROCK SLOPE PROTECTION AT RCB OUTLETS

DRAINAGE DETAILS

NO SCALE

DD-17

STATE OF CALIFORNIA - DEPARTMENT OF TRANSPORTATION
Caltrans® DESIGN
FUNCTIONAL SUPERVISOR: GEORGE MORHIG
CALCULATED-DESIGNED BY: VU TRAN
CHECKED BY: HA VU
REVISED BY
DATE REVISED

LAST REVISION 01-30-14
DATE PLOTTED => 30-JUN-2014
TIME PLOTTED => 05:28

Dist	COUNTY	ROUTE	POST MILES TOTAL PROJECT	SHEET No.	TOTAL SHEETS
08	SBd	15	42.5/46.0	208	824

REGISTERED CIVIL ENGINEER 1-30-14 DATE

6-23-14
PLANS APPROVAL DATE

REGISTERED PROFESSIONAL ENGINEER HA VU No. C61359 Exp. 6-30-15 CIVIL STATE OF CALIFORNIA

THE STATE OF CALIFORNIA OR ITS OFFICERS OR AGENTS SHALL NOT BE RESPONSIBLE FOR THE ACCURACY OR COMPLETENESS OF SCANNED COPIES OF THIS PLAN SHEET.

NOTES:

1. ALL WIRE REINFORCING STEEL SHALL HAVE 1 INCH CLEAR COVER.
2. FOR DETAILS NOT SHOWN, SEE STANDARD PLAN D83A AND D83B.

MINIMUM WELDED WIRE FABRIC (in^2/ft)	"a"	"b"	"c"	"d"	"e"
	1.211	0.954	0.288	0.288	0.288

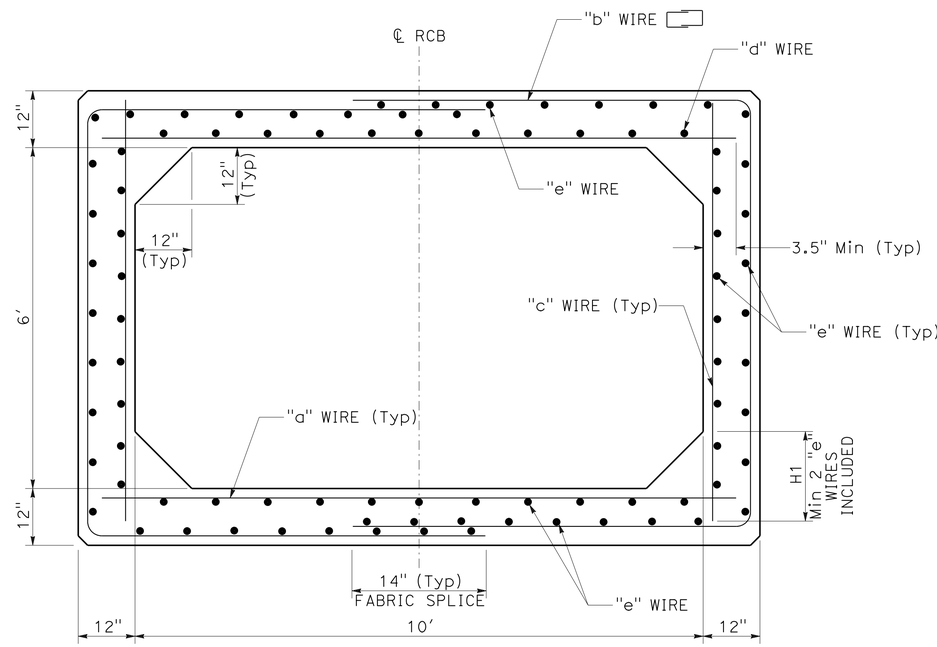

PRECAST REINFORCED CONCRETE BOX CULVERT 91 b

DRAINAGE DETAILS

NO SCALE

DD-18

STATE OF CALIFORNIA - DEPARTMENT OF TRANSPORTATION
Caltrans® DESIGN

FUNCTIONAL SUPERVISOR: GEORGE MORHIG
CALCULATED-DESIGNED BY: HA VU
CHECKED BY: VU TRAN
REVISED BY
DATE REVISED

LAST REVISION 01-30-14 | DATE PLOTTED => 30-JUN-2014 | TIME PLOTTED => 05:28

Dist	COUNTY	ROUTE	POST MILES TOTAL PROJECT	SHEET No.	TOTAL SHEETS
08	SBd	15	42.5/46.0	209	824

REGISTERED CIVIL ENGINEER 1-30-14 DATE

6-23-14
PLANS APPROVAL DATE

REGISTERED PROFESSIONAL ENGINEER HA VU No. C61359 Exp. 6-30-15 CIVIL STATE OF CALIFORNIA

THE STATE OF CALIFORNIA OR ITS OFFICERS OR AGENTS SHALL NOT BE RESPONSIBLE FOR THE ACCURACY OR COMPLETENESS OF SCANNED COPIES OF THIS PLAN SHEET.

ALTERNATIVE PIPE CULVERTS
ALLOWABLE PIPE MATERIAL AND PROTECTION

DESIGNATION	PP (SMOOTH INTERIOR WALL)	RCP	CSP			DESIGNATION	PP (SMOOTH INTERIOR WALL)	RCP	CSP		
	SIZE	SIZE	SIZE	THICK	Bit Ctd		SIZE	SIZE	SIZE	THICK	Bit Ctd
18" AP	18"	18"	18"	0.064"	YES	42" AP	42"	42"	42"	0.064"	YES
24" AP	24"	24"	24"	0.064"	YES	48" AP	48"	48"	48"	0.064"	YES
30" AP	30"	30"	30"	0.064"	YES	60" AP	60"	60"	60"	0.079"	YES
36" AP	36"	36"	36"	0.079"	YES	72" AP	72"	72"	72"	0.079"	YES

DRAINAGE PLAN SHEET No.	DRAINAGE SYSTEM No. ⬡	DRAINAGE UNIT No. ◯	STATION	DESCRIPTION	ABANDON CULVERT (LF)	SAND BACKFILL	REMOVE CONCRETE (CHANNEL)	REMOVE HEADWALL	REMOVE CULVERT (LF)	REMOVE GRATED LINE DRAIN	REMOVE INLET	ABANDON INLET	FRAME, GRATE, CHECKERED PLATE, AND MH (N): TYPE 24-12	TYPE 24-12X	TYPE 36R	1/4" CHECKERED PL COVER	MANHOLE	Misc IRON AND STEEL	MINOR Conc (MINOR STRUCTURE)	MINOR Conc (Misc Const)	HOT MIX ASPHALT (TYPE A)	PLACE HMA (Misc AREA)	CAP INLET	CONCRETE COLLAR (N)	12" ELBOW (N)	18" ELBOW (N)	10' x 6' PRECAST REINFORCED CONCRETE BOX CULVERT	STRUCTURAL Conc, BOX Culv	STRUCTURAL Conc, HEADWALL	BAR REINFORCING STEEL	CABLE RAILING	GRATED LINE DRAIN	AFES 18"	AFES 30"	RSP FABRIC (CLASS 8)	RSP (METHOD B) FACING	RSP (METHOD B) LIGHT	RSP (METHOD B) 1/4T
					LF	CY	LF	EA	LF	LF	EA	EA	EA	EA	EA	EA	EA	LB	CY	CY	TON	SQYD	EA	EA	EA	EA	LF	CY	CY	LB	LF	LF	EA	EA	SQYD	CY	CY	CY
D-1	1	a	68.7′ R+ "A" 123+98.50	REMOVE INLET							1																											
		b	71.3′ R+ "A" 123+98.50	G1 INLET									1					326	0.99																			
		c	71.3′ R+ "A" 123+98.50	18" RCP																																		
		d	65.0′ R+ "A" 123+98.50	CONCRETE COLLAR*																			1															
D-2	2	a	105.7′ R+ "A" 127+34.61	REMOVE INLET							1																											
		b	105.7′ R+ "A" 127+34.61	REMOVE 12" CMP					34.2																													
		c	70.2′ R+ "A" 127+38.41	REMOVE HW				1																														
D-2,3	3	a	2.3′ L+ "A" 137+96.00	REMOVE GLD						277.0																												
		b	1.5′ L+ "A" 140+73.00	REMOVE 18" CMP					5.5																													
		c	1.5′ L+ "A" 138+00.00	MOD G1 INLET*									2					634	2.20																			
		d	1.5′ L+ "A" 138+00.00	24" APC																																		
		e	1.5′ L+ "A" 139+70.00	MOD G1 INLET*									2					634	2.20																			
		f	1.5′ L+ "A" 139+70.00	24" APC																																		
		g	2.3′ L+ "A" 140+75.50	GLD																												70.0						
		h	1.5′ L+ "A" 140+73.00	24" APC																																		
		i	2.3′ L+ "A" 141+55.00	GLD																												56.0						
		j	1.5′ L+ "A" 141+50.00	18" APC																																		
		k	1.5′ L+ "A" 142+15.00	G1 INLET									1					326	1.57																			
D-3	4	a	102.4′ R+ "A" 139+76.00	REMOVE 36" CMP					66.3																													
		b	56.9′ R+ "A" 140+23.39	ABANDON INLET								1																										
		c	56.9′ R+ "A" 140+23.39	ABANDON 30" CMP	173.2	31.5																																
		d	3.8′ L+ "D3" 141+45.00	REMOVE 30" CMP					37.5																													
D-3,4,7	5	a	33.8′ L+ "D3" 140+09.06	REMOVE HW				1																														
		b	33.8′ L+ "D3" 140+09.06	REMOVE 48" CMP					162.9																													
		c	31.2′ L+ "D3" 141+73.13	REMOVE INLET							1																											
		d	31.2′ L+ "D3" 141+73.13	ABANDON 48" CMP	2253.8	1049.0																																
		e	119.0′ L+ "A" 157+99.88	REMOVE INLET							1																											
		f	109.7′ L+ "D4" 160+13.20	ABANDON INLET								1																										
		g	77.3′ L+ "D4" 153+01.77	ABANDON INLET								1																										
		h	48.1′ L+ "D3" 164+55.08	REMOVE HW				1																														
				SHEET TOTAL	2427.0	1080.5		3	306.4	277.0	4	3	6					1920	6.96					1							126.0						

NOTES:
1. *: SEE DRAINAGE DETAIL SHEETS.
2. (N): NOT A SEPARATE PAY ITEM, FOR INFORMATION ONLY.
3. SUFFICIENT SPACE WAS NOT AVAILABLE TO LIST ALL DRAINAGE ITEMS WITHIN A SINGLE TABLE ON A SHEET BORDER, THEREFORE THE LISTING OF THE FIRST GROUPING OF DRAINAGE ITEMS ARE REPEATED ON THE ODD NUMBERED ID CODE SHEETS (DQ-1, DQ-3, ECT.) AND THE LISTING OF THE REMAINING GROUP OF DRAINAGE ITEMS ARE REPEATED ON THE EVEN NUMBERED ID CODE SHEETS (DQ-2, DQ-4, ETC.).

DRAINAGE QUANTITIES
DQ-1

REVISED BY | DATE REVISED
VU TRAN | HA VU
CALCULATED-DESIGNED BY | CHECKED BY
FUNCTIONAL SUPERVISOR: GEORGE MORHIG
STATE OF CALIFORNIA - DEPARTMENT OF TRANSPORTATION
Caltrans DESIGN

LAST REVISION 01-30-14 | DATE PLOTTED => 30-JUN-2014 | TIME PLOTTED => 05:29

Dist	COUNTY	ROUTE	POST MILES TOTAL PROJECT	SHEET No.	TOTAL SHEETS
08	SBd	15	42.5/46.0	210	824

REGISTERED CIVIL ENGINEER 1-30-14 DATE

6-23-14
PLANS APPROVAL DATE

REGISTERED PROFESSIONAL ENGINEER HA VU No. C61359 Exp. 6-30-15 CIVIL STATE OF CALIFORNIA

THE STATE OF CALIFORNIA OR ITS OFFICERS OR AGENTS SHALL NOT BE RESPONSIBLE FOR THE ACCURACY OR COMPLETENESS OF SCANNED COPIES OF THIS PLAN SHEET.

APC 18" LF	APC 24" LF	APC 30" LF	APC 36" LF	APC 42" LF	APC 48" LF	APC 60" LF	APC 72" LF	APL 24" LF	APL 30" LF	APL 36" LF	APL 42" LF	APL 48" LF	APL 60" LF	APC (JACKED) 42" LF	APC (JACKED) 48" LF	APC (JACKED) 60" LF	CSP (0.064" THICK) 12" LF	CSP (0.064" THICK) 18" LF	CSP (0.064" THICK) 24" LF	CSP (0.079" THICK) 36" LF	RCP 18" LF	RCP 24" LF	RCP 30" LF	RCP 36" LF	12" CSP RISER (0.064" THICK) LF	36" CSP INLET (0.079" THICK) LF	36" PRECAST Conc PIPE INLET LF	36" PRECAST Conc PIPE MH LF	JOINT CLASSIFICATION (N)	MAXIMUN COVER (N) FT	HEIGHT OF INLET (N) FT	DESCRIPTION	STATION	DRAINAGE UNIT No. ◯	DRAINAGE SYSTEM No. ⬡	DRAINAGE PLAN SHEET No.
																																REMOVE INLET	68.7′ R+ "A" 123+98.50	a	1	D-1
																															3.2	G1 INLET	71.3′ R+ "A" 123+98.50	b		
																					4.3								S	2.1		18" RCP	71.3′ R+ "A" 123+98.50	c		
																																CONCRETE COLLAR*	65.0′ R+ "A" 123+98.50	d		
																																REMOVE INLET	105.7′ R+ "A" 127+34.61	a	2	D-2
																																REMOVE 12" CMP	105.7′ R+ "A" 127+34.61	b		
																																REMOVE HW	70.2′ R+ "A" 127+38.41	c		
																																REMOVE GLD	2.3′ L+ "A" 137+96.00	a	3	D-2,3
																																REMOVE 18" CMP	1.5′ L+ "A" 140+73.00	b		
																															5.0	MOD G1 INLET*	1.5′ L+ "A" 138+00.00	c		
	167.3																												S	3.0		24" APC	1.5′ L+ "A" 138+00.00	d		
																															5.0	MOD G1 INLET*	1.5′ L+ "A" 139+70.00	e		
	100.1																												S	3.0		24" APC	1.5′ L+ "A" 139+70.00	f		
																																GLD	2.3′ L+ "A" 140+75.50	g		
	73.9																												P	7.6		24" APC	1.5′ L+ "A" 140+73.00	h		
																																GLD	2.3′ L+ "A" 141+55.00	i		
61.5																													S	8.1		18" APC	1.5′ L+ "A" 141+50.00	j		
																															5.8	G1 INLET	1.5′ L+ "A" 142+15.00	k		
																																REMOVE 36" CMP	102.4′ R+ "A" 139+76.00	a	4	D-3
																																ABANDON INLET	56.9′ R+ "A" 140+23.39	b		
																																ABANDON 30" CMP	56.9′ R+ "A" 140+23.39	c		
																																REMOVE 30" CMP	3.8′ L+ "D3" 141+45.00	d		
																																REMOVE HW	33.8′ L+ "D3" 140+09.06	a	5	D-3,4,7
																																REMOVE 48" CMP	33.8′ L+ "D3" 140+09.06	b		
																																REMOVE INLET	31.2′ L+ "D3" 141+73.13	c		
																																ABANDON 48" CMP	31.2′ L+ "D3" 141+73.13	d		
																																REMOVE INLET	119.0′ L+ "A" 157+99.88	e		
																																ABANDON INLET	109.7′ L+ "D4" 160+13.20	f		
																																ABANDON INLET	77.3′ L+ "D4" 153+01.77	g		
																																REMOVE HW	48.1′ L+ "D3" 164+55.08	h		
61.5	341.3																				4.3											SHEET TOTAL				

NOTES:

1. *: SEE DRAINAGE DETAIL SHEETS.
2. (N): NOT A SEPARATE PAY ITEM, FOR INFORMATION ONLY.

DRAINAGE QUANTITIES
DQ-2

REVISED BY | DATE REVISED

VU TRAN | HA VU

CALCULATED-DESIGNED BY | CHECKED BY

FUNCTIONAL SUPERVISOR: GEORGE MORHIG

STATE OF CALIFORNIA - DEPARTMENT OF TRANSPORTATION

Caltrans DESIGN

LAST REVISION 01-30-14 | DATE PLOTTED => 30-JUN-2014 | TIME PLOTTED => 05:29

Dist	COUNTY	ROUTE	POST MILES TOTAL PROJECT	SHEET No.	TOTAL SHEETS
08	SBd	15	42.5/46.0	211	824

REGISTERED CIVIL ENGINEER 1-30-14 DATE

6-23-14
PLANS APPROVAL DATE

REGISTERED PROFESSIONAL ENGINEER HA VU No. C61359 Exp. 6-30-15 CIVIL STATE OF CALIFORNIA

THE STATE OF CALIFORNIA OR ITS OFFICERS OR AGENTS SHALL NOT BE RESPONSIBLE FOR THE ACCURACY OR COMPLETENESS OF SCANNED COPIES OF THIS PLAN SHEET.

DRAINAGE PLAN SHEET No.	DRAINAGE SYSTEM No. ⬡	DRAINAGE UNIT No. ◯	STATION	DESCRIPTION	ABANDON CULVERT (LF)	SAND BACKFILL	REMOVE CONCRETE (CHANNEL)	REMOVE HEADWALL	REMOVE CULVERT (LF)	REMOVE GRATED LINE DRAIN	REMOVE INLET	ABANDON INLET	FRAME, GRATE, CHECKERED PLATE, AND MH (N): TYPE 24-12	TYPE 24-12X	TYPE 36R	1/4" CHECKERED PL COVER	MANHOLE	Misc IRON AND STEEL	MINOR Conc (MINOR STRUCTURE)	MINOR Conc (Misc Const)	HOT MIX ASPHALT (TYPE A)	PLACE HMA (Misc AREA)	CAP INLET	CONCRETE COLLAR (N)	12" ELBOW (N)	18" ELBOW (N)	10'x6' PRECAST REINFORCED CONCRETE BOX CULVERT	STRUCTURAL Conc, BOX Culv	STRUCTURAL Conc, HEADWALL	BAR REINFORCING STEEL	CABLE RAILING	GRATED LINE DRAIN	AFES: 18"	AFES: 30"	RSP: FABRIC (CLASS 8)	RSP (METHOD B): FACING	RSP (METHOD B): LIGHT	RSP (METHOD B): 1/4T
					LF	CY	LF	EA	LF	LF	EA	EA	EA	EA	EA	EA	EA	LB	CY	CY	TON	SQYD	EA	EA	EA	EA	LF	CY	CY	LB	LF	LF	EA	EA	SQYD	CY	CY	CY
D-3,4,7	6	a	102.4' R+ "A" 139+76.00	GMP INLET*																																		
		b	102.4' R+ "A" 139+76.00	36" APC																																		
		c	76.3' R+ "A" 140+25.00	MOD G1 INLET*									2					634	2.50																			
		d	76.3' R+ "A" 140+25.00	42" APC																																		
		e	29.3' R+ "A" 141+50.00	42" APC (JACKED)																																		
		f	1.5' L+ "A" 141+50.00	G2 INLET									1					326	4.08																			
		g	1.5' L+ "A" 141+50.00	48" APC (JACKED)																																		
		h	6.5' L+ "D3" 141+50.13	48" APC																																		
		i	65.5' L+ "D3" 142+20.00	GMP INLET W/HMA APRON*											1			236			0.5	4.5																
		j	62.4' L+ "D3" 149+26.38	JS, MH*													1	435	14.18																			
		k	62.4' L+ "D3" 149+26.38	60" APC																																		
		l	57.3' L+ "D3" 150+50.00	GMP INLET W/HMA APRON*											1			236			0.5	4.5																
		m	54.7' L+ "D3" 158+14.83	GMP INLET W/HMA APRON, JS*											1			236	10.25		0.5	4.5																
		n	54.7' L+ "D3" 158+14.83	72" APC																																		
		o	52.5' L+ "D3" 160+76.83	JS, MH*													1	435	11.80																			
		p	52.5' L+ "D3" 160+76.83	72" APC																																		
		q	54.0' L+ "D3" 162+58.00	GMP INLET W/HMA APRON*											1			236	0.40		0.5	4.5																
				12" CSP RISER (0.064" THICK)																																		
		r	54.0' L+ "D3" 165+85.00	TS*															19.31																			
		s	54.0' L+ "D3" 166+05.00	10' (W) x 3' (H) RCB																							229.8		56012									
D-3	7	a	37.4' R+ "D1" 143+25.00	HMA OSD, L=45'*																	1.5	23.4																
		b	59.4' R+ "D1" 143+46.00	RSP (FACING, METHOD B)*																														4.6	0.9		
D-3	8	a	54.1' L+ "D3" 148+60.53	REMOVE HW				1																														
		b	54.1' L+ "D3" 148+60.53	ABANDON 36" CMP	60.2	15.8																																
D-3	9	a	85.8' L+ "D3" 148+97.00	HW AND CABLE RAILING																								2.75	160	15.0								
		b	85.8' L+ "D3" 148+97.00	48" APC																																		
D-3-5	10	a	8.6' L+ "D1" 149+43.66	REMOVE INLET							1																											
		b	8.6' L+ "D1" 149+43.66	REMOVE 24" CMP					83.3																													
		c	54.1' R+ "A" 150+13.25	ABANDON 24" CMP	163.9	19.1																																
		d	13.3' L+ "D3" 150+44.64	ABANDON 18" CMP	37.1	2.4																																
		e	53.6' L+ "D3" 150+47.36	REMOVE INLET							1																											
SHEET TOTAL					261.2	37.3		1	83.3		2		3		4		2	2774	62.52		3.5	41.4					229.8	2.75	56172	15.0				4.6	0.9		

NOTES:
1. *: SEE DRAINAGE DETAIL SHEETS.
2. (N): NOT A SEPARATE PAY ITEM, FOR INFORMATION ONLY.

DRAINAGE QUANTITIES
DQ-3

REVISED BY | DATE REVISED
VU TRAN | HA VU
CALCULATED-DESIGNED BY | CHECKED BY
FUNCTIONAL SUPERVISOR: GEORGE MORHIG
STATE OF CALIFORNIA - DEPARTMENT OF TRANSPORTATION
Caltrans DESIGN

LAST REVISION 01-30-14 | DATE PLOTTED => 30-JUN-2014 | TIME PLOTTED => 05:29

Dist	COUNTY	ROUTE	POST MILES TOTAL PROJECT	SHEET No.	TOTAL SHEETS
08	SBd	15	42.5/46.0	212	824

REGISTERED CIVIL ENGINEER 1-30-14 DATE

6-23-14
PLANS APPROVAL DATE

REGISTERED PROFESSIONAL ENGINEER HA VU No. C61359 Exp. 6-30-15 CIVIL STATE OF CALIFORNIA

THE STATE OF CALIFORNIA OR ITS OFFICERS OR AGENTS SHALL NOT BE RESPONSIBLE FOR THE ACCURACY OR COMPLETENESS OF SCANNED COPIES OF THIS PLAN SHEET.

APC 18" LF	APC 24" LF	APC 30" LF	APC 36" LF	APC 42" LF	APC 48" LF	APC 60" LF	APC 72" LF	APL 24" LF	APL 30" LF	APL 36" LF	APL 42" LF	APL 48" LF	APL 60" LF	APC (JACKED) 42" LF	APC (JACKED) 48" LF	APC (JACKED) 60" LF	CSP (0.064" THICK) 12" LF	CSP (0.064" THICK) 18" LF	CSP (0.064" THICK) 24" LF	CSP (0.079" THICK) 36" LF	RCP 18" LF	RCP 24" LF	RCP 30" LF	RCP 36" LF	12" CSP RISER (0.064" THICK) LF	36" CSP INLET (0.079" THICK) LF	36" PRECAST Conc PIPE INLET LF	36" PRECAST Conc PIPE MH LF	JOINT CLASSIFICATION (N)	MAXIMUN COVER (N) FT	HEIGHT OF INLET (N) FT	DESCRIPTION	STATION	DRAINAGE UNIT No.	DRAINAGE SYSTEM No.	DRAINAGE PLAN SHEET No.
																										29.4			D		28.9	GMP INLET*	102.4′ R+ "A" 139+76.00	a	6	D-3,4,7
			55.5																										D	25.9		36" APC	102.4′ R+ "A" 139+76.00	b		
																															6.0	MOD G1 INLET*	76.3′ R+ "A" 140+25.00	c		
				149.2																									P	3.4		42" APC	76.3′ R+ "A" 140+25.00	d		
														30.8															P	6.1		42" APC (JACKED)	29.3′ R+ "A" 141+50.00	e		
																															9.6	G2 INLET	1.5′ L+ "A" 141+50.00	f		
															69.2														P	8.2		48" APC (JACKED)	1.5′ L+ "A" 141+50.00	g		
					805.1																								P	9.7		48" APC	6.5′ L+ "D3" 141+50.13	h		
																										9.8			D		9.8	GMP INLET W/HMA APRON*	65.5′ L+ "D3" 142+20.00	i		
																												9.7				JS, MH*	62.4′ L+ "D3" 149+26.38	j		
						850.6																							P	20.0		60" APC	62.4′ L+ "D3" 149+26.38	k		
																										10.7			D		10.7	GMP INLET W/HMA APRON*	57.3′ L+ "D3" 150+50.00	l		
																										14.5					14.5	GMP INLET W/HMA APRON, JS*	54.7′ L+ "D3" 158+14.83	m		
							295.3																						P	20.0		72" APC	54.7′ L+ "D3" 158+14.83	n		
																												13.5				JS, MH*	52.5′ L+ "D3" 160+76.83	o		
							502.5																						P	13.5		72" APC	52.5′ L+ "D3" 160+76.83	p		
																										4.5			D		4.0	GMP INLET W/HMA APRON*	54.0′ L+ "D3" 162+58.00	q		
																									5.3				D			12" CSP RISER (0.064" THICK)				
																																TS*	54.0′ L+ "D3" 165+85.00	r		
																														4.0		10′ (W) x 3′ (H) RCB	54.0′ L+ "D3" 166+05.00	s		
																																HMA OSD, L=45′*	37.4′ R+ "D1" 143+25.00	a	7	D-3
																																RSP (FACING, METHOD B)*	59.4′ R+ "D1" 143+46.00	b		
																																REMOVE HW	54.1′ L+ "D3" 148+60.53	a	8	D-3
																																ABANDON 36" CMP	54.1′ L+ "D3" 148+60.53	b		
																																HW AND CABLE RAILING	85.8′ L+ "D3" 148+97.00	a	9	D-3
					32.9																								P	10.1		48" APC	85.8′ L+ "D3" 148+97.00	b		
																																REMOVE INLET	8.6′ L+ "D1" 149+43.66	a	10	D-3-5
																																REMOVE 24" CMP	8.6′ L+ "D1" 149+43.66	b		
																																ABANDON 24" CMP	54.1′ R+ "A" 150+13.25	c		
																																ABANDON 18" CMP	13.3′ L+ "D3" 150+44.64	d		
																																REMOVE INLET	53.6′ L+ "D3" 150+47.36	e		
			55.5	149.2	838.0	850.6	797.8							30.8	69.2										5.3	68.9		23.2				SHEET TOTAL				

NOTES:
1. *: SEE DRAINAGE DETAIL SHEETS.
2. (N): NOT A SEPARATE PAY ITEM, FOR INFORMATION ONLY.

DRAINAGE QUANTITIES
DQ-4

REVISED BY | DATE REVISED
VU TRAN | HA VU
CALCULATED-DESIGNED BY | CHECKED BY
FUNCTIONAL SUPERVISOR: GEORGE MORHIG
STATE OF CALIFORNIA - DEPARTMENT OF TRANSPORTATION
Caltrans DESIGN

LAST REVISION 01-30-14 | DATE PLOTTED => 30-JUN-2014 | TIME PLOTTED => 05:29

Dist	COUNTY	ROUTE	POST MILES TOTAL PROJECT	SHEET No.	TOTAL SHEETS
08	SBd	15	42.5/46.0	213	824

REGISTERED CIVIL ENGINEER 1-30-14 DATE

6-23-14
PLANS APPROVAL DATE

REGISTERED PROFESSIONAL ENGINEER HA VU No. C61359 Exp. 6-30-15 CIVIL STATE OF CALIFORNIA

THE STATE OF CALIFORNIA OR ITS OFFICERS OR AGENTS SHALL NOT BE RESPONSIBLE FOR THE ACCURACY OR COMPLETENESS OF SCANNED COPIES OF THIS PLAN SHEET.

DRAINAGE PLAN SHEET No.	DRAINAGE SYSTEM No. ⬡	DRAINAGE UNIT No. ◯	STATION	DESCRIPTION	ABANDON CULVERT (LF)	SAND BACKFILL	REMOVE CONCRETE (CHANNEL)	REMOVE HEADWALL	REMOVE CULVERT (LF)	REMOVE GRATED LINE DRAIN	REMOVE INLET	ABANDON INLET	FRAME, GRATE, CHECKERED PLATE, AND MH (N): TYPE 24-12	TYPE 24-12X	TYPE 36R	1/4" CHECKERED PL COVER	MANHOLE	Misc IRON AND STEEL	MINOR Conc (MINOR STRUCTURE)	MINOR Conc (Misc Const)	HOT MIX ASPHALT (TYPE A)	PLACE HMA (Misc AREA)	CAP INLET	CONCRETE COLLAR (N)	12" ELBOW (N)	18" ELBOW (N)	10'x6' PRECAST REINFORCED CONCRETE BOX CULVERT	STRUCTURAL Conc, BOX Culv	STRUCTURAL Conc, HEADWALL	BAR REINFORCING STEEL	CABLE RAILING	GRATED LINE DRAIN	AFES: 18"	AFES: 30"	RSP: FABRIC (CLASS 8)	RSP (METHOD B): FACING	RSP (METHOD B): LIGHT	RSP (METHOD B): 1/4T
					LF	CY	LF	EA	LF	LF	EA	EA	EA	EA	EA	EA	EA	LB	CY	CY	TON	SQYD	EA	EA	EA	EA	LF	CY	CY	LB	LF	LF	EA	EA	SQYD	CY	CY	CY
D-4	11	a	32.0' Lt "D3" 156+50.00	MOD G1 INLET*									2					634	2.05																			
		b	32.0' Lt "D3" 156+50.00	18" APC																																		
		c	31.2' Lt "D3" 156+64.00	GLD																												30.0						
		d	32.0' Lt "D3" 156+98.00	G1 INLET									1					326	1.48																			
		e	32.0' Lt "D3" 156+98.00	18" CSP (0.064" THICK)																																		
D-4-5	12	a	50.2' Rt "D1" 152+36.00	REMOVE 24" CMP					59.1																													
		b	50.2' Rt "D1" 152+36.00	CONCRETE COLLAR*																			1															
		c	50.2' Rt "D1" 152+36.00	24" CSP (0.064" THICK)																																		
		d	8.2' Lt "D1" 152+53.76	ABANDON INLET								1																										
		e	8.2' Lt "D1" 152+53.76	ABANDON 24" CMP	69.7	8.1																																
		f	26.3' Rt "CD1" 153+06.99	ABANDON INLET								1																										
		g	26.3' Rt "CD1" 153+06.99	ABANDON 24" CMP	190.2	22.1																																
D-4	13	a	194.6' Lt "A" 156+83.25	REMOVE INLET							1																											
		b	194.6' Lt "A" 156+83.25	REMOVE 18" CMP					136.5																													
D-4	14	a	78.1' Rt "D3" 157+42.30	HW																									1.95	105								
		b	78.1' Rt "D3" 157+42.30	36" APC																																		
D-4-5	15	a	90.5' Rt "CD1" 156+16.33	ABANDON INLET								1																										
		b	90.5' Rt "CD1" 156+16.33	ABANDON 18" CMP	217.4	14.2																																
		c	59.2' Rt "A" 157+98.75	ABANDON INLET								1																										
		d	59.2' Rt "A" 157+98.75	ABANDON 18" CMP	118.9	7.8																																
		e	61.0' Lt "A" 157+98.87	REMOVE 18" CMP					57.3																													
D-4	16	a	25.7' Lt "D3" 160+55.3	REMOVE HW				1																														
		b	25.7' Lt "D3" 160+55.3	REMOVE 18" CMP					120.0																													
		c	23.3' Lt "D4" 154+03.12	REMOVE INLET							1																											
		d	23.3' Lt "D4" 154+03.12	REMOVE 18" CMP					26.9																													
		e	38.0' Lt "D4" 153+76.27	REMOVE INLET							1																											
		f	38.0' Lt "D4" 153+76.27	REMOVE 18" CMP					13.0																													
		g	43.8' Lt "D4" 153+64.21	REMOVE INLET							1																											
		h	43.8' Lt "D4" 153+64.21	REMOVE 18" CMP					67.6																													
SHEET TOTAL					596.2	52.2		1	480.4		4	4	3					960	3.53					1					1.95	105		30.0						

NOTES:

1. *: SEE DRAINAGE DETAIL SHEETS.
2. (N): NOT A SEPARATE PAY ITEM, FOR INFORMATION ONLY.

DRAINAGE QUANTITIES
DQ-5

REVISED BY | DATE REVISED
VU TRAN | HA VU
CALCULATED-DESIGNED BY | CHECKED BY
FUNCTIONAL SUPERVISOR: GEORGE MORHIG
STATE OF CALIFORNIA - DEPARTMENT OF TRANSPORTATION
Caltrans DESIGN

LAST REVISION 01-30-14 | DATE PLOTTED => 30-JUN-2014 | TIME PLOTTED => 05:29

Dist	COUNTY	ROUTE	POST MILES TOTAL PROJECT	SHEET No.	TOTAL SHEETS
08	SBd	15	42.5/46.0	214	824

REGISTERED CIVIL ENGINEER 1-30-14 DATE

6-23-14
PLANS APPROVAL DATE

REGISTERED PROFESSIONAL ENGINEER HA VU No. C61359 Exp. 6-30-15 CIVIL STATE OF CALIFORNIA

THE STATE OF CALIFORNIA OR ITS OFFICERS OR AGENTS SHALL NOT BE RESPONSIBLE FOR THE ACCURACY OR COMPLETENESS OF SCANNED COPIES OF THIS PLAN SHEET.

APC 18" LF	APC 24" LF	APC 30" LF	APC 36" LF	APC 42" LF	APC 48" LF	APC 60" LF	APC 72" LF	APL 24" LF	APL 30" LF	APL 36" LF	APL 42" LF	APL 48" LF	APL 60" LF	APC (JACKED) 42" LF	APC (JACKED) 48" LF	APC (JACKED) 60" LF	CSP 12" (0.064" THICK) LF	CSP 18" (0.064" THICK) LF	CSP 24" (0.064" THICK) LF	CSP 36" (0.079" THICK) LF	RCP 18" LF	RCP 24" LF	RCP 30" LF	RCP 36" LF	12" CSP RISER (0.064" THICK) LF	36" CSP INLET (0.079" THICK) LF	36" PRECAST Conc PIPE INLET LF	36" PRECAST Conc PIPE MH LF	JOINT CLASSIFICATION (N)	MAXIMUN COVER (N) FT	HEIGHT OF INLET (N) FT	DESCRIPTION	STATION	DRAINAGE UNIT No.	DRAINAGE SYSTEM No.	DRAINAGE PLAN SHEET No.
																															4.5	MOD G1 INLET*	32.0' L+ "D3" 156+50.00	a	11	D-4
45.0																													S	3.9		18" APC	32.0' L+ "D3" 156+50.00	b		
																																GLD	31.2' L+ "D3" 156+64.00	c		
																															5.4	G1 INLET	32.0' L+ "D3" 156+98.00	d		
																		23.8											D	14.7		18" CSP (0.064" THICK)	32.0' L+ "D3" 156+98.00	e		
																																REMOVE 24" CMP	50.2' R+ "D1" 152+36.00	a	12	D-4-5
																																CONCRETE COLLAR*	50.2' R+ "D1" 152+36.00	b		
																			17.5										D	4.0		24" CSP (0.064" THICK)	50.2' R+ "D1" 152+36.00	c		
																																ABANDON INLET	8.2' L+ "D1" 152+53.76	d		
																																ABANDON 24" CMP	8.2' L+ "D1" 152+53.76	e		
																																ABANDON INLET	26.3' R+ "CD1" 153+06.99	f		
																																ABANDON 24" CMP	26.3' R+ "CD1" 153+06.99	g		
																																REMOVE INLET	194.6' L+ "A" 156+83.25	a	13	D-4
																																REMOVE 18" CMP	194.6' L+ "A" 156+83.25	b		
																																HW	78.1' R+ "D3" 157+42.30	a	14	D-4
			146.4																										S	20.0		36" APC	78.1' R+ "D3" 157+42.30	b		
																																ABANDON INLET	90.5' R+ "CD1" 156+16.33	a	15	D-4-5
																																ABANDON 18" CMP	90.5' R+ "CD1" 156+16.33	b		
																																ABANDON INLET	59.2' R+ "A" 157+98.75	c		
																																ABANDON 18" CMP	59.2' R+ "A" 157+98.75	d		
																																REMOVE 18" CMP	61.0' L+ "A" 157+98.87	e		
																																REMOVE HW	25.7' L+ "D3" 160+55.3	a	16	D-4
																																REMOVE 18" CMP	25.7' L+ "D3" 160+55.3	b		
																																REMOVE INLET	23.3' L+ "D4" 154+03.12	c		
																																REMOVE 18" CMP	23.3' L+ "D4" 154+03.12	d		
																																REMOVE INLET	38.0' L+ "D4" 153+76.27	e		
																																REMOVE 18" CMP	38.0' L+ "D4" 153+76.27	f		
																																REMOVE INLET	43.8' L+ "D4" 153+64.21	g		
																																REMOVE 18" CMP	43.8' L+ "D4" 153+64.21	h		
45.0			146.4															23.8	17.5													SHEET TOTAL				

NOTES:

1. *: SEE DRAINAGE DETAIL SHEETS.
2. (N): NOT A SEPARATE PAY ITEM, FOR INFORMATION ONLY.

DRAINAGE QUANTITIES
DQ-6

STATE OF CALIFORNIA - DEPARTMENT OF TRANSPORTATION
Caltrans DESIGN

FUNCTIONAL SUPERVISOR: GEORGE MORHIG
CALCULATED-DESIGNED BY: VU TRAN
CHECKED BY: HA VU
REVISED BY
DATE REVISED

LAST REVISION 01-30-14
DATE PLOTTED => 30-JUN-2014
TIME PLOTTED => 05:29

Dist	COUNTY	ROUTE	POST MILES TOTAL PROJECT	SHEET No.	TOTAL SHEETS
08	SBd	15	42.5/46.0	215	824

REGISTERED CIVIL ENGINEER 1-30-14 DATE

6-23-14
PLANS APPROVAL DATE

REGISTERED PROFESSIONAL ENGINEER HA VU No. C61359 Exp. 6-30-15 CIVIL STATE OF CALIFORNIA

THE STATE OF CALIFORNIA OR ITS OFFICERS OR AGENTS SHALL NOT BE RESPONSIBLE FOR THE ACCURACY OR COMPLETENESS OF SCANNED COPIES OF THIS PLAN SHEET.

DRAINAGE PLAN SHEET No.	DRAINAGE SYSTEM No. (⬡)	DRAINAGE UNIT No. (◯)	STATION	DESCRIPTION	ABANDON CULVERT (LF)	SAND BACKFILL	REMOVE CONCRETE (CHANNEL)	REMOVE HEADWALL	REMOVE CULVERT (LF)	REMOVE GRATED LINE DRAIN	REMOVE INLET	ABANDON INLET	FRAME, GRATE, CHECKERED PLATE, AND MH (N): TYPE 24-12	TYPE 24-12X	TYPE 36R	1/4" CHECKERED PL COVER	MANHOLE	Misc IRON AND STEEL	MINOR Conc (MINOR STRUCTURE)	MINOR Conc (Misc Const)	HOT MIX ASPHALT (TYPE A)	PLACE HMA (Misc AREA)	CAP INLET	CONCRETE COLLAR (N)	12" ELBOW (N)	18" ELBOW (N)	10' x 6' PRECAST REINFORCED CONCRETE BOX CULVERT	STRUCTURAL Conc, BOX Culv	STRUCTURAL Conc, HEADWALL	BAR REINFORCING STEEL	CABLE RAILING	GRATED LINE DRAIN	AFES 18"	AFES 30"	RSP FABRIC (CLASS 8)	RSP (METHOD B) FACING	RSP (METHOD B) LIGHT	RSP (METHOD B) 1/4T
					LF	CY	LF	EA	LF	LF	EA	EA	EA	EA	EA	EA	EA	LB	CY	CY	TON	SQYD	EA	EA	EA	EA	LF	CY	CY	LB	LF	LF	EA	EA	SQYD	CY	CY	CY
D-4	17	a	81.0' Lt "D3" 160+56.00	HW																									1.95	105								
		b	81.0' Lt "D3" 160+56.00	36" CSP (0.079" THICK)																																		
D-4	18	a	56.6' Lt "A" 161+52.95	ABANDON INLET								1																										
		b	56.6' Lt "A" 161+52.95	ABANDON 18" CMP	83.1	5.4																																
		c	85.3' Lt "A" 160+72.22	ABANDON INLET								1																										
		d	85.3' Lt "A" 160+72.22	ABANDON 18" CMP	122.7	8.0																																
D-4	19	a	2.0' Rt "D3" 161+10.00	G1 INLET									1					326	1.17																			
		b	2.0' Rt "D3" 161+10.00	18" APC																																		
		c	2.0' Rt "D3" 161+70.00	G1 INLET									1					326	1.21																			
		d	2.0' Rt "D3" 161+70.00	18" APC																																		
		e	2.0' Rt "D3" 162+30.00	G1 INLET									1					326	1.26																			
		f	2.0' Rt "D3" 162+30.00	18" APC																																		
		g	2.0' Rt "D3" 162+58.00	G1 INLET									1					326	1.24																			
		h	2.0' Rt "D3" 162+58.00	18" CSP (0.064" THICK)																																		
D-4, 7	20	a	26.4' Lt "D4" 152+65.10	ABANDON 12" CMP	20.1	0.6																																
D-4, 7	21	a	11.5' Rt "D4" 161+85.00	GMP INLET											1			236	0.40																			
		b	11.5' Rt "D4" 161+85.00	24" APC																																		
		c	20.0' Lt "D4" 164+65.00	MOD G1 INLET*									2					634	1.90																			
		d	20.0' Lt "D4" 164+65.00	24" APC																																		
		e	66.6' Lt "A" 165+48.00	MOD G1 INLET*									2					634	2.11																			
				12" CSP RISER (0.064" THICK)																																		
D-5	22	a	55.0' Rt "D1" 150+40.00	HW																									1.95	105								
		b	55.0' Rt "D1" 150+40.00	36" APC																																		
		c	34.0' Rt "D1" 152+41.00	G2 INLET									1					326	3.25																			
		d	34.0' Rt "D1" 152+41.00	36" APC																																		
		e	31.0' Lt "D1" 153+43.00	HW																									1.95	105								
		f	31.0' Lt "D1" 153+43.00	RSP (LIGHT, METHOD B)*																															37.3		16.0
D-5	23	a	34.0' Rt "D1" 155+70.00	HMA OSD, L=20'*																	0.7	11.4															
		b	42.6' Rt "D1" 155+78.00	RSP (FACING, METHOD B)*																															4.6	0.9	
SHEET TOTAL					225.9	14.0						2	9		1			3134	12.54		0.7	11.4							5.85	315					41.9	0.9	16.0

NOTES:

1. *: SEE DRAINAGE DETAIL SHEETS.
2. (N): NOT A SEPARATE PAY ITEM, FOR INFORMATION ONLY.

DRAINAGE QUANTITIES
DQ-7

REVISED BY | DATE REVISED
VU TRAN | HA VU
CALCULATED-DESIGNED BY | CHECKED BY
FUNCTIONAL SUPERVISOR: GEORGE MORHIG
STATE OF CALIFORNIA - DEPARTMENT OF TRANSPORTATION
Caltrans DESIGN

LAST REVISION 01-30-14 | DATE PLOTTED => 30-JUN-2014 | TIME PLOTTED => 05:29

Dist	COUNTY	ROUTE	POST MILES TOTAL PROJECT	SHEET No.	TOTAL SHEETS
08	SBd	15	42.5/46.0	216	824

REGISTERED CIVIL ENGINEER 1-30-14 DATE

6-23-14
PLANS APPROVAL DATE

REGISTERED PROFESSIONAL ENGINEER HA VU No. C61359 Exp. 6-30-15 CIVIL STATE OF CALIFORNIA

THE STATE OF CALIFORNIA OR ITS OFFICERS OR AGENTS SHALL NOT BE RESPONSIBLE FOR THE ACCURACY OR COMPLETENESS OF SCANNED COPIES OF THIS PLAN SHEET.

APC 18" LF	APC 24" LF	APC 30" LF	APC 36" LF	APC 42" LF	APC 48" LF	APC 60" LF	APC 72" LF	APL 24" LF	APL 30" LF	APL 36" LF	APL 42" LF	APL 48" LF	APL 60" LF	APC (JACKED) 42" LF	APC (JACKED) 48" LF	APC (JACKED) 60" LF	CSP 12" (0.064" THICK) LF	CSP 18" (0.064" THICK) LF	CSP 24" (0.064" THICK) LF	CSP 36" (0.079" THICK) LF	RCP 18" LF	RCP 24" LF	RCP 30" LF	RCP 36" LF	12" CSP RISER (0.064" THICK) LF	36" CSP INLET (0.079" THICK) LF	36" PRECAST Conc PIPE INLET LF	36" PRECAST Conc PIPE MH LF	JOINT CLASSIFICATION (N)	MAXIMUN COVER (N) FT	HEIGHT OF INLET (N) FT	DESCRIPTION	STATION	DRAINAGE UNIT No.	DRAINAGE SYSTEM No.	DRAINAGE PLAN SHEET No.
																																HW	81.0′ L+ "D3" 160+56.00	a	17	D-4
																				30.6									D	14.1		36" CSP (0.079" THICK)	81.0′ L+ "D3" 160+56.00	b		
																																ABANDON INLET	56.6′ L+ "A" 161+52.95	a	18	D-4
																																ABANDON 18" CMP	56.6′ L+ "A" 161+52.95	b		
																																ABANDON INLET	85.3′ L+ "A" 160+72.22	c		
																																ABANDON 18" CMP	85.3′ L+ "A" 160+72.22	d		
																															4.0	G1 INLET	2.0′ R+ "D3" 161+10.00	a	19	D-4
57.1																													S	2.7		18" APC	2.0′ R+ "D3" 161+10.00	b		
																															4.2	G1 INLET	2.0′ R+ "D3" 161+70.00	c		
57.1																													S	2.9		18" APC	2.0′ R+ "D3" 161+70.00	d		
																															4.4	G1 INLET	2.0′ R+ "D3" 162+30.00	e		
25.0																													S	2.9		18" APC	2.0′ R+ "D3" 162+30.00	f		
																															4.3	G1 INLET	2.0′ R+ "D3" 162+58.00	g		
																		52.1											D	11.5		18" CSP (0.064" THICK)	2.0′ R+ "D3" 162+58.00	h		
																																ABANDON 12" CMP	26.4′ L+ "D4" 152+65.10	a	20	D-4, 7
																										4.5			D		4.0	GMP INLET	11.5′ R+ "D4" 161+85.00	a	21	D-4, 7
	278.6																												S	2.9		24" APC	11.5′ R+ "D4" 161+85.00	b		
																															4.0	MOD G1 INLET*	20.0′ L+ "D4" 164+65.00	c		
	77.8																												S	2.3		24" APC	20.0′ L+ "D4" 164+65.00	d		
																															4.7	MOD G1 INLET*	66.6′ L+ "A" 165+48.00	e		
																									8.1				D			12" CSP RISER (0.064" THICK)				
																																HW	55.0′ R+ "D1" 150+40.00	a	22	D-5
			207.4																										S	3.5		36" APC	55.0′ R+ "D1" 150+40.00	b		
																															6.0	G2 INLET	34.0′ R+ "D1" 152+41.00	c		
			120.0																										S	4.0		36" APC	34.0′ R+ "D1" 152+41.00	d		
																																HW	31.0′ L+ "D1" 153+43.00	e		
																																RSP (LIGHT, METHOD B)*	31.0′ L+ "D1" 153+43.00	f		
																																HMA OSD, L=20′*	34.0′ R+ "D1" 155+70.00	a	23	D-5
																																RSP (FACING, METHOD B)*	42.6′ R+ "D1" 155+78.00	b		
139.2	356.4		327.4															52.1		30.6					8.1	4.5						SHEET TOTAL				

NOTES:
1. *: SEE DRAINAGE DETAIL SHEETS.
2. (N): NOT A SEPARATE PAY ITEM, FOR INFORMATION ONLY.

DRAINAGE QUANTITIES
DQ-8

STATE OF CALIFORNIA - DEPARTMENT OF TRANSPORTATION
Caltrans DESIGN

FUNCTIONAL SUPERVISOR: GEORGE MORHIG
CALCULATED-DESIGNED BY: VU TRAN
CHECKED BY: HA VU
REVISED BY
DATE REVISED

LAST REVISION 01-30-14
DATE PLOTTED => 30-JUN-2014
TIME PLOTTED => 05:29

Dist	COUNTY	ROUTE	POST MILES TOTAL PROJECT	SHEET No.	TOTAL SHEETS
08	SBd	15	42.5/46.0	217	824

REGISTERED CIVIL ENGINEER 1-30-14 DATE

6-23-14
PLANS APPROVAL DATE

REGISTERED PROFESSIONAL ENGINEER HA VU No. C61359 Exp. 6-30-15 CIVIL STATE OF CALIFORNIA

THE STATE OF CALIFORNIA OR ITS OFFICERS OR AGENTS SHALL NOT BE RESPONSIBLE FOR THE ACCURACY OR COMPLETENESS OF SCANNED COPIES OF THIS PLAN SHEET.

DRAINAGE PLAN SHEET No.	DRAINAGE SYSTEM No. ⬡	DRAINAGE UNIT No. ◯	STATION	DESCRIPTION	ABANDON CULVERT (LF)	SAND BACKFILL	REMOVE CONCRETE (CHANNEL)	REMOVE HEADWALL	REMOVE CULVERT (LF)	REMOVE GRATED LINE DRAIN	REMOVE INLET	ABANDON INLET	FRAME, GRATE, CHECKERED PLATE, AND MH (N): TYPE 24-12	TYPE 24-12X	TYPE 36R	1/4" CHECKERED PL COVER	MANHOLE	Misc IRON AND STEEL	MINOR Conc (MINOR STRUCTURE)	MINOR Conc (Misc Const)	HOT MIX ASPHALT (TYPE A)	PLACE HMA (Misc AREA)	CAP INLET	CONCRETE COLLAR (N)	12" ELBOW (N)	18" ELBOW (N)	10'x6' PRECAST REINFORCED CONCRETE BOX CULVERT	STRUCTURAL Conc, BOX Culv	STRUCTURAL Conc, HEADWALL	BAR REINFORCING STEEL	CABLE RAILING	GRATED LINE DRAIN	AFES: 18"	AFES: 30"	RSP: FABRIC (CLASS 8)	RSP (METHOD B): FACING	RSP (METHOD B): LIGHT	RSP (METHOD B): 1/4T
					LF	CY	LF	EA	LF	LF	EA	EA	EA	EA	EA	EA	EA	LB	CY	CY	TON	SQYD	EA	EA	EA	EA	LF	CY	CY	LB	LF	LF	EA	EA	SQYD	CY	CY	CY
D-5	24	a	43.2′ R+ "D1" 159+15.00	HW																									1.20	75								
		b	43.2′ R+ "D1" 159+15.00	24" APC																																		
		c	51.8′ L+ "D1" 159+15.00	HW																									1.20	75								
		d	51.8′ L+ "D1" 159+15.00	RSP (LIGHT, METHOD B)*																															20.4		7.6	
D-5	25	a	11.3′ R+ "D1" 158+69.47	REMOVE INLET							1																											
		b	11.3′ R+ "D1" 158+69.47	REMOVE 18" CMP					67.7																													
		c	1.6′ R+ "D1" 159+39.57	REMOVE INLET							1																											
		d	1.6′ R+ "D1" 159+39.57	REMOVE 18" CMP					42.4																													
		e	40.9′ R+ "D1" 159+60.46	REMOVE 12" CMP					110.1																													
		f	40.9′ R+ "D1" 159+60.46	12" CSP (0.064" THICK) W/ELBOW																					1													
D-5	26	a	31.0′ L+ "D2" 158+75.60	HW																									2.65	145								
		b	31.0′ L+ "D2" 158+75.60	2-36" APC																																		
		c	81.3′ R+ "D2" 157+39.00	HW																									2.65	145								
D-5	27	a	74.7′ R+ "D2" 156+63.59	REMOVE INLET							1																											
		b	74.7′ R+ "D2" 156+63.59	REMOVE 18" RCP					69.6																													
		c	18.7′ R+ "D2" 156+22.37	REMOVE HW				1																														
D-5	28	a	14.0′ L+ "D1" 160+85.00	G1 INLET									1					326	1.17																			
		b	14.0′ L+ "D1" 160+85.00	18" APC																																		
		c	14.0′ L+ "D1" 161+20.00	G1 INLET									1					326	1.21																			
		d	14.0′ L+ "D1" 161+20.00	18" APC																																		
		e	14.0′ L+ "D1" 161+65.00	G1 INLET									1					326	1.21																			
		f	14.0′ L+ "D1" 161+65.00	18" APC																																		
		g	14.0′ L+ "D1" 162+00.00	G1 INLET									1					326	1.21																			
		h	14.0′ L+ "D1" 162+00.00	18" APC																																		
		i	14.0′ L+ "D1" 162+17.00	G1 INLET									1					326	1.21																			
		j	14.0′ L+ "D1" 162+17.00	18" APC																																		
		k	54.2′ R+ "D2" 155+73.00	18" AFES																													1					
D-5	29	a	130.0′ R+ "D2" 161+28.62	REMOVE 12" CMP					25.0																													
D-6-9	30	a	43.8′ R+ "DS1" 5091+00.00	REMOVE CONCRETE CHANNEL			1994.2																															
		b	43.8′ R+ "DS1" 5091+00.00	TS*															58.30																			
				SHEET TOTAL			1994.2	1	314.8		3		5					1630	64.31						1				7.70	440			1		20.4		7.6	

NOTES:

1. *: SEE DRAINAGE DETAIL SHEETS.
2. (N): NOT A SEPARATE PAY ITEM, FOR INFORMATION ONLY.

DRAINAGE QUANTITIES
DQ-9

VU TRAN | HA VU | REVISED BY | DATE REVISED

CALCULATED-DESIGNED BY | CHECKED BY

FUNCTIONAL SUPERVISOR: GEORGE MORHIG

STATE OF CALIFORNIA - DEPARTMENT OF TRANSPORTATION

Caltrans® DESIGN

LAST REVISION 01-30-14 | DATE PLOTTED => 30-JUN-2014 | TIME PLOTTED => 05:29

Dist	COUNTY	ROUTE	POST MILES TOTAL PROJECT	SHEET No.	TOTAL SHEETS
08	SBd	15	42.5/46.0	218	824

REGISTERED CIVIL ENGINEER 1-30-14 DATE

6-23-14
PLANS APPROVAL DATE

REGISTERED PROFESSIONAL ENGINEER HA VU No. C61359 Exp. 6-30-15 CIVIL STATE OF CALIFORNIA

THE STATE OF CALIFORNIA OR ITS OFFICERS OR AGENTS SHALL NOT BE RESPONSIBLE FOR THE ACCURACY OR COMPLETENESS OF SCANNED COPIES OF THIS PLAN SHEET.

APC 18" LF	APC 24" LF	APC 30" LF	APC 36" LF	APC 42" LF	APC 48" LF	APC 60" LF	APC 72" LF	APL 24" LF	APL 30" LF	APL 36" LF	APL 42" LF	APL 48" LF	APL 60" LF	APC (JACKED) 42" LF	APC (JACKED) 48" LF	APC (JACKED) 60" LF	CSP (0.064" THICK) 12" LF	CSP (0.064" THICK) 18" LF	CSP (0.064" THICK) 24" LF	CSP (0.079" THICK) 36" LF	RCP 18" LF	RCP 24" LF	RCP 30" LF	RCP 36" LF	12" CSP RISER (0.064" THICK) LF	36" CSP INLET (0.079" THICK) LF	36" PRECAST Conc PIPE INLET LF	36" PRECAST Conc PIPE MH LF	JOINT CLASSIFICATION (N)	MAXIMUN COVER (N) FT	HEIGHT OF INLET (N) FT	DESCRIPTION	STATION	DRAINAGE UNIT No. ◯	DRAINAGE SYSTEM No. ⬡	DRAINAGE PLAN SHEET No.
																																HW	43.2′ R+ "D1" 159+15.00	a	24	D-5
	95.2																												P	4.2		24" APC	43.2′ R+ "D1" 159+15.00	b		
																																HW	51.8′ L+ "D1" 159+15.00	c		
																																RSP (LIGHT, METHOD B)*	51.8′ L+ "D1" 159+15.00	d		
																																REMOVE INLET	11.3′ R+ "D1" 158+69.47	a	25	D-5
																																REMOVE 18" CMP	11.3′ R+ "D1" 158+69.47	b		
																																REMOVE INLET	1.6′ R+ "D1" 159+39.57	c		
																																REMOVE 18" CMP	1.6′ R+ "D1" 159+39.57	d		
																																REMOVE 12" CMP	40.9′ R+ "D1" 159+60.46	e		
																	97.1												D	10.6		12" CSP (0.064" THICK) W/ELBOW	40.9′ R+ "D1" 159+60.46	f		
			291.0																										P	8.9		HW	31.0′ L+ "D2" 158+75.60	a	26	D-5
																																2-36" APC	31.0′ L+ "D2" 158+75.60	b		
																																HW	81.3′ R+ "D2" 157+39.00	c		
																																REMOVE INLET	74.7′ R+ "D2" 156+63.59	a	27	D-5
																																REMOVE 18" RCP	74.7′ R+ "D2" 156+63.59	b		
																																REMOVE HW	18.7′ R+ "D2" 156+22.37	c		
																															4.0	G1 INLET	14.0′ L+ "D1" 160+85.00	a	28	D-5
31.9																													S	2.7		18" APC	14.0′ L+ "D1" 160+85.00	b		
																															4.2	G1 INLET	14.0′ L+ "D1" 161+20.00	c		
42.1																													S	2.7		18" APC	14.0′ L+ "D1" 161+20.00	d		
																															4.2	G1 INLET	14.0′ L+ "D1" 161+65.00	e		
32.1																													S	2.7		18" APC	14.0′ L+ "D1" 161+65.00	f		
																															4.2	G1 INLET	14.0′ L+ "D1" 162+00.00	g		
14.0																													S	2.7		18" APC	14.0′ L+ "D1" 162+00.00	h		
																															4.2	G1 INLET	14.0′ L+ "D1" 162+17.00	i		
68.7																													S	4.7		18" APC	14.0′ L+ "D1" 162+17.00	j		
																																18" AFES	54.2′ R+ "D2" 155+73.00	k		
																																REMOVE 12" CMP	130.0′ R+ "D2" 161+28.62	a	29	D-5
																																REMOVE CONCRETE CHANNEL	43.8′ R+ "DS1" 5091+00.00	a	30	D-6-9
																																TS*	43.8′ R+ "DS1" 5091+00.00	b		
188.8	95.2		291.0														97.1															SHEET TOTAL				

NOTES:

1. *: SEE DRAINAGE DETAIL SHEETS.
2. (N): NOT A SEPARATE PAY ITEM, FOR INFORMATION ONLY.

DRAINAGE QUANTITIES
DQ-10

STATE OF CALIFORNIA - DEPARTMENT OF TRANSPORTATION
Caltrans DESIGN

FUNCTIONAL SUPERVISOR: GEORGE MORHIG
CALCULATED-DESIGNED BY: VU TRAN
CHECKED BY: HA VU
REVISED BY
DATE REVISED

LAST REVISION 01-30-14
DATE PLOTTED => 30-JUN-2014
TIME PLOTTED => 05:29

Dist	COUNTY	ROUTE	POST MILES TOTAL PROJECT	SHEET No.	TOTAL SHEETS
08	SBd	15	42.5/46.0	219	824

REGISTERED CIVIL ENGINEER 1-30-14 DATE

6-23-14
PLANS APPROVAL DATE

REGISTERED PROFESSIONAL ENGINEER HA VU No. C61359 Exp. 6-30-15 CIVIL STATE OF CALIFORNIA

THE STATE OF CALIFORNIA OR ITS OFFICERS OR AGENTS SHALL NOT BE RESPONSIBLE FOR THE ACCURACY OR COMPLETENESS OF SCANNED COPIES OF THIS PLAN SHEET.

DRAINAGE PLAN SHEET No.	DRAINAGE SYSTEM No. ⬡	DRAINAGE UNIT No. ◯	STATION	DESCRIPTION	ABANDON CULVERT (LF)	SAND BACKFILL	REMOVE CONCRETE (CHANNEL)	REMOVE HEADWALL	REMOVE CULVERT (LF)	REMOVE GRATED LINE DRAIN	REMOVE INLET	ABANDON INLET	FRAME, GRATE, CHECKERED PLATE, AND MH (N): TYPE 24-12	TYPE 24-12X	TYPE 36R	1/4" CHECKERED PL COVER	MANHOLE	Misc IRON AND STEEL	MINOR Conc (MINOR STRUCTURE)	MINOR Conc (Misc Const)	HOT MIX ASPHALT (TYPE A)	PLACE HMA (Misc AREA)	CAP INLET	CONCRETE COLLAR (N)	12" ELBOW (N)	18" ELBOW (N)	10'x 6' PRECAST REINFORCED CONCRETE BOX CULVERT	STRUCTURAL Conc, BOX Culv	STRUCTURAL Conc, HEADWALL	BAR REINFORCING STEEL	CABLE RAILING	GRATED LINE DRAIN	AFES: 18"	AFES: 30"	RSP: FABRIC (CLASS 8)	RSP (METHOD B): FACING	RSP (METHOD B): LIGHT	RSP (METHOD B): 1/4T
					LF	CY	LF	EA	LF	LF	EA	EA	EA	EA	EA	EA	EA	LB	CY	CY	TON	SQYD	EA	EA	EA	EA	LF	CY	CY	LB	LF	LF	EA	EA	SQYD	CY	CY	CY
D-6-9	30	c	45.5' R+ "DS1" 5091+50.00	14' (W) x 2'-4.8' (H) RCB																								2718.9		646227								
		d	33.2' R+ "DS2" 5093+00.00	CLEAN-OUT											1			236																				
			33.2' R+ "DS2" 5093+95.00	CLEAN-OUT											1			236																				
			33.2' R+ "DS2" 5094+95.00	CLEAN-OUT											1			236																				
			33.2' R+ "DS2" 5096+30.00	CLEAN-OUT											1			236																				
			33.2' R+ "DS2" 5097+15.00	CLEAN-OUT											1			236																				
			33.2' R+ "DS2" 5098+00.00	CLEAN-OUT											1			236																				
			33.2' R+ "DS2" 5099+00.00	CLEAN-OUT											1			236																				
			33.2' R+ "DS2" 5100+00.00	CLEAN-OUT											1			236																				
			33.2' R+ "DS2" 5101+00.00	CLEAN-OUT											1			236																				
			33.2' R+ "DS2" 5101+85.00	CLEAN-OUT											1			236																				
			33.2' R+ "DS2" 5102+70.00	CLEAN-OUT											1			236																				
			33.2' R+ "DS2" 5104+00.00	CLEAN-OUT											1			236																				
			33.2' R+ "DS2" 5105+00.00	CLEAN-OUT											1			236																				
			33.2' R+ "DS2" 5106+00.00	CLEAN-OUT											1			236																				
			33.2' R+ "DS2" 5107+00.00	CLEAN-OUT											1			236																				
			33.2' R+ "DS2" 5108+00.00	CLEAN-OUT											1			236																				
			33.3' R+ "DS2" 5109+00.00	CLEAN-OUT											1			236																				
		e	29.1' R+ "DS1" 5110+50.00	TS*															58.30																			
D-6	31	a	45.7' R+ "DS1" 5108+00.00	G1 INLET W/HMA APRON*										1				326	0.95		0.3	4.6																
		b	45.7' R+ "DS1" 5108+00.00	18" APC																																		
D-7	32	a	39.7' L+ "D4" 149+70.24	ABANDON INLET								1																										
		b	39.7' L+ "D4" 149+70.24	ABANDON 18" CMP	79.5	5.2																																
		c	80.3' L+ "D4" 148+24.86	ABANDON 12" CMP	111.5	3.2																																
D-7	33	a	50.0' L+ "DS1" 5100+87.00	GCP INLET											1			236	0.64																			
		b	50.0' L+ "DS1" 5100+87.00	24" RCP																																		
D-7	34	a	51.2' L+ "D4" 148+23.10	ABANDON 6" CMP	30.9	0.2																																
D-7	35	a	84.5' R+ "DS1" 5102+20.00	G1 INLET W/HMA APRON*										1				326	1.08		0.3	4.6																
		b	84.5' R+ "DS1" 5102+20.00	18" APC																																		
SHEET TOTAL					221.9	8.6						1	2		18			4900	60.97		0.6	9.2						2718.9		646227								

NOTES:

1. *: SEE DRAINAGE DETAIL SHEETS.
2. (N): NOT A SEPARATE PAY ITEM, FOR INFORMATION ONLY.

DRAINAGE QUANTITIES
DQ-11

REVISED BY | DATE REVISED
VU TRAN | HA VU
CALCULATED-DESIGNED BY | CHECKED BY
FUNCTIONAL SUPERVISOR: GEORGE MORHIG
STATE OF CALIFORNIA - DEPARTMENT OF TRANSPORTATION
Caltrans DESIGN

LAST REVISION 01-30-14 | DATE PLOTTED => 30-JUN-2014 | TIME PLOTTED => 05:29

Dist	COUNTY	ROUTE	POST MILES TOTAL PROJECT	SHEET No.	TOTAL SHEETS
08	SBd	15	42.5/46.0	220	824

REGISTERED CIVIL ENGINEER 1-30-14 DATE

6-23-14
PLANS APPROVAL DATE

REGISTERED PROFESSIONAL ENGINEER HA VU No. C61359 Exp. 6-30-15 CIVIL STATE OF CALIFORNIA

THE STATE OF CALIFORNIA OR ITS OFFICERS OR AGENTS SHALL NOT BE RESPONSIBLE FOR THE ACCURACY OR COMPLETENESS OF SCANNED COPIES OF THIS PLAN SHEET.

APC								APL						APC (JACKED)			CSP				RCP														
18"	24"	30"	36"	42"	48"	60"	72"	24"	30"	36"	42"	48"	60"	42"	48"	60"	12" (0.064" THICK)	18" (0.064" THICK)	24" (0.064" THICK)	36" (0.079" THICK)	18"	24"	30"	36"	12" CSP RISER (0.064" THICK)	36" CSP INLET (0.079" THICK)	36" PRECAST Conc PIPE INLET	36" PRECAST Conc PIPE MH	JOINT CLASSIFICATION (N)	MAXIMUN COVER (N)	HEIGHT OF INLET (N)	DESCRIPTION	STATION	DRAINAGE UNIT No. ◯	DRAINAGE SYSTEM No. ⬡	DRAINAGE PLAN SHEET No.
LF	LF	LF	LF	LF	LF	LF	LF	LF	LF	LF	LF	LF	LF	LF	LF	LF	LF	LF	LF	LF	LF	LF	LF	LF	LF	LF	LF	LF		FT	FT				
																																14′ (W) x 2′-4.8′ (H) RCB	45.5′ R+ "DS1" 5091+50.00	c	30	D-6-9
																																CLEAN-OUT	33.2′ R+ "DS2" 5093+00.00	d		
																																CLEAN-OUT	33.2′ R+ "DS2" 5093+95.00			
																																CLEAN-OUT	33.2′ R+ "DS2" 5094+95.00			
																																CLEAN-OUT	33.2′ R+ "DS2" 5096+30.00			
																																CLEAN-OUT	33.2′ R+ "DS2" 5097+15.00			
																																CLEAN-OUT	33.2′ R+ "DS2" 5098+00.00			
																																CLEAN-OUT	33.2′ R+ "DS2" 5099+00.00			
																																CLEAN-OUT	33.2′ R+ "DS2" 5100+00.00			
																																CLEAN-OUT	33.2′ R+ "DS2" 5101+00.00			
																																CLEAN-OUT	33.2′ R+ "DS2" 5101+85.00			
																																CLEAN-OUT	33.2′ R+ "DS2" 5102+70.00			
																																CLEAN-OUT	33.2′ R+ "DS2" 5104+00.00			
																																CLEAN-OUT	33.2′ R+ "DS2" 5105+00.00			
																																CLEAN-OUT	33.2′ R+ "DS2" 5106+00.00			
																																CLEAN-OUT	33.2′ R+ "DS2" 5107+00.00			
																																CLEAN-OUT	33.2′ R+ "DS2" 5108+00.00			
																																CLEAN-OUT	33.3′ R+ "DS2" 5109+00.00			
																																TS*	29.1′ R+ "DS1" 5110+50.00	e		
																														2.3		G1 INLET W/HMA APRON*	45.7′ R+ "DS1" 5108+00.00	a	31	D-6
2.3																													S	1.5		18" APC	45.7′ R+ "DS1" 5108+00.00	b		
																																ABANDON INLET	39.7′ L+ "D4" 149+70.24	a	32	D-7
																																ABANDON 18" CMP	39.7′ L+ "D4" 149+70.24	b		
																																ABANDON 12" CMP	80.3′ L+ "D4" 148+24.86	c		
																									3.8					3.3		GCP INLET	50.0′ L+ "DS1" 5100+87.00	a	33	D-7
																						115.7							S	2.9		24" RCP	50.0′ L+ "DS1" 5100+87.00	b		
																																ABANDON 6" CMP	51.2′ L+ "D4" 148+23.10	a	34	D-7
																														3.6		G1 INLET W/HMA APRON*	84.5′ R+ "DS1" 5102+20.00	a	35	D-7
2.3																													S	2.8		18" APC	84.5′ R+ "DS1" 5102+20.00	b		
4.6																						115.7			3.8							SHEET TOTAL				

NOTES:

1. *: SEE DRAINAGE DETAIL SHEETS.
2. (N): NOT A SEPARATE PAY ITEM, FOR INFORMATION ONLY.

DRAINAGE QUANTITIES
DQ-12

REVISED BY | DATE REVISED
VU TRAN | HA VU
CALCULATED-DESIGNED BY | CHECKED BY
FUNCTIONAL SUPERVISOR | GEORGE MORHIG
STATE OF CALIFORNIA - DEPARTMENT OF TRANSPORTATION
Caltrans DESIGN

LAST REVISION 01-30-14 | DATE PLOTTED => 30-JUN-2014 | TIME PLOTTED => 05:29

Dist	COUNTY	ROUTE	POST MILES TOTAL PROJECT	SHEET No.	TOTAL SHEETS
08	SBd	15	42.5/46.0	221	824

REGISTERED CIVIL ENGINEER 1-30-14 DATE

6-23-14
PLANS APPROVAL DATE

REGISTERED PROFESSIONAL ENGINEER HA VU No. C61359 Exp. 6-30-15 CIVIL STATE OF CALIFORNIA

THE STATE OF CALIFORNIA OR ITS OFFICERS OR AGENTS SHALL NOT BE RESPONSIBLE FOR THE ACCURACY OR COMPLETENESS OF SCANNED COPIES OF THIS PLAN SHEET.

DRAINAGE PLAN SHEET No.	DRAINAGE SYSTEM No. ⬡	DRAINAGE UNIT No. ◯	STATION	DESCRIPTION	ABANDON CULVERT (LF)	SAND BACKFILL	REMOVE CONCRETE (CHANNEL)	REMOVE HEADWALL	REMOVE CULVERT (LF)	REMOVE GRATED LINE DRAIN	REMOVE INLET	ABANDON INLET	FRAME, GRATE, CHECKERED PLATE, AND MH (N) TYPE 24-12	TYPE 24-12X	TYPE 36R	1/4" CHECKERED PL COVER	MANHOLE	Misc IRON AND STEEL	MINOR Conc (MINOR STRUCTURE)	MINOR Conc (Misc Const)	HOT MIX ASPHALT (TYPE A)	PLACE HMA (Misc AREA)	CAP INLET	CONCRETE COLLAR (N)	12" ELBOW (N)	18" ELBOW (N)	10'x 6' PRECAST REINFORCED CONCRETE BOX CULVERT	STRUCTURAL Conc, BOX Culv	STRUCTURAL Conc, HEADWALL	BAR REINFORCING STEEL	CABLE RAILING	GRATED LINE DRAIN	AFES 18"	AFES 30"	RSP FABRIC (CLASS 8)	RSP (METHOD B) FACING	RSP (METHOD B) LIGHT	RSP (METHOD B) 1/4T
					LF	CY	LF	EA	LF	LF	EA	EA	EA	EA	EA	EA	EA	LB	CY	CY	TON	SQYD	EA	EA	EA	EA	LF	CY	CY	LB	LF	LF	EA	EA	SQYD	CY	CY	CY
D-7	36	a	78.1′ R+ "DS1" 5104+00.00	G1 INLET W/HMA APRON*									1					326	0.95		0.3	4.6																
		b	78.1′ R+ "DS1" 5104+00.00	18" APC																																		
D-7	37	a	61.4′ R+ "DS1" 5106+00.00	G1 INLET W/HMA APRON*									1					326	0.95		0.3	4.6																
		b	61.4′ R+ "DS1" 5106+00.00	18" APC																																		
D-7,8	38	a	39.5′ L+ "ES" 5095+43.50	GO INLET W/GUTTER DEPRESSION										1				239	1.24	1.14																		
		b	39.5′ L+ "ES" 5095+43.50	18" RCP																																		
		c	4.5′ R+ "ES" 5095+43.50	GO INLET W/GUTTER DEPRESSION										1				239	1.24	1.14																		
		d	4.5′ R+ "ES" 5095+43.50	24" RCP																																		
		e	12.0′ R+ "ES" 5098+64.00	GO INLET W/GUTTER DEPRESSION										1				239	1.56	1.14																		
		f	12.0′ R+ "ES" 5098+64.00	24" RCP																																		
		g	12.0′ R+ "ES" 5101+46.00	GO INLET W/GUTTER DEPRESSION										1				239	1.34	1.14																		
		h	12.0′ R+ "ES" 5101+46.00	24" RCP																																		
		i	28.2′ R+ "ES" 5102+00.00	HW																									1.20	75								
D-7	39A	a	36.5′ R+ "WFR" 1+65.00	HW																									2.21	126								
		b	36.5′ R+ "WFR" 1+65.00	30" RCP																																		
		c	48.3′ L+ "WFR" 1+65.00	HW																									2.21	126								
		d	48.3′ L+ "WFR" 1+65.00	RSP (LIGHT, METHOD B)*																															38.3		16.7
D-7	39B	a	36.5′ R+ "WFR" 1+70.00	30" RCP																																		
		b	31.0′ L+ "WFR" 1+70.00	G1 INLET W/HMA APRON*									1					326	1.21		0.3	4.6																
		c	31.0′ L+ "WFR" 1+70.00	30" RCP																																		
D-7	40	a	58.1′ L+ "A" 173+55.03	REMOVE 12" CMP					56.0																													
D-8	41	a	44.7′ R+ "D1" 164+50.00	GLD																												20.0						
		b	45.5′ R+ "D1" 164+74.00	MOD G1 INLET*									2					634	1.61																			
		c	45.5′ R+ "D1" 164+74.00	18" APC																																		
		d	59.8′ R+ "D1" 164+74.00	18" AFES																													1					
D-8	42	a	141.8′ R+ "D2" 164+50.52	REMOVE INLET							1																											
		b	141.8′ R+ "D2" 164+50.52	REMOVE 18" CMP					38.5																													
		c	104.7′ R+ "D2" 164+61.06	REMOVE HW				1																														
				SHEET TOTAL				1	94.5		1		5	4				2568	10.10	4.56	0.9	13.8							5.62	327		20.0	1		38.3		16.7

NOTES:

1. *: SEE DRAINAGE DETAIL SHEETS.
2. (N): NOT A SEPARATE PAY ITEM, FOR INFORMATION ONLY.

DRAINAGE QUANTITIES
DQ-13

REVISED BY | DATE REVISED
VU TRAN | HA VU
CALCULATED-DESIGNED BY | CHECKED BY
FUNCTIONAL SUPERVISOR: GEORGE MORHIG

STATE OF CALIFORNIA - DEPARTMENT OF TRANSPORTATION
Caltrans DESIGN

LAST REVISION 01-30-14 | DATE PLOTTED => 30-JUN-2014 | TIME PLOTTED => 05:29

Dist	COUNTY	ROUTE	POST MILES TOTAL PROJECT	SHEET No.	TOTAL SHEETS
08	SBd	15	42.5/46.0	222	824

REGISTERED CIVIL ENGINEER 1-30-14 DATE

6-23-14
PLANS APPROVAL DATE

REGISTERED PROFESSIONAL ENGINEER HA VU No. C61359 Exp. 6-30-15 CIVIL STATE OF CALIFORNIA

THE STATE OF CALIFORNIA OR ITS OFFICERS OR AGENTS SHALL NOT BE RESPONSIBLE FOR THE ACCURACY OR COMPLETENESS OF SCANNED COPIES OF THIS PLAN SHEET.

APC								APL						APC (JACKED)			CSP				RCP				12" CSP RISER (0.064" THICK)	36" CSP INLET (0.079" THICK)	36" PRECAST Conc PIPE INLET	36" PRECAST Conc PIPE MH	JOINT CLASSIFICATION (N)	MAXIMUN COVER (N)	HEIGHT OF INLET (N)	DESCRIPTION	STATION	DRAINAGE UNIT No. ◯	DRAINAGE SYSTEM No. ⬡	DRAINAGE PLAN SHEET No.
18"	24"	30"	36"	42"	48"	60"	72"	24"	30"	36"	42"	48"	60"	42"	48"	60"	12" (0.064" THICK)	18" (0.064" THICK)	24" (0.064" THICK)	36" (0.079" THICK)	18"	24"	30"	36"												
LF	LF	LF	LF	LF	LF	LF	LF	LF	LF	LF	LF	LF	LF	LF	LF	LF	LF	LF	LF	LF	LF	LF	LF	LF	LF	LF	LF	LF		FT	FT				
																															3.0	G1 INLET W/HMA APRON*	78.1′ R+ "DS1" 5104+00.00	a	36	D-7
2.3																													S	2.2		18" APC	78.1′ R+ "DS1" 5104+00.00	b		
																															2.3	G1 INLET W/HMA APRON*	61.4′ R+ "DS1" 5106+00.00	a	37	D-7
2.3																													S	1.6		18" APC	61.4′ R+ "DS1" 5106+00.00	b		
																															2.5	GO INLET W/GUTTER DEPRESSION	39.5′ L+ "ES" 5095+43.50	a	38	D-7,8
																					40.0								S	2.0		18" RCP	39.5′ L+ "ES" 5095+43.50	b		
																															3.0	GO INLET W/GUTTER DEPRESSION	4.5′ R+ "ES" 5095+43.50	c		
																						316.9							S	2.7		24" RCP	4.5′ R+ "ES" 5095+43.50	d		
																															4.3	GO INLET W/GUTTER DEPRESSION	12.0′ R+ "ES" 5098+64.00	e		
																						279.0							S	2.7		24" RCP	12.0′ R+ "ES" 5098+64.00	f		
																															3.4	GO INLET W/GUTTER DEPRESSION	12.0′ R+ "ES" 5101+46.00	g		
																						56.0							S	2.6		24" RCP	12.0′ R+ "ES" 5101+46.00	h		
																																HW	28.2′ R+ "ES" 5102+00.00	i		
																																HW	36.5′ R+ "WFR" 1+65.00	a	39A	D-7
																							84.8						S	2.8		30" RCP	36.5′ R+ "WFR" 1+65.00	b		
																																HW	48.3′ L+ "WFR" 1+65.00	c		
																																RSP (LIGHT, METHOD B)*	48.3′ L+ "WFR" 1+65.00	d		
																							66.5						S	2.8		30" RCP	36.5′ R+ "WFR" 1+70.00	a	39B	D-7
																															4.2	G1 INLET W/HMA APRON*	31.0′ L+ "WFR" 1+70.00	b		
																							16.3						S	2.4		30" RCP	31.0′ L+ "WFR" 1+70.00	c		
																																REMOVE 12" CMP	58.1′ L+ "A" 173+55.03	a	40	D-7
																																GLD	44.7′ R+ "D1" 164+50.00	a	41	D-8
																															3.0	MOD G1 INLET*	45.5′ R+ "D1" 164+74.00	b		
14.3																													S	1.5		18" APC	45.5′ R+ "D1" 164+74.00	c		
																																18" AFES	59.8′ R+ "D1" 164+74.00	d		
																																REMOVE INLET	141.8′ R+ "D2" 164+50.52	a	42	D-8
																																REMOVE 18" CMP	141.8′ R+ "D2" 164+50.52	b		
																																REMOVE HW	104.7′ R+ "D2" 164+61.06	c		
18.9																					40.0	651.9	167.6									SHEET TOTAL				

NOTES:

1. *: SEE DRAINAGE DETAIL SHEETS.
2. (N): NOT A SEPARATE PAY ITEM, FOR INFORMATION ONLY.

DRAINAGE QUANTITIES
DQ-14

REVISED BY | DATE REVISED
VU TRAN | HA VU
CALCULATED-DESIGNED BY | CHECKED BY
FUNCTIONAL SUPERVISOR | GEORGE MORHIG
STATE OF CALIFORNIA - DEPARTMENT OF TRANSPORTATION
Caltrans
DESIGN

LAST REVISION 01-30-14 | DATE PLOTTED => 30-JUN-2014 | TIME PLOTTED => 05:30

Dist	COUNTY	ROUTE	POST MILES TOTAL PROJECT	SHEET No.	TOTAL SHEETS
08	SBd	15	42.5/46.0	223	824

REGISTERED CIVIL ENGINEER 1-30-14 DATE

6-23-14
PLANS APPROVAL DATE

REGISTERED PROFESSIONAL ENGINEER HA VU No. C61359 Exp. 6-30-15 CIVIL STATE OF CALIFORNIA

THE STATE OF CALIFORNIA OR ITS OFFICERS OR AGENTS SHALL NOT BE RESPONSIBLE FOR THE ACCURACY OR COMPLETENESS OF SCANNED COPIES OF THIS PLAN SHEET.

DRAINAGE PLAN SHEET No.	DRAINAGE SYSTEM No. ⬡	DRAINAGE UNIT No. ◯	STATION	DESCRIPTION	ABANDON CULVERT (LF)	SAND BACKFILL	REMOVE CONCRETE (CHANNEL)	REMOVE HEADWALL	REMOVE CULVERT (LF)	REMOVE GRATED LINE DRAIN	REMOVE INLET	ABANDON INLET	FRAME, GRATE, CHECKERED PLATE, AND MH (N): TYPE 24-12	TYPE 24-12X	TYPE 36R	1/4" CHECKERED PL COVER	MANHOLE	Misc IRON AND STEEL	MINOR Conc (MINOR STRUCTURE)	MINOR Conc (Misc Const)	HOT MIX ASPHALT (TYPE A)	PLACE HMA (Misc AREA)	CAP INLET	CONCRETE COLLAR (N)	12" ELBOW (N)	18" ELBOW (N)	10'x 6' PRECAST REINFORCED CONCRETE BOX CULVERT	STRUCTURAL Conc, BOX Culv	STRUCTURAL Conc, HEADWALL	BAR REINFORCING STEEL	CABLE RAILING	GRATED LINE DRAIN	AFES: 18"	AFES: 30"	RSP: FABRIC (CLASS 8)	RSP (METHOD B): FACING	RSP (METHOD B): LIGHT	RSP (METHOD B): 1/4T
					LF	CY	LF	EA	LF	LF	EA	EA	EA	EA	EA	EA	EA	LB	CY	CY	TON	SQYD	EA	EA	EA	EA	LF	CY	CY	LB	LF	LF	EA	EA	SQYD	CY	CY	CY
D-8	43	a	20.0' L+ "CD1" 165+05.00	GMP INLET W/HMA APRON*											1			236	0.40		0.5	4.5																
		b	20.0' L+ "CD1" 165+05.00	24" APC																																		
		c	21.0' R+ "D2" 164+90.00	MOD G1 INLET*									2					634	2.50																			
		d	21.0' R+ "D2" 164+90.00	18" CSP (0.064" THICK) W/ELBOW																					1													
		e	94.9' R+ "D2" 164+90.00	18" AFES																													1					
		f	94.9' R+ "D2" 164+90.00	RSP (LIGHT, METHOD B)*																															17.1		6.0	
D-8	44	a	52.5' R+ "A" 165+24.96	REMOVE 12" CMP					66.0																													
D-8	45	a	72.4'' L+ "DS1" 5093+77.36	HW AND WW TYPE "A"																									13.38	893								
		b	72.4'' L+ "DS1" 5093+77.36	4' (W) x 2' (H) RCB																								39.0		6444								
D-8	46	a	31.6' L+ "DS1" 5095+00.00	REMOVE HW				1																														
		b	31.6' L+ "DS1" 5095+00.00	REMOVE 2-24" RCP					63.0																													
		c	67.7' L+ "DS1" 5095+14.00	HW																									1.72	100								
		d	67.7' L+ "DS1" 5095+14.00	2-24" RCP																																		
		e	"DS1" 5094+96.97	CONCRETE COLLAR*																				2														
		f	19.2' R+ "DS2" 5095+00.94	REMOVE 2-24" RCP					16.0																													
		g	19.2' R+ "DS2" 5095+00.94	JS*															0.50																			
D-8	47	a	48.8' R+ "D2" 152+65.94	REMOVE 24" x 12" ARCH CMP					29.4																													
D-8	48	a	36.7' L+ "DS1" 5096+00.00	HW AND WW TYPE "A"																									14.48	1067								
		b	36.7' L+ "DS1" 5096+00.00	8' (W) x 2' (H) RCB																								65.3		10382								
D-8	49	a	37.9' L+ "DS1" 5098+06.23	REMOVE HW				1																														
		b	37.9' L+ "DS1" 5098+06.23	REMOVE 24" RCP					47.9																													
		c	36.0' L+ "DS1" 5097+78.00	HW																									1.20	75								
		d	36.0' L+ "DS1" 5097+78.00	24" RCP																																		
		e	20.0' L+ "DS1" 5097+95.00	GO INLET W/GUTTER DEPRESSION										1				239	1.24	1.14																		
		f	20.0' L+ "DS1" 5097+95.00	24" RCP																																		
		g	10.0' R+ "DS1" 5098+06.42	CONCRETE COLLAR*																				1														
D-8	50	a	83.7' R+ "DS1" 5096+00.00	G1 INLET W/HMA APRON*									1					326	0.95		0.3	4.6																
		b	83.7' R+ "DS1" 5096+00.00	18" APC																																		
SHEET TOTAL								2	222.3				3	1	1			1435	5.59	1.14	0.8	9.1		3		1		104.3	30.78	18961			1		17.1		6.0	

NOTES:

1. *: SEE DRAINAGE DETAIL SHEETS.
2. (N): NOT A SEPARATE PAY ITEM, FOR INFORMATION ONLY.

DRAINAGE QUANTITIES
DQ-15

REVISED BY | DATE REVISED

VU TRAN | HA VU

CALCULATED-DESIGNED BY | CHECKED BY

FUNCTIONAL SUPERVISOR: GEORGE MORHIG

STATE OF CALIFORNIA - DEPARTMENT OF TRANSPORTATION

Caltrans DESIGN

LAST REVISION 01-30-14 | DATE PLOTTED => 30-JUN-2014 | TIME PLOTTED => 05:30

Dist	COUNTY	ROUTE	POST MILES TOTAL PROJECT	SHEET No.	TOTAL SHEETS
08	SBd	15	42.5/46.0	224	824

REGISTERED CIVIL ENGINEER 1-30-14 DATE

6-23-14
PLANS APPROVAL DATE

REGISTERED PROFESSIONAL ENGINEER HA VU No. C61359 Exp. 6-30-15 CIVIL STATE OF CALIFORNIA

THE STATE OF CALIFORNIA OR ITS OFFICERS OR AGENTS SHALL NOT BE RESPONSIBLE FOR THE ACCURACY OR COMPLETENESS OF SCANNED COPIES OF THIS PLAN SHEET.

APC 18" LF	APC 24" LF	APC 30" LF	APC 36" LF	APC 42" LF	APC 48" LF	APC 60" LF	APC 72" LF	APL 24" LF	APL 30" LF	APL 36" LF	APL 42" LF	APL 48" LF	APL 60" LF	APC (JACKED) 42" LF	APC (JACKED) 48" LF	APC (JACKED) 60" LF	CSP 12" (0.064" THICK) LF	CSP 18" (0.064" THICK) LF	CSP 24" (0.064" THICK) LF	CSP 36" (0.079" THICK) LF	RCP 18" LF	RCP 24" LF	RCP 30" LF	RCP 36" LF	12" CSP RISER (0.064" THICK) LF	36" CSP INLET (0.079" THICK) LF	36" PRECAST Conc PIPE INLET LF	36" PRECAST Conc PIPE MH LF	JOINT CLASSIFICATION (N)	MAXIMUN COVER (N) FT	HEIGHT OF INLET (N) FT	DESCRIPTION	STATION	DRAINAGE UNIT No.	DRAINAGE SYSTEM No.	DRAINAGE PLAN SHEET No.
																										4.8			D		4.3	GMP INLET W/HMA APRON*	20.0' L+ "CD1" 165+05.00	a	43	D-8
	50.1																												S	4.4		24" APC	20.0' L+ "CD1" 165+05.00	b		
																															6.0	MOD G1 INLET*	21.0' R+ "D2" 164+90.00	c		
																		80.6											D	6.1		18" CSP (0.064" THICK) W/ELBOW	21.0' R+ "D2" 164+90.00	d		
																																18" AFES	94.9' R+ "D2" 164+90.00	e		
																																RSP (LIGHT, METHOD B)*	94.9' R+ "D2" 164+90.00	f		
																																REMOVE 12" CMP	52.5' R+ "A" 165+24.96	a	44	D-8
																																HW AND WW TYPE "A"	72.4'' L+ "DS1" 5093+77.36	a	45	D-8
																														2.0		4' (W) x 2' (H) RCB	72.4'' L+ "DS1" 5093+77.36	b		
																																REMOVE HW	31.6' L+ "DS1" 5095+00.00	a	46	D-8
																																REMOVE 2-24" RCP	31.6' L+ "DS1" 5095+00.00	b		
																																HW	67.7' L+ "DS1" 5095+14.00	c		
																					136.6								S	1.8		2-24" RCP	67.7' L+ "DS1" 5095+14.00	d		
																																CONCRETE COLLAR*	"DS1" 5094+96.97	e		
																																REMOVE 2-24" RCP	19.2' R+ "DS2" 5095+00.94	f		
																																JS*	19.2' R+ "DS2" 5095+00.94	g		
																																REMOVE 24" x 12" ARCH CMP	48.8' R+ "D2" 152+65.94	a	47	D-8
																																HW AND WW TYPE "A"	36.7' L+ "DS1" 5096+00.00	a	48	D-8
																														2.0		8' (W) x 2' (H) RCB	36.7' L+ "DS1" 5096+00.00	b		
																																REMOVE HW	37.9' L+ "DS1" 5098+06.23	a	49	D-8
																																REMOVE 24" RCP	37.9' L+ "DS1" 5098+06.23	b		
																																HW	36.0' L+ "DS1" 5097+78.00	c		
																					22.9								S	1.9		24" RCP	36.0' L+ "DS1" 5097+78.00	d		
																															2.8	GO INLET W/GUTTER DEPRESSION	20.0' L+ "DS1" 5097+95.00	e		
																					30.2								S	2.2		24" RCP	20.0' L+ "DS1" 5097+95.00	f		
																																CONCRETE COLLAR*	10.0' R+ "DS1" 5098+06.42	g		
																															2.6	G1 INLET W/HMA APRON*	83.7' R+ "DS1" 5096+00.00	a	50	D-8
2.3																													S	1.8		18" APC	83.7' R+ "DS1" 5096+00.00	b		
2.3	50.1																	80.6			189.7					4.8						SHEET TOTAL				

NOTES:

1. *: SEE DRAINAGE DETAIL SHEETS.
2. (N): NOT A SEPARATE PAY ITEM, FOR INFORMATION ONLY.

DRAINAGE QUANTITIES
DQ-16

REVISED BY | DATE REVISED
VU TRAN | HA VU
CALCULATED-DESIGNED BY | CHECKED BY
FUNCTIONAL SUPERVISOR | GEORGE MORHIG
STATE OF CALIFORNIA - DEPARTMENT OF TRANSPORTATION
Caltrans DESIGN

LAST REVISION 01-30-14 | DATE PLOTTED => 30-JUN-2014 | TIME PLOTTED => 05:30

Dist	COUNTY	ROUTE	POST MILES TOTAL PROJECT	SHEET No.	TOTAL SHEETS
08	SBd	15	42.5/46.0	225	824

REGISTERED CIVIL ENGINEER 1-30-14 DATE

6-23-14
PLANS APPROVAL DATE

REGISTERED PROFESSIONAL ENGINEER HA VU No. C61359 Exp. 6-30-15 CIVIL STATE OF CALIFORNIA

THE STATE OF CALIFORNIA OR ITS OFFICERS OR AGENTS SHALL NOT BE RESPONSIBLE FOR THE ACCURACY OR COMPLETENESS OF SCANNED COPIES OF THIS PLAN SHEET.

DRAINAGE PLAN SHEET No.	DRAINAGE SYSTEM No. ⬡	DRAINAGE UNIT No. ◯	STATION	DESCRIPTION	ABANDON CULVERT (LF)	SAND BACKFILL	REMOVE CONCRETE (CHANNEL)	REMOVE HEADWALL	REMOVE CULVERT (LF)	REMOVE GRATED LINE DRAIN	REMOVE INLET	ABANDON INLET	FRAME, GRATE, CHECKERED PLATE, AND MH (N): TYPE 24-12	TYPE 24-12X	TYPE 36R	1/4" CHECKERED PL COVER	MANHOLE	Misc IRON AND STEEL	MINOR Conc (MINOR STRUCTURE)	MINOR Conc (Misc Const)	HOT MIX ASPHALT (TYPE A)	PLACE HMA (Misc AREA)	CAP INLET	CONCRETE COLLAR (N)	12" ELBOW (N)	18" ELBOW (N)	10'x 6' PRECAST REINFORCED CONCRETE BOX CULVERT	STRUCTURAL Conc, BOX Culv	STRUCTURAL Conc, HEADWALL	BAR REINFORCING STEEL	CABLE RAILING	GRATED LINE DRAIN	AFES 18"	AFES 30"	RSP FABRIC (CLASS 8)	RSP (METHOD B) FACING	RSP (METHOD B) LIGHT	RSP (METHOD B) 1/4T
					LF	CY	LF	EA	LF	LF	EA	EA	EA	EA	EA	EA	EA	LB	CY	CY	TON	SQYD	EA	EA	EA	EA	LF	CY	CY	LB	LF	LF	EA	EA	SQYD	CY	CY	CY
D-8	51	a	84.5' R+ "DS1" 5097+20.00	G1 INLET W/HMA APRON*									1					326	0.95		0.3	4.6																
		b	84.5' R+ "DS1" 5097+20.00	18" APC																																		
D-8	52	a	84.5' R+ "DS1" 5098+20.00	G1 INLET W/HMA APRON*									1					326	0.95		0.3	4.6																
		b	84.5' R+ "DS1" 5098+20.00	18" APC																																		
D-8	53	a	16.4' L+ "CD1" 172+15.00	GMP INLET W/HMA APRON*											1			236	0.40		0.5	4.5																
		b	16.4' L+ "CD1" 172+15.00	18" APC																																		
		c	20.0' L+ "E2" 172+10.00	MOD G1 INLET*									2					634	2.32																			
		d	20.0' L+ "E2" 172+10.00	18" CSP (0.064" THICK) W/ELBOW																						1												
		e	111.3' R+ "E2" 172+10.00	18" AFES																													1					
		f	111.3' R+ "E2" 172+10.00	RSP (LIGHT, METHOD B)*																															17.1		6.0	
		g	19.2' L+ "E2" 172+00.00	GLD																												6.0						
D-8, 11	54	a	2.0' L+ "E1" 174+00.00	G1 INLET									1					326	1.17																			
		b	2.0' L+ "E1" 174+00.00	18" APC																																		
		c	2.0' L+ "E1" 173+50.00	G1 INLET									1					326	1.19																			
		d	2.0' L+ "E1" 173+50.00	18" APC																																		
		e	2.0' L+ "E1" 173+00.00	G1 INLET									1					326	1.19																			
		f	2.0' L+ "E1" 173+00.00	18" APC																																		
		g	2.0' L+ "E1" 172+54.00	G1 INLET									1					326	1.19																			
		h	2.0' L+ "E1" 172+54.00	18" APC																																		
		i	71.3' L+ "E1" 172+54.00	18" AFES																													1					
D-10	55	a	64.9' L+ "A" 177+95.58	REMOVE 12" CMP					46.3																													
D-10	56	a	5.8' R+ "WFR" 8+63.38	REMOVE 12" CMP					46.4																													
D-10	57	a	8.4' R+ "WFR" 8+67.47	REMOVE HW				1																														
		b	8.4' R+ "WFR" 8+67.47	REMOVE 24" CMP					83.6																													
		c	63.2' L+ "WFR" 9+11.98	REMOVE INLET							1																											
		d	63.2' L+ "WFR" 9+11.98	REMOVE 24" CMP					75.3																													
		e	139.8' L+ "WFR" 9+17.69	REMOVE HW				1																														
D-10	58	a	80.9' L+ "A" 180+86.86	REMOVE 12" CMP					45.0																													
SHEET TOTAL								2	296.6		1		8		1			2826	9.36		1.1	13.7				1						6.0	2		17.1		6.0	

NOTES:

1. *: SEE DRAINAGE DETAIL SHEETS.
2. (N): NOT A SEPARATE PAY ITEM, FOR INFORMATION ONLY.

DRAINAGE QUANTITIES

DQ-17

REVISED BY | DATE REVISED

VU TRAN | HA VU

CALCULATED-DESIGNED BY | CHECKED BY

FUNCTIONAL SUPERVISOR: GEORGE MORHIG

STATE OF CALIFORNIA - DEPARTMENT OF TRANSPORTATION

Caltrans DESIGN

LAST REVISION 01-30-14 | DATE PLOTTED => 30-JUN-2014 | TIME PLOTTED => 05:30

Dist	COUNTY	ROUTE	POST MILES TOTAL PROJECT	SHEET No.	TOTAL SHEETS
08	SBd	15	42.5/46.0	226	824

REGISTERED CIVIL ENGINEER 1-30-14 DATE

6-23-14
PLANS APPROVAL DATE

REGISTERED PROFESSIONAL ENGINEER HA VU No. C61359 Exp. 6-30-15 CIVIL STATE OF CALIFORNIA

THE STATE OF CALIFORNIA OR ITS OFFICERS OR AGENTS SHALL NOT BE RESPONSIBLE FOR THE ACCURACY OR COMPLETENESS OF SCANNED COPIES OF THIS PLAN SHEET.

REVISED BY: VU TRAN
DATE REVISED: HA VU
CALCULATED-DESIGNED BY: CHECKED BY
FUNCTIONAL SUPERVISOR: GEORGE MORHIG

APC 18" LF	APC 24" LF	APC 30" LF	APC 36" LF	APC 42" LF	APC 48" LF	APC 60" LF	APC 72" LF	APL 24" LF	APL 30" LF	APL 36" LF	APL 42" LF	APL 48" LF	APL 60" LF	APC (JACKED) 42" LF	APC (JACKED) 48" LF	APC (JACKED) 60" LF	CSP (0.064" THICK) 12" LF	CSP (0.064" THICK) 18" LF	CSP (0.064" THICK) 24" LF	CSP (0.079" THICK) 36" LF	RCP 18" LF	RCP 24" LF	RCP 30" LF	RCP 36" LF	12" CSP RISER (0.064" THICK) LF	36" CSP INLET (0.079" THICK) LF	36" PRECAST Conc PIPE INLET LF	36" PRECAST Conc PIPE MH LF	JOINT CLASSIFICATION (N)	MAXIMUN COVER (N) FT	HEIGHT OF INLET (N) FT	DESCRIPTION	STATION	DRAINAGE UNIT No. ◯	DRAINAGE SYSTEM No. ⬡	DRAINAGE PLAN SHEET No.
																															2.5	G1 INLET W/HMA APRON*	84.5' R+ "DS1" 5097+20.00	a	51	D-8
2.3																													S	1.7		18" APC	84.5' R+ "DS1" 5097+20.00	b		
																															2.7	G1 INLET W/HMA APRON*	84.5' R+ "DS1" 5098+20.00	a	52	D-8
2.3																													S	1.9		18" APC	84.5' R+ "DS1" 5098+20.00	b		
																										4.0			D		3.5	GMP INLET W/HMA APRON*	16.4' L+ "CD1" 172+15.00	a	53	D-8
64.1																													S	4.7		18" APC	16.4' L+ "CD1" 172+15.00	b		
																															5.4	MOD G1 INLET*	20.0' L+ "E2" 172+10.00	c		
																		93.8											D	5.5		18" CSP (0.064" THICK) W/ELBOW	20.0' L+ "E2" 172+10.00	d		
																																18" AFES	111.3' R+ "E2" 172+10.00	e		
																																RSP (LIGHT, METHOD B)*	111.3' R+ "E2" 172+10.00	f		
																																GLD	19.2' L+ "E2" 172+00.00	g		
																															4.0	G1 INLET	2.0' L+ "E1" 174+00.00	a	54	D-8, 11
47.0																													S	2.6		18" APC	2.0' L+ "E1" 174+00.00	b		
																															4.1	G1 INLET	2.0' L+ "E1" 173+50.00	c		
47.0																													S	2.6		18" APC	2.0' L+ "E1" 173+50.00	d		
																															4.1	G1 INLET	2.0' L+ "E1" 173+00.00	e		
43.0																													S	2.6		18" APC	2.0' L+ "E1" 173+00.00	f		
																															4.1	G1 INLET	2.0' L+ "E1" 172+54.00	g		
72.1																													S	3.8		18" APC	2.0' L+ "E1" 172+54.00	h		
																																18" AFES	71.3' L+ "E1" 172+54.00	i		
																																REMOVE 12" CMP	64.9' L+ "A" 177+95.58	a	55	D-10
																																REMOVE 12" CMP	5.8' R+ "WFR" 8+63.38	a	56	D-10
																																REMOVE HW	8.4' R+ "WFR" 8+67.47	a	57	D-10
																																REMOVE 24" CMP	8.4' R+ "WFR" 8+67.47	b		
																																REMOVE INLET	63.2' L+ "WFR" 9+11.98	c		
																																REMOVE 24" CMP	63.2' L+ "WFR" 9+11.98	d		
																																REMOVE HW	139.8' L+ "WFR" 9+17.69	e		
																																REMOVE 12" CMP	80.9' L+ "A" 180+86.86	a	58	D-10
277.8																		93.8								4.0						SHEET TOTAL				

NOTES:

1. *: SEE DRAINAGE DETAIL SHEETS.
2. (N): NOT A SEPARATE PAY ITEM, FOR INFORMATION ONLY.

DRAINAGE QUANTITIES
DQ-18

STATE OF CALIFORNIA - DEPARTMENT OF TRANSPORTATION
Caltrans DESIGN

LAST REVISION 01-30-14 | DATE PLOTTED => 30-JUN-2014 | TIME PLOTTED => 05:30

Dist	COUNTY	ROUTE	POST MILES TOTAL PROJECT	SHEET No.	TOTAL SHEETS
08	SBd	15	42.5/46.0	227	824

REGISTERED CIVIL ENGINEER 1-30-14 DATE

6-23-14
PLANS APPROVAL DATE

REGISTERED PROFESSIONAL ENGINEER HA VU No. C61359 Exp. 6-30-15 CIVIL STATE OF CALIFORNIA

THE STATE OF CALIFORNIA OR ITS OFFICERS OR AGENTS SHALL NOT BE RESPONSIBLE FOR THE ACCURACY OR COMPLETENESS OF SCANNED COPIES OF THIS PLAN SHEET.

DRAINAGE PLAN SHEET No.	DRAINAGE SYSTEM No. (⬡)	DRAINAGE UNIT No. (◯)	STATION	DESCRIPTION	ABANDON CULVERT (LF)	SAND BACKFILL	REMOVE CONCRETE (CHANNEL)	REMOVE HEADWALL	REMOVE CULVERT (LF)	REMOVE GRATED LINE DRAIN	REMOVE INLET	ABANDON INLET	FRAME, GRATE, CHECKERED PLATE, AND MH (N): TYPE 24-12	TYPE 24-12X	TYPE 36R	1/4" CHECKERED PL COVER	MANHOLE	Misc IRON AND STEEL	MINOR Conc (MINOR STRUCTURE)	MINOR Conc (Misc Const)	HOT MIX ASPHALT (TYPE A)	PLACE HMA (Misc AREA)	CAP INLET	CONCRETE COLLAR (N)	12" ELBOW (N)	18" ELBOW (N)	10'x 6' PRECAST REINFORCED CONCRETE BOX CULVERT	STRUCTURAL Conc, BOX Culv	STRUCTURAL Conc, HEADWALL	BAR REINFORCING STEEL	CABLE RAILING	GRATED LINE DRAIN	AFES 18"	AFES 30"	RSP FABRIC (CLASS 8)	RSP (METHOD B) FACING	RSP (METHOD B) LIGHT	RSP (METHOD B) 1/4T
					LF	CY	LF	EA	LF	LF	EA	EA	EA	EA	EA	EA	EA	LB	CY	CY	TON	SQYD	EA	EA	EA	EA	LF	CY	CY	LB	LF	LF	EA	EA	SQYD	CY	CY	CY
D-10,11	59	a	9.0′ R+ "E1" 184+60.93	REMOVE HW				1																														
		b	76.1′ R+ "E1" 184+55.00	HW AND CABLE RAILING																									2.75	160	15.0							
		c	76.1′ R+ "E1" 184+55.00	48" APC																																		
		d	18.1′ R+ "E1" 184+58.02	CONCRETE COLLAR*																				1														
		e	18.1′ R+ "E1" 184+58.02	48" APL																																		
		f	67.0′ R+ "A" 184+50.00	GMP INLET W/HMA APRON*											1			236	0.40		0.5	4.5																
				12" CSP RISER (0.064" THICK)																																		
		g	91.9′ L+ "A" 184+53.00	REMOVE HW				1																														
		h	90.2′ L+ "A" 184+52.97	CONCRETE COLLAR*																				1														
		i	90.2′ L+ "A" 184+52.97	48" APC																																		
		j	72.8′ L+ "WFR" 15+06.00	HW AND CABLE RAILING																									2.75	160	15.0							
		k	72.8′ L+ "WFR" 15+06.00	RSP (LIGHT, METHOD B)*																															57.3		26.7	
D-11	60	a	15.4′ R+ "CD1" 174+78.16	REMOVE 12" CMP					59.7																													
D-11	61	a	89.8′ L+ "E2" 180+00.00	HW																									1.95	105								
		b	89.8′ L+ "E2" 180+00.00	36" RCP																																		
		c	89.0′ R+ "E1" 175+75.00	HW																									1.95	105								
		d	89.0′ R+ "E1" 175+75.00	RSP (LIGHT, METHOD B)*																															37.3		16.0	
D-11	62	a	54.3′ R+ "E2" 176+72.05	REMOVE 12" CMP					25.4																													
D-11	63	a	28.8′ R+ "E2" 176+58.09	REMOVE HW				1																														
		b	28.8′ R+ "E2" 176+58.09	REMOVE 24" CMP					77.4																													
		c	25.7′ R+ "E2" 177+56.30	REMOVE INLET							1																											
		d	25.7′ R+ "E2" 177+56.30	REMOVE 24" CMP					75.0																													
		e	3.1′ R+ "E2" 178+39.83	REMOVE HW				1																														
D-11	64	a	38.7′ L+ "E1" 179+16.00	HW																									1.52	90								
		b	38.7′ L+ "E1" 179+16.00	30" APC																																		
		c	31.0′ R+ "E1" 179+80.00	GMP INLET W/HMA APRON*											1			236	0.40		0.5	4.5																
				12" CSP RISER (0.064" THICK)																																		
		d	72.5′ R+ "E1" 180+31.00	HW																									1.52	90								
		e	72.5′ R+ "E1" 180+31.00	RSP (LIGHT, METHOD B)*																															27.8		11.1	
D-11	65	a	66.1′ R+ "A" 180+90.81	REMOVE 12" CMP					47.2																													
			SHEET TOTAL					4	284.7		1				2			472	0.80		1.0	9.0		2					12.44	710	30.0				122.4		53.8

NOTES:
1. *: SEE DRAINAGE DETAIL SHEETS.
2. (N): NOT A SEPARATE PAY ITEM, FOR INFORMATION ONLY.

DRAINAGE QUANTITIES
DQ-19

REVISED BY | DATE REVISED
VU TRAN | HA VU
CALCULATED-DESIGNED BY | CHECKED BY
FUNCTIONAL SUPERVISOR: GEORGE MORHIG
STATE OF CALIFORNIA - DEPARTMENT OF TRANSPORTATION
Caltrans DESIGN

LAST REVISION 01-30-14 | DATE PLOTTED => 30-JUN-2014 | TIME PLOTTED => 05:30

Dist	COUNTY	ROUTE	POST MILES TOTAL PROJECT	SHEET No.	TOTAL SHEETS
08	SBd	15	42.5/46.0	228	824

REGISTERED CIVIL ENGINEER 1-30-14 DATE

6-23-14
PLANS APPROVAL DATE

REGISTERED PROFESSIONAL ENGINEER HA VU No. C61359 Exp. 6-30-15 CIVIL STATE OF CALIFORNIA

THE STATE OF CALIFORNIA OR ITS OFFICERS OR AGENTS SHALL NOT BE RESPONSIBLE FOR THE ACCURACY OR COMPLETENESS OF SCANNED COPIES OF THIS PLAN SHEET.

APC 18" LF	APC 24" LF	APC 30" LF	APC 36" LF	APC 42" LF	APC 48" LF	APC 60" LF	APC 72" LF	APL 24" LF	APL 30" LF	APL 36" LF	APL 42" LF	APL 48" LF	APL 60" LF	APC (JACKED) 42" LF	APC (JACKED) 48" LF	APC (JACKED) 60" LF	CSP 12" (0.064" THICK) LF	CSP 18" (0.064" THICK) LF	CSP 24" (0.064" THICK) LF	CSP 36" (0.079" THICK) LF	RCP 18" LF	RCP 24" LF	RCP 30" LF	RCP 36" LF	12" CSP RISER (0.064" THICK) LF	36" CSP INLET (0.079" THICK) LF	36" PRECAST Conc PIPE INLET LF	36" PRECAST Conc PIPE MH LF	JOINT CLASSIFICATION (N)	MAXIMUN COVER (N) FT	HEIGHT OF INLET (N) FT	DESCRIPTION	STATION	DRAINAGE UNIT No.	DRAINAGE SYSTEM No.	DRAINAGE PLAN SHEET No.
																																REMOVE HW	9.0′ R+ "E1" 184+60.93	a	59	D-10,11
																																HW AND CABLE RAILING	76.1′ R+ "E1" 184+55.00	b		
					69.1																								S	19.3		48" APC	76.1′ R+ "E1" 184+55.00	c		
																																CONCRETE COLLAR*	18.1′ R+ "E1" 184+58.02	d		
												176.1																				48" APL	18.1′ R+ "E1" 184+58.02	e		
																										8.2			D		7.7	GMP INLET W/HMA APRON*	67.0′ R+ "A" 184+50.00	f		
																									10.5				D			12" CSP RISER (0.064" THICK)				
																																REMOVE HW	91.9′ L+ "A" 184+53.00	g		
																																CONCRETE COLLAR*	90.2′ L+ "A" 184+52.97	h		
					108.0																								S	21.4		48" APC	90.2′ L+ "A" 184+52.97	i		
																																HW AND CABLE RAILING	72.8′ L+ "WFR" 15+06.00	j		
																																RSP (LIGHT, METHOD B)*	72.8′ L+ "WFR" 15+06.00	k		
																																REMOVE 12" CMP	15.4′ R+ "CD1" 174+78.16	a	60	D-11
																																HW	89.8′ L+ "E2" 180+00.00	a	61	D-11
																								220.2					S	17.9		36" RCP	89.8′ L+ "E2" 180+00.00	b		
																																HW	89.0′ R+ "E1" 175+75.00	c		
																																RSP (LIGHT, METHOD B)*	89.0′ R+ "E1" 175+75.00	d		
																																REMOVE 12" CMP	54.3′ R+ "E2" 176+72.05	a	62	D-11
																																REMOVE HW	28.8′ R+ "E2" 176+58.09	a	63	D-11
																																REMOVE 24" CMP	28.8′ R+ "E2" 176+58.09	b		
																																REMOVE INLET	25.7′ R+ "E2" 177+56.30	c		
																																REMOVE 24" CMP	25.7′ R+ "E2" 177+56.30	d		
																																REMOVE HW	3.1′ R+ "E2" 178+39.83	e		
		160.0																											P	13.2		HW	38.7′ L+ "E1" 179+16.00	a	64	D-11
																																30" APC	38.7′ L+ "E1" 179+16.00	b		
																										4.5			D		4.0	GMP INLET W/HMA APRON*	31.0′ R+ "E1" 179+80.00	c		
																									6.8				D			12" CSP RISER (0.064" THICK)				
																																HW	72.5′ R+ "E1" 180+31.00	d		
																																RSP (LIGHT, METHOD B)*	72.5′ R+ "E1" 180+31.00	e		
																																REMOVE 12" CMP	66.1′ R+ "A" 180+90.81	a	65	D-11
		160.0			177.1							176.1												220.2	17.3	12.7						SHEET TOTAL				

NOTES:
1. *: SEE DRAINAGE DETAIL SHEETS.
2. (N): NOT A SEPARATE PAY ITEM, FOR INFORMATION ONLY.

DRAINAGE QUANTITIES
DQ-20

REVISED BY | DATE REVISED
VU TRAN | HA VU
CALCULATED-DESIGNED BY | CHECKED BY
FUNCTIONAL SUPERVISOR: GEORGE MORHIG
STATE OF CALIFORNIA - DEPARTMENT OF TRANSPORTATION
Caltrans DESIGN

LAST REVISION 01-30-14 | DATE PLOTTED => 30-JUN-2014 | TIME PLOTTED => 05:30

Dist	COUNTY	ROUTE	POST MILES TOTAL PROJECT	SHEET No.	TOTAL SHEETS
08	SBd	15	42.5/46.0	229	824

REGISTERED CIVIL ENGINEER 1-30-14 DATE

6-23-14
PLANS APPROVAL DATE

REGISTERED PROFESSIONAL ENGINEER HA VU No. C61359 Exp. 6-30-15 CIVIL STATE OF CALIFORNIA

THE STATE OF CALIFORNIA OR ITS OFFICERS OR AGENTS SHALL NOT BE RESPONSIBLE FOR THE ACCURACY OR COMPLETENESS OF SCANNED COPIES OF THIS PLAN SHEET.

REVISED BY | DATE REVISED

VU TRAN | HA VU

CALCULATED-DESIGNED BY | CHECKED BY

FUNCTIONAL SUPERVISOR: GEORGE MORHIG

STATE OF CALIFORNIA - DEPARTMENT OF TRANSPORTATION

DESIGN

Caltrans

DRAINAGE PLAN SHEET No.	DRAINAGE SYSTEM No. (⬡)	DRAINAGE UNIT No. (◯)	STATION	DESCRIPTION	ABANDON CULVERT (LF)	SAND BACKFILL	REMOVE CONCRETE (CHANNEL)	REMOVE HEADWALL	REMOVE CULVERT (LF)	REMOVE GRATED LINE DRAIN	REMOVE INLET	ABANDON INLET	FRAME, GRATE, CHECKERED PLATE, AND MH (N): TYPE 24-12	TYPE 24-12X	TYPE 36R	1/4" CHECKERED PL COVER	MANHOLE	Misc IRON AND STEEL	MINOR Conc (MINOR STRUCTURE)	MINOR Conc (Misc Const)	HOT MIX ASPHALT (TYPE A)	PLACE HMA (Misc AREA)	CAP INLET	CONCRETE COLLAR (N)	12" ELBOW (N)	18" ELBOW (N)	10'x6' PRECAST REINFORCED CONCRETE BOX CULVERT	STRUCTURAL Conc, BOX Culv	STRUCTURAL Conc, HEADWALL	BAR REINFORCING STEEL	CABLE RAILING	GRATED LINE DRAIN	AFES 18"	AFES 30"	RSP FABRIC (CLASS 8)	RSP (METHOD B) FACING	RSP (METHOD B) LIGHT	RSP (METHOD B) 1/4T
					LF	CY	LF	EA	LF	LF	EA	EA	EA	EA	EA	EA	EA	LB	CY	CY	TON	SQYD	EA	EA	EA	EA	LF	CY	CY	LB	LF	LF	EA	EA	SQYD	CY	CY	CY
D-11	66	a	31.0' Rt "E1" 183+00.00	GMP INLET W/HMA APRON*											1			236	0.40		0.5	4.5																
		b	31.0' Rt "E1" 183+00.00	18" CSP (0.064" THICK) W/ELBOW																					1													
		c	77.0' Rt "E1" 183+00.00	18" AFES																													1					
D-11,12	67	a	86.5' Rt "A" 185+66.96	CONCRETE COLLAR*																				1														
		b	86.5' Rt "A" 185+66.96	18" APC																																		
D-12	68	a	50.0' Rt "A" 185+60.04	REMOVE 12" CMP					42.1																													
D-12	69	a	65.2' Lt "A" 186+22.16	CONCRETE COLLAR*																				1														
		b	65.2' Lt "A" 186+22.16	18" APC																																		
		c	33.0' Rt "WFR" 16+50.00	GMP INLET W/HMA APRON*											1			236	0.40		0.5	4.5																
		d	33.0' Rt "WFR" 16+50.00	18" APC																																		
		e	25.0' Lt "WFR" 16+50.00	GMP INLET W/HMA APRON*											1			236	0.40		0.5	4.5																
		f	25.0' Lt "WFR" 16+50.00	18" CSP (0.064" THICK) W/ELBOW																					1													
		g	74.4' Lt "WFR" 16+50.00	18" AFES																													1					
		h	74.4' Lt "WFR" 16+50.00	RSP (LIGHT, METHOD B)*																															17.1		6.0	
D-12	70	a	16.2' Lt "WFR" 17+24.71	CONCRETE COLLAR*																				1														
			16.2' Lt "WFR" 17+24.71	18" APC																																		
D-12	71	a	46.4' Lt "A" 186+31.88	REMOVE 12" CMP					52.3																													
D-12	72	a	70.5' Rt "A" 192+14.90	CONCRETE COLLAR*																				1														
		b	70.5' Rt "A" 192+14.90	18" APC																																		
		c	90.3' Rt "A" 192+35.00	MOD G1 INLET*									2					634	2.29																			
		d	90.3' Rt "A" 192+35.00	18" CSP (0.064" THICK) W/ELBOW																					1													
		e	132.1' Rt "A" 192+35.00	18" AFES																													1					
D-12	73	a	16.2' Lt "WFR" 23+19.96	CONCRETE COLLAR*																				1														
		b	16.2' Lt "WFR" 23+19.96	18" APC																																		
D-12	74	a	65.2' Lt "A" 192+64.29	CONCRETE COLLAR*																				1														
		b	65.2' Lt "A" 192+64.30	18" APC																																		
		c	16.0' Lt "WFR" 23+40	G2 INLET									1					326	2.51																			
		d	16.0' Lt "WFR" 23+40	18" CSP (0.064" THICK)																																		
			SHEET TOTAL						94.4				3		3			1668	6.00		1.5	13.5		6		3							3		17.1		6.0	

NOTES:

1. *: SEE DRAINAGE DETAIL SHEETS.
2. (N): NOT A SEPARATE PAY ITEM, FOR INFORMATION ONLY.

DRAINAGE QUANTITIES
DQ-21

LAST REVISION 01-30-14 | DATE PLOTTED => 30-JUN-2014 | TIME PLOTTED => 05:30

Dist	COUNTY	ROUTE	POST MILES TOTAL PROJECT	SHEET No.	TOTAL SHEETS
08	SBd	15	42.5/46.0	230	824

REGISTERED CIVIL ENGINEER 1-30-14 DATE

6-23-14
PLANS APPROVAL DATE

REGISTERED PROFESSIONAL ENGINEER HA VU No. C61359 Exp. 6-30-15 CIVIL STATE OF CALIFORNIA

THE STATE OF CALIFORNIA OR ITS OFFICERS OR AGENTS SHALL NOT BE RESPONSIBLE FOR THE ACCURACY OR COMPLETENESS OF SCANNED COPIES OF THIS PLAN SHEET.

APC 18" LF	APC 24" LF	APC 30" LF	APC 36" LF	APC 42" LF	APC 48" LF	APC 60" LF	APC 72" LF	APL 24" LF	APL 30" LF	APL 36" LF	APL 42" LF	APL 48" LF	APL 60" LF	APC (JACKED) 42" LF	APC (JACKED) 48" LF	APC (JACKED) 60" LF	CSP 12" (0.064" THICK) LF	CSP 18" (0.064" THICK) LF	CSP 24" (0.064" THICK) LF	CSP 36" (0.079" THICK) LF	RCP 18" LF	RCP 24" LF	RCP 30" LF	RCP 36" LF	12" CSP RISER (0.064" THICK) LF	36" CSP INLET (0.079" THICK) LF	36" PRECAST Conc PIPE INLET LF	36" PRECAST Conc PIPE MH LF	JOINT CLASSIFICATION (N)	MAXIMUN COVER (N) FT	HEIGHT OF INLET (N) FT	DESCRIPTION	STATION	DRAINAGE UNIT No.	DRAINAGE SYSTEM No.	DRAINAGE PLAN SHEET No.
																										4.5			D		4.0	GMP INLET W/HMA APRON*	31.0' R+ "E1" 183+00.00	a	66	D-11
																		47.0											D	6.7		18" CSP (0.064" THICK) W/ELBOW	31.0' R+ "E1" 183+00.00	b		
																																18" AFES	77.0' R+ "E1" 183+00.00	c		
																																CONCRETE COLLAR*	86.5' R+ "A" 185+66.96	a	67	D-11,12
120.0																													P	7.1		18" APC	86.5' R+ "A" 185+66.96	b		
																																REMOVE 12" CMP	50.0' R+ "A" 185+60.04	a	68	D-12
																																CONCRETE COLLAR*	65.2' L+ "A" 186+22.16	a	69	D-12
40.0																													P	4.0		18" APC	65.2' L+ "A" 186+22.16	b		
																										4.5			D		4.0	GMP INLET W/HMA APRON*	33.0' R+ "WFR" 16+50.00	c		
55.0																													S	4.3		18" APC	33.0' R+ "WFR" 16+50.00	d		
																										8.7			D		8.2	GMP INLET W/HMA APRON*	25.0' L+ "WFR" 16+50.00	e		
																		49.9											D	9.4		18" CSP (0.064" THICK) W/ELBOW	25.0' L+ "WFR" 16+50.00	f		
																																18" AFES	74.4' L+ "WFR" 16+50.00	g		
																																RSP (LIGHT, METHOD B)*	74.4' L+ "WFR" 16+50.00	h		
																																CONCRETE COLLAR*	16.2' L+ "WFR" 17+24.71	a	70	D-12
74.5																													P	6.6		18" APC	16.2' L+ "WFR" 17+24.71			
																																REMOVE 12" CMP	46.4' L+ "A" 186+31.88	a	71	D-12
																																CONCRETE COLLAR*	70.5' R+ "A" 192+14.90	a	72	D-12
29.6																													P	3.7		18" APC	70.5' R+ "A" 192+14.90	b		
																															5.3	MOD G1 INLET*	90.3' R+ "A" 192+35.00	c		
																		44.3											D	5.6		18" CSP (0.064" THICK) W/ELBOW	90.3' R+ "A" 192+35.00	d		
																																18" AFES	132.1' R+ "A" 192+35.00	e		
																																CONCRETE COLLAR*	16.2' L+ "WFR" 23+19.96	a	73	D-12
18.6																													S	6.1		18" APC	16.2' L+ "WFR" 23+19.96	b		
																																CONCRETE COLLAR*	65.2' L+ "A" 192+64.29	a	74	D-12
90.5																													P	6.1		18" APC	65.2' L+ "A" 192+64.30	b		
																															7.7	G2 INLET	16.0' L+ "WFR" 23+40	c		
																		48.2											D	9.4		18" CSP (0.064" THICK)	16.0' L+ "WFR" 23+40	d		
428.2																		189.4								17.7						SHEET TOTAL				

NOTES:

1. *: SEE DRAINAGE DETAIL SHEETS.
2. (N): NOT A SEPARATE PAY ITEM, FOR INFORMATION ONLY.

DRAINAGE QUANTITIES
DQ-22

VU TRAN | HA VU | REVISED BY | DATE REVISED
CALCULATED-DESIGNED BY | CHECKED BY
FUNCTIONAL SUPERVISOR | GEORGE MORHIG
STATE OF CALIFORNIA - DEPARTMENT OF TRANSPORTATION
Caltrans DESIGN

LAST REVISION 01-30-14 | DATE PLOTTED => 30-JUN-2014 | TIME PLOTTED => 05:30

Dist	COUNTY	ROUTE	POST MILES TOTAL PROJECT	SHEET No.	TOTAL SHEETS
08	SBd	15	42.5/46.0	231	824

REGISTERED CIVIL ENGINEER 1-30-14 DATE

6-23-14
PLANS APPROVAL DATE

REGISTERED PROFESSIONAL ENGINEER HA VU No. C61359 Exp. 6-30-15 CIVIL STATE OF CALIFORNIA

THE STATE OF CALIFORNIA OR ITS OFFICERS OR AGENTS SHALL NOT BE RESPONSIBLE FOR THE ACCURACY OR COMPLETENESS OF SCANNED COPIES OF THIS PLAN SHEET.

DRAINAGE PLAN SHEET No.	DRAINAGE SYSTEM No. ⬡	DRAINAGE UNIT No. ◯	STATION	DESCRIPTION	ABANDON CULVERT (LF)	SAND BACKFILL	REMOVE CONCRETE (CHANNEL)	REMOVE HEADWALL	REMOVE CULVERT (LF)	REMOVE GRATED LINE DRAIN	REMOVE INLET	ABANDON INLET	FRAME, GRATE, CHECKERED PLATE, AND MH (N): TYPE 24-12	TYPE 24-12X	TYPE 36R	1/4" CHECKERED ℞ COVER	MANHOLE	Misc IRON AND STEEL	MINOR Conc (MINOR STRUCTURE)	MINOR Conc (Misc Const)	HOT MIX ASPHALT (TYPE A)	PLACE HMA (Misc AREA)	CAP INLET	CONCRETE COLLAR (N)	12" ELBOW (N)	18" ELBOW (N)	10'x 6' PRECAST REINFORCED CONCRETE BOX CULVERT	STRUCTURAL Conc, BOX Culv	STRUCTURAL Conc, HEADWALL	BAR REINFORCING STEEL	CABLE RAILING	GRATED LINE DRAIN	AFES: 18"	AFES: 30"	RSP: FABRIC (CLASS 8)	RSP (METHOD B): FACING	RSP (METHOD B): LIGHT	RSP (METHOD B): 1/4T
					LF	CY	LF	EA	LF	LF	EA	EA	EA	EA	EA	EA	EA	LB	CY	CY	TON	SQYD	EA	EA	EA	EA	LF	CY	CY	LB	LF	LF	EA	EA	SQYD	CY	CY	CY
D-12	74	e	64.2' Lt "WFR" 23+40	18" AFES																													1					
		f	64.2' Lt "WFR" 23+40	RSP (LIGHT, METHOD B)*																															17.1		6.0	
D-12	75	a	44.7' Rt "A" 193+15.44	REMOVE 12" CMP					42.3																													
D-12,13	76	a	1.6' Rt "A" 196+23.00	REMOVE GLD						98.0																												
		b	2.4' Rt "A" 193+32.00	GLD																												64.0						
		c	1.6' Rt "A" 194+00.00	G1 INLET									1					326	1.17																			
		d	1.6' Rt "A" 194+00.00	24" APC																																		
D-13	77	a	86.6' Rt "A" 196+10.50	REMOVE HW				1																														
		b	131.0' Rt "A" 196+04.00	HW																									1.95	105								
		c	131.0' Rt "A" 196+04.00	36" APC																																		
		d	84.9' Rt "A" 196+10.77	CONCRETE COLLAR*																				1														
		e	84.9' Rt "A" 196+10.77	36" APL																																		
		f	44.0' Lt "A" 196+31.15	CAP INLET*																			1															
		g	78.1' Lt "A" 196+36.71	REMOVE HW				1																														
		h	48.8' Rt "WFR" 26+80.46	CONCRETE COLLAR*																				1														
		i	48.8' Rt "WFR" 26+80.46	36" APC																																		
		j	25.0' Lt "WFR" 26+98.00	GMP INLET W/HMA APRON*											1			236	0.40		0.5	4.5																
				12" CSP RISER (0.064" THICK)																																		
		k	69.3' Lt "WFR" 27+12.00	HW																									1.95	105								
		l	69.3' Lt "WFR" 27+12.00	RSP (LIGHT, METHOD B)*																															37.3		16.0	
D-13	78	a	76.5' Rt "A" 199+36.22	REMOVE HW				1																														
		b	119.6' Rt "A" 199+29.00	HW, WW TYPE "A", & CABLE RAILING																									26.13	2760	43.7							
		c	119.6' Rt "A" 199+29.00	60" APC																																		
		d	74.5' Rt "A" 199+36.59	CONCRETE COLLAR*																				1														
		e	74.5' Rt "A" 199+36.59	60" APL																																		
		f	75.7' Lt "A" 199+66.31	REMOVE HW				1																														
		g	75.7' Lt "A" 199+66.31	REMOVE 60" CMP					23.7																													
		h	10.5' Rt "SW3" 199+52.66	CONCRETE COLLAR*																				1														
		i	10.5' Rt "SW3" 199+52.66	60" APC																																		
		j	63.5' Lt "SW3" 200+50.00	HW, WW TYPE "A", & CABLE RAILING																									54.88	5174	87.2							
		k	63.5' Lt "SW3" 200+50.00	RSP (LIGHT, METHOD B)*																															148.2		79.3	
SHEET TOTAL								4	66.0	98.0			1		1			562	1.57		0.5	4.5	1	4					84.91	8144	130.9	64.0	1		202.6		101.3

NOTES:

1. *: SEE DRAINAGE DETAIL SHEETS.
2. (N): NOT A SEPARATE PAY ITEM, FOR INFORMATION ONLY.

DRAINAGE QUANTITIES

DQ-23

VU TRAN | HA VU | REVISED BY | DATE REVISED

CALCULATED-DESIGNED BY | CHECKED BY

FUNCTIONAL SUPERVISOR: GEORGE MORHIG

STATE OF CALIFORNIA - DEPARTMENT OF TRANSPORTATION

Caltrans DESIGN

LAST REVISION 01-30-14 | DATE PLOTTED => 30-JUN-2014 | TIME PLOTTED => 05:30

Dist	COUNTY	ROUTE	POST MILES TOTAL PROJECT	SHEET No.	TOTAL SHEETS
08	SBd	15	42.5/46.0	232	824

REGISTERED CIVIL ENGINEER 1-30-14 DATE

6-23-14
PLANS APPROVAL DATE

REGISTERED PROFESSIONAL ENGINEER HA VU No. C61359 Exp. 6-30-15 CIVIL STATE OF CALIFORNIA

THE STATE OF CALIFORNIA OR ITS OFFICERS OR AGENTS SHALL NOT BE RESPONSIBLE FOR THE ACCURACY OR COMPLETENESS OF SCANNED COPIES OF THIS PLAN SHEET.

APC 18" LF	APC 24" LF	APC 30" LF	APC 36" LF	APC 42" LF	APC 48" LF	APC 60" LF	APC 72" LF	APL 24" LF	APL 30" LF	APL 36" LF	APL 42" LF	APL 48" LF	APL 60" LF	APC (JACKED) 42" LF	APC (JACKED) 48" LF	APC (JACKED) 60" LF	CSP (0.064" THICK) 12" LF	CSP (0.064" THICK) 18" LF	CSP (0.064" THICK) 24" LF	CSP (0.079" THICK) 36" LF	RCP 18" LF	RCP 24" LF	RCP 30" LF	RCP 36" LF	12" CSP RISER (0.064" THICK) LF	36" CSP INLET (0.079" THICK) LF	36" PRECAST Conc PIPE INLET LF	36" PRECAST Conc PIPE MH LF	JOINT CLASSIFICATION (N)	MAXIMUN COVER (N) FT	HEIGHT OF INLET (N) FT	DESCRIPTION	STATION	DRAINAGE UNIT No. ◯	DRAINAGE SYSTEM No. ⬡	DRAINAGE PLAN SHEET No.
																																18" AFES	64.2′ Lt "WFR" 23+40	e	74	D-12
																																RSP (LIGHT, METHOD B)*	64.2′ Lt "WFR" 23+40	f		
																																REMOVE 12" CMP	44.7′ Rt "A" 193+15.44	a	75	D-12
																																REMOVE GLD	1.6′ Rt "A" 196+23.00	a	76	D-12,13
																																GLD	2.4′ Rt "A" 193+32.00	b		
																															4.0	G1 INLET	1.6′ Rt "A" 194+00.00	c		
	220.2																												S	4.0		24" APC	1.6′ Rt "A" 194+00.00	d		
																																REMOVE HW	86.6′ Rt "A" 196+10.50	a	77	D-13
																																HW	131.0′ Rt "A" 196+04.00	b		
			46.6																										S	20.6		36" APC	131.0′ Rt "A" 196+04.00	c		
																																CONCRETE COLLAR*	84.9′ Rt "A" 196+10.77	d		
										163.3																						36" APL	84.9′ Rt "A" 196+10.77	e		
																																CAP INLET*	44.0′ Lt "A" 196+31.15	f		
																																REMOVE HW	78.1′ Lt "A" 196+36.71	g		
																																CONCRETE COLLAR*	48.8′ Rt "WFR" 26+80.46	h		
			130.4																										S	19.6		36" APC	48.8′ Rt "WFR" 26+80.46	i		
																										4.5			D		4.0	GMP INLET W/HMA APRON*	25.0′ Lt "WFR" 26+98.00	j		
																									13.2				D			12" CSP RISER (0.064" THICK)				
																																HW	69.3′ Lt "WFR" 27+12.00	k		
																																RSP (LIGHT, METHOD B)*	69.3′ Lt "WFR" 27+12.00	l		
																																REMOVE HW	76.5′ Rt "A" 199+36.22	a	78	D-13
																																HW, WW TYPE "A", & CABLE RAILING	119.6′ Rt "A" 199+29.00	b		
						45.8																							S	15.7		60" APC	119.6′ Rt "A" 199+29.00	c		
																																CONCRETE COLLAR*	74.5′ Rt "A" 199+36.59	d		
													129.4																			60" APL	74.5′ Rt "A" 199+36.59	e		
																																REMOVE HW	75.7′ Lt "A" 199+66.31	f		
																																REMOVE 60" CMP	75.7′ Lt "A" 199+66.31	g		
																																CONCRETE COLLAR*	10.5′ Rt "SW3" 199+52.66	h		
						124.5																							S	11.8		60" APC	10.5′ Rt "SW3" 199+52.66	i		
																																HW, WW TYPE "A", & CABLE RAILING	63.5′ Lt "SW3" 200+50.00	j		
																																RSP (LIGHT, METHOD B)*	63.5′ Lt "SW3" 200+50.00	k		
	220.2		177.0			170.3				163.3			129.4												13.2	4.5						SHEET TOTAL				

NOTES:

1. *: SEE DRAINAGE DETAIL SHEETS.
2. (N): NOT A SEPARATE PAY ITEM, FOR INFORMATION ONLY.

DRAINAGE QUANTITIES
DQ-24

VU TRAN | HA VU | REVISED BY | DATE REVISED
CALCULATED-DESIGNED BY | CHECKED BY
FUNCTIONAL SUPERVISOR | GEORGE MORHIG
STATE OF CALIFORNIA - DEPARTMENT OF TRANSPORTATION
Caltrans DESIGN

LAST REVISION 01-30-14 | DATE PLOTTED => 30-JUN-2014 | TIME PLOTTED => 05:30

Dist	COUNTY	ROUTE	POST MILES TOTAL PROJECT	SHEET No.	TOTAL SHEETS
08	SBd	15	42.5/46.0	233	824

REGISTERED CIVIL ENGINEER 1-30-14 DATE

6-23-14
PLANS APPROVAL DATE

REGISTERED PROFESSIONAL ENGINEER HA VU No. C61359 Exp. 6-30-15 CIVIL STATE OF CALIFORNIA

THE STATE OF CALIFORNIA OR ITS OFFICERS OR AGENTS SHALL NOT BE RESPONSIBLE FOR THE ACCURACY OR COMPLETENESS OF SCANNED COPIES OF THIS PLAN SHEET.

DRAINAGE PLAN SHEET No.	DRAINAGE SYSTEM No. ⬡	DRAINAGE UNIT No. ◯	STATION	DESCRIPTION	ABANDON CULVERT (LF)	SAND BACKFILL	REMOVE CONCRETE (CHANNEL)	REMOVE HEADWALL	REMOVE CULVERT (LF)	REMOVE GRATED LINE DRAIN	REMOVE INLET	ABANDON INLET	FRAME, GRATE, CHECKERED PLATE, AND MH (N): TYPE 24-12	TYPE 24-12X	TYPE 36R	1/4" CHECKERED PL COVER	MANHOLE	Misc IRON AND STEEL	MINOR Conc (MINOR STRUCTURE)	MINOR Conc (Misc Const)	HOT MIX ASPHALT (TYPE A)	PLACE HMA (Misc AREA)	CAP INLET	CONCRETE COLLAR (N)	12" ELBOW (N)	18" ELBOW (N)	10' x 6' PRECAST REINFORCED CONCRETE BOX CULVERT	STRUCTURAL Conc, BOX Culv	STRUCTURAL Conc, HEADWALL	BAR REINFORCING STEEL	CABLE RAILING	GRATED LINE DRAIN	AFES: 18"	AFES: 30"	RSP: FABRIC (CLASS 8)	RSP (METHOD B): FACING	RSP (METHOD B): LIGHT	RSP (METHOD B): 1/4T
					LF	CY	LF	EA	LF	LF	EA	EA	EA	EA	EA	EA	EA	LB	CY	CY	TON	SQYD	EA	EA	EA	EA	LF	CY	CY	LB	LF	LF	EA	EA	SQYD	CY	CY	CY
D-13	79	a	52.6' L+ "A" 201+04.54	REMOVE 12" CMP					25.7																													
D-13	80	a	19.2' L+ "SW3" 201+50.00	GLD																												4.0						
		b	20.0' L+ "SW3" 201+57.00	MOD G1 INLET*									2					634	2.11																			
		c	20.0' L+ "SW3" 201+57.00	18" CSP (0.064" THICK) W/ELBOW																					1													
		d	88.3' L+ "SW3" 201+57.00	18" AFES																													1					
D-13	81	a	32.0' R+ "WFR" 33+45.00	GMP INLET W/HMA APRON*											1			236	0.40		0.5	4.5																
		b	32.0' R+ "WFR" 33+45.00	18" CSP (0.064" THICK) W/ELBOW																					1													
		c	91.3' R+ "WFR" 33+45.00	18" AFES																													1					
D-13,	82	a	2.4' R+ "A" 203+16.00	REMOVE GLD						873.0																												
14, 16		b	1.6' R+ "A" 203+20.00	MOD G1 INLET*									2					634	1.90																			
		c	1.6' R+ "A" 203+20.00	24" APC																																		
		d	1.7' R+ "A" 206+20.00	MOD G1 INLET*									2					634	2.26																			
		e	1.7' R+ "A" 206+20.00	24" APC																																		
		f	1.7' R+ "A" 209+23.00	18" APC																																		
		g	1.6' R+ "A" 210+05.00	MOD G1 INLET*									2					634	2.41																			
		h	1.6' R+ "A" 210+05.00	18" APC																																		
		i	1.6' R+ "A" 210+80.00	MOD G1 INLET*									2					634	2.11																			
		j	1.6' R+ "A" 210+80.00	18" APC																																		
		k	1.6' R+ "A" 211+06.00	MOD G1 INLET*									2					634	2.05																			
		l	1.6' R+ "A" 211+06.00	18" APC																																		
		m	1.6' R+ "A" 212+40.00	G1 INLET									1					326	1.17																			
		n	2.4' R+ "A" 212+44.00	GLD																												124.0						
D-14	83	a	80.6' L+ "SW3" 205+13.00	HW, WW TYPE "A", & CABLE RAILING																								41.33	4036	66.7								
		b	80.6' L+ "SW3" 205+13.00	60" APC																																		
		c	79.7' R+ "SW3" 208+60.00	HW, WW TYPE "A", & CABLE RAILING																								24.01	2582	40.5								
D-14	84	a	26.0' L+ "WFR" 37+09.00	GMP INLET W/HMA APRON*											1			236	0.40		0.5	4.5																
		b	26.0' L+ "WFR" 37+09.00	18" CSP (0.064" THICK)																																		
		c	87.0' R+ "WFR" 37+09.00	18" AFES																													1					
		d	87.0' R+ "WFR" 37+09.00	RSP (FACING, METHOD B)*																															15.1	4.5	
SHEET TOTAL									25.7	873.0			13		2			4602	14.81		1.0	9.0				2		65.34	6618	107.2	128.0	3		15.1	4.5		

NOTES:

1. *: SEE DRAINAGE DETAIL SHEETS.
2. (N): NOT A SEPARATE PAY ITEM, FOR INFORMATION ONLY.

DRAINAGE QUANTITIES
DQ-25

REVISED BY | DATE REVISED
VU TRAN | HA VU
CALCULATED-DESIGNED BY | CHECKED BY
FUNCTIONAL SUPERVISOR: GEORGE MORHIG
STATE OF CALIFORNIA - DEPARTMENT OF TRANSPORTATION
Caltrans DESIGN

LAST REVISION 01-30-14 | DATE PLOTTED => 30-JUN-2014 | TIME PLOTTED => 05:30

Dist	COUNTY	ROUTE	POST MILES TOTAL PROJECT	SHEET No.	TOTAL SHEETS
08	SBd	15	42.5/46.0	234	824

REGISTERED CIVIL ENGINEER 1-30-14 DATE

6-23-14
PLANS APPROVAL DATE

REGISTERED PROFESSIONAL ENGINEER HA VU No. C61359 Exp. 6-30-15 CIVIL STATE OF CALIFORNIA

THE STATE OF CALIFORNIA OR ITS OFFICERS OR AGENTS SHALL NOT BE RESPONSIBLE FOR THE ACCURACY OR COMPLETENESS OF SCANNED COPIES OF THIS PLAN SHEET.

APC 18" LF	APC 24" LF	APC 30" LF	APC 36" LF	APC 42" LF	APC 48" LF	APC 60" LF	APC 72" LF	APL 24" LF	APL 30" LF	APL 36" LF	APL 42" LF	APL 48" LF	APL 60" LF	APC (JACKED) 42" LF	APC (JACKED) 48" LF	APC (JACKED) 60" LF	CSP 12" (0.064" THICK) LF	CSP 18" (0.064" THICK) LF	CSP 24" (0.064" THICK) LF	CSP 36" (0.079" THICK) LF	RCP 18" LF	RCP 24" LF	RCP 30" LF	RCP 36" LF	12" CSP RISER (0.064" THICK) LF	36" CSP INLET (0.079" THICK) LF	36" PRECAST Conc PIPE INLET LF	36" PRECAST Conc PIPE MH LF	JOINT CLASSIFICATION (N)	MAXIMUN COVER (N) FT	HEIGHT OF INLET (N) FT	DESCRIPTION	STATION	DRAINAGE UNIT No.	DRAINAGE SYSTEM No.	DRAINAGE PLAN SHEET No.
																																REMOVE 12" CMP	52.6' L+ "A" 201+04.54	a	79	D-13
																																GLD	19.2' L+ "SW3" 201+50.00	a	80	D-13
																															4.7	MOD G1 INLET*	20.0' L+ "SW3" 201+57.00	b		
																		69.3											D	4.8		18" CSP (0.064" THICK) W/ELBOW	20.0' L+ "SW3" 201+57.00	c		
																																18" AFES	88.3' L+ "SW3" 201+57.00	d		
																										4.5			D		4.0	GMP INLET W/HMA APRON*	32.0' R+ "WFR" 33+45.00	a	81	D-13
																		62.9											D	5.0		18" CSP (0.064" THICK) W/ELBOW	32.0' R+ "WFR" 33+45.00	b		
																																18" AFES	91.3' R+ "WFR" 33+45.00	c		
																																REMOVE GLD	2.4' R+ "A" 203+16.00	a	82	D-13,
																															4.0	MOD G1 INLET*	1.6' R+ "A" 203+20.00	b		14, 16
	297.4																												S	3.2		24" APC	1.6' R+ "A" 203+20.00	c		
																															5.2	MOD G1 INLET*	1.7' R+ "A" 206+20.00	d		
	300.4																												S	4.9		24" APC	1.7' R+ "A" 206+20.00	e		
79.0																													S	4.9		18" APC	1.7' R+ "A" 209+23.00	f		
																															5.7	MOD G1 INLET*	1.6' R+ "A" 210+05.00	g		
72.1																													S	4.2		18" APC	1.6' R+ "A" 210+05.00	h		
																															4.7	MOD G1 INLET*	1.6' R+ "A" 210+80.00	i		
23.0																													S	3.2		18" APC	1.6' R+ "A" 210+80.00	j		
																															4.5	MOD G1 INLET*	1.6' R+ "A" 211+06.00	k		
131.0																													S	3.0		18" APC	1.6' R+ "A" 211+06.00	l		
																															4.0	G1 INLET	1.6' R+ "A" 212+40.00	m		
																																GLD	2.4' R+ "A" 212+44.00	n		
																																HW, WW TYPE "A", & CABLE RAILING	80.6' L+ "SW3" 205+13.00	a	83	D-14
						396.7																							S	37.4		60" APC	80.6' L+ "SW3" 205+13.00	b		
																																HW, WW TYPE "A", & CABLE RAILING	79.7' R+ "SW3" 208+60.00	c		
																										4.5			D		4.0	GMP INLET W/HMA APRON*	26.0' L+ "WFR" 37+09.00	a	84	D-14
																		113.4											D	14.1		18" CSP (0.064" THICK)	26.0' L+ "WFR" 37+09.00	b		
																																18" AFES	87.0' R+ "WFR" 37+09.00	c		
																																RSP (FACING, METHOD B)*	87.0' R+ "WFR" 37+09.00	d		
305.1	597.8					396.7												245.6								9.0						SHEET TOTAL				

NOTES:

1. *: SEE DRAINAGE DETAIL SHEETS.
2. (N): NOT A SEPARATE PAY ITEM, FOR INFORMATION ONLY.

DRAINAGE QUANTITIES
DQ-26

VU TRAN | HA VU | REVISED BY | DATE REVISED | CALCULATED-DESIGNED BY | CHECKED BY | FUNCTIONAL SUPERVISOR GEORGE MORHIG

STATE OF CALIFORNIA - DEPARTMENT OF TRANSPORTATION
Caltrans DESIGN

LAST REVISION 01-30-14 | DATE PLOTTED => 30-JUN-2014 | TIME PLOTTED => 05:30

Dist	COUNTY	ROUTE	POST MILES TOTAL PROJECT	SHEET No.	TOTAL SHEETS
08	SBd	15	42.5/46.0	235	824

REGISTERED CIVIL ENGINEER 1-30-14 DATE

6-23-14
PLANS APPROVAL DATE

REGISTERED PROFESSIONAL ENGINEER HA VU No. C61359 Exp. 6-30-15 CIVIL STATE OF CALIFORNIA

THE STATE OF CALIFORNIA OR ITS OFFICERS OR AGENTS SHALL NOT BE RESPONSIBLE FOR THE ACCURACY OR COMPLETENESS OF SCANNED COPIES OF THIS PLAN SHEET.

DRAINAGE PLAN SHEET No.	DRAINAGE SYSTEM No. ⬡	DRAINAGE UNIT No. ◯	STATION	DESCRIPTION	ABANDON CULVERT (LF)	SAND BACKFILL	REMOVE CONCRETE (CHANNEL)	REMOVE HEADWALL	REMOVE CULVERT (LF)	REMOVE GRATED LINE DRAIN	REMOVE INLET	ABANDON INLET	FRAME, GRATE, CHECKERED PLATE, AND MH (N) TYPE 24-12	TYPE 24-12X	TYPE 36R	1/4" CHECKERED PL COVER	MANHOLE	Misc IRON AND STEEL	MINOR Conc (MINOR STRUCTURE)	MINOR Conc (Misc Const)	HOT MIX ASPHALT (TYPE A)	PLACE HMA (Misc AREA)	CAP INLET	CONCRETE COLLAR (N)	12" ELBOW (N)	18" ELBOW (N)	10'x6' PRECAST REINFORCED CONCRETE BOX CULVERT	STRUCTURAL Conc, BOX Culv	STRUCTURAL Conc, HEADWALL	BAR REINFORCING STEEL	CABLE RAILING	GRATED LINE DRAIN	AFES 18"	AFES 30"	RSP FABRIC (CLASS 8)	RSP (METHOD B) FACING	RSP (METHOD B) LIGHT	RSP (METHOD B) 1/4T
					LF	CY	LF	EA	LF	LF	EA	EA	EA	EA	EA	EA	EA	LB	CY	CY	TON	SQYD	EA	EA	EA	EA	LF	CY	CY	LB	LF	LF	EA	EA	SQYD	CY	CY	CY
D-14	85	a	75.3' Rt "A" 208+10.00	HMA DITCH*																	3.4	16.5																
		b	122.3' Rt "A" 208+36.00	RSP (FACING, METHOD B)*																															4.6	0.9		
D-14	86	a	79.5' Rt "A" 209+36.59	REMOVE HW				1																														
		b	98.6' Rt "A" 209+40.00	HW, WW TYPE "A", & CABLE RAILING																									41.13	4020	66.4							
		c	98.6' Rt "A" 209+40.00	60" APC																																		
		d	77.5' Rt "A" 209+36.26	CONCRETE COLLAR*																				1														
		e	77.5' Rt "A" 209+36.26	60" APL																																		
		f	101.7' Lt "A" 209+03.73	REMOVE HW				1																														
		g	101.7' Lt "A" 209+03.73	REMOVE 60" CMP					67.8																													
		h	35.0' Lt "A" 209+16.30	CONCRETE COLLAR*																				1														
		i	35.0' Lt "A" 209+16.30	60" APC																																		
		j	98.0' Lt "A" 209+54.00	HW, WW TYPE "A", & CABLE RAILING																									45.76	4408	73.4							
D-14	87	a	85.4' Lt "A" 209+53.81	REMOVE 12" CMP					26.4																													
D-14	88	a	59.3' Lt "A" 210+03.46	REMOVE INLET							1																											
		b	59.3' Lt "A" 210+03.46	REMOVE 18" CMP					53.4																													
D-14	89	a	107.9' Rt "WFR" 39+84.00	HW, WW TYPE "A", & CABLE RAILING																									34.77	4816	59.3							
		b	107.9' Rt "WFR" 39+84.00	2-72" APC																																		
		c	115.6' Lt "WFR" 40+88.00	HW, WW TYPE "A", & CABLE RAILING																									35.81	4908	60.8							
		d	115.6' Lt "WFR" 40+88.00	RSP (1/4 T, METHOD B)*																															182.0			136.5
D-15,16	90	a	82.0' Rt "A" 215+70.93	REMOVE HW				1																														
		b	82.0' Rt "A" 215+70.93	ABANDON 2-48" CMP	485.7	226.0																																
		c	67.8' Lt "A" 215+97.69	REMOVE INLET							1																											
		d	67.8' Lt "A" 215+97.69	REMOVE 18" CMP					18.2																													
		e	9.2' Rt "WFR" 45+30.44	REMOVE 2-48" CMP					137.8																													
		f	57.9' Lt "WFR" 45+19.69	REMOVE HW				1																														
D-15,16	91	a	91.7' Rt "A" 216+00.00	HW, WW TYPE "A", & CABLE RAILING																									58.76	5054	96.2							
		b	91.7' Rt "A" 216+00.00	10' (W) x 6' (H) PRECAST RCB*																						385.9												
		c	94.3' Lt "WFR" 44+65.00	HW, WW TYPE "A", & CABLE RAILING																									38.48	3504	65.1							
		d	94.3' Lt "WFR" 44+65.00	RSP (1/4 T, METHOD B)*																															227.7			172.5
SHEET TOTAL					485.7	226.0		4	303.6		2										3.4	16.5		2			385.9		254.71	26710	421.2				414.3	0.9		309.0

NOTES:

1. *: SEE DRAINAGE DETAIL SHEETS.
2. (N): NOT A SEPARATE PAY ITEM, FOR INFORMATION ONLY.

DRAINAGE QUANTITIES
DQ-27

REVISED BY | DATE REVISED
VU TRAN | HA VU
CALCULATED-DESIGNED BY | CHECKED BY
FUNCTIONAL SUPERVISOR: GEORGE MORHIG
STATE OF CALIFORNIA - DEPARTMENT OF TRANSPORTATION
Caltrans DESIGN

LAST REVISION 01-30-14 | DATE PLOTTED => 30-JUN-2014 | TIME PLOTTED => 05:30

Dist	COUNTY	ROUTE	POST MILES TOTAL PROJECT	SHEET No.	TOTAL SHEETS
08	SBd	15	42.5/46.0	236	824

REGISTERED CIVIL ENGINEER 1-30-14 DATE

6-23-14
PLANS APPROVAL DATE

REGISTERED PROFESSIONAL ENGINEER HA VU No. C61359 Exp. 6-30-15 CIVIL STATE OF CALIFORNIA

THE STATE OF CALIFORNIA OR ITS OFFICERS OR AGENTS SHALL NOT BE RESPONSIBLE FOR THE ACCURACY OR COMPLETENESS OF SCANNED COPIES OF THIS PLAN SHEET.

APC 18" LF	APC 24" LF	APC 30" LF	APC 36" LF	APC 42" LF	APC 48" LF	APC 60" LF	APC 72" LF	APL 24" LF	APL 30" LF	APL 36" LF	APL 42" LF	APL 48" LF	APL 60" LF	APC (JACKED) 42" LF	APC (JACKED) 48" LF	APC (JACKED) 60" LF	CSP 12" (0.064" THICK) LF	CSP 18" (0.064" THICK) LF	CSP 24" (0.064" THICK) LF	CSP 36" (0.079" THICK) LF	RCP 18" LF	RCP 24" LF	RCP 30" LF	RCP 36" LF	12" CSP RISER (0.064" THICK) LF	36" CSP INLET (0.079" THICK) LF	36" PRECAST Conc PIPE INLET LF	36" PRECAST Conc PIPE MH LF	JOINT CLASSIFICATION (N)	MAXIMUN COVER (N) FT	HEIGHT OF INLET (N) FT	DESCRIPTION	STATION	DRAINAGE UNIT No.	DRAINAGE SYSTEM No.	DRAINAGE PLAN SHEET No.
																																HMA DITCH*	75.3' Rt "A" 208+10.00	a	85	D-14
																																RSP (FACING, METHOD B)*	122.3' Rt "A" 208+36.00	b		
																																REMOVE HW	79.5' Rt "A" 209+36.59	a	86	D-14
																																HW, WW TYPE "A", & CABLE RAILING	98.6' Rt "A" 209+40.00	b		
						21.4																							S	12.0		60" APC	98.6' Rt "A" 209+40.00	c		
																																CONCRETE COLLAR*	77.5' Rt "A" 209+36.26	d		
													114.3																			60" APL	77.5' Rt "A" 209+36.26	e		
																															3.0	REMOVE HW	101.7' Lt "A" 209+03.73	f		
																																REMOVE 60" CMP	101.7' Lt "A" 209+03.73	g		
																																CONCRETE COLLAR*	35.0' Lt "A" 209+16.30	h		
						76.9																							S	11.0		60" APC	35.0' Lt "A" 209+16.30	i		
																																HW, WW TYPE "A", & CABLE RAILING	98.0' Lt "A" 209+54.00	j		
																																REMOVE 12" CMP	85.4' Lt "A" 209+53.81	a	87	D-14
																																REMOVE INLET	59.3' Lt "A" 210+03.46	a	88	D-14
																																REMOVE 18" CMP	59.3' Lt "A" 210+03.46	b		
																																HW, WW TYPE "A", & CABLE RAILING	107.9' Rt "WFR" 39+84.00	a	89	D-14
							493.0																						S	39.5		2-72" APC	107.9' Rt "WFR" 39+84.00	b		
																																HW, WW TYPE "A", & CABLE RAILING	115.6' Lt "WFR" 40+88.00	c		
																																RSP (1/4 T, METHOD B)*	115.6' Lt "WFR" 40+88.00	d		
																																REMOVE HW	82.0' Rt "A" 215+70.93	a	90	D-15,16
																																ABANDON 2-48" CMP	82.0' Rt "A" 215+70.93	b		
																																REMOVE INLET	67.8' Lt "A" 215+97.69	c		
																																REMOVE 18" CMP	67.8' Lt "A" 215+97.69	d		
																																REMOVE 2-48" CMP	9.2' Rt "WFR" 45+30.44	e		
																																REMOVE HW	57.9' Lt "WFR" 45+19.69	f		
																																HW, WW TYPE "A", & CABLE RAILING	91.7' Rt "A" 216+00.00	a	91	D-15,16
																														28.3		10' (W) x 6' (H) PRECAST RCB*	91.7' Rt "A" 216+00.00	b		
																																HW, WW TYPE "A", & CABLE RAILING	94.3' Lt "WFR" 44+65.00	c		
																																RSP (1/4 T, METHOD B)*	94.3' Lt "WFR" 44+65.00	d		
						98.3	493.0						114.3																			SHEET TOTAL				

NOTES:

1. *: SEE DRAINAGE DETAIL SHEETS.
2. (N): NOT A SEPARATE PAY ITEM, FOR INFORMATION ONLY.

DRAINAGE QUANTITIES
DQ-28

REVISED BY | DATE REVISED
VU TRAN | HA VU
CALCULATED-DESIGNED BY | CHECKED BY
FUNCTIONAL SUPERVISOR: GEORGE MORHIG
STATE OF CALIFORNIA - DEPARTMENT OF TRANSPORTATION
Caltrans DESIGN

LAST REVISION 01-30-14 | DATE PLOTTED => 30-JUN-2014 | TIME PLOTTED => 05:31

Dist	COUNTY	ROUTE	POST MILES TOTAL PROJECT	SHEET No.	TOTAL SHEETS
08	SBd	15	42.5/46.0	237	824

REGISTERED CIVIL ENGINEER 1-30-14 DATE

6-23-14
PLANS APPROVAL DATE

REGISTERED PROFESSIONAL ENGINEER HA VU No. C61359 Exp. 6-30-15 CIVIL STATE OF CALIFORNIA

THE STATE OF CALIFORNIA OR ITS OFFICERS OR AGENTS SHALL NOT BE RESPONSIBLE FOR THE ACCURACY OR COMPLETENESS OF SCANNED COPIES OF THIS PLAN SHEET.

DRAINAGE PLAN SHEET No.	DRAINAGE SYSTEM No. ⬡	DRAINAGE UNIT No. ◯	STATION	DESCRIPTION	ABANDON CULVERT (LF)	SAND BACKFILL	REMOVE CONCRETE (CHANNEL)	REMOVE HEADWALL	REMOVE CULVERT (LF)	REMOVE GRATED LINE DRAIN	REMOVE INLET	ABANDON INLET	FRAME, GRATE, CHECKERED PLATE, AND MH (N) TYPE 24-12	TYPE 24-12X	TYPE 36R	1/4" CHECKERED PL COVER	MANHOLE	Misc IRON AND STEEL	MINOR Conc (MINOR STRUCTURE)	MINOR Conc (Misc Const)	HOT MIX ASPHALT (TYPE A)	PLACE HMA (Misc AREA)	CAP INLET	CONCRETE COLLAR (N)	12" ELBOW (N)	18" ELBOW (N)	10' x 6' PRECAST REINFORCED CONCRETE BOX CULVERT	STRUCTURAL Conc, BOX Culv	STRUCTURAL Conc, HEADWALL	BAR REINFORCING STEEL	CABLE RAILING	GRATED LINE DRAIN	AFES 18"	AFES 30"	RSP FABRIC (CLASS 8)	RSP (METHOD B) FACING	RSP (METHOD B) LIGHT	RSP (METHOD B) 1/4T
					LF	CY	LF	EA	LF	LF	EA	EA	EA	EA	EA	EA	EA	LB	CY	CY	TON	SQYD	EA	EA	EA	EA	LF	CY	CY	LB	LF	LF	EA	EA	SQYD	CY	CY	CY
D-15	92	a	72.3' L+ "A" 216+25.00	GMP INLET W/HMA APRON*											1			236	0.40		0.5	4.5																
		b	72.3' L+ "A" 216+25.00	18" CSP (0.064" THICK)																																		
D-15	93	a	72.0' L+ "A" 217+23.03	REMOVE 12" CMP					37.1																													
		b	30.1' R+ "WFR" 46+57.80	GLD																												38.0						
		c	28.0' R+ "WFR" 47+00.00	G1 INLET									1					326	1.41																			
		d	28.0' R+ "WFR" 47+00.00	18" CSP (0.064" THICK) W/ELBOW																					1													
		e	61.6' R+ "WFR" 47+00.00	18" AFES																													1					
		f	61.6' R+ "WFR" 47+00.00	RSP (FACING, METHOD B)*																															15.1	4.5		
D-15,	94	a	3.6' R+ "SW1" 221+37.01	REMOVE HW				1																														
16, 17		b	3.6' R+ "SW1" 221+37.01	REMOVE 30" CMP					30.6																													
		c	19.5' L+ "SW1" 221+21.00	GMP INLET W/HMA APRON*											1			236	0.40		0.5	4.5																
		d	19.5' L+ "SW1" 221+21.00	30" APL																																		
		e	25.1' L+ "WFR" 49+61.34	REMOVE INLET							1																											
		f	24.2' L+ "WFR" 49+62.00	GT3 INLET										2				478	2.77																			
		g	24.2' L+ "WFR" 49+62.00	30" APC																																		
		h	27.8' L+ "WFR" 49+56.00	CONCRETE COLLAR*																			1															
		i	57.4' L+ "WFR" 47+39.00	CONCRETE COLLAR*																			1															
		j	57.4' L+ "WFR" 47+39.00	30" APC																																		
D-15,17	95	a	35.0' L+ "SW4" 221+72.00	GMP INLET W/HMA APRON*											1			236	0.40		0.5	4.5																
		b	35.0' L+ "SW4" 221+72.00	18" APC																																		
		c	26.5' L+ "WFR" 50+35.00	OL-10 INLET W/GUTTER DEPRESSION												1		170	2.81	2.17																		
		d	26.5' L+ "WFR" 50+35.00	24" APC																																		
D-16	96	a	20.0' L+ "SW" 1+00.00	HMA OSD, L=25'*																	2.3	21.0																
		b	54.7' L+ "SW" 0+82.00	RSP (FACING, METHOD B)*																															4.6	0.9		
D-16	97	a	47.9' R+ "SW" 1+90.00	HMA OSD, L=20'*																	3.0	23.2																
		b	85.7' R+ "SW" 2+15.00	RSP (FACING, METHOD B)*																															4.6	0.9		
D-16	98	a	20.6' R+ "EFR" 2+10.87	REMOVE HW				1																														
		b	20.6' R+ "EFR" 2+10.87	ABANDON 2-48" CMP	100.6	11.7																																
		c	26.3' L+ "EFR" 2+28.81	REMOVE HW				1																														
				SHEET TOTAL	100.6	11.7		3	67.7		1		1	2	3	1		1682	8.19	2.17	6.8	57.7		2		1						38.0	1		24.3	6.3		

NOTES:

1. *: SEE DRAINAGE DETAIL SHEETS.
2. (N): NOT A SEPARATE PAY ITEM, FOR INFORMATION ONLY.

DRAINAGE QUANTITIES
DQ-29

REVISED BY | DATE REVISED
VU TRAN | HA VU
CALCULATED-DESIGNED BY | CHECKED BY
FUNCTIONAL SUPERVISOR: GEORGE MORHIG
STATE OF CALIFORNIA - DEPARTMENT OF TRANSPORTATION
Caltrans DESIGN

LAST REVISION 01-30-14 | DATE PLOTTED => 30-JUN-2014 | TIME PLOTTED => 05:31

Dist	COUNTY	ROUTE	POST MILES TOTAL PROJECT	SHEET No.	TOTAL SHEETS
08	SBd	15	42.5/46.0	238	824

REGISTERED CIVIL ENGINEER 1-30-14 DATE

6-23-14
PLANS APPROVAL DATE

REGISTERED PROFESSIONAL ENGINEER HA VU No. C61359 Exp. 6-30-15 CIVIL STATE OF CALIFORNIA

THE STATE OF CALIFORNIA OR ITS OFFICERS OR AGENTS SHALL NOT BE RESPONSIBLE FOR THE ACCURACY OR COMPLETENESS OF SCANNED COPIES OF THIS PLAN SHEET.

APC 18" LF	APC 24" LF	APC 30" LF	APC 36" LF	APC 42" LF	APC 48" LF	APC 60" LF	APC 72" LF	APL 24" LF	APL 30" LF	APL 36" LF	APL 42" LF	APL 48" LF	APL 60" LF	APC (JACKED) 42" LF	APC (JACKED) 48" LF	APC (JACKED) 60" LF	CSP (0.064" THICK) 12" LF	CSP (0.064" THICK) 18" LF	CSP (0.064" THICK) 24" LF	CSP (0.079" THICK) 36" LF	RCP 18" LF	RCP 24" LF	RCP 30" LF	RCP 36" LF	12" CSP RISER (0.064" THICK) LF	36" CSP INLET (0.079" THICK) LF	36" PRECAST Conc PIPE INLET LF	36" PRECAST Conc PIPE MH LF	JOINT CLASSIFICATION (N)	MAXIMUN COVER (N) FT	HEIGHT OF INLET (N) FT	DESCRIPTION	STATION	DRAINAGE UNIT No. ◯	DRAINAGE SYSTEM No. ⬡	DRAINAGE PLAN SHEET No.
																										4.5			D		4.0	GMP INLET W/HMA APRON*	72.3′ L+ "A" 216+25.00	a	92	D-15
																		19.1											D	8.1		18" CSP (0.064" THICK)	72.3′ L+ "A" 216+25.00	b		
																																REMOVE 12" CMP	72.0′ L+ "A" 217+23.03	a	93	D-15
																																GLD	30.1′ R+ "WFR" 46+57.80	b		
																															5.1	G1 INLET	28.0′ R+ "WFR" 47+00.00	c		
																		35.5											D	5.3		18" CSP (0.064" THICK) W/ELBOW	28.0′ R+ "WFR" 47+00.00	d		
																																18" AFES	61.6′ R+ "WFR" 47+00.00	e		
																																RSP (FACING, METHOD B)*	61.6′ R+ "WFR" 47+00.00	f		
																																REMOVE HW	3.6′ R+ "SW1" 221+37.01	a	94	D-15,
																																REMOVE 30" CMP	3.6′ R+ "SW1" 221+37.01	b		16, 17
																										6.9			D		6.4	GMP INLET W/HMA APRON*	19.5′ L+ "SW1" 221+21.00	c		
									253.3																							30" APL	19.5′ L+ "SW1" 221+21.00	d		
																																REMOVE INLET	25.1′ L+ "WFR" 49+61.34	e		
																															6.0	GT3 INLET	24.2′ L+ "WFR" 49+62.00	f		
		6.7																											S	4.2		30" APC	24.2′ L+ "WFR" 49+62.00	g		
																																CONCRETE COLLAR*	27.8′ L+ "WFR" 49+56.00	h		
																																CONCRETE COLLAR*	57.4′ L+ "WFR" 47+39.00	i		
		221.2																											S	26.7		30" APC	57.4′ L+ "WFR" 47+39.00	j		
																										4.5			D		4.0	GMP INLET W/HMA APRON*	35.0′ L+ "SW4" 221+72.00	a	95	D-15,17
139.1																													S	4.0		18" APC	35.0′ L+ "SW4" 221+72.00	b		
																															4.5	OL-10 INLET W/GUTTER DEPRESSION	26.5′ L+ "WFR" 50+35.00	c		
	64.3																												S	3.9		24" APC	26.5′ L+ "WFR" 50+35.00	d		
																																HMA OSD, L=25′*	20.0′ L+ "SW" 1+00.00	a	96	D-16
																																RSP (FACING, METHOD B)*	54.7′ L+ "SW" 0+82.00	b		
																																HMA OSD, L=20′*	47.9′ R+ "SW" 1+90.00	a	97	D-16
																																RSP (FACING, METHOD B)*	85.7′ R+ "SW" 2+15.00	b		
																																REMOVE HW	20.6′ R+ "EFR" 2+10.87	a	98	D-16
																																ABANDON 2-48" CMP	20.6′ R+ "EFR" 2+10.87	b		
																																REMOVE HW	26.3′ L+ "EFR" 2+28.81	c		
139.1	64.3	227.9							253.3									54.6								15.9						SHEET TOTAL				

NOTES:

1. *: SEE DRAINAGE DETAIL SHEETS.
2. (N): NOT A SEPARATE PAY ITEM, FOR INFORMATION ONLY.

DRAINAGE QUANTITIES
DQ-30

STATE OF CALIFORNIA - DEPARTMENT OF TRANSPORTATION
Caltrans DESIGN

FUNCTIONAL SUPERVISOR: GEORGE MORHIG
CALCULATED-DESIGNED BY: VU TRAN
CHECKED BY: HA VU
REVISED BY
DATE REVISED

LAST REVISION 01-30-14
DATE PLOTTED => 30-JUN-2014
TIME PLOTTED => 05:31

Dist	COUNTY	ROUTE	POST MILES TOTAL PROJECT	SHEET No.	TOTAL SHEETS
08	SBd	15	42.5/46.0	239	824

REGISTERED CIVIL ENGINEER 1-30-14 DATE

6-23-14
PLANS APPROVAL DATE

REGISTERED PROFESSIONAL ENGINEER HA VU No. C61359 Exp. 6-30-15 CIVIL STATE OF CALIFORNIA

THE STATE OF CALIFORNIA OR ITS OFFICERS OR AGENTS SHALL NOT BE RESPONSIBLE FOR THE ACCURACY OR COMPLETENESS OF SCANNED COPIES OF THIS PLAN SHEET.

DRAINAGE PLAN SHEET No.	DRAINAGE SYSTEM No. ⬡	DRAINAGE UNIT No. ◯	STATION	DESCRIPTION	ABANDON CULVERT (LF)	SAND BACKFILL	REMOVE CONCRETE (CHANNEL)	REMOVE HEADWALL	REMOVE CULVERT (LF)	REMOVE GRATED LINE DRAIN	REMOVE INLET	ABANDON INLET	FRAME, GRATE, CHECKERED PLATE, AND MH (N) TYPE 24-12	TYPE 24-12X	TYPE 36R	1/4" CHECKERED PL COVER	MANHOLE	Misc IRON AND STEEL	MINOR Conc (MINOR STRUCTURE)	MINOR Conc (Misc Const)	HOT MIX ASPHALT (TYPE A)	PLACE HMA (Misc AREA)	CAP INLET	CONCRETE COLLAR (N)	12" ELBOW (N)	18" ELBOW (N)	10'x 6' PRECAST REINFORCED CONCRETE BOX CULVERT	STRUCTURAL Conc, BOX Culv	STRUCTURAL Conc, HEADWALL	BAR REINFORCING STEEL	CABLE RAILING	GRATED LINE DRAIN	AFES 18"	AFES 30"	RSP FABRIC (CLASS 8)	RSP (METHOD B) FACING	RSP (METHOD B) LIGHT	RSP (METHOD B) 1/4T
					LF	CY	LF	EA	LF	LF	EA	EA	EA	EA	EA	EA	EA	LB	CY	CY	TON	SQYD	EA	EA	EA	EA	LF	CY	CY	LB	LF	LF	EA	EA	SQYD	CY	CY	CY
D-16	99	a	46.3' R+ "EFR" 3+40.00	HW, WW TYPE "A", & CABLE RAILING																									45.25	5230	76.3								
		b	46.3' R+ "EFR" 3+40.00	2-60" APC																																			
		c	66.3' L+ "EFR" 3+40.00	HW, WW TYPE "A", & CABLE RAILING																									64.56	6851	105.5								
		d	66.3' L+ "EFR" 3+40.00	RSP (1/4 T, METHOD B)*																															209.9			153.3
D-16	100	a	9.5' L+ "SW1" 219+00.00	GMP INLET											1			236	0.40																			
		b	9.5' L+ "SW1" 219+00.00	18" APC																																			
		c	47.0' R+ "SW1" 219+00.00	18" AFES																													1						
D-16	101	a	1.6' L+ "EFR" 6+65.43	REMOVE INLET							1																											
		b	1.6' L+ "EFR" 6+65.43	REMOVE 18" CMP					57.9																													
D-17	102	a	20.7' L+ "SW4" 221+80.00	HMA OSD, L=30'*																	0.8	15.2																
D-17	103	a	76.8' L+ "SW1" 223+26.00	30" AFES																														1				
		b	76.8' L+ "SW1" 223+26.00	30" APC																																		
		c	72.3' R+ "SW1" 222+67.00	HW																									1.52	90								
		d	72.3' R+ "SW1" 222+67.00	RSP (FACING, METHOD B)*																															25.0	8.3		
D-17	104	a	48.1' R+ "SW2" 223+02.43	REMOVE INLET							1																											
		b	48.1' R+ "SW2" 223+02.43	REMOVE 18" CMP					45.8																													
D-17	105	a	20.0' R+ "SW2" 228+70.00	HMA OSD, L=20'*																	0.5	10.3																
		b	26.0' R+ "SW2" 228+65.00	RSP (FACING, METHOD B)*																															4.6	0.9		
D-18	106	a	18.1' R+ "EFR" 20+77.09	REMOVE HW				1																														
		b	36.0' R+ "EFR" 20+87.79	HW																									2.34	140								
		c	36.0' R+ "EFR" 20+87.79	42" APC																																		
		d	16.3' R+ "EFR" 20+76.07	CONCRETE COLLAR*																				1														
		e	16.3' R+ "EFR" 20+76.07	42" APL																																		
		f	25.0' L+ "EFR" 20+52.50	GMP INLET W/HMA APRON*											1			236			0.5	4.5																
		g	60.4' L+ "A" 232+08.98	REMOVE HW				1																														
		h	58.6' L+ "A" 232+10.00	CONCRETE COLLAR*																				1														
		i	58.6' L+ "A" 232+10.00	42" APC																																		
		j	102.6' L+ "A" 232+05.00	HW																									2.34	140								
		k	102.6' L+ "A" 232+05.00	RSP (LIGHT, METHOD B)*																															46.8		21.0	
SHEET TOTAL								2	103.7		2				2			472	0.40		1.8	30.0		2					116.01	12451	181.8		1	1	286.3	9.2	21.0	153.3

NOTES:

1. *: SEE DRAINAGE DETAIL SHEETS.
2. (N): NOT A SEPARATE PAY ITEM, FOR INFORMATION ONLY.

DRAINAGE QUANTITIES
DQ-31

STATE OF CALIFORNIA - DEPARTMENT OF TRANSPORTATION
Caltrans DESIGN

FUNCTIONAL SUPERVISOR: GEORGE MORHIG
CALCULATED-DESIGNED BY: VU TRAN
CHECKED BY: HA VU
REVISED BY
DATE REVISED

LAST REVISION 01-30-14
DATE PLOTTED => 30-JUN-2014
TIME PLOTTED => 05:31

Dist	COUNTY	ROUTE	POST MILES TOTAL PROJECT	SHEET No.	TOTAL SHEETS
08	SBd	15	42.5/46.0	240	824

REGISTERED CIVIL ENGINEER 1-30-14 DATE

6-23-14
PLANS APPROVAL DATE

REGISTERED PROFESSIONAL ENGINEER HA VU No. C61359 Exp. 6-30-15 CIVIL STATE OF CALIFORNIA

THE STATE OF CALIFORNIA OR ITS OFFICERS OR AGENTS SHALL NOT BE RESPONSIBLE FOR THE ACCURACY OR COMPLETENESS OF SCANNED COPIES OF THIS PLAN SHEET.

APC								APL						APC (JACKED)			CSP				RCP															
18"	24"	30"	36"	42"	48"	60"	72"	24"	30"	36"	42"	48"	60"	42"	48"	60"	12" (0.064" THICK)	18" (0.064" THICK)	24" (0.064" THICK)	36" (0.079" THICK)	18"	24"	30"	36"	12" CSP RISER (0.064" THICK)	36" CSP INLET (0.079" THICK)	36" PRECAST Conc PIPE INLET	36" PRECAST Conc PIPE MH	JOINT CLASSIFICATION (N)	MAXIMUN COVER (N)	HEIGHT OF INLET (N)	DESCRIPTION	STATION	DRAINAGE UNIT No.	DRAINAGE SYSTEM No.	DRAINAGE PLAN SHEET No.
LF	LF	LF	LF	LF	LF	LF	LF	LF	LF	LF	LF	LF	LF	LF	LF	LF	LF	LF	LF	LF	LF	LF	LF	LF	LF	LF	LF	LF		FT	FT					
																																HW, WW TYPE "A", & CABLE RAILING	46.3′ R+ "EFR" 3+40.00	a	99	D-16
						217.4																							S	11.3		2-60" APC	46.3′ R+ "EFR" 3+40.00	b		
																																HW, WW TYPE "A", & CABLE RAILING	66.3′ L+ "EFR" 3+40.00	c		
																																RSP (1/4 T, METHOD B)*	66.3′ L+ "EFR" 3+40.00	d		
																										4.5			D		4.0	GMP INLET	9.5′ L+ "SW1" 219+00.00	a	100	D-16
55.0																													S	3.3		18" APC	9.5′ L+ "SW1" 219+00.00	b		
																																18" AFES	47.0′ R+ "SW1" 219+00.00	c		
																																REMOVE INLET	1.6′ L+ "EFR" 6+65.43	a	101	D-16
																																REMOVE 18" CMP	1.6′ L+ "EFR" 6+65.43	b		
																																HMA OSD, L=30′*	20.7′ L+ "SW4" 221+80.00	a	102	D-17
																																30" AFES	76.8′ L+ "SW1" 223+26.00	a	103	D-17
		156.4																											S	5.2		30" APC	76.8′ L+ "SW1" 223+26.00	b		
																																HW	72.3′ R+ "SW1" 222+67.00	c		
																																RSP (FACING, METHOD B)*	72.3′ R+ "SW1" 222+67.00	d		
																																REMOVE INLET	48.1′ R+ "SW2" 223+02.43	a	104	D-17
																																REMOVE 18" CMP	48.1′ R+ "SW2" 223+02.43	b		
																																HMA OSD, L=20′*	20.0′ R+ "SW2" 228+70.00	a	105	D-17
																																RSP (FACING, METHOD B)*	26.0′ R+ "SW2" 228+65.00	b		
																																REMOVE HW	18.1′ R+ "EFR" 20+77.09	a	106	D-18
																																HW	36.0′ R+ "EFR" 20+87.79	b		
				22.9																									S	4.2		42" APC	36.0′ R+ "EFR" 20+87.79	c		
																																CONCRETE COLLAR*	16.3′ R+ "EFR" 20+76.07	d		
											197.8																					42" APL	16.3′ R+ "EFR" 20+76.07	e		
																										4.1			D		4.1	GMP INLET W/HMA APRON*	25.0′ L+ "EFR" 20+52.50	f		
																																REMOVE HW	60.4′ L+ "A" 232+08.98	g		
																																CONCRETE COLLAR*	58.6′ L+ "A" 232+10.00	h		
				44.3																									S	5.5		42" APC	58.6′ L+ "A" 232+10.00	i		
																																HW	102.6′ L+ "A" 232+05.00	j		
																																RSP (LIGHT, METHOD B)*	102.6′ L+ "A" 232+05.00	k		
55.0		156.4		67.2		217.4					197.8															8.6						SHEET TOTAL				

NOTES:

1. *: SEE DRAINAGE DETAIL SHEETS.
2. (N): NOT A SEPARATE PAY ITEM, FOR INFORMATION ONLY.

DRAINAGE QUANTITIES
DQ-32

REVISED BY | DATE REVISED
VU TRAN | HA VU
CALCULATED-DESIGNED BY | CHECKED BY
FUNCTIONAL SUPERVISOR | GEORGE MORHIG
STATE OF CALIFORNIA - DEPARTMENT OF TRANSPORTATION
Caltrans DESIGN

LAST REVISION 01-30-14 | DATE PLOTTED => 30-JUN-2014 | TIME PLOTTED => 05:31

Dist	COUNTY	ROUTE	POST MILES TOTAL PROJECT	SHEET No.	TOTAL SHEETS
08	SBd	15	42.5/46.0	241	824

REGISTERED CIVIL ENGINEER 1-30-14 DATE

6-23-14
PLANS APPROVAL DATE

REGISTERED PROFESSIONAL ENGINEER HA VU No. C61359 Exp. 6-30-15 CIVIL STATE OF CALIFORNIA

THE STATE OF CALIFORNIA OR ITS OFFICERS OR AGENTS SHALL NOT BE RESPONSIBLE FOR THE ACCURACY OR COMPLETENESS OF SCANNED COPIES OF THIS PLAN SHEET.

DRAINAGE PLAN SHEET No.	DRAINAGE SYSTEM No. ⬡	DRAINAGE UNIT No. ◯	STATION	DESCRIPTION	ABANDON CULVERT (LF)	SAND BACKFILL	REMOVE CONCRETE (CHANNEL)	REMOVE HEADWALL	REMOVE CULVERT (LF)	REMOVE GRATED LINE DRAIN	REMOVE INLET	ABANDON INLET	FRAME, GRATE, CHECKERED PLATE, AND MH (N): TYPE 24-12	TYPE 24-12X	TYPE 36R	1/4" CHECKERED PL COVER	MANHOLE	Misc IRON AND STEEL	MINOR Conc (MINOR STRUCTURE)	MINOR Conc (Misc Const)	HOT MIX ASPHALT (TYPE A)	PLACE HMA (Misc AREA)	CAP INLET	CONCRETE COLLAR (N)	12" ELBOW (N)	18" ELBOW (N)	10'x6' PRECAST REINFORCED CONCRETE BOX CULVERT	STRUCTURAL Conc, BOX Culv	STRUCTURAL Conc, HEADWALL	BAR REINFORCING STEEL	CABLE RAILING	GRATED LINE DRAIN	AFES 18"	AFES 30"	RSP FABRIC (CLASS 8)	RSP (METHOD B) FACING	RSP (METHOD B) LIGHT	RSP (METHOD B) 1/4T
					LF	CY	LF	EA	LF	LF	EA	EA	EA	EA	EA	EA	EA	LB	CY	CY	TON	SQYD	EA	EA	EA	EA	LF	CY	CY	LB	LF	LF	EA	EA	SQYD	CY	CY	CY
D-18	107	a	57.3′ R+ "A" 237+50.00	HMA OSD, L=18′*																	0.9	11.7																
		b	70.5′ R+ "A" 237+43.00	RSP (FACING, METHOD B)*																															4.6	0.9		
D-18	108	a	20.0′ R+ "EFR" 25+67.51	REMOVE HW				1																														
		b	33.0′ R+ "EFR" 25+67.50	HW																									2.65	145								
		c	33.0′ R+ "EFR" 25+67.50	2-36" RCP																																		
		d	18.3′ R+ "EFR" 25+67.52	CONCRETE COLLAR*																				2														
		e	75.3′ L+ "A" 238+01.29	REMOVE HW				1																														
		f	73.6′ L+ "A" 238+01.29	CONCRETE COLLAR*																				2														
		g	73.6′ L+ "A" 238+01.29	2-36" RCP																																		
		h	115.0′ L+ "A" 238+01.00	HW																									2.65	145								
		i	115.0′ L+ "A" 238+01.00	RSP (1/4 T, METHOD B)*																															57.3			34.0
D-18	109	a	33.0′ R+ "EFR" 26+22.50	HW, WW TYPE "A", & CABLE RAILING																									38.05	4625	65.4							
		b	33.0′ R+ "EFR" 26+22.50	2-60" APC																																		
		c	57.3′ R+ "A" 238+55.60	MOD G1 INLET*									2					634	1.90																			
				12" CSP RISER (0.064" THICK)																																		
		d	49.3′ R+ "A" 238+55.64	2-60" APC (JACKED)																																		
		e	49.3′ L+ "A" 238+55.55	2-60" APC																																		
		f	104.0′ L+ "A" 238+55.55	HW, WW TYPE "A", & CABLE RAILING																									46.84	5364	78.7							
		g	104.0′ L+ "A" 238+55.55	RSP (1/4 T, METHOD B)*																															179.5			131.0
D-19	110	a	117.6′′ R+ "A" 247+52.74	24" APL																																		
		b	60.8′ R+ "A" 247+53.22	CAP INLET*																			1															
		c	85.5′ L+ "A" 247+54.95	REMOVE HW				1																														
		d	83.5′ L+ "A" 247+54.92	CONCRETE COLLAR*																				1														
		e	83.5′ L+ "A" 247+54.92	24" APC																																		
		f	115.6′ L+ "A" 247+54.00	HW																									1.20	75								
		g	115.6′ L+ "A" 247+54.00	RSP (LIGHT, METHOD B)*																															20.4		7.6	
D-19	111	a	114.6′ R+ "A" 249+36.43	REMOVE HW				1																														
		b	128.0′ R+ "A" 249+39.30	HW AND CABLE RAILING																									3.64	200	21.0							
		c	128.0′ R+ "A" 249+39.30	2-48" APC																																		
		d	113.3′ R+ "A" 249+29.54	CONCRETE COLLAR*																				2														
		e	113.3′ R+ "A" 249+29.54	2-48" APL																																		
		f	73.0′ L+ "A" 248+12.84	REMOVE HW				1																														
SHEET TOTAL								5					2					634	1.90		0.9	11.7	1	7					95.03	10554	165.1				261.8	0.9	7.6	165.0

NOTES:
1. *: SEE DRAINAGE DETAIL SHEETS.
2. (N): NOT A SEPARATE PAY ITEM, FOR INFORMATION ONLY.

DRAINAGE QUANTITIES
DQ-33

REVISED BY | DATE REVISED
VU TRAN | HA VU
CALCULATED-DESIGNED BY | CHECKED BY
FUNCTIONAL SUPERVISOR: GEORGE MORHIG
STATE OF CALIFORNIA - DEPARTMENT OF TRANSPORTATION
Caltrans DESIGN

LAST REVISION 01-30-14 | DATE PLOTTED => 30-JUN-2014 | TIME PLOTTED => 05:31

Dist	COUNTY	ROUTE	POST MILES TOTAL PROJECT	SHEET No.	TOTAL SHEETS
08	SBd	15	42.5/46.0	242	824

REGISTERED CIVIL ENGINEER 1-30-14 DATE

6-23-14
PLANS APPROVAL DATE

REGISTERED PROFESSIONAL ENGINEER HA VU No. C61359 Exp. 6-30-15 CIVIL STATE OF CALIFORNIA

THE STATE OF CALIFORNIA OR ITS OFFICERS OR AGENTS SHALL NOT BE RESPONSIBLE FOR THE ACCURACY OR COMPLETENESS OF SCANNED COPIES OF THIS PLAN SHEET.

APC 18" LF	APC 24" LF	APC 30" LF	APC 36" LF	APC 42" LF	APC 48" LF	APC 60" LF	APC 72" LF	APL 24" LF	APL 30" LF	APL 36" LF	APL 42" LF	APL 48" LF	APL 60" LF	APC (JACKED) 42" LF	APC (JACKED) 48" LF	APC (JACKED) 60" LF	CSP (0.064" THICK) 12" LF	CSP (0.064" THICK) 18" LF	CSP (0.064" THICK) 24" LF	CSP (0.079" THICK) 36" LF	RCP 18" LF	RCP 24" LF	RCP 30" LF	RCP 36" LF	12" CSP RISER (0.064" THICK) LF	36" CSP INLET (0.079" THICK) LF	36" PRECAST Conc PIPE INLET LF	36" PRECAST Conc PIPE MH LF	JOINT CLASSIFICATION (N)	MAXIMUN COVER (N) FT	HEIGHT OF INLET (N) FT	DESCRIPTION	STATION	DRAINAGE UNIT No. ◯	DRAINAGE SYSTEM No. ⬡	DRAINAGE PLAN SHEET No.
																																HMA OSD, L=18'*	57.3' R+ "A" 237+50.00	a	107	D-18
																																RSP (FACING, METHOD B)*	70.5' R+ "A" 237+43.00	b		
																																REMOVE HW	20.0' R+ "EFR" 25+67.51	a	108	D-18
																																HW	33.0' R+ "EFR" 25+67.50	b		
																								29.4					S	2.7		2-36" RCP	33.0' R+ "EFR" 25+67.50	c		
																																CONCRETE COLLAR*	18.3' R+ "EFR" 25+67.52	d		
																																REMOVE HW	75.3' L+ "A" 238+01.29	e		
																																CONCRETE COLLAR*	73.6' L+ "A" 238+01.29	f		
																								83.0					P	7.9		2-36" RCP	73.6' L+ "A" 238+01.29	g		
																																HW	115.0' L+ "A" 238+01.00	h		
																																RSP (1/4 T, METHOD B)*	115.0' L+ "A" 238+01.00	i		
																																HW, WW TYPE "A", & CABLE RAILING	33.0' R+ "EFR" 26+22.50	a	109	D-18
						157.6																							S	10.0		2-60" APC	33.0' R+ "EFR" 26+22.50	b		
																															4.0	MOD G1 INLET*	57.3' R+ "A" 238+55.60	c		
																									4.0				D			12" CSP RISER (0.064" THICK)				
																197.2													S	10.0		2-60" APC (JACKED)	49.3' R+ "A" 238+55.64	d		
						109.4																							S	10.3		2-60" APC	49.3' L+ "A" 238+55.55	e		
																																HW, WW TYPE "A", & CABLE RAILING	104.0' L+ "A" 238+55.55	f		
																																RSP (1/4 T, METHOD B)*	104.0' L+ "A" 238+55.55	g		
								201.3																								24" APL	117.6'' R+ "A" 247+52.74	a	110	D-19
																																CAP INLET*	60.8' R+ "A" 247+53.22	b		
																																REMOVE HW	85.5' L+ "A" 247+54.95	c		
																																CONCRETE COLLAR*	83.5' L+ "A" 247+54.92	d		
	32.1																												S	7.3		24" APC	83.5' L+ "A" 247+54.92	e		
																																HW	115.6' L+ "A" 247+54.00	f		
																																RSP (LIGHT, METHOD B)*	115.6' L+ "A" 247+54.00	g		
																																REMOVE HW	114.6' R+ "A" 249+36.43	a	111	D-19
																																HW AND CABLE RAILING	128.0' R+ "A" 249+39.30	b		
					34.0																								S	4.7		2-48" APC	128.0' R+ "A" 249+39.30	c		
																																CONCRETE COLLAR*	113.3' R+ "A" 249+29.54	d		
												435.8																				2-48" APL	113.3' R+ "A" 249+29.54	e		
																																REMOVE HW	73.0' L+ "A" 248+12.84	f		
	32.1				34.0	267.0		201.3				435.8				197.2								112.4	4.0							SHEET TOTAL				

NOTES:

1. *: SEE DRAINAGE DETAIL SHEETS.
2. (N): NOT A SEPARATE PAY ITEM, FOR INFORMATION ONLY.

DRAINAGE QUANTITIES
DQ-34

STATE OF CALIFORNIA - DEPARTMENT OF TRANSPORTATION
Caltrans DESIGN

FUNCTIONAL SUPERVISOR: GEORGE MORHIG

CALCULATED-DESIGNED BY: VU TRAN
CHECKED BY: HA VU
REVISED BY
DATE REVISED

LAST REVISION 01-30-14
DATE PLOTTED => 30-JUN-2014
TIME PLOTTED => 05:31

Dist	COUNTY	ROUTE	POST MILES TOTAL PROJECT	SHEET No.	TOTAL SHEETS
08	SBd	15	42.5/46.0	243	824

REGISTERED CIVIL ENGINEER 1-30-14 DATE

6-23-14
PLANS APPROVAL DATE

REGISTERED PROFESSIONAL ENGINEER HA VU No. C61359 Exp. 6-30-15 CIVIL STATE OF CALIFORNIA

THE STATE OF CALIFORNIA OR ITS OFFICERS OR AGENTS SHALL NOT BE RESPONSIBLE FOR THE ACCURACY OR COMPLETENESS OF SCANNED COPIES OF THIS PLAN SHEET.

DRAINAGE PLAN SHEET No.	DRAINAGE SYSTEM No. ⬡	DRAINAGE UNIT No. ◯	STATION	DESCRIPTION	ABANDON CULVERT (LF)	SAND BACKFILL	REMOVE CONCRETE (CHANNEL)	REMOVE HEADWALL	REMOVE CULVERT (LF)	REMOVE GRATED LINE DRAIN	REMOVE INLET	ABANDON INLET	FRAME, GRATE, CHECKERED PLATE, AND MH (N) TYPE 24-12	TYPE 24-12X	TYPE 36R	1/4" CHECKERED PL COVER	MANHOLE	Misc IRON AND STEEL	MINOR Conc (MINOR STRUCTURE)	MINOR Conc (Misc Const)	HOT MIX ASPHALT (TYPE A)	PLACE HMA (Misc AREA)	CAP INLET	CONCRETE COLLAR (N)	12" ELBOW (N)	18" ELBOW (N)	10'x 6' PRECAST REINFORCED CONCRETE BOX CULVERT	STRUCTURAL Conc, BOX Culv	STRUCTURAL Conc, HEADWALL	BAR REINFORCING STEEL	CABLE RAILING	GRATED LINE DRAIN	AFES 18"	AFES 30"	RSP FABRIC (CLASS 8)	RSP (METHOD B) FACING	RSP (METHOD B) LIGHT	RSP (METHOD B) 1/4T
					LF	CY	LF	EA	LF	LF	EA	EA	EA	EA	EA	EA	EA	LB	CY	CY	TON	SQYD	EA	EA	EA	EA	LF	CY	CY	LB	LF	LF	EA	EA	SQYD	CY	CY	CY
D-19	111	g	71.1' Lt "A" 248+14.01	CONCRETE COLLAR*																				2														
		h	71.1' Lt "A" 248+14.01	2-48" APC																																		
		i	107.0' Lt "A" 248+00.00	HW AND CABLE RAILING																									3.64	200	21.0							
		j	107.0' Lt "A" 248+00.00	RSP (1/4 T, METHOD B)*																															86.0			56.0
D-19	112	a	128.0' Rt "A" 249+95.00	HW, WW TYPE "A", & CABLE RAILING																									29.72	3926	52.8							
		b	128.0' Rt "A" 249+95.00	2-60" APC																																		
		c	66.3' Rt "A" 249+57.60	GMP INLET W/HMA APRON*											1			236	0.40		0.5	4.5																
				12" CSP RISER (0.064" THICK)																																		
		d	49.3' Rt "A" 249+47.50	2-60" APC (JACKED)																																		
		e	49.3' Lt "A" 248+90.46	2-60" APC																																		
		f	100.7' Lt "A" 248+61.50	HW, WW TYPE "A", & CABLE RAILING																									55.10	6057	91.2							
		g	100.7' Lt "A" 248+61.50	RSP (1/4 T, METHOD B)*																															155.1			111.2
D-19	113	a	56.2' Lt "A" 252+00.41	REMOVE 12" CMP					19.6																													
D-19	114	a	57.3' Lt "A" 254+70.00	MOD G1 INLET*									2					634	1.90																			
		b	57.3' Lt "A" 254+70.00	18" APC																																		
		c	57.3' Lt "A" 254+05.00	MOD G1 INLET*									2					634	2.11																			
		d	56.5' Lt "A" 254+02.50	GLD																												102.0						
		e	57.3' Lt "A" 254+05.00	18" APC																																		
		f	57.3' Lt "A" 252+96.00	G1 INLET									1					326	1.48																			
		g	57.3' Lt "A" 252+96.00	18" APC																																		
		h	100.3' Lt "A" 252+96.00	18" AFES																													1					
D-19	115	a	73.0' Lt "A" 256+07.81	REMOVE HW				1																														
		b	115.9' Rt "A" 256+07.67	36" APL																																		
		c	71.5' Lt "A" 256+07.81	CONCRETE COLLAR*																				1														
		d	71.5' Lt "A" 256+07.81	36" APC																																		
		e	109.6' Lt "A" 256+08.00	HW																									1.95	105								
		f	109.6' Lt "A" 256+08.00	RSP (LIGHT, METHOD B)*																															37.3		16.0	
D-20	116	a	56.9' Lt "A" 258+03.17	REMOVE 12" CMP					20.4																													
				SHEET TOTAL				1	40.0				5		1			1830	5.89		0.5	4.5		3					90.41	10288	697.0	102.0	1		278.4		16.0	167.2
				TOTAL FROM Q-5 AND Q-9																											532.0							
				TOTAL FROM Q-2																															284.0	18.0		
				GRAND TOTAL	4318.5	1430.3	1994.2	34	2784.1	1248.0	21	10						34069	275.44	7.87	25.0 **	255 ***	2				385.9	3053.0	773.50	798022	1748.2	514.0	15	1	2045.6	41.6	258.0	794.5

NOTES:

1. *: SEE DRAINAGE DETAIL SHEETS.
2. (N): NOT A SEPARATE PAY ITEM, FOR INFORMATION ONLY.
3. **: FOR TOTAL QUANTITY OF HMA (TYPE C), SEE SHEET Q-1.
4. ***: FOR TOTAL QUANTITY OF PLACE HMA (MISCELLANEOUS AREA), SEE SHEET Q-2.

DRAINAGE QUANTITIES
DQ-35

REVISED BY | DATE REVISED
VU TRAN | HA VU
CALCULATED-DESIGNED BY | CHECKED BY
FUNCTIONAL SUPERVISOR: GEORGE MORHIG
STATE OF CALIFORNIA - DEPARTMENT OF TRANSPORTATION
Caltrans DESIGN

LAST REVISION 01-30-14 | DATE PLOTTED => 30-JUN-2014 | TIME PLOTTED => 05:31

Dist	COUNTY	ROUTE	POST MILES TOTAL PROJECT	SHEET No.	TOTAL SHEETS
08	SBd	15	42.5/46.0	244	824

REGISTERED CIVIL ENGINEER 1-30-14 DATE

6-23-14
PLANS APPROVAL DATE

REGISTERED PROFESSIONAL ENGINEER HA VU No. C61359 Exp. 6-30-15 CIVIL STATE OF CALIFORNIA

THE STATE OF CALIFORNIA OR ITS OFFICERS OR AGENTS SHALL NOT BE RESPONSIBLE FOR THE ACCURACY OR COMPLETENESS OF SCANNED COPIES OF THIS PLAN SHEET.

APC 18" LF	APC 24" LF	APC 30" LF	APC 36" LF	APC 42" LF	APC 48" LF	APC 60" LF	APC 72" LF	APL 24" LF	APL 30" LF	APL 36" LF	APL 42" LF	APL 48" LF	APL 60" LF	APC (JACKED) 42" LF	APC (JACKED) 48" LF	APC (JACKED) 60" LF	CSP (0.064" THICK) 12" LF	CSP (0.064" THICK) 18" LF	CSP (0.064" THICK) 24" LF	CSP (0.079" THICK) 36" LF	RCP 18" LF	RCP 24" LF	RCP 30" LF	RCP 36" LF	12" CSP RISER (0.064" THICK) LF	36" CSP INLET (0.079" THICK) LF	36" PRECAST Conc PIPE INLET LF	36" PRECAST Conc PIPE MH LF	JOINT CLASSIFICATION (N)	MAXIMUN COVER (N) FT	HEIGHT OF INLET (N) FT	DESCRIPTION	STATION	DRAINAGE UNIT No. ◯	DRAINAGE SYSTEM No. ⬡	DRAINAGE PLAN SHEET No.
																																CONCRETE COLLAR*	71.1′ L+ "A" 248+14.01	g	111	D-19
					84.6																								S	9.4		2-48" APC	71.1′ L+ "A" 248+14.01	h		
																																HW AND CABLE RAILING	107.0′ L+ "A" 248+00.00	i		
																																RSP (1/4 T, METHOD B)*	107.0′ L+ "A" 248+00.00	j		
																																HW, WW TYPE "A", & CABLE RAILING	128.0′ R+ "A" 249+95.00	a	112	D-19
						182.8																							S	10.4		2-60" APC	128.0′ R+ "A" 249+95.00	b		
																										4.5			D		4.0	GMP INLET W/HMA APRON*	66.3′ R+ "A" 249+57.60	c		
																									3.2				D			12" CSP RISER (0.064" THICK)				
																228.2													S	10.7		2-60" APC (JACKED)	49.3′ R+ "A" 249+47.50	d		
						118.0																							S	10.7		2-60" APC	49.3′ L+ "A" 248+90.46	e		
																																HW, WW TYPE "A", & CABLE RAILING	100.7′ L+ "A" 248+61.50	f		
																																RSP (1/4 T, METHOD B)*	100.7′ L+ "A" 248+61.50	g		
																																REMOVE 12" CMP	56.2′ L+ "A" 252+00.41	a	113	D-19
																															4.0	MOD G1 INLET*	57.3′ L+ "A" 254+70.00	a	114	D-19
62.0																													S	3.2		18" APC	57.3′ L+ "A" 254+70.00	b		
																															4.7	MOD G1 INLET*	57.3′ L+ "A" 254+05.00	c		
																																GLD	56.5′ L+ "A" 254+02.50	d		
106.1																													S	3.9		18" APC	57.3′ L+ "A" 254+05.00	e		
																															5.4	G1 INLET	57.3′ L+ "A" 252+96.00	f		
43.3																													P	5.3		18" APC	57.3′ L+ "A" 252+96.00	g		
																																18" AFES	100.3′ L+ "A" 252+96.00	h		
																																REMOVE HW	73.0′ L+ "A" 256+07.81	a	115	D-19
										187.5																						36" APL	115.9′ R+ "A" 256+07.67	b		
																																CONCRETE COLLAR*	71.5′ L+ "A" 256+07.81	c		
			38.2																										P	3.4		36" APC	71.5′ L+ "A" 256+07.81	d		
																																HW	109.6′ L+ "A" 256+08.00	e		
																																RSP (LIGHT, METHOD B)*	109.6′ L+ "A" 256+08.00	f		
																																REMOVE 12" CMP	56.9′ L+ "A" 258+03.17	a	116	D-20
																																TOTAL FROM Q-5 AND Q-9				
211.4			38.2		84.6	300.8				187.5						228.2									3.2	4.5						SHEET TOTAL				
1876.9	1757.4	544.3	1035.5	216.4	1133.7	2301.1	1290.8	201.3	253.3	350.8	197.8	611.9	243.7	30.8	69.2	425.4	97.1	739.9	17.5	30.6	44.3	957.3	167.6	332.6	51.1	155.1	3.8	23.2				GRAND TOTAL				

NOTES:
1. *: SEE DRAINAGE DETAIL SHEETS.
2. (N): NOT A SEPARATE PAY ITEM, FOR INFORMATION ONLY.

DRAINAGE QUANTITIES
DQ-36

REVISED BY | DATE REVISED
VU TRAN | HA VU
CALCULATED-DESIGNED BY | CHECKED BY
FUNCTIONAL SUPERVISOR: GEORGE MORHIG
STATE OF CALIFORNIA - DEPARTMENT OF TRANSPORTATION
Caltrans DESIGN

LAST REVISION 01-30-14 | DATE PLOTTED => 30-JUN-2014 | TIME PLOTTED => 05:31

Dist	COUNTY	ROUTE	POST MILES TOTAL PROJECT	SHEET No.	TOTAL SHEETS
08	SBd	15	42.5/46.0	245	824

REGISTERED CIVIL ENGINEER 1-30-14 DATE

6-23-14
PLANS APPROVAL DATE

REGISTERED PROFESSIONAL ENGINEER
AHMAD SHAH
No. C55259
Exp. 9-30-14
CIVIL
STATE OF CALIFORNIA

THE STATE OF CALIFORNIA OR ITS OFFICERS OR AGENTS SHALL NOT BE RESPONSIBLE FOR THE ACCURACY OR COMPLETENESS OF SCANNED COPIES OF THIS PLAN SHEET.

ABREVIATION:

SSMH SANITARY SEWER MANHOLE -#

LEGEND:

[#] EXISTING SEWER PIPE SECTION AND MANHOLE

(#) SEWER PIPE AND MANHOLE

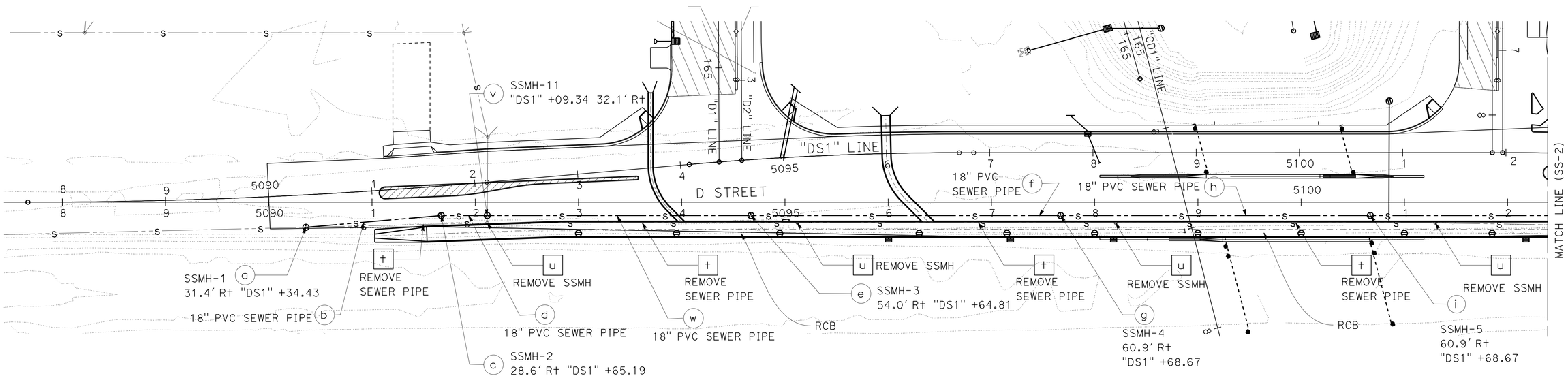

SANITARY SEWER SYSTEM 1

SANITARY SEWER PLAN

SCALE: 1" = 50'

SS-1

APPROVED FOR SANITARY SEWER WORK ONLY

STATE OF CALIFORNIA - DEPARTMENT OF TRANSPORTATION
Caltrans
DESIGN

FUNCTIONAL SUPERVISOR: GEORGE MORHIG
CALCULATED-DESIGNED BY: RAFTAR SHARIA
CHECKED BY: AHMAD SHAH
REVISED BY
DATE REVISED

LAST REVISION 01-30-14
DATE PLOTTED => 30-JUN-2014
TIME PLOTTED => 05:31

Dist	COUNTY	ROUTE	POST MILES TOTAL PROJECT	SHEET No.	TOTAL SHEETS
08	SBd	15	42.5/46.0	246	824

REGISTERED CIVIL ENGINEER 1-30-14 DATE

6-23-14
PLANS APPROVAL DATE

REGISTERED PROFESSIONAL ENGINEER
AHMAD SHAH
No. C55259
Exp. 9-30-14
CIVIL
STATE OF CALIFORNIA

THE STATE OF CALIFORNIA OR ITS OFFICERS OR AGENTS SHALL NOT BE RESPONSIBLE FOR THE ACCURACY OR COMPLETENESS OF SCANNED COPIES OF THIS PLAN SHEET.

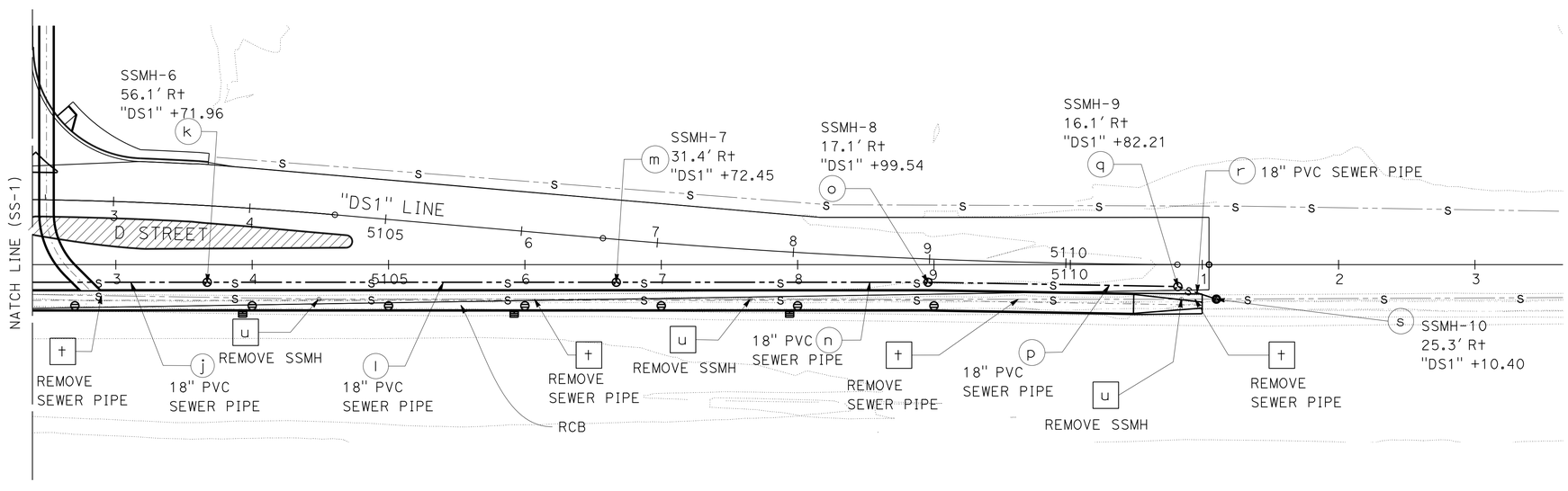

SANITARY SEWER SYSTEM 1

SANITARY SEWER PLAN

SCALE: 1" = 50′

SS-2

APPROVED FOR SANITARY SEWER WORK ONLY

STATE OF CALIFORNIA - DEPARTMENT OF TRANSPORTATION
DESIGN
FUNCTIONAL SUPERVISOR: GEORGE MORHIG
CALCULATED-DESIGNED BY: RAFTAR SHARIA
CHECKED BY: AHMAD SHAH
REVISED BY
DATE REVISED

LAST REVISION 01-30-14
DATE PLOTTED => 30-JUN-2014
TIME PLOTTED => 05:31

Dist	COUNTY	ROUTE	POST MILES TOTAL PROJECT	SHEET No.	TOTAL SHEETS
08	SBd	15	42.5/46.0	247	824

REGISTERED CIVIL ENGINEER 1-30-14 DATE

6-23-14
PLANS APPROVAL DATE

REGISTERED PROFESSIONAL ENGINEER
AHMAD SHAH
No. C55259
Exp. 9-30-14
CIVIL
STATE OF CALIFORNIA

THE STATE OF CALIFORNIA OR ITS OFFICERS OR AGENTS SHALL NOT BE RESPONSIBLE FOR THE ACCURACY OR COMPLETENESS OF SCANNED COPIES OF THIS PLAN SHEET.

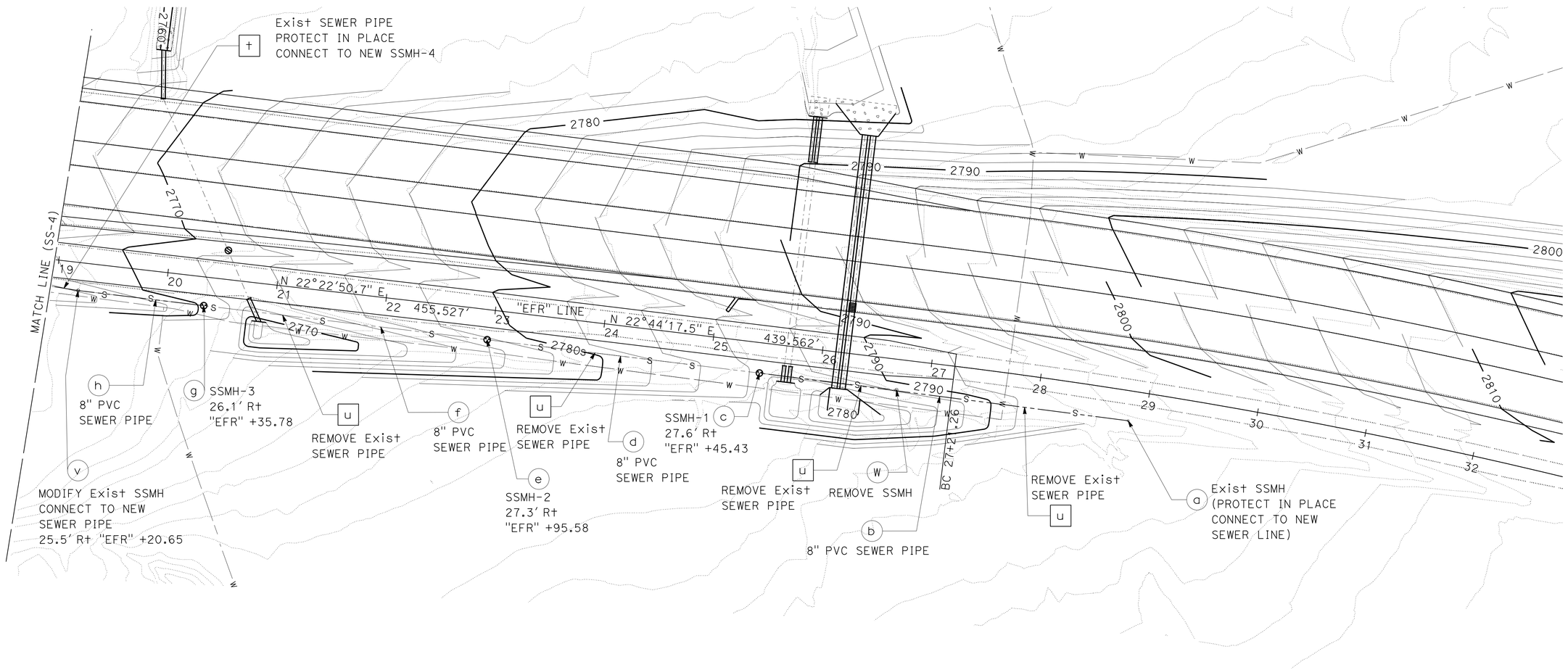

SANITARY SEWER SYSTEM 2

SANITARY SEWER PLAN

SCALE: 1" = 50'

SS-3

APPROVED FOR SANITARY SEWER WORK ONLY

REVISED BY	DATE REVISED

CALCULATED-DESIGNED BY	CHECKED BY
RAFTAR SHARIA	AHMAD SHAH

FUNCTIONAL SUPERVISOR: GEORGE MORHIG

STATE OF CALIFORNIA - DEPARTMENT OF TRANSPORTATION

Caltrans® DESIGN

LAST REVISION 01-30-14 | DATE PLOTTED => 30-JUN-2014 | TIME PLOTTED => 05:31

Dist	COUNTY	ROUTE	POST MILES TOTAL PROJECT	SHEET No.	TOTAL SHEETS
08	SBd	15	42.5/46.0	248	824

REGISTERED CIVIL ENGINEER 1-30-14 DATE

6-23-14
PLANS APPROVAL DATE

REGISTERED PROFESSIONAL ENGINEER AHMAD SHAH No. C55259 Exp. 9-30-14 CIVIL STATE OF CALIFORNIA

THE STATE OF CALIFORNIA OR ITS OFFICERS OR AGENTS SHALL NOT BE RESPONSIBLE FOR THE ACCURACY OR COMPLETENESS OF SCANNED COPIES OF THIS PLAN SHEET.

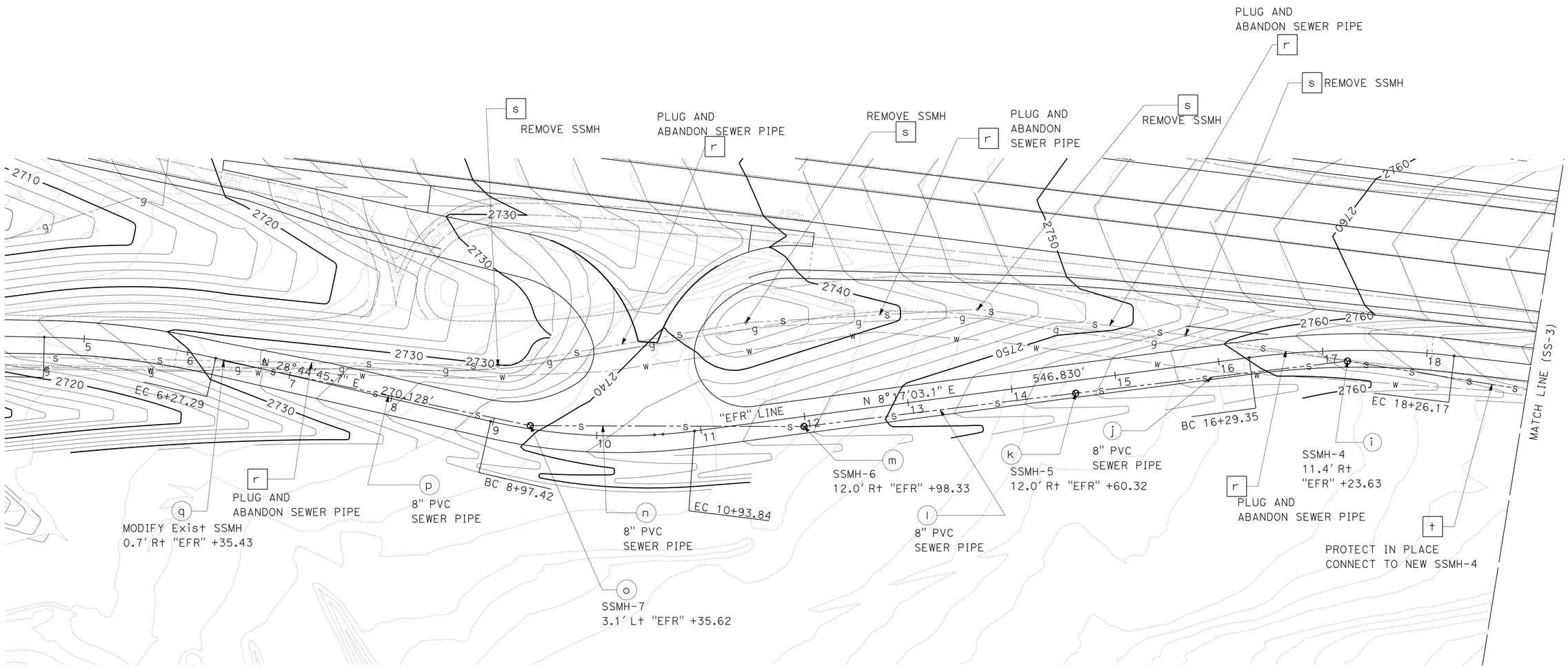

SANITARY SEWER SYSTEM 2

SANITARY SEWER PLAN

SCALE: 1" = 50'

SS-4

APPROVED FOR SANITARY SEWER WORK ONLY

STATE OF CALIFORNIA - DEPARTMENT OF TRANSPORTATION

Caltrans® **DESIGN**

FUNCTIONAL SUPERVISOR: GEORGE MORHIG

CALCULATED-DESIGNED BY: RAFTAR SHARIA

CHECKED BY: AHMAD SHAH

REVISED BY

DATE REVISED

LAST REVISION 01-30-14 | DATE PLOTTED => 30-JUN-2014 | TIME PLOTTED => 05:31

Dist	COUNTY	ROUTE	POST MILES TOTAL PROJECT	SHEET No.	TOTAL SHEETS
08	SBd	15	42.5/46.0	249	824

REGISTERED CIVIL ENGINEER 1-30-14 DATE

6-23-14
PLANS APPROVAL DATE

REGISTERED PROFESSIONAL ENGINEER AHMAD SHAH No. C55259 Exp. 9-30-14 CIVIL STATE OF CALIFORNIA

THE STATE OF CALIFORNIA OR ITS OFFICERS OR AGENTS SHALL NOT BE RESPONSIBLE FOR THE ACCURACY OR COMPLETENESS OF SCANNED COPIES OF THIS PLAN SHEET.

NOTE:

FOR ACCURATE RIGHT OF WAY DATA, CONTACT RIGHT OF WAY ENGINEERING AT THE DISTRICT OFFICE.

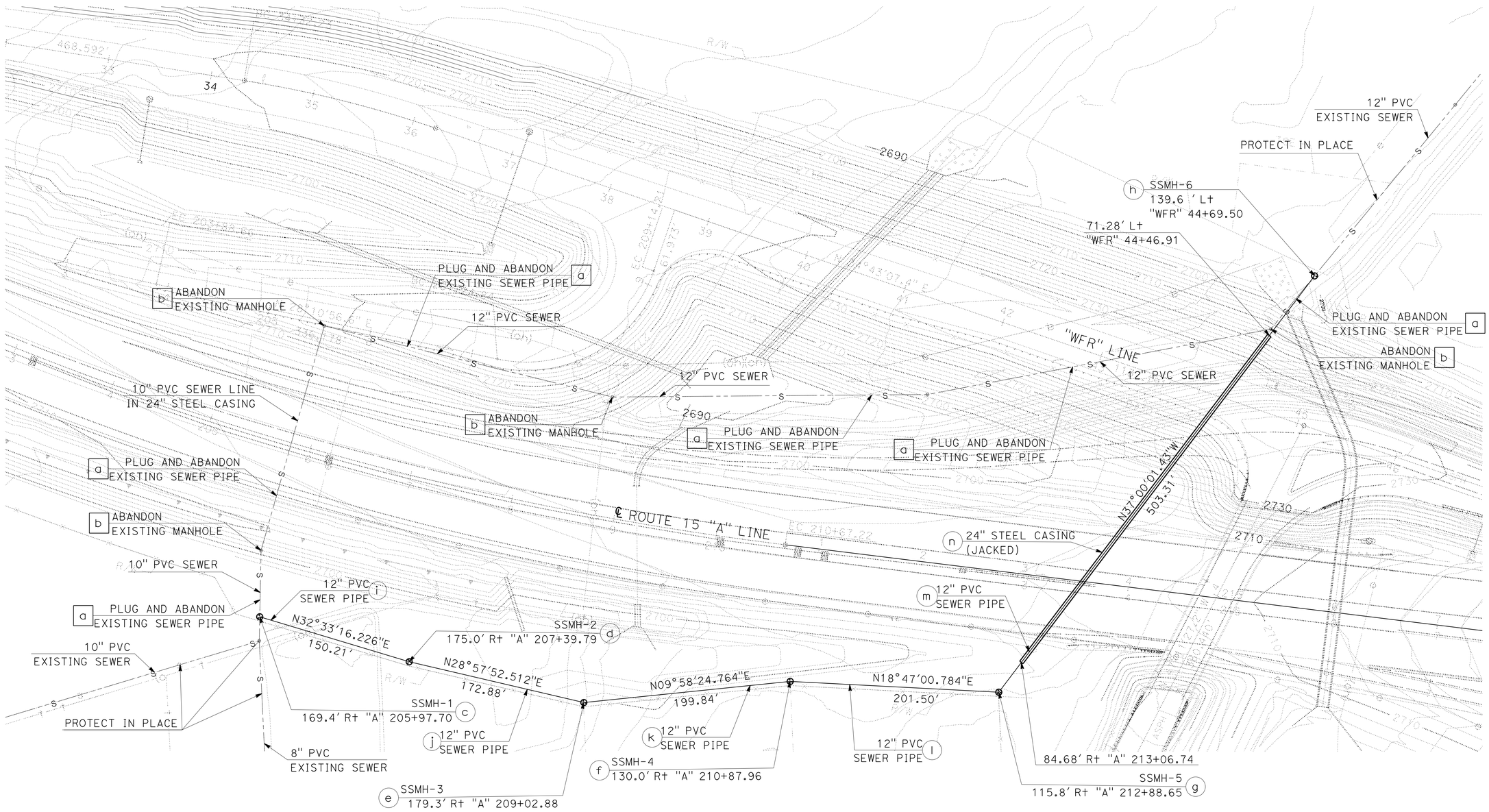

SANITARY SEWER SYSTEM 3

SANITARY SEWER PLAN

SCALE: 1" = 50'

SS-5

APPROVED FOR SANITARY SEWER WORK ONLY

STATE OF CALIFORNIA - DEPARTMENT OF TRANSPORTATION
Caltrans
DESIGN

FUNCTIONAL SUPERVISOR: GEORGE MORHIG
CALCULATED-DESIGNED BY: RAFTAR SHARIA
CHECKED BY: AHMAD SHAH
REVISED BY
DATE REVISED

LAST REVISION 01-30-14
DATE PLOTTED => 30-JUN-2014
TIME PLOTTED => 05:32

Dist	COUNTY	ROUTE	POST MILES TOTAL PROJECT	SHEET No.	TOTAL SHEETS
08	SBd	15	42.5/46.0	250	824

REGISTERED CIVIL ENGINEER 1-30-14 DATE

6-23-14
PLANS APPROVAL DATE

REGISTERED PROFESSIONAL ENGINEER AHMAD SHAH No. C55259 Exp. 9-30-14 CIVIL STATE OF CALIFORNIA

THE STATE OF CALIFORNIA OR ITS OFFICERS OR AGENTS SHALL NOT BE RESPONSIBLE FOR THE ACCURACY OR COMPLETENESS OF SCANNED COPIES OF THIS PLAN SHEET.

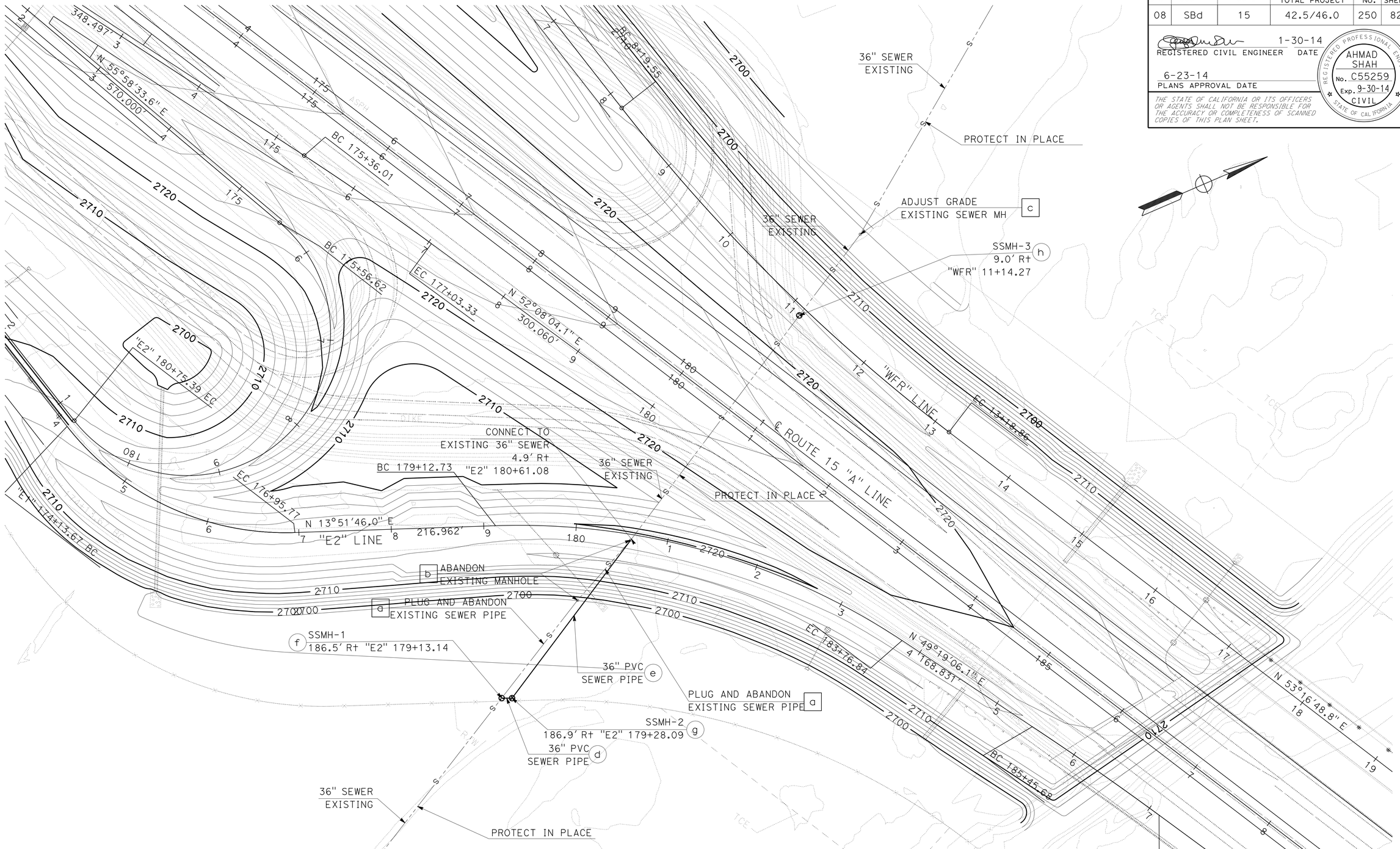

SANITARY SEWER SYSTEM 4

SANITARY SEWER PLAN

SCALE: 1" = 50'

SS-6

NOTE:

FOR ACCURATE RIGHT OF WAY DATA, CONTACT RIGHT OF WAY ENGINEERING AT THE DISTRICT OFFICE.

APPROVED FOR SANITARY SEWER WORK ONLY

STATE OF CALIFORNIA - DEPARTMENT OF TRANSPORTATION

Caltrans DESIGN

FUNCTIONAL SUPERVISOR: GEORGE MORHIG

CALCULATED-DESIGNED BY: RAFTAR SHARIA

CHECKED BY: AHMAD SHAH

REVISED BY

DATE REVISED

LAST REVISION 01-30-14

DATE PLOTTED => 30-JUN-2014
TIME PLOTTED => 05:32

Dist	COUNTY	ROUTE	POST MILES TOTAL PROJECT	SHEET No.	TOTAL SHEETS
08	SBd	15	42.5/46.0	251	824

REGISTERED CIVIL ENGINEER 1-30-14 DATE

6-23-14
PLANS APPROVAL DATE

REGISTERED PROFESSIONAL ENGINEER AHMAD SHAH No. C55259 Exp. 9-30-14 CIVIL STATE OF CALIFORNIA

THE STATE OF CALIFORNIA OR ITS OFFICERS OR AGENTS SHALL NOT BE RESPONSIBLE FOR THE ACCURACY OR COMPLETENESS OF SCANNED COPIES OF THIS PLAN SHEET.

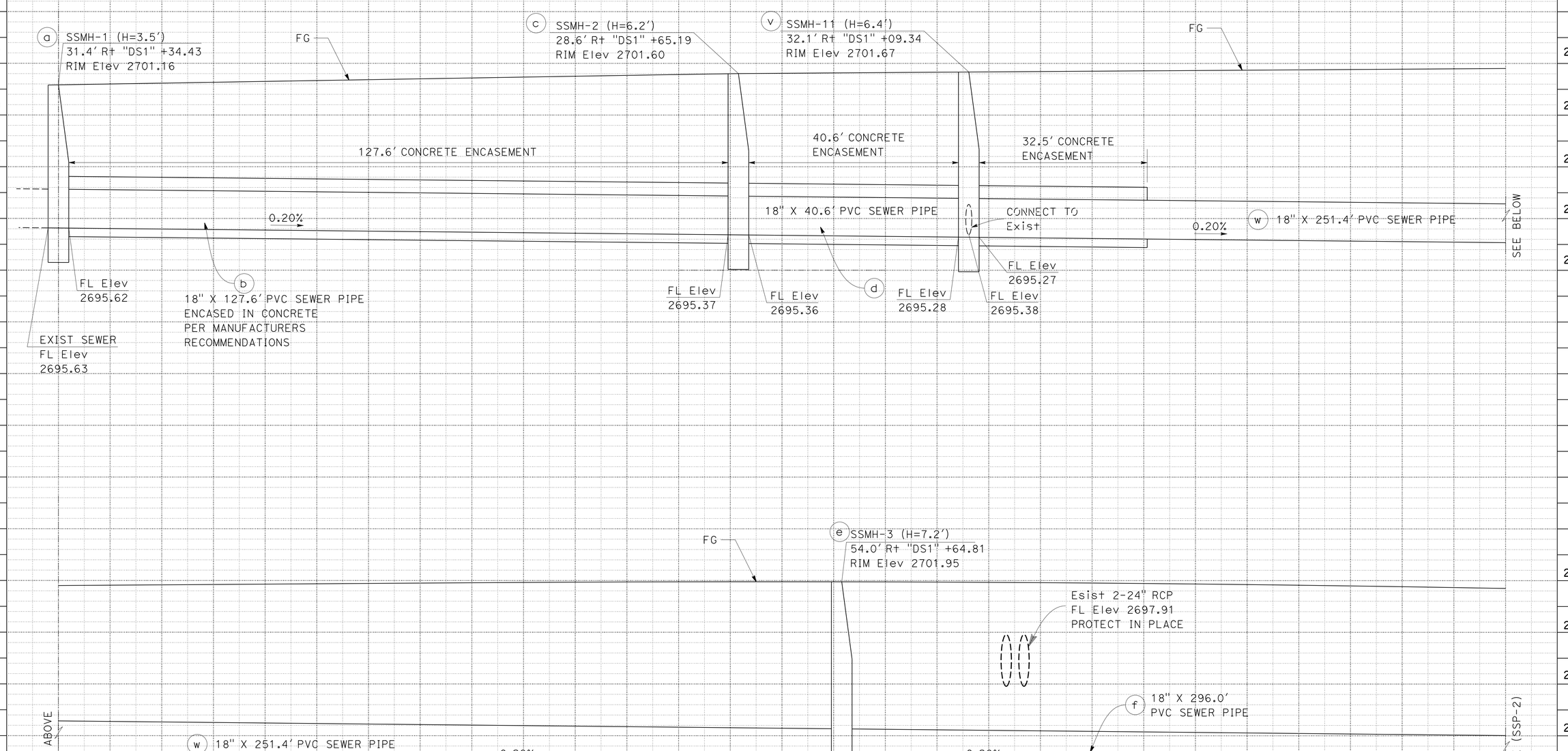

SANITARY SEWER SYSTEM 1

SANITARY SEWER PROFILES

SCALE: Horiz 1" = 10'
Vert 1" = 2'

SSP-1

STATE OF CALIFORNIA - DEPARTMENT OF TRANSPORTATION
Caltrans® DESIGN

FUNCTIONAL SUPERVISOR: GEORGE MORHIG
CALCULATED-DESIGNED BY: RAFTAR SHARIA
CHECKED BY: AHMAD SHAH
REVISED BY
DATE REVISED

LAST REVISION 01-30-14
DATE PLOTTED => 30-JUN-2014
TIME PLOTTED => 06:02

Dist	COUNTY	ROUTE	POST MILES TOTAL PROJECT	SHEET No.	TOTAL SHEETS
08	SBd	15	42.5/46.0	252	824

REGISTERED CIVIL ENGINEER 1-30-14 DATE

6-23-14
PLANS APPROVAL DATE

REGISTERED PROFESSIONAL ENGINEER AHMAD SHAH No. C55259 Exp. 9-30-14 CIVIL STATE OF CALIFORNIA

THE STATE OF CALIFORNIA OR ITS OFFICERS OR AGENTS SHALL NOT BE RESPONSIBLE FOR THE ACCURACY OR COMPLETENESS OF SCANNED COPIES OF THIS PLAN SHEET.

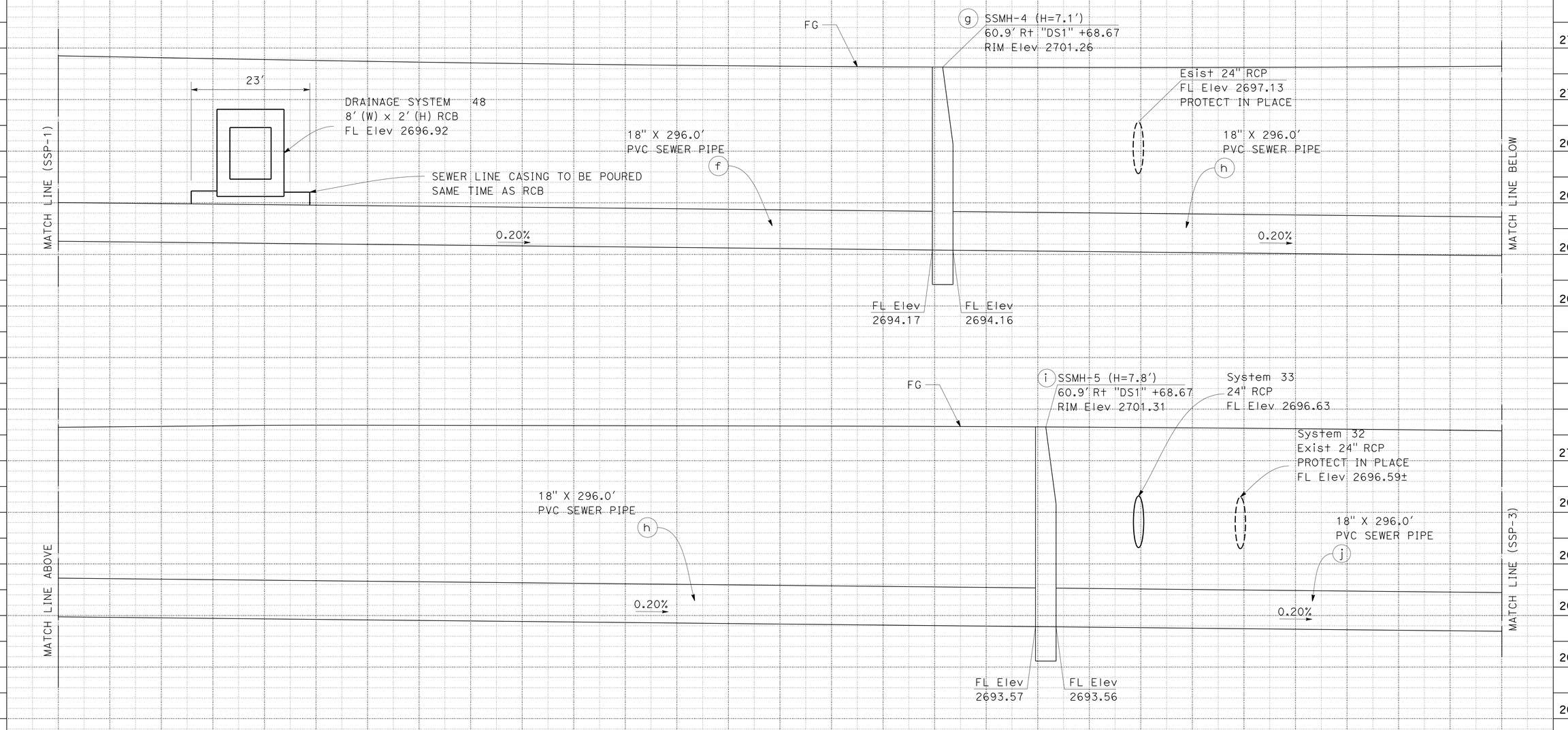

SANITARY SEWER PROFILES

SCALE: Horiz 1" = 10'
Vert 1" = 2'

SSP-2

SANITARY SEWER SYSTEM 1

STATE OF CALIFORNIA - DEPARTMENT OF TRANSPORTATION
Caltrans
DESIGN

FUNCTIONAL SUPERVISOR: GEORGE MORHIG
CALCULATED-DESIGNED BY: RAFTAR SHARIA
CHECKED BY: AHMAD SHAH
REVISED BY
DATE REVISED

LAST REVISION 01-30-14
DATE PLOTTED => 30-JUN-2014
TIME PLOTTED => 06:02

Dist	COUNTY	ROUTE	POST MILES TOTAL PROJECT	SHEET No.	TOTAL SHEETS
08	SBd	15	42.5/46.0	253	824

REGISTERED CIVIL ENGINEER 1-30-14 DATE

6-23-14
PLANS APPROVAL DATE

REGISTERED PROFESSIONAL ENGINEER AHMAD SHAH No. C55259 Exp. 9-30-14 CIVIL STATE OF CALIFORNIA

THE STATE OF CALIFORNIA OR ITS OFFICERS OR AGENTS SHALL NOT BE RESPONSIBLE FOR THE ACCURACY OR COMPLETENESS OF SCANNED COPIES OF THIS PLAN SHEET.

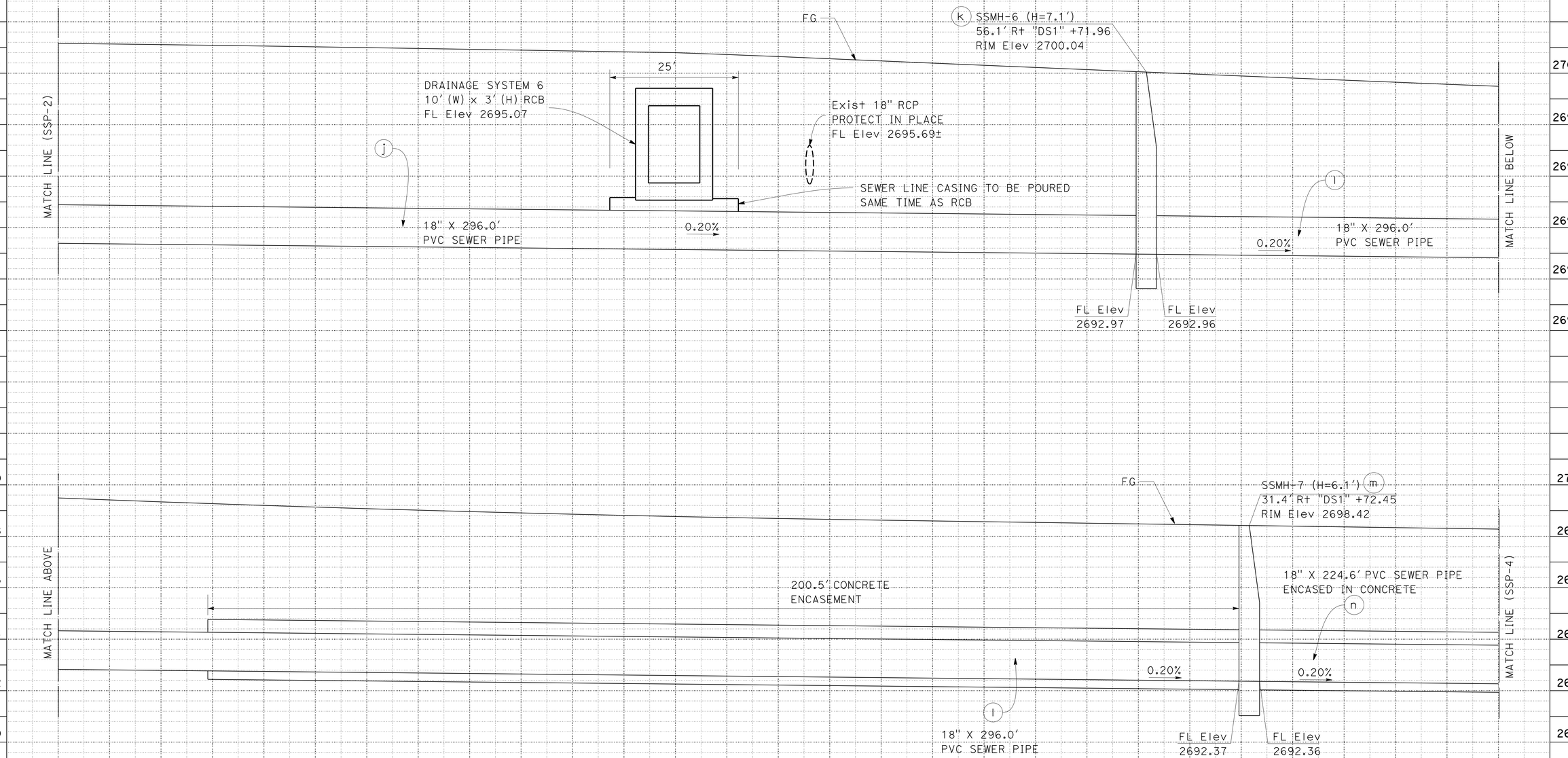

SANITARY SEWER PROFILES

SCALE: Horiz 1" = 10'
Vert 1" = 2'

SSP-3

SANITARY SEWER SYSTEM 1

STATE OF CALIFORNIA - DEPARTMENT OF TRANSPORTATION
Caltrans **DESIGN**

FUNCTIONAL SUPERVISOR: GEORGE MORHIG
CALCULATED-DESIGNED BY: RAFTAR SHARIA
CHECKED BY: AHMAD SHAH
REVISED BY
DATE REVISED

LAST REVISION 01-30-14
DATE PLOTTED => 30-JUN-2014
TIME PLOTTED => 06:02

Dist	COUNTY	ROUTE	POST MILES TOTAL PROJECT	SHEET No.	TOTAL SHEETS
08	SBd	15	42.5/46.0	254	824

REGISTERED CIVIL ENGINEER 1-30-14 DATE

6-23-14
PLANS APPROVAL DATE

REGISTERED PROFESSIONAL ENGINEER AHMAD SHAH No. C55259 Exp. 9-30-14 CIVIL STATE OF CALIFORNIA

THE STATE OF CALIFORNIA OR ITS OFFICERS OR AGENTS SHALL NOT BE RESPONSIBLE FOR THE ACCURACY OR COMPLETENESS OF SCANNED COPIES OF THIS PLAN SHEET.

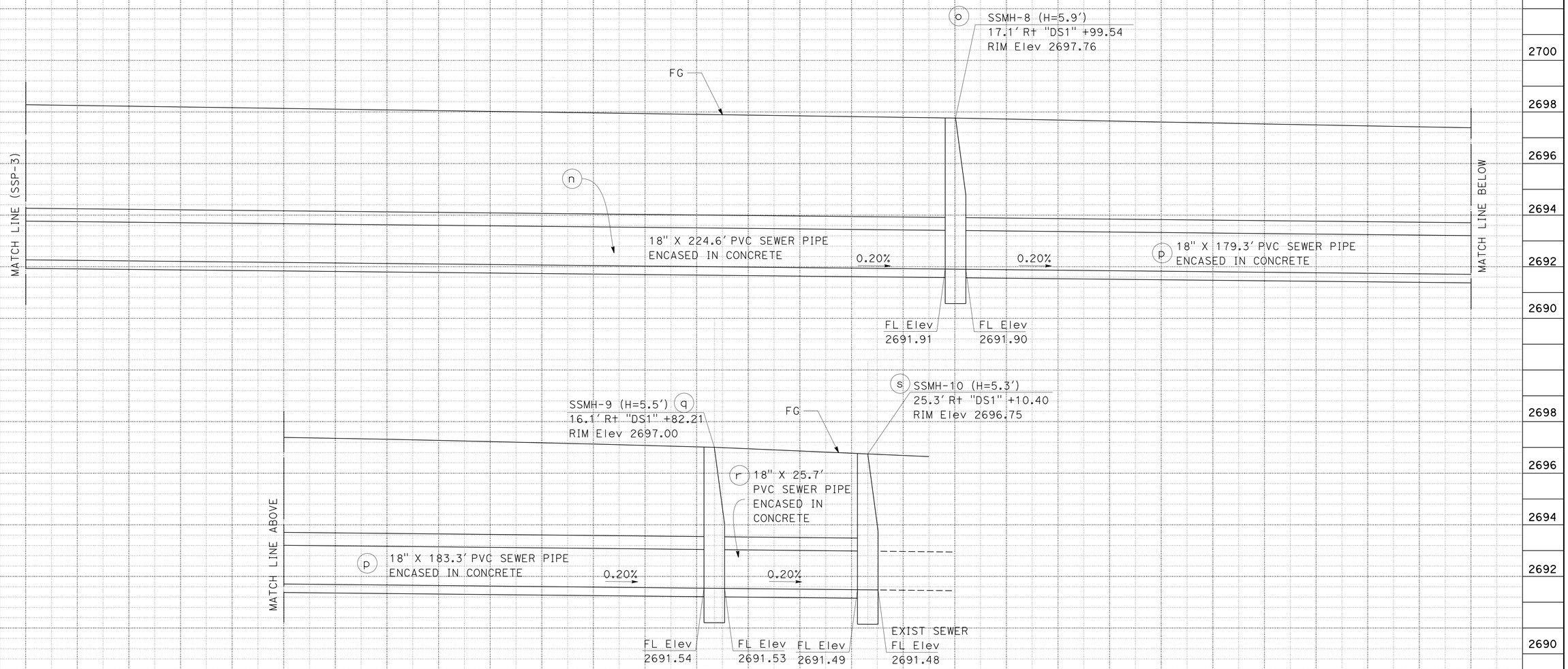

SANITARY SEWER SYSTEM 1

SANITARY SEWER PROFILES

SCALE: Horiz 1" = 10'
Vert 1" = 2'

SSP-4

STATE OF CALIFORNIA - DEPARTMENT OF TRANSPORTATION
Caltrans® DESIGN
FUNCTIONAL SUPERVISOR GEORGE MORHIG
CALCULATED-DESIGNED BY RAFTAR SHARIA
CHECKED BY AHMAD SHAH
REVISED BY
DATE REVISED

LAST REVISION 01-30-14
DATE PLOTTED => 30-JUN-2014
TIME PLOTTED => 06:02

Dist	COUNTY	ROUTE	POST MILES TOTAL PROJECT	SHEET No.	TOTAL SHEETS
08	SBd	15	42.5/46.0	255	824

REGISTERED CIVIL ENGINEER 1-30-14 DATE

6-23-14
PLANS APPROVAL DATE

REGISTERED PROFESSIONAL ENGINEER AHMAD SHAH No. C55259 Exp. 9-30-14 CIVIL STATE OF CALIFORNIA

THE STATE OF CALIFORNIA OR ITS OFFICERS OR AGENTS SHALL NOT BE RESPONSIBLE FOR THE ACCURACY OR COMPLETENESS OF SCANNED COPIES OF THIS PLAN SHEET.

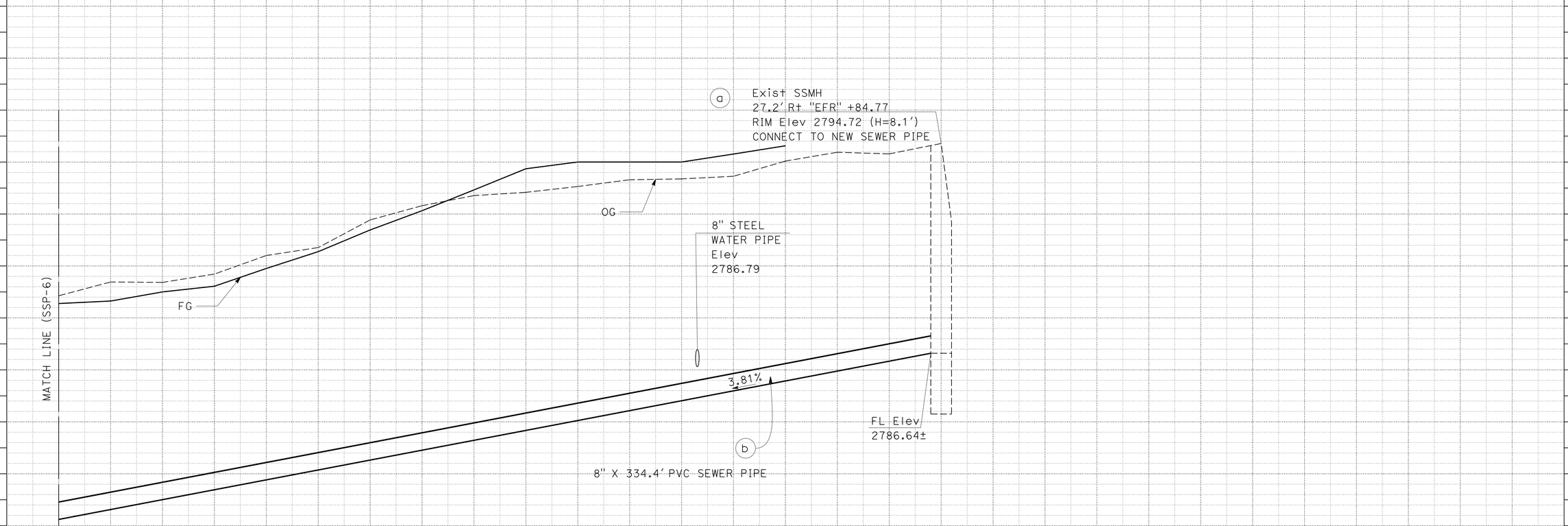

SANITARY SEWER SYSTEM 2

SANITARY SEWER PROFILES

SCALE: Horiz 1" = 10'
Vert 1" = 2'

SSP-5

STATE OF CALIFORNIA - DEPARTMENT OF TRANSPORTATION
Caltrans® **DESIGN**

FUNCTIONAL SUPERVISOR: GEORGE MORHIG

CALCULATED-DESIGNED BY: RAFTAR SHARIA
CHECKED BY: AHMAD SHAH

REVISED BY
DATE REVISED

LAST REVISION 01-30-14
DATE PLOTTED => 30-JUN-2014
TIME PLOTTED => 06:02

Dist	COUNTY	ROUTE	POST MILES TOTAL PROJECT	SHEET No.	TOTAL SHEETS
08	SBd	15	42.5/46.0	256	824

REGISTERED CIVIL ENGINEER 1-30-14 DATE

6-23-14
PLANS APPROVAL DATE

REGISTERED PROFESSIONAL ENGINEER AHMAD SHAH No. C55259 Exp. 9-30-14 CIVIL STATE OF CALIFORNIA

THE STATE OF CALIFORNIA OR ITS OFFICERS OR AGENTS SHALL NOT BE RESPONSIBLE FOR THE ACCURACY OR COMPLETENESS OF SCANNED COPIES OF THIS PLAN SHEET.

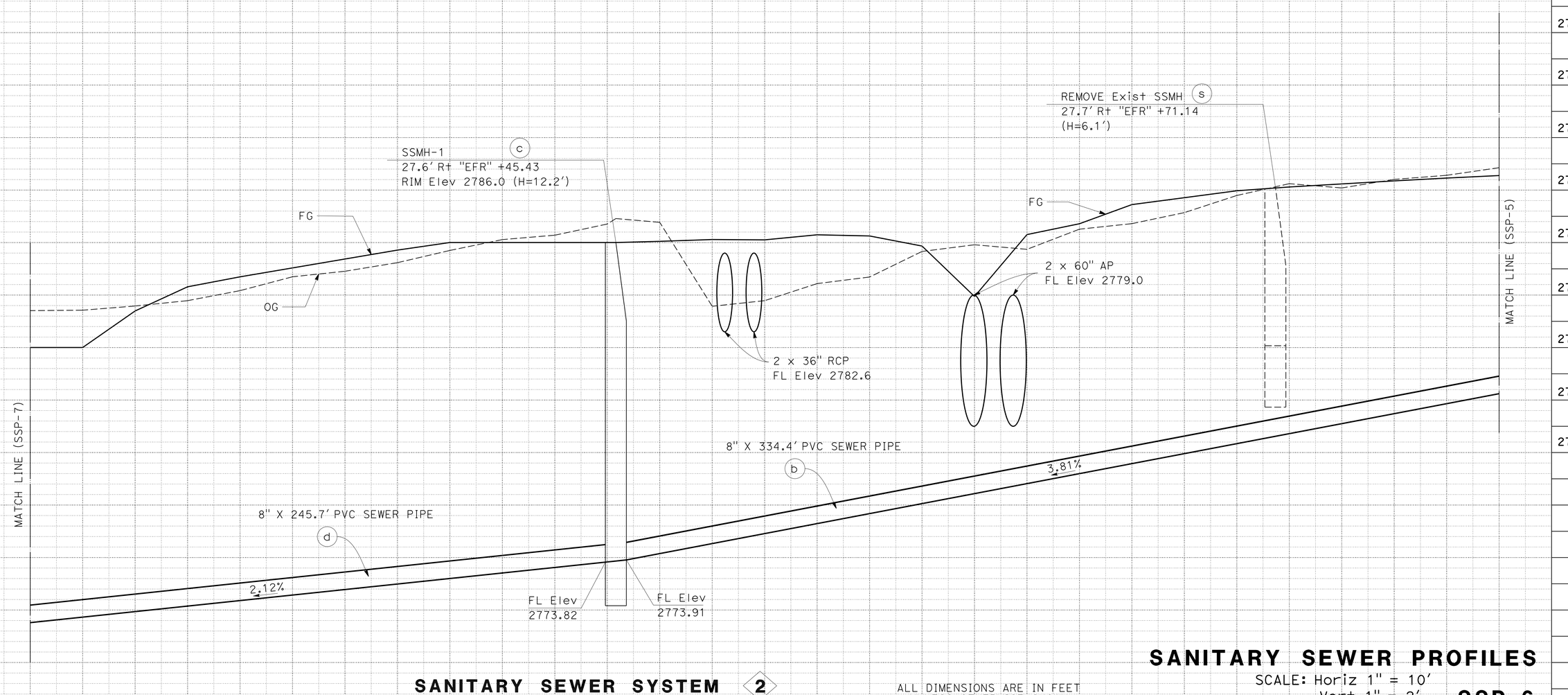

SANITARY SEWER SYSTEM (2)

ALL DIMENSIONS ARE IN FEET UNLESS OTHERWISE SHOWN

SANITARY SEWER PROFILES

SCALE: Horiz 1" = 10'
Vert 1" = 2'

SSP-6

STATE OF CALIFORNIA - DEPARTMENT OF TRANSPORTATION
Caltrans® DESIGN

FUNCTIONAL SUPERVISOR: GEORGE MORHIG
CALCULATED-DESIGNED BY: RAFTAR SHARIA
CHECKED BY: AHMAD SHAH
REVISED BY
DATE REVISED

LAST REVISION 01-30-14
DATE PLOTTED => 30-JUN-2014
TIME PLOTTED => 06:02

Dist	COUNTY	ROUTE	POST MILES TOTAL PROJECT	SHEET No.	TOTAL SHEETS
08	SBd	15	42.5/46.0	257	824

REGISTERED CIVIL ENGINEER 1-30-14 DATE

6-23-14
PLANS APPROVAL DATE

REGISTERED PROFESSIONAL ENGINEER AHMAD SHAH No. C55259 Exp. 9-30-14 CIVIL STATE OF CALIFORNIA

THE STATE OF CALIFORNIA OR ITS OFFICERS OR AGENTS SHALL NOT BE RESPONSIBLE FOR THE ACCURACY OR COMPLETENESS OF SCANNED COPIES OF THIS PLAN SHEET.

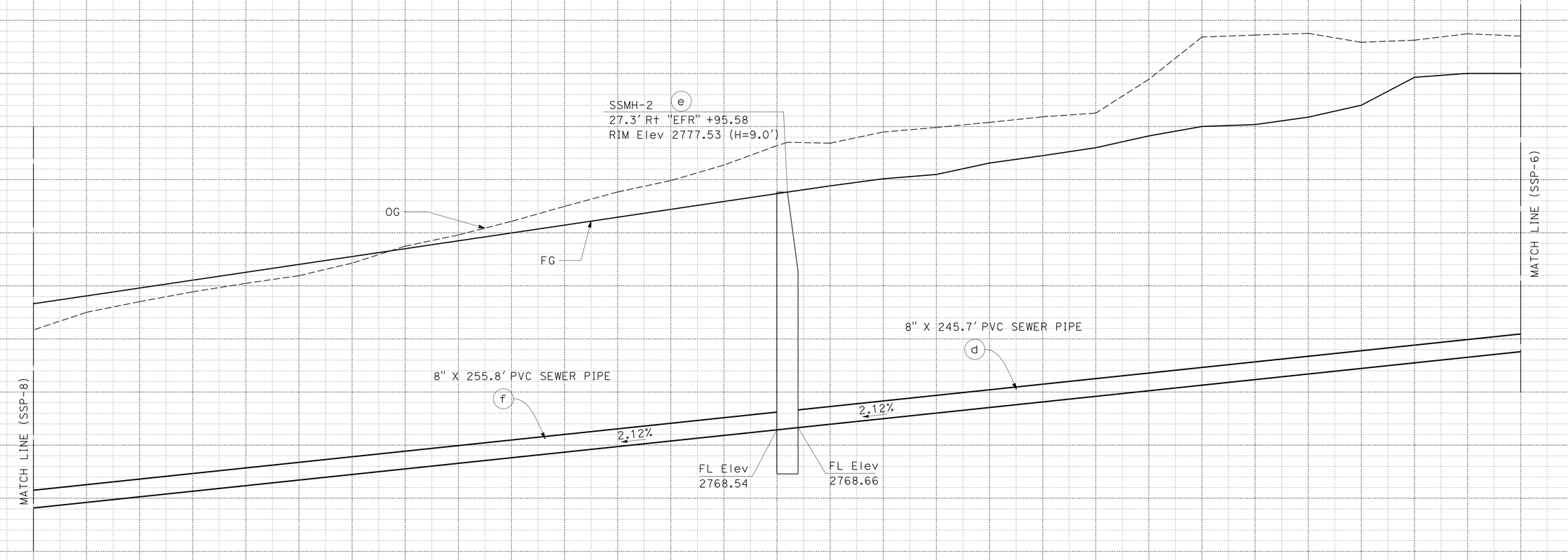

SANITARY SEWER SYSTEM 2

SANITARY SEWER PROFILES

SCALE: Horiz 1" = 10'
Vert 1" = 2'

SSP-7

STATE OF CALIFORNIA - DEPARTMENT OF TRANSPORTATION
Caltrans
DESIGN

FUNCTIONAL SUPERVISOR: GEORGE MORHIG

CALCULATED-DESIGNED BY: RAFTAR SHARIA
CHECKED BY: AHMAD SHAH

REVISED BY
DATE REVISED

LAST REVISION 01-30-14
DATE PLOTTED => 30-JUN-2014
TIME PLOTTED => 06:02

Dist	COUNTY	ROUTE	POST MILES TOTAL PROJECT	SHEET No.	TOTAL SHEETS
08	SBd	15	42.5/46.0	258	824

REGISTERED CIVIL ENGINEER 1-30-14 DATE

6-23-14
PLANS APPROVAL DATE

REGISTERED PROFESSIONAL ENGINEER AHMAD SHAH No. C55259 Exp. 9-30-14 CIVIL STATE OF CALIFORNIA

THE STATE OF CALIFORNIA OR ITS OFFICERS OR AGENTS SHALL NOT BE RESPONSIBLE FOR THE ACCURACY OR COMPLETENESS OF SCANNED COPIES OF THIS PLAN SHEET.

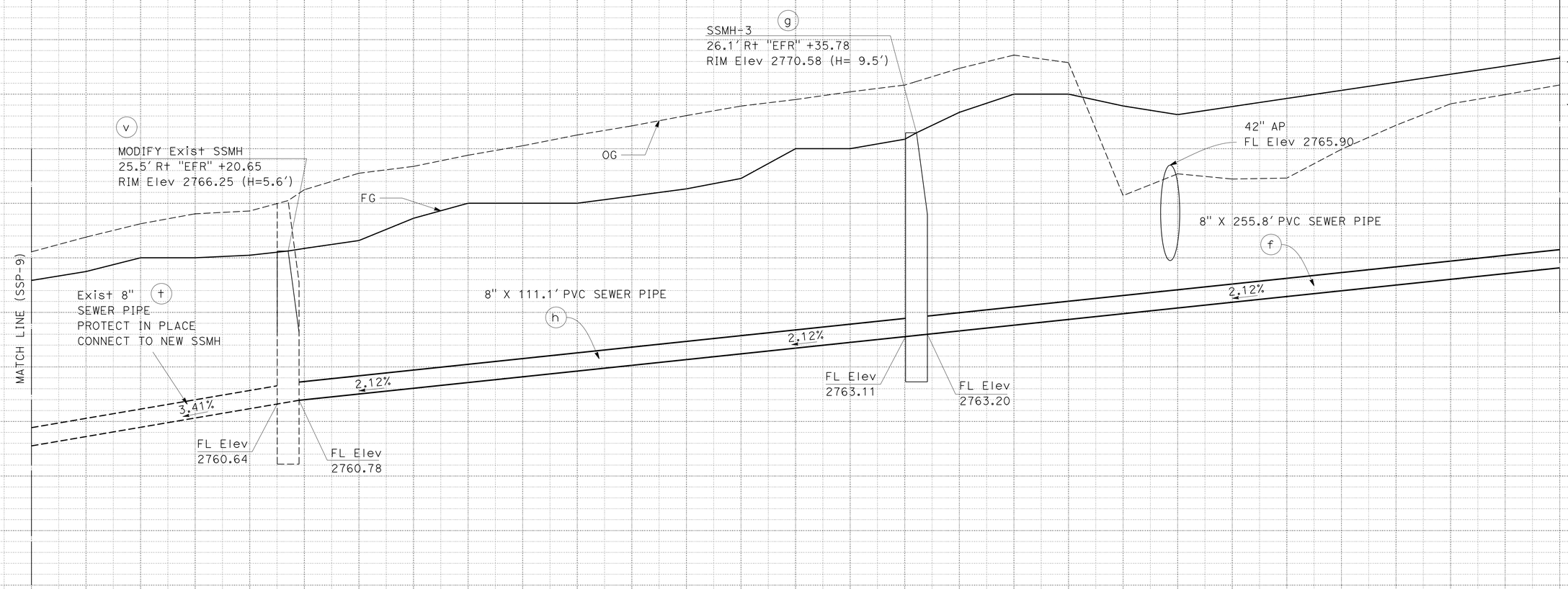

SANITARY SEWER PROFILES

SCALE: Horiz 1" = 10'
Vert 1" = 2'

SSP-8

SANITARY SEWER SYSTEM 2

STATE OF CALIFORNIA - DEPARTMENT OF TRANSPORTATION
Caltrans® **DESIGN**

FUNCTIONAL SUPERVISOR: GEORGE MORHIG
CALCULATED-DESIGNED BY: RAFTAR SHARIA
CHECKED BY: AHMAD SHAH
REVISED BY
DATE REVISED

LAST REVISION 01-30-14
DATE PLOTTED => 30-JUN-2014
TIME PLOTTED => 06:02

Dist	COUNTY	ROUTE	POST MILES TOTAL PROJECT	SHEET No.	TOTAL SHEETS
08	SBd	15	42.5/46.0	259	824

REGISTERED CIVIL ENGINEER 1-30-14 DATE

6-23-14
PLANS APPROVAL DATE

REGISTERED PROFESSIONAL ENGINEER AHMAD SHAH No. C55259 Exp. 9-30-14 CIVIL STATE OF CALIFORNIA

THE STATE OF CALIFORNIA OR ITS OFFICERS OR AGENTS SHALL NOT BE RESPONSIBLE FOR THE ACCURACY OR COMPLETENESS OF SCANNED COPIES OF THIS PLAN SHEET.

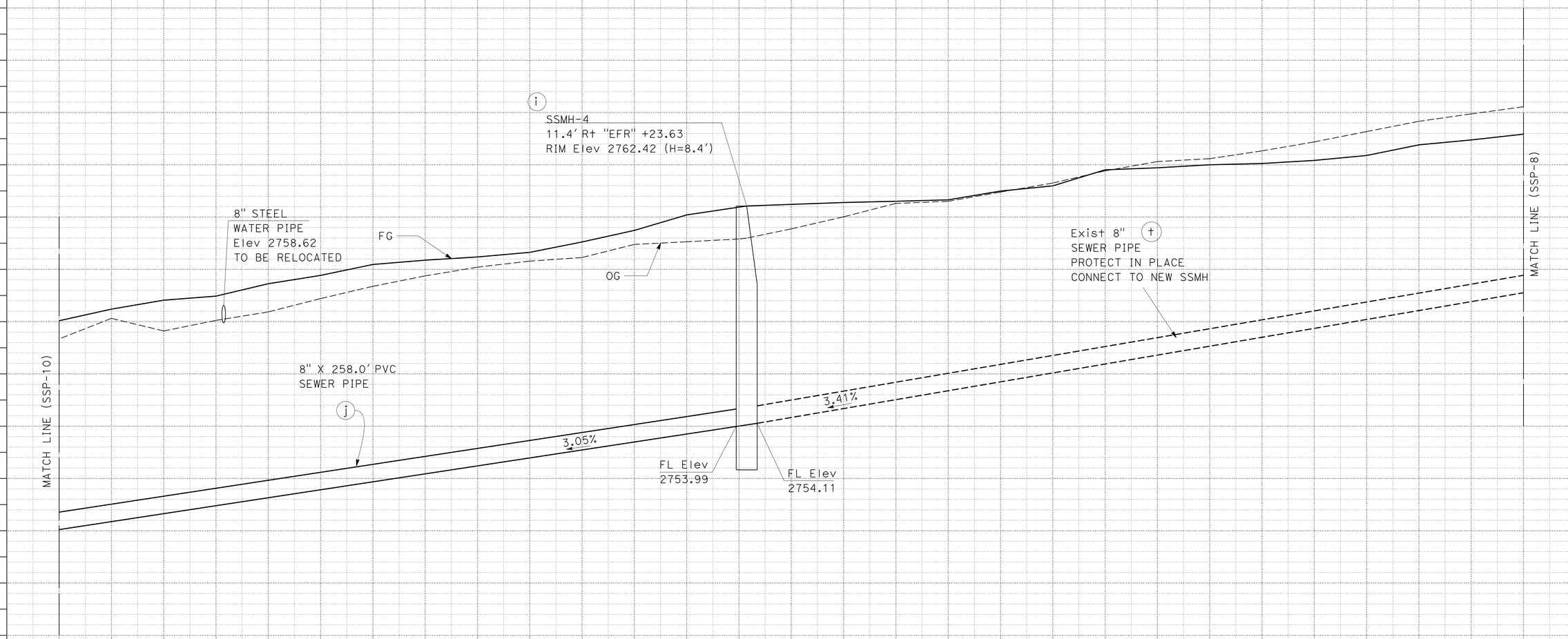

SANITARY SEWER SYSTEM 2

SANITARY SEWER PROFILES

SCALE: Horiz 1" = 10'
Vert 1" = 2'

SSP-9

STATE OF CALIFORNIA - DEPARTMENT OF TRANSPORTATION
Caltrans
DESIGN

FUNCTIONAL SUPERVISOR: GEORGE MORHIG
CALCULATED-DESIGNED BY: RAFTAR SHARIA
CHECKED BY: AHMAD SHAH
REVISED BY
DATE REVISED

LAST REVISION 01-30-14 DATE PLOTTED => 30-JUN-2014 TIME PLOTTED => 06:02

BORDER LAST REVISED 7/2/2010
USERNAME => s121614
DGN FILE => 08140000086jb009.dgn
RELATIVE BORDER SCALE IS IN INCHES 0 1 2 3
UNIT 2231
PROJECT NUMBER & PHASE 08140000861

Dist	COUNTY	ROUTE	POST MILES TOTAL PROJECT	SHEET No.	TOTAL SHEETS
08	SBd	15	42.5/46.0	260	824

REGISTERED CIVIL ENGINEER 1-30-14 DATE

6-23-14
PLANS APPROVAL DATE

REGISTERED PROFESSIONAL ENGINEER AHMAD SHAH No. C55259 Exp. 9-30-14 CIVIL STATE OF CALIFORNIA

THE STATE OF CALIFORNIA OR ITS OFFICERS OR AGENTS SHALL NOT BE RESPONSIBLE FOR THE ACCURACY OR COMPLETENESS OF SCANNED COPIES OF THIS PLAN SHEET.

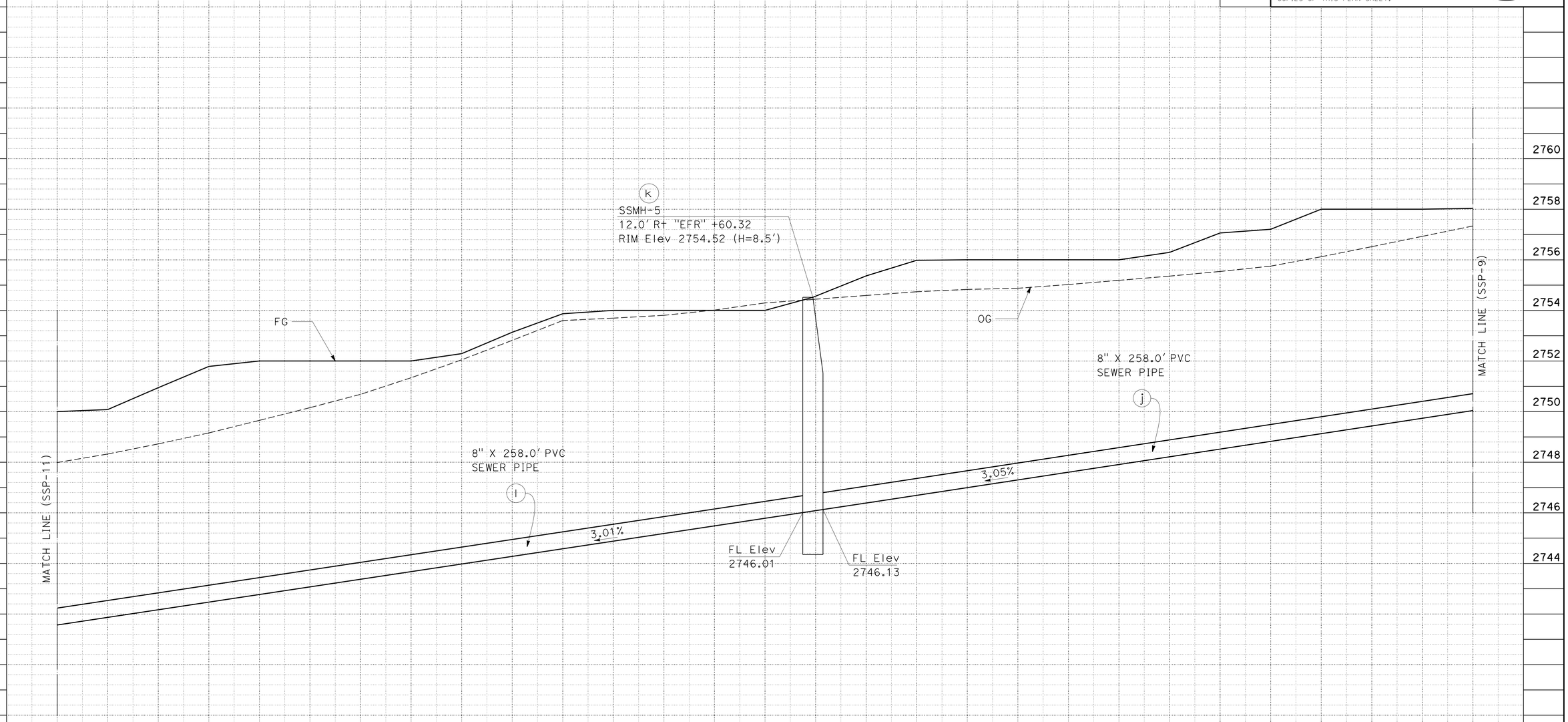

SANITARY SEWER PROFILES

SCALE: Horiz 1" = 10'
Vert 1" = 2'

SSP-10

SANITARY SEWER SYSTEM 2

STATE OF CALIFORNIA - DEPARTMENT OF TRANSPORTATION
Caltrans
DESIGN

FUNCTIONAL SUPERVISOR: GEORGE MORHIG
CALCULATED-DESIGNED BY: RAFTAR SHARIA
CHECKED BY: AHMAD SHAH
REVISED BY
DATE REVISED

LAST REVISION 01-30-14
DATE PLOTTED => 30-JUN-2014
TIME PLOTTED => 06:03

Dist	COUNTY	ROUTE	POST MILES TOTAL PROJECT	SHEET No.	TOTAL SHEETS
08	SBd	15	42.5/46.0	261	824

REGISTERED CIVIL ENGINEER 1-30-14 DATE

6-23-14
PLANS APPROVAL DATE

REGISTERED PROFESSIONAL ENGINEER AHMAD SHAH No. C55259 Exp. 9-30-14 CIVIL STATE OF CALIFORNIA

THE STATE OF CALIFORNIA OR ITS OFFICERS OR AGENTS SHALL NOT BE RESPONSIBLE FOR THE ACCURACY OR COMPLETENESS OF SCANNED COPIES OF THIS PLAN SHEET.

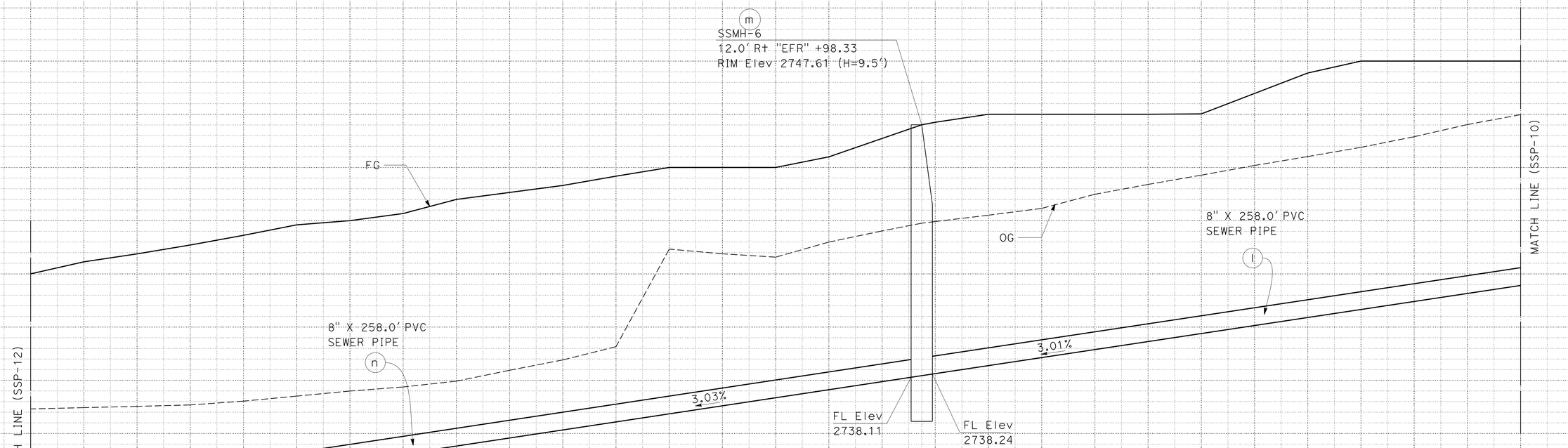

SANITARY SEWER PROFILES

SCALE: Horiz 1" = 10'
Vert 1" = 2'

SSP-11

SANITARY SEWER SYSTEM 2

STATE OF CALIFORNIA - DEPARTMENT OF TRANSPORTATION
Caltrans® **DESIGN**

FUNCTIONAL SUPERVISOR: GEORGE MORHIG

CALCULATED-DESIGNED BY: RAFTAR SHARIA
CHECKED BY: AHMAD SHAH

REVISED BY
DATE REVISED

LAST REVISION 01-30-14
DATE PLOTTED => 30-JUN-2014
TIME PLOTTED => 06:03

Dist	COUNTY	ROUTE	POST MILES TOTAL PROJECT	SHEET No.	TOTAL SHEETS
08	SBd	15	42.5/46.0	262	824

REGISTERED CIVIL ENGINEER 1-30-14 DATE

6-23-14
PLANS APPROVAL DATE

REGISTERED PROFESSIONAL ENGINEER AHMAD SHAH No. C55259 Exp. 9-30-14 CIVIL STATE OF CALIFORNIA

THE STATE OF CALIFORNIA OR ITS OFFICERS OR AGENTS SHALL NOT BE RESPONSIBLE FOR THE ACCURACY OR COMPLETENESS OF SCANNED COPIES OF THIS PLAN SHEET.

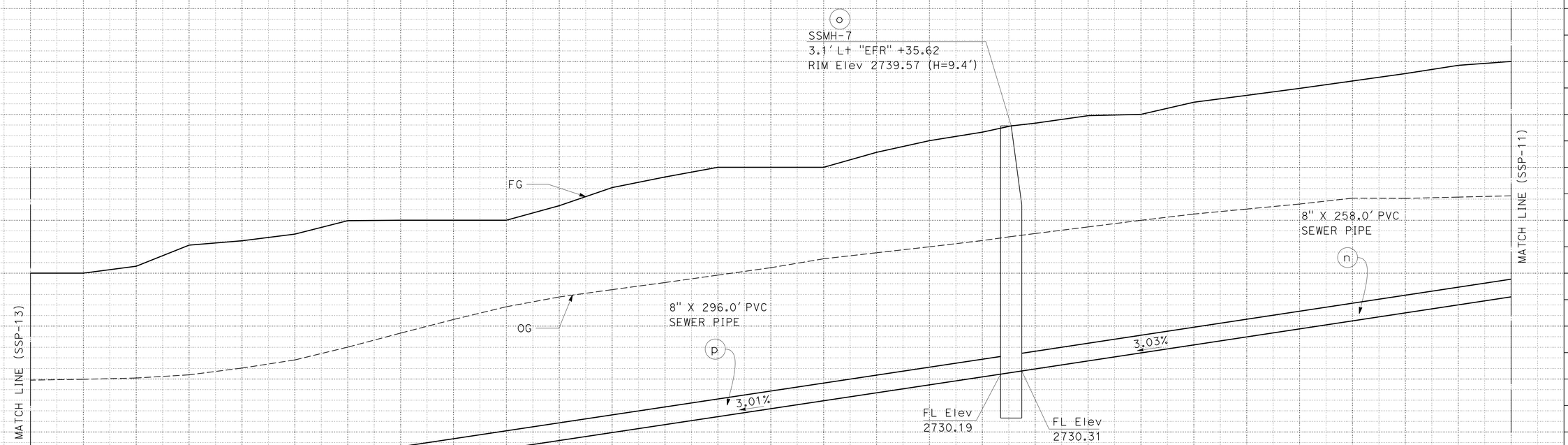

SANITARY SEWER SYSTEM 2

SANITARY SEWER PROFILES

SCALE: Horiz 1" = 10'
Vert 1" = 2'

SSP-12

STATE OF CALIFORNIA - DEPARTMENT OF TRANSPORTATION
Caltrans® DESIGN

FUNCTIONAL SUPERVISOR: GEORGE MORHIG
CALCULATED-DESIGNED BY: RAFTAR SHARIA
CHECKED BY: AHMAD SHAH
REVISED BY
DATE REVISED

LAST REVISION 01-30-14
DATE PLOTTED => 30-JUN-2014
TIME PLOTTED => 06:03

Dist	COUNTY	ROUTE	POST MILES TOTAL PROJECT	SHEET No.	TOTAL SHEETS
08	SBd	15	42.5/46.0	263	824

REGISTERED CIVIL ENGINEER 1-30-14 DATE

6-23-14
PLANS APPROVAL DATE

REGISTERED PROFESSIONAL ENGINEER
AHMAD SHAH
No. C55259
Exp. 9-30-14
CIVIL
STATE OF CALIFORNIA

THE STATE OF CALIFORNIA OR ITS OFFICERS OR AGENTS SHALL NOT BE RESPONSIBLE FOR THE ACCURACY OR COMPLETENESS OF SCANNED COPIES OF THIS PLAN SHEET.

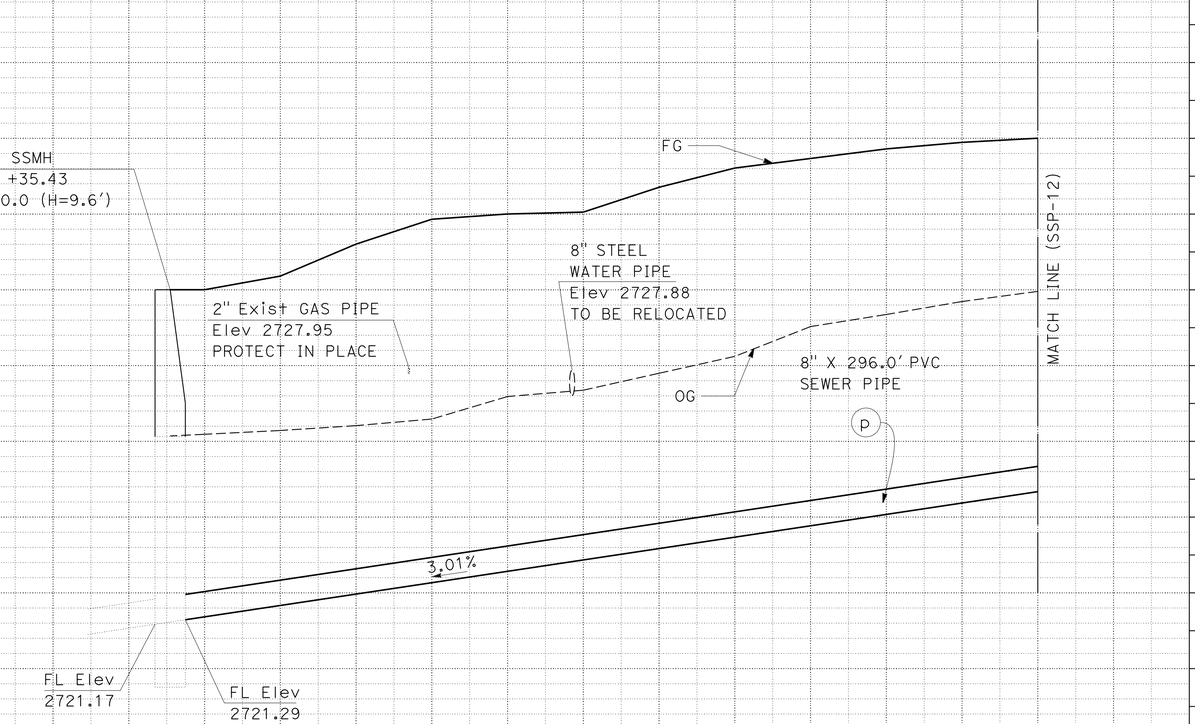

SANITARY SEWER PROFILES

SCALE: Horiz 1" = 10'
Vert 1" = 2'

SSP-13

SANITARY SEWER SYSTEM 2

STATE OF CALIFORNIA - DEPARTMENT OF TRANSPORTATION
Caltrans®
DESIGN

FUNCTIONAL SUPERVISOR: GEORGE MORHIG
CALCULATED-DESIGNED BY: RAFTAR SHARIA
CHECKED BY: AHMAD SHAH
REVISED BY
DATE REVISED

LAST REVISION 01-30-14
DATE PLOTTED => 30-JUN-2014
TIME PLOTTED => 06:03

Dist	COUNTY	ROUTE	POST MILES TOTAL PROJECT	SHEET No.	TOTAL SHEETS
08	SBd	15	42.5/46.0	264	824

REGISTERED CIVIL ENGINEER 1-30-14 DATE

6-23-14
PLANS APPROVAL DATE

REGISTERED PROFESSIONAL ENGINEER AHMAD SHAH No. C55259 Exp. 9-30-14 CIVIL STATE OF CALIFORNIA

THE STATE OF CALIFORNIA OR ITS OFFICERS OR AGENTS SHALL NOT BE RESPONSIBLE FOR THE ACCURACY OR COMPLETENESS OF SCANNED COPIES OF THIS PLAN SHEET.

REVISED BY
DATE REVISED

RAFTAR SHARIA
AHMAD SHAH

CALCULATED-DESIGNED BY
CHECKED BY

FUNCTIONAL SUPERVISOR
GEORGE MORHIG

STATE OF CALIFORNIA - DEPARTMENT OF TRANSPORTATION
Caltrans
DESIGN

SANITARY SEWER SYSTEM 3

SANITARY SEWER PROFILES

SCALE: Horiz 1" = 10'
Vert 1" = 4'

SSP-14

LAST REVISION 01-30-14
DATE PLOTTED => 30-JUN-2014
TIME PLOTTED => 06:03

Dist	COUNTY	ROUTE	POST MILES TOTAL PROJECT	SHEET No.	TOTAL SHEETS
08	SBd	15	42.5/46.0	265	824

REGISTERED CIVIL ENGINEER 1-30-14 DATE

6-23-14
PLANS APPROVAL DATE

REGISTERED PROFESSIONAL ENGINEER AHMAD SHAH No. C55259 Exp. 9-30-14 CIVIL STATE OF CALIFORNIA

THE STATE OF CALIFORNIA OR ITS OFFICERS OR AGENTS SHALL NOT BE RESPONSIBLE FOR THE ACCURACY OR COMPLETENESS OF SCANNED COPIES OF THIS PLAN SHEET.

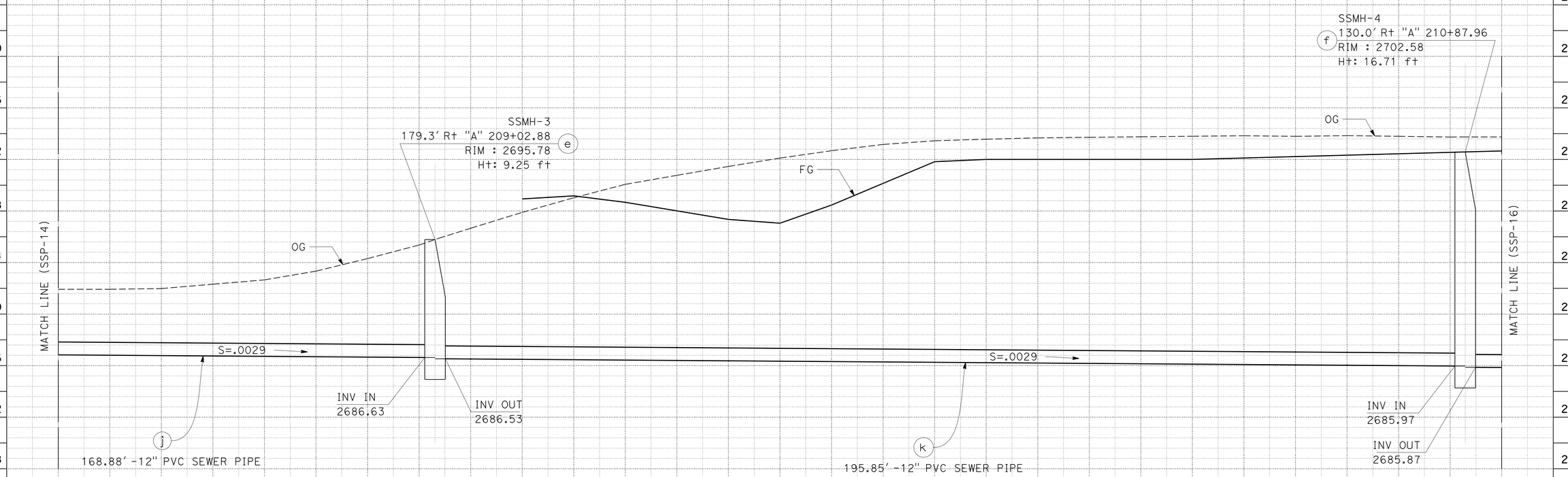

SANITARY SEWER SYSTEM 3

SANITARY SEWER PROFILES

SCALE: Horiz 1" = 10'
Vert 1" = 4'

SSP-15

REVISED BY | DATE REVISED

RAFTAR SHARIA | AHMAD SHAH

CALCULATED-DESIGNED BY | CHECKED BY

FUNCTIONAL SUPERVISOR: GEORGE MORHIG

STATE OF CALIFORNIA - DEPARTMENT OF TRANSPORTATION

Caltrans® DESIGN

LAST REVISION 01-30-14 | DATE PLOTTED => 30-JUN-2014 | TIME PLOTTED => 06:03

Dist	COUNTY	ROUTE	POST MILES TOTAL PROJECT	SHEET No.	TOTAL SHEETS
08	SBd	15	42.5/46.0	266	824

REGISTERED CIVIL ENGINEER 1-30-14 DATE

6-23-14
PLANS APPROVAL DATE

REGISTERED PROFESSIONAL ENGINEER AHMAD SHAH No. C55259 Exp. 9-30-14 CIVIL STATE OF CALIFORNIA

THE STATE OF CALIFORNIA OR ITS OFFICERS OR AGENTS SHALL NOT BE RESPONSIBLE FOR THE ACCURACY OR COMPLETENESS OF SCANNED COPIES OF THIS PLAN SHEET.

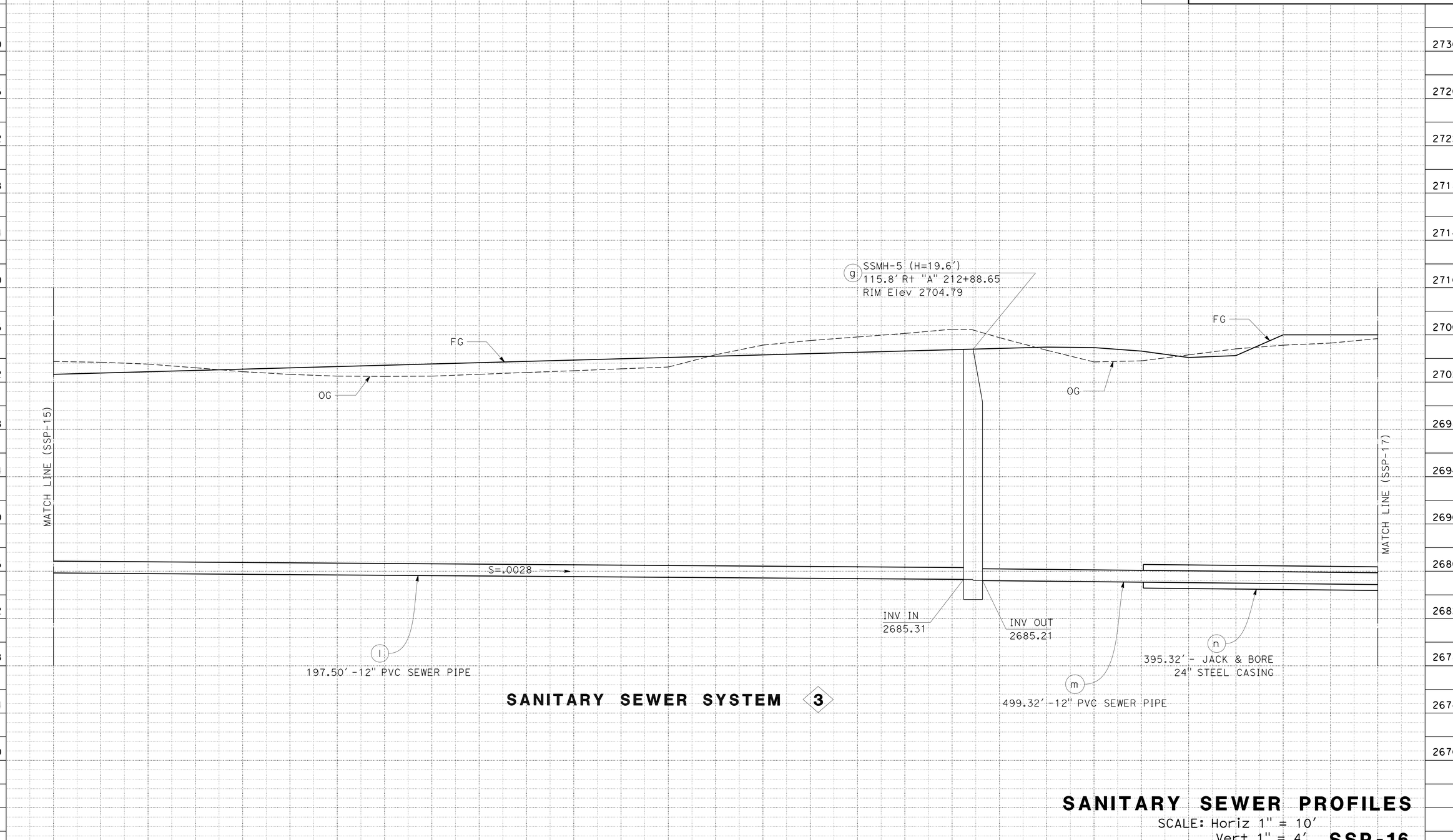

SANITARY SEWER PROFILES

SCALE: Horiz 1" = 10'
Vert 1" = 4'

SSP-16

STATE OF CALIFORNIA - DEPARTMENT OF TRANSPORTATION
Caltrans
DESIGN

FUNCTIONAL SUPERVISOR: GEORGE MORHIG

CALCULATED-DESIGNED BY: RAFTAR SHARIA
CHECKED BY: AHMAD SHAH

REVISED BY
DATE REVISED

LAST REVISION 01-30-14
DATE PLOTTED => 30-JUN-2014
TIME PLOTTED => 06:03

Dist	COUNTY	ROUTE	POST MILES TOTAL PROJECT	SHEET No.	TOTAL SHEETS
08	SBd	15	42.5/46.0	267	824

REGISTERED CIVIL ENGINEER 1-30-14 DATE

6-23-14
PLANS APPROVAL DATE

REGISTERED PROFESSIONAL ENGINEER AHMAD SHAH No. C55259 Exp. 9-30-14 CIVIL STATE OF CALIFORNIA

THE STATE OF CALIFORNIA OR ITS OFFICERS OR AGENTS SHALL NOT BE RESPONSIBLE FOR THE ACCURACY OR COMPLETENESS OF SCANNED COPIES OF THIS PLAN SHEET.

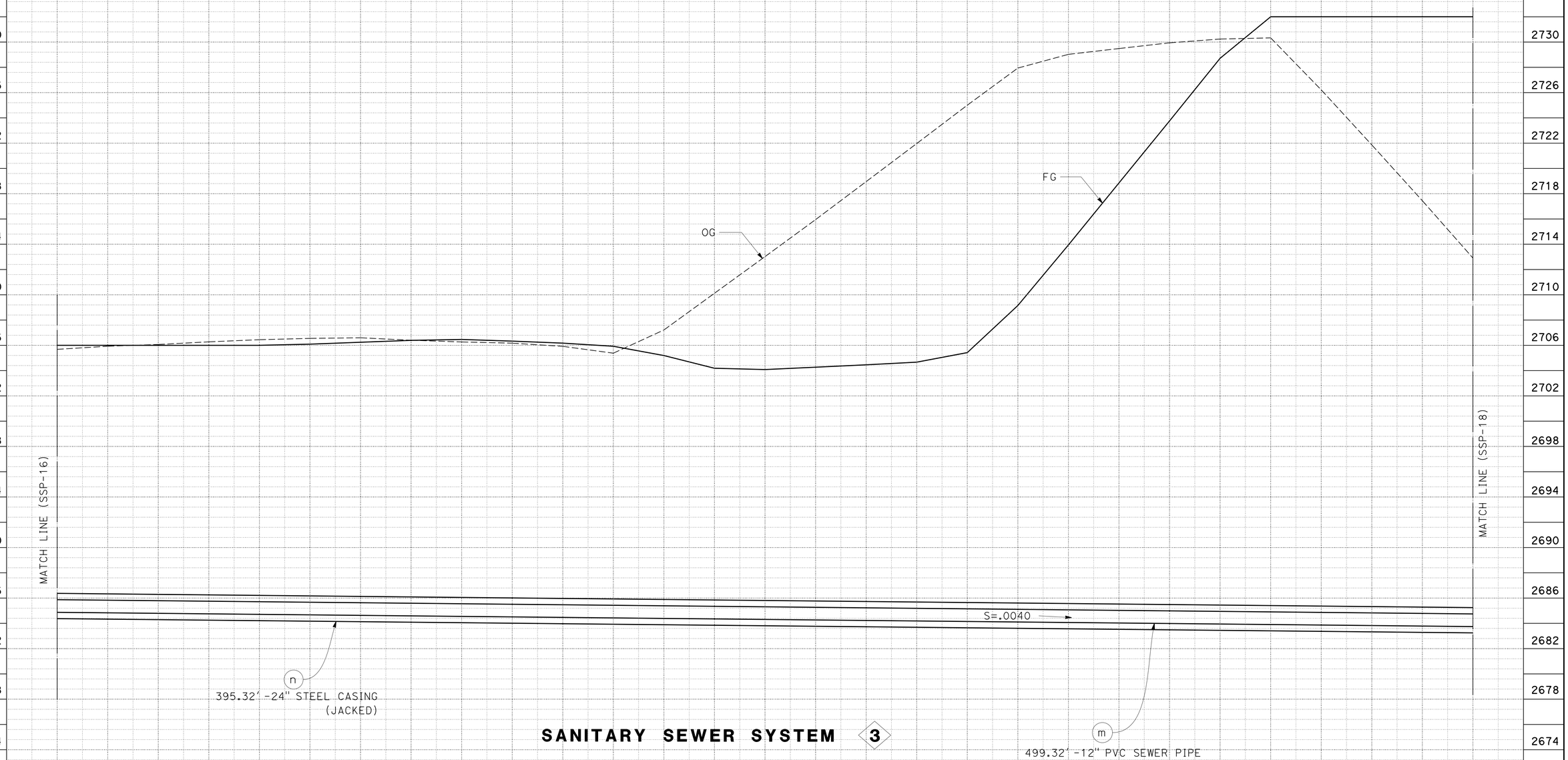

SANITARY SEWER SYSTEM 3

SANITARY SEWER PROFILES

SCALE: Horiz 1" = 10'
Vert 1" = 4'

SSP-17

STATE OF CALIFORNIA - DEPARTMENT OF TRANSPORTATION
Caltrans® **DESIGN**

FUNCTIONAL SUPERVISOR: GEORGE MORHIG
CALCULATED-DESIGNED BY: RAFTAR SHARIA
CHECKED BY: AHMAD SHAH
REVISED BY
DATE REVISED

LAST REVISION 01-30-14 DATE PLOTTED => 30-JUN-2014 TIME PLOTTED => 06:03

Dist	COUNTY	ROUTE	POST MILES TOTAL PROJECT	SHEET No.	TOTAL SHEETS
08	SBd	15	42.5/46.0	268	824

REGISTERED CIVIL ENGINEER 1-30-14 DATE

6-23-14
PLANS APPROVAL DATE

REGISTERED PROFESSIONAL ENGINEER AHMAD SHAH No. C55259 Exp. 9-30-14 CIVIL STATE OF CALIFORNIA

THE STATE OF CALIFORNIA OR ITS OFFICERS OR AGENTS SHALL NOT BE RESPONSIBLE FOR THE ACCURACY OR COMPLETENESS OF SCANNED COPIES OF THIS PLAN SHEET.

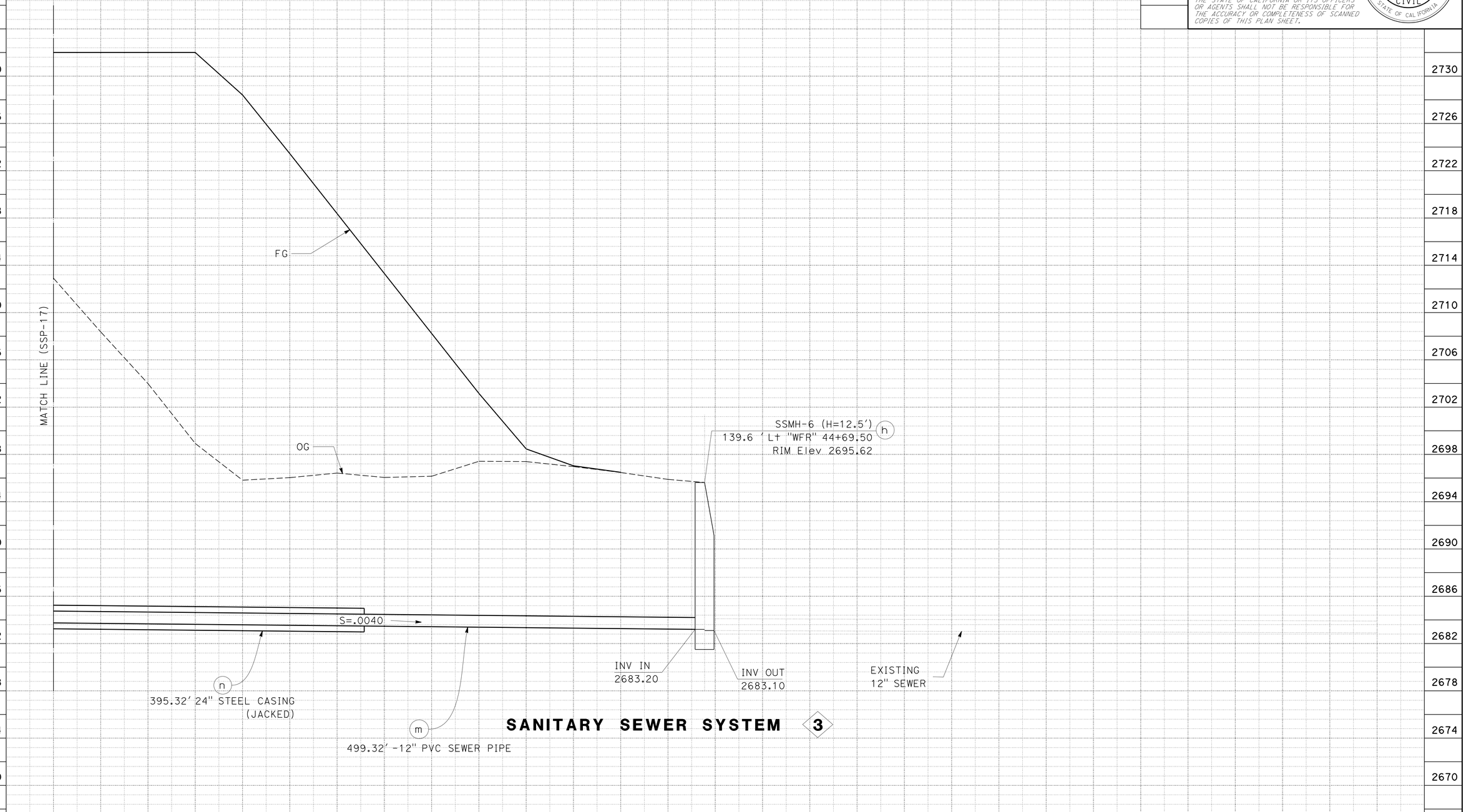

SANITARY SEWER PROFILES

SCALE: Horiz 1" = 10'
Vert 1" = 4'

SSP-18

STATE OF CALIFORNIA - DEPARTMENT OF TRANSPORTATION
Caltrans
DESIGN

FUNCTIONAL SUPERVISOR: GEORGE MORHIG
CALCULATED-DESIGNED BY: RAFTAR SHARIA
CHECKED BY: AHMAD SHAH
REVISED BY
DATE REVISED

LAST REVISION 01-30-14
DATE PLOTTED => 30-JUN-2014
TIME PLOTTED => 06:03

Dist	COUNTY	ROUTE	POST MILES TOTAL PROJECT	SHEET No.	TOTAL SHEETS
08	SBd	15	42.5/46.0	269	824

REGISTERED CIVIL ENGINEER 1-30-14 DATE

6-23-14
PLANS APPROVAL DATE

REGISTERED PROFESSIONAL ENGINEER AHMAD SHAH No. C55259 Exp. 9-30-14 CIVIL STATE OF CALIFORNIA

THE STATE OF CALIFORNIA OR ITS OFFICERS OR AGENTS SHALL NOT BE RESPONSIBLE FOR THE ACCURACY OR COMPLETENESS OF SCANNED COPIES OF THIS PLAN SHEET.

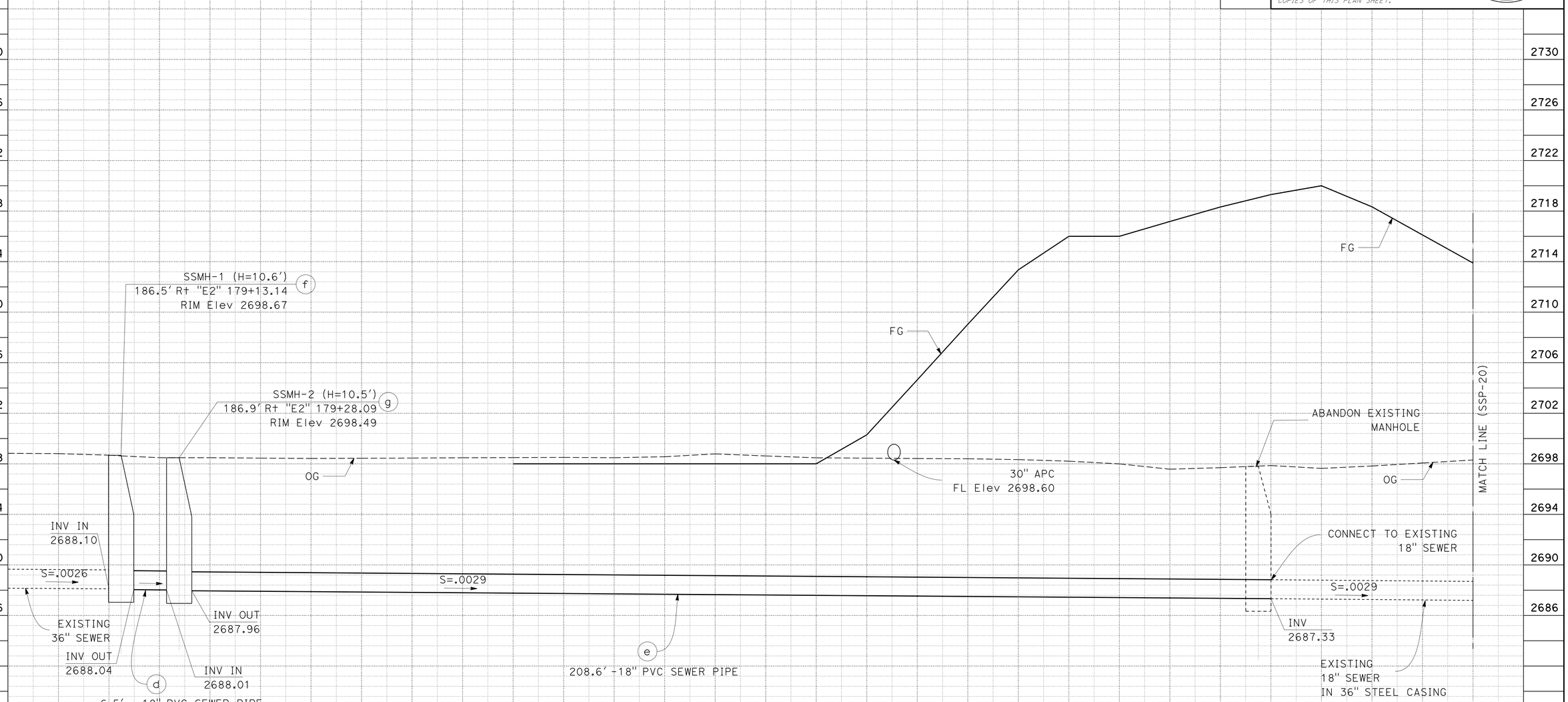

SANITARY SEWER SYSTEM 4

SANITARY SEWER PROFILES

SCALE: Horiz 1" = 10'
Vert 1" = 4'

SSP-19

REVISED BY | DATE REVISED
RAFTAR SHARIA | AHMAD SHAH
CALCULATED-DESIGNED BY | CHECKED BY
FUNCTIONAL SUPERVISOR | GEORGE MORHIG
STATE OF CALIFORNIA - DEPARTMENT OF TRANSPORTATION
Caltrans
DESIGN

LAST REVISION 01-30-14 | DATE PLOTTED => 30-JUN-2014 | TIME PLOTTED => 06:03

Dist	COUNTY	ROUTE	POST MILES TOTAL PROJECT	SHEET No.	TOTAL SHEETS
08	SBd	15	42.5/46.0	270	824

REGISTERED CIVIL ENGINEER 1-30-14 DATE

6-23-14
PLANS APPROVAL DATE

REGISTERED PROFESSIONAL ENGINEER AHMAD SHAH No. C55259 Exp. 9-30-14 CIVIL STATE OF CALIFORNIA

THE STATE OF CALIFORNIA OR ITS OFFICERS OR AGENTS SHALL NOT BE RESPONSIBLE FOR THE ACCURACY OR COMPLETENESS OF SCANNED COPIES OF THIS PLAN SHEET.

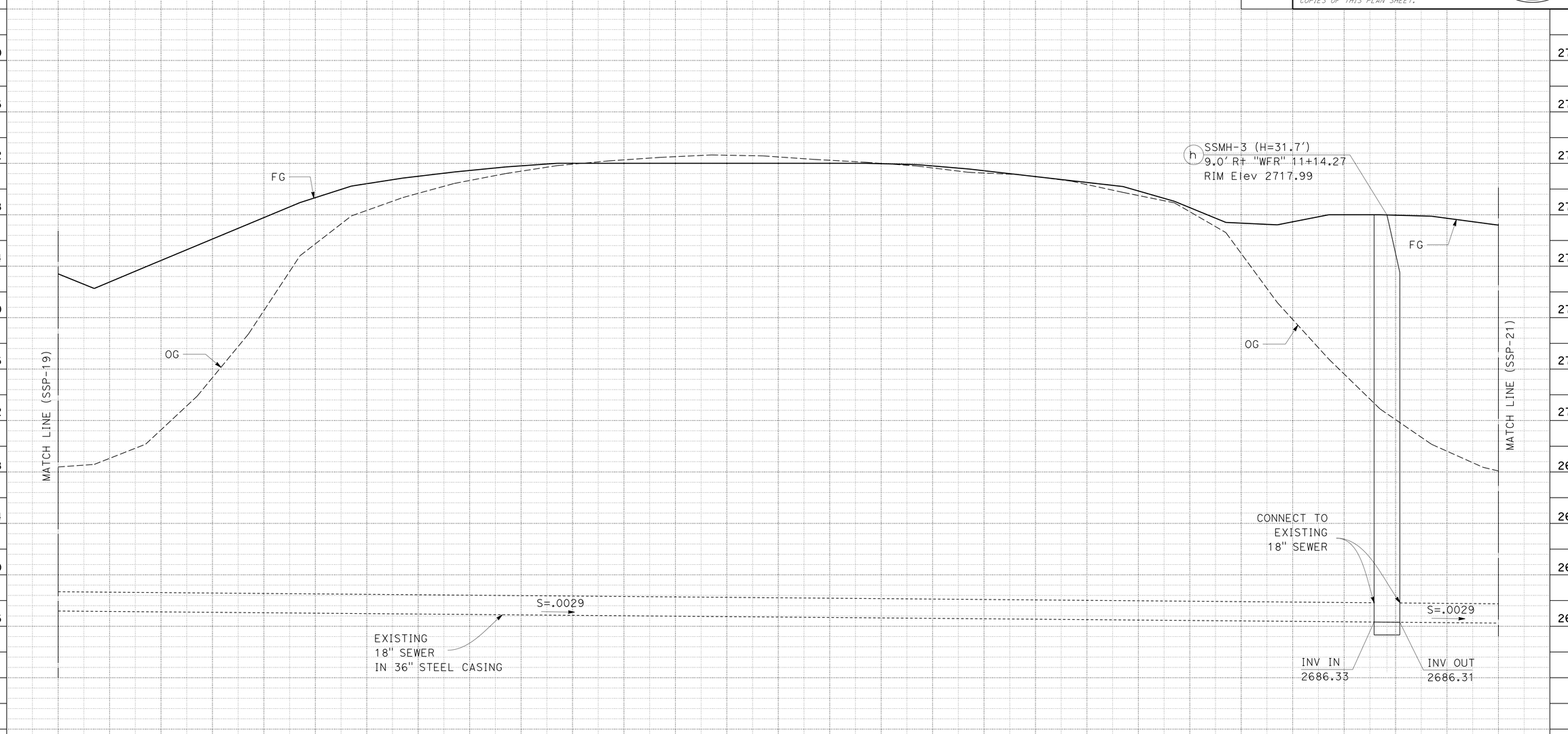

SANITARY SEWER SYSTEM 4

SANITARY SEWER PROFILES

SCALE: Horiz 1" = 10'
Vert 1" = 4'

SSP-20

STATE OF CALIFORNIA - DEPARTMENT OF TRANSPORTATION
Caltrans® **DESIGN**

FUNCTIONAL SUPERVISOR: GEORGE MORHIG
CALCULATED-DESIGNED BY: RAFTAR SHARIA
CHECKED BY: AHMAD SHAH
REVISED BY
DATE REVISED

LAST REVISION 01-30-14 DATE PLOTTED => 30-JUN-2014 TIME PLOTTED => 06:03

Dist	COUNTY	ROUTE	POST MILES TOTAL PROJECT	SHEET No.	TOTAL SHEETS
08	SBd	15	42.5/46.0	271	824

REGISTERED CIVIL ENGINEER 1-30-14 DATE

6-23-14
PLANS APPROVAL DATE

REGISTERED PROFESSIONAL ENGINEER AHMAD SHAH No. C55259 Exp. 9-30-14 CIVIL STATE OF CALIFORNIA

THE STATE OF CALIFORNIA OR ITS OFFICERS OR AGENTS SHALL NOT BE RESPONSIBLE FOR THE ACCURACY OR COMPLETENESS OF SCANNED COPIES OF THIS PLAN SHEET.

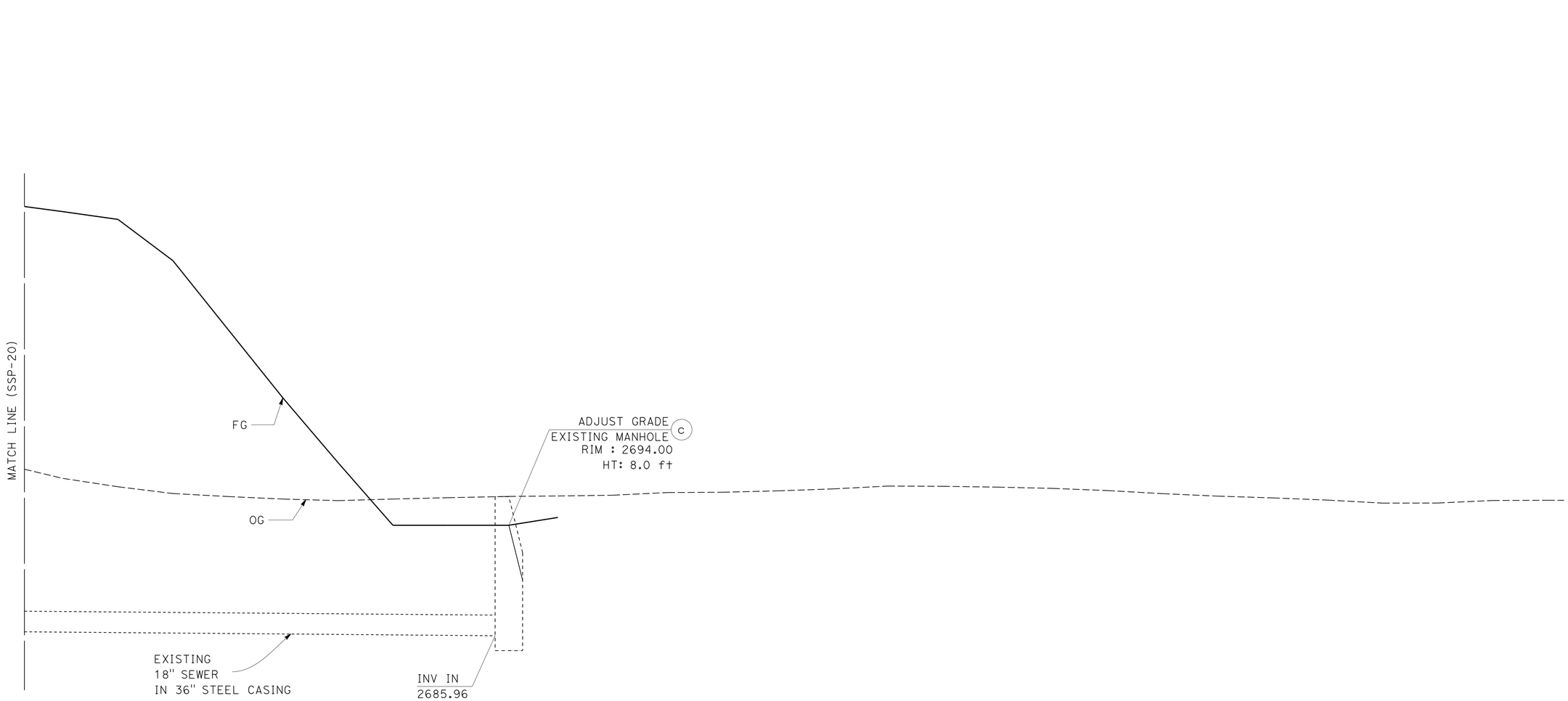

SANITARY SEWER SYSTEM 4

SANITARY SEWER PROFILES

SCALE: Horiz 1" = 10'
Vert 1" = 4'

SSP-21

STATE OF CALIFORNIA - DEPARTMENT OF TRANSPORTATION
Caltrans® **DESIGN**
FUNCTIONAL SUPERVISOR: GEORGE MORHIG
CALCULATED-DESIGNED BY: RAFTAR SHARIA
CHECKED BY: AHMAD SHAH
REVISED BY
DATE REVISED

LAST REVISION 01-30-14 | DATE PLOTTED => 30-JUN-2014 | TIME PLOTTED => 06:03

Dist	COUNTY	ROUTE	POST MILES TOTAL PROJECT	SHEET No.	TOTAL SHEETS
08	SBd	15	42.5/46.0	272	824

REGISTERED CIVIL ENGINEER 1-30-14 DATE

6-23-14
PLANS APPROVAL DATE

REGISTERED PROFESSIONAL ENGINEER AHMAD SHAH No. C55259 Exp. 9-30-14 CIVIL STATE OF CALIFORNIA

THE STATE OF CALIFORNIA OR ITS OFFICERS OR AGENTS SHALL NOT BE RESPONSIBLE FOR THE ACCURACY OR COMPLETENESS OF SCANNED COPIES OF THIS PLAN SHEET.

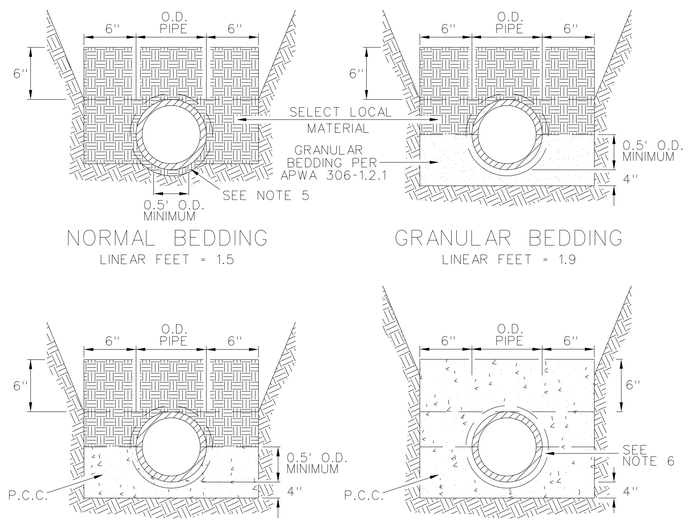

NOTES:

1. WIDTH OF TRENCH AT TOP OF PIPE SHALL BE 21" MINIMUM.
2. CONCRETE SHALL BE MINOR CONCRETE PER SECTION 90 OF STANDARD SPECIFICATIONS.
3. BEDDING SHALL BE PLACED IN 6" LAYERS AND MECHANICALLY COMPACTED TO A HEIGHT OF 6" ABOVE THE TOP OF THE PIPE.
4. TRENCH EXCAVATION AND BACKFILL SHALL BE IN ACCORDANCE WITH SECTION 306.1 OF THE STANDARD SPECIFICATIONS FOR PUBLIC WORKS CONSTRUCTION AND CITY STANDARD DRAWING S-10.
5. HAND SHAPED BOTTOM EITHER IN UNDISTURBED SOIL OR IN APPROVED GRANULAR MATERIAL AT LEAST 1" BELOW BELL OR COLLAR.
6. PLACE ONE LAYER OF 15# BUILDING PAPER AS BOND BREAKER AROUND PIPE AND COUPLINGS.

REV.	DATE	BY		
			CITY OF VICTORVILLE - ENGINEERING DEPARTMENT	
	1/24/67	R.S.	CLAY SEWER PIPE BEDDING	SS-05
1	3/23/93	D.G.H.		
2	6/1/07	STAFF	JOHN A. McGLADE, CITY ENGINEER	SHEET 1 OF 2

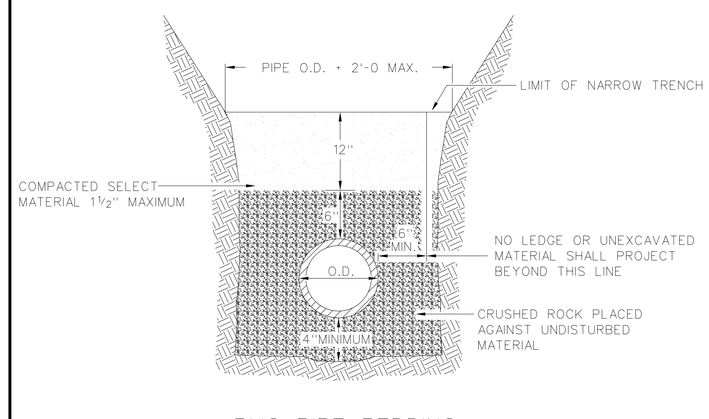

PVC PIPE BEDDING
NOT TO SCALE

NOTES:

1. P.V.C. PIPE SHALL CONFORM TO THE REQUIREMENTS OF ASTM D-2680, D-3034 AND F-679 WITH AN SDR VALUE NOT MORE THAN 35 OR F-949.
2. BEDDING SHALL BE PLACED IN 6" LAYERS AND MECHANICALLY COMPACTED TO 12" ABOVE PIPE.
3. TRENCH EXCAVATION AND BACKFILL SHALL BE PER SECTION 306.1 OF THE STANDARD SPECIFICATIONS FOR PUBLIC WORKS CONSTRUCTION AND CITY STANDARD DRAWING S-10.
4. THE CRUSHED ROCK BEDDING SHALL CONFORM TO THE REQUIREMENTS OF THE STANDARD SPECIFICATIONS FOR PUBLIC WORKS CONSTRUCTION 306-1.2.13.

REV.	DATE	BY		
			CITY OF VICTORVILLE - ENGINEERING DEPARTMENT	
	7/28/89	R.S.	PVC SEWER PIPE BEDDING	SS-05
1	3/23/93	D.G.H.		
2	6/1/07	STAFF	JOHN A. McGLADE, CITY ENGINEER	SHEET 2 OF 2

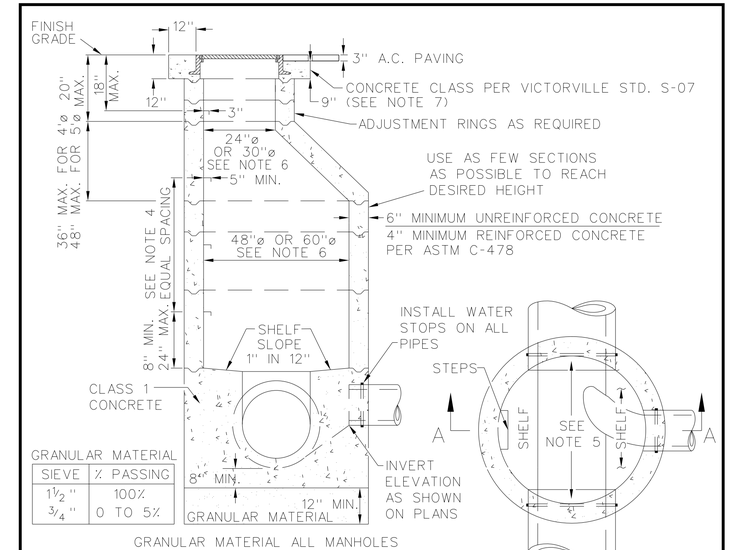

GRANULAR MATERIAL	
SIEVE	% PASSING
1½"	100%
¾"	0 TO 5%

NOTES:

1. ALL SECTIONS TO BE SET IN 1:3 MORTAR TRIMMED SMOOTH INSIDE.
2. CONCRETE FOR MANHOLE SECTIONS SHALL BE 3000 P.S.I. MINIMUM.
3. PROVIDE FLEXIBLE JOINT IN ALL SEWER PIPE OUTSIDE OF MANHOLE BUT WITHIN 12" OF CONCRETE BASE FOR VCP ONLY.
4. MANHOLE STEPS SHALL BE ALHAMBRA FOUNDRY A3320 OR EQUAL. INSTALL AT 12" MINIMUM TO 16" MAXIMUM EQUAL SPACINGS WITH TREAD WIDTH OF 14" MINIMUM.
5. FOR ALL PIPE SIZES THE TOP HALF OF THE PIPE SHALL BE REMOVED TO THE CONTOUR OF THE INSIDE OF THE MANHOLE AND THE BROKEN EDGES SHALL BE TROWELED SMOOTH WITH CEMENT MORTAR PROVIDING A MONOLITHIC BASE.
6. 60" SHAFT DIA. AND 30" DIA. CLEAR OPENING SHALL BE USED FOR MANHOLES WITH A) 18" DIA. OR LARGER, OR B) WHERE 2 OR MORE INLETS EXIST.
7. IN AREAS WHERE MANHOLE IS IN A DIRT EASEMENT, A MINIMUM 12" WIDE BY 12" DEEP PAD OR PRE-CAST FRAME AND LID WILL BE REQUIRED AROUND MANHOLE LID AND FRAME.

APPROVED BY CITY ENGINEER		CITY OF VICTORVILLE - ENGINEERING DEPARTMENT	
DATE	INITIALS	SANITARY SEWER MANHOLE	SS-01
05/05/09		JOHN A. MCGLADE, CITY ENGINEER	SHEET 1 OF 1

SANITARY SEWER DETAILS

NO SCALE

SSD-1

REVISED BY	DATE REVISED

RAFTAR SHARIA — AHMAD SHAH

CALCULATED-DESIGNED BY — CHECKED BY

FUNCTIONAL SUPERVISOR: GEORGE MORHIG

STATE OF CALIFORNIA - DEPARTMENT OF TRANSPORTATION

Caltrans® DESIGN

LAST REVISION 01-30-14 — DATE PLOTTED => 30-JUN-2014 TIME PLOTTED => 06:04

Dist	COUNTY	ROUTE	POST MILES TOTAL PROJECT	SHEET No.	TOTAL SHEETS
08	SBd	15	42.5/46.0	273	824

REGISTERED CIVIL ENGINEER 1-30-14 DATE

6-23-14
PLANS APPROVAL DATE

REGISTERED PROFESSIONAL ENGINEER AHMAD SHAH No. C55259 Exp. 9-30-14 CIVIL STATE OF CALIFORNIA

THE STATE OF CALIFORNIA OR ITS OFFICERS OR AGENTS SHALL NOT BE RESPONSIBLE FOR THE ACCURACY OR COMPLETENESS OF SCANNED COPIES OF THIS PLAN SHEET.

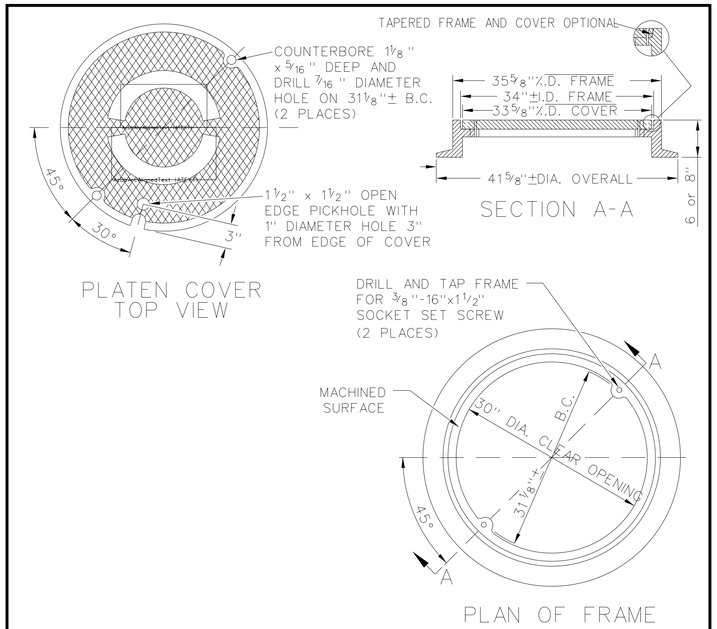

NOTES:

1. MANHOLE FRAME AND COVER TO BE MANUFACTURED FROM CLASS 35 CAST IRON PER ASTM A-48.
2. FRAME AND COVER SHALL BE CAPABLE OF SUPPORTING H-20 WHEEL LOADING.
3. COVER SHALL HAVE CAST INTO TOP IN 1" HIGH MINIMUM BLOCK LETTERS "VICTORVILLE" OR "CITY OF VICTORVILLE" AND "SEWER". MANUFACTURER'S NAME OR INSIGNIA SHALL BE CAST INTO BOTH FRAME AND COVER.
4. MACHINE MATING SURFACES OF FRAME AND COVER TO PROVIDE UNIFORM EDGE SUPPORT FOR COVER.
5. PAINT FRAME AND COVER WITH BLACK BITUMINOUS PAINT.
6. APPROVED SUPPLIERS: ALHAMBRA FOUNDRY, NEENAH FOUNDRY AND SOUTH BAY FOUNDRY.

APPROVED BY CITY ENGINEER			
DATE	INITIALS	**SANITARY SEWER 30" MANHOLE FRAME AND COVER**	**SS-02A**
04/30/09		JOHN A. McGLADE, CITY ENGINEER	SHEET 1 OF 1

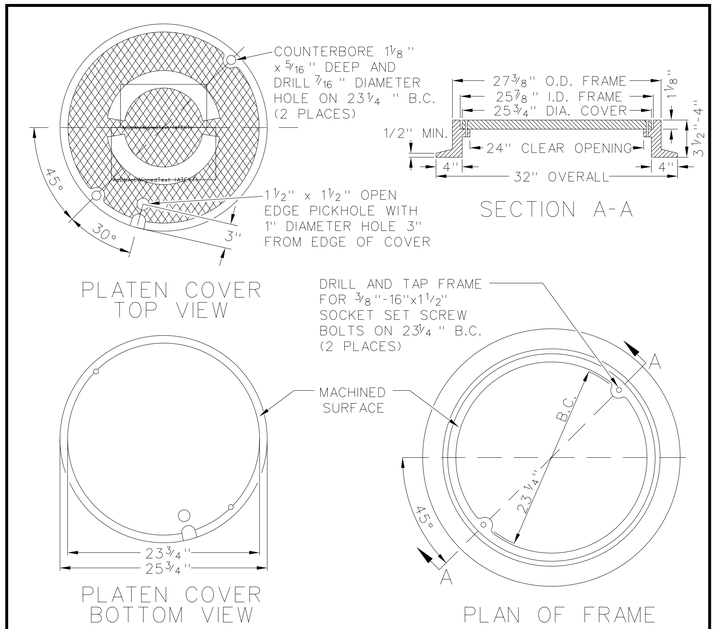

NOTES:

1. MANHOLE FRAME AND COVER TO BE MANUFACTURED FROM CLASS 35 CAST IRON PER ASTM A-48.
2. FRAME AND COVER SHALL BE CAPABLE OF SUPPORTING H-20 WHEEL LOADING.
3. COVER SHALL HAVE CAST INTO TOP IN 1" HIGH MINIMUM BLOCK LETTERS "VICTORVILLE" OR "CITY OF VICTORVILLE" AND "SEWER". MANUFACTURER'S NAME OR INSIGNIA SHALL BE CAST INTO BOTH FRAME AND COVER.
4. MACHINE MATING SURFACES OF FRAME AND COVER TO PROVIDE UNIFORM EDGE SUPPORT FOR COVER.
5. PAINT FRAME AND COVER WITH BLACK BITUMINOUS PAINT.
6. APPROVED SUPPLIERS: ALHAMBRA FOUNDRY #1254, NEENAH FOUNDRY #R-1593 AND SOUTH BAY FOUNDRY #SBF1253B.

APPROVED BY CITY ENGINEER		CITY OF VICTORVILLE - ENGINEERING DEPARTMENT	
DATE	INITIALS	**SANITARY SEWER 24" MANHOLE FRAME AND COVER**	**SS-02**
		JOHN A. McGLADE, CITY ENGINEER	SHEET 1 OF 1

SANITARY SEWER DETAILS

NO SCALE

SSD-2

STATE OF CALIFORNIA - DEPARTMENT OF TRANSPORTATION
Caltrans
DESIGN

FUNCTIONAL SUPERVISOR: GEORGE MORHIG
CALCULATED-DESIGNED BY: RAFTAR SHARIA
CHECKED BY: AHMAD SHAH
REVISED BY
DATE REVISED

LAST REVISION 01-30-14 | DATE PLOTTED => 30-JUN-2014 | TIME PLOTTED => 06:04

Dist	COUNTY	ROUTE	POST MILES TOTAL PROJECT	SHEET No.	TOTAL SHEETS
08	SBd	15	42.5/46.0	274	824

REGISTERED CIVIL ENGINEER 1-30-14 DATE

6-23-14
PLANS APPROVAL DATE

REGISTERED PROFESSIONAL ENGINEER AHMAD SHAH No. C55259 Exp. 9-30-14 CIVIL STATE OF CALIFORNIA

THE STATE OF CALIFORNIA OR ITS OFFICERS OR AGENTS SHALL NOT BE RESPONSIBLE FOR THE ACCURACY OR COMPLETENESS OF SCANNED COPIES OF THIS PLAN SHEET.

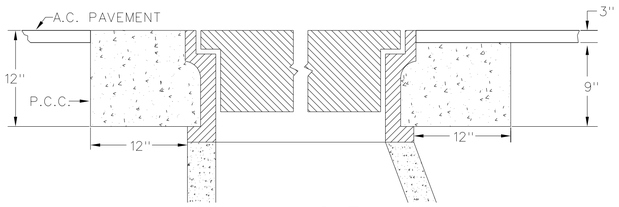

MANHOLE
COVER AND FRAME SECTION 5
NOT TO SCALE

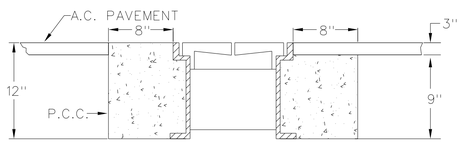

CLEAN-OUT
COVER AND FRAME SECTION 5
NOT TO SCALE

NOTES:

1. CONCRETE SHALL CONTAIN NOT LESS THAN 550 POUNDS OF CEMENTITIOUS MATERIAL PER CUBIC YARD WITH 4% AIR ENTRAINMENT.
2. MANHOLE AND CLEAN-OUT FRAMES SHALL BE ADJUSTED TO GRADE AFTER PLACING SURFACE COURSE OF ASPHALT CONCRETE OR, IF A.C. CAP IS TO BE PLACED OVER CONCRETE RING, THE FRAMES SHALL BE ADJUSTED TO GRADE PRIOR TO PLACING A.C. SURFACE COURSE. FRAMES IN P.C.C. PAVEMENT SHALL BE ADJUSTED TO GRADE JUST PRIOR TO P.C.C. PLACEMENT.
3. MANHOLE AND CLEAN-OUT FRAMES SHALL NOT BE MORE THAN 1/4" OUT OF LEVEL WITH PAVEMENT SURFACE.
4. WHEN ADJUSTING MANHOLE OR CLEAN-OUT TO GRADE THE CONTRACTOR SHALL NOT INTERRUPT THE SERVICE FUNCTION OF THE LINE UNLESS OTHERWISE APPROVED BY THE ENGINEER PRIOR TO SUCH WORK. FURTHER THE CONTRACTOR SHALL IMPLEMENT MEASURES TO PREVENT DEBRIS AND FOREIGN MATERIALS FROM ENTERING THE PIPELINE SYSTEM.

REV.	DATE	BY
1	7/74	X.X.S.
2	4/5/93	D.G.H.
3	9/9/96	J.A.M.
4	7/25/07	STAFF
5	11/20/08	STAFF

CITY OF VICTORVILLE - ENGINEERING DEPARTMENT

STANDARD MANHOLE / CLEAN-OUT FRAME AND COVER INSTALLATION — **S-07**

JOHN A. McGLADE, CITY ENGINEER — SHEET 1 OF 1

THICKNESS SHALL BE 1-INCH THICKER THAN EXISTING PAVEMENT BUT NO LESS THAN 3-INCHES. GRADATION SHALL CONFORM TO TYPE C2 OF THE GREENBOOK. ASPHALT BINDER SHALL CONFORM TO TYPE PG 70-10.

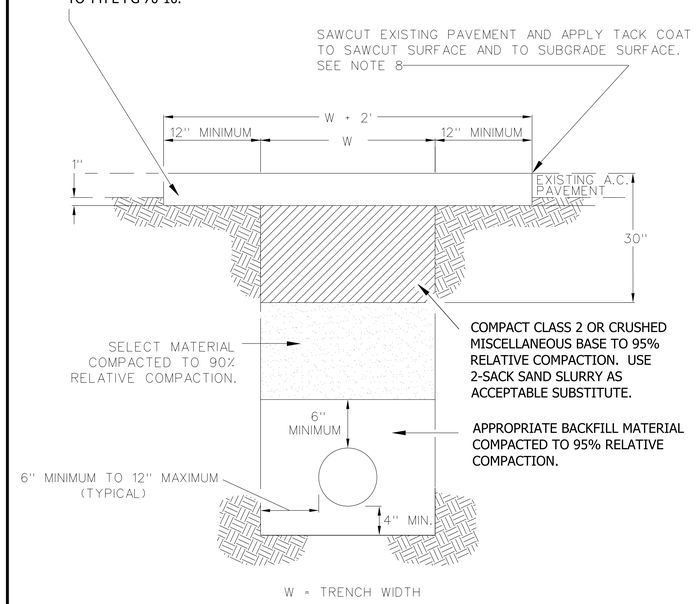

TYPICAL SECTION
NOT TO SCALE

APPROVED BY CITY ENGINEER		CITY OF VICTORVILLE - ENGINEERING DEPARTMENT	
DATE	SIGNATURE	**TRENCH BACKFILL AND PAVEMENT REPAIRS**	**S-10**
02/03/09		JOHN A. McGLADE, CITY ENGINEER	SHEET 1 OF 2

NOTES:

1. ALL EXCAVATIONS WITHIN THE CITY RIGHT-OF-WAY REQUIRE AN EXCAVATION PERMIT FROM THE ENGINEERING DEPARTMENT.
2. NOTIFY UNDERGROUND SERVICE ALERT (DigAlert) 2 WORKING DAYS PRIOR TO START OF EXCAVATION AT 1-800-227-2600.
3. NOTIFY ENGINEERING DEPARTMENT 1 WORKING DAY (24 HOURS) PRIOR TO START OF CONSTRUCTION TO ARRANGE INSPECTIONS BY CITY PUBLIC WORKS INSPECTORS.
4. ALL EXCAVATIONS SHALL BE MADE, PROTECTED AND SUPPORTED AS REQUIRED FOR SAFETY AS PRESCRIBED BY CAL OSHA.
5. TEMPORARY PAVING SHALL BE 2 SACK SAND SLURRY OR 2 INCH THICKNESS TEMPORARY ASPHALT OVER COMPACTED SUBGRADE TO TOP OF PAVEMENT TO PROVIDE A SAFE AND SMOOTH TRAVELED SURFACE. PERMANENT PAVING SHALL BE PLACED WITHIN 7 DAYS OF EXCAVATION. SEAL COAT PAVEMENT 6 INCHES BEYOND PAVEMENT REPAIR AREA.
6. ANY STREET PAVED OR RESURFACED IN THE PREVIOUS 36 MONTHS THAT IS TRENCHED FOR 300 FEET OR MORE IN A TRAVELED LANE OR EXTENDS MORE THAN 7 FEET FROM THE CURB FACE / EDGE OF PAVEMENT OR HAS MORE THAN 3 CROSS TRENCHES IN 300 FEET SHALL BE OVERLAID AS DIRECTED BY THE ENGINEER WITH A SELF PROPELLED PAVING MACHINE PER CALTRANS SECTION 39.
7. POT HOLES AND/OR NARROW TRENCH CUTS SHALL NOT BE ALLOWED IN P.C.C. IMPROVEMENTS. P.C.C. SHALL BE SAWCUT, REMOVED AND RECONSTRUCTED IN PANELS AT THE SCORE LINES, OR WEAKENED PLANE JOINTS, OR AT LEAST 10 FEET WIDE AND AS DIRECTED BY THE ENGINEER IN THE FIELD.
8. IF THE EDGE OF THE TRENCH REPAIR (W+2 FEET) IS 2 FEET OR LESS FROM THE LIP OF THE GUTTER OR 3' OR LESS FROM THE EDGE OF PAVEMENT, THE EXISTING PAVEMENT SHALL BE REMOVED AND REPLACED PER THE TYPICAL SECTION.
9. FOR NOMINAL PIPE DIAMETERS OF 12" OR LESS, TYPICAL COVER IS 36" UNLESS CIRCUMSTANCES WARRANT DIFFERENTLY OR OTHERWISE APPROVED BY THE CITY ENGINEER.

APPROVED BY CITY ENGINEER		CITY OF VICTORVILLE - ENGINEERING DEPARTMENT	
DATE	SIGNATURE	**TRENCH BACKFILL AND PAVEMENT REPAIRS**	**S-10**
02/03/09		JOHN A. McGLADE, CITY ENGINEER	SHEET 2 OF 2

SANITARY SEWER DETAILS

NO SCALE

SSD-3

STATE OF CALIFORNIA - DEPARTMENT OF TRANSPORTATION
Caltrans® DESIGN
FUNCTIONAL SUPERVISOR: GEORGE MORHIG
CALCULATED-DESIGNED BY: RAFTAR SHARIA
CHECKED BY: AHMAD SHAH
REVISED BY
DATE REVISED

LAST REVISION 01-30-14 | DATE PLOTTED => 30-JUN-2014 | TIME PLOTTED => 06:04

Dist	COUNTY	ROUTE	POST MILES TOTAL PROJECT	SHEET No.	TOTAL SHEETS
08	SBd	15	42.5/46.0	275	824

REGISTERED CIVIL ENGINEER 1-30-14 DATE

6-23-14
PLANS APPROVAL DATE

REGISTERED PROFESSIONAL ENGINEER AHMAD SHAH No. C55259 Exp. 9-30-14 CIVIL STATE OF CALIFORNIA

THE STATE OF CALIFORNIA OR ITS OFFICERS OR AGENTS SHALL NOT BE RESPONSIBLE FOR THE ACCURACY OR COMPLETENESS OF SCANNED COPIES OF THIS PLAN SHEET.

SANITARY SEWER QUANTITIES

SEWER PLAN SHEET No.	SYSTEM No.	UNIT No.	18" PVC SANITARY SEWER PIPE LF	12" PVC SANITARY SEWER PIPE LF	8" PVC SANITARY SEWER PIPE LF	CONCRETE ENCASEMENT LF	24" STEEL CASING (JACKED) LF	ABANDON SEWER MANHOLE EA	REMOVE SEWER MANHOLE EA	REMOVE SEWER PIPE LF	ABANDON SEWER LS	ADJUST SEWER MANHOLE EA	48" SANITARY SEWER MANHOLE EA	60" SANITARY SEWER MANHOLE EA	24" FRAME AND COVER EA	30" FRAME AND COVER EA	HEIGHT OF MANHOLE (N) LF	DESCRIPTION	STATION/OFFSET (MANHOLES)	SYSTEM No.	UNIT No.
SS-1	1	a												1		1	3.5	CONSTRUCT SSMH-1	"DS1" +34.43 31.4 R†	1	a
		b	127.6			127.6															b
		c												1		1	6.2	CONSTRUCT SSMH-2	"DS1" +65.19 28.6 R†		c
		d	40.6			40.6															d
		e												1		1	7.2	CONSTRUCT SSMH-3	"DS1" +64.81 54.0 R†		e
		f	296.0																		f
		g												1		1	7.1	CONSTRUCT SSMH-4	"DS1" +68.67 60.9 R†		g
		h	296.0																		h
		i												1		1	7.8	CONSTRUCT SSMH-5	"DS1" +68.67 60.9 R†		i
SS-02	1	j	296.0																		j
		k												1		1	7.1	CONSTRUCT SSMH-6	"DS1" +71.96 56.1 R†		k
		l	296.0			200.5															l
		m												1		1	6.1	CONSTRUCT SSMH-7	"DS1" +72.45 31.4 R†		m
		n	224.6			224.6															n
		o												1		1	5.9	CONSTRUCT SSMH-8	"DS1" +99.54 17.1 R†		o
		p	179.3			179.3															p
		q												1		1	5.5	CONSTRUCT SSMH-9	"DS1" +82.21 16.1 R†		q
		r	27.7			27.7															r
		s												1		1	5.3	CONSTRUCT SSMH-10	"DS1" +10.40 25.3 R†		s
		†								2071.0								REMOVE SEWER PIPE			†
		u							7									REMOVE EXISTING SSMH			u
		v												1		1	6.4	CONSTRUCT SSMH-11			v
																					w
SS-03	2	a																Exist SSMH CONNECT TO NEW SEWER PIPE	"EFR" 28+84.77 27.2 R†	2	a
		b			334.4																b
		c											1		1		12.2	CONSTRUCT SSMH-1	"EFR" 25+45.43 27.6 R†		c
		d			245.7																d
		e											1		1		9.0	CONSTRUCT SSMH-2	"EFR" 22+95.58 27.3 R†		e
		f			255.8																f
		g											1		1		9.0	CONSTRUCT SSMH-3	"EFR" 20+35.78 26.1 R†		g
		h			111.1																h
SS-04	2	i													1		8.4	CONSTRUCT SSMH-4	"EFR" 17+23.63 11.4 R†		i
		j			258.0																j
SHEET TOTAL			1783.8		1205.0	800.3			7	2071.0			3	11	4	11		(N) - NOT A SEPARATE PAY ITEM, FOR INFORMATION ONLY			

STATE OF CALIFORNIA - DEPARTMENT OF TRANSPORTATION
Caltrans DESIGN

FUNCTIONAL SUPERVISOR: GEORGE MORHIG
CALCULATED-DESIGNED BY: RAFTAR SHARIA
CHECKED BY: AHMAD SHAH
REVISED BY
DATE REVISED

SANITARY SEWER QUANTITIES

SSQ-1

LAST REVISION 01-30-14
DATE PLOTTED => 30-JUN-2014
TIME PLOTTED => 06:04

Dist	COUNTY	ROUTE	POST MILES TOTAL PROJECT	SHEET No.	TOTAL SHEETS
08	SBd	15	42.5/46.0	276	824

REGISTERED CIVIL ENGINEER 1-30-14 DATE

6-23-14
PLANS APPROVAL DATE

REGISTERED PROFESSIONAL ENGINEER AHMAD SHAH No. C55259 Exp. 9-30-14 CIVIL STATE OF CALIFORNIA

THE STATE OF CALIFORNIA OR ITS OFFICERS OR AGENTS SHALL NOT BE RESPONSIBLE FOR THE ACCURACY OR COMPLETENESS OF SCANNED COPIES OF THIS PLAN SHEET.

SANITARY SEWER QUANTITIES

SEWER PLAN SHEET No.	SYSTEM No.	UNIT No.	18" PVC SANITARY SEWER PIPE LF	12" PVC SANITARY SEWER PIPE LF	8" PVC SANITARY SEWER PIPE LF	CONCRETE ENCASEMENT LF	24" STEEL CASING (JACKED) LF	ABANDON SEWER MANHOLE EA	REMOVE SEWER MANHOLE EA	REMOVE SEWER PIPE LF	ABANDON SEWER LS	ADJUST SEWER MANHOLE EA	48" SANITARY SEWER MANHOLE EA	60" SANITARY SEWER MANHOLE EA	24" FRAME AND COVER EA	30" FRAME AND COVER EA	HEIGHT OF MANHOLE (N) LF	DESCRIPTION	STATION/OFFSET (MANHOLES)	SYSTEM No.	UNIT No.
SS-4	2	k											1		1		3.5	CONSTRUCT SSMH-5	"EFR" 14+60.32 12.0 R+	2	k
		l			258.0																l
		m											1		1		9.5	CONSTRUCT SSMH-6	"EFR" 11+98.33 12.0 R+		m
		n			258.0																n
		o											1		1		9.4	CONSTRUCT SSMH-7	"EFR" 9+35.62 3.1 L+		o
		p			296.0																p
		q										1			1		3.9	MODIFY Exist SSMH CONNECT TO NEW SEWRE PIPE	"EFR" 6+35.43 0.7 R+		q
		r									5							PLUG AND ABANDON SEWER PIPE			r
		s						4													s
		t																CONNECT Exist SEWER PIPE TO NEW SSMH			t
SS-3		u								847.9											u
SS-4		v										1						MODIFY Exist SSMH CONNECT TO NEW SEWRE PIPE	"EFR" 19+20.65 25.5 R+		v
		w							1									REMOVE Exist SSMH			w
SS-5	3	a									7							PLUG AND ABANDON SEWER PIPE		3	a
		b						3										FILL AND ABANDON SEWER MANHOLE			b
		c											1		1		7.3	CONSTRUCT SSMH-1	"A1" 205+97.70 169.4 R+		c
		d											1		1		5.7	CONSTRUCT SSMH-2	"A1" 207+39.79 175.0 R+		d
		e											1		1		9.3	CONSTRUCT SSMH-3	"A1" 209+02.88 179.3 R+		e
		f											1		1		16.7	CONSTRUCT SSMH-4	"A1" 210+87.96 130.0 R+		f
		g											1		1		19.6	CONSTRUCT SSMH-5	"A1" 212+88.65 115.8 R+		g
		h											1		1		12.5	CONSTRUCT SSMH-6	"WFR" 44+69.50 139.6 L+		h
		i		146.2																	i
		j		168.8																	j
		k		195.8																	k
		l		197.2																	l
		m		499.3																	m
		n					395.3											JACK & BORE 24" STEEL CASING			n
SS-6	4	a									2							PLUG AND ABANDON SEWER PIPE		4	a
		b						2										ABANDON SEWER MANHOLE			b
		c										1						ADJUST GRADE OF Exist SSMH			c
		d	6.5																		d
		e	208.6																		e
		f												1		1	10.6	CONSTRUCT SSMH-1	"E2" 179+13.14 186.5 R+		f
		g												1		1	10.5	CONSTRUCT SSMH-2	"E2" 179+28.09 186.9 R+		g
		h												1		1	31.7	CONSTRUCT SSMH-3	"WFR" 11+14.27 9.0 R+		h
TOTAL			215.1	1207.3	812.0		395.3	9	1	847.9	14	3	9	3	10	3					
TOTAL SSQ-1			1783.8		1205.0	800.3			7	2071.0			3	11	4	11					
GRAND TOTAL			1998.9	1207.3	2017.0	800.3	395.3	9	8	2918.9	14	3	12	14	14	14					

(N) - NOT A SEPARATE PAY ITEM, FOR INFORMATION ONLY

SANITARY SEWER QUANTITIES

SSQ-2

STATE OF CALIFORNIA - DEPARTMENT OF TRANSPORTATION
Caltrans DESIGN

FUNCTIONAL SUPERVISOR: GEORGE MORHIG
CALCULATED-DESIGNED BY: RAFTAR SHARIA
CHECKED BY: AHMAD SHAH
REVISED BY
DATE REVISED

LAST REVISION 01-30-14
DATE PLOTTED => 30-JUN-2014
TIME PLOTTED => 06:04

Dist	COUNTY	ROUTE	POST MILES TOTAL PROJECT	SHEET No.	TOTAL SHEETS
08	SBd	15	42.5/46.0	277	824

REGISTERED CIVIL ENGINEER 1-30-14 DATE

6-23-14
PLANS APPROVAL DATE

REGISTERED PROFESSIONAL ENGINEER AHMAD SHAH No. C55259 Exp. 9-30-14 CIVIL STATE OF CALIFORNIA

THE STATE OF CALIFORNIA OR ITS OFFICERS OR AGENTS SHALL NOT BE RESPONSIBLE FOR THE ACCURACY OR COMPLETENESS OF SCANNED COPIES OF THIS PLAN SHEET.

NOTE:

FOR ACCURATE RIGHT OF WAY DATA, CONTACT RIGHT OF WAY ENGINEERING AT THE DISTRICT OFFICE.

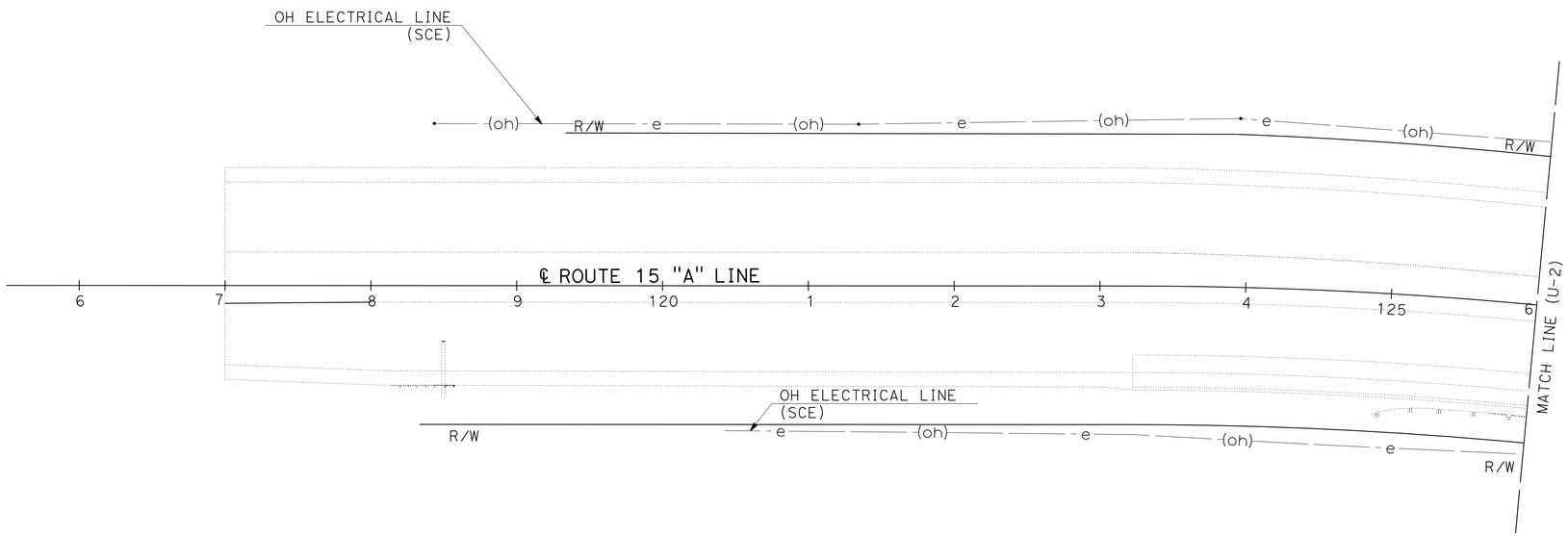

UTILITY DENOTATIONS

ATT	DENOTES: AT&T INCORPORATION
COV	DENOTES: CITY OF VICTORVILLE
SCE	DENOTES: SOUTHERN CALIFORNIA EDISON
SWG	DENOTES: SOUTHWESTERN GAS COMPANY
VER	DENOTES: VERIZON COMMUNICATIONS
VVWD	DENOTES: VICTOR VALLEY WATER DISTRICT
VVWRA	DENOTES: VICTOR VALLEY WASTEWATER RECLAMATION AUTHORITY
PP	DENOTES: ELECTRICAL POWER POLE
OH	DENOTES: OVERHEAD UTILITY
UG	DENOTES: UNDERGROUND UTILITY
SSMH	DENOTES: SANITARY SEWER MANHOLE
R/W	DENOTES: RIGHT OF WAY
TCE	DENOTES: TEMPORARY CONSTRUCTION EASEMENT

UTILITY LEGEND

—e——(oh)	EXISTING OVERHEAD ELECTRICAL LINE
—e——e—	EXISTING UNDERGROUND ELECTRICAL LINE
—t——(oh)	EXISTING OVERHEAD TELEPHONE LINE
—t——t—	EXISTING UNDERGROUND TELEPHONE LINE
—fo———	EXISTING FIBER OPTIC LINE
—tv———	EXISTING CABLE TV
—w———	EXISTING WATER LINE
—s———	EXISTING SANITARY SEWER LINE
—g———	EXISTING GAS LINE
PHX	UTILITY POTHOLING LOCATION

UTILITY PLAN

SCALE: 1" = 50'

U-1

APPROVED FOR UTILITY INFORMATION ONLY

STATE OF CALIFORNIA - DEPARTMENT OF TRANSPORTATION
Caltrans
DESIGN

FUNCTIONAL SUPERVISOR: GEORGE MORHIG
CALCULATED-DESIGNED BY: WILLIAM J. ONKUMPOL
CHECKED BY: AHMAD SHAH
REVISED BY
DATE REVISED

LAST REVISION 01-30-14
DATE PLOTTED => 30-JUN-2014
TIME PLOTTED => 06:04

Dist	COUNTY	ROUTE	POST MILES TOTAL PROJECT	SHEET No.	TOTAL SHEETS
08	SBd	15	42.5/46.0	278	824

REGISTERED CIVIL ENGINEER 1-30-14 DATE

6-23-14
PLANS APPROVAL DATE

REGISTERED PROFESSIONAL ENGINEER
AHMAD SHAH
No. C55259
Exp. 9-30-14
CIVIL
STATE OF CALIFORNIA

THE STATE OF CALIFORNIA OR ITS OFFICERS OR AGENTS SHALL NOT BE RESPONSIBLE FOR THE ACCURACY OR COMPLETENESS OF SCANNED COPIES OF THIS PLAN SHEET.

NOTE:

FOR ACCURATE RIGHT OF WAY DATA, CONTACT
RIGHT OF WAY ENGINEERING AT THE DISTRICT OFFICE.

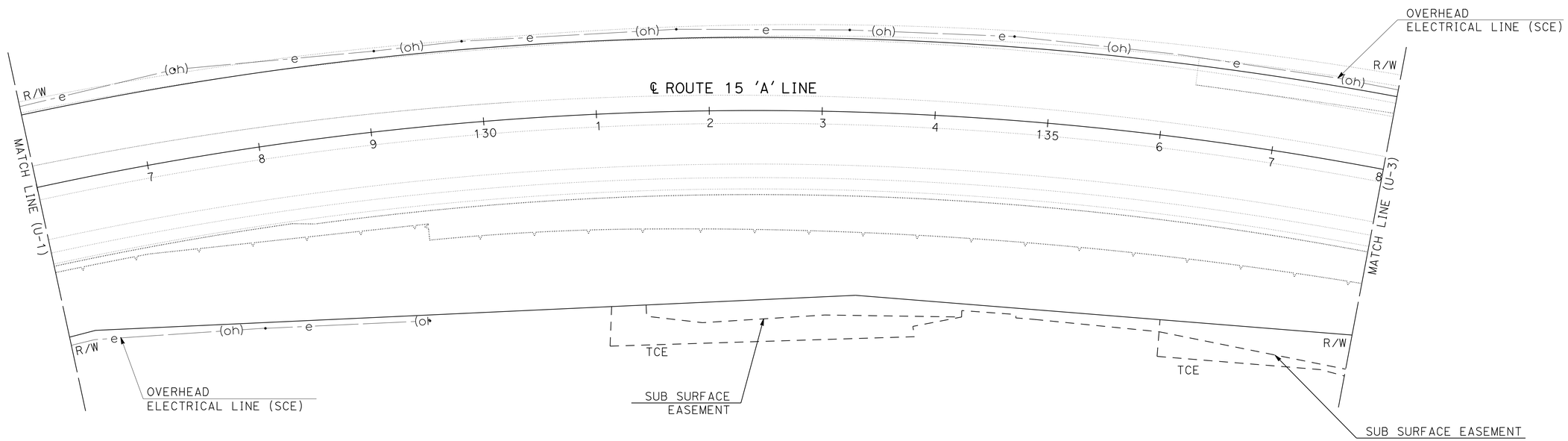

UTILITY PLAN

SCALE: 1" = 50'

U-2

APPROVED FOR UTILITY INFORMATION ONLY

STATE OF CALIFORNIA - DEPARTMENT OF TRANSPORTATION
Caltrans
DESIGN

FUNCTIONAL SUPERVISOR: GEORGE MORHIG
CALCULATED-DESIGNED BY: WILLIAM J. ONKUMPOL
CHECKED BY: AHMAD SHAH
REVISED BY
DATE REVISED

LAST REVISION 01-30-14
DATE PLOTTED => 30-JUN-2014
TIME PLOTTED => 06:04

Dist	COUNTY	ROUTE	POST MILES TOTAL PROJECT	SHEET No.	TOTAL SHEETS
08	SBd	15	42.5/46.0	279	824

REGISTERED CIVIL ENGINEER 1-30-14 DATE

6-23-14
PLANS APPROVAL DATE

REGISTERED PROFESSIONAL ENGINEER AHMAD SHAH No. C55259 Exp. 9-30-14 CIVIL STATE OF CALIFORNIA

THE STATE OF CALIFORNIA OR ITS OFFICERS OR AGENTS SHALL NOT BE RESPONSIBLE FOR THE ACCURACY OR COMPLETENESS OF SCANNED COPIES OF THIS PLAN SHEET.

NOTE:

FOR ACCURATE RIGHT OF WAY DATA, CONTACT
RIGHT OF WAY ENGINEERING AT THE DISTRICT OFFICE.

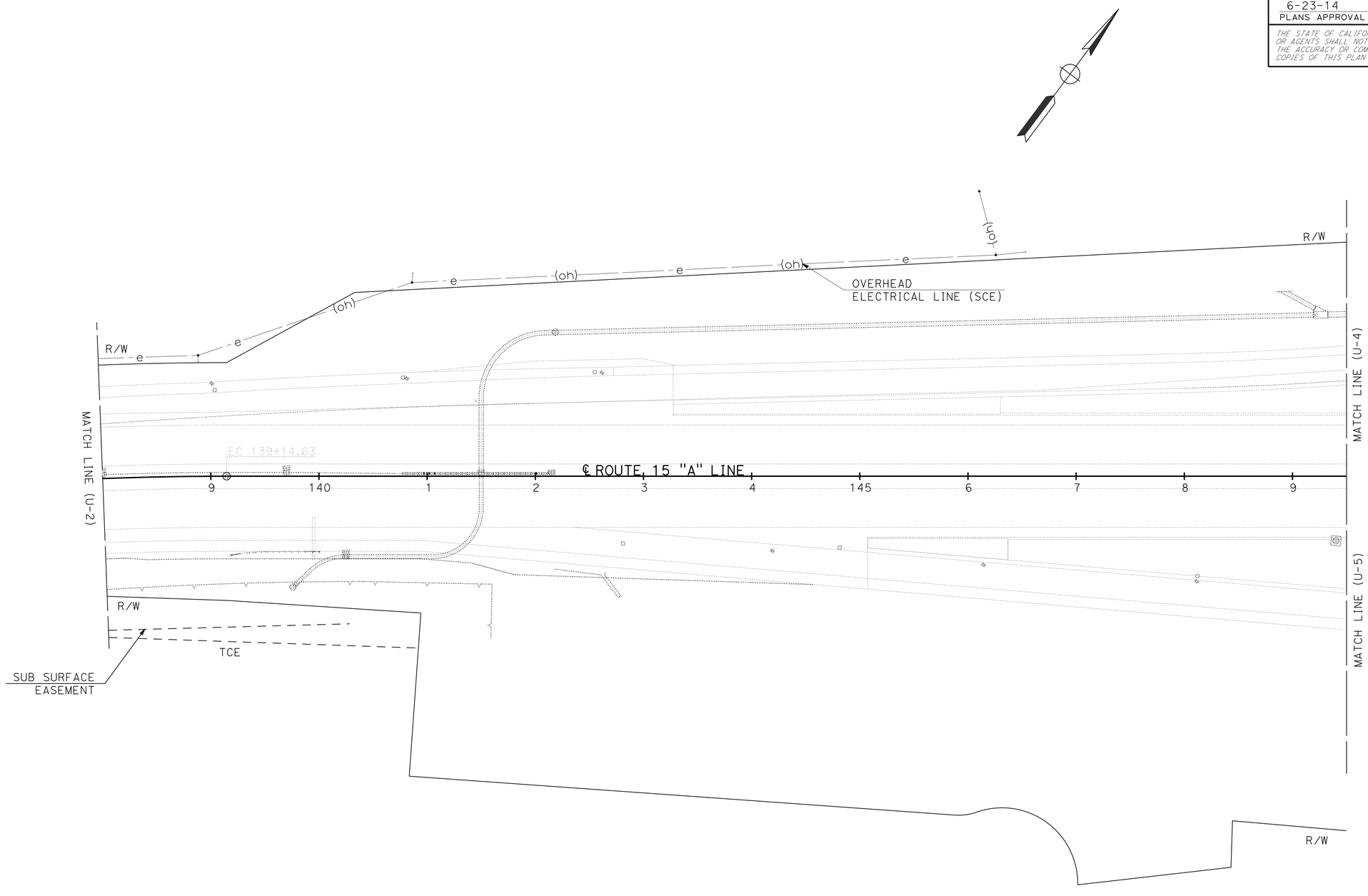

UTILITY PLAN

SCALE: 1" = 50'

U-3

APPROVED FOR UTILITY INFORMATION ONLY

STATE OF CALIFORNIA - DEPARTMENT OF TRANSPORTATION
Caltrans
DESIGN

FUNCTIONAL SUPERVISOR: GEORGE MORHIG
CALCULATED-DESIGNED BY: WILLIAM J. ONKUMPOL
CHECKED BY: AHMAD SHAH
REVISED BY
DATE REVISED

LAST REVISION 01-30-14
DATE PLOTTED => 30-JUN-2014
TIME PLOTTED => 06:04

Dist	COUNTY	ROUTE	POST MILES TOTAL PROJECT	SHEET No.	TOTAL SHEETS
08	SBd	15	42.5/46.0	280	824

REGISTERED CIVIL ENGINEER 1-30-14 DATE

6-23-14
PLANS APPROVAL DATE

REGISTERED PROFESSIONAL ENGINEER
AHMAD SHAH
No. C55259
Exp. 9-30-14
CIVIL
STATE OF CALIFORNIA

THE STATE OF CALIFORNIA OR ITS OFFICERS OR AGENTS SHALL NOT BE RESPONSIBLE FOR THE ACCURACY OR COMPLETENESS OF SCANNED COPIES OF THIS PLAN SHEET.

NOTE:

FOR ACCURATE RIGHT OF WAY DATA, CONTACT
RIGHT OF WAY ENGINEERING AT THE DISTRICT OFFICE.

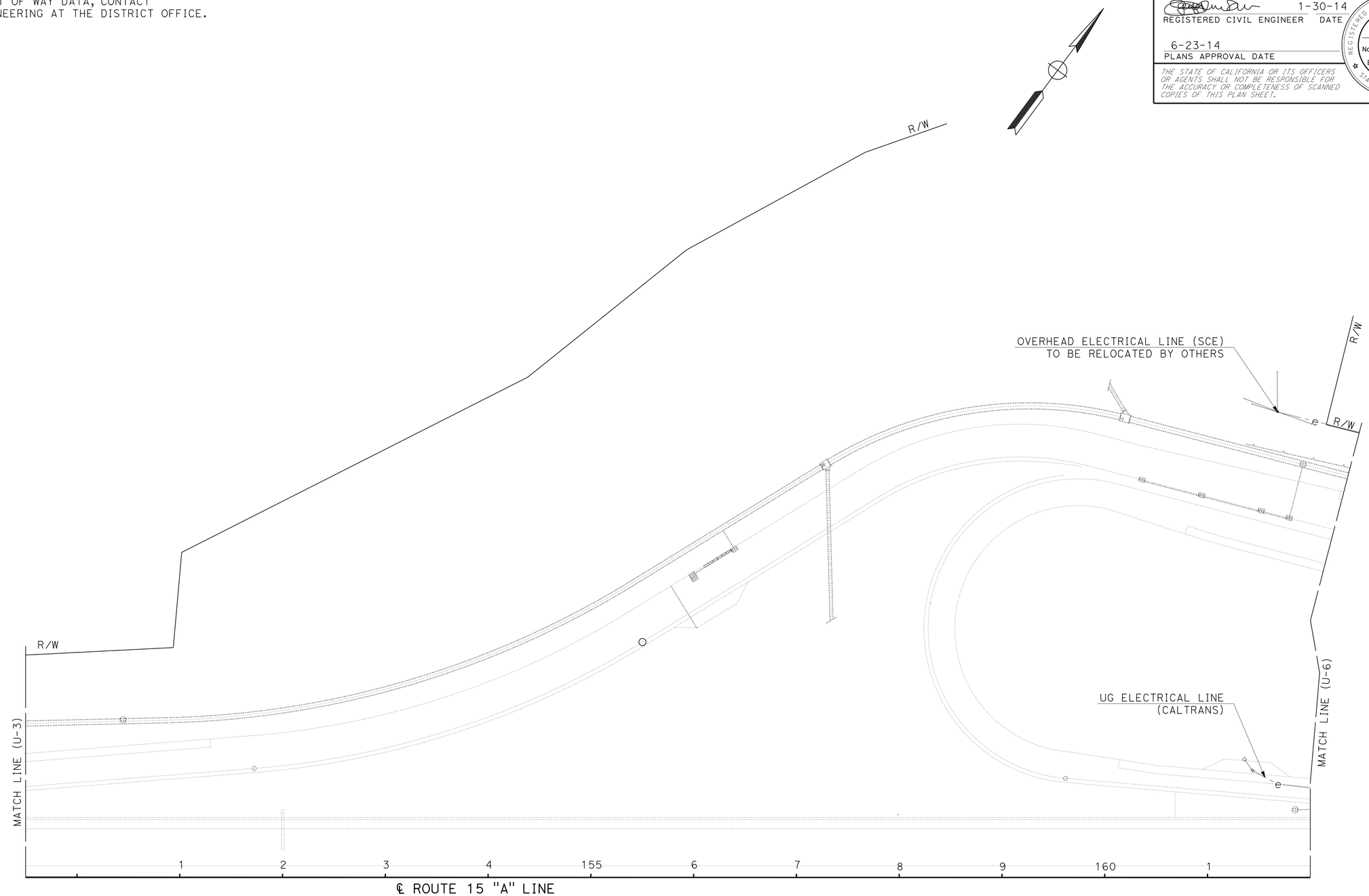

UTILITY PLAN

SCALE: 1" = 50'

U-4

APPROVED FOR UTILITY INFORMATION ONLY

STATE OF CALIFORNIA - DEPARTMENT OF TRANSPORTATION
Caltrans
DESIGN

FUNCTIONAL SUPERVISOR: GEORGE MORHIG
CALCULATED-DESIGNED BY: WILLIAM J. ONKUMPOL
CHECKED BY: AHMAD SHAH
REVISED BY
DATE REVISED

LAST REVISION 01-30-14
DATE PLOTTED => 30-JUN-2014
TIME PLOTTED => 10:27

Dist	COUNTY	ROUTE	POST MILES TOTAL PROJECT	SHEET No.	TOTAL SHEETS
08	SBd	15	42.5/46.0	281	824

REGISTERED CIVIL ENGINEER 1-30-14 DATE

6-23-14
PLANS APPROVAL DATE

REGISTERED PROFESSIONAL ENGINEER AHMAD SHAH No. C55259 Exp. 9-30-14 CIVIL STATE OF CALIFORNIA

THE STATE OF CALIFORNIA OR ITS OFFICERS OR AGENTS SHALL NOT BE RESPONSIBLE FOR THE ACCURACY OR COMPLETENESS OF SCANNED COPIES OF THIS PLAN SHEET.

NOTE:

FOR ACCURATE RIGHT OF WAY DATA, CONTACT RIGHT OF WAY ENGINEERING AT THE DISTRICT OFFICE.

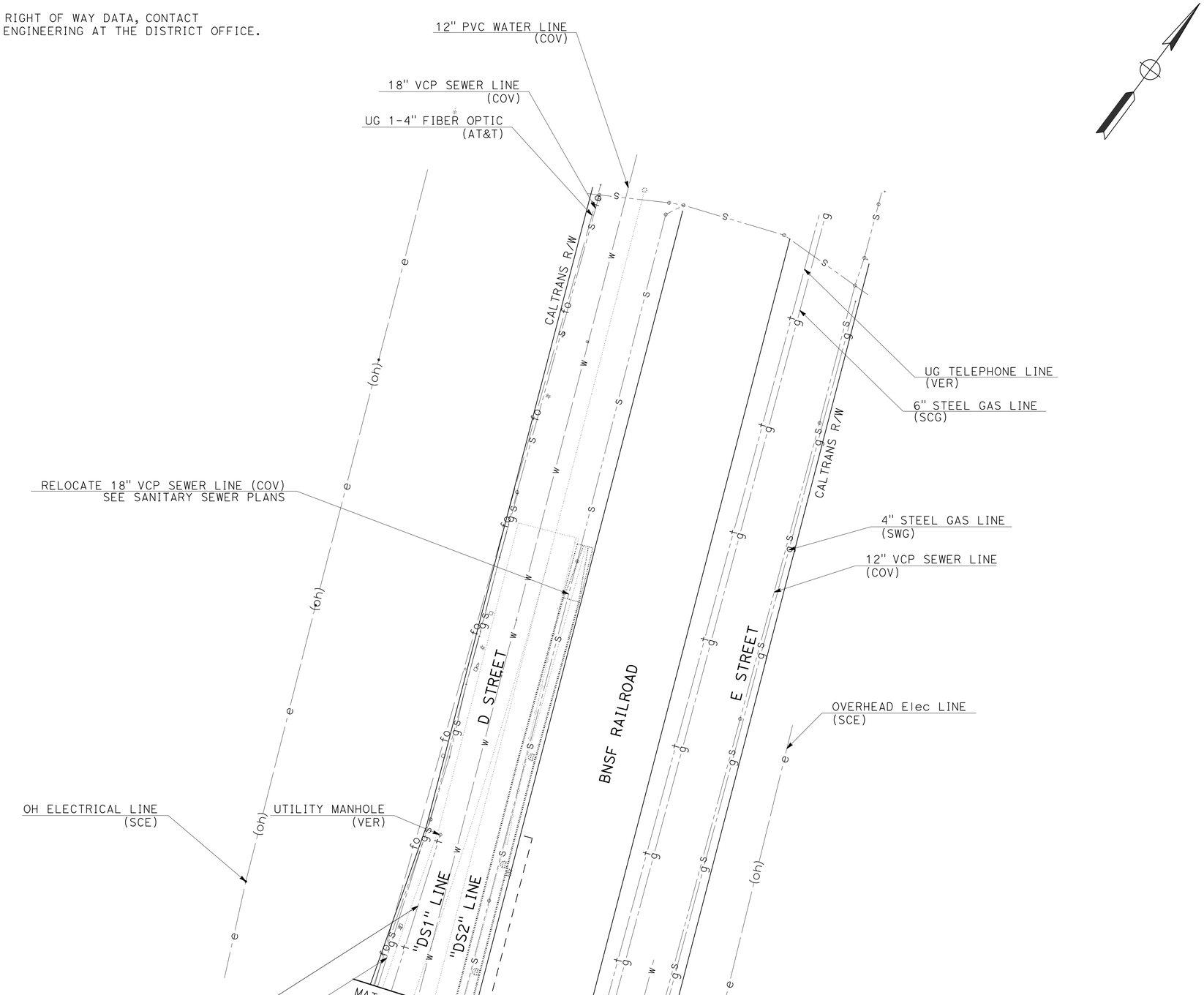

APPROVED FOR UTILITY INFORMATION ONLY

UTILITY PLAN

SCALE: 1" = 50'

U-5

STATE OF CALIFORNIA - DEPARTMENT OF TRANSPORTATION
Caltrans
DESIGN

FUNCTIONAL SUPERVISOR: GEORGE MORHIG

CALCULATED-DESIGNED BY: WILLIAM J. ONKUMPOL
CHECKED BY: AHMAD SHAH

REVISED BY
DATE REVISED

LAST REVISION 01-30-14
DATE PLOTTED => 30-JUN-2014
TIME PLOTTED => 06:04

Dist	COUNTY	ROUTE	POST MILES TOTAL PROJECT	SHEET No.	TOTAL SHEETS
08	SBd	15	42.5/46.0	282	824

REGISTERED CIVIL ENGINEER 1-30-14 DATE

6-23-14
PLANS APPROVAL DATE

REGISTERED PROFESSIONAL ENGINEER AHMAD SHAH No. C55259 Exp. 9-30-14 CIVIL STATE OF CALIFORNIA

THE STATE OF CALIFORNIA OR ITS OFFICERS OR AGENTS SHALL NOT BE RESPONSIBLE FOR THE ACCURACY OR COMPLETENESS OF SCANNED COPIES OF THIS PLAN SHEET.

NOTE:

FOR ACCURATE RIGHT OF WAY DATA, CONTACT
RIGHT OF WAY ENGINEERING AT THE DISTRICT OFFICE.

POTHOLE LOCATION INFORMATION

No.	Sta	OFFSET	TOP Elev	DEPTH	DESCRIPTION
PH01	166+58.40	64.20' LT	2700.94'	5.54'	1' AC WATER LINE (VVWD)
PH02	166+50.42	80.84' LT	2700.71'	3.40'	1-4" FIBER OPTIC LINE (AT&T)
PH04	166+53.88	76.38' LT	2700.75'	3.09'	2-4" ABS TEL LINES (VERIZON)
PH05	167+03.67	239.36' LT	2700.49'	5.05'	1' AC WATER LINE (VVWD)
PH06	166+97.11	254.88' LT	2700.18'	3.34'	1-4" FIBER OPTIC LINE (AT&T)
PH07	168+93.33	115.30' LT	2699.25'	2.99'	6" STEEL GAS (SWG)
PH08	169+71.28	235.83' LT	2698.06'	2.72'	4" STEEL GAS (SWG)
PH09	169+06.14	87.91' LT	2699.63'	3.74'	8" AC WATER LINE (VVWD)

POTHOLE LOCATION INFORMATION (CONT'D)

No.	Sta	OFFSET	TOP Elev	DEPTH	DESCRIPTION
PH03A	167+00.50	206.58' LT	2700.60'	6.13'	2-4" ABS TEL LINES (VERIZON)
PH03B	167+39.90	267.62' LT	2700.80'	4.99'	12" AC WATER LINE (VVWD)
PH03C	166+94.60	248.31' LT	2700.47'	1.96'	1-4" FIBER OPTIC LINE (AT&T)

TOP ELEVATION FOR 'PH03C' REFERS TO THE TOP OF EXISTING CONCRETE SLURRY.

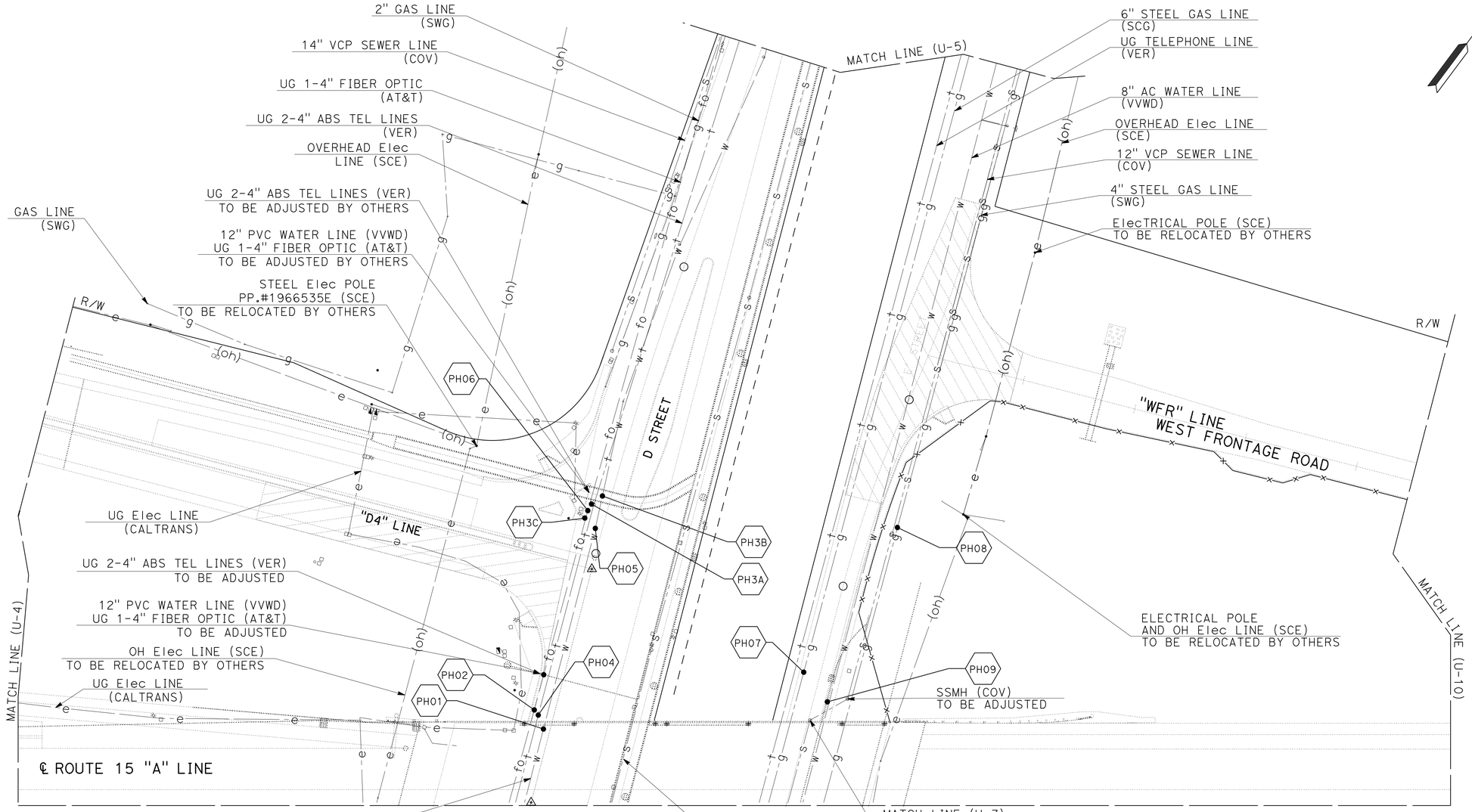

UTILITY PLAN

SCALE: 1" = 50'

U-6

APPROVED FOR UTILITY INFORMATION ONLY

STATE OF CALIFORNIA - DEPARTMENT OF TRANSPORTATION
Caltrans DESIGN

FUNCTIONAL SUPERVISOR: GEORGE MORHIG
CALCULATED-DESIGNED BY: WILLIAM J. ONKUMPOL
CHECKED BY: AHMAD SHAH
REVISED BY
DATE REVISED

LAST REVISION 01-30-14 | DATE PLOTTED => 30-JUN-2014 | TIME PLOTTED => 06:04

Dist	COUNTY	ROUTE	POST MILES TOTAL PROJECT	SHEET No.	TOTAL SHEETS
08	SBd	15	42.5/46.0	283	824

REGISTERED CIVIL ENGINEER 1-30-14 DATE

6-23-14
PLANS APPROVAL DATE

REGISTERED PROFESSIONAL ENGINEER AHMAD SHAH No. C55259 Exp. 9-30-14 CIVIL STATE OF CALIFORNIA

THE STATE OF CALIFORNIA OR ITS OFFICERS OR AGENTS SHALL NOT BE RESPONSIBLE FOR THE ACCURACY OR COMPLETENESS OF SCANNED COPIES OF THIS PLAN SHEET.

NOTE:

FOR ACCURATE RIGHT OF WAY DATA, CONTACT
RIGHT OF WAY ENGINEERING AT THE DISTRICT OFFICE.

POTHOLE LOCATION INFORMATION

No.	Sta	OFFSET	TOP Elev	DEPTH	DESCRIPTION
PH10	164+97.39	510.85' RT	2701.99'	4.46'	4" FIBER OPTIC LINE (AT&T)
PH11	165+11.38	510.23' RT	2701.68'	4.52'	1' AC WATER LINE (VVWD)
PH12	165+12.59	481.37' RT	2701.44'	2.78'	2-4" ABS TEL LINES (VERIZON)
PH13	165+87.68	153.27' RT	2701.16'	5.04'	4" FIBER OPTIC LINE (AT&T)
PH14	168+00.50	330.27' RT	2700.31'	3.25'	8" AC WATER LINE (VVWD)
PH15	168+37.05	188.91' RT	2700.13'	3.97'	8" AC WATER LINE (VVWD)
PH16	168+57.31	98.36' RT	2699.36'	4.23'	8" AC WATER LINE (VVWD)
PH17	164+95.75	579.85' RT	2701.43'	3.79'	12" AC WATER LINE (VVWD)

POTHOLE LOCATION INFORMATION (CONT'D)

No.	Sta	OFFSET	TOP Elev	DEPTH	DESCRIPTION
PH18	164+77.75	599.47' RT	2702.21'	3.88'	4" FIBER OPTIC (AT&T)
PH19	164+91.39	578.52' RT	2701.74'	2.13'	3-4" ABS TEL LINE (VERIZON)
PH20	167+27.08	477.56' RT	2700.72'	3.23'	6" STEEL GAS (SWG)
PH21	167+78.83	469.90' RT	2700.74'	2.70'	4" STEEL GAS (SWG)
PH22	167+15.12	479.70' RT	2701.05'	2.11'	2-4" ABS TEL LINE (VERIZON)
PH23	167+60.47	399.61' RT	2700.81'	2.07'	8" AC WATER LINE (VVWD)

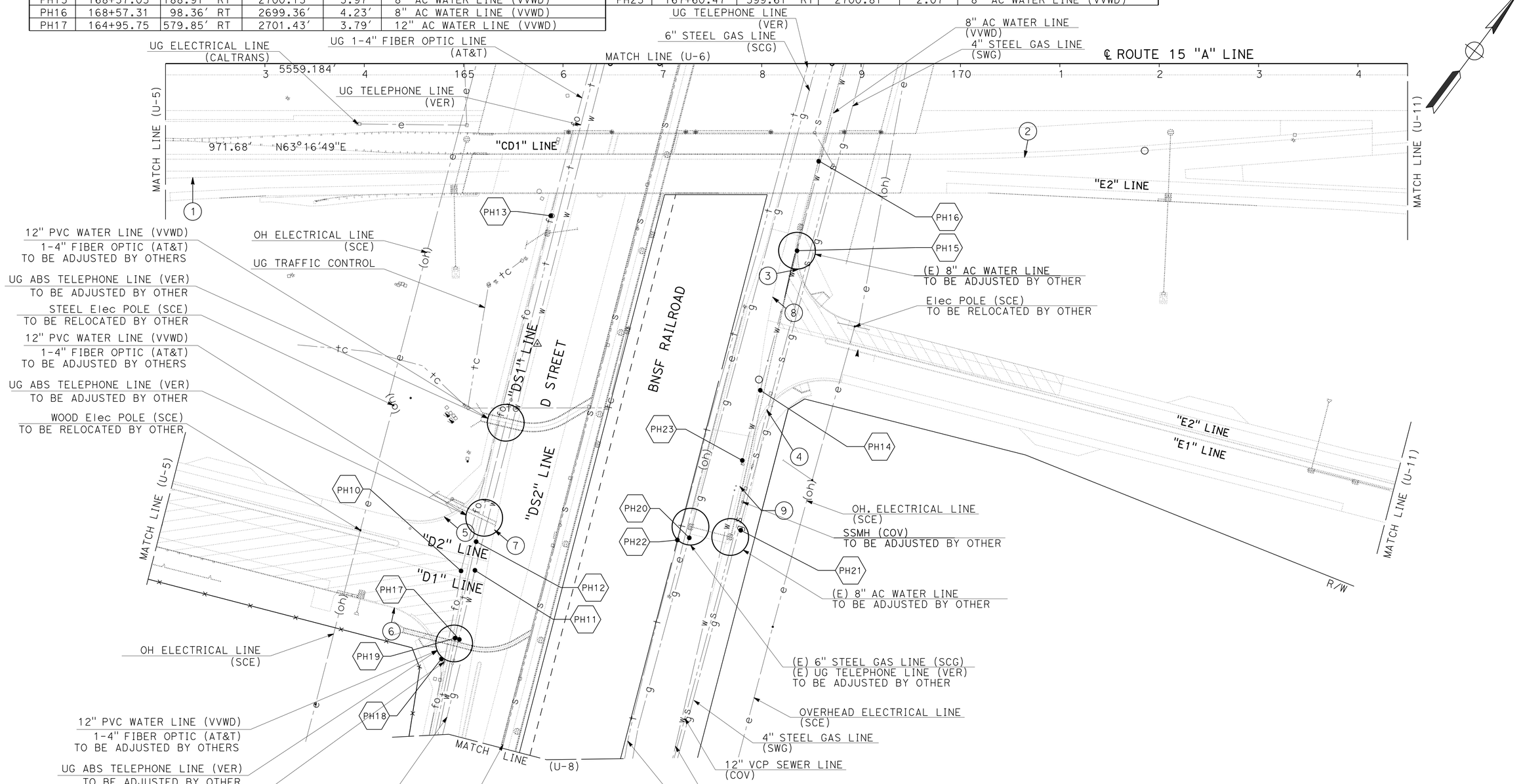

APPROVED FOR UTILITY INFORMATION ONLY

UTILITY PLAN

SCALE: 1" = 50'

U-7

STATE OF CALIFORNIA - DEPARTMENT OF TRANSPORTATION
Caltrans
DESIGN

FUNCTIONAL SUPERVISOR: GEORGE MORHIG
CALCULATED-DESIGNED BY: WILLIAM J. ONKUMPOL
CHECKED BY: AHMAD SHAH
REVISED BY / DATE REVISED

LAST REVISION 01-30-14 | DATE PLOTTED => 30-JUN-2014 | TIME PLOTTED => 06:04

Dist	COUNTY	ROUTE	POST MILES TOTAL PROJECT	SHEET No.	TOTAL SHEETS
08	SBd	15	42.5/46.0	284	824

REGISTERED CIVIL ENGINEER 1-30-14 DATE

6-23-14
PLANS APPROVAL DATE

REGISTERED PROFESSIONAL ENGINEER AHMAD SHAH No. C55259 Exp. 9-30-14 CIVIL STATE OF CALIFORNIA

THE STATE OF CALIFORNIA OR ITS OFFICERS OR AGENTS SHALL NOT BE RESPONSIBLE FOR THE ACCURACY OR COMPLETENESS OF SCANNED COPIES OF THIS PLAN SHEET.

NOTE:

FOR ACCURATE RIGHT OF WAY DATA, CONTACT RIGHT OF WAY ENGINEERING AT THE DISTRICT OFFICE.

POTHOLE LOCATION INFORMATION

No.	Sta	OFFSET	TOP Elev	DEPTH	DESCPIPTION
PH24	164+50.50	696.40' RT	2701.61'	4.27'	2" STEEL GAS LINE (SWG)
PH25	164+40.85	726.00' RT	2701.72'	4.49'	2" STEEL GAS LINE (SWG)
PH26	164+15.51	866.00' RT	2701.45'	3.12'	2" STEEL GAS LINE (SWG)

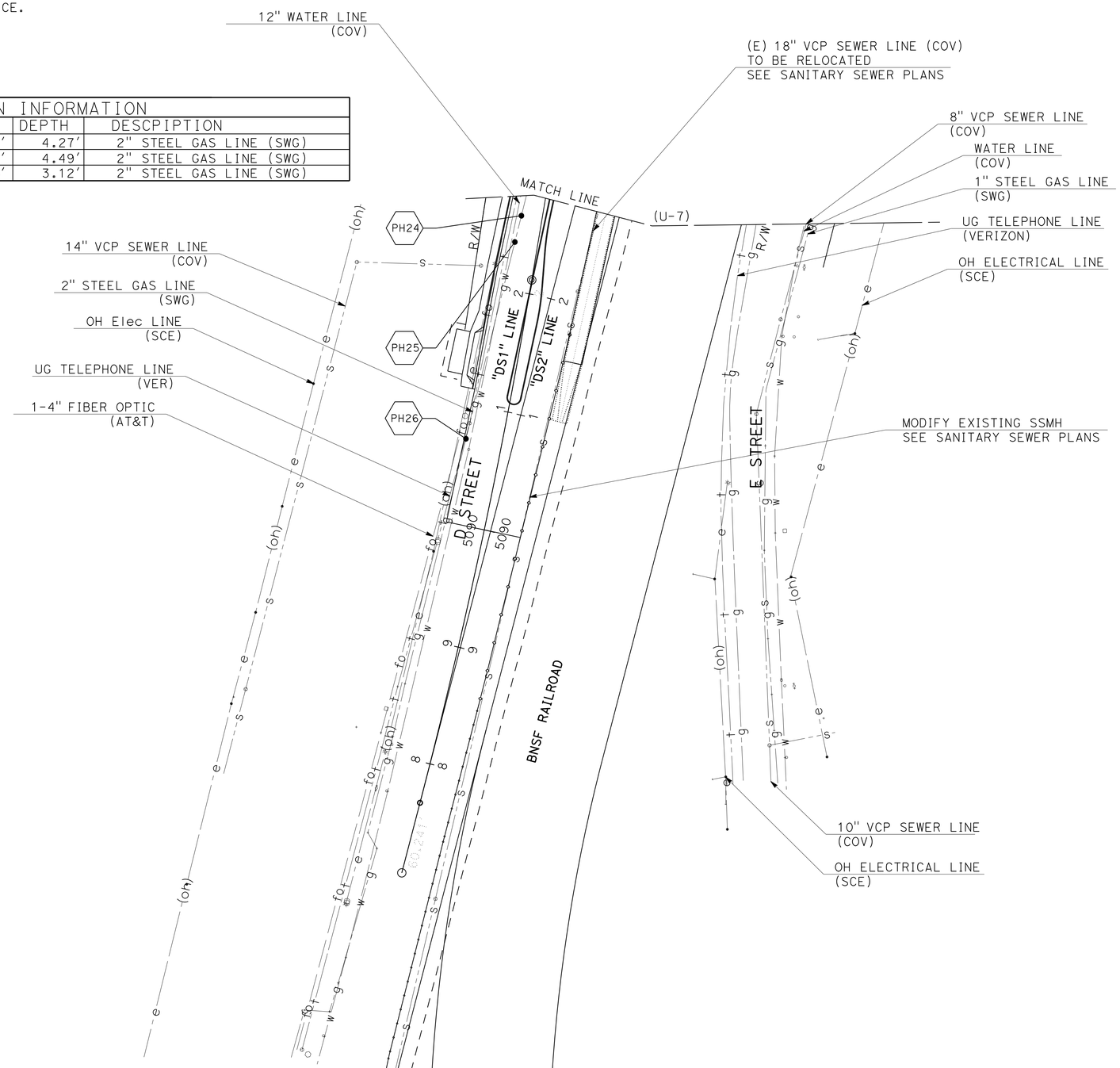

UTILITY PLAN

SCALE: 1" = 50'

U-8

APPROVED FOR UTILITY INFORMATION ONLY

STATE OF CALIFORNIA - DEPARTMENT OF TRANSPORTATION

Caltrans® **DESIGN**

FUNCTIONAL SUPERVISOR: GEORGE MORHIG

CALCULATED-DESIGNED BY: WILLIAM J. ONKUMPOL

CHECKED BY: AHMAD SHAH

REVISED BY | DATE REVISED

LAST REVISION 01-30-14 | DATE PLOTTED => 30-JUN-2014 | TIME PLOTTED => 06:05

Dist	COUNTY	ROUTE	POST MILES TOTAL PROJECT	SHEET No.	TOTAL SHEETS
08	SBd	15	42.5/46.0	285	824

REGISTERED CIVIL ENGINEER 1-30-14 DATE

6-23-14
PLANS APPROVAL DATE

REGISTERED PROFESSIONAL ENGINEER
AHMAD SHAH
No. C55259
Exp. 9-30-14
CIVIL
STATE OF CALIFORNIA

THE STATE OF CALIFORNIA OR ITS OFFICERS OR AGENTS SHALL NOT BE RESPONSIBLE FOR THE ACCURACY OR COMPLETENESS OF SCANNED COPIES OF THIS PLAN SHEET.

NOTE:

FOR ACCURATE RIGHT OF WAY DATA, CONTACT
RIGHT OF WAY ENGINEERING AT THE DISTRICT OFFICE.

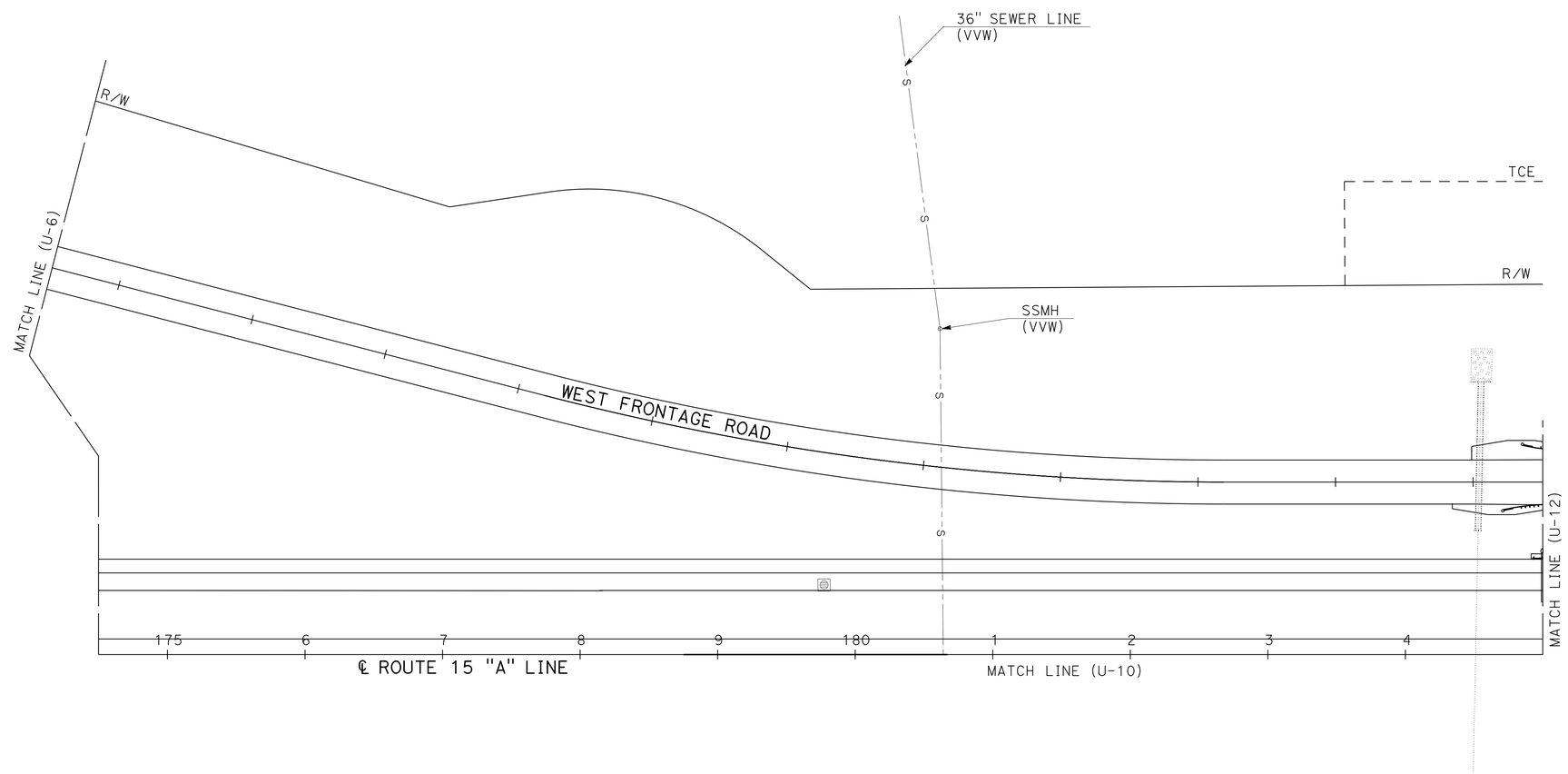

UTILITY PLAN

SCALE: 1" = 50'

U-9

APPROVED FOR UTILITY INFORMATION ONLY

STATE OF CALIFORNIA - DEPARTMENT OF TRANSPORTATION
Caltrans® DESIGN

FUNCTIONAL SUPERVISOR: GEORGE MORHIG
CALCULATED-DESIGNED BY: WILLIAM J. ONKUMPOL
CHECKED BY: AHMAD SHAH
REVISED BY
DATE REVISED

LAST REVISION 01-30-14
DATE PLOTTED => 30-JUN-2014
TIME PLOTTED => 06:05

Dist	COUNTY	ROUTE	POST MILES TOTAL PROJECT	SHEET No.	TOTAL SHEETS
08	SBd	15	42.5/46.0	286	824

REGISTERED CIVIL ENGINEER 1-30-14 DATE

6-23-14
PLANS APPROVAL DATE

REGISTERED PROFESSIONAL ENGINEER AHMAD SHAH No. C55259 Exp. 9-30-14 CIVIL STATE OF CALIFORNIA

THE STATE OF CALIFORNIA OR ITS OFFICERS OR AGENTS SHALL NOT BE RESPONSIBLE FOR THE ACCURACY OR COMPLETENESS OF SCANNED COPIES OF THIS PLAN SHEET.

NOTE:

FOR ACCURATE RIGHT OF WAY DATA, CONTACT
RIGHT OF WAY ENGINEERING AT THE DISTRICT OFFICE.

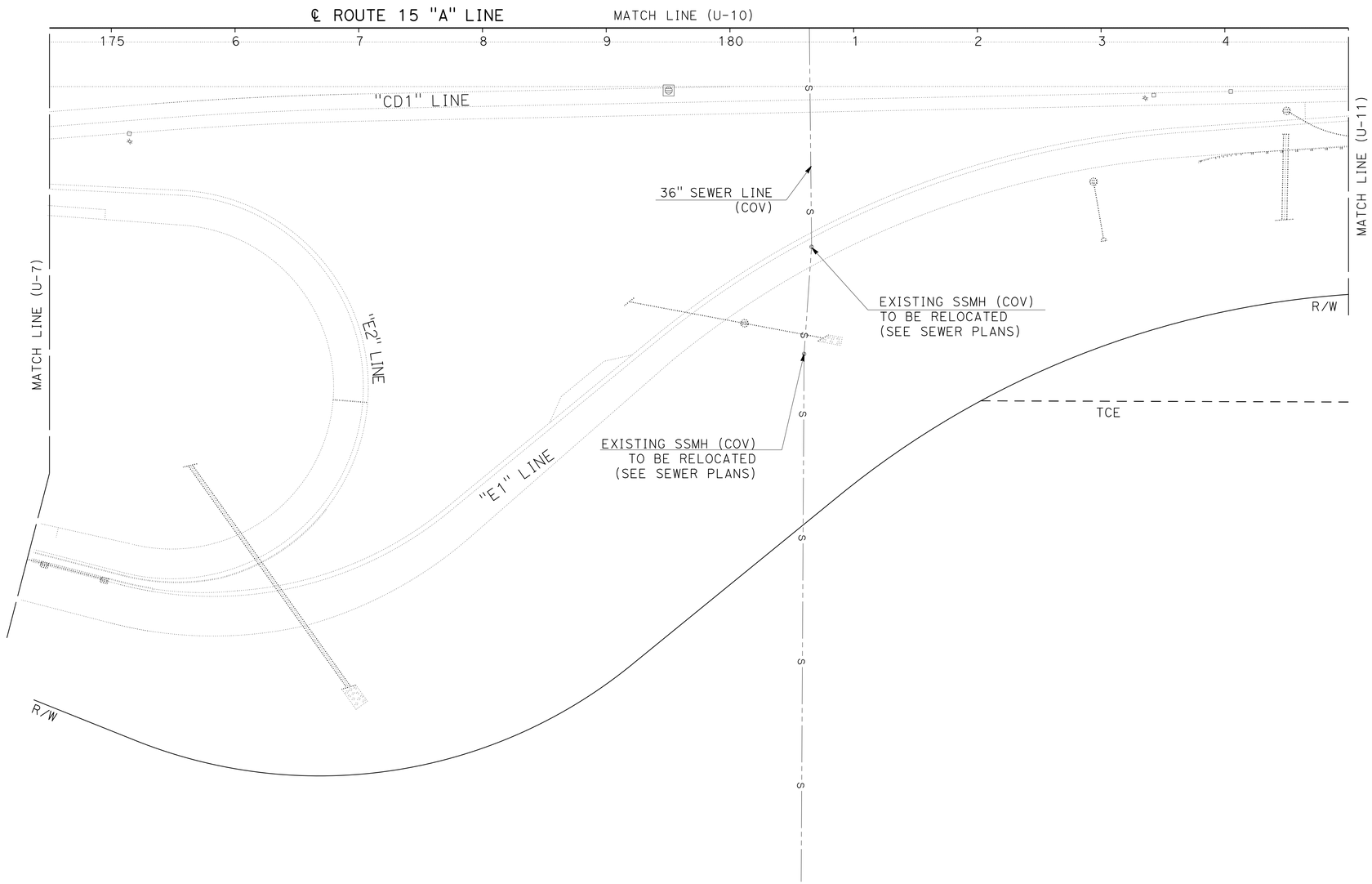

UTILITY PLAN

SCALE: 1" = 50'

U-10

APPROVED FOR UTILITY INFORMATION ONLY

STATE OF CALIFORNIA - DEPARTMENT OF TRANSPORTATION
Caltrans
DESIGN

FUNCTIONAL SUPERVISOR: GEORGE MORHIG
CALCULATED-DESIGNED BY: WILLIAM J. ONKUMPOL
CHECKED BY: AHMAD SHAH
REVISED BY
DATE REVISED

LAST REVISION 01-30-14
DATE PLOTTED => 30-JUN-2014
TIME PLOTTED => 06:05

Dist	COUNTY	ROUTE	POST MILES TOTAL PROJECT	SHEET No.	TOTAL SHEETS
08	SBd	15	42.5/46.0	287	824

REGISTERED CIVIL ENGINEER 1-30-14 DATE

6-23-14
PLANS APPROVAL DATE

REGISTERED PROFESSIONAL ENGINEER AHMAD SHAH No. C55259 Exp. 9-30-14 CIVIL STATE OF CALIFORNIA

THE STATE OF CALIFORNIA OR ITS OFFICERS OR AGENTS SHALL NOT BE RESPONSIBLE FOR THE ACCURACY OR COMPLETENESS OF SCANNED COPIES OF THIS PLAN SHEET.

NOTE:

FOR ACCURATE RIGHT OF WAY DATA, CONTACT
RIGHT OF WAY ENGINEERING AT THE DISTRICT OFFICE.

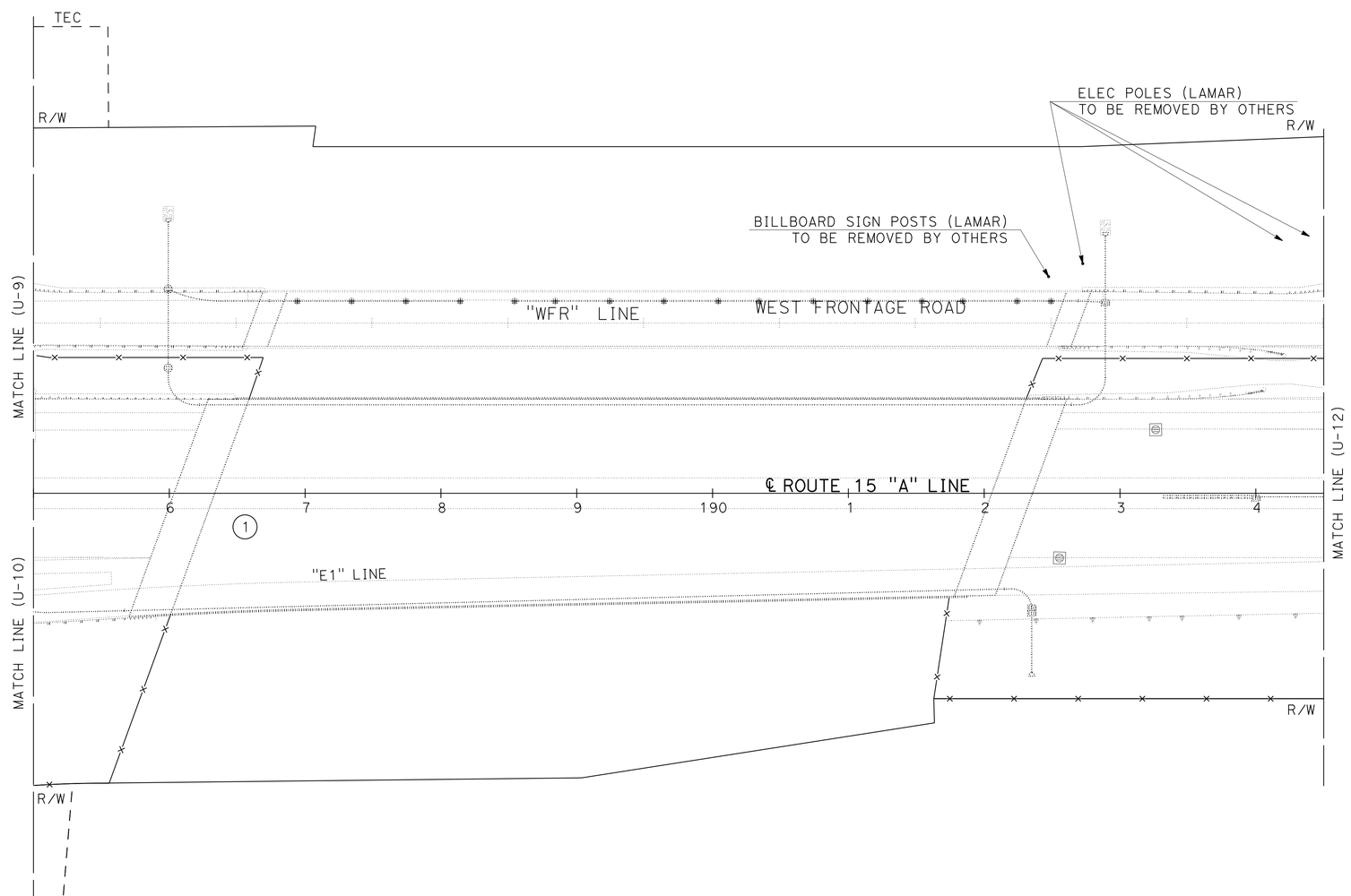

UTILITY PLAN

SCALE: 1" = 50'

U-11

APPROVED FOR UTILITY INFORMATION ONLY

STATE OF CALIFORNIA - DEPARTMENT OF TRANSPORTATION
Caltrans
DESIGN

FUNCTIONAL SUPERVISOR: GEORGE MORHIG
CALCULATED-DESIGNED BY: WILLIAM J. ONKUMPOL
CHECKED BY: AHMAD SHAH
REVISED BY
DATE REVISED

LAST REVISION 01-30-14
DATE PLOTTED => 30-JUN-2014
TIME PLOTTED => 06:05

Dist	COUNTY	ROUTE	POST MILES TOTAL PROJECT	SHEET No.	TOTAL SHEETS
08	SBd	15	42.5/46.0	288	824

REGISTERED CIVIL ENGINEER 1-30-14 DATE

6-23-14
PLANS APPROVAL DATE

REGISTERED PROFESSIONAL ENGINEER
AHMAD SHAH
No. C55259
Exp. 9-30-14
CIVIL
STATE OF CALIFORNIA

THE STATE OF CALIFORNIA OR ITS OFFICERS OR AGENTS SHALL NOT BE RESPONSIBLE FOR THE ACCURACY OR COMPLETENESS OF SCANNED COPIES OF THIS PLAN SHEET.

NOTE:

FOR ACCURATE RIGHT OF WAY DATA, CONTACT
RIGHT OF WAY ENGINEERING AT THE DISTRICT OFFICE.

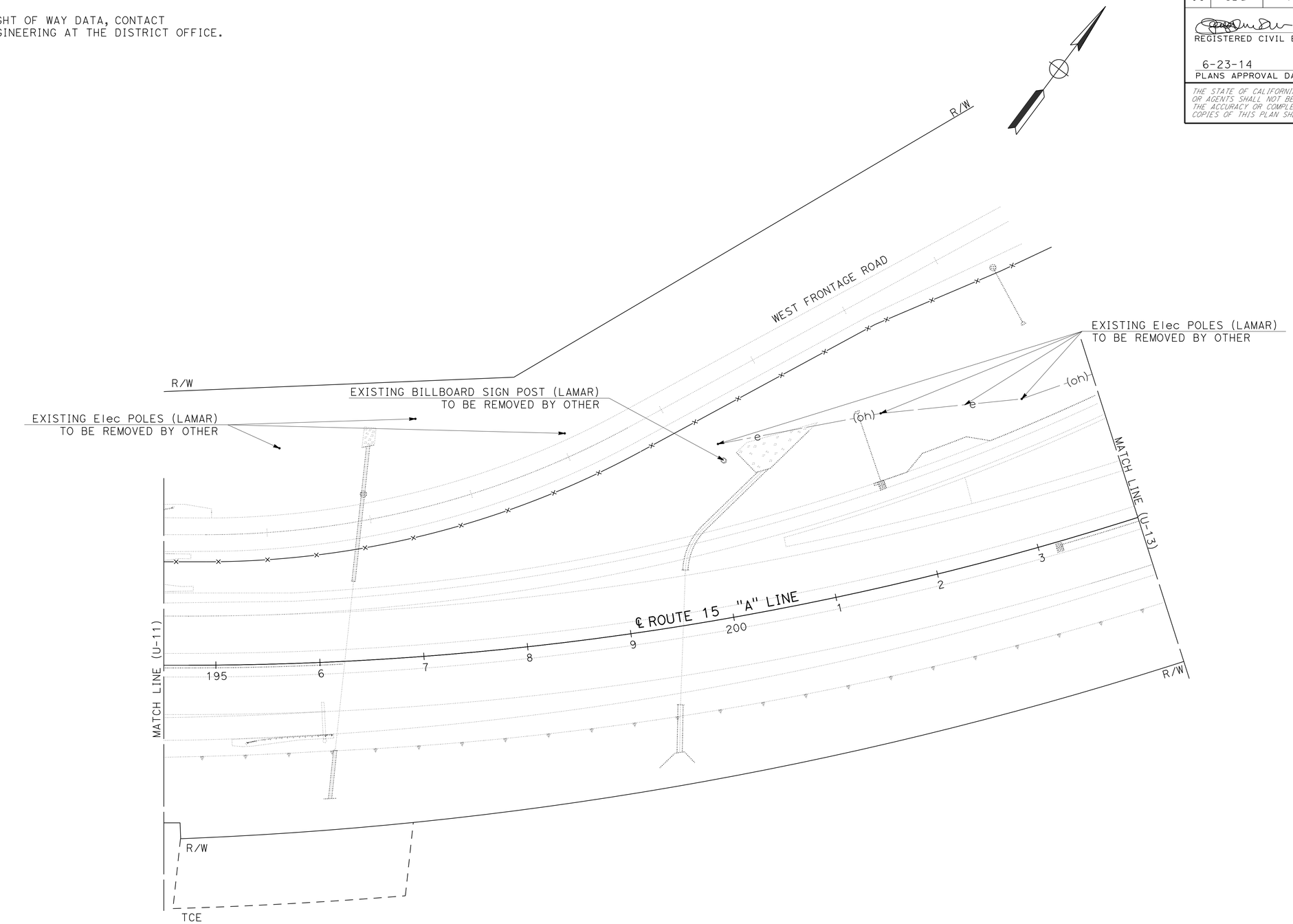

UTILITY PLAN

SCALE: 1" = 50'

U-12

APPROVED FOR UTILITY INFORMATION ONLY

STATE OF CALIFORNIA - DEPARTMENT OF TRANSPORTATION
Caltrans
DESIGN

FUNCTIONAL SUPERVISOR: GEORGE MORHIG
CALCULATED-DESIGNED BY: WILLIAM J. ONKUMPOL
CHECKED BY: AHMAD SHAH
REVISED BY
DATE REVISED

LAST REVISION 01-30-14
DATE PLOTTED => 30-JUN-2014
TIME PLOTTED => 06:05

Dist	COUNTY	ROUTE	POST MILES TOTAL PROJECT	SHEET No.	TOTAL SHEETS
08	SBd	15	42.5/46.0	289	824

REGISTERED CIVIL ENGINEER 1-30-14 DATE

6-23-14
PLANS APPROVAL DATE

REGISTERED PROFESSIONAL ENGINEER AHMAD SHAH No. C55259 Exp. 9-30-14 CIVIL STATE OF CALIFORNIA

THE STATE OF CALIFORNIA OR ITS OFFICERS OR AGENTS SHALL NOT BE RESPONSIBLE FOR THE ACCURACY OR COMPLETENESS OF SCANNED COPIES OF THIS PLAN SHEET.

NOTE:

FOR ACCURATE RIGHT OF WAY DATA, CONTACT
RIGHT OF WAY ENGINEERING AT THE DISTRICT OFFICE.

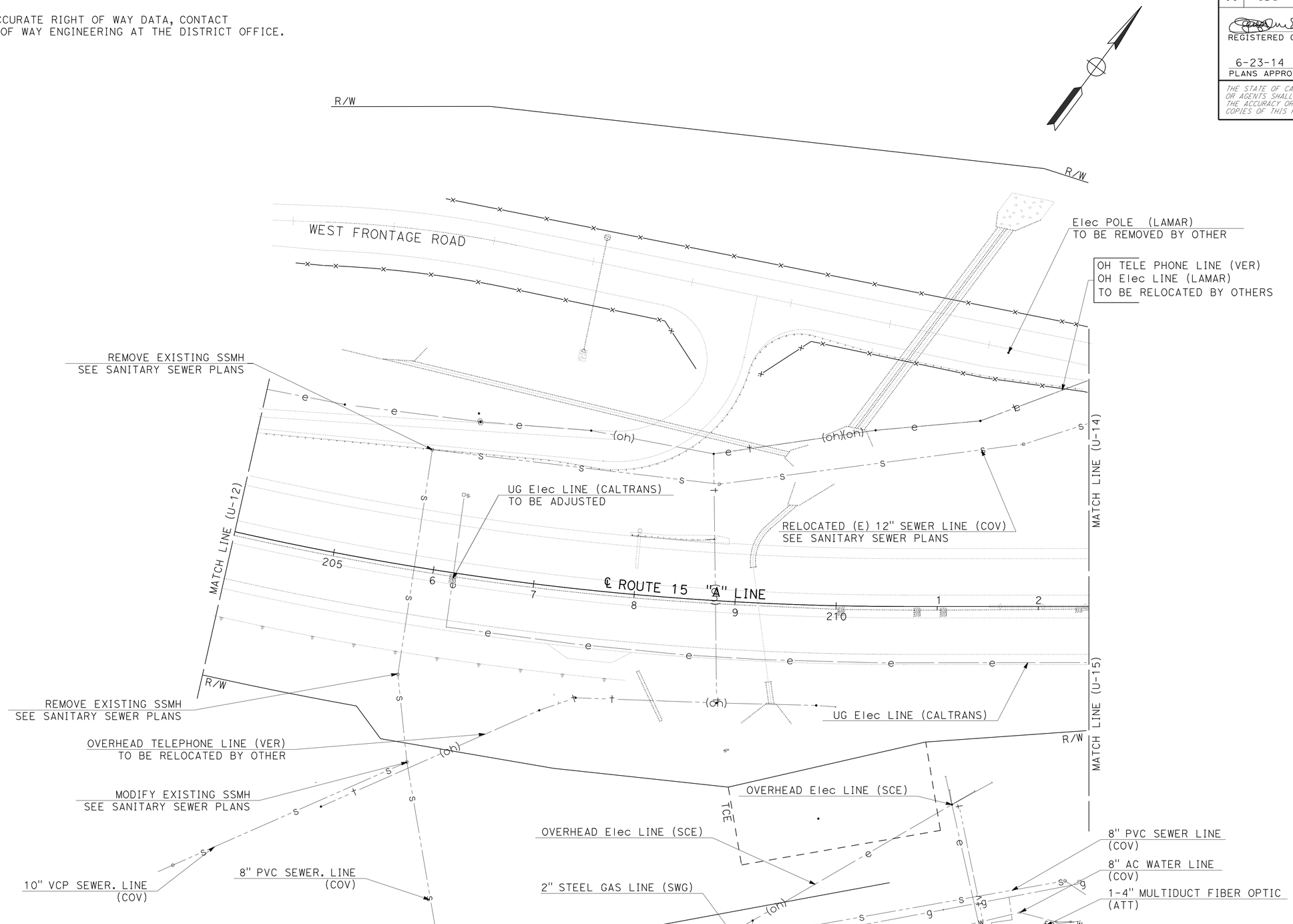

APPROVED FOR UTILITY INFORMATION ONLY

UTILITY PLAN

SCALE: 1" = 50'

U-13

STATE OF CALIFORNIA - DEPARTMENT OF TRANSPORTATION
Caltrans
DESIGN

FUNCTIONAL SUPERVISOR: GEORGE MORHIG
CALCULATED-DESIGNED BY: WILLIAM J. ONKUMPOL
CHECKED BY: AHMAD SHAH
REVISED BY
DATE REVISED

LAST REVISION 01-30-14
DATE PLOTTED => 30-JUN-2014
TIME PLOTTED => 06:05

Dist	COUNTY	ROUTE	POST MILES TOTAL PROJECT	SHEET No.	TOTAL SHEETS
08	SBd	15	42.5/46.0	290	824

REGISTERED CIVIL ENGINEER 1-30-14 DATE

6-23-14
PLANS APPROVAL DATE

REGISTERED PROFESSIONAL ENGINEER AHMAD SHAH No. C55259 Exp. 9-30-14 CIVIL STATE OF CALIFORNIA

THE STATE OF CALIFORNIA OR ITS OFFICERS OR AGENTS SHALL NOT BE RESPONSIBLE FOR THE ACCURACY OR COMPLETENESS OF SCANNED COPIES OF THIS PLAN SHEET.

NOTE:

FOR ACCURATE RIGHT OF WAY DATA, CONTACT
RIGHT OF WAY ENGINEERING AT THE DISTRICT OFFICE.

POTHOLE LOCATION INFORMATION

No.	Sta	OFFSET	TOP Elev	DEPTH	DESCRIPTION
PH27	218+06.64	144.10' LT	2726.34'	4.00'	8" AC WATER (VVWD)
PH28	218+16.53	65.09' LT	2716.50'	7.71'	4" PE W/ 6" STEEL CASING
PH29	220+45.25	179.81' LT	2720.47'	4.30'	2" STEEL GAS (SWG)

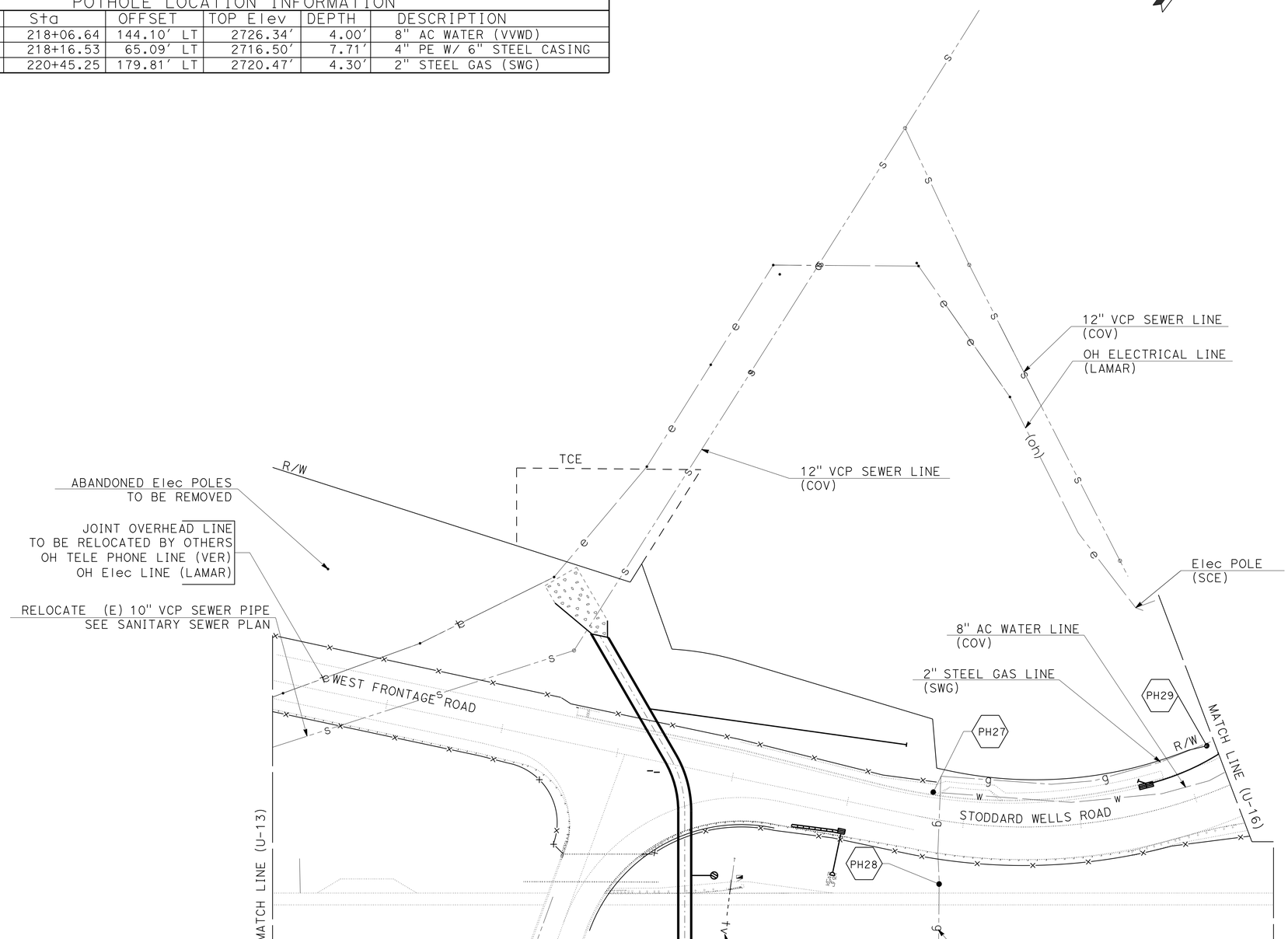

APPROVED FOR UTILITY INFORMATION ONLY

UTILITY PLAN

SCALE: 1" = 50'

U-14

STATE OF CALIFORNIA - DEPARTMENT OF TRANSPORTATION
Caltrans® DESIGN

FUNCTIONAL SUPERVISOR: GEORGE MORHIG
CALCULATED-DESIGNED BY: WILLIAM J. ONKUMPOL
CHECKED BY: AHMAD SHAH
REVISED BY
DATE REVISED

LAST REVISION 01-30-14 | DATE PLOTTED => 30-JUN-2014 | TIME PLOTTED => 06:05

Dist	COUNTY	ROUTE	POST MILES TOTAL PROJECT	SHEET No.	TOTAL SHEETS
08	SBd	15	42.5/46.0	291	824

REGISTERED CIVIL ENGINEER 1-30-14 DATE

6-23-14
PLANS APPROVAL DATE

REGISTERED PROFESSIONAL ENGINEER AHMAD SHAH No. C55259 Exp. 9-30-14 CIVIL STATE OF CALIFORNIA

THE STATE OF CALIFORNIA OR ITS OFFICERS OR AGENTS SHALL NOT BE RESPONSIBLE FOR THE ACCURACY OR COMPLETENESS OF SCANNED COPIES OF THIS PLAN SHEET.

NOTE:

FOR ACCURATE RIGHT OF WAY DATA, CONTACT RIGHT OF WAY ENGINEERING AT THE DISTRICT OFFICE.

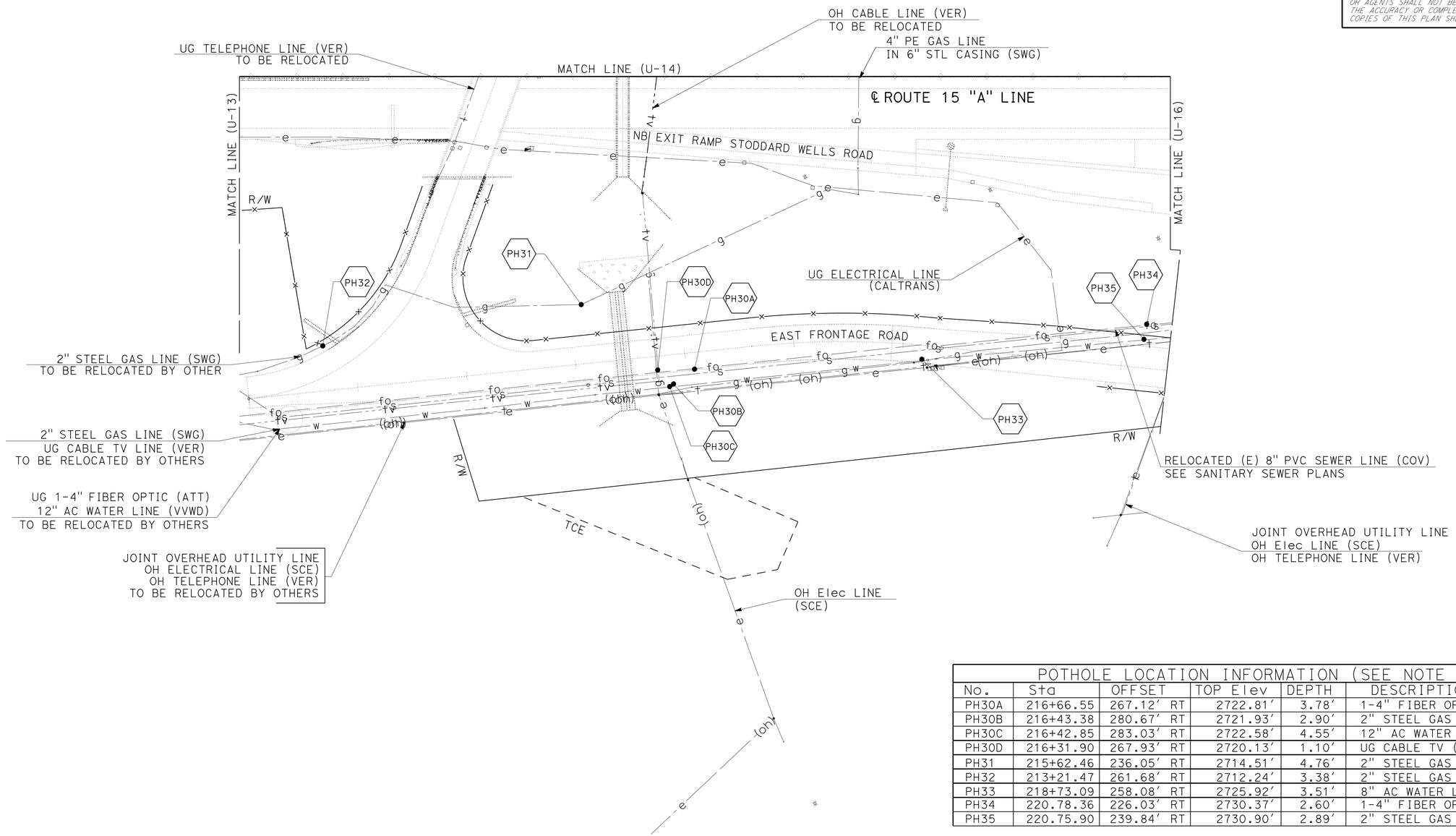

POTHOLE LOCATION INFORMATION (SEE NOTE 2)					
No.	Sta	OFFSET	TOP Elev	DEPTH	DESCRIPTION
PH30A	216+66.55	267.12′ RT	2722.81′	3.78′	1-4" FIBER OPTIC (AT&T)
PH30B	216+43.38	280.67′ RT	2721.93′	2.90′	2" STEEL GAS LINE (SWG)
PH30C	216+42.85	283.03′ RT	2722.58′	4.55′	12" AC WATER LINE (VVWD)
PH30D	216+31.90	267.93′ RT	2720.13′	1.10′	UG CABLE TV (VER)
PH31	215+62.46	236.05′ RT	2714.51′	4.76′	2" STEEL GAS (SWG)
PH32	213+21.47	261.68′ RT	2712.24′	3.38′	2" STEEL GAS (SWG)
PH33	218+73.09	258.08′ RT	2725.92′	3.51′	8" AC WATER LINE (VVWD)
PH34	220.78.36	226.03′ RT	2730.37′	2.60′	1-4" FIBER OPTIC (AT&T)
PH35	220.75.90	239.84′ RT	2730.90′	2.89′	2" STEEL GAS LINE (SWG)

1. ELEVATION SHOWN FOR 'PH30A' REFERS TO THE TOP OF EXISTING CONCRETE SLURRY.

UTILITY PLAN

SCALE: 1" = 50′

U-15

APPROVED FOR UTILITY INFORMATION ONLY

STATE OF CALIFORNIA - DEPARTMENT OF TRANSPORTATION
Caltrans
DESIGN

FUNCTIONAL SUPERVISOR: GEORGE MORHIG
CALCULATED-DESIGNED BY: WILLIAM J. ONKUMPOL
CHECKED BY: AHMAD SHAH
REVISED BY
DATE REVISED

LAST REVISION 01-30-14
DATE PLOTTED => 30-JUN-2014
TIME PLOTTED => 06:05

Dist	COUNTY	ROUTE	POST MILES TOTAL PROJECT	SHEET No.	TOTAL SHEETS
08	SBd	15	42.5/46.0	292	824

REGISTERED CIVIL ENGINEER 1-30-14 DATE

6-23-14
PLANS APPROVAL DATE

REGISTERED PROFESSIONAL ENGINEER AHMAD SHAH No. C55259 Exp. 9-30-14 CIVIL STATE OF CALIFORNIA

THE STATE OF CALIFORNIA OR ITS OFFICERS OR AGENTS SHALL NOT BE RESPONSIBLE FOR THE ACCURACY OR COMPLETENESS OF SCANNED COPIES OF THIS PLAN SHEET.

NOTE:

FOR ACCURATE RIGHT OF WAY DATA, CONTACT RIGHT OF WAY ENGINEERING AT THE DISTRICT OFFICE.

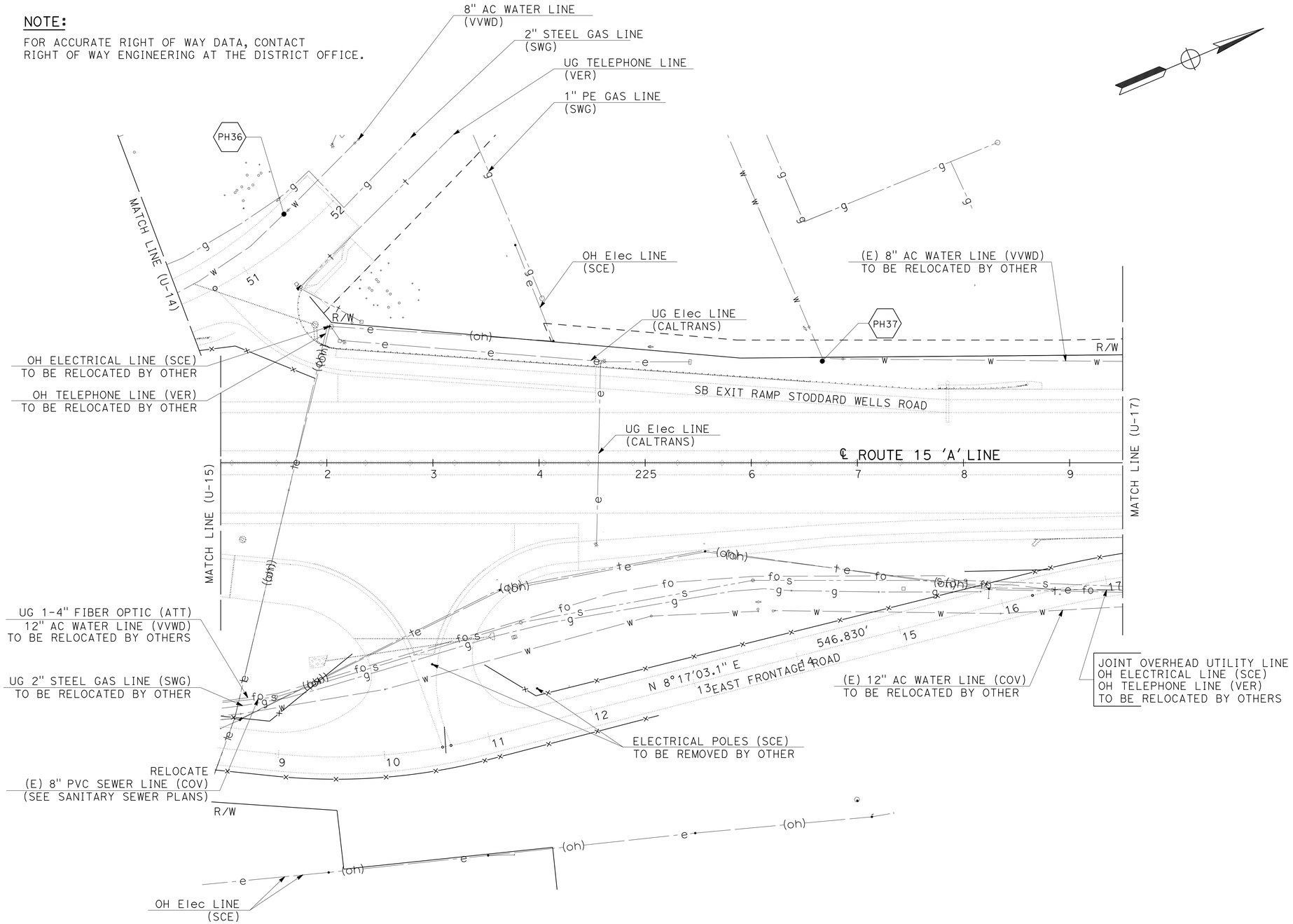

POTHOLE LOCATION INFORMATION					
No.	Sta	OFFSET	TOP Elev	DEPTH	DESCRIPTION
PH36	221+60.01	232.89' LT	2721.91'	3.67'	8" AC WATER LINE (VVWD)
PH37	226+66.94	95.79' LT	2746.65'	3.31'	8" AC WATER LINE (VVWD)

UTILITY PLAN

SCALE: 1" = 50'

U-16

APPROVED FOR UTILITY INFORMATION ONLY

STATE OF CALIFORNIA - DEPARTMENT OF TRANSPORTATION
Caltrans® **DESIGN**

FUNCTIONAL SUPERVISOR: GEORGE MORHIG
CALCULATED-DESIGNED BY: WILLIAM J. ONKUMPOL
CHECKED BY: AHMAD SHAH
REVISED BY / DATE REVISED

LAST REVISION 01-30-14 | DATE PLOTTED => 30-JUN-2014 | TIME PLOTTED => 06:05

Dist	COUNTY	ROUTE	POST MILES TOTAL PROJECT	SHEET No.	TOTAL SHEETS
08	SBd	15	42.5/46.0	293	824

REGISTERED CIVIL ENGINEER 1-30-14 DATE

6-23-14
PLANS APPROVAL DATE

REGISTERED PROFESSIONAL ENGINEER AHMAD SHAH No. C55259 Exp. 9-30-14 CIVIL STATE OF CALIFORNIA

THE STATE OF CALIFORNIA OR ITS OFFICERS OR AGENTS SHALL NOT BE RESPONSIBLE FOR THE ACCURACY OR COMPLETENESS OF SCANNED COPIES OF THIS PLAN SHEET.

NOTE:

FOR ACCURATE RIGHT OF WAY DATA, CONTACT RIGHT OF WAY ENGINEERING AT THE DISTRICT OFFICE.

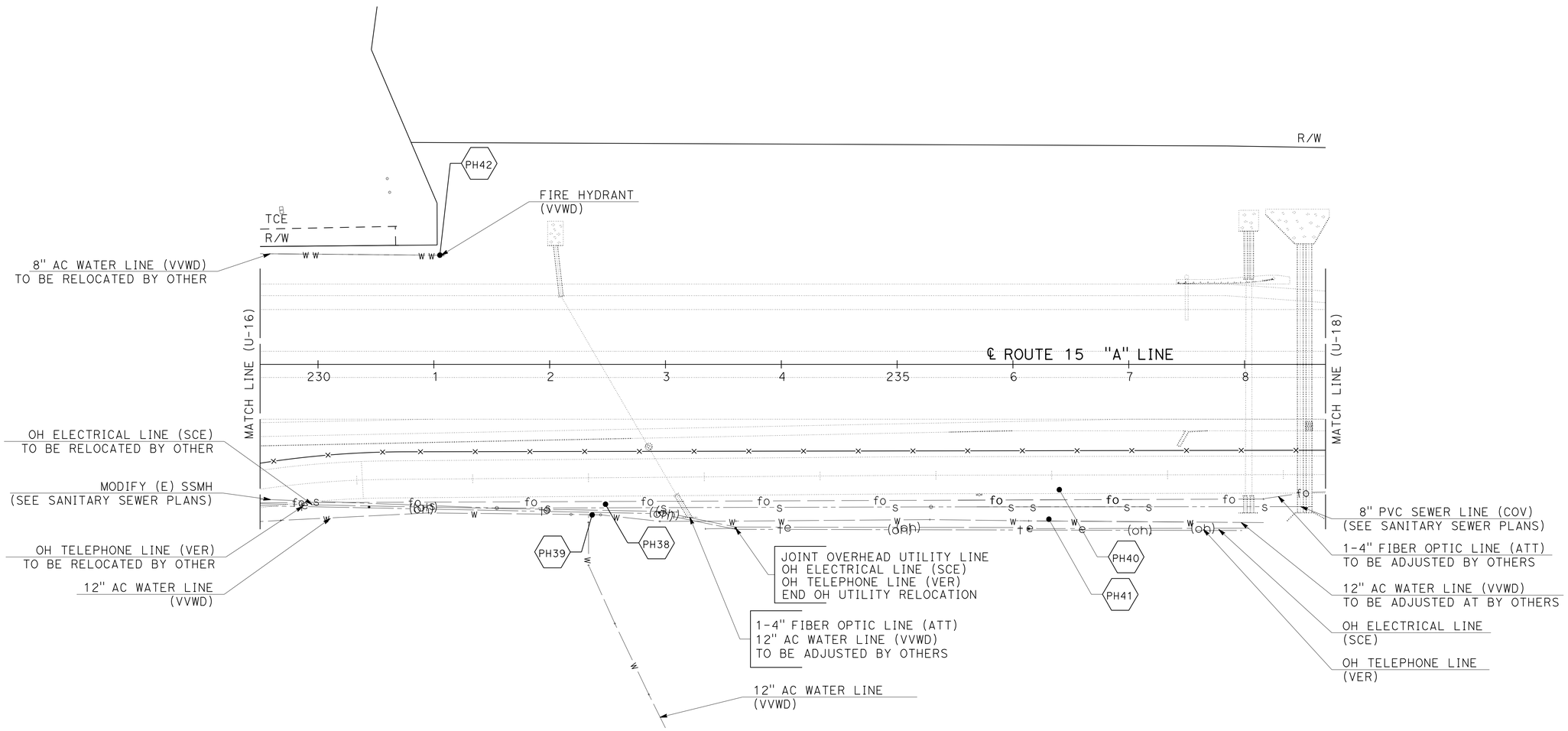

POTHOLE LOCATION INFORMATION					
No.	Sta	OFFSET	TOP Elev	DEPTH	DESCRIPTION
PH38	221+60.01	232.89′ LT	2771.35′	3.07′	1-4" FIBER OPTIC LINE (ATT)
PH39	226+66.94	95.79′ LT	2771.51′	2.31′	12" AC WATER LINE (VVWD)
PH40	226+66.94	95.79′ LT	2782.30′	2.48′	1-4" FIBER OPTIC LINE (ATT)
PH41	226+66.94	95.79′ LT	2782.76′	4.47′	12" AC WATER LINE (VVWD)
PH42	231+05.21	94.30′ LT	2760.96′	3.22′	8" AC WATER LINE (VVWD)

ELEVATIONS SHOWN FOR PH38 AND PH40 REFERS TO THE TOP OF EXISTING CONCRETE SLURRY.

UTILITY PLAN

SCALE: 1" = 50′

U-17

APPROVED FOR UTILITY INFORMATION ONLY

STATE OF CALIFORNIA - DEPARTMENT OF TRANSPORTATION
Caltrans
DESIGN

FUNCTIONAL SUPERVISOR: GEORGE MORHIG
CALCULATED-DESIGNED BY: WILLIAM J. ONKUMPOL
CHECKED BY: AHMAD SHAH
REVISED BY
DATE REVISED

LAST REVISION 01-30-14
DATE PLOTTED => 30-JUN-2014
TIME PLOTTED => 06:05

Dist	COUNTY	ROUTE	POST MILES TOTAL PROJECT	SHEET No.	TOTAL SHEETS
08	SBd	15	42.5/46.0	294	824

REGISTERED CIVIL ENGINEER 1-30-14 DATE

6-23-14
PLANS APPROVAL DATE

REGISTERED PROFESSIONAL ENGINEER AHMAD SHAH No. C55259 Exp. 9-30-14 CIVIL STATE OF CALIFORNIA

THE STATE OF CALIFORNIA OR ITS OFFICERS OR AGENTS SHALL NOT BE RESPONSIBLE FOR THE ACCURACY OR COMPLETENESS OF SCANNED COPIES OF THIS PLAN SHEET.

NOTE:

FOR ACCURATE RIGHT OF WAY DATA, CONTACT
RIGHT OF WAY ENGINEERING AT THE DISTRICT OFFICE.

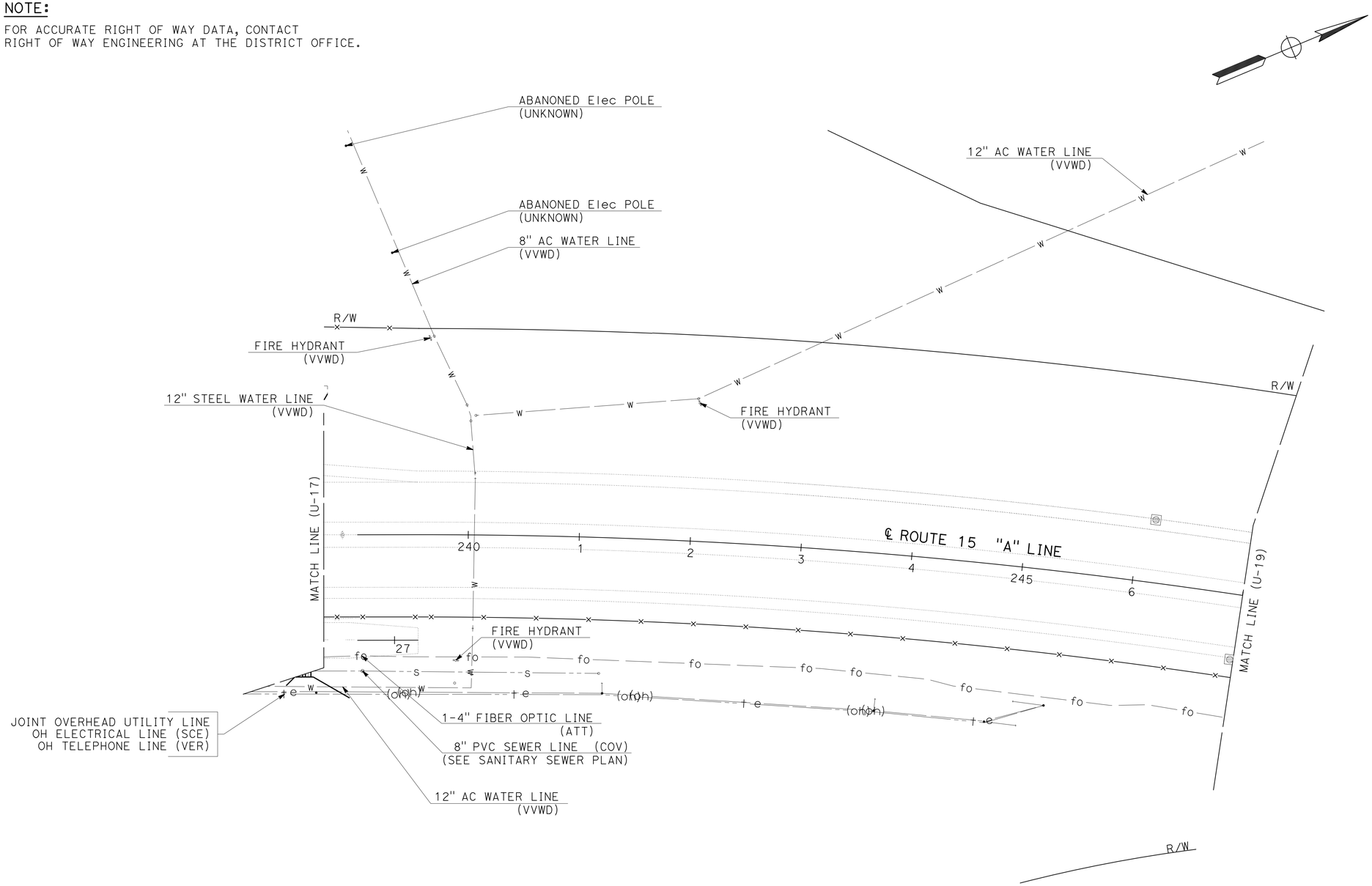

UTILITY PLAN

SCALE: 1" = 50'

U-18

APPROVED FOR UTILITY INFORMATION ONLY

STATE OF CALIFORNIA - DEPARTMENT OF TRANSPORTATION
Caltrans
DESIGN

FUNCTIONAL SUPERVISOR: GEORGE MORHIG
CALCULATED-DESIGNED BY: WILLIAM J. ONKUMPOL
CHECKED BY: AHMAD SHAH
REVISED BY
DATE REVISED

LAST REVISION 01-30-14
DATE PLOTTED => 30-JUN-2014
TIME PLOTTED => 06:05

Dist	COUNTY	ROUTE	POST MILES TOTAL PROJECT	SHEET No.	TOTAL SHEETS
08	SBd	15	42.5/46.0	295	824

REGISTERED CIVIL ENGINEER 1-30-14 DATE

6-23-14
PLANS APPROVAL DATE

REGISTERED PROFESSIONAL ENGINEER AHMAD SHAH No. C55259 Exp. 9-30-14 CIVIL STATE OF CALIFORNIA

THE STATE OF CALIFORNIA OR ITS OFFICERS OR AGENTS SHALL NOT BE RESPONSIBLE FOR THE ACCURACY OR COMPLETENESS OF SCANNED COPIES OF THIS PLAN SHEET.

NOTE:

FOR ACCURATE RIGHT OF WAY DATA, CONTACT RIGHT OF WAY ENGINEERING AT THE DISTRICT OFFICE.

POTHOLE LOCATION INFORMATION					
NO.	STA.	OFFSET	TOP ELEV.	DEPTH	DESCRIPTION
PH43	252+97.10	107.10′ RT	2830.39′	2.61′	1-4" FIBER OPTIC LINE (ATT)

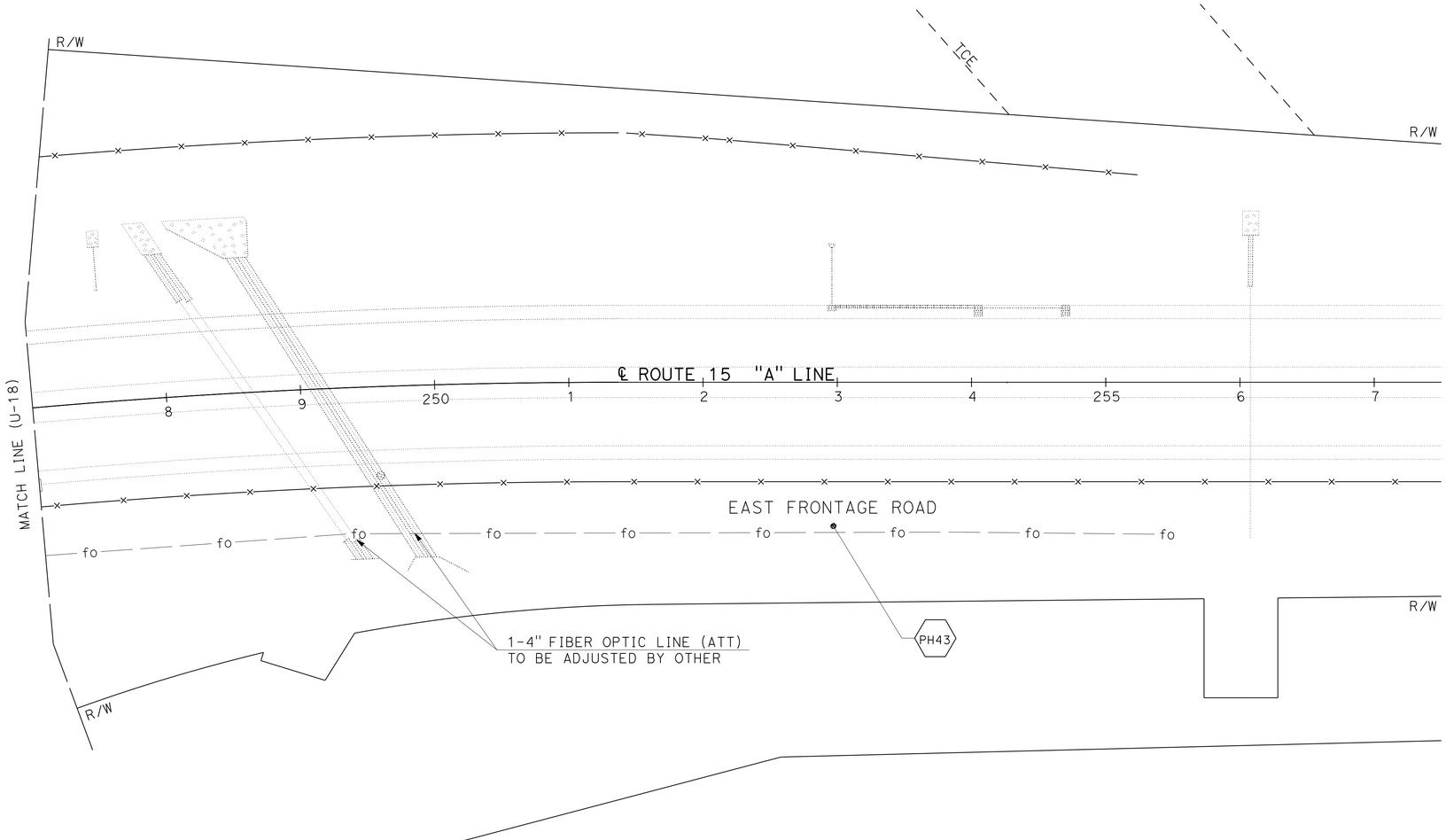

UTILITY PLAN

SCALE: 1" = 50′

U-19

APPROVED FOR UTILITY INFORMATION ONLY

STATE OF CALIFORNIA - DEPARTMENT OF TRANSPORTATION
Caltrans
DESIGN

FUNCTIONAL SUPERVISOR: GEORGE MORHIG
CALCULATED-DESIGNED BY: WILLIAM J. ONKUMPOL
CHECKED BY: AHMAD SHAH
REVISED BY
DATE REVISED

LAST REVISION 01-30-14 | DATE PLOTTED => 30-JUN-2014 | TIME PLOTTED => 06:05

Dist	COUNTY	ROUTE	POST MILES TOTAL PROJECT	SHEET No.	TOTAL SHEETS
08	SBd	15	42.5/46.0	296	824

Thanh Trinh 1-30-14
REGISTERED CIVIL ENGINEER DATE

6-23-14
PLANS APPROVAL DATE

REGISTERED PROFESSIONAL ENGINEER
THANH TRINH
No. 41189
Exp. 3-31-15
CIVIL
STATE OF CALIFORNIA

THE STATE OF CALIFORNIA OR ITS OFFICERS OR AGENTS SHALL NOT BE RESPONSIBLE FOR THE ACCURACY OR COMPLETENESS OF SCANNED COPIES OF THIS PLAN SHEET.

LEGEND:

- CONSTRUCTION AREA SIGNS (1 POST)
- CONSTRUCTION AREA SIGNS (2 POSTS)
- WORK AREA
- (X) CONSTRUCTION AREA SIGN NUMBER
- * PORTABLE FLASHING BEACON

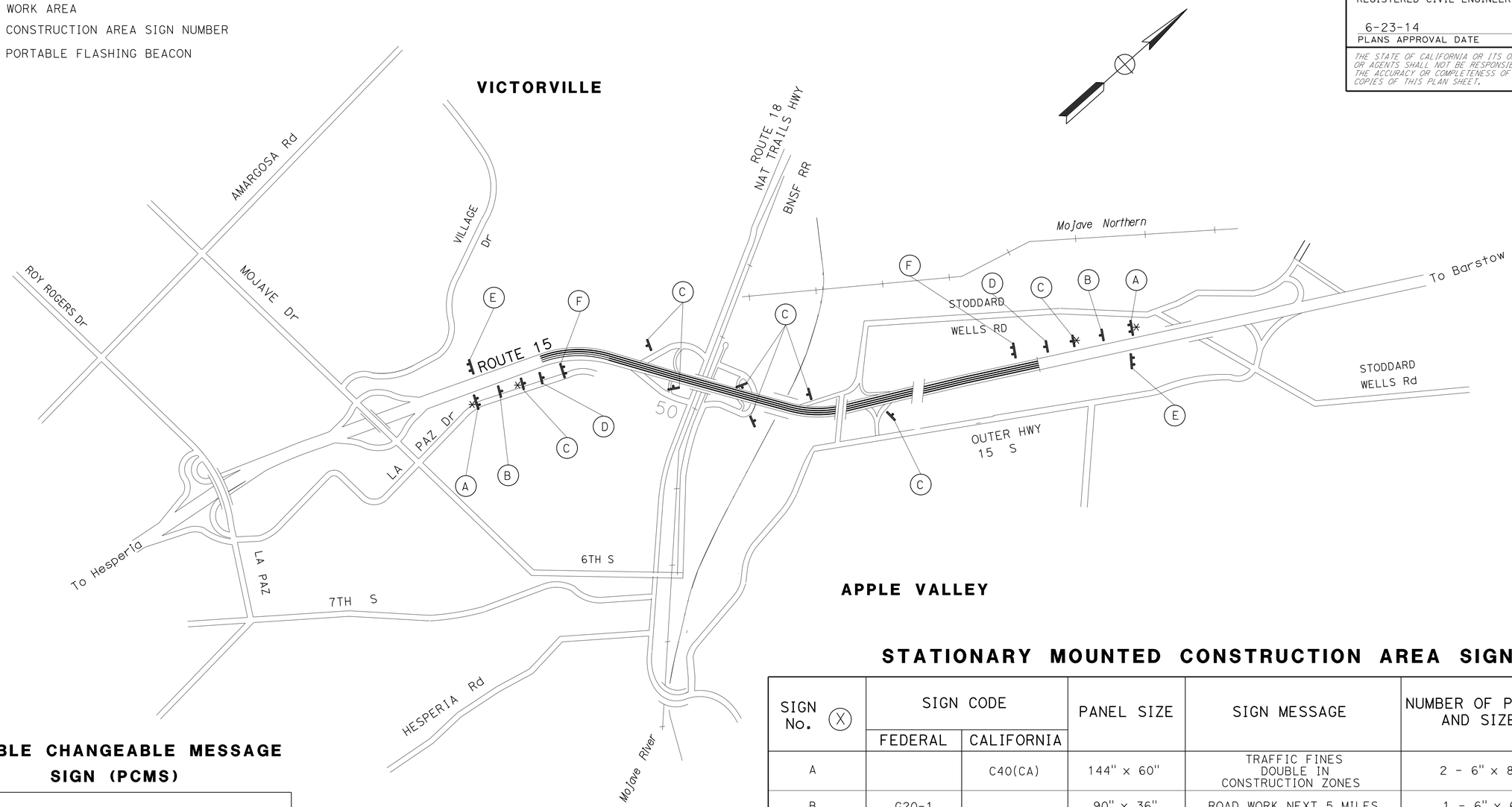

STATIONARY MOUNTED CONSTRUCTION AREA SIGNS

SIGN No. (X)	SIGN CODE		PANEL SIZE	SIGN MESSAGE	NUMBER OF POSTS AND SIZE	NUMBER OF SIGNS
	FEDERAL	CALIFORNIA				
A		C40(CA)	144" x 60"	TRAFFIC FINES DOUBLE IN CONSTRUCTION ZONES	2 - 6" x 8"	2
B	G20-1		90" x 36"	ROAD WORK NEXT 5 MILES	1 - 6" x 6"	2
C	W20-1		48" x 48"	ROAD WORK AHEAD	1 - 6" x 6"	8
D		C30A	48" x 48"	SHOULDER CLOSED	1 - 6" x 6"	2
E	G20-2		36" x 18"	END ROAD WORK	2 - 4" x 4"	4
F	SPECIAL FUNDING SIGN		89" x 60"	CONSTRUCTION FUNDING SIGN	2 - 6" x 6"	2

PORTABLE CHANGEABLE MESSAGE SIGN (PCMS)

EA
4

PORTABLE FLASHING BEACON

EA
4

CONSTRUCTION AREA SIGNS

NO SCALE

CS-1

APPROVED FOR CONSTRUCTION AREA SIGN WORK ONLY

REVISED BY | DATE REVISED
PHIL VU | THANH TRINH
CALCULATED-DESIGNED BY | CHECKED BY
FUNCTIONAL SUPERVISOR
BILL WASSER

STATE OF CALIFORNIA - DEPARTMENT OF TRANSPORTATION
Caltrans
TRAFFIC DESIGN

LAST REVISION 01-30-14 | DATE PLOTTED => 30-JUN-2014 | TIME PLOTTED => 06:05

Dist	COUNTY	ROUTE	POST MILES TOTAL PROJECT	SHEET No.	TOTAL SHEETS
08	SBd	15	42.5/46.0	297	824

REGISTERED CIVIL ENGINEER 3-13-14 DATE

6-23-14
PLANS APPROVAL DATE

REGISTERED PROFESSIONAL ENGINEER AHMAD SHAH No. C55259 Exp. 9-30-14 CIVIL STATE OF CALIFORNIA

THE STATE OF CALIFORNIA OR ITS OFFICERS OR AGENTS SHALL NOT BE RESPONSIBLE FOR THE ACCURACY OR COMPLETENESS OF SCANNED COPIES OF THIS PLAN SHEET.

LEGEND:

STAGE 1

STAGE 1 COMPLETE

STAGE 2

EXISTING DRAINAGE STRUCTURE

PROPOSED DRAINAGE STRUCTURE

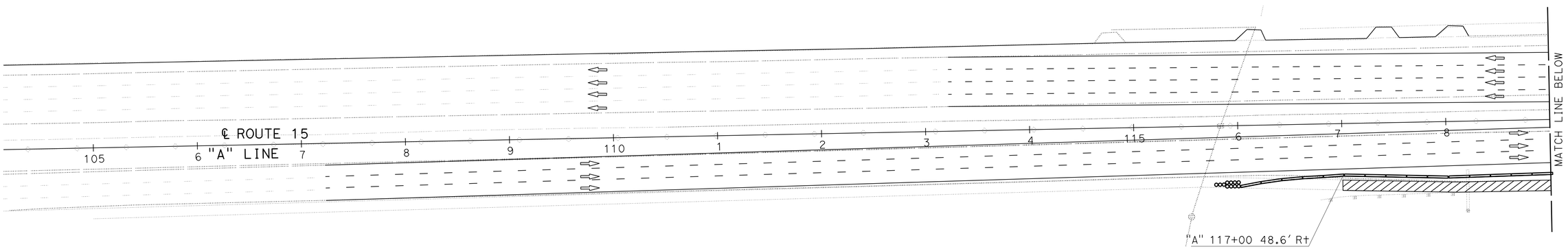

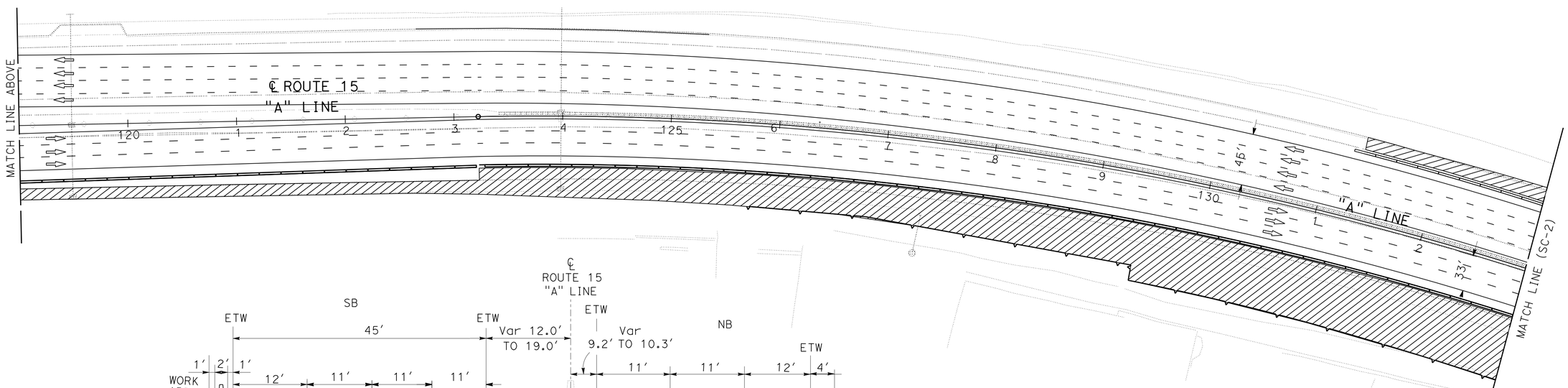

NO SCALE

STAGE CONSTRUCTION
STAGE 1
SCALE: 1" = 50'

SC-1

APPROVED FOR STAGE CONSTRUCTION WORK ONLY

STATE OF CALIFORNIA - DEPARTMENT OF TRANSPORTATION
Caltrans
DESIGN

FUNCTIONAL SUPERVISOR: GEORGE MORHIG

CALCULATED-DESIGNED BY: RAFTAR SHARIA
CHECKED BY: AHMAD SHAH

REVISED BY
DATE REVISED

LAST REVISION 03-13-14 | DATE PLOTTED => 30-JUN-2014 | TIME PLOTTED => 06:06

Dist	COUNTY	ROUTE	POST MILES TOTAL PROJECT	SHEET No.	TOTAL SHEETS
08	SBd	15	42.5/46.0	298	824

REGISTERED CIVIL ENGINEER 2-14-14 DATE

6-23-14
PLANS APPROVAL DATE

REGISTERED PROFESSIONAL ENGINEER AHMAD SHAH No. C55259 Exp. 9-30-14 CIVIL STATE OF CALIFORNIA

THE STATE OF CALIFORNIA OR ITS OFFICERS OR AGENTS SHALL NOT BE RESPONSIBLE FOR THE ACCURACY OR COMPLETENESS OF SCANNED COPIES OF THIS PLAN SHEET.

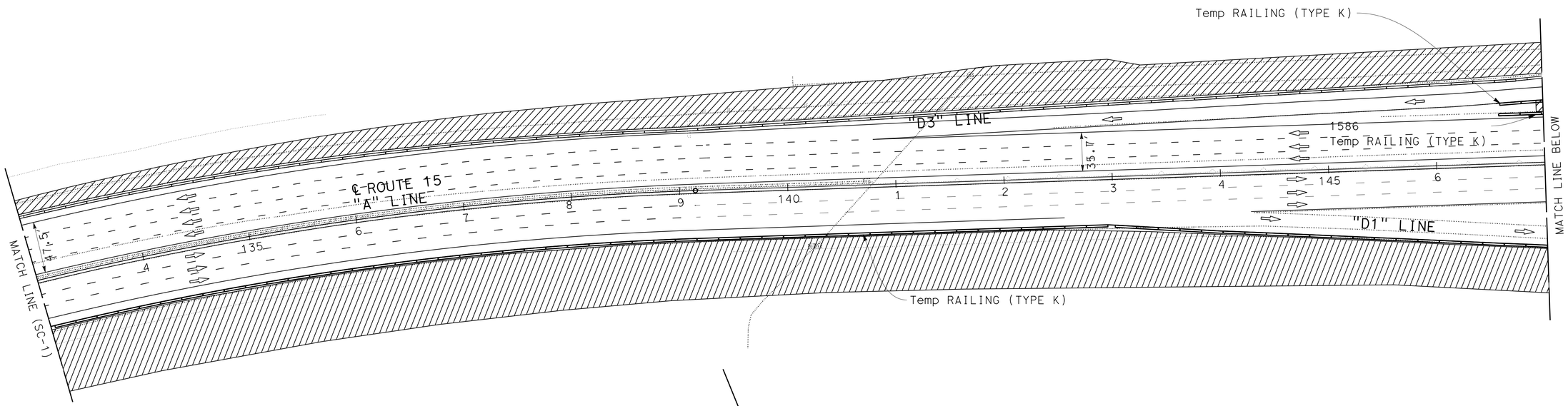

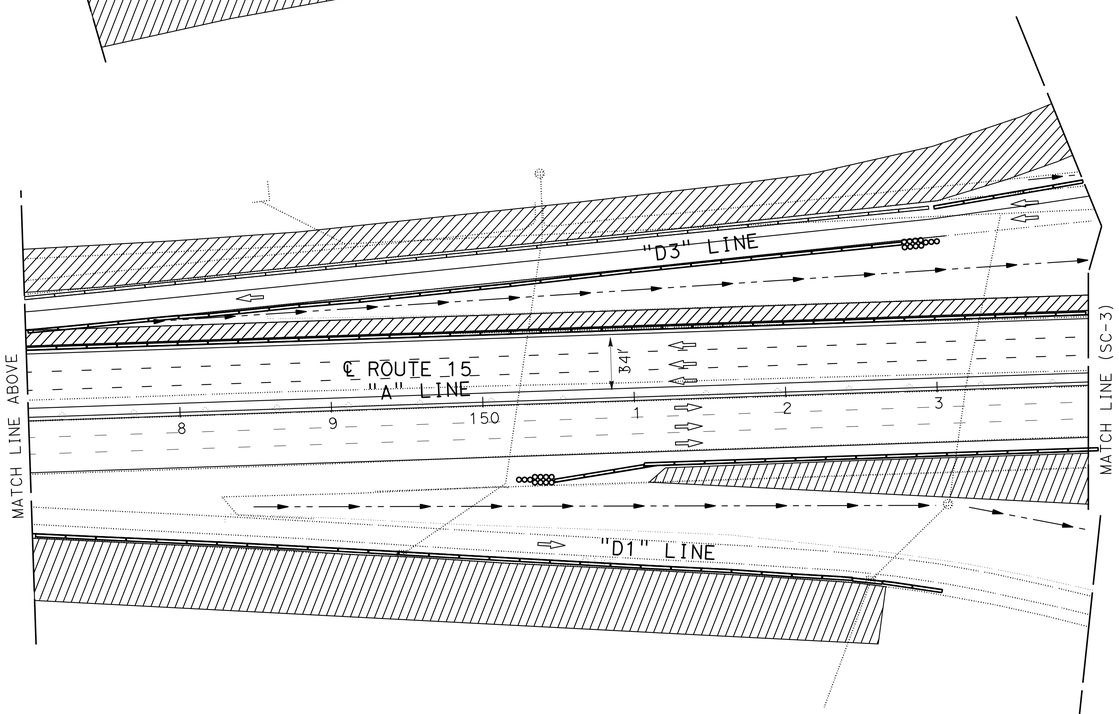

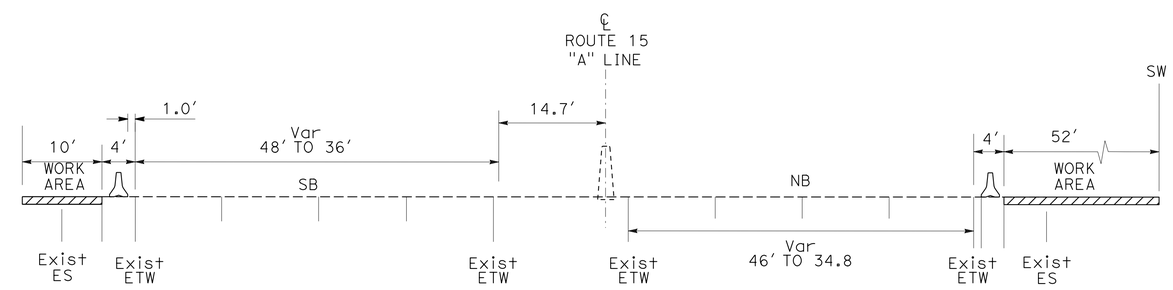

NO SCALE

STAGE CONSTRUCTION
STAGE 1
SCALE: 1" = 50'

SC-2

APPROVED FOR STAGE CONSTRUCTION WORK ONLY

STATE OF CALIFORNIA - DEPARTMENT OF TRANSPORTATION
Caltrans
DESIGN

FUNCTIONAL SUPERVISOR: GEORGE MORHIG
CALCULATED-DESIGNED BY: RAFTAR SHARIA
CHECKED BY: AHMAD SHAH
REVISED BY
DATE REVISED

LAST REVISION 02-14-14
DATE PLOTTED => 30-JUN-2014
TIME PLOTTED => 06:06

Dist	COUNTY	ROUTE	POST MILES TOTAL PROJECT	SHEET No.	TOTAL SHEETS
08	SBd	15	42.5/46.0	299	824

REGISTERED CIVIL ENGINEER 2-14-14 DATE

6-23-14
PLANS APPROVAL DATE

REGISTERED PROFESSIONAL ENGINEER
AHMAD SHAH
No. C55259
Exp. 9-30-14
CIVIL
STATE OF CALIFORNIA

THE STATE OF CALIFORNIA OR ITS OFFICERS OR AGENTS SHALL NOT BE RESPONSIBLE FOR THE ACCURACY OR COMPLETENESS OF SCANNED COPIES OF THIS PLAN SHEET.

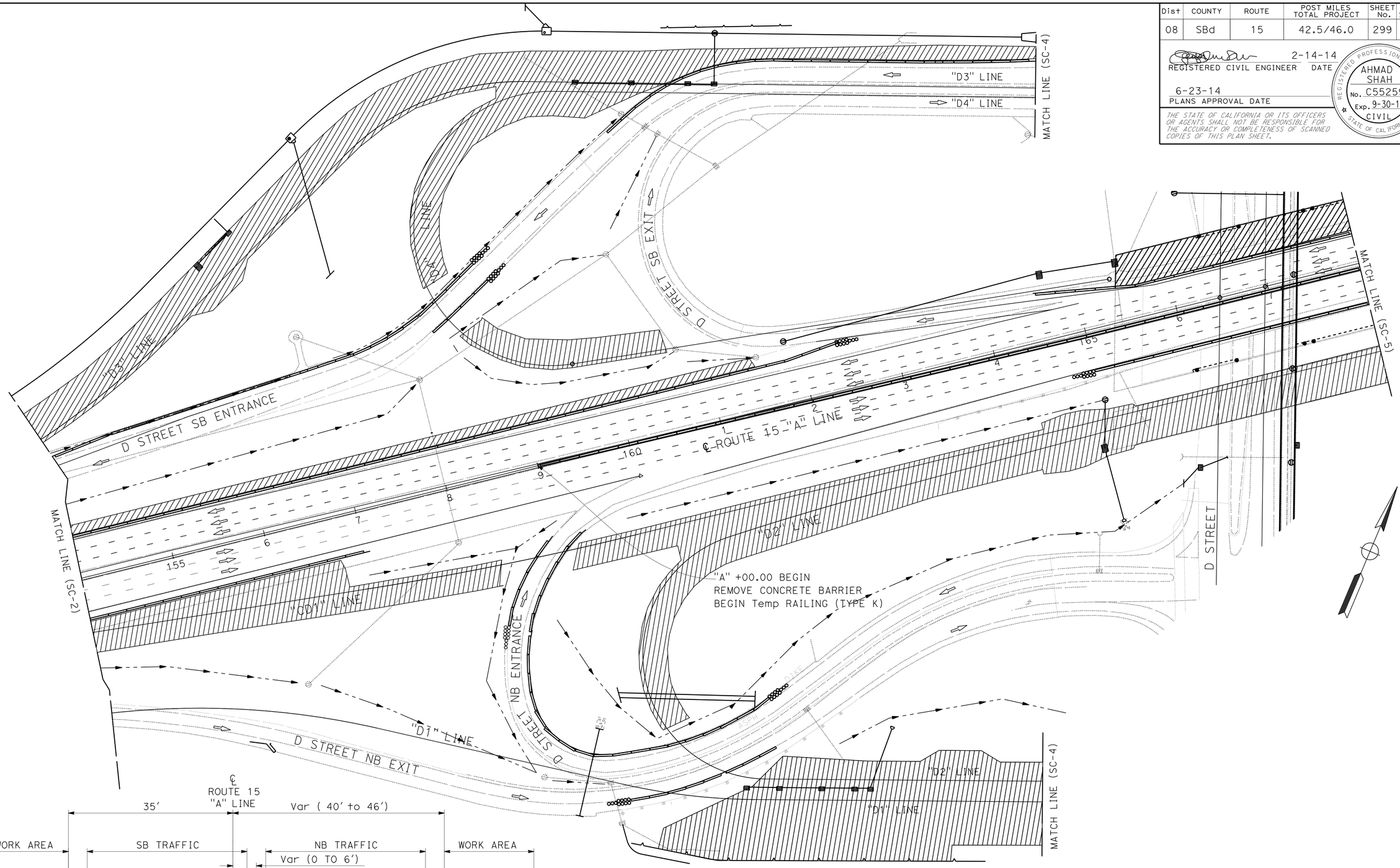

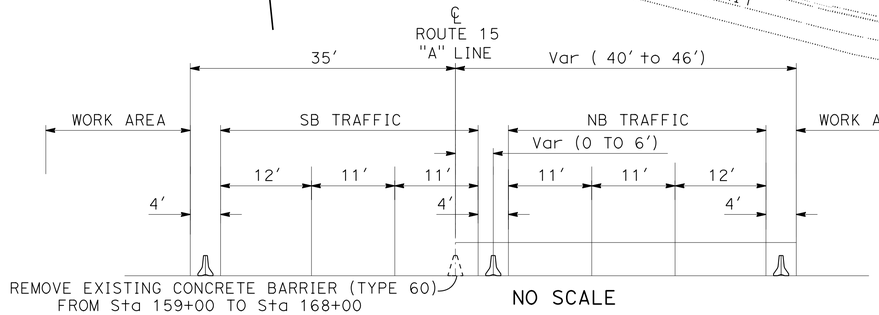

NO SCALE

STAGE CONSTRUCTION
STAGE 1
SCALE: 1" = 50'

SC-3

APPROVED FOR STAGE CONSTRUCTION WORK ONLY

STATE OF CALIFORNIA - DEPARTMENT OF TRANSPORTATION
Caltrans
DESIGN

FUNCTIONAL SUPERVISOR: GEORGE MORHIG
CALCULATED-DESIGNED BY: RAFTAR SHARIA
CHECKED BY: AHMAD SHAH
REVISED BY
DATE REVISED

LAST REVISION 02-14-14
DATE PLOTTED => 30-JUN-2014
TIME PLOTTED => 06:06

Dist	COUNTY	ROUTE	POST MILES TOTAL PROJECT	SHEET No.	TOTAL SHEETS
08	SBd	15	42.5/46.0	300	824

REGISTERED CIVIL ENGINEER 2-14-14 DATE

6-23-14
PLANS APPROVAL DATE

REGISTERED PROFESSIONAL ENGINEER
AHMAD SHAH
No. C55259
Exp. 9-30-14
CIVIL
STATE OF CALIFORNIA

THE STATE OF CALIFORNIA OR ITS OFFICERS OR AGENTS SHALL NOT BE RESPONSIBLE FOR THE ACCURACY OR COMPLETENESS OF SCANNED COPIES OF THIS PLAN SHEET.

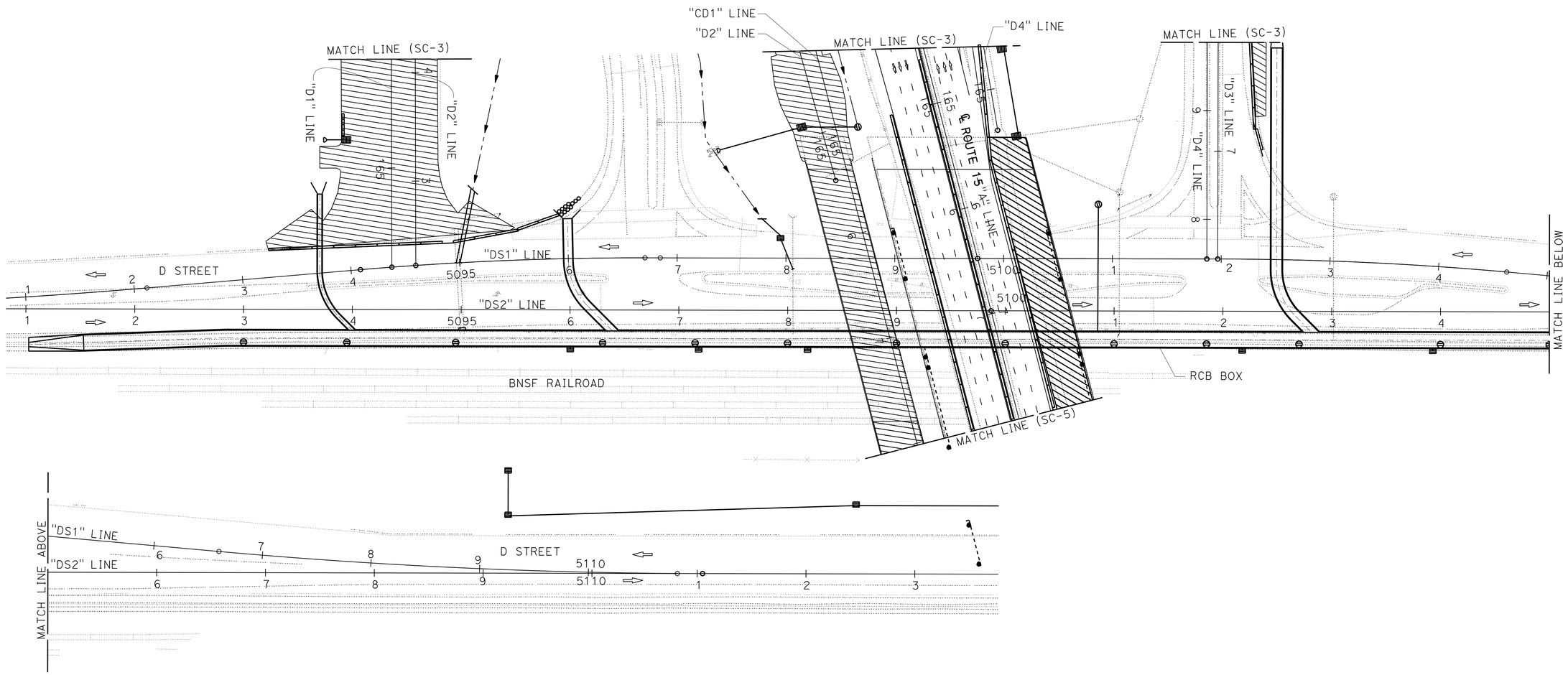

STAGE CONSTRUCTION
STAGE 1
SCALE: 1" = 50'

SC-4

APPROVED FOR STAGE CONSTRUCTION WORK ONLY

STATE OF CALIFORNIA - DEPARTMENT OF TRANSPORTATION
Caltrans
DESIGN

FUNCTIONAL SUPERVISOR: GEORGE MORHIG
CALCULATED-DESIGNED BY: RAFTAR SHARIA
CHECKED BY: AHMAD SHAH
REVISED BY
DATE REVISED

LAST REVISION 02-14-14
DATE PLOTTED => 27-JUN-2014
TIME PLOTTED => 13:55