Dist	COUNTY	ROUTE	POST MILES TOTAL PROJECT	SHEET No.	TOTAL SHEETS
08	SBd	15	42.5/46.0	31	824

REGISTERED CIVIL ENGINEER 3-13-14 DATE

6-23-14
PLANS APPROVAL DATE

REGISTERED PROFESSIONAL ENGINEER AHMAD SHAH No. C55259 Exp. 9-30-14 CIVIL STATE OF CALIFORNIA

THE STATE OF CALIFORNIA OR ITS OFFICERS OR AGENTS SHALL NOT BE RESPONSIBLE FOR THE ACCURACY OR COMPLETENESS OF SCANNED COPIES OF THIS PLAN SHEET.

NOTE:

FOR ACCURATE RIGHT OF WAY DATA, CONTACT RIGHT OF WAY ENGINEERING AT THE DISTRICT OFFICE.

CURVE DATA

No.	R	Δ	T	L
1	445′	57°25′44″	243.78′	446.03′

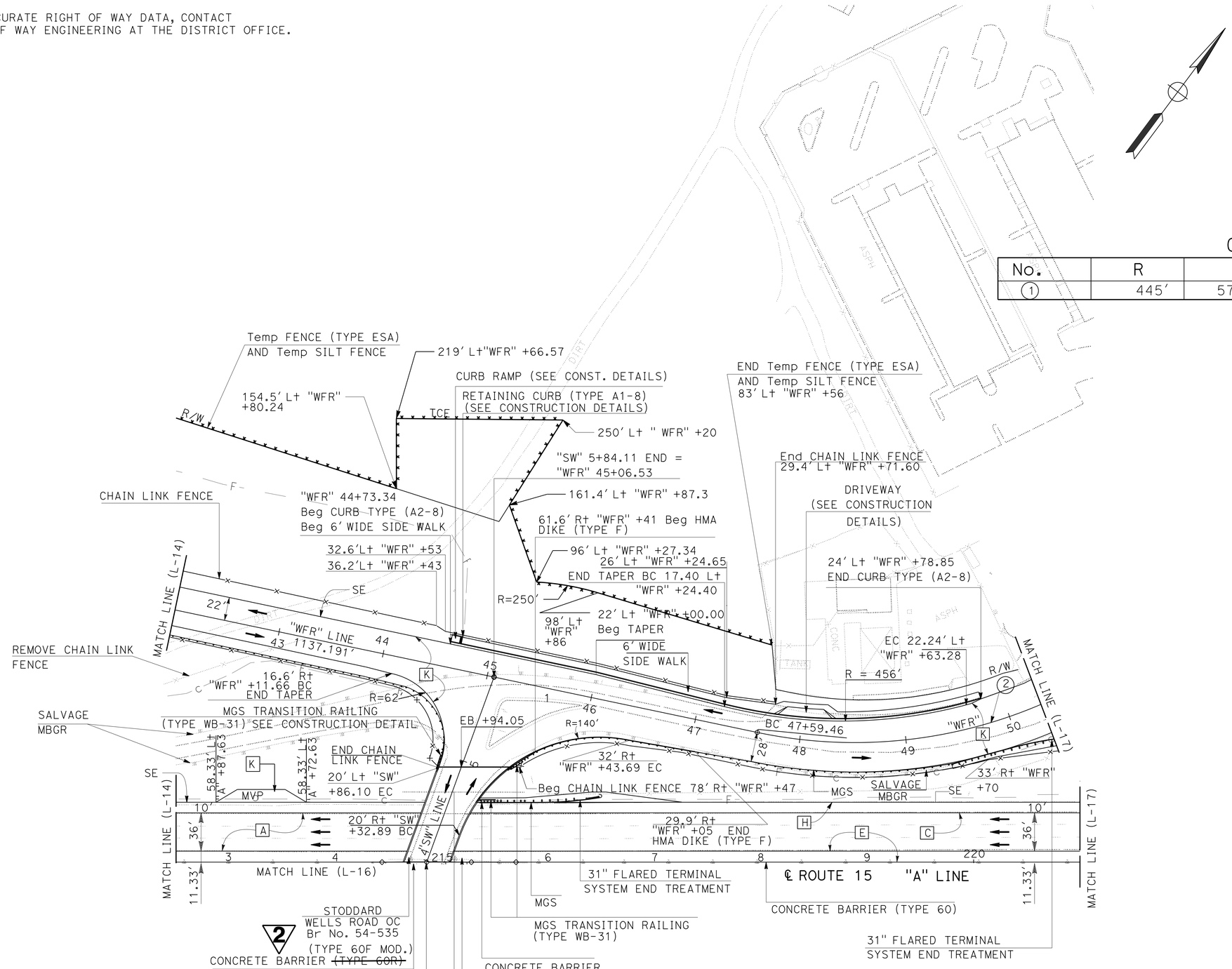

2 REPLACED PER ADDENDUM No. 2 DATED JULY 30, 2015

LAYOUT

SCALE: 1" = 50′

L-15

STATE OF CALIFORNIA - DEPARTMENT OF TRANSPORTATION

DESIGN

FUNCTIONAL SUPERVISOR: GEORGE MORHIG

CALCULATED-DESIGNED BY: KEA NEEDS

CHECKED BY: AHMAD SHAH

REVISED BY / DATE REVISED

LAST REVISION 03-13-14

DATE PLOTTED => 30-JUL-2015
TIME PLOTTED => 10:20

Dist	COUNTY	ROUTE	POST MILES TOTAL PROJECT	SHEET No.	TOTAL SHEETS
08	SBd	15	42.5/46.0	32	824

REGISTERED CIVIL ENGINEER 3-13-14 DATE

6-23-14
PLANS APPROVAL DATE

REGISTERED PROFESSIONAL ENGINEER AHMAD SHAH No. C55259 Exp. 9-30-14 CIVIL STATE OF CALIFORNIA

THE STATE OF CALIFORNIA OR ITS OFFICERS OR AGENTS SHALL NOT BE RESPONSIBLE FOR THE ACCURACY OR COMPLETENESS OF SCANNED COPIES OF THIS PLAN SHEET.

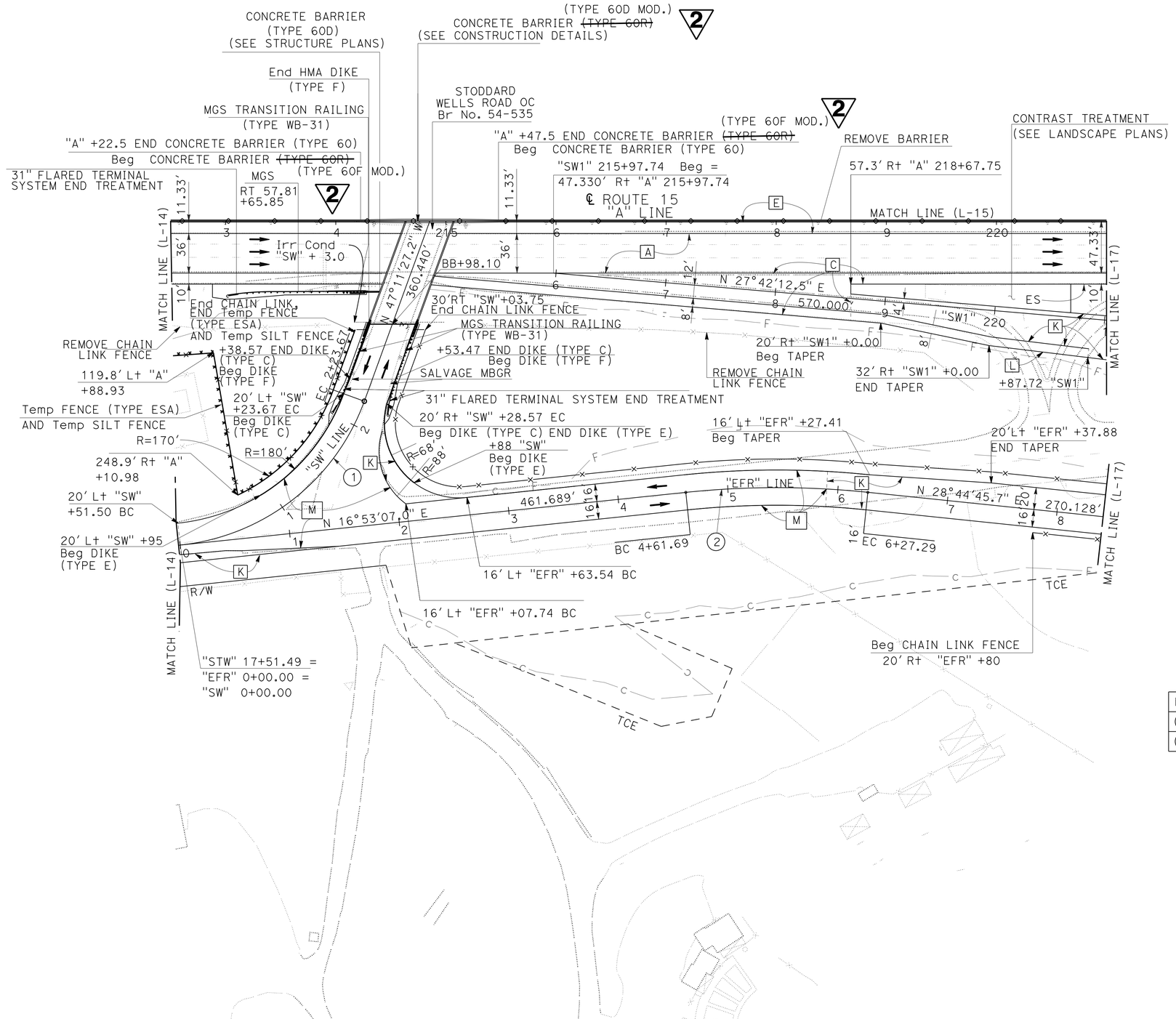

CURVE DATA

No.	R	△	T	L
1	200'	64°04'34"	125.16'	223.67'
2	800'	11°51'38"	83.10'	165.61'

NOTE:
FOR ACCURATE RIGHT OF WAY DATA, CONTACT RIGHT OF WAY ENGINEERING AT THE DISTRICT OFFICE.

2 **REPLACED PER ADDENDUM No. 2 DATED JULY 30, 2015**

LAYOUT

SCALE: 1" = 50'

L-16

STATE OF CALIFORNIA - DEPARTMENT OF TRANSPORTATION
Caltrans **DESIGN**

FUNCTIONAL SUPERVISOR: GEORGE MORHIG
CALCULATED-DESIGNED BY: KEA NEEDS
CHECKED BY: AHMAD SHAH
REVISED BY
DATE REVISED

LAST REVISION 03-13-14 | DATE PLOTTED => 30-JUL-2015 | TIME PLOTTED => 10:11

Dist	COUNTY	ROUTE	POST MILES TOTAL PROJECT	SHEET No.	TOTAL SHEETS
08	SBd	15	42.5/46.0	98	824

REGISTERED CIVIL ENGINEER 1-30-14 DATE

6-23-14
PLANS APPROVAL DATE

REGISTERED PROFESSIONAL ENGINEER AHMAD SHAH No. C55259 Exp. 9-30-14 CIVIL STATE OF CALIFORNIA

THE STATE OF CALIFORNIA OR ITS OFFICERS OR AGENTS SHALL NOT BE RESPONSIBLE FOR THE ACCURACY OR COMPLETENESS OF SCANNED COPIES OF THIS PLAN SHEET.

2

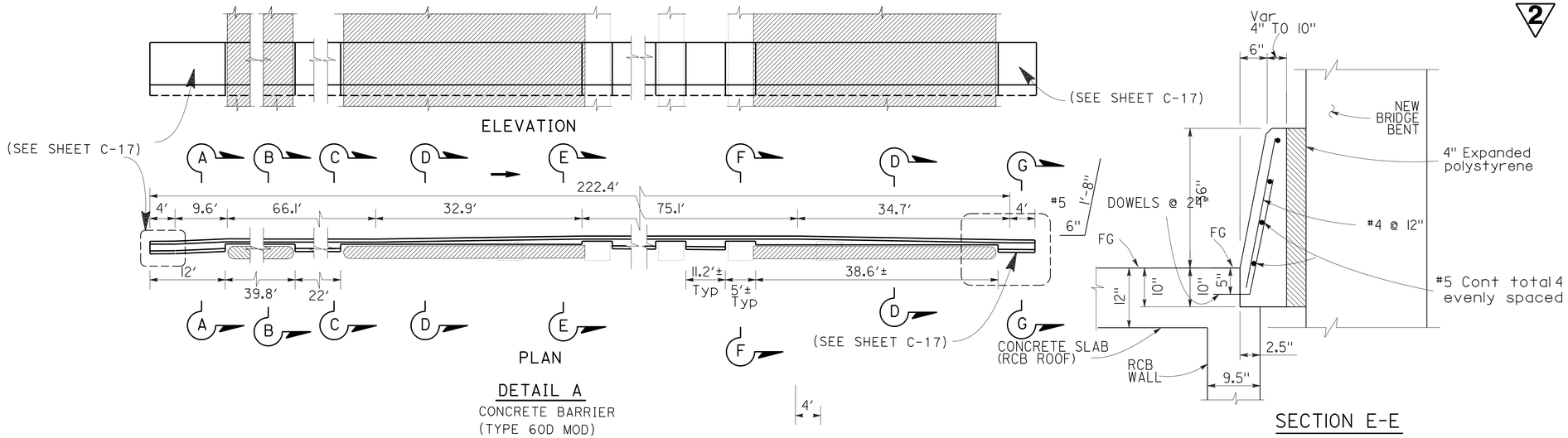

DETAIL A
CONCRETE BARRIER
(TYPE 60D MOD)

SECTION E-E
Typ

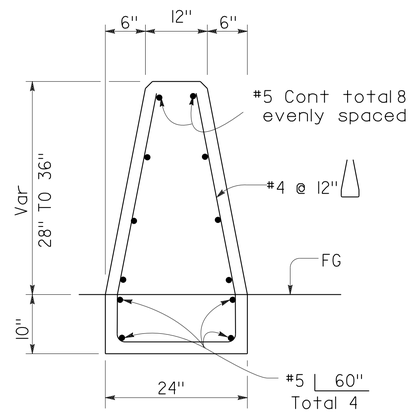

SECTION A-A

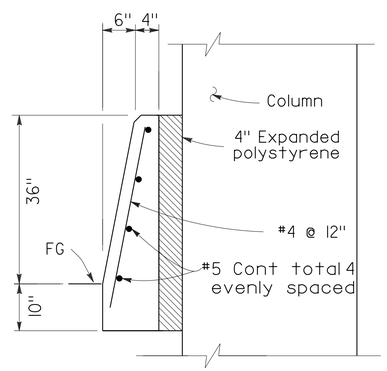

SECTION B-B

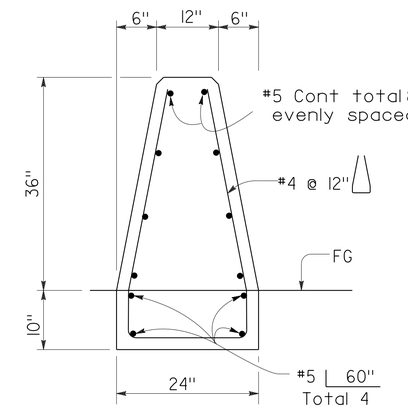

SECTION C-C (Typ)

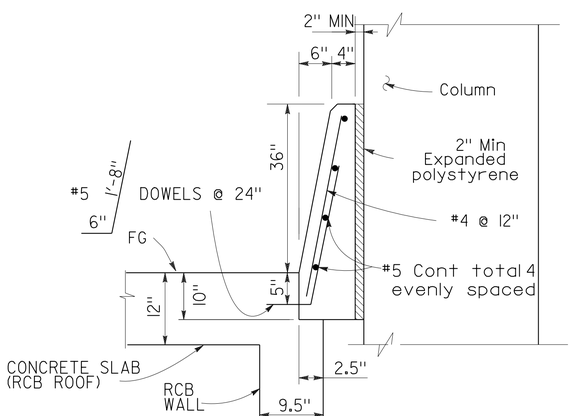

SECTION F-F
Typ

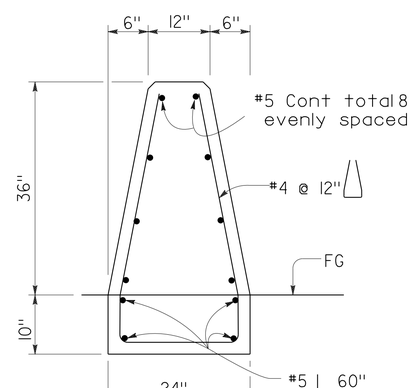

SECTION G-G

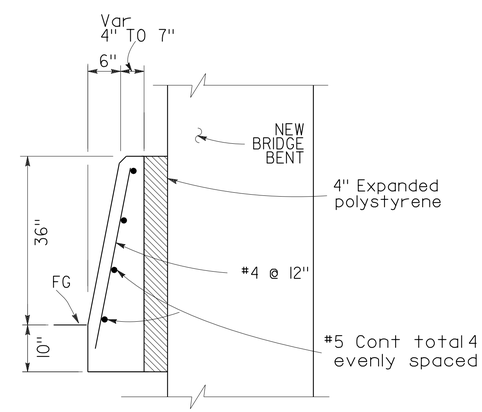

SECTION D-D

2 **REPLACED PER ADDENDUM No. 2 DATED JULY 30, 2015**

CONSTRUCTION DETAILS

NO SCALE

C-8

STATE OF CALIFORNIA - DEPARTMENT OF TRANSPORTATION
Caltrans® DESIGN

FUNCTIONAL SUPERVISOR: GEORGE MORHIG
CALCULATED-DESIGNED BY: RAFTAR SHARIA
CHECKED BY: AHMAD SHAH
REVISED BY
DATE REVISED

LAST REVISION 01-30-14
DATE PLOTTED => 29-JUL-2015
TIME PLOTTED => 14:24

Dist	COUNTY	ROUTE	POST MILES TOTAL PROJECT	SHEET No.	TOTAL SHEETS
08	SBd	15	42.5/46.0	406	824

REGISTERED CIVIL ENGINEER 1-30-14 DATE

6-23-14
PLANS APPROVAL DATE

REGISTERED PROFESSIONAL ENGINEER AHMAD SHAH No. C55259 Exp. 9-30-14 CIVIL STATE OF CALIFORNIA

THE STATE OF CALIFORNIA OR ITS OFFICERS OR AGENTS SHALL NOT BE RESPONSIBLE FOR THE ACCURACY OR COMPLETENESS OF SCANNED COPIES OF THIS PLAN SHEET.

2

ROADWAY QUANTITIES

SHEET NUMBER	DIRECTION OF TRAVEL	STATION LIMTS	LINE	ROADWAY EXCAVATION	EMBANKMENT (N)	IMPORTED BORROW	COLD PLANE ASPHALT CONCRETE PAVEMENT	CLASS-2 AGGREGATE BASE (CY)	HOT MIX ASPHALT (TYPE A)	LEAN CONCRETE BASE	JOINTED PLAIN CONCRETE PAVEMENT	HOT MIX ASPHALT (TYPE A)	RUBBERIZED HOT MIX ASPHALT (GAP GRADED)	LIQUID ASPHALT (PRIME COAT)	TACK COAT	~~ISOLATION~~ JOINT SEAL (PREFORMED COMPRESSION)	SHOULDER BACKING	MINOR CONCRETE (CURB,GUTTER,SIDEWALK & DRIVEWAY)	MINOR CONCRETE (CURB)(CY)	REMOVE CONCRETE CURB & SIDEWALK
				CY	CY	CY	SQYD	CY	TON	CY	CY	TON	TON	TON	TON	LF	TON	CY	CY	SQYD
L-01	NB,SB	117+00 TO 126+00	A	869			14,251	333				4,053	623	0.74	7.25		225			
L-02	NB,SB	126+00 TO 138+00	A	11,935			15,365	2094				6,150	861	4.62	10.25		1,235			
L-03	NB,SB	138+00 TO 149+50	A	128,102			14,619	3,898				8,010	784	9.18	11.33		1,470			
L-04	SB	149+50 TO 162+00	A	332,637			8,232	3,203				5,875	326	9.07	6.83		2,390			
L-05	NB	149+50 TO 162+00	A	53,225	20,966		7,352	4,267	71	182	418	6,630	326	11.34	7.92	3272	1,275			
L-06	EB,WB	5106+65.71 TO 5110+04.97	DS1				3,839	179	21	54	122	1,998		3	4			101	5	162
		5106+61.99 TO 5110+78.50	DS2																	
L-07	SB	162+00 TO 174+50	A	10,552	34,087		5,507	2,071	75	192	438	4,019	311	5.94	6.12	3456	750			
L-07	EB,WB	5099+72.75 TO 5106+65.71	DS1				7,038	328	38	99	222	3,518		5	8			185	10	297
		5099+83.54 TO 5106+61.99	DS2																	
		5099+27.86 TO 5105+81.22	ES																	
L-08	NB	162+00 TO 174+50	A	6,313	89,255		4,493	2,843	176	450	1,032	4,035	214	9.38	5.54	8100	1,070			
L-08	EB,WB	5092+80.80 TO 5099+72.75	DS1				5,757	269	31	81	182	2,997		4	7			151	8	243
		5092+79.97 TO 5099+83.54	DS2																	
		5095+36.48 TO 5099+27.86	ES																	
L-09	EB,WB	5087+66.57 TO 5092+80.80	DS1				4,691	219	25	66	149	2,442		3	6			123	7	198
		5087+06.33 TO 5092+79.97	DS2																	
L-10	SB	174+50 TO 185+00	A	22,020	55,968		5,436	2,566				3,930	365	7.25	4.89		870			
L-11	NB	174+50 TO 185+00	A	20,413	106,390		5,517	1,362				2,870	348	3.01	4.30		1,780			
L-12	NB,SB	185+00 TO 194+50	A	2,328	41,868		3,206	1,329				2,162	223	2.90	2.96	0				
L-13	NB,SB	194+50 TO 204+00	A	4,457	117,954		10,330	3,104				5,865	627	8.49	8.18		1,425			
L-14	NB,SB	204+00 TO 212+50	A	10,264	205,813		9,239	2,960				5,490	444	9.12	6.88		1,430			
L-15	SB	212+50 TO 221+00	A	12,210	44,271		4,880	2,038				3,400	222	6.50	3.99		725	97	5	265
L-16	NB	212+50 TO 221+00	A	23,821	3,892		7,876	1,382				3,715	222	3.98	5.29		1,310			
L-17	NB,SB	221+00 TO 229+50	A	9,680	5,411		10,746	3,941				6,875	487	11.41	8.58		1,625	38		60
L-18	NB,SB	229+50 TO 239+00	A	9,126	831		12,805	2,077				5,640	575	4.82	8.82		1,825			
L-19	NB,SB	239+00 TO 247+00	A	2,946	6,022		8,579	895				3,160	419	5.75	5.17		1,230			
L-20	NB,SB	247+00 TO 257+50	A	5,284	6,242		10,937	1,220				4,100	541	2.69	6.63		1,390			
L-21	NB,SB	257+50 TO 268+50	A	2,137	1,071		10,089	917				3,600	431	2.03	5.63		670			
L-22	NB,SB	268+50 TO 282+50	A				5,827					1,575		0	1.70					
L-23	NB,SB	282+50 TO 297+00	A				1,598					417		0	0.47					
Q-7												309								
Q-2												170								
DQ-35												25								
		TOTAL		668,319	740,041	118,504	198,209	43,495	437	1124	2,563	103,030	8,349	133.22	203.45	14,828	22,695	695	35	1,225

NOTE: (N) - NOT A SEPARATE PAY ITEM, FOR INFORMATION ONLY

2 **REPLACED PER ADDENDUM No. 2 DATED JULY 30, 2015**

SUMMARY OF QUANTITIES
Q-1

STATE OF CALIFORNIA - DEPARTMENT OF TRANSPORTATION
Caltrans® DESIGN

FUNCTIONAL SUPERVISOR: GEORGE MORHIG
CALCULATED-DESIGNED BY: WILLIAM J. ONKUMPOL
CHECKED BY: AHMAD SHAH
REVISED BY
DATE REVISED

LAST REVISION 01-30-14
DATE PLOTTED => 29-JUL-2015
TIME PLOTTED => 14:24

Dist	COUNTY	ROUTE	POST MILES TOTAL PROJECT	SHEET No.	TOTAL SHEETS
08	SBd	15	42.5/46.0	414	824

REGISTERED CIVIL ENGINEER 1-30-14 DATE

6-23-14
PLANS APPROVAL DATE

REGISTERED PROFESSIONAL ENGINEER AHMAD SHAH No. C55259 Exp. 9-30-14 CIVIL STATE OF CALIFORNIA

THE STATE OF CALIFORNIA OR ITS OFFICERS OR AGENTS SHALL NOT BE RESPONSIBLE FOR THE ACCURACY OR COMPLETENESS OF SCANNED COPIES OF THIS PLAN SHEET.

1

RETAINING WALL QUANTITIES

2

RW No.	STATION TO STATION	STRUCTURAL CONCRETE RETAINING WALL	BAR REINFORCING STEEL (RETAINING WALL)	* CABLE RAILING	STRUCTURE BACKFILL	PERVIOUS BACKFILL MATERIAL (RETAINING WALL)	(N) PLASTIC PIPE	PREPARE AND STAIN CONCRETE	STRUCTURE EXCAVATION (RETAINING WALL)	MINOR CONCRETE (GUTTER) (LF)
		CY	LB	LF	CY	CY	LF	SQFT	CY	LF
160	159+80 TO 163+20	1,535	211,000	342	5350	15	500	5880	2200	342
163	162+00 TO 163+40	480	61,500	145	1550	10	180	2150	1600	145
	TOTAL	2,015	272,500	487	6900	25	680	8030	3800	487

SOUND WALL QUANTITIES

SW No.	STATION TO STATION	CONCRETE BARRIER (TYPE 736SV)	BAR REINFORCING STEEL (SOUND WALL)	16" CAST-IN-DRILLED-HOLE CONCRETE PILING (SOUND WALL)	SOUND WALL (MASONRY BLOCK)	ACCESS GATE (SOUND WALL)	STRUCTURAL CONCRETE, SOUND WALL
		LF	LB	LF	SQFT	EA	CY
194	192+20 TO 208+00	1,580	101,500	1900	14700	1	12
	TOTAL	1,580	101,500	1900	14700	1	12

1 **REPLACED PER ADDENDUM No. 1 DATED JULY 17, 2015**

2 **REPLACED PER ADDENDUM No. 2 DATED JULY 30, 2015**

NOTE: (N) - NOT A SEPARATE PAY ITEM, FOR INFORMATION ONLY
* - FOR TOTAL QUANTITY OF CABLE RAILING, SEE SHEET DQ-35.

SUMMARY OF QUANTITIES
Q-9

STATE OF CALIFORNIA - DEPARTMENT OF TRANSPORTATION
Caltrans® DESIGN

FUNCTIONAL SUPERVISOR: GEORGE MORHIG
CALCULATED-DESIGNED BY: WILLIAM J. ONKUMPOL
CHECKED BY: AHMAD SHAH
REVISED BY
DATE REVISED

LAST REVISION 01-30-14
DATE PLOTTED => 30-JUL-2015
TIME PLOTTED => 10:11

Dist	COUNTY	ROUTE	POST MILES TOTAL PROJECT	SHEET No.	TOTAL SHEETS
08	SBd	15	42.5/46.0	419	824

REGISTERED CIVIL ENGINEER 1-30-14 DATE

6-23-14
PLANS APPROVAL DATE

REGISTERED PROFESSIONAL ENGINEER AHMAD SHAH No. C55259 Exp. 9-30-14 CIVIL STATE OF CALIFORNIA

THE STATE OF CALIFORNIA OR ITS OFFICERS OR AGENTS SHALL NOT BE RESPONSIBLE FOR THE ACCURACY OR COMPLETENESS OF SCANNED COPIES OF THIS PLAN SHEET.

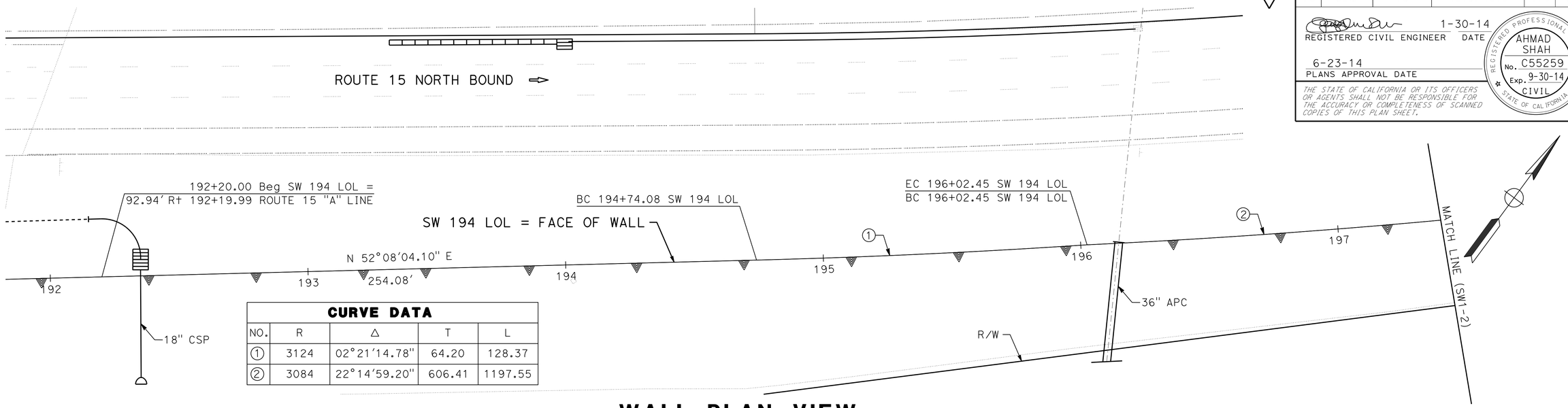

CURVE DATA

NO.	R	Δ	T	L
1	3124	02°21'14.78"	64.20	128.37
2	3084	22°14'59.20"	606.41	1197.55

WALL PLAN VIEW

SCALE: 1"=20'

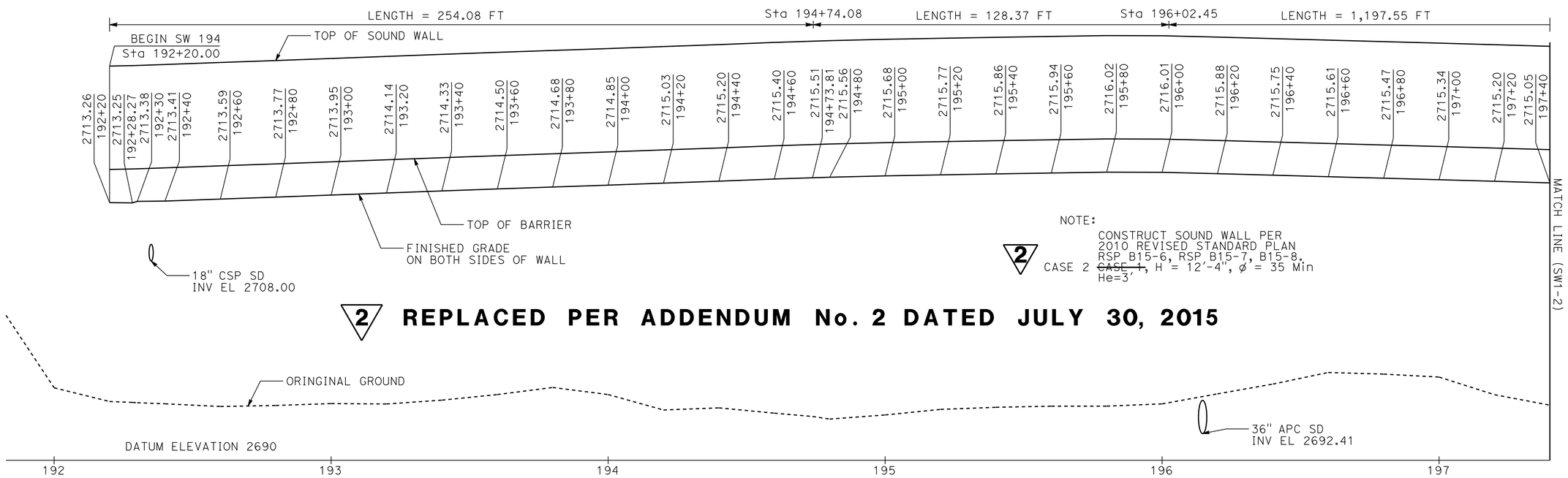

NOTE:
CONSTRUCT SOUND WALL PER 2010 REVISED STANDARD PLAN RSP B15-6, RSP B15-7, B15-8.
CASE 2 ~~CASE 1~~, H = 12'-4", ø = 35 Min
He=3'

2 **REPLACED PER ADDENDUM No. 2 DATED JULY 30, 2015**

WALL PROFILE

SCALE: HORZ. 1"=20'
VERT. 1"=5'

1 **REPLACED PER ADDENDUM No. 1 DATED JULY 17, 2015**

APPROVED FOR SOUND WALL WORK ONLY

SOUND WALL PLAN

SCALE AS SHOWN

SW1-1

STATE OF CALIFORNIA - DEPARTMENT OF TRANSPORTATION
Caltrans
DESIGN

FUNCTIONAL SUPERVISOR: GEORGE MORHIG
CALCULATED-DESIGNED BY: TOM NGUYEN
CHECKED BY: AHMAD SHAH
REVISED BY
DATE REVISED

LAST REVISION 01-30-14
DATE PLOTTED => 30-JUL-2015
TIME PLOTTED => 10:11

DIST	COUNTY	ROUTE	POST MILES TOTAL PROJECT	SHEET No.	TOTAL SHEETS
08	SBd	15	42.5/46.0	679	824

REGISTERED CIVIL ENGINEER 7-21-15 DATE

6-23-14
PLANS APPROVAL DATE

REGISTERED PROFESSIONAL ENGINEER RYAN STILTZ No. C65738 Exp. 9-30-15 CIVIL STATE OF CALIFORNIA

The State of California or its officers or agents shall not be responsible for the accuracy or completeness of electronic copies of this plan sheet.

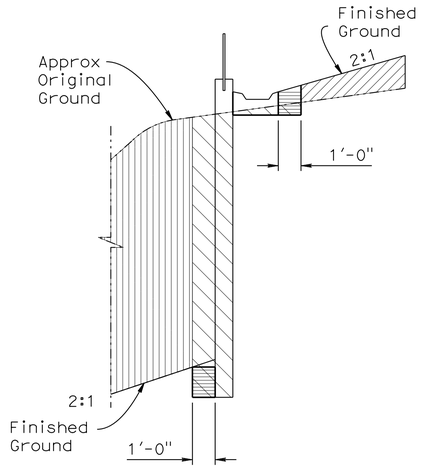

SOIL NAIL WALL EXCAVATION & BACKFILL

NO SCALE

Sta 129+39.17, "NDXSR4" LINE
to Sta 141+13.43 "NDXSR4" LINE

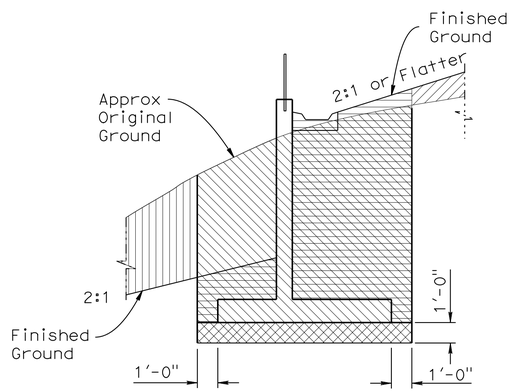

RETAINING WALL TYPE 1 EXCAVATION & BACKFILL

NO SCALE

Sta 175+72.53 "NDXSR4" LINE to Sta 129+39.17 "NDXSR4" LINE
Sta 141+13.43 "NDXSR4" LINE to Sta 141+23.43 "NDXSR4" LINE

LEGEND:

- Structure Excavation (Retaining Wall)
- Structure Excavation (Soil Nail Wall)
- Structure Backfill (Retaining Wall)
- Structure Backfill (Soil Nail Wall)
- Roadway Excavation (see Roadway Plan)
- Roadway Backfill (see Roadway Plan)
- Structure Overexcavation & Backfill to 95% relative compaction

GENERAL NOTES

DESIGN (TYPE 1 RETAINING WALL): AASHTO LRFD BRIDGE DESIGN SPECIFICATIONS, 4th Edition and the California Amendments, Preface dated Nov. 2011.

DESIGN (SOIL NAIL WALL): Service Load Design Method per FHWA Geotechnical Engineering Circular No. 7 (FHWA O-IF-03-017) & Manual for Design and Construction Monitoring of Soil Nail Wall (FHWA-SA-96-069R)

SESIMIC LOAD: k_h = 0.2g
k_v = 0.0g

SOIL: k_{ae} = Mononobe-Okabe Method

REINFORCED CONCRETE: f_c = 3.6 KSI
f_y = 60 KSI

SHOTCRETE: f_c = 3.6 KSI
f_y = 60 KSI

SOIL NAILS: ASTM Designation: A615, Grade 60
f_y = 60 KSI

SOIL PARAMETERS: ϕ = 33°
c = 100 lb/ft^3
γ = 130 lb/ft^3
Q_d = 3.30 k/ft (Design Pullout Resistance)

NOTE: For Design Data of Retaining Wall Type 1, see Standard Plan B3-1B.

QUANTITIES

STRUCTURE EXCAVATION (RETAINING WALL)	2,983	CY
STRUCTURE EXCAVATION (SOIL NAIL WALL)	1,101	CY
STRUCTURE BACKFILL (RETAINING WALL)	2,138	CY
STRUCTURE BACKFILL (SOIL NAIL WALL)	160	CY
PERVIOUS BACKFILL MATERIAL	59	CY
SOIL NAIL	16,750	LF
STRUCTURAL CONCRETE, RETAINING WALL	1,162 ~~631~~	CY
CONCRETE SURFACE TEXTURE (FLUTED RIB)	13,306	SQFT
BAR REINFORCING STEEL (RETAINING WALL)	120,939	LB
STRUCTURAL SHOTCRETE	197	CY
MINOR CONCRETE (GUTTER) (LF)	1,550	LF
CABLE RAILING	1,551	LF

2

INDEX TO PLANS

Sheet No.	Title
1	GENERAL PLAN NO.1
2	GENERAL PLAN NO.2
3	INDEX TO PLANS
4	STRUCTURE PLAN NO. 1
5	STRUCTURE PLAN NO. 2
6	STRUCTURE PLAN NO. 3
7	STRUCTURE PLAN NO. 4
8	STRUCTURE PLAN NO. 5
9	STRUCTURE PLAN NO. 6
10	STRUCTURE PLAN NO. 7
11	STRUCTURE PLAN NO. 8
12	SOIL NAIL WALL DETAILS NO. 1
13	SOIL NAIL WALL DETAILS NO. 2
14	SOIL NAIL WALL DETAILS NO. 3
15	ARCHITECTURAL TREATMENT NO. 1
16	ARCHITECTURAL TREATMENT NO. 2
17	LOG OF TEST BORINGS 1 OF 3
18	LOG OF TEST BORINGS 2 OF 3
19	LOG OF TEST BORINGS 3 OF 3

STANDARD PLANS DATED 2010

A10A	ABBREVIATIONS (SHEET 1 OF 2)
RSP A10B	ABBREVIATIONS (SHEET 2 OF 2)
A10C	LINES AND SYMBOLS (SHEET 1 OF 3)
A10D	LINES AND SYMBOLS (SHEET 2 OF 3)
A10E	LINES AND SYMBOLS (SHEET 3 OF 3)
A10F	LEGEND-SOIL (SHEET 1 OF 2)
A10G	LEGEND-SOIL (SHEET 2 OF 2)
A10H	LEGEND-ROCK
RSP A77U3	MIDWEST GUARDRAIL SYSTEM CONNECTIONS TO ABUTMENTS AND WALLS
BO-1	BRIDGE DETAILS
BO-3	BRIDGE DETAILS
RSP B3-1A	RETAINING WALL TYPE 1 (CASE 1)
RSP B3-1B	RETAINING WALL TYPE 1 (CASE 2)
RSP B3-5	RETAINING WALL DETAILS NO. 1
B3-6	RETAINING WALL DETAILS NO. 2
RSP B11-47	CABLE RAILING

STANDARD PLAN SHEET NO.
DETAIL NO.

2 **REPLACED PER ADDENDUM No. 2 DATED JULY 30, 2015**

	BY	CHECKED
DESIGN	F. Chen	A. McPhee
DETAILS	D. Wooten	A. McPhee
QUANTITIES	F. Chen	A. McPhee

STATE OF CALIFORNIA
DEPARTMENT OF TRANSPORTATION

DIVISION OF ENGINEERING SERVICES
STRUCTURE DESIGN
DESIGN BRANCH 10

BRIDGE NO. 54E0131
POST MILE 42.7

RETAINING WALL NO. 124
INDEX TO PLANS

STRUCTURES DESIGN DETAIL SHEET (ENGLISH) (REV. 09-01-10)

ORIGINAL SCALE IN INCHES FOR REDUCED PLANS 0 1 2 3

UNIT: 3589
PROJECT NUMBER & PHASE: 08140000861
CONTRACT NO.: 08-3555V1

DISREGARD PRINTS BEARING EARLIER REVISION DATES

REVISION DATES: 6-14-13 7-18-13 9-27-13 11-07-13

SHEET 3 OF 19

FILE => 54e0131aitp03.dgn

USERNAME => s114640 DATE PLOTTED => 29-JUL-2015 TIME PLOTTED => 14:40

DIST	COUNTY	ROUTE	POST MILES TOTAL PROJECT	SHEET No.	TOTAL SHEETS
08	SBd	15	42.5/46.0	688	824

REGISTERED CIVIL ENGINEER 7-21-15 DATE

6-23-14
PLANS APPROVAL DATE

REGISTERED PROFESSIONAL ENGINEER RYAN STILTZ No. C65738 Exp. 9-30-15 CIVIL STATE OF CALIFORNIA

The State of California or its officers or agents shall not be responsible for the accuracy or completeness of electronic copies of this plan sheet.

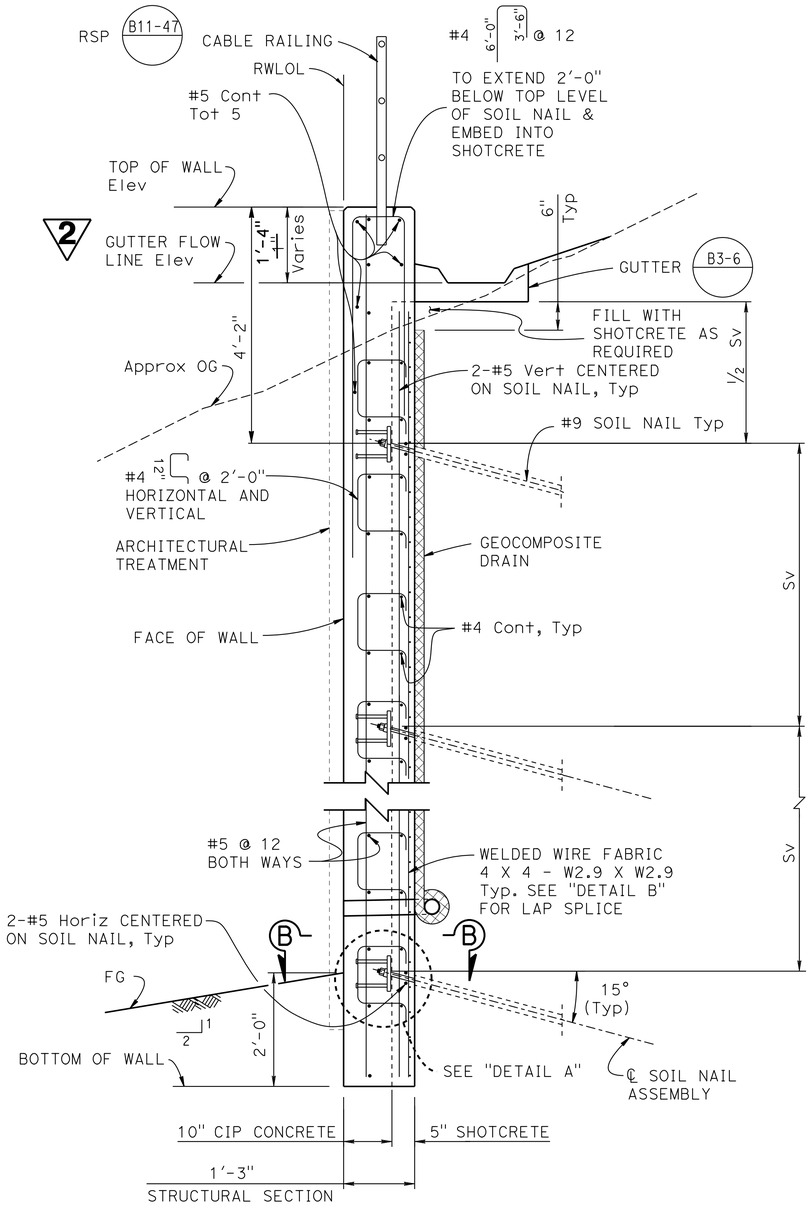

TYPICAL SECTION

3/4" = 1'-0"

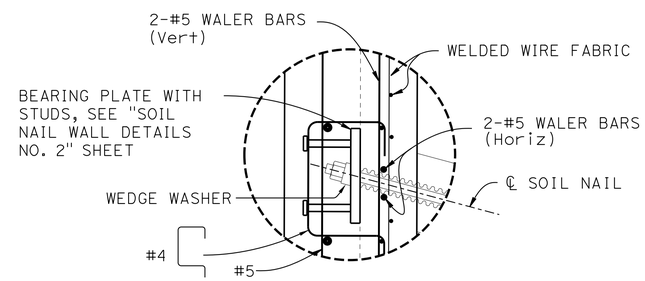

DETAIL A

1 1/2" = 1'-0"

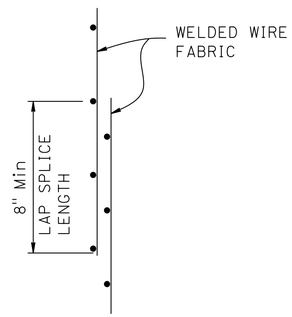

LAP SPLICE

DETAIL B

NO SCALE

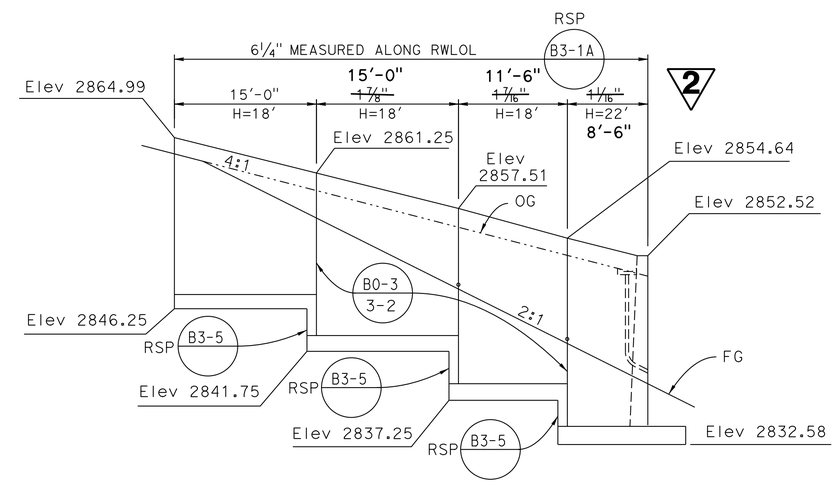

RETURN WALL-ELEVATION

1/8" = 1'-0"

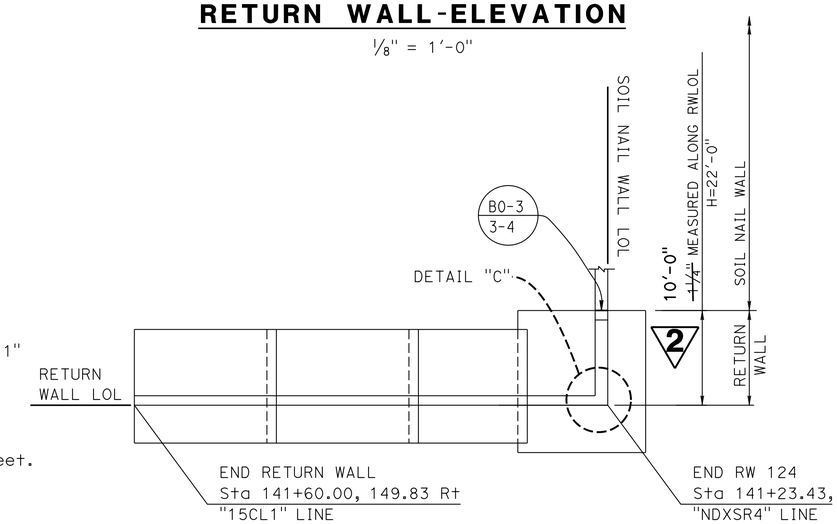

RETURN WALL-PLAN

1/8" = 1'-0"

NOTES:

1. Bottom of wall to be placed against undisturbed material.
2. For Horizontal and Vertical Soil Nail spacing see "STRUCTURE PLAN NO. 1" through "STRUCTURE PLAN NO. 8" sheets.
3. For additional Soil Nail Details & Assemblies, see "SOIL NAIL WALL DETAILS NO. 2" sheet.
4. For Geocomposite Drain Details see "SOIL NAIL WALL DETAILS NO. 3" sheet.
5. For Architectural Treatment, see "ARCHITECTURAL TREATMENT NO. 1" & "ARCHITECTURAL TREATMENT NO. 2" sheets.
6. For "SECTION B-B", see "SOIL NAIL WALL DETAILS NO. 2" sheet.
7. For "DETAIL C", see "STRUCTURE PLAN NO. 2" sheet.

LEGEND:

Sv = Vertical spacing of Soil Nail Assemblies

REPLACED PER ADDENDUM No. 2 DATED JULY 30, 2015

	BY	CHECKED
DESIGN	F. Chen	A. McPhee
DETAILS	D. Wooten	A. McPhee
QUANTITIES	F. Chen	A. McPhee

STATE OF CALIFORNIA DEPARTMENT OF TRANSPORTATION

DIVISION OF ENGINEERING SERVICES STRUCTURE DESIGN DESIGN BRANCH 10

BRIDGE NO. 54E0131
POST MILE 42.7

RETAINING WALL NO. 124
SOIL NAIL WALL DETAILS NO. 1

STRUCTURES DESIGN DETAIL SHEET (ENGLISH) (REV. 09-01-10)

ORIGINAL SCALE IN INCHES FOR REDUCED PLANS 0 1 2 3

UNIT: 3589
PROJECT NUMBER & PHASE: 08140000861
CONTRACT NO.: 08-3555V1

DISREGARD PRINTS BEARING EARLIER REVISION DATES

REVISION DATES 9-13-13 9-23-13 10-16-13 11-04-13

SHEET 12 OF 19

FILE => 54e0131grwdt12.dgn

USERNAME => s114640 DATE PLOTTED => 29-JUL-2015 TIME PLOTTED => 14:40

DIST	COUNTY	ROUTE	POST MILES TOTAL PROJECT	SHEET No	TOTAL SHEETS
08	SBd	15	42.5/46.0	697	824

REGISTERED CIVIL ENGINEER 7-21-15 DATE

6-23-14
PLANS APPROVAL DATE

REGISTERED PROFESSIONAL ENGINEER RYAN STILTZ No. C65738 Exp. 9/30/15 CIVIL STATE OF CALIFORNIA

The State of California or its officers or agents shall not be responsible for the accuracy or completeness of electronic copies of this plan sheet.

INDEX TO PLANS

Sheet No.	Title
1.	GENERAL PLAN
2.	INDEX TO PLANS
3.	FOUNDATION PLAN NO. 1
4.	FOUNDATION PLAN NO. 2
5.	ABUTMENT 1 LEFT LAYOUT
6.	ABUTMENT 1 RIGHT LAYOUT
7.	ABUTMENT 9 RIGHT LAYOUT
8.	ABUTMENT DETAILS NO. 1
9.	ABUTMENT DETAILS NO. 2
10.	ABUTMENT DETAILS NO. 3
11.	PIER LEFT LAYOUT
12.	PIER RIGHT LAYOUT
13.	PIER DETAILS
14.	TYPICAL SECTION
15.	LEFT WIDENING GIRDER LAYOUT
16.	RIGHT WIDENING GIRDER LAYOUT NO. 1
17.	RIGHT WIDENING GIRDER LAYOUT NO. 2
18.	HINGE LAYOUT
19.	HINGE DETAILS
20.	HINGE RETROFIT DETAILS
21.	CABLE RESTRAINER TYPE 2
22.	CABLE RESTRAINER ADJUSTMENT HARDWARE
23.	LEFT WIDENING TOP & BOTTOM GIRDER REINFORCEMENT
24.	RIGHT WIDENING TOP GIRDER REINFORCEMENT
25.	RIGHT WIDENING BOTTOM GIRDER REINFORCEMENT
26.	STRUCTURE APPROACH TYPE N(30S)
27.	STRUCTURE APPROACH TYPE R(30S)
28.	STRUCTURE APPROACH DRAINAGE DETAILS
29.	ABUTMENT RECONSTRUCTION DETAILS NO. 1
30.	ABUTMENT RECONSTRUCTION DETAILS NO. 2
31.	ABUTMENT RECONSTRUCTION DETAILS NO. 3
32.	ABUTMENT RECONSTRUCTION DETAILS NO. 4
33.	STRUCTURE DRAINAGE LAYOUT
34.	LOG OF TEST BORINGS 1 OF 11
35.	LOG OF TEST BORINGS 2 OF 11
36.	LOG OF TEST BORINGS 3 OF 11
37.	LOG OF TEST BORINGS 4 OF 11
38.	LOG OF TEST BORINGS 5 OF 11
39.	LOG OF TEST BORINGS 6 OF 11
40.	LOG OF TEST BORINGS 7 OF 11
41.	LOG OF TEST BORINGS 8 OF 11
42.	LOG OF TEST BORINGS 9 OF 11
43.	LOG OF TEST BORINGS 10 OF 11
44.	LOG OF TEST BORINGS 11 OF 11

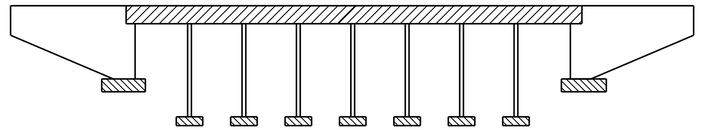

Structural Concrete, Bridge

Structural Concrete, Bridge Footing

Structural Concrete, Bridge (4,000 psi at 28 days)

CONCRETE STRENGTH AND TYPE LIMITS

No Scale

STANDARD PLANS DATED 2010

A10A	ABBREVIATIONS (SHEET 1 OF 2)
RSP A10B	ABBREVIATIONS (SHEET 2 OF 2)
A10C	LINES AND SYMBOLS (SHEET 1 OF 3)
A10D	LINES AND SYMBOLS (SHEET 2 OF 3)
A10E	LINES AND SYMBOLS (SHEET 3 OF 3)
A10F	LEGEND-SOIL (SHEET 1 OF 2)
A10G	LEGEND-SOIL (SHEET 2 OF 2)
A10H	LEGEND-ROCK
A62C	LIMITS OF PAYMENT FOR EXCAVATION AND BACKFILL BRIDGE
A76A	CONCRETE BARRIER TYPE 60
BO-1	BRIDGE DETAILS
BO-3	BRIDGE DETAILS
BO-5	BRIDGE DETAILS
BO-13	BRIDGE DETAILS
B2-8	PILE DETAILS CLASS 200
B6-21	JOINT SEALS (MAXIMUM MOVEMENT RATING = 2")
B7-6	DECK DRAINS TYPES D-1 AND D-2
B7-7	DECK DRAIN TYPE D-3
B7-8	DECK DRAINAGE DETAILS
B7-10	UTILITY OPENING BOX GIRDER
RSP B11-56	CONCRETE BARRIER TYPE 736

Standard Plan sheet number

Detail number

GENERAL NOTES
LOAD AND RESISTANCE FACTOR DESIGN

DESIGN: AASHTO LRFD BRIDGE DESIGN SPECIFICATIONS, 4th Edition with California Amendments, Preface dated Nov. 2011.

SEISMIC DESIGN: Caltrans Seismic Design Criteria (SDC) Version 1.6, November 2010

DEAD LOAD: Includes 35 Psf for future wearing surface. The deck load between the girders has been increased by a factor of 10% to allow for the use of steel deck forms.

LIVE LOADING: HL93 and permit design load.

SEISMIC LOADING: Soil Profile: V_{S30} = 1030 ft/s
Moment Magnitude: M_{max} = 6.5
Peak Ground Acceleration = 0.49g

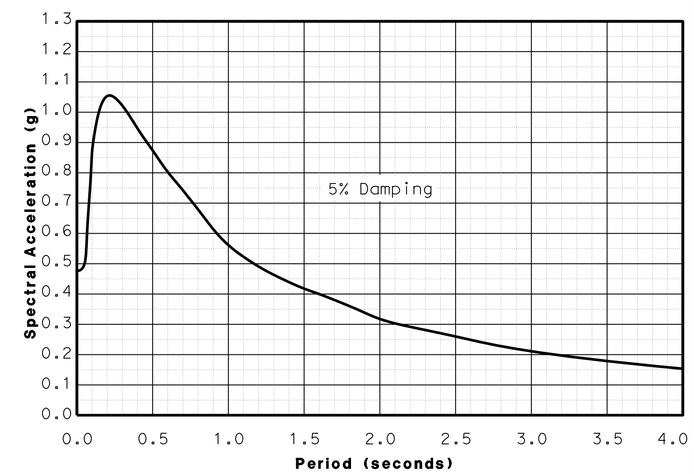

REINFORCED CONCRETE: f_y = 60 ksi
f'_c = 3600 psi, unless otherwise noted
n = 8

STRUCTURAL STEEL:
NEW CONSTRUCTION: fy = ASTM A709 Grade 50

STEEL PIPE PILES: ASTM A252 Grade 3

PILE DATA TABLE
MOJAVE RIVER BRIDGE WIDEN

Location	Pile Type	Nominal Resistance (kips) Compression	Nominal Resistance (kips) Tension	Design Tip Elevation (ft)	Specified Tip Elevation (ft)	Nominal Driving Resistance (kips)
Abut 1 Lt Abut 1 Rt	Class 200 Alt "W"	400 380	0 0	2665 (a), 2650 (d) 2665 (a), 2650 (d)	2650 2650	510 520
Pier 2 Lt Pier 2 Rt Nose Ext.	Class 200 Alt "W"	400 400 150	130 130 0	2627 (a), 2638 (b), 2635 (d) 2627 (a), 2634 (b), 2635 (d) 2650 (a), 2655 (d)	2627 2627 2650	440 410 150
Pier 3 Lt Pier 3 Rt Nose Ext.	Class 200 Alt "W"	400 400 150	130 130 0	2627 (a), 2638 (b), 2634 (d) 2626 (a), 2633 (b), 2634 (d) 2650 (a), 2655 (d)	2627 2626 2650	440 420 150
Pier 4 Lt Pier 4 Rt Nose Ext.	Class 200 Alt "W"	400 400 150	130 130 0	2627 (a), 2637 (b), 2634 (d) 2628 (a), 2635 (b), 2634 (d) 2650 (a), 2655 (d)	2627 2628 2650	440 400 150
Pier 5 Lt Pier 5 Rt Nose Ext.	Class 200 Alt "W"	400 390 150	130 100 0	2626 (a), 2642 (b), 2636 (d) 2630 (a), 2637 (b), 2636 (d) 2650 (a), 2655 (d)	2626 2630 2650	400 390 150
Pier 6 Lt Pier 6 Rt Nose Ext.	Class 200 Alt "W"	400 390 150	130 100 0	2627 (a), 2642 (b), 2637 (d) 2632 (a), 2646 (b), 2637 (d) 2655 (a), 2655 (d)	2627 2632 2655	400 390 150
Pier 7 Lt Pier 7 Rt Nose Ext.	Class 200 Alt "W"	400 390 150	130 100 0	2622 (a), 2638 (b), 2634 (d) 2632 (a), 2644 (b), 2637 (d) 2655 (a), 2655 (d)	2622 2632 2655	500 390 150
Pier 8 Lt Pier 8 Rt Nose Ext.	Class 200 Alt "W"	400 390 150	130 100 0	2622 (a), 2638 (b), 2634 (d) 2632 (a), 2644 (b), 2637 (d) 2655 (a), 2655 (d)	2622 2632 2655	500 390 150
Abut 9 Lt Abut 9 Rt	Class 200 Alt "W"	400 400	0 0	2665 (a), 2660 (d) 2665 (a), 2660 (d)	2660 2660	500 520

NOTES:

1. Design tip elevations are controlled by: (a) compression, (b) Tension, (d) Lateral Load.

2 REPLACED PER ADDENDUM NO. 2 DATED July 30, 2015

1 REPLACED PER ADDENDUM NO. 1 DATED July 17, 2015

QUANTITIES

PREPARE CONCRETE BRIDGE DECK SURFACE	34,870	SQFT
REFINISH BRIDGE DECK	1,896	SQFT
FURNISH POLYESTER CONCRETE OVERLAY	2,180	CF
PLACE POLYESTER CONCRETE OVERLAY	34,870	SQFT
CORE CONCRETE (6")	120	LF
CORE CONCRETE (10")	110	LF
BRIDGE REMOVAL (PORTION), LOCATION A	LUMP	SUM
STRUCTURE EXCAVATION (BRIDGE)	301	CY
STRUCTURE EXCAVATION (TYPE D)	4,249	CY
STRUCTURE BACKFILL (BRIDGE)	152	CY
TEMPORARY SUPPORT (LOCATION A)	LUMP	SUM
FURNISH PILING (CLASS 200) (ALTERNATIVE W)	10,123	LF
DRIVE PILE (CLASS 200) (ALTERNATIVE W)	226	EA
STRUCTURAL CONCRETE, BRIDGE FOOTING	2 689 ~~554~~	CY
STRUCTURAL CONCRETE, BRIDGE	3,205	CY
AGGREGATE BASE (APPROACH SLAB)	18	CY
STRUCTURAL CONCRETE, APPROACH SLAB (TYPE N)	150	CY
STRUCTURAL CONCRETE, APPROACH SLAB (TYPE R)	185	CY
DIAPHRAGM BOLSTER	18	EA
DRILL AND BOND DOWEL	1,976	LF
JOINT SEAL (MR 1")	336	LF
JOINT SEAL (MR 2")	336	LF
BAR REINFORCING STEEL (BRIDGE)	1,552,381	LB
MISCELLANEOUS METAL (RESTRAINER-CABLE TYPE)	9,649	LB
MISCELLANEOUS METAL (RESTRAINER-PIPE/CABLE TYPE)	7,500	LB
BRIDGE DECK DRAINAGE SYSTEM	4,640	LB
CONCRETE BARRIER (TYPE 60A MODIFIED)	632	LF
CONCRETE BARRIER (TYPE 736)	1,277	LF

	BY	CHECKED
DESIGN	Ryan Stiltz	L. Wu
DETAILS	G. Hallstrom	L. Wu
QUANTITIES	D. Azzam	A. McPhee/F. Chen

STATE OF CALIFORNIA
DEPARTMENT OF TRANSPORTATION

DIVISION OF ENGINEERING SERVICES
STRUCTURE DESIGN
DESIGN BRANCH 10

BRIDGE NO. 54-0483
POST MILE 43.93

MOJAVE RIVER BRIDGE (WIDEN)
INDEX TO PLANS

STRUCTURES DESIGN DETAIL SHEET (ENGLISH) (REV. 10/25/05)

ORIGINAL SCALE IN INCHES FOR REDUCED PLANS 0 1 2 3

CU 08
EA 3555V1

DISREGARD PRINTS BEARING EARLIER REVISION DATES

REVISION DATES: 03-12-08, 11-14-13, 4-28-14, 5-14-14, 6-30-15, 6-10-13, 7-11-13, 9-30-13, 10-31-13

SHEET 2 OF 44

FILE => 540483aitp02.add

USERNAME => s12614 DATE PLOTTED => 30-JUL-2015 TIME PLOTTED => 10:12

DIST	COUNTY	ROUTE	POST MILES TOTAL PROJECT	SHEET No	TOTAL SHEETS
08	SBd	15	42.5/46.0	740	824

REGISTERED CIVIL ENGINEER 7-21-15 DATE

6-23-14
PLANS APPROVAL DATE

REGISTERED PROFESSIONAL ENGINEER RYAN STILTZ No. C65738 Exp. 9/30/15 CIVIL STATE OF CALIFORNIA

The State of California or its officers or agents shall not be responsible for the accuracy or completeness of electronic copies of this plan sheet.

2

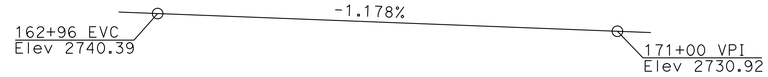

PROFILE GRADE

NO SCALE

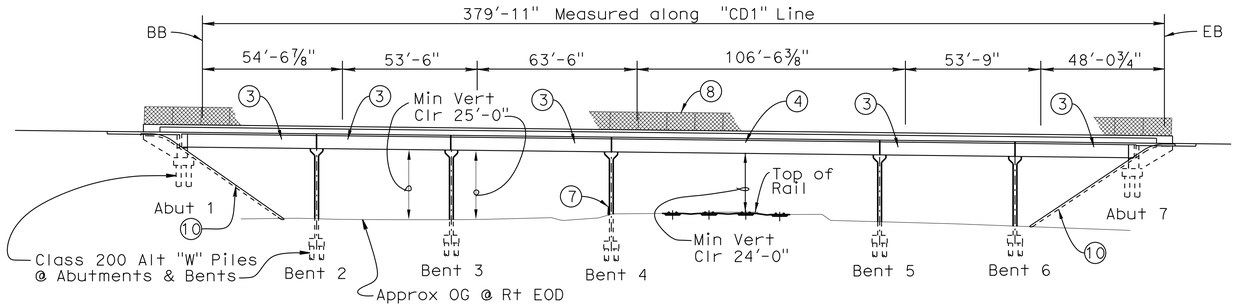

ELEVATION

1"=30'-0"

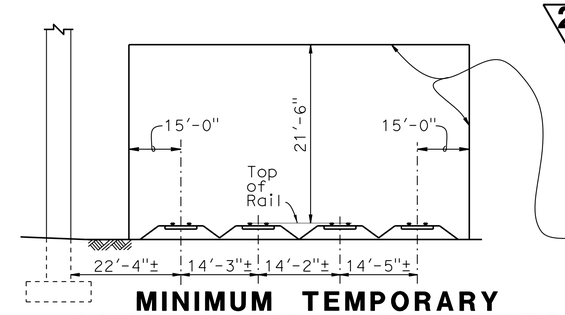

No construction activities or other obstructions may be placed within these limits, without getting RR approval

MINIMUM TEMPORARY CONSTRUCTION CLEARANCES

(NORMAL TO RAILROAD)
NO SCALE

(A) Sta 166+74.10 "CD1" Line
=Sta 5098+87.43 Hist Hwy 66 NB

(B) Sta 167+64.82 "CD1" Line
=Sta 5099+10.25 "RR1" Line

(C) Sta 168+47.71 "CD1" Line
=Sta 5099+31.88 "E3" Line

(D) Sta 166+24.46 "CD1" Line
=Sta 5098+76.60 Hist Hwy 66 SB

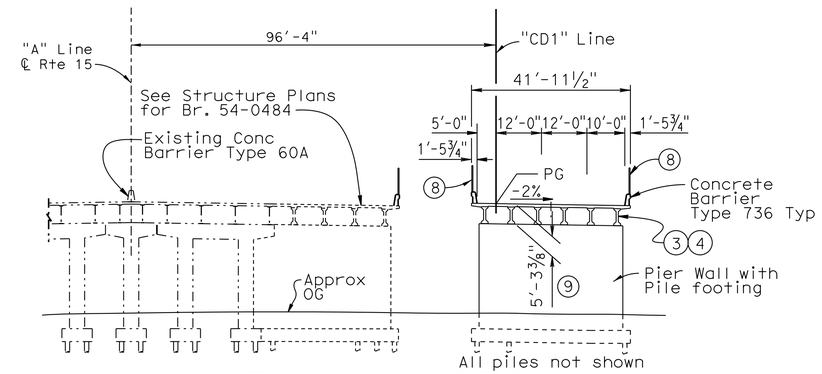

TYPICAL SECTION

1"=20'-0"

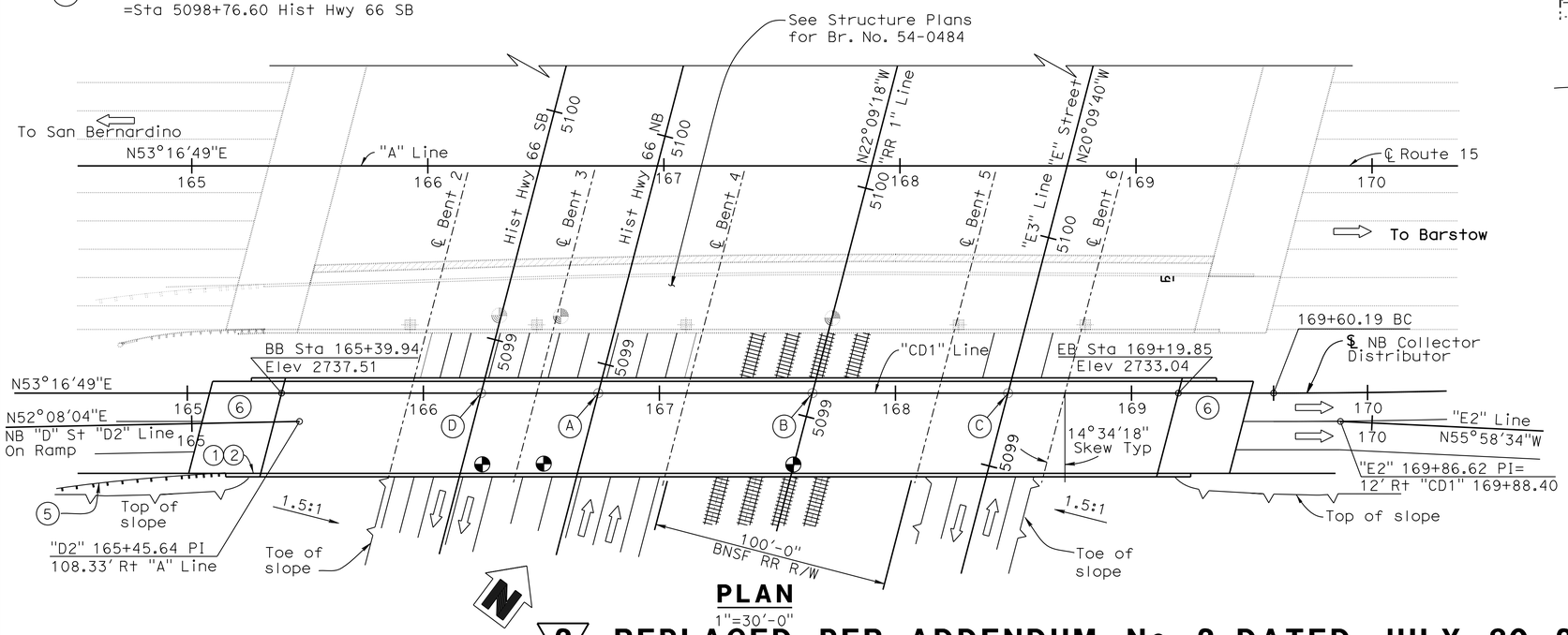

PLAN

1"=30'-0"

NOTES:

1. Paint "BR. NO. 54-0484G"
2. Paint " VICTORVILLE SEPARATION & OVERHEAD"
3. PC/PS "I" Girder, for Spans 1, 2, 3, 5, 6, see "TYPICAL SECTION I GIRDERS" sheet.
4. Precast Conc Bulb-Tee Girder, for Span 4, see "TYPICAL SECTION BULB-TEE GIRDERS" sheet.
5. MGS, see "ROADWAY PLANS"
6. Structure Approach Type N(30S)
7. Type 60 Barrier, see "ROADWAY PLANS"
8. Chain Link Railing Type 7 (Mod)
9. 5'-3⅜" at Span 4, 5'-0" all others.
10. Slope Paving-Full Slope

For "GENERAL NOTES", "INDEX TO PLANS", "STANDARD PLANS", "QUANTITIES", and "PILE DATA TABLE", see "INDEX TO PLANS" Sheet.

LEGEND:

—— Indicates new construction
-·-·- Indicates existing structure
◐ Point of Min Vertical Clearance

2 **REPLACED PER ADDENDUM No. 2 DATED JULY 30, 2015**

DANIEL T. ADAMS
DESIGN ENGINEER

	BY	CHECKED
DESIGN	R. Stiltz	A. McPhee
DETAILS	G. Hallstrom	A. McPhee
QUANTITIES	A. McPhee	R. Kirkland

LOAD & RESISTANCE FACTOR DESIGN — LIVE LOADING: HL93 W/"LOW-BOY"; PERMIT DESIGN VEHICLE

	BY	CHECKED
LAYOUT	R. Stiltz	A. McPhee
SPECIFICATIONS	K. Doll	PLANS AND SPECS COMPARED K. Doll

STATE OF CALIFORNIA
DEPARTMENT OF TRANSPORTATION

DIVISION OF ENGINEERING SERVICES
STRUCTURE DESIGN
DESIGN BRANCH 10

BRIDGE NO. 54-0484G
POST MILE 43.5

VICTORVILLE SEPARATION & OVERHEAD
GENERAL PLAN

ORIGINAL SCALE IN INCHES FOR REDUCED PLANS 0 1 2 3

UNIT: 3589
PROJECT NUMBER & PHASE: 0814000086
CONTRACT NO.: 08-3555V1

DISREGARD PRINTS BEARING EARLIER REVISION DATES

REVISION DATES 05-13-08 10-31-13 11-07-13 10-25-13

SHEET 1 OF 26

USERNAME => s114640 DATE PLOTTED => 29-JUL-2015 TIME PLOTTED => 14:40

STRUCTURES DESIGN GENERAL PLAN SHEET (ENGLISH) (REV.07-24-06)

FILE => 540484_gagp01.add

DIST	COUNTY	ROUTE	POST MILES TOTAL PROJECT	SHEET No.	TOTAL SHEETS
08	SBd	15	42.5/46.0	753	824

REGISTERED CIVIL ENGINEER 7-21-15 DATE

6-23-14
PLANS APPROVAL DATE

REGISTERED PROFESSIONAL ENGINEER RYAN STILTZ No. C65738 Exp. 9/30/15 CIVIL STATE OF CALIFORNIA

The State of California or its officers or agents shall not be responsible for the accuracy or completeness of electronic copies of this plan sheet.

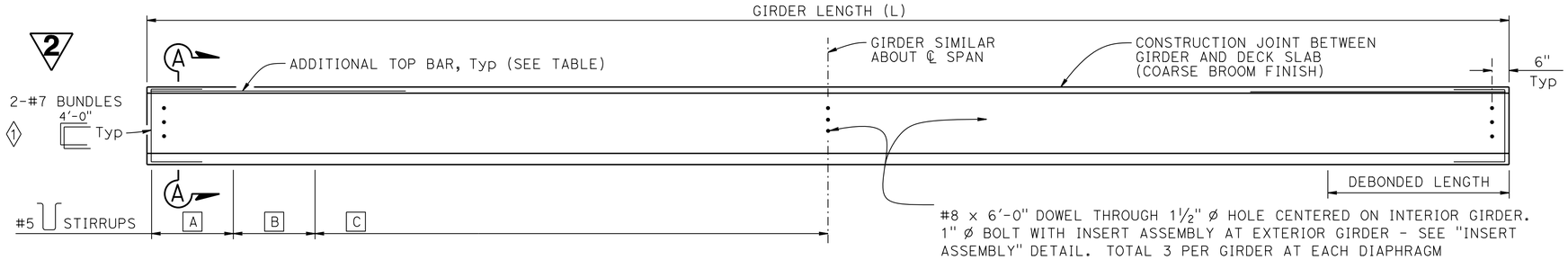

LOCATION	A	B	C		
SPAN 4	#5 @ 6"	#5 @ 9"	#5 @ 12"		

GIRDER ELEVATION

NOTE:
Girder ends to be cast such that a level surface is provided at bearing pads

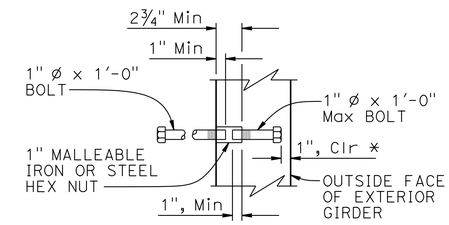

* DIMENSION MAY BE INCREASED WHEN INSERT ASSEMBLY IS USED AT END BLOCK

INSERT ASSEMBLY

PRESTRESSING NOTES

1. The Jacking Force (P) is the jacking force required at the point of control along the span. The jacking force does not include any fabrication specific losses
2. The maximum temporary tensile stress (jacking stress) in the prestressing steel shall not exceed 80% of the specified minimum ultimate tensile strength of the prestressing steel
3. Concrete strength:
   f'ci is at time of initial stressing
   f'c is at 28 days
4. Deflection components are informational and will be used to set screed line elevations
5. Screed line elevations for deck concrete will be determined by the Engineer
6. Prestressing strand shall be 270 ksi low relaxation

LOCATION	GIRDER LENGTH (L)	GIRDER DEPTH (D)	NUMBER OF 0.6" ø STRANDS	JACKING FORCE (P)	CONCRETE STRENGTH (ksi)		MIDSPAN DEAD LOAD DEFLECTION (In)		ADDITIONAL TOP BAR (EACH END)
					f'ci	f'c	DECK	RAIL	
SPAN 4	105'-2"	4'-4"	42	1846.0 kips (44 kips/STRAND)	4.5	6	1.5	0	#8 x 20 Tot 4

2 REPLACED PER ADDENDUM No. 2 DATED JULY 30, 2015

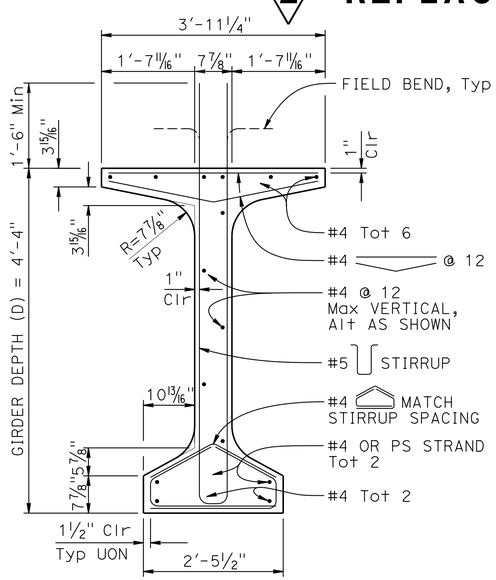

TYPICAL GIRDER SECTION

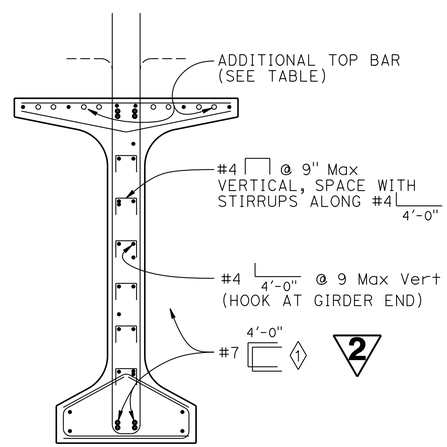

NOTE:
For details not shown, see "TYPICAL GIRDER SECTION" detail

SECTION A-A

NOTE: For "WELDED WIRE REINFORCEMENT (WWR) ALTERNATIVE", see "PC/PS BULB-TEE GIRDER (MISCELLANEOUS DETAILS)" sheet

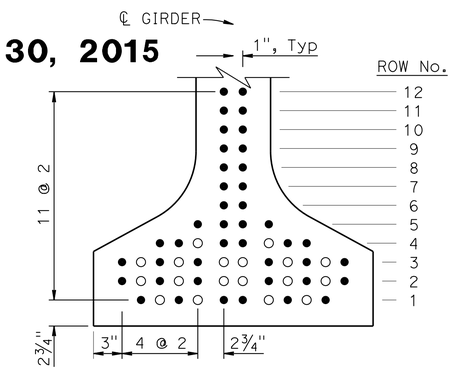

LEGEND:
● DENOTES CONTINUOUSLY BONDED STRAND LOCATION
○ DENOTES PERMISSIBLE DEBONDED STRAND LOCATION

STRAND TEMPLATE & DEBONDING PATTERN

GIRDER A, B, C, (Etc)			
ROW No.	TOTAL No. OF STRANDS	No. OF DEBONDED STRANDS	DEBONDED LENGTH
12			
11			
10			
9			
8			
7			
6			
5			
4	8		
3	12	2	40
2	12	2	30
1	10	4	20

NOTES:
1. Strands shall be placed as low as possible in the strand template and symmetrical about ℄ Girder
2. No more than 33% of the total number of strands and 50% of the strands per horziontal row may be debonded
3. Strand locations may be adjusted as approved by the Engineer

SPECIAL DETAILS

NO SCALE

REVISED STANDARD DRAWING

FILE NO. xs1-121-1

APPROVAL DATE July 2011

1 Revised Note

STATE OF CALIFORNIA DEPARTMENT OF TRANSPORTATION

DIVISION OF ENGINEERING SERVICES

BRIDGE NO. 54-0484G

POST MILE 43.5

VICTORVILLE SEPARATION & OVERHEAD

PC/PS BULB-TEE GIRDER (DEBONDED STRANDS)

DS OSD 2147A (ENGLISH STANDARD DRAWING "XS" BORDER REV. (02-02-11)

ORIGINAL SCALE IN INCHES FOR REDUCED PLANS 0 1 2 3

UNIT: 3589
PROJECT NUMBER & PHASE: 08140000861
CONTRACT NO.: 08-3555V1

DISREGARD PRINTS BEARING EARLIER REVISION DATES

REVISION DATES 12-22-12 4-02-13 10-25-13

SHEET 14 OF 26

FILE => 540484_gigdt14.add

USERNAME => s114640 DATE PLOTTED => 29-JUL-2015 TIME PLOTTED => 14:41

DIST	COUNTY	ROUTE	POST MILES TOTAL PROJECT	SHEET No.	TOTAL SHEETS
08	SBd	15	42.5/46.0	786	824

REGISTERED CIVIL ENGINEER 7-21-15 DATE

6-23-14
PLANS APPROVAL DATE

REGISTERED PROFESSIONAL ENGINEER RYAN STILTZ No. C65738 Exp. 9/30/15 CIVIL STATE OF CALIFORNIA

The State of California or its officers or agents shall not be responsible for the accuracy or completeness of electronic copies of this plan sheet.

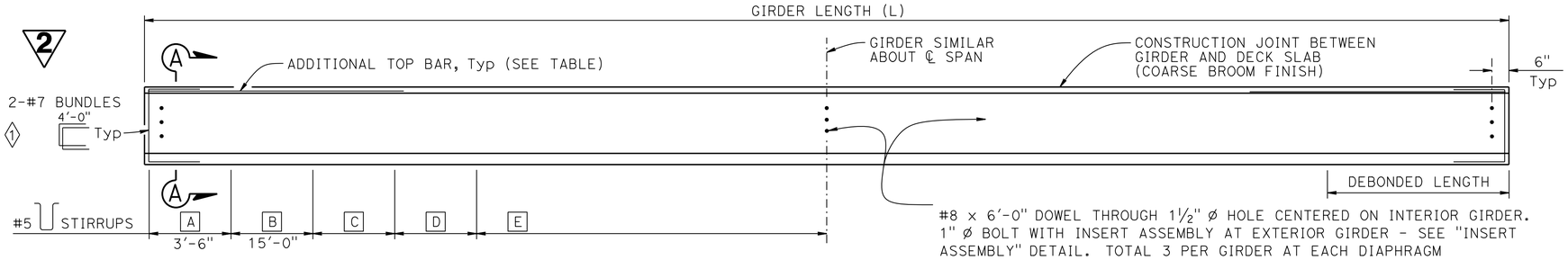

LOCATION	A	B	C	D	E
GIRDER	#5 @ 6"	#5 @ 6"	#5 @ 12"	#5 @ 12"	#5 @ 12"

GIRDER ELEVATION

NOTE:
Girder ends to be cast such that a level surface is provided at bearing pads

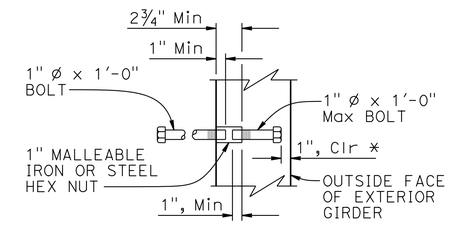

* DIMENSION MAY BE INCREASED WHEN INSERT ASSEMBLY IS USED AT END BLOCK

INSERT ASSEMBLY

LOCATION	GIRDER LENGTH (L)	GIRDER DEPTH (D)	NUMBER OF 0.6" ø STRANDS	JACKING FORCE (P)	CONCRETE STRENGTH (ksi)		MIDSPAN DEAD LOAD DEFLECTION (In)		ADDITIONAL TOP BAR (EACH END)
					f'ci	f'c	DECK	RAIL	
SPAN 4 (8 EA)	105'-0"	4'-7⅛"	42	1760 kips (42 kips/STRAND)	5.7	6.0	1½	3/32	#8 x 20', Tot 4

PRESTRESSING NOTES

1. The Jacking Force (P) is the jacking force required at the point of control along the span. The jacking force does not include any fabrication specific losses
2. The maximum temporary tensile stress (jacking stress) in the prestressing steel shall not exceed 80% of the specified minimum ultimate tensile strength of the prestressing steel
3. Concrete strength:
   f'ci is at time of initial stressing
   f'c is at 28 days
4. Deflection components are informational and will be used to set screed line elevations
5. Screed line elevations for deck concrete will be determined by the Engineer
6. Prestressing strand shall be 270 ksi low relaxation

2 REPLACED PER ADDENDUM No. 2 DATED JULY 30, 2015

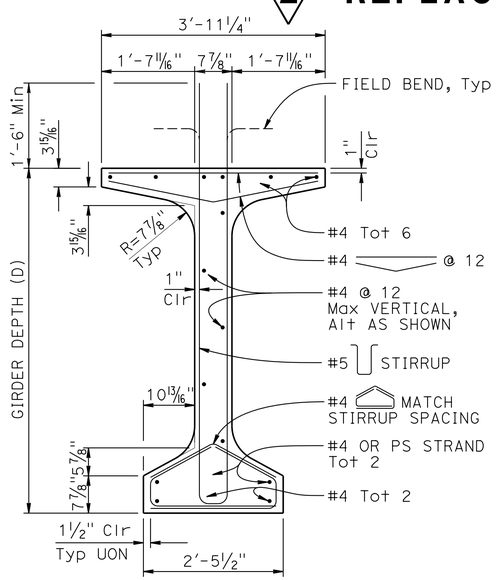

TYPICAL GIRDER SECTION

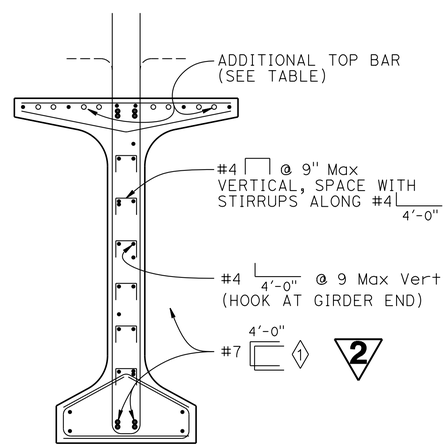

NOTE:
For details not shown, see "TYPICAL GIRDER SECTION" detail

SECTION A-A

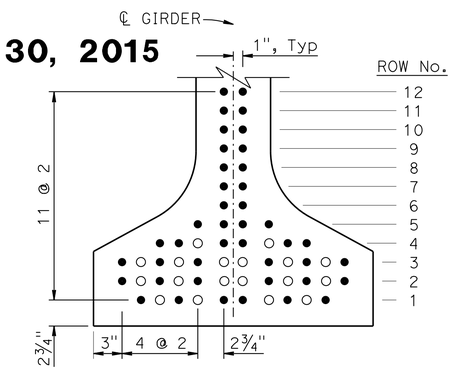

LEGEND:
● DENOTES CONTINUOUSLY BONDED STRAND LOCATION
○ DENOTES PERMISSIBLE DEBONDED STRAND LOCATION

STRAND TEMPLATE & DEBONDING PATTERN

GIRDER A, B, C, (Etc)			
ROW No.	TOTAL No. OF STRANDS	No. OF DEBONDED STRANDS	DEBONDED LENGTH
12	0		
11	0		
10	0		
9	0		
8	0		
7	0		
6	0		
5	2		
4	6		
3	12	2	40'-0"
2	12	2	30'-0"
1	10	4	20'-0"

NOTES:
1. Strands shall be placed as low as possible in the strand template and symmetrical about ℄ Girder
2. No more than 33% of the total number of strands and 50% of the strands per horziontal row may be debonded
3. Strand locations may be adjusted as approved by the Engineer

NOTE:
THE CONTRACTOR SHALL VERIFY ALL CONTROLLING FIELD DIMENSIONS BEFORE ORDERING OR FABRICATING ANY MATERIAL.

NOTE: For "WELDED WIRE REINFORCEMENT (WWR) ALTERNATIVE", see "PC/PS BULB-TEE GIRDER (MISCELLANEOUS DETAILS)" sheet

SPECIAL DETAILS

NO SCALE

REVISED STANDARD DRAWING

FILE NO. xs1-121-1

APPROVAL DATE July 2011

1 Revised Note

STATE OF CALIFORNIA DEPARTMENT OF TRANSPORTATION

DIVISION OF ENGINEERING SERVICES

BRIDGE NO. 54-0484

POST MILE 43.5

VICTORVILLE SEPARATION & OVERHEAD (WIDEN)

PC/PS BULB-TEE GIRDER (DEBONDED STRANDS)

DS OSD 2147A (ENGLISH STANDARD DRAWING "XS" BORDER REV. (02-02-11)

ORIGINAL SCALE IN INCHES FOR REDUCED PLANS 0 1 2 3

UNIT: 3589
PROJECT NUMBER & PHASE: 08140000861
CONTRACT NO.: 08-3555V1

DISREGARD PRINTS BEARING EARLIER REVISION DATES 12-20-12

SHEET 21 OF 41

FILE => 540484lgdt21.add

USERNAME => s114640 DATE PLOTTED => 29-JUL-2015 TIME PLOTTED => 14:41