Dist	COUNTY	LOCATION CODE	POST MILES TOTAL PROJECT	SHEET No.	TOTAL SHEETS
08	Riv	215	R15.0	1	26

INDEX OF PLANS

SHEET No.	DESCRIPTION
1	TITLE AND LOCATION MAP
2	TYPICAL CROSS SECTIONS
3	LAYOUT
4	CONSTRUCTION DETAILS
5	UTILITY PLAN
6	CONSTRUCTION AREA SIGNS
7	MOTORIST INFORMATION PLAN
8	PAVEMENT DELINEATION QUANTITIES
9	SUMMARY OF QUANTITIES
10-12	ELECTRICAL PLANS
13-26	REVISED STANDARD PLANS

THE STANDARD PLANS LIST APPLICABLE TO THIS CONTRACT IS INCLUDED IN THE NOTICE TO BIDDERS AND SPECIAL PROVISIONS BOOK.

STATE OF CALIFORNIA

DEPARTMENT OF TRANSPORTATION

PROJECT PLANS FOR CONSTRUCTION ON

STATE HIGHWAY

IN RIVERSIDE COUNTY NEAR MURRIETA AT 0.5 MILE NORTH OF KELLER ROAD

TO BE SUPPLEMENTED BY STANDARD PLANS DATED 2010

LOCATION MAP

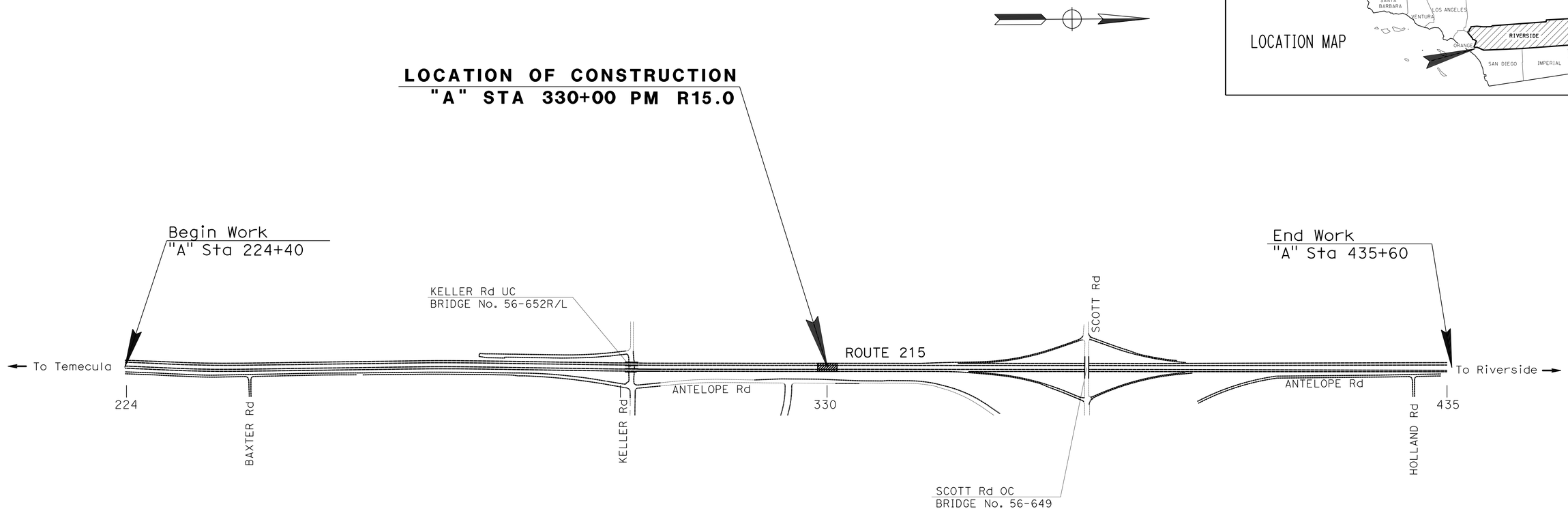

NO SCALE

PROJECT ENGINEER
REGISTERED CIVIL ENGINEER

3-3-14
DATE

REGISTERED PROFESSIONAL ENGINEER
VINH TRUONG
No. 67669
Exp. 6/30/15
CIVIL
STATE OF CALIFORNIA

March 3, 2014
PLANS APPROVAL DATE

THE STATE OF CALIFORNIA OR ITS OFFICERS OR AGENTS SHALL NOT BE RESPONSIBLE FOR THE ACCURACY OR COMPLETENESS OF SCANNED COPIES OF THIS PLAN SHEET.

THE CONTRACTOR SHALL POSSESS THE CLASS (OR CLASSES) OF LICENSE AS SPECIFIED IN THE "NOTICE TO BIDDERS."

CONTRACT No.	08-0R8104
PROJECT ID	0812000186

PROJECT MANAGER: MUSTAPHA IAALI
DESIGN ENGINEER: JAIME ESTRADA

LAST REVISION 03-03-14 | DATE PLOTTED => 05-MAR-2014 | TIME PLOTTED => 09:37

Dist	COUNTY	LOCATION CODE	POST MILES TOTAL PROJECT	SHEET No.	TOTAL SHEETS
08	Riv	215	R15.0	2	26

REGISTERED CIVIL ENGINEER 3-3-14 DATE

3-3-14
PLANS APPROVAL DATE

REGISTERED PROFESSIONAL ENGINEER VINH TRUONG No. 67669 Exp 6/30/15 CIVIL STATE OF CALIFORNIA

THE STATE OF CALIFORNIA OR ITS OFFICERS OR AGENTS SHALL NOT BE RESPONSIBLE FOR THE ACCURACY OR COMPLETENESS OF SCANNED COPIES OF THIS PLAN SHEET.

NOTES:

1. DIMENSIONS OF THE PAVEMENT STRUCTURES (STRUCTURAL SECTIONS) ARE SUBJECT TO TOLERANCES SPECIFIED IN THE STANDARD SPECIFICATIONS.
2. (*) CROSS SLOPE AS SHOWN OR AS DIRECTED BY THE ENGINEER.

DESIGN DESIGNATION (I-215):

ADT (2015) = 109,400
ADT (2035) = 152,200
DHV = 6,481
$ESAL_{40}$ = 13,345,892 (INSIDE LANES)

D = 53%
T = 4%
V = 70 mph
TI_{40} = 12.5 (INSIDE LANES)
TI_{20} = 7.5 (INSIDE SHOULDERS)

PROPOSED STRUCTURAL SECTIONS:

[A] 1.05′ PCC (RSC)
0.02′ POLYETHYLENE (BASE BOND BREAKER)
0.5′ LCBRS

[B] COLD PLANE 0-0.1′
HMA OVERLAY 0.1′ (TYPE A

EXISTING STRUCTURAL SECTIONS:

[1] 0.50′ HMA (TYPE A)
1.00′ CI 2 AB

[2] 0.10′ HMA (OPEN GRADED)
0.80′ HMA (TYPE A)
1.45′ CI 2 AB

[3] 0.50′ HMA (TYPE A)
0.40′ CI 2 AB

[4] 0.10′ HMA (OPEN GRADED)
0.55′ HMA (TYPE A)
2.00′ CI 2 AB

[9] 0.10′ HMA (OPEN GRADED)
0.55′ HMA (TYPE A)
0.75′ CI 2 AB

[12] 0.40′ AC
0.75′ CI 2 AB
1.40′ AS

[13] 0.10′ OGAC
0.40′ AC
0.75′ CTB
1.40′ AS

[15] 0.10′ OGAC
0.25′ AC
0.75′ CTB
1.40′ AS

[16] 0.80′ AC
1.50′ IMPORTED BASE MATERIAL

[17] 0.10′ OGAC
0.80′-1.04′ AC
0.50′ CTB
1.00′ IMPORTED BASE MATERIAL

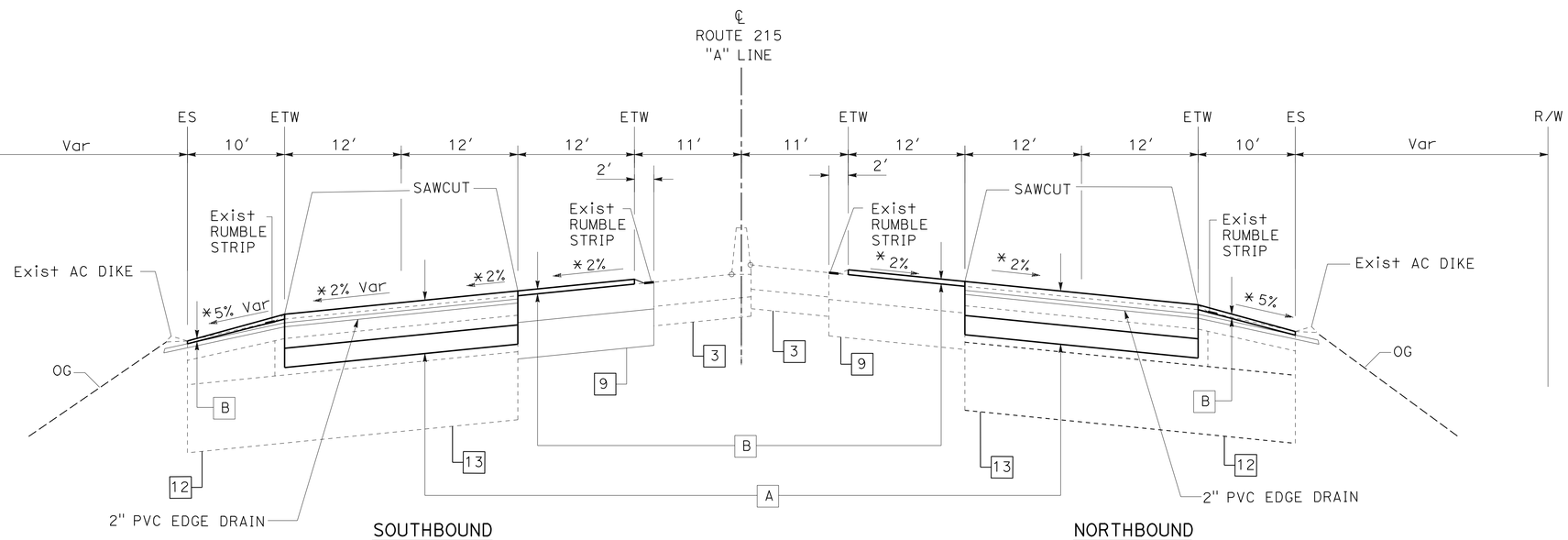

SOUTHBOUND
Sta 329+25 TO 331+00

NORTHBOUND
Sta 329+00 TO 330+75

TYPICAL CROSS SECTIONS

NO SCALE

X-1

STATE OF CALIFORNIA - DEPARTMENT OF TRANSPORTATION
Caltrans® DESIGN

FUNCTIONAL SUPERVISOR: DIBORO KANABOLO
CALCULATED-DESIGNED BY: VINH TRUONG
CHECKED BY: DIBORO KANABOLO
REVISED BY
DATE REVISED

LAST REVISION 03-03-14
DATE PLOTTED => 05-MAR-2014
TIME PLOTTED => 09:37

Dist	COUNTY	ROUTE	POST MILES TOTAL PROJECT	SHEET No.	TOTAL SHEETS
08	Riv	215	R15.0	3	26

REGISTERED CIVIL ENGINEER 3-3-14 DATE

3-3-14
PLANS APPROVAL DATE

REGISTERED PROFESSIONAL ENGINEER VINH TRUONG No. 67669 Exp 6/30/15 CIVIL STATE OF CALIFORNIA

THE STATE OF CALIFORNIA OR ITS OFFICERS OR AGENTS SHALL NOT BE RESPONSIBLE FOR THE ACCURACY OR COMPLETENESS OF SCANNED COPIES OF THIS PLAN SHEET.

NOTES:

1. FOR ACURATE RIGHT OF WAY DATA, CONTACT RIGHT OF WAY ENGINEERING AT THE DISTRICT OFFICE.
2. SEE ELECTRICAL PLANS FOR WIM SYSTEM DETAILS.
3. CROSS SLOPE OF HMA OVERLAY AND PCC (RSC) TO BE DETERMINED BY WIM SPECIFICATION OR DIRECTED BY THE ENGINEER IN THE FIELD.

LEGENDS:

REMOVE Exist WIM SYSTEM AND Exist PAVEMENT AND CONSTRUCT JPCC PAVEMENT (RSC)

COLD PLANE Exist PAVEMENT (0.1′) AND OVERLAY WITH HMA (TYPE A) (0.1′)

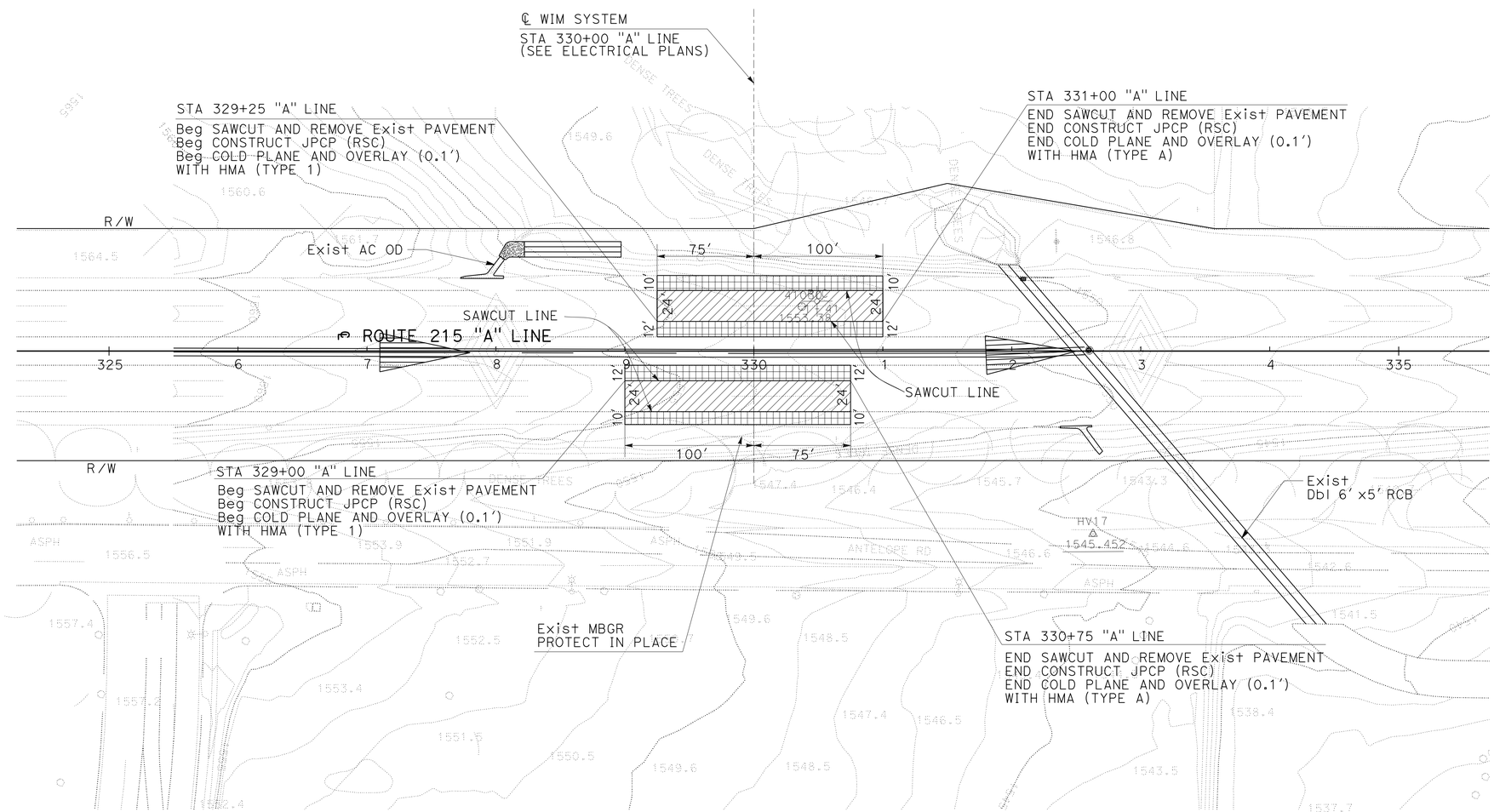

LAYOUT

SCALE 1"= 50′

L-1

REVISED BY	DATE REVISED

CALCULATED-DESIGNED BY: VINH TRUONG
CHECKED BY: DIBORO KANABOLO
FUNCTIONAL SUPERVISOR: DIBORO KANABOLO

STATE OF CALIFORNIA - DEPARTMENT OF TRANSPORTATION
Caltrans
DESIGN

LAST REVISION 03-03-14 | DATE PLOTTED => 05-MAR-2014 | TIME PLOTTED => 09:37

Dist	COUNTY	ROUTE	POST MILES TOTAL PROJECT	SHEET No.	TOTAL SHEETS
08	Riv	215	R15.0	4	26

REGISTERED CIVIL ENGINEER 3-3-14 DATE

3-3-14
PLANS APPROVAL DATE

REGISTERED PROFESSIONAL ENGINEER VINH TRUONG No. 67669 Exp. 6/30/15 CIVIL STATE OF CALIFORNIA

THE STATE OF CALIFORNIA OR ITS OFFICERS OR AGENTS SHALL NOT BE RESPONSIBLE FOR THE ACCURACY OR COMPLETENESS OF SCANNED COPIES OF THIS PLAN SHEET.

NOTES:

1. SEE ELECTRICAL PLANS FOR WIM SYSTEM DETAILS.
2. SEE RSP STD P-1, P-8, P-10, P-15, P-18, AND P-20 FOR JOINT AND DOWEL/TIE BAR DETAILS.
3. USE ISOLATION JOINT SEAL (SILICONE) FOR EXPANSION/ISOLATION JOINTS.
4. USE ISOLATION JOINT SEAL (PREFORMED COMPRESSION) FOR CONSTRUCTION/CONTRACTION JOINTS.

LEGEND:

JOINTED PLAIN CONCRETE PAVEMENT (RSC)

JOINTED PLAIN CONCRETE PAVEMENT (RSC) (PAVEMENT TRANSITIONAL PANNEL)

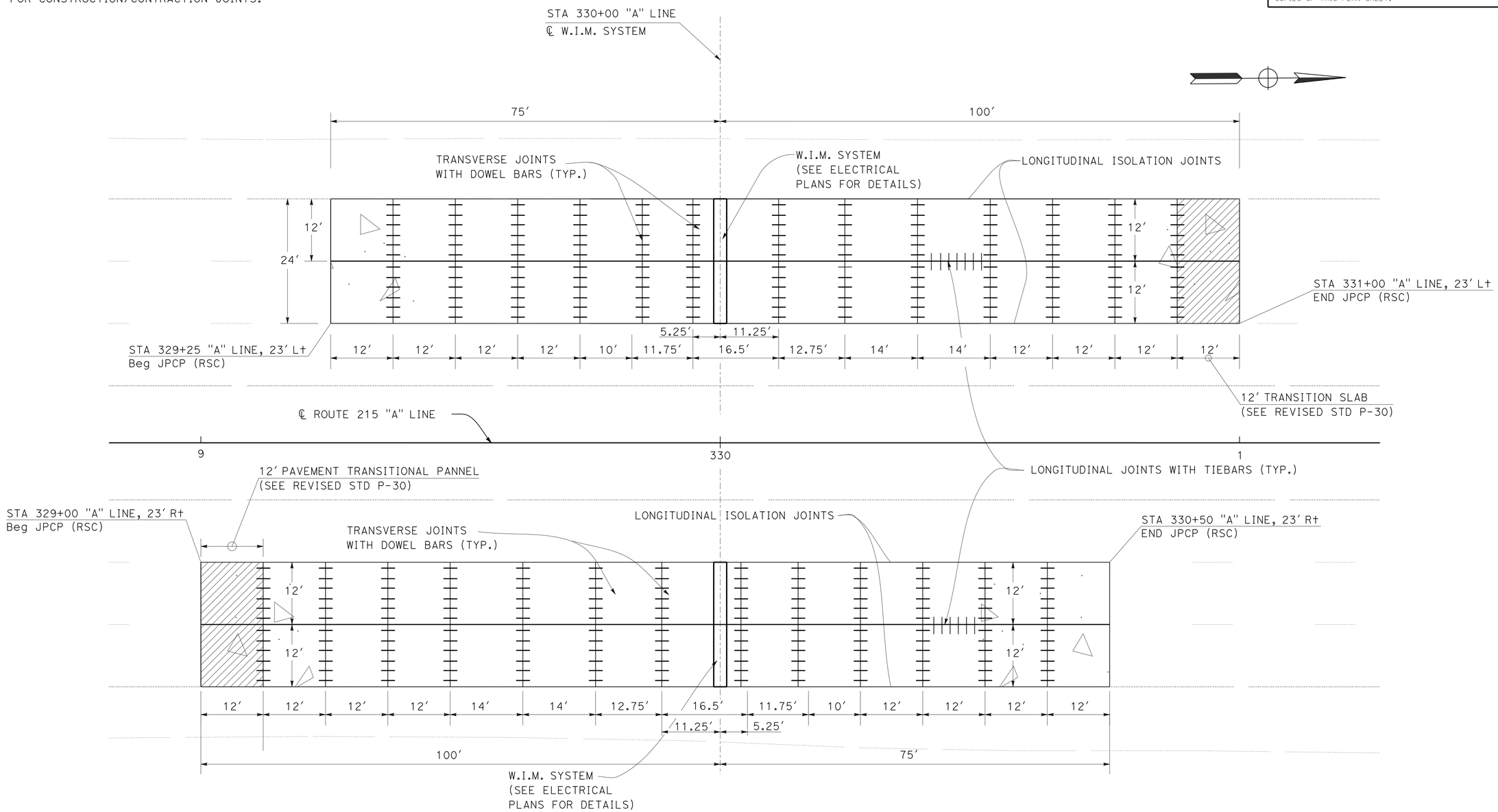

DIMENSIONS AND LOCATIONS OF JPCP (RSC)

CONSTRUCTION DETAILS

SCALE 1"= 10′

C-1

STATE OF CALIFORNIA - DEPARTMENT OF TRANSPORTATION
Caltrans® DESIGN

FUNCTIONAL SUPERVISOR: DIBORO KANABOLO
CALCULATED-DESIGNED BY: VINH TRUONG
CHECKED BY: DIBORO KANABOLO
REVISED BY
DATE REVISED

LAST REVISION 03-03-14
DATE PLOTTED => 05-MAR-2014
TIME PLOTTED => 09:37

Dist	COUNTY	ROUTE	POST MILES TOTAL PROJECT	SHEET No.	TOTAL SHEETS
08	Riv	215	R15.0	5	26

REGISTERED CIVIL ENGINEER 3-3-14 DATE

PLANS APPROVAL DATE 3-3-14

REGISTERED PROFESSIONAL ENGINEER VINH TRUONG No. 67669 Exp. 6/30/15 CIVIL STATE OF CALIFORNIA

THE STATE OF CALIFORNIA OR ITS OFFICERS OR AGENTS SHALL NOT BE RESPONSIBLE FOR THE ACCURACY OR COMPLETENESS OF SCANNED COPIES OF THIS PLAN SHEET.

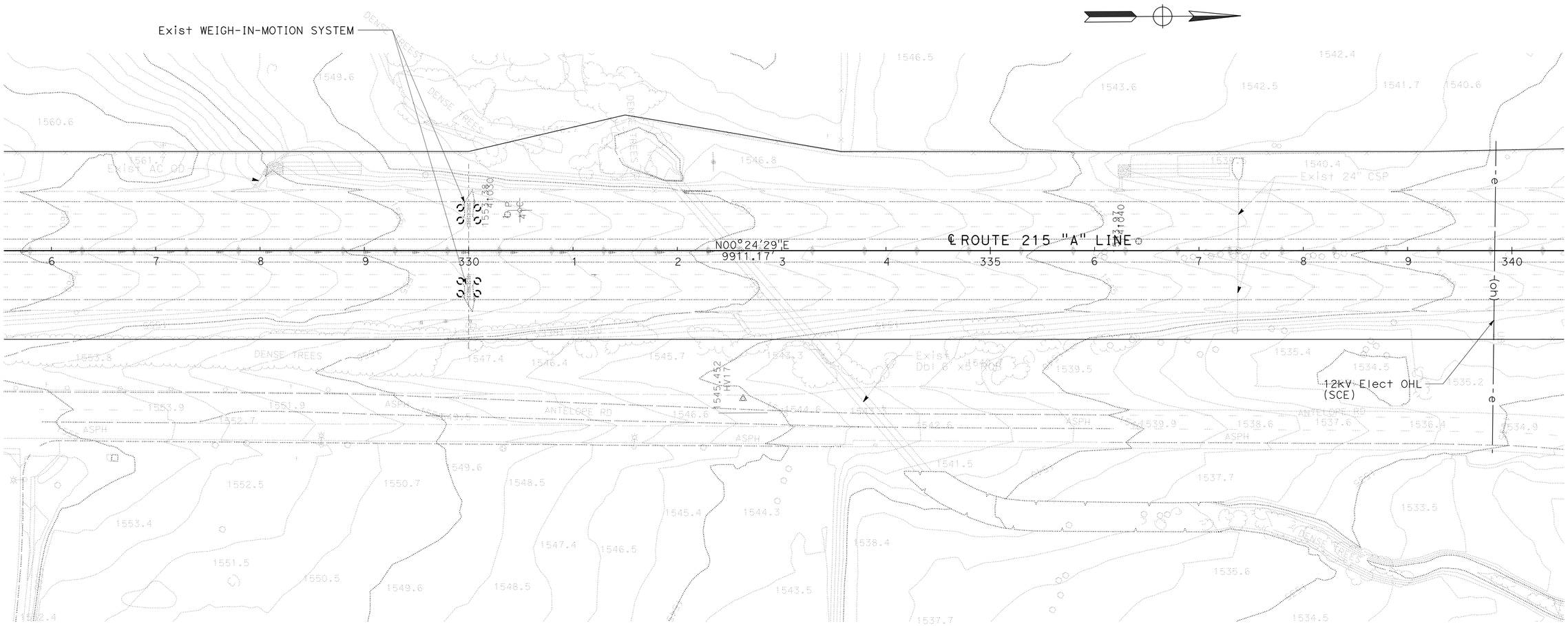

UTILITY PLAN

SCALE 1"= 50'

U-1

STATE OF CALIFORNIA - DEPARTMENT OF TRANSPORTATION

Caltrans® **DESIGN**

FUNCTIONAL SUPERVISOR: DIBORO KANABOLO

CALCULATED-DESIGNED BY: VINH TRUONG

CHECKED BY: DIBORO KANABOLO

REVISED BY

DATE REVISED

LAST REVISION 03-03-14 | DATE PLOTTED => 05-MAR-2014 | TIME PLOTTED => 09:37

Dist	COUNTY	ROUTE	POST MILES TOTAL PROJECT	SHEET No.	TOTAL SHEETS
08	Riv	215	R15.0	6	26

REGISTERED CIVIL ENGINEER 3-3-14 DATE

3-3-14
PLANS APPROVAL DATE

REGISTERED PROFESSIONAL ENGINEER
DEAN D TO
No. 81698
Exp. 3-31-16
CIVIL
STATE OF CALIFORNIA

THE STATE OF CALIFORNIA OR ITS OFFICERS OR AGENTS SHALL NOT BE RESPONSIBLE FOR THE ACCURACY OR COMPLETENESS OF SCANNED COPIES OF THIS PLAN SHEET.

NOTE:

1. EXACT LOCATION AND POSTION OF SIGNS WILL BE DETERMINED BY THE ENGINEER.
2. LOCATIONS OF PCMS WILL BE DETERMINED BY THE ENGINEER.

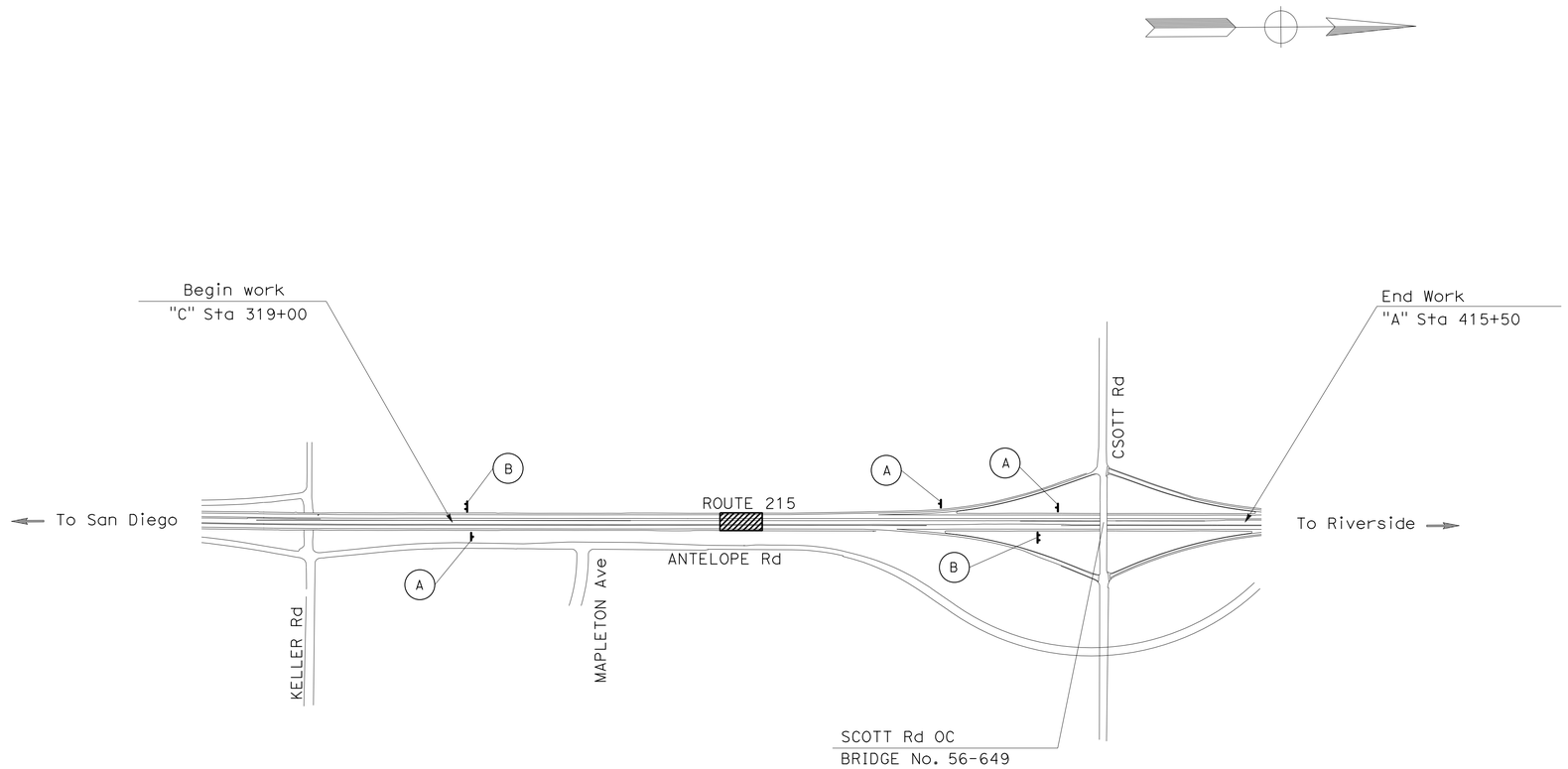

STATIONARY MOUNTED CONSTRUCTION AREA SIGNS

SIGN No. (X)	SIGN CODE		PANEL SIZE	SIGN MESSAGE	NUMBER OF POSTS AND SIZE	NUMBER OF SIGNS
	FEDERAL	CALIFORNIA				
A	W20-1		48" x 48"	ROAD WORK AHEAD	1- 6" x 6"	3
B	G20-2		132" x 120"	END ROAD WORK	2- 4" x 4"	2

PCMS

(EA)
2

APPROVED FOR CONSTRUCTION AREA SIGN WORK ONLY

CONSTRCUTION AREA SIGNS

NO SCALE

CS-1

STATE OF CALIFORNIA - DEPARTMENT OF TRANSPORTATION
Caltrans
TRAFFIC DESIGN

FUNCTIONAL SUPERVISOR: W. E. WASSER
CALCULATED-DESIGNED BY: DEAN TO
CHECKED BY: W. E. WASSER
REVISED BY
DATE REVISED

LAST REVISION 03-03-14 | DATE PLOTTED => 05-MAR-2014 | TIME PLOTTED => 09:37

Dist	COUNTY	ROUTE	POST MILES TOTAL PROJECT	SHEET No.	TOTAL SHEETS
08	Riv	215	R15.0	7	26

REGISTERED CIVIL ENGINEER 3-3-14 DATE

3-3-14
PLANS APPROVAL DATE

REGISTERED PROFESSIONAL ENGINEER
DEAN D TO
No. 81698
Exp. 3-31-16
CIVIL
STATE OF CALIFORNIA

THE STATE OF CALIFORNIA OR ITS OFFICERS OR AGENTS SHALL NOT BE RESPONSIBLE FOR THE ACCURACY OR COMPLETENESS OF SCANNED COPIES OF THIS PLAN SHEET.

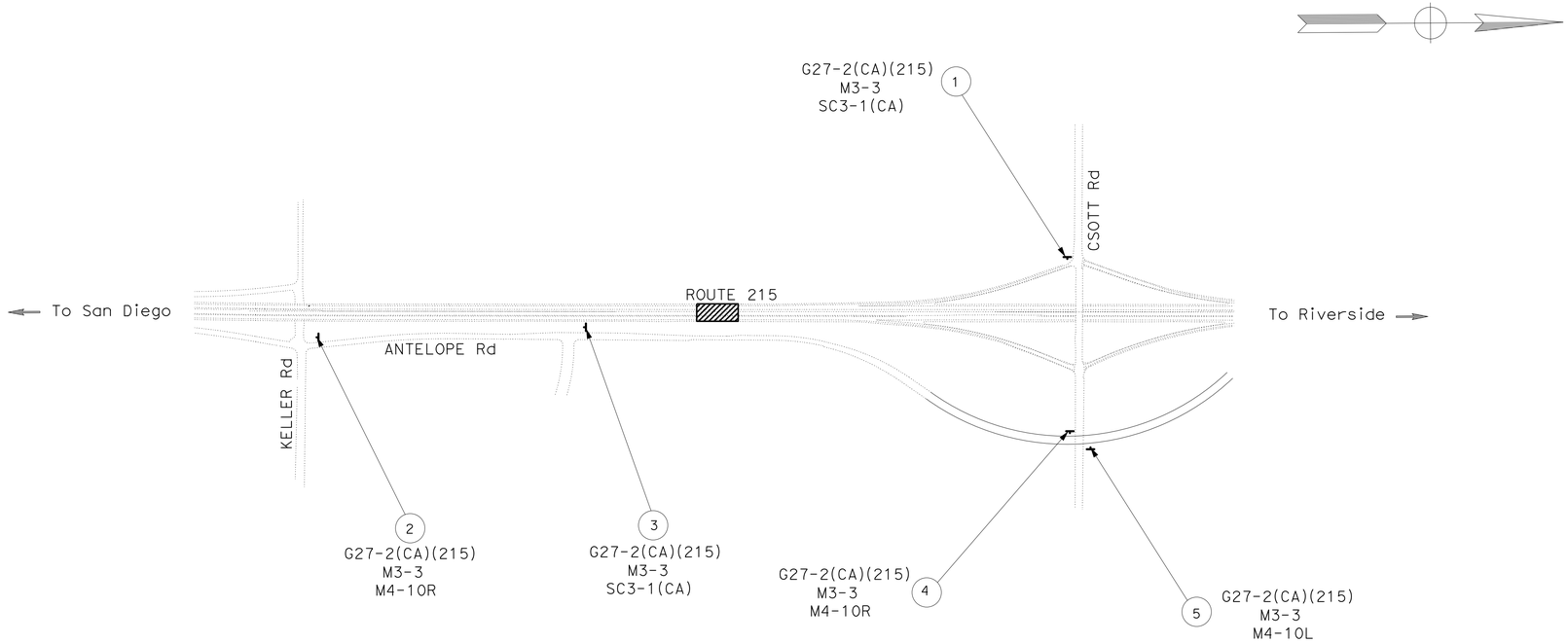

STATIONARY MOUNTED CONSTRUCTION AREA SIGNS

SIGN No. (X)	SIGN CODE FEDERAL	SIGN CODE CALIFORNIA	PANEL SIZE	SIGN MESSAGE	NUMBER OF POSTS AND SIZE	NUMBER OF SIGNS
1		G27-2 (215)	30" x 25"	INTERSTATE SHIELD	1- 6" x 6"	1
	M3-3		30" x 15"	SOUTH	1- 6" x 6"	1
		SC3-1(CA)	48" x 18"	DETOUR WITH UP ARROW	1- 6" x 6"	1
2		G27-2 (215)	30" x 25"	INTERSTATE SHIELD	1- 6" x 6"	1
	M3-3		30" x 15"	SOUTH	1- 6" x 6"	1
		M4-10R	48" x 18"	DETOUR WITH HORIZ. ARROW	1- 6" x 6"	1
3		G27-2 (215)	30" x 25"	INTERSTATE SHIELD	1- 6" x 6"	1
	M3-3		30" x 15"	SOUTH	1- 6" x 6"	1
		SC3-1(CA)	48" x 18"	DETOUR WITH UP ARROW	1- 6" x 6"	1
4		G27-2 (215)	30" x 25"	INTERSTATE SHIELD	1- 6" x 6"	1
	M3-3		30" x 15"	SOUTH	1- 6" x 6"	1
		M4-10R	48" x 18"	DETOUR WITH HORIZ. ARROW	1- 6" x 6"	1
5		G27-2 (215)	30" x 25"	INTERSTATE SHIELD	1- 6" x 6"	1
	M3-3		30" x 15"	SOUTH	1- 6" x 6"	1
		M4-10L	48" x 18"	DETOUR WITH HORIZ. ARROW	1- 6" x 6"	1

MOTORIST INFORMATION PLAN

NO SCALE

MI-1

APPROVED FOR MOTORIST INFORMATION WORK ONLY

STATE OF CALIFORNIA - DEPARTMENT OF TRANSPORTATION
Caltrans® TRAFFIC DESIGN

FUNCTIONAL SUPERVISOR: W.E. WASSER
CALCULATED-DESIGNED BY: DEAN TO
CHECKED BY: W.E. WASSER
REVISED BY
DATE REVISED

LAST REVISION 03-03-14
DATE PLOTTED => 05-MAR-2014
TIME PLOTTED => 09:37

Dist	COUNTY	ROUTE	POST MILES TOTAL PROJECT	SHEET No.	TOTAL SHEETS
08	Riv	215	R14.9/R15.1	8	26

Dean D To 3-3-14
REGISTERED CIVIL ENGINEER DATE

3-3-14
PLANS APPROVAL DATE

REGISTERED PROFESSIONAL ENGINEER
DEAN D TO
No. 81698
Exp. 3-31-16
CIVIL
STATE OF CALIFORNIA

THE STATE OF CALIFORNIA OR ITS OFFICERS OR AGENTS SHALL NOT BE RESPONSIBLE FOR THE ACCURACY OR COMPLETENESS OF SCANNED COPIES OF THIS PLAN SHEET.

PAVEMENT DELINEATION QUANTITIES

DETAIL No. OR PAVEMENT MARKING	THERMOPLASTIC TRAFFIC STRIPE (SPRAYABLE)		PAVEMENT MARKER		
			NON REFLECTIVE	RETROREFLECTIVE	
	4" YELLOW	4" WHITE	TYPE A	TYPE G	TYPE H
	LF	LF	EA	EA	EA
13M		800	72	18	
25	400				9
27B		400			
SHEET TOTAL	400	1200	72	18	9
TOTAL	1600		72	27	

PAVEMENT DELINEATION QUANTITIES
PDQ-1

REVISED BY | DATE REVISED
DEAN TO | W.E. WASSER
CALCULATED-DESIGNED BY | CHECKED BY
FUNCTIONAL SUPERVISOR: W.E. WASSER
STATE OF CALIFORNIA - DEPARTMENT OF TRANSPORTATION
Caltrans® TRAFFIC DESIGN

LAST REVISION 03-03-14
DATE PLOTTED => 05-MAR-2014
TIME PLOTTED => 09:37

Dist	COUNTY	LOCATION CODE	POST MILES TOTAL PROJECT	SHEET No.	TOTAL SHEETS
08	Riv	215	R14.9/15.1	9	26

REGISTERED CIVIL ENGINEER 3-3-14 DATE

PLANS APPROVAL DATE 3-3-14

REGISTERED PROFESSIONAL ENGINEER VINH TRUONG No. 67669 Exp. 6/30/15 CIVIL STATE OF CALIFORNIA

THE STATE OF CALIFORNIA OR ITS OFFICERS OR AGENTS SHALL NOT BE RESPONSIBLE FOR THE ACCURACY OR COMPLETENESS OF SCANNED COPIES OF THIS PLAN SHEET.

ROADWAY QUANTITIES

DESCRIPTION NB	DESCRIPTION SB	LOCATION	JOINTED PLAIN CONCRETE PAVEMENT (RSC)	LEAN CONCRETE BASE (RAPID SETTING)	BASE BOND BREAKER	ISOLATION JOINT SEAL (SILICONE)	JOINT SEAL (PREFORMED COMPRESSION)	ROADWAY EXCAVATION	COLD PLANE EXISTING ASPHALT CONCRETE PAVEMENT	HMA (TYPE A)	2" PLASTIC PIPE (EDGE DRAIN)
NB	SB		CY	CY	SQYD	LF	LF	CY	SQYD	TONN	LF
	X	FROM 329+00.00 TO 330+75.00 "A"	163.5	78	466.5	199	614	244	428	29	
X		FROM 329+25.00 TO 331+00.00 "A"	163.5	78	466.5	199	614	244	428	29	
X	X	STA 330+00 "A1"									100
		GRAND TOTAL	327	156	933	398	1228	488	856	58	100

SUMMARY OF QUANTITIES

Q-1

STATE OF CALIFORNIA - DEPARTMENT OF TRANSPORTATION

Caltrans® DESIGN

FUNCTIONAL SUPERVISOR DIBORO KANABOLO

CALCULATED-DESIGNED BY VINH TRUONG

CHECKED BY DIBORO KANABOLO

REVISED BY

DATE REVISED

LAST REVISION 03-03-00

DATE PLOTTED => 05-MAR-2014

TIME PLOTTED => 09:37

Dist	COUNTY	ROUTE	POST MILES TOTAL PROJECT	SHEET No.	TOTAL SHEETS
8	Riv	215	R15.0	10	26

REGISTERED ELECTRICAL ENGINEER 3-3-14 DATE

3-3-14
PLANS APPROVAL DATE

REGISTERED PROFESSIONAL ENGINEER JAIME ESTRADA No. E-18351 Exp. 06-30-14 ELECTRICAL STATE OF CALIFORNIA

THE STATE OF CALIFORNIA OR ITS OFFICERS OR AGENTS SHALL NOT BE RESPONSIBLE FOR THE ACCURACY OR COMPLETENESS OF SCANNED COPIES OF THIS PLAN SHEET.

NOTES:

1. SCREENED TRANSMISSION CABLE AND SCALE LEAD-IN CABLE MUST NOT BE SPLICED AND MUST RUN CONTINUOUSLY TO THE EXISTING CABINETS.
2. FOR WEIGH IN MOTION INSTALLATION DETAILS SEE SHEETS E-2 & E-3.
3. GRIND THE SURFACE OF THE PAVED ROADWAY FOR SURFACE SMOOTHNESS 200 FEET IN ADVANCE OF AND 100 FEET BEYOND THE WIM SYSTEM SENSORS.

ABBREVIATIONS:

WIM	WEIGH IN MOTION
wim	EXISTING WEIGH IN MOTION
STC	SCREENED TRANSMISSION CABLE
SLC	SCALE LEAD-IN CABLE

LEGEND:

1 RC ALL WIM EQUIPMENT AND INSTALL NEW EQUIPMENT IN SAME LOCATION AS SHOWN.

EXISTING WEIGH IN MOTION

PROPOSED WEIGH IN MOTION

EXISTING PIEZO-ELECTRIC AXLE SENSOR

PROPOSED PIEZO-ELECTRIC AXLE SENSOR

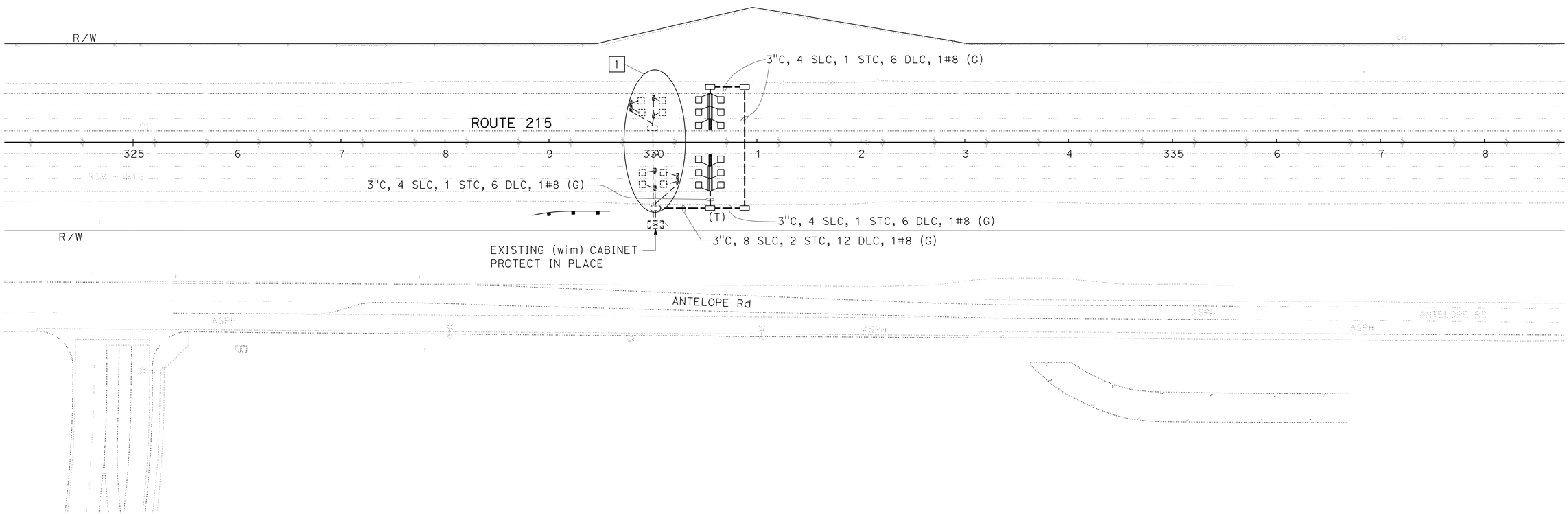

NOTE:

FOR ACCURATE RIGHT OF WAY DATA, CONTACT RIGHT OF WAY ENGINEERING AT THE DISTRICT OFFICE.

APPROVED FOR ELECTRICAL WORK ONLY

WEIGH IN MOTION SYSTEM

SCALE 1" = 50'

E-1

STATE OF CALIFORNIA - DEPARTMENT OF TRANSPORTATION
Caltrans
ELECTRICAL DESIGN

FUNCTIONAL SUPERVISOR: DAVID A GONZALEZ

CALCULATED-DESIGNED BY: JAIME ESTRADA
CHECKED BY: DAVID A GONZALEZ

REVISED BY
DATE REVISED

LAST REVISION 03-03-14
DATE PLOTTED => 05-MAR-2014
TIME PLOTTED => 09:37

Dist	COUNTY	ROUTE	POST MILES TOTAL PROJECT	SHEET No.	TOTAL SHEETS
8	Riv	215	R15.0	11	26

REGISTERED ELECTRICAL ENGINEER 3-3-14 DATE

3-3-14
PLANS APPROVAL DATE

REGISTERED PROFESSIONAL ENGINEER JAIME ESTRADA No. E-18351 Exp. 06-30-14 ELECTRICAL STATE OF CALIFORNIA

THE STATE OF CALIFORNIA OR ITS OFFICERS OR AGENTS SHALL NOT BE RESPONSIBLE FOR THE ACCURACY OR COMPLETENESS OF SCANNED COPIES OF THIS PLAN SHEET.

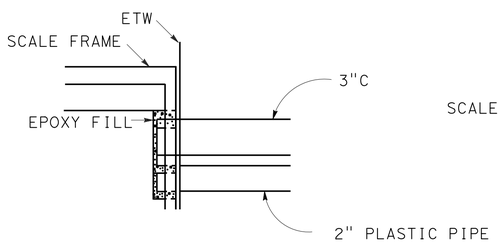

PLAN VIEW

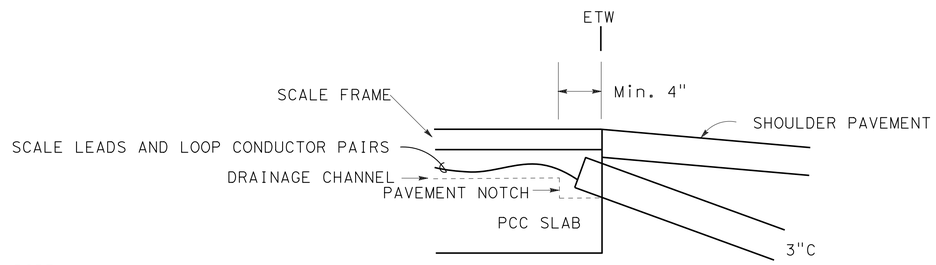

CROSS SECTION

CONDUIT AND DRAIN TERMINATION DETAILS

NOTES:

1. NON-METALLIC BUSHING MUST BE USED AT ROADWAY END OF CONDUIT.
2. TAPE WIRE 3 INCHES EACH SIDE OF ROADWAY BUSHING.
3. INSTALL DUCT SEAL COMPOUND TO EACH END OF ROADWAY CONDUIT BEFORE INSTALLING EPOXY, OR OTHER APPROVED MATERIALS.
4. END OF CONDUIT AND/OR PVC DRAIN RESTS ON BOTTOM OF PAVEMENT NOTCH; CONDUIT BOTTOM MUST BE ABOVE PVC DRAIN BOTTOM.

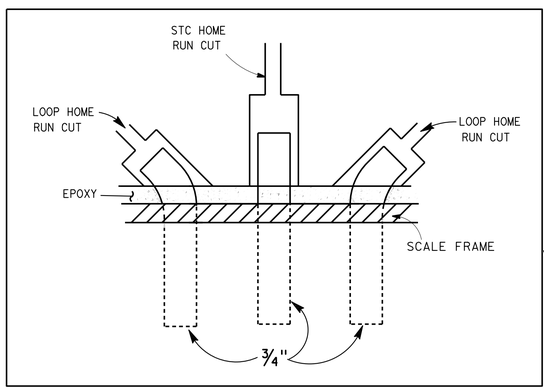

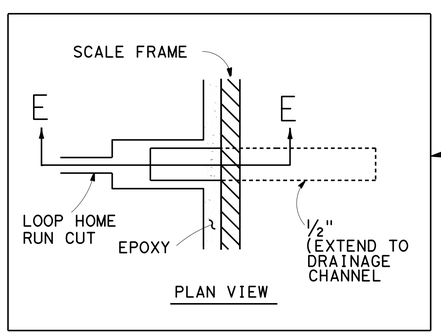

PLAN VIEW

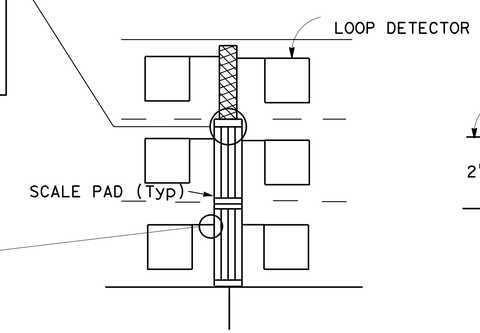

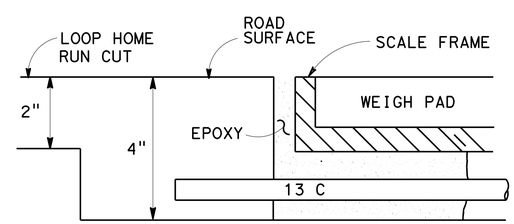

SECTION E-E

LOOP HOME RUN DETAILS

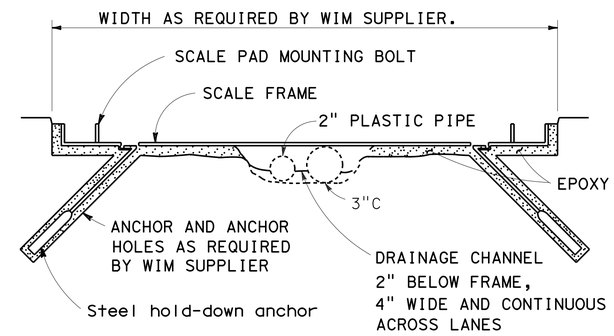

SCALE FRAME INSTALLATION DETAIL

(TYPICAL)

(DRAIN AND CONDUIT AS SHOWN AT ETW ONLY)

ELECTRICAL DETAILS

NO SCALE

E-2

STATE OF CALIFORNIA - DEPARTMENT OF TRANSPORTATION
Caltrans® **ELECTRICAL DESIGN**

FUNCTIONAL SUPERVISOR: DAVID A GONZALEZ
CALCULATED-DESIGNED BY: JAIME ESTRADA
CHECKED BY: DAVID A GONZALEZ
REVISED BY
DATE REVISED

LAST REVISION 03-03-14
DATE PLOTTED => 05-MAR-2014
TIME PLOTTED => 09:37

Dist	COUNTY	ROUTE	POST MILES TOTAL PROJECT	SHEET No.	TOTAL SHEETS
8	Riv	215	R15.0	12	26

REGISTERED ELECTRICAL ENGINEER 3-3-14 DATE

3-3-14
PLANS APPROVAL DATE

REGISTERED PROFESSIONAL ENGINEER
JAIME ESTRADA
No. E-18351
Exp. 06-30-14
ELECTRICAL
STATE OF CALIFORNIA

THE STATE OF CALIFORNIA OR ITS OFFICERS OR AGENTS SHALL NOT BE RESPONSIBLE FOR THE ACCURACY OR COMPLETENESS OF SCANNED COPIES OF THIS PLAN SHEET.

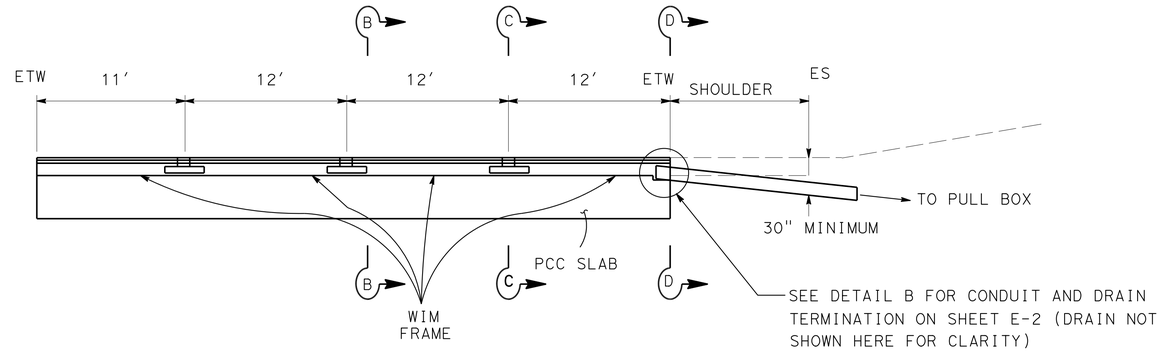

SECTION A-A

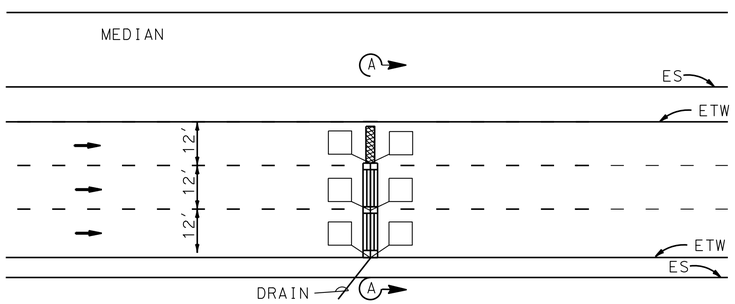

TYPICAL INSTALLATION DETAIL

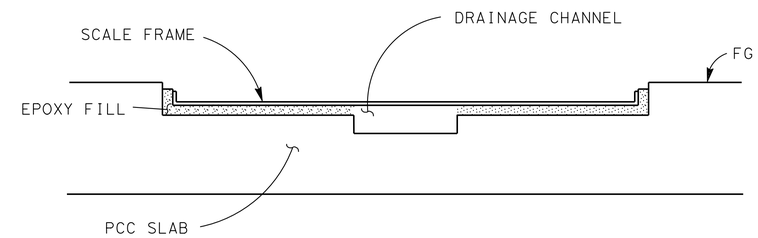

SECTION B-B

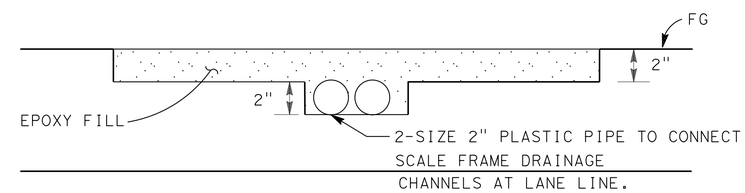

SECTION C-C

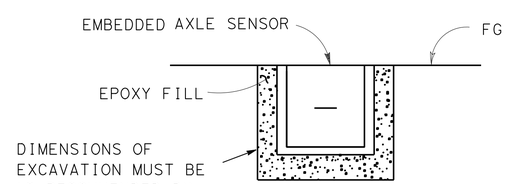

SECTION F-F

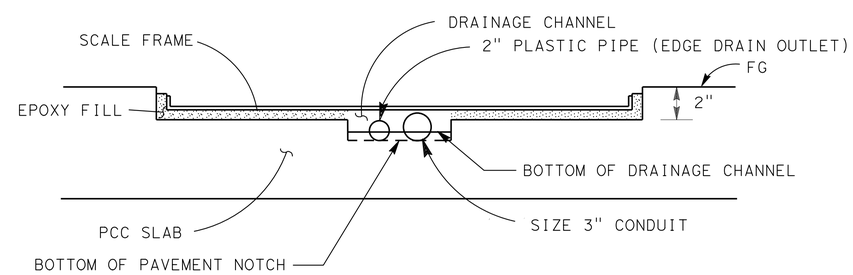

SECTION D-D

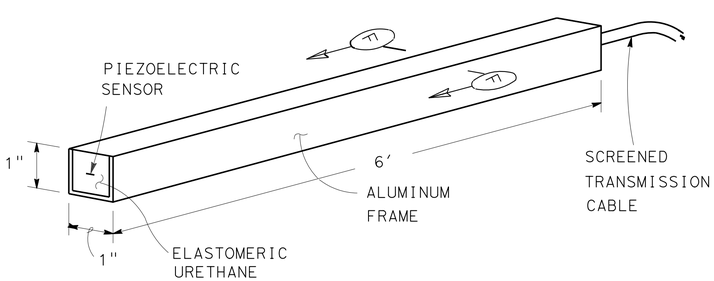

EMBEDDED AXLE SENSOR

NOTES:

1. THE EXACT LOCATION OF THE WIM SCALES TO BE DETERMINED BY THE WIM ENGINEER. THE WIM ENGINEER MUST VERIFY THE FINAL LOCATION OF THE WIM SCALES PRIOR TO THE CONTRACTOR PERFORMING ANY WORK IN THE TRAVELED WAY OR SHOULDERS. STATIONS SHOWN ON THE PLANS ARE APPROXIMATE.
2. EDGE DRAIN OUTLET SHALL CONFORM TO TYPE C OUTLET WITH OUTLET COVER AS SHOWN ON Std. PLAN D99B EXCEPT THAT PIPE SHALL BE 2".
3. WIM SCALE TO MATCH EXISTING ROADWAY PROFILE AND CROSS-SLOPE.
4. EXACT CONFINURATION AND INSTALLATION PROCEDURES OF SCALE FRAME AND LOOP DETECTORS SHALL CONFORM TO THE REQUIREMENTS OF THE WIM SUPPLIER.

ELECTRICAL DETAILS
NO SCALE

E-3

STATE OF CALIFORNIA - DEPARTMENT OF TRANSPORTATION
Caltrans® ELECTRICAL DESIGN

FUNCTIONAL SUPERVISOR: DAVID A GONZALEZ
CALCULATED-DESIGNED BY: JAIME ESTRADA
CHECKED BY: DAVID A GONZALEZ
REVISED BY
DATE REVISED

LAST REVISION 03-03-14
DATE PLOTTED => 05-MAR-2014
TIME PLOTTED => 09:37

M

Maint	MAINTENANCE
Max	MAXIMUM
MB	METAL BEAM
MBB	METAL BEAM BARRIER
MBGR	METAL BEAM GUARD RAILING
Med	MEDIAN
MGS	MIDWEST GUARDRAIL SYSTEM
MH	MANHOLE
Min	MINIMUM
Misc	MISCELLANEOUS
Misc I & S	MISCELLANEOUS IRON AND STEEL
Mkr	MARKER
Mod	MODIFIED,
	MODIFY
Mon	MONUMENT
MP	METAL PLATE
MPGR	METAL PLATE GUARD RAILING
MR	MOVEMENT RATING
MSE	MECHANICALLY STABILIZED EMBANKMENT
Mt	MOUNTAIN, MOUNT
Mtl	MATERIAL
MVP	MAINTENANCE VEHICLE PULLOUT

N

N	NORTH
NB	NORTHBOUND
No.	NUMBER (MUST HAVE PERIOD)
Nos.	NUMBERS (MUST HAVE PERIOD)
NPS	NOMINAL PIPE SIZE
NS	NEAR SIDE
NSP	NEW STANDARD PLAN
NTS	NOT TO SCALE

O

Oblr	OBLITERATE
OC	OVERCROSSING
OD	OUTSIDE DIAMETER
OF	OUTSIDE FACE
OG	ORIGINAL GROUND
OGAC	OPEN GRADED ASPHALT CONCRETE
OGFC	OPEN GRADED FRICTION COURSE
OH	OVERHEAD
OHWM	ORDINARY HIGH WATER MARK
O-O	OUT TO OUT
Opp	OPPOSITE
OSD	OVERSIDE DRAIN

P

P	PAGE
PAP	PERFORATED ALUMINUM PIPE
PB	PULL BOX
PC	POINT OF CURVATURE,
	PRECAST
PCC	POINT OF COMPOUND CURVE,
	PORTLAND CEMENT CONCRETE
PCMS	PORTABLE CHANGEABLE MESSAGE SIGN
PCP	PERFORATED CONCRETE PIPE,
	PRESTRESSED CONCRETE PIPE
PCVC	POINT OF COMPOUND VERTICAL CURVE
PEC	PERMIT TO ENTER AND CONSTRUCT
Ped	PEDESTRIAN
Ped OC	PEDESTRIAN OVERCROSSING
Ped UC	PEDESTRIAN UNDERCROSSING
Perm Mtl	PERMEABLE MATERIAL

P continued

PG	PROFILE GRADE
PI	POINT OF INTERSECTION
PJP	PARTIAL JOINT PENETRATION
Pkwy	PARKWAY
₱,PL	PLATE
P/L	PROPERTY LINE
PM	POST MILE,
	TIME FROM NOON TO MIDNIGHT
PN	PAVING NOTCH
POC	POINT OF HORIZONTAL CURVE
POT	POINT OF TANGENT
POVC	POINT OF VERTICAL CURVE
PP	PIPE PILE,
	PLASTIC PIPE,
	POWER POLE
PPL	PREFORMED PERMEABLE LINER
PPP	PERFORATED PLASTIC PIPE
PRC	POINT OF REVERSE CURVE
PRF	PAVEMENT REINFORCING FABRIC
PRVC	POINT OF REVERSE VERTICAL CURVE
PS&E	PLANS, SPECIFICATIONS AND ESTIMATES
PS, P/S	PRESTRESSED
PSP	PERFORATED STEEL PIPE
PT	POINT OF TANGENCY
PVC	POLYVINYL CHLORIDE
Pvmt	PAVEMENT

Q

Qty	QUANTITY

R

R	RADIUS
R & D	REMOVE AND DISPOSE
R & S	REMOVE AND SALVAGE
R/C	RATE OF CHANGE
RCA	REINFORCED CONCRETE ARCH
RCB	REINFORCED CONCRETE BOX
RCP	REINFORCED CONCRETE PIPE
RCPA	REINFORCED CONCRETE PIPE ARCH
Rd	ROAD
Reinf	REINFORCED,
	REINFORCEMENT,
	REINFORCING
Rel	RELOCATE
Repl	REPLACEMENT
Ret	RETAINING
Rev	REVISED, REVISION
Rdwy	ROADWAY
RHMA	RUBBERIZED HOT MIX ASPHALT
Riv	RIVER
RM	ROAD-MIXED
RP	RADIUS POINT,
	REFERENCE POINT
RR	RAILROAD
RSP	ROCK SLOPE PROTECTION,
	REVISED STANDARD PLAN
Rt	RIGHT
Rte	ROUTE
RW	REDWOOD,
	RETAINING WALL
R/W	RIGHT OF WAY
Rwy	RAILWAY

S

S	SOUTH,
	SUPPLEMENT
SAE	STRUCTURE APPROACH EMBANKMENT
Salv	SALVAGE
SAPP	STRUCTURAL ALUMINUM PLATE PIPE
SB	SOUTHBOUND
SC	SAND CUSHION
SCSP	SLOTTED CORRUGATED STEEL PIPE
SD	STORM DRAIN
Sec	SECOND,
	SECTION
Sep	SEPARATION
SG	SUBGRADE
Shld	SHOULDER
Sht	SHEET
Sim	SIMILAR
℄	STATION LINE
SM	SELECTED MATERIAL
Spec	SPECIAL,
	SPECIFICATIONS
SPP	SLOTTED PLASTIC PIPE
SS	SLOPE STAKE
SSBM	STRAP AND SADDLE BRACKET METHOD
SSD	STRUCTURAL SECTION DRAIN
SSPA	STRUCTURAL STEEL PLATE ARCH
SSPP	STRUCTURAL STEEL PLATE PIPE
SSPPA	STRUCTURAL STEEL PLATE PIPE ARCH
SSRP	STEEL SPIRAL RIB PIPE
St	STREET
Sta	STATION
STBB	SINGLE THRIE BEAM BARRIER
Std	STANDARD
Str	STRUCTURE
Surf	SURFACING
SW	SIDEWALK,
	SOUND WALL
Swr	SEWER
Sym	SYMMETRICAL
S4S	SURFACE 4 SIDES

T

T	SEMI-TANGENT
Tan	TANGENT
TBB	THRIE BEAM BARRIER
Tbr	TIMBER
TC	TOP OF CURB
TCB	TRAFFIC CONTROL BOX
TCE	TEMPORARY CONSTRUCTION EASEMENT
Tel	TELEPHONE
Temp	TEMPORARY
TG	TOP OF GRADE
Tot	TOTAL
TP	TELEPHONE POLE
TPB	TREATED PERMEABLE BASE
TPM	TREATED PERMEABLE MATERIAL
Trans	TRANSITION

T continued

TS	TRANSVERSE,
	TRAFFIC SIGNAL,
	TUBULAR STEEL
Typ	TYPICAL

U

UC	UNDERCROSSING
UD	UNDERDRAIN
UG	UNDERGROUND
UON	UNLESS OTHERWISE NOTED
UP	UNDERPASS

V

V	VALVE,
	DESIGN SPEED
Var	VARIABLE,
	VARIES
VC	VERTICAL CURVE
VCP	VITRIFIED CLAY PIPE
Vert	VERTICAL
Via	VIADUCT
Vol	VOLUME

W

W	WEST,
	WIDTH
WB	WESTBOUND
WH	WEEP HOLE
WM	WIRE MESH
WS	WATER SURFACE
WSP	WELDED STEEL PIPE
Wt	WEIGHT
WV	WATER VALVE
WW	WINGWALL
WWLOL	WINGWALL LAYOUT LINE

X

X Sec	CROSS SECTION
Xing	CROSSING

Y

Yr	YEAR
Yrs	YEARS

Dist	COUNTY	ROUTE	POST MILES TOTAL PROJECT	SHEET No.	TOTAL SHEETS
08	Riv	215	R15.0	13	26

Grace M. Tsushima
REGISTERED CIVIL ENGINEER

July 19, 2013
PLANS APPROVAL DATE

REGISTERED PROFESSIONAL ENGINEER Grace M. Tsushima No. C49814 Exp. 9-30-14 CIVIL STATE OF CALIFORNIA

THE STATE OF CALIFORNIA OR ITS OFFICERS OR AGENTS SHALL NOT BE RESPONSIBLE FOR THE ACCURACY OR COMPLETENESS OF SCANNED COPIES OF THIS PLAN SHEET.

TO ACCOMPANY PLANS DATED 3-3-14

UNIT OF MEASUREMENT SYMBOLS:

Some of the symbols used in the project plan quantity tables and in the Bid Item List are:

TABLE A

SYMBOL USED	DEFINITIONS
ACRE	ACRE
CF	CUBIC FOOT
CY	CUBIC YARD
EA	EACH
GAL	GALLON
LB	POUND
LF	LINEAR FOOT
SQFT	SQUARE FOOT
SQYD	SQUARE YARD
STA	100 FEET
TAB	TABLET
TON	2,000 POUNDS

Some of the symbols used in the plans other than in the project plan quantity tables are:

TABLE B

SYMBOL USED	DEFINITIONS
ksi	KIPS PER SQUARE INCH
ksf	KIPS PER SQUARE FOOT
psi	POUNDS PER SQUARE INCH
psf	POUNDS PER SQUARE FOOT
lb/ft^3, pcf	POUNDS PER CUBIC FOOT
tsf	TONS PER SQUARE FOOT
mph, MPH *	MILES PER HOUR
ø	NOMINAL DIAMETER
oz	OUNCE
lb	POUND
kip	1,000 POUNDS
cal	CALORIE
ft	FOOT OR FEET
gal	GALLON

* For use on a sign panel only

STATE OF CALIFORNIA
DEPARTMENT OF TRANSPORTATION

ABBREVIATIONS (SHEET 2 OF 2)

NO SCALE

RSP A10B DATED JULY 19, 2013 SUPERSEDES STANDARD PLAN A10B DATED MAY 20, 2011 - PAGE 2 OF THE STANDARD PLANS BOOK DATED 2010.

REVISED STANDARD PLAN RSP A10B

2010 REVISED STANDARD PLAN RSP A10B

6-7-13

Dist	COUNTY	ROUTE	POST MILES TOTAL PROJECT	SHEET No.	TOTAL SHEETS
08	Riv	215	R15.0	14	26

Theresa Gabriel
REGISTERED ELECTRICAL ENGINEER

July 19, 2013
PLANS APPROVAL DATE

REGISTERED PROFESSIONAL ENGINEER Theresa Aziz Gabriel No. E15129 Exp. 6-30-14 ELECTRICAL STATE OF CALIFORNIA

THE STATE OF CALIFORNIA OR ITS OFFICERS OR AGENTS SHALL NOT BE RESPONSIBLE FOR THE ACCURACY OR COMPLETENESS OF SCANNED COPIES OF THIS PLAN SHEET.

TO ACCOMPANY PLANS DATED 3-3-14

LEGEND:

AB	ABANDON. IF APPLIED TO CONDUIT, REMOVE CONDUCTORS
BC	INSTALL PULL BOX IN EXISTING CONDUIT RUN
BP	PEDESTRIAN BARRICADE, TYPE AS INDICATED ON PLAN
CB	INSTALL CONDUIT INTO EXISTING PULL BOX
CC	CONNECT NEW AND EXISTING CONDUIT. REMOVE EXISTING CONDUCTORS AND INSTALL CONDUCTORS AS INDICATED
CF	CONDUIT TO REMAIN FOR FUTURE USE. REMOVE CONDUCTORS. INSTALL PULL TAPE
DH	DETECTOR HANDHOLE
FA	FOUNDATION TO BE ABANDONED
IS	INSTALL SIGN ON SIGNAL MAST ARM
NS	NO SLIP BASE ON STANDARD
PEC	PHOTOELECTRIC CONTROL
PEU	PHOTOELECTRIC UNIT
RC	EQUIPMENT OR MATERIAL TO BE REMOVED AND BECOME THE PROPERTY OF THE CONTRACTOR
RE	REMOVE ELECTROLIER, FUSES AND BALLAST. TAPE ENDS OF CONDUCTORS
RL	RELOCATE EQUIPMENT
RR	REMOVE AND REUSE EQUIPMENT
RS	REMOVE AND SALVAGE EQUIPMENT
SC	SPLICE NEW TO EXISTING CONDUCTORS
SD	SERVICE DISCONNECT
TSP	TELEPHONE SERVICE POINT

ABBREVIATIONS

APS	ACCESSIBLE PEDESTRIAN SIGNAL
BBS	BATTERY BACKUP SYSTEM
BC	BOLT CIRCLE
BPB	BICYCLE PUSH BUTTON
C	CONDUIT
CB	CIRCUIT BREAKER
CCTV	CLOSED CIRCUIT TELEVISION
Ckt	CIRCUIT
CMS	CHANGEABLE MESSAGE SIGN
Ctid	CALTRANS IDENTIFICATION
Comm	COMMUNICATION
DLC	LOOP DETECTOR LEAD-IN CABLE
EMS	EXTINGUISHABLE MESSAGE SIGN
EVUC	EMERGENCY VEHICLE UNIT CABLE
EVUD	EMERGENCY VEHICLE UNIT DETECTOR
FB	FLASHING BEACON
FBCA	FLASHING BEACON CONTROL ASSEMBLY
FBS	FLASHING BEACON WITH SLIP BASE
FO	FIBER OPTIC
G	EQUIPMENT GROUNDING CONDUCTOR
GB	GROUND BUS
GFCI	GROUND FAULT CIRCUIT INTERRUPTER
HAR	HIGHWAY ADVISORY RADIO
Hex	HEXAGONAL
HPS	HIGH PRESSURE SODIUM
IISNS	INTERNALLY ILLUMINATED STREET NAME SIGN
ISL	INDUCTION SIGN LIGHTING
LED	LIGHT EMITTING DIODE
LMA	LUMINAIRE MAST ARM
LPS	LOW PRESSURE SODIUM
Ltg	LIGHTING
Lum	LUMINAIRE
M	METERED
MAT	MAST ARM MOUNTING TOP ATTACHMENT
MAS	MAST ARM MOUNTING SIDE ATTACHMENT
M/M	MULTIPLE TO MULTIPLE TRANSFORMER
Mtg	MOUNTING
MV	MERCURY VAPOR LIGHTING FIXTURE
MVDS	MICROWAVE VEHICLE DETECTION SYSTEM
N	NEUTRAL (GROUNDED CONDUCTOR)
NB	NEUTRAL BUS
NC	NORMALLY CLOSE
NO	NORMALLY OPEN
P	CIRCUIT BREAKER'S POLE
PB	PULL BOX
PBA	PUSH BUTTON ASSEMBLY
PEC	PHOTOELECTRIC CONTROL
Ped	PEDESTRIAN
PEU	PHOTOELECTRIC UNIT
PT	CONDUIT WITH PULL TAPE
RE	RELOCATED EQUIPMENT
RM	RAMP METERING
RWIS	ROADSIDE WEATHER INFORMATION SYSTEM
SB	SLIP BASE
SIC	SIGNAL INTERCONNECT CABLE
Sig	SIGNAL
SMA	SIGNAL MAST ARM
SNS	STREET NAME SIGN
SP	SERVICE POINT
TDC	TELEPHONE DEMARCATION CABINET
TMS	TRAFFIC MONITORING STATION
TOS	TRAFFIC OPERATIONS SYSTEM
Veh	VEHICLE
VIVDS	VIDEO IMAGE VEHICLE DETECTION SYSTEM
WIM	WEIGH-IN-MOTION
Xfmr	TRANSFORMER

SOFFIT AND WALL MOUNTED LUMINAIRES

PENDANT, 70 W HPS UNLESS OTHERWISE SPECIFIED

FLUSH, 70 W HPS UNLESS OTHERWISE SPECIFIED

WALL SURFACE, 70 W HPS UNLESS OTHERWISE SPECIFIED

EXISTING SOFFIT OR WALL LUMINAIRE TO REMAIN UNMODIFIED

EXISTING SOFFIT OR WALL LUMINAIRE TO BE MODIFIED AS SPECIFIED

NOTE:

Arrow indicates "street side" of luminaire.

COMMONLY USED SYMBOLS FOR UNITED STATES CUSTOMARY UNITS OF MEASUREMENT:

SYMBOL USED	DEFINITIONS
Ω	OHMS
min	MINUTE
s	SECOND
bps	BITS PER SECOND
Bps	BYTES PER SECOND
A	AMPERE
V	VOLT
V(dc)	VOLT (DIRECT CURRENT)
V(ac)	VOLT (ALTERNATING CURRENT)
FC	FOOT - CANDLE
W	WATTS
VA	VOLT-AMPERE
M	MEGA
k	KILO
m	MILLI
μ	MICRO
P	PICO
Hz	HERTZ

MISCELLANEOUS ELECTROLIERS

NEW	EXISTING	
		LUMINAIRE ON WOOD POLE
		NON-STANDARD ELECTROLIER (SEE PROJECT NOTES OR PROJECT PLANS)
		CITY ELECTROLIER
		ELECTROLIER FOUNDATION (FUTURE INSTALLATION)

NOTES:

1. HPS luminaires shall be 310 W HPS when installed on Type 21, 21D, 30, 31 and 32 Standards, unless otherwise specified. HPS luminaires shall be 200 W when installed on other type standards or poles, unless otherwise specified.
2. LED luminaires shall be 235 W when installed on Type 21, 21D, 30, 31 and 32 Standards, unless otherwise specified. LED luminaires shall be 165 W when installed on other type standards or poles, unless otherwise specified.
3. Luminaires shall be the cutoff type, ANSI Type III medium cutoff lighting distribution, unless otherwise specified.

STANDARD ELECTROLIER

NEW	EXISTING	STANDARD TYPE
		15
		15D
		15 STRUCTURE
		15D STRUCTURE
		21
		21D
		21 STRUCTURE
		21D STRUCTURE
		30
		31
		32

STATE OF CALIFORNIA
DEPARTMENT OF TRANSPORTATION

ELECTRICAL SYSTEMS (LEGEND AND ABBREVIATIONS)

NO SCALE

RSP ES-1A DATED JULY 19, 2013 SUPERSEDES STANDARD PLAN ES-1A DATED MAY 20, 2011 - PAGE 425 OF THE STANDARD PLANS BOOK DATED 2010.

REVISED STANDARD PLAN RSP ES-1A

2010 REVISED STANDARD PLAN RSP ES-1A

Dist	COUNTY	ROUTE	POST MILES TOTAL PROJECT	SHEET No.	TOTAL SHEETS
08	Riv	215	R15.0	15	26

Theresa Gabriel
REGISTERED ELECTRICAL ENGINEER

July 19, 2013
PLANS APPROVAL DATE

REGISTERED PROFESSIONAL ENGINEER
Theresa Aziz Gabriel
No. E15129
Exp. 6-30-14
ELECTRICAL
STATE OF CALIFORNIA

THE STATE OF CALIFORNIA OR ITS OFFICERS OR AGENTS SHALL NOT BE RESPONSIBLE FOR THE ACCURACY OR COMPLETENESS OF SCANNED COPIES OF THIS PLAN SHEET.

TO ACCOMPANY PLANS DATED _____

CONDUIT

NEW	EXISTING	
		LIGHTING CONDUIT, UNLESS OTHERWISE INDICATED OR NOTED
		TRAFFIC SIGNAL CONDUIT
C	c	COMMUNICATION CONDUIT
T	t	TELEPHONE CONDUIT
F	f	FIRE ALARM CONDUIT
FO	fo	FIBER OPTIC CONDUIT
		CONDUIT TERMINATION
R	r	CONDUIT RISER ATTACHED TO THE STRUCTURE OR SERVICE POLE

SERVICE EQUIPMENT

NEW	EXISTING	
OH	oh	OVERHEAD LINES
U	U	WOOD POLE, "U" INDICATES UTILITY OWNED
		POLE GUY WITH ANCHOR
		UTILITY TRANSFORMER - GROUND MOUNTED
III	III	SERVICE EQUIPMENT ENCLOSURE TYPE. DOOR INDICATES FRONT OF ENCLOSURE
T	t	TELEPHONE DEMARCATION CABINET

POLE-MOUNTED SERVICE DESIGNATION

TYPE H SERVICE, 28'-10" — TYPE OF INSTALLATION AND POLE HEIGHT ABOVE GRADE

FLASHING BEACON

NEW	EXISTING	
R	R	FLASHING BEACON (ONE VEHICLE SIGNAL HEAD WITH BACKPLATE AND VISOR) "R" INDICATES RED INDICATION, "Y" INDICATES YELLOW INDICATION
Y Y	Y Y	FLASHING BEACON WITH TYPE 15-FBS STANDARD AND A SIGN.
R R	R R	FLASHING BEACON WITH TYPES 9, 9A OR 9B SIGN UNLESS OTHERWISE SPECIFIED OR INDICATED

SIGNAL EQUIPMENT

NEW	EXISTING	
C	C	PEDESTRIAN SIGNAL HEAD "C" INDICATES COUNTDOWN PEDESTRIAN HEAD
		PUSH BUTTON ASSEMBLY POST
		PEDESTRIAN BARRICADE
		VEHICLE SIGNAL HEAD (WITH BACKPLATE AND 3-SECTIONS: RED, YELLOW AND GREEN)
		VEHICLE SIGNAL HEAD WITH ANGLE VISOR
PV	PV	MODIFICATIONS OF BASIC SYMBOL: "L" INDICATES ALL NON-ARROW SECTIONS LOUVERED "LG" INDICATES LOUVERED GREEN SECTION ONLY "PV" INDICATES ALL 12" SECTIONS PROGRAMMED VISIBILITY "8" INDICATES ALL 8" SECTIONS (ONLY WHEN SPECIFIED)
		VEHICLE SIGNAL HEAD CONSISTING OF RED, YELLOW AND GREEN LEFT ARROW SECTIONS
		VEHICLE SIGNAL HEAD CONSISTING OF RED AND YELLOW SECTIONS WITH AN UP GREEN ARROW SECTION
		VEHICLE SIGNAL HEAD (5 SECTION) CONSISTING OF RED, YELLOW AND GREEN SECTIONS WITH YELLOW AND GREEN RIGHT ARROW SECTIONS
		TYPE 15TS STANDARD WITH VEHICLE SIGNAL HEAD AND LUMINAIRE
		TYPE 21TS STANDARD WITH VEHICLE SIGNAL HEAD AND LUMINAIRE
		STANDARD WITH LUMINAIRE AND SIGNAL MAST ARMS AND ATTACHED VEHICLE SIGNAL HEADS
		TYPE 1 STANDARD WITH ATTACHED VEHICLE SIGNAL HEADS
		STANDARD WITH A SIGNAL MAST ARM, ATTACHED VEHICLE SIGNAL HEADS AND INTERNALLY ILLUMINATED STREET NAME SIGN
		CONTROLLER ASSEMBLY. DOOR INDICATES FRONT OF CABINET

SIGNAL EQUIPMENT Cont

NEW	EXISTING	
		GUARD POST
		TYPE 1 STANDARD WITH RAMP METERING SIGN
		OPTICAL DETECTOR FOR THE EMERGENCY VEHICLE DETECTION SYSTEM

NOTES:

1. All signal sections shall be 12" unless shown otherwise.
2. Signal heads shall be provided with backplates unless shown otherwise.

ILLUMINATED OVERHEAD SIGN

NEW	EXISTING	
		SINGLE POST, SINGLE ILLUMINATED SIGN, BALANCED BUTTERFLY
		SINGLE POST, DOUBLE ILLUMINATED SIGN, BALANCED BUTTERFLY
		SINGLE POST, SINGLE ILLUMINATED SIGN, FULL CANTILEVER
		DOUBLE POST, SINGLE ILLUMINATED SIGN
		SINGLE ILLUMINATED SIGN MOUNTED ON STRUCTURE
		DOUBLE POST, SINGLE ILLUMINATED SIGN WITH ELECTROLIER

STATE OF CALIFORNIA
DEPARTMENT OF TRANSPORTATION

ELECTRICAL SYSTEMS (LEGEND AND ABBREVIATIONS)

NO SCALE

RSP ES-1B DATED JULY 19, 2013 SUPERSEDES STANDARD PLAN ES-1B DATED MAY 20, 2011 - PAGE 426 OF THE STANDARD PLANS BOOK DATED 2010.

REVISED STANDARD PLAN RSP ES-1B

2010 REVISED STANDARD PLAN RSP ES-1B

7-15-13

Dist	COUNTY	ROUTE	POST MILES TOTAL PROJECT	SHEET No.	TOTAL SHEETS
08	Riv	215	R15.0	16	26

Theresa Gabriel
REGISTERED ELECTRICAL ENGINEER

July 19, 2013
PLANS APPROVAL DATE

REGISTERED PROFESSIONAL ENGINEER
Theresa Aziz Gabriel
No. E15129
Exp. 6-30-14
ELECTRICAL
STATE OF CALIFORNIA

THE STATE OF CALIFORNIA OR ITS OFFICERS OR AGENTS SHALL NOT BE RESPONSIBLE FOR THE ACCURACY OR COMPLETENESS OF SCANNED COPIES OF THIS PLAN SHEET.

TO ACCOMPANY PLANS DATED 3-3-14

EQUIPMENT IDENTIFICATION

ILLUMINATED SIGN IDENTIFICATION NUMBER:

SIGN No. 12345
10 ISL SCI 1.0

- SIGN NUMBER - PLACE ON POST OR STRUCTURE
- TRANSFORMER RATING (kVA)
- LIGHTING CONTROL TYPE
- NUMBER AND TYPE OF FIXTURES

DO NOT PLACE ON STANDARD OR STRUCTURE

ELECTROLIER OR EQUIPMENT IDENTIFICATION NUMBER:

12345 - 15'-0"

- MAST ARM LENGTH, IF SHOWN. DO NOT PLACE ON STANDARD OR STRUCTURE
- EQUIPMENT NUMBER - PLACE ON STANDARD OR STRUCTURE. EXISTING EQUIPMENT NUMBERS ARE SHOWN IN PARENTHESIS

CONDUIT AND CONDUCTOR IDENTIFICATION:

1½"C, 2#10, 15#14, 2 DLC, 12P#18 (PAIR)

- NUMBER AND SIZE OF CONDUCTORS AND CABLES
- SIZE OF CONDUIT IN INCHES

ø1, ø2, ø2P, etc.	TRAFFIC PHASE IDENTIFICATION FOR SIGNAL FACES, DETECTORS AND PHASE DIAGRAMS
1 2 3	LEGEND NUMBERS
A B C	EQUIPMENT, SIGNAL POLES, INSTALLATION OR ITEMS
1 2 3	CONDUIT RUN NUMBERS

SIGNAL AND LIGHTING STANDARD (TYPICAL DESIGNATION):

19A - 3 - 100

- WIND VELOCITY = 100 mph
- CASE 3 ARM LOADING
- STANDARD TYPE
- STANDARD PLAN SHEET NUMBER
- DETAIL, NUMBER, SECTION, TYPE OR ELEVATION

MISCELLANEOUS EQUIPMENT

NEW	EXISTING	
CMS	cms	CHANGEABLE MESSAGE SIGN
		CLOSED CIRCUIT TELEVISION CAMERA
		HIGHWAY ADVISORY RADIO POLE AND ANTENNA
EMS	ems	EXTINGUISHABLE MESSAGE SIGN
M V	m v	DETECTION DEVICE M = MICROWAVE SENSOR V = VIDEO IMAGE SENSOR

WIRING DIAGRAM LEGEND

----	EXTERNAL CONDUCTOR
	CONDUCTOR OR BUS
	TIE POINT
	CONTACTOR COIL
	CONTACTOR, NO CONTACT
	TERMINAL BLOCKS
	CONTACTOR, NC CONTACT
	ENCLOSURE BOND
	GROUNDING ELECTRODE
	CIRCUIT BREAKER
	RECEPTACLE

PULL BOXES

NEW	EXISTING	
		PULL BOX, No. 5 UNLESS OTHERWISE INDICATED OR NOTED
3	9A(21)	PULL BOX, ADDITIONAL DESIGNATIONS OR DESCRIPTIONS

3 No. 3½ PULL BOX
5 No. 5 PULL BOX
6 No. 6 PULL BOX
7 No. 7 (CEILING PULL BOX)
8 No. 8 (PENDANT SOFFIT PULL BOX)
9 No. 9 PULL BOX
9A No. 9A PULL BOX

(C) COMMUNICATIONS PULL BOX
(E) PULL BOX WITH EXTENSION
(S) SPRINKLER CONTROL PULL BOX
(21) ANCHOR BOLTS AND CONDUIT FOR FUTURE INSTALLATION OF TYPE 21 STANDARD
(T) TRAFFIC PULL BOX

VEHICLE DETECTORS

5 J 9 U

- VEHICLE DETECTOR DESIGNATION
- U = UPPER
  L = LOWER
- SLOT NUMBER IN INPUT FILE
- INPUT FILE (I OR J)
- PHASE

NEW	EXISTING	
		TYPE A DETECTOR LOOP. OUTLINE OF SAWCUT SHOWN
		TYPE B DETECTOR LOOP. OUTLINE OF SAWCUT SHOWN
		TYPE C DETECTOR LOOP. OUTLINE OF SAWCUT SHOWN
		TYPE D DETECTOR LOOP. OUTLINE OF SAWCUT SHOWN
		TYPE E DETECTOR LOOP. OUTLINE OF SAWCUT SHOWN
		TYPE Q DETECTOR LOOP. OUTLINE OF SAWCUT SHOWN
		MAGNETIC DETECTOR
DH	dh	DETECTOR HANDHOLE
		MICROWAVE OR VIDEO DETECTION ZONE

STATE OF CALIFORNIA
DEPARTMENT OF TRANSPORTATION

ELECTRICAL SYSTEMS (LEGEND AND ABBREVIATIONS)

NO SCALE

RSP ES-1C DATED JULY 19, 2013 SUPERSEDES STANDARD PLAN ES-1C DATED MAY 20, 2011 - PAGE 427 OF THE STANDARD PLANS BOOK DATED 2010.

REVISED STANDARD PLAN RSP ES-1C

2010 REVISED STANDARD PLAN RSP ES-1C

7-11-13

Dist	COUNTY	ROUTE	POST MILES TOTAL PROJECT	SHEET No.	TOTAL SHEETS
08	Riv	215	R15.0	17	26

Theresa Gabriel
REGISTERED ELECTRICAL ENGINEER

July 19, 2013
PLANS APPROVAL DATE

REGISTERED PROFESSIONAL ENGINEER Theresa Aziz Gabriel No. E15129 Exp. 6-30-14 ELECTRICAL STATE OF CALIFORNIA

THE STATE OF CALIFORNIA OR ITS OFFICERS OR AGENTS SHALL NOT BE RESPONSIBLE FOR THE ACCURACY OR COMPLETENESS OF SCANNED COPIES OF THIS PLAN SHEET.

TO ACCOMPANY PLANS DATED 3-3-14

2010 REVISED STANDARD PLAN RSP ES-5B

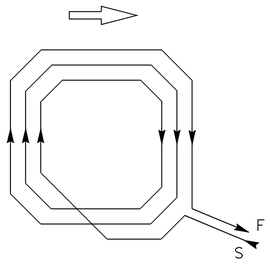

WINDING DETAIL

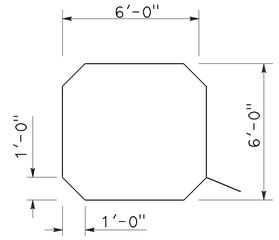

SAWCUT DETAIL

TYPE A LOOP DETECTOR CONFIGURATION

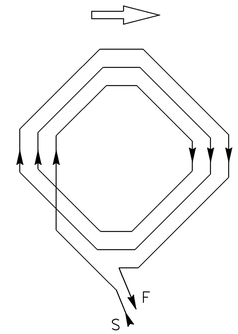

WINDING DETAIL

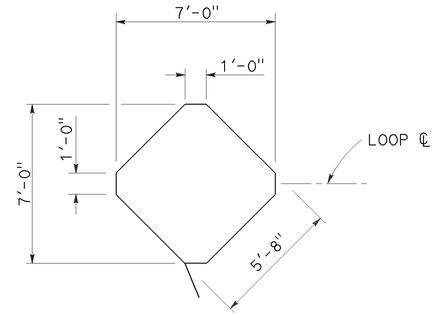

SAWCUT DETAIL

TYPE B LOOP DETECTOR CONFIGURATION

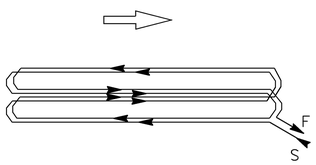

WINDING DETAIL

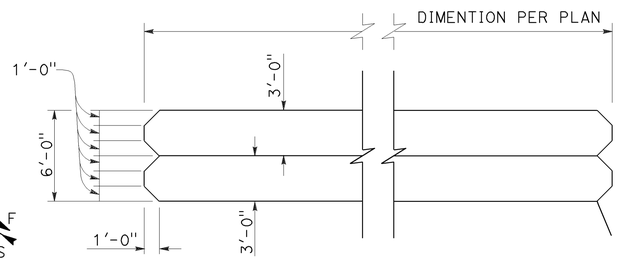

SAWCUT DETAIL

TYPE C LOOP DETECTOR CONFIGURATION

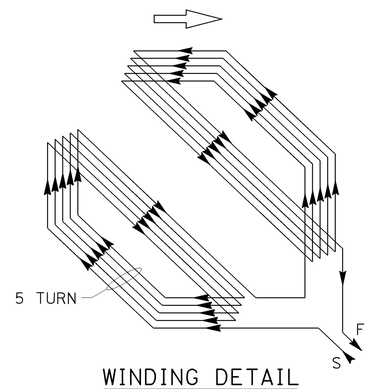

WINDING DETAIL

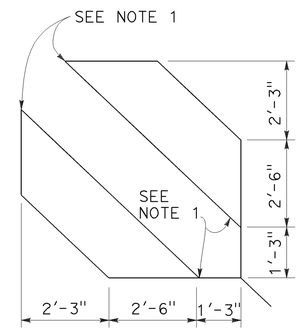

SAWCUT DETAIL

TYPE D LOOP DETECTOR CONFIGURATION

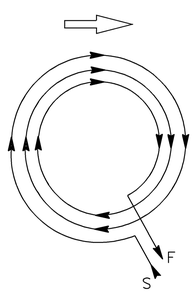

WINDING DETAIL

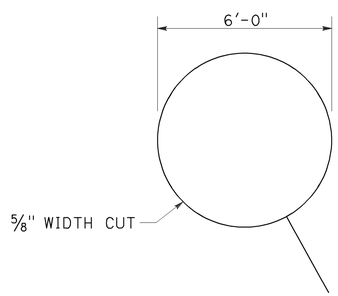

SAWCUT DETAIL

TYPE E LOOP DETECTOR CONFIGURATION

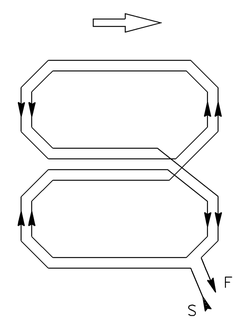

WINDING DETAIL

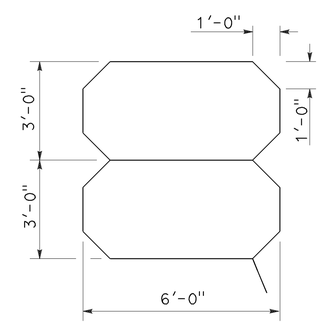

SAWCUT DETAIL

TYPE Q LOOP DETECTOR CONFIGURATION

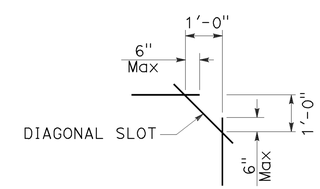

PLAN VIEW OF DIAGONAL SLOT AT CORNERS

NOTES:

1. Round corners of acute angle sawcuts to prevent damage to conductors.
2. Typical distance separating loops from edge to edge is 10' for Type A, B, D and E installation in single lane.

STATE OF CALIFORNIA
DEPARTMENT OF TRANSPORTATION

ELECTRICAL SYSTEMS (DETECTORS)

NO SCALE

RSP ES-5B DATED JULY 19, 2013 SUPERSEDES STANDARD PLAN ES-5B DATED MAY 20, 2011 - PAGE 449 OF THE STANDARD PLANS BOOK DATED 2010.

REVISED STANDARD PLAN RSP ES-5B

Dist	COUNTY	ROUTE	POST MILES TOTAL PROJECT	SHEET No.	TOTAL SHEETS
08	Riv	215	R15.0	18	26

Theresa Gabriel
REGISTERED ELECTRICAL ENGINEER

July 19, 2013
PLANS APPROVAL DATE

REGISTERED PROFESSIONAL ENGINEER Theresa Aziz Gabriel No. E15129 Exp. 6-30-14 ELECTRICAL STATE OF CALIFORNIA

THE STATE OF CALIFORNIA OR ITS OFFICERS OR AGENTS SHALL NOT BE RESPONSIBLE FOR THE ACCURACY OR COMPLETENESS OF SCANNED COPIES OF THIS PLAN SHEET.

TO ACCOMPANY PLANS DATED 3-3-14

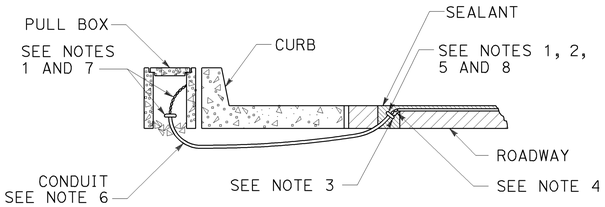

TYPE A
CURB TERMINATION DETAIL

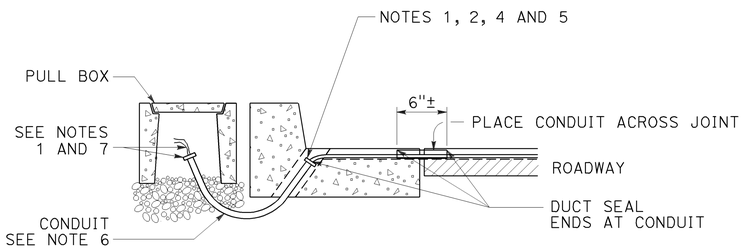

CROSS SECTION

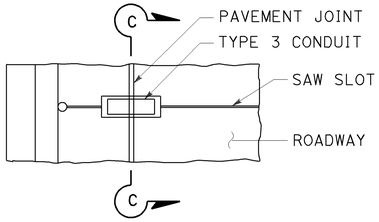

PLAN VIEW

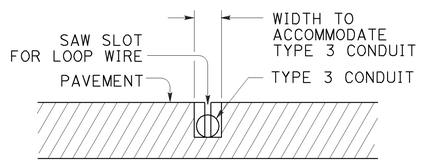

SECTION C-C

TYPE B
CURB TERMINATION DETAIL

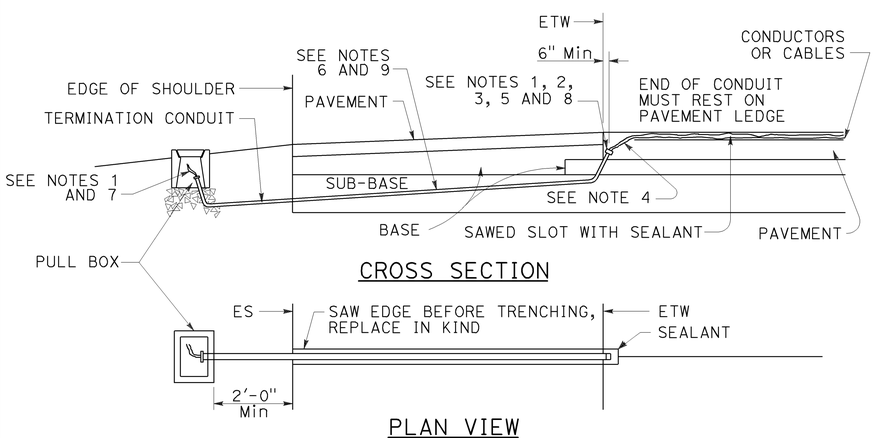

CROSS SECTION

PLAN VIEW

SHOULDER TERMINATION DETAILS

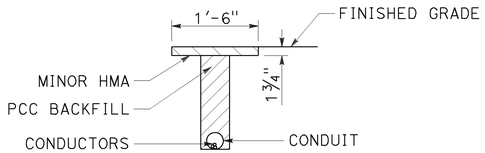

"T" TRENCH
DETAIL T

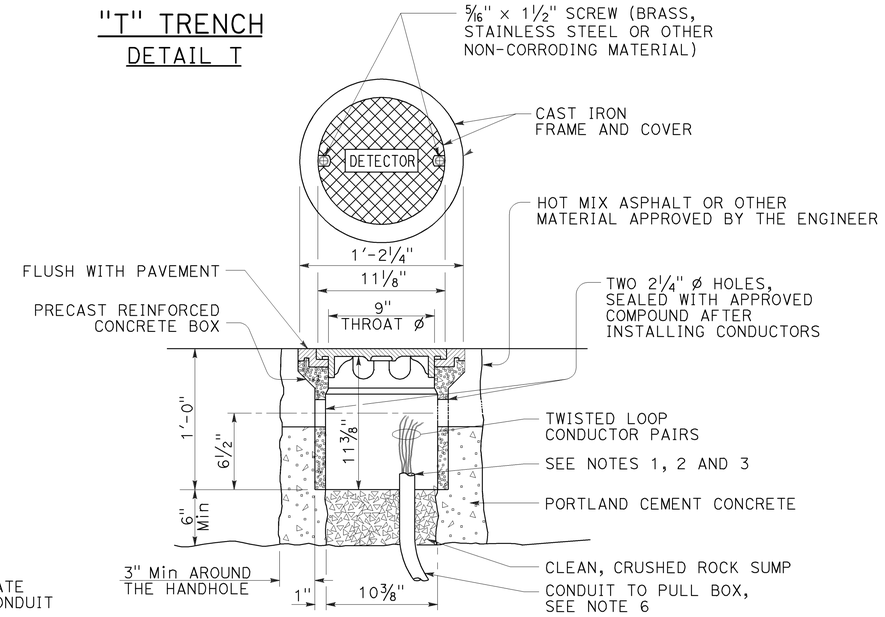

DETECTOR HANDHOLE DETAIL

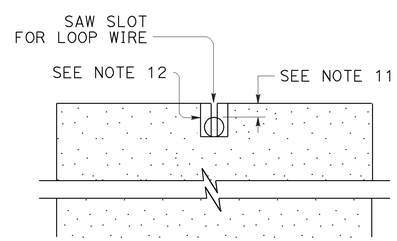

SECTION A-A

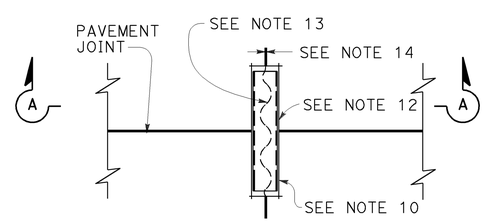

PLAN VIEW

TYPICAL LOOP LEAD-IN DETAIL
AT PAVEMENT JOINT

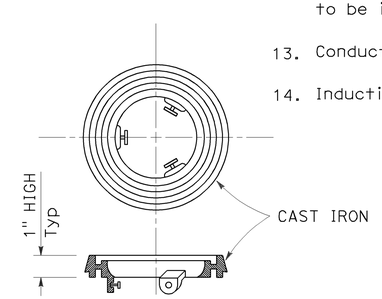

LOCKING GRADE RING

NOTES:

1. Bushing shall be used at end of conduit.
2. Tape detector conductors or cables 3" each side of bushings.
3. Install duct seal compound to each end of termination conduit before installing sealant.
4. Round all sharp edges where detector conductors or cables have to pass.
5. End of conduit shall be 3⅛" below roadway surface.
6.

Conduit size	Loop conductors
1"C minimum	1 to 2 pairs
1½"C minimum	3 to 4 pairs
2"C minimum	5 or more pairs

7. Splice detector conductors or cables to detector lead-in-cable.
8. Location of detector handhole when shown on plans.
9. When the shoulder and traveled way are paved with the same material and there is no joint between them, the conduit shall extend only 2'-0" into the shoulder pavement.
10. ¾"C, Type 3 conduit 6" long minimum, plug both ends with duct compound to keep out sealant.
11. ½" Minimum between top of conduit and pavement surface.
12. Sawcut shall not exceed 1" in width and ⅛" longer than conduit to be installed.
13. Conductors with ½" minimum slack inside conduit.
14. Inductive loop detector saw slot.

STATE OF CALIFORNIA
DEPARTMENT OF TRANSPORTATION

ELECTRICAL SYSTEMS (CURB TERMINATION AND HANDHOLE)

NO SCALE

RSP ES-5D DATED JULY 19, 2013 SUPERSEDES STANDARD PLAN ES-5D DATED MAY 20, 2011 - PAGE 451 OF THE STANDARD PLANS BOOK DATED 2010.

REVISED STANDARD PLAN RSP ES-5D

2010 REVISED STANDARD PLAN RSP ES-5D

7-9-13

Dist	COUNTY	ROUTE	POST MILES TOTAL PROJECT	SHEET No.	TOTAL SHEETS
08	Riv	215	R15.0	19	26

William K. Farnbach
REGISTERED CIVIL ENGINEER

July 19, 2013
PLANS APPROVAL DATE

REGISTERED PROFESSIONAL ENGINEER
William K. Farnbach
No. C49042
Exp. 9-30-14
CIVIL
STATE OF CALIFORNIA

THE STATE OF CALIFORNIA OR ITS OFFICERS OR AGENTS SHALL NOT BE RESPONSIBLE FOR THE ACCURACY OR COMPLETENESS OF SCANNED COPIES OF THIS PLAN SHEET.

TO ACCOMPANY PLANS DATED 3-3-14

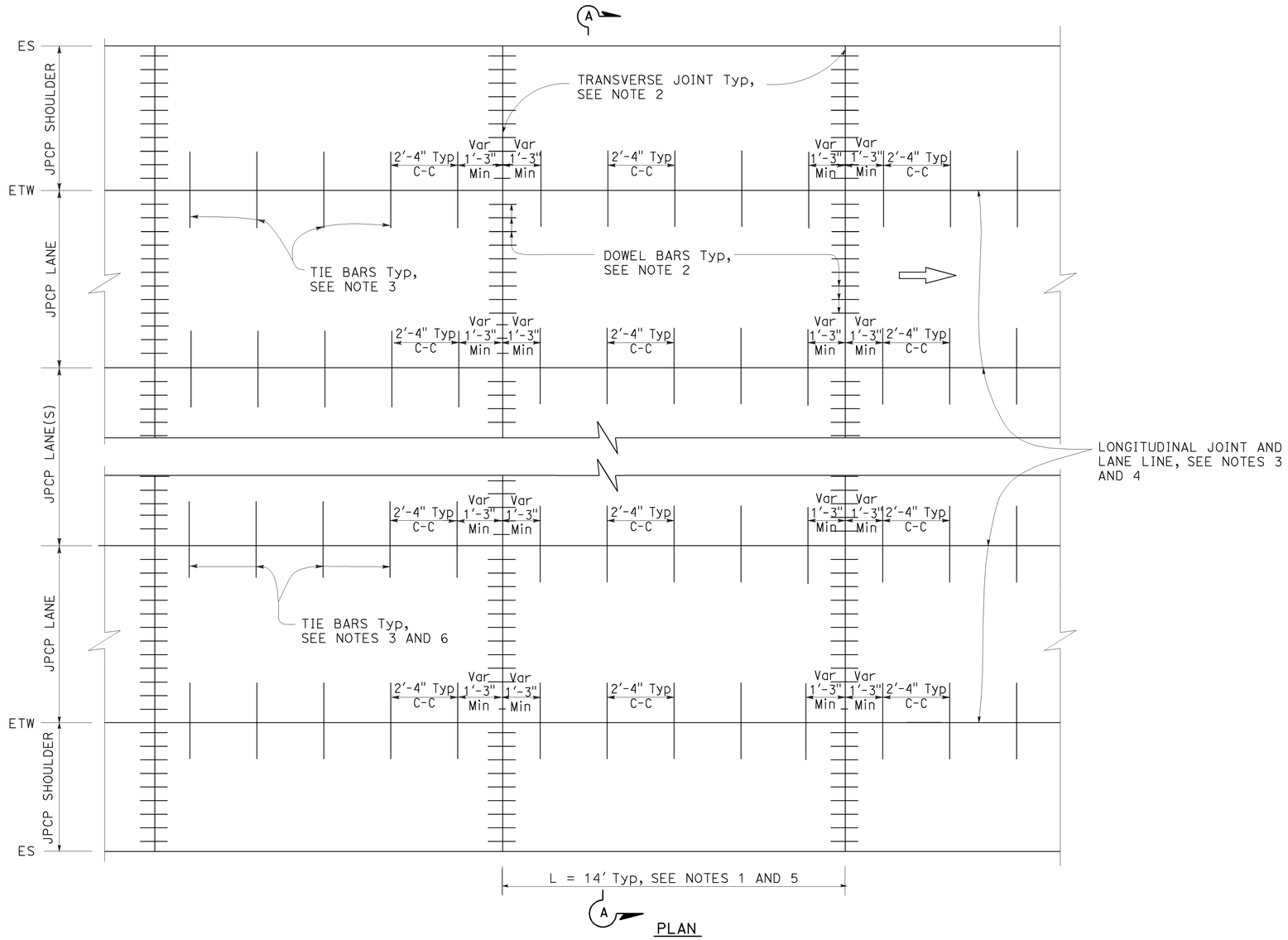

PLAN

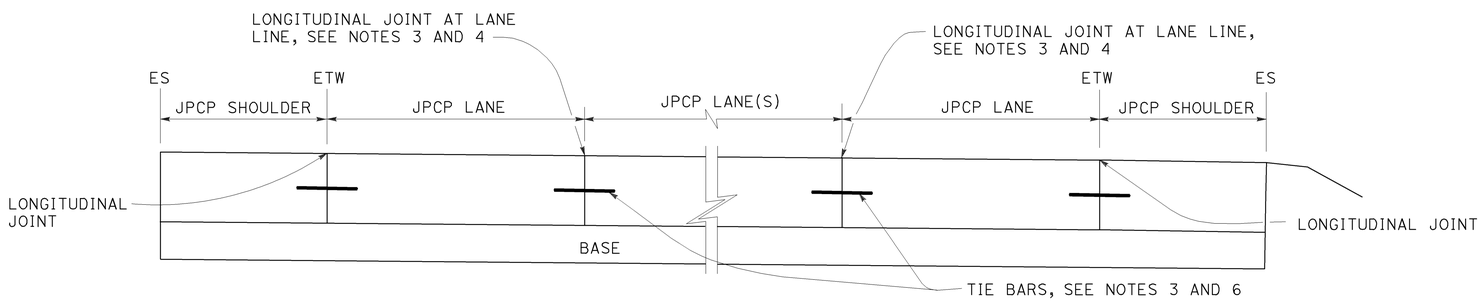

SECTION A-A

NOTES:

1. Transverse joint spacing may be adjusted to no less than 10' and no more than 14' to conform to bridges, change in pavement type, and hardened concrete pavement.
2. For transverse joint and dowel bar details not shown, see Revised Standard Plan RSP P10.
3. For longitudinal joint and tie bar details not shown, see Revised Standard Plan RSP P15.
4. For additional longitudinal joint layout details, see Revised Standard Plan RSP P18.
5. For joint layout at intersections, see Project Plans.
6. For dowel bars at longitudinal joint. see Revised Standard Plan RSP P18.

STATE OF CALIFORNIA
DEPARTMENT OF TRANSPORTATION

JOINTED PLAIN CONCRETE PAVEMENT NEW CONSTRUCTION

NO SCALE

RSP P1 DATED JULY 19, 2013 SUPERSEDES STANDARD PLAN P1
DATED MAY 20, 2011 - PAGE 125 OF THE STANDARD PLANS BOOK DATED 2010.

REVISED STANDARD PLAN RSP P1

2010 REVISED STANDARD PLAN RSP P1

5-31-13

Dist	COUNTY	ROUTE	POST MILES TOTAL PROJECT	SHEET No.	TOTAL SHEETS
08	Riv	215	R15.0	20	26

William K. Farnbach
REGISTERED CIVIL ENGINEER

July 19, 2013
PLANS APPROVAL DATE

REGISTERED PROFESSIONAL ENGINEER William K. Farnbach No. C49042 Exp. 9-30-14 CIVIL STATE OF CALIFORNIA

THE STATE OF CALIFORNIA OR ITS OFFICERS OR AGENTS SHALL NOT BE RESPONSIBLE FOR THE ACCURACY OR COMPLETENESS OF SCANNED COPIES OF THIS PLAN SHEET.

TO ACCOMPANY PLANS DATED 3-3-14

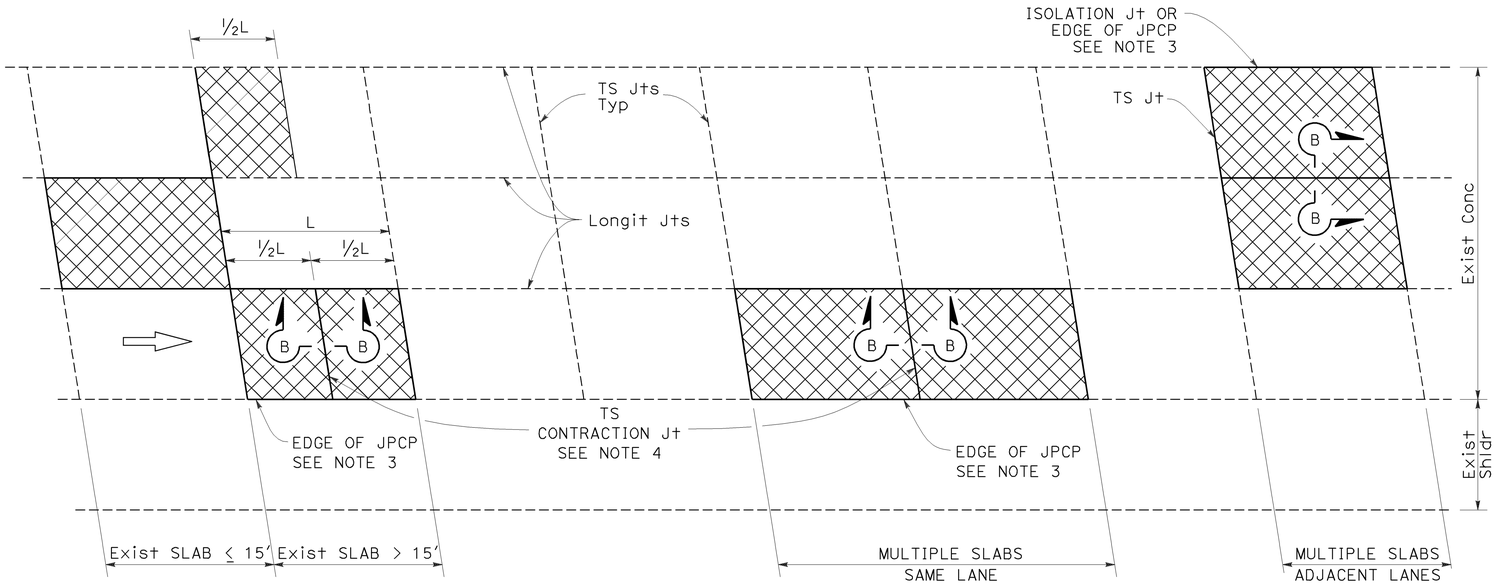

PLAN

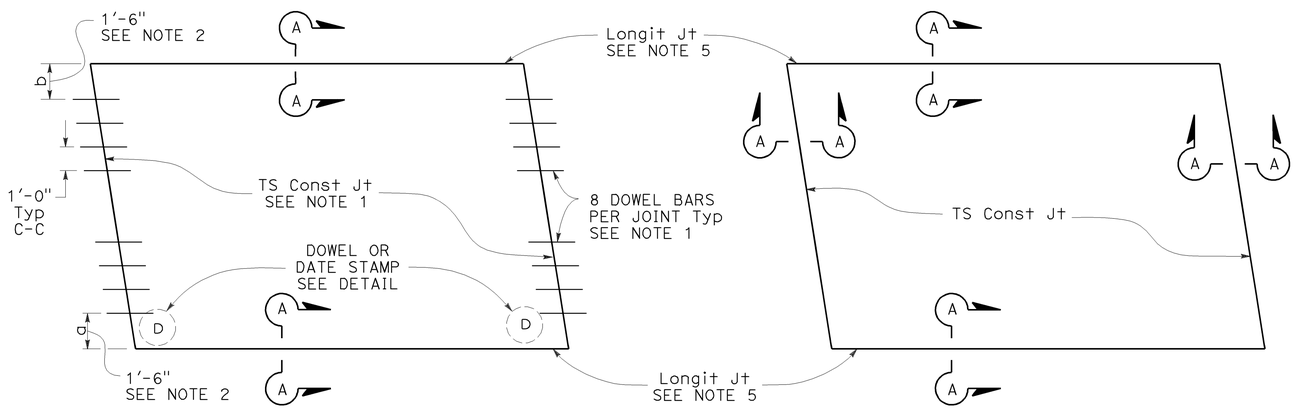

TYPE I
See Design Note 1

TYPE II
See Design Note 2

SLAB LAYOUT

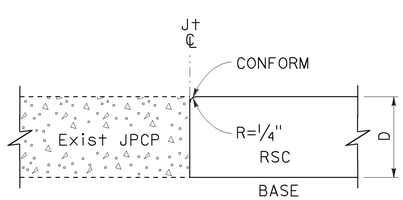

SECTION A-A

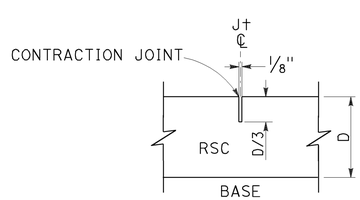

SECTION B-B

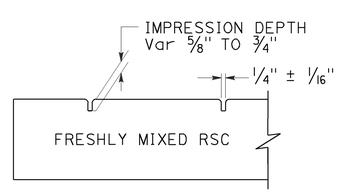

SECTION C-C

LEGEND:

RSC RAPID STRENGTH CONCRETE

INDIVIDUAL SLAB REPLACEMENT WITH RSC

NOTES:

1. For details not shown, see Revised Standard Plan RSP P10.
2. Where the existing outside shoulder is asphalt concrete pavement, "a" = 1'-0" and "b" = 2'-0".
3. Use side forms where edge of RSC pavement is adjacent to asphalt concrete.
4. Transverse contraction joint to match skew of existing joint. Omit dowel bars.
5. Do not place tie bars at longitudinal joints.

DESIGN NOTES:

1. For concrete slab repair with at least 5 years design life.
2. For short term repairs < 5 yrs design life or for slab replacements with cracking and seating.

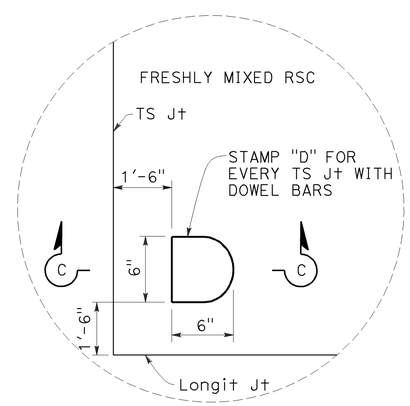

DOWEL STAMP DETAIL

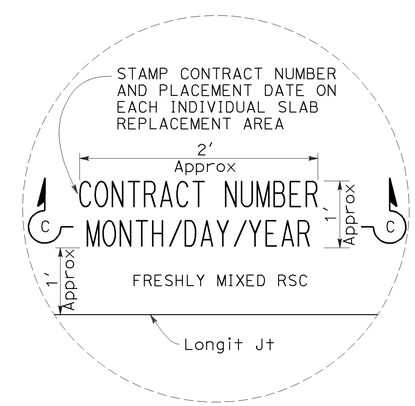

DATE STAMP DETAIL

STATE OF CALIFORNIA
DEPARTMENT OF TRANSPORTATION

INDIVIDUAL SLAB REPLACEMENT WITH RAPID STRENGTH CONCRETE

NO SCALE

RSP P8 DATED JULY 19, 2013 SUPERSEDES RSP P8 DATED APRIL 20, 2012 AND STANDARD PLAN P8 DATED MAY 20, 2011 - PAGE 130 OF THE STANDARD PLANS BOOK DATED 2010.

REVISED STANDARD PLAN RSP P8

2010 REVISED STANDARD PLAN RSP P8

5-31-13

Dist	COUNTY	ROUTE	POST MILES TOTAL PROJECT	SHEET No.	TOTAL SHEETS
08	Riv	215	R15.0	21	26

REGISTERED CIVIL ENGINEER

July 19, 2013
PLANS APPROVAL DATE

REGISTERED PROFESSIONAL ENGINEER William K. Farnbach No. C49042 Exp. 9-30-14 CIVIL STATE OF CALIFORNIA

THE STATE OF CALIFORNIA OR ITS OFFICERS OR AGENTS SHALL NOT BE RESPONSIBLE FOR THE ACCURACY OR COMPLETENESS OF SCANNED COPIES OF THIS PLAN SHEET.

TO ACCOMPANY PLANS DATED 3-3-14

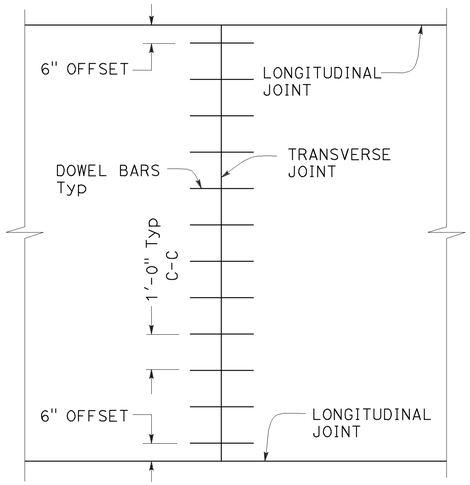

TRANSVERSE JOINT DOWEL BAR LAYOUT

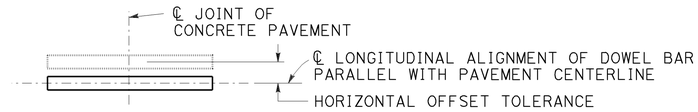

PLAN

HORIZONTAL OFFSET TOLERANCE

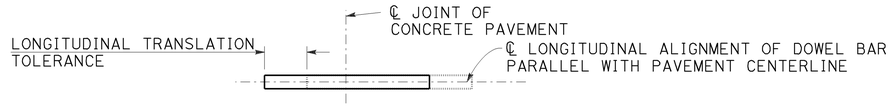

PLAN

LONGITUDINAL TRANSLATION TOLERANCE

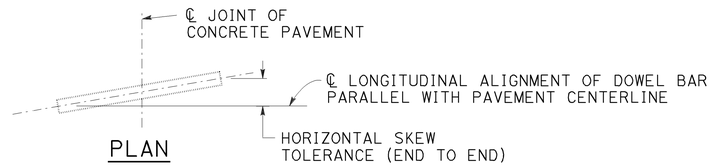

PLAN

HORIZONTAL SKEW TOLERANCE

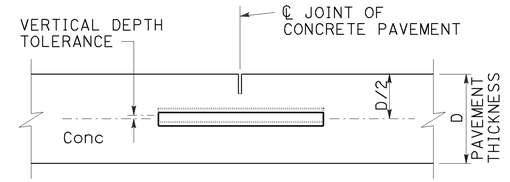

ELEVATION

VERTICAL DEPTH TOLERANCE

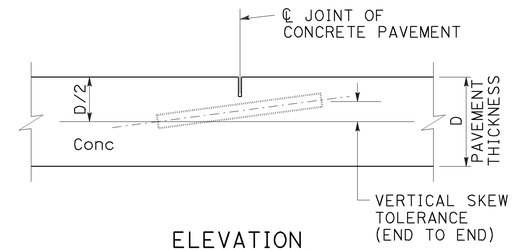

ELEVATION

VERTICAL SKEW TOLERANCE

NOTES:

1. See Revised Standard Plan RSP P1 for typical dowel bar placement and locations.
2. Where fresh concrete pavement is placed against new concrete or existing concrete pavement, rounding the corner of the existing concrete pavement is not required.
3. May also use ¾" Dia dowel bars 2'-4" ± ¼" in length. Center the length of dowel bars at the centerline of longitudinal joint.

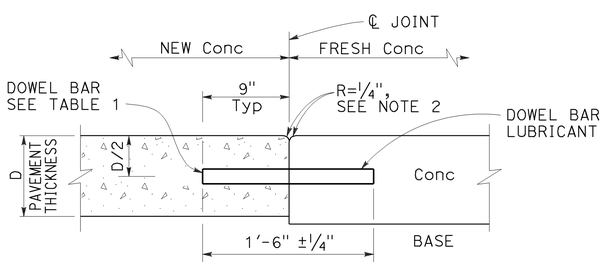

TRANSVERSE CONSTRUCTION JOINT DETAIL

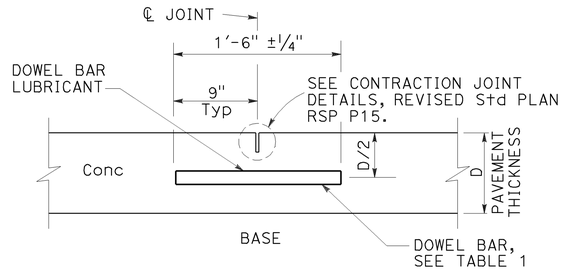

TRANSVERSE CONTRACTION JOINT

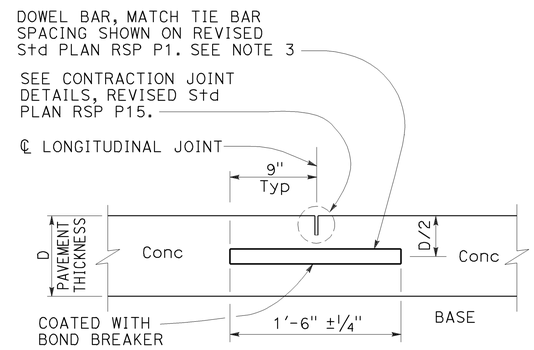

LONGITUDINAL CONTRACTION JOINT WITH DOWEL BARS

See Revised Std Plan RSP P18

TABLE 1

DOWEL BAR DIAMETER TABLE			
PAVEMENT THICKNESS	0.65'	> 0.65' - 0.85'	> 0.85'
MINIMUM DOWEL * BAR DIAMETER	1"	1¼"	1½"

* The drilled hole diameter must be ⅛" to 3/16" larger than the bar diameter.

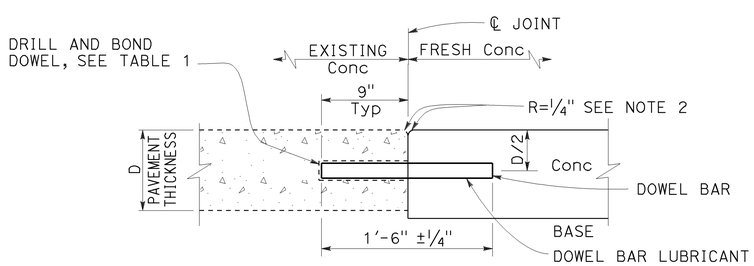

TRANSVERSE CONSTRUCTION JOINT FOR EXISTING CONCRETE PAVEMENT

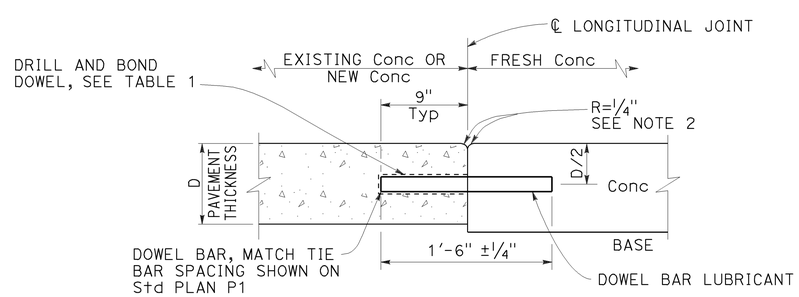

LONGITUDINAL CONSTRUCTION JOINT WITH DOWEL BARS

See Revised Std Plan RSP P18

STATE OF CALIFORNIA
DEPARTMENT OF TRANSPORTATION

CONCRETE PAVEMENT DOWEL BAR DETAILS

NO SCALE

RSP P10 DATED JULY 19, 2013 SUPERSEDES RSP P10 DATED APRIL 20, 2012 AND STANDARD PLAN P10 DATED MAY 20, 2011 - PAGE 131 OF THE STANDARD PLANS BOOK DATED 2010.

REVISED STANDARD PLAN RSP P10

2010 REVISED STANDARD PLAN RSP P10

5-31-13

Dist	COUNTY	ROUTE	POST MILES TOTAL PROJECT	SHEET No.	TOTAL SHEETS
08	Riv	215	R15.0	22	26

William K. Farnbach
REGISTERED CIVIL ENGINEER

July 19, 2013
PLANS APPROVAL DATE

REGISTERED PROFESSIONAL ENGINEER
William K. Farnbach
No. C49042
Exp. 9-30-14
CIVIL
STATE OF CALIFORNIA

THE STATE OF CALIFORNIA OR ITS OFFICERS OR AGENTS SHALL NOT BE RESPONSIBLE FOR THE ACCURACY OR COMPLETENESS OF SCANNED COPIES OF THIS PLAN SHEET.

TO ACCOMPANY PLANS DATED 3-3-14

2010 REVISED STANDARD PLAN RSP P15

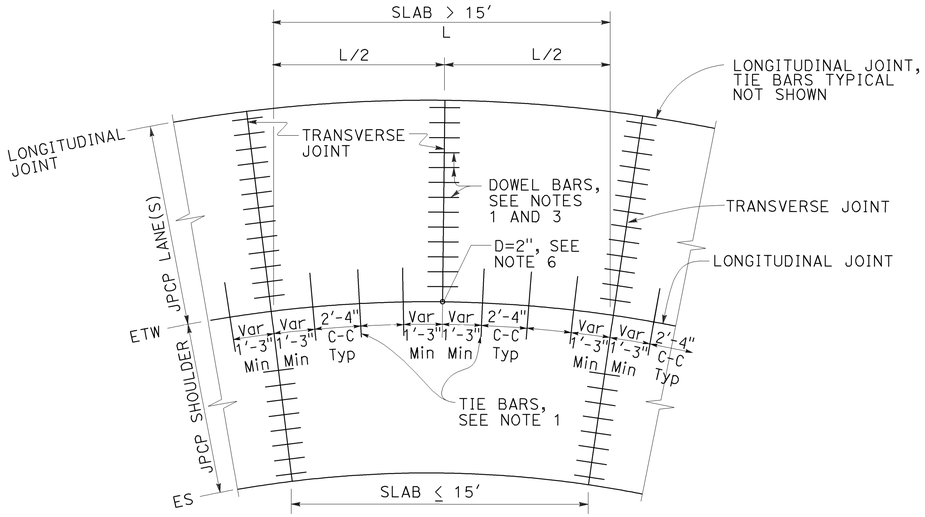

TIE BAR LAYOUT IN CURVED LANES

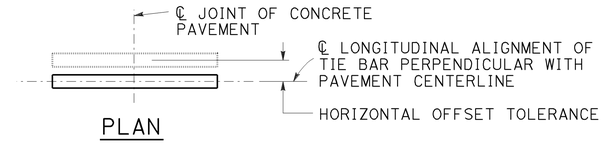

PLAN

HORIZONTAL OFFSET TOLERANCE

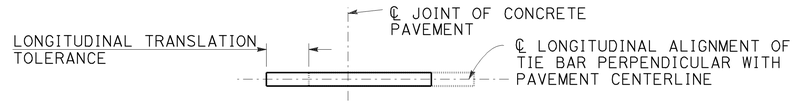

PLAN

LONGITUDINAL TRANSLATION TOLERANCE

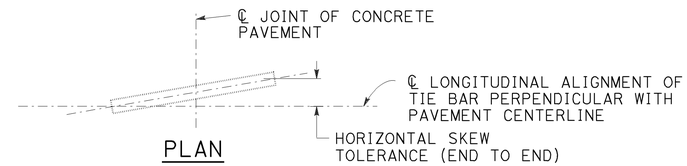

PLAN

HORIZONTAL SKEW TOLERANCE

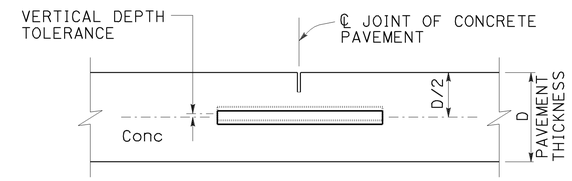

ELEVATION

VERTICAL DEPTH TOLERANCE

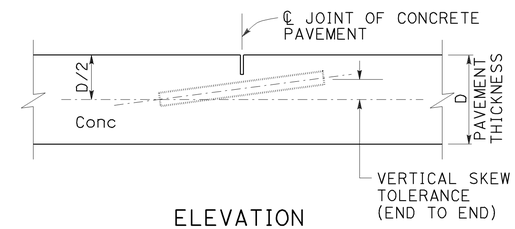

ELEVATION

VERTICAL SKEW TOLERANCE

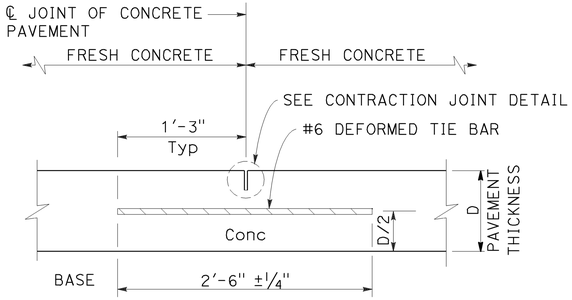

LONGITUDINAL CONTRACTION JOINT

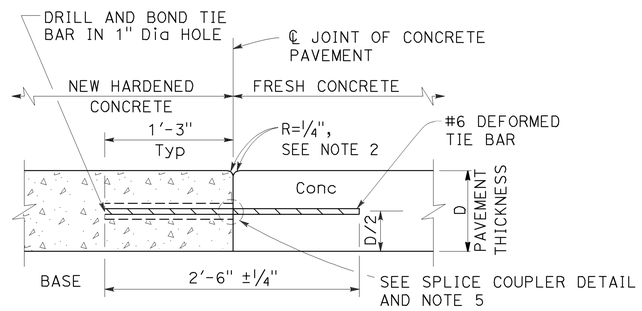

LONGITUDINAL CONSTRUCTION JOINT

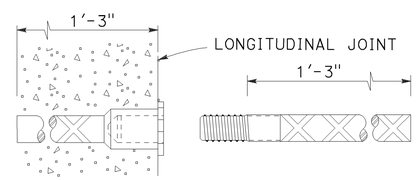

ALTERNATIVE SPLICE COUPLER

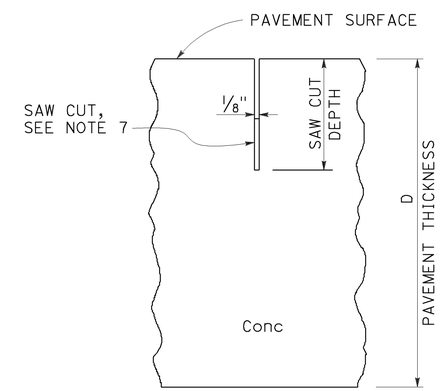

CONTRACTION JOINT DETAIL

NOTES:

1. See Revised Standard Plan RSP P1 for typical dowel bar and tie bar placement and locations.
2. Where new pavement is placed against existing concrete pavement, rounding the corner is not required.
3. For dowel bar sizes, See Revised Standard Plan RSP P10.
4. Tie bar details apply to inside widenings.
5. Use either drill and bond or splice couplers.
6. Full depth drilled hole. Fill hole with filler material.
7. The bottom of the saw cut must be at least 0.5" clear of any dowel bar, tie bar and bar reinforcement.

STATE OF CALIFORNIA
DEPARTMENT OF TRANSPORTATION

CONCRETE PAVEMENT-TIE BAR DETAILS

NO SCALE

RSP P15 DATED JULY 19, 2013 SUPPLEMENTS THE STANDARD PLANS BOOK DATED 2010.

REVISED STANDARD PLAN RSP P15

5-31-13

Dist	COUNTY	ROUTE	POST MILES TOTAL PROJECT	SHEET No.	TOTAL SHEETS
08	Riv	215	R15.0	23	26

William K. Farnbach
REGISTERED CIVIL ENGINEER

July 19, 2013
PLANS APPROVAL DATE

REGISTERED PROFESSIONAL ENGINEER William K. Farnbach No. C49042 Exp. 9-30-14 CIVIL STATE OF CALIFORNIA

THE STATE OF CALIFORNIA OR ITS OFFICERS OR AGENTS SHALL NOT BE RESPONSIBLE FOR THE ACCURACY OR COMPLETENESS OF SCANNED COPIES OF THIS PLAN SHEET.

TO ACCOMPANY PLANS DATED 3-3-14

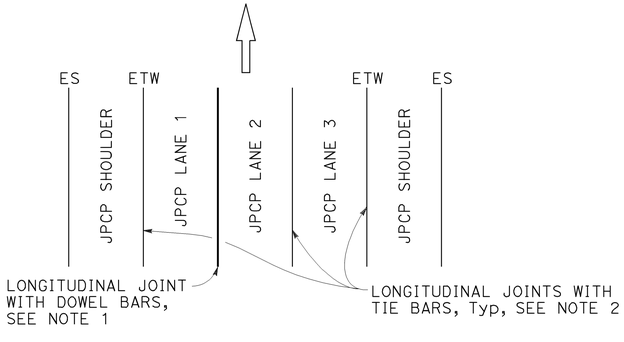

3 LANES WITH CONCRETE SHOULDERS
PLAN

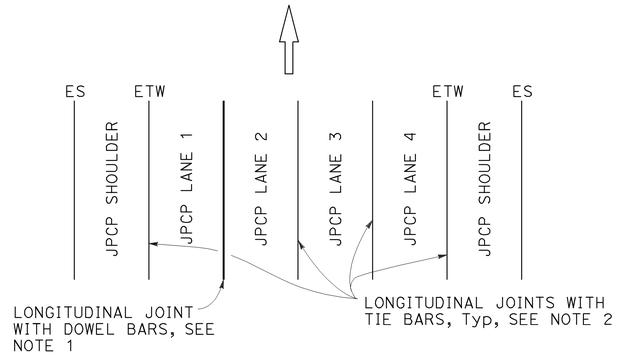

4 LANES WITH CONCRETE SHOULDERS
PLAN

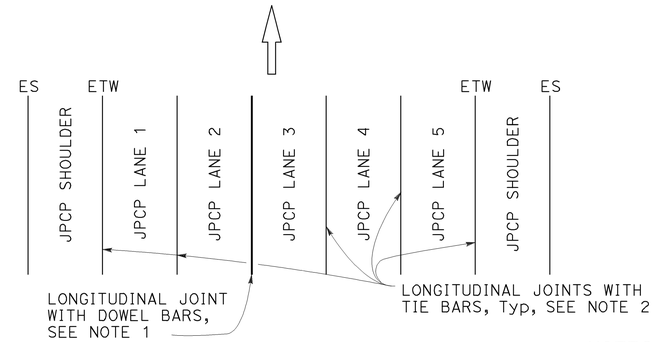

5 LANES WITH CONCRETE SHOULDERS
PLAN

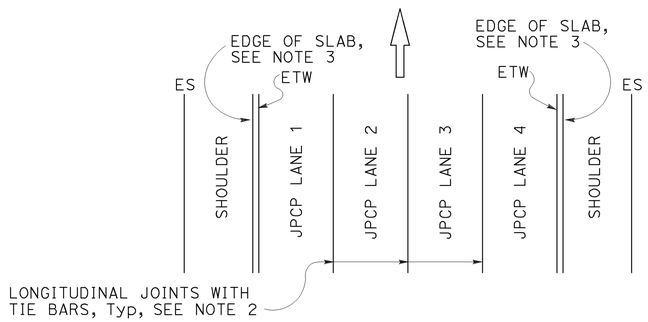

4 LANES OR LESS WITH AC SHOULDERS
PLAN

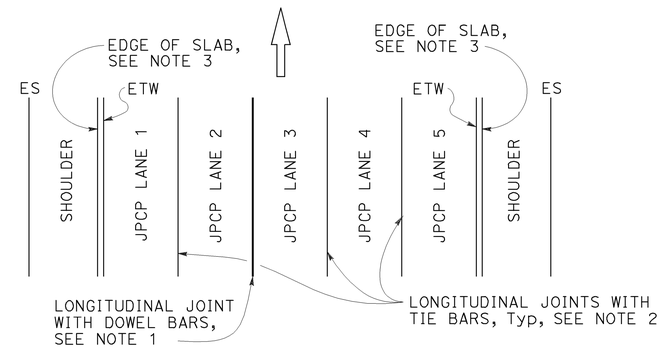

5 LANES WITH AC SHOULDERS
PLAN

NEW CONSTRUCTION

Location of Longitudinal Joints
For JPCP

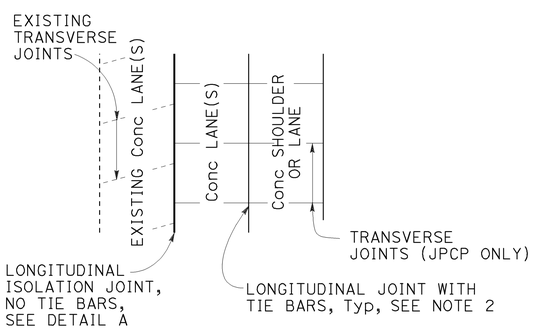

CASE 1
PLAN

Transverse Joints do not align between new and existing.

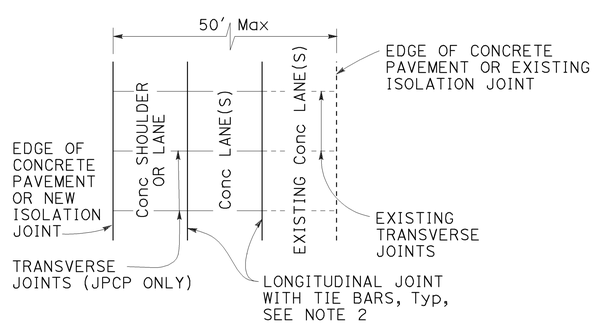

CASE 2
PLAN

Transverse Joints align between new and existing.
(For JPCP only)

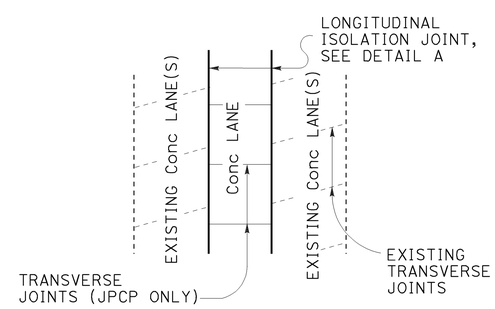

CASE 3 (INTERIOR LANE REPLACEMENT)
PLAN

Transverse Joints do not align between new and existing.

LANE/SHOULDER ADDITION OR RECONSTRUCTION

For JPCP and CRCP

NOTES:

1. See Revised Standard Plan RSP P10 for longitudinal joint with dowel bars.
2. See Revised Standard Plan RSP P15 for longitudinal joint with tie bars.
3. S= Reservoir depth.
   S= 7/8" ± 1/16" for asphalt rubber seals
   S= 9/16" ± 1/16" for silicone seals
   Preformed compression seals must be 13/16" wide and S= 1 11/16" ± 1/16"

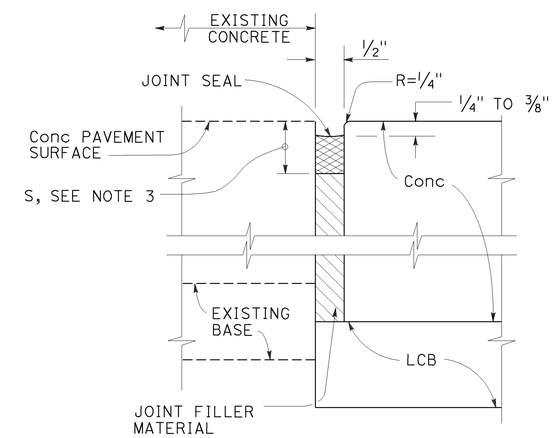

DETAIL "A"

ISOLATION JOINT

STATE OF CALIFORNIA
DEPARTMENT OF TRANSPORTATION

CONCRETE PAVEMENT LANE SCHEMATICS AND ISOLATION JOINT DETAIL

NO SCALE

RSP P18 DATED JULY 19, 2013 SUPERSEDES RSP P18 DATED APRIL 20, 2012 AND STANDARD PLAN P18 DATED MAY 20, 2011 - PAGE 135 OF THE STANDARD PLANS BOOK DATED 2010.

REVISED STANDARD PLAN RSP P18

2010 REVISED STANDARD PLAN RSP P18

5-31-13

Dist	COUNTY	ROUTE	POST MILES TOTAL PROJECT	SHEET No.	TOTAL SHEETS
08	Riv	215	R15.0	24	26

William K. Farnbach
REGISTERED CIVIL ENGINEER

July 19, 2013
PLANS APPROVAL DATE

REGISTERED PROFESSIONAL ENGINEER
William K. Farnbach
No. C49042
Exp. 9-30-14
CIVIL
STATE OF CALIFORNIA

THE STATE OF CALIFORNIA OR ITS OFFICERS OR AGENTS SHALL NOT BE RESPONSIBLE FOR THE ACCURACY OR COMPLETENESS OF SCANNED COPIES OF THIS PLAN SHEET.

TO ACCOMPANY PLANS DATED 3-3-14

NOTES:

1. Details do not apply to isolation joints and longitudinal construction joints.
2. Tie bars, dowel bars, and bar reinforcement are not shown.
3. Depths are measured from the final concrete pavement surface elevation after any grinding.

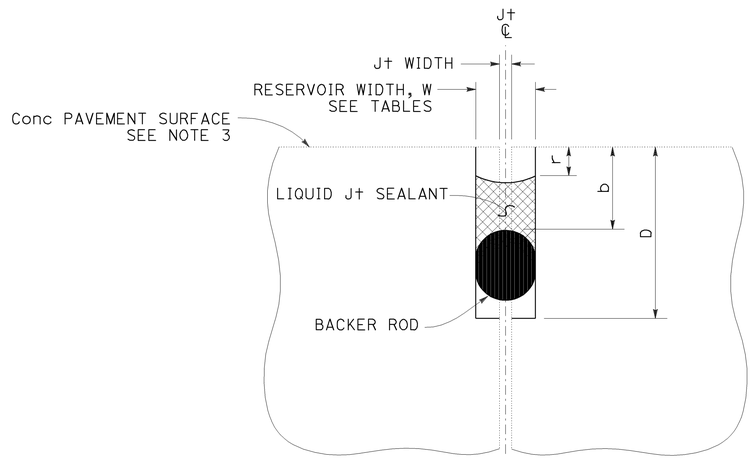

LIQUID JOINT SEALANT

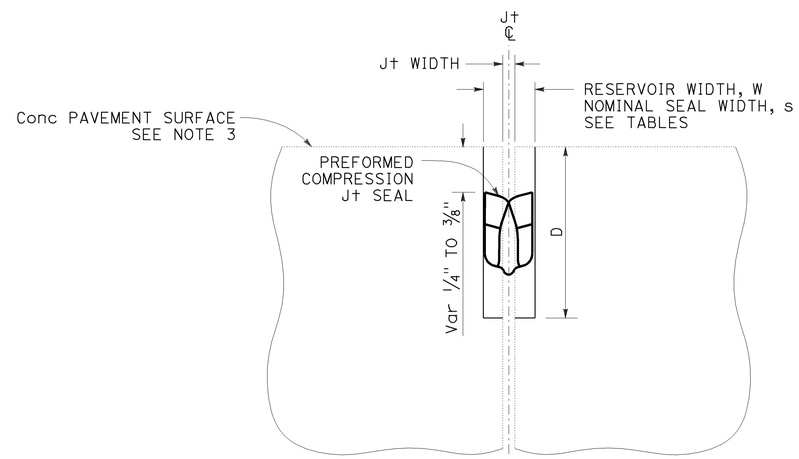

PREFORMED COMPRESSION JOINT SEAL

Const SEASON	Min RESERVOIR WIDTH * W ± 1/16"
WINTER	1/4"
SPRING	3/8"
SUMMER	
FALL	

* Minimum reservoir width for replace joint seal = existing joint width + 1/8"

RESERVOIR WIDTH W ±1/16"	LIQUID JOINT SEALANT DIMENSIONS					
	BACKER ROD NOMINAL Dia *	DEPTHS (ASPHALT RUBBER) **		DEPTHS (SILICONE)		
		RESERVOIR D ± 1/4"	BACKER ROD b ± 1/16"	RESERVOIR D ± 1/4"	BACKER ROD b ± 1/16"	RECESS r ± 1/16"
1/4"	3/8"	1 3/4"	7/8"	1 3/8"	1/2"	1/4"
3/8"	1/2"	1 7/8"	7/8"	1 1/2"	1/2"	1/4"
1/2"	3/4"	2"	7/8"	1 3/4"	9/16"	5/16"
5/8"	7/8"	2 1/4"	1"	2"	5/8"	5/16"
3/4"	1"	2 3/4"	1 1/8"	2 1/4"	3/4"	3/8"
7/8"	1 1/4"	3"	1 1/4"	2 1/2"	13/16"	3/8"
1"	1 1/2"	3 1/4"	1 3/8"	2 5/8"	7/8"	3/8"
1 1/8"	1 1/2"	3 1/2"	1 1/2"	2 13/16"	1"	1/2"

* Larger diameter backer rods may be substituted according to manufacturer recommendations if reservoir depth is increased equivalently.

** Asphalt rubber sealant recess depth "r" varies from 1/4" to 3/8"

RESERVOIR WIDTH W ±1/16"	PREFORMED COMPRESSION JOINT SEAL DIMENSIONS	
	NOMINAL SEAL WIDTH s	RESERVOIR DEPTH D ± 1/4"
1/4"	7/16"	1 1/4"
3/8"	11/16"	1 7/16"
1/2"	13/16"	1 11/16"
5/8"	1"	1 7/8"
3/4"	1 1/4"	2 1/8"
7/8"	1 5/8"	2 5/8"
1"	1 5/8"	2 5/8"
1 1/8"	2"	2 7/8"

STATE OF CALIFORNIA
DEPARTMENT OF TRANSPORTATION

JOINT SEALS

NO SCALE

RSP P20 DATED JULY 19, 2013 SUPERSEDES STANDARD PLAN P20
DATED MAY 20, 2011 - PAGE 136 OF THE STANDARD PLANS BOOK DATED 2010.

REVISED STANDARD PLAN RSP P20

2010 REVISED STANDARD PLAN RSP P20

6-17-13

Dist	COUNTY	ROUTE	POST MILES TOTAL PROJECT	SHEET No.	TOTAL SHEETS
08	Riv	215	R15.0	25	26

William K. Farnbach
REGISTERED CIVIL ENGINEER

July 19, 2013
PLANS APPROVAL DATE

REGISTERED PROFESSIONAL ENGINEER
William K. Farnbach
No. C49042
Exp. 9-30-14
CIVIL
STATE OF CALIFORNIA

THE STATE OF CALIFORNIA OR ITS OFFICERS OR AGENTS SHALL NOT BE RESPONSIBLE FOR THE ACCURACY OR COMPLETENESS OF SCANNED COPIES OF THIS PLAN SHEET.

TO ACCOMPANY PLANS DATED 3-3-14

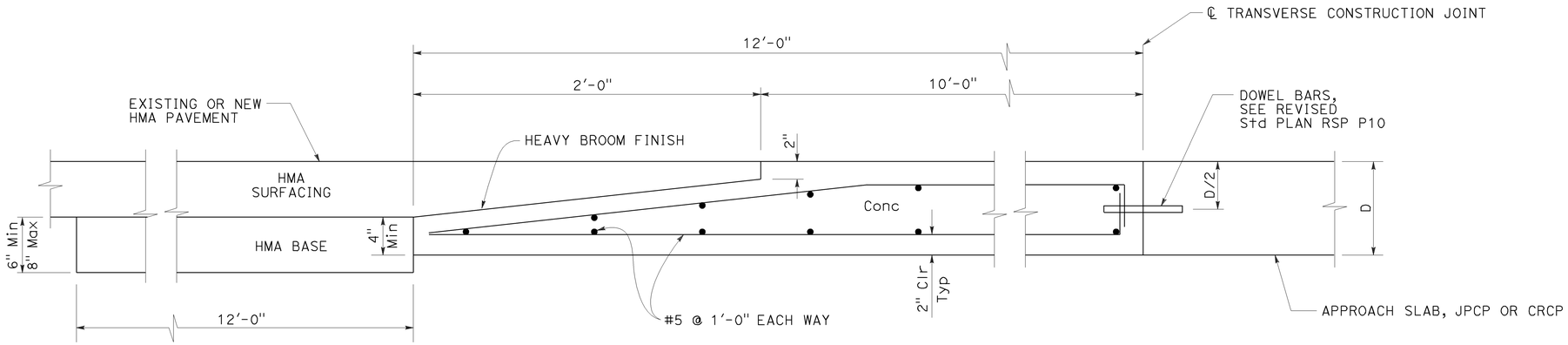

ELEVATION

CONCRETE PAVEMENT TRANSITION PANEL

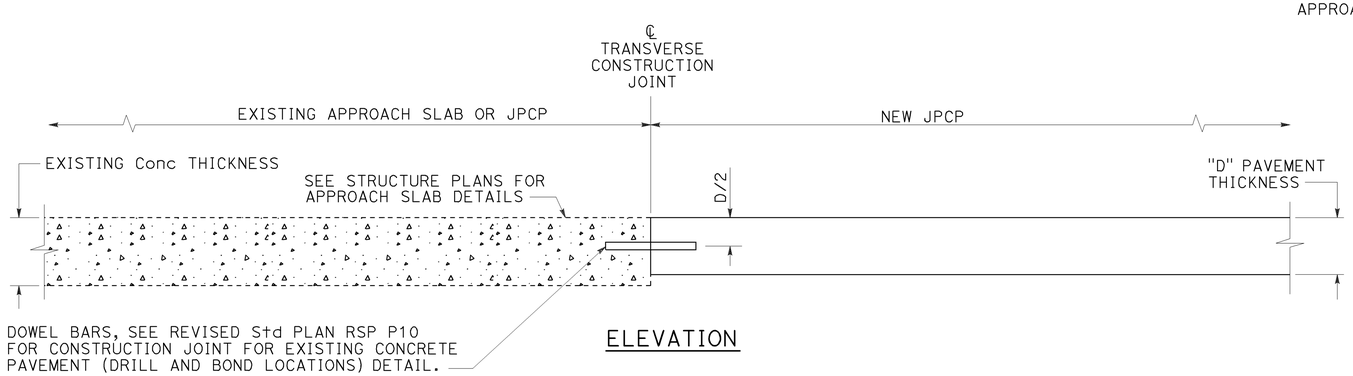

ELEVATION

TERMINAL JOINT TYPE 1

For Exist JPCP or Approach Slab

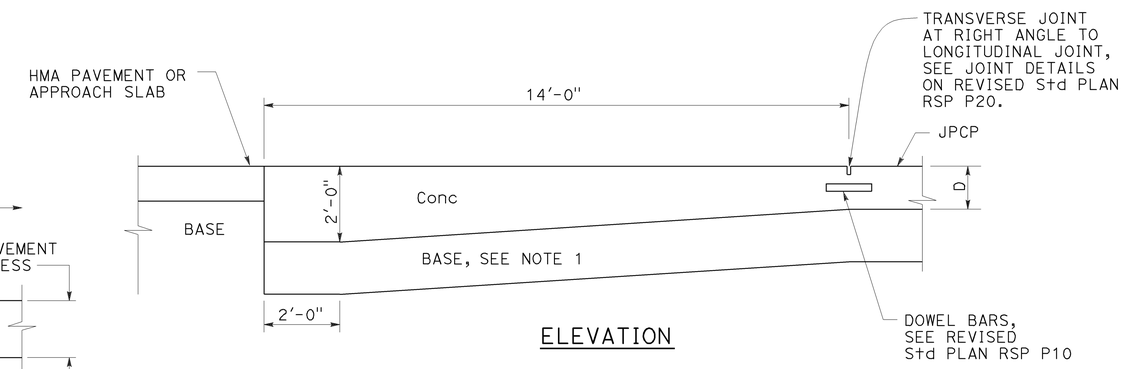

ELEVATION

PAVEMENT END ANCHOR

For HMA Pvmt or Approach Slab

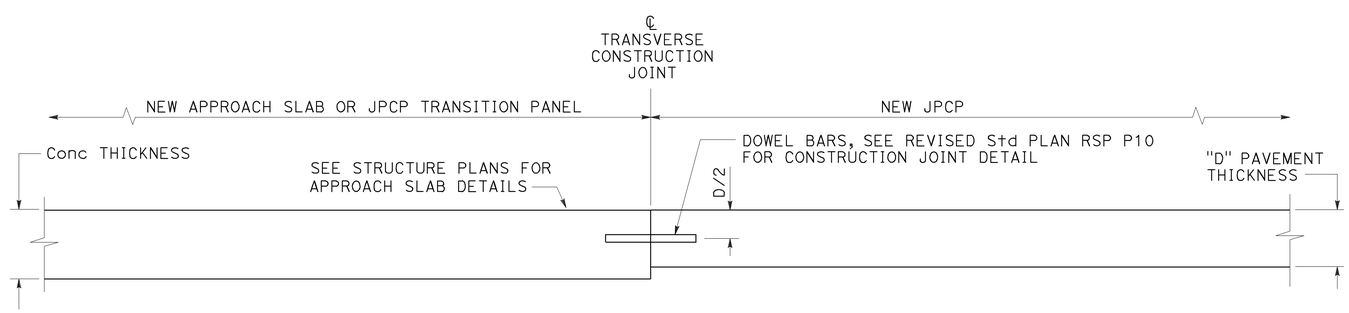

ELEVATION

TERMINAL JOINT TYPE 2

For JPCP Transition Panel or Approach Slab

NOTE:

1. Maintain same base thickness as JPCP.

STATE OF CALIFORNIA
DEPARTMENT OF TRANSPORTATION

CONCRETE PAVEMENT-END PANEL PAVEMENT TRANSITIONS

NO SCALE

RSP P30 DATED JULY 19, 2013 SUPERSEDES RSP P30 DATED APRIL 20, 2012 AND STANDARD PLAN P30 DATED MAY 20, 2011 - PAGE 137 OF THE STANDARD PLANS BOOK DATED 2010.

REVISED STANDARD PLAN RSP P30

2010 REVISED STANDARD PLAN RSP P30

3-26-13

Dist	COUNTY	ROUTE	POST MILES TOTAL PROJECT	SHEET No.	TOTAL SHEETS
08	Riv	215	R15.0	26	26

REGISTERED CIVIL ENGINEER

April 19, 2013
PLANS APPROVAL DATE

REGISTERED PROFESSIONAL ENGINEER Gurinderpal Bhullar No. C48815 Exp. 9-30-14 CIVIL STATE OF CALIFORNIA

THE STATE OF CALIFORNIA OR ITS OFFICERS OR AGENTS SHALL NOT BE RESPONSIBLE FOR THE ACCURACY OR COMPLETENESS OF SCANNED COPIES OF THIS PLAN SHEET.

TO ACCOMPANY PLANS DATED 3-3-14

TYPICAL RAMP CLOSURES

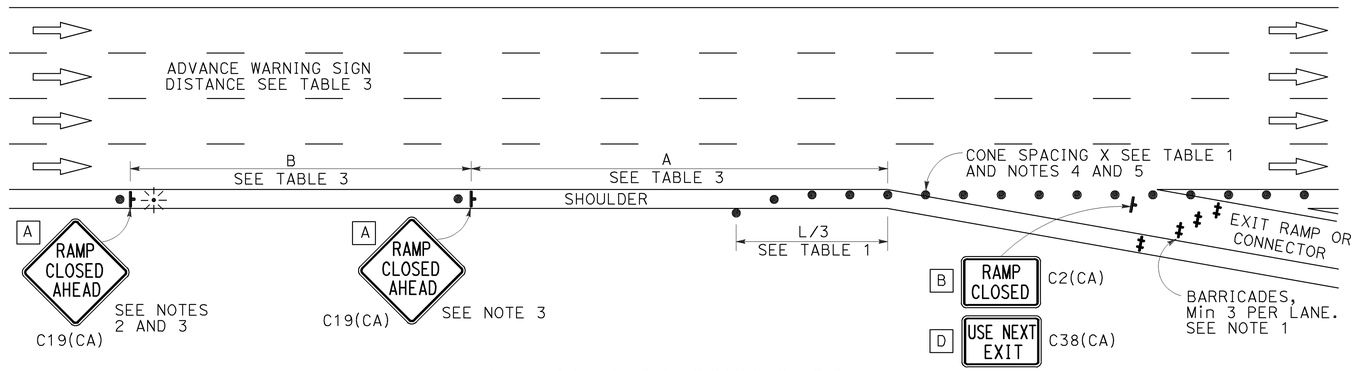

EXIT RAMP OR CONNECTOR

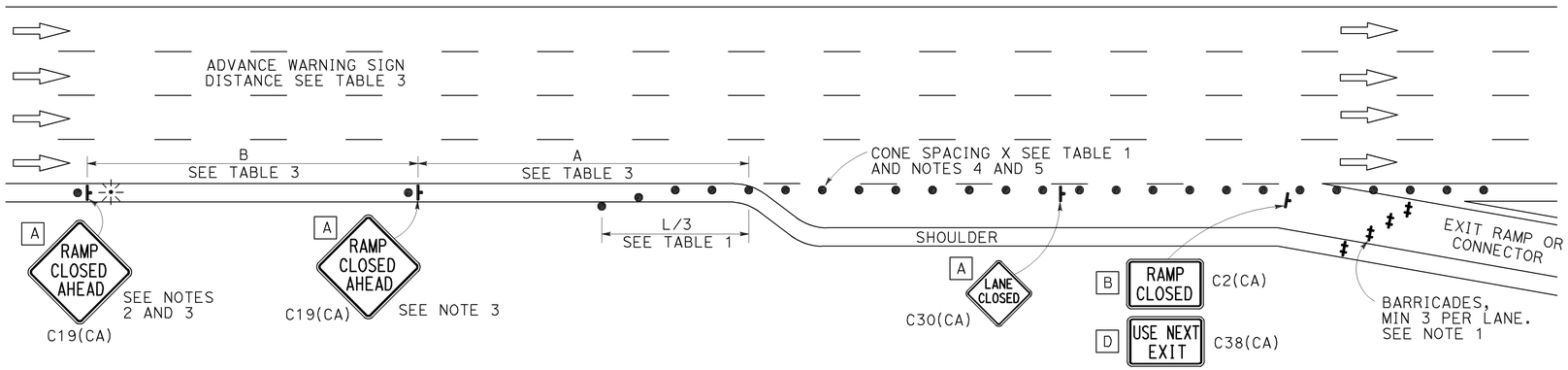

EXIT RAMP OR CONNECTOR WITH ADDITIONAL LANE

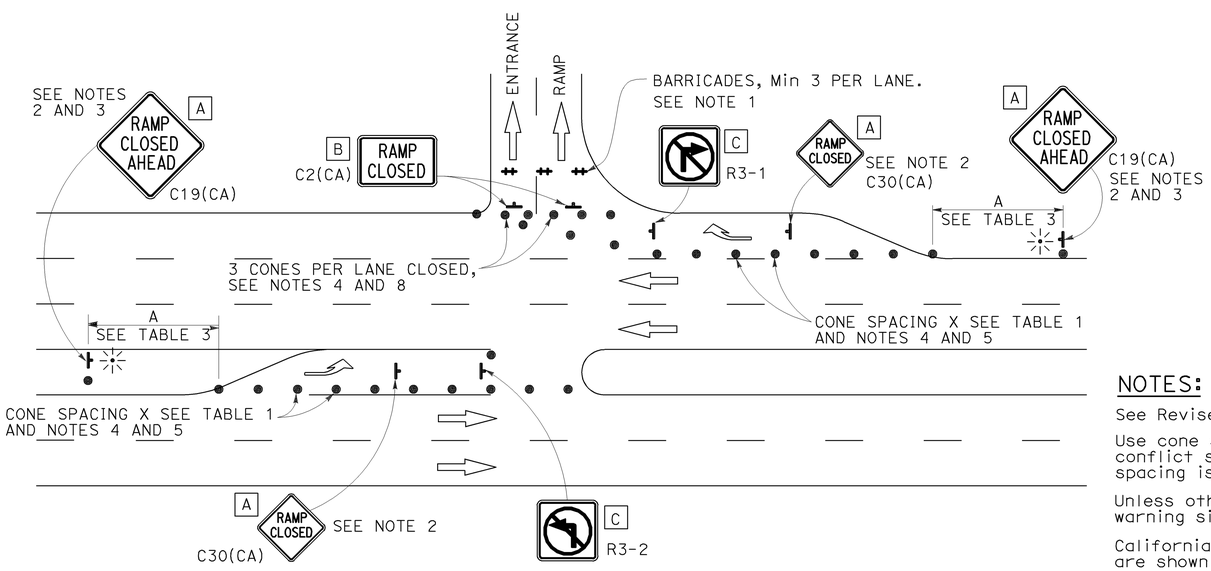

ENTRANCE RAMP WITH TURNING POCKETS

SIGN PANEL SIZE (Min)

- A 48" × 48"
- B 48" × 30"
- C 36" × 36"
- D 48" × 36"

LEGEND

- TRAFFIC CONE
- TEMPORARY TRAFFIC CONTROL SIGN
- BARRICADES
- PORTABLE FLASHING BEACON

NOTES:

1. Barricades shall be Type I, II, or III for closures lasting one week or less and Type III for closures lasting longer than one week.
2. In addition to placing the C19(CA) "RAMP CLOSED AHEAD" and C30(CA) "RAMP CLOSED" signs, black on orange overlay plates with the word "CLOSED" may be mounted, as directed by the Engineer, on all guide signs that refer to the closed ramp. The letter size on the overlay shall be the same as the guide sign.
3. Each advance C19(CA) "RAMP CLOSED AHEAD" sign shall be equipped with at least two flags for daytime closure. Each flag shall be at least 16" × 16" in size and shall be orange or fluorescent red-orange in color. A flashing beacon shall be placed on top of the first C19(CA) sign during hours of darkness.
4. All cones used for ramp closures during the hours of darkness shall be fitted with retroreflective bands (or sleeves) as specified in the specifications.
5. Portable delineators, placed at one-half the spacing indicated for traffic cones, may be used instead of cones for daytime ramp closures only.
6. At least one person shall be assigned to provide full time maintenance of traffic control devices, unless otherwise directed by the Engineer.
7. The existing "EXIT" signs shall be covered during ramp closures.
8. A minimum of 3 cones shall be placed transversely across each closed lane and shoulder.

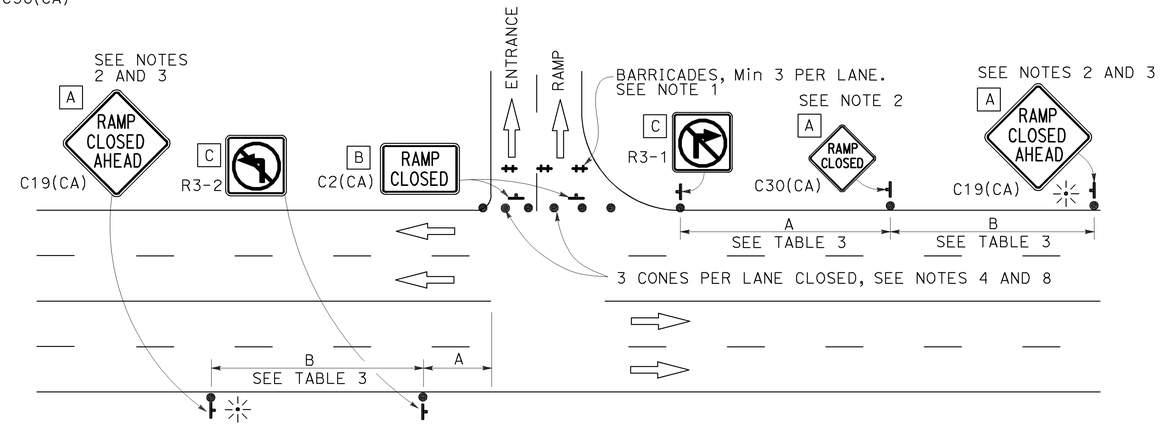

ENTRANCE RAMP WITHOUT TURNING POCKETS

NOTES:

See Revised Standard Plan RSP T9 for tables.

Use cone spacing X for taper segment, Y for tangent segment or Z for conflict situations, as approriate, per Table 1, unless X, Y, or Z cone spacing is shown on this sheet.

Unless otherwise specified in the special provisions, all temporary warning signs shall have black legend on fluorescent orange background.

California codes are designated by (CA). Otherwise, Federal (MUTCD) codes are shown.

STATE OF CALIFORNIA
DEPARTMENT OF TRANSPORTATION

TRAFFIC CONTROL SYSTEM FOR RAMP CLOSURE

NO SCALE

RSP T14 DATED APRIL 19, 2013 SUPERSEDES STANDARD PLAN T14
DATED MAY 20, 2011 - PAGE 242 OF THE STANDARD PLANS BOOK DATED 2010.

REVISED STANDARD PLAN RSP T14

2010 REVISED STANDARD PLAN RSP T14

12-18-12