Dist	COUNTY	ROUTE	POST MILES TOTAL PROJECT	SHEET No.	TOTAL SHEETS
08	SBd	138	R17.1/R19.2	1	212

ACHSNHP-P138(055)E

STATE OF CALIFORNIA
DEPARTMENT OF TRANSPORTATION

PROJECT PLANS FOR CONSTRUCTION ON
STATE HIGHWAY
IN SAN BERNARDINO COUNTY
NEAR HESPERIA
FROM 1.9 MILES EAST OF ROUTE 15
TO 0.1 MILE WEST OF
SUMMIT POST OFFICE ROAD

TO BE SUPPLEMENTED BY STANDARD PLANS DATED 2010

INDEX OF PLANS

SHEET No.	DESCRIPTION
1	TITLE AND LOCATION MAP
2-3	TYPICAL CROSS SECTIONS
4	KEY MAP AND LINE INDEX
5-13	LAYOUTS
14-24	PROFILES AND SUPERELEVATION DIAGRAMS
25-27	CONSTRUCTION DETAILS
28	TEMPORARY WATER POLLUTION CONTROL PLAN
29-37	CONTOUR GRADING
38-72	DRAINAGE PLANS,PROFILES, DETAILS AND QUANTITIES
73	CONSTRUCTION AREA SIGNS
74-82	STAGE CONSTRUCTION PLANS AND QUANTITIES
83-84	TRAFFIC HANDLING PLANS AND QUANTITIES
85-88	DETOUR PLANS
89	PAVEMENT DELINEATION QUANTITIES
90-91	SIGN PLANS AND DETAILS
92-94	SUMMARY OF QUANTITIES
95	RETAINING WALL PLAN
96-105	EROSION CONTROL PLANS AND QUANTITIES
~~106~~	~~ELECTRICAL PLAN~~
107-145	REVISED STANDARD PLANS 2

STRUCTURE PLANS

146-162	HOG RANCH CREEK BRIDGE Br No. 54-1218
163-183	MINER'S SHACK CREEK BRIDGE Br No. 54-1219
184-212	DOUBLE DRAIN CREEK BRIDGE Br No. 54-1220

THE STANDARD PLANS LIST APPLICABLE TO THIS CONTRACT IS INCLUDED IN THE NOTICE TO BIDDERS AND SPECIAL PROVISIONS BOOK

LOCATION MAP

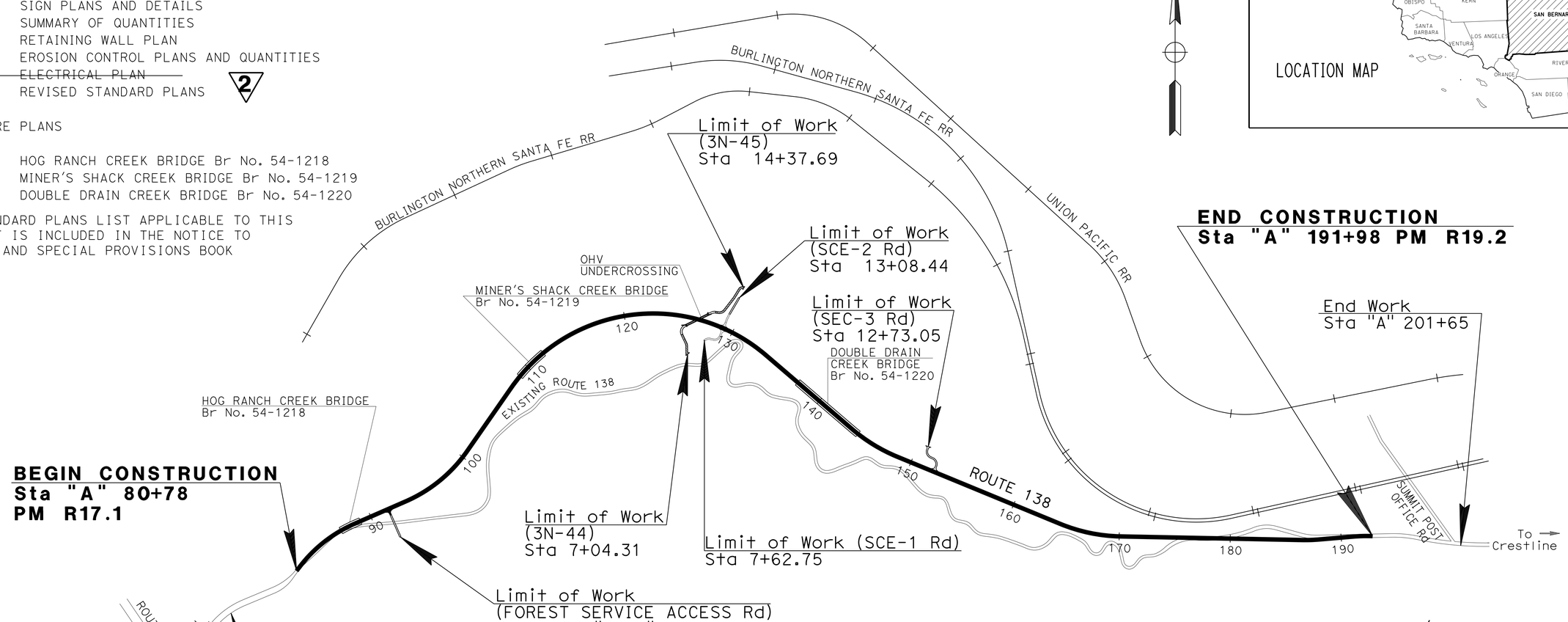

THE CONTRACTOR SHALL POSSESS THE CLASS (OR CLASSES) OF LICENSE AS SPECIFIED IN THE "NOTICE TO BIDDERS."

2 REPLACED PER ADDENDUM No. 2 DATED FEBRUARY 8, 2016

PROJECT ENGINEER REGISTERED CIVIL ENGINEER — DATE 9-10-15

September 11, 2015
PLANS APPROVAL DATE

REGISTERED PROFESSIONAL ENGINEER — DUNG HUY PHAN — No. 73061 — Exp. 12/31/16 — CIVIL — STATE OF CALIFORNIA

THE STATE OF CALIFORNIA OR ITS OFFICERS OR AGENTS SHALL NOT BE RESPONSIBLE FOR THE ACCURACY OR COMPLETENESS OF SCANNED COPIES OF THIS PLAN SHEET.

PROJECT MANAGER: BRYCE JOHNSTON
DESIGN MANAGER: JAMAL ELSALEH

CONTRACT No.	08-0Q3004
PROJECT ID	0800020191

LAST REVISION 09-10-15 — DATE PLOTTED => 05-FEB-2016 — TIME PLOTTED => 12:42

Dist	COUNTY	ROUTE	POST MILES TOTAL PROJECT	SHEET No.	TOTAL SHEETS
08	SBd	138	R17.1/R19.2	5	209

REGISTERED CIVIL ENGINEER DATE

PLANS APPROVAL DATE

REGISTERED PROFESSIONAL ENGINEER DUNG HUY PHAN No. 73061 Exp. 12/31/16 CIVIL STATE OF CALIFORNIA

THE STATE OF CALIFORNIA OR ITS OFFICERS OR AGENTS SHALL NOT BE RESPONSIBLE FOR THE ACCURACY OR COMPLETENESS OF SCANNED COPIES OF THIS PLAN SHEET.

NOTES:

1. FOR ACCURATE RIGHT OF WAY DATA, CONTACT RIGHT OF WAY ENGINEERING AT THE DISTRICT OFFICE.
2. EXACT LOCATIONS AND TYPES OF DIKES, MIDWEST GUARDRAIL SYSTEM (MGS), AND VEGETATION CONTROL (MINOR CONCRETE), SEE LAYOUTS AND SUMMARY OF QUANTITIES.
3. FOR CONCRETE BARRIER AND DIKE TRANSITION DETAILS, SEE CONSTRUCTION DETAILS Sht C-1.
4. FOR CENTERLINE RUMBLE STRIP DETAILS, SEE CONSTRUCTION DETAILS Sht C-2.
5. FOR V-DITCH AND DOWN DRAIN LOCATIONS, SEE DRAINAGE PLANS.
6. ALL ROADWAY WORK SHALL CONFORM TO EXISTING.
7. ALL LANDSCAPE AND HARDSCAPE WITHIN THE TCE LIMIT SHALL BE PROTECTED IN PLACE. DISTURBED LANDSCAPE AND HARDSCAPE SHALL BE REPLACED IN KIND.
8. RETANING WALL TYPE 1 (CASE1) PER STD PLANS RSP B3-1A. & RSP B3-5 FOR RETANING WALL QUANTITY SEE QUANTITY SHEET Q-1.

LEGEND:

- REMOVE BASE AND SURFACING
- COLD PLANE 0.15' ASPHALT CONCRETE AND PLACE 0.15' HMA (TYPE A)
- FENCE (TYPE AS NOTED)
- MAINTENANCE ACCESS ROAD
- TEMPORARY FENCE (TYPE ESA)
- A — FENCE ANGLE POINTS (WHERE FENCE DEVIATES FROM R/W)
- 1 — SURVEY SHOT (SCE OVERHEAD ELECTRIC)
- DIRT ROAD
- ARCHAEOLOGICAL MONITORING AREA (AMA). ALL GROUND DISTURBING ACTIVITIES WITHIN THIS AREA REQUIRED CULTURAL RESOURCE MONITORING

ABBREVIATIONS:

PDE	PERMANENT DRAINAGE EASEMENT
OHV	OFF HIGHWAY VEHICLE
TR	MGS TRANSITION RAILING
AITS	ALTERNATIVE IN-LINE TERMINAL SYSTEM
AFTS	ALTERNATIVE FLARED TERMINAL SYSTEM
C/F	CUT/FILL LINE

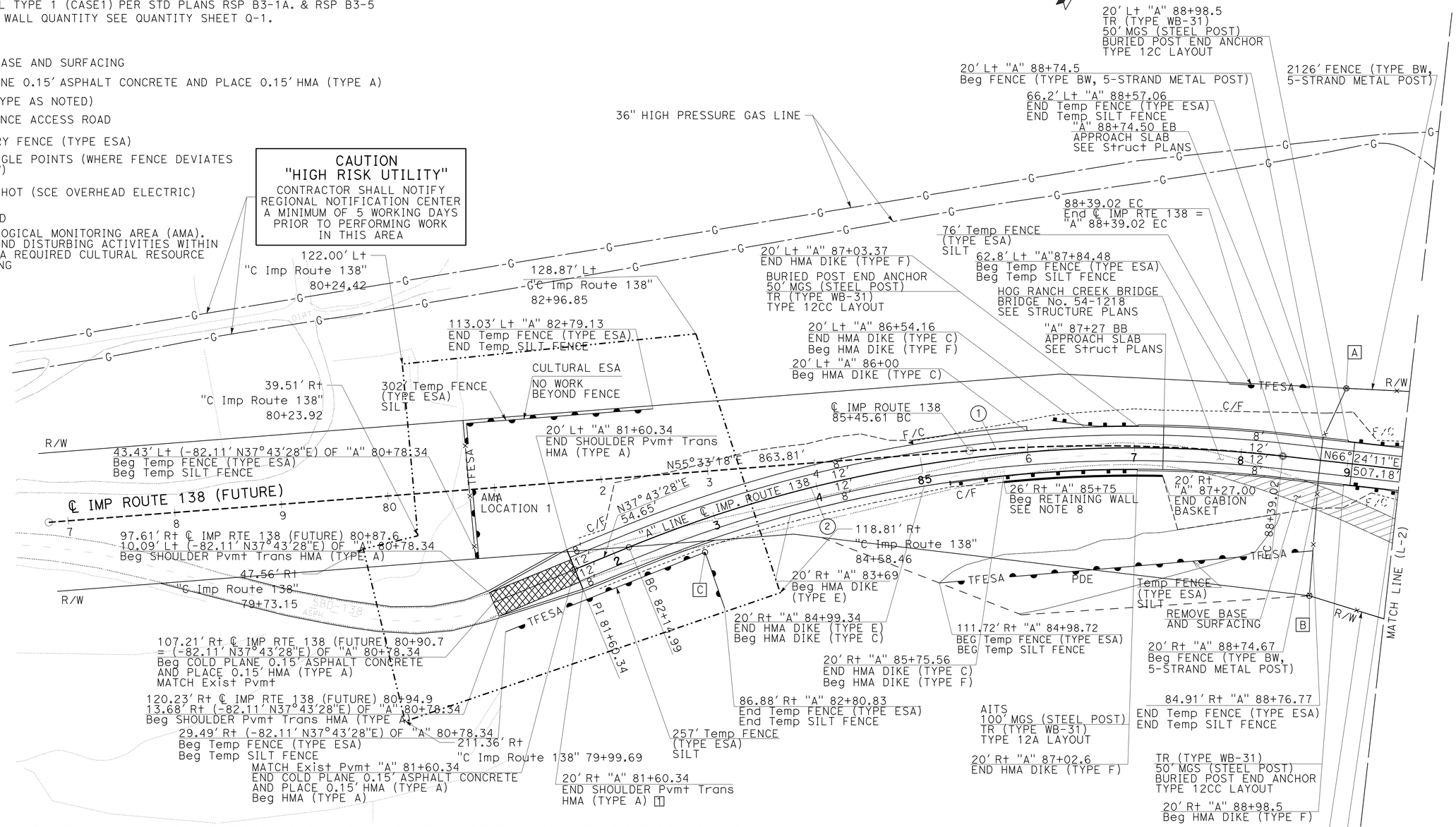

2 REPLACED PER ADDENDUM No. 2 DATED FEBRUARY 8, 2016

CURVE DATA

No. ⊕	R	Δ	T	L
1	1549.67'	10°50'54"	147.14'	293.41'
2	1246.72'	28°40'43"	318.70'	624.03'

ANGLE POINT	STATION	OFFSET
A	"A" 88+90.99	69.62' Lt
B	"A" 88+78.32	127.06' Rt
C	"A" 82+80.84	29.61' Rt

LAYOUT

SCALE: 1"=50'

L-1

REVISED BY | DATE REVISED
DON NGUYEN | PAUL PHAN
CALCULATED-DESIGNED BY | CHECKED BY
FUNCTIONAL SUPERVISOR | MUSTAPHA RAOUF
STATE OF CALIFORNIA - DEPARTMENT OF TRANSPORTATION
Caltrans® DESIGN

LAST REVISION | DATE PLOTTED => 05-FEB-2016 | TIME PLOTTED => 12:42

Dist	COUNTY	ROUTE	POST MILES TOTAL PROJECT	SHEET No.	TOTAL SHEETS
08	SBd	138	R17.1/R19.2	20	212

REGISTERED CIVIL ENGINEER 9-10-15 DATE

9-11-15
PLANS APPROVAL DATE

REGISTERED PROFESSIONAL ENGINEER DUNG HUY PHAN No. 73061 Exp. 12/31/16 CIVIL STATE OF CALIFORNIA

THE STATE OF CALIFORNIA OR ITS OFFICERS OR AGENTS SHALL NOT BE RESPONSIBLE FOR THE ACCURACY OR COMPLETENESS OF SCANNED COPIES OF THIS PLAN SHEET.

2 **REPLACED PER ADDENDUM No. 2 DATED FEBRUARY 8, 2016**

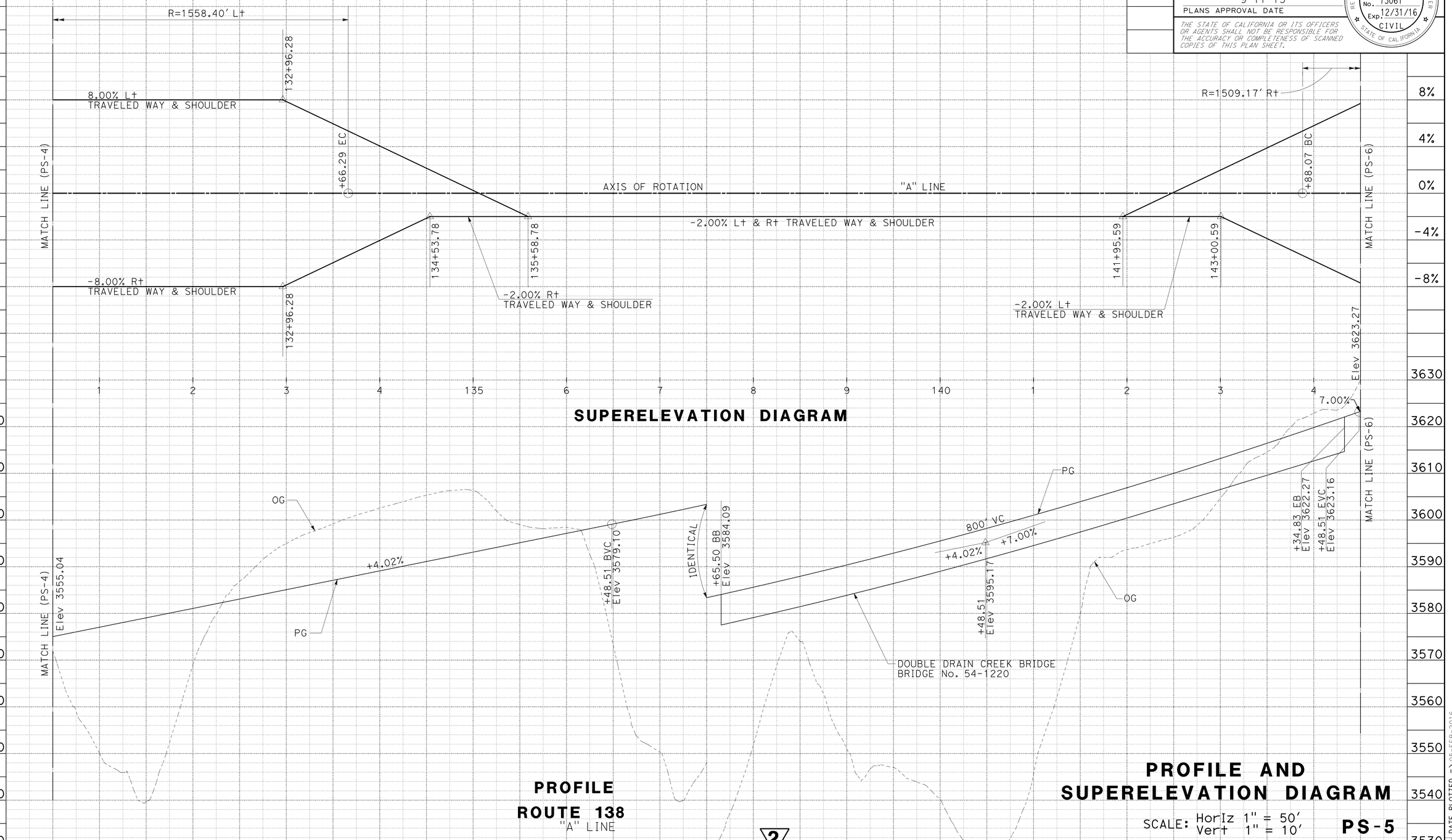

REVISED BY	DATE REVISED
PAUL PHAN	MUSTAPHA RAOUF
CALCULATED-DESIGNED BY	CHECKED BY
FUNCTIONAL SUPERVISOR	MUSTAPHA RAOUF

STATE OF CALIFORNIA - DEPARTMENT OF TRANSPORTATION
Caltrans
DESIGN

LAST REVISION 09-10-15
DATE PLOTTED => 05-FEB-2016
TIME PLOTTED => 12:42

Dist	COUNTY	ROUTE	POST MILES TOTAL PROJECT	SHEET No.	TOTAL SHEETS
08	SBd	138	R17.1/R19.2	38	209

REGISTERED CIVIL ENGINEER 9-10-15 DATE

9-11-15
PLANS APPROVAL DATE

REGISTERED PROFESSIONAL ENGINEER DUNG HUY PHAN No. 73061 Exp. 12/31/16 CIVIL STATE OF CALIFORNIA

THE STATE OF CALIFORNIA OR ITS OFFICERS OR AGENTS SHALL NOT BE RESPONSIBLE FOR THE ACCURACY OR COMPLETENESS OF SCANNED COPIES OF THIS PLAN SHEET.

NOTE:

1. FOR ACCURATE RIGHT OF WAY DATA, CONTACT RIGHT OF WAY ENGINEERING AT THE DISTRICT OFFICE.

LEGEND:

- (1) DRAINAGE CURVE NUMBER
- ROCK SLOPE PROTECTION (RSP) SEE DD-4, DD-5 AND DD-6
- SWALE OR GRADE TO DRAIN SEE DD-1
- DD OR MOD DD WITH TS SEE DD-1
- INLET
- FLARED END SECTION (FES)
- (×) DRAINAGE SYSTEM NUMBER
- (×) DRAINAGE UNIT DESIGNATION

ABBREVIATIONS:

BPG	BICYCLE PROOF GRATE
GLD	GRATED LINE DRAIN
TS	TRANSITION SECTION
TW	TOP OF WALL
WWF	WELDED WIRE FABRIC
PDE	PERMANENT DRAINAGE EASEMENT

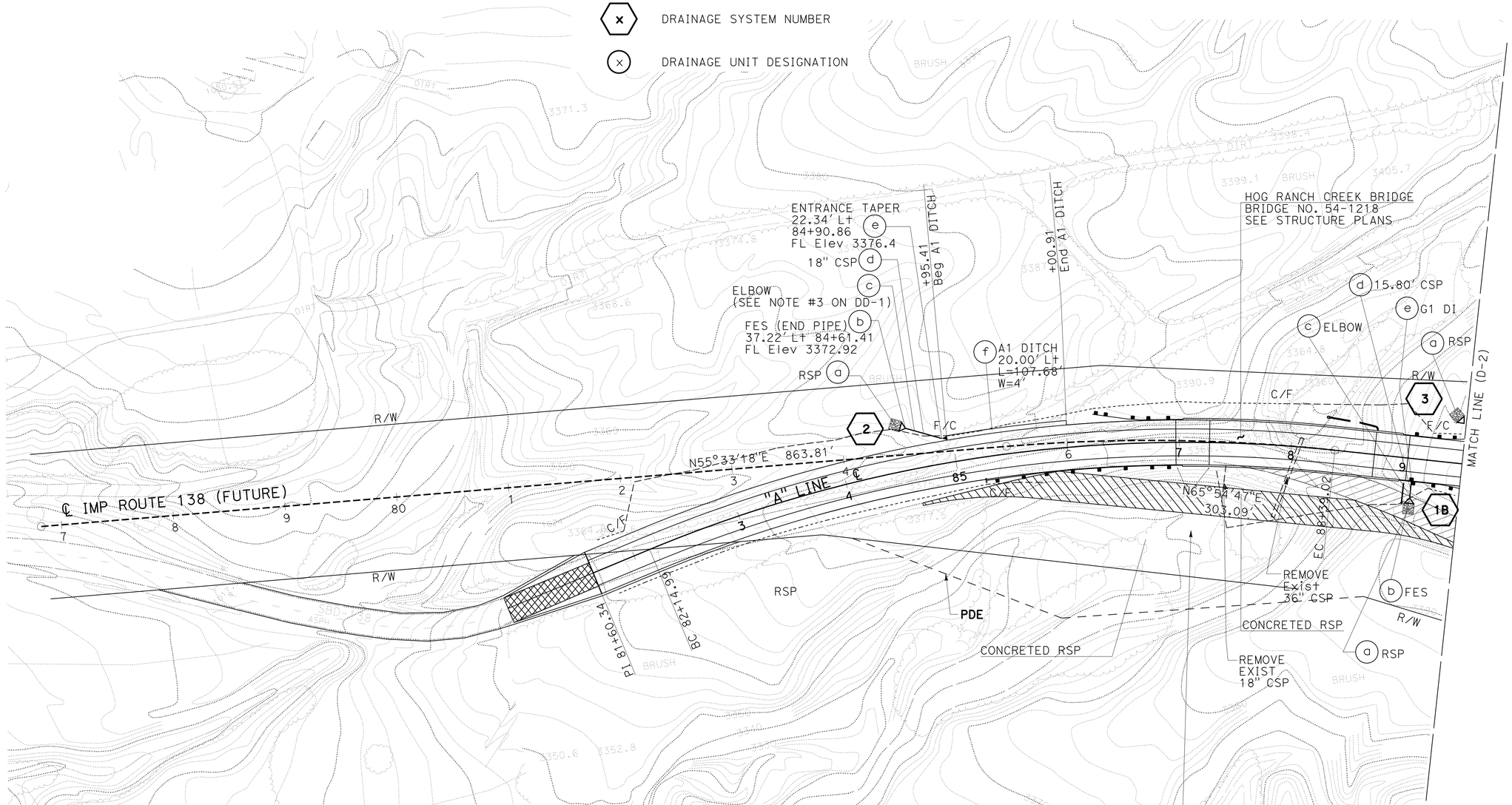

2 **REPLACED PER ADDENDUM No. 2 DATED FEBRUARY 8, 2016**

APPROVED FOR DRAINAGE WORK ONLY

DRAINAGE PLAN

SCALE: 1"=50'

D-1

STATE OF CALIFORNIA - DEPARTMENT OF TRANSPORTATION

Caltrans® **DESIGN**

FUNCTIONAL SUPERVISOR: MUSTAPHA RAOUF

CALCULATED-DESIGNED BY: KHA PHAM MYLINH NGUYEN

CHECKED BY: PAUL PHAN

REVISED BY | DATE REVISED

LAST REVISION 09-10-15 | DATE PLOTTED => 05-FEB-2016 | TIME PLOTTED => 12:42

Dist	COUNTY	ROUTE	POST MILES TOTAL PROJECT	SHEET No.	TOTAL SHEETS
08	SBd	138	R17.1/R19.2	48	212

REGISTERED CIVIL ENGINEER 9-10-15 DATE

9-11-15
PLANS APPROVAL DATE

REGISTERED PROFESSIONAL ENGINEER DUNG HUY PHAN No. 73061 Exp. 12/31/16 CIVIL STATE OF CALIFORNIA

THE STATE OF CALIFORNIA OR ITS OFFICERS OR AGENTS SHALL NOT BE RESPONSIBLE FOR THE ACCURACY OR COMPLETENESS OF SCANNED COPIES OF THIS PLAN SHEET.

NOTES:

1. FOR ROCK SLOPE PROTECTION AND CABLE RAILING SEE DETAILS ON DD-6 & DD-5, RESPECTIVELY.
2. SEE RSPD77B FOR BICYCLE PROOF GRATE ON SHOULDER.

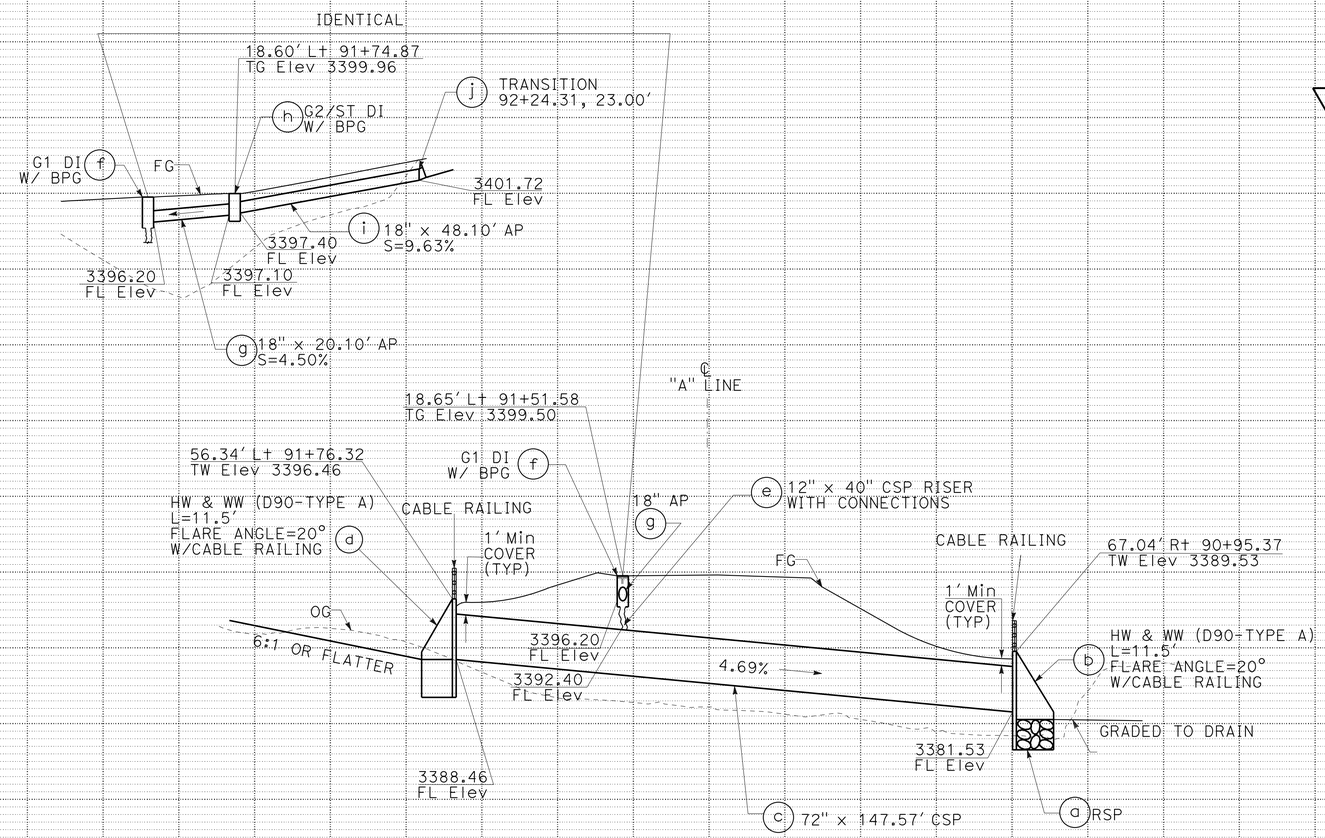

DRAINAGE SYSTEM No. 4

"A" 91+39.36

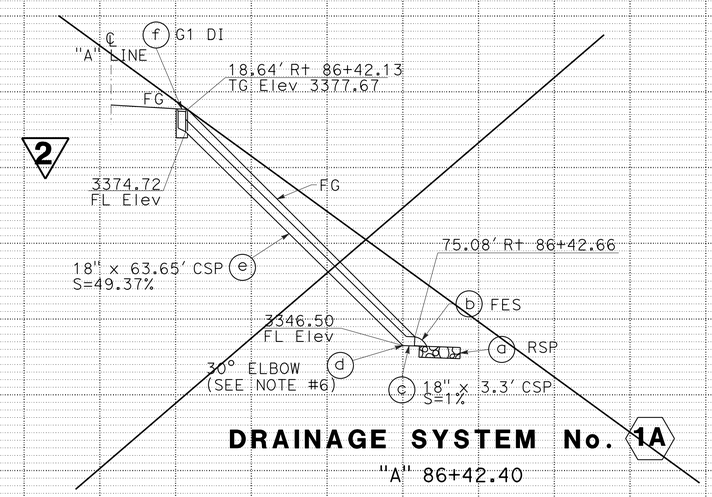

DRAINAGE SYSTEM No. 1A

"A" 86+42.40

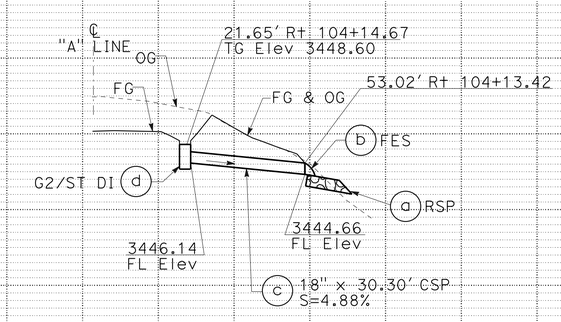

DRAINAGE SYSTEM No. 5

"A" 104+14.04

1A 4 5

DRAINAGE PROFILES

SCALE: Horiz 1" = 20'
Vert 1" = 10'

DP-1

2 **REPLACED PER ADDENDUM No. 2 DATED FEBRUARY 8, 2016**

STATE OF CALIFORNIA - DEPARTMENT OF TRANSPORTATION
Caltrans
DESIGN
FUNCTIONAL SUPERVISOR: MUSTAPHA RAOUF
CALCULATED-DESIGNED BY: TRI TRAN & KHA PHAM
CHECKED BY: PAUL PHAN
REVISED BY
DATE REVISED

LAST REVISION 09-10-15
DATE PLOTTED => 05-FEB-2016
TIME PLOTTED => 12:42

Dist	COUNTY	ROUTE	POST MILES TOTAL PROJECT	SHEET No.	TOTAL SHEETS
08	SBd	138	R17.1/R19.2	63	212

REGISTERED CIVIL ENGINEER 9-10-15 DATE

9-11-15
PLANS APPROVAL DATE

REGISTERED PROFESSIONAL ENGINEER DUNG HUY PHAN No. 73061 Exp. 12/31/16 CIVIL STATE OF CALIFORNIA

THE STATE OF CALIFORNIA OR ITS OFFICERS OR AGENTS SHALL NOT BE RESPONSIBLE FOR THE ACCURACY OR COMPLETENESS OF SCANNED COPIES OF THIS PLAN SHEET.

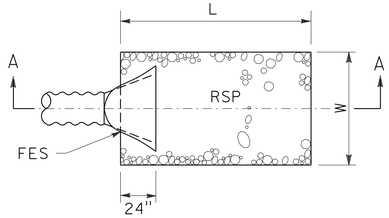

PLAN

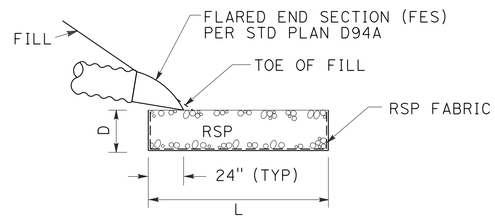

SECTION A-A

ROCK SLOPE PROTECTION AT OUTLET WITH FES

SEE TABLE BELOW FOR DIMENSIONS

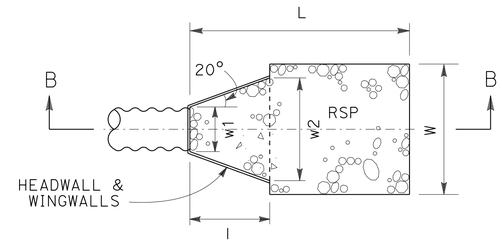

PLAN

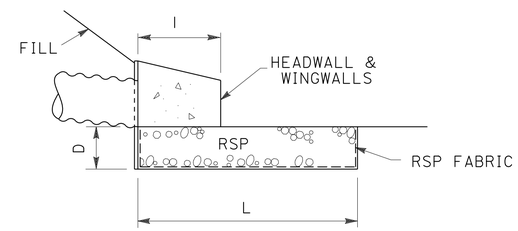

SECTION B-B

ROCK SLOPE PROTECTION AT OUTLET WITH HW&WW

SEE TABLE BELOW FOR DIMENSIONS

* FOR DRAINAGE SYSTEMS 13, 17 & 21
USE STD PLAN D89 FOR "L" HEADWALL

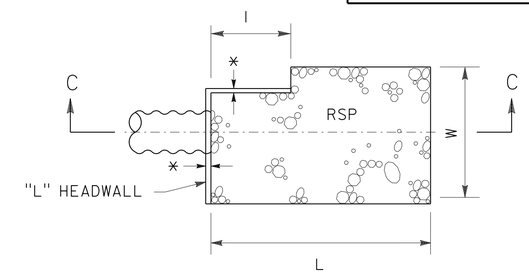

PLAN

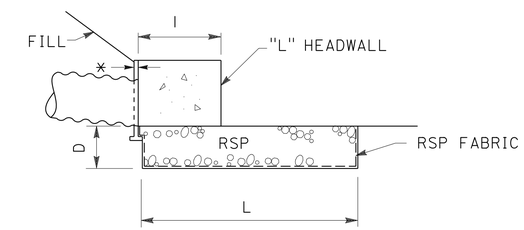

SECTION C-C

ROCK SLOPE PROTECTION AT OUTLET WITH HW & "L"HW

SEE TABLE BELOW FOR DIMENSIONS

ROCK SLOPE PROTECTION

DRAINAGE SYS NO.	UNIT	TYPE OF RSP	PIPE DIAM	W (ft)	L (ft)	D (ft)
~~1~~	~~a~~	~~FACING~~	~~-~~	~~8~~	~~8~~	~~1.5~~
~~1A~~	~~a~~	~~FACING~~	~~18"~~	~~4.4~~	~~11~~	~~1.5~~
1B	a	FACING	18"	4.4	11	1.5
2	a	FACING	18"	4.4	11	1.5
3	a	FACING	18"	4.4	11	1.5
5	a	FACING	18"	4.4	11	1.5
5A	a	FACING	18"	4.4	11	1.5
6	a	FACING	24"	6	14	1.5
8	a	FACING	18"	4.4	11	1.5
9	a	1T	42"	10.3	22.6	4
10	a	FACING	18"	4.4	11	1.5
12	a	FACING	24"	6	14	1.5
13	a	1T	54"	13.3	28.6	4
15	a	1/2T	24"	6	14	3
19	a	FACING	24"	6	14	1.5
20	e	FACING	60"	20.3	32.8	1.5
23	a	FACING	-	10	10	1.5
24	a	FACING	18"	4.4	11	2
25	a	1/2T	24"	6	14	3.3
26	a	FACING	18"	4.4	11	1.5
27	a	FACING	-	8	8	1.5

HW AND WW

DRAINAGE SYS NO.	UNIT	TYPE OF RSP	PIPE DIAM	w1 (ft)	w2 (ft)	W (ft)	I (ft)	L (ft)	D (ft)
AT OUTLET WITH HW&WW									
4	a	1T	72"	6	14	17.7	11	37.4	4
7	a	1T	90"	7.4	20.83	22.15	18.5	46.25	4
14	a	1T	84"	7	13.6	20.7	9.3	43.3	4
20	a	1T	60"	5	12	14.75	9	31.5	4
AT OUTLET WITH HW & "L"HW									
13	a	1T	54"	-	-	4.05	-	28.5	4
17	a	1/2T	36"	-	-	8.9	-	19.7	3.3
18	a	1T	36"	-	-	8.9	9.25	19.7	3.3
21	a	1T	36"	-	-	8.9	-	19.7	3.3
22	a	1T	48"	-	-	12	6.6	25.6	4

2 **REPLACED PER ADDENDUM No. 2 DATED FEBRUARY 8, 2016**

DRAINAGE DETAILS
NO SCALE

DD-4

STATE OF CALIFORNIA - DEPARTMENT OF TRANSPORTATION
Caltrans® DESIGN
FUNCTIONAL SUPERVISOR: MUSTAPHA RAOUF
CALCULATED-DESIGNED BY: TRI TRAN | CHECKED BY: PAUL PHAN
REVISED BY | DATE REVISED

LAST REVISION 09-10-15 | DATE PLOTTED => 05-FEB-2016 | TIME PLOTTED => 12:42

Dist	COUNTY	ROUTE	POST MILES TOTAL PROJECT	SHEET No.	TOTAL SHEETS
08	SBd	138	R17.1/R19.2	65	212

REGISTERED CIVIL ENGINEER 9-10-15 DATE

9-11-15
PLANS APPROVAL DATE

REGISTERED PROFESSIONAL ENGINEER DUNG HUY PHAN No. 73061 Exp. 12/31/16 CIVIL STATE OF CALIFORNIA

THE STATE OF CALIFORNIA OR ITS OFFICERS OR AGENTS SHALL NOT BE RESPONSIBLE FOR THE ACCURACY OR COMPLETENESS OF SCANNED COPIES OF THIS PLAN SHEET.

NOTES:

1. FILL - 60% NATIVE SOIL/40% COMPOST, SEE PLANTING PLANS.
2. PLANT - SEE PLANTING PLANS FOR SPACING AND OTHER INFO.
3. WATER IN - APPLY WATER TO 'FILL' TO PROMOTE PLANT GROWTH AND TO HELP FILL VOIDS BETWEEN RSP WITH 'FILL'.
4. COMPOST AND PLANT QUANTITIES IS SHOWN ON LANDSCAPE SHEETS.
5. PLACEMENT OF METHOD 'B' MUST BE SPREAD IN LAYERS NO THICKER THAN ONE LAYER OF RSP.
   A. EXCAVATE FOOTING TRENCH. (EXCAVATED SOIL MAY BE USED IN 'FILL').
   B. PLACE RSP FABRIC.
   C. PLACE ONE LAYER OF RSP.
   D. FILL VOIDS OF RSP WITH 'FILL'.
   E. 'WATER IN' 'FILL'.
   (REPEAT C-E UNTIL RSP IS ABOVE CREEK BED).
   F. ADD PLANTS IN VOIDS AND 'WATER IN' PLANTS IMMEDIATELY AFTER PLANTING.
   (REPEAT C-F TO HEIGHT AS SHOWN).
   G. ADD 'FILL' ON TOP OF RSP AS SHOWN
   H. 'WATER IN' ALL 'FILL'.

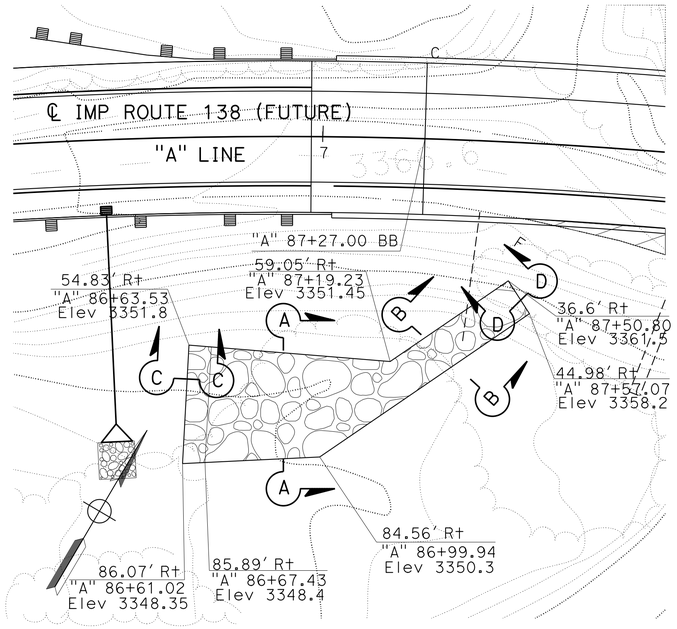

PLAN 2
HOG RANCH CREEK BRIDGE
SCALE 1"=50'

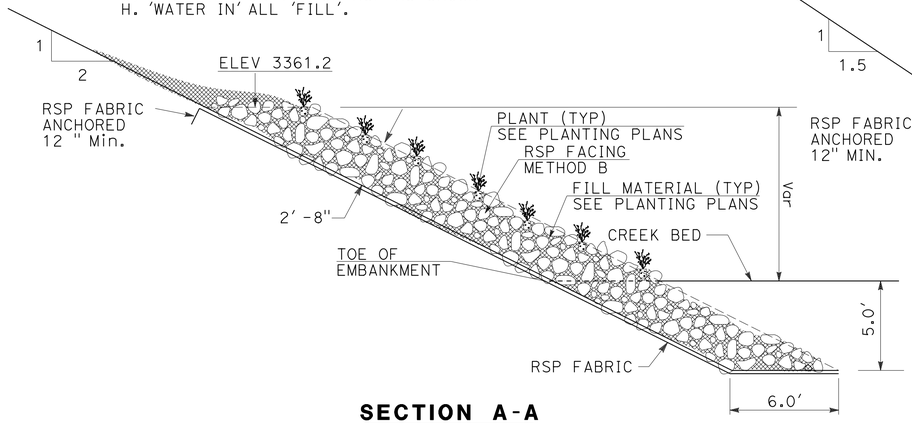

SECTION A-A

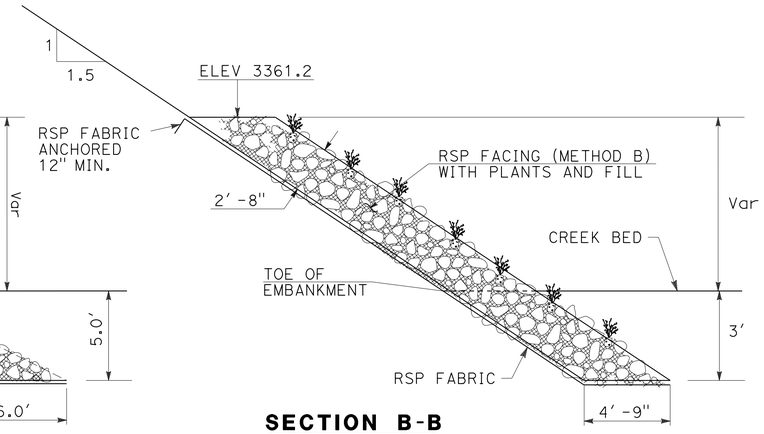

SECTION B-B

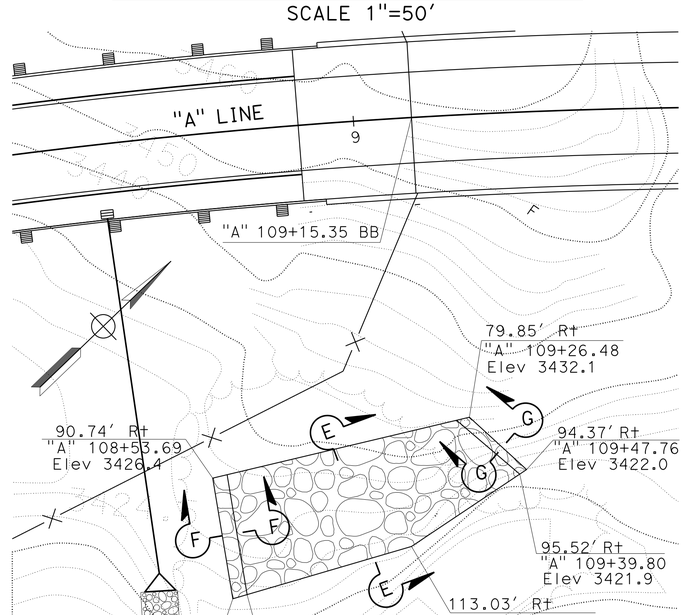

PLAN 1
MINER'S SHACK CREEK BRIDGE
SCALE 1"=50'

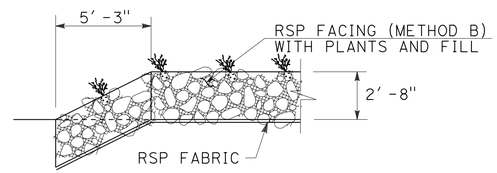

SECTION C-C

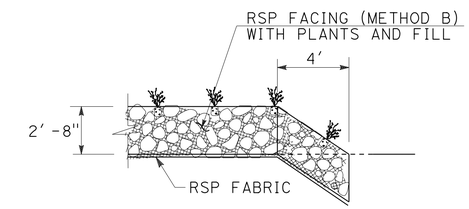

SECTION D-D

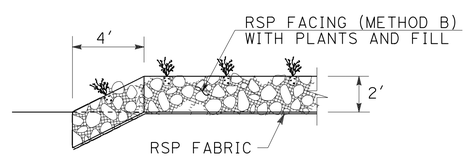

SECTION F-F

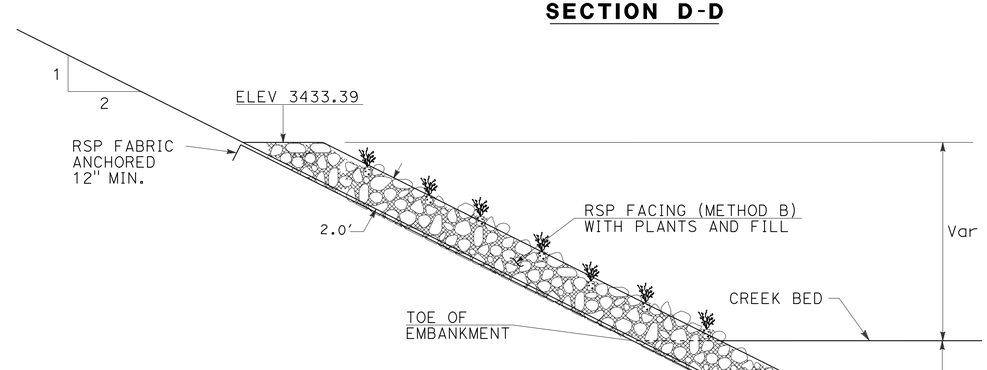

SECTION E-E

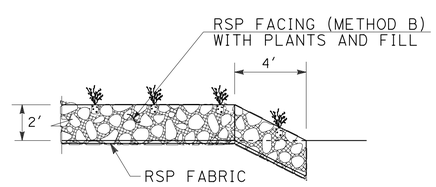

SECTION G-G

2 **REPLACED PER ADDENDUM No. 2 DATED FEBRUARY 8, 2016**

THIS PLAN ACCURATE FOR DRAINAGE WORK ONLY.

DRAINAGE DETAILS
NO SCALE
DD-6

STATE OF CALIFORNIA - DEPARTMENT OF TRANSPORTATION
Caltrans® DESIGN
FUNCTIONAL SUPERVISOR: MUSTAPHA RAOUF
CALCULATED-DESIGNED BY: PAUL PHAN
CHECKED BY: TRI TRAN
REVISED BY / DATE REVISED

LAST REVISION 09-10-15 DATE PLOTTED => 05-FEB-2016 TIME PLOTTED => 12:42

Dist	COUNTY	ROUTE	POST MILES TOTAL PROJECT	SHEET No.	TOTAL SHEETS
08	SBd	138	R17.1/R19.2	66	212

REGISTERED CIVIL ENGINEER 9-10-15 DATE

9-11-15
PLANS APPROVAL DATE

REGISTERED PROFESSIONAL ENGINEER DUNG HUY PHAN No. 73061 Exp. 12/31/16 CIVIL STATE OF CALIFORNIA

THE STATE OF CALIFORNIA OR ITS OFFICERS OR AGENTS SHALL NOT BE RESPONSIBLE FOR THE ACCURACY OR COMPLETENESS OF SCANNED COPIES OF THIS PLAN SHEET.

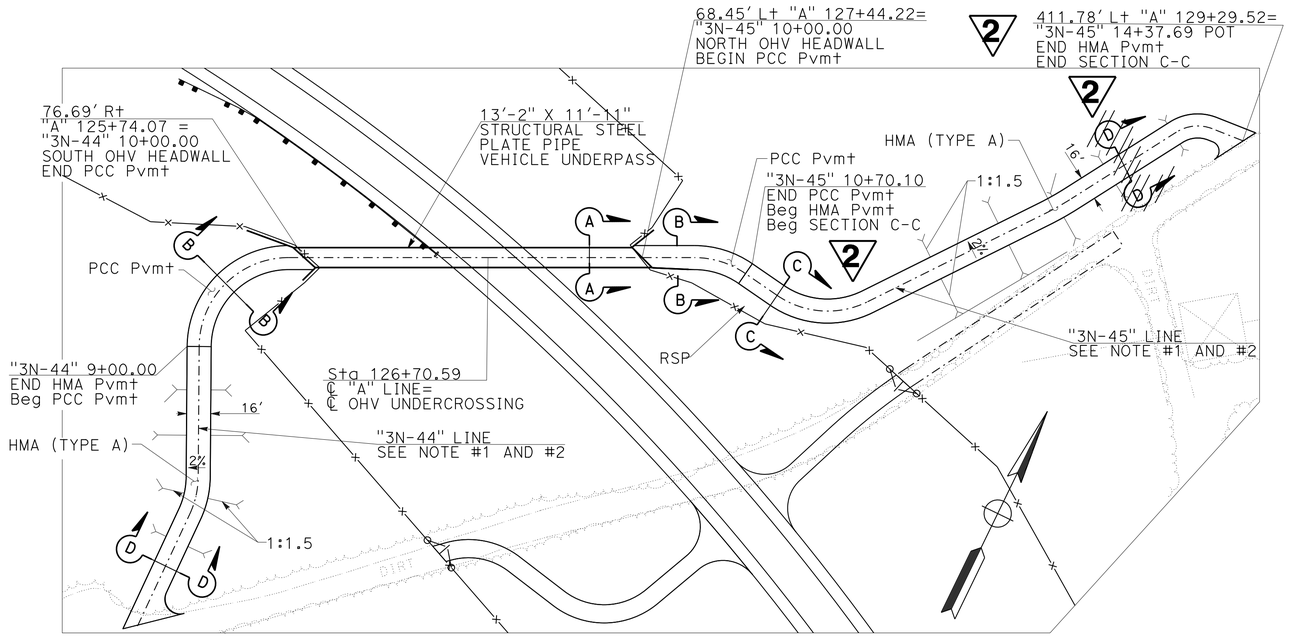

PLAN

SCALE 1"=50'

NOTES:

1. SEE SHEET L-5 FOR OHV ACCESS ROAD ALIGNMENT LAYOUT DATA.
2. SEE SHEET P-1 PROFILE FOR 3N-44 AND 3N-45.
3. SEE SHEET DD-8 FOR X-SECTIONS.
4. HEADWALL & WINGWALL PER STD PLAN D86C.

ABBREVIATIONS:

T = THICKNESS
TW = TOP OF WALL
SSPPA = STRUCTURAL STEEL PLATE PIPE ARCH

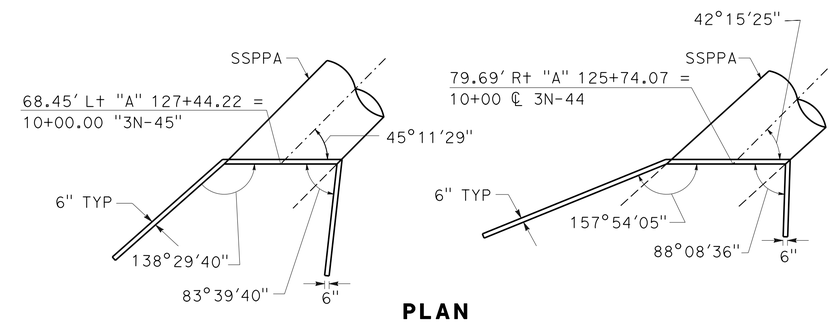

PLAN

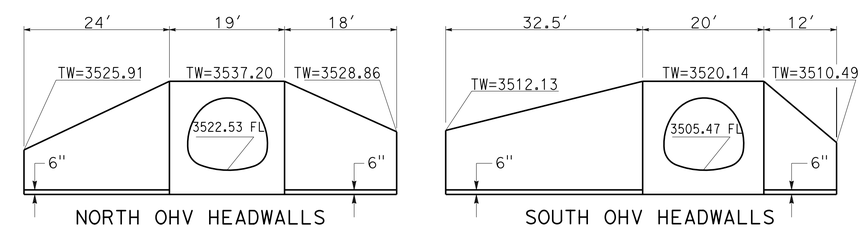

ELEVATIONS

HEADWALL DETAILS

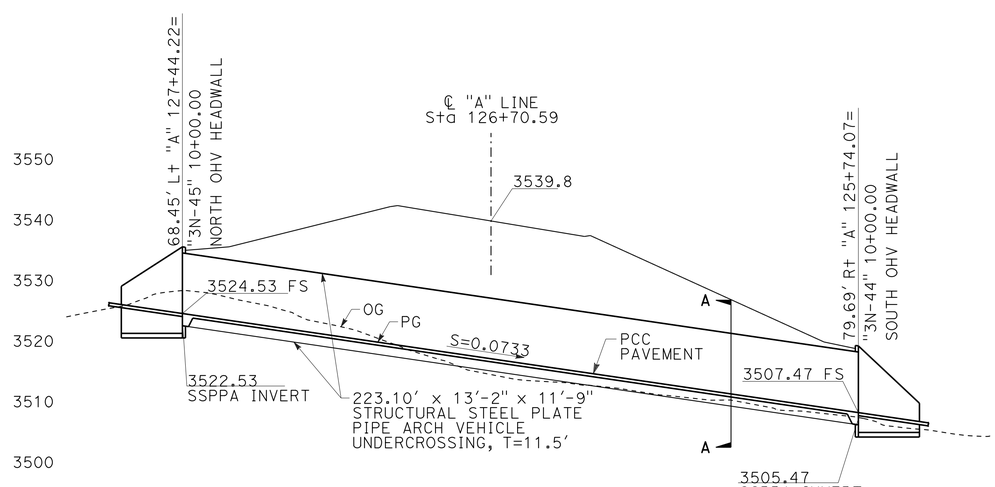

PROFILE

SCALE: HORIZ 1"=20'
VERT 1"=10'

ROUTE 138

OHV UNDERCROSSING

2 **REPLACED PER ADDENDUM No. 2 DATED FEBRUARY 8, 2016**

APPROVED FOR EDGE DRAIN WORK ONLY

DRAINAGE DETAILS

NO SCALE

DD-7

STATE OF CALIFORNIA - DEPARTMENT OF TRANSPORTATION
Caltrans® DESIGN
FUNCTIONAL SUPERVISOR: MUSTAPHA RAOUF
CALCULATED-DESIGNED BY: TRI TRAN
CHECKED BY: PAUL PHAN
REVISED BY
DATE REVISED

LAST REVISION 09-10-15
DATE PLOTTED => 05-FEB-2016
TIME PLOTTED => 12:42

Dist	COUNTY	ROUTE	POST MILES TOTAL PROJECT	SHEET No.	TOTAL SHEETS
08	SBd	138	R17.1/R19.2	67	212

REGISTERED CIVIL ENGINEER 9-10-15 DATE

9-11-15
PLANS APPROVAL DATE

REGISTERED PROFESSIONAL ENGINEER DUNG HUY PHAN No. 73061 Exp. 12/31/16 CIVIL STATE OF CALIFORNIA

THE STATE OF CALIFORNIA OR ITS OFFICERS OR AGENTS SHALL NOT BE RESPONSIBLE FOR THE ACCURACY OR COMPLETENESS OF SCANNED COPIES OF THIS PLAN SHEET.

2

LEGEND:

- CL 2 AB
- STRUCTURE BACKFILL
- ROADWAY EMBANKMENT

NOTES:

1. VOIDS IN RSP BELOW SURFACE GRADE LINE SHALL BE FILLED WITH NO.3 RSP BACKING.
2. UPPER 1.5′ OF RSP SHALL BE PLACED TO PRODUCE A JAGGED UNEVEN SURFACE ACROSS RSP BARRIER.

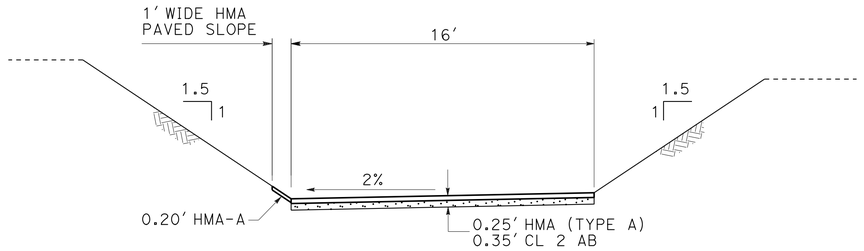

SECTION D-D

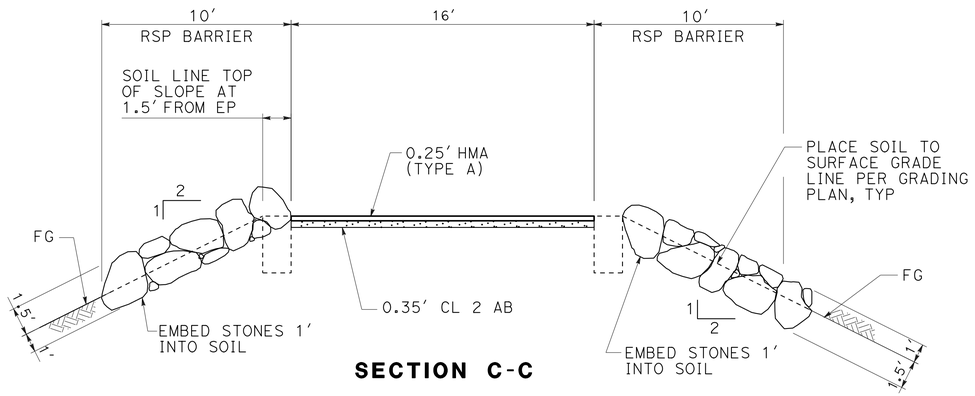

SECTION C-C

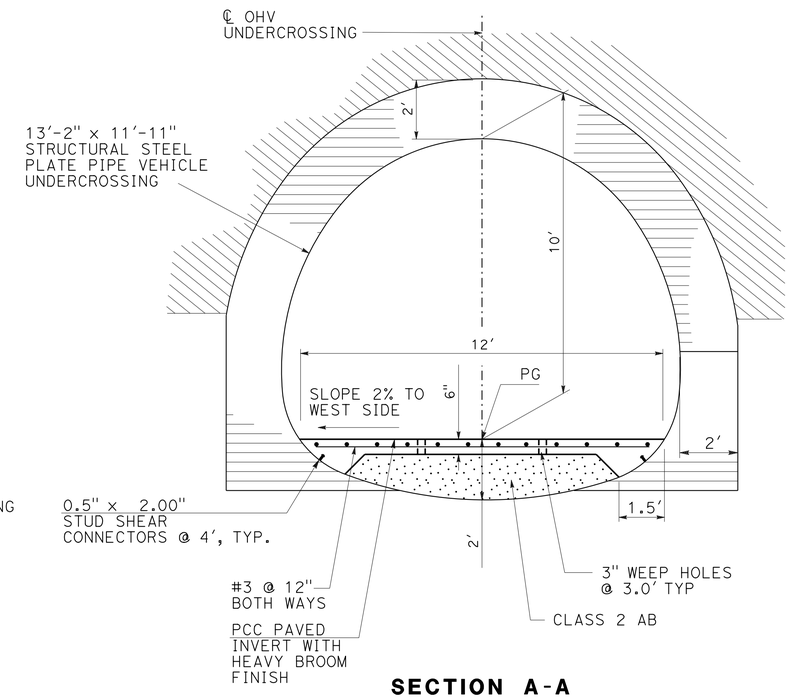

SECTION A-A

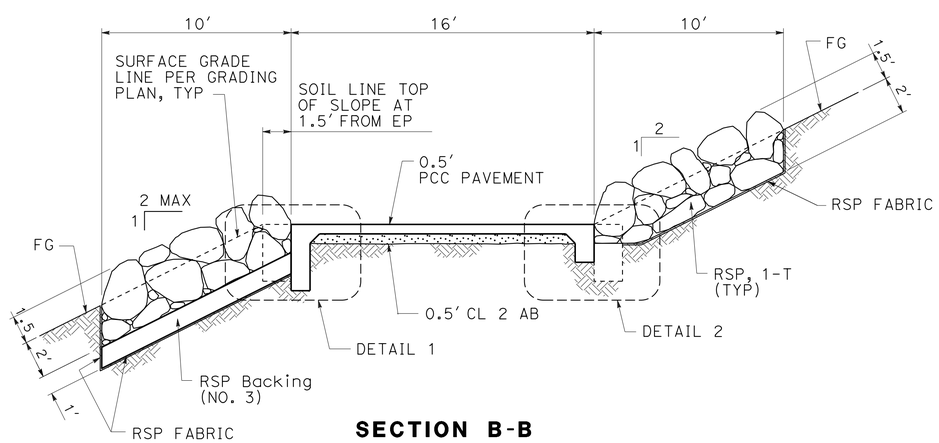

SECTION B-B

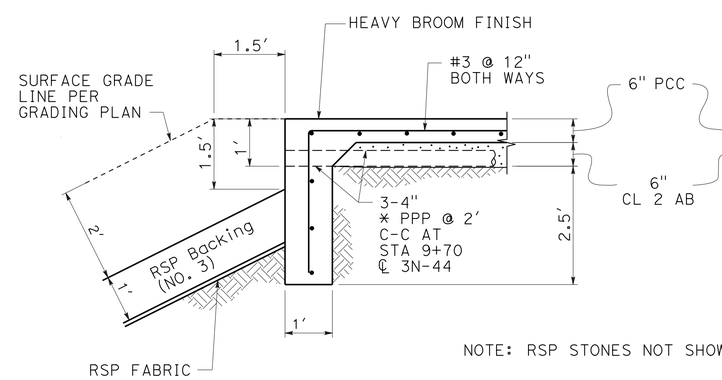

DETAIL 1

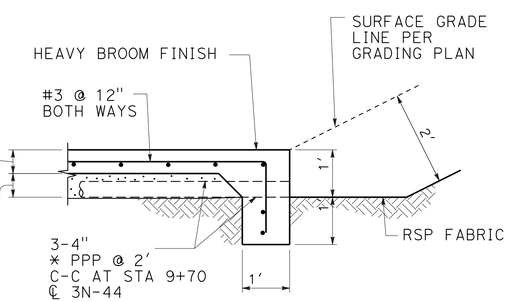

NOTE: RSP STONES NOT SHOWN FOR CLARITY.

DETAIL 2

OHV UNDERCROSSING
ROUTE 138

2 **REPLACED PER ADDENDUM No. 2 DATED FEBRUARY 8, 2016**

APPROVED FOR DRAINAGE WORK ONLY

DRAINAGE DETAILS

NO SCALE

DD-8

STATE OF CALIFORNIA - DEPARTMENT OF TRANSPORTATION
Caltrans®
DESIGN
FUNCTIONAL SUPERVISOR: MUSTAPHA RAOUF
CALCULATED-DESIGNED BY: TRI TRAN
CHECKED BY: PAUL PHAN
REVISED BY
DATE REVISED

LAST REVISION 09-10-15
DATE PLOTTED => 05-FEB-2016
TIME PLOTTED => 12:42

Dist	COUNTY	ROUTE	POST MILES TOTAL PROJECT	SHEET No.	TOTAL SHEETS
08	SBd	138	R17.1/R19.2	68	212

REGISTERED CIVIL ENGINEER 9-10-15 DATE

9-11-15
PLANS APPROVAL DATE

REGISTERED PROFESSIONAL ENGINEER DUNG HUY PHAN No. 73061 Exp. 12/31/16 CIVIL STATE OF CALIFORNIA

THE STATE OF CALIFORNIA OR ITS OFFICERS OR AGENTS SHALL NOT BE RESPONSIBLE FOR THE ACCURACY OR COMPLETENESS OF SCANNED COPIES OF THIS PLAN SHEET.

NOTES :

1. THE PRECISE DETERMINATION OF THE FOLLOWING ITEMS WILL BE DETERMINED BY THE ENGINEER: STATION, SKEW, LENGTH, FLOW LINE ELEVATION, AND DEPTH OF STRUCTURE 'H'.
2. FOR DRAINAGE LOCATIONS AND DETAILS, SEE DRAINAGE LAYOUTS, PROFILES, AND DETAILS SHEETS.

ABBREVIATION:

ST : SAND TRAP
BPG : BICYCLE PROOF GRATE
(N) - NOT A SEPARATE PAY ITEM, FOR INFORMATION ONLY

2

DRAINAGE QUANTITIES

DRAINAGE SHEET No.	DRAINAGE SYSTEM No.	DRAINAGE UNIT	REMOVE PIPE	REMOVE CONCRETE	CABLE RAILING	ROCK SLOPE PROTECTION (RSP) 1T METHOD B	1/2T METHOD B	FACING METHOD B	RSP FABRIC (CLASS 10)	MINOR CONCRETE (MINOR STRUCTURES)	STRUCTURE CONCRETE HEADWALL	BAR REINFORCE STEEL	HOT MIX ASPHALT (TYPE A)	PLACE HMA (Misc AREAS)	(N) TYPE 600-12 FRAME & GRATE	MISCELLANEOUS IRON & STEEL	(N) ELBOW	Alt PIPE CULVERT 18"	24"	CORRUGATED STEEL PIPE .109" THICK 12"	18"	24"	36"	42"	48"	54"	60"	.138" THICK 72"	84"	90"	STRUCTURAL STEEL PLATE PIPE ARCH 13'-2" × 11'-9"	STEEL FLARED END SECTION 18"	24"	36"	42"	48"	ENTRANCE TAPER 18"	(N) MAXIMUM COVER	(N) DEPTH OF "H" STRUCTURES	DESCRIPTION	STATION "A" LINE FROM 80+00 TO 110+00	DRAINAGE SHEET No.	DRAINAGE SYSTEM No.	DRAINAGE UNIT
			LF	CY	LF	CY			SQYD	CY	CY	LB	TON	SQYD	EA	LB	EA	LF		LF										LF	EA						LF							
D-1			36																																				REMOVE 18" CSP	87+40.71, 35.93' Rt			
			75																																				REMOVE 36" CSP	87+98.81, 28.39' Rt			
D-1	1B																																						CSP DRAIN	"A" 89+09.76	D-1	1B	
		a						2.7	10.3																														RSP				a
		b																													1								FES	89+09.89, 35.30' Rt			b
		c																			4.1																		18" CSP				c
		d															1																						ELBOW FOR 18" CSP				d
		e																			13.7																		18" CSP				e
		f								1					1	326																					3.0	G1 DI	89+09.76, 18.50' Rt			f
D-1	2																																						CSP MOD. DOWNDRAIN	"A" 85+10.47	D-1	2	
		a						2.7	10.3																														RSP				a
		b																													1								FES	84+61.41, 37.22' Lt			b
		c															1																						ELBOW FOR 18" CSP				c
		d																			34.6																		18" CSP MOD.				d
		e								1.3																										1			ENTRANCE TAPER-TRANSITION	84+90.86, 22.34' Lt			e
		f											16	48																								A1 DITCH	84+95.41, 20.00' Lt			f
D-2	3																																						CSP MOD. DOWNDRAIN	"A" 89+50.10	D-2	3	
D-1		a						2.7	10.3																														RSP		D-1		a
D-2		b																													1								FES	89+51.11, 36.09' Lt	D-2		b
		c															1																						ELBOW FOR 18" CSP				c
		d																			9.5																		18" CSP MOD.				d
		e								1																										1			ENTRANCE TAPER-TRANSITION	90+00.33,22.00' Lt			e
		f											17	49																								A1 DITCH	90+05.00,20.00' Lt			f
D-2	4																																						CSP CULVERT	"A" 91+39.36	D-2	4	
		a				85			109.6																														RSP				a
		b		30							23	2430																											HEADWALL & WINGWALLS(O)				b
		c																									148.6									8.5			72" CSP				c
		d		30							23	2430																											HEADWALL & WINGWALLS(I)				d
		e																		4.5																			12" CSP RISER				e
		f								1					1	326																					3.3	G1 DI w/ BPG	91+51.58, 18.65' Lt			f
		g																22.1																		2		18" AP				g
		h							1	1.3					1	326																					2.9	G2/ST DI	91+74.87, 18.60' Lt			h
		i																50.1																					18" AP				i
		j								1.3																										1			ENTRANCE TAPER-TRANSITION	92+24.31, 23.00' Lt			j
		k											317	939																								A2 DITCH	92+30.00, 20.00' Lt			k
		l	62																																				REMOVE 30" CSP	90+81.71, 109.10' Rt			l
			54																																				REMOVE 12" CSP	99+27.41, 373.61' Rt			
D-3	5																																						CSP DRAIN	"A" 104+14.04	D-3	5	
		a						2.7	10.3																														RSP				a
		b																													1								FES	104+13.42, 53.02 Rt			b
		c																			31.3															3.3			18" CSP				c
		d							1	1.3					1	326																					2.5	G2/ST DI	104+14.65,21.66' Rt			d
		e											22	65																								A1 DITCH	104+10.10,21.66' Rt			e
			67																																				REMOVE 24" CSP (OSD)	104+85.02,179.14' Rt			
D-3	5A																																						CSP DRAIN		D-3	5A	
		a						2.7	10.3																														RSP				a
		b																													1								FES	108+35.87,114.27' Rt			b
		c																			4.7																		18" CSP				c
		d															1																						22.5° ELBOW FOR 18" CSP				d
		e																			91.5																		18" CSP				e
		f								1					1	326																					2.9	G1 DI	108+32.61, 18.56' Rt			f
			294	60	85			13.5	163.1	10.2	46	4860	372	1101	5	1956	4	72.2	4.5		189.4						148.6			5				3	13.8	17.6		TOTAL				

2 **REPLACED PER ADDENDUM No. 2 DATED FEBRUARY 8, 2016**

DRAINAGE QUANTITIES
DQ-1

STATE OF CALIFORNIA - DEPARTMENT OF TRANSPORTATION
Caltrans® DESIGN

FUNCTIONAL SUPERVISOR: MUSTAPHA RAOUF
CALCULATED-DESIGNED BY: MYLINH NGUYEN, KHA PHAM, TRI TRAN
CHECKED BY: PAUL PHAN
REVISED BY / DATE REVISED

LAST REVISION 09-10-15
DATE PLOTTED => 05-FEB-2016
TIME PLOTTED => 12:42

Dist	COUNTY	ROUTE	POST MILES TOTAL PROJECT	SHEET No.	TOTAL SHEETS
08	SBd	138	R17.1/R19.2	69	212

REGISTERED CIVIL ENGINEER 9-10-15 DATE

9-11-15
PLANS APPROVAL DATE

REGISTERED PROFESSIONAL ENGINEER DUNG HUY PHAN No. 73061 Exp. 12/31/16 CIVIL STATE OF CALIFORNIA

THE STATE OF CALIFORNIA OR ITS OFFICERS OR AGENTS SHALL NOT BE RESPONSIBLE FOR THE ACCURACY OR COMPLETENESS OF SCANNED COPIES OF THIS PLAN SHEET.

DRAINAGE QUANTITIES

DRAINAGE SHEET No.	DRAINAGE SYSTEM No.	DRAINAGE UNIT	REMOVE PIPE	REMOVE CONCRETE	CABLE RAILING	ROCK SLOPE PROTECTION (RSP) 1T METHOD B	ROCK SLOPE PROTECTION (RSP) 1/2T METHOD B	ROCK SLOPE PROTECTION (RSP) FACING METHOD B	ROCK SLOPE PROTECTION (RSP) RSP FABRIC (CLASS 10)	MINOR CONCRETE (MINOR STRUCTURES)	STRUCTURE CONCRETE HEADWALL	BAR REINFORCE STEEL	HOT MIX ASPHALT (TYPE A)	PLACE HMA (Misc AREAS)	(N) TYPE 600-12 FRAME & GRATE	MISCELLANEOUS IRON & STEEL	(N) ELBOW	A1+ PIPE CULVERT 18"	A1+ PIPE CULVERT 24"	CORRUGATED STEEL PIPE .109" THICK 12"	CORRUGATED STEEL PIPE .109" THICK 18"	CORRUGATED STEEL PIPE .109" THICK 24"	CORRUGATED STEEL PIPE .109" THICK 36"	CORRUGATED STEEL PIPE .109" THICK 42"	CORRUGATED STEEL PIPE .109" THICK 48"	CORRUGATED STEEL PIPE .109" THICK 54"	CORRUGATED STEEL PIPE .109" THICK 60"	CORRUGATED STEEL PIPE .138" THICK 72"	CORRUGATED STEEL PIPE .138" THICK 84"	CORRUGATED STEEL PIPE .138" THICK 90"	STRUCTURAL STEEL PLATE PIPE ARCH 13'-2" x 11'-9"	STEEL FLARED END SECTION 18"	STEEL FLARED END SECTION 24"	STEEL FLARED END SECTION 36"	STEEL FLARED END SECTION 42"	STEEL FLARED END SECTION 48"	18" ENTRANCE TAPER	(N) MAXIMUM COVER	(N) DEPTH OF STRUCTURES "H"	DESCRIPTION	STATION "A" LINE FROM 110+00 TO 130+00	DRAINAGE SHEET No.	DRAINAGE SYSTEM No.	DRAINAGE UNIT
			LF	CY	LF	CY			SQYD	CY	CY	LB	TON	SQYD	EA	LB	EA	LF		LF										LF	EA						LF						
D-3	6																																						CSP DRAIN	"A" 111+38.76	D-3	6	
		a						5	18																														RSP				a
		b																														1								FES	111+02.56, 31.51′ R+			b
		c																				8.6															3.0		24" CSP				c
		d															1																						22.5° ELBOW FOR 24" CSP				d
		e																				66.3															6.7		24" CSP				e
		f							1	2					1	326																						5.3	G2/ST DI	111+77.79, 29.52′ R+			f
		g																				25.4															3.1		24" CSP				g
		h							1	2					1	326																						5.7	G2/ST DI	112+00.00, 18.42′ R+			h
D-3	7																																						CSP CULVERT	"A" 115+31.46	D-3	7	
		a				128			153																														RSP				a
		b			42					~~33.4~~	33.4	3701				~~462~~																							HEADWALL & WINGWALLS (O)				b
		c																											302.5								31.2		90" CSP				c
		d			42					~~33.4~~	33.4	3701				~~462~~																							HEADWALL & WINGWALLS (I)				d
		e								1.2					1	326																					4.3	G1 DI W/ BPG	115+30.49, 18.56′ R+			e
		f																		27.9																			12" CSP RISER				f
		g																16.1																			2.6		18" AP				g
		h							1	1.5					1	326																						3.5	G2/ST DI W/ BPG	115+48.47, 18.60′ R+			h
D-4	8																																						CSP MOD. DOWNDRAIN		D-4	8	
		a						2.7	10.3																														RSP				a
		b																													1								FES	116+51.97, 68.90′ L+			b
		c															1																						ELBOW FOR 18" CSP				c
		d																			65.5																		18" CSP				d
		e								1.3																								1					ENTRANCE TAPER-TRANSITION	116+98.06, 24.00′ L+			e
		f											11	32																								A1 DITCH	116+98.06, 20.00′ L+			f
D-4	9																																						CSP CULVERT	"A" 118+05.23	D-4	9	
		a				35			55																														RSP				a
		b																															1						FES	116+91.31, 97.18′ R+			b
		c																						293.9													28.5		42" CSP				c
		d																															1						FES	119+03.95, 102.95′ L+			d
		e								1.2					1	326																						3.9	G1 DI W/BPG	117+85.44, 18.55′ R+			e
		f																		18.2																			12" CSP RISER				f
		g																	11.8																	1.9		24" AP				g
		h							1	2					1	326																						4.1	G2/ST DI W/BPG	117+99.67, 18.60′ R+			h
		i																	116.8																	2.9		24" AP				i
		j							1	1.3					1	326																						2.8	G2/ST DI	119+18.16, 21.86′ R+			j
		k																	43.3																	2.6		24" AP				k
		l								1					1	326																						2.8	G1 DI	119+18.06, 21.72′ L+			l
		m											72	213																									A1 DITCH	119+12.73, 20.00′ R+			m
		n											32	95																									A1 DITCH	119+12.57, 19.96′ L+			n
D-4	10																																						CSP MOD. DOWNDRAIN		D-4	10	
		a						2.7	10.3																														RSP				a
		b																													1								FES	122+00.35, 44.18′ L+			b
		c															1																						ELBOW FOR 18" CSP				c
		d																			48.9																		18" CSP				d
		e								1.3																								1					ENTRANCE TAPER-TRANSITION	122+41.96, 24.38′ L+			e
		f											55	150																									A1 DITCH	122+44.04, 19.87′ L+			f
	SYSTEM No. 11 DELETED																																										
D-4	12																																						CSP CULVERT	"A" 128+36.22	D-4	12	
		a						5	18																														RSP				a
		b																														1							FES	128+25.89, 84.28′ L+			b
		c																				18.4															3.3		24" CSP				c
		d															1																						22.5° ELBOW FOR 24" CSP				d
		e																				55.2															7		24" CSP				e
		f							1	3					1	326																						7.6	G2/ST DI	128+46.86, 21.64′ L+			f
		g																	42.7																	6		24" AP				g
		h							1	2					1	326																						4.0	G2/ST DI	128+39.91, 21.66′ R+			h
		i											28	86																									A1 DITCH	128+41.44, 20.00′ L+			i
		j											32	95																									A1 DITCH	128+34.63, 20.00′ R+			j
					84	163		15.4	271.6	~~86.6~~ 19.8	66.8	7402	230	671	10	~~4184~~ 3260	4	16.1	214.6	46.1	114.4	173.9		293.9				302.5		2	2		2	2	98.8	44		TOTAL				

2 **REPLACED PER ADDENDUM No. 2 DATED FEBRUARY 8, 2016**

DRAINAGE QUANTITIES
DQ-2

REVISED BY | DATE REVISED
MYLINH NGUYEN, KHA PHAM, TRI TRAN | PAUL PHAN
CALCULATED-DESIGNED BY | CHECKED BY
FUNCTIONAL SUPERVISOR: MUSTAPHA RAOUF
STATE OF CALIFORNIA - DEPARTMENT OF TRANSPORTATION
Caltrans® DESIGN

LAST REVISION 09-10-15 | DATE PLOTTED => 05-FEB-2016 | TIME PLOTTED => 12:42

Dist	COUNTY	ROUTE	POST MILES TOTAL PROJECT	SHEET No.	TOTAL SHEETS
08	SBd	138	R17.1/R19.2	70	212

REGISTERED CIVIL ENGINEER 9-10-15 DATE

9-11-15
PLANS APPROVAL DATE

REGISTERED PROFESSIONAL ENGINEER DUNG HUY PHAN No. 73061 Exp. 12/31/16 CIVIL STATE OF CALIFORNIA

THE STATE OF CALIFORNIA OR ITS OFFICERS OR AGENTS SHALL NOT BE RESPONSIBLE FOR THE ACCURACY OR COMPLETENESS OF SCANNED COPIES OF THIS PLAN SHEET.

DRAINAGE QUANTITIES

DRAINAGE SHEET No.	DRAINAGE SYSTEM No.	DRAINAGE UNIT	REMOVE PIPE	REMOVE CONCRETE	CABLE RAILING	ROCK SLOPE PROTECTION (RSP) 1T METHOD B	ROCK SLOPE PROTECTION (RSP) 1/2T METHOD B	ROCK SLOPE PROTECTION (RSP) FACING METHOD B	ROCK SLOPE PROTECTION (RSP) RSP FABRIC (CLASS 10)	2 MINOR CONCRETE (MINOR STRUCTURES)	2 STRUCTURE CONCRETE HEADWALL	2 BAR REINFORCE STEEL	HOT MIX ASPHALT (TYPE A)	PLACE HMA (Misc AREAS)	(N) TYPE 600-12 FRAME & GRATE	2 MISCELLANEOUS IRON & STEEL	(N) ELBOW	A1+ PIPE CULVERT 18"	A1+ PIPE CULVERT 24"	CORRUGATED STEEL PIPE .109" THICK 12"	CORRUGATED STEEL PIPE .109" THICK 18"	CORRUGATED STEEL PIPE .109" THICK 24"	CORRUGATED STEEL PIPE .109" THICK 36"	CORRUGATED STEEL PIPE .109" THICK 42"	CORRUGATED STEEL PIPE .109" THICK 48"	CORRUGATED STEEL PIPE .109" THICK 54"	CORRUGATED STEEL PIPE .109" THICK 60"	CORRUGATED STEEL PIPE .138" THICK 72"	CORRUGATED STEEL PIPE .138" THICK 84"	CORRUGATED STEEL PIPE .138" THICK 90"	STRUCTURAL STEEL PLATE PIPE ARCH 13'-2" x 11'-9"	STEEL FLARED END SECTION 18"	STEEL FLARED END SECTION 24"	STEEL FLARED END SECTION 36"	STEEL FLARED END SECTION 42"	STEEL FLARED END SECTION 48"	18" ENTRANCE TAPER	(N) MAXIMUM COVER	(N) DEPTH OF STRUCTURES "H"	DESCRIPTION	STATION "A" LINE FROM 130+00 TO 155+00	DRAINAGE SHEET No.	DRAINAGE SYSTEM No.	DRAINAGE UNIT
			LF	CY	LF	CY			SQYD	CY	CY	LB	TON	SQYD	EA	LB	EA	LF		LF										LF	EA						LF						
																																							CSP CULVERT	"A" 131+18.78			
D-4	13	a				57			80																														RSP		D-4	13	a
D-5		b			17					4						190																							HEADWALL (O)	130+48.50, 170.36' R+	D-5		b
		c																							306											34			54" CSP				c
		d			17					4						235																							"L" HEADWALL (I)	131+57.34, 114.13' L+			d
		e																		31.2																			12" CSP RISER				e
		f								2					1	326																						3.9	G2 DI w/BPG	131+11.86, 18.54' R+			f
		g																	15.8																	2		24" AP				g
		h							1	2					1	326																					4.1	G2/ST w/BPG	131+29.77, 18.57' R+			h
		i																	132.2																	3.3		24" AP				i
		j							1	2					1	326																					4.1	G2/ST DI	132+63.19, 21.64' R+			j
		k																	42.3																	3		24" AP				k
		l							1	2					1	326																					4	G2/ST DI	132+62.95, 21.71' L+			l
		m											50	150																								A1 DITCH	132+57.90, 20.00' R+			m
		n											50	150																								A1 DITCH	132+57.82, 20.00' L+			n
		o	66																																			REMOVE 60" CSP	131+21.70, 36.04' R+			o
D-5	14																																					CSP CULVERT	"A" 137+43.95	D-5	14	
		a				133			142																													RSP				a
		b			33					~~27~~	27	2405				~~441~~																						HEADWALL & WINGWALLS (O)	137+92.00, 137.61' R+			b
		c																										259								56		84" CSP				c
		d			33					~~27~~	27	2405				~~441~~																						HEADWALL & WINGWALLS (I)	136+99.56, 128.26' L+			d
			23																																			REMOVE 18" CSP	138+93.89, 273.82' R+			
			50																																			REMOVE 18" CSP	139+52.11, 265.5' R+			
D-5	15																																					CSP CULVERT	"A" 145+63.01	D-5	15	
		a					9		22																													RSP				a
		b																													1							FES	143+20.34, 102.76' L+			b
		c																				39.7														5.6		24" CSP				c
		d															1																					45° ELBOW FOR 24" CSP				d
		e																				103.6														2.6		24" CSP				e
D-6		f								4					1	326																					9.0	G2 DI	144+72.21, 18.42' L+	D-6		f
		g																				117.7																24" CSP				g
		h							1	2					1	326																					7.0	G2/ST DI	145+63.01, 22.00' L+			h
		i																	42.9																			24" CSP				i
		j							1	2					1	326																					5.0	G2/ST DI	145+62.96, 22.03' R+			j
		k											83	250																								A1 DITCH	145+60.33, 20.00' L+			k
		l											74	217																								A1 DITCH	145+60.33, 20.00' R+			l
			60																																			REMOVE 18" CSP	150+95.75, 179.51' R+			
	SYSTEM No. 16 DELETED																						SYSTEM No. 16 DELETED																			
D-6	17																																					CSP CULVERT	"A" 152+15.63	D-6	17	
		a					21		40																													RSP				a
		b								2						105																						HEADWALL (O)	151+78.89, 113.09' R+			b
		c																				211.4														30		36" CSP				c
		d																													1							FES	152+52.27, 83.06' L+			d
		e																		26.6																		12" CSP RISER				e
		f								1.3					1	326																					4.4	G1 DI w/ BPG	152+14.40, 18.50' R+			f
		g																	54.1																	7.3		24" AP				g
		h							1	2					1	326																					7	G1/ST DI W/ BPG	151+89.44, 18.42' L+			h
D-6	18																																					CSP CULVERT	"A" 154+06.77	D-6	18	
		a				21			40																													RSP				a
		b								3						170																						"L" HEADWALL (O)	153+83.98, 106.21' R+			b
		c																				18.8														4		36" CSP				c
		d															1																					22.5° ELBOW FOR 36" CSP				d
		e																				74.5														6		36" CSP				e
		f															1																					22.5° ELBOW FOR 36" CSP				f
		g																				78.4														6		36" CSP				g
		h																													1							FES	154+28.18, 53.49' L+			h
			40																																			REMOVE 36" CSP	154+42.87, 214.53' R+			
				20																																		REMOVE PIPE HEADWALLS	228.5' & 200.6' R+			
			239	20	100	211	30		330	~~86.3~~ 32.3	54	4810	257	767	9	~~4516~~ 3634	3		287.3	57.8		261.0	383.1			306		259			1	2				159.8	48.5	TOTAL				

2 **REPLACED PER ADDENDUM No. 2 DATED FEBRUARY 8, 2016**

DRAINAGE QUANTITIES
DQ-3

STATE OF CALIFORNIA - DEPARTMENT OF TRANSPORTATION
Caltrans® DESIGN

FUNCTIONAL SUPERVISOR: MUSTAPHA RAOUF
CALCULATED-DESIGNED BY: MYLINH NGUYEN, KHA PHAM, TRI TRAN
CHECKED BY: PAUL PHAN
REVISED BY / DATE REVISED

LAST REVISION 09-10-15
DATE PLOTTED => 05-FEB-2016
TIME PLOTTED => 12:42

Dist	COUNTY	ROUTE	POST MILES TOTAL PROJECT	SHEET No.	TOTAL SHEETS
08	SBd	138	R17.1/R19.2	71	212

REGISTERED CIVIL ENGINEER 9-10-15 DATE

9-11-15
PLANS APPROVAL DATE

REGISTERED PROFESSIONAL ENGINEER DUNG HUY PHAN No. 73061 Exp. 12/31/16 CIVIL STATE OF CALIFORNIA

THE STATE OF CALIFORNIA OR ITS OFFICERS OR AGENTS SHALL NOT BE RESPONSIBLE FOR THE ACCURACY OR COMPLETENESS OF SCANNED COPIES OF THIS PLAN SHEET.

DRAINAGE QUANTITIES

DRAINAGE SHEET No.	DRAINAGE SYSTEM No.	DRAINAGE UNIT	REMOVE PIPE	REMOVE CONCRETE	CABLE RAILING	ROCK SLOPE PROTECTION (RSP) 1T METHOD B	ROCK SLOPE PROTECTION (RSP) 1/2T METHOD B	ROCK SLOPE PROTECTION (RSP) FACING METHOD B	ROCK SLOPE PROTECTION (RSP) RSP FABRIC (CLASS 10)	MINOR CONCRETE (MINOR STRUCTURES) 2	STRUCTURE CONCRETE HEADWALL 2	BAR REINFORCE STEEL 2	HOT MIX ASPHALT (TYPE A)	PLACE HMA (Misc AREAS)	(N) TYPE 600-12 FRAME & GRATE	MISCELLANEOUS IRON & STEEL 2	(N) ELBOW	Al+ PIPE CULVERT 18"	Al+ PIPE CULVERT 24"	CORRUGATED STEEL PIPE .109" THICK 12"	CORRUGATED STEEL PIPE .109" THICK 18"	CORRUGATED STEEL PIPE .109" THICK 24"	CORRUGATED STEEL PIPE .109" THICK 36"	CORRUGATED STEEL PIPE .109" THICK 42"	CORRUGATED STEEL PIPE .109" THICK 48"	CORRUGATED STEEL PIPE .109" THICK 54"	CORRUGATED STEEL PIPE .109" THICK 60"	CORRUGATED STEEL PIPE .138" THICK 72"	CORRUGATED STEEL PIPE .138" THICK 84"	CORRUGATED STEEL PIPE .138" THICK 90"	STRUCTURAL STEEL PLATE PIPE ARCH 13'-2" × 11'-9"	STEEL FLARED END SECTION 18"	STEEL FLARED END SECTION 24"	STEEL FLARED END SECTION 36"	STEEL FLARED END SECTION 42"	STEEL FLARED END SECTION 48"	18" ENTRANCE TAPER	(N) MAXIMUM COVER	(N) DEPTH OF STRUCTURES "H"	DESCRIPTION	STATION "A" LINE FROM 155+00 TO 175+00	DRAINAGE SHEET No.	DRAINAGE SYSTEM No.	DRAINAGE UNIT
			LF	CY	LF	CY			SQYD	CY	CY	LB	TON	SQYD	EA	LB	EA	LF		LF										LF	EA						LF						
D-6	19																																						CSP CULVERT	"A" 155+72.80	D-6	19	
		a						5	18																													RSP				a
		b																													1								FES	155+31.53, 52.48′ L+			b
		c																				52.2														9.5		24" CSP				c
		d							1	1.68					1	326																					4.4	G2/ST DI	155+72.80, 21.73′ L+			d
		e																	42.3																	3.3		24" AP				e
		f							1	1.65					1	326																					3.9	G2/ST DI	155+72.84, 21.69′ R+			f
		g											85	250																								A1 DITCH	155+67.56, 20.00′ R+			g
		h											85	250																								A1 DITCH	155+67.57, 20.00′ L+			h
			50																																			REMOVE 36" CSP	158+59.53, 352.16′ R+			
D-7	20																																					CSP CULVERT	"A" 162+58.45	D-7	20	
		a				70			100																													RSP				a
		b			27					~~20~~	20	1880				~~333~~																						HEADWALL & WINGWALLS (O)	161+26.51, 206.69′ R+			b
		c																								445										39.7		60" CSP				c
		d			10					~~20~~	20	1880				~~333~~																						HEADWALL & WINGWALLS (I)	163+90.39, 149.00′ L+			d
		e						37	93																													RSP				e
D-7	21																																					CSP CULVERT	"A" 167+67.66	D-7	21	
		a				22			41																													RSP				a
		b								1.95						105																						HEADWALL (OUTLET)	167+49.81, 117.35′ L+			b
		c																					15.1													6.2		36" CSP				c
		d															1																					30° ELBOW FOR 36" CSP				d
		e																					50.3													10.2		36" CSP				e
		f															1																					22.5° ELBOW FOR 36" CSP				f
		g																					160.3													18.4		36" CSP				g
		h																													1							FES	167+80.82, 100.26′ R+			h
		i																		33.8																		12" CSP RISER				i
		j								1.6					1	326																					4.1	G2 DI W/ BPG	167+64.86, 18.43′ L+			j
		k																	17.4																	2		24" AP				k
		l							1	1.71					1	326																					4.5	G2/ST DI W/ BPG	167+84.79, 18.47′ L+			l
		m																	50.2																	2		24" AP				m
		n							1	1.81					1	326																					5.0	G2/ST DI W/ BPG	167+84.79, 18.47′ L+			n
		o																	39.1																	2		24" AP				o
		p								1.28					1	326																					4.5	G1 DI	168+37.95, 21.70′ R+			p
		q							1	1.71					1	326																					4.5	G2/ST DI W/ BPG	165+77.55, 18.42′ L+			q
		r																	84.9																	2		24" AP				r
		s							1	4.35					1	326																					10.3	G2/ST DI W/ BPG	166+65.79, 18.42′ L+			s
		t																	95.6																	2		24" AP				t
		u											40	122																								A1 DITCH	168+32.64, 20.00′ R+			u
			53																																			REMOVE 24" CSP				
D-7	22																																					CSP CULVERT	"A" 170+62.14	D-7	22	
		a				50			70																													RSP				a
		b			10					3.47						215																						"L" HEADWALL (OUTLET)	170+30.14, 101.7′ L+			b
		c																						9.84												3.6		48" CSP				c
		d															1																					30° ELBOW FOR 48" CSP				d
		e																						56.6												3.6		48" CSP				e
		f															1																					22.5° ELBOW FOR 48" CSP				f
D-8	22	g																						142.9												8.9		48" CSP		D-8	22	g
		h			3																												1					FES	170+84.75, 100.56′ R+			h
		i																		22.2																		12" CSP RISER				i
		j								1.15					1	326																					3.9	G1 DI w/ BPG	170+64.27, 18.44′ R+			j
		k																36.2																		3.3		18" AP				k
		l							1	1.71					1	326																					4.7	G2/ST DI	170+99.55, 23.59′ R+			l
		m											115	353																								A3 DITCH	170+94.60, 28.00′ R+			m
		n	125																																			REMOVE 18" CSP DOWNDRAIN	173+83.35, 32.53′ R+			n
		o	66																																			REMOVE 24" CSP	173+88.28, 109.66′ R+			o
			69																																			REMOVE 18" CSP	170+77.5, 288.14′ R+			
D-8	23																																					CONC V DITCH (TYPE A3)		D-8	23	
		a					6		24																													RSP				a
		b											60	180																								A3 DITCH	Fr 172+93.63, 127.48′ R+			b
																																							To 174+56.19, 197.46′ R+			
			363		50	142	6	42	353	~~64.1~~ 44.1	40	3760	385	1155	10	~~4246~~ 3580	4	36.2	329.5	56		52.2	225.7		209.3		445						1	1		1		116.7	49.8	TOTAL				

2 **REPLACED PER ADDENDUM No. 2 DATED FEBRUARY 8, 2016**

DRAINAGE QUANTITIES
DQ-4

STATE OF CALIFORNIA - DEPARTMENT OF TRANSPORTATION
Caltrans® DESIGN

FUNCTIONAL SUPERVISOR: MUSTAPHA RAOUF
CALCULATED-DESIGNED BY: MYLINH NGUYEN, KHA PHAM, TRI TRAN
CHECKED BY: PAUL PHAN
REVISED BY / DATE REVISED

LAST REVISION 09-10-15
DATE PLOTTED => 05-FEB-2016
TIME PLOTTED => 12:42

Dist	COUNTY	ROUTE	POST MILES TOTAL PROJECT	SHEET No.	TOTAL SHEETS
08	SBd	138	R17.1/R19.2	72	212

REGISTERED CIVIL ENGINEER 9-10-15 DATE

9-11-15
PLANS APPROVAL DATE

REGISTERED PROFESSIONAL ENGINEER DUNG HUY PHAN No. 73061 Exp. 12/31/16 CIVIL STATE OF CALIFORNIA

THE STATE OF CALIFORNIA OR ITS OFFICERS OR AGENTS SHALL NOT BE RESPONSIBLE FOR THE ACCURACY OR COMPLETENESS OF SCANNED COPIES OF THIS PLAN SHEET.

2

DRAINAGE QUANTITIES

DRAINAGE SHEET No.	DRAINAGE SYSTEM No.	DRAINAGE UNIT	REMOVE PIPE	REMOVE CONCRETE	CABLE RAILING	ROCK SLOPE PROTECTION (RSP) 1T METHOD B	1/2T METHOD B	FACING METHOD B	No.1 METHOD B	No.3 METHOD B	RSP FABRIC (CLASS 10)	MINOR CONCRETE (MINOR STRUCTURES)	STRUCTURE CONCRETE HEADWALL	BAR REINFORCE STEEL	* HOT MIX ASPHALT (TYPE A)	PLACE HMA (Misc AREAS)	(N) TYPE 600-12 FRAME & GRATE	MISCELLANEOUS IRON & STEEL	(N) ELBOW	Al+ PIPE CULVERT 18"	Al+ PIPE CULVERT 24"	CORRUGATED STEEL PIPE .109" THICK 12"	.109" THICK 18"	.109" THICK 24"	.109" THICK 36"	.109" THICK 42"	.109" THICK 48"	.109" THICK 54"	.109" THICK 60"	.138" THICK 72"	.138" THICK 84"	.138" THICK 90"	STRUCTURAL STEEL PLATE PIPE ARCH 13'-2" × 11'-9"	STEEL FLARED END SECTION 18"	24"	36"	42"	48"	18" ENTRANCE TAPER	(N) MAXIMUM COVER	(N) DEPTH OF STRUCTURES "H"	DESCRIPTION	STATION "A" LINE FR 175+00 TO 193+00(END)	DRAINAGE SHEET No.	DRAINAGE SYSTEM No.	DRAINAGE UNIT
			LF	CY	LF	CY					SQYD	CY	CY	LB	TON	SQYD	EA	LB	EA	LF		LF											LF	EA						LF						
D-8	24																																										CSP DRAIN		D-8	24	
		a						2.7			10.3																															RSP				a
		b																																1								FES	171+97.72, 73.52′ L+			b
		c																					86																5.5			18" CSP				c
		d									1	1.4					1	326																						3.4	G2/ST DI	172+66.85, 23.66′ L+			d
		e													61	188																									A3 DITCH	172+61.92, 20.01′ L+			e
D-9	25																																									CSP CULVERT	"A" 189+60.82	D-9	25	
		a					11				23																															RSP				a
		b																																	1							FES	189+54.84, 76.99′ L+			b
		c																						12															1			24" CSP				c
		d																	1																							22.5° ELBOW FOR 36" CSP				d
		e																						64.8															5.5			24" CSP				e
		f									1	2.3					1	326																						6.7	G2/ST DI	189+09.99, 18.62′ L+			f
		g																			41																		4			24" AP				g
		h										1.6					1	326																						5.8	G1 INLET	189+10.02, 23.60′ R+			h
		i						3.5			12																															RSP				i
D-9	26																																									CSP MOD. DOWNDRAIN		D-9	26	
		a						2.7			10.3																															RSP				a
		b																																1								FES	187+53.27, 69.76′ L+			b
		c																	1																							ELBOW FOR 18" CSP				c
		d																					93																			18" CSP				d
		e										1.6																											1			ENTRANCE TAPER TRANSITION	186+74.13, 24.02′ L+			e
								180.7			237.2																															HOG RANCH CREEK BRIDGE Fr 86+67.43,85.89′ R+ To 87+57.05,44.95′ R+				
								161			278.3																															MINOR'S SHACK CREEK BRIDGE Fr 108+60.22,122.45′ R+ To 109+39.80,95.52′ R+				
							847		424		931																															MINOR'S SHACK CREEK BRIDGE Fr 111+86.27,63.48′ L+ To 113+97.67,218.82′ L+				
						740				85	326	65	39	4427				10740														223									OHV UNDERCROSSING (HW & WW)	Fr "#3N-44" 10+00.00 To "#3N-45" 10+00.00			
												105	41	4601																										OHV UNDERCROSSING (PCC PAVEMENT)	"#3N-44" Fr 9+00.00 To 10+00.00 Lt+/Rt+ "#3N-45" Fr 10+00.00 To 10+70.10 Lt+/Rt+			
						740	858	351	424	85	1830	177	80	9028	61	188	3	11718	2		41		179	76.8							223	2	1				1	16	16	SHEET DQ-5				
			363		50	142	6	42			353	44	40	3760	385	1155	10	3580	4	36.2	329.5	56			52.2	226		209		445					1	1		1		117	50	SHEET DQ-4				
			239	20	100	211	30				330	32	54	4810	257	767	9	3634	3		287.3	57.8		261	383			306			259				1	2				160	49	SHEET DQ-3				
					84	163		15			272	20	67	7402	230	671	10	3260	4	16.1	214.6	46.1	114.4	173.9		293.9					302.5		2	2		2		2	99	44	SHEET DQ-2				
			294		60	85		13.5			163.1	10	46	4860	372	1101	5	1956	4	72.2		4.5	189.4						148.6				5					3	14	15	SHEET DQ-1				
			896	20	294	1341	894	422	424	85	2948	283	287	29860	1305	3882	37	24148	17	124.5	872.4	164.4	483	564	609	293.9	209	306	445	148.6	259	302.5	223	9	5	3	2	1	6	406	174	TOTAL				

* QUANTITIES INCLUDED IN ROADWAY QUANTITIES (SEE Q-1)

2 **REPLACED PER ADDENDUM No. 2 DATED FEBRUARY 8, 2016**

DRAINAGE QUANTITIES
DQ-5

STATE OF CALIFORNIA - DEPARTMENT OF TRANSPORTATION
Caltrans® DESIGN

FUNCTIONAL SUPERVISOR: MUSTAPHA RAOUF
CALCULATED-DESIGNED BY: PAUL PHAN
CHECKED BY: MYLINH NGUYEN, KHA PHAM, TRI TRAN
REVISED BY / DATE REVISED

LAST REVISION 09-10-15
DATE PLOTTED => 05-FEB-2016
TIME PLOTTED => 12:42

Dist	COUNTY	ROUTE	POST MILES TOTAL PROJECT	SHEET No.	TOTAL SHEETS
08	SBd	138	R17.1/R19.2	92	209

REGISTERED CIVIL ENGINEER 9-10-15 DATE

9-11-15
PLANS APPROVAL DATE

REGISTERED PROFESSIONAL ENGINEER DUNG HUY PHAN No. 73061 Exp. 12/31/16 CIVIL STATE OF CALIFORNIA

THE STATE OF CALIFORNIA OR ITS OFFICERS OR AGENTS SHALL NOT BE RESPONSIBLE FOR THE ACCURACY OR COMPLETENESS OF SCANNED COPIES OF THIS PLAN SHEET.

ROADWAY QUANTITIES

LOCATION				COLD PLANE AC (0.15' Max)	HMA (TYPE A)	AB CLASS 2	LIQUID ASPHALT (PRIME COAT)	TACK COAT
LINE	NAME	FROM STA	TO STA	SQYD	TON	CY	TON	TON
"A"	RTE 138	80+78.34	81+60.34	288.6	19			0.02
		81+60.34	86+97.00		724	477	1.9	0.20
		89+04.50	108+85.35		2,674	1,761	7.0	0.73
		111+94.68	137+35.50		3,430	2,259	8.9	0.94
		144+64.83	190+97.64		6,254	4,118	16.3	1.72
		190+97.57	191+97.57	318.1	116	76	0.3	0.03
FS-1	FS ROAD	8+17.50	9+80.00		70	67	0.2	0.02
	DRIVEWAY No.1	90+46.82	90+46.82		23	22	0.1	0.01
	DRIVEWAY No.2	95+86.90	95+86.90		22	21	0.1	0.01
	DRIVEWAY No.3	98+77.55	98+77.55		22	21	0.1	0.01
	DRIVEWAY No.4	101+93.56	101+93.56		22	21	0.1	0.01
	MVP No. 1				24	16	0.1	0.01
	MVP No. 2				25	16	0.1	0.01
	"3N-44" OVH	7+04.31	10+00.00		80	64	0.4	0.04
	"3N-45" OVH	10+00.00	14+37.69		118	94	0.6	0.06
	SCE-1 LINE	7+62.75	9+80.00		94	90	0.3	0.03
	SCE-2 LINE	10+20.00	11+38.17		51	49	0.2	0.02
	SCE-3 LINE	10+20.00	12+44.36		97	93	0.3	0.03
	SUB TOTAL			606.7	13,865	9265	37.0	3.90
	DETOUR A,B, AND C See Sht SCQ-1				1,562	750	5.1	0.54
	SASETY EDGE See Sht Q-3				104			
	DIKE See Sht Q-2				151			
	HMA DICTH See Sht DQ-5				1,305			
	OHV Sta 10+00.00 ℄ 3N-44 TO 10+00.00 ℄ 3N-45					115		
	GRAND TOTAL			606.7	16,987	10,130	42.1	4.44

REMOVE BASE AND SURFACING

Exist ROUTE 138 UNLESS OTHERWISE NOTED	CY
L-1 TO L-9	9,519
FROM DETOUR A SHEET SCQ-1	286
FROM DETOUR B SHEET SCQ-1	125
FROM DETOUR C SHEET SCQ-1	1,302
TOTAL	11,232

TREATED WOOD WASTE
LB
250

EARTHWORK QUANTITIES

LOCATION	ROADWAY EXCAVATION	EMBANKMENT (N)	ROADWAY EXCAVATION (UNSUITABLE MATERIAL)
	CY		CY
"A" LINE	379,654	459,718.1	
DETOUR A LINE	458	6,251	
DETOUR B LINE	1,208	2,038	
DETOUR C LINE	380,872	376	
FS-1 LINE	164	11	
SCE-1 LINE	955	1	
SCE-2 LINE	1362	1	
SCE-3 LINE	4	4650	
3N-44 LINE	1,272	725	
3N-45 LINE	4,137	456	
BACKFILL Exist ROUTE 138		61,500	187,000
TOTAL	770,086	535,727.1	187,000

(N) : NOT A SEPARATE PAY ITEM, FOR INFORMATION ONLY.

FENCE

LOCATION STATION TO STATION ℄ "A" LINE (UNLESS NOTED OTHERWISE)	BW, 5-STRAND (METAL POST)	TEMPORARY FENCE (TYPE ESA)	TEMPORARY SILT FENCE
	LF		
20' Rt "A" 88+74.67 TO 20' Rt "A" 109+15.35	2,438		
20' Lt "A" 88+74.50 TO 20' Lt "A" 109+15.35	2,126		
20' Rt "A" 111+64.68 TO 20' Rt "A" 137+65.50	2,823		
20' Lt "A" 111+64.68 TO 20' Lt "A" 137+65.50	3,106		
20' Rt "A" 144+34.83 TO 127.88' Rt "A" 192+81.00	5,389		
20' Lt "A" 144+34.83 TO 44.76' Lt "A" 192+05.64	4,829		
43.43' Lt "A" 80+78.34 TO 113.03' Lt "A" 82+79.13		302	302
29.49' Rt "A" 80+78.34 TO 86.88' Rt "A" 82+80.83		257	257
111.72' Rt "A" 84+98.72 TO 151.17' Rt "A" 95+79.85		605	605
62.80' Lt "A" 87+84.48 TO 66.20' Lt "A" 88+57.06		76	76
247.34' Rt "A" 107+45.99 TO 37.29' Rt "A" 111+74.70		790	790
48.48' Lt "A" 107+98.79 TO 47.25' Lt "A" 119+49.95		1940	1940
157.93' Lt "A" 111+87.65 TO 228.74' Lt "A" 113+51.70		198	198
136.42' Rt "A" 124+96.13 TO 44.55' Rt "A" 124+77.77		270	270
54.42' Lt "A" 126+23.81 TO 294.95' Lt "A" 128+80.38		420	420
57.82' Lt "A" 129+20.77 TO 47.41' Lt "A" 132+96.90		514	514
59.61' Lt "A" 134+75.57 TO 59.12' Lt "A" 144+28.65		1160	1160
97.06' Lt "A" 140+11.84 TO 97.06' Lt "A" 140+84.02		72	72
40.76' Rt "A" 155+67.93 TO 44.83' Rt "A" 158+99.51		412	412
41.60' Rt "A" 160+97.25 TO 198.92' Rt "A" 162+45.73		372	372
30.87' Lt "A" 173+74.86 TO 81.28' Lt "A" 180+24.82		655	655
275.85' Rt "A" 175+70.95 TO 28.10' Rt "A" 195+80.48		1820	1820
TOTAL	20,711	9863	9863

REMOVE EXISTING FENCE

LOCATION STATION TO STATION ℄ "A" LINE (UNLESS NOTED OTHERWISE)	REMOVE FENCE
	LF
193.68' Rt "A" 91+29.01 TO 256.61' Rt "A" 91+91.38	90
TOTAL	90

GATES

LOCATION ℄ "A" LINE	24' FOREST SERVICE GATE	16' WIRE MESH GATE
	EA	EA
"FS-1" 8+17.50		1
Lt "A" 90+46.82		1
Lt "A" 95+86.90		1
Rt "A" 98+77.55		1
Lt "A" 101+93.55		1
Rt "A" 94+50.10	1	
CL "SCE-1" 7+62.75	1	
CL "SCE-2" 11+38.17	1	
CL "SCE-3" 12+44.36		1
TOTAL	3	6

RETAINING WALL TYPE 1 (CASE 1)

LOCATION STATION TO STATION ℄ "A" LINE	STRUCTURE EXCAVATION (Ret WALL)	STRUCTURE BACKFILL (Ret WALL)	BAR Reinf STEEL (Ret WALL)	STRUCTURE CONCRETE (Ret WALL)	PREPARE AND STAIN CONCRETE SURFACE	CONCRETE SURFACE TEXTURE
	CY	CY	LB	CY	SQFT	SQFT
STA 85+75.00 To STA 86+00.00	50	40	2,268	20		
STA 86+00.00 To STA 86+25.00	60	55	2,707	25		
STA 86+25.00 To STA 86+50.00	55	65	3,064	28		
STA 86+50.00 To STA 86+75.00	70	115	4,503	36		
STA 86+75.00 To STA 87+00.00	130	175	7,988	45		
STA 87+00.00 To STA 87+25.00	135	200	10,348	46		
STA 85+75.00 To STA 87+25.00					1431	1431
TOTAL	500	650	30,879	200	1431	1431

2 REPLACED PER ADDENDUM No. 2 DATED FEBRUARY 8, 2016

SUMMARY OF QUANTITIES
Q-1

STATE OF CALIFORNIA - DEPARTMENT OF TRANSPORTATION
Caltrans DESIGN
FUNCTIONAL SUPERVISOR MUSTAPHA RAOUF
CALCULATED-DESIGNED BY DON NGUYEN
CHECKED BY PAUL PHAN
REVISED BY
DATE REVISED

LAST REVISION 09-10-15
DATE PLOTTED => 05-FEB-2016
TIME PLOTTED => 12:42

NOTE: FOR COMPLETE RIGHT OF WAY AND ACCURATE ACCESS DATA, SEE RIGHT OF WAY RECORD MAPS AT DISTRICT OFFICE

Dist	COUNTY	ROUTE	POST MILES TOTAL PROJECT	SHEET No.	TOTAL SHEETS
08	SBd	138	R17.1/R19.2	94A	212

2

LICENSED LANDSCAPE ARCHITECT

9-11-15
PLANS APPROVAL DATE

LICENSED LANDSCAPE ARCHITECT — Matthew Harry Hall — Signature — 10/31/2017 Renewal Date — 9/10/2015 Date — STATE OF CALIFORNIA

THE STATE OF CALIFORNIA OR ITS OFFICERS OR AGENTS SHALL NOT BE RESPONSIBLE FOR THE ACCURACY OR COMPLETENESS OF SCANNED COPIES OF THIS PLAN SHEET.

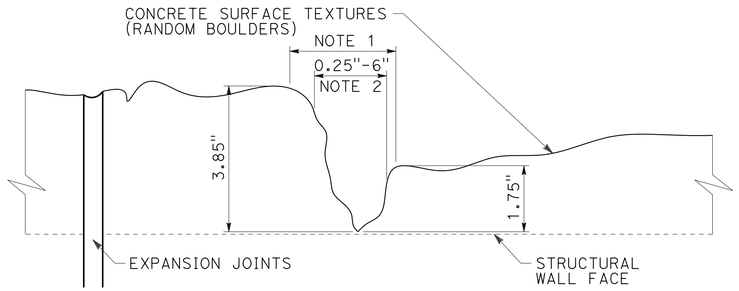

NOTE:
1. THESE TWO POINTS ARE THE LINES THAT LAYOUT THE BOULDERS ON THE 'RANDOM BOULDER ELEVATION'. IN BETWEEN THESE TWO POINTS ARE THE GROOVES SHOWN ON THE 'RANDOM BOULDER SECTION C,D,E'.
2. GROOVES WILL NOT HAVE A UNIFORM . GROOVES WILL RANDOM AND (FROM TOP TO BOTTOM) IN AS SHOWN.
3. RANDOM BOULDERS TEXTURES AND GROOVES WILL BE CONTINUES THROUGH EXPANSION JOINTS.

EXPANSION JOINTS DETAIL FOR CONCRETE SURFACE TEXTURES (RANDOM BOULDERS)

NO SCALE

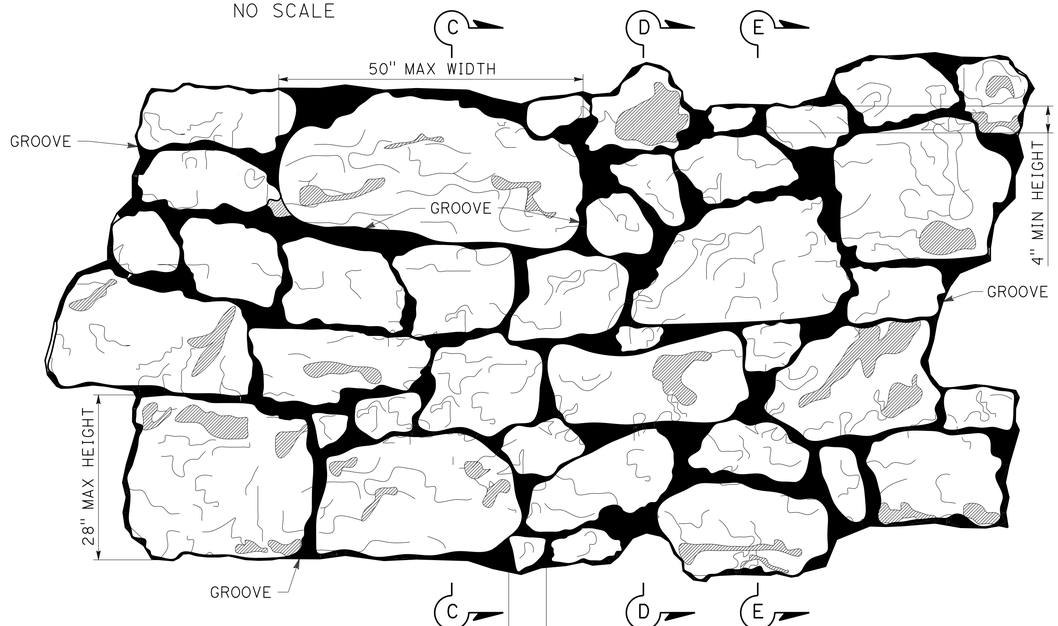

RANDOM BOULDER ELEVATION

SCALE: 1"=1'-0"

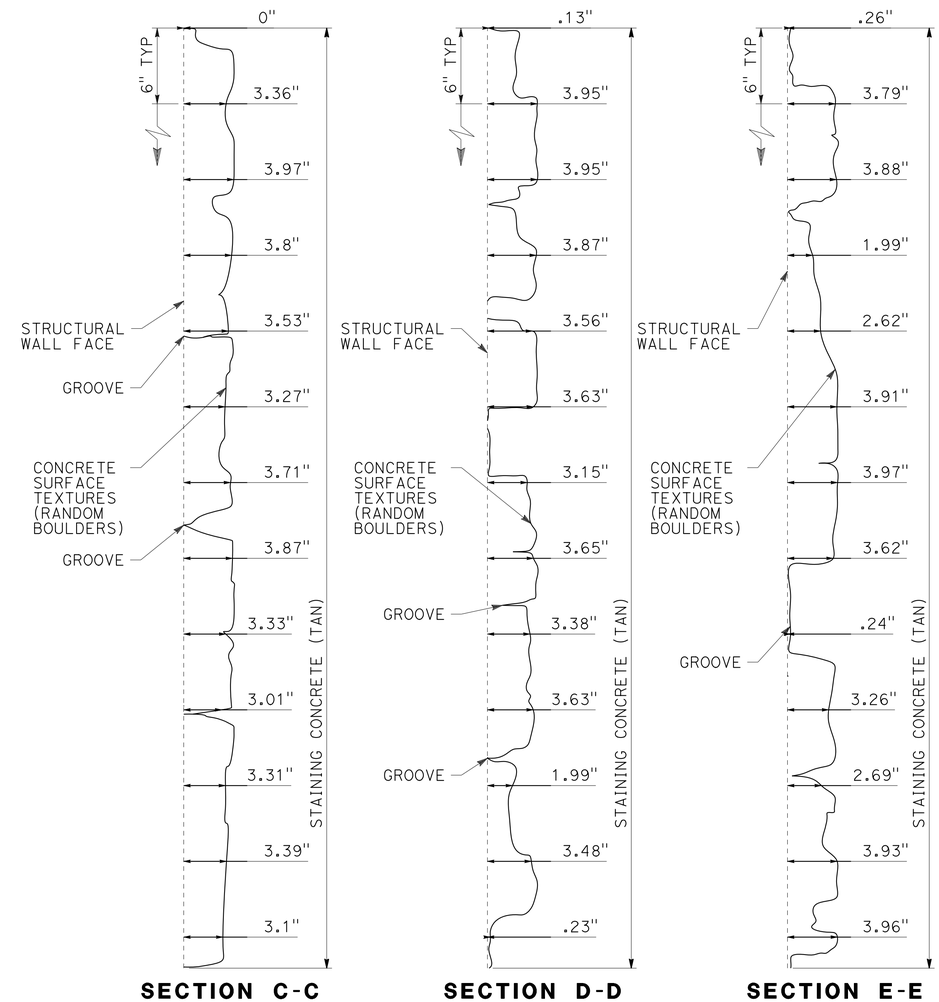

SECTION C-C SECTION D-D SECTION E-E

NOTE: MAX DEPTH OF 4"

RANDOM BOULDER SECTIONS C,D,E

SCALE: 2"=1'-0"

2 ADDED PER ADDENDUM No. 2 DATED FEBRUARY 8, 2016

ARCHITECTURAL TREATMENT
RANDOM BOULDER DETAILS

SCALE: AS SHOWN

AT-1

STATE OF CALIFORNIA - DEPARTMENT OF TRANSPORTATION
Caltrans® LANDSCAPE ARCHITECTURE
SENIOR LANDSCAPE ARCHITECT: JOHN STANTON
CALCULATED-DESIGNED BY: MATTHEW HALL
CHECKED BY: MIKE BABICH
REVISED BY
DATE REVISED

LAST REVISION 09-10-15
DATE PLOTTED => 05-FEB-2016
TIME PLOTTED => 12:42

NOTES:
1- FOR RETAINING WALL DETAILS SEE STANDARD PLAN RSP B3-5 & B3-6.
2- CONTRACTOR TO VERIFY ALL UTILITY LOCATIONS AND INVERT ELEVATIONS PRIOR TO RETAINING WALL CONSTRUCTION.
3- WEAKENED PLANE JOINT SHOULD BE IN THE BACK FACE OF THE WALL ONLY.

Dist	COUNTY	ROUTE	POST MILES TOTAL PROJECT	SHEET No.	TOTAL SHEETS
08	SBd	138	R17.1/R19.2	95	212

REGISTERED CIVIL ENGINEER 9-10-15 DATE

9-11-15
PLANS APPROVAL DATE

REGISTERED PROFESSIONAL ENGINEER DUNG HUY PHAN No. 73061 Exp. 12/31/16 CIVIL STATE OF CALIFORNIA

THE STATE OF CALIFORNIA OR ITS OFFICERS OR AGENTS SHALL NOT BE RESPONSIBLE FOR THE ACCURACY OR COMPLETENESS OF SCANNED COPIES OF THIS PLAN SHEET.

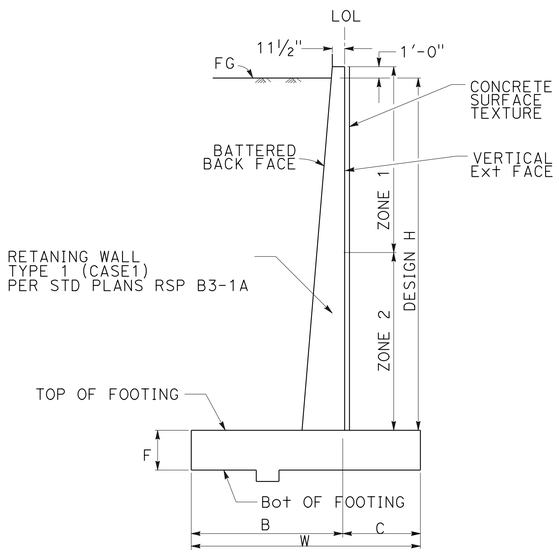

TYPICAL SECTION
NO SCALE

WALL ELEVATIONS

LOCATION STATION TO STATION ℄ "A" LINE	DESIGN H (FT)	PROFILE GRADE TOP OF WALL ELEVATION FROM	TOP OF WALL ELEVATION TO	FG Elev FACE FROM	FG Elev FACE TO
STA 85+75.00 To STA 86+00.00	6	3375.20	3375.88	3374.20	3374.88
STA 86+00.00 To STA 86+25.00	8	3375.88	3376.63	3374.88	3375.63
STA 86+25.00 To STA 86+50.00	10	3376.63	3377.45	3375.63	3376.45
STA 86+50.00 To STA 86+75.00	14	3377.45	3378.33	3376.45	3377.33
STA 86+75.00 To STA 87+00.00	18	3378.33	3379.27	3377.33	3378.27
STA 87+00.00 To STA 87+25.00	20	3379.27	3380.25	3378.27	3379.25

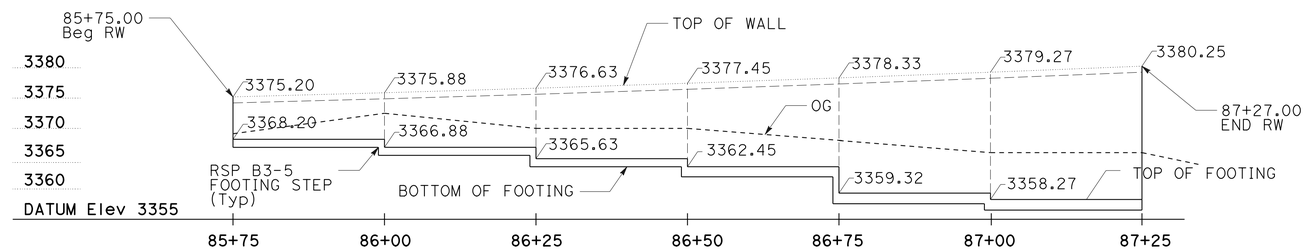

ELEVATION
NO SCALE

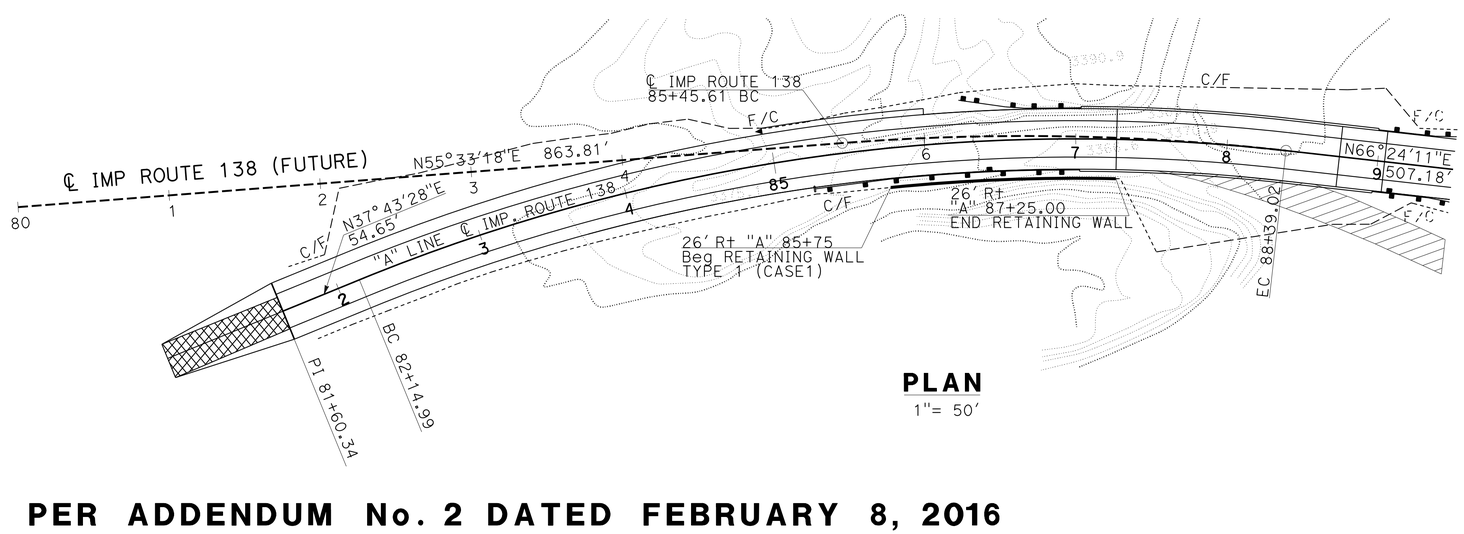

PLAN
1"= 50'

2 REPLACED PER ADDENDUM No. 2 DATED FEBRUARY 8, 2016

RETAINING WALL PLAN
SCALE AS SHOWN
R-1

STATE OF CALIFORNIA - DEPARTMENT OF TRANSPORTATION
DESIGN
FUNCTIONAL SUPERVISOR: MUSTAPHA RAOUF
CALCULATED-DESIGNED BY: DON NGUYEN
CHECKED BY: PAUL PHAN
REVISED BY / DATE REVISED

LAST REVISION 09-10-15 | DATE PLOTTED => 05-FEB-2016 | TIME PLOTTED => 12:42

NOTE: FOR COMPLETE RIGHT OF WAY AND ACCURATE ACCESS DATA, SEE RIGHT OF WAY RECORD MAPS AT DISTRICT OFFICE

2

Dist	COUNTY	ROUTE	POST MILES TOTAL PROJECT	SHEET No.	TOTAL SHEETS
08	SBd	138	R17.1/R19.2	95A	212

LICENSED LANDSCAPE ARCHITECT

9-11-15
PLANS APPROVAL DATE

LICENSED LANDSCAPE ARCHITECT
Matthew Harry Hall, No. 5000
Signature
10/31/2017
Renewal Date
9/10/2015
Date
STATE OF CALIFORNIA

THE STATE OF CALIFORNIA OR ITS OFFICERS OR AGENTS SHALL NOT BE RESPONSIBLE FOR THE ACCURACY OR COMPLETENESS OF SCANNED COPIES OF THIS PLAN SHEET.

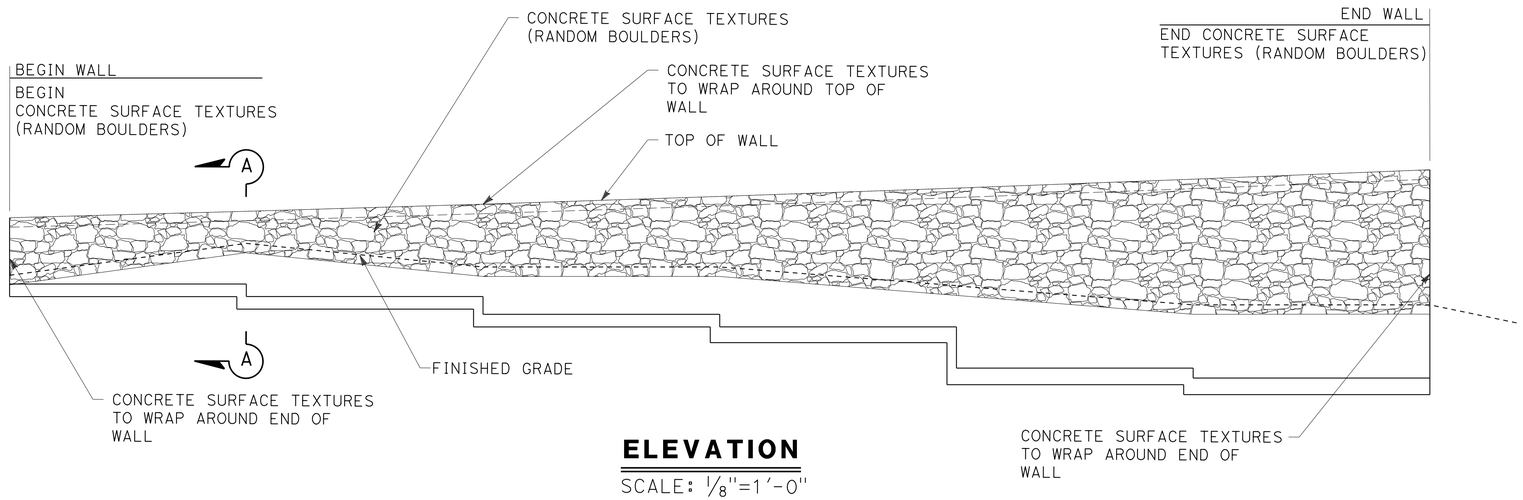

ELEVATION

SCALE: 1/8"=1'-0"

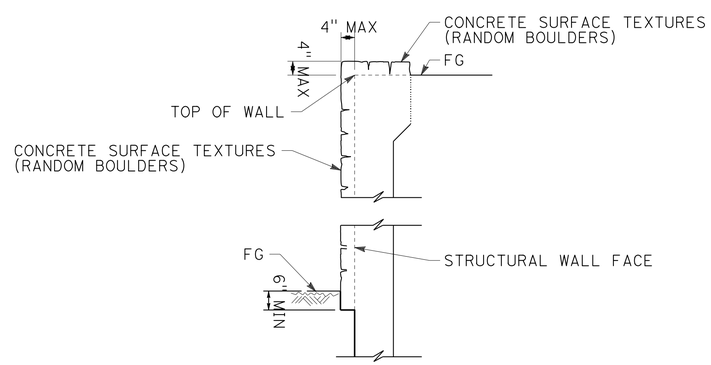

SECTION A-A

SCALE: 1/2"=1'-0"

2 **ADDED PER ADDENDUM No. 2 DATED FEBRUARY 8, 2016**

THIS PLAN IS ACCURATE FOR ARCHITECTUAL TREATMENT WORK ONLY.

ARCHITECTURAL TREATMENT
RETAINING WALL

SCALE: SHOWN

R1-2

STATE OF CALIFORNIA - DEPARTMENT OF TRANSPORTATION
Caltrans® LANDSCAPE ARCHITECTURE

SENIOR LANDSCAPE ARCHITECT: JOHN STANTON
CALCULATED-DESIGNED BY: MATTHEW HALL
CHECKED BY: MIKE BABICH
REVISED BY
DATE REVISED

LAST REVISION 09-10-15
DATE PLOTTED => 05-FEB-2016
TIME PLOTTED => 12:42

Dist	COUNTY	ROUTE	POST MILES TOTAL PROJECT	SHEET No.	TOTAL SHEETS
08	SBd	138	R17.1/R19.2	141A	212

REGISTERED CIVIL ENGINEER

April 20, 2012
PLANS APPROVAL DATE

REGISTERED PROFESSIONAL ENGINEER Gary Wang No. C58298 Exp. 6-30-12 CIVIL STATE OF CALIFORNIA

THE STATE OF CALIFORNIA OR ITS OFFICERS OR AGENTS SHALL NOT BE RESPONSIBLE FOR THE ACCURACY OR COMPLETENESS OF SCANNED COPIES OF THIS PLAN SHEET.

2

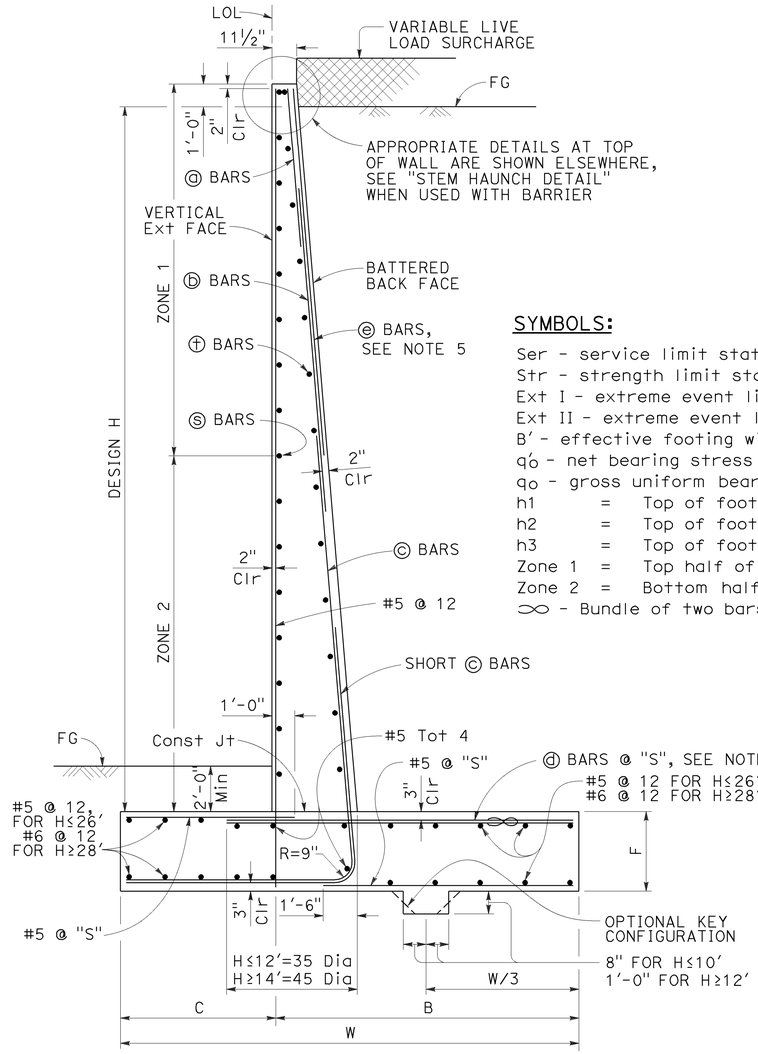

TYPICAL SECTION

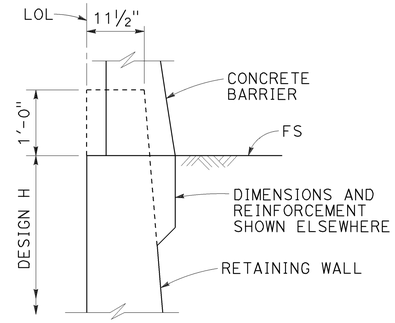

STEM HAUNCH DETAIL

SYMBOLS:

Ser - service limit state I
Str - strength limit state I
Ext I - extreme event limit state I
Ext II - extreme event limit state II
B' - effective footing width (ft)
q'o - net bearing stress (ksf), OG assumed to be FG at toe
qo - gross uniform bearing stress (ksf)
h1 = Top of footing to top of short ⓒ bar
h2 = Top of footing to top of ⓒ bar
h3 = Top of footing to top of ⓓ bar
Zone 1 = Top half of stem height
Zone 2 = Bottom half of stem height
∞ - Bundle of two bars

DESIGN CONDITIONS:

Design H may be exceeded by 6" before going to the next size. Special footing design is required where foundation material is incapable of supporting bearing stress listed in the table.

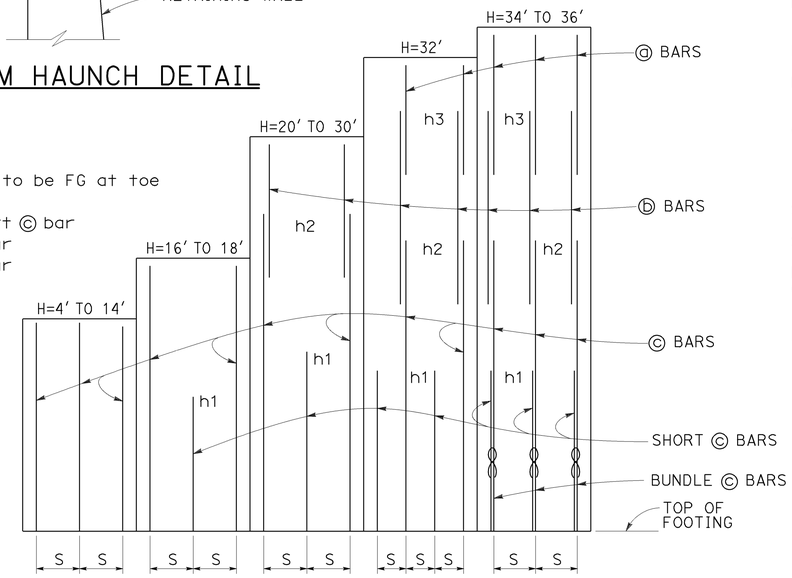

ELEVATION

DESIGN NOTES:

TO ACCOMPANY PLANS DATED 9-11-15

DESIGN: AASHTO LRFD Bridge Design Specifications, 4th Edition with California Amendments

LS: Varied surcharge on level ground surface

DC: Stem Architectural Treatment of thickness up to 6" of concrete (75 psf) considered

CT: 54 kip transverse force applied at He = 32", distributed over 10 feet at the top of wall and 1 : 1 distribution down and outward. Distribution below footing taken no less than 40'.

SEISMIC: $k_h = 0.2$, $k_v = 0.0$

SOIL: $\phi = 34°$, $\gamma = 120$ pcf

REINFORCED CONCRETE: f'c = 3,600 psi
fy = 60,000 psi

LOAD COMBINATIONS AND LIMIT STATES:

Service I	Q = 1.00DC+1.00EV+1.00EH+1.00LS
Strength I	Q = αDC+βEV+ηEH+1.75LS
Extreme I	Q = 1.00DC+1.00EV+1.00EH+1.00EQD+1.00EQE
Extreme II	Q = 1.00DC+1.00EV+1.00EH+1.00CT

Where:

Q:	Force Effects
α:	1.25 or 0.90, Whichever Controls Design
β:	1.35 or 1.00, Whichever Controls Design
η:	1.50 or 0.90, Whichever Controls Design
DC:	Dead Load of Structure Components
EH:	Horizontal Earth Fill Pressure
EV:	Vertical Earth Pressure from Earth Fill Weight
LS:	Live Load Surcharge
EQE:	Seismic Earth Pressure
EQD:	Soil and Structural and Nonstructural Components Inertia
CT:	Vehicular Collision Force

TABLE OF REINFORCING STEEL, DIMENSIONS AND DATA

DESIGN H	4'	6'	8'	10'	12'	14'	16'	18'	20'	22'	24'	26'	28'	30'	32'	34'	36'
W	6'-10"	7'-0"	7'-3"	7'-7"	8'-4"	9'-7"	10'-9"	12'-0"	13'-3"	14'-6"	15'-9"	17'-1"	18'-5"	19'-10"	21'-2"	22'-7"	24'-0"
C	2'-2"	2'-3"	2'-3"	2'-4"	2'-6"	3'-0"	3'-6"	4'-0"	4'-6"	5'-0"	5'-5"	6'-0"	6'-6"	7'-2"	7'-8"	8'-2"	9'-0"
B	4'-8"	4'-9"	5'-0"	5'-3"	5'-10"	6'-7"	7'-3"	8'-0"	8'-9"	9'-6"	10'-4"	11'-1"	11'-11"	12'-8"	13'-6"	14'-5"	15'-0"
F	1'-4"	1'-4"	1'-4"	1'-4"	1'-6"	1'-8"	1'-8"	1'-9"	1'-9"	1'-11"	2'-2"	2'-5"	2'-10"	3'-3"	3'-6"	4'-0"	4'-3"
BATTER	½: 12	½: 12	½: 12	½: 12	½: 12	½: 12	½: 12	½: 12	½: 12	½: 12	⅝: 12	⅝: 12	¾: 12	⅞: 12	1 : 12	1 : 12	1 : 12
SPACING "S"	9"	9"	9"	9"	9"	7"	6"	5"	6"	6"	6"	6"	6"	6"	6"	10"	8"
ⓐ BARS	-	-	-	-	-	-	-	-	-	-	-	-	-	-	#7	#7	#6
ⓑ BARS	-	-	-	-	-	-	-	-	#7	#7	#7	#7	#7	#7	#9	#9	#8
ⓒ BARS	#6	#6	#6	#6	#6	#6	#7	#7	#8	#9	#9	#10	#10	#10	#11	#11	#11
ⓓ BARS	#5	#5	#6	#6	#6	#6	#9	#8	#8	#9	#9	#10	#10	#10	#11	#11	#11
h1	-	-	-	-	-	-	5'-9"	5'-10"	8'-0"	9'-0"	10'-1"	11'-0"	12'-1"	13'-0"	13'-0"	12'-7"	11'-6"
h2	-	-	-	-	-	-	-	-	10'-5"	13'-0"	14'-7"	17'-6"	19'-0"	20'-5"	19'-0"	18'-0"	20'-2"
h3	-	-	-	-	-	-	-	-	-	-	-	-	-	-	21'-2"	21'-10"	24'-0"
ZONE 1 ⓢ BARS	#5 @ 18	#5 @ 18	#5 @ 18	#5 @ 18	#5 @ 18	#5 @ 18	#5 @ 18	#5 @ 18	#5 @ 18	#5 @ 18	#5 @ 12	#5 @ 12	#5 @ 12	#5 @ 12	#5 @ 12	#5 @ 12	#5 @ 12
ZONE 2 ⓢ BARS	#5 @ 18	#5 @ 18	#5 @ 18	#5 @ 18	#5 @ 18	#5 @ 18	#5 @ 12	#5 @ 12	#5 @ 12	#5 @ 12	#5 @ 12	#5 @ 12	#6 @ 12	#6 @ 12	#6 @ 12	#7 @ 12	#7 @ 12
ZONE 1 ⓕ BARS	#4 @ 18	#4 @ 18	#4 @ 18	#4 @ 18	#4 @ 18	#4 @ 18	#4 @ 18	#4 @ 18	#4 @ 18	#4 @ 18	#4 @ 12	#4 @ 12	#4 @ 18	#4 @ 12	#4 @ 12	#4 @ 12	#4 @ 12
ZONE 2 ⓕ BARS	#4 @ 18	#4 @ 18	#4 @ 18	#4 @ 18	#4 @ 18	#4 @ 18	#4 @ 18	#4 @ 18	#4 @ 18	#4 @ 18	#4 @ 12	#4 @ 12	#4 @ 12	#4 @ 12	#5 @ 12	#5 @ 12	#5 @ 12
Ser: B', q'_o	6.8, 0.7	6.5, 1.0	6.2, 1.3	6.0, 1.6	6.3, 2.0	7.5, 2.1	8.6, 2.2	9.8, 2.3	11.0, 2.4	12.1, 2.5	13.2, 2.8	14.4, 2.9	15.5, 3.1	16.8, 3.3	18.0, 3.5	19.2, 3.7	20.6, 3.7
Str: B', q_o	6.6, 1.6	5.0, 1.8	3.6, 2.3	3.0, 3.3	3.2, 4.0	4.3, 3.8	5.3, 3.7	6.4, 3.7	7.4, 3.8	8.2, 4.1	9.0, 4.4	9.9, 4.6	10.7, 4.9	11.7, 5.2	12.6, 5.4	13.6, 5.8	14.6, 5.9
Ext I: B', q_o	5.2, 1.1	4.7, 1.5	3.9, 2.2	3.1, 3.4	2.8, 4.8	3.2, 5.3	3.6, 5.7	4.1, 6.1	4.6, 6.4	5.0, 6.9	5.3, 7.6	5.8, 8.1	6.1, 8.9	6.7, 9.4	7.1, 10.0	7.5, 10.7	8.2, 10.9
Ext II: B', q_o	2.6, 2.2	2.7, 2.6	2.8, 3.1	2.9, 3.6	3.7, 3.6	5.2, 3.3	6.7, 3.1	8.3, 3.0	9.8, 3.0	11.2, 3.1	12.5, 3.2	13.9, 3.4	15.2, 3.6	16.7, 3.8	18.0, 4.0	19.3, 4.2	20.8, 4.3

NOTES:

1. For details not shown and drainage notes see RSP B3-5
2. For wall stem joint details see B0-3/3-3 and B0-3/3-4
3. At ⓒ bars:
   H ≤ 6', no splices are allowed within 1'-8" above the top of footing.
   H > 6', no splices are allowed within H/4 above the top of footing.
4. Bundle ⓓ bars for H = 34' & 36'.
5. Provide #6 @ 10" x 15'-0" ⓔ bars over a distance of 8'-0" measured from all expansion joints, begin wall and end wall locations. For H ≤ 14', hook ⓔ bar into footing and reduce bar length as needed to maintain Min Clr cover.

STATE OF CALIFORNIA
DEPARTMENT OF TRANSPORTATION

RETAINING WALL TYPE 1 (CASE 1)

NO SCALE

RSP B3-1A DATED APRIL 20, 2012 SUPPLEMENTS THE STANDARD PLANS BOOK DATED 2010.

2 ADDED PER ADDENDUM No. 2 DATED FEBRUARY 8, 2016

REVISED STANDARD PLAN RSP B3-1A

2010 REVISED STANDARD PLAN RSP B3-1A

2-22-12

Dist	COUNTY	ROUTE	POST MILES TOTAL PROJECT	SHEET No.	TOTAL SHEETS
08	SBd	138	R17.1/R19.2	141B	212

REGISTERED CIVIL ENGINEER

April 20, 2012
PLANS APPROVAL DATE

REGISTERED PROFESSIONAL ENGINEER Gary Wang No. C58298 Exp. 6-30-12 CIVIL STATE OF CALIFORNIA

THE STATE OF CALIFORNIA OR ITS OFFICERS OR AGENTS SHALL NOT BE RESPONSIBLE FOR THE ACCURACY OR COMPLETENESS OF SCANNED COPIES OF THIS PLAN SHEET.

TO ACCOMPANY PLANS DATED 9-11-15

2010 REVISED STANDARD PLAN RSP B3-5

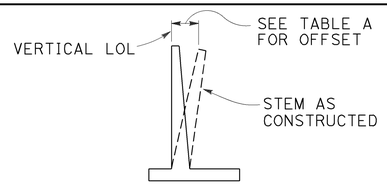

APPROXIMATE WALL OFFSET VALUES

Values for offseting forms to be determined by the Engineer.

TABLE A

H	OFFSET
4'-12'	H/200
14'-16'	H/160
18'-20'	H/140
22'-24'	H/130
26'-36'	2½"

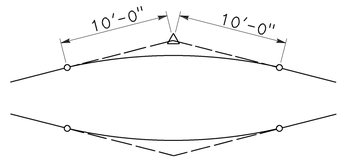

20'-0" VC AT TOP OF WALL SLOPE CHANGE

Where shown on the plans

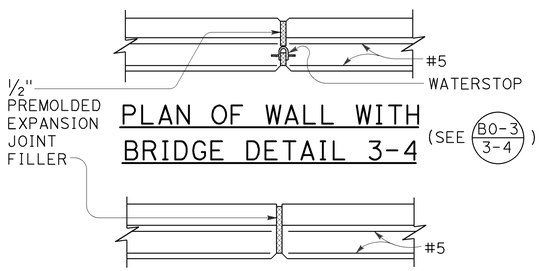

PLAN OF WALL WITH BRIDGE DETAIL 3-4

(SEE B0-3 / 3-4)

PLAN OF WALL WITH EXPANSION JOINT ONLY

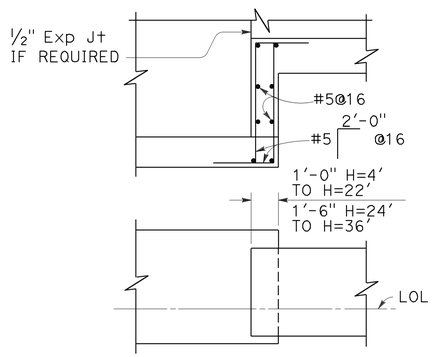

FOOTING STEP

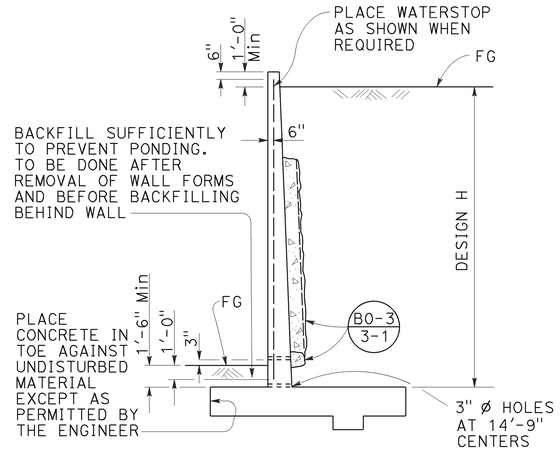

DESIGN AND DRAINAGE

DESIGN CONDITIONS:

Design "H" may be exceeded by 6" before going to the next size. Special footing design is required where foundation material is incapable of supporting bearing stress listed in table

Return wall not required unless shown elsewhere

DESIGN NOTES:

DESIGN: AASHTO LRFD Bridge Design Specifications, 4th edition with California Amendments

LIVE LOAD: Surcharge on level ground surface

SOIL: ϕ = 34°
γ = 120 pcf

REINFORCED CONCRETE: fy = 60,000 psi
fc' = 3,600 psi

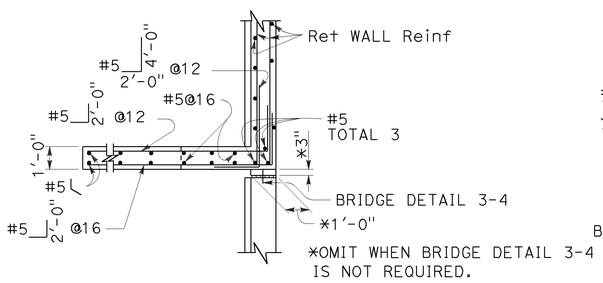

PLAN

(For return wall Type "A")

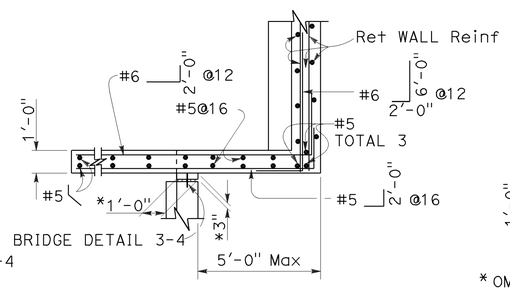

PLAN

(For return wall Type "B")

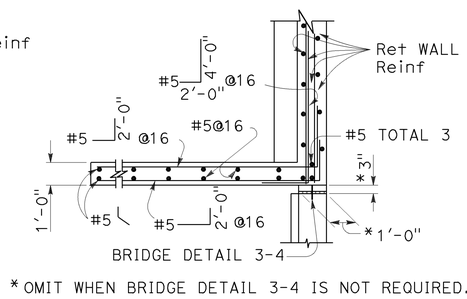

*OMIT WHEN BRIDGE DETAIL 3-4 IS NOT REQUIRED.

PLAN

(For return wall Type "C")

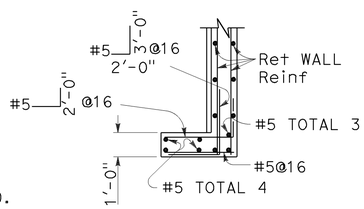

PLAN

(For return wall Type "D")

2 ADDED PER ADDENDUM No. 2 DATED FEBRUARY 8, 2016

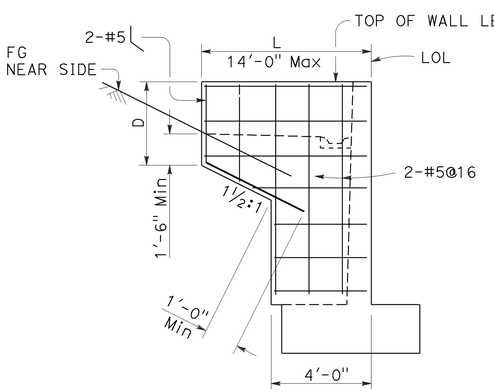

ELEVATION

RETURN WALL TYPE "A"

Use where H=8' or less

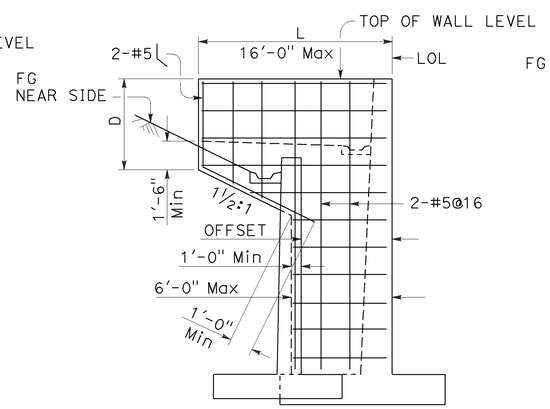

ELEVATION

RETURN WALL TYPE "B"

Use where H=10' or more on offset walls

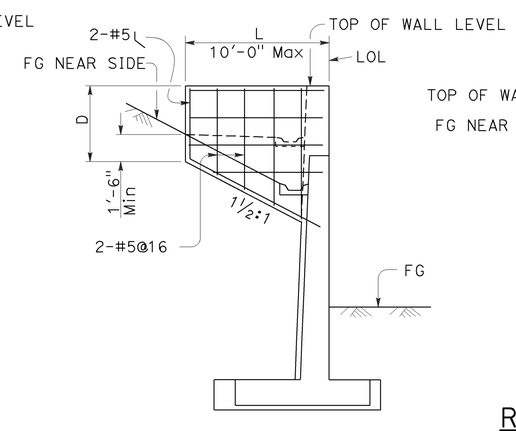

ELEVATION

RETURN WALL TYPE "C"

Use where H=10' or more on straight walls

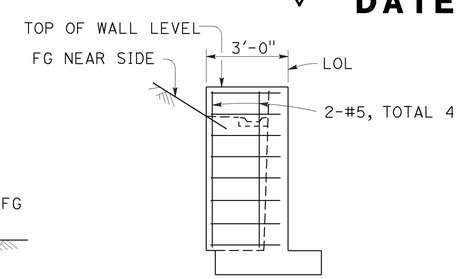

ELEVATION

RETURN WALL TYPE "D"

Use where H=6' or less

STATE OF CALIFORNIA
DEPARTMENT OF TRANSPORTATION

RETAINING WALL DETAILS No. 1

NO SCALE

RSP B3-5 DATED APRIL 20, 2012 SUPERSEDES STANDARD PLAN B3-5 DATED MAY 20, 2011 - PAGE 277 OF THE STANDARD PLANS BOOK DATED 2010.

REVISED STANDARD PLAN RSP B3-5

DIST	COUNTY	ROUTE	POST MILES TOTAL PROJECT	SHEET No.	TOTAL SHEETS
08	SBd	138	R17.1/R19.2	146	212

Peter W. Norboe 3-5-15
REGISTERED CIVIL ENGINEER DATE

9-11-15
PLANS APPROVAL DATE

REGISTERED PROFESSIONAL ENGINEER Peter W. Norboe No. C57519 Exp. 12-31-2015 CIVIL STATE OF CALIFORNIA

The State of California or its officers or agents shall not be responsible for the accuracy or completeness of scanned copies of this plan sheet.

NOTES:

1. For Index to Plans, General Notes, and Standard Plans List, see "INDEX TO PLANS" sheet.
2. For pile data table, see "INDEX TO PLANS" sheet.

QUANTITIES

STRUCTURE EXCAVATION (BRIDGE)	301	CY
STRUCTURE BACKFILL (BRIDGE)	278	CY
FURNISH PILING (CLASS 140) (ALTERNATIVE W MODIFIED)	1,247	LF
DRIVE PILE (CLASS 140) (ALTERNATIVE W MODIFIED)	44	EA
PRESTRESSING CAST-IN-PLACE CONCRETE	LUMP	SUM
STRUCTURAL CONCRETE, BRIDGE FOOTING	56	CY
STRUCTURAL CONCRETE, BRIDGE	592	CY
STRUCTURAL CONCRETE, APPROACH SLAB (TYPE N)	98	CY
RANDOM BOULDER TEXTURE	656	SQFT
JOINT SEAL (MR 2")	80	LF
BAR REINFORCING STEEL (BRIDGE)	65,576	LB
BAR REINFORCING STEEL (EPOXY COATED) (BRIDGE)	80,843	LB
PREPARE AND STAIN CONCRETE	11,230 ~~3,257~~	SQFT
24" WELDED STEEL PIPE CASING (BRIDGE)	78	LF
CONCRETE BARRIER (TYPE 742 MODIFIED)	391	LF

2

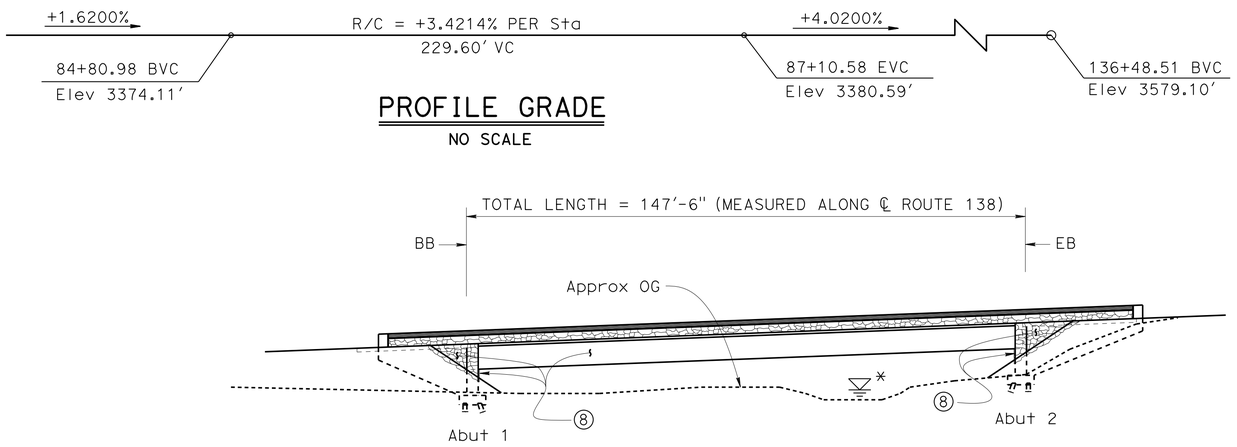

DATUM Elev = 3320.00'

2 **REPLACED PER ADDENDUM No. 2 DATED FEBRUARY 8, 2016**

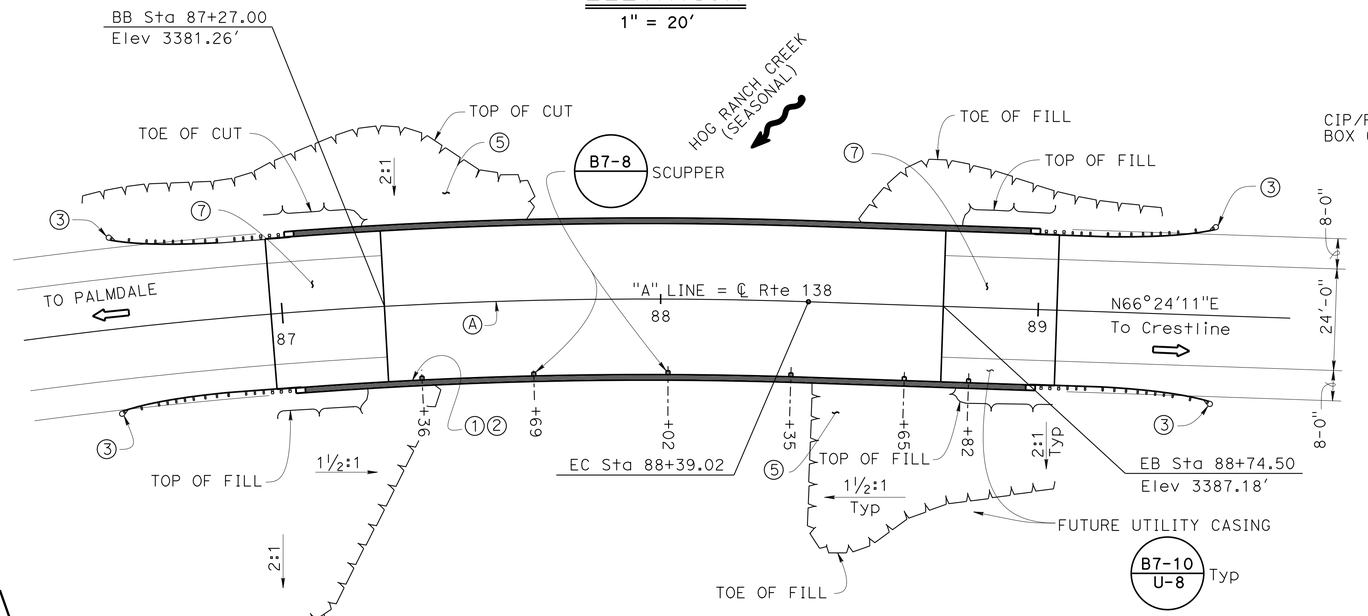

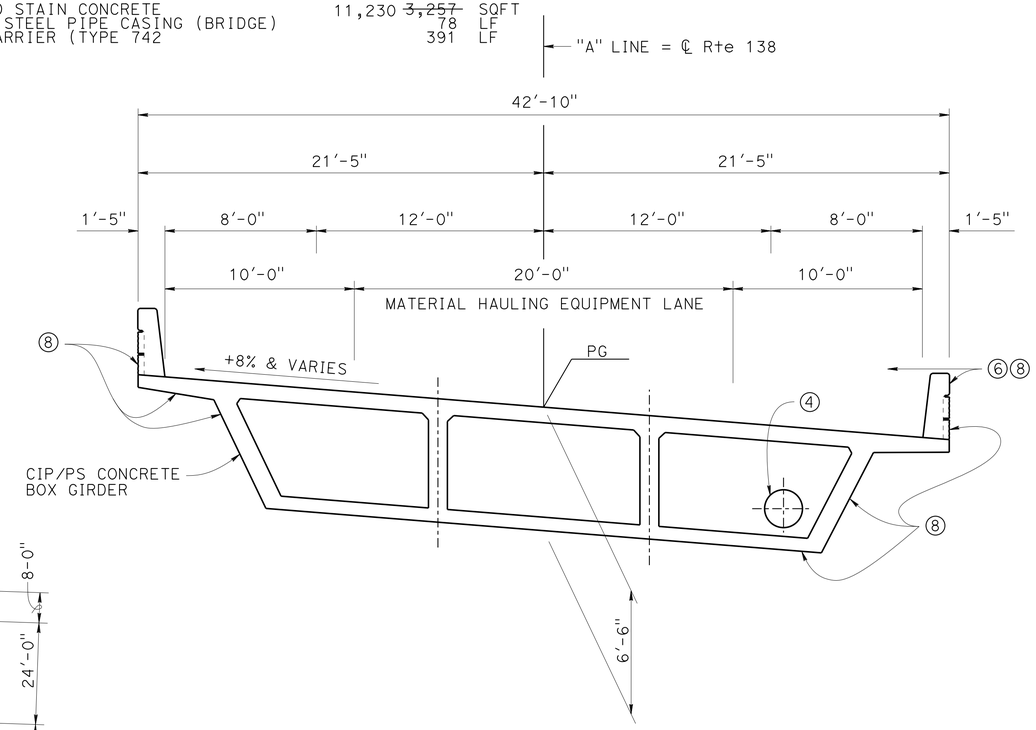

CURVE DATA

NO.	R	Δ	T	L
Ⓐ	1246.72'	28°40'44"	318.70'	624.03'

LEGEND:

1. PAINT "BRIDGE NUMBER 54-1218"
2. PAINT "HOG RANCH CREEK BRIDGE"
3. MGS, SEE "ROADWAY PLANS"
4. FUTURE UTILITY OPENING
5. RSP, SEE "ROADWAY PLANS"
6. CONCRETE BARRIER TYPE 742 (MODIFIED)
7. STRUCTURE APPROACH TYPE N(30S)
8. PREPARE AND STAIN CONCRETE SURFACE (ALL EXPOSED SURFACES EXCLUDING BRIDGE DECK AND APPROACH SLAB)

SCUPPER LOCATION

GORDON DANKE
DESIGN ENGINEER

	BY	CHECKED
DESIGN	Pete Norboe	L. Jimenez
DETAILS	David Elliott	R. Candiotti
QUANTITIES	Pete Norboe	R. Candiotti

LOAD & RESISTANCE FACTOR DESIGN — LIVE LOADING: HL93 W/"LOW-BOY": PERMIT DESIGN VEHICLE

	BY	CHECKED
LAYOUT	Pete Norboe	R. Candiotti
SPECIFICATIONS	Theresa Nedwick	PLANS AND SPECS COMPARED Theresa Nedwick

ORIGINAL SCALE IN INCHES FOR REDUCED PLANS 0 1 2 3

STATE OF CALIFORNIA
DEPARTMENT OF TRANSPORTATION

DIVISION OF ENGINEERING SERVICES
STRUCTURE DESIGN
DESIGN BRANCH 9

BRIDGE NO. 54-1218
POST MILE R17.2

HOG RANCH CREEK BRIDGE
GENERAL PLAN

UNIT: 3594
PROJECT NUMBER & PHASE: 0800020191-1
CONTRACT NO.: 08-003004

DISREGARD PRINTS BEARING EARLIER REVISION DATES

REVISION DATES: ~~1-13-14~~ ~~1-31-14~~ 10-6-14 ~~12-4-13~~

SHEET 1 OF 17

USERNAME => s102458 DATE PLOTTED => 05-FEB-2016 TIME PLOTTED => 12:42

STRUCTURES DESIGN GENERAL PLAN SHEET (ENGLISH) (REV.09-01-10)

FILE => 54-1218-a-gp-sheet.dgn

DIST	COUNTY	ROUTE	POST MILES TOTAL PROJECT	SHEET No.	TOTAL SHEETS
08	SBd	138	R17.1/R19.2	163	212

Peter W. Norboe 3-5-15
REGISTERED CIVIL ENGINEER DATE

9-11-15
PLANS APPROVAL DATE

REGISTERED PROFESSIONAL ENGINEER Peter W. Norboe No. 57519 Exp. 12-31-2015 CIVIL STATE OF CALIFORNIA

The State of California or its officers or agents shall not be responsible for the accuracy or completeness of scanned copies of this plan sheet.

Notes:

1. For Index to Plans, Standard Plans List, and Pile Data, see "INDEX TO PLANS" sheet.
2. For General Notes, see "DECK CONTOURS" sheet.

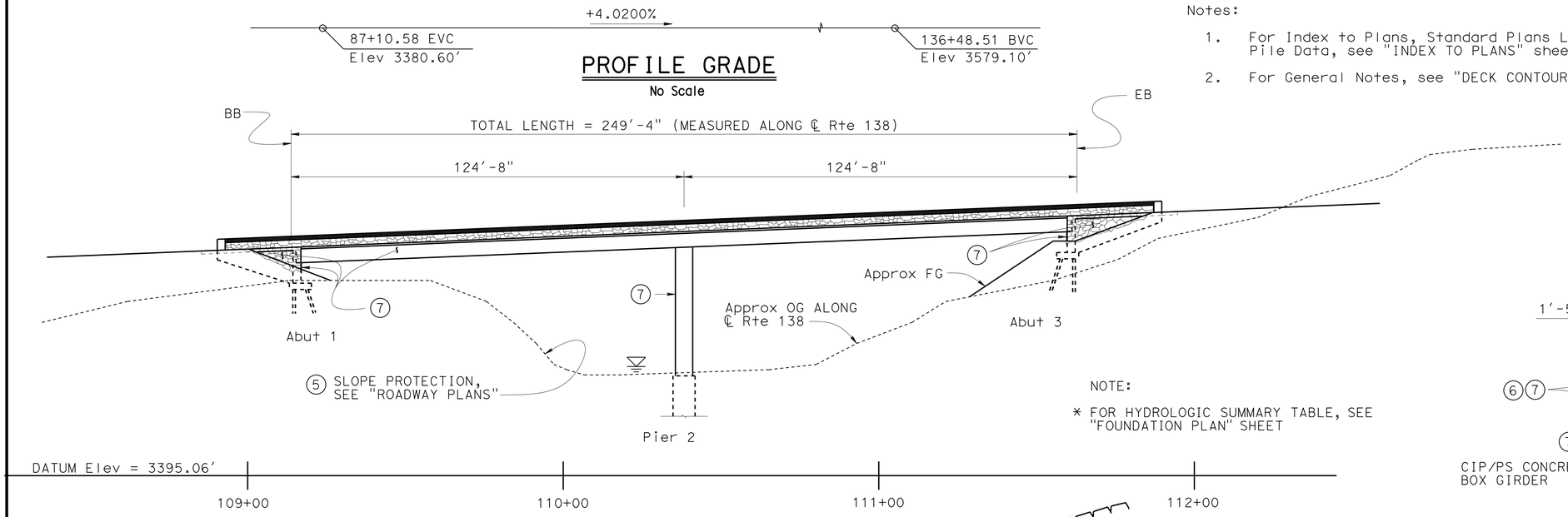

NOTE:

* FOR HYDROLOGIC SUMMARY TABLE, SEE "FOUNDATION PLAN" SHEET

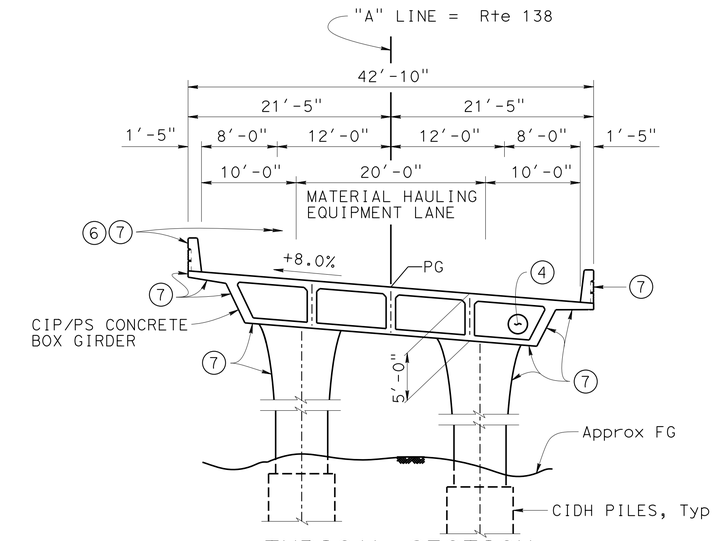

TYPICAL SECTION
1/8" = 1'-0"

QUANTITIES

STRUCTURE EXCAVATION (BRIDGE)	337	CY
STRUCTURE BACKFILL (BRIDGE)	257	CY
84" CAST-IN-DRILLED-HOLE CONCRETE PILING	138	LF
FURNISH PILING (CLASS 140) (ALTERNATIVE W MODIFIED)	570	LF
DRIVE PILE (CLASS 140) (ALTERNATIVE W MODIFIED)	28	EA
PRESTRESSING CAST-IN-PLACE CONCRETE	LUMP	SUM
STRUCTURAL CONCRETE, BRIDGE FOOTING	46	CY
STRUCTURAL CONCRETE, BRIDGE	950	CY
STRUCTURAL CONCRETE, APPROACH SLAB (TYPE N)	98	CY
RANDOM BOULDER TEXTURE	616	SQFT
JOINT SEAL (MR 2")	80	LF
BAR REINFORCING STEEL (BRIDGE)	179,092	LB
BAR REINFORCING STEEL (EPOXY COATED) (BRIDGE)	159,155	LB
PREPARE AND STAIN CONCRETE	19,201 ~~4,956~~	SQFT
24" WELDED STEEL PIPE CASING (BRIDGE)	78	LF
CONCRETE BARRIER (TYPE 742 MODIFIED)	595	LF

2

LEGEND:

1. Paint "BRIDGE NUMBER 54-1219"
2. Paint "MINER'S SHACK CREEK BRIDGE"
3. MGS, see "ROADWAY PLANS"
4. Future Utility Opening
5. RSP, see "ROADWAY PLANS"
6. Concrete Barrier Type 742 (Modified)
7. Prepare and Stain Concrete Surface (ALL EXPOSED SURFACES EXCLUDING BRIDGE DECK AND APPROACH SLABS)

Scupper Location

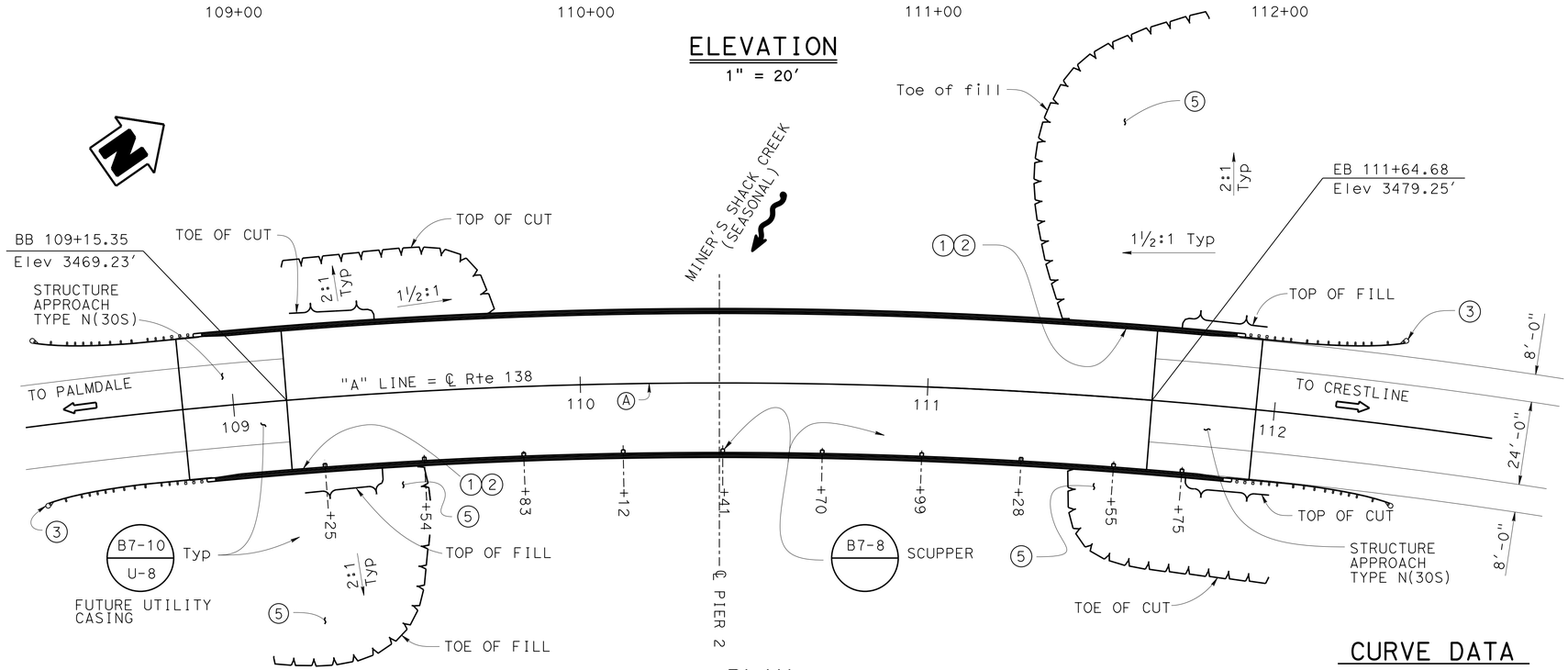

CURVE DATA

NO.	R	Δ	T	L
Ⓐ	1558.40'	95°43'34"	1722.48'	2603.67'

2 **REPLACED PER ADDENDUM No. 2 DATED FEBRUARY 8, 2016**

Gordon Danke DESIGN ENGINEER	DESIGN	BY Pete Norboe	CHECKED Rosa Candiotti	LOAD & RESISTANCE FACTOR DESIGN	LIVE LOADING: HL93 W/"LOW-BOY": PERMIT DESIGN VEHICLE
	DETAILS	BY David Elliott	CHECKED Rosa Candiotti	LAYOUT: BY Pete Norboe	CHECKED R. Candiotti
	QUANTITIES	BY Pete Norboe	CHECKED Rosa Candiotti	SPECIFICATIONS: BY Theresa Nedwick	PLANS AND SPECS COMPARED Theresa Nedwick

ORIGINAL SCALE IN INCHES FOR REDUCED PLANS 0 1 2 3

STATE OF CALIFORNIA
DEPARTMENT OF TRANSPORTATION

DIVISION OF ENGINEERING SERVICES
STRUCTURE DESIGN
DESIGN BRANCH 9

BRIDGE NO. 54-1219
POST MILE R17.6

MINER'S SHACK CREEK BRIDGE
GENERAL PLAN

UNIT: 3594
PROJECT NUMBER & PHASE: 0800020191-1
CONTRACT NO.: 08-003004

DISREGARD PRINTS BEARING EARLIER REVISION DATES

REVISION DATES: 1-13-14 1-31-14 2-18-14 10-9-14

SHEET 1 OF 21

STRUCTURES DESIGN GENERAL PLAN SHEET (ENGLISH) (REV.09-01-10)

FILE => 54-1219-a-gp-sheet.dgn

USERNAME => s102458 DATE PLOTTED => 05-FEB-2016 TIME PLOTTED => 12:42

DIST	COUNTY	ROUTE	POST MILES TOTAL PROJECT	SHEET No.	TOTAL SHEETS
08	SBd	138	R17.1/R19.2	164	212

Peter W. Norboe 3-5-15
REGISTERED CIVIL ENGINEER DATE

9-11-15
PLANS APPROVAL DATE

REGISTERED PROFESSIONAL ENGINEER Peter W. Norboe No. 57519 Exp. 12-31-2015 CIVIL STATE OF CALIFORNIA

The State of California or its officers or agents shall not be responsible for the accuracy or completeness of scanned copies of this plan sheet.

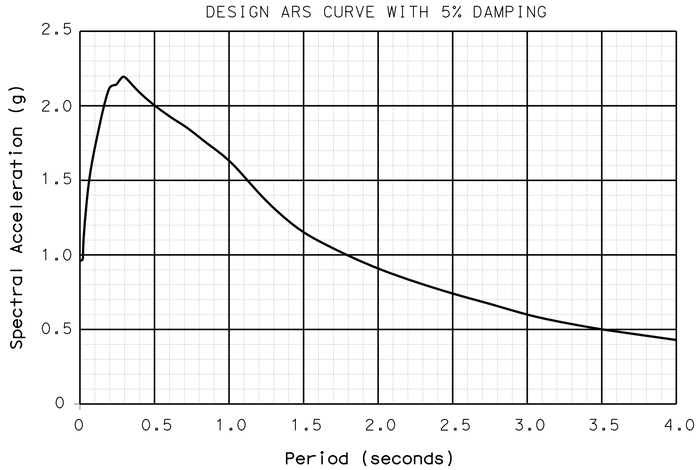

ACCELERATION RESPONSE SPECTRA

No Scale

PILE DATA TABLE

2

Support Location	Pile Type (b)	Nominal Resistance (kips)		Design Tip Elevation (Ft)	Specified Tip Elevation (Ft)	Design Loading (kips)	Cut Off Elevation (ft)
		Compression	Tension				
Abutment 1	Modified Class 140 Alt W (PP 14 x 0.438)	280	0	3432.8 (a)	3432.8	280	3452.92
Pier 2	84" CIDH	4330	1430	3353.0 (a) 3382.0 (b)	3353.0	N/A	3422.00
Abutment 3	Modified Class 140 Alt W (PP 14 x 0.438)	280	0	3442.5 (a)	3442.5	280	3462.42

NOTE:

1) Design tip elevations are controlled by: (a) Compression (b) Tension

2) "Modified" Class 140, Alternative "W" pipe pile is to be driven with either a flat or conical steel tip welded to the pile tip.

INDEX TO PLANS

1. GENERAL PLAN
2. INDEX TO PLANS
3. DECK CONTOUR
4. FOUNDATION PLAN
5. ABUTMENT LAYOUT
6. ABUTMENT DETAILS NO. 1
7. ABUTMENT DETAILS NO. 2
8. PIER DETAILS
9. COLUMN DETAILS NO. 1
10. COLUMN DETAILS NO. 2
11. COLUMN DETAILS NO. 3
12. TYPICAL SECTION
13. GIRDER LAYOUT
14. GIRDER REINFORCEMENT
15. ARCHITECTURAL TREATMENT DETAILS
16. STRUCTURE APPROACH TYPE N(30S)
17. STRUCTURE APPROACH DRAINAGE DETAILS
18. LOG OF TEST BORINGS NO. 1
19. LOG OF TEST BORINGS NO. 2
20. LOG OF TEST BORINGS NO. 3
21. LOG OF TEST BORINGS NO. 4

STANDARD PLANS 2010

SHEET NO.	TITLE
B0-1	Bridge Details
B0-3	Bridge Details
B0-5	Bridge Details
B0-13	Bridge Details
B2-5	Pile Details Class 90 and Class 140
B6-21	Joint Seals (Maximum Movement Rating = 2")
B7-1	Box Girder Details
B7-8	Deck Drainage Details
B7-10	Utility Opening Box Girder
RSP B8-5	Cast-In-Place Prestressed Girder Details
RSP B11-57	Concrete Barrier Type 742
B14-5	Water Supply Line (Details) (Pipe Sizes Less Than NPS 4)

STANDARD PLAN SHEET NO.

DETAIL NO.

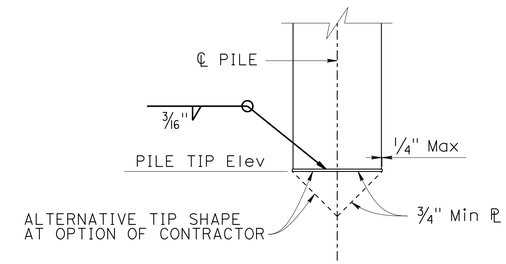

CLASS 140 ALTERNATIVE "W" MODIFIED TIP (NOTE 2)

No Scale

2 **REPLACED PER ADDENDUM No. 2 DATED FEBRUARY 8, 2016**

	BY	CHECKED
DESIGN	P. Norboe	R. Candiotti
DETAILS	D. Elliott	R. Candiotti
QUANTITIES	P. Norboe	R. Candiotti

STATE OF CALIFORNIA
DEPARTMENT OF TRANSPORTATION

DIVISION OF ENGINEERING SERVICES
STRUCTURE DESIGN
DESIGN BRANCH 9

BRIDGE NO. 54-1219
POST MILE R17.6

MINER'S SHACK CREEK BRIDGE
INDEX TO PLANS

STRUCTURES DESIGN DETAIL SHEET (ENGLISH) (REV. 09-01-10)

ORIGINAL SCALE IN INCHES FOR REDUCED PLANS 0 1 2 3

UNIT: 3594
PROJECT NUMBER & PHASE: 0800020191-1 CONTRACT NO.: 08-003004

DISREGARD PRINTS BEARING EARLIER REVISION DATES

REVISION DATES 1-13-14 1-31-14 2-18-14

SHEET 2 OF 21

FILE => 54-1219-a-itp-sheet.dgn

USERNAME => s102458 DATE PLOTTED => 05-FEB-2016 TIME PLOTTED => 12:42

DIST	COUNTY	ROUTE	POST MILES TOTAL PROJECT	SHEET No.	TOTAL SHEETS
08	SBd	138	R17.1/R19.2	184	212

Peter W. Norboe 3-5-15
REGISTERED CIVIL ENGINEER DATE

9-11-15
PLANS APPROVAL DATE

REGISTERED PROFESSIONAL ENGINEER Peter W. Norboe No. C57519 Exp. 12-31-15 CIVIL STATE OF CALIFORNIA

The State of California or its officers or agents shall not be responsible for the accuracy or completeness of scanned copies of this plan sheet.

LEGEND:

1. Paint "Bridge Number 54-1220"
2. Paint "Double Drain Creek Bridge"
3. MGS, see "ROADWAY PLANS"
4. Future Utility Opening
5. Structure Approach, Type N(30S)
6. Concrete Barrier Type 736 (Mod)
7. Prepare and Stain Concrete Surface (ALL EXPOSED SURFACE, EXCLUDING BRIDGE DECK AND APPROACH SLABS)
8. Any conflicting OG shall be removed to provide a minimum 2' clearance to structure, unless otherwise noted

† Scupper Location

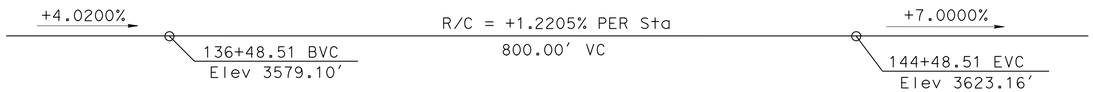

PROFILE GRADE

NO SCALE

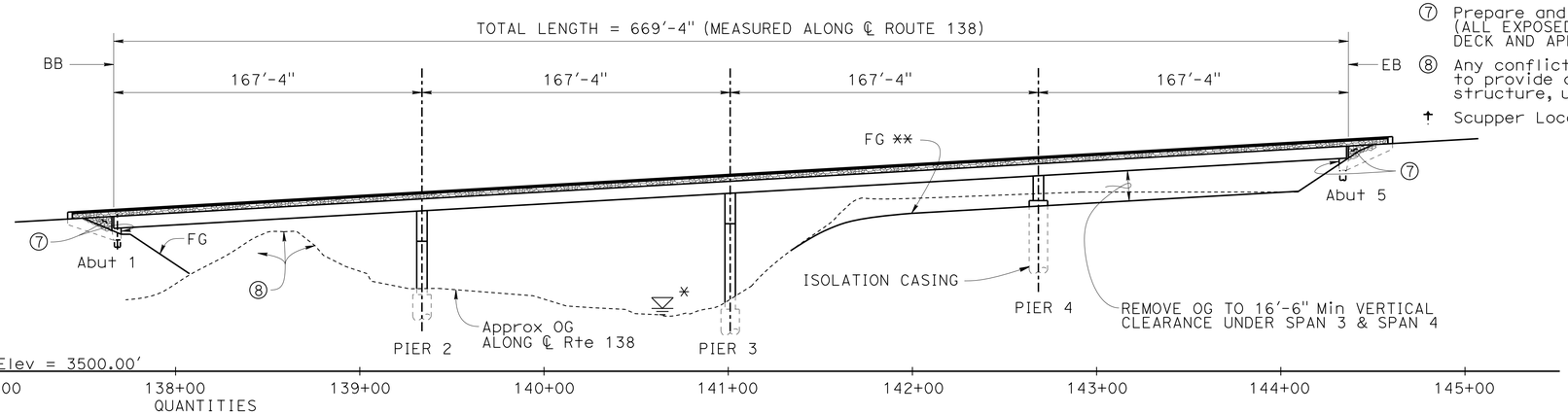

QUANTITIES

STRUCTURE EXCAVATION (BRIDGE)	687	CY
STRUCTURE BACKFILL (BRIDGE)	163	CY
42" CAST-IN-DRILLED-HOLE CONCRETE PILING	416	LF
84" CAST-IN-DRILLED-HOLE CONCRETE PILING	467	LF
PRESTRESSING CAST-IN-PLACE CONCRETE	LUMP	SUM
STRUCTURAL CONCRETE, BRIDGE	2,660	CY
STRUCTURAL CONCRETE, APPROACH SLAB (TYPE N)	104	CY
RANDOM BOULDER TEXTURE	630	SQFT
PTFE SPHERICAL BEARING	8	EA
JOINT SEAL ASSEMBLY (MR 4")	80	LF
BAR REINFORCING STEEL (BRIDGE)	692,487	LB
BAR REINFORCING STEEL (EPOXY COATED) (BRIDGE)	428,904	LB
PREPARE AND STAIN CONCRETE	48,750 ~~41,833~~	SQFT
24" WELDED STEEL PIPE CASING (BRIDGE)	80	LF
ISOLATION CASING	53,600	LB
CONCRETE BARRIER (TYPE 736 MODIFIED)	1,431	LF

2

ELEVATION

1" = 40'

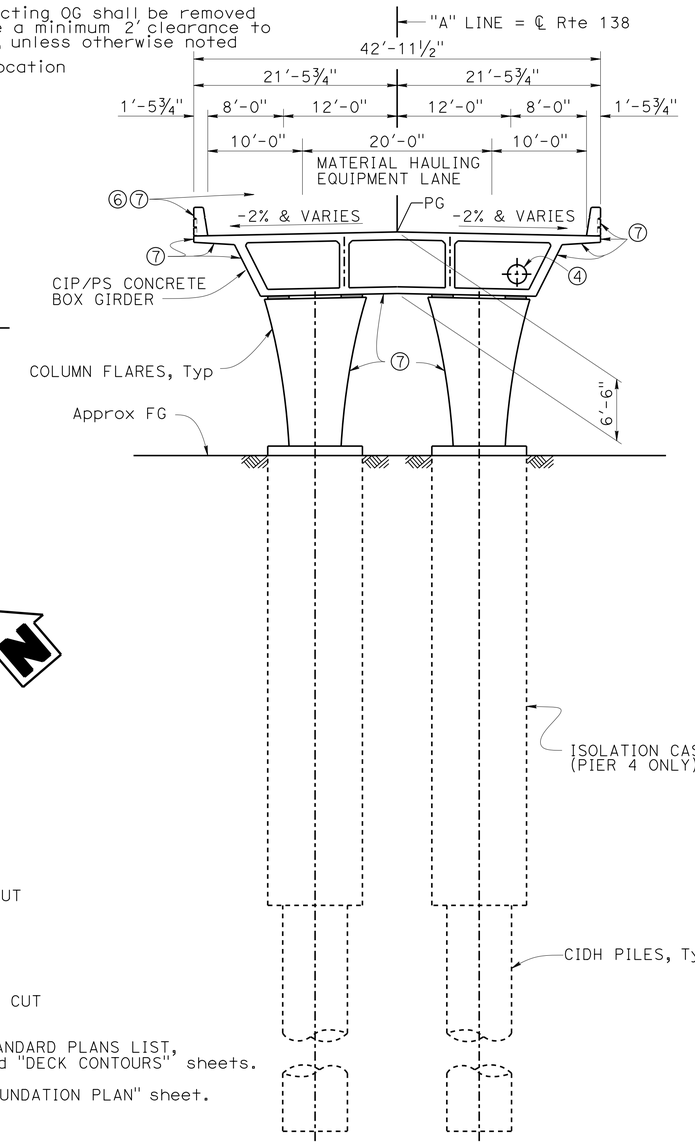

TYPICAL SECTION

⅛" = 1'-0"

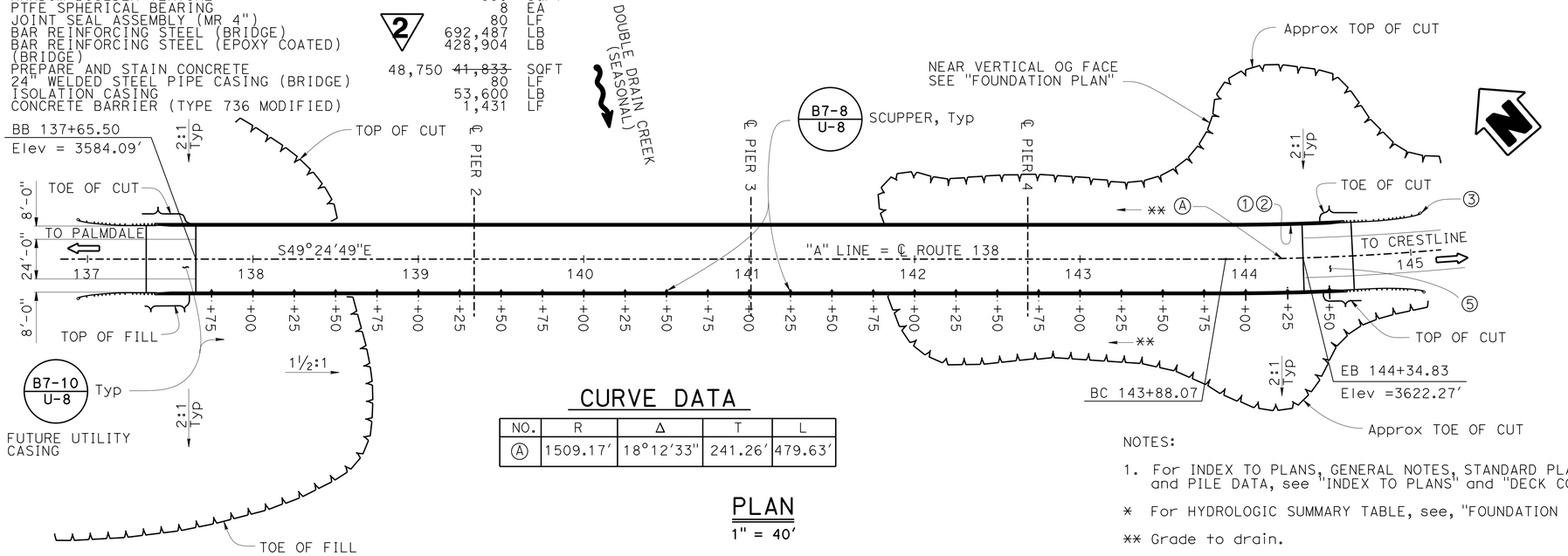

CURVE DATA

NO.	R	Δ	T	L
Ⓐ	1509.17'	18°12'33"	241.26'	479.63'

PLAN

1" = 40'

NOTES:

1. For INDEX TO PLANS, GENERAL NOTES, STANDARD PLANS LIST, and PILE DATA, see "INDEX TO PLANS" and "DECK CONTOURS" sheets.

* For HYDROLOGIC SUMMARY TABLE, see, "FOUNDATION PLAN" sheet.

** Grade to drain.

2 **REPLACED PER ADDENDUM No. 2 DATED FEBRUARY 8, 2016**

Gordon Danke
DESIGN ENGINEER

	BY	CHECKED
DESIGN	Pete Norboe	Rosa Candiotti
DETAILS	David Elliott	Rosa Candiotti
QUANTITIES	Pete Norboe	Rosa Candiotti

LOAD & RESISTANCE FACTOR DESIGN — LIVE LOADING: HL93 W/"LOW-BOY": PERMIT DESIGN VEHICLE

	BY	CHECKED
LAYOUT	Pete Norboe	Rosa Candiotti
SPECIFICATIONS	Theresa Nedwick	PLANS AND SPECS COMPARED Theresa Nedwick

ORIGINAL SCALE IN INCHES FOR REDUCED PLANS 0 1 2 3

STATE OF CALIFORNIA
DEPARTMENT OF TRANSPORTATION

DIVISION OF ENGINEERING SERVICES
STRUCTURE DESIGN
DESIGN BRANCH 9

UNIT: 3594
PROJECT NUMBER & PHASE: 0800020191-1
CONTRACT NO.: 08-003004

BRIDGE NO. 54-1220
POST MILE R18.1

DOUBLE DRAIN CREEK BRIDGE
GENERAL PLAN

DISREGARD PRINTS BEARING EARLIER REVISION DATES

REVISION DATES: 10-7-14 1-14-14 1-30-14 2-18-14

SHEET 1 OF 29

USERNAME => s102458 DATE PLOTTED => 05-FEB-2016 TIME PLOTTED => 12:42

STRUCTURES DESIGN GENERAL PLAN SHEET (ENGLISH) (REV.09-01-10)

FILE => 54-1220-a-gp-sheet.dgn