Dist	COUNTY	ROUTE	POST MILES TOTAL PROJECT	SHEET No.	TOTAL SHEETS
08	SBd	15	11.1	1	46

STATE OF CALIFORNIA

DEPARTMENT OF TRANSPORTATION

PROJECT PLANS FOR CONSTRUCTION ON

STATE HIGHWAY

IN SAN BERNARDINO COUNTY

IN FONTANA

AT DUNCAN CANYON ROAD OVERCROSSING

TO BE SUPPLEMENTED BY STANDARD PLANS DATED 2010

INDEX OF PLANS

SHEET No.	DESCRIPTION
1	TITLE AND LOCATION MAP
2	TYPICAL CROSS SECTIONS
3	LAYOUTS
4-7	DRAINAGE PLAN, PROFILES, DETAILS AND QUANTITIES
8	UTILITY PLAN
9-11	CONSTRUCTION AREA SIGNS
12-13	MOTORIST INFORMATION PLAN
14-15	STAGE CONSTRUCTION PLANS
16-20	TRAFFIC HANDLING PLANS AND QUANTITIES
21-26	DETOUR PLANS AND QUANTITIES
27-29	PAVEMENT DELINEATION PLANS
30	SUMMARY OF QUANTITIES
31-46	REVISED STANDARD PLANS

THE STANDARD PLANS LIST APPLICABLE TO THIS CONTRACT IS INCLUDED IN THE NOTICE TO BIDDERS AND SPECIAL PROVISIONS BOOK.

LOCATION MAP

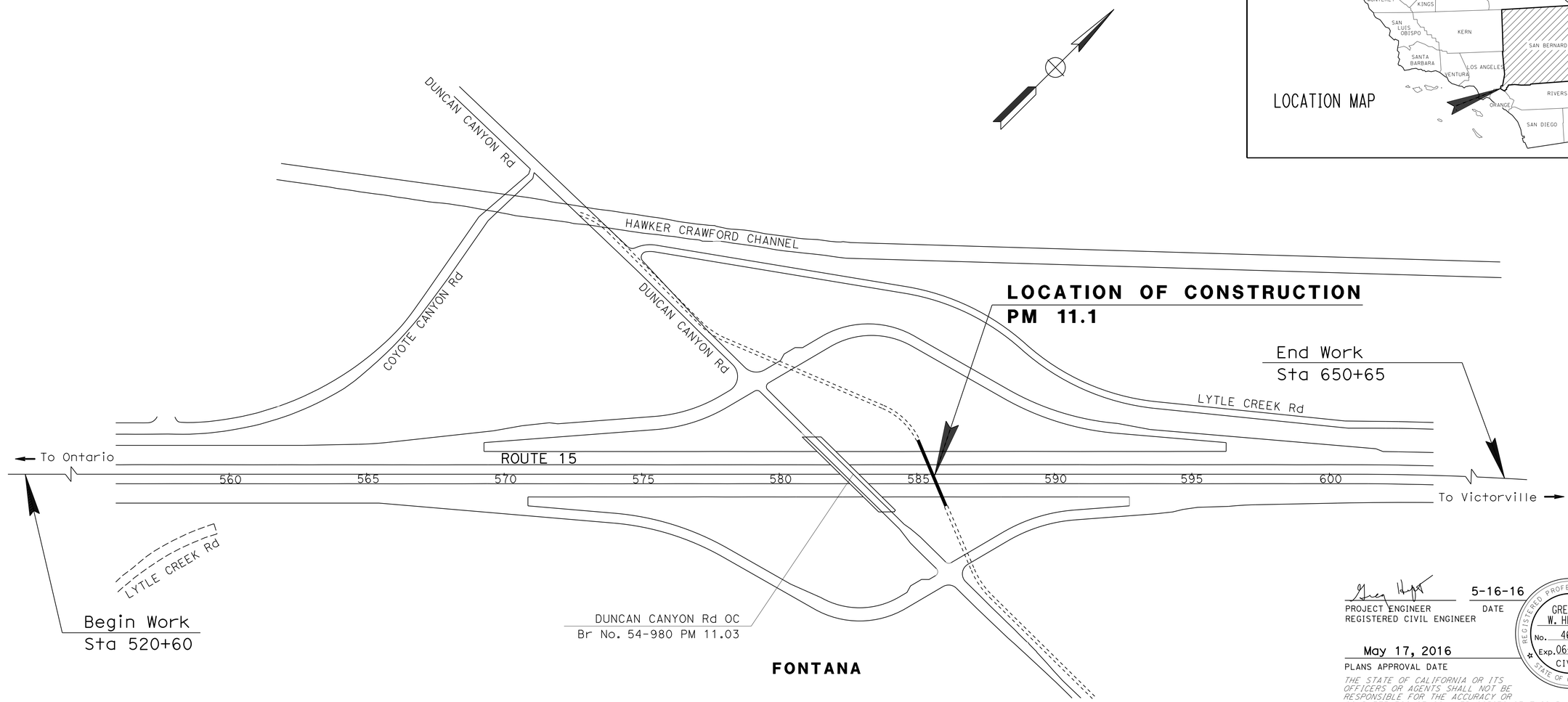

PROJECT ENGINEER
REGISTERED CIVIL ENGINEER

5-16-16
DATE

May 17, 2016
PLANS APPROVAL DATE

REGISTERED PROFESSIONAL ENGINEER
GREGORY W. HEFTER
No. 46655
Exp. 06-30-17
CIVIL
STATE OF CALIFORNIA

THE STATE OF CALIFORNIA OR ITS OFFICERS OR AGENTS SHALL NOT BE RESPONSIBLE FOR THE ACCURACY OR COMPLETENESS OF SCANNED COPIES OF THIS PLAN SHEET.

CITY OF FONTANA
8353 SIERRA AVENUE
FONTANA, CA 92335

AECOM
999 TOWN AND COUNTRY Rd
ORANGE, CA 92868

CONTRACT No.	**08-0K5214**
PROJECT ID	**0815000180**

THE CONTRACTOR SHALL POSSESS THE CLASS (OR CLASSES) OF LICENSE AS SPECIFIED IN THE "NOTICE TO BIDDERS."

APPROVED AS TO IMPACT ON STATE FACILITIES AND CONFORMANCE WITH APPLICABLE STATE STANDARDS AND PRACTICES AND THAT TECHNICAL OVERSIGHT WAS PERFORMED.

CONSULTANT DESIGN ENGINEER	CALTRANS DESIGN OVERSIGHT APPROVAL	REGISTRATION No.	LICENSE Exp DATE	DATE SIGNED
GREG HEFTER	DU LU	60886	12/31/16	05/17/16

LAST REVISION 05-16-16 | DATE PLOTTED => 01-JUN-2016 | TIME PLOTTED => 09:55

Dist	COUNTY	ROUTE	POST MILES TOTAL PROJECT	SHEET No.	TOTAL SHEETS
08	SBd	15	11.1	2	46

REGISTERED CIVIL ENGINEER 5-16-16 DATE

5-17-16
PLANS APPROVAL DATE

REGISTERED PROFESSIONAL ENGINEER GREGORY W. HEFTER No. 46655 Exp. 6-30-17 CIVIL STATE OF CALIFORNIA

THE STATE OF CALIFORNIA OR ITS OFFICERS OR AGENTS SHALL NOT BE RESPONSIBLE FOR THE ACCURACY OR COMPLETENESS OF ELECTRONIC COPIES OF THIS PLAN SHEET.

AECOM
999 TOWN AND COUNTRY Rd
ORANGE, CA 92868

CITY OF FONTANA
8353 SIERRA AVENUE
FONTANA, CA 92335

NOTE:

1. DIMENSIONS OF THE PAVEMENT STRUCTURES (STRUCTURAL SECTIONS) ARE SUBJECT TO TOLERANCES SPECIFIED IN THE STANDARD SPECIFICATIONS.

PAVEMENT LEGEND:

RMCTB = ROAD-MIXED CEMENT TREATED BASE
RSC = RAPID STRENGTH CONCRETE

DESIGN DESIGNATION (ROUTE 15)

2011 ADT = 116000
2030 ADT = 264000
DHV = AM PEAK-19000; PM PEAK-23000

D = AM PEAK-78%, PM PEAK-67%
V = 75 MPH
T = AM & PM-15%
TI_{40} = 15.5

TYPICAL PAVEMENT STRUCTURE SECTIONS

1. 1.15′ JPCP
   WHITE OPAQUE POLYETHYLENE FILM
   0.50′ LCB
2. 1.30′ JPCP (RSC)
   WHITE OPAQUE POLYETHYLENE FILM
   0.50′ RSC BASE
3. 1.30′ JPCP
   WHITE OPAQUE POLYETHYLENE FILM
   0.50′ LCB
4. 1.00′ JPCP
   WHITE OPAQUE POLYETHYLENE FILM
   0.50′ LCB
5. Exist
   1.75′ AC
6. Exist
   0.65′ PCC
   0.40′ CLASS A RMCTB
7. Exist
   1.30′ JPCP
   0.1′ HMA (TYPE A)
   (BOND BREAKER)
   0.50′ LCB
8. Exist
   1.0′ JPCP
   0.1′ HMA (TYPE A)
   (BOND BREAKER)
   0.50′ LCB
9. Exist
   0.20′ HMA (TYPE A)
   0.50′ CLASS 2 AB

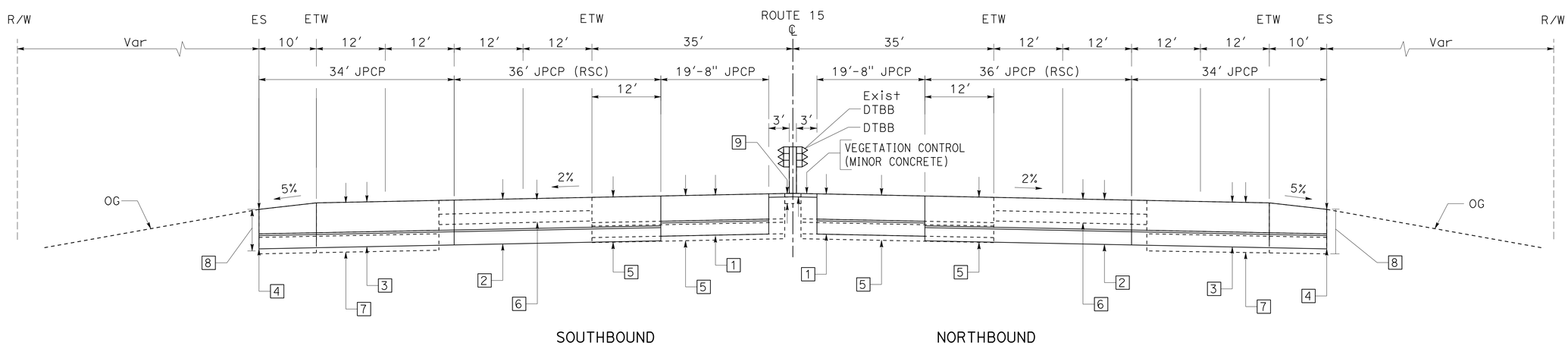

ROUTE 15

Sta 584+75.50 TO Sta 585+94.13 (SB)
Sta 585+32.52 TO Sta 586+31.15 (NB)

TYPICAL CROSS SECTIONS

NO SCALE

X-1

STATE OF CALIFORNIA - DEPARTMENT OF TRANSPORTATION
Caltrans

CONSULTANT FUNCTIONAL SUPERVISOR: GREG W. HEFTER
CALCULATED-DESIGNED BY: DAT NGUYEN
CHECKED BY: GREG W. HEFTER
REVISED BY
DATE REVISED

LAST REVISION 05-16-16
DATE PLOTTED => 01-JUN-2016
TIME PLOTTED => 09:55

Dist	COUNTY	ROUTE	POST MILES TOTAL PROJECT	SHEET No.	TOTAL SHEETS
08	SBd	15	11.1	3	46

REGISTERED CIVIL ENGINEER 5-16-16 DATE

5-17-16
PLANS APPROVAL DATE

REGISTERED PROFESSIONAL ENGINEER GREGORY W. HEFTER No. 46655 Exp. 6-30-17 CIVIL STATE OF CALIFORNIA

THE STATE OF CALIFORNIA OR ITS OFFICERS OR AGENTS SHALL NOT BE RESPONSIBLE FOR THE ACCURACY OR COMPLETENESS OF ELECTRONIC COPIES OF THIS PLAN SHEET.

AECOM
999 TOWN AND COUNTRY Rd
ORANGE, CA 92868

CITY OF FONTANA
8353 SIERRA AVENUE
FONTANA, CA 92335

NOTES:

1. FOR ACCURATE RIGHT OF WAY AND ACCESS DATA, CONTACT RIGHT OF WAY ENGINEERING AT THE DISTRICT OFFICE.

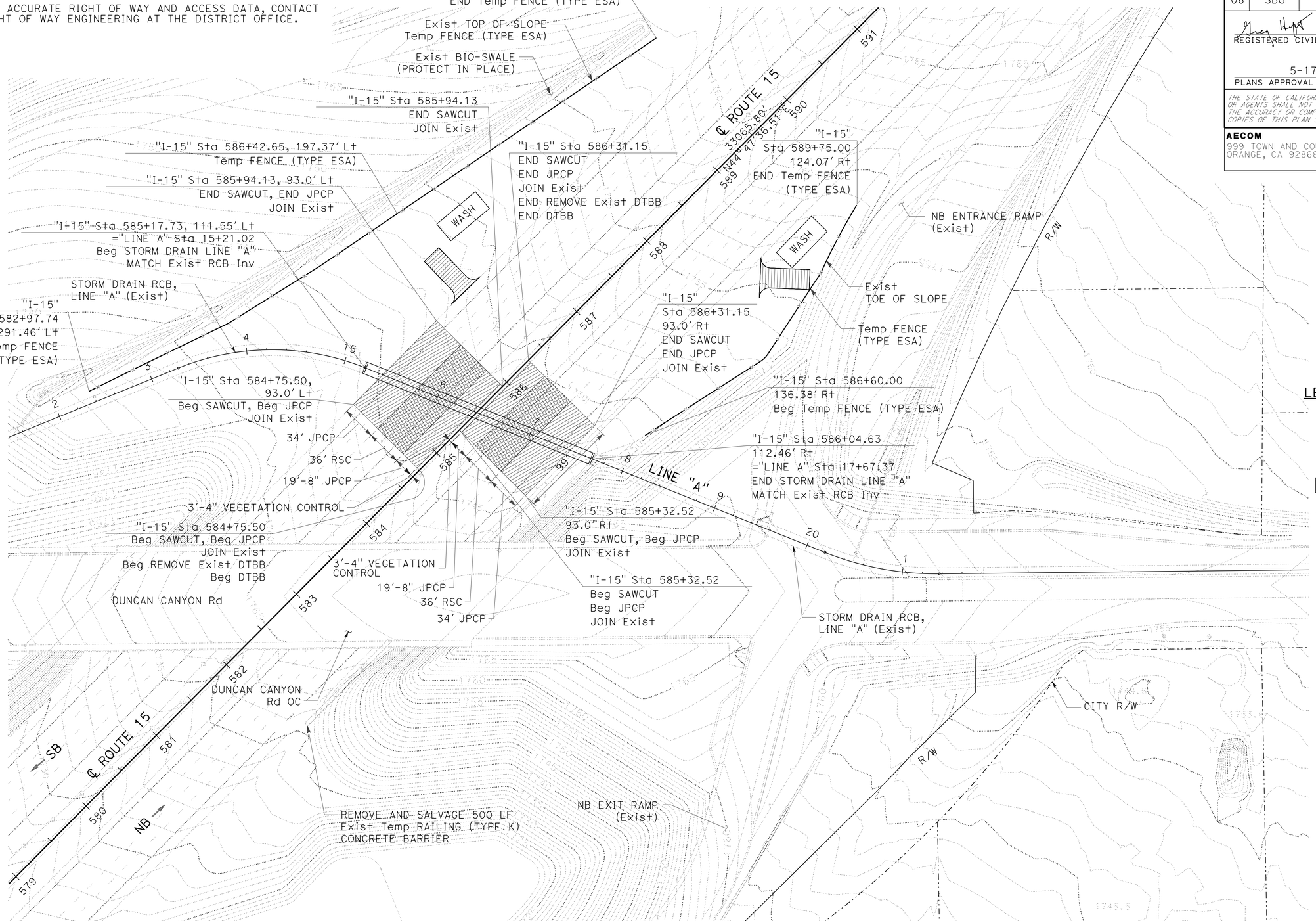

LEGEND:

- NEW JPCP PAVEMENT
- NEW JPCP (RSC) PAVEMENT
- TEMPORARY CONSTRUCTION ENTRANCE
- WASH — TEMPORARY CONCRETE WASHOUT FACILITY

LAYOUT

SCALE: 1" = 50'

L-1

STATE OF CALIFORNIA - DEPARTMENT OF TRANSPORTATION
Caltrans

CONSULTANT FUNCTIONAL SUPERVISOR: GREG W. HEFTER

CALCULATED-DESIGNED BY: DAT NGUYEN
CHECKED BY: GREG W. HEFTER

REVISED BY | DATE REVISED

LAST REVISION 05-16-16 | DATE PLOTTED => 01-JUN-2016 | TIME PLOTTED => 09:55

Dist	COUNTY	ROUTE	POST MILES TOTAL PROJECT	SHEET No.	TOTAL SHEETS
08	SBd	15	11.1	4	46

REGISTERED CIVIL ENGINEER 5-16-16 DATE

5-17-16
PLANS APPROVAL DATE

REGISTERED PROFESSIONAL ENGINEER NADIA D'PARASCHIVOU No. 51422 Exp. 6-30-16 CIVIL STATE OF CALIFORNIA

THE STATE OF CALIFORNIA OR ITS OFFICERS OR AGENTS SHALL NOT BE RESPONSIBLE FOR THE ACCURACY OR COMPLETENESS OF ELECTRONIC COPIES OF THIS PLAN SHEET.

AECOM
999 TOWN AND COUNTRY Rd
ORANGE, CA 92868

CITY OF FONTANA
8353 SIERRA AVENUE
FONTANA, CA 92335

NOTES:

1. DURING INSTALLATION OF RCB, CONTRACTOR SHALL KEEP RCB FREE OF WATER AND DEBRIS AT ALL TIMES.
2. FOR ACCURATE RIGHT OF WAY DATA, CONTACT RIGHT OF WAY ENGINEERING AT THE DISTRICT OFFICE.

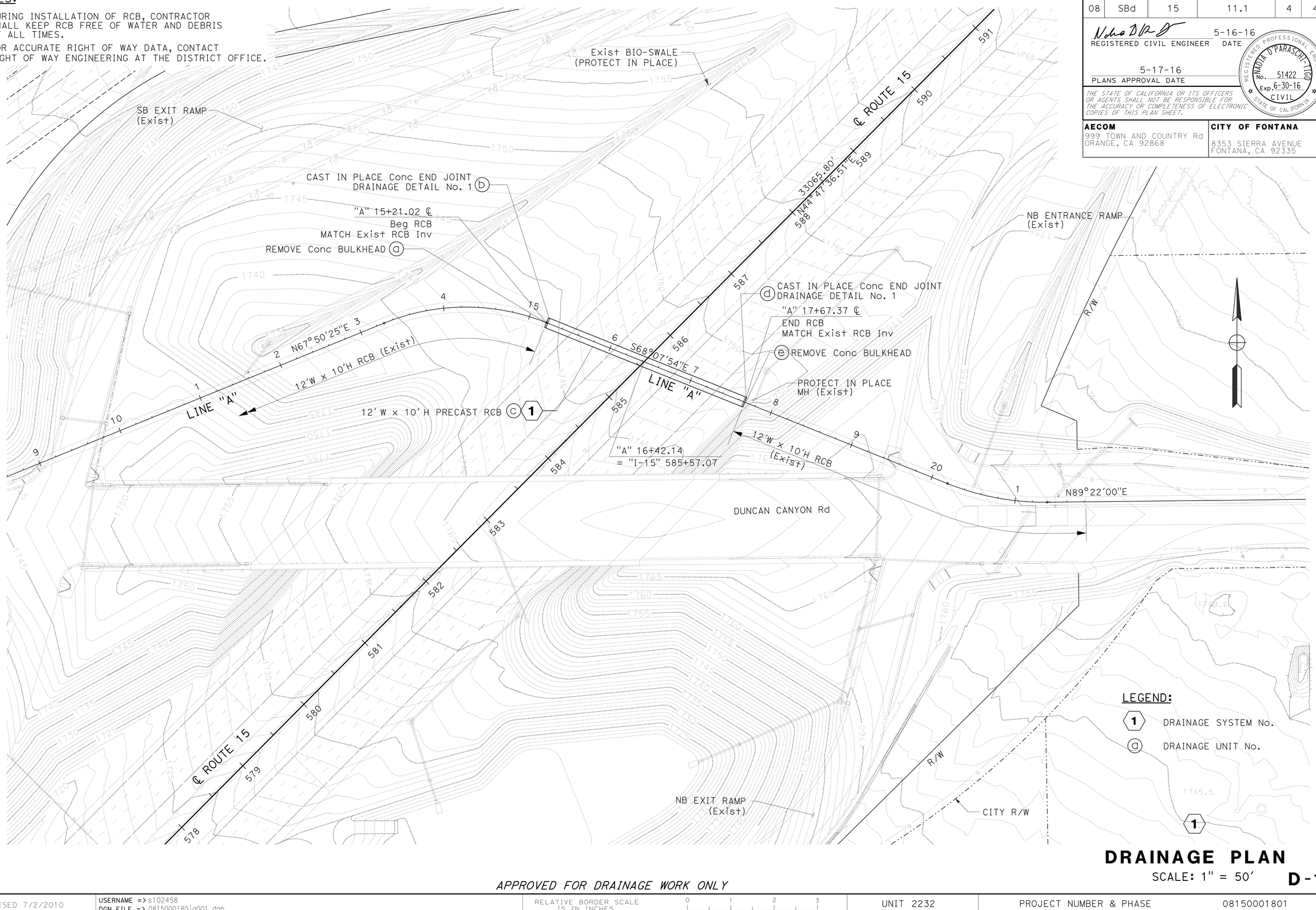

DRAINAGE PLAN

SCALE: 1" = 50'

D-1

APPROVED FOR DRAINAGE WORK ONLY

STATE OF CALIFORNIA - DEPARTMENT OF TRANSPORTATION
Caltrans

CONSULTANT FUNCTIONAL SUPERVISOR: GREG W. HEFTER
CALCULATED-DESIGNED BY: DAT NGUYEN
CHECKED BY: GREG W. HEFTER
REVISED BY
DATE REVISED

LAST REVISION 05-16-16
DATE PLOTTED => 01-JUN-2016
TIME PLOTTED => 09:55

Dist	COUNTY	ROUTE	POST MILES TOTAL PROJECT	SHEET No.	TOTAL SHEETS
08	SBd	15	11.1	5	46

REGISTERED CIVIL ENGINEER 5-16-16 DATE

5-17-16
PLANS APPROVAL DATE

REGISTERED PROFESSIONAL ENGINEER NADIA D'PARASCHIVOU No. 51422 Exp. 6-30-16 CIVIL STATE OF CALIFORNIA

THE STATE OF CALIFORNIA OR ITS OFFICERS OR AGENTS SHALL NOT BE RESPONSIBLE FOR THE ACCURACY OR COMPLETENESS OF ELECTRONIC COPIES OF THIS PLAN SHEET.

AECOM
999 TOWN AND COUNTRY Rd
ORANGE, CA 92868

CITY OF FONTANA
8353 SIERRA AVENUE
FONTANA, CA 92335

NOTE:

1. SEE SHEET X-1, SC-1 AND SC-2 FOR PAVEMENT REPLACEMENT.

ABBREVIATIONS:

fo = FIBER OPTIC

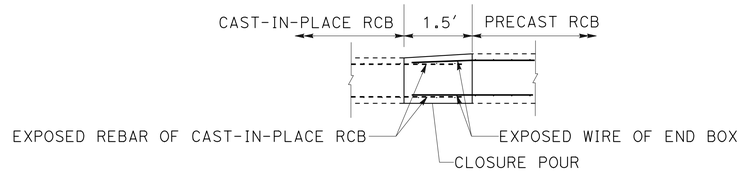

CAST-IN-PLACE CONCRETE END JOINT DETAIL (BOTH ENDS) DRAINAGE DETAIL No. 1

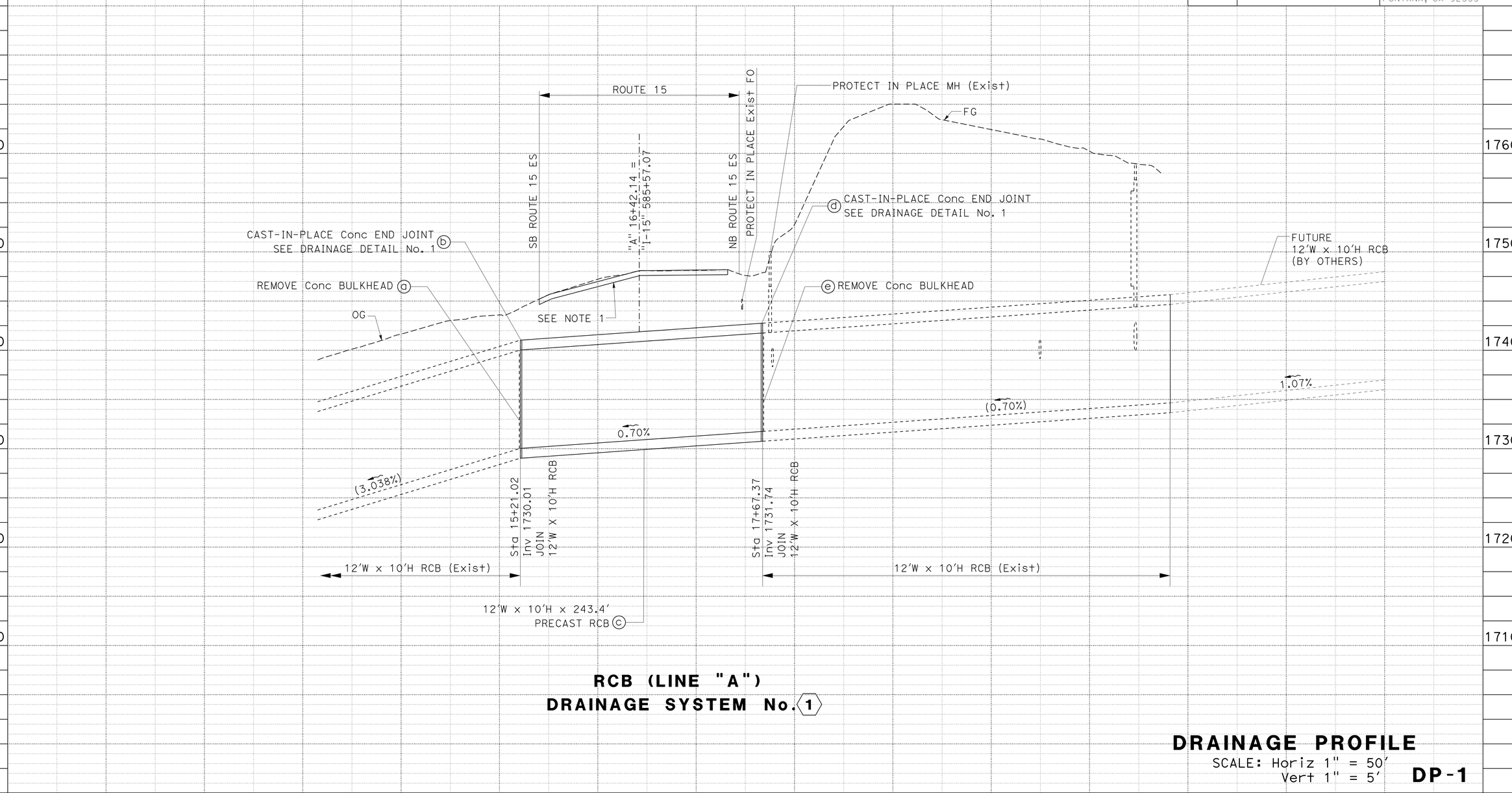

RCB (LINE "A") DRAINAGE SYSTEM No. 1

DRAINAGE PROFILE

SCALE: Horiz 1" = 50'
Vert 1" = 5'

DP-1

STATE OF CALIFORNIA - DEPARTMENT OF TRANSPORTATION
Caltrans

CONSULTANT FUNCTIONAL SUPERVISOR: GREG W. HEFTER
CALCULATED-DESIGNED BY: DAT NGUYEN
CHECKED BY: GREG W. HEFTER
REVISED BY
DATE REVISED

LAST REVISION 05-16-16
DATE PLOTTED => 01-JUN-2016
TIME PLOTTED => 09:55

Dist	COUNTY	ROUTE	POST MILES TOTAL PROJECT	SHEET No.	TOTAL SHEETS
08	SBd	15	11.1	6	46

REGISTERED CIVIL ENGINEER 5-16-16 DATE

5-17-16
PLANS APPROVAL DATE

REGISTERED PROFESSIONAL ENGINEER GREGORY W. HEFTER No. 46655 Exp. 6-30-17 CIVIL STATE OF CALIFORNIA

THE STATE OF CALIFORNIA OR ITS OFFICERS OR AGENTS SHALL NOT BE RESPONSIBLE FOR THE ACCURACY OR COMPLETENESS OF ELECTRONIC COPIES OF THIS PLAN SHEET.

AECOM
999 TOWN AND COUNTRY Rd
ORANGE, CA 92868

CITY OF FONTANA
8353 SIERRA AVENUE
FONTANA, CA 92335

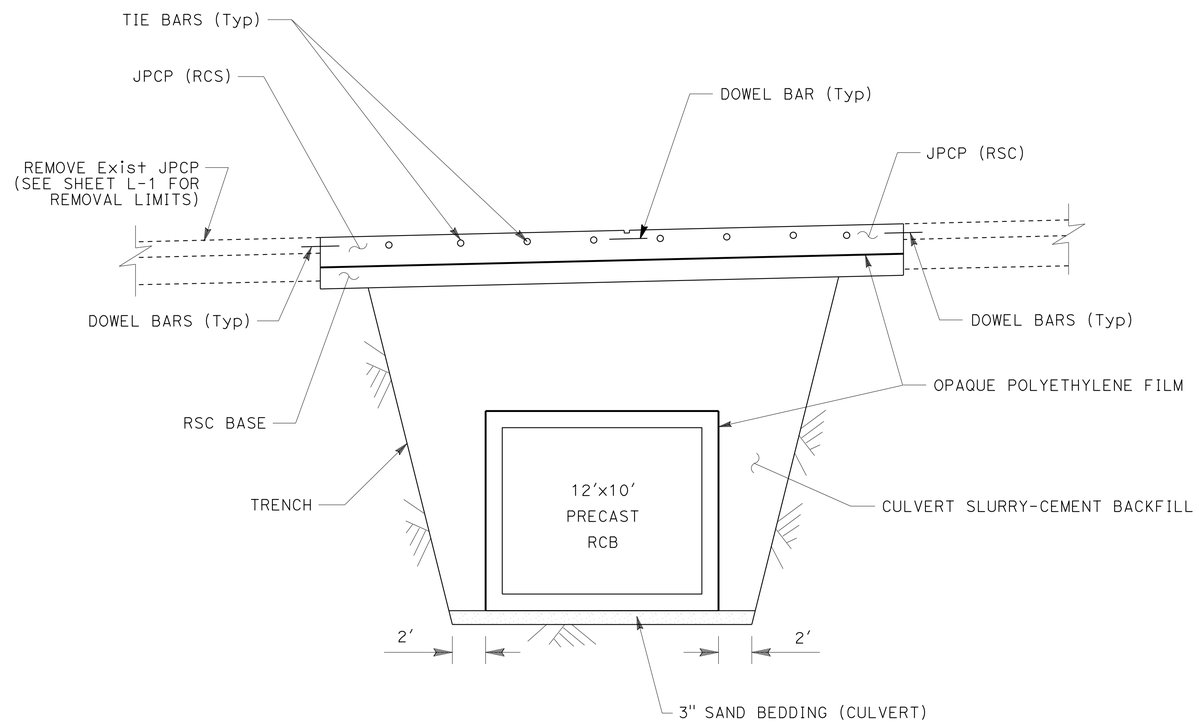

RCB SECTION

NOTES:

1. SEE SHEET X-1 FOR PAVEMENT SECTIONS.
2. SEE SHEET DP-1 FOR RCB PROFILE.
3. SLOPE OR SHORE EXCAVATION SIDES AS NECESSARY.
4. SEE RSP D83A FOR DETAILS.

DRAINAGE DETAILS

NO SCALE

DD-1

STATE OF CALIFORNIA - DEPARTMENT OF TRANSPORTATION
Caltrans

CONSULTANT FUNCTIONAL SUPERVISOR: GREG W. HEFTER
CALCULATED-DESIGNED BY: DAT NGUYEN
CHECKED BY: GREG W. HEFTER
REVISED BY
DATE REVISED

LAST REVISION 05-16-16
DATE PLOTTED => 01-JUN-2016
TIME PLOTTED => 09:55

Dist	COUNTY	ROUTE	POST MILES TOTAL PROJECT	SHEET No.	TOTAL SHEETS
08	SBd	15	11.1	7	46

REGISTERED CIVIL ENGINEER 5-16-16 DATE

5-17-16
PLANS APPROVAL DATE

REGISTERED PROFESSIONAL ENGINEER NADIA D'PARASCHI-TIGO No. 51422 Exp. 6-30-16 CIVIL STATE OF CALIFORNIA

THE STATE OF CALIFORNIA OR ITS OFFICERS OR AGENTS SHALL NOT BE RESPONSIBLE FOR THE ACCURACY OR COMPLETENESS OF ELECTRONIC COPIES OF THIS PLAN SHEET.

AECOM
999 TOWN AND COUNTRY Rd
ORANGE, CA 92868

CITY OF FONTANA
8353 SIERRA AVENUE
FONTANA, CA 92335

DRAINAGE QUANTITIES

DRAINAGE PLAN SHEET No.	DRAINAGE SYSTEM No. ⬡	DRAINAGE UNIT ○	REMOVE CONCTRETE	STRUCTURAL CONCRETE, BOX CULVERT	12' X 10' PRECAST RCB	OPAQUE POLYETHYLENE FILM	DESCRIPTION	STATION
			CY	CY	FT	SQFT		
D-1	1	a	4.5				REMOVE CONCRETE BULKHEAD	
D-1	1	b		2.7			CAST-IN-PLACE Conc END JOINT	
D-1	1	c			245.1		12'W x 10'H PRECAST RCB	"I-15" 585+57.07
D-1	1	d		2.7			CAST-IN-PLACE Conc END JOINT	
D-1	1	e	4.5				REMOVE CONCRETE BULKHEAD	
D-1	1					9400	OPAQUE POLYETHYLENE FILM	
TOTAL			9.0	5.4	245.1	9400*		

* SEE QUANTITY TOTAL FOR "OPAQUE POLYETHYLENE FILM," ON SHEET Q-1

STATE OF CALIFORNIA - DEPARTMENT OF TRANSPORTATION
Caltrans

CONSULTANT FUNCTIONAL SUPERVISOR: GREG W. HEFTER
CALCULATED-DESIGNED BY: DAT NGUYEN
CHECKED BY: GREG W. HEFTER
REVISED BY
DATE REVISED

DRAINAGE QUANTITIES

DQ-1

LAST REVISION 05-16-16
DATE PLOTTED => 01-JUN-2016
TIME PLOTTED => 09:55

NOTES:

1. CONTRACTOR SHALL POTHOLE THE FO LINE TO DETERMINE THE EXACT LOCATION AND DEPTH PRIOR TO EXCAVATION FOR THE RCB.
2. FOR ACCURATE RIGHT OF WAY DATA, CONTACT RIGHT OF WAY ENGINEERING AT THE DISTRICT OFFICE.

ABBREVIATIONS:

fo - FIBER OPTIC

UTILITIES CONTACT:

FLOOD CONTROL	SAN BERNARDINO COUNTY FLOOD CONTROL DISTRICT OPERATIONS DIVISION	(909) 387-7995
WATER	WEST VALLEY WATER DISTRICT	(909) 875-1804
FIBER OPTIC	CALTRANS	(909) 889-7867

LEGEND

—— fo —— —— – EXISTING FIBER OPTIC LINE

- —— w —— —— EXISTING WATER LINE

Dist	COUNTY	ROUTE	POST MILES TOTAL PROJECT	SHEET No.	TOTAL SHEETS
08	SBd	15	11.1	8	46

REGISTERED CIVIL ENGINEER 5-16-16 DATE

PLANS APPROVAL DATE 5-17-16

REGISTERED PROFESSIONAL ENGINEER GREGORY W. HEFTER No. 46655 Exp. 6-30-17 CIVIL STATE OF CALIFORNIA

THE STATE OF CALIFORNIA OR ITS OFFICERS OR AGENTS SHALL NOT BE RESPONSIBLE FOR THE ACCURACY OR COMPLETENESS OF ELECTRONIC COPIES OF THIS PLAN SHEET.

AECOM
999 TOWN AND COUNTRY Rd
ORANGE, CA 92868

CITY OF FONTANA
8353 SIERRA AVENUE
FONTANA, CA 92335

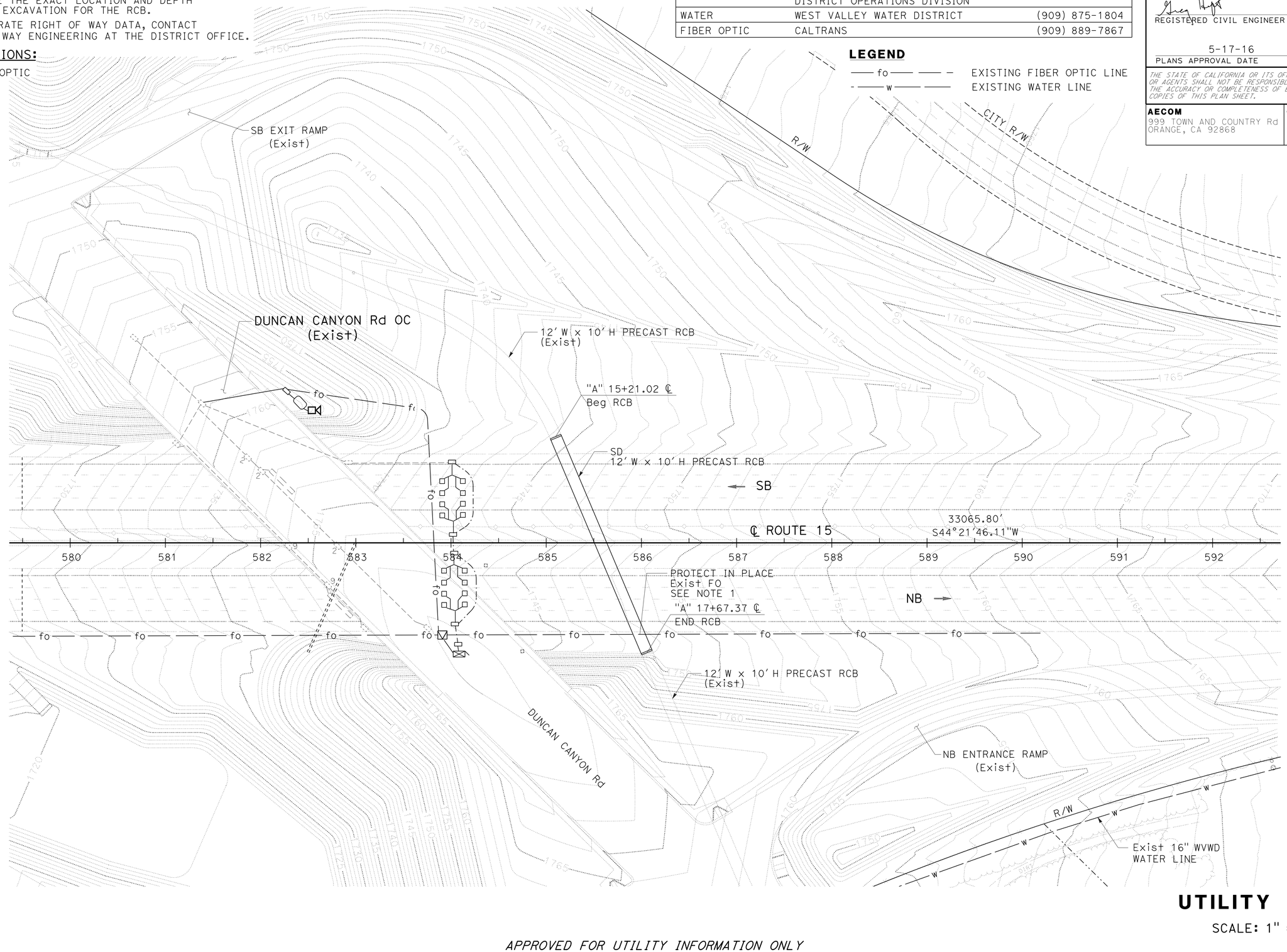

UTILITY PLAN

SCALE: 1" = 50'

U-1

APPROVED FOR UTILITY INFORMATION ONLY

STATE OF CALIFORNIA - DEPARTMENT OF TRANSPORTATION

Caltrans

CONSULTANT FUNCTIONAL SUPERVISOR: GREG W. HEFTER

CALCULATED-DESIGNED BY: DAT NGUYEN

CHECKED BY: GREG W. HEFTER

REVISED BY | DATE REVISED

LAST REVISION 05-16-16 | DATE PLOTTED => 01-JUN-2016 | TIME PLOTTED => 09:55

Dist	COUNTY	ROUTE	POST MILES TOTAL PROJECT	SHEET No.	TOTAL SHEETS
08	SBd	15	11.1	9	46

REGISTERED CIVIL ENGINEER 5-16-16 DATE

5-17-16
PLANS APPROVAL DATE

REGISTERED PROFESSIONAL ENGINEER GREGORY W. HEFTER No. 46655 Exp. 6-30-17 CIVIL STATE OF CALIFORNIA

THE STATE OF CALIFORNIA OR ITS OFFICERS OR AGENTS SHALL NOT BE RESPONSIBLE FOR THE ACCURACY OR COMPLETENESS OF ELECTRONIC COPIES OF THIS PLAN SHEET.

AECOM
999 TOWN AND COUNTRY Rd
ORANGE, CA 92868

CITY OF FONTANA
8353 SIERRA AVENUE
FONTANA, CA 92335

CONSTRUCTION AREA SIGNS (PORTABLE)

SIGN NO	SIGN CODE	PANEL SIZE	SIGN MESSAGE	NO OF SIGNS	NO OF POST AND SIZE
* 1	M4-10(ST)	48" X 18"	DETOUR STRAIGHT	9	1 - 4" x 6"
	M1-1	36" X 36"	I-15	9	
	M3-1	36" X 18"	NORTH	9	
* 2	M4-10(LT)	48" X 18"	DETOUR LEFT	6	1 - 4" x 6"
	M1-1	36" X 36"	I-15	6	
	M3-1	36" X 18"	NORTH	6	
* 3	M4-10(RT)	48" X 18"	DETOUR RIGHT	6	1 - 4" x 6"
	M1-1	36" X 36"	I-15	6	
	M3-1	36" X 18"	NORTH	6	

* SEE DETAIL THIS SHEET

NOTE:
1. ALL SIGN LOCATIONS SHOWN ARE APPROXIMATE. EXACT LOCATIONS TO BE DETERMINED BY THE ENGINEER.

LEGEND
- TEMPORARY TRAFFIC CONTROL SIGN
- PCMS (TOTAL 2 THIS SHEET)
- TEMPORARY BARRICADE (TYPE III)

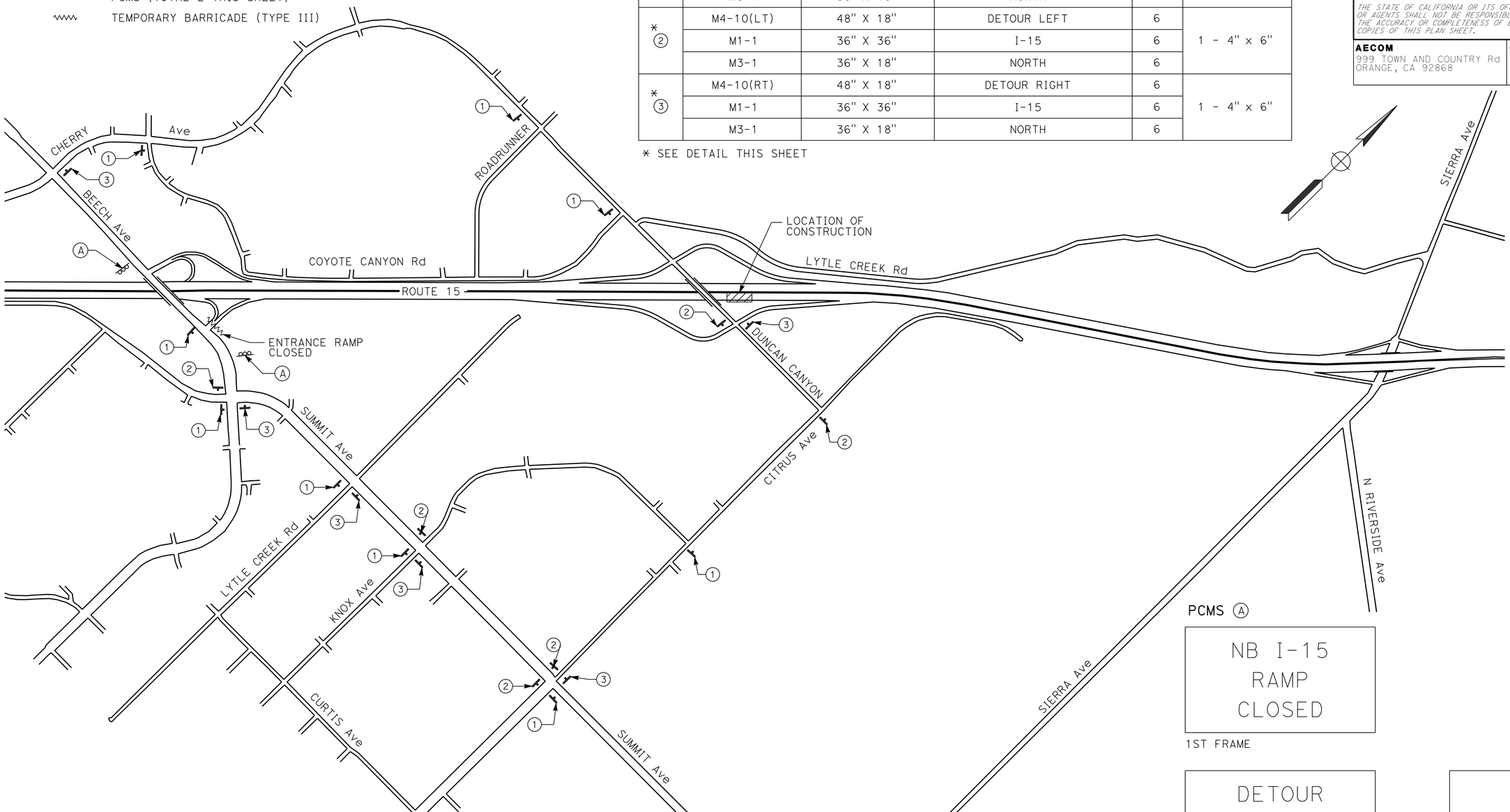

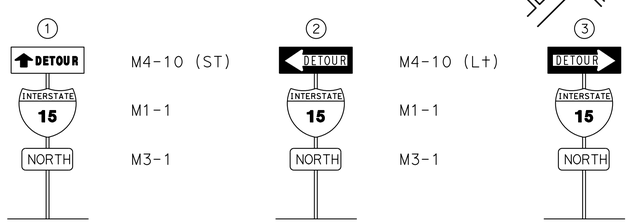

PCMS (A)

NB I-15 RAMP CLOSED
1ST FRAME

DETOUR STRAIGHT AHEAD
2ND FRAME
(DAY OF CLOSURE MESSAGE)

DATE TIME
(IN ADVANCE OF CLOSURE MESSAGE)

NB ROUTE 15 FULL FREEWAY CLOSURE

CONSTRUCTION AREA SIGNS

NO SCALE

CS-1

APPROVED FOR CONSTRUCTION AREA SIGN WORK ONLY

STATE OF CALIFORNIA - DEPARTMENT OF TRANSPORTATION
Caltrans

CONSULTANT FUNCTIONAL SUPERVISOR: GREG W. HEFTER
CALCULATED-DESIGNED BY: DAT NGUYEN
CHECKED BY: GREG W. HEFTER
REVISED BY
DATE REVISED

LAST REVISION DATE PLOTTED => 01-JUN-2016
TIME PLOTTED => 09:56
05-16-16

Dist	COUNTY	ROUTE	POST MILES TOTAL PROJECT	SHEET No.	TOTAL SHEETS
08	SBd	15	11.1	10	46

REGISTERED CIVIL ENGINEER 5-16-16 DATE

5-17-16
PLANS APPROVAL DATE

REGISTERED PROFESSIONAL ENGINEER GREGORY W. HEFTER No. 46655 Exp. 6-30-17 CIVIL STATE OF CALIFORNIA

THE STATE OF CALIFORNIA OR ITS OFFICERS OR AGENTS SHALL NOT BE RESPONSIBLE FOR THE ACCURACY OR COMPLETENESS OF ELECTRONIC COPIES OF THIS PLAN SHEET.

AECOM
999 TOWN AND COUNTRY Rd
ORANGE, CA 92868

CITY OF FONTANA
8353 SIERRA AVENUE
FONTANA, CA 92335

CONSTRUCTION AREA SIGNS (PORTABLE)

SIGN NO	SIGN CODE	PANEL SIZE	SIGN MESSAGE	NO OF SIGNS	NO OF POST AND SIZE
* 4	M4-10(ST)	48" X 18"	DETOUR STRAIGHT	8	1 - 4" x 6"
	M1-1	36" X 36"	I-15	8	
	M3-3	36" X 18"	SOUTH	8	
* 5	M4-10(LT)	48" X 18"	DETOUR LEFT	4	1 - 4" x 6"
	M1-1	36" X 36"	I-15	4	
	M3-3	36" X 18"	SOUTH	4	
* 6	M4-10(RT)	48" X 18"	DETOUR RIGHT	5	1 - 4" x 6"
	M1-1	36" X 36"	I-15	5	
	M3-3	36" X 18"	SOUTH	5	

* SEE DETAIL THIS SHEET

NOTE:
1. ALL SIGN LOCATIONS SHOWN ARE APPROXIMATE. EXACT LOCATIONS TO BE DETERMINED BY THE ENGINEER.

LEGEND
- TEMPORARY TRAFFIC CONTROL SIGN
- PCMS (TOTAL 4 THIS SHEET)
- TEMPORARY BARRICADE (TYPE III)

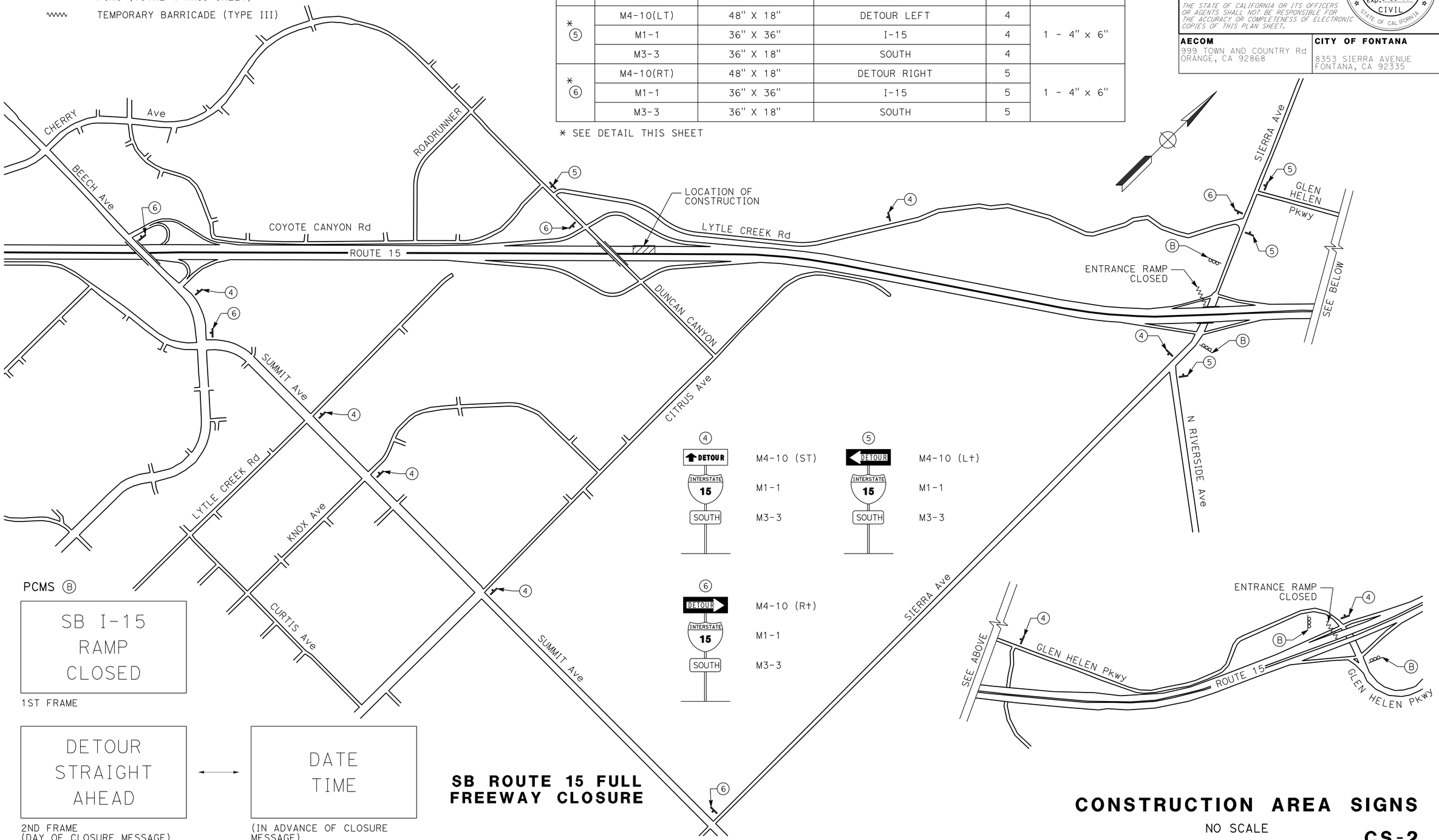

SB ROUTE 15 FULL FREEWAY CLOSURE

APPROVED FOR CONSTRUCTION AREA SIGN WORK ONLY

CONSTRUCTION AREA SIGNS

NO SCALE

CS-2

STATE OF CALIFORNIA - DEPARTMENT OF TRANSPORTATION
Caltrans

CONSULTANT FUNCTIONAL SUPERVISOR: GREG W. HEFTER
CALCULATED-DESIGNED BY: DAT NGUYEN
CHECKED BY: GREG W. HEFTER
REVISED BY
DATE REVISED

LAST REVISION 05-16-16
DATE PLOTTED =>
TIME PLOTTED =>

Dist	COUNTY	ROUTE	POST MILES TOTAL PROJECT	SHEET No.	TOTAL SHEETS
08	SBd	15	11.1	11	46

REGISTERED CIVIL ENGINEER 5-16-16 DATE

5-17-16
PLANS APPROVAL DATE

REGISTERED PROFESSIONAL ENGINEER GREGORY W. HEFTER No. 46655 Exp. 6-30-17 CIVIL STATE OF CALIFORNIA

THE STATE OF CALIFORNIA OR ITS OFFICERS OR AGENTS SHALL NOT BE RESPONSIBLE FOR THE ACCURACY OR COMPLETENESS OF ELECTRONIC COPIES OF THIS PLAN SHEET.

AECOM
999 TOWN AND COUNTRY Rd
ORANGE, CA 92868

CITY OF FONTANA
8353 SIERRA AVENUE
FONTANA, CA 92335

CONSTRUCTION AREA SIGNS (PORTABLE)

SIGN NO	SIGN CODE	PANEL SIZE	SIGN MESSAGE	NO OF SIGNS	NO OF POST AND SIZE
* 4	M4-10(ST)	48" X 18"	DETOUR STRAIGHT	8	1 - 4" x 6"
	M1-1	36" X 36"	I-15	8	
	M3-3	36" X 18"	SOUTH	8	
* 5	M4-10(LT)	48" X 18"	DETOUR LEFT	4	1 - 4" x 6"
	M1-1	36" X 36"	I-15	4	
	M3-3	36" X 18"	SOUTH	4	
* 6	M4-10(RT)	48" X 18"	DETOUR RIGHT	6	1 - 4" x 6"
	M1-1	36" X 36"	I-15	6	
	M3-3	36" X 18"	SOUTH	6	

* SEE DETAIL THIS SHEET

NOTE:

1. ALL SIGN LOCATIONS SHOWN ARE APPROXIMATE. EXACT LOCATIONS TO BE DETERMINED BY THE ENGINEER.
2. D3-1 SIGN SHALL BE ORANGE BACKGROUND WITH BLACK LETTERS.

LEGEND:

TEMPORARY TRAFFIC CONTROL SIGN

TEMPORARY BARRICADE (TYPE III)

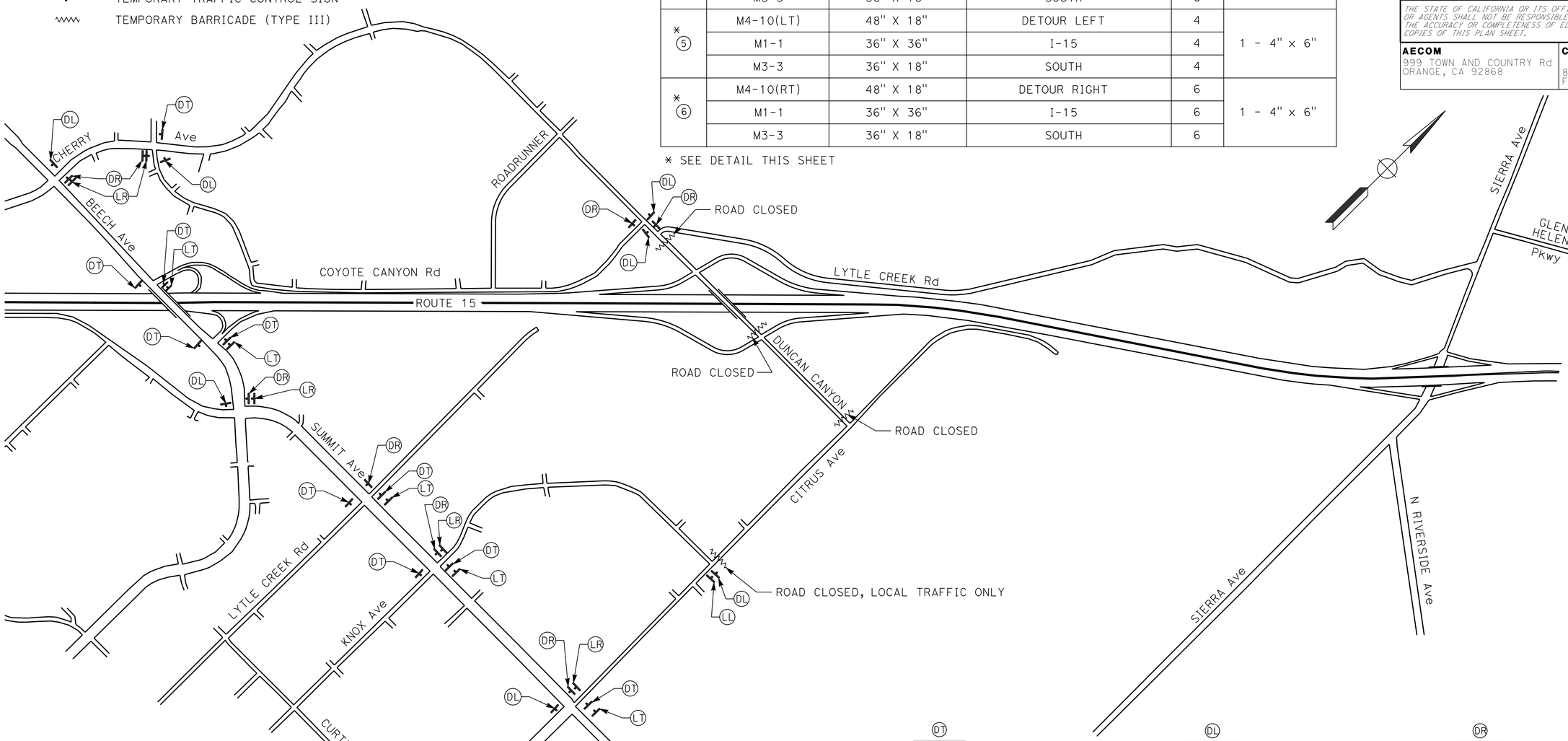

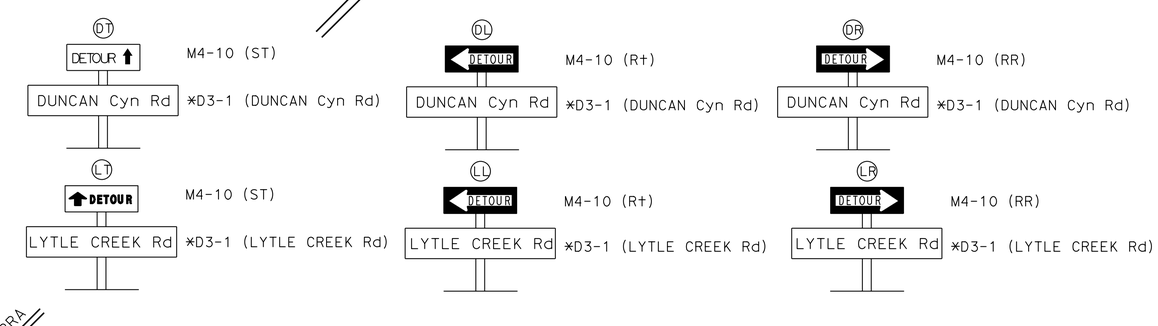

SB ROUTE 15 FULL FREEWAY CLOSURE

APPROVED FOR CONSTRUCTION AREA SIGN WORK ONLY

CONSTRUCTION AREA SIGNS

NO SCALE

CS-3

STATE OF CALIFORNIA - DEPARTMENT OF TRANSPORTATION
Caltrans

CONSULTANT FUNCTIONAL SUPERVISOR: GREG W. HEFTER

CALCULATED-DESIGNED BY: DAT NGUYEN
CHECKED BY: GREG W. HEFTER

REVISED BY
DATE REVISED

LAST REVISION 05-16-16
DATE PLOTTED =>
TIME PLOTTED =>

Dist	COUNTY	ROUTE	POST MILES TOTAL PROJECT	SHEET No.	TOTAL SHEETS
08	SBd	15	11.1	12	46

REGISTERED CIVIL ENGINEER 5-16-16 DATE

5-17-16
PLANS APPROVAL DATE

REGISTERED PROFESSIONAL ENGINEER GREGORY W. HEFTER No. 46655 Exp. 6-30-17 CIVIL STATE OF CALIFORNIA

THE STATE OF CALIFORNIA OR ITS OFFICERS OR AGENTS SHALL NOT BE RESPONSIBLE FOR THE ACCURACY OR COMPLETENESS OF ELECTRONIC COPIES OF THIS PLAN SHEET.

AECOM
999 TOWN AND COUNTRY Rd
ORANGE, CA 92868

CITY OF FONTANA
8353 SIERRA AVENUE
FONTANA, CA 92335

NOTES:

1. ALL SIGN LOCATIONS SHOWN ARE APPROXIMATE. EXACT LOCATIONS TO BE DETERMINED BY THE ENGINEER.

2 INSTALL PCMS TWENTY ONE (21) DAYS PRIOR TO CLOSURE.

3. FULL NB FREEWAY CLOSURE OF ROUTE 15 BETWEEN ROUTE 210 AND DUNCAN CANYON ROAD.

LEGEND:

PCMS (TOTAL 20 THIS SHEET)

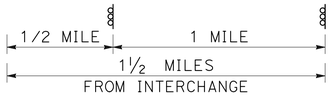

APPROXIMATE PCMS SPACING (Typ)

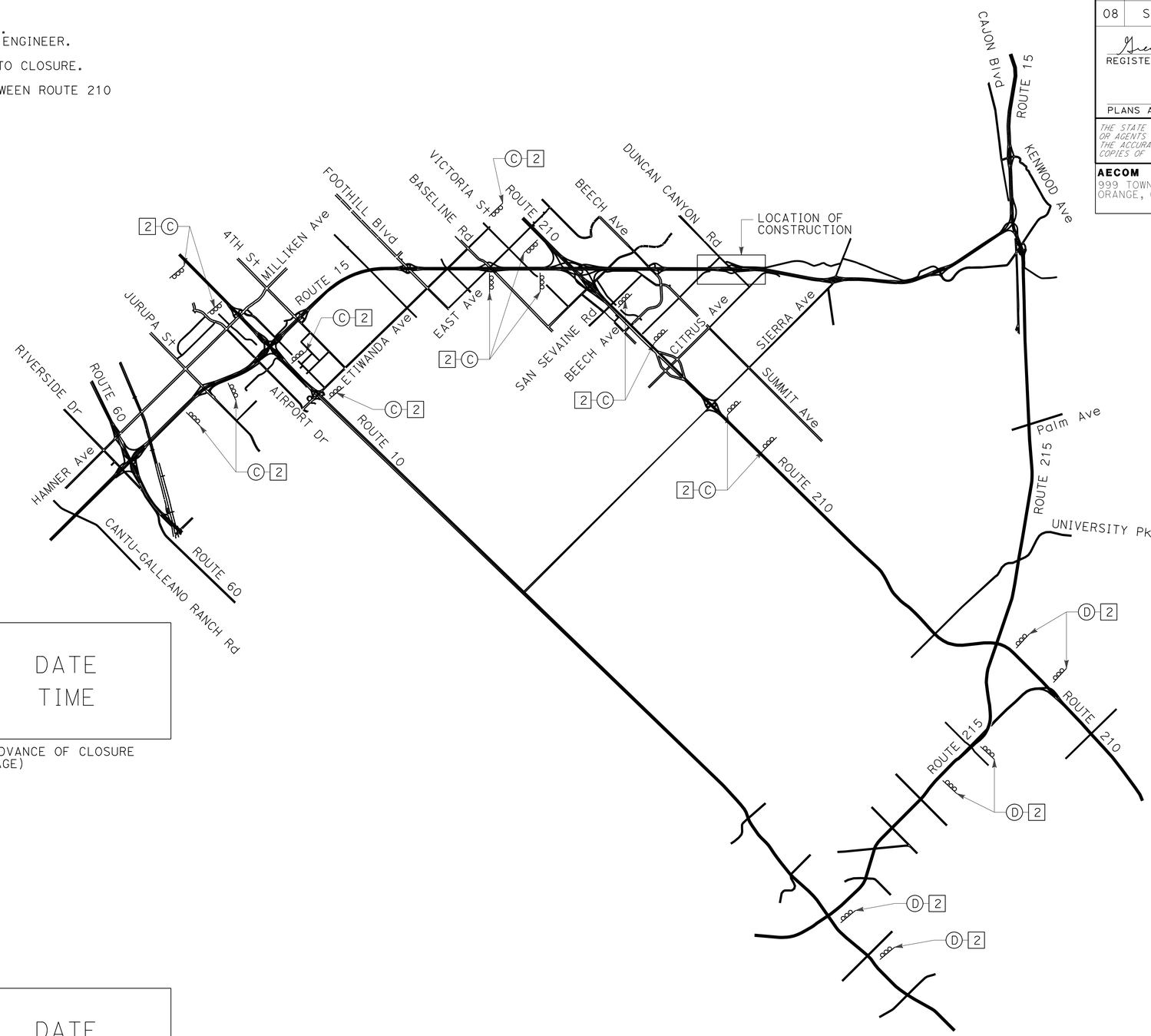

PCMS C

NB I-15
CLOSED
AT SR-210

1ST FRAME

USE
210 E
TO I-215 N

2ND FRAME
(DAY OF CLOSURE MESSAGE)

DATE
TIME

(IN ADVANCE OF CLOSURE MESSAGE)

PCMS D

NB I-15
CLOSED
AT SR-210

1ST FRAME

USE
I-215 N

2ND FRAME
(DAY OF CLOSURE MESSAGE)

DATE
TIME

(IN ADVANCE OF CLOSURE MESSAGE)

NB ROUTE 15 FULL FREEWAY CLOSURE

(SEE NOTE 3)

MOTORIST INFORMATION PLAN
(PORTABLE CHANGEABLE MESSAGE SIGN LOCATIONS)

NO SCALE

MI-1

APPROVED FOR MOTORIST INFORMATION ONLY

STATE OF CALIFORNIA - DEPARTMENT OF TRANSPORTATION
Caltrans

CONSULTANT FUNCTIONAL SUPERVISOR: GREG W. HEFTER
CALCULATED-DESIGNED BY: DAT NGUYEN
CHECKED BY: GREG W. HEFTER
REVISED BY
DATE REVISED

LAST REVISION 05-16-16
DATE PLOTTED => 01-JUN-2016
TIME PLOTTED => 09:56

Dist	COUNTY	ROUTE	POST MILES TOTAL PROJECT	SHEET No.	TOTAL SHEETS
08	SBd	15	11.1	13	46

REGISTERED CIVIL ENGINEER 5-16-16 DATE

5-17-16
PLANS APPROVAL DATE

REGISTERED PROFESSIONAL ENGINEER GREGORY W. HEFTER No. 46655 Exp. 6-30-17 CIVIL STATE OF CALIFORNIA

THE STATE OF CALIFORNIA OR ITS OFFICERS OR AGENTS SHALL NOT BE RESPONSIBLE FOR THE ACCURACY OR COMPLETENESS OF ELECTRONIC COPIES OF THIS PLAN SHEET.

AECOM
999 TOWN AND COUNTRY Rd
ORANGE, CA 92868

CITY OF FONTANA
8353 SIERRA AVENUE
FONTANA, CA 92335

NOTES:

1. ALL SIGN LOCATIONS SHOWN ARE APPROXIMATE. EXACT LOCATIONS TO BE DETERMINED BY THE ENGINEER.

2 INSTALL PCMS TWENTY ONE (21) DAYS PRIOR TO CLOSURE.

3. FULL SB FREEWAY CLOSURE OF ROUTE 15 BETWEEN ROUTE 215 AND DUNCAN CANYON ROAD.

LEGEND:

PCMS (TOTAL 12 THIS SHEET)

1/2 MILE | 1 MILE
1½ MILES
FROM INTERCHANGE

APPROXIMATE PCMS SPACING (Typ)

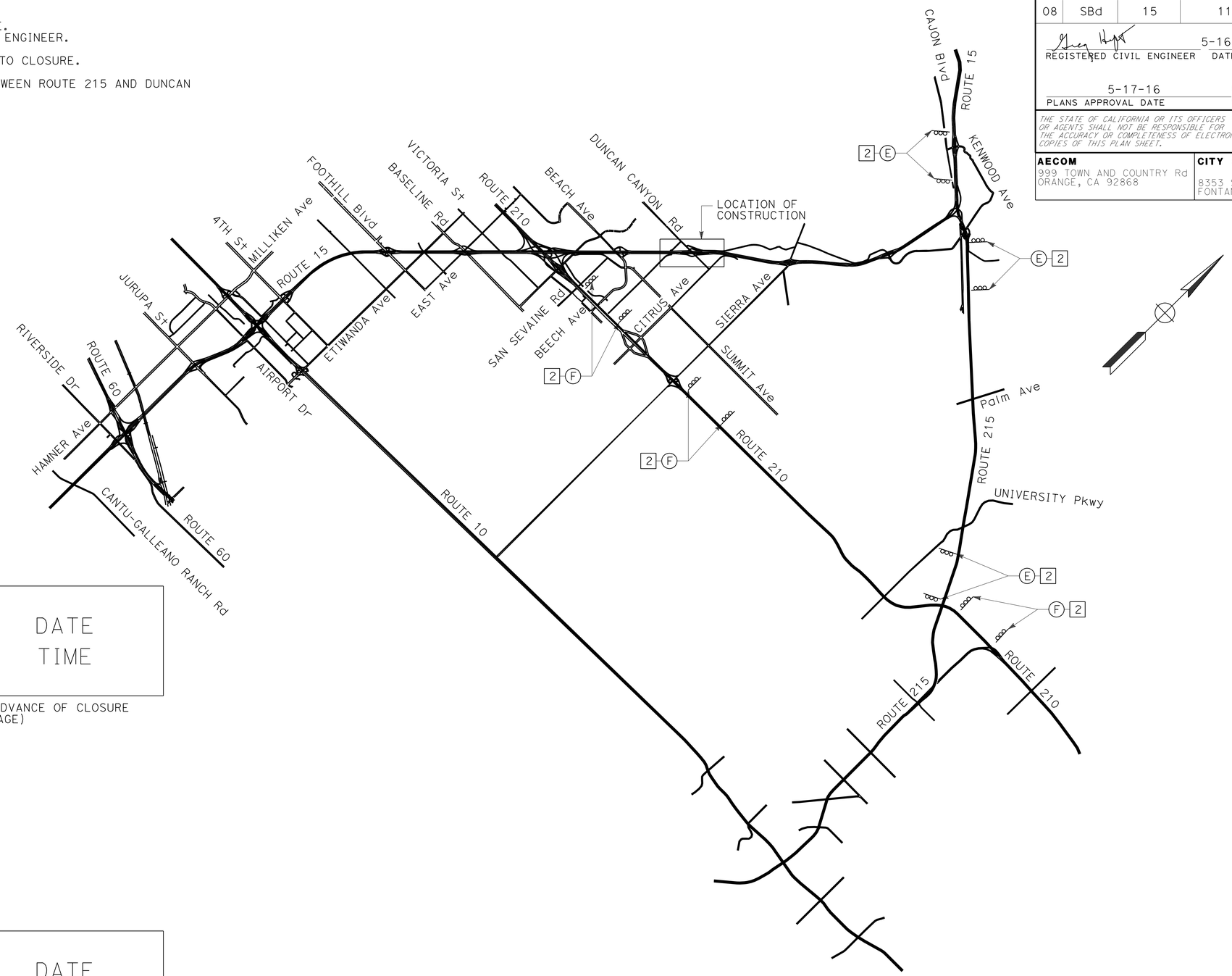

PCMS E

SB I-15 CLOSED AT I-215

1ST FRAME

USE I-215 S TO 210 W	↔	DATE TIME

2ND FRAME (DAY OF CLOSURE MESSAGE) — (IN ADVANCE OF CLOSURE MESSAGE)

PCMS F

SB I-15 CLOSED AT I-215

1ST FRAME

USE 210 W TO I-15	↔	DATE TIME

2ND FRAME (DAY OF CLOSURE MESSAGE) — (IN ADVANCE OF CLOSURE MESSAGE)

SB ROUTE 15
FULL FREEWAY CLOSURE
(SEE NOTE 3)

MOTORIST INFORMATION PLAN
(PORTABLE CHANGEABLE MESSAGE SIGN LOCATIONS)

NO SCALE

MI-2

APPROVED FOR MOTORIST INFORMATION ONLY

STATE OF CALIFORNIA - DEPARTMENT OF TRANSPORTATION
Caltrans
CONSULTANT FUNCTIONAL SUPERVISOR: GREG W. HEFTER
CALCULATED-DESIGNED BY: DAT NGUYEN
CHECKED BY: GREG W. HEFTER
REVISED BY
DATE REVISED

LAST REVISION 05-16-16 | DATE PLOTTED => 01-JUN-2016 | TIME PLOTTED => 09:56

Dist	COUNTY	ROUTE	POST MILES TOTAL PROJECT	SHEET No.	TOTAL SHEETS
08	SBd	15	11.1	14	46

REGISTERED CIVIL ENGINEER 5-16-16 DATE

5-17-16
PLANS APPROVAL DATE

REGISTERED PROFESSIONAL ENGINEER GREGORY W. HEFTER No. 46655 Exp. 6-30-17 CIVIL STATE OF CALIFORNIA

THE STATE OF CALIFORNIA OR ITS OFFICERS OR AGENTS SHALL NOT BE RESPONSIBLE FOR THE ACCURACY OR COMPLETENESS OF ELECTRONIC COPIES OF THIS PLAN SHEET.

AECOM
999 TOWN AND COUNTRY Rd
ORANGE, CA 92868

CITY OF FONTANA
8353 SIERRA AVENUE
FONTANA, CA 92335

GENERAL NOTES:

1. STAGES 1A AND 1B SHALL BE CONSTRUCTED DURING NB AND SB FULL FREEWAY CLOSURES AND THE SB FULL FREEWAY CLOSURE SHALL BE THE FIRST ORDER OF WORK.

LEGEND:

CONSTRUCT LINE "A" AT STAGE 1. REMOVE AND REPLACE PAVEMENT.

CONSTRUCT LINE "A" AT STAGE 2. REMOVE AND REPLACE PAVEMENT.

CONSTRUCTION STAGING NOTES:

(1) RCB LINE "A" (Exist)

(2) PRECAST RCB LINE "A"

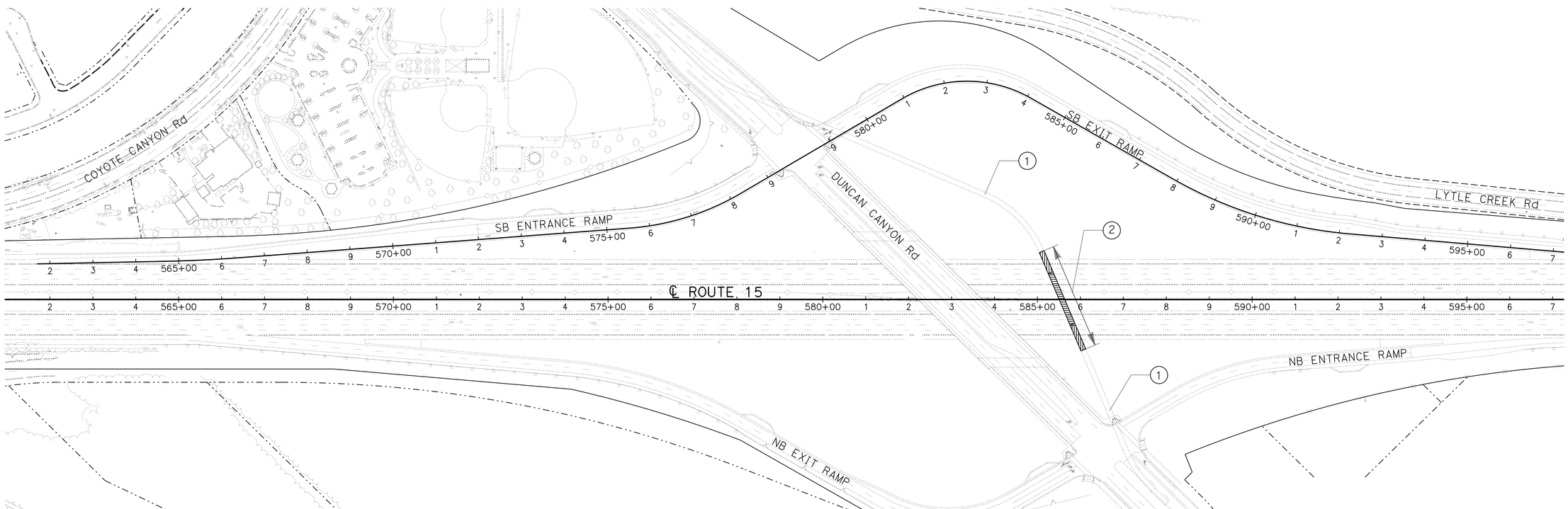

STAGE CONSTRUCTION

NO SCALE

SC-1

APPROVED FOR STAGE CONSTRUCTION WORK ONLY

STATE OF CALIFORNIA - DEPARTMENT OF TRANSPORTATION

Caltrans

CONSULTANT FUNCTIONAL SUPERVISOR: GREG W. HEFTER

CALCULATED-DESIGNED BY: DAT NGUYEN

CHECKED BY: GREG W. HEFTER

REVISED BY

DATE REVISED

LAST REVISION 05-16-16

DATE PLOTTED => 01-JUN-2016
TIME PLOTTED => 09:56

Dist	COUNTY	ROUTE	POST MILES TOTAL PROJECT	SHEET No.	TOTAL SHEETS
08	SBd	15	11.1	15	46

REGISTERED CIVIL ENGINEER 5-16-16 DATE

5-17-16
PLANS APPROVAL DATE

REGISTERED PROFESSIONAL ENGINEER GREGORY W. HEFTER No. 46655 Exp. 6-30-17 CIVIL STATE OF CALIFORNIA

THE STATE OF CALIFORNIA OR ITS OFFICERS OR AGENTS SHALL NOT BE RESPONSIBLE FOR THE ACCURACY OR COMPLETENESS OF ELECTRONIC COPIES OF THIS PLAN SHEET.

AECOM
999 TOWN AND COUNTRY Rd
ORANGE, CA 92868

CITY OF FONTANA
8353 SIERRA AVENUE
FONTANA, CA 92335

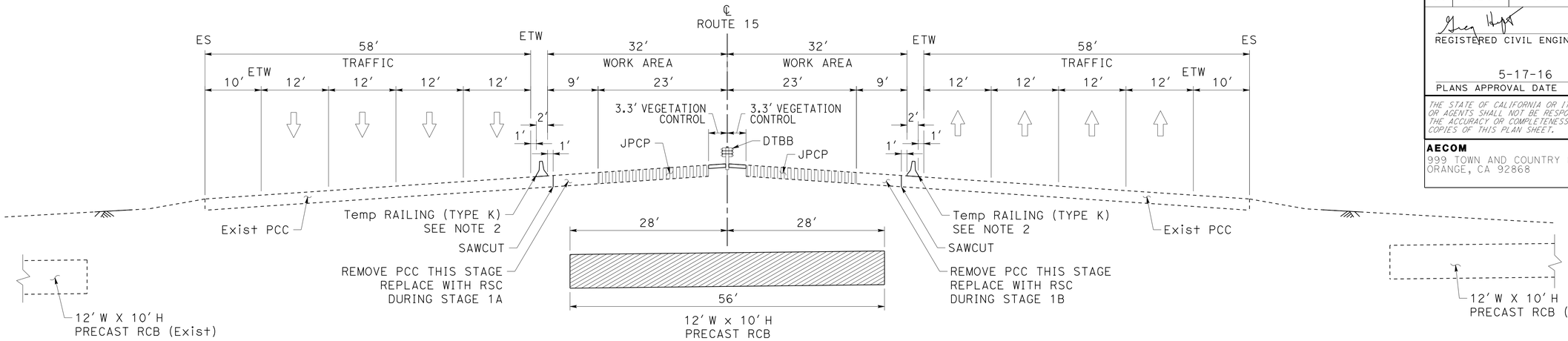

STAGE 1

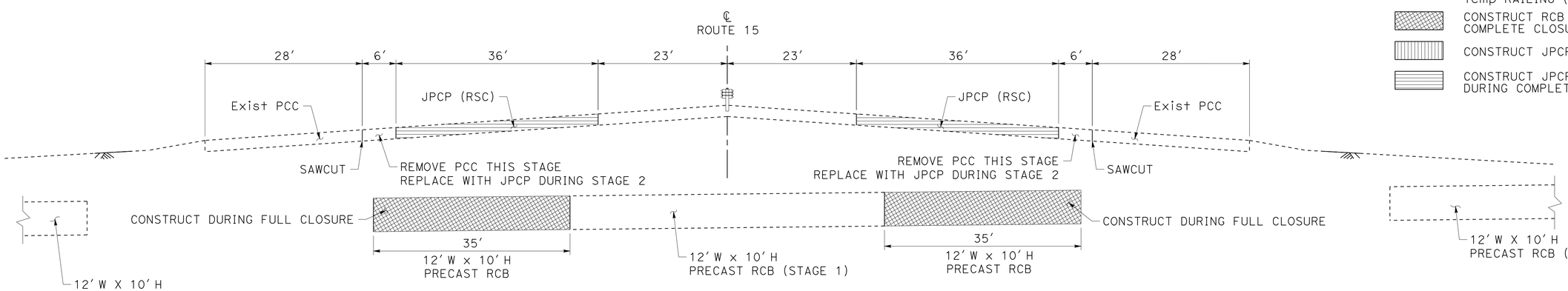

STAGE 1A

STAGE 1B

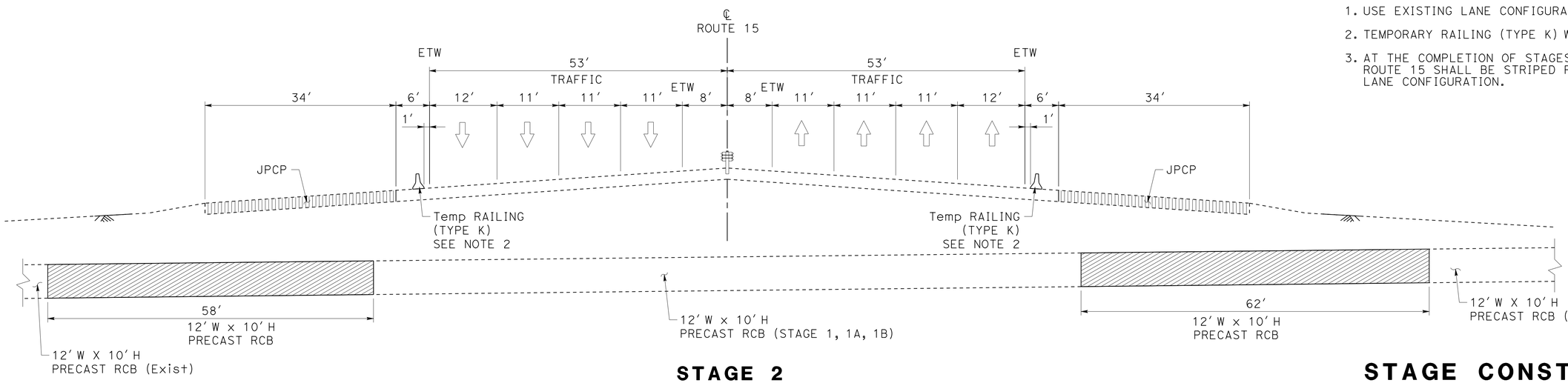

STAGE 2

LEGEND:

- CONSTRUCT PRECAST RCB BEHIND Temp RAILING (TYPE K)
- CONSTRUCT RCB DURING COMPLETE CLOSURE OF ROUTE 15
- CONSTRUCT JPCP PAVEMENT
- CONSTRUCT JPCP (RSC) PAVEMENT DURING COMPLETE CLOSURE OF ROUTE 15

GENERAL NOTES:

1. USE EXISTING LANE CONFIGURATION DURING STAGE 1.
2. TEMPORARY RAILING (TYPE K) WITH TRAFFIC SCREEN.
3. AT THE COMPLETION OF STAGES 1A AND 1B, ROUTE 15 SHALL BE STRIPED FOR THE STAGE 2 LANE CONFIGURATION.

STAGE CONSTRUCTION

NO SCALE

SC-2

APPROVED FOR STAGE CONSTRUCTION WORK ONLY

STATE OF CALIFORNIA - DEPARTMENT OF TRANSPORTATION
Caltrans

CONSULTANT FUNCTIONAL SUPERVISOR: GREG W. HEFTER
CALCULATED-DESIGNED BY: DAT NGUYEN
CHECKED BY: GREG W. HEFTER
REVISED BY
DATE REVISED

LAST REVISION: 05-16-16
DATE PLOTTED => 01-JUN-2016
TIME PLOTTED => 09:56

Dist	COUNTY	ROUTE	POST MILES TOTAL PROJECT	SHEET No.	TOTAL SHEETS
08	SBd	15	11.1	16	46

REGISTERED CIVIL ENGINEER 5-16-16 DATE

5-17-16
PLANS APPROVAL DATE

REGISTERED PROFESSIONAL ENGINEER GREGORY W. HEFTER No. 46655 Exp. 6-30-17 CIVIL STATE OF CALIFORNIA

THE STATE OF CALIFORNIA OR ITS OFFICERS OR AGENTS SHALL NOT BE RESPONSIBLE FOR THE ACCURACY OR COMPLETENESS OF ELECTRONIC COPIES OF THIS PLAN SHEET.

AECOM
999 TOWN AND COUNTRY Rd
ORANGE, CA 92868

CITY OF FONTANA
8353 SIERRA AVENUE
FONTANA, CA 92335

NOTE:

FOR ACCURATE RIGHT OF WAY DATA, CONTACT RIGHT OF WAY ENGINEERING AT THE DISTRICT OFFICE.

LEGEND:

- WORK AREA CONSTRUCTION
- TEMPORARY RAILING (TYPE K) WITH TRAFFIC SCREEN.
- TEMPORARY CRASH CUSHION MODULES (ARRAY AS NOTED)
- DIRECTION OF TRAFFIC, UNLESS OTHERWISE NOTED
- SIGN

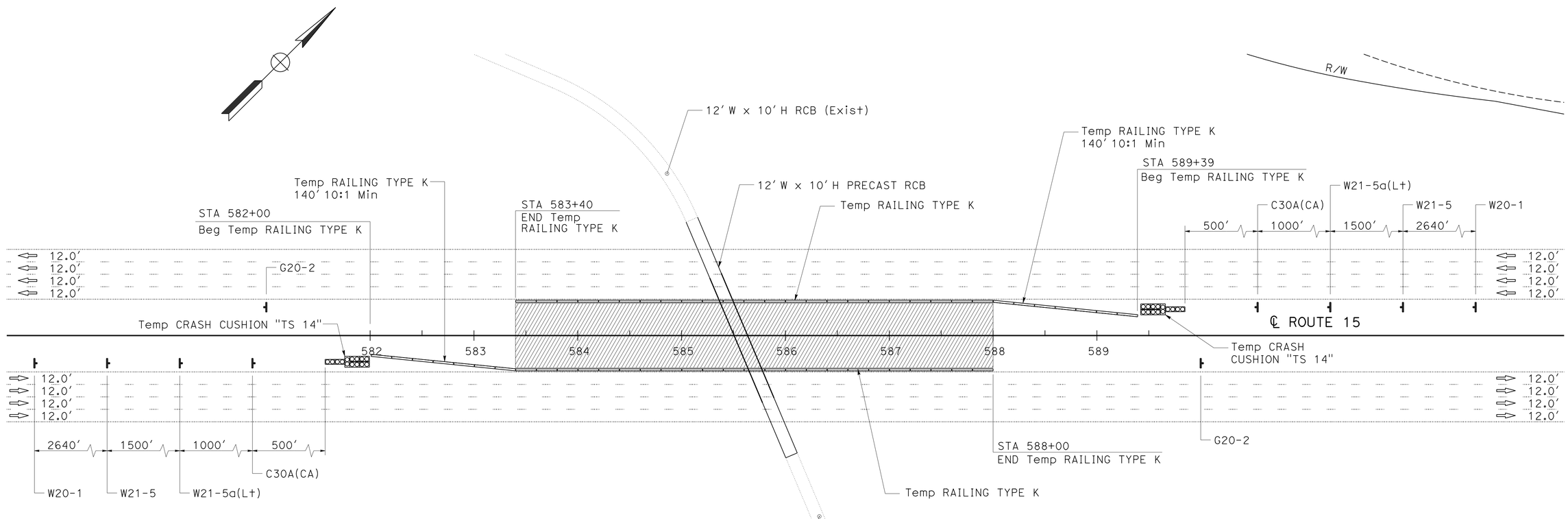

CONSTRUCTION AREA SIGNS

SIGN CODE	PANEL SIZE	SIGN MESSAGE	No. OF POST AND SIZE	POST TYPE	No. OF SIGN(S)
C30A(CA)	48" x 48"	SHOULDER CLOSED	1 - 4" x 6"	WOOD	2
W20-1	48" x 48"	ROAD WORK AHEAD	1 - 4" x 6"	WOOD	2
W21-5a(Lt)	48" x 48"	LEFT SHOULDER CLOSED	1 - 4" x 6"	WOOD	2
W21-5	48" x 48"	SHOULDER WORK	1 - 4" x 6"	WOOD	2
G20-2	48" x 24"	END ROAD WORK	1 - 4" x 6"	WOOD	2

TRAFFIC HANDLING PLAN
STAGE 1
SCALE: 1" = 50'

TH-1

APPROVED FOR TRAFFIC HANDLING WORK ONLY

STATE OF CALIFORNIA - DEPARTMENT OF TRANSPORTATION
Caltrans

CONSULTANT FUNCTIONAL SUPERVISOR: GREG W. HEFTER
CALCULATED-DESIGNED BY: DAT NGUYEN
CHECKED BY: GREG W. HEFTER
REVISED BY
DATE REVISED

LAST REVISION 05-16-16
DATE PLOTTED => 01-JUN-2016
TIME PLOTTED => 09:56

Dist	COUNTY	ROUTE	POST MILES TOTAL PROJECT	SHEET No.	TOTAL SHEETS
08	SBd	15	11.1	17	46

REGISTERED CIVIL ENGINEER 5-16-16 DATE

5-17-16
PLANS APPROVAL DATE

REGISTERED PROFESSIONAL ENGINEER GREGORY W. HEFTER No. 46655 Exp. 6-30-17 CIVIL STATE OF CALIFORNIA

THE STATE OF CALIFORNIA OR ITS OFFICERS OR AGENTS SHALL NOT BE RESPONSIBLE FOR THE ACCURACY OR COMPLETENESS OF ELECTRONIC COPIES OF THIS PLAN SHEET.

AECOM
999 TOWN AND COUNTRY Rd
ORANGE, CA 92868

CITY OF FONTANA
8353 SIERRA AVENUE
FONTANA, CA 92335

NOTE:

FOR ACCURATE RIGHT OF WAY DATA, CONTACT RIGHT OF WAY ENGINEERING AT THE DISTRICT OFFICE.

LEGEND:

- WORK AREA CONSTRUCTION
- CHANNELIZERS (SURFACE MOUNTED)
- TEMPORARY RAILING (TYPE K) WITH TRAFFIC SCREEN.
- TEMPORARY CRASH CUSHION MODULES (ARRAY AS NOTED)
- SIGN
- CHANGE IN PAVEMENT DELINEATION DETAILS
- T XXX — TEMPORARY PAVEMENT DELINEATION DETAIL NO.

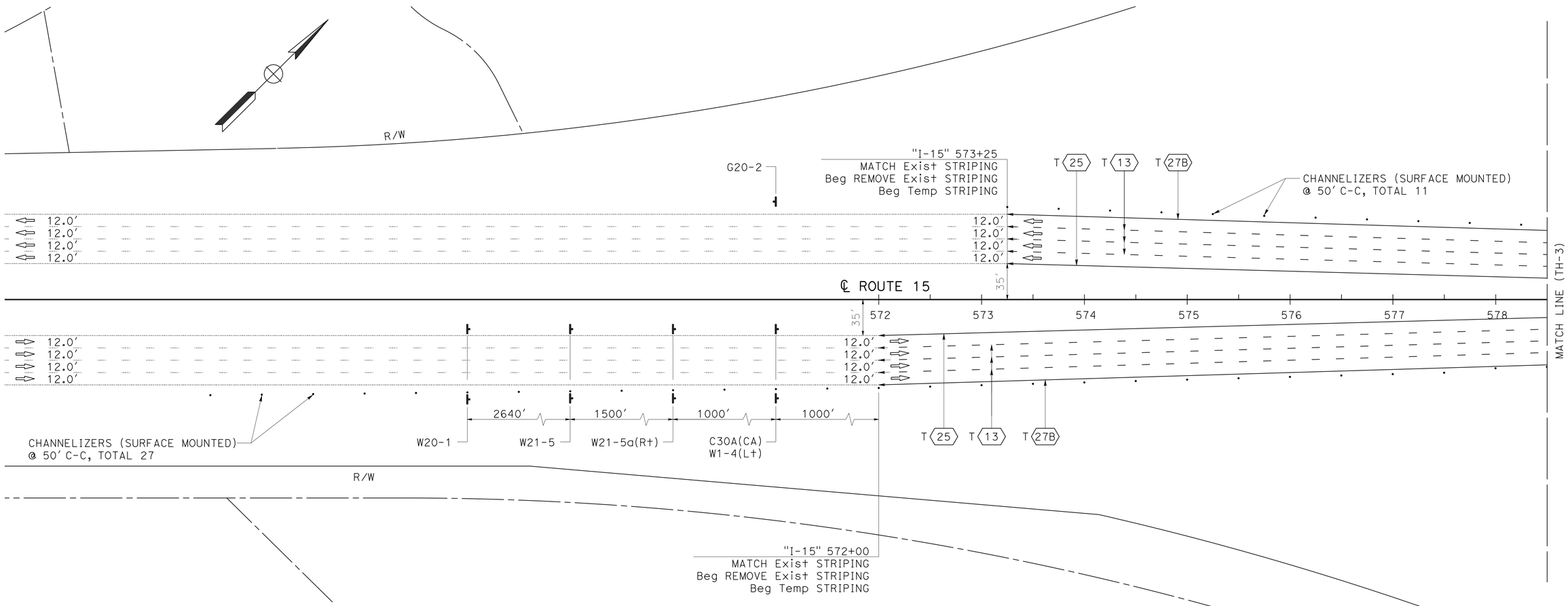

CONSTRUCTION AREA SIGNS

SIGN CODE	PANEL SIZE	SIGN MESSAGE	No. OF POST AND SIZE	POST TYPE	No. OF SIGN(S)
C30A(CA)	48" x 48"	SHOULDER CLOSED	1 - 4" x 6"	WOOD	2
W1-4(Lt)	48" x 48"	---	1 - 4" x 6"	WOOD	2
W20-1	48" x 48"	ROAD WORK AHEAD	1 - 4" x 6"	WOOD	2
W21-5a(Rt)	48" x 48"	RIGHT SHOULDER CLOSED	1 - 4" x 6"	WOOD	2
W21-5	48" x 48"	SHOULDER WORK	1 - 4" x 6"	WOOD	2
G20-2	48" x 24"	END ROAD WORK	1 - 4" x 6"	WOOD	1

APPROVED FOR TRAFFIC HANDLING WORK ONLY

TRAFFIC HANDLING PLAN
STAGE 2
SCALE: 1" = 50'

TH-2

STATE OF CALIFORNIA - DEPARTMENT OF TRANSPORTATION
Caltrans

CONSULTANT FUNCTIONAL SUPERVISOR: GREG W. HEFTER
CALCULATED-DESIGNED BY: DAT NGUYEN
CHECKED BY: GREG W. HEFTER
REVISED BY
DATE REVISED

LAST REVISION 05-16-16 | DATE PLOTTED => 01-JUN-2016 | TIME PLOTTED => 09:56

Dist	COUNTY	ROUTE	POST MILES TOTAL PROJECT	SHEET No.	TOTAL SHEETS
08	SBd	15	11.1	18	46

REGISTERED CIVIL ENGINEER 5-16-16 DATE

5-17-16
PLANS APPROVAL DATE

REGISTERED PROFESSIONAL ENGINEER GREGORY W. HEFTER No. 46655 Exp. 6-30-17 CIVIL STATE OF CALIFORNIA

THE STATE OF CALIFORNIA OR ITS OFFICERS OR AGENTS SHALL NOT BE RESPONSIBLE FOR THE ACCURACY OR COMPLETENESS OF ELECTRONIC COPIES OF THIS PLAN SHEET.

AECOM
999 TOWN AND COUNTRY Rd
ORANGE, CA 92868

CITY OF FONTANA
8353 SIERRA AVENUE
FONTANA, CA 92335

NOTE:

FOR ACCURATE RIGHT OF WAY DATA, CONTACT RIGHT OF WAY ENGINEERING AT THE DISTRICT OFFICE.

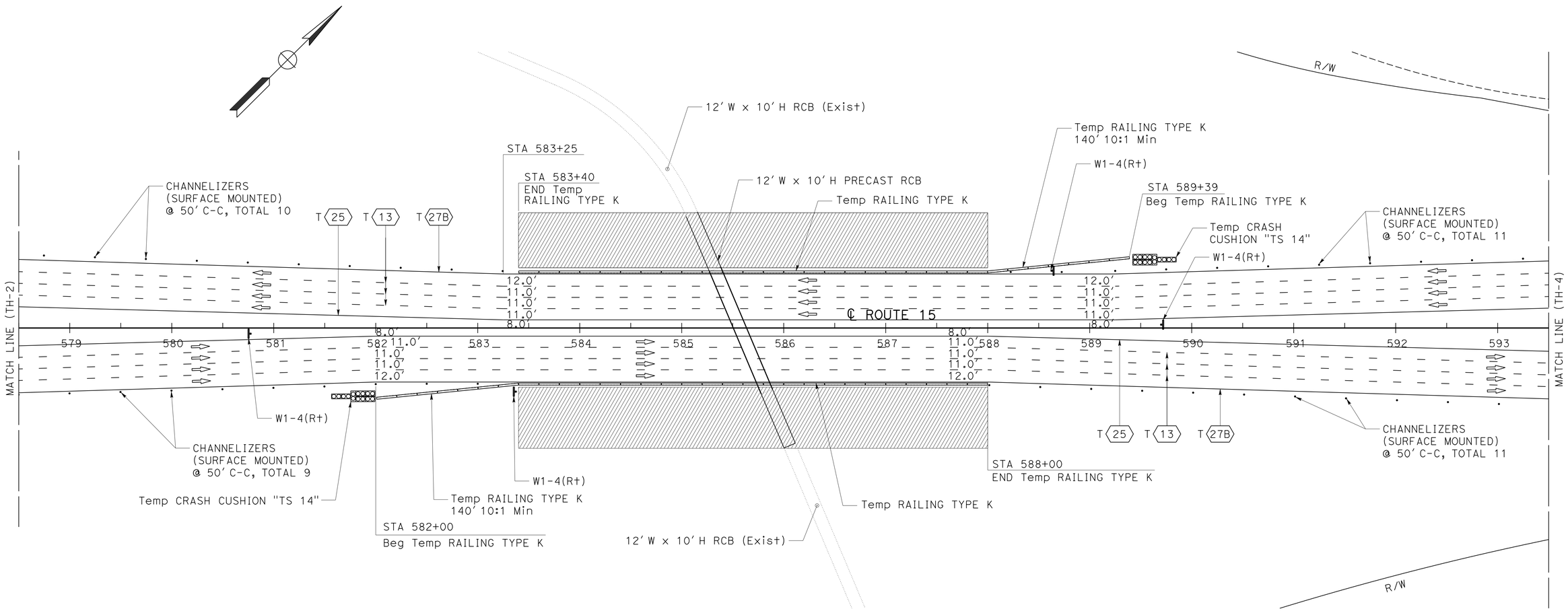

CONSTRUCTION AREA SIGNS

SIGN CODE	PANEL SIZE	SIGN MESSAGE	No. OF POST AND SIZE	POST TYPE	No. OF SIGN(S)
W1-4(Rt)	48" x 48"	---	1 - 4" x 6"	WOOD	4

TRAFFIC HANDLING PLAN
STAGE 2
SCALE: 1" = 50'

TH-3

APPROVED FOR TRAFFIC HANDLING WORK ONLY

STATE OF CALIFORNIA - DEPARTMENT OF TRANSPORTATION
Caltrans

CONSULTANT FUNCTIONAL SUPERVISOR: GREG W. HEFTER
CALCULATED-DESIGNED BY: DAT NGUYEN
CHECKED BY: GREG W. HEFTER
REVISED BY
DATE REVISED

LAST REVISION 05-16-16
DATE PLOTTED => 01-JUN-2016
TIME PLOTTED => 09:56

Dist	COUNTY	ROUTE	POST MILES TOTAL PROJECT	SHEET No.	TOTAL SHEETS
08	SBd	15	11.1	19	46

REGISTERED CIVIL ENGINEER 5-16-16 DATE

5-17-16
PLANS APPROVAL DATE

REGISTERED PROFESSIONAL ENGINEER GREGORY W. HEFTER No. 46655 Exp. 6-30-17 CIVIL STATE OF CALIFORNIA

THE STATE OF CALIFORNIA OR ITS OFFICERS OR AGENTS SHALL NOT BE RESPONSIBLE FOR THE ACCURACY OR COMPLETENESS OF ELECTRONIC COPIES OF THIS PLAN SHEET.

AECOM
999 TOWN AND COUNTRY Rd
ORANGE, CA 92868

CITY OF FONTANA
8353 SIERRA AVENUE
FONTANA, CA 92335

NOTE:

FOR ACCURATE RIGHT OF WAY DATA, CONTACT RIGHT OF WAY ENGINEERING AT THE DISTRICT OFFICE.

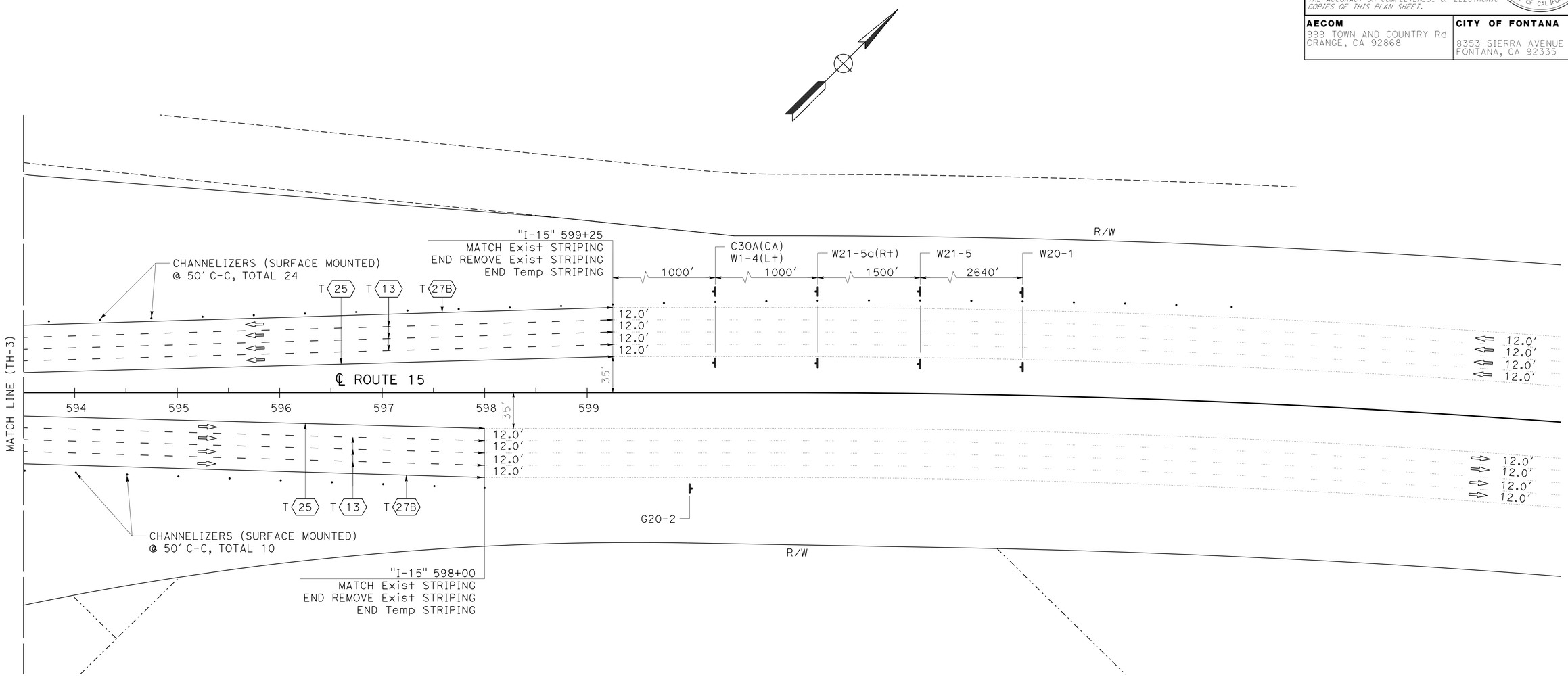

CONSTRUCTION AREA SIGNS

SIGN CODE	PANEL SIZE	SIGN MESSAGE	NO. OF POST AND SIZE	POST TYPE	NO. OF SIGN(S)
C30A(CA)	48" x 48"	SHOULDER CLOSED	1 - 4" x 6"	WOOD	2
W1-4(Lt)	48" x 48"	---	1 - 4" x 6"	WOOD	2
W20-1	48" x 48"	ROAD WORK AHEAD	1 - 4" x 6"	WOOD	2
W21-5a(Rt)	48" x 48"	RIGHT SHOULDER CLOSED	1 - 4" x 6"	WOOD	2
W21-5	48" x 48"	SHOULDER WORK	1 - 4" x 6"	WOOD	2
G20-2	48" x 24"	END ROAD WORK	1 - 4" x 6"	WOOD	1

APPROVED FOR TRAFFIC HANDLING WORK ONLY

TRAFFIC HANDLING PLAN
STAGE 2
SCALE: 1" = 50'

TH-4

REVISED BY | DATE REVISED
DAT NGUYEN | GREG W. HEFTER
CALCULATED-DESIGNED BY | CHECKED BY
CONSULTANT FUNCTIONAL SUPERVISOR | GREG W. HEFTER
STATE OF CALIFORNIA - DEPARTMENT OF TRANSPORTATION
Caltrans

LAST REVISION 05-16-16 | DATE PLOTTED => 01-JUN-2016 | TIME PLOTTED => 09:56

Dist	COUNTY	ROUTE	POST MILES TOTAL PROJECT	SHEET No.	TOTAL SHEETS
08	SBd	15	11.1	20	46

REGISTERED CIVIL ENGINEER 5-16-16 DATE

5-17-16
PLANS APPROVAL DATE

REGISTERED PROFESSIONAL ENGINEER GREGORY W. HEFTER No. 46655 Exp. 6-30-17 CIVIL STATE OF CALIFORNIA

THE STATE OF CALIFORNIA OR ITS OFFICERS OR AGENTS SHALL NOT BE RESPONSIBLE FOR THE ACCURACY OR COMPLETENESS OF ELECTRONIC COPIES OF THIS PLAN SHEET.

AECOM
999 TOWN AND COUNTRY Rd
ORANGE, CA 92868

CITY OF FONTANA
8353 SIERRA AVENUE
FONTANA, CA 92335

TEMPORARY STRIPING AND TEMPORARY PAVEMENT MARKER

CONSTRUCTION STAGE	TRAFFIC STRIPE DETAIL No./ PAVEMENT MARKING	LENGTH	TEMPORARY TRAFFIC STRIPE (PAINT)		TEMPORARY PAVEMENT MARKER		
					(NONREFLECTIVE)	(REFLECTIVE)	
			4" YELLOW	4" WHITE	TYPE A	TYPE G	TYPE H
		LF	LF		EA	EA	
2	13	15,605			1,320	330	
	25	5,202	5,202				109
	27B	5,202		5,202			
		TOTAL	10,404*		1,759**		

* SEE ADDITIONAL QUANTITIES OF "TEMPORARY TRAFFIC STRIPE (PAINT)", ON SHEET DEQ-1.
** SEE ADDITIONAL QUANTITIES OF "TEMPORARY PAVEMENT MARKER", ON SHEET DEQ-1.

TEMPORARY RAILING AND CRASH CUSHION MODULE

CONSTRUCTION STAGE	TEMPORARY RAILING (TYPE K)	TEMPORARY TRAFFIC SCREEN	TEMPORARY CRASH CUSHION MODULE	CHANNELIZER (SURFACE MOUNTED)
	LF	LF	EA	EA
1	1,200	1,200	28	
2	1,200	1,200	28	113*
TOTAL	2,400	2,400	56	113*

* SEE ADDITIONAL QUANTITIES OF "CHANNELIZER (SURFACE MOUNTED)", ON SHEET DEQ-1.

TEMPORARY SIGNS

CONSTRUCTION STAGE	(N) C30A(CA)	(N) W1-4(L+)	(N) W1-4(R+)	(N) W20-1	(N) W21-5	(N) W21-5a(L+)	(N) W21-5a(R+)	(N) G20-2
	EA	EA	EA	EA	EA	EA	EA	EA
1	2			2	2	2		2
2	4	4	4	4	4		4	2
TOTAL	6	4	4	6	6	2	4	4

(N) - NOT A SEPARATE PAY ITEM, FOR INFORMATION ONLY.

TRAFFIC HANDLING QUANTITIES
THQ-1

STATE OF CALIFORNIA - DEPARTMENT OF TRANSPORTATION
Caltrans

CONSULTANT FUNCTIONAL SUPERVISOR: GREG W. HEFTER
CALCULATED-DESIGNED BY: DAT NGUYEN
CHECKED BY: GREG W. HEFTER
REVISED BY
DATE REVISED

LAST REVISION 05-16-16
DATE PLOTTED => 01-JUN-2016
TIME PLOTTED => 09:56

Dist	COUNTY	ROUTE	POST MILES TOTAL PROJECT	SHEET No.	TOTAL SHEETS
08	SBd	15	11.1	21	46

REGISTERED CIVIL ENGINEER 5-16-16 DATE

5-17-16
PLANS APPROVAL DATE

REGISTERED PROFESSIONAL ENGINEER GREGORY W. HEFTER No. 46655 Exp. 6-30-17 CIVIL STATE OF CALIFORNIA

THE STATE OF CALIFORNIA OR ITS OFFICERS OR AGENTS SHALL NOT BE RESPONSIBLE FOR THE ACCURACY OR COMPLETENESS OF ELECTRONIC COPIES OF THIS PLAN SHEET.

AECOM
999 TOWN AND COUNTRY Rd
ORANGE, CA 92868

CITY OF FONTANA
8353 SIERRA AVENUE
FONTANA, CA 92335

NOTES:

1. FIRST ORDER OF WORK SHALL BE FOR SOUTHBOUND FREEWAY CLOSURE.
2. FOR ACCURATE RIGHT OF WAY DATA, CONTACT RIGHT OF WAY ENGINEERING AT THE DISTRICT OFFICE.

LEGEND:

STRIPING DETAIL

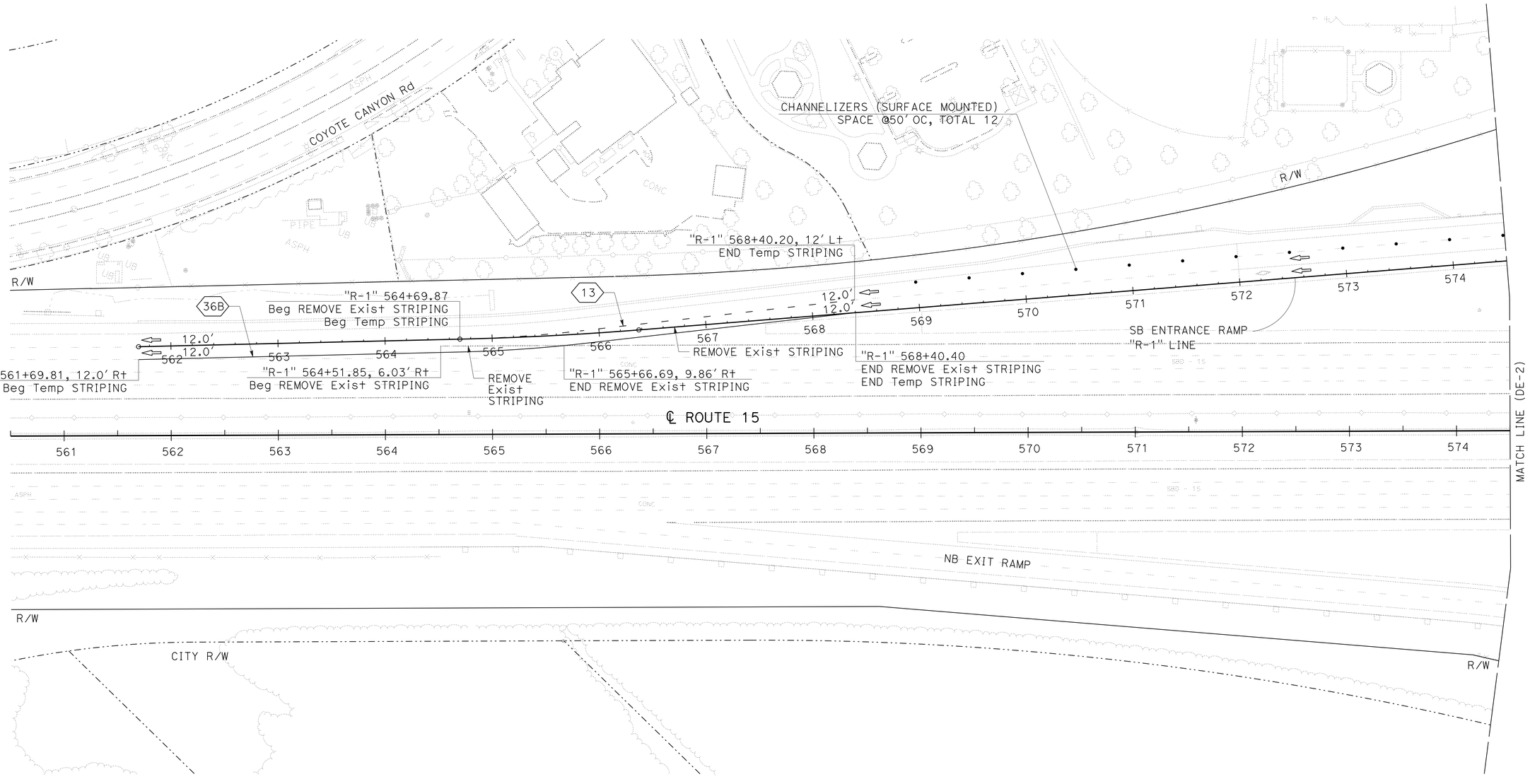

DETOUR PLAN

SCALE: 1" = 50'

DE-1

APPROVED FOR DETOUR CONSTRUCTION WORK ONLY

REVISED BY | DATE REVISED
DAT NGUYEN | GREG W. HEFTER
CALCULATED-DESIGNED BY | CHECKED BY
CONSULTANT FUNCTIONAL SUPERVISOR | GREG W. HEFTER
STATE OF CALIFORNIA - DEPARTMENT OF TRANSPORTATION
Caltrans

LAST REVISION 05-16-16 | DATE PLOTTED => 01-JUN-2016 TIME PLOTTED => 09:56

Dist	COUNTY	ROUTE	POST MILES TOTAL PROJECT	SHEET No.	TOTAL SHEETS
08	SBd	15	11.1	22	46

REGISTERED CIVIL ENGINEER 5-16-16 DATE

5-17-16
PLANS APPROVAL DATE

REGISTERED PROFESSIONAL ENGINEER GREGORY W. HEFTER No. 46655 Exp. 6-30-17 CIVIL STATE OF CALIFORNIA

THE STATE OF CALIFORNIA OR ITS OFFICERS OR AGENTS SHALL NOT BE RESPONSIBLE FOR THE ACCURACY OR COMPLETENESS OF ELECTRONIC COPIES OF THIS PLAN SHEET.

AECOM
999 TOWN AND COUNTRY Rd
ORANGE, CA 92868

CITY OF FONTANA
8353 SIERRA AVENUE
FONTANA, CA 92335

NOTE:

1. FOR ACCURATE RIGHT OF WAY DATA, CONTACT RIGHT OF WAY ENGINEERING AT THE DISTRICT OFFICE.

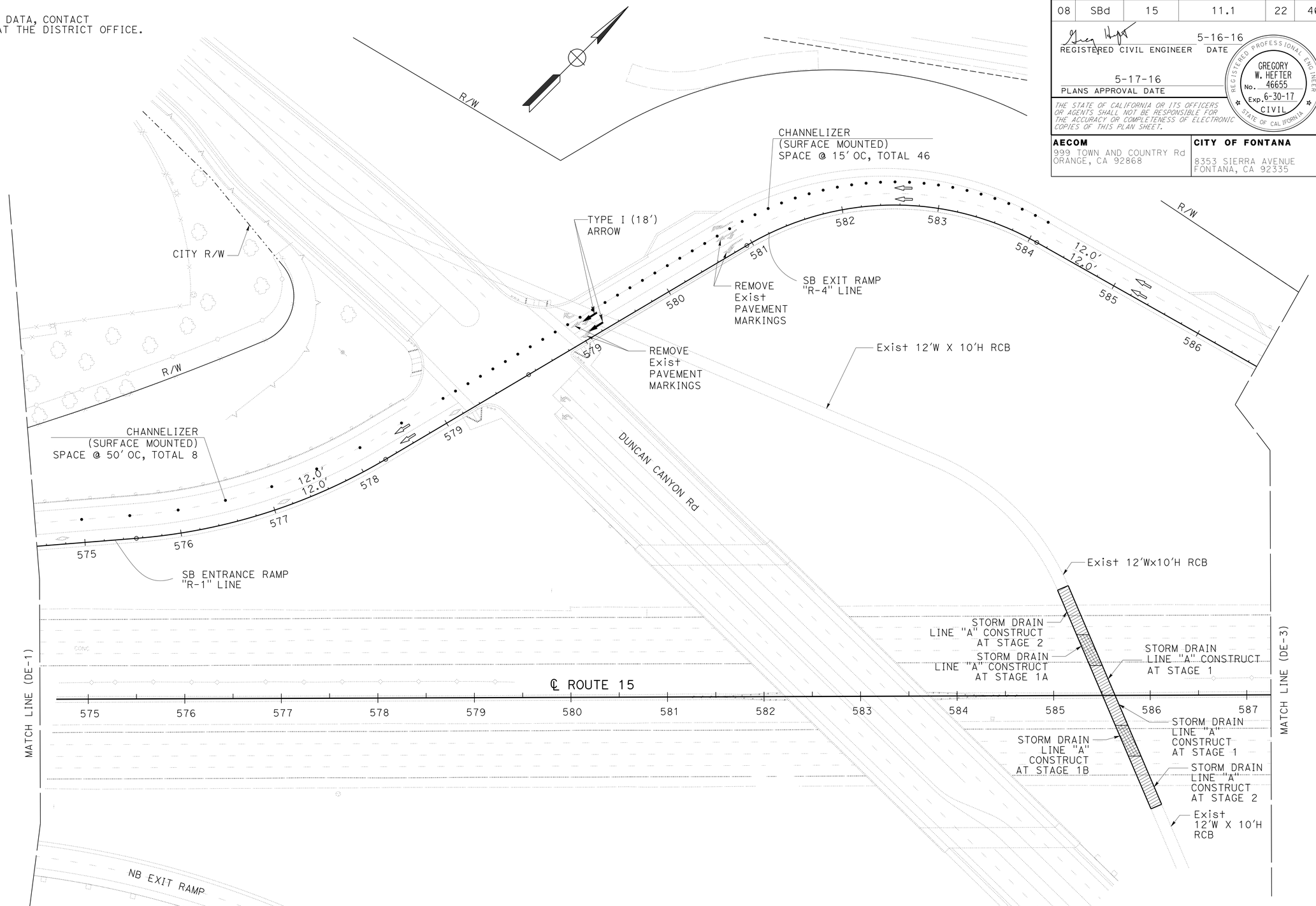

DETOUR PLAN

SCALE: 1" = 50'

DE-2

APPROVED FOR DETOUR CONSTRUCTION WORK ONLY

STATE OF CALIFORNIA - DEPARTMENT OF TRANSPORTATION
Caltrans

CONSULTANT FUNCTIONAL SUPERVISOR: GREG W. HEFTER
CALCULATED-DESIGNED BY: DAT NGUYEN
CHECKED BY: GREG W. HEFTER
REVISED BY
DATE REVISED

LAST REVISION 05-16-16
DATE PLOTTED => 01-JUN-2016
TIME PLOTTED => 09:56

Dist	COUNTY	ROUTE	POST MILES TOTAL PROJECT	SHEET No.	TOTAL SHEETS
08	SBd	15	11.1	23	46

REGISTERED CIVIL ENGINEER 5-16-16 DATE

5-17-16
PLANS APPROVAL DATE

REGISTERED PROFESSIONAL ENGINEER GREGORY W. HEFTER No. 46655 Exp. 6-30-17 CIVIL STATE OF CALIFORNIA

THE STATE OF CALIFORNIA OR ITS OFFICERS OR AGENTS SHALL NOT BE RESPONSIBLE FOR THE ACCURACY OR COMPLETENESS OF ELECTRONIC COPIES OF THIS PLAN SHEET.

AECOM
999 TOWN AND COUNTRY Rd
ORANGE, CA 92868

CITY OF FONTANA
8353 SIERRA AVENUE
FONTANA, CA 92335

NOTE:

FOR ACCURATE RIGHT OF WAY DATA, CONTACT RIGHT OF WAY ENGINEERING AT THE DISTRICT OFFICE.

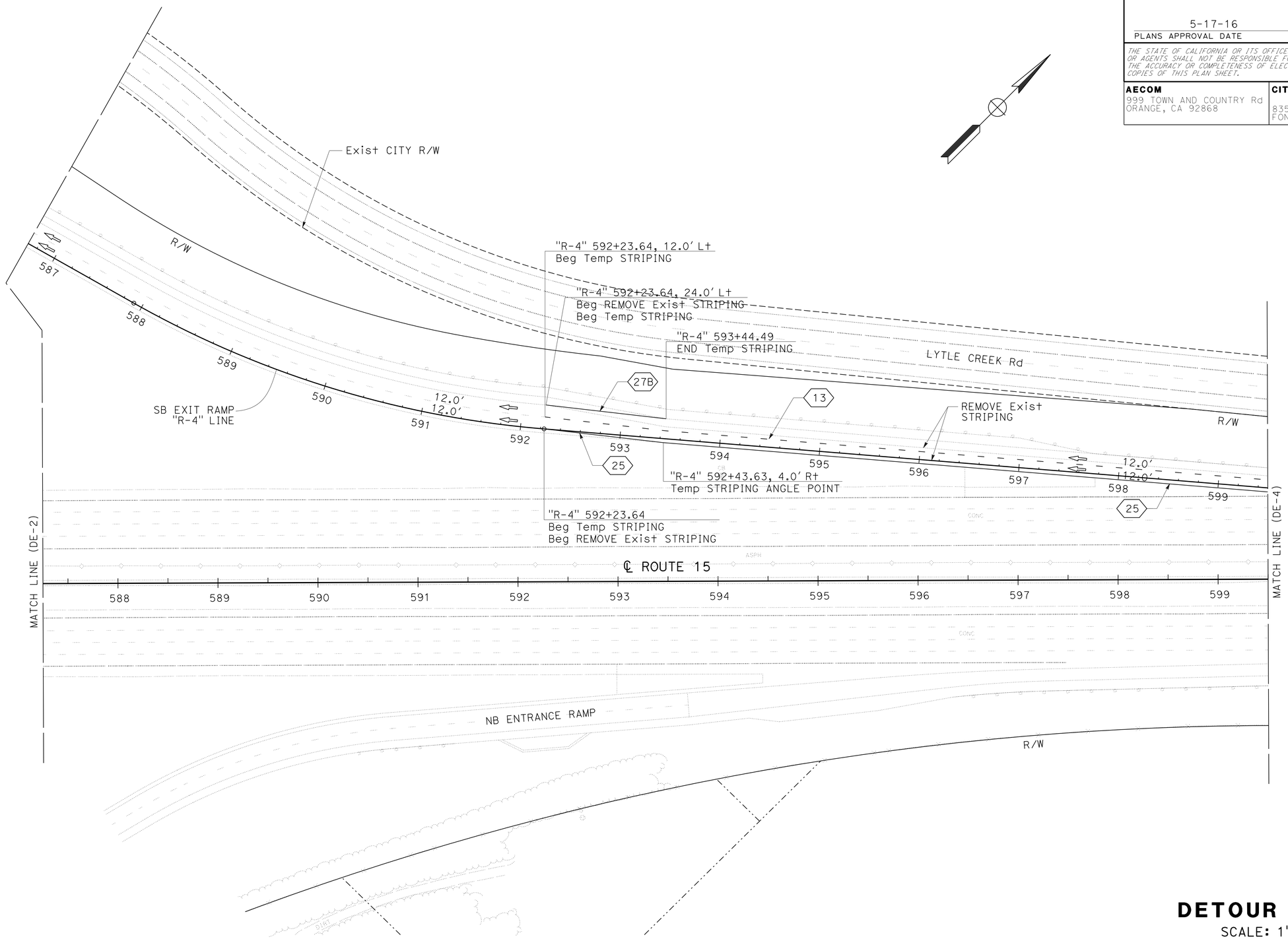

DETOUR PLAN

SCALE: 1" = 50'

DE-3

APPROVED FOR DETOUR CONSTRUCTION WORK ONLY

STATE OF CALIFORNIA - DEPARTMENT OF TRANSPORTATION
Caltrans

CONSULTANT FUNCTIONAL SUPERVISOR: GREG W. HEFTER
CALCULATED-DESIGNED BY: DAT NGUYEN
CHECKED BY: GREG W. HEFTER
REVISED BY
DATE REVISED

LAST REVISION 05-16-16
DATE PLOTTED => 01-JUN-2016
TIME PLOTTED => 09:56

Dist	COUNTY	ROUTE	POST MILES TOTAL PROJECT	SHEET No.	TOTAL SHEETS
08	SBd	15	11.1	24	46

REGISTERED CIVIL ENGINEER 5-16-16 DATE

5-17-16
PLANS APPROVAL DATE

REGISTERED PROFESSIONAL ENGINEER GREGORY W. HEFTER No. 46655 Exp. 6-30-17 CIVIL STATE OF CALIFORNIA

THE STATE OF CALIFORNIA OR ITS OFFICERS OR AGENTS SHALL NOT BE RESPONSIBLE FOR THE ACCURACY OR COMPLETENESS OF ELECTRONIC COPIES OF THIS PLAN SHEET.

AECOM
999 TOWN AND COUNTRY Rd
ORANGE, CA 92868

CITY OF FONTANA
8353 SIERRA AVENUE
FONTANA, CA 92335

NOTE:

FOR ACCURATE RIGHT OF WAY DATA, CONTACT RIGHT OF WAY ENGINEERING AT THE DISTRICT OFFICE.

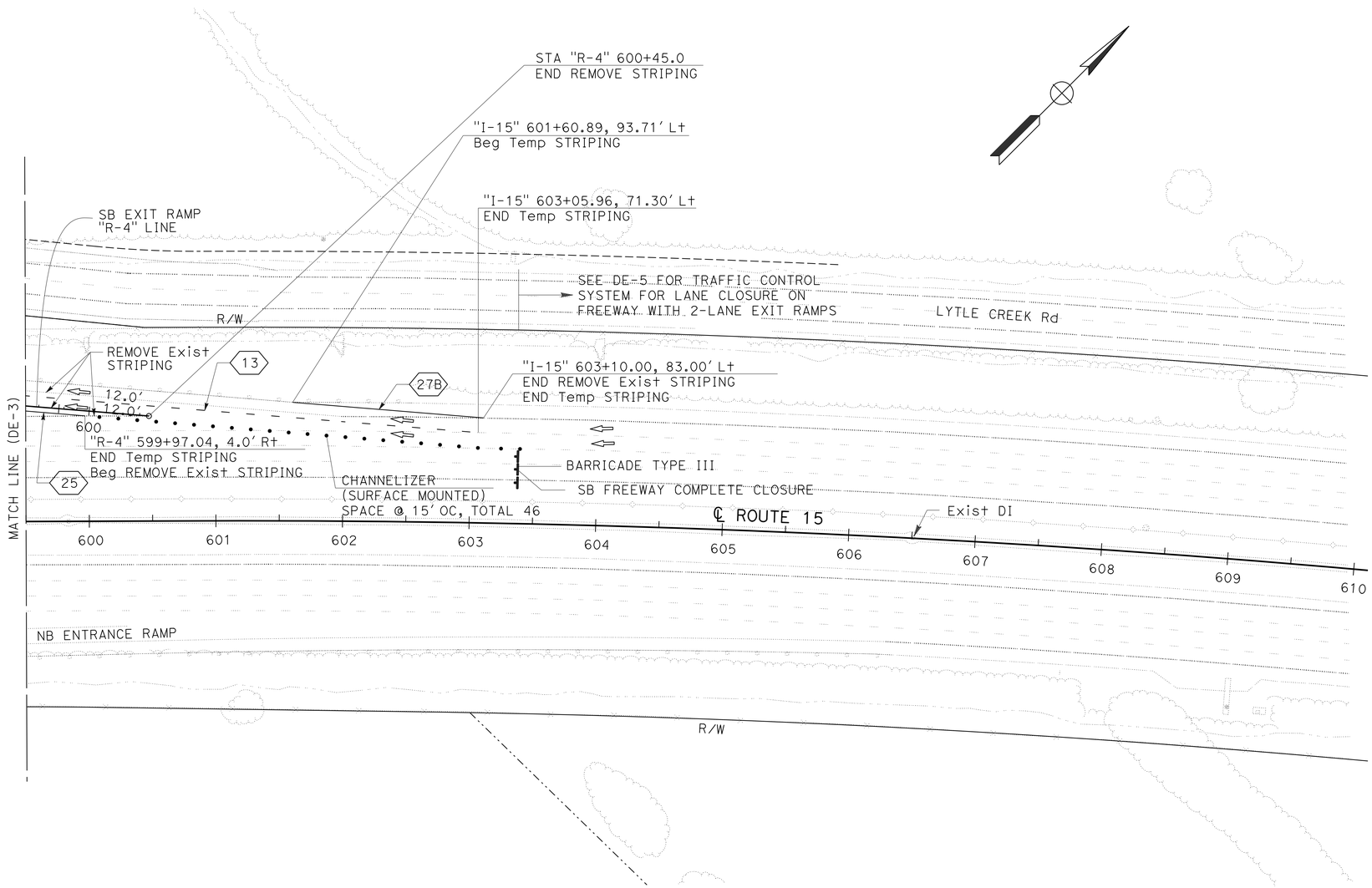

DETOUR PLAN

SCALE: 1" = 50'

DE-4

STATE OF CALIFORNIA - DEPARTMENT OF TRANSPORTATION
Caltrans

CONSULTANT FUNCTIONAL SUPERVISOR: GREG W. HEFTER

CALCULATED-DESIGNED BY: DAT NGUYEN
CHECKED BY: GREG W. HEFTER

REVISED BY
DATE REVISED

LAST REVISION 05-16-16
DATE PLOTTED => 01-JUN-2016
TIME PLOTTED => 09:56

Dist	COUNTY	ROUTE	POST MILES TOTAL PROJECT	SHEET No.	TOTAL SHEETS
08	SBd	15	11.1	25	46

REGISTERED CIVIL ENGINEER 5-16-16 DATE

5-17-16
PLANS APPROVAL DATE

REGISTERED PROFESSIONAL ENGINEER GREGORY W. HEFTER No. 46655 Exp. 6-30-17 CIVIL STATE OF CALIFORNIA

THE STATE OF CALIFORNIA OR ITS OFFICERS OR AGENTS SHALL NOT BE RESPONSIBLE FOR THE ACCURACY OR COMPLETENESS OF ELECTRONIC COPIES OF THIS PLAN SHEET.

AECOM
999 TOWN AND COUNTRY Rd
ORANGE, CA 92868

CITY OF FONTANA
8353 SIERRA AVENUE
FONTANA, CA 92335

LEGEND

- TRAFFIC CONE
- TRAFFIC CONE (OPTIONAL TAPER)
- TEMPORARY TRAFFIC CONTROL SIGN
- FLASHING ARROW SIGN (FAS)
- FAS SUPPORT OR TRAILER
- PORTABLE FLASHING BEACON

NOTES:

See Revised Standard Plan RSP T9 for tables.

Use cone spacing X for taper segment, Y for tangent segment or Z for conflict situations, as approriate, per Table 1, unless X, Y, or Z cone spacing is shown on this sheet.

Unless otherwise specified in the special provisions, all temporary warning signs shall have black legend on fluorescent orange background.

California codes are designated by (CA). Otherwise, Federal (MUTCD) codes are shown.

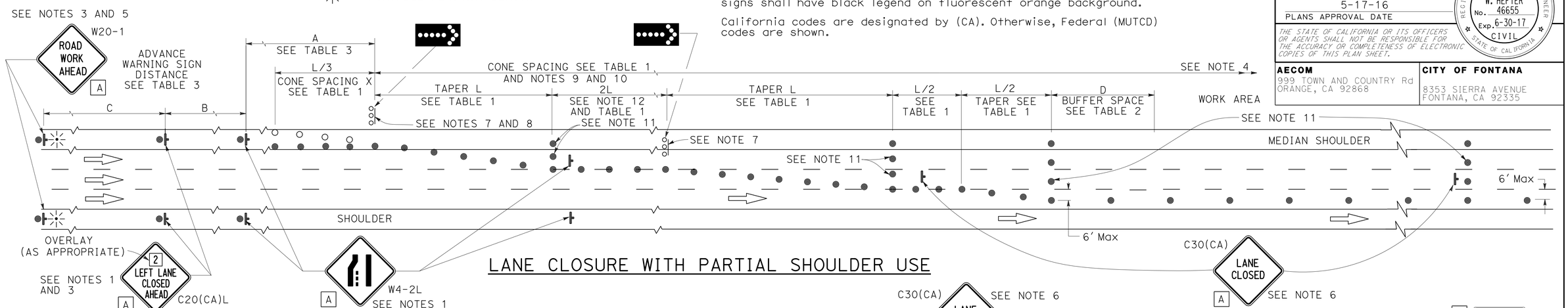

LANE CLOSURE WITH PARTIAL SHOULDER USE

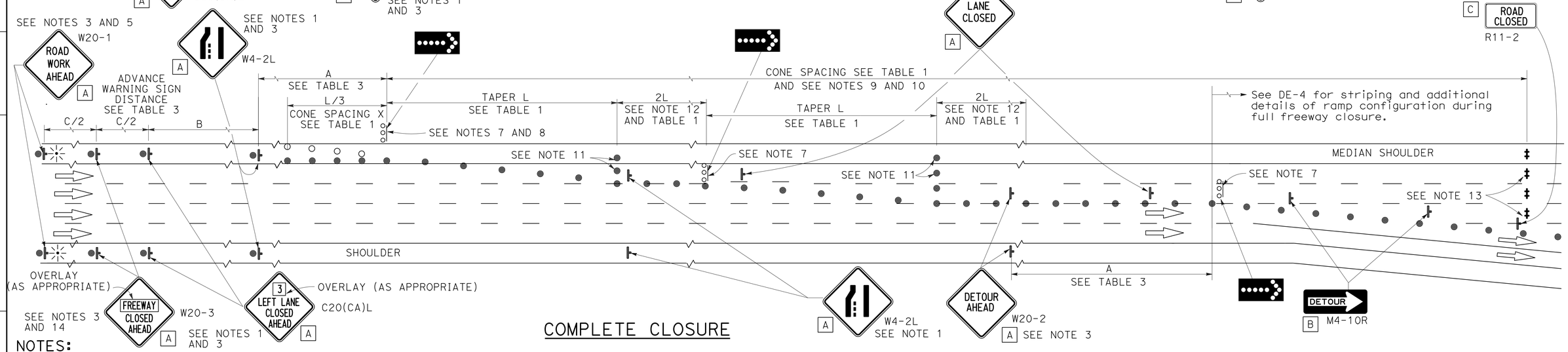

COMPLETE CLOSURE

NOTES:

1. Lane closures on the right side using partial median shoulder as a traffic lane shall conform to the details as shown except that C20(CA)R and W4-2R signs shall be used.
2. At least one person shall be assigned to provide full time maintenance of traffic control devices for lane closures.
3. Each advance warning sign on each side of the roadway shall be equipped with at least two flags for daytime closure. Each flag shall be at least 16" X 16" in size and shall be orange or fluorescent red-orange in color. Flashing beacons shall be placed at the locations indicated for lane closure during hours of darkness.
4. A G20-2 "END ROAD WORK" sign, with minimum size of 48" x 24" as appropriate, shall be placed at the end of the lane closure unless the end of work area is obvious or ends within a larger project's limits.
5. If the W20-1 sign would follow within 2000′ of a stationary W20-1 or G20-1 "ROAD WORK NEXT MILES", use a C20(CA) sign for the first advance warning sign.
6. Place a C30(CA) sign every 2000′ throughout length of lane closure.
7. One flashing arrow sign for each lane closed. The flashing arrow signs shall be Type I.
8. A minimum 1500′ of sight distance shall be provided where possible for vehicles approaching the first flashing arrow sign. Lane closures shall not begin at the top of crest vertical curve or on a horizontal curve.
9. All cones used for lane closures during the hours of darkness shall be fitted with retroreflective bands (or sleeves) as specified in the specifications.
10. Portable delineators, placed at one-half the spacing indicated for traffic cones, may be used instead of cones for daytime closures only.
11. Unless otherwise specified in the special provisions, a minimum of 3 cones shall be placed transversely across each closed lane and shoulder at each location where a taper across a traffic lane ends and every 2000′ as shown on the "Lane Closure With Partial Shoulder Use" detail. Two Type II barricades may be used instead of the 3 cones. The transverse alignment of the cones or barricades on the closed shoulder may be shifted from the transverse alignment to provide access to the work.
12. Unless otherwise specified in the special provisions, the 2L tangent shown along lane lines shall be used between the L tapers required for each closed traffic lane.
13. A minimum of Two Type II or III barricades shall be placed across each closed lane and shoulder at the location shown and every 2000′ within the complete closure area. Within the complete closure area, the transverse alignment of the barricades on the closed shoulder may be shifted from the transverse alignment to provide access to the work.
14. When specified in the special provisions, a W20-2 "DETOUR AHEAD" sign is to be used in place of the W20-3 "FREEWAY CLOSED AHEAD" sign.

SIGN PANEL SIZE (Min)

- A 48" x 48"
- B 48" x 18"
- C 48" x 30"

DETOUR PLAN TRAFFIC CONTROL SYSTEM FOR LANE CLOSURES ON FREEWAYS AND EXPRESSWAYS

NO SCALE

DE-5

STATE OF CALIFORNIA - DEPARTMENT OF TRANSPORTATION
Caltrans

CONSULTANT FUNCTIONAL SUPERVISOR: GREG W. HEFTER
CALCULATED-DESIGNED BY: DAT NGUYEN
CHECKED BY: GREG W. HEFTER
REVISED BY
DATE REVISED

LAST REVISION 05-16-16
DATE PLOTTED => 01-JUN-2016
TIME PLOTTED => 09:56

Dist	COUNTY	ROUTE	POST MILES TOTAL PROJECT	SHEET No.	TOTAL SHEETS
08	SBd	15	11.1	26	46

REGISTERED CIVIL ENGINEER 5-16-16 DATE

PLANS APPROVAL DATE 5-17-16

REGISTERED PROFESSIONAL ENGINEER GREGORY W. HEFTER No. 46655 Exp. 6-30-17 CIVIL STATE OF CALIFORNIA

THE STATE OF CALIFORNIA OR ITS OFFICERS OR AGENTS SHALL NOT BE RESPONSIBLE FOR THE ACCURACY OR COMPLETENESS OF ELECTRONIC COPIES OF THIS PLAN SHEET.

AECOM
999 TOWN AND COUNTRY Rd
ORANGE, CA 92868

CITY OF FONTANA
8353 SIERRA AVENUE
FONTANA, CA 92335

BARRICADE, CHANNELIZER AND TEMPORARY PAVEMENT MARKING

SHEET #	CHANNELIZER (SURFACE MOUNTED)	TEMPORARY PAVEMENT MARKING (PAINT)
	EA	SQFT
DE-1	12	
DE-2	54	50
DE-4	46	
TOTAL	113 *	50

* SEE ADDITIONAL QUANTITIES OF "CHANNELIZER (SURFACE MOUNTED)", ON SHEET THQ-1.

TEMPORARY STRIPING AND TEMPORARY PAVEMENT MARKER

SHEET #	STATION	DETAIL NUMBER	TEMPORARY TRAFFIC STRIPE (PAINT)			TEMPORARY PAVEMENT MARKER		
						RETROREFLECTIVE		NON-REFLECTIVE
			4" WHITE	4" YELLOW	8" WHITE	TYPE G	TYPE H	TYPE A
			LF	LF	LF	EA	EA	EA
DE-1	"R-1" 564+69.87 TO 568+40.20	13				9		36
DE-1	"R-1" 561+69.81 TO 568+40.40	36B			672	29		
DE-3	"R-4" 592+23.64 TO 599+50	13				17		68
DE-3	"R-4" 592+23.64 TO 593+44.49	27B	121					
DE-3	"R-4" 592+23.64 TO 599+50	25	727				16	
DE-4	"R-4" 599+50 TO "ROUTE 15" 603+10	13				9		36
DE-4	"I-15" 601+60.89 TO "ROUTE 15" 603+10	27B	152					
DE-4	"R-4" 599+50 TO "R-4" 599+97.04	25	48				2	
	TOTAL		1048*		672*	222**		

* SEE ADDITIONAL QUANTITIES OF "TEMPORARY TRAFFIC STRIPE (PAINT)", ON SHEET THQ-1.
** SEE ADDITIONAL QUANTITIES OF "TEMPORARY PAVEMENT MARKER", ON SHEET THQ-1.

DETOUR QUANTITIES

DEQ-1

REVISED BY | DATE REVISED
DAT NGUYEN | GREG W. HEFTER
CALCULATED-DESIGNED BY | CHECKED BY
CONSULTANT FUNCTIONAL SUPERVISOR
GREG W. HEFTER
STATE OF CALIFORNIA - DEPARTMENT OF TRANSPORTATION
Caltrans

LAST REVISION 05-16-16 | DATE PLOTTED => 01-JUN-2016 | TIME PLOTTED => 09:56

Dist	COUNTY	ROUTE	POST MILES TOTAL PROJECT	SHEET No.	TOTAL SHEETS
08	SBd	15	11.1	27	46

REGISTERED CIVIL ENGINEER 5-16-16 DATE

5-17-16
PLANS APPROVAL DATE

REGISTERED PROFESSIONAL ENGINEER GREGORY W. HEFTER No. 46655 Exp. 6-30-17 CIVIL STATE OF CALIFORNIA

THE STATE OF CALIFORNIA OR ITS OFFICERS OR AGENTS SHALL NOT BE RESPONSIBLE FOR THE ACCURACY OR COMPLETENESS OF ELECTRONIC COPIES OF THIS PLAN SHEET.

AECOM
999 TOWN AND COUNTRY Rd
ORANGE, CA 92868

CITY OF FONTANA
8353 SIERRA AVENUE
FONTANA, CA 92335

NOTES:

1. FOR ACCURATE RIGHT OF WAY DATA, CONTACT RIGHT OF WAY ENGINEERING AT THE DISTRICT OFFICE.

LEGEND:

STRIPING DETAIL

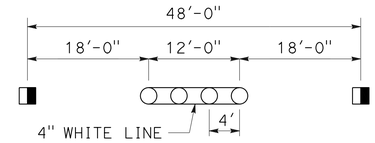

TYPE G ONE-WAY CLEAR RETROREFLECTIVE

TYPE A WHITE NON-REFLECTIVE (INSTALL BEFORE STRIPE)

DETAIL 13M
NO SCALE

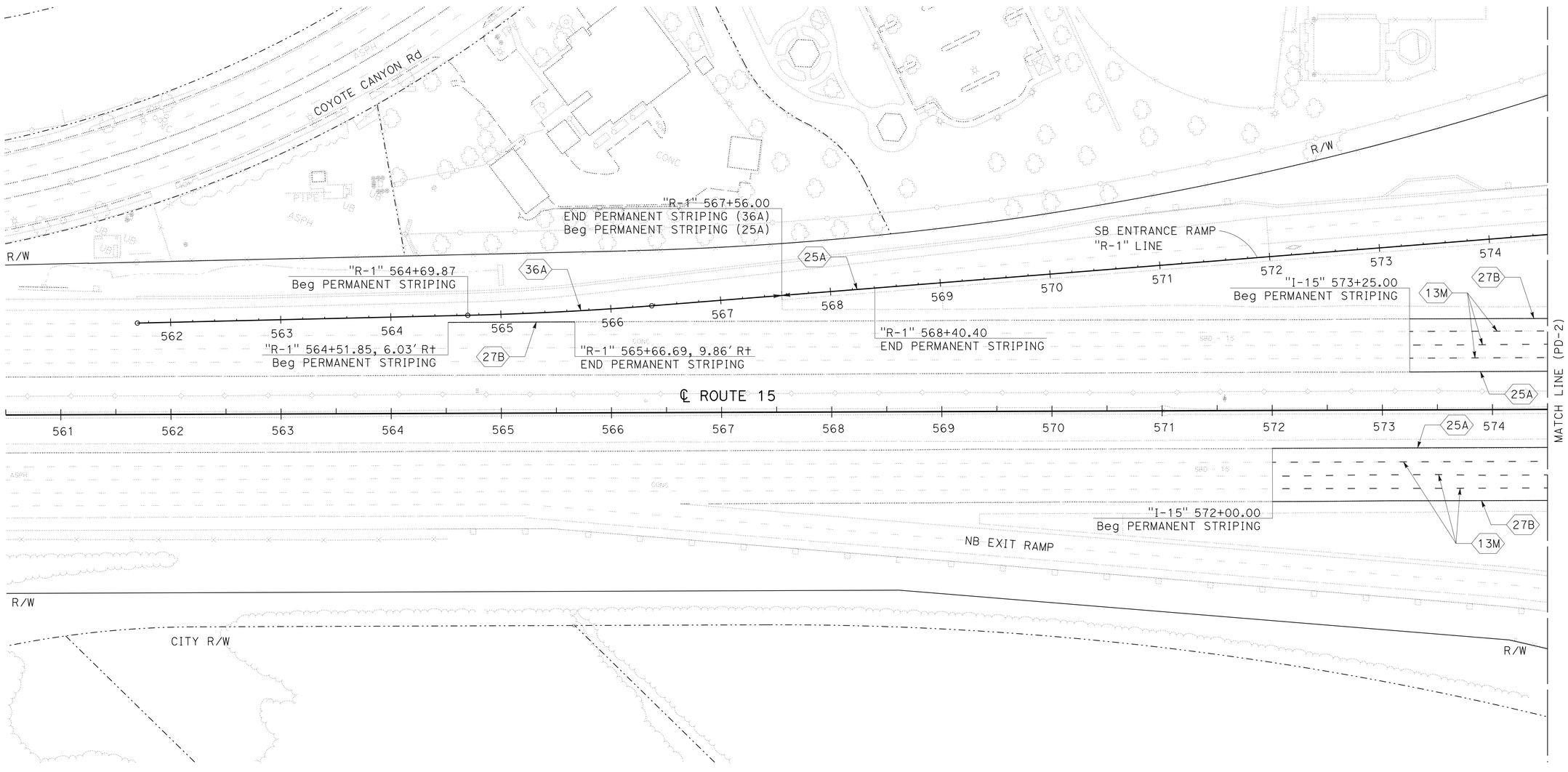

PAVEMENT DELINEATION PLAN

SCALE: 1" = 50'

PD-1

APPROVED FOR PAVEMENT DELINEATION WORK ONLY

STATE OF CALIFORNIA - DEPARTMENT OF TRANSPORTATION
Caltrans

CONSULTANT FUNCTIONAL SUPERVISOR: GREG W. HEFTER
CALCULATED-DESIGNED BY: DAT NGUYEN
CHECKED BY: GREG W. HEFTER
REVISED BY
DATE REVISED

LAST REVISION 05-16-16
DATE PLOTTED => 01-JUN-2016
TIME PLOTTED => 09:56

Dist	COUNTY	ROUTE	POST MILES TOTAL PROJECT	SHEET No.	TOTAL SHEETS
08	SBd	15	11.1	28	46

REGISTERED CIVIL ENGINEER 5-16-16 DATE

PLANS APPROVAL DATE 5-17-16

REGISTERED PROFESSIONAL ENGINEER GREGORY W. HEFTER No. 46655 Exp. 6-30-17 CIVIL STATE OF CALIFORNIA

THE STATE OF CALIFORNIA OR ITS OFFICERS OR AGENTS SHALL NOT BE RESPONSIBLE FOR THE ACCURACY OR COMPLETENESS OF ELECTRONIC COPIES OF THIS PLAN SHEET.

AECOM
999 TOWN AND COUNTRY Rd
ORANGE, CA 92868

CITY OF FONTANA
8353 SIERRA AVENUE
FONTANA, CA 92335

NOTE:

FOR ACCURATE RIGHT OF WAY DATA, CONTACT RIGHT OF WAY ENGINEERING AT THE DISTRICT OFFICE.

LEGEND:

STRIPING DETAIL

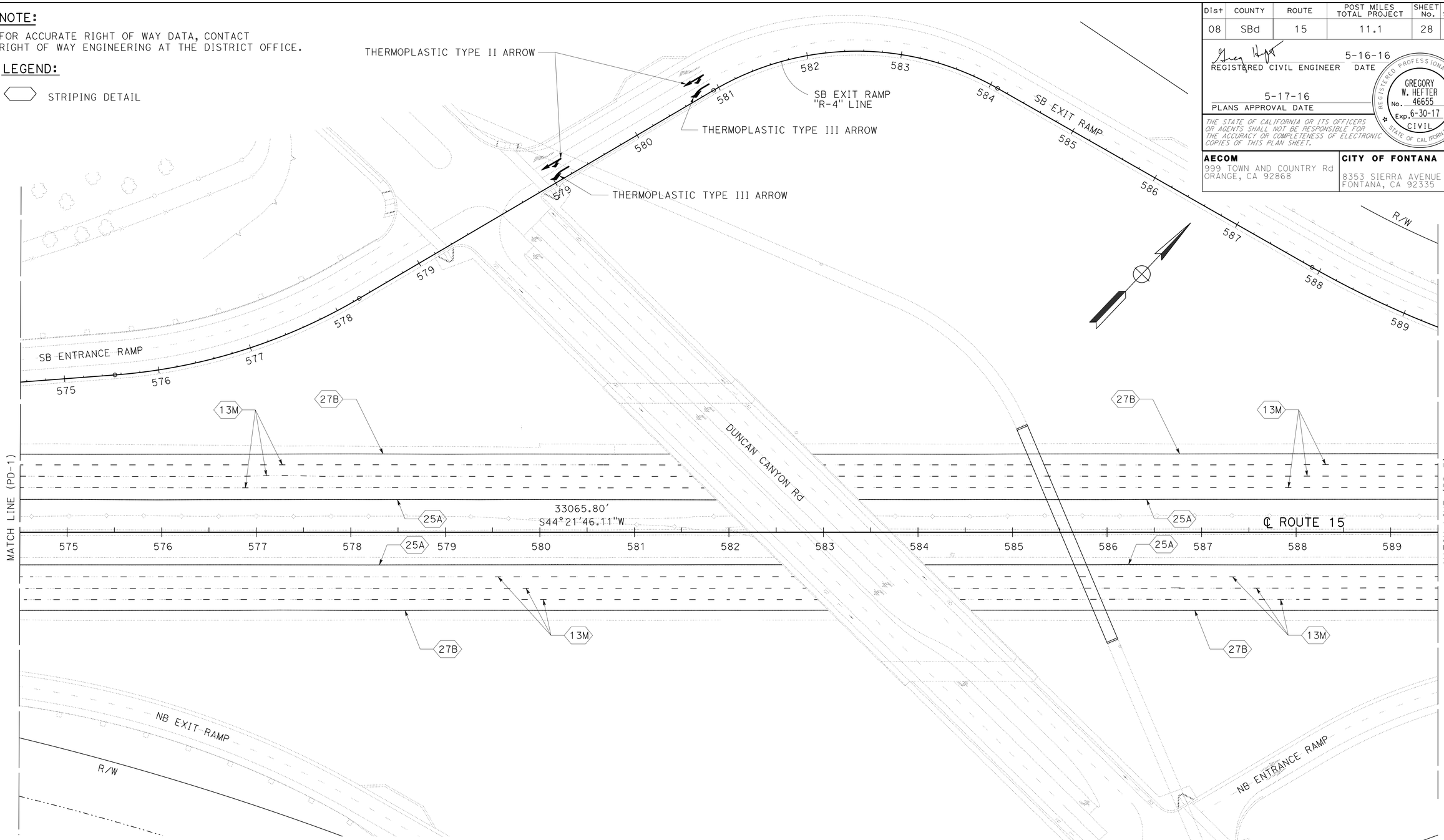

PAVEMENT DELINEATION PLAN

SCALE: 1" = 50'

PD-2

APPROVED FOR PAVEMENT DELINEATION WORK ONLY

STATE OF CALIFORNIA - DEPARTMENT OF TRANSPORTATION

Caltrans

CONSULTANT FUNCTIONAL SUPERVISOR: GREG W. HEFTER

CALCULATED-DESIGNED BY: DAT NGUYEN

CHECKED BY: GREG W. HEFTER

REVISED BY

DATE REVISED

LAST REVISION 05-16-16

DATE PLOTTED => 01-JUN-2016
TIME PLOTTED => 09:56

Dist	COUNTY	ROUTE	POST MILES TOTAL PROJECT	SHEET No.	TOTAL SHEETS
08	SBd	15	11.1	29	46

REGISTERED CIVIL ENGINEER 5-16-16 DATE

5-17-16
PLANS APPROVAL DATE

REGISTERED PROFESSIONAL ENGINEER GREGORY W. HEFTER No. 46655 Exp. 6-30-17 CIVIL STATE OF CALIFORNIA

THE STATE OF CALIFORNIA OR ITS OFFICERS OR AGENTS SHALL NOT BE RESPONSIBLE FOR THE ACCURACY OR COMPLETENESS OF ELECTRONIC COPIES OF THIS PLAN SHEET.

AECOM
999 TOWN AND COUNTRY Rd
ORANGE, CA 92868

CITY OF FONTANA
8353 SIERRA AVENUE
FONTANA, CA 92335

NOTE:

FOR ACCURATE RIGHT OF WAY DATA, CONTACT RIGHT OF WAY ENGINEERING AT THE DISTRICT OFFICE.

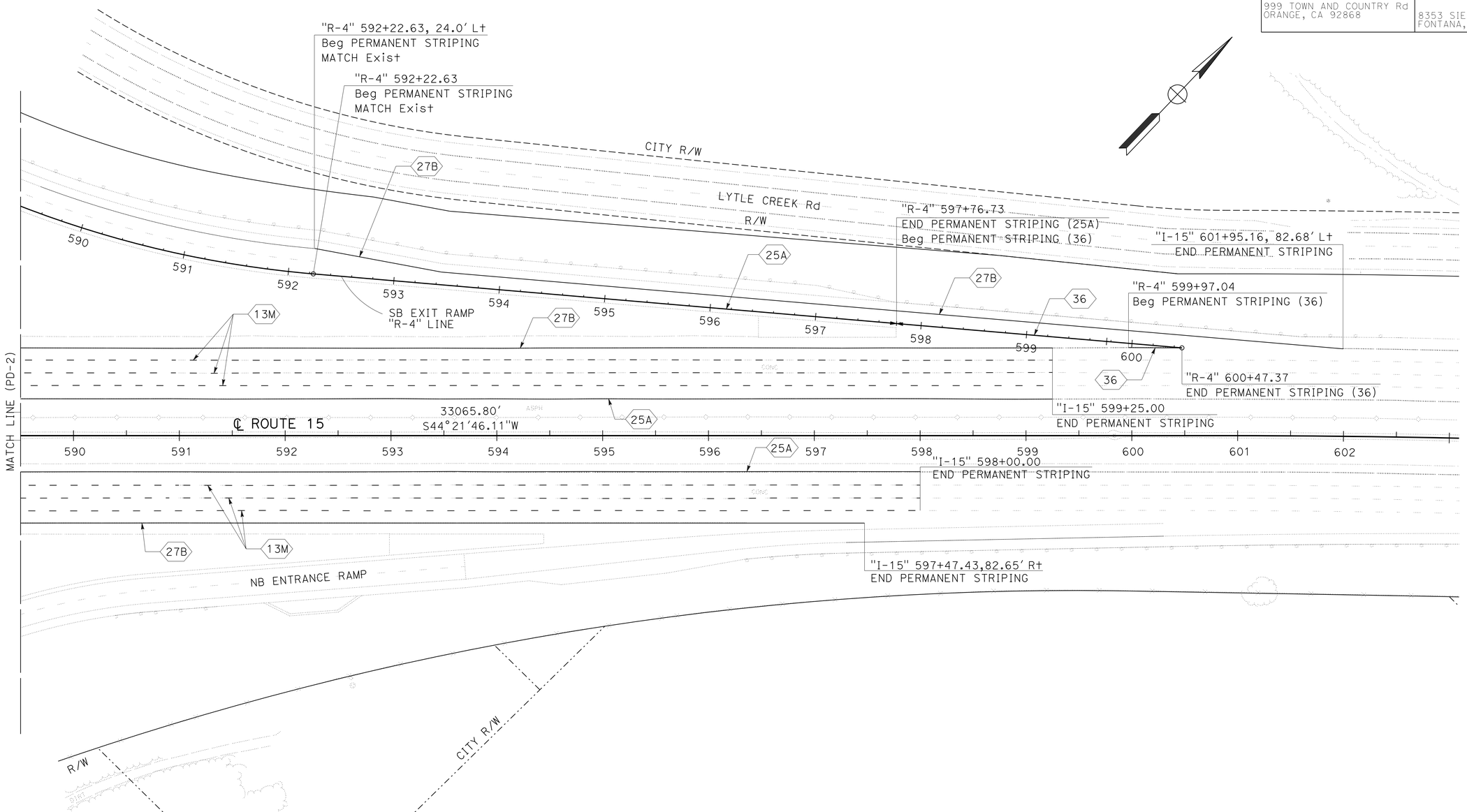

PAVEMENT DELINEATION PLAN

SCALE: 1" = 50'

PD-3

APPROVED FOR PAVEMENT DELINEATION WORK ONLY

STATE OF CALIFORNIA - DEPARTMENT OF TRANSPORTATION
Caltrans

CONSULTANT FUNCTIONAL SUPERVISOR: GREG W. HEFTER
CALCULATED-DESIGNED BY: DAT NGUYEN
CHECKED BY: GREG W. HEFTER
REVISED BY
DATE REVISED

LAST REVISION 05-16-16
DATE PLOTTED => 01-JUN-2016
TIME PLOTTED => 09:56

Dist	COUNTY	ROUTE	POST MILES TOTAL PROJECT	SHEET No.	TOTAL SHEETS
08	SBd	15	11.1	30	46

REGISTERED CIVIL ENGINEER 5-16-16 DATE

5-17-16
PLANS APPROVAL DATE

REGISTERED PROFESSIONAL ENGINEER GREGORY W. HEFTER No. 46655 Exp. 6-30-17 CIVIL STATE OF CALIFORNIA

THE STATE OF CALIFORNIA OR ITS OFFICERS OR AGENTS SHALL NOT BE RESPONSIBLE FOR THE ACCURACY OR COMPLETENESS OF ELECTRONIC COPIES OF THIS PLAN SHEET.

AECOM
999 TOWN AND COUNTRY Rd
ORANGE, CA 92868

CITY OF FONTANA
8353 SIERRA AVENUE
FONTANA, CA 92335

ROADWAY QUANTITIES TABLE

STATION	SALVAGE CONCRETE BARRIER (TYPE K)	REMOVE DOUBLE METAL BEAM BARRIER	DOUBLE THRIE BEAM BARRIER (STEEL POST)	JOINTED PLAIN CONCRETE PAVEMENT (RAPID STRENGTH CONCRETE)	LEAN CONCRETE BASE	JOINTED PLAIN CONCRETE PAVEMENT	RAPID STRENGTH CONCRETE BASE	TEMPORARY CONSTRUCTION ENTRANCE	STRUCTURE EXCAVATION (CULVERT)	OPAQUE POLYETHYLENE FILM	CULVERT SLURRY-CEMENT BACKFILL	ROADWAY EXCAVATION
	LF	LF	LF	CY	CY	CY	CY	EA	CY	SQFT	CY	CY
584+75.50 - 585+94.13, "I-15", SOUTHBOUND		157	157	206	118	288	79	1	1376	10671	623	673
585+32.52 - 586+31.15, "I-15", NORTHBOUND				171	99	240	66	1	1596	8877	816	549
582+13.81 - 587+13.81, "I-15", NORTHBOUND	500											
FROM DRAINAGE QUANTITIES										9400		
TOTAL	500	157	157	377	217	528	145	2	2972	28948	1439	1222

MINOR CONCRETE

STATION	VEGETATION CONTROL (MINOR CONCRETE)
	SQYD
584+75.50 - 586+31.15, "I-15"	73
TOTAL	73

DRILL AND BOND (DOWEL BAR)

LOCATION	JPCP (RSC)	JPCP
	EA	EA
584+75.50, "I-15" SB	36	54
585+94.13, "I-15" SB	36	54
585+32.52, "I-15" NB	36	54
586+31.15, "I-15" NB	36	54
TOTAL	360	

CONCRETE PAVEMENT JOINT SEALANT

STATION	JOINT SEAL (PREFORMED COMPRESSION)			
	TRANSVERSE JOINT	LONGITUDINAL W/TIE BAR	LONGITUDINAL W/DOWEL BAR	ISOLATION JOINT SEAL (SILICONE)
	LF	LF	LF	LF
585+32.52-586+31.15, "I-15", NORTHBOUND	580	99	594	198
584+75.50-585+94.13, "I-15", SOUTHBOUND	504	119	595	238
TOTAL	2491			436

PAVEMENT STRIPING, PAVEMENT MARKER, PAVEMENT MARKING

STATION	LOCATION	DETAIL No.	THERMOPLASTIC TRAFFIC STRIPE (SPRAYABLE)			PAVEMENT MARKER			THERMOPLASTIC PAVEMENT MARKING	REMOVE THERMOPLASTIC TRAFFIC STRIPE	REMOVE PAVEMENT MARKER	REMOVE THERMOPLASTIC PAVEMENT MARKING
			4" WHITE	4" YELLOW	8" WHITE	NON-REFLECTIVE TYPE A	RETROREFLECTIVE TYPE H	RETROREFLECTIVE TYPE G				
			LF	LF	LF	EA	EA	EA	SQFT	LF	EA	SQFT
573+25 TO 599+25	"I-15" SOUTHBOUND	27B	2600							7200	950	
		25A		2600			110					
		13M	7800			650		165				
572+00 TO 598+00	"I-15" NORTHBOUND	27B	2550							7200	950	
		25A		2600			110					
		13M	7800			650		165				
564+51.85 TO 568+40.40	LINE "R-1"	25A		85			5			487	17	
		27B	116									
		36A			286			13				
592+22.63 TO 600+47.37	LINE "R-4"	25A		554			25		174	1913	72	624
		27B	977									
		36			322			15				
TOTAL			28290			1300	608		174	16800	1989	624*

* SEE SHEET DE-2 FOR REMOVALS.

TEMPORARY WATER POLLUTION CONTROL

STATION	TEMPORARY FIBER ROLL	TEMPORARY SOIL BINDER
	LF	SQYD
584+75.5 TO 586+31.15	1210	
584+75.5 TO 586+31.15		3940
TOTAL	1210	3940

ESA FENCE

STATION	LOCATION	TEMPORARY FENCE (TYPE ESA)
		LF
586+60.00 TO 589+75.00	"I-15", NORTHBOUND	324
582+97.74 TO 589+51.39	"I-15", SOUTHBOUND	673
TOTAL		997

SUMMARY OF QUANTITIES
Q-1

STATE OF CALIFORNIA - DEPARTMENT OF TRANSPORTATION
Caltrans
CONSULTANT FUNCTIONAL SUPERVISOR: GREG W. HEFTER
CALCULATED-DESIGNED BY: DAT NGUYEN
CHECKED BY: GREG W. HEFTER
REVISED BY
DATE REVISED

LAST REVISION 05-16-16 DATE PLOTTED => 01-JUN-2016 TIME PLOTTED => 09:56

M

Maint	MAINTENANCE
Max	MAXIMUM
MB	METAL BEAM
MBB	METAL BEAM BARRIER
MBGR	METAL BEAM GUARD RAILING
Med	MEDIAN
MGS	MIDWEST GUARDRAIL SYSTEM
MH	MANHOLE
Min	MINIMUM
Misc	MISCELLANEOUS
Misc I & S	MISCELLANEOUS IRON AND STEEL
Mkr	MARKER
Mod	MODIFIED,
	MODIFY
Mon	MONUMENT
MP	METAL PLATE
MPGR	METAL PLATE GUARD RAILING
MR	MOVEMENT RATING
MSE	MECHANICALLY STABILIZED EMBANKMENT
Mt	MOUNTAIN, MOUNT
Mtl	MATERIAL
MVP	MAINTENANCE VEHICLE PULLOUT

N

N	NORTH
NB	NORTHBOUND
No.	NUMBER (MUST HAVE PERIOD)
Nos.	NUMBERS (MUST HAVE PERIOD)
NPS	NOMINAL PIPE SIZE
NS	NEAR SIDE
NSP	NEW STANDARD PLAN
NTS	NOT TO SCALE

O

Oblr	OBLITERATE
OC	OVERCROSSING
OD	OUTSIDE DIAMETER
OF	OUTSIDE FACE
OG	ORIGINAL GROUND
OGAC	OPEN GRADED ASPHALT CONCRETE
OGFC	OPEN GRADED FRICTION COURSE
OH	OVERHEAD
OHWM	ORDINARY HIGH WATER MARK
O-O	OUT TO OUT
Opp	OPPOSITE
OSD	OVERSIDE DRAIN

P

P	PAGE
PAP	PERFORATED ALUMINUM PIPE
PB	PULL BOX
PC	POINT OF CURVATURE,
	PRECAST
PCC	POINT OF COMPOUND CURVE,
	PORTLAND CEMENT CONCRETE
PCMS	PORTABLE CHANGEABLE MESSAGE SIGN
PCP	PERFORATED CONCRETE PIPE,
	PRESTRESSED CONCRETE PIPE
PCVC	POINT OF COMPOUND VERTICAL CURVE
PEC	PERMIT TO ENTER AND CONSTRUCT
Ped	PEDESTRIAN
Ped OC	PEDESTRIAN OVERCROSSING
Ped UC	PEDESTRIAN UNDERCROSSING
Perm Mtl	PERMEABLE MATERIAL

P continued

PG	PROFILE GRADE
PI	POINT OF INTERSECTION
PJP	PARTIAL JOINT PENETRATION
Pkwy	PARKWAY
ℙ,PL	PLATE
P/L	PROPERTY LINE
PM	POST MILE,
	TIME FROM NOON TO MIDNIGHT
PN	PAVING NOTCH
POC	POINT OF HORIZONTAL CURVE
POT	POINT OF TANGENT
POVC	POINT OF VERTICAL CURVE
PP	PIPE PILE,
	PLASTIC PIPE,
	POWER POLE
PPL	PREFORMED PERMEABLE LINER
PPP	PERFORATED PLASTIC PIPE
PRC	POINT OF REVERSE CURVE
PRF	PAVEMENT REINFORCING FABRIC
PRVC	POINT OF REVERSE VERTICAL CURVE
PS&E	PLANS, SPECIFICATIONS AND ESTIMATES
PS, P/S	PRESTRESSED
PSP	PERFORATED STEEL PIPE
PT	POINT OF TANGENCY
PVC	POLYVINYL CHLORIDE
Pvmt	PAVEMENT

Q

Qty	QUANTITY

R

R	RADIUS
R & D	REMOVE AND DISPOSE
R & S	REMOVE AND SALVAGE
R/C	RATE OF CHANGE
RCA	REINFORCED CONCRETE ARCH
RCB	REINFORCED CONCRETE BOX
RCP	REINFORCED CONCRETE PIPE
RCPA	REINFORCED CONCRETE PIPE ARCH
Rd	ROAD
Reinf	REINFORCED,
	REINFORCEMENT,
	REINFORCING
Rel	RELOCATE
Repl	REPLACEMENT
Ret	RETAINING
Rev	REVISED, REVISION
Rdwy	ROADWAY
RHMA	RUBBERIZED HOT MIX ASPHALT
Riv	RIVER
RM	ROAD-MIXED
RP	RADIUS POINT,
	REFERENCE POINT
RR	RAILROAD
RSP	ROCK SLOPE PROTECTION,
	REVISED STANDARD PLAN
Rt	RIGHT
Rte	ROUTE
RW	REDWOOD,
	RETAINING WALL
R/W	RIGHT OF WAY
Rwy	RAILWAY

S

S	SOUTH,
	SUPPLEMENT
SAE	STRUCTURE APPROACH EMBANKMENT
Salv	SALVAGE
SAPP	STRUCTURAL ALUMINUM PLATE PIPE
SB	SOUTHBOUND
SC	SAND CUSHION
SCSP	SLOTTED CORRUGATED STEEL PIPE
SD	STORM DRAIN
Sec	SECOND,
	SECTION
Sep	SEPARATION
SG	SUBGRADE
Shld	SHOULDER
Sht	SHEET
Sim	SIMILAR
℄	STATION LINE
SM	SELECTED MATERIAL
Spec	SPECIAL,
	SPECIFICATIONS
SPP	SLOTTED PLASTIC PIPE
SS	SLOPE STAKE
SSBM	STRAP AND SADDLE BRACKET METHOD
SSD	STRUCTURAL SECTION DRAIN
SSPA	STRUCTURAL STEEL PLATE ARCH
SSPP	STRUCTURAL STEEL PLATE PIPE
SSPPA	STRUCTURAL STEEL PLATE PIPE ARCH
SSRP	STEEL SPIRAL RIB PIPE
St	STREET
Sta	STATION
STBB	SINGLE THRIE BEAM BARRIER
Std	STANDARD
Str	STRUCTURE
Surf	SURFACING
SW	SIDEWALK,
	SOUND WALL
Swr	SEWER
Sym	SYMMETRICAL
S4S	SURFACE 4 SIDES

T

T	SEMI-TANGENT
Tan	TANGENT
TBB	THRIE BEAM BARRIER
Tbr	TIMBER
TC	TOP OF CURB
TCB	TRAFFIC CONTROL BOX
TCE	TEMPORARY CONSTRUCTION EASEMENT
Tel	TELEPHONE
Temp	TEMPORARY
TG	TOP OF GRADE
Tot	TOTAL
TP	TELEPHONE POLE
TPB	TREATED PERMEABLE BASE
TPM	TREATED PERMEABLE MATERIAL
Trans	TRANSITION

T continued

TS	TRANSVERSE,
	TRAFFIC SIGNAL,
	TUBULAR STEEL
Typ	TYPICAL

U

UC	UNDERCROSSING
UD	UNDERDRAIN
UG	UNDERGROUND
UON	UNLESS OTHERWISE NOTED
UP	UNDERPASS

V

V	VALVE,
	DESIGN SPEED
Var	VARIABLE,
	VARIES
VC	VERTICAL CURVE
VCP	VITRIFIED CLAY PIPE
Vert	VERTICAL
Via	VIADUCT
Vol	VOLUME

W

W	WEST,
	WIDTH
WB	WESTBOUND
WH	WEEP HOLE
WM	WIRE MESH
WS	WATER SURFACE
WSP	WELDED STEEL PIPE
Wt	WEIGHT
WV	WATER VALVE
WW	WINGWALL
WWLOL	WINGWALL LAYOUT LINE

X

X Sec	CROSS SECTION
Xing	CROSSING

Y

Yr	YEAR
Yrs	YEARS

Dist	COUNTY	ROUTE	POST MILES TOTAL PROJECT	SHEET No.	TOTAL SHEETS
08	SBd	15	11.1	31	46

Grace M. Tsushima
REGISTERED CIVIL ENGINEER

July 19, 2013
PLANS APPROVAL DATE

REGISTERED PROFESSIONAL ENGINEER Grace M. Tsushima No. C49814 Exp. 9-30-14 CIVIL STATE OF CALIFORNIA

THE STATE OF CALIFORNIA OR ITS OFFICERS OR AGENTS SHALL NOT BE RESPONSIBLE FOR THE ACCURACY OR COMPLETENESS OF SCANNED COPIES OF THIS PLAN SHEET.

TO ACCOMPANY PLANS DATED 5-17-16

UNIT OF MEASUREMENT SYMBOLS:

Some of the symbols used in the project plan quantity tables and in the Bid Item List are:

TABLE A

SYMBOL USED	DEFINITIONS
ACRE	ACRE
CF	CUBIC FOOT
CY	CUBIC YARD
EA	EACH
GAL	GALLON
LB	POUND
LF	LINEAR FOOT
SQFT	SQUARE FOOT
SQYD	SQUARE YARD
STA	100 FEET
TAB	TABLET
TON	2,000 POUNDS

Some of the symbols used in the plans other than in the project plan quantity tables are:

TABLE B

SYMBOL USED	DEFINITIONS
ksi	KIPS PER SQUARE INCH
ksf	KIPS PER SQUARE FOOT
psi	POUNDS PER SQUARE INCH
psf	POUNDS PER SQUARE FOOT
lb/ft^3, pcf	POUNDS PER CUBIC FOOT
tsf	TONS PER SQUARE FOOT
mph, MPH *	MILES PER HOUR
ø	NOMINAL DIAMETER
oz	OUNCE
lb	POUND
kip	1,000 POUNDS
cal	CALORIE
ft	FOOT OR FEET
gal	GALLON

* For use on a sign panel only

STATE OF CALIFORNIA
DEPARTMENT OF TRANSPORTATION

ABBREVIATIONS (SHEET 2 OF 2)

NO SCALE

RSP A10B DATED JULY 19, 2013 SUPERSEDES STANDARD PLAN A10B DATED MAY 20, 2011 - PAGE 2 OF THE STANDARD PLANS BOOK DATED 2010.

REVISED STANDARD PLAN RSP A10B

2010 REVISED STANDARD PLAN RSP A10B

6-7-13

Dist	COUNTY	ROUTE	POST MILES TOTAL PROJECT	SHEET No.	TOTAL SHEETS
08	SBd	15	11.1	32	46

REGISTERED CIVIL ENGINEER

April 20, 2012
PLANS APPROVAL DATE

REGISTERED PROFESSIONAL ENGINEER
Roberta L. McLaughlin
No. C40375
Exp. 3-31-13
CIVIL
STATE OF CALIFORNIA

THE STATE OF CALIFORNIA OR ITS OFFICERS OR AGENTS SHALL NOT BE RESPONSIBLE FOR THE ACCURACY OR COMPLETENESS OF SCANNED COPIES OF THIS PLAN SHEET.

TO ACCOMPANY PLANS DATED 5-17-16

2010 REVISED STANDARD PLAN RSP A24A

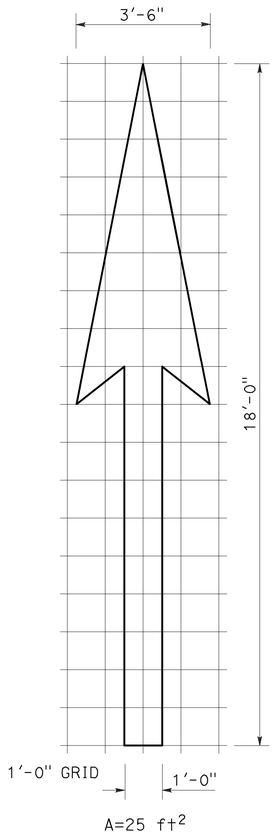

A=25 ft^2

TYPE I 18'-0" ARROW

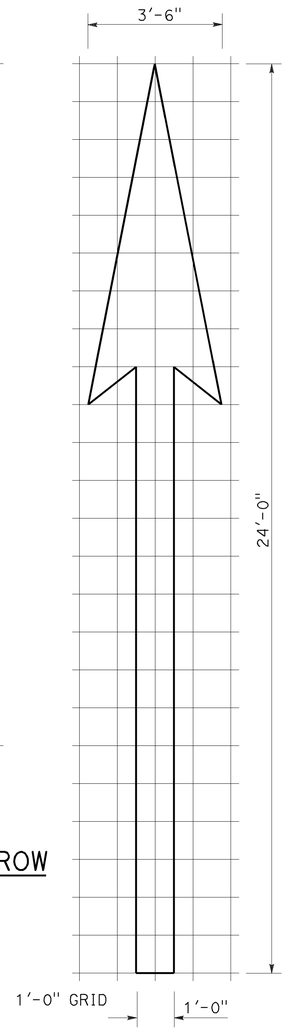

A=31 ft^2

TYPE I 24'-0" ARROW

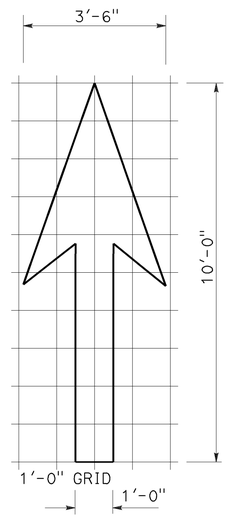

A=14 ft^2

TYPE I 10'-0" ARROW

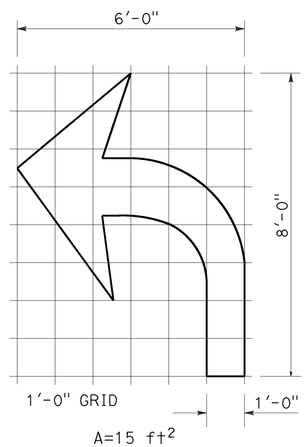

A=15 ft^2

TYPE IV (L) ARROW

(For Type IV (R) arrow, use mirror image)

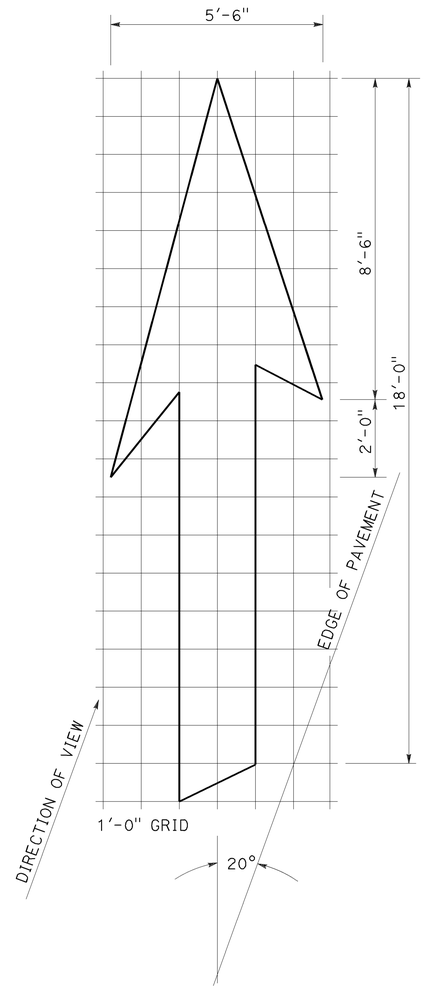

A=42 ft^2

TYPE VI ARROW

Right lane drop arrow
(For left lane, use mirror image)

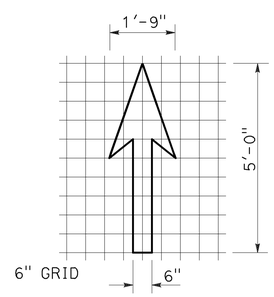

A=3.5 ft^2

BIKE LANE ARROW

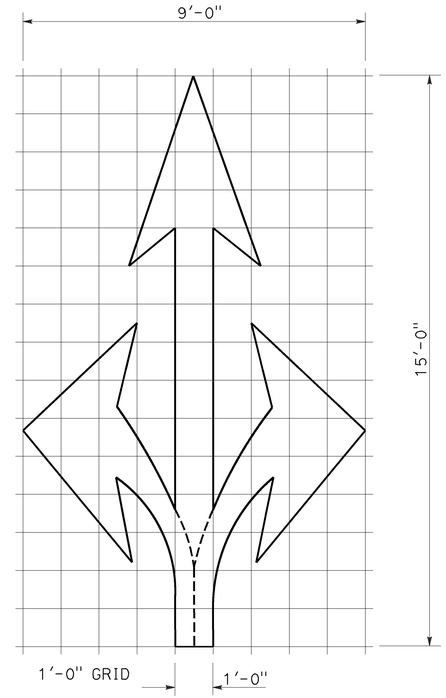

A=36 ft^2

TYPE VIII ARROW

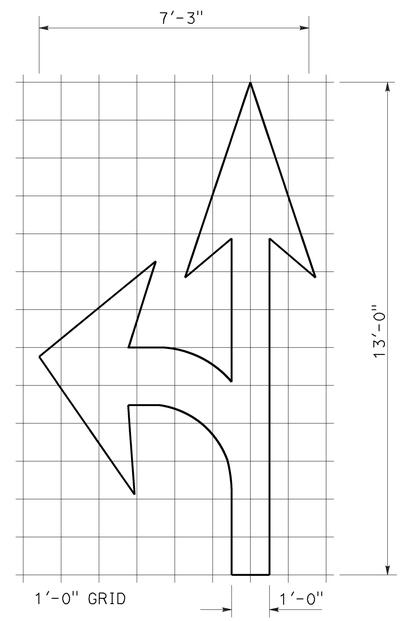

A=27 ft^2

TYPE VII (L) ARROW

(For Type VII (R) arrow, use mirror image)

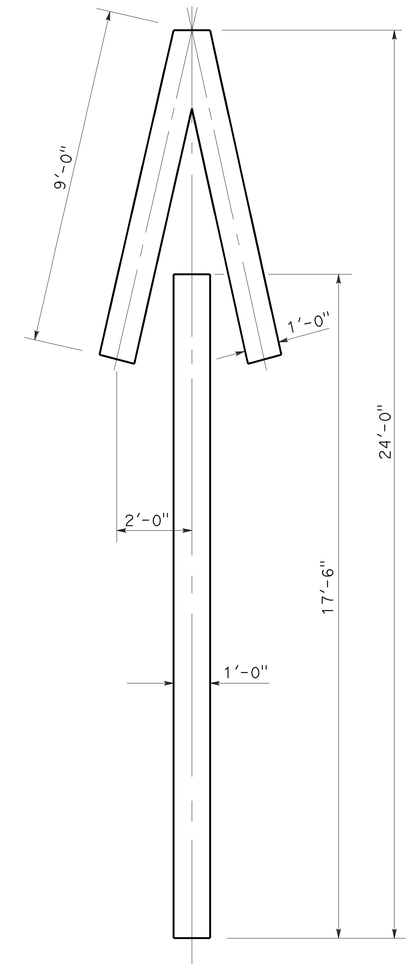

A=33 ft^2

TYPE V ARROW

NOTE:
Minor variations in dimensions may be accepted by the Engineer.

STATE OF CALIFORNIA
DEPARTMENT OF TRANSPORTATION

PAVEMENT MARKINGS ARROWS

NO SCALE

RSP A24A DATED APRIL 20, 2012 SUPERSEDES STANDARD PLAN A24A DATED MAY 20, 2011 - PAGE 13 OF THE STANDARD PLANS BOOK DATED 2010.

REVISED STANDARD PLAN RSP A24A

3-14-12

Dist	COUNTY	ROUTE	POST MILES TOTAL PROJECT	SHEET No.	TOTAL SHEETS
08	SBd	15	11.1	33	46

REGISTERED CIVIL ENGINEER

July 18, 2014
PLANS APPROVAL DATE

REGISTERED PROFESSIONAL ENGINEER
Carl M. Duan
No. C59976
Exp. 6-30-16
CIVIL
STATE OF CALIFORNIA

THE STATE OF CALIFORNIA OR ITS OFFICERS OR AGENTS SHALL NOT BE RESPONSIBLE FOR THE ACCURACY OR COMPLETENESS OF SCANNED COPIES OF THIS PLAN SHEET.

TO ACCOMPANY PLANS DATED 5-17-16

DESIGN NOTES:

Design: AASHTO LRFD Bridge Design Specifications, 4th edition with California Amendments. ACPA DESIGN DATA 1, October 2007. INDIRECT DESIGN METHOD

Soil: w Fe = 162 pcf Installation Type 1
w Fe = 168 pcf Installation Types 2 & 3
w = Unit weight of soil (pcf)
Fe = Soil-structure interaction factor

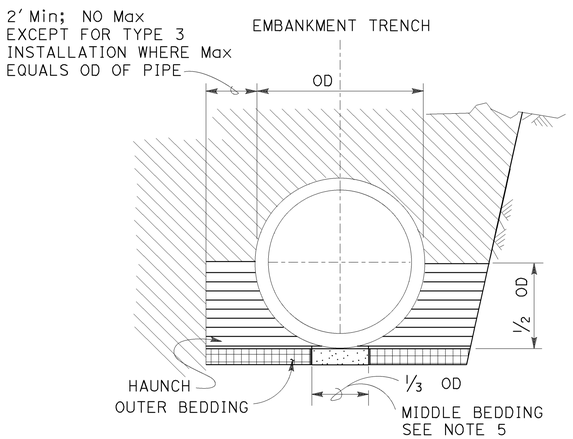

BACKFILL

LEGEND:

- ROADWAY EMBANKMENT
- STRUCTURE BACKFILL (CULVERT) FOR HAUNCH SEE NOTE 6
- STRUCTURE BACKFILL (CULVERT) FOR OUTER BEDDING SEE NOTE 6
- LOOSE BACKFILL
- STRUCTURE EXCAVATION (CULVERT)

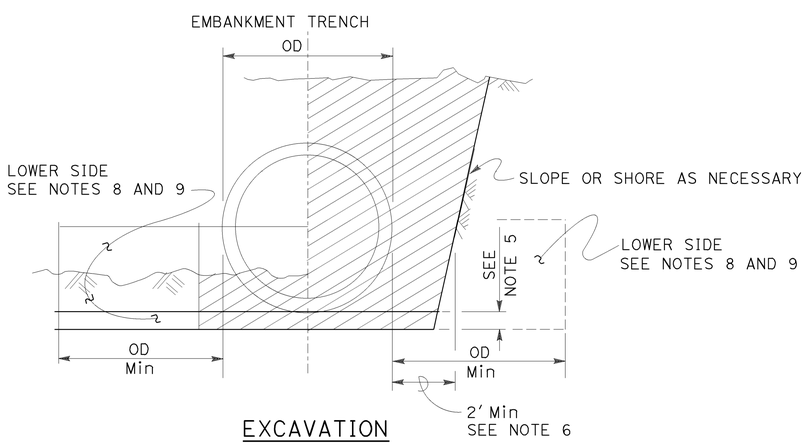

EXCAVATION

INSTALLATION TYPE 1:

The haunch and outer bedding shall be compacted to a minimum 90 percent relative compaction. In addition, the minimum sand equivalent in these areas shall be 30 and the maximum percentage passing the No. 200 sieve size shall be 12.

INSTALLATION TYPE 2:

The haunch and outer bedding shall be compacted to a minimum 90 percent relative compaction. In addition, the minimum sand equivalent in these areas shall be 25.

INSTALLATION TYPE 3:

The haunch and outer bedding shall be compacted to a minimum 85 percent relative compaction. 90 percent relative compaction will be required where the fill over the pipe is less than 4′-0″ or ½ OD. In addition, the minimum sand equivalent in these areas shall be 25 and the material shall not contain rocks, broken concrete, or other solid material exceeding 3″ in greatest dimension.

INSTALLATION TYPE 1

MINIMUM CLASS AND D-LOAD	COVER	
	60″ Dia AND SMALLER	OVER 60″ Dia TO 120″ Dia Max
CLASS II 1000D	14.9′	12.9′
CLASS III 1350D	15.0′ - 21.9′	13.0′ - 18.9′
CLASS III SPECIAL 1700D	22.0′ - 27.9′	19.0′ - 24.9′
CLASS IV 2000D	28.0′ - 32.9′	25.0′ - 29.9′
CLASS IV SPECIAL 2500D	33.0′ - 41.9′	30.0′ - 38.9′
CLASS V 3000D	42.0′ - 49.9′	39.0′ - 46.9′
CLASS V SPECIAL 3600D	50.0′ - 60.0′	47.0′ - 58.0′

INSTALLATION TYPE 2

MINIMUM CLASS AND D-LOAD	COVER	
	60″ Dia AND SMALLER	OVER 60″ Dia TO 120″ Dia Max
CLASS II 1000D	11.9′	9.9′
CLASS III 1350D	12.0′ - 15.9′	10.0′ - 14.9′
CLASS III SPECIAL 1700D	16.0′ - 20.9′	15.0′ - 19.9′
CLASS IV 2000D	21.0′ - 24.9′	20.0′ - 23.9′
CLASS IV SPECIAL 2500D	25.0′ - 31.9′	24.0′ - 30.9′
CLASS V 3000D	32.0′ - 37.9′	31.0′ - 37.9′
CLASS V SPECIAL 3600D	38.0′ - 46.0′	38.0′ - 46.0′

INSTALLATION TYPE 3

MINIMUM CLASS AND D-LOAD	COVER	
	60″ Dia AND SMALLER	OVER 60″ Dia TO 120″ Dia Max
CLASS II 1000D	8.9′	5.9′
CLASS III 1350D	9.0′ - 11.9′	6.0′ - 10.9′
CLASS III SPECIAL 1700D	12.0′ - 15.9′	11.0′ - 13.9′
CLASS IV 2000D	16.0′ - 18.9′	14.0′ - 17.9′
CLASS IV SPECIAL 2500D	19.0′ - 24.9′	18.0′ - 22.9′
CLASS V 3000D	25.0′ - 29.9′	23.0′ - 28.9′
CLASS V SPECIAL 3600D	30.0′ - 36.0′	29.0′ - 35.0′

NOTES:

1. Unless otherwise shown on the plans or specified in the special provision, the Contractor shall have the option of selecting the class of RCP and the type of installation to be used, provided the height of cover does not exceed the value shown for the RCP selected.
   Example: 24″ RCP culvert with maximum cover of 24′-0″ the options are:
   a) Class III Special or stronger with Installation Type 1.
   b) Class IV or stronger with Installation Type 2.
   c) Class IV Special or stronger with Installation Type 3.
   Cover is defined as the maximum vertical distance from top of the pipe to finished grade within the length of any given culvert.
2. The class of RCP and Installation Type selected shall be the same throughout the length of any given culvert.
3. The "length of any culvert" is defined as the culvert between:
   a) Successive drainage structure (inlets, junction boxes, headwalls, etc.).
   b) A drainage structure and the inlet or outlet end of the culvert.
   c) The inlet and outlet end of the culvert when there are no intervening drainage structures.
4. Oval and arch shaped RCP shall not be used.
5. Bedding depth: 1/25 OD Min, not less than 3″.
6. Slurry cement backfill may be substituted for backfill in the outer bedding and haunch areas. If slurry is used, the outer and middle beddings shall be omitted. Prior to installation, the soil under the middle ⅓ of the outside diameter of the pipe shall be softened by scarifying or other means to a minimum depth of 1/25 OD, but not less than 3″. Where slurry cement backfill is used, clear distance to trench wall may be reduced as set forth in the Standard Specifications.
7. Backfill shall be placed full width of excavation except where dimensions are shown for backfill width or thickness. Dimensions shown are minimum.
8. Lower side shall be suitable material as determined by the Engineer. Otherwise it shall be considered unsuitable as set forth in of the Standard Specifications. See Note 9.
9. Where the pipe is placed in a trench, if the trench walls are sloped at 5 vertical to 1 horizontal or steeper for at least 90 percent of the trench height or up to not less than 12″ from the grading plane, the firmness of the soil in the lower side need not be considered.
10. Non-reinforced precast concrete pipe sizes 3′-0″ or smaller may be placed under installation Types 1, 2 or 3.

STATE OF CALIFORNIA
DEPARTMENT OF TRANSPORTATION

EXCAVATION AND BACKFILL CONCRETE PIPE CULVERTS INDIRECT DESIGN METHOD

NO SCALE

RSP A62DA DATED JULY 18, 2014 SUPERSEDES STANDARD PLAN A62DA DATED MAY 20, 2011 - PAGE 24 OF THE STANDARD PLANS BOOK DATED 2010.

REVISED STANDARD PLAN RSP A62DA

2010 REVISED STANDARD PLAN RSP A62DA

Dist	COUNTY	ROUTE	POST MILES TOTAL PROJECT	SHEET No.	TOTAL SHEETS
08	SBd	15	11.1	34	46

Randell D. Hiatt
REGISTERED CIVIL ENGINEER

October 30, 2015
PLANS APPROVAL DATE

REGISTERED PROFESSIONAL ENGINEER Randell D. Hiatt No. C50200 Exp. 6-30-17 CIVIL STATE OF CALIFORNIA

THE STATE OF CALIFORNIA OR ITS OFFICERS OR AGENTS SHALL NOT BE RESPONSIBLE FOR THE ACCURACY OR COMPLETENESS OF SCANNED COPIES OF THIS PLAN SHEET.

TO ACCOMPANY PLANS DATED 5-17-16

2010 REVISED STANDARD PLAN RSP A78A

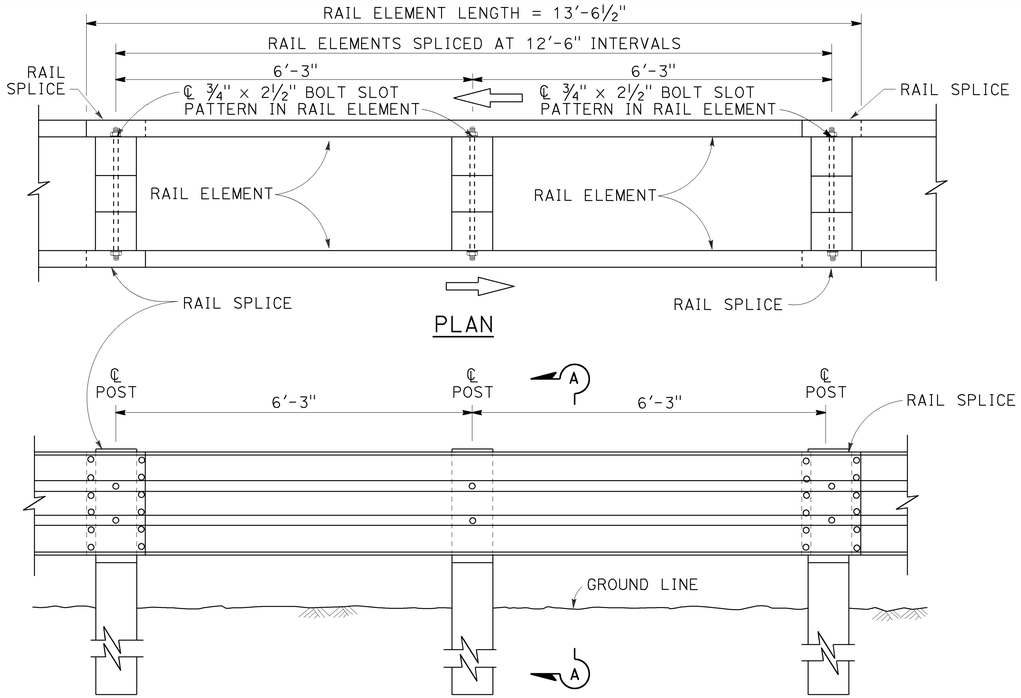

PLAN

ELEVATION

DOUBLE THRIE BEAM BARRIER

(Wood post and blocks)
See Note 1

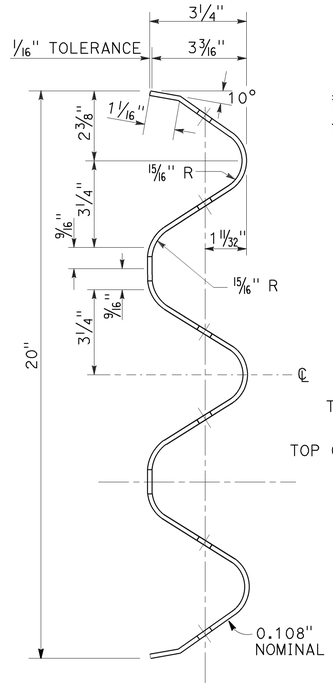

SECTION THRU RAIL ELEMENT

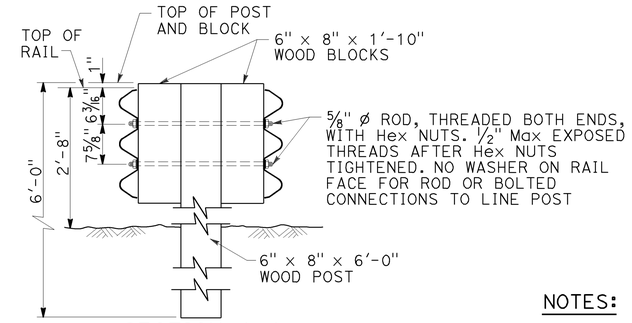

SECTION A-A

TYPICAL WOOD LINE POST INSTALLATION

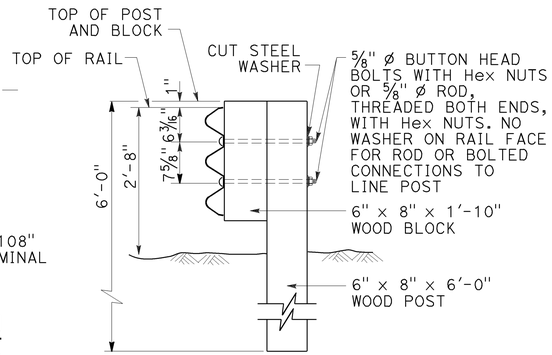

Where bolts are used, install so that the threaded end of the bolts and nuts are placed away from traffic side of rail.

SECTION B-B

TYPICAL WOOD LINE POST INSTALLATION

NOTES:

1. For details of steel post thrie beam barrier, see Standard Plan A78B.
2. For details of standard hardware, posts and blocks used to construct thrie beam barrier, see Standard Plan A78C1 and Revised Standard Plan RSP A78C2.
3. Thrie beam barrier post spacing to be 6'-3" center to center, except as otherwise noted.
4. Top of barrier rail to be 2'-8" above ground line or shoulder surfacing under the rail element.
5. For barrier end treatments and barrier connections, see Standard Plans A78E3 and A78G, and Revised Standard Plans RSP A78E1, RSP A78E2 RSP A77Q1, RSP A77Q2 and RSP A78H.
6. For connection to Concrete Barrier (Type 60), see Standard Plans A78I.
7. For details of thrie beam barrier on bridge see Standard Plan A78D2. For details of thrie beam barrier at fixed object, see Revised Standard Plan RSP A78D1.
8. See Project Plans for barrier delineation locations. Spacing of barrier markers to match spacing of raised pavement markers on adjacent median edgeline pavement delineation.
9. Install posts in soil.

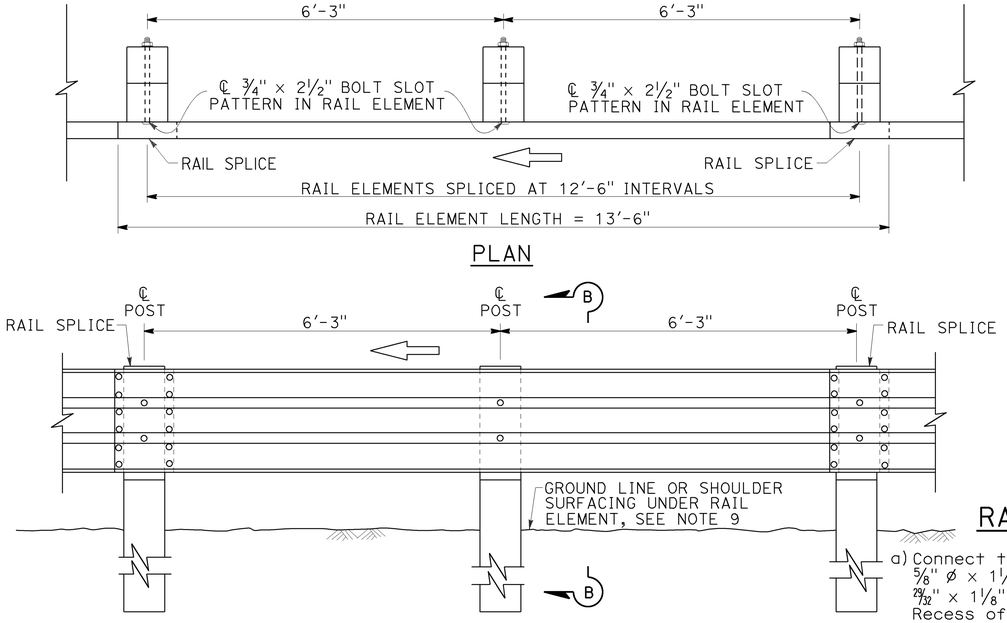

PLAN

ELEVATION

SINGLE THRIE BEAM BARRIER

(Wood post and blocks)
See Note 1

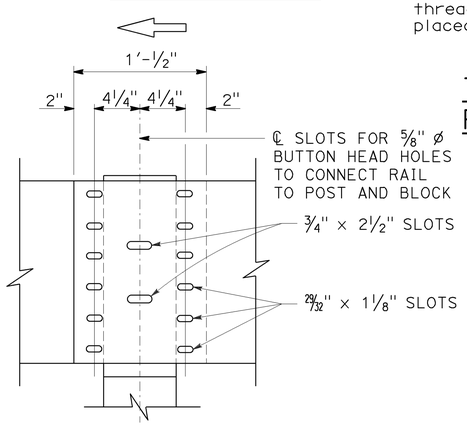

ELEVATION

RAIL ELEMENT SPLICE DETAIL

a) Connect the overlapped ends of the thrie beam rail elements with ⅝" ø x 1¼" button head oval shoulder bolts inserted into the 29/32" x 1⅛" slots and bolted together with ⅝" ø recessed hex nuts. Recess of hex nut points toward rail element. A total of 12 bolts and nuts are to be used at each rail splice connection.

b) The ends of the rail elements are to be overlapped in the direction of traffic (see details).

c) Where end cap is to be attached to the end of a rail element, a total of 4 of the above described splice bolts and nuts are to be used. Where a return cap is to be attached to the ends of rail elements, a total of 8 of the above described splice bolts and nuts are to be used.

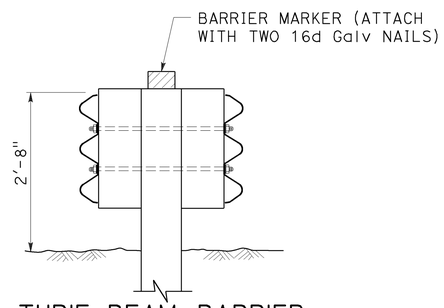

THRIE BEAM BARRIER DELINEATION

See Note 8

STATE OF CALIFORNIA
DEPARTMENT OF TRANSPORTATION

THRIE BEAM BARRIER STANDARD BARRIER RAILING SECTION (WOOD POST WITH WOOD BLOCK)

NO SCALE

RSP A78A DATED OCTOBER 30, 2015 SUPERSEDES RSP A78A DATED JULY 19, 2013 AND STANDARD PLAN A78A DATED MAY 20, 2011 - PAGE 89 OF THE STANDARD PLANS BOOK DATED 2010.

REVISED STANDARD PLAN RSP A78A

9-28-15

Dist	COUNTY	ROUTE	POST MILES TOTAL PROJECT	SHEET No.	TOTAL SHEETS
08	SBd	15	11.1	35	46

Randell D. Hiatt
REGISTERED CIVIL ENGINEER

October 19, 2012
PLANS APPROVAL DATE

REGISTERED PROFESSIONAL ENGINEER
Randell D. Hiatt
No. C50200
Exp. 6-30-13
CIVIL
STATE OF CALIFORNIA

THE STATE OF CALIFORNIA OR ITS OFFICERS OR AGENTS SHALL NOT BE RESPONSIBLE FOR THE ACCURACY OR COMPLETENESS OF SCANNED COPIES OF THIS PLAN SHEET.

TO ACCOMPANY PLANS DATED 5-17-16

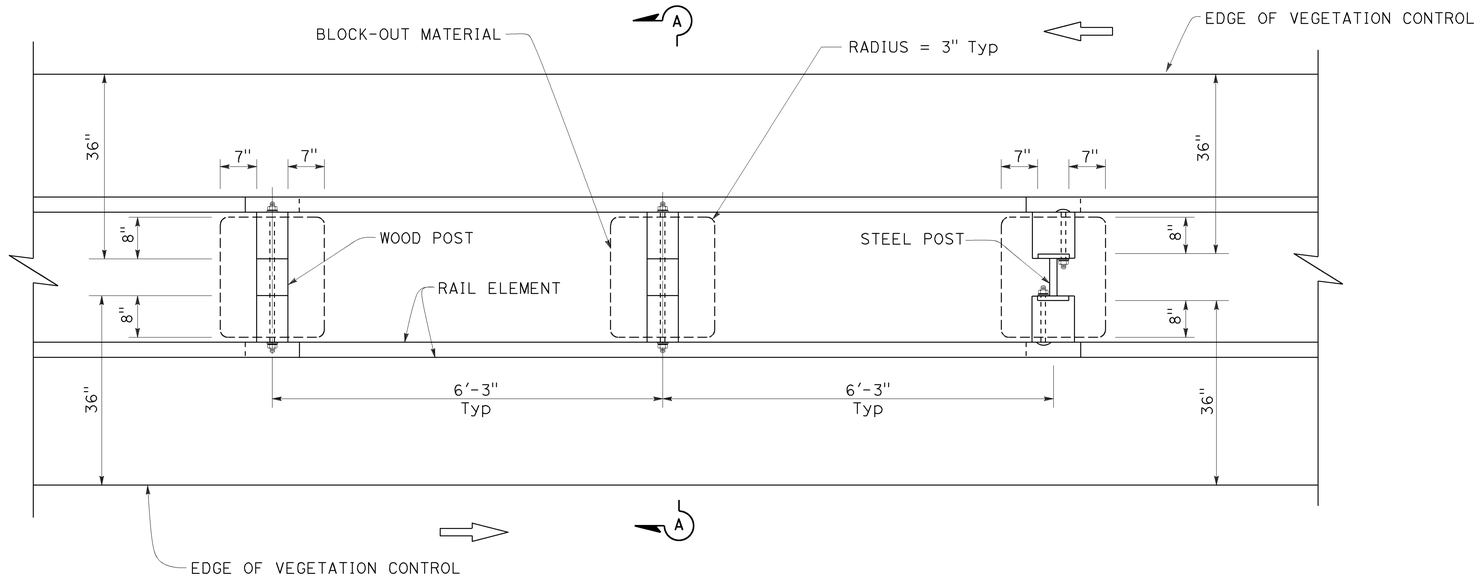

PLAN

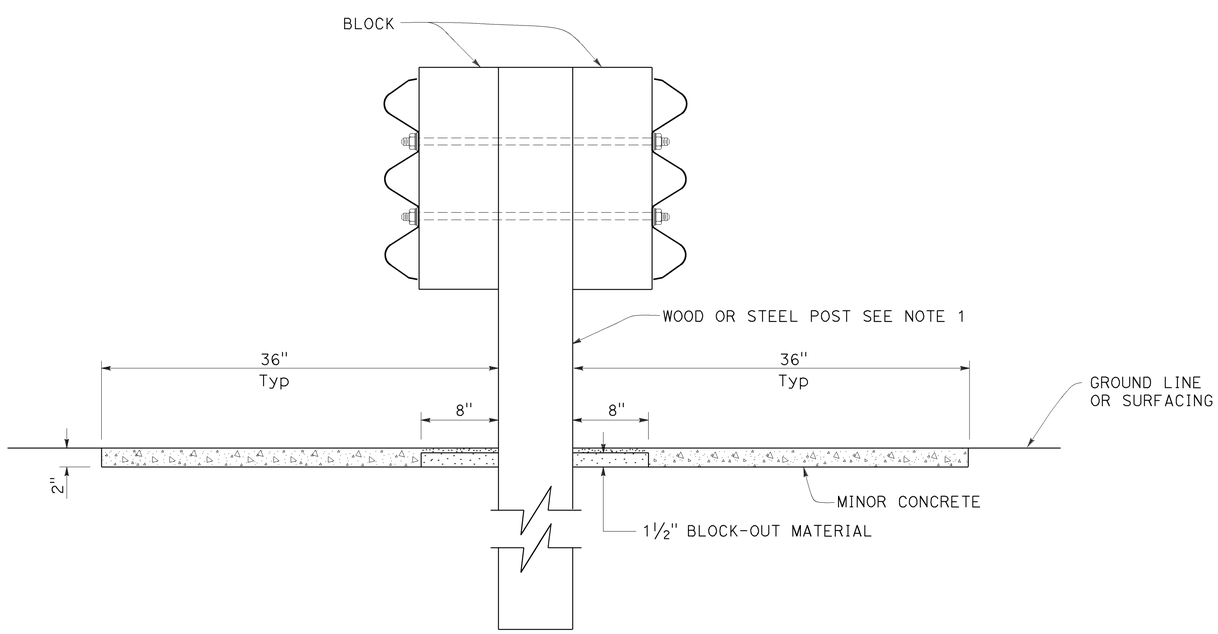

SECTION A-A

NOTES:

1. For wood and steel post sizes, see Standard Plan A78C2.
2. For details not shown, see Standard Plans A78A and A78B.

STATE OF CALIFORNIA
DEPARTMENT OF TRANSPORTATION

DOUBLE THRIE BEAM BARRIER TYPICAL VEGETATION CONTROL STANDARD BARRIER RAILING SECTION

NO SCALE

RSP A78C4 DATED OCTOBER 19, 2012 SUPERSEDES STANDARD PLAN A78C4
DATED MAY 20, 2011 - PAGE 94 OF THE STANDARD PLANS BOOK DATED 2010.

REVISED STANDARD PLAN RSP A78C4

2010 REVISED STANDARD PLAN RSP A78C4

9-26-12

Dist	COUNTY	ROUTE	POST MILES TOTAL PROJECT	SHEET No.	TOTAL SHEETS
08	SBd	15	11.1	36	46

William K. Farnbach
REGISTERED CIVIL ENGINEER

July 19, 2013
PLANS APPROVAL DATE

REGISTERED PROFESSIONAL ENGINEER
William K. Farnbach
No. C49042
Exp. 9-30-14
CIVIL
STATE OF CALIFORNIA

THE STATE OF CALIFORNIA OR ITS OFFICERS OR AGENTS SHALL NOT BE RESPONSIBLE FOR THE ACCURACY OR COMPLETENESS OF SCANNED COPIES OF THIS PLAN SHEET.

TO ACCOMPANY PLANS DATED 5-17-16

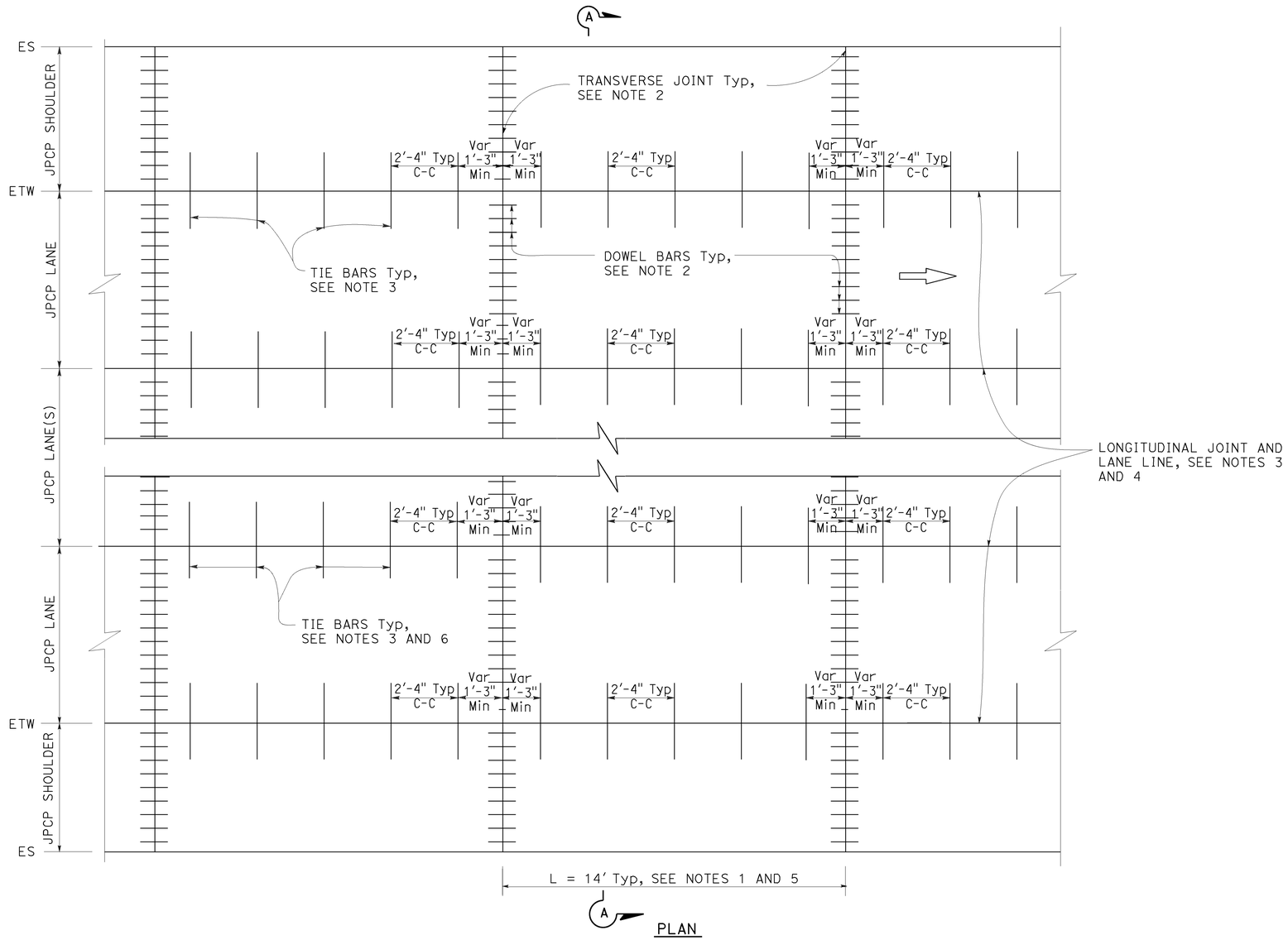

PLAN

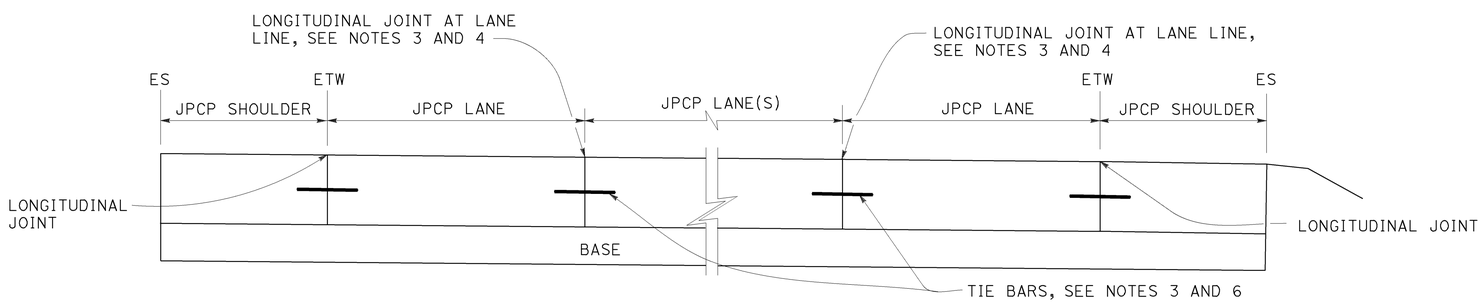

SECTION A-A

NOTES:

1. Transverse joint spacing may be adjusted to no less than 10' and no more than 14' to conform to bridges, change in pavement type, and hardened concrete pavement.
2. For transverse joint and dowel bar details not shown, see Revised Standard Plan RSP P10.
3. For longitudinal joint and tie bar details not shown, see Revised Standard Plan RSP P15.
4. For additional longitudinal joint layout details, see Revised Standard Plan RSP P18.
5. For joint layout at intersections, see Project Plans.
6. For dowel bars at longitudinal joint. see Revised Standard Plan RSP P18.

STATE OF CALIFORNIA
DEPARTMENT OF TRANSPORTATION

JOINTED PLAIN CONCRETE PAVEMENT NEW CONSTRUCTION

NO SCALE

RSP P1 DATED JULY 19, 2013 SUPERSEDES STANDARD PLAN P1
DATED MAY 20, 2011 - PAGE 125 OF THE STANDARD PLANS BOOK DATED 2010.

REVISED STANDARD PLAN RSP P1

2010 REVISED STANDARD PLAN RSP P1

5-31-13

Dist	COUNTY	ROUTE	POST MILES TOTAL PROJECT	SHEET No.	TOTAL SHEETS
08	SBd	15	11.1	37	46

William K. Farnbach
REGISTERED CIVIL ENGINEER

July 19, 2013
PLANS APPROVAL DATE

REGISTERED PROFESSIONAL ENGINEER William K. Farnbach No. C49042 Exp. 9-30-14 CIVIL STATE OF CALIFORNIA

THE STATE OF CALIFORNIA OR ITS OFFICERS OR AGENTS SHALL NOT BE RESPONSIBLE FOR THE ACCURACY OR COMPLETENESS OF SCANNED COPIES OF THIS PLAN SHEET.

TO ACCOMPANY PLANS DATED 5-17-16

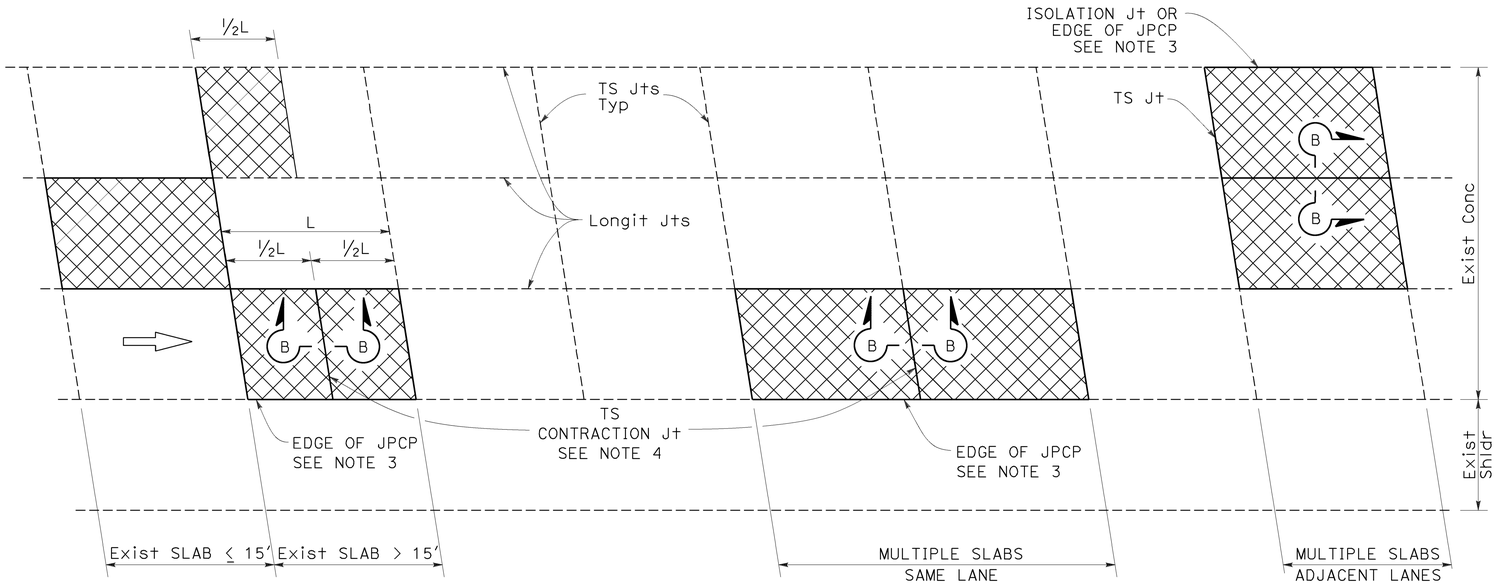

PLAN

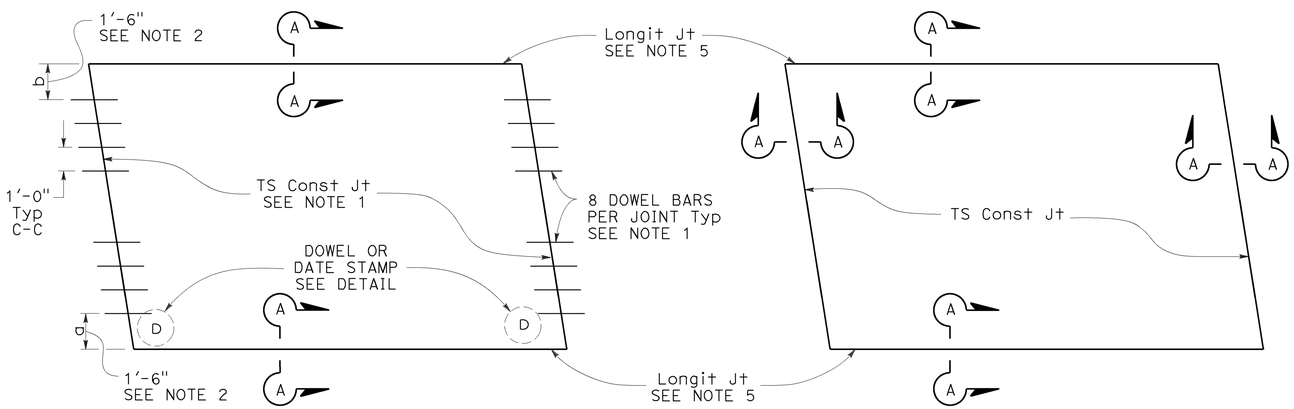

TYPE I
See Design Note 1

TYPE II
See Design Note 2

SLAB LAYOUT

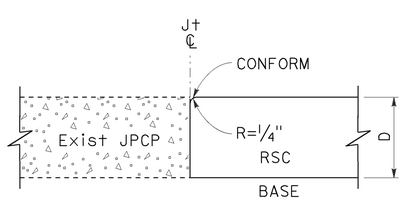

SECTION A-A

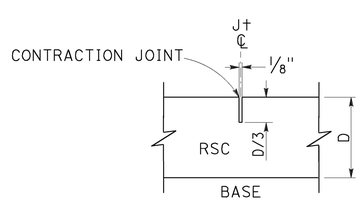

SECTION B-B

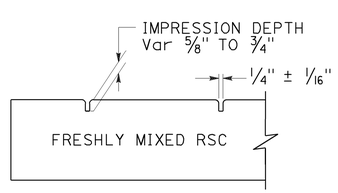

SECTION C-C

LEGEND:

RSC RAPID STRENGTH CONCRETE

INDIVIDUAL SLAB REPLACEMENT WITH RSC

NOTES:

1. For details not shown, see Revised Standard Plan RSP P10.
2. Where the existing outside shoulder is asphalt concrete pavement, "a" = 1'-0" and "b" = 2'-0".
3. Use side forms where edge of RSC pavement is adjacent to asphalt concrete.
4. Transverse contraction joint to match skew of existing joint. Omit dowel bars.
5. Do not place tie bars at longitudinal joints.

DESIGN NOTES:

1. For concrete slab repair with at least 5 years design life.
2. For short term repairs < 5 yrs design life or for slab replacements with cracking and seating.

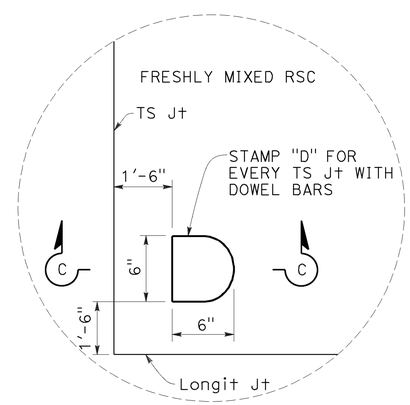

DOWEL STAMP DETAIL

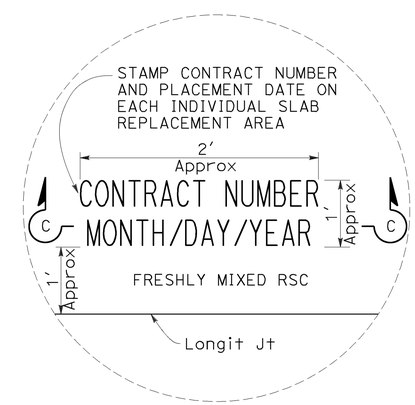

DATE STAMP DETAIL

STATE OF CALIFORNIA
DEPARTMENT OF TRANSPORTATION

INDIVIDUAL SLAB REPLACEMENT WITH RAPID STRENGTH CONCRETE

NO SCALE

RSP P8 DATED JULY 19, 2013 SUPERSEDES RSP P8 DATED APRIL 20, 2012 AND STANDARD PLAN P8 DATED MAY 20, 2011 - PAGE 130 OF THE STANDARD PLANS BOOK DATED 2010.

REVISED STANDARD PLAN RSP P8

2010 REVISED STANDARD PLAN RSP P8

5-31-13

Dist	COUNTY	ROUTE	POST MILES TOTAL PROJECT	SHEET No.	TOTAL SHEETS
08	SBd	15	11.1	38	46

William K. Farnbach
REGISTERED CIVIL ENGINEER

July 19, 2013
PLANS APPROVAL DATE

REGISTERED PROFESSIONAL ENGINEER William K. Farnbach No. C49042 Exp. 9-30-14 CIVIL STATE OF CALIFORNIA

THE STATE OF CALIFORNIA OR ITS OFFICERS OR AGENTS SHALL NOT BE RESPONSIBLE FOR THE ACCURACY OR COMPLETENESS OF SCANNED COPIES OF THIS PLAN SHEET.

TO ACCOMPANY PLANS DATED 5-17-16

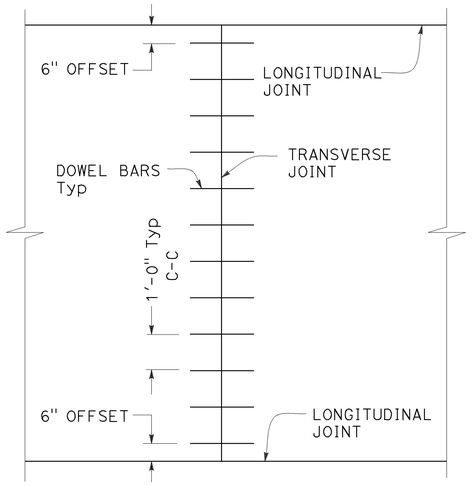

TRANSVERSE JOINT DOWEL BAR LAYOUT

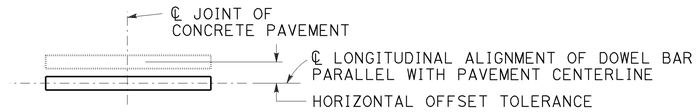

PLAN

HORIZONTAL OFFSET TOLERANCE

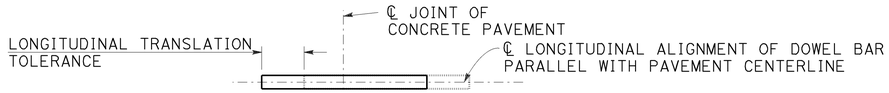

PLAN

LONGITUDINAL TRANSLATION TOLERANCE

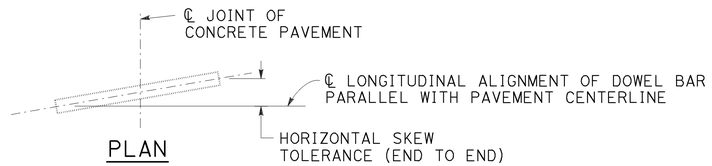

PLAN

HORIZONTAL SKEW TOLERANCE

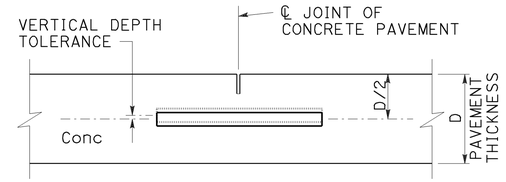

ELEVATION

VERTICAL DEPTH TOLERANCE

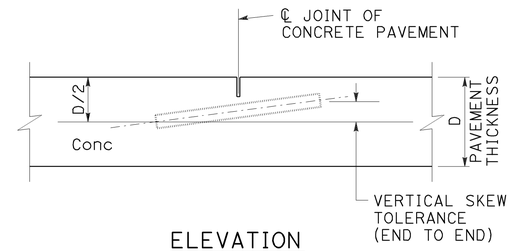

ELEVATION

VERTICAL SKEW TOLERANCE

NOTES:

1. See Revised Standard Plan RSP P1 for typical dowel bar placement and locations.
2. Where fresh concrete pavement is placed against new concrete or existing concrete pavement, rounding the corner of the existing concrete pavement is not required.
3. May also use ¾" Dia dowel bars 2'-4" ± ¼" in length. Center the length of dowel bars at the centerline of longitudinal joint.

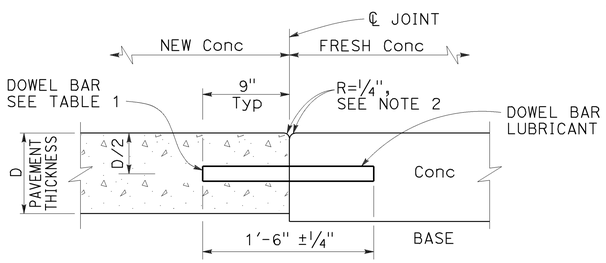

TRANSVERSE CONSTRUCTION JOINT DETAIL

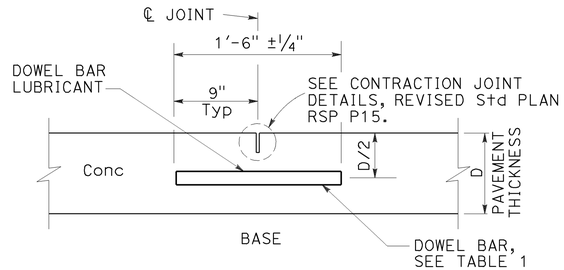

TRANSVERSE CONTRACTION JOINT

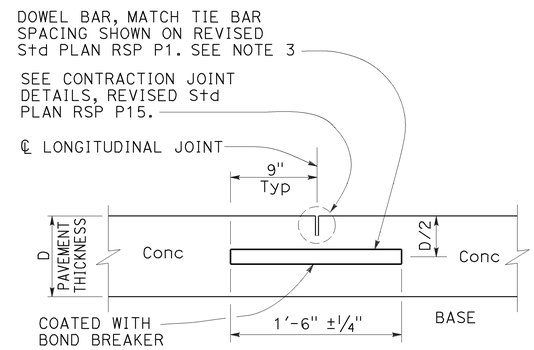

LONGITUDINAL CONTRACTION JOINT WITH DOWEL BARS

See Revised Std Plan RSP P18

TABLE 1

DOWEL BAR DIAMETER TABLE			
PAVEMENT THICKNESS	0.65'	> 0.65' - 0.85'	> 0.85'
MINIMUM DOWEL * BAR DIAMETER	1"	1¼"	1½"

* The drilled hole diameter must be ⅛" to 3/16" larger than the bar diameter.

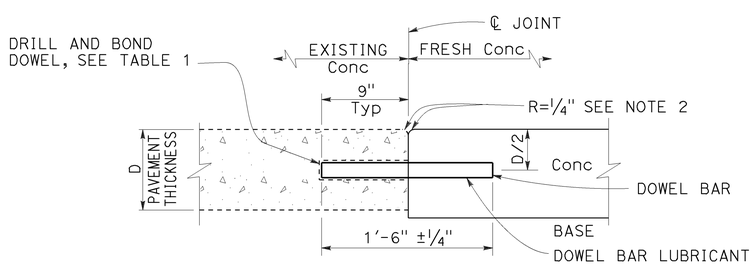

TRANSVERSE CONSTRUCTION JOINT FOR EXISTING CONCRETE PAVEMENT

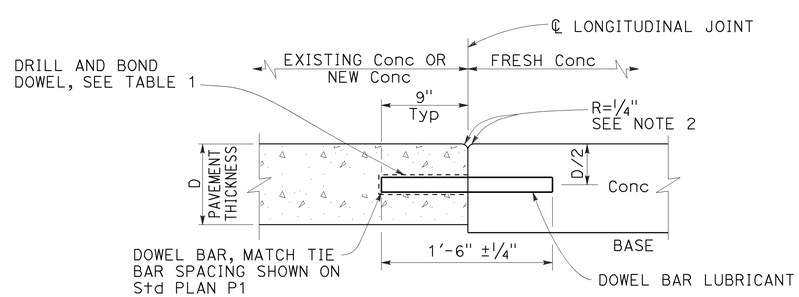

LONGITUDINAL CONSTRUCTION JOINT WITH DOWEL BARS

See Revised Std Plan RSP P18

STATE OF CALIFORNIA
DEPARTMENT OF TRANSPORTATION

CONCRETE PAVEMENT DOWEL BAR DETAILS

NO SCALE

RSP P10 DATED JULY 19, 2013 SUPERSEDES RSP P10 DATED APRIL 20, 2012 AND STANDARD PLAN P10 DATED MAY 20, 2011 - PAGE 131 OF THE STANDARD PLANS BOOK DATED 2010.

REVISED STANDARD PLAN RSP P10

2010 REVISED STANDARD PLAN RSP P10

5-31-13

Dist	COUNTY	ROUTE	POST MILES TOTAL PROJECT	SHEET No.	TOTAL SHEETS
08	SBd	15	11.1	39	46

William K. Farnbach
REGISTERED CIVIL ENGINEER

July 19, 2013
PLANS APPROVAL DATE

REGISTERED PROFESSIONAL ENGINEER William K. Farnbach No. C49042 Exp. 9-30-14 CIVIL STATE OF CALIFORNIA

THE STATE OF CALIFORNIA OR ITS OFFICERS OR AGENTS SHALL NOT BE RESPONSIBLE FOR THE ACCURACY OR COMPLETENESS OF SCANNED COPIES OF THIS PLAN SHEET.

TO ACCOMPANY PLANS DATED 5-17-16

2010 REVISED STANDARD PLAN RSP P12

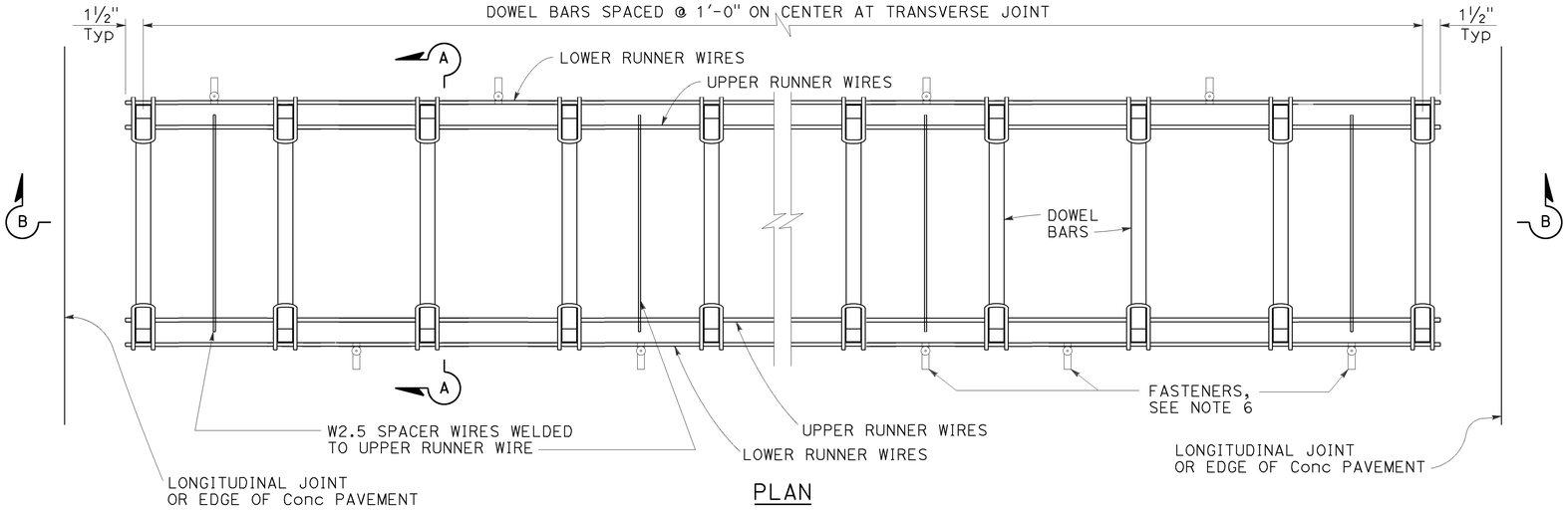

PLAN

DOWEL BAR BASKET (TRANSVERSE JOINT)

See Note 1

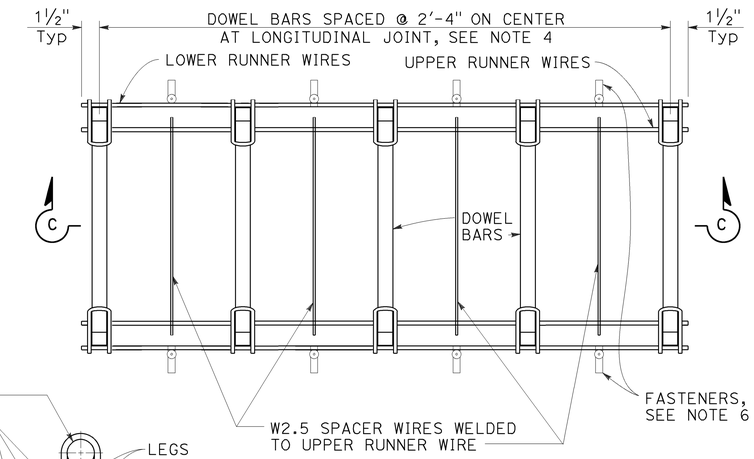

PLAN

DOWEL BAR BASKET (LONGITUDINAL JOINT)

See Note 1

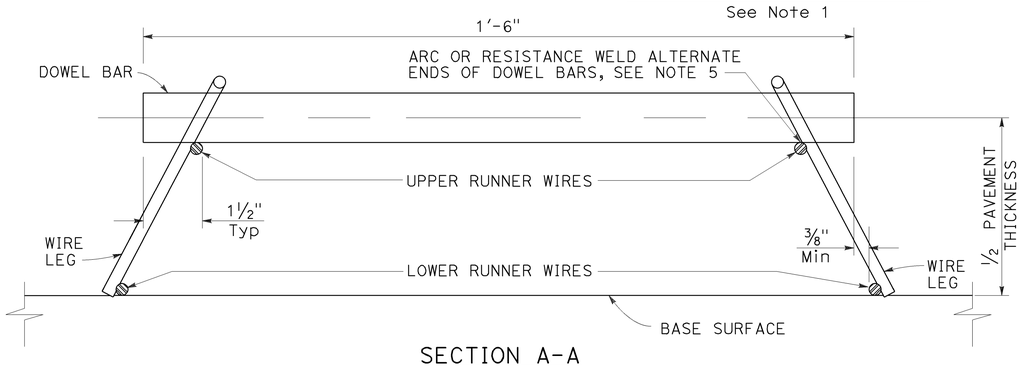

SECTION A-A

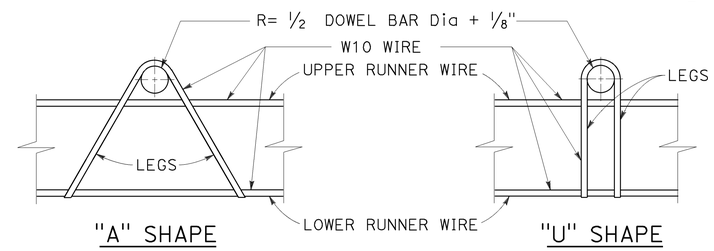

ASSEMBLY FRAME DETAILS

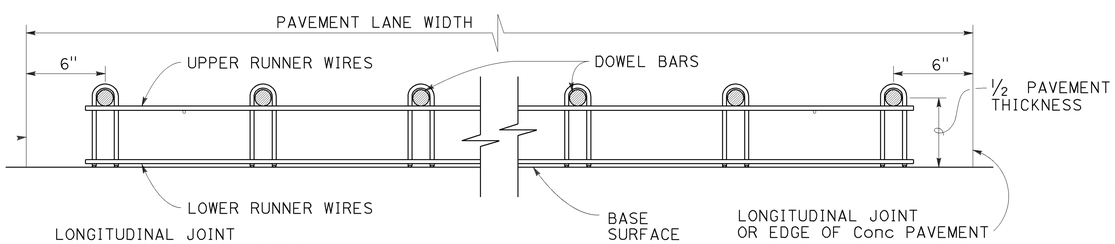

SECTION B-B

See Note 1

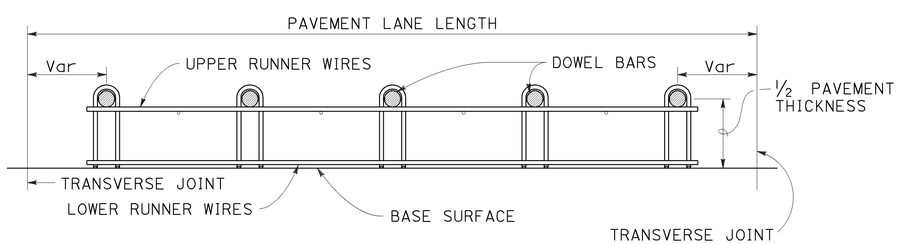

SECTION C-C

See Notes 1 and 4

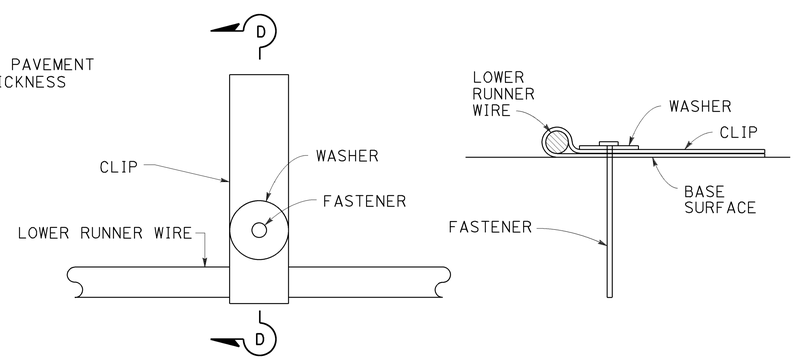

PLAN

SECTION D-D

FASTENER DETAIL

See Note 6

NOTES:

1. "U" frame shape assembly shown. Use either "U" frame shape or "A" frame shape.
2. Wire sizes shown are the minimum required.
3. All wire intersections must be resistance welded.
4. Use tie bar spacing for longitudinal dowel bar locations. See Revised Standard Plans RSP P1, RSP P2, RSP P3A, and RSP P3B for tie bar requirements.
5. Weld may be at the top or bottom of the dowel bar.
6. Use anchor pins where soil or granular base is used. See Revised Standard Plan RSP P17 for Anchor Pin Detail.

STATE OF CALIFORNIA
DEPARTMENT OF TRANSPORTATION

CONCRETE PAVEMENT DOWEL BAR BASKET DETAILS

NO SCALE

RSP P12 DATED JULY 19, 2013 SUPERSEDES STANDARD PLAN P12
DATED MAY 20, 2011 - PAGE 132 OF THE STANDARD PLANS BOOK DATED 2010.

REVISED STANDARD PLAN RSP P12

5-31-13

Dist	COUNTY	ROUTE	POST MILES TOTAL PROJECT	SHEET No.	TOTAL SHEETS
08	SBd	15	11.1	40	46

REGISTERED CIVIL ENGINEER

July 19, 2013
PLANS APPROVAL DATE

REGISTERED PROFESSIONAL ENGINEER William K. Farnbach No. C49042 Exp. 9-30-14 CIVIL STATE OF CALIFORNIA

THE STATE OF CALIFORNIA OR ITS OFFICERS OR AGENTS SHALL NOT BE RESPONSIBLE FOR THE ACCURACY OR COMPLETENESS OF SCANNED COPIES OF THIS PLAN SHEET.

TO ACCOMPANY PLANS DATED 5-17-16

2010 REVISED STANDARD PLAN RSP P15

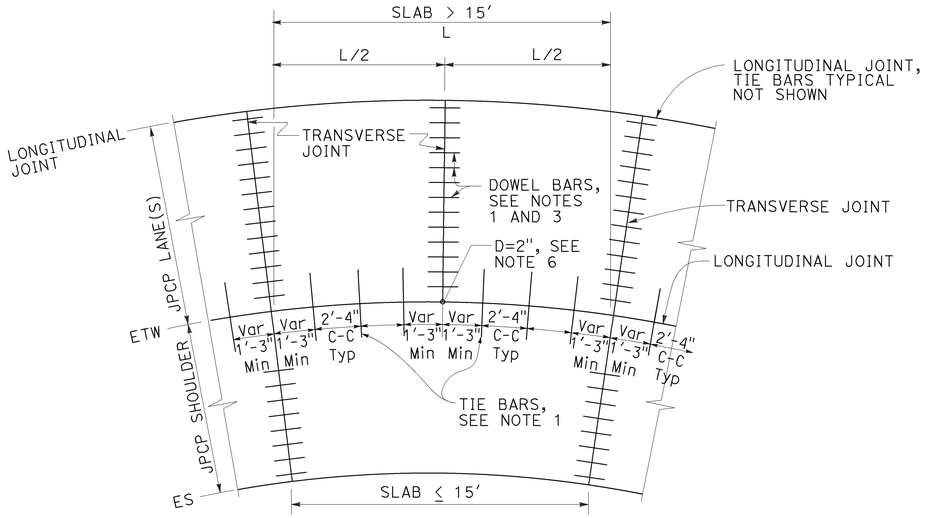

TIE BAR LAYOUT IN CURVED LANES

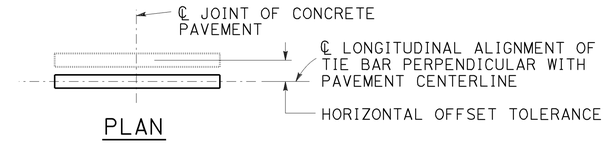

PLAN

HORIZONTAL OFFSET TOLERANCE

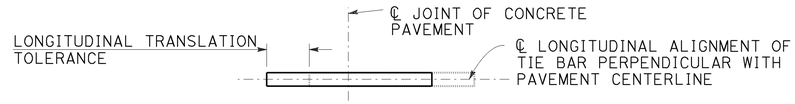

PLAN

LONGITUDINAL TRANSLATION TOLERANCE

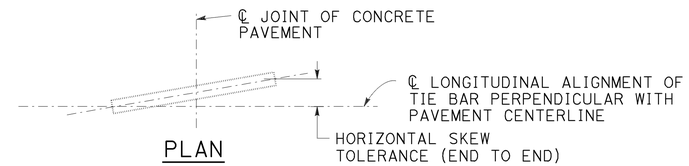

PLAN

HORIZONTAL SKEW TOLERANCE

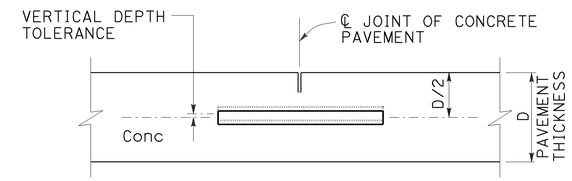

ELEVATION

VERTICAL DEPTH TOLERANCE

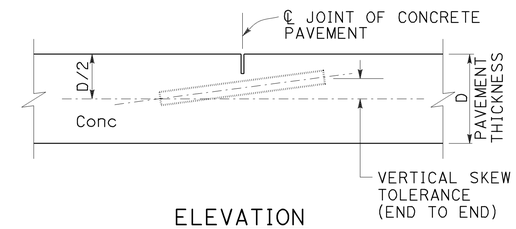

ELEVATION

VERTICAL SKEW TOLERANCE

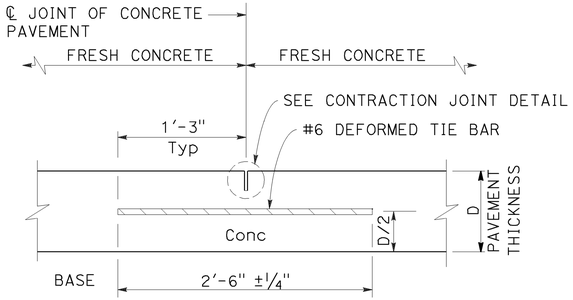

LONGITUDINAL CONTRACTION JOINT

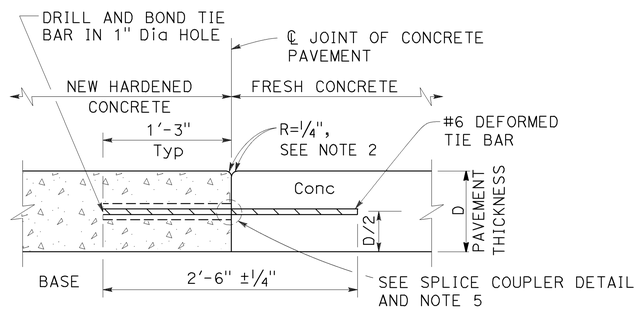

LONGITUDINAL CONSTRUCTION JOINT

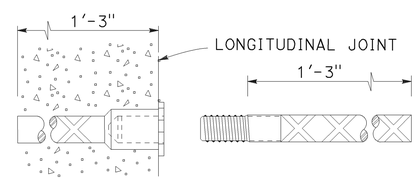

ALTERNATIVE SPLICE COUPLER

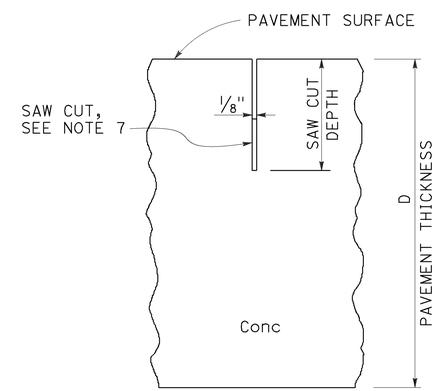

CONTRACTION JOINT DETAIL

NOTES:

1. See Revised Standard Plan RSP P1 for typical dowel bar and tie bar placement and locations.
2. Where new pavement is placed against existing concrete pavement, rounding the corner is not required.
3. For dowel bar sizes, See Revised Standard Plan RSP P10.
4. Tie bar details apply to inside widenings.
5. Use either drill and bond or splice couplers.
6. Full depth drilled hole. Fill hole with filler material.
7. The bottom of the saw cut must be at least 0.5" clear of any dowel bar, tie bar and bar reinforcement.

STATE OF CALIFORNIA
DEPARTMENT OF TRANSPORTATION

CONCRETE PAVEMENT-TIE BAR DETAILS

NO SCALE

RSP P15 DATED JULY 19, 2013 SUPPLEMENTS THE STANDARD PLANS BOOK DATED 2010.

REVISED STANDARD PLAN RSP P15

5-31-13

Dist	COUNTY	ROUTE	POST MILES TOTAL PROJECT	SHEET No.	TOTAL SHEETS
08	SBd	15	11.1	41	46

William K. Farnbach
REGISTERED CIVIL ENGINEER

July 19, 2013
PLANS APPROVAL DATE

REGISTERED PROFESSIONAL ENGINEER William K. Farnbach No. C49042 Exp. 9-30-14 CIVIL STATE OF CALIFORNIA

THE STATE OF CALIFORNIA OR ITS OFFICERS OR AGENTS SHALL NOT BE RESPONSIBLE FOR THE ACCURACY OR COMPLETENESS OF SCANNED COPIES OF THIS PLAN SHEET.

TO ACCOMPANY PLANS DATED 5-17-16

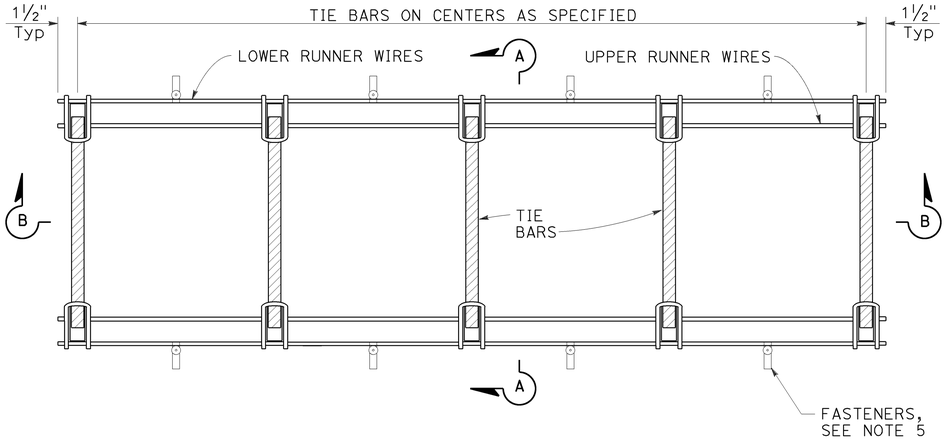

PLAN

TIE BAR BASKET

(Tie bars at longitudinal joint)
See Note 1

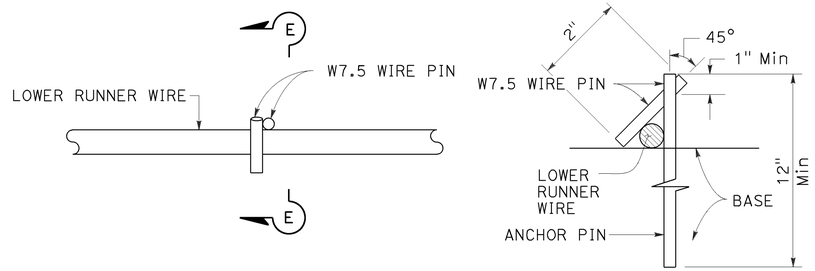

PLAN

SECTION E-E

ANCHOR PIN DETAIL

See Note 5

NOTES:

1. "U" frame shape assembly shown. Use either "U" frame shape or "A" frame shape.
2. Wire sizes shown are the minimum required.
3. All wire intersections must be resistance welded.
4. Weld may be at top or bottom of tie bars.
5. Use anchor pins where soil or granular base is used.

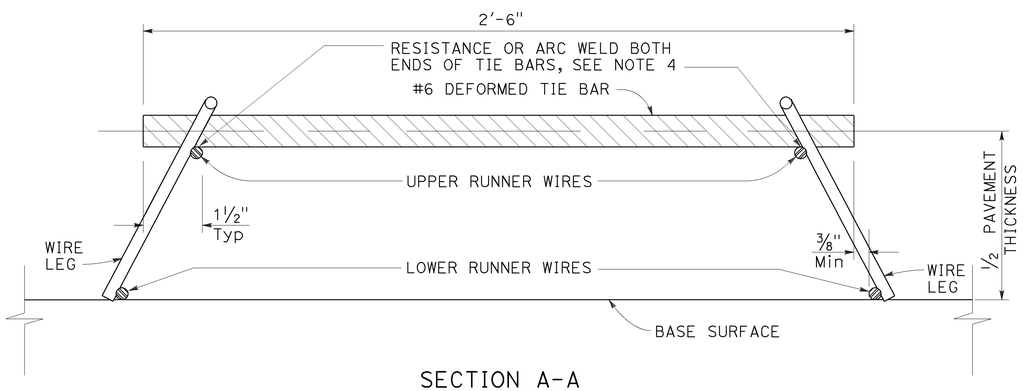

SECTION A-A

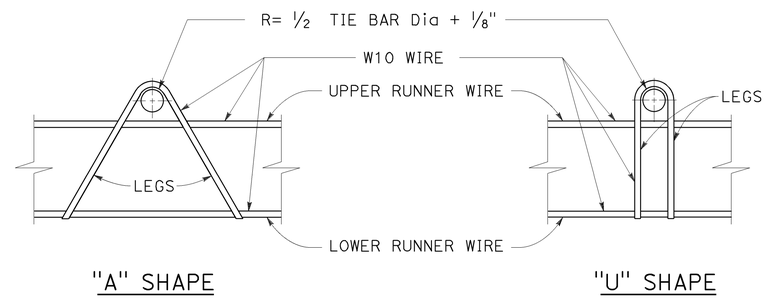

"A" SHAPE

"U" SHAPE

ASSEMBLY FRAME DETAILS

See Note 1

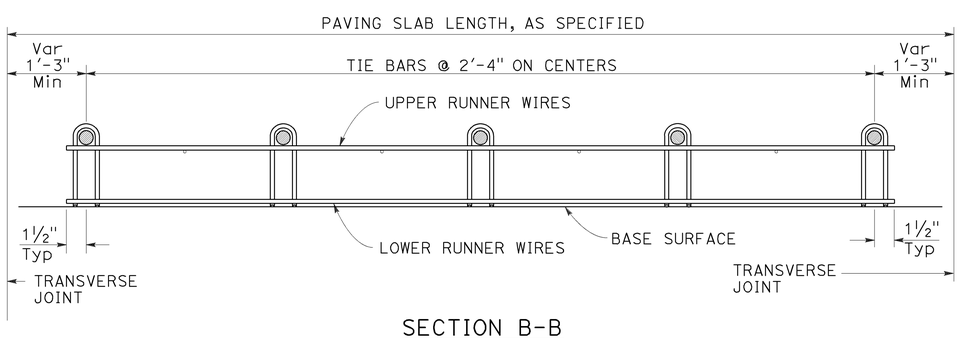

SECTION B-B

See Note 1

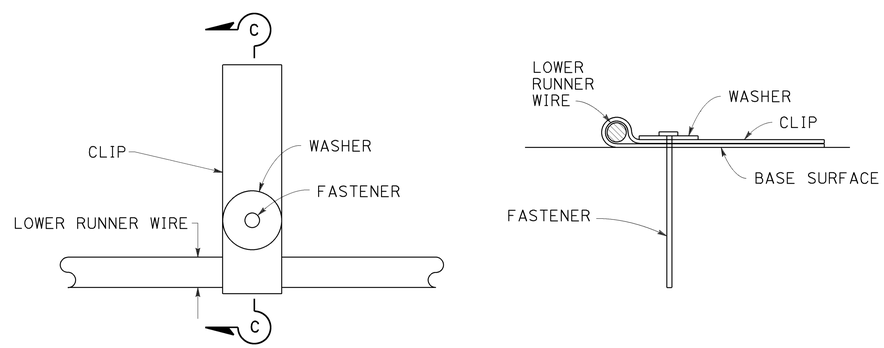

PLAN

SECTION C-C

FASTENER DETAIL

STATE OF CALIFORNIA
DEPARTMENT OF TRANSPORTATION

CONCRETE PAVEMENT TIE BAR BASKET DETAILS

NO SCALE

RSP P17 DATED JULY 19, 2013 SUPERSEDES STANDARD PLAN P17
DATED MAY 20, 2011 - PAGE 134 OF THE STANDARD PLANS BOOK DATED 2010.

REVISED STANDARD PLAN RSP P17

2010 REVISED STANDARD PLAN RSP P17

5-31-13

Dist	COUNTY	ROUTE	POST MILES TOTAL PROJECT	SHEET No.	TOTAL SHEETS
08	SBd	15	11.1	42	46

William K. Farnbach
REGISTERED CIVIL ENGINEER

July 19, 2013
PLANS APPROVAL DATE

REGISTERED PROFESSIONAL ENGINEER
William K. Farnbach
No. C49042
Exp. 9-30-14
CIVIL
STATE OF CALIFORNIA

THE STATE OF CALIFORNIA OR ITS OFFICERS OR AGENTS SHALL NOT BE RESPONSIBLE FOR THE ACCURACY OR COMPLETENESS OF SCANNED COPIES OF THIS PLAN SHEET.

TO ACCOMPANY PLANS DATED 5-17-16

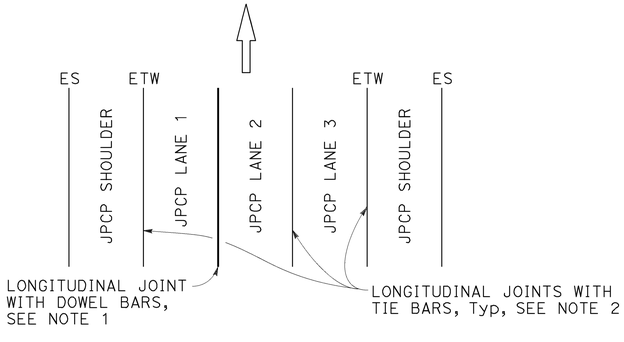

3 LANES WITH CONCRETE SHOULDERS
PLAN

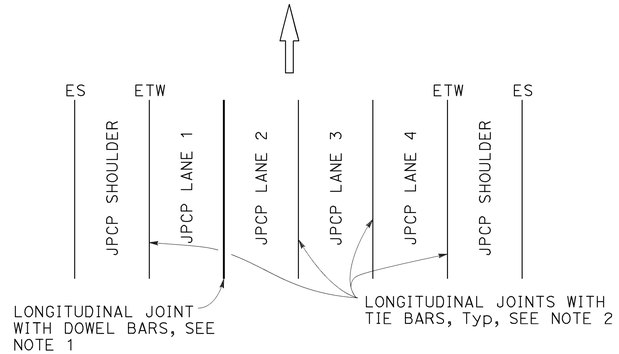

4 LANES WITH CONCRETE SHOULDERS
PLAN

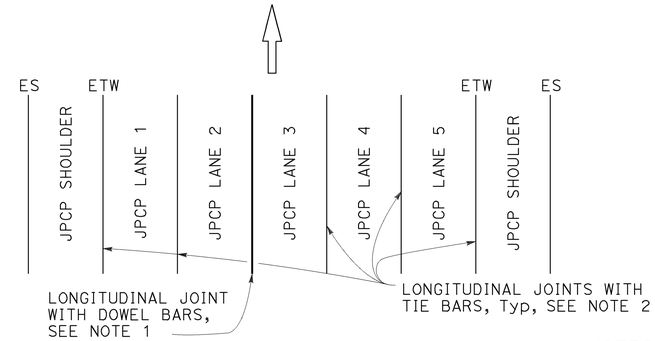

5 LANES WITH CONCRETE SHOULDERS
PLAN

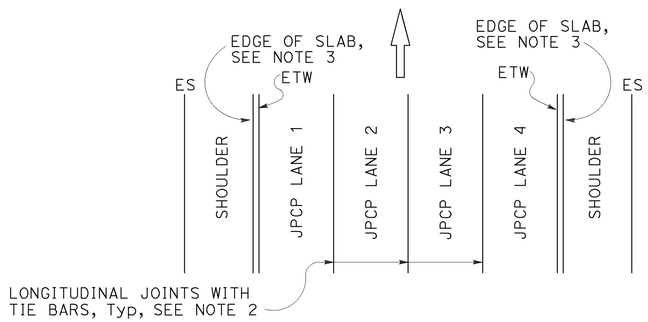

4 LANES OR LESS WITH AC SHOULDERS
PLAN

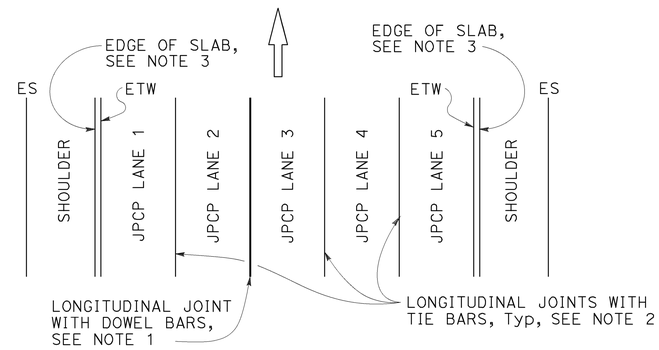

5 LANES WITH AC SHOULDERS
PLAN

NEW CONSTRUCTION

Location of Longitudinal Joints
For JPCP

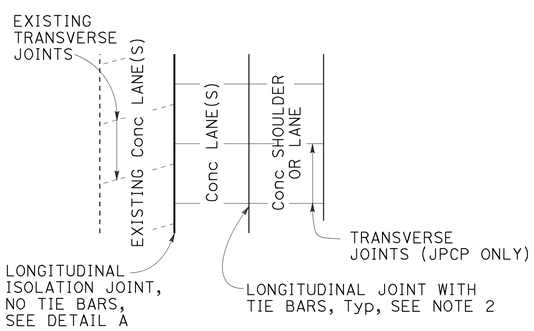

CASE 1
PLAN

Transverse Joints do not align between new and existing.

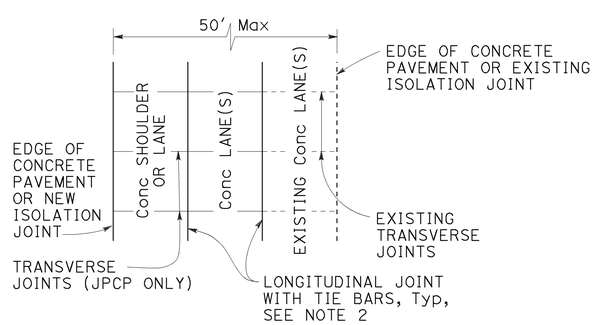

CASE 2
PLAN

Transverse Joints align between new and existing.
(For JPCP only)

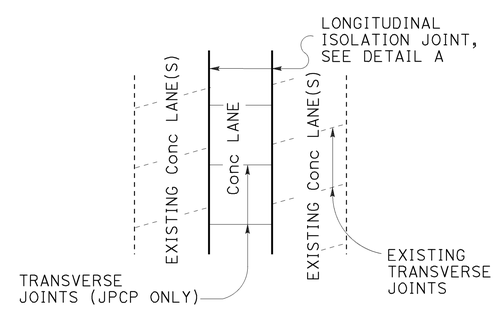

CASE 3 (INTERIOR LANE REPLACEMENT)
PLAN

Transverse Joints do not align between new and existing.

LANE/SHOULDER ADDITION OR RECONSTRUCTION

For JPCP and CRCP

NOTES:

1. See Revised Standard Plan RSP P10 for longitudinal joint with dowel bars.
2. See Revised Standard Plan RSP P15 for longitudinal joint with tie bars.
3. S= Reservoir depth.
   S= 7/8" ± 1/16" for asphalt rubber seals
   S= 9/16" ± 1/16" for silicone seals
   Preformed compression seals must be 13/16" wide and S= 1 11/16" ± 1/16"

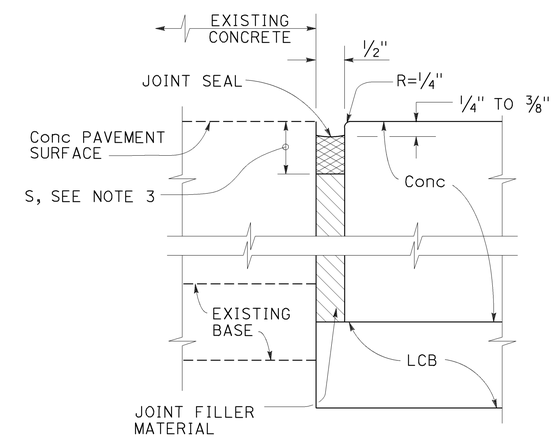

DETAIL "A"

ISOLATION JOINT

STATE OF CALIFORNIA
DEPARTMENT OF TRANSPORTATION

CONCRETE PAVEMENT LANE SCHEMATICS AND ISOLATION JOINT DETAIL

NO SCALE

RSP P18 DATED JULY 19, 2013 SUPERSEDES RSP P18 DATED APRIL 20, 2012 AND STANDARD PLAN P18 DATED MAY 20, 2011 - PAGE 135 OF THE STANDARD PLANS BOOK DATED 2010.

REVISED STANDARD PLAN RSP P18

2010 REVISED STANDARD PLAN RSP P18

5-31-13

Dist	COUNTY	ROUTE	POST MILES TOTAL PROJECT	SHEET No.	TOTAL SHEETS
08	SBd	15	11.1	43	46

William K. Farnbach
REGISTERED CIVIL ENGINEER

July 19, 2013
PLANS APPROVAL DATE

REGISTERED PROFESSIONAL ENGINEER
William K. Farnbach
No. C49042
Exp. 9-30-14
CIVIL
STATE OF CALIFORNIA

THE STATE OF CALIFORNIA OR ITS OFFICERS OR AGENTS SHALL NOT BE RESPONSIBLE FOR THE ACCURACY OR COMPLETENESS OF SCANNED COPIES OF THIS PLAN SHEET.

TO ACCOMPANY PLANS DATED 5-17-16

2010 REVISED STANDARD PLAN RSP P20

NOTES:

1. Details do not apply to isolation joints and longitudinal construction joints.
2. Tie bars, dowel bars, and bar reinforcement are not shown.
3. Depths are measured from the final concrete pavement surface elevation after any grinding.

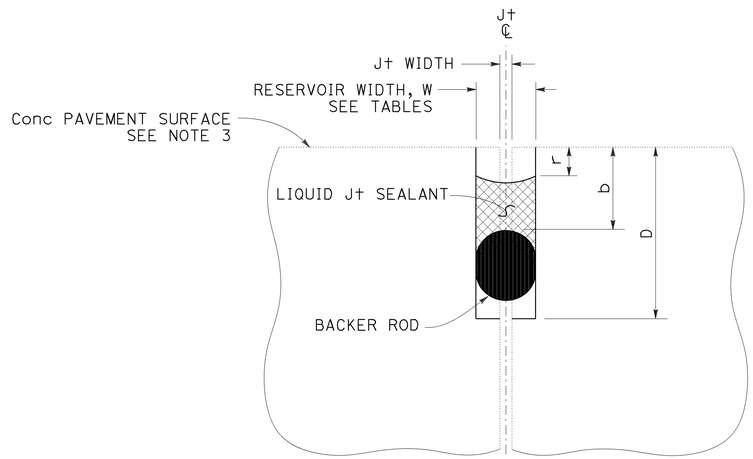

LIQUID JOINT SEALANT

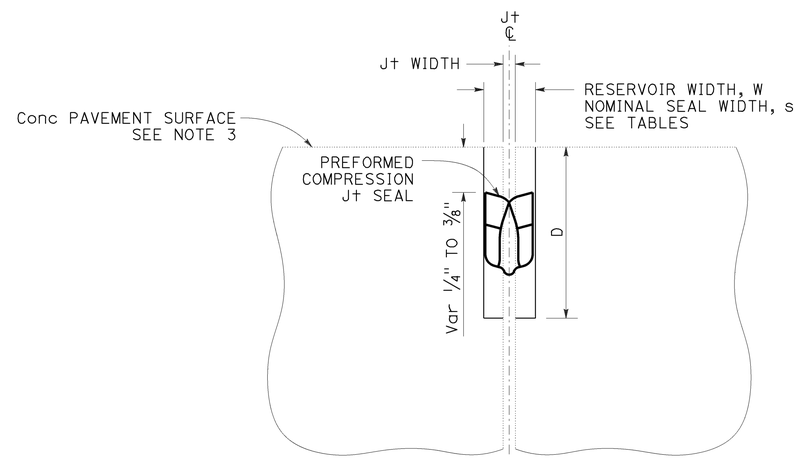

PREFORMED COMPRESSION JOINT SEAL

Const SEASON	Min RESERVOIR WIDTH * W ± 1/16"
WINTER	1/4"
SPRING	3/8"
SUMMER	3/8"
FALL	3/8"

* Minimum reservoir width for replace joint seal = existing joint width + 1/8"

RESERVOIR WIDTH W ±1/16"	LIQUID JOINT SEALANT DIMENSIONS					
	BACKER ROD NOMINAL Dia *	DEPTHS (ASPHALT RUBBER) **		DEPTHS (SILICONE)		
		RESERVOIR D ± 1/4"	BACKER ROD b ± 1/16"	RESERVOIR D ± 1/4"	BACKER ROD b ± 1/16"	RECESS r ± 1/16"
1/4"	3/8"	1 3/4"	7/8"	1 3/8"	1/2"	1/4"
3/8"	1/2"	1 7/8"	7/8"	1 1/2"	1/2"	1/4"
1/2"	3/4"	2"	7/8"	1 3/4"	9/16"	5/16"
5/8"	7/8"	2 1/4"	1"	2"	5/8"	5/16"
3/4"	1"	2 3/4"	1 1/8"	2 1/4"	3/4"	3/8"
7/8"	1 1/4"	3"	1 1/4"	2 1/2"	13/16"	3/8"
1"	1 1/2"	3 1/4"	1 3/8"	2 5/8"	7/8"	3/8"
1 1/8"	1 1/2"	3 1/2"	1 1/2"	2 13/16"	1"	1/2"

* Larger diameter backer rods may be substituted according to manufacturer recommendations if reservoir depth is increased equivalently.

** Asphalt rubber sealant recess depth "r" varies from 1/4" to 3/8"

RESERVOIR WIDTH W ±1/16"	PREFORMED COMPRESSION JOINT SEAL DIMENSIONS	
	NOMINAL SEAL WIDTH s	RESERVOIR DEPTH D ± 1/4"
1/4"	7/16"	1 1/4"
3/8"	11/16"	1 7/16"
1/2"	13/16"	1 11/16"
5/8"	1"	1 7/8"
3/4"	1 1/4"	2 1/8"
7/8"	1 5/8"	2 5/8"
1"	1 5/8"	2 5/8"
1 1/8"	2"	2 7/8"

STATE OF CALIFORNIA
DEPARTMENT OF TRANSPORTATION

JOINT SEALS

NO SCALE

RSP P20 DATED JULY 19, 2013 SUPERSEDES STANDARD PLAN P20
DATED MAY 20, 2011 - PAGE 136 OF THE STANDARD PLANS BOOK DATED 2010.

REVISED STANDARD PLAN RSP P20

6-17-13

Dist	COUNTY	ROUTE	POST MILES TOTAL PROJECT	SHEET No.	TOTAL SHEETS
08	SBd	15	11.1	44	46

REGISTERED CIVIL ENGINEER

July 18, 2014
PLANS APPROVAL DATE

REGISTERED PROFESSIONAL ENGINEER Carl M. Duan No. C59976 Exp. 6-30-16 CIVIL STATE OF CALIFORNIA

THE STATE OF CALIFORNIA OR ITS OFFICERS OR AGENTS SHALL NOT BE RESPONSIBLE FOR THE ACCURACY OR COMPLETENESS OF SCANNED COPIES OF THIS PLAN SHEET.

TO ACCOMPANY PLANS DATED 5-17-16

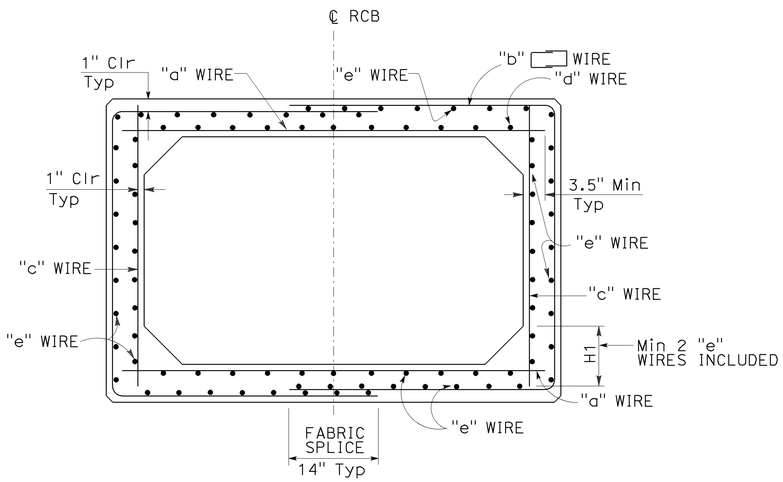

TYPICAL SECTION - SPANS 4'-0" THRU 12'-0"

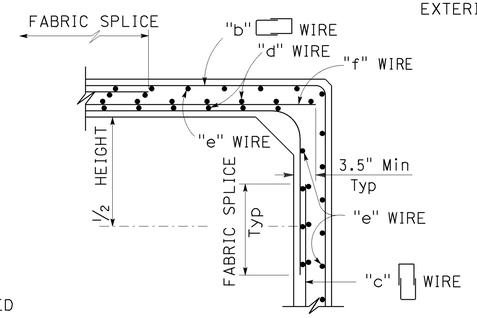

ALTERNATIVE DETAILING OPTION

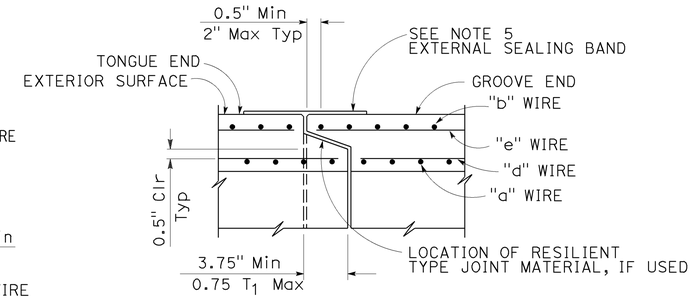

END JOINT DETAIL

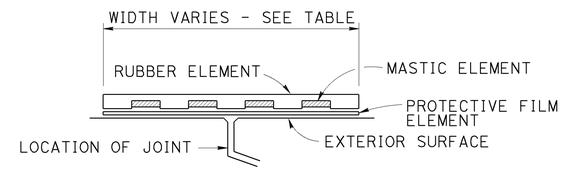

EXTERNAL SEALING BAND SCHEMATIC

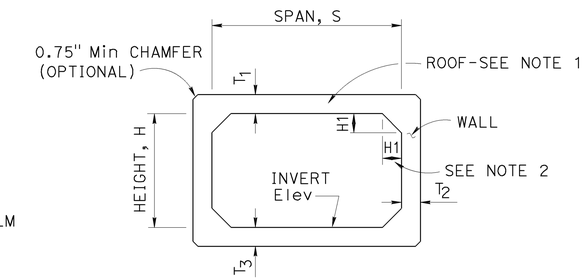

SCHEMATIC

TABLE	
SPAN	EXTERNAL SEALING BAND WIDTH
4'-6'	9"
7'-8'	11"
10'-12'	13"

SPAN, S			4'						5'								6'								7'									
HEIGHT, H			2'		3'		4'		2'		3'		4'		5'		3'		4'		5'		6'		3'		4'		5'		6'		7'	
MAXIMUM EARTH COVER			10'	20'	10'	20'	10'	20'	10'	20'	10'	20'	10'	20'	10'	20'	10'	20'	10'	20'	10'	20'	10'	20'	10'	20'	10'	20'	10'	20'	10'	20'	10'	20'
CONCRETE (INCH)	ROOF	T_1	5.5"	5.5"	5.5"	5.5"	5.5"	5.5"	6"	6"	6"	6"	6"	6"	6"	6"	7"	7"	7"	7"	7"	7"	7"	7"	8"	8"	8"	8"	8"	8"	8"	8"	8"	8"
	SIDE WALL	T_2	5.5"	5.5"	5.5"	5.5"	5.5"	5.5"	6"	6"	6"	6"	6"	6"	6"	6"	7"	7"	7"	7"	7"	7"	7"	7"	8"	8"	8"	8"	8"	8"	8"	8"	8"	8"
	INVERT	T_3	5.5"	5.5"	5.5"	5.5"	5.5"	5.5"	6"	6"	6"	6"	6"	6"	6"	6"	7"	7"	7"	7"	7"	7"	7"	7"	8"	8"	8"	8"	8"	8"	8"	8"	8"	8"
MINIMUM WELDED WIRE FABRIC ($inch^2/ft$)		"a"	.33	.47	.34	.49	.34	.50	.40	.62	.41	.62	.42	.64	.43	.64	.44	.67	.45	.70	.46	.71	.47	.72	.47	.72	.48	.75	.50	.78	.50	.79	.51	.80
		"b"	.23	.28	.23	.25	.21	.23	.26	.36	.24	.36	.24	.33	.24	.30	.28	.44	.27	.40	.27	.37	.27	.38	.33	.52	.31	.48	.30	.45	.30	.43	.30	.48
		"c"	.11	.11	.11	.12	.18	.24	.11	.11	.11	.11	.13	.23	.24	.34	.11	.11	.11	.12	.19	.27	.27	.42	.11	.11	.11	.11	.13	.20	.26	.31	.30	.50
		"d"	.16	.11	.16	.11	.16	.11	.17	.11	.18	.11	.18	.11	.18	.11	.17	.11	.18	.11	.18	.11	.18	.11	.17	.11	.17	.11	.18	.11	.18	.11	.18	.11
		"e"	.11	.11	.11	.11	.11	.11	.11	.11	.11	.11	.11	.11	.11	.11	.11	.11	.11	.11	.11	.11	.11	.11	.11	.11	.11	.11	.11	.11	.11	.11	.11	.11
		"f"	.22	.36	.23	.37	.22	.26	.29	.51	.30	.51	.29	.41	.26	.30	.33	.56	.34	.58	.27	.44	.21	.30	.36	.61	.37	.64	.37	.57	.25	.48	.21	.30
* QUANTITY	Conc	CY/LF	.31		.34		.38		.37		.41		.44		.48		.51		.56		.60		.64		.63		.68		.73		.78		.83	
	Reinf	LB/LF	35	41	39	45	45	51	49	58	49	62	54	69	62	78	60	79	64	83	72	93	80	107	72	98	76	102	81	110	92	120	101	143
** SOIL PRESSURE (ksf)			2.3	4.4	2.4	4.5	2.4	4.5	3.1	4.4	3.1	4.5	3.1	4.5	3.2	4.5	2.7	4.5	2.8	4.5	2.8	4.6	2.8	4.6	2.5	4.5	2.5	4.6	2.5	4.6	2.5	4.6	2.6	4.6

SPAN, S			8'										10'												12'													
HEIGHT, H			4'		5'		6'		7'		8'		5'		6'		7'		8'		9'		10'		6'		7'		8'		9'		10'		11'		12'	
MAXIMUM EARTH COVER			10'	20'	10'	20'	10'	20'	10'	20'	10'	20'	10'	20'	10'	20'	10'	20'	10'	20'	10'	20'	10'	20'	10'	20'	10'	20'	10'	20'	10'	20'	10'	20'	10'	20'	10'	20'
CONCRETE (INCH)	ROOF	T_1	8.5"	8.5"	8.5"	8.5"	8.5"	8.5"	8.5"	8.5"	8.5"	8.5"	10"	10"	10"	10"	10"	10"	10"	10"	10"	10"	10"	10"	12"	12"	12"	12"	12"	12"	12"	12"	12"	12"	12"	12"	12"	12"
	SIDE WALL	T_2	8.5"	8.5"	8.5"	8.5"	8.5"	8.5"	8.5"	8.5"	8.5"	8.5"	10"	10"	10"	10"	10"	10"	10"	10"	10"	10"	10"	10"	12"	12"	12"	12"	12"	12"	12"	12"	12"	12"	12"	12"	12"	12"
	INVERT	T_3	8.5"	8.5"	8.5"	8.5"	8.5"	8.5"	8.5"	8.5"	8.5"	8.5"	10"	10"	10"	10"	10"	10"	10"	10"	10"	10"	10"	10"	12"	12"	12"	12"	12"	12"	12"	12"	12"	12"	12"	12"	12"	12"
MINIMUM WELDED WIRE FABRIC ($inch^2/ft$)		"a"	.55	.87	.56	.90	.57	.92	.58	.93	.58	.94	.66	1.07	.67	1.10	.69	1.13	.70	1.14	.70	1.16	.77	1.16	.73	1.21	1.21	1.24	.77	1.27	1.24	1.29	1.27	1.31	.78	1.32	1.29	1.32
		"b"	.37	.59	.35	.55	.33	.52	.33	.52	.36	.57	.45	.74	.43	.70	.41	.67	.40	.64	.43	.67	.48	.67	.51	.85	.85	.81	.49	.77	.81	.74	.77	.77	.53	.79	.74	.79
		"c"	.11	.11	.11	.11	.20	.31	.31	.42	.38	.62	.11	.11	.11	.11	.22	.31	.36	.42	.40	.62	.54	.86	.11	.11	.11	.11	.23	.30	.37	.42	.42	.60	.54	.82	.42	1.06
		"d"	.19	.11	.19	.11	.20	.11	.20	.11	.20	.11	.20	.11	.20	.11	.21	.11	.21	.11	.21	.11	.21	.11	.20	.11	.20	.11	.21	.11	.22	.11	.22	.11	.22	.11	.22	.11
		"e"	.11	.11	.11	.11	.11	.11	.11	.11	.11	.11	.11	.11	.11	.11	.11	.11	.11	.11	.11	.11	.11	.11	.11	.11	.11	.11	.11	.11	.11	.11	.11	.11	.11	.11	.11	.11
		"f"	.44	.76	.45	.79	.37	.61	.27	.52	.20	.31	.55	.96	.56	.99	.47	.81	.34	.73	.31	.53	.16	.30	.62	1.10	1.10	1.13	.64	.97	1.13	.87	.97	.71	.40	.50	.87	.26
* QUANTITY	Conc	CY/LF	.78		.83		.88		.94		.99		1.10		1.17		1.23		1.29		1.35		1.41		1.56		1.63		1.70		1.78		1.85		1.93		2.00	
	Reinf	LB/LF	93	129	97	133	105	148	117	161	131	189	133	191	138	196	148	212	191	225	176	253	201	282	174	255	179	261	191	279	207	293	223	323	249	357	281	393
** SOIL PRESSURE (ksf)			2.5	4.6	2.5	4.6	2.5	4.6	2.5	4.6	2.5	4.6	3.8	4.6	3.8	4.7	3.8	4.7	4.6	4.7	3.9	4.7	3.9	4.8	3.6	4.7	3.7	4.7	3.7	4.8	3.7	4.8	3.7	4.8	3.8	4.9	3.8	4.9

* See Note 3 ** See Note 6

NOTES:

1. The inside and outside surfaces of the RCB roof shall be marked "TOP".
2. H1 minimum shall equal the wall thickness. H1 maximum shall be 8" for spans through 8' and 14" for spans over 8'.
3. Quantities are approximate and for design purposes only.
4. For design and details not shown see Revised Standard Plan RSP D83B.
5. For external sealing band applications see Standard Plan A62G.
6. Soil pressures shown are factored per AASHTO LRFD and include soil weight of fill over box, self weight of box and live load where applicable.

STATE OF CALIFORNIA
DEPARTMENT OF TRANSPORTATION

PRECAST REINFORCED CONCRETE BOX CULVERT

NO SCALE

RSP D83A DATED JULY 18, 2014 SUPERSEDES STANDARD PLAN D83A DATED MAY 20, 2011 - PAGE 175 OF THE STANDARD PLANS BOOK DATED 2010.

REVISED STANDARD PLAN RSP D83A

2010 REVISED STANDARD PLAN RSP D83A

4-3-14

Dist	COUNTY	ROUTE	POST MILES TOTAL PROJECT	SHEET No.	TOTAL SHEETS
08	SBd	15	11.1	45	46

REGISTERED CIVIL ENGINEER

July 18, 2014
PLANS APPROVAL DATE

REGISTERED PROFESSIONAL ENGINEER Carl M. Duan No. C59976 Exp. 6-30-16 CIVIL STATE OF CALIFORNIA

THE STATE OF CALIFORNIA OR ITS OFFICERS OR AGENTS SHALL NOT BE RESPONSIBLE FOR THE ACCURACY OR COMPLETENESS OF SCANNED COPIES OF THIS PLAN SHEET.

TO ACCOMPANY PLANS DATED 5-17-16

DESIGN NOTES:

Specifications:

AASHTO LRFD Bridge Design Specifications, 4th Edition with California Amendments.

Earth load:

Earth pressures for two conditions:
140 pcf Vert, 42 pcf Horiz
140 pcf Vert, 140 pcf Horiz

Unit stresses:

f'c = 5.0 ksi
fy = 65.0 ksi for weld wire fabric
n = 7

Shear:

Based on

$V_c = \{2.14\sqrt{f_c'} + 4600 \frac{A_s}{b d_e} \frac{V_u d_e}{M_u}\} b.d_e \leq 4.0\sqrt{f_c'} b.d_e$ (Pounds)

V_c shall not be less than $3.00\sqrt{f_c'} b.d_e$ for frame members and $2.5\sqrt{f_c'} b.d_e$ for simply supported members.

Exclusion:

Axial loading on the members has not been considered.

GENERAL NOTES:

Designation:

Standard single or multiple precast box culverts are shown on the plans as span times height with maximum cover over roof thus: 8' x 5' RCB with 10'-0" or double 10' x 5' RCB with 20'-0", followed by alternatives.

Alternatives:

Single cell:

Standard dimensions of AASHTO Material Specification 'M259' or 'M273'.

Multiple cell:

Constructed by placing single cells adjacent to each other. Inlet and outlet ends of culvert will be rounded unless square ends are designated. Parapet will be shown unless designated in plans. Such designation may be different for inlet and outlet ends.

Limitations:

Where the overfill is less than 12", Precast RCB culverts are not to be used. Precast RCB culverts are not to be used in siphon or pressurized installations unless appropriate "watertight" jointing is provided.

Special reinforcement coverage:

Precast RCB culvert standard plans are not to be used in a corrosive environment or where there is a severe abrasive flow condition or freeze-thaw locations.

Special design:

Required for culvert with different conditions, loads or design bearing pressures greater than those given on these plans. Required for culverts where end details need higher skew angles, higher parapets or barrier sections.

CONSTRUCTION NOTES:

Cutoff walls:

4'-0" Cutoff walls are to be provided at inlet and/or outlet unless channel is lined and unless otherwise shown. These walls are to be extended if scour conditions warrant. See Standard Plans D84, D85 and D86A.

Wingwalls:

Wingwalls shall be cast-in-place and shall conform to standard plan details for box culvert wingwalls. See Standard Plans D84, D85 and D86A.

Earthwork:

See Standard Plan A62G.

Construction loads:

Strutting may be required near temporary ends. For construction loads on culverts, See Standard Plan D88.

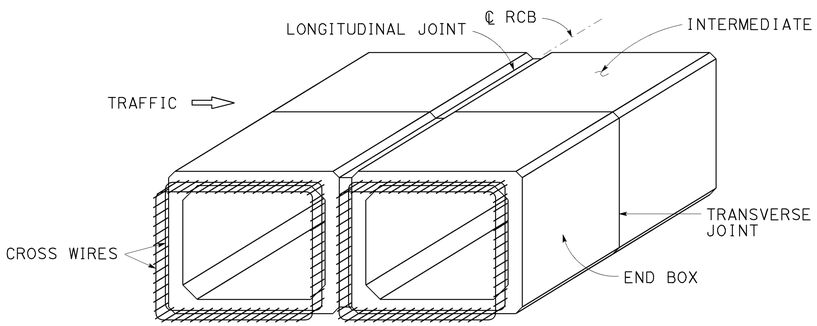

PRECAST RCB TERMINOLOGY

NOTE: Inner and outer reinforcement to be exposed as required to tie to cast-in-place construction. A minimum of two cross wires shall be exposed on all sides.

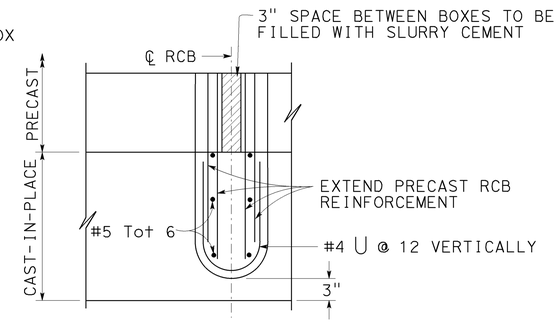

PARTIAL PLAN INTERIOR WALL MULTICELL CULVERT

PARAPET "P" BARS			
SPAN \ SKEW ANGLE	0° TO 15°	16° TO 30°	31° TO 45°
4'-0"	#5	#5	#5
5'-0"	#5	#5	#6
6'-0"	#6	#6	#6
7'-0"	#7	#7	#7
8'-0"	#7	#7	#8
10'-0"	#8	#8	#9
12'-0"	#9	#9	#10

BARRIER PARAPET REINFORCEMENT

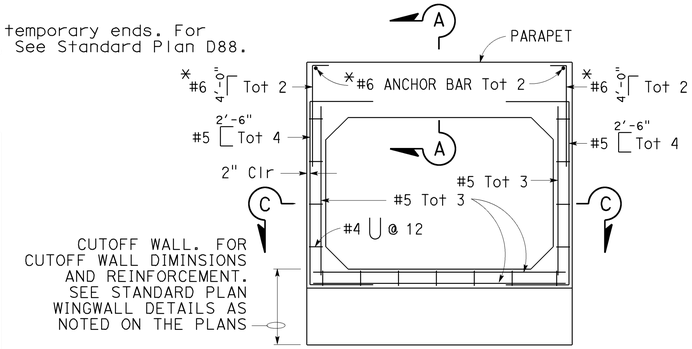

CAST-IN-PLACE END ELEVATION

* Reinforcing required for barrier parapet application only.

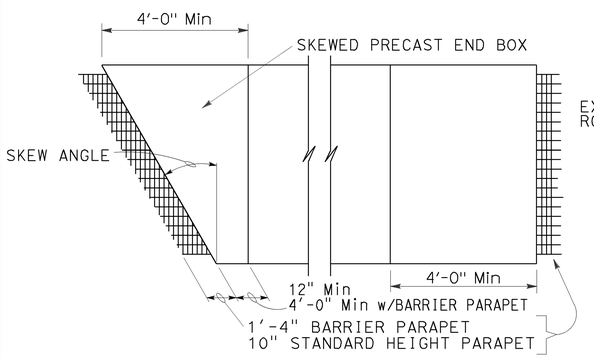

PARTIAL PLAN VIEW

For illustrative purposes only.
For correct skew direction see plans.

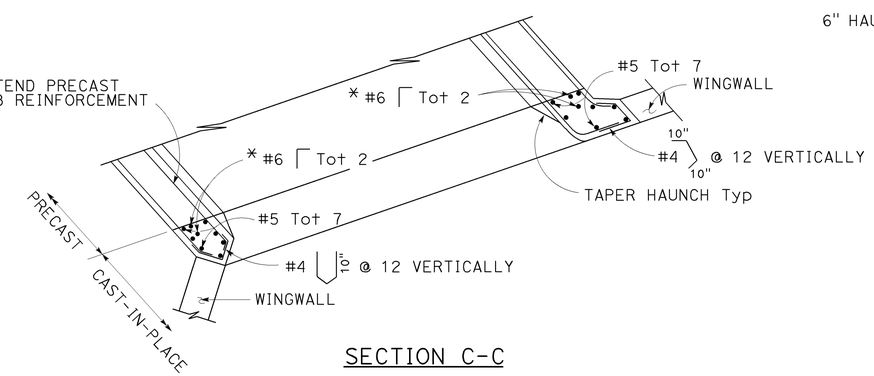

SECTION C-C

* Reinforcing required for barrier parapet application only.

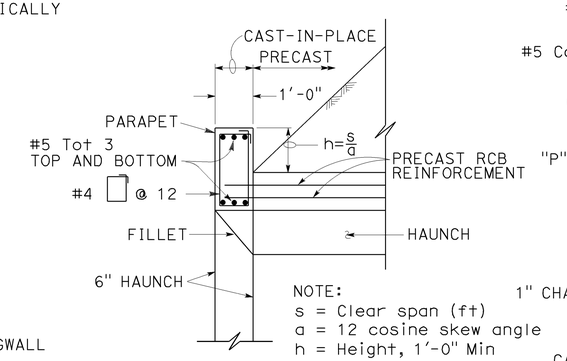

SECTION A-A
(Standard Height Parapet)

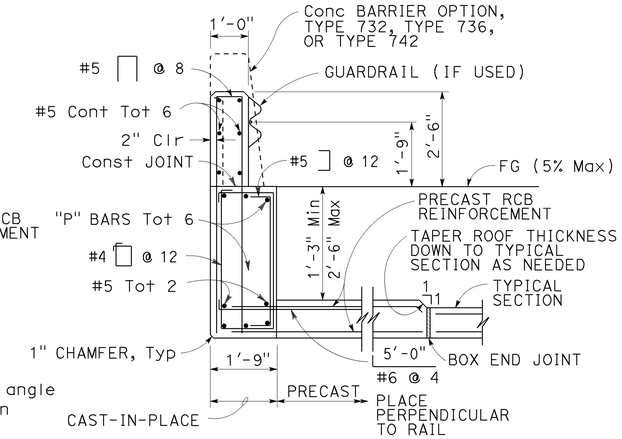

SECTION A-A
(Barrier Parapet)

TYPICAL CULVERT END DETAILS

For wall and invert reinforcement not shown, See "End Elevation" detail.

STATE OF CALIFORNIA
DEPARTMENT OF TRANSPORTATION

PRECAST REINFORCED CONCRETE BOX CULVERT MISCELLANEOUS DETAILS

NO SCALE

RSP D83B DATED JULY 18, 2014 SUPERSEDES STANDARD PLAN D83B DATED MAY 20, 2011 - PAGE 176 OF THE STANDARD PLANS BOOK DATED 2010.

REVISED STANDARD PLAN RSP D83B

2010 REVISED STANDARD PLAN RSP D83B

4-3-14

Dist	COUNTY	ROUTE	POST MILES TOTAL PROJECT	SHEET No.	TOTAL SHEETS
08	SBd	15	11.1	46	46

REGISTERED CIVIL ENGINEER

July 19, 2013
PLANS APPROVAL DATE

REGISTERED PROFESSIONAL ENGINEER
Gurinderpal Bhullar
No. C48815
Exp. 9-30-14
CIVIL
STATE OF CALIFORNIA

THE STATE OF CALIFORNIA OR ITS OFFICERS OR AGENTS SHALL NOT BE RESPONSIBLE FOR THE ACCURACY OR COMPLETENESS OF SCANNED COPIES OF THIS PLAN SHEET.

TO ACCOMPANY PLANS DATED 5-17-16

2010 REVISED STANDARD PLAN RSP T9

TABLE 1

TAPER LENGTH CRITERIA AND CHANNELIZING DEVICE SPACING

SPEED (S)	MINIMUM TAPER LENGTH * FOR WIDTH OF OFFSET 12 FEET (W)				MAXIMUM CHANNELIZING DEVICE SPACING		
					X	Y	Z **
	TANGENT 2L	MERGING L	SHIFTING L/2	SHOULDER L/3	TAPER	TANGENT	CONFLICT
mph	ft	ft	ft	ft	ft	ft	ft
20	160	80	40	27	20	40	10
25	250	125	63	42	25	50	12
30	360	180	90	60	30	60	15
35	490	245	123	82	35	70	17
40	640	320	160	107	40	80	20
45	1080	540	270	180	45	90	22
50	1200	600	300	200	50	100	25
55	1320	660	330	220	55	110	27
60	1440	720	360	240	60	120	30
65	1560	780	390	260	65	130	32
70	1680	840	420	280	70	140	35

* - For other offsets, use the following merging taper length formula for L:
For speed of 40 mph or less, $L = WS^2/60$
For speed of 45 mph or more, $L = WS$

Where: L = Taper length in feet
W = Width of offset in feet
S = Posted speed limit, off-peak 85th-percentile speed prior to work starting, or the anticipated operating speed in mph

** - Use for taper and tangent sections where there are no pavement markings or where there is a conflict between existing pavement markings and channelizers (CA).

TABLE 2

LONGITUDINAL BUFFER SPACE AND FLAGGER STATION SPACING

SPEED *	Min D **	DOWNGRADE Min D ***		
		-3%	-6%	-9%
mph	ft	ft	ft	ft
20	115	116	120	126
25	155	158	165	173
30	200	205	215	227
35	250	257	271	287
40	305	315	333	354
45	360	378	400	427
50	425	446	474	507
55	495	520	553	593
60	570	598	638	686
65	645	682	728	785
70	730	771	825	891

* - Speed is posted speed limit, off-peak 85th-percentile speed prior to work starting, or the anticipated operating speed in mph

** - Longitudinal buffer space or flagger station spacing

*** - Use on sustained downgrade steeper than -3 percent and longer than 1 mile.

TABLE 3

ADVANCE WARNING SIGN SPACING

ROAD TYPE	DISTANCE BETWEEN SIGNS *		
	A	B	C
	ft	ft	ft
URBAN - 25 mph OR LESS	100	100	100
URBAN - MORE THAN 25 mph TO 40 mph	250	250	250
URBAN - MORE THAN 40 mph	350	350	350
RURAL	500	500	500
EXPRESSWAY / FREEWAY	1000	1500	2640

* - The distances are approximate, are intended for guidance purposes only, and should be applied with engineering judgment. These distances should be adjusted by the Engineer for field conditions, if necessary, by increasing or decreasing the recommmended distances.

STATE OF CALIFORNIA
DEPARTMENT OF TRANSPORTATION

TRAFFIC CONTROL SYSTEM TABLES FOR LANE AND RAMP CLOSURES

NO SCALE

RSP T9 DATED JULY 19, 2013 SUPERSEDES RSP T9 DATED APRIL 19, 2013 THAT SUPPLEMENTS THE STANDARD PLANS BOOK DATED 2010.

REVISED STANDARD PLAN RSP T9