Dist	COUNTY	ROUTE	POST MILES TOTAL PROJECT	SHEET No.	TOTAL SHEETS
08	SBd	40	R73.0/R89.0	2	36

3

12-13-13
REGISTERED CIVIL ENGINEER DATE

12-16-13
PLANS APPROVAL DATE

REGISTERED PROFESSIONAL ENGINEER
RENEE SASSE
No. C41092
Exp. 3-31-15
CIVIL
STATE OF CALIFORNIA

THE STATE OF CALIFORNIA OR ITS OFFICERS OR AGENTS SHALL NOT BE RESPONSIBLE FOR THE ACCURACY OR COMPLETENESS OF SCANNED COPIES OF THIS PLAN SHEET.

NOTES:

1. DIMENSIONS OF STRUCTURAL SECTIONS ARE SUBJECT TO TOLERANCES SPECIFIED IN THE STANDARD SPECIFICATIONS.
2. SUPERELEVATION AS SHOWN OR AS DIRECTED BY THE ENGINEER.
3. COLD PLANE TO BE ~~0.35'~~ 0.40' AND HMA TO BE ~~0.45'~~ 0.50' AT ONLY THOSE LOCATIONS SHOWN ON SHEET Q-1.
4. SEE 2010 STD PLAN A40B FOR SHOULDER RUMBLE STRIP (GROUND-IN INDENTATION) DETAILS.
5. ASPHALT RUBBER BINDER SEAL COAT APPLIES FOR TRAVELED WAY ONLY.
~~5. SEAL COAT (RUBBERIZED) APPLIES FOR TRAVELED WAY ONLY.~~
6. NO COLD PLANING, ~~SEAL COAT (RUBBERIZED),~~ ASPHALT RUBBER BINDER SEAL COAT, AND HMA OVERLAY ON APPROACH SLABS AND BRIDGE DECKS.
7. FOR LOCATIONS AND TYPE OF HMA DIKE SEE SHEET Q-2.
8. ASPHALT RUBBER BINDER SEAL COAT MUST BE PLACED ON ROADWAY PRIOR TO OPENING TO TRAFFIC.

DESIGN DESIGNATION (ROUTE 40)

ADT (2010) = 12,800	D = 88%
ADT (2020) = 17,900	T = 47%
DHV = 1,540	V = 65 MPH
ESAL = 25,144,408	TI_{10} = 13.0

PAVEMENT CLIMATE REGION
DESERT

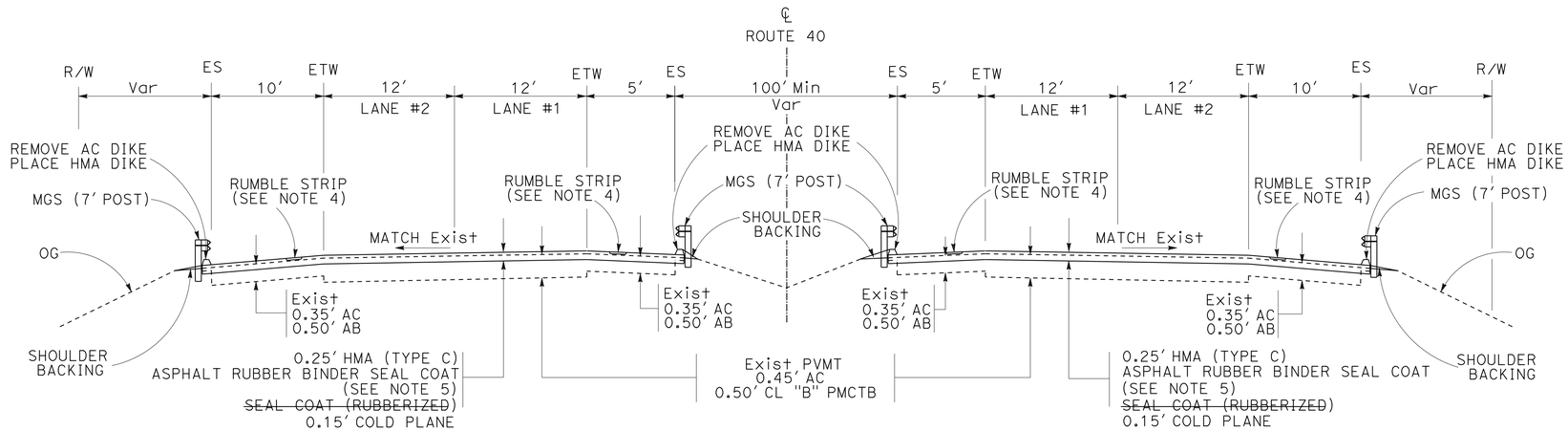

WESTBOUND **EASTBOUND**

ROUTE 40
PM R73.0/R89.0

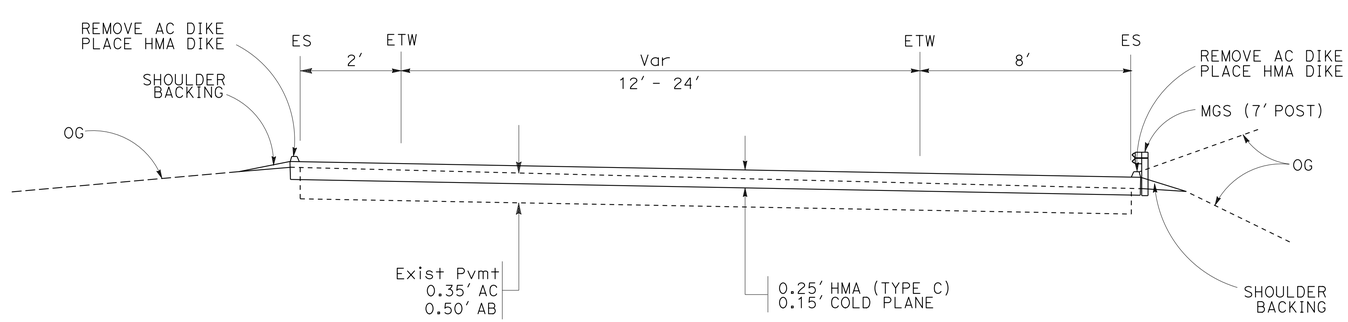

ROUTE 40
KELBAKER ROAD ENTRANCE AND EXIT RAMPS (PM R78.2)
(Typ)

3 **REPLACED PER ADDENDUM No. 3 DATED MARCH 21, 2014**

EXISTING UTILITY FACILITIES HAVE NOT BEEN PLOTTED ON THESE PLANS.

TYPICAL CROSS SECTIONS
NO SCALE

X-1

STATE OF CALIFORNIA - DEPARTMENT OF TRANSPORTATION
Caltrans
DESIGN
FUNCTIONAL SUPERVISOR: RENEE SASSE
CALCULATED-DESIGNED BY: DON D NGUYEN
CHECKED BY: DUNG HUY PHAN
REVISED BY
DATE REVISED

LAST REVISION 12-13-13
DATE PLOTTED => 21-MAR-2014
TIME PLOTTED => 11:12

Dist	COUNTY	ROUTE	POST MILES TOTAL PROJECT	SHEET No.	TOTAL SHEETS
08	SBd	40	R73.0/R89.0	2A	36

REGISTERED CIVIL ENGINEER 12-13-13 DATE

12-16-13
PLANS APPROVAL DATE

REGISTERED PROFESSIONAL ENGINEER RENEE SASSE No. C41092 Exp. 3-31-15 CIVIL STATE OF CALIFORNIA

THE STATE OF CALIFORNIA OR ITS OFFICERS OR AGENTS SHALL NOT BE RESPONSIBLE FOR THE ACCURACY OR COMPLETENESS OF SCANNED COPIES OF THIS PLAN SHEET.

3

DESIGN DESIGNATION (ROUTE 40)

ADT (2010) = 12,800 D = 88%
ADT (2020) = 17,900 T = 47%
DHV = 1,540 V = 65 MPH
ESAL = 25,144,408 TI_{10} = 13.0

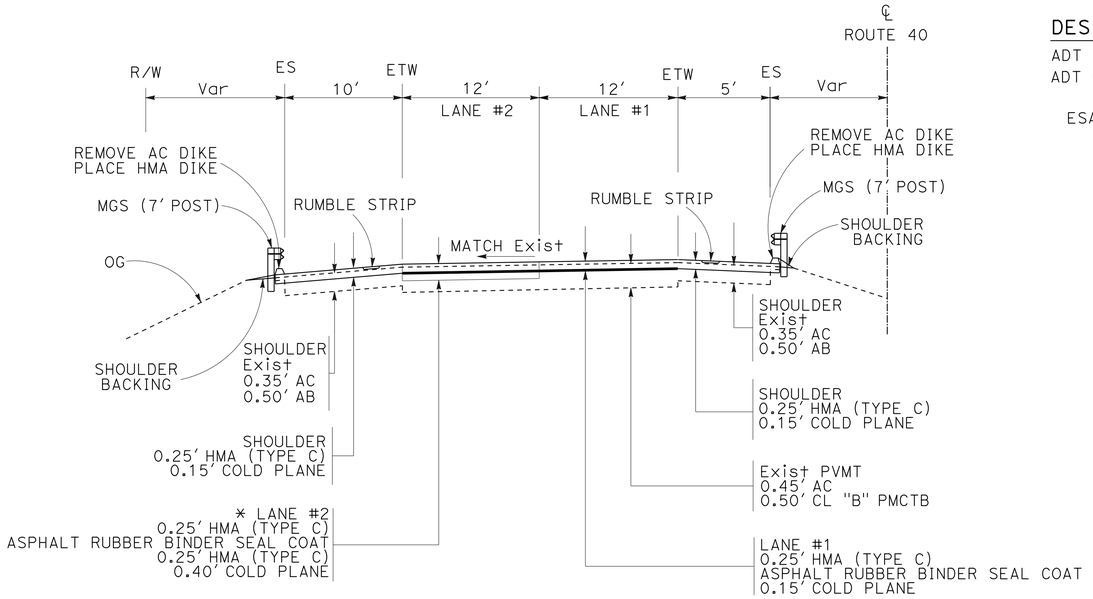

WESTBOUND ROUTE 40
PM R73/R77
PM R81/R88

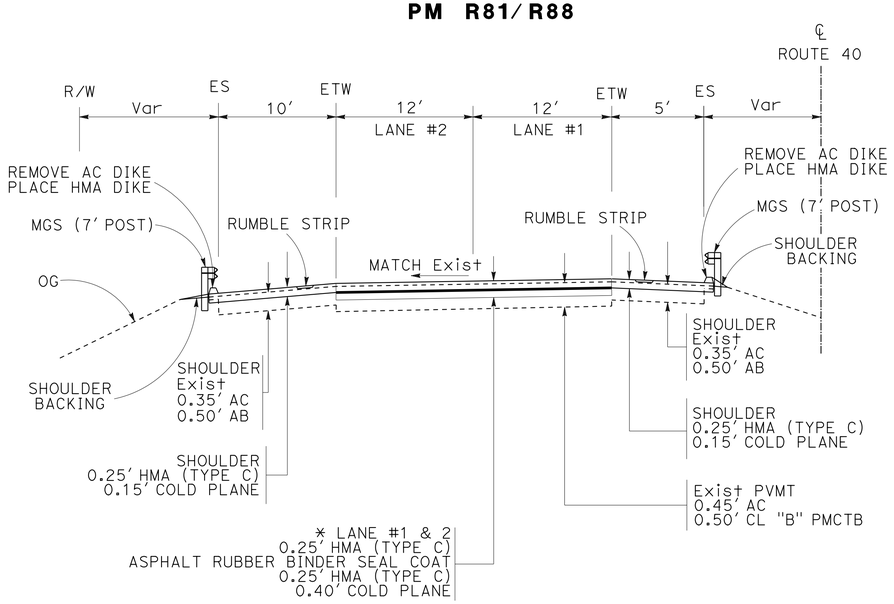

WESTBOUND ROUTE 40
PM R88/R89

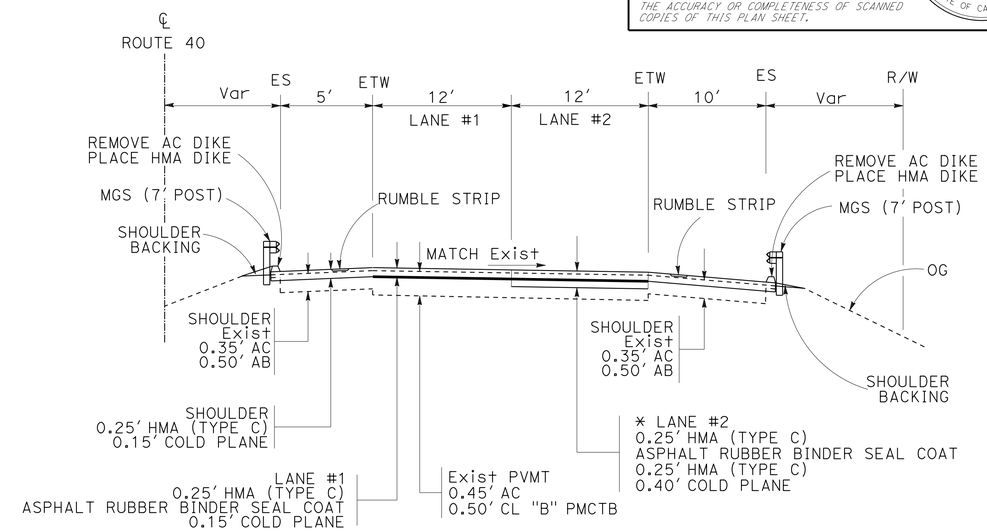

EASTBOUND ROUTE 40
PM R74/R77
PM R78/R81
PM R83/R84
PM R86/R89

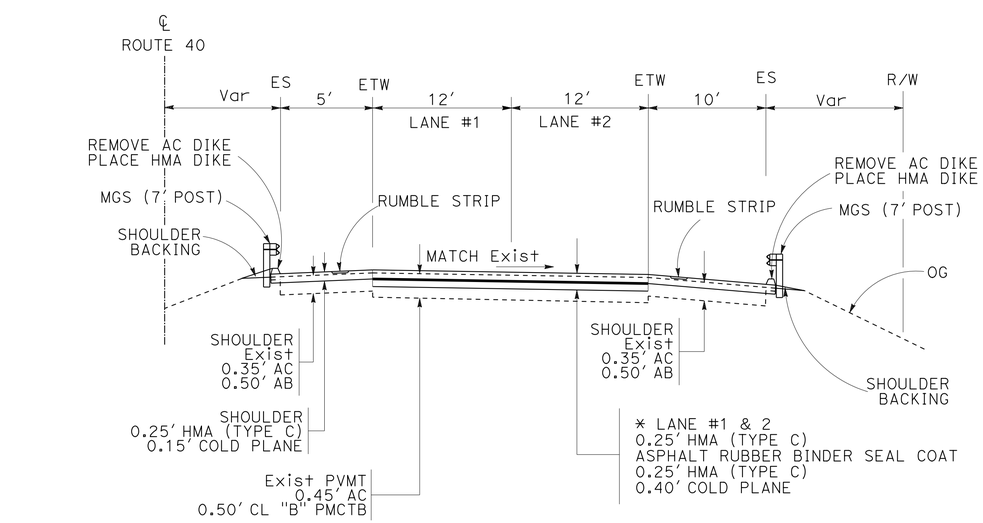

EASTBOUND ROUTE 40
PM R77/R78
PM R81/R82

3 **ADDED PER ADDENDUM No. 3 DATED MARCH 21, 2014**

* EXACT LOCATIONS TO BE DETERMINED BY THE RESIDENT ENGINEER.
EXISTING UTILITY FACILITIES HAVE NOT BEEN PLOTTED ON THESE PLANS.

PAVEMENT CLIMATE REGION
DESERT

TYPICAL CROSS SECTIONS
X-2

NO SCALE

STATE OF CALIFORNIA - DEPARTMENT OF TRANSPORTATION
Caltrans®
DESIGN

FUNCTIONAL SUPERVISOR: RENEE SASSE
CALCULATED-DESIGNED BY: DON D NGUYEN
CHECKED BY: DUNG HUY PHAN
REVISED BY
DATE REVISED

LAST REVISION 12-13-13
DATE PLOTTED => 21-MAR-2014
TIME PLOTTED => 11:12

Dist	COUNTY	ROUTE	POST MILES TOTAL PROJECT	SHEET No.	TOTAL SHEETS
08	SBd	40	R73.0/R89.0	5	36

REGISTERED CIVIL ENGINEER 12-13-13 DATE

12-16-13
PLANS APPROVAL DATE

REGISTERED PROFESSIONAL ENGINEER
RENEE SASSE
No. C41092
Exp. 3-31-15
CIVIL
STATE OF CALIFORNIA

THE STATE OF CALIFORNIA OR ITS OFFICERS OR AGENTS SHALL NOT BE RESPONSIBLE FOR THE ACCURACY OR COMPLETENESS OF SCANNED COPIES OF THIS PLAN SHEET.

NOTE:

1. SEE QUANTITY SHEET Q-2 FOR LOCATIONS OF HMA OVERSIDE DRAINS AND HMA DIKES.

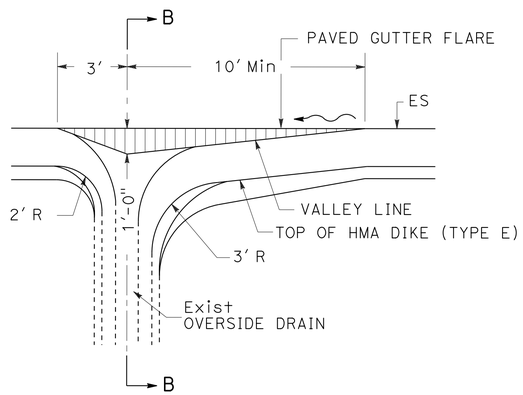

PLAN

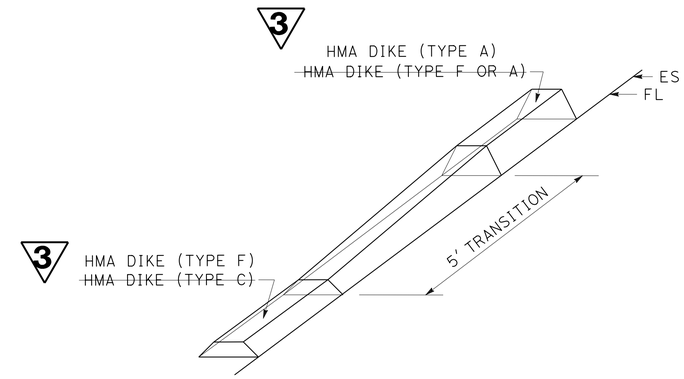

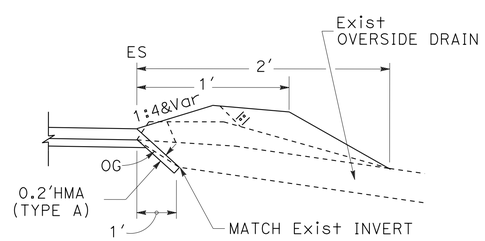

SECTION B-B

MODIFY OVERSIDE DRAIN

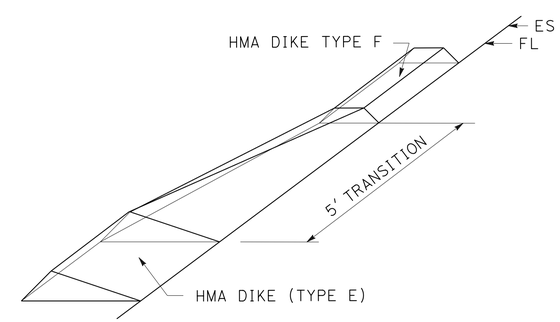

HMA DIKE TRANSITION

3 **REPLACED PER ADDENDUM No. 3 DATED MARCH 21, 2014**

CONSTRUCTION DETAILS
NO SCALE

C-3

STATE OF CALIFORNIA - DEPARTMENT OF TRANSPORTATION
Caltrans®
DESIGN
FUNCTIONAL SUPERVISOR: RENEE SASSE
CALCULATED-DESIGNED BY: DON D NGUYEN
CHECKED BY: DUNG HUY PHAN
REVISED BY
DATE REVISED

LAST REVISION 12-13-13
DATE PLOTTED => 21-MAR-2014
TIME PLOTTED => 11:12

Dist	COUNTY	ROUTE	POST MILES TOTAL PROJECT	SHEET No.	TOTAL SHEETS
08	SBd	40	R73.0/R89.0	14	36

REGISTERED CIVIL ENGINEER 12-13-13 DATE

12-16-13
PLANS APPROVAL DATE

REGISTERED PROFESSIONAL ENGINEER
RENEE SASSE
No. C41092
Exp. 3-31-15
CIVIL
STATE OF CALIFORNIA

THE STATE OF CALIFORNIA OR ITS OFFICERS OR AGENTS SHALL NOT BE RESPONSIBLE FOR THE ACCURACY OR COMPLETENESS OF SCANNED COPIES OF THIS PLAN SHEET.

NOTES:

1. POST MILES ARE APPROXIMATE FOR LIMITS OF ~~0.35'~~ 0.40' COLD PLANING AND ~~0.45'~~ 0.50' HMA (TYPE C). EXACT LOCATIONS TO BE DETERMINED BY THE ENGINEER. (3)
2. FOR TYPICAL CROSS SECTION, SEE SHEET X-2

LOCATIONS TO BE COLD PLANED ~~0.35'~~ 0.40' AND PAVED WITH ~~0.45'~~ 0.50' HMA (TYPE C) (3)

WESTBOUND

PM TO PM	LANE No.	LANE WIDTH LF	(N) AREA SQFT
R73 TO R74	2	12	5,400
R74 TO R75	2	12	104
R75 TO R76	2	12	4,872
R76 TO R77	2	12	2,160
	2	12	5,572
	2	12	3,940
R81 TO R82	2	12	10,560
R83 TO R84	2	12	2,800
R86 TO R87	2	12	3,128
R87 TO R88	2	12	13,360
R88 TO R89	2	12	6,552
	2	12	3,560
	1	12	6,400
TOTAL			68,408

(N) NOT A SEPARATE PAY ITEM, FOR INFORMATION ONLY.

EASTBOUND

PM TO PM	LANE No.	LANE WIDTH LF	(N) AREA SQFT
R74 TO R75	2	12	1,440
R75 TO R76	2	12	800
R76 TO R77	2	12	1,100
R77 TO R78	2	12	480
	1	12	240
R78 TO R79	2	12	480
R79 TO R80	2	12	9,800
R80 TO R81	2	12	884
R81 TO R82	2	12	960
	1	12	48
R83 TO R84	2	12	1,560
	2	12	520
R86 TO R87	2	12	1,352
R87 TO R88	2	12	3,296
R88 TO R89	2	12	9,112
TOTAL EASTBOUND			32,072
TOTAL WESTBOUND			68,408
TOTAL			100,480

(N) NOT A SEPARATE PAY ITEM, FOR INFORMATION ONLY.
FOR QUANTITIES OF COLD PLANE AND HMA, SEE SHEET Q-4.

(3) REPLACED PER ADDENDUM No. 3 DATED MARCH 21, 2014

SUMMARY OF QUANTITIES

Q-1

REVISED BY | DATE REVISED
DON D NGUYEN | DUNG HUY PHAN
CALCULATED-DESIGNED BY | CHECKED BY
FUNCTIONAL SUPERVISOR
RENEE SASSE
STATE OF CALIFORNIA - DEPARTMENT OF TRANSPORTATION
Caltrans DESIGN

LAST REVISION 12-13-13 | DATE PLOTTED => 21-MAR-2014 | TIME PLOTTED => 11:12

Dist	COUNTY	ROUTE	POST MILES TOTAL PROJECT	SHEET No.	TOTAL SHEETS
08	SBd	40	R73.0/R89.0	16	36

REGISTERED CIVIL ENGINEER 12-13-13 DATE

12-16-13
PLANS APPROVAL DATE

REGISTERED PROFESSIONAL ENGINEER RENEE SASSE No. C41092 Exp. 3-31-15 CIVIL STATE OF CALIFORNIA

THE STATE OF CALIFORNIA OR ITS OFFICERS OR AGENTS SHALL NOT BE RESPONSIBLE FOR THE ACCURACY OR COMPLETENESS OF SCANNED COPIES OF THIS PLAN SHEET.

NOTE:

1. SEE 2010 REVISED STD PLANS RSP A77P1 AND RSP A77T2 FOR DETAILS OF BURIED POST END ANCHOR, ALTERNATIVE TERMINAL SYSTEM AND TYPE 11C LAYOUT.

METAL BEAM GUARD RAILING

3 WESTBOUND

LOCATION	SALVAGE GUARD RAIL	TREATED WOOD WASTE (TWW)	MGS (7' POST)	MINOR CONCRETE (MINOR STRUCTURE)	TRANSITION RAILING (TYPE WB-31)	ALTERNATIVE TERMINAL SYSTEM FLARED	ALTERNATIVE TERMINAL SYSTEM IN-LINE	END ANCHOR ASSEMBLY (TYPE SFT)	NOTE
	LF	LB	LF	CY	EA	EA		EA	
VAN WINKLE WASH 54-903 R† PM R85.230	125.0	1,815	62.5	0.72	1	1			BRIDGE RAIL (TYPE 9)
VAN WINKLE WASH 54-903 L† PM R85.230	300.0	4,356	287.5	0.72	1	1			
MARBLE WASH 54-886 R† PM R80.190	150.0	2,178	112.5			1			
MARBLE WASH 54-886 L† PM R80.190	137.5	1,996	312.5			1			
PM R79.70 TO PM R79.36 R†	1,800.0	26,134	1,762.5			1		1	
PM R79.51 TO PM R78.63 L†	4,675.0	67,875	4,637.5			1		1	
PM R78.94 TO PM R78.25 R†	3,650.0	52,993	3,612.5			1		1	OFF RAMP AT KELBAKER
KELBAKER RD UC 54-885 R† PM R78.174	100.0	1,452	37.5	0.72	1	1			BRIDGE RAIL (TYPE 9)
KELBAKER RD UC 54-885 L† PM R78.174	100.0	1,452	275.0	0.72	1		1		
PM R77.94 TO PM R77.68 R†	1,362.5	19,782	1,325.0			1		1	
PM R77.87 TO PM R77.63 L†	1350	19,600	1,300.0				1	1	
WILLOW SPR WASH 54-853 R† PM R77.371	175.0	2,541	112.5	0.72	1	1			BRIDGE RAIL (TYPE 9)
WILLOW SPR WASH 54-853 L† PM R77.371	175.0	2,541	287.5	0.72	1	1			
GRANITE MT WASH 54-852 R† PM R76.497	200.0	2,904	137.5	0.72	1	1			BRIDGE RAIL (TYPE 9)
GRANITE MT WASH 54-852 L† PM R76.497	200.0	2,904	287.5	0.72	1	1			
BADGER WASH 54-851 R† PM R75.496	125.0	1,815	62.5	0.72	1	1			BRIDGE RAIL (TYPE 9)
BADGER WASH 54-851 L† PM R75.496	125.0	1,815	275.0	0.72	1		1		
OLD DAD WASH 54-850 R† PM R74.507	112.5	1,633	50.0	0.72	1	1			BRIDGE RAIL (TYPE 9)
OLD DAD WASH 54-850 L† PM R74.507	125.0	1,815	275.0	0.72	1		1		
PM R74.30 TO PM R74.14 R†	850.0	12,341	812.5			1		1	
PM R74.02 TO PM R73.98 R†	225.0	3,267	187.5			1		1	
PM R73.88 TO PM R73.84 R†	200.0	2,904	162.5			1		1	
SUBTOTAL (WESTBOUND)	16,262.5	236,110	16,375.0	8.64	12	18	4	8	

3 EASTBOUND

LOCATION	SALVAGE GUARD RAIL	TREATED WOOD WASTE (TWW)	MGS (7' POST)	MINOR CONCRETE (MINOR STRUCTURE)	TRANSITION RAILING (TYPE WB-31)	ALTERNATIVE TERMINAL SYSTEM FLARED	ALTERNATIVE TERMINAL SYSTEM IN-LINE	END ANCHOR ASSEMBLY (TYPE SFT)	NOTE
	LF	LB	LF	CY	EA	EA		EA	
PM R73.45 TO PM R73.68 R†	1,225.0	17,785	1,225.0					1	SEE NOTE FOR BURIED END
PM R73.80 TO PM R73.84 R†	175.0	2,541	137.5			1		1	
PM R73.95 TO PM R74.26 R†	1,600.0	23,230	1,562.5			1		1	
OLD DAD WASH 54-850 R† PM R74.507	100.0	1,452	37.5	0.72	1	1			BRIDGE RAIL (TYPE 9)
OLD DAD WASH 54-850 L† PM R74.507	100.0	1,452	275.0	0.72	1		1		
BADGER WASH 54-851 R† PM R75.496	100.0	1,452	37.5	0.72	1	1			BRIDGE RAIL (TYPE 9)
BADGER WASH 54-851 L† PM R75.496	100.0	1,452	275.0	0.72	1		1		
GRANITE MT WASH 54-852 R† PM R76.497	275.0	3,993	212.5	0.72	1	1			BRIDGE RAIL TYPE 30A MOD (CONCRETE)
GRANITE MT WASH 54-852 L† PM R76.497	275.0	3,993	287.5	0.72	1	1			
WILLOW SPR WASH 54-853 R† PM R77.371	475.0	6,896	412.5	0.72	1	1			BRIDGE RAIL TYPE 30A MOD (CONCRETE)
WILLOW SPR WASH 54-853 L† PM R77.371	62.5	907	312.5	0.72	1	1			
PM R77.59 TO PM R77.87 L†	1,500.0	21,778	1,462.5			1		1	
PM R77.69 TO PM R77.88 R†	1,125.0	16,334	1,087.5			1		1	
KELBAKER RD UC 54-885 R† PM R78.174	100.0	1,452	37.5	0.72	1	1			BRIDGE RAIL (TYPE 9)
KELBAKER RD UC 54-885 L† PM R78.174	100.0	1,452	275.0	0.72	1		1		
PM R78.66 TO PM R79.49 L†	4,362.5	63,338	4,312.5				1	1	
PM R78.67 TO PM R79.52 R†	4,450.0	64,608	4,412.5			1		1	
MARBLE WASH 54-886 R† PM R80.190	150.0	2,178	112.5			1			
MARBLE WASH 54-886 L† PM R80.190	250.0	3,630	312.5			1			
PM R80.45 TO PM R80.58 R†	687.5	9,982	687.5					1	AT END OF BRIDGE
VAN WINKLE WASH 54-903 R† PM R85.230	100.0	1,452	37.5	0.72	1	1			BRIDGE RAIL (TYPE 9)
VAN WINKLE WASH 54-903 L† PM R85.230	175.0	2,541	287.5	0.72	1	1			
SUBTOTAL (EASTBOUND)	17,487.5	253,895	17,800.0	8.64	12	16	4	8	
SUBTOTAL (WESTBOUND)	16,262.5	236,110	16,375.0	8.64	12	18	4	8	
TOTAL	33,750	490,005	34,175	17.28	24	34	8	16	

3 REPLACED PER ADDENDUM No. 3 DATED MARCH 21, 2014

SUMMARY OF QUANTITIES

Q-3

STATE OF CALIFORNIA - DEPARTMENT OF TRANSPORTATION
Caltrans DESIGN
FUNCTIONAL SUPERVISOR RENEE SASSE
CALCULATED-DESIGNED BY DON D NGUYEN
CHECKED BY DUNG HUY PHAN
REVISED BY
DATE REVISED

LAST REVISION 12-13-13
DATE PLOTTED => 21-MAR-2014
TIME PLOTTED => 11:12

Dist	COUNTY	ROUTE	POST MILES TOTAL PROJECT	SHEET No.	TOTAL SHEETS
08	SBd	40	R73.0/R89.0	17	36

3

Renee Sasse 12-13-13
REGISTERED CIVIL ENGINEER DATE

12-16-13
PLANS APPROVAL DATE

REGISTERED PROFESSIONAL ENGINEER
RENEE SASSE
No. C41092
Exp. 3-31-15
CIVIL
STATE OF CALIFORNIA

THE STATE OF CALIFORNIA OR ITS OFFICERS OR AGENTS SHALL NOT BE RESPONSIBLE FOR THE ACCURACY OR COMPLETENESS OF SCANNED COPIES OF THIS PLAN SHEET.

ROADWAY QUANTITIES

LOCATION	COLD PLANE AC			HMA (TYPE C)				HMA (TYPE A)			TACK COAT	IMPORTED BORROW	SHOULDER RUMBLE STRIP (HMA, GROUND-IN-INDENTATIONS)	ASPHALT RUBBER BINDER SEAL COAT			
	DEPTH 0.15′	DEPTH 0.40′	SUB-TOTAL	DEPTH 0.25′	DEPTH ~~0.45′~~ 0.50′	UNDER DIKE	SUB-TOTAL	DIKE	MODIFIED OVERSIDE DRAIN	SUB-TOTAL				ASPHALT-RUBBER BINDER	SCREENINGS	ASPHALTIC EMULSION (FOG SEAL COAT)	SAND COVER (SEAL)
	SQYD			TON				TON			TON		STA	TON	TON	TON	TON
EASTBOUND PM R73.0/R89.0	362,517	3,563	366,080	61,175	1,203 ~~1,082~~	370	62,748 ~~62,627~~	401	1.50	402.5	168	3,675	1,690	563	3,830	27	563
WESTBOUND PM R73.0/R89.0	358,479	7,601	366,080	60,493	2,565 ~~2,309~~	146	63,204 ~~62,948~~	157	0.50	157.5	168	3,675	1,690	563	3,830	27	563
RAMPS AT KELBAKER Rd EB EXIT 1570 LF WB ENTRANCE 1700 LF EB ENTRANCE 1750 LF WB EXIT 1470 LF	20,191		20,191	3,407		112	3,519	118		118	9	282					
TOTAL			752,351				~~129,094~~ 129,471			678	345	7,632	3,380	1,126	7,660	54	1,126

TEMPORARY FENCE

TEMPORARY FENCE (TYPE DESERT TORTOISE)	LF
TOTAL	1500

TEMPORARY CONSTRUCTION BMPs

TEMPORARY CONSTRUCTION SITE BMPs	UNITS	QUANTITIES
TEMPORARY FIBER ROLL	LF	500

3 REPLACED PER ADDENDUM No. 3 DATED MARCH 21, 2014

SUMMARY OF QUANTITIES

Q-4

STATE OF CALIFORNIA - DEPARTMENT OF TRANSPORTATION
Caltrans
DESIGN
FUNCTIONAL SUPERVISOR: RENEE SASSE
CALCULATED-DESIGNED BY: DON D NGUYEN
CHECKED BY: DUNG HUY PHAN
REVISED BY
DATE REVISED

LAST REVISION 12-13-13
DATE PLOTTED => 21-MAR-2014
TIME PLOTTED => 11:12