Dist	COUNTY	ROUTE	POST MILES TOTAL PROJECT	SHEET No.	TOTAL SHEETS
08	SBd	40	R3.0/R28.1	1	43

STATE OF CALIFORNIA

DEPARTMENT OF TRANSPORTATION

ACIM-040-1(080)E

PROJECT PLANS FOR CONSTRUCTION ON

STATE HIGHWAY

IN SAN BERNARDINO COUNTY AT DAGGETT AND NEWBERRY FROM 0.4 MILE WEST OF SOUTH IWO JIMA AVENUE UNDERCROSSING TO 0.2 MILE WEST OF DESERT OASIS SAFETY ROADSIDE REST AREA

TO BE SUPPLEMENTED BY STANDARD PLANS DATED 2010

INDEX OF PLANS

SHEET No.	DESCRIPTION
1	TITLE AND LOCATION MAP
2-4	TYPICAL CROSS SECTIONS
5-10	CONSTRUCTION DETAILS
11	CONSTRUCTION AREA SIGNS
12	PAVEMENT DELINEATION DETAILS
13-18	PAVEMENT DELINEATION QUANTITIES
19-34	SUMMARY OF QUANTITIES
35	ELECTRICAL PLAN
36-43	REVISED STANDARD PLANS

THE STANDARD PLANS LIST APPLICABLE TO THIS CONTRACT IS INCLUDED IN THE NOTICE TO BIDDERS AND SPECIAL PROVISIONS BOOK

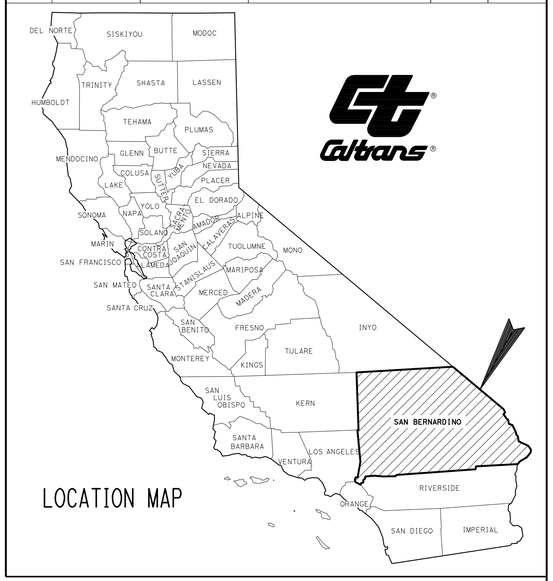

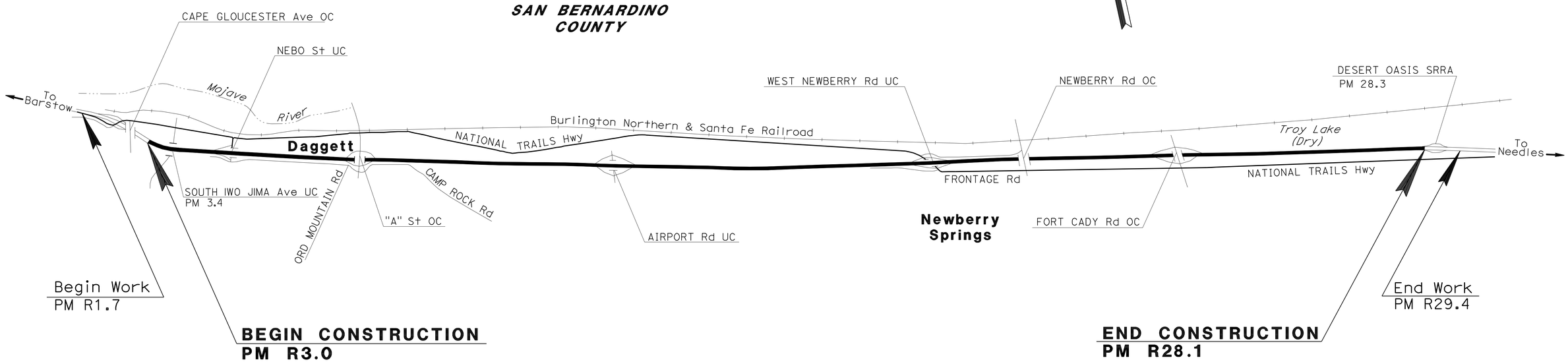

NO SCALE

PROJECT ENGINEER
REGISTERED CIVIL ENGINEER

8-13-12
DATE

August 13, 2012
PLANS APPROVAL DATE

REGISTERED PROFESSIONAL ENGINEER
MICHAEL P. RISTIC
No. 69429
Exp. 06-30-14
CIVIL
STATE OF CALIFORNIA

THE STATE OF CALIFORNIA OR ITS OFFICERS OR AGENTS SHALL NOT BE RESPONSIBLE FOR THE ACCURACY OR COMPLETENESS OF SCANNED COPIES OF THIS PLAN SHEET.

PROJECT MANAGER: MOHAMMAD MOLLAZADEH

DESIGN ENGINEER: YONGBEE LIAU

THE CONTRACTOR SHALL POSSESS THE CLASS (OR CLASSES) OF LICENSE AS SPECIFIED IN THE "NOTICE TO BIDDERS."

CONTRACT No.	08-0K2504
PROJECT ID	0800020490

LAST REVISION 08-13-12 DATE PLOTTED => 14-AUG-2012 TIME PLOTTED => 08:25

Dist	COUNTY	ROUTE	POST MILES TOTAL PROJECT	SHEET No.	TOTAL SHEETS
08	SBd	40	R3.0/R28.1	2	43

REGISTERED CIVIL ENGINEER 8-13-12 DATE

8-13-12
PLANS APPROVAL DATE

REGISTERED PROFESSIONAL ENGINEER YONGBEE LIAU No. 75571 Exp. 06-30-14 CIVIL STATE OF CALIFORNIA

THE STATE OF CALIFORNIA OR ITS OFFICERS OR AGENTS SHALL NOT BE RESPONSIBLE FOR THE ACCURACY OR COMPLETENESS OF SCANNED COPIES OF THIS PLAN SHEET.

NOTES:

1. DIMENSIONS OF STRUCTURAL SECTIONS ARE SUBJECT TO TOLERANCES SPECIFIED IN THE STANDARD SPECIFICATIONS.
2. SUPERELEVATION AS SHOWN OR AS DIRECTED BY THE ENGINEER.
3. NO SURFACING, COLD PLANING, OR FOG SEAL SHALL BE ALLOWED ON APPROACH SLABS AND ON BRIDGE STRUCTURES.
4. EXISTING UTILITY FACILITIES HAVE NOT BEEN PLOTTED ON THESE PLANS.
5. EXISTING STRUCTURAL SECTIONS NOT SHOWN.
6. CENTERLINE, LANE WIDTH AND SHOULDER WIDTH SHOWN ARE APPROXIMATE.
7. INSTALL SAFETY EDGE PER RSP P74 TO P76.

LEGEND:

1	Fog Seal Shoulder
2	0.40′ COLD PLANE 0.40′ HMA-C
3	0.10′ Cold Plane 0.10′ RHMA-G
4	0.25′ COLD PLANE 0.25′ HMA-C
5	0.10′ RHMA-G
6	0.25′ MAX COLD PLANE 0.25′ - 0.45′ HMA-C
7	0.90′ JPCPRSC (FOR RAMP TERMINI) PLASTIC POLYETHLENE BOND BREAKER 0.40′ LCBRS
8	0.15′ COLD PLANE 0.15′ RHMA-G

ABBREVIATION:

RHMA-G	RUBBERIZED HOT MIX ASPHALT (GAP GRADED)
JPCPRSC	JOINTED PLAIN CONCRETE PAVEMENT (RAMP TERMINI WITH RAPID STRENGTH CONCRETE)
LCBRS	LEAN CONCRETE BASE RAPID SETTING

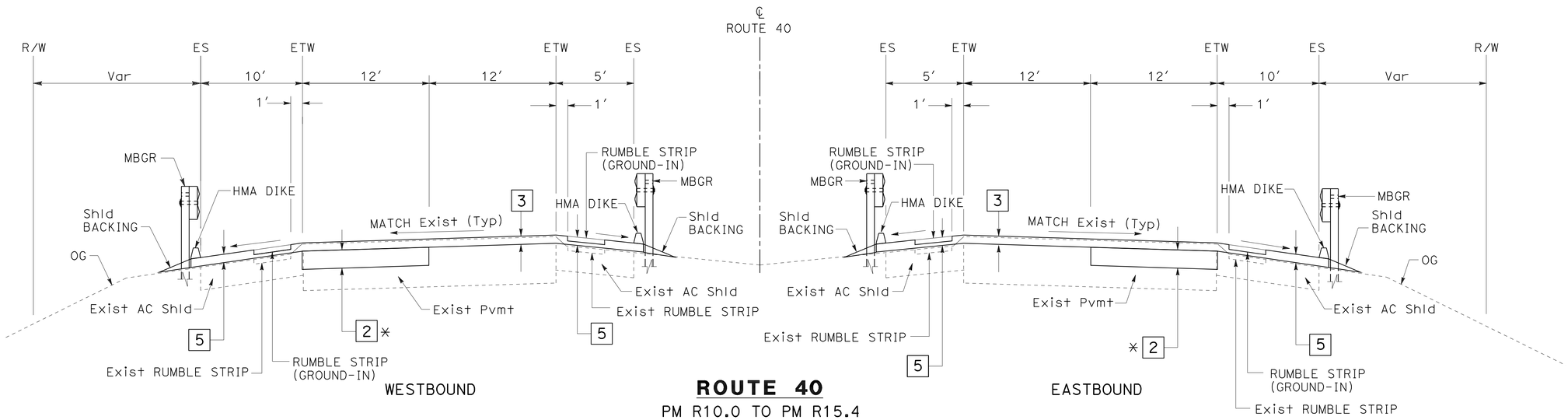

ROUTE 40
PM R10.0 TO PM R15.4

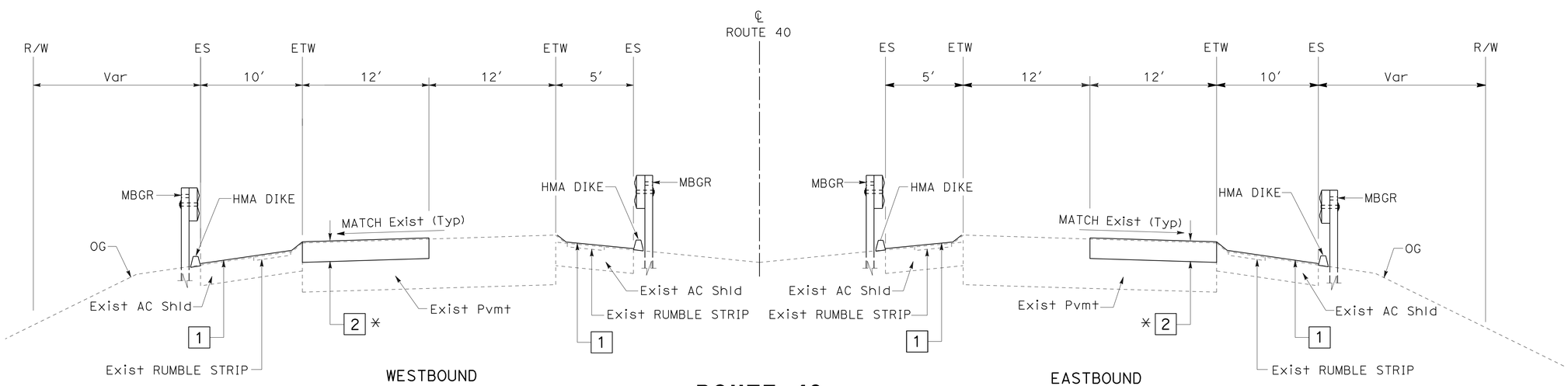

ROUTE 40
PM R3.0 TO PM R10.0

* THE LOCATION AND DIMENSIONS OF COLD PLANE TO BE DETERMINED BY THE ENGINEER.

TYPICAL CROSS SECTIONS

NO SCALE

X-1

REVISED BY	DATE REVISED
YONGBEE LIAU	MICHAEL RISTIC
CALCULATED-DESIGNED BY	CHECKED BY
FUNCTIONAL SUPERVISOR	MICHAEL RISTIC

STATE OF CALIFORNIA - DEPARTMENT OF TRANSPORTATION
Caltrans® MAINTENANCE ENGINEERING

LAST REVISION 08-13-12 | DATE PLOTTED => 14-AUG-2012 | TIME PLOTTED => 08:25

Dist	COUNTY	ROUTE	POST MILES TOTAL PROJECT	SHEET No.	TOTAL SHEETS
08	SBd	40	R3.0/R28.1	3	43

REGISTERED CIVIL ENGINEER 8-13-12 DATE

8-13-12
PLANS APPROVAL DATE

REGISTERED PROFESSIONAL ENGINEER
YONGBEE LIAU
No. 75571
Exp. 06-30-14
CIVIL
STATE OF CALIFORNIA

THE STATE OF CALIFORNIA OR ITS OFFICERS OR AGENTS SHALL NOT BE RESPONSIBLE FOR THE ACCURACY OR COMPLETENESS OF SCANNED COPIES OF THIS PLAN SHEET.

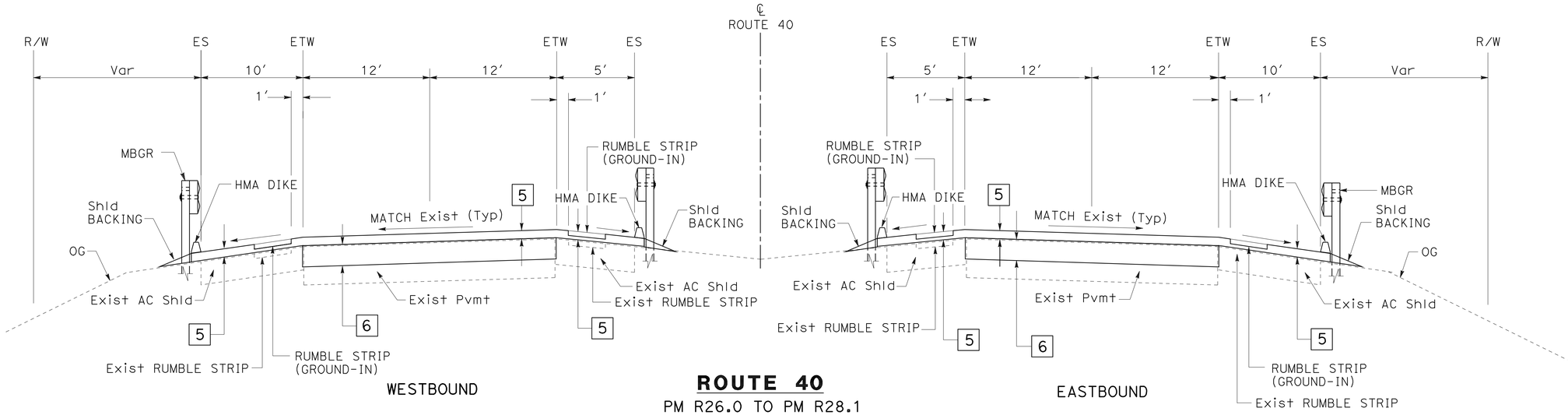

ROUTE 40
PM R26.0 TO PM R28.1

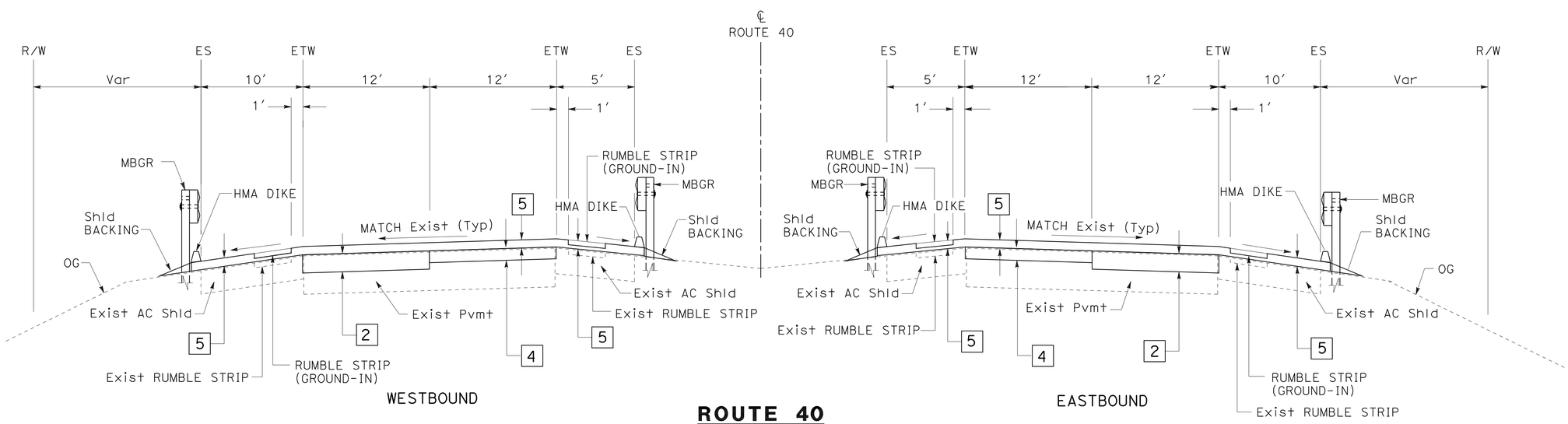

ROUTE 40
PM R15.4 TO PM R26.0

TYPICAL CROSS SECTIONS
NO SCALE

X-2

REVISED BY	DATE REVISED
YONGBEE LIAU	MICHAEL RISTIC
CALCULATED-DESIGNED BY	CHECKED BY
FUNCTIONAL SUPERVISOR	MICHAEL RISTIC

STATE OF CALIFORNIA - DEPARTMENT OF TRANSPORTATION
Caltrans® MAINTENANCE ENGINEERING

LAST REVISION 08-13-12 | DATE PLOTTED => 14-AUG-2012 | TIME PLOTTED => 08:26

Dist	COUNTY	ROUTE	POST MILES TOTAL PROJECT	SHEET No.	TOTAL SHEETS
08	SBd	40	R3.0/R28.1	4	43

REGISTERED CIVIL ENGINEER 8-13-12 DATE

8-13-12
PLANS APPROVAL DATE

REGISTERED PROFESSIONAL ENGINEER YONGBEE LIAU No. 75571 Exp. 06-30-14 CIVIL STATE OF CALIFORNIA

THE STATE OF CALIFORNIA OR ITS OFFICERS OR AGENTS SHALL NOT BE RESPONSIBLE FOR THE ACCURACY OR COMPLETENESS OF SCANNED COPIES OF THIS PLAN SHEET.

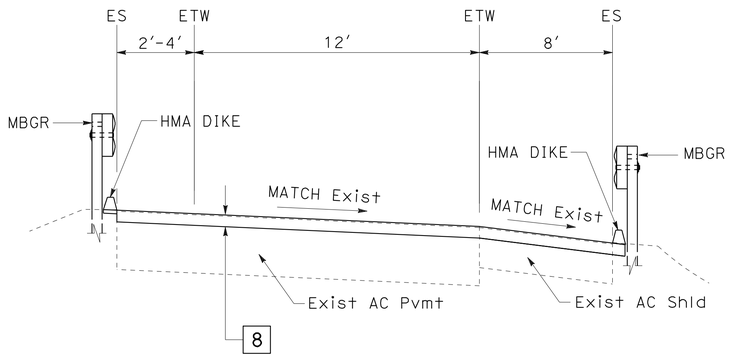

ROUTE 40 EB ENTRANCE/EXIT RAMP

NEBO STREET
"A" STREET
AIRPORT ROAD
WEST NEWBERRY ROAD
FORT CADY ROAD

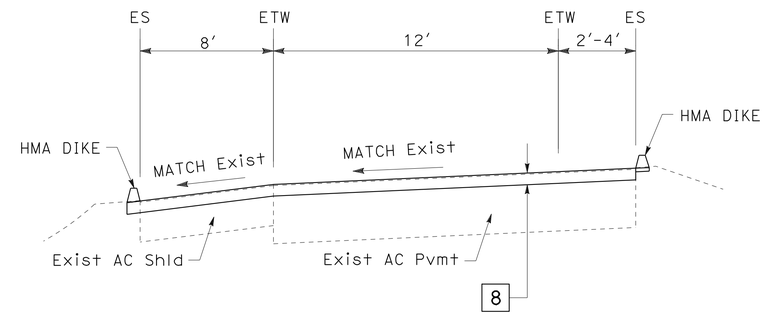

ROUTE 40 WB ENTRANCE/EXIT RAMP

NEBO STREET
"A" STREET
AIRPORT ROAD
WEST NEWBERRY ROAD
FORT CADY ROAD

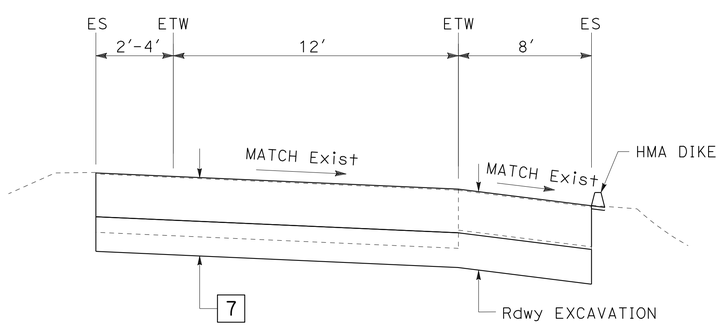

ROUTE 40 EB EXIT RAMP

WEST NEWBERRY ROAD
FORT CADY ROAD

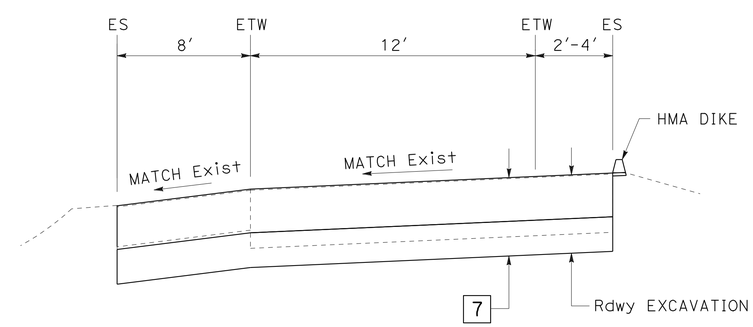

ROUTE 40 WB EXIT RAMP

WEST NEWBERRY ROAD
FORT CADY ROAD

TYPICAL CROSS SECTIONS

NO SCALE

X-3

STATE OF CALIFORNIA - DEPARTMENT OF TRANSPORTATION
Caltrans® MAINTENANCE ENGINEERING

FUNCTIONAL SUPERVISOR: MICHAEL RISTIC
CALCULATED-DESIGNED BY: YONGBEE LIAU
CHECKED BY: MICHAEL RISTIC
REVISED BY
DATE REVISED

LAST REVISION 08-13-12
DATE PLOTTED => 14-AUG-2012
TIME PLOTTED => 08:26

Dist	COUNTY	ROUTE	POST MILES TOTAL PROJECT	SHEET No.	TOTAL SHEETS
08	SBd	40	R3.0/R28.1	5	43

REGISTERED CIVIL ENGINEER 8-13-12 DATE

8-13-12
PLANS APPROVAL DATE

REGISTERED PROFESSIONAL ENGINEER YONGBEE LIAU No. 75571 Exp. 06-30-14 CIVIL STATE OF CALIFORNIA

THE STATE OF CALIFORNIA OR ITS OFFICERS OR AGENTS SHALL NOT BE RESPONSIBLE FOR THE ACCURACY OR COMPLETENESS OF SCANNED COPIES OF THIS PLAN SHEET.

NOTES:

1. SEE QUANTITY SHEETS FOR LOCATIONS, TYPES, AND QUANTITIES.
2. SEE STANDARD PLANS FOR DETAILS NOT SHOWN.
3. SEE SHEET C-2 FOR THRIE BEAM CONNECTION DETAILS.

LEGEND:

⇨ DIRECTION OF TRAFFIC

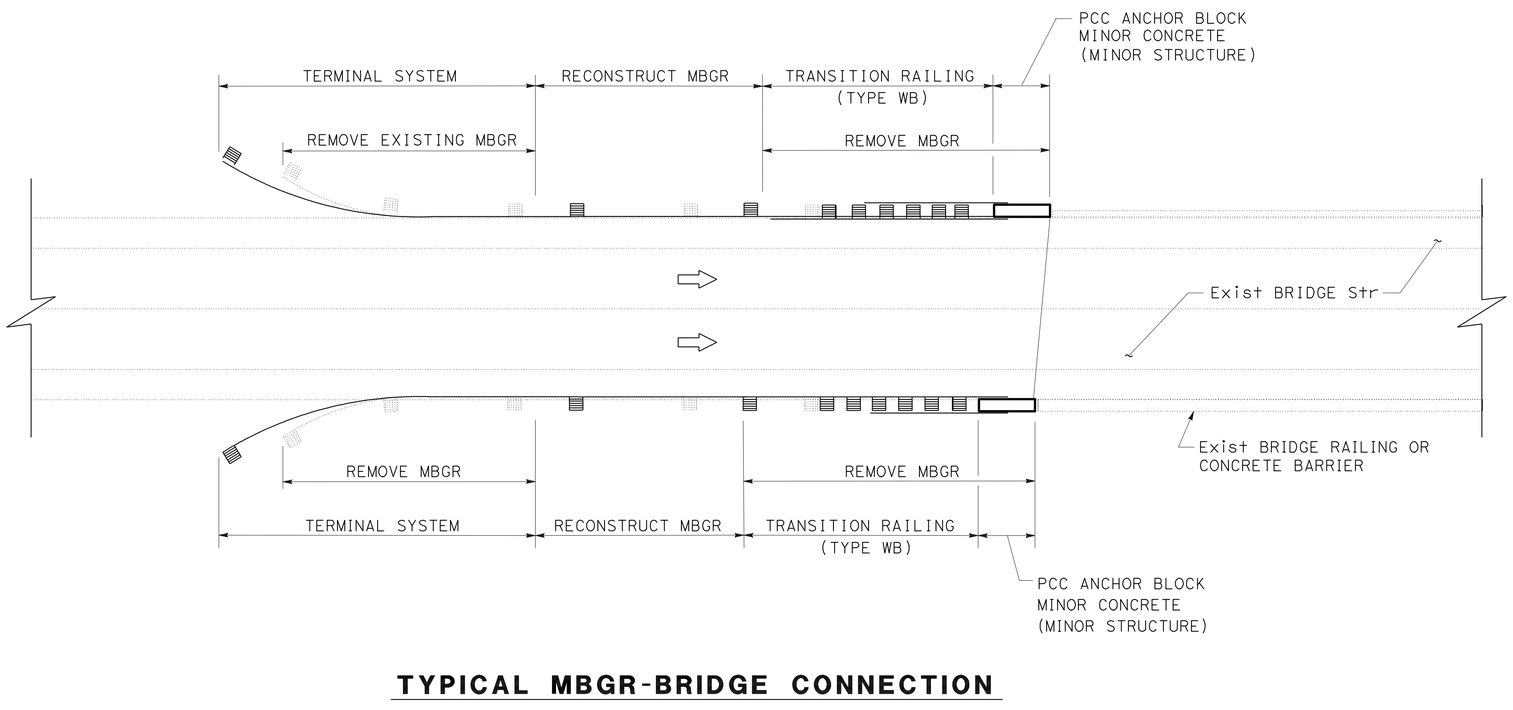

TYPICAL MBGR-BRIDGE CONNECTION

CONSTRUCTION DETAILS

NO SCALE

C-1

STATE OF CALIFORNIA - DEPARTMENT OF TRANSPORTATION
Caltrans MAINTENANCE ENGINEERING

FUNCTIONAL SUPERVISOR: MICHAEL RISTIC

CALCULATED-DESIGNED BY: YONGBEE LIAU
CHECKED BY: MICHAEL RISTIC

REVISED BY
DATE REVISED

LAST REVISION 08-13-12
DATE PLOTTED => 14-AUG-2012
TIME PLOTTED => 08:26

Dist	COUNTY	ROUTE	POST MILES TOTAL PROJECT	SHEET No.	TOTAL SHEETS
08	SBd	40	R3.0/R28.1	6	43

REGISTERED CIVIL ENGINEER 8-13-12 DATE

8-13-12
PLANS APPROVAL DATE

REGISTERED PROFESSIONAL ENGINEER YONGBEE LIAU No. 75571 Exp. 06-30-14 CIVIL STATE OF CALIFORNIA

THE STATE OF CALIFORNIA OR ITS OFFICERS OR AGENTS SHALL NOT BE RESPONSIBLE FOR THE ACCURACY OR COMPLETENESS OF SCANNED COPIES OF THIS PLAN SHEET.

NOTES:

1. FOR DETAILS NOT SHOWN, SEE STANDARD PLANS
2. DEPENDENT DIMENSIONS WILL BE VERIFIED IN THE FIELD BEFORE FABRICATING ANY END CONNECTION TO CONFORM WITH EXISTING PAVED CONDITIONS.
3. WHEN END SECTION IS CALLED FOR, MODIFY TYPICAL TERMINAL SECTION TO FIT. SEE DETAIL E
4. ALL PLATES AND BOLTS ARE GALVANIZED.
5. CUT AND REMOVE PORTION OF TYPE 1, 2 AND BAGR AS REQUIRED.
6. EXTERIOR SPLICE BOLT HOLES SHALL BE THE STANDARD 7/8" X 1 1/8"SLOT SIZE FOR RAIL SPLICES AT POST #T4 AND THE CONNECTION TO THE CONCRETE BARRIER OR RAILING. INTERIOR SPLICE BOLT HOLES MAY BE INCREASED UP TO 1 1/4" DIA. WASHERS SHALL BE USED WITH SPLICE BOLTS ON BACK SIDE OF RAIL ELEMENT AT POST #T4 AND CONNECTION TO THE CONCRETE BARRIER OR RAILING.
7. TAPER THE TOP OF THE END OF THE BRIDGE RAILING AT 4:1 TO MATCH THE TOP ELEVATION OF THE THRIE BEAM RAIL ELEMENT.

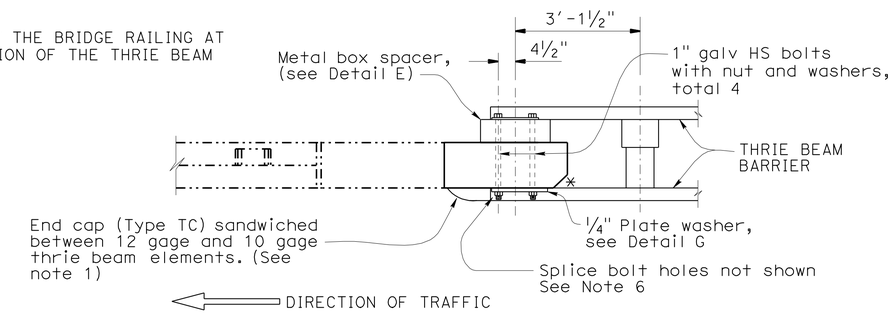

PLAN

* 5" x 5" chamfer

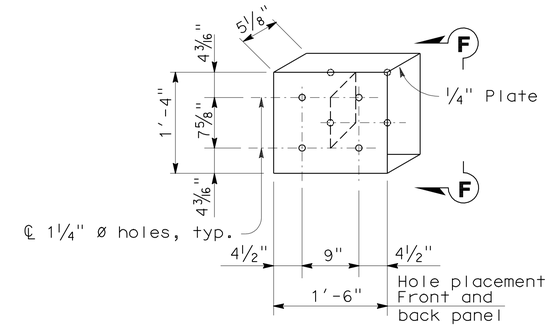

DETAIL E

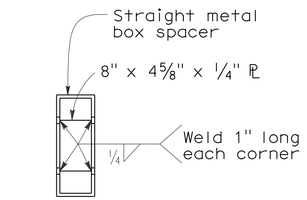

VIEW F-F

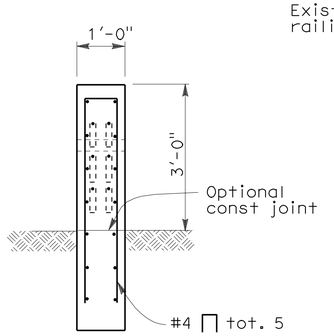

SECTION A-A

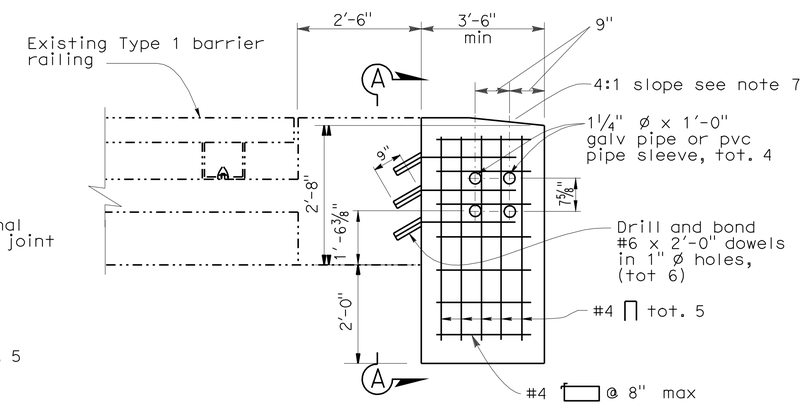

ELEVATION

TYPE I

TYPICAL SECTION

(TYPE 1 BARRIER)

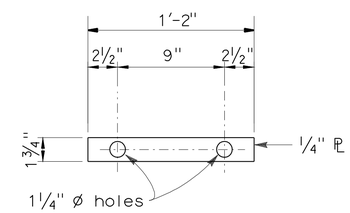

DETAIL G

THRIE BEAM CONNECTION DETAILS
BARRIER RAILING TYPE 1
TRANSITION RAILING CONNECTION (TYPE WB)

CONSTRUCTION DETAILS

NO SCALE

C-2

STATE OF CALIFORNIA - DEPARTMENT OF TRANSPORTATION
Caltrans MAINTENANCE ENGINEERING

FUNCTIONAL SUPERVISOR: MICHAEL RISTIC
CALCULATED-DESIGNED BY: YONGBEE LIAU
CHECKED BY: MICHAEL RISTIC
REVISED BY / DATE REVISED

LAST REVISION 08-13-12 | DATE PLOTTED => 14-AUG-2012 | TIME PLOTTED => 08:26

Dist	COUNTY	ROUTE	POST MILES TOTAL PROJECT	SHEET No.	TOTAL SHEETS
08	SBd	40	R3.0/R28.1	7	43

REGISTERED CIVIL ENGINEER 8-13-12 DATE

8-13-12
PLANS APPROVAL DATE

REGISTERED PROFESSIONAL ENGINEER YONGBEE LIAU No. 75571 Exp. 06-30-14 CIVIL STATE OF CALIFORNIA

THE STATE OF CALIFORNIA OR ITS OFFICERS OR AGENTS SHALL NOT BE RESPONSIBLE FOR THE ACCURACY OR COMPLETENESS OF SCANNED COPIES OF THIS PLAN SHEET.

NOTES:

1. PLACE GROUND-IN INDENTATIONS RUMBLE STRIP PER STANDARD PLAN A40B.
2. LIMITS OF THE RUMBLE STRIPS AS SHOWN OR AS DIRECTED BY THE ENGINEER.

LEGEND:

RUMBLE STRIP

DIRECTION OF TRAFFIC

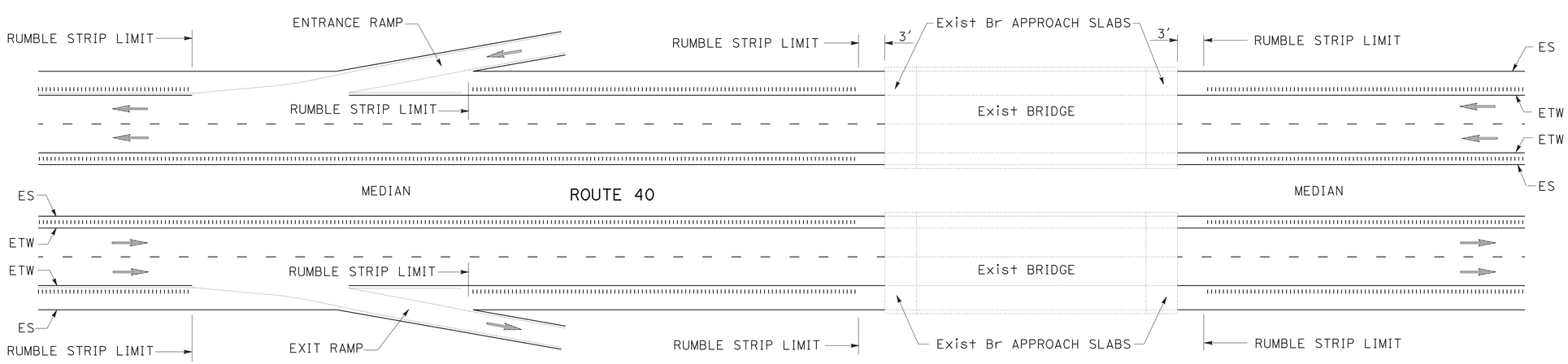

RUMBLE STRIP PLACEMENT

(AT RAMPS AND BRIDGES)

CONSTRUCTION DETAILS

NO SCALE

C-3

STATE OF CALIFORNIA - DEPARTMENT OF TRANSPORTATION
Caltrans® MAINTENANCE ENGINEERING

FUNCTIONAL SUPERVISOR: MICHAEL RISTIC

CALCULATED-DESIGNED BY: YONGBEE LIAU
CHECKED BY: MICHAEL RISTIC

REVISED BY | DATE REVISED

LAST REVISION 08-13-12
DATE PLOTTED => 14-AUG-2012
TIME PLOTTED => 08:26

Dist	COUNTY	ROUTE	POST MILES TOTAL PROJECT	SHEET No.	TOTAL SHEETS
08	SBd	40	R3.0/R28.1	8	43

REGISTERED CIVIL ENGINEER 8-13-12 DATE

8-13-12
PLANS APPROVAL DATE

REGISTERED PROFESSIONAL ENGINEER YONGBEE LIAU No. 75571 Exp. 06-30-14 CIVIL STATE OF CALIFORNIA

THE STATE OF CALIFORNIA OR ITS OFFICERS OR AGENTS SHALL NOT BE RESPONSIBLE FOR THE ACCURACY OR COMPLETENESS OF SCANNED COPIES OF THIS PLAN SHEET.

NOTE:

1. TAPER CONFORM TO EXISTING PAVEMENT IS INTENDED TO MAINTAIN VERTICAL CLEARANCE AT OVERCROSSING.

LEGEND:

0.10' RHMA-G

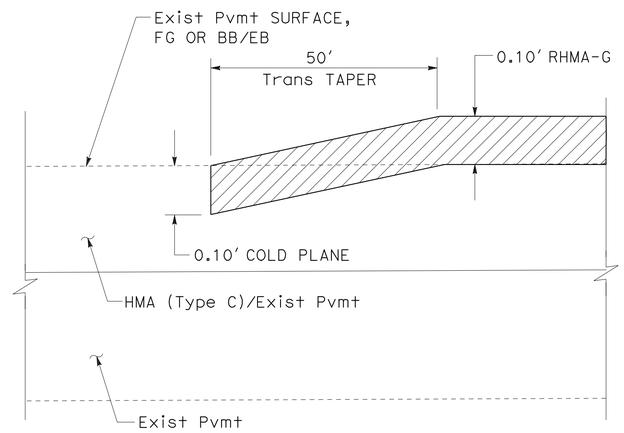

DETAIL "A"
PAVEMENT CONFORM

ENTRANCE / EXIT RAMP TO AND FROM MAINLINE
BEGIN / END BRIDGE AND APROACH SLAB
BEGIN / END CONSTRUCTION

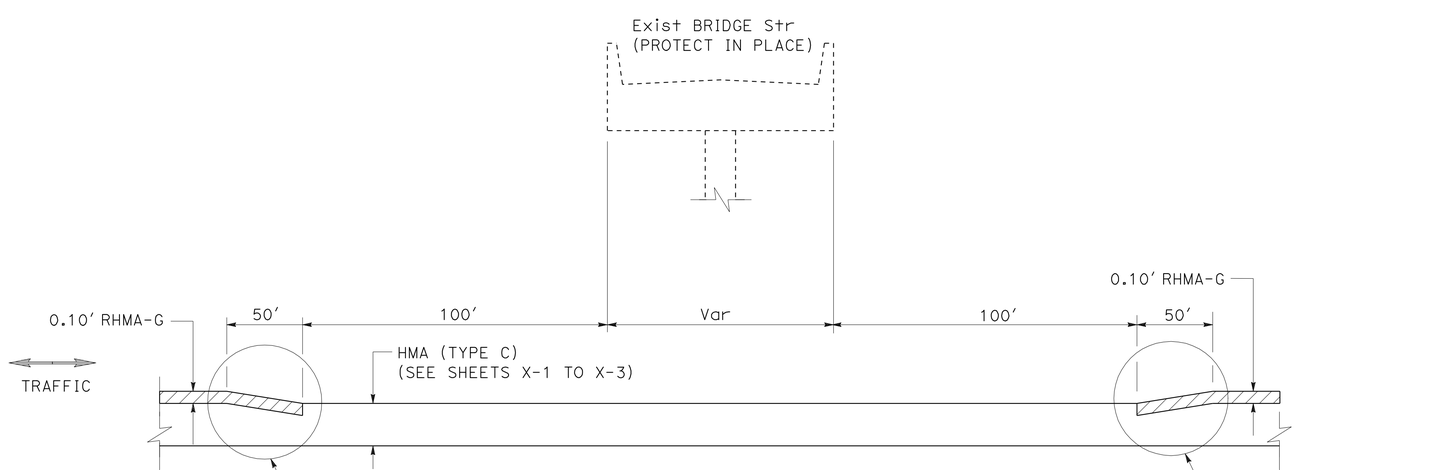

TAPER CONFORM TO EXISTING PAVEMENT AT OVERCROSSING

CONSTRUCTION DETAILS
NO SCALE

C-4

REVISED BY | DATE REVISED
YONGBEE LIAU | MICHAEL RISTIC
CALCULATED-DESIGNED BY | CHECKED BY
FUNCTIONAL SUPERVISOR | MICHAEL RISTIC
STATE OF CALIFORNIA - DEPARTMENT OF TRANSPORTATION
Caltrans MAINTENANCE ENGINEERING

LAST REVISION 08-13-12 | DATE PLOTTED => 14-AUG-2012 | TIME PLOTTED => 08:26

Dist	COUNTY	ROUTE	POST MILES TOTAL PROJECT	SHEET No.	TOTAL SHEETS
08	SBd	40	R3.0/R28.1	9	43

REGISTERED CIVIL ENGINEER 8-13-12 DATE

8-13-12
PLANS APPROVAL DATE

REGISTERED PROFESSIONAL ENGINEER YONGBEE LIAU No. 75571 Exp. 06-30-14 CIVIL STATE OF CALIFORNIA

THE STATE OF CALIFORNIA OR ITS OFFICERS OR AGENTS SHALL NOT BE RESPONSIBLE FOR THE ACCURACY OR COMPLETENESS OF SCANNED COPIES OF THIS PLAN SHEET.

NOTES:

1. DOWELS AND TIE BARS SPACING PER STANDARD PLANS P10 AND P18.
2. LONGITUDINAL WEAKENED PLANE JOINTS SHALL EXTEND TO AND TERMINATE AT THE TRANSVERSE JOINT WHERE NO SLAB WIDTH LESS THAN 2′ OR GREATER THAN 15′ RESULTS.
3. MATCH AND JOIN EXISTING GRADE ALONG EXISTING LOCAL STREET.
4. FOR DETAILS NOT SHOWN, SEE STD. PLANS P10, P12, P17, P18, P20, AND P30.
5. SEE SHEETS X-1 AND X-3 FOR PAVEMENT TYPICAL CROSS SECTIONS.
6. CONTRACTOR TO VERIFY EXISTING UTILITIES IF ANY.

ABBREVIATIONS:

RSC RAPID STRENGTH CONCRETE

LEGEND:

⇨ DIRECTION OF TRAFFIC

[X] SEE NOTE 5

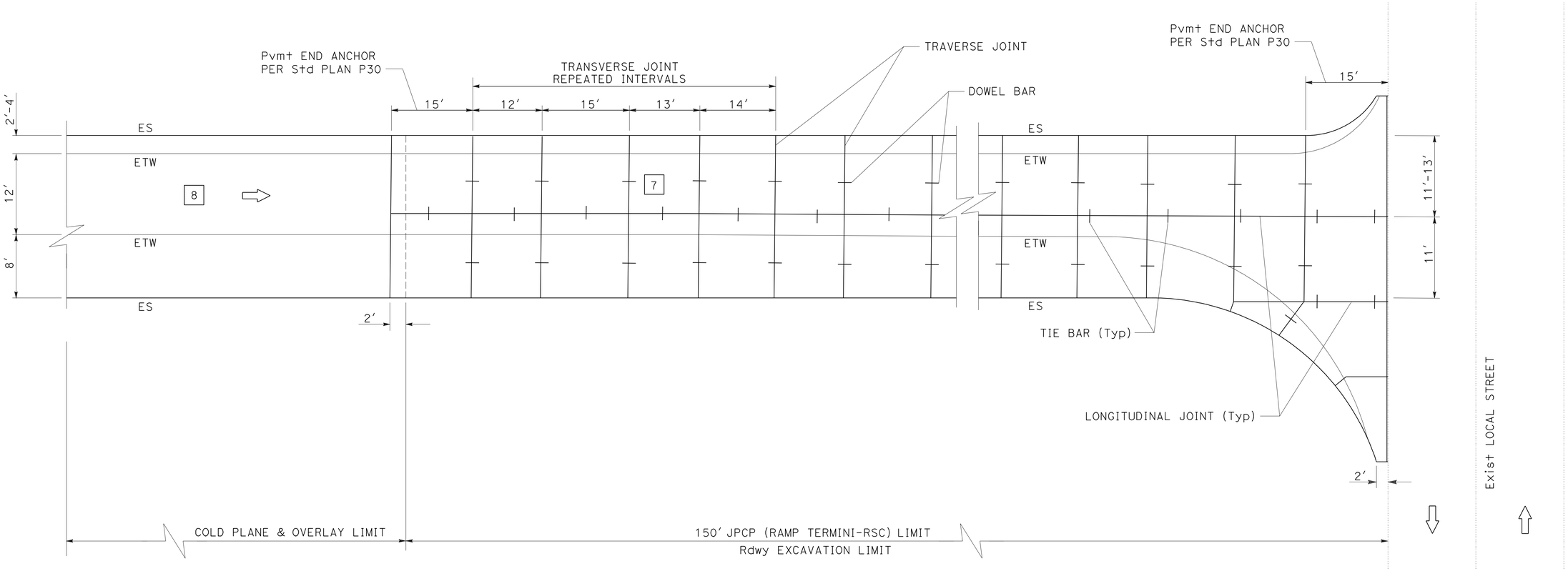

TYPICAL EXIT RAMP DETAIL

AT NEWBERRY ROAD
AT FORT CADY ROAD
(EASTBOUND AND WESTBOUND)

CONSTRUCTION DETAILS

NO SCALE

C-5

STATE OF CALIFORNIA - DEPARTMENT OF TRANSPORTATION
Caltrans® MAINTENANCE ENGINEERING

FUNCTIONAL SUPERVISOR: MICHAEL RISTIC
CALCULATED-DESIGNED BY: YONGBEE LIAU
CHECKED BY: MICHAEL RISTIC
REVISED BY
DATE REVISED

LAST REVISION 08-13-12
DATE PLOTTED => 14-AUG-2012
TIME PLOTTED => 08:26

Dist	COUNTY	ROUTE	POST MILES TOTAL PROJECT	SHEET No.	TOTAL SHEETS
08	SBd	40	R3.0/R28.1	10	43

REGISTERED CIVIL ENGINEER 8-13-12 DATE

8-13-12
PLANS APPROVAL DATE

REGISTERED PROFESSIONAL ENGINEER YONGBEE LIAU No. 75571 Exp. 06-30-14 CIVIL STATE OF CALIFORNIA

THE STATE OF CALIFORNIA OR ITS OFFICERS OR AGENTS SHALL NOT BE RESPONSIBLE FOR THE ACCURACY OR COMPLETENESS OF SCANNED COPIES OF THIS PLAN SHEET.

NOTES:

1. SEE SHEET Q-5 (PM 11.984 TO PM 12.005) FOR METAL BEAM GUARD RAILING QUANTITIES.
2. SEE STANDARD PLAN A77F4 FOR DOUBLE METAL BEAM GUARD RAILING AND TYPICAL PARABOLIC LAYOUT DETAILS.
3. CONTRACTOR TO VERIFY DIMENSIONS IN FIELD BEFORE FABRICATING ALTERNATIVE CRASH CUSHION SYSTEM AND METAL BEAM GUARD RAILING CONNECTIONS.
4. LINE OF 12.5° DEPARTURE ANGLE TO INTERCEPT END OF FIRST 12.5′ METAL BEAM GUARD RAILING PANEL.
5. PROJECT LINE OF 12.5° DEPARTURE ANGLE TO APPROACH END OF BRIDGE RAILING.

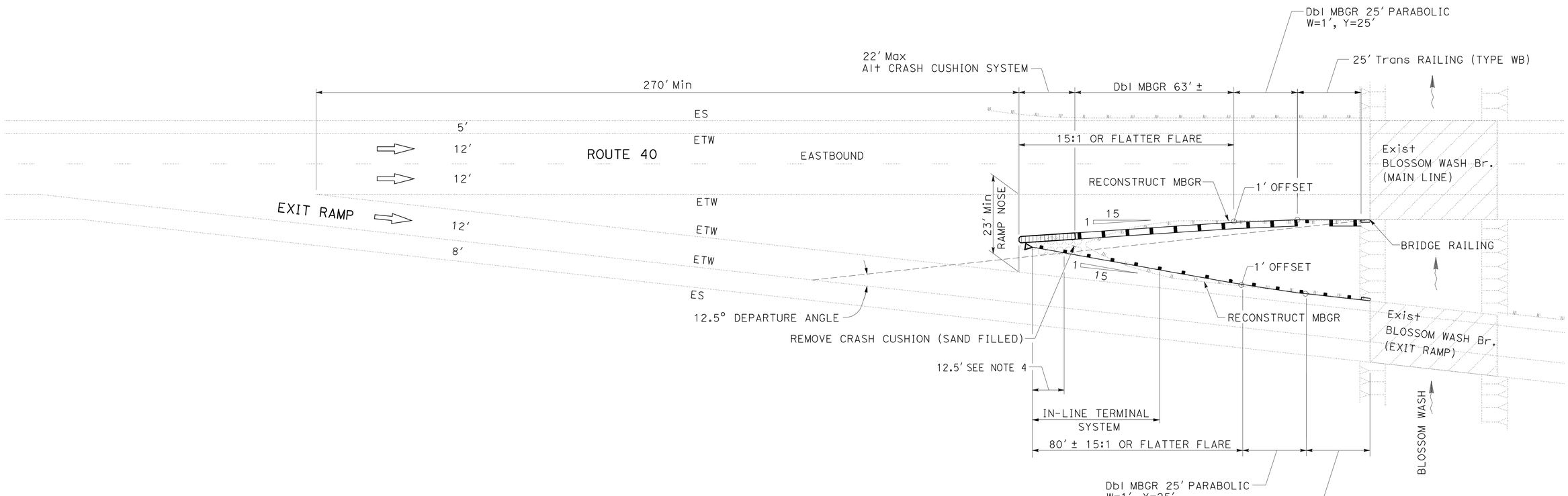

AIRPORT Rd EB EXIT RAMP AT BLOSSOM WASH GORE WASH

CONSTRUCTION DETAILS

SCALE: 1" = 20′

C-6

STATE OF CALIFORNIA - DEPARTMENT OF TRANSPORTATION
Caltrans MAINTENANCE ENGINEERING

FUNCTIONAL SUPERVISOR: MICHAEL RISTIC
CALCULATED-DESIGNED BY: YONGBEE LIAU
CHECKED BY: MICHAEL RISTIC
REVISED BY
DATE REVISED

LAST REVISION 08-13-12
DATE PLOTTED => 14-AUG-2012
TIME PLOTTED => 08:27

Dist	COUNTY	ROUTE	POST MILES TOTAL PROJECT	SHEET No.	TOTAL SHEETS
08	SBd	40	R3.0/R28.1	11	43

REGISTERED CIVIL ENGINEER 8-13-12 DATE

8-13-12
PLANS APPROVAL DATE

REGISTERED PROFESSIONAL ENGINEER OSCAR ALEJANDRE No. 70863 Exp. 06-30-13 CIVIL STATE OF CALIFORNIA

THE STATE OF CALIFORNIA OR ITS OFFICERS OR AGENTS SHALL NOT BE RESPONSIBLE FOR THE ACCURACY OR COMPLETENESS OF SCANNED COPIES OF THIS PLAN SHEET.

NOTES:

1. LOCATIONS OF THE CONSTRUCTION AREA SIGNS ARE APPROXIMATE. THE EXACT LOCATIONS WILL BE DETERMINED BY THE ENGINEER.
2. SEE STANDARD PLANS T-10 ,T-10A AND T-14 FOR LANE, SHOULDER AND RAMP CLOSURES.
3. LOCATION OF THE PCMS SIGNS WILL BE DETERMINED BY THE ENGINEER

LEGEND:

- CONSTRUCTION AREA SIGNS (1 POST)
- CONSTRUCTION AREA SIGNS (2 POST)
- WORK AREA
- (1-X) CONSTRUCTION AREA SIGN NUMBER

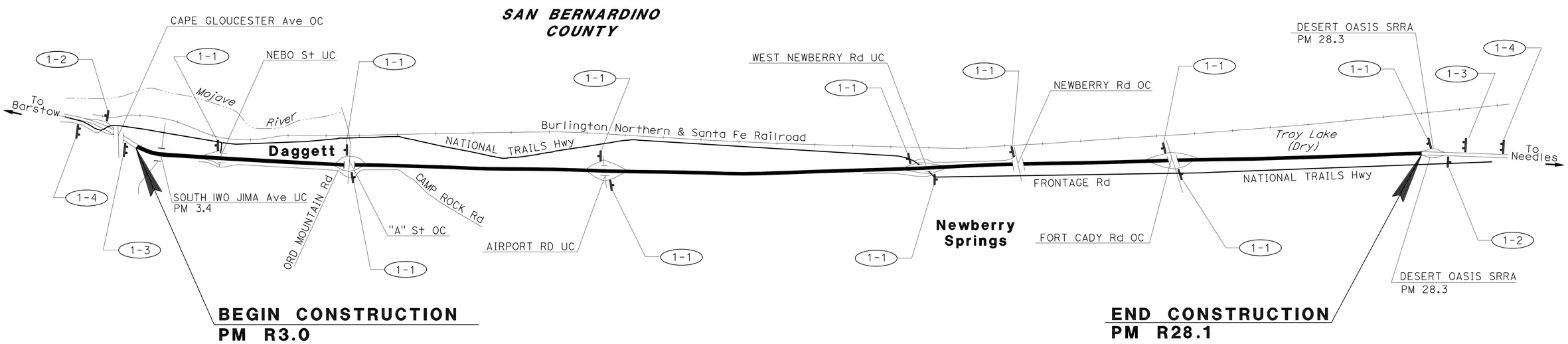

STATIONARY MOUNTED CONSTRUCTION AREA SIGNS

SIGN No.	SIGN CODE FEDERAL	SIGN CODE CALIFORNIA	PANEL SIZE	SIGN MESSAGE	NUMBER OF POSTS AND SIZE	No. OF SIGNS
1-1	W20-1		48" X 48"	ROAD WORK AHEAD	1 - 4" X 6"	11
1-2	G20-2		48" X 24"	END ROAD WORK	1 - 4" X 4"	2
1-3	G20-1		90" X 48"	ROAD WORK NEXT 25 MILES	2 - 6" X 6"	2
1-4		C40(CA)	144" x 60"	TRAFFIC FINES DOUBLE IN CONSTRUCTION ZONES	2 - 6" X 8"	2

PORTABLE CHANGEABLE MESSAGE SIGNS (PCMS)

(EA)
4

APPROVED FOR CONSTRUCTION AREA SIGN WORK ONLY

CONSTRUCTION AREA SIGNS

NO SCALE

CS-1

REVISED BY | DATE REVISED
OSCAR ALEJANDRE | DARIUSH NAMI
CALCULATED-DESIGNED BY | CHECKED BY
FUNCTIONAL SUPERVISOR: BILL WASSER
STATE OF CALIFORNIA - DEPARTMENT OF TRANSPORTATION
Caltrans® TRAFFIC DESIGN

LAST REVISION 08-13-12 | DATE PLOTTED => 14-AUG-2012 | TIME PLOTTED => 08:27

Dist	COUNTY	ROUTE	POST MILES TOTAL PROJECT	SHEET No.	TOTAL SHEETS
08	SBd	40	R3.0/R28.1	12	43

REGISTERED CIVIL ENGINEER 8-13-12 DATE

8-13-12
PLANS APPROVAL DATE

REGISTERED PROFESSIONAL ENGINEER OSCAR ALEJANDRE No. 70863 Exp. 06-30-13 CIVIL STATE OF CALIFORNIA

THE STATE OF CALIFORNIA OR ITS OFFICERS OR AGENTS SHALL NOT BE RESPONSIBLE FOR THE ACCURACY OR COMPLETENESS OF SCANNED COPIES OF THIS PLAN SHEET.

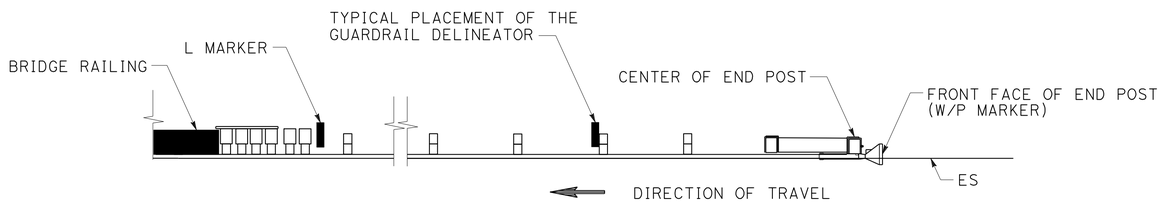

ALONG MBGR (TYPE 12A LAYOUT)

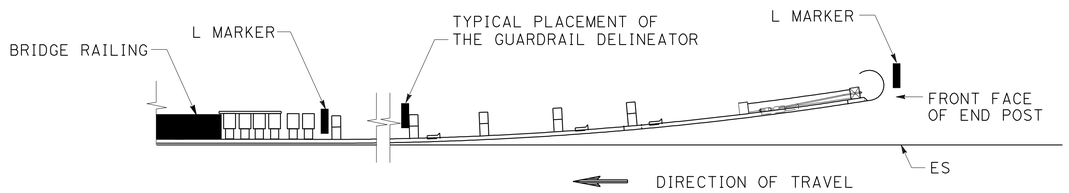

ALONG MBGR (TYPE 12B LAYOUT)

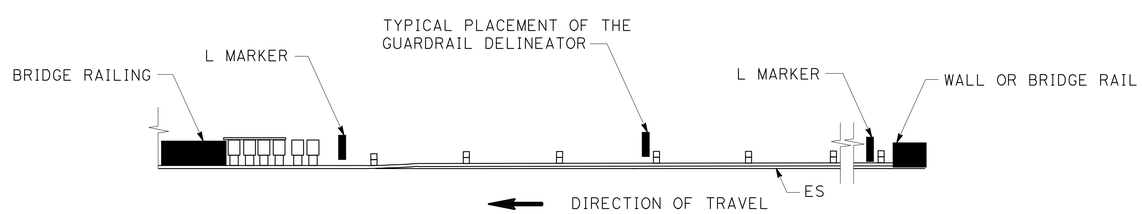

ALONG MBGR (TYPE 12D LAYOUT)

PLACEMENT OF GUARD RAIL DELINEATORS AND L MARKERS

(SEE STANDARD PLANS A73A AND A77C4)

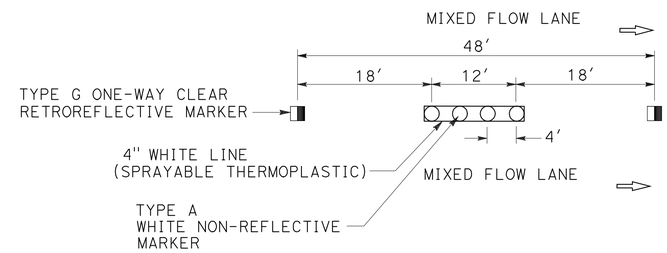

DETAIL 13 MODIFIED (13M)

INSTALL TYPE A NON-REFLECTIVE MARKER WITH STRIPING DETAIL 13M
INSTALL TYPE A MARKER BEFORE STRIPING TO GET THE PROPER BONDING

NOTE:

1. REPLACE TYPE G MARKERS WITH C MARKERS IN ADVANCE OF EXIT RAMPS AS IN DETAIL IN STANDARD PLAN A20A.

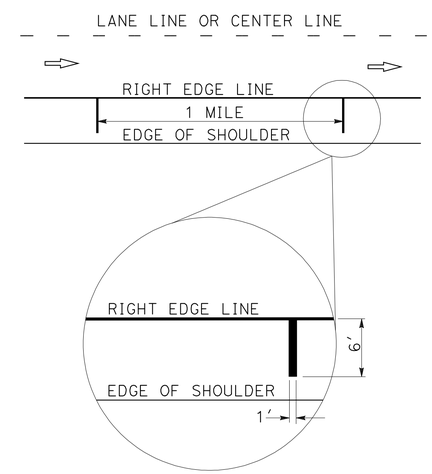

SPEED ENFORCED BY AIRCRAFT PAVEMENT MARKING DETAIL

PAVEMENT DELINEATION DETAILS

NO SCALE

PDD-1

STATE OF CALIFORNIA - DEPARTMENT OF TRANSPORTATION
Caltrans® TRAFFIC DESIGN

FUNCTIONAL SUPERVISOR: BILL WASSER
CALCULATED-DESIGNED BY: OSCAR ALEJANDRE
CHECKED BY: DARIUSH NAMI
REVISED BY
DATE REVISED

LAST REVISION 08-13-12
DATE PLOTTED => 14-AUG-2012
TIME PLOTTED => 08:27

Dist	COUNTY	ROUTE	POST MILES TOTAL PROJECT	SHEET No.	TOTAL SHEETS
08	SBd	40	R3.0/R28.1	13	43

REGISTERED CIVIL ENGINEER 8-13-12 DATE

8-13-12
PLANS APPROVAL DATE

REGISTERED PROFESSIONAL ENGINEER OSCAR ALEJANDRE No. 70863 Exp. 06-30-13 CIVIL STATE OF CALIFORNIA

THE STATE OF CALIFORNIA OR ITS OFFICERS OR AGENTS SHALL NOT BE RESPONSIBLE FOR THE ACCURACY OR COMPLETENESS OF SCANNED COPIES OF THIS PLAN SHEET.

NOTE:

1. FOR DETAIL 13M, PAVEMENT MARKERS SHALL BE PLACED BEFORE THE TRAFFIC STRIPE.

PAVEMENT DELINEATION QUANTITIES

POSTMILE LIMITS	LOCATION	DETAIL No. OR PAVEMENT MARKING	THERMOPLASTIC TRAFFIC STRIPE (SPRAYABLE)			PAVEMENT MARKER					THERMOPLASTIC PAVEMENT MARKING	(N) REMOVE PAVEMENT MARKING	(N) REMOVE PAVEMENT MARKER
						NON-REFLECTIVE	RETROREFLECTIVE						
			4" YELLOW	4" WHITE	8" WHITE	TYPE A	TYPE C	TYPE D	TYPE G	TYPE H			
			LF	LF	LF	EA	EA	EA	EA	EA	SQFT	SQFT	EA
PM R3.0 TO PM R28.1	WB MAINLINE	13M		132,500		11048	48		2714				13810
		27B		132,500									
		25	132,500							2762			2762
		MAINLINE AIRCRAFT MARKING @ 1 M									156	156	
	EB MAINLINE	13M		132,500		11048	72		2690				13810
		27B		132,500									
		25	132,500							2762			2762
		MAINLINE AIRCRAFT MARKING @ 1 M									156	156	
	NEBO St UC EB EXIT RAMP	25A	800							35			35
		27B		800									
		36			700				30				30
		TYPE V ARROW (2)									66	66	
		"STOP" (2)									44	44	
		"AHEAD" (1)									31	31	
		LIMIT LINE									60	60	
	NEBO St UC WB ENTRANCE RAMP	25A	950							40			40
		27B		950									
		36A			240				10				10
		8		220									
		TYPE I ARROW (1)									24	24	
	A St OC EB EXIT RAMP	25A	1270							54			54
		27B		1270									
		36			700				30				30
		TYPE V ARROW (2)									66	66	
		"STOP" (2)									44	44	
		"AHEAD" (1)									31	31	
		LIMIT LINE									60	60	
	A St OC WB ENTRANCE RAMP	25A	1280							54			54
		27B		1280									
		36A			220				10				10
		8		170									
		TYPE I ARROW (1)									24	24	
SUBTOTAL			269,300	534,690	1860	22096	120		5484	5707	762	762	33407

(N) - NOT A SEPARATE PAY ITEM, FOR INFORMATION ONLY.

STATE OF CALIFORNIA - DEPARTMENT OF TRANSPORTATION
Caltrans TRAFFIC DESIGN

FUNCTIONAL SUPERVISOR: BILL WASSER
CALCULATED-DESIGNED BY: OSCAR ALEJANDRE
CHECKED BY: DARIUSH NAMI
REVISED BY
DATE REVISED

LAST REVISION 08-13-12 | DATE PLOTTED => 14-AUG-2012 | TIME PLOTTED => 08:27

PAVEMENT DELINEATION QUANTITIES

PDQ-1

Dist	COUNTY	ROUTE	POST MILES TOTAL PROJECT	SHEET No.	TOTAL SHEETS
08	SBd	40	R3.0/R28.1	14	43

REGISTERED CIVIL ENGINEER 8-13-12 DATE

8-13-12
PLANS APPROVAL DATE

REGISTERED PROFESSIONAL ENGINEER OSCAR ALEJANDRE No. 70863 Exp. 06-30-13 CIVIL STATE OF CALIFORNIA

THE STATE OF CALIFORNIA OR ITS OFFICERS OR AGENTS SHALL NOT BE RESPONSIBLE FOR THE ACCURACY OR COMPLETENESS OF SCANNED COPIES OF THIS PLAN SHEET.

NOTE:

1. FOR DETAIL 13M, PAVEMENT MARKERS SHALL BE PLACED BEFORE THE TRAFFIC STRIPE.

PAVEMENT DELINEATION QUANTITIES

POSTMILE LIMITS	LOCATION	DETAIL No. OR PAVEMENT MARKING	THERMOPLASTIC TRAFFIC STRIPE (SPRAYABLE)			PAVEMENT MARKER					THERMOPLASTIC PAVEMENT MARKING	(N) REMOVE PAVEMENT MARKING	(N) REMOVE PAVEMENT MARKER
						NON-REFLECTIVE	RETROREFLECTIVE						
			4" YELLOW	4" WHITE	8" WHITE	TYPE A	TYPE C	TYPE D	TYPE G	TYPE H			
			LF	LF	LF	EA	EA	EA	EA	EA	SQFT	SQFT	EA
PM R3.0 TO PM R28.1	A S† OC EB ENTRANCE RAMP	25A	1160							50			50
		27B		1160									
		36A			280				12				12
		8		250									
		TYPE I ARROW (1)									24	24	
	A S† OC WB EXIT RAMP	25A	1380							60			60
		27B		1380									
		36			700				30				30
		TYPE V ARROW (2)									66	66	
		"STOP" (3)									66	66	
		"AHEAD" (1)									31	31	
		LIMIT LINE									65	65	
	AIRPORT RD UC EB EXIT RAMP	25A	1480							63			63
		27B		1480									
		36			460				20				20
		TYPE V ARROW (2)									66	66	
		"STOP" (2)									44	44	
		"AHEAD" (1)									31	31	
		LIMIT LINE									60	60	
	AIRPORT RD UC EB ENTRANCE RAMP	25A	1120							48			
		27B		1120									
		36A			260				12				
		8		180									
		TYPE I ARROW (1)									24	24	
	AIRPORT RD UC WB EXIT RAMP	25A	1350							58			58
		27B		1350									
		36			680				30				30
		TYPE V ARROW (2)									66	66	
		"STOP" (3)									66	66	
		"AHEAD" (1)									31	31	
		LIMIT LINE									60	60	
SUBTOTAL			6490	6920	2380				104	279	700	700	323

(N) - NOT A SEPARATE PAY ITEM, FOR INFORMATION ONLY.

REVISED BY | DATE REVISED
OSCAR ALEJANDRE | DARIUSH NAMI
CALCULATED-DESIGNED BY | CHECKED BY
FUNCTIONAL SUPERVISOR | BILL WASSER

STATE OF CALIFORNIA - DEPARTMENT OF TRANSPORTATION
Caltrans TRAFFIC DESIGN

PAVEMENT DELINEATION QUANTITIES

PDQ-2

LAST REVISION 08-13-12 | DATE PLOTTED => 14-AUG-2012 | TIME PLOTTED => 08:27

Dist	COUNTY	ROUTE	POST MILES TOTAL PROJECT	SHEET No.	TOTAL SHEETS
08	SBd	40	R3.0/R28.1	15	43

REGISTERED CIVIL ENGINEER 8-13-12 DATE

8-13-12
PLANS APPROVAL DATE

REGISTERED PROFESSIONAL ENGINEER OSCAR ALEJANDRE No. 70863 Exp. 06-30-13 CIVIL STATE OF CALIFORNIA

THE STATE OF CALIFORNIA OR ITS OFFICERS OR AGENTS SHALL NOT BE RESPONSIBLE FOR THE ACCURACY OR COMPLETENESS OF SCANNED COPIES OF THIS PLAN SHEET.

NOTE:

1. FOR DETAIL 13M, PAVEMENT MARKERS SHALL BE PLACED BEFORE THE TRAFFIC STRIPE.

PAVEMENT DELINEATION QUANTITIES

POSTMILE LIMITS	LOCATION	DETAIL No. OR PAVEMENT MARKING	THERMOPLASTIC TRAFFIC STRIPE (SPRAYABLE)			PAVEMENT MARKER					THERMOPLASTIC PAVEMENT MARKING	(N) REMOVE PAVEMENT MARKING	(N) REMOVE PAVEMENT MARKER
						NON-REFLECTIVE	RETROREFLECTIVE						
			4" YELLOW	4" WHITE	8" WHITE	TYPE A	TYPE C	TYPE D	TYPE G	TYPE H			
			LF	LF	LF	EA	EA	EA	EA	EA	SQFT	SQFT	EA
PM R3.0 TO PM R28.1	AIRPORT RD UC WB ENTRANCE RAMP	25A	830							36			36
		27B		830									
		36A			220				10				10
		8		240									
		TYPE I ARROW (1)									24	24	
	W NEWBERRY RD UC EB EXIT RAMP	25A	1000							43			43
		27B		1000									
		36			600				26				26
		TYPE V ARROW (2)									66	66	
		"STOP" (3)									66	66	
		"AHEAD" (1)									31	31	
		LIMIT LINE									40	40	
	W NEWBERRY RD UC EB ENTRANCE RAMP	25A	620							27			27
		27B		620									
		36A			300				14				14
		8		210									
		TYPE I ARROW (1)									24	24	
	W NEWBERRY RD UC WB EXIT RAMP	25A	1000							43			43
		27B		1000									
		36			600				26				26
		TYPE V ARROW (2)									66	66	
		"STOP" (3)									66	66	
		"AHEAD" (1)									31	31	
		LIMIT LINE									40	40	
	W NEWBERRY RD UC WB ENTRANCE RAMP	25A	1000							43			43
		27B		1000									
		36A			315				15				15
		8		260									
		12		540									
		TYPE I ARROW (2)									48	48	
SUBTOTAL			4450	5700	2035				91	192	502	502	283

(N) - NOT A SEPARATE PAY ITEM, FOR INFORMATION ONLY.

REVISED BY | DATE REVISED
OSCAR ALEJANDRE | DARIUSH NAMI
CALCULATED-DESIGNED BY | CHECKED BY
FUNCTIONAL SUPERVISOR | BILL WASSER
STATE OF CALIFORNIA - DEPARTMENT OF TRANSPORTATION
Caltrans® TRAFFIC DESIGN

PAVEMENT DELINEATION QUANTITIES PDQ-3

LAST REVISION 08-13-12 | DATE PLOTTED => 14-AUG-2012 | TIME PLOTTED => 08:27

Dist	COUNTY	ROUTE	POST MILES TOTAL PROJECT	SHEET No.	TOTAL SHEETS
08	SBd	40	R3.0/R28.1	16	43

REGISTERED CIVIL ENGINEER 8-13-12 DATE

8-13-12
PLANS APPROVAL DATE

REGISTERED PROFESSIONAL ENGINEER OSCAR ALEJANDRE No. 70863 Exp. 06-30-13 CIVIL STATE OF CALIFORNIA

THE STATE OF CALIFORNIA OR ITS OFFICERS OR AGENTS SHALL NOT BE RESPONSIBLE FOR THE ACCURACY OR COMPLETENESS OF SCANNED COPIES OF THIS PLAN SHEET.

NOTE:

1. FOR DETAIL 13M, PAVEMENT MARKERS SHALL BE PLACED BEFORE THE TRAFFIC STRIPE.

PAVEMENT DELINEATION QUANTITIES

POSTMILE LIMITS	LOCATION	DETAIL No. OR PAVEMENT MARKING	THERMOPLASTIC TRAFFIC STRIPE (SPRAYABLE)			PAVEMENT MARKER					THERMOPLASTIC PAVEMENT MARKING	(N) REMOVE PAVEMENT MARKING	(N) REMOVE PAVEMENT MARKER
						NON-REFLECTIVE	RETROREFLECTIVE						
			4" YELLOW	4" WHITE	8" WHITE	TYPE A	TYPE C	TYPE D	TYPE G	TYPE H			
			LF	LF	LF	EA	EA	EA	EA	EA	SQFT	SQFT	EA
PM R3.0 TO PM R28.1	FORT CADY RD UC EB EXIT RAMP	25A	1600							68			68
		27B		1600									
		36			660				29				29
		TYPE V ARROW (2)									66	66	
		"STOP" (3)									66	66	
		"AHEAD" (1)									31	31	
		LIMIT LINE									55	55	
	FORT CADY RD UC EB ENTRANCE RAMP	25A	1080							46			46
		27B		1080									
		36A			260				12				12
		8		300									
		TYPE I ARROW (1)									24	24	
	FORT CADY RD UC WB EXIT RAMP	25A	1600							68			68
		27B		1600									
		36			660				29				29
		TYPE V ARROW (2)									66	66	
		"STOP" (3)									66	66	
		"AHEAD" (1)									31	31	
		LIMIT LINE									50	50	
	FORT CADY RD UC WB ENTRANCE RAMP	25A	1080							46			46
		27B		1080									
		36A			680				30				30
		8		300									
		TYPE I ARROW (1)									24	24	
SUBTOTAL			5360	5960	2260				100	228	479	479	328
TOTAL			847,405			22096	12305				2443	2443	34341

(N) - NOT A SEPARATE PAY ITEM, FOR INFORMATION ONLY.

STATE OF CALIFORNIA - DEPARTMENT OF TRANSPORTATION
Caltrans TRAFFIC DESIGN

FUNCTIONAL SUPERVISOR: BILL WASSER
CALCULATED-DESIGNED BY: OSCAR ALEJANDRE
CHECKED BY: DARIUSH NAMI
REVISED BY
DATE REVISED

PAVEMENT DELINEATION QUANTITIES

PDQ-4

LAST REVISION 08-13-12
DATE PLOTTED => 14-AUG-2012
TIME PLOTTED => 08:27

Dist	COUNTY	ROUTE	POST MILES TOTAL PROJECT	SHEET No.	TOTAL SHEETS
08	SBd	40	R3.0/R28.1	17	43

REGISTERED CIVIL ENGINEER 8-13-12 DATE

8-13-12
PLANS APPROVAL DATE

REGISTERED PROFESSIONAL ENGINEER
OSCAR ALEJANDRE
No. 70863
Exp. 06-30-13
CIVIL
STATE OF CALIFORNIA

THE STATE OF CALIFORNIA OR ITS OFFICERS OR AGENTS SHALL NOT BE RESPONSIBLE FOR THE ACCURACY OR COMPLETENESS OF SCANNED COPIES OF THIS PLAN SHEET.

DELINEATOR AND MARKER QUANTITIES

POSTMILE	DIRECTION	APPROACH ORIENTATION	DELINEATOR (CLASS 1) TYPE F EA	OBJECT MARKER TYPE L-1 EA	REMOVE MARKER EA
3.274	EB	OUTSIDE Shld	9	1	1
3.398	EB	INSIDE Shld	2	2	2
3.458	EB	OUTSIDE Shld	8		
3.772	EB	OUTSIDE Shld	2	1	1
3.795	EB	INSIDE Shld	2	1	1
4.189	EB	OUTSIDE Shld	2		
4.674	EB	INSIDE Shld	1	2	2
4.679	EB	OUTSIDE Shld	1	2	2
6.820	EB	OUTSIDE Shld	2		
7.169	EB	OUTSIDE Shld	2	2	2
9.842	EB	INSIDE Shld	2	1	1
9.843	EB	OUTSIDE Shld	2	1	1
10.318	EB	INSIDE Shld	2	1	1
10.319	EB	OUTSIDE Shld	2	1	1
11.036	EB	INSIDE Shld	2		
11.048	EB	OUTSIDE Shld	2		
11.419	EB	INSIDE Shld	2	2	2
11.421	EB	OUTSIDE Shld	2	1	1
11.974	EB	INSIDE Shld	2	1	1
11.984	EB	OUTSIDE Shld	2	1	1
12.023	EB	OUTSIDE Shld	5	1	1
12.023	EB	INSIDE Shld	3		
12.166	EB	INSIDE Shld	2	2	2
12.411	EB	INSIDE Shld	2	1	1
12.424	EB	OUTSIDE Shld	2	1	1
13.505	EB	OUTSIDE Shld	2	1	1
13.507	EB	INSIDE Shld	2	2	2
14.572	EB	INSIDE Shld	2	1	1
14.586	EB	OUTSIDE Shld	2	1	1
15.369	EB	INSIDE Shld	2	2	2
15.381	EB	OUTSIDE Shld	2	1	1
15.878	EB	INSIDE Shld	2	1	1
15.894	EB	OUTSIDE Shld	2	2	2
16.917	EB	OUTSIDE Shld	2	1	1
16.917	EB	INSIDE Shld	2	1	1
17.079	EB	OUTSIDE Shld	2	1	1
17.079	EB	INSIDE Shld	2	1	1
17.993	EB	INSIDE Shld	2	2	2
18.012	EB	OUTSIDE Shld	2	2	2
18.409	EB	INSIDE Shld	2	2	2
18.417	EB	OUTSIDE Shld	2	2	2
18.490	EB	INSIDE Shld	2	2	2
18.499	EB	OUTSIDE Shld	2	2	2
SUBTOTAL			101	52	52

PAVEMENT DELINEATION QUANTITIES

PDQ-5

REVISED BY | DATE REVISED
OSCAR ALEJANDRE | DARIUSH NAMI
CALCULATED-DESIGNED BY | CHECKED BY
FUNCTIONAL SUPERVISOR: BILL WASSER
STATE OF CALIFORNIA - DEPARTMENT OF TRANSPORTATION
Caltrans® TRAFFIC DESIGN

LAST REVISION 08-13-12 | DATE PLOTTED => 14-AUG-2012 | TIME PLOTTED => 08:27

Dist	COUNTY	ROUTE	POST MILES TOTAL PROJECT	SHEET No.	TOTAL SHEETS
08	SBd	40	R3.0/R28.1	18	43

REGISTERED CIVIL ENGINEER 8-13-12 DATE

8-13-12
PLANS APPROVAL DATE

REGISTERED PROFESSIONAL ENGINEER
OSCAR ALEJANDRE
No. 70863
Exp. 06-30-13
CIVIL
STATE OF CALIFORNIA

THE STATE OF CALIFORNIA OR ITS OFFICERS OR AGENTS SHALL NOT BE RESPONSIBLE FOR THE ACCURACY OR COMPLETENESS OF SCANNED COPIES OF THIS PLAN SHEET.

DELINEATOR AND MARKER QUANTITIES

POSTMILE	DIRECTION	APPROACH ORIENTATION	DELINEATOR (CLASS 1)	OBJECT MARKER	REMOVE MARKER
			TYPE F	TYPE L-1	
			EA	EA	EA
3.247	WB	OUTSIDE Shld	2		
3.435	WB	OUTSIDE Shld	4		
3.557	WB	INSIDE Shld	6	2	2
3.562	WB	OUTSIDE Shld	3	2	2
3.852	WB	INSIDE Shld	2	1	1
3.860	WB	OUTSIDE Shld	2	1	1
4.254	WB	OUTSIDE Shld	1	1	1
4.680	WB	OUTSIDE Shld	2		
4.767	WB	OUTSIDE Shld	1	1	1
4.770	WB	INSIDE Shld	1	1	1
6.976	WB	OUTSIDE Shld	2	1	1
7.200	WB	OUTSIDE Shld	1	2	2
7.549	WB	OUTSIDE Shld	2		
9.876	WB	OUTSIDE Shld	2		
9.886	WB	INSIDE Shld	2	1	1
10.375	WB	INSIDE Shld	2	1	1
10.377	WB	OUTSIDE Shld	2		
11.083	WB	OUTSIDE Shld	2		
11.091	WB	INSIDE Shld	2	1	1
11.485	WB	OUTSIDE Shld	1	1	1
11.498	WB	INSIDE Shld	2	1	1
12.038	WB	OUTSIDE Shld	1	2	2
12.057	WB	INSIDE Shld	2	1	1
12.254	WB	INSIDE Shld	2	2	2
12.267	WB	OUTSIDE Shld	2	1	1
12.460	WB	OUTSIDE Shld	2	1	1
12.480	WB	INSIDE Shld	2	1	1
13.589	WB	OUTSIDE Shld	1	2	2
13.616	WB	INSIDE Shld	2	2	1
14.648	WB	OUTSIDE Shld	1	2	2
14.665	WB	INSIDE Shld	2	1	1
15.442	WB	OUTSIDE Shld	1	2	2
15.459	WB	INSIDE Shld	2	2	2
15.959	WB	OUTSIDE Shld	2	2	2
15.971	WB	INSIDE Shld	2	2	2
16.970	WB	OUTSIDE Shld	2	1	1
16.980	WB	INSIDE Shld	2	1	1
17.130	WB	OUTSIDE Shld	2	1	1
17.140	WB	INSIDE Shld	2	1	1
18.066	WB	OUTSIDE Shld	2	2	2
18.082	WB	INSIDE Shld	2	2	2
18.424	WB	OUTSIDE Shld	3		
18.434	WB	INSIDE Shld	3		
18.535	WB	OUTSIDE Shld	2	2	2
18.544	WB	INSIDE Shld	2	2	2
23.8/28.1	EB	OUTSIDE Shld			23 *
		SUBTOTAL	90	52	74
		TOTAL	191	104	126

* 23 MARKERS IDENTIFING PAVEMENT TEST SECTIONS.

PAVEMENT DELINEATION QUANTITIES

PDQ-6

STATE OF CALIFORNIA - DEPARTMENT OF TRANSPORTATION
Caltrans TRAFFIC DESIGN

FUNCTIONAL SUPERVISOR: BILL WASSER
CALCULATED-DESIGNED BY: OSCAR ALEJANDRE
CHECKED BY: DARIUSH NAMI
REVISED BY
DATE REVISED

LAST REVISION 08-13-12
DATE PLOTTED => 14-AUG-2012
TIME PLOTTED => 08:28

Dist	COUNTY	ROUTE	POST MILES TOTAL PROJECT	SHEET No.	TOTAL SHEETS
08	SBd	40	R3.0/R28.1	19	43

REGISTERED CIVIL ENGINEER 8-13-12 DATE

8-13-12
PLANS APPROVAL DATE

REGISTERED PROFESSIONAL ENGINEER YONGBEE LIAU No. 75571 Exp. 06-30-14 CIVIL STATE OF CALIFORNIA

THE STATE OF CALIFORNIA OR ITS OFFICERS OR AGENTS SHALL NOT BE RESPONSIBLE FOR THE ACCURACY OR COMPLETENESS OF SCANNED COPIES OF THIS PLAN SHEET.

NOTES:

1. ADDITIONAL PAVEMENT LOCATIONS SCATTERED WITHIN THE POST MILES SHOWN. EXACT NUMBER OF LOCATIONS AND ITS LENGTHS SHALL BE DETERMINED BY THE ENGINEER.
2. SEE SHEET X-1 FOR ABBREVIATION.

PAVEMENT QUANTITIES

POST MILE		HMA (Type C)	RHMA-G	COLD PLANE	FOG SEAL COAT	TACK COAT	IMPORTED MATERIAL (Shld BACKING)	RUMBLE STRIP	REMARK
FROM	TO	(TON)	(TON)	(SQYD)	(TON)	(TON)	(TON)	(Sta)	
3.0	10.0				82.1				
10.0	15.4		17,236			68.0			
10.0	15.4			158,400					
15.4	18.5		9,894			39.0			
15.4	18.5	19,789				24.7			
15.4	18.5			87,296					
18.5	26.0		23,938			94.4			
18.5	26.0	47,876				59.7			
18.5	26.0			211,200					
26.0	28.1		6,703			26.4			
26.0	28.1	14,437				16.7			
26.0	28.1			59,136					
10.0	28.1						4,731	3,823	
3.0	10.0	2,000		7,168		2.2			Rte 40 EB LANE No 2. SEE NOTE 1
10.0	15.4	2,000		7,168		2.2			Rte 40 EB LANE No 2. SEE NOTE 1
3.0	10.0	2,000		7,168		2.2			Rte 40 WB LANE No 2. SEE NOTE 1
10.0	15.4	2,000		7,168		2.2			Rte 40 WB LANE No 2. SEE NOTE 1
AC PAVING UNDER AC DIKES			5,187						
NEBO St EB EXIT RAMP			307	2,933		0.8			
NEBO St WB ENTRANCE RAMP			367	3,509		1.0			
"A" St EB EXIT RAMP			425	4,061		1.1			
"A" St EB ENTRANCE RAMP			497	4,749		1.3			
"A" St Rd WB EXIT RAMP			457	4,368		1.2			
"A" St WB ENTRANCE RAMP			435	4,160		1.1			
AIRPORT Rd EB EXIT RAMP			463	4,427		1.2			
AIRPORT Rd EB ENTRANCE RAMP			413	3,947		1.1			
AIRPORT Rd WB EXIT RAMP			441	4,213		1.2			
AIRPORT Rd WB ENTRANCE RAMP			331	3,165		0.9			
W NEWBERRY Rd EB EXIT RAMP			310	2,960		0.8			
W NEWBERRY Rd EB ENTRANCE RAMP			300	2,867		0.8			
W NEWBERRY Rd WB EXIT RAMP			315	3,013		0.8			
W NEWBERRY Rd WB ENTRANCE			417	3,987		1.1			
FORT CADY Rd EB EXIT RAMP			470	4,493		1.2			
FORT CADY Rd EB ENTRANCE RAMP			442	4,227		1.2			
FORT CADY Rd WB EXIT RAMP			469	4,480		1.2			
FORT CADY Rd WB ENTRANCE RAMP			463	4,427		1.2			
TOTAL		90,102	70,280	614,690	82.1	356.9	4,731	3,823	

REVISED BY | DATE REVISED
YONGBEE LIAU | MICHAEL RISTIC
CALCULATED-DESIGNED BY | CHECKED BY
FUNCTIONAL SUPERVISOR: MICHAEL RISTIC

STATE OF CALIFORNIA - DEPARTMENT OF TRANSPORTATION
Caltrans® MAINTENANCE ENGINEERING

SUMMARY OF QUANTITIES

Q-1

LAST REVISION 08-13-12 | DATE PLOTTED => 14-AUG-2012 | TIME PLOTTED => 08:29

Dist	COUNTY	ROUTE	POST MILES TOTAL PROJECT	SHEET No.	TOTAL SHEETS
08	SBd	40	R3.0/R28.1	20	43

REGISTERED CIVIL ENGINEER 8-13-12 DATE

8-13-12
PLANS APPROVAL DATE

REGISTERED PROFESSIONAL ENGINEER YONGBEE LIAU No. 75571 Exp. 06-30-14 CIVIL STATE OF CALIFORNIA

THE STATE OF CALIFORNIA OR ITS OFFICERS OR AGENTS SHALL NOT BE RESPONSIBLE FOR THE ACCURACY OR COMPLETENESS OF SCANNED COPIES OF THIS PLAN SHEET.

NOTE:

1. SEE SHEET X-1 FOR ABBREVIATION.

RAMP TERMINI CONCRETE PAVEMENT QUANTITIES

POST MILE	RAMP LOCATION	ROADWAY EXCAVATION	LEAN Conc BASE RAPID SETTING	JPCP (RAMP TERMINI WITH RAPID STRENGTH Conc)	SEAL Pvmt JOINT	PLASTIC (N) POLYETHYLENE BOND BREAKER
		CY	CY	CY	LF	SQYD
18.27	W NEWBERRY Rd EB EXIT RAMP	206.4	63.5	142.9	438.0	476
18.63	W NEWBERRY Rd WB EXIT RAMP	206.4	63.5	142.9	438.0	476
23.05	FORT CADY Rd EB EXIT RAMP	206.4	63.5	142.9	438.0	476
23.62	FORT CADY Rd WB EXIT RAMP	206.4	63.5	142.9	438.0	476
	TOTAL	825.6	254.0	571.6	1752.0	1904.0

(N) - NOT A SEPARATE PAY ITEM. FOR INFORMATION ONLY.

SUMMARY OF QUANTITIES

Q-2

REVISED BY | DATE REVISED

YONGBEE LIAU | MICHAEL RISTIC

CALCULATED-DESIGNED BY | CHECKED BY

FUNCTIONAL SUPERVISOR: MICHAEL RISTIC

STATE OF CALIFORNIA - DEPARTMENT OF TRANSPORTATION
Caltrans® MAINTENANCE ENGINEERING

LAST REVISION 08-13-12 | DATE PLOTTED => 14-AUG-2012 | TIME PLOTTED => 08:29

Dist	COUNTY	ROUTE	POST MILES TOTAL PROJECT	SHEET No.	TOTAL SHEETS
08	SBd	40	R3.0/R28.1	21	43

REGISTERED CIVIL ENGINEER 8-13-12 DATE

8-13-12
PLANS APPROVAL DATE

REGISTERED PROFESSIONAL ENGINEER YONGBEE LIAU No. 75571 Exp. 06-30-14 CIVIL STATE OF CALIFORNIA

THE STATE OF CALIFORNIA OR ITS OFFICERS OR AGENTS SHALL NOT BE RESPONSIBLE FOR THE ACCURACY OR COMPLETENESS OF SCANNED COPIES OF THIS PLAN SHEET.

NOTES:

1. LEFT (L+) AND RIGHT (R+) SIDES DETERMINED BY LOOKING IN THE DIRECTION OF TRAVEL.
2. SEE SHEETS Q-4 TO Q-15 FOR AC DIKE QUANTITIES.

DRAINAGE AND MISCELLLANEOUS QUANTITIES

POST MILE FROM	POST MILE TO	(N) No. OF LOCATIONS	DIRECTION	ORIENTATION	10'' TAPERED INLET EA	10'' CORRUGATED STEEL FLUME DOWNDRAIN LF	FLUME ANCHOR ASSEMBLY EA	PLACE HMA (Misc AREA) SQYD	HMA (AC DIKE & Misc AREA) TON	ROADWAY EXCAVATION CY	DESCRIPTION
7.20		1	EB	R+	1	10	2	12	1.7	3.6	NEW FLUME DOWNDRAIN
11.02		1	EB	R+	1	20	3	12	1.7	3.6	NEW FLUME DOWNDRAIN
11.45		1	EB	R+	1	15	3	12	1.7	3.6	NEW FLUME DOWNDRAIN
12.00		1	EB	R+	1	20	3	12	1.7	3.6	NEW FLUME DOWNDRAIN
13.50		1	EB	R+	1	10	2	12	1.7	3.6	NEW FLUME DOWNDRAIN
15.40		1	EB	R+	1	20	3	12	1.7	3.6	NEW FLUME DOWNDRAIN
3.00	28.10	22	EB	R+				264	37.4	79.2	Exist AC OVERSIDE DRAIN. RECONSTRUCT PAVED GUTTER FLARE AND DIKE
3.00	28.10	37	EB	R+				444	62.9	133.2	Exist PIPE DOWNDRAIN. RECONSTRUCT PAVED GUTTER FLARE AND DIKE
3.00	28.10	4	EB	L+				48	6.8	14.4	Exist AC OVERSIDE DRAIN. RECONSTRUCT PAVED GUTTER FLARE AND DIKE
3.00	28.10	3	EB	L+				36	5.1	10.8	Exist PIPE DOWNDRAIN. RECONSTRUCT PAVED GUTTER FLARE AND DIKE
RAMPS		9	EB	R+				108	15.3	32.4	Exist AC OVERSIDE DRAIN. RECONSTRUCT PAVED GUTTER FLARE AND DIKE
RAMPS		4	EB	R+				48	6.8	14.4	Exist PIPE DOWNDRAIN. RECONSTRUCT PAVED GUTTER FLARE AND DIKE
RAMPS		2	EB	L+				24	3.4	7.2	Exist AC OVERSIDE DRAIN. RECONSTRUCT PAVED GUTTER FLARE AND DIKE
RAMPS		1	EB	L+				12	1.7	3.6	Exist PIPE DOWNDRAIN. RECONSTRUCT PAVED GUTTER FLARE AND DIKE
17.00		1	WB	R+	1	40	5	12	1.7	3.6	NEW FLUME DOWNDRAIN
16.9		1	WB	R+	1	50	6	12	1.7	3.6	NEW FLUME DOWNDRAIN
13.60		1	WB	R+	1	40	5	12	1.7	3.6	NEW FLUME DOWNDRAIN
11.02		1	WB	R+	1	50	6	12	1.7	3.6	NEW FLUME DOWNDRAIN AIRPORT WASH BRIDGE. JUST EAST OF MBGR
10.04		1	WB	R+	1	50	6	12	1.7	3.6	NEW FLUME DOWNDRAIN
4.20		1	WB	R+	1	50	6	12	1.7	3.6	NEW FLUME DOWNDRAIN
3.00	28.10	19	WB	R+				228	32.3	68.4	Exist AC OVERSIDE DRAIN. RECONSTRUCT PAVED GUTTER FLARE AND DIKE
3.00	28.10	63	WB	R+				756	107.1	226.8	Exist PIPE DOWNDRAIN. RECONSTRUCT PAVED GUTTER FLARE AND DIKE
3.00	28.10	10	WB	L+				120	17.0	36.0	Exist AC OVERSIDE DRAIN. RECONSTRUCT PAVED GUTTER FLARE AND DIKE
3.00	28.10	1	WB	L+				12	1.7	3.6	Exist PIPE DOWNDRAIN. RECONSTRUCT PAVED GUTTER FLARE AND DIKE
RAMPS		3	WB	R+				36	5.1	10.8	Exist AC OVERSIDE DRAIN. RECONSTRUCT PAVED GUTTER FLARE AND DIKE
RAMPS		1	WB	R+				12	1.7	3.6	Exist PIPE DOWNDRAIN. RECONSTRUCT PAVED GUTTER FLARE AND DIKE
RAMPS		1	WB	L+				12	1.7	3.6	Exist AC OVERSIDE DRAIN. RECONSTRUCT PAVED GUTTER FLARE AND DIKE
RAMPS		1	WB	L+				12	1.7	3.6	Exist PIPE DOWNDRAIN. RECONSTRUCT PAVED GUTTER FLARE AND DIKE
TOTAL					12	375	50	2,316	328.1	694.8	

(N) - NOT A SEPARATE PAY ITEM. FOR INFORMATION ONLY.

SUMMARY OF QUANTITIES

Q-3

REVISED BY | DATE REVISED
YONGBEE LIAU | MICHAEL RISTIC
CALCULATED-DESIGNED BY | CHECKED BY
FUNCTIONAL SUPERVISOR: MICHAEL RISTIC
STATE OF CALIFORNIA - DEPARTMENT OF TRANSPORTATION
Caltrans MAINTENANCE ENGINEERING

LAST REVISION 08-13-12 | DATE PLOTTED => 14-AUG-2012 | TIME PLOTTED => 08:29

Dist	COUNTY	ROUTE	POST MILES TOTAL PROJECT	SHEET No.	TOTAL SHEETS
08	SBd	40	R3.0/R28.1	22	43

REGISTERED CIVIL ENGINEER 8-13-12 DATE

8-13-12
PLANS APPROVAL DATE

REGISTERED PROFESSIONAL ENGINEER YONGBEE LIAU No. 75571 Exp. 06-30-14 CIVIL STATE OF CALIFORNIA

THE STATE OF CALIFORNIA OR ITS OFFICERS OR AGENTS SHALL NOT BE RESPONSIBLE FOR THE ACCURACY OR COMPLETENESS OF SCANNED COPIES OF THIS PLAN SHEET.

ABBREVIATION:

ML MAIN LINE

METAL BEAM GUARD RAILING AND AC DIKE QUANTITIES

LOCATION	POST MILE Rte 40 EB Rt FROM	TO	MBGR LAYOUT TYPE (N)	REMOVE MBGR	RECONSTRUCT MBGR	MBGR WOOD POST	Trans RAILING (TYPE WB)	END ANCHOR ASSEMBLY (TYPE SFT)	MINOR Conc	END CAP (TYPE TC)	END CAP (TYPE A)	ALTERNATIVE FLARED TERMINAL SYSTEM	ALTERNATIVE IN-LINE TERMINAL SYSTEM	Dbl MBGR WOOD POST	ALTERNATIVE CRASH CUSHION SYSTEM	REMOVE CRASH CUSHION (SAND FILLED)	REMOVE AC DIKE	PLACE HMA DIKE TYPE A	TYPE C	TYPE D	TYPE F	HMA (AC DIKE & Misc AREA)
	--		--	LF	LF	LF	EA	EA	CY	EA	EA	EA	EA	LF	EA	EA	LF	LF	LF	LF	LF	TON
	3.000	3.165															870.0			870.0		53.34
S IWO JIMA Ave UC	3.274	(APPROACH) 3.428	12A	75	737.5		1		0.81	1			1									
	3.458 (DEPARTURE)	3.600	12DD		750			1			1						750.0				750	10.36
	3.600	3.772															912.0			912.0		55.91
	3.809	4.189															2,011.0		25	1,986.0		121.96
UNNAMED DITCH	4.189	4.251	11A	50	275			1					1				325.0		50.0		275.0	4.20
	4.251	EXIT RAMP @ NOSE 4.566															1,661.0			1,661.0		101.84
	(ML @ NOSE) 4.566	4.679															599.0		25.0	574		35.39
NEBO St UC	4.679	(APPROACH) 4.703	12B	62.5	62.5		1		0.81	1		1					125.0		37.5		87.5	1.51
	4.731 (DEPARTURE)	6.820															11,026.0		25.0	11,001.0		674.67
"DAGGETT" EXIT OH SIGN	6.820	6.841	16A	50	62.5			1					1				112.5		50.0		62.5	1.26
	6.841	6.964 (EXIT RAMP @ NOSE)															648.5			648.5		39.76
	(ML @ NOSE) 6.964	7.169															1,084.0		25.0	1,059.0		65.13
"A" St OC BENT SOUTH	7.169	7.181	16B	37.5	25.0			1				1					62.5		37.5		25.0	0.64
	7.181	7.376 (ML @ NOSE)															1,028.5			1,028.5		63.06
	(ENTRANCE RAMP @ NOSE) 7.376	9.243															9,860.0			9,860.0		604.52
	9.302	9.842															2,849.0		25.0	2,824.0		173.34
SHEET TOTAL				275.0	1912.5		2	4	1.62	2	1	2	3				33924.0		300.0	32424.0	1200.0	2006.89

SUMMARY OF QUANTITIES

Q-4

REVISED BY | DATE REVISED

YONGBEE LIAU | MICHAEL RISTIC

CALCULATED-DESIGNED BY | CHECKED BY

FUNCTIONAL SUPERVISOR: MICHAEL RISTIC

STATE OF CALIFORNIA - DEPARTMENT OF TRANSPORTATION
Caltrans MAINTENANCE ENGINEERING

LAST REVISION 08-13-12 | DATE PLOTTED => 14-AUG-2012 | TIME PLOTTED => 08:29

Dist	COUNTY	ROUTE	POST MILES TOTAL PROJECT	SHEET No.	TOTAL SHEETS
08	SBd	40	R3.0/R28.1	23	43

REGISTERED CIVIL ENGINEER 8-13-12 DATE

8-13-12
PLANS APPROVAL DATE

REGISTERED PROFESSIONAL ENGINEER YONGBEE LIAU No. 75571 Exp. 06-30-14 CIVIL STATE OF CALIFORNIA

THE STATE OF CALIFORNIA OR ITS OFFICERS OR AGENTS SHALL NOT BE RESPONSIBLE FOR THE ACCURACY OR COMPLETENESS OF SCANNED COPIES OF THIS PLAN SHEET.

METAL BEAM GUARD RAILING AND AC DIKE QUANTITIES

LOCATION	POST MILE Rte 40 EB Rt FROM	TO	MBGR LAYOUT TYPE (N)	REMOVE MBGR	RECONSTRUCT MBGR	MBGR WOOD POST	Trans RAILING (TYPE WB)	END ANCHOR ASSEMBLY (TYPE SFT)	MINOR Conc	END CAP (TYPE TC)	END CAP (TYPE A)	ALTERNATIVE FLARED TERMINAL SYSTEM	ALTERNATIVE IN-LINE TERMINAL SYSTEM	Dbl MBGR WOOD POST	ALTERNATIVE CRASH CUSHION SYSTEM	REMOVE CRASH CUSHION (SAND FILLED)	REMOVE AC DIKE	PLACE HMA DIKE TYPE A	TYPE C	TYPE D	TYPE F	HMA (AC DIKE & Misc AREA)
	FROM	TO	--	LF	LF	LF	EA	EA	CY	EA	EA	EA	EA	LF	EA	EA	LF	LF	LF	LF	LF	TON
	9.842	9.861	11B	37.5	62.5			1				1					100.0		37.5		62.5	1.16
	9.861	10.329															2,471.0		25.0	2,446.0		150.16
Dbl 11′ x 7′ SPPA	10.329	10.353	11B	37.5	87.5			1				1					125.0		37.5		87.5	1.51
	10.353	11.048															3,673.0		25.0	3,648.0		223.86
Dbl 11′ x 7′ SPPA	11.048	11.074	11A	50.0	87.5			1					1				137.5		50.0		87.5	1.61
	11.074	11.421															1,828.5		25.0	1,803.5		110.77
BLOOM WASH Br	11.421	(APPROACH) 11.447	12A	75.0	62.5		1		0.81	1			1				137.5		50.0		87.5	1.61
	11.463 (DEPARTURE)	11.984 (EXIT RAMP @ NOSE)															2,748.0			2,748.0		168.48
	(ML @ NOSE) 11.984	(ML APPROACH) 12.005	SEE Sht C-6	112.5			1		0.81	1				87.5	1	1						
BLOSSOM WASH Br	(EXIT RAMP @ NOSE) 11.984	(EXIT RAMP APPROACH) 12.005		50.0	62.5		1		0.81	1			1									
	12.023 (DEPARTURE)	12.195 (APPROACH)	12D	25.0	887.5		1		0.81	1							912.5				912.5	12.60
AIRPORT Rd UC	12.228 (DEPARTURE)	12.413 (ML @ NOSE)															974.0		25.0	949.0		58.38
	12.413 (ENTRANCE RAMP @ NOSE)	12.424															59.0		25.0	34.0		2.28
	12.424	12.448	11B	37.5	87.5			1				1					125		37.5		87.5	1.51
	12.448	13.505															5,580.0		25.0	5,555.0		340.78
AIRPORT WASH Br	13.505	(APPROACH) 13.545	12A	75.0	137.5		1		0.81	1			1				212.5		50.0		162.5	2.64
	13.566 (DEPARTURE)	14.586															5,386.0		25.0	5,361.0		328.88
SHEET TOTAL				500.0	1475.0		5	4	4.05	5		3	4	87.5	1	1	24,469.5		437.5	22,544.5	1,487.5	1,406.23

REVISED BY | DATE REVISED
YONGBEE LIAU | MICHAEL RISTIC
CALCULATED-DESIGNED BY | CHECKED BY
FUNCTIONAL SUPERVISOR | MICHAEL RISTIC

STATE OF CALIFORNIA - DEPARTMENT OF TRANSPORTATION
Caltrans® MAINTENANCE ENGINEERING

LAST REVISION 08-13-12 | DATE PLOTTED => 14-AUG-2012 TIME PLOTTED => 08:29

SUMMARY OF QUANTITIES

Dist	COUNTY	ROUTE	POST MILES TOTAL PROJECT	SHEET No.	TOTAL SHEETS
08	SBd	40	R3.0/R28.1	24	43

REGISTERED CIVIL ENGINEER 8-13-12 DATE

8-13-12
PLANS APPROVAL DATE

REGISTERED PROFESSIONAL ENGINEER YONGBEE LIAU No. 75571 Exp. 06-30-14 CIVIL STATE OF CALIFORNIA

THE STATE OF CALIFORNIA OR ITS OFFICERS OR AGENTS SHALL NOT BE RESPONSIBLE FOR THE ACCURACY OR COMPLETENESS OF SCANNED COPIES OF THIS PLAN SHEET.

METAL BEAM GUARD RAILING AND AC DIKE QUANTITIES

LOCATION	POST MILE Rte 40 EB Rt FROM	TO	MBGR LAYOUT TYPE (N)	REMOVE MBGR	RECONSTRUCT MBGR	MBGR WOOD POST	Trans RAILING (TYPE WB)	END ANCHOR ASSEMBLY (TYPE SFT)	MINOR Conc	END CAP (TYPE TC)	END CAP (TYPE A)	ALTERNATIVE FLARED TERMINAL SYSTEM	ALTERNATIVE IN-LINE TERMINAL SYSTEM	DbI MBGR WOOD POST	ALTERNATIVE CRASH CUSHION SYSTEM	REMOVE CRASH CUSHION (SAND FILLED)	REMOVE AC DIKE	PLACE HMA DIKE TYPE A	TYPE C	TYPE D	TYPE F	HMA (AC DIKE & Misc AREA)
	--		--	LF	LF	LF	EA	EA	CY	EA	EA	EA	EA	LF	EA	EA	LF	LF	LF	LF	LF	TON
LAVA WASH Br	14.586	(APPROACH) 14.612	12A	75.0	62.5		1		0.81	1			1				137.5		50.0		87.5	1.61
	14.630 (DEPARTURE)	15.381															3,966.0		25.0	3,941.0		241.82
GAS LINE WASH Br	15.381	(APPROACH) 15.407	12A	75.0	62.5		1		0.81	1			1				137.5		50.0		87.5	1.61
	15.424 (DEPARTURE)	15.894															2,483.0		25.0	2,458.0		150.90
TWIN HILLS WASH Br	15.894	(APPROACH) 15.918	12B	62.5	62.5		1		0.81	1		1					125.0		37.5		87.5	1.51
	15.935 (DEPARTURE)	15.973															201.0			201.0		12.32
	16.496	16.667															900.0			900.0		55.18
	16.810	16.917															562.0		25.0	537.0		33.12
	16.917	16.955	11B	37.5	162.5			1				1					200.0		37.5		162.5	2.54
	16.955	17.079															654.0		25.0	629.0		38.76
"Newberry Springs" "NEXT 2 Exits" ROADSIDE SIGN	17.079	17.119	11B	37.5	175.0			1				1					212.5		37.5		175	2.72
	17.119	17.252															704.5			704.5		43.19
	17.690	18.012															1,700.0		25.0	1,675.0		102.89
CREST WASH Br	18.012	(APPROACH) 18.031	12B	62.5	37.5		1		0.81	1		1					100.0		37.5		62.5	1.16
	18.049 (DEPARTURE)	18.308 (EXIT RAMP @ NOSE)															1,367.0			1,367.0		83.81
	18.308 (ML @ NOSE)	18.417															575.0		25.0	550.0		33.92
W NEWBERRY Rd UC (NATIOAL TRAILS Hwy)	18.417	(APPROACH) 18.455	12B	62.5	137.5		1		0.81	1		1					200.0		37.5		162.5	2.54
	18.499 (DEPARTURE)	18.563	12DD		337.5			1			1						337.5				337.5	4.66
SHEET TOTAL				412.5	1037.5		5	3	4.05	5	1	5	2				14,562.5		437.5	12,962.5	1,162.5	814.26

SUMMARY OF QUANTITIES

Q-6

REVISED BY | DATE REVISED
YONGBEE LIAU | MICHAEL RISTIC
CALCULATED-DESIGNED BY | CHECKED BY
FUNCTIONAL SUPERVISOR: MICHAEL RISTIC
STATE OF CALIFORNIA - DEPARTMENT OF TRANSPORTATION
Caltrans® MAINTENANCE ENGINEERING

LAST REVISION 08-13-12 | DATE PLOTTED => 14-AUG-2012 | TIME PLOTTED => 08:29

Dist	COUNTY	ROUTE	POST MILES TOTAL PROJECT	SHEET No.	TOTAL SHEETS
08	SBd	40	R3.0/R28.1	25	43

REGISTERED CIVIL ENGINEER 8-13-12 DATE

8-13-12
PLANS APPROVAL DATE

REGISTERED PROFESSIONAL ENGINEER YONGBEE LIAU No. 75571 Exp. 06-30-14 CIVIL STATE OF CALIFORNIA

THE STATE OF CALIFORNIA OR ITS OFFICERS OR AGENTS SHALL NOT BE RESPONSIBLE FOR THE ACCURACY OR COMPLETENESS OF SCANNED COPIES OF THIS PLAN SHEET.

METAL BEAM GUARD RAILING AND AC DIKE QUANTITIES

LOCATION	POST MILE Rte 40 EB Rt FROM	TO	MBGR LAYOUT TYPE (N)	REMOVE MBGR	RECONSTRUCT MBGR	MBGR WOOD POST	Trans RAILING (TYPE WB)	END ANCHOR ASSEMBLY (TYPE SFT)	MINOR Conc	END CAP (TYPE TC)	END CAP (TYPE A)	ALTERNATIVE FLARED TERMINAL SYSTEM	ALTERNATIVE IN-LINE TERMINAL SYSTEM	Dbl MBGR WOOD POST	ALTERNATIVE CRASH CUSHION SYSTEM	REMOVE CRASH CUSHION (SAND FILLED)	REMOVE AC DIKE	PLACE HMA DIKE TYPE A	TYPE C	TYPE D	TYPE F	HMA (AC DIKE & Misc AREA)
	--		--	LF	LF	LF	EA	EA	CY	EA	EA	EA	EA	LF	EA	EA	LF	LF	LF	LF	LF	TON
	18.563	18.625 (ML @ NOSE)															329.5			329.5		20.20
	18.625 (ENTRANCE RAMP @ NOSE)	20.260															8,630.0			8,630.0		529.11
	20.260	20.268															42.0	42.0				1.19
NEWBERRY Rd OC																						
	20.276	20.287															57.0	57.0				1.61
	20.287	20.770															2,547.0			2,547.0		156.16
	21.109	21.822															3,762.0			3,762.0		230.65
	27.638	28.024 (EXIT RAMP @ NOSE)															2,040.0			2,040.0		125.07
	Rte 40 EB Lt																					
	3.140	3.365															1,188.0		25.0	1,163.0		71.50
S IWO JIMA Ave UC	3.365	(APPROACH) 3.429	12A	62.5	100.0	175.0	1		0.81	1			1				337.5		50.0		287.5	4.37
WONSAN DITCH	3.795	3.816	11B	37.5	75.0			1				1										
NEBO St UC	4.674	(APPROACH) 4.703	12A	62.5	87.5	187.5	1		0.81	1			1									
"A" St OC MEDIAN BENT	7.181	(NORTH SIDE) 7.181	14A		-	37.5		1						25.0	1							
		(SOUTH SIDE)	14A			37.5		1						25.0	1							
	9.112	9.434															1,699.0			1,699.0		104.17
	9.842	9.862	11B	37.5	62.5			1				1					125.0		62.5		62.5	1.36
Dbl 11' x 7' SPPA	10.318	10.356	11B	37.5	162.5			1				1										
Dbl 11' x 7' SPPA	11.036	11.074	11A	50.0	150			1					1									
BLOOM WASH Br	11.419	(APPROACH) 11.447	12B	62.5	87.5		1		0.81	1		1										
SHEET TOTAL				350.0	725.0	437.5	3	6	2.43	3		4	3	50.0	2		20757.0	99.0	137.5	20170.5	350.0	1245.38

SUMMARY OF QUANTITIES

Q-7

REVISED BY | DATE REVISED
YONGBEE LIAU | MICHAEL RISTIC
CALCULATED-DESIGNED BY | CHECKED BY
FUNCTIONAL SUPERVISOR: MICHAEL RISTIC
STATE OF CALIFORNIA - DEPARTMENT OF TRANSPORTATION
Caltrans® MAINTENANCE ENGINEERING

LAST REVISION 08-13-12 | DATE PLOTTED => 14-AUG-2012 TIME PLOTTED => 08:29

Dist	COUNTY	ROUTE	POST MILES TOTAL PROJECT	SHEET No.	TOTAL SHEETS
08	SBd	40	R3.0/R28.1	26	43

REGISTERED CIVIL ENGINEER 8-13-12 DATE

8-13-12
PLANS APPROVAL DATE

REGISTERED PROFESSIONAL ENGINEER YONGBEE LIAU No. 75571 Exp. 06-30-14 CIVIL STATE OF CALIFORNIA

THE STATE OF CALIFORNIA OR ITS OFFICERS OR AGENTS SHALL NOT BE RESPONSIBLE FOR THE ACCURACY OR COMPLETENESS OF SCANNED COPIES OF THIS PLAN SHEET.

METAL BEAM GUARD RAILING AND AC DIKE QUANTITIES

LOCATION	POST MILE Rte 40 EB Rt FROM	TO	MBGR LAYOUT TYPE (N)	REMOVE MBGR	RECONSTRUCT MBGR	MBGR WOOD POST	Trans RAILING (TYPE WB)	END ANCHOR ASSEMBLY (TYPE SFT)	MINOR Conc	END CAP (TYPE TC)	END CAP (TYPE A)	ALTERNATIVE FLARED TERMINAL SYSTEM	ALTERNATIVE IN-LINE TERMINAL SYSTEM	Dbl MBGR WOOD POST	ALTERNATIVE CRASH CUSHION SYSTEM	REMOVE CRASH CUSHION (SAND FILLED)	REMOVE AC DIKE	PLACE HMA DIKE TYPE A	TYPE C	TYPE D	TYPE F	HMA (AC DIKE & Misc AREA)
	FROM	TO	--	LF	LF	LF	EA	EA	CY	EA	EA	EA	EA	LF	EA	EA	LF	LF	LF	LF	LF	TON
BLOSSOM WASH Br	11.974	(APPROACH) 12.005	12A	75.0	87.5		1		0.81	1			1									
	12.023 (DEPARTURE)	12.103	12DD		425			1			1											
AIRPORT Rd UC	12.166	(APPROACH) 12.195	12B	62.5	87.5		1		0.81	1		1										
Dbl BARREL CULVERTS	12.411	12.449	11B	37.5	162.5			1				1										
AIRPORT WASH Br	13.507	(APPROACH) 13.545	12B	62.5	137.5		1		0.81	1		1										
LAVA WASH Br	14.572	(APPROACH) 14.613	12A	75	137.5		1		0.81	1			1									
	14.630 (DEPARTURE)	14.832															1,069.0			1,069.0		65.54
	15.298	15.369															372.0		25.0	347		21.47
GAS LINE WASH Br	15.369	(APPROACH) 15.407	12B	62.5	137.5		1		0.81	1		1					200.0		37.5		162.5	2.54
TWIN HILLS WASH Br	15.878	(APPROACH) 15.918	12A	75.0	137.5		1		0.81	1			1				237.5		75.0		162.5	2.84
CROSS CULVERT	16.917	16.955	11B	37.5	162.5			1				1					225.0		62.5		162.5	2.74
"Newberry Springs" "NEXT 2 Exits" ROADSIDE SIGN	17.079	17.119	11B	37.5	175			1				1					237.5		62.5		175.0	2.91
CREST WASH Br	17.993	(APPROACH) 18.031	12B	62.5	137.5		1		0.81	1		1					225.0		62.5		162.5	2.74
W NEWBERRY Rd UC (NATIOAL TRAILS Hwy)	18.409	(APPROACH) 18.447	12B	62.5	137.5		1		0.81	1		1					225.0		62.5		162.5	2.74
	18.490 (DEPARTURE)	18.554	12DD		337.5			1			1											
NEWBERRY Rd OC MEDIAN BENT	(NORTH SIDE) 20.258	20.278	14A	62.5	37.5			1						25.0	1							
	(SOUTH SIDE)		14A	62.5	37.5			1						25.0	1							
FORT CADY Rd OC	(NORTH SIDE) 23.324	23.344	14A	62.5	37.5			1						25.0	1							
	(SOUTH SIDE)		14A	62.5	37.5			1						25.0	1							
		SHEET TOTAL		900.0	2412.5		8	9	6.48	8	2	8	3	100.0	4		2,791.0		387.5	1,416.0	987.5	103.52

SUMMARY OF QUANTITIES

Q-8

STATE OF CALIFORNIA - DEPARTMENT OF TRANSPORTATION
Caltrans® MAINTENANCE ENGINEERING

FUNCTIONAL SUPERVISOR: MICHAEL RISTIC
CALCULATED-DESIGNED BY: YONGBEE LIAU
CHECKED BY: MICHAEL RISTIC
REVISED BY / DATE REVISED

LAST REVISION 08-13-12
DATE PLOTTED => 14-AUG-2012
TIME PLOTTED => 08:30

Dist	COUNTY	ROUTE	POST MILES TOTAL PROJECT	SHEET No.	TOTAL SHEETS
08	SBd	40	R3.0/R28.1	27	43

REGISTERED CIVIL ENGINEER 8-13-12 DATE

8-13-12
PLANS APPROVAL DATE

REGISTERED PROFESSIONAL ENGINEER YONGBEE LIAU No. 75571 Exp. 06-30-14 CIVIL STATE OF CALIFORNIA

THE STATE OF CALIFORNIA OR ITS OFFICERS OR AGENTS SHALL NOT BE RESPONSIBLE FOR THE ACCURACY OR COMPLETENESS OF SCANNED COPIES OF THIS PLAN SHEET.

METAL BEAM GUARD RAILING AND AC DIKE QUANTITIES

LOCATION	POST MILE Rte 40 WB Rt FROM	TO	MBGR LAYOUT TYPE (N)	REMOVE MBGR	RECONSTRUCT MBGR	MBGR WOOD POST	Trans RAILING (TYPE WB)	END ANCHOR ASSEMBLY (TYPE SFT)	MINOR Conc	END CAP (TYPE TC)	END CAP (TYPE A)	ALTERNATIVE FLARED TERMINAL SYSTEM	ALTERNATIVE IN-LINE TERMINAL SYSTEM	Dbl MBGR WOOD POST	ALTERNATIVE CRASH CUSHION SYSTEM	REMOVE CRASH CUSHION (SAND FILLED)	REMOVE AC DIKE	PLACE HMA DIKE TYPE A	TYPE C	TYPE D	TYPE F	HMA (AC DIKE & Misc AREA)
	--		--	LF	LF	LF	EA	EA	CY	EA	EA	EA	EA	LF	EA	EA	LF	LF	LF	LF	LF	TON
	3.216	3.013															1,072.5			1,072.5		65.76
PELELIU DITCH	3.247	3.216	11B	37.5	125.0			1				1					162.5		37.5		125.0	2.02
	3.296	3.247															258.5		25.0	233.5		14.51
S IWO JIMA Ave UC	(DEPARTURE) 3.435	3.296	12D		737.5			1			1						737.5				737.5	10.19
	3.562	3.465 (APPROACH)	12B	62.5	450.0		1		0.81	1		1					512.5		37.5		475.0	6.86
	3.831	3.562															1,421.0		25.0	1,396.0		85.79
WONSAN DITCH	3.860	3.831	11B	37.5	112.5			1				1					150.0		37.5		112.5	1.85
	4.242	3.860															2,016.5		25.0	1,991.5		122.30
(UNNAMED DITCH)	4.254	4.242	11B	37.5	25.0			1				1					62.5		37.5		25.0	0.64
	4.546 (ENTRANCE RAMP @ NOSE)	4.254															1,545.0		25.0	1,520.0		93.39
	4.674	4.546 (ML @ NOSE)															676.0			676.0		41.45
NEBO St UC	(DEPARTURE) 4.712	4.674	12DD		200.0												200.0				200.0	2.76
	4.767	4.741 (APPROACH)	12A	75.0	62.5		1		0.81	1			1				137.5		50.0		87.5	1.61
	6.959	4.767															11,577.5		25.0	11,552.5		708.49
	6.976 (ENTRANCE RAMP @ NOSE)	6.959	11B	37.5	50.0							1					87.5		50.0		37.5	0.92
	7.186	6.976 (ML @ NOSE)															1,108.0			1,108.0		67.93
"A St OC BENT NORTH	7.200	7.186	16B	37.5	37.5			1				1					75.0		50.0		25.0	0.74
SHEET TOTAL				325.0	1800.0		2	5	1.62	2	1	6	1				21,800.0		425.0	19,550.0	1,825.0	1227.21

SUMMARY OF QUANTITIES

Q-9

STATE OF CALIFORNIA - DEPARTMENT OF TRANSPORTATION
Caltrans MAINTENANCE ENGINEERING

FUNCTIONAL SUPERVISOR: MICHAEL RISTIC
CALCULATED-DESIGNED BY: YONGBEE LIAU
CHECKED BY: MICHAEL RISTIC
REVISED BY / DATE REVISED

LAST REVISION 08-13-12 DATE PLOTTED => 14-AUG-2012 TIME PLOTTED => 08:30

Dist	COUNTY	ROUTE	POST MILES TOTAL PROJECT	SHEET No.	TOTAL SHEETS
08	SBd	40	R3.0/R28.1	28	43

REGISTERED CIVIL ENGINEER 8-13-12 DATE

8-13-12
PLANS APPROVAL DATE

REGISTERED PROFESSIONAL ENGINEER YONGBEE LIAU No. 75571 Exp. 06-30-14 CIVIL STATE OF CALIFORNIA

THE STATE OF CALIFORNIA OR ITS OFFICERS OR AGENTS SHALL NOT BE RESPONSIBLE FOR THE ACCURACY OR COMPLETENESS OF SCANNED COPIES OF THIS PLAN SHEET.

METAL BEAM GUARD RAILING AND AC DIKE QUANTITIES

LOCATION	POST MILE Rte 40 WB Rt FROM	TO	MBGR LAYOUT TYPE (N)	REMOVE MBGR	RECONSTRUCT MBGR	MBGR WOOD POST	Trans RAILING (TYPE WB)	END ANCHOR ASSEMBLY (TYPE SFT)	MINOR Conc	END CAP (TYPE TC)	END CAP (TYPE A)	ALTERNATIVE FLARED TERMINAL SYSTEM	ALTERNATIVE IN-LINE TERMINAL SYSTEM	Dbl MBGR WOOD POST	ALTERNATIVE CRASH CUSHION SYSTEM	REMOVE CRASH CUSHION (SAND FILLED)	REMOVE AC DIKE	PLACE HMA DIKE TYPE A	TYPE C	TYPE D	TYPE F	HMA (AC DIKE & Misc AREA)
	--		--	LF	LF	LF	EA	EA	CY	EA	EA	EA	EA	LF	EA	EA	LF	LF	LF	LF	LF	TON
	7.419 (ML @ NOSE)	7.200															1,157.0		25.0	1,132.0		69.60
	7.528	7.419 (EXIT RAMP @ NOSE)															572.5			572.5		35.10
"BARSTOW/DAGGETT" EXIT OH SIGN	7.549	7.528	16B	37.5	75.0			1					1				112.5		50.0		62.5	1.26
	9.848	7.549															12,139.0		25.0	12,114.0		742.91
	9.876	9.848	11A	50.0	100.0			1					1				150.0		50.0		100.0	1.78
	10.349	9.876															2,495.0		25	2,470.0		151.64
Dbl 11′ x 7′ SPPA	10.377	10.349	11A	50.0	100.0			1					1				150.0		50.0		100.0	1.78
	11.062	10.377															3,614.5		25.0	3,589.5		220.27
Dbl 11′ x 7′ SPPA	11.083	11.062	11A	50.0	62.5			1					1				112.5		25.0		87.5	1.41
BLOOM WASH Br	(DEPARTURE) 11.449	11.083															1,930.0		25.0	1,905.0		116.99
	11.485	11.466 (APPROACH)	12A	75.0	25.0		1		0.81	1			1				100.0		50.0		50.0	1.09
BLOSSOM WASH Br	(DEPARTURE) 12.007	11.485															2,755.0		25.0	2,730.0		167.58
	12.038	12.026 (APPROACH)	12B	62.5	0.0		1		0.81	1		1					62.5		37.5		25.0	0.64
	12.063 (ENTRANCE RAMP @ NOSE)	12.038															130.0		25.0	105.0		6.64
AIRPORT Rd UC	(DEPARTURE) 12.193	(ML @ ENTRANCE RAMP NOSE) 12.063															689.0			689.0		42.24
	12.267	12.227 (APPROACH)	12A	75.0	137.5		1		0.81	1			1				212.5		50.0		162.5	2.64
SHEET TOTAL				400.0	500.0		3	4	2.43	3		1	6				26,382.0		487.5	25,307.0	587.5	1,563.57

SUMMARY OF QUANTITIES

Q-10

STATE OF CALIFORNIA - DEPARTMENT OF TRANSPORTATION
Caltrans MAINTENANCE ENGINEERING

REVISED BY | DATE REVISED
YONGBEE LIAU | MICHAEL RISTIC
CALCULATED-DESIGNED BY | CHECKED BY
FUNCTIONAL SUPERVISOR
MICHAEL RISTIC

LAST REVISION 08-13-12 | DATE PLOTTED => 14-AUG-2012 | TIME PLOTTED => 08:30

Dist	COUNTY	ROUTE	POST MILES TOTAL PROJECT	SHEET No.	TOTAL SHEETS
08	SBd	40	R3.0/R28.1	29	43

REGISTERED CIVIL ENGINEER 8-13-12 DATE

8-13-12
PLANS APPROVAL DATE

REGISTERED PROFESSIONAL ENGINEER YONGBEE LIAU No. 75571 Exp. 06-30-14 CIVIL STATE OF CALIFORNIA

THE STATE OF CALIFORNIA OR ITS OFFICERS OR AGENTS SHALL NOT BE RESPONSIBLE FOR THE ACCURACY OR COMPLETENESS OF SCANNED COPIES OF THIS PLAN SHEET.

METAL BEAM GUARD RAILING AND AC DIKE QUANTITIES

LOCATION	POST MILE Rte 40 WB Rt FROM	TO	MBGR LAYOUT TYPE (N)	REMOVE MBGR	RECONSTRUCT MBGR	MBGR WOOD POST	Trans RAILING (TYPE WB)	END ANCHOR ASSEMBLY (TYPE SFT)	MINOR Conc	END CAP (TYPE TC)	END CAP (TYPE A)	ALTERNATIVE FLARED TERMINAL SYSTEM	ALTERNATIVE IN-LINE TERMINAL SYSTEM	Dbl MBGR WOOD POST	ALTERNATIVE CRASH CUSHION SYSTEM	REMOVE CRASH CUSHION (SAND FILLED)	REMOVE AC DIKE	PLACE HMA DIKE TYPE A	TYPE C	TYPE D	TYPE F	HMA (AC DIKE & Misc AREA)
	--		--	LF	LF	LF	EA	EA	CY	EA	EA	EA	EA	LF	EA	EA	LF	LF	LF	LF	LF	TON
	12.446 (ML @ EXIT RAMP NOSE)	12.267															943.0		25.0	918.0		56.48
	12.460 (ON AIRPORT Rd EXIT RAMP)	12.441 (ON AIRPORT Rd EXIT RAMP)	11B	37.5	62.5			1				1					100.0		37.5		62.5	1.16
AIRPORT WASH Br	(DEPARTURE) 13.556	(ON AIRPORT Rd EXIT RAMP) 12.460															5,786.0		25.0	5761.0		353.41
	13.589	13.577 (APPROACH)	12B	62.5			1		0.81	1		1					62.5		37.5		25.0	0.64
LAVA WASH Br	(DEPARTURE) 14.618	13.589															5,436.0		25.0	5,411.0		331.95
	14.648	14.636 (APPROACH)	12B	62.5			1		0.81	1		1					62.5		37.5		25.0	0.64
GAS LINE WASH Br	(DEPARTURE) 15.414	14.648															4044.0		25.0	4019.0		246.60
	15.442	15.431 (APPROACH)	12B	62.5			1		0.81	1		1					62.5		37.5		25.0	0.64
TWIN HILLS WASH Br	(DEPARTURE) 15.925	15.442															2,549.0		25	2,524.0		154.95
	15.959	15.942 (APPROACH)	12B	62.5	25.0		1		0.81	1		1					87.5		37.5		50.0	0.99
	16.952	15.959															5,241.0		25.0	5,216.0		319.99
	16.970	16.952	11B	37.5	62.5			1				1					100.0		37.5		62.5	1.16
	17.112	16.970															745.0		25.0	720.0		44.34
	17.130	17.112	11B	37.5	62.5			1				1					100.0		37.5		62.5	1.16
CREST WASH Br	(DEPARTURE) 18.035	17.130															4,775.0		25	4,750.0		291.42
	18.066	18.054 (APPROACH)	12B	62.5			1		0.81	1		1					62.5		37.5		25.0	0.64
SHEET TOTAL				425.0	212.5		5	3	4.05	5		8					30,156.5		500.0	29,319.0	337.5	1,806.17

SUMMARY OF QUANTITIES

Q-11

REVISED BY	DATE REVISED
YONGBEE LIAU	MICHAEL RISTIC
CALCULATED-DESIGNED BY	CHECKED BY
FUNCTIONAL SUPERVISOR	MICHAEL RISTIC

STATE OF CALIFORNIA - DEPARTMENT OF TRANSPORTATION
Caltrans MAINTENANCE ENGINEERING

LAST REVISION 08-13-12 | DATE PLOTTED => 14-AUG-2012 TIME PLOTTED => 08:30

Dist	COUNTY	ROUTE	POST MILES TOTAL PROJECT	SHEET No.	TOTAL SHEETS
08	SBd	40	R3.0/R28.1	30	43

REGISTERED CIVIL ENGINEER 8-13-12 DATE

8-13-12
PLANS APPROVAL DATE

REGISTERED PROFESSIONAL ENGINEER YONGBEE LIAU No. 75571 Exp. 06-30-14 CIVIL STATE OF CALIFORNIA

THE STATE OF CALIFORNIA OR ITS OFFICERS OR AGENTS SHALL NOT BE RESPONSIBLE FOR THE ACCURACY OR COMPLETENESS OF SCANNED COPIES OF THIS PLAN SHEET.

METAL BEAM GUARD RAILING AND AC DIKE QUANTITIES

LOCATION	POST MILE Rte 40 WB Rt FROM	TO	MBGR LAYOUT TYPE (N)	REMOVE MBGR	RECONSTRUCT MBGR	MBGR WOOD POST	Trans RAILING (TYPE WB)	END ANCHOR ASSEMBLY (TYPE SFT)	MINOR Conc	END CAP (TYPE TC)	END CAP (TYPE A)	ALTERNATIVE FLARED TERMINAL SYSTEM	ALTERNATIVE IN-LINE TERMINAL SYSTEM	DbI MBGR WOOD POST	ALTERNATIVE CRASH CUSHION SYSTEM	REMOVE CRASH CUSHION (SAND FILLED)	REMOVE AC DIKE	PLACE HMA DIKE TYPE A	TYPE C	TYPE D	TYPE F	HMA (AC DIKE & Misc AREA)
			--	LF	LF	LF	EA	EA	CY	EA	EA	EA	EA	LF	EA	EA	LF	LF	LF	LF	LF	TON
	18.222 (ENTRANCE RAMP @ NOSE)	18.066															826.0		25.0	801.0		49.31
	18.310	18.222 (ML @ NOSE)															466.0			466.0		28.57
W NEWBERRY Rd UC (NATIOAL TRAILS Hwy)	(DEPARTURE) 18.424	18.310	12DD		600.0			1									600.0				600.0	8.29
	18.535	18.468 (APPROACH)	12B	62.5	287.5		1		0.81	1		1					350.0		37.5		312.5	4.61
	18.615 (ML @ NOSE)	18.535															422.0		25.0	397.0		24.54
	19.693	18.615 (EXIT RAMP @ NOSE)															5,694.0			5,694.0		349.10
NEWBERRY Rd OC	20.267	19.840															2,255.0			2,255.0		138.25
	20.288	20.267															110.0	110.0				3.11
	22.064	20.288															9,380.0			9,380.0		575.09
FORT CADY Rd OC																						
	23.684	23.594 (EXIT RAMP @ NOSE)															476.0			476.0		29.18
	28.100	27.580															2,745.0			2,745.0		168.30
SHEET TOTAL				62.5	887.5		1	1	0.81	1		1					23,324.0	110.0	87.5	22,214.0	912.5	1,378.35

SUMMARY OF QUANTITIES

Q-12

REVISED BY | DATE REVISED

YONGBEE LIAU | MICHAEL RISTIC

CALCULATED-DESIGNED BY | CHECKED BY

FUNCTIONAL SUPERVISOR: MICHAEL RISTIC

STATE OF CALIFORNIA - DEPARTMENT OF TRANSPORTATION
Caltrans® MAINTENANCE ENGINEERING

LAST REVISION 08-13-12 | DATE PLOTTED => 14-AUG-2012 | TIME PLOTTED => 08:30

Dist	COUNTY	ROUTE	POST MILES TOTAL PROJECT	SHEET No.	TOTAL SHEETS
08	SBd	40	R3.0/R28.1	31	43

REGISTERED CIVIL ENGINEER 8-13-12 DATE

8-13-12
PLANS APPROVAL DATE

REGISTERED PROFESSIONAL ENGINEER YONGBEE LIAU No. 75571 Exp. 06-30-14 CIVIL STATE OF CALIFORNIA

THE STATE OF CALIFORNIA OR ITS OFFICERS OR AGENTS SHALL NOT BE RESPONSIBLE FOR THE ACCURACY OR COMPLETENESS OF SCANNED COPIES OF THIS PLAN SHEET.

METAL BEAM GUARD RAILING AND AC DIKE QUANTITIES

LOCATION	POST MILE Rte 40 WB Lt		MBGR LAYOUT TYPE (N)	REMOVE MBGR	RECONSTRUCT MBGR	MBGR WOOD POST	Trans RAILING (TYPE WB)	END ANCHOR ASSEMBLY (TYPE SFT)	MINOR Conc	END CAP (TYPE TC)	END CAP (TYPE A)	ALTERNATIVE FLARED TERMINAL SYSTEM	ALTERNATIVE IN-LINE TERMINAL SYSTEM	Dbl MBGR WOOD POST	ALTERNATIVE CRASH CUSHION SYSTEM	REMOVE CRASH CUSHION (SAND FILLED)	REMOVE AC DIKE	PLACE HMA DIKE				HMA (AC DIKE & Misc AREA)
																		TYPE A	TYPE C	TYPE D	TYPE F	
	FROM	TO	--	LF	LF	LF	EA	EA	CY	EA	EA	EA	EA	LF	EA	EA	LF	LF	LF	LF	LF	TON
S IWO JIMA Ave UC	3.557	3.465 (APPROACH)	12B	37.5	450.0		1		0.81	1		1										
WONSAN DITCH	3.852	3.823	11B	37.5	112.5			1				1										
NEBO St UC	4.770	4.741 (APPROACH)	12E	62.5	87.5	25.0	1		0.81	1				187.5	1							
"A" St OC																						
	9.886	9.848	11B	37.5	162.5			1				1										
Dbl 11' x 7' SPPA	10.375	10.346	11B	37.5	112.5			1				1										
Dbl 11' x 7' SPPA	11.091	11.063	11B	37.5	112.5			1				1										
BLOOM WASH Br	11.498	11.467 (APPROACH)	12A	75.0	87.5		1		0.81	1			1									
BLOSSOM WASH Br	12.057	12.026 (APPROACH)	12A	75.0	87.5		1		0.81	1			1									
AIRPORT Rd UC	12.254	12.228 (APPROACH)	12B	62.5	75.0		1		0.81	1		1										
	12.480	12.442	11B	37.5	162.5			1				1										
AIRPORT WASH Br	13.616	13.578 (APPROACH)	12A	75.0	125.0		1		0.81	1			1									
LAVA WASH Br	14.665	14.637 (APPROACH)	12A	75.0	75.0		1		0.81	1			1									
GAS LINE WASH Br	15.459	15.431 (APPROACH)	12B	62.5	87.5		1		0.81	1		1					175.0		62.5		112.5	2.05
TWIN HILLS WASH Br	15.971	15.943 (APPROACH)	12B	62.5	87.5		1		0.81	1		1					175.0		62.5		112.5	2.05
	16.980	16.952	11B	37.5	112.5			1				1					175.0		62.5		112.5	2.05
	17.140	17.112	11B	37.5	112.5			1				1					175.0		62.5		112.5	2.05
SHEET TOTAL				850.0	2050.0	25.0	9	7	7.29	9		11	4	187.5	1		700.0		250.0		450.0	8.20

SUMMARY OF QUANTITIES

Q-13

REVISED BY | DATE REVISED
YONGBEE LIAU | MICHAEL RISTIC
CALCULATED-DESIGNED BY | CHECKED BY
FUNCTIONAL SUPERVISOR: MICHAEL RISTIC

STATE OF CALIFORNIA - DEPARTMENT OF TRANSPORTATION
Caltrans MAINTENANCE ENGINEERING

LAST REVISION 08-13-12 | DATE PLOTTED => 14-AUG-2012 | TIME PLOTTED => 08:30

Dist	COUNTY	ROUTE	POST MILES TOTAL PROJECT	SHEET No.	TOTAL SHEETS
08	SBd	40	R3.0/R28.1	32	43

REGISTERED CIVIL ENGINEER 8-13-12 DATE

8-13-12
PLANS APPROVAL DATE

REGISTERED PROFESSIONAL ENGINEER YONGBEE LIAU No. 75571 Exp. 06-30-14 CIVIL STATE OF CALIFORNIA

THE STATE OF CALIFORNIA OR ITS OFFICERS OR AGENTS SHALL NOT BE RESPONSIBLE FOR THE ACCURACY OR COMPLETENESS OF SCANNED COPIES OF THIS PLAN SHEET.

METAL BEAM GUARD RAILING AND AC DIKE QUANTITIES

LOCATION	POST MILE Rte 40 WB Lt		MBGR LAYOUT TYPE (N)	REMOVE MBGR	RECONSTRUCT MBGR	MBGR WOOD POST	Trans RAILING (TYPE WB)	END ANCHOR ASSEMBLY (TYPE SFT)	MINOR Conc	END CAP (TYPE TC)	END CAP (TYPE A)	ALTERNATIVE FLARED TERMINAL SYSTEM	ALTERNATIVE IN-LINE TERMINAL SYSTEM	Dbl MBGR WOOD POST	ALTERNATIVE CRASH CUSHION SYSTEM	REMOVE CRASH CUSHION (SAND FILLED)	REMOVE AC DIKE	PLACE HMA DIKE				HMA (AC DIKE & Misc AREA)
																		TYPE A	TYPE C	TYPE D	TYPE F	
	FROM	TO	--	LF	LF	LF	EA	EA	CY	EA	EA	EA	EA	LF	EA	EA	LF	LF	LF	LF	LF	TON
CREST WASH Br	18.082	18.054 (APPROACH)	12B	62.5	87.5		1		0.81	1		1					175.0		62.5		112.5	2.05
W NEWBERRY Rd UC (NATIOAL TRAILS Hwy)	(DEPARTURE) 18.434	18.320	12DD		600.0			1	0.81													
	18.544	18.478 (APPROACH)	12B	62.5	287.5		1		0.81	1		1					375.0		62.5		312.5	4.81
	18.882	18.666															1,140.0			1,140.0		69.89
	19.843	19.674															893.0			893.0		54.75
NEWBERRY Rd OC																						
NEBO St Rte 40 EB EXIT RAMP																						
Lt																	165.0			165.0		10.12
Rt	(EXIT RAMP @ NOSE)																735.0			735.0		45.06
NEBO St Rte 40 WB ENTRANCE RAMP																						
Lt																	290.0			290.0		17.78
Rt		(ENTRANCE RAMP @ NOSE)															915.0			915.0		56.10
"A" St/DAGGETT-YERMO Rd Rte 40 EB EXIT RAMP (DAGGETT)																						
Lt																	593.0			593.0		36.36
Rt	(EXIT RAMP @ NOSE)																763.0			763.0		46.78
Rt																	127.0			127.0		7.79
"A" St/DAGGETT-YERMO Rd Rte 40 EB ENTRANCE RAMP (DAGGETT)																						
Lt																	573.0			573.0		35.13
Rt																	135.0			135.0		8.28
RT		(ENTRANCE RAMP @ NOSE)															651.0			651.0		39.91
		SHEET TOTAL		125.0	975.0		2	1	2.43	2		2					7530.0		125.0	6980.0	425.0	434.81

SUMMARY OF QUANTITIES

Q-14

REVISED BY | DATE REVISED
YONGBEE LIAU | MICHAEL RISTIC
CALCULATED-DESIGNED BY | CHECKED BY
FUNCTIONAL SUPERVISOR: MICHAEL RISTIC
STATE OF CALIFORNIA - DEPARTMENT OF TRANSPORTATION
Caltrans® MAINTENANCE ENGINEERING

LAST REVISION 08-13-12 | DATE PLOTTED => 14-AUG-2012 | TIME PLOTTED => 08:30

Dist	COUNTY	ROUTE	POST MILES TOTAL PROJECT	SHEET No.	TOTAL SHEETS
08	SBd	40	R3.0/R28.1	33	43

REGISTERED CIVIL ENGINEER 8-13-12 DATE

8-13-12
PLANS APPROVAL DATE

REGISTERED PROFESSIONAL ENGINEER YONGBEE LIAU No. 75571 Exp. 06-30-14 CIVIL STATE OF CALIFORNIA

THE STATE OF CALIFORNIA OR ITS OFFICERS OR AGENTS SHALL NOT BE RESPONSIBLE FOR THE ACCURACY OR COMPLETENESS OF SCANNED COPIES OF THIS PLAN SHEET.

METAL BEAM GUARD RAILING AND AC DIKE QUANTITIES

LOCATION	Rte 40 RAMPS		MBGR LAYOUT TYPE (N)	REMOVE MBGR	RECONSTRUCT MBGR	MBGR WOOD POST	Trans RAILING (TYPE WB)	END ANCHOR ASSEMBLY (TYPE SFT)	MINOR Conc	END CAP (TYPE TC)	END CAP (TYPE A)	ALTERNATIVE FLARED TERMINAL SYSTEM	ALTERNATIVE IN-LINE TERMINAL SYSTEM	DbI MBGR WOOD POST	ALTERNATIVE CRASH CUSHION SYSTEM	REMOVE CRASH CUSHION (SAND FILLED)	REMOVE AC DIKE	PLACE HMA DIKE				HMA (AC DIKE & Misc AREA)
																		TYPE A	TYPE C	TYPE D	TYPE F	
	FROM	TO	--	LF	LF	LF	EA	EA	CY	EA	EA	EA	EA	LF	EA	EA	LF	LF	LF	LF	LF	TON
"A" St/DAGGETT-YERMO Rd Rte 40 WB EXIT RAMP (DAGGETT)																						
Lt																	1235.0			1235.0		75.72
Rt	(EXIT RAMP @ NOSE)																885.0			885.0		54.26
Rt																	187.0			187.0		11.47
"A" St/DAGGETT-YERMO Rd Rte 40 WB ENTRANCE RAMP (DAGGETT)																						
Lt																	616.0			616.0		37.77
Lt		(ENTRANCE RAMP @ NOSE)															159.0			159.0		9.75
Rt																	224.0			224.0		13.73
Rt		(ENTRANCE RAMP @ NOSE)															725.0			725.0		44.45
AIRPORT Rd Rte 40 EB EXIT RAMP (BARSTOW-DAGGETT AIRPORT)																						
BLOSSOM WASH Br																						
Lt	(DEPARTURE)		12DD		475.0			1	0.81													
Rt	(EXIT RAMP @ NOSE)	(APPROACH)	12A	75.0	37.5		1		0.81	1		1					112.5		37.5		75.0	1.33
BLOSSOM WASH Br																						
Rt	(DEPARTURE)																1,120.0			1,120.0		68.67
AIRPORT Rd Rte 40 EB ENTRANCE RAMP (BARSTOW-DAGGETT AIRPORT)																						
Rt		(ENTRANCE RAMP @ NOSE)															860.0			860.0		52.73
AIRPORT Rd Rte 40 WB EXIT RAMP (BARSTOW-DAGGETT AIRPORT)																						
Rt		(ENTRANCE RAMP @ NOSE)															1,270.0			1,270.0		77.86
AIRPORT Rd Rte 40 WB ENTRANCE RAMP (BARSTOW-DAGGETT AIRPORT)																						
Rt		(ENTRANCE RAMP @ NOSE)															812.00			812.00		49.78
W NEWBERRY Rd Rte 40 EB EXIT RAMP (NATIONAL TRAILS Hwy)																						
Rt	(EXIT RAMP @ NOSE)																552.00			552.00		33.84
W NEWBERRY Rd Rte 40 EB ENTRANCE RAMP (NATIONAL TRAILS Hwy)																						
Rt		(ENTRANCE RAMP @ NOSE)															520.00			520.00		31.88
SHEET TOTAL				75.0	512.5		1	1	1.62	1		1					9,277.5		37.5	9,165.0	75.0	563.24

SUMMARY OF QUANTITIES

Q-15

REVISED BY | DATE REVISED
YONGBEE LIAU | MICHAEL RISTIC
CALCULATED-DESIGNED BY | CHECKED BY
FUNCTIONAL SUPERVISOR: MICHAEL RISTIC
STATE OF CALIFORNIA - DEPARTMENT OF TRANSPORTATION
Caltrans MAINTENANCE ENGINEERING

LAST REVISION 08-13-12 | DATE PLOTTED => 14-AUG-2012 | TIME PLOTTED => 08:30

Dist	COUNTY	ROUTE	POST MILES TOTAL PROJECT	SHEET No.	TOTAL SHEETS
08	SBd	40	R3.0/R28.1	34	43

REGISTERED CIVIL ENGINEER 8-13-12 DATE

8-13-12
PLANS APPROVAL DATE

REGISTERED PROFESSIONAL ENGINEER YONGBEE LIAU No. 75571 Exp. 06-30-14 CIVIL STATE OF CALIFORNIA

THE STATE OF CALIFORNIA OR ITS OFFICERS OR AGENTS SHALL NOT BE RESPONSIBLE FOR THE ACCURACY OR COMPLETENESS OF SCANNED COPIES OF THIS PLAN SHEET.

METAL BEAM GUARD RAILING AND AC DIKE QUANTITIES

LOCATION	Rte 40 RAMPS		MBGR LAYOUT TYPE (N)	REMOVE MBGR	RECONSTRUCT MBGR	MBGR WOOD POST	Trans RAILING (TYPE WB)	END ANCHOR ASSEMBLY (TYPE SFT)	MINOR Conc	END CAP (TYPE TC)	END CAP (TYPE A)	ALTERNATIVE FLARED TERMINAL SYSTEM	ALTERNATIVE IN-LINE TERMINAL SYSTEM	Dbl MBGR WOOD POST	ALTERNATIVE CRASH CUSHION SYSTEM	REMOVE CRASH CUSHION (SAND FILLED)	REMOVE AC DIKE	PLACE HMA DIKE				HMA (AC DIKE & Misc AREA)
	FROM	TO	--	LF	LF	LF	EA	EA	CY	EA	EA	EA	EA	LF	EA	EA	LF	TYPE A LF	TYPE C LF	TYPE D LF	TYPE F LF	TON
W NEWBERRY Rd Rte 40 WB EXIT RAMP (NATIONAL TRAILS Hwy)																						
Rt	(EXIT RAMP @ NOSE)																685.0			685.0		42.00
W NEWBERRY Rd Rte 40 WB ENTRANCE RAMP (NATIONAL TRAILS Hwy)																						
Rt		(ENTRANCE RAMP @ NOSE)															870.0			870.0		53.34
FORT CADY Rd Rte 40 EB EXIT RAMP																						
Rt																	103.0	103.0				2.91
FORT CADY Rd Rte 40 EB ENTRANCE RAMP																						
Rt																	545.0			545.0		33.41
FORT CADY Rd Rte 40 WB EXIT RAMP																						
Lt																	100.0	100.0				2.82
Rt																	85.0			85.0		5.21
		SHEET TOTAL															2,388.0	203.0		2,185.0		139.70
		GRAND TOTAL		4,700.0	14,500.0	462.5	46	48	38.88	46	5	52	26	425.0	8	1	218,062.0	412.0	3612.5	204,237.5	9,800.0	12,697.6

SUMMARY OF QUANTITIES

Q-16

REVISED BY | DATE REVISED

YONGBEE LIAU | MICHAEL RISTIC

CALCULATED-DESIGNED BY | CHECKED BY

FUNCTIONAL SUPERVISOR: MICHAEL RISTIC

STATE OF CALIFORNIA - DEPARTMENT OF TRANSPORTATION
Caltrans MAINTENANCE ENGINEERING

LAST REVISION 08-13-12 | DATE PLOTTED => 14-AUG-2012 | TIME PLOTTED => 08:31

Dist	COUNTY	ROUTE	POST MILES TOTAL PROJECT	SHEET No.	TOTAL SHEETS
08	SBd	40	R3.0/R28.1	35	43

REGISTERED ELECTRICAL ENGINEER 8-13-12 DATE

8-13-12
PLANS APPROVAL DATE

REGISTERED PROFESSIONAL ENGINEER
FERDINAND DE LA CRUZ
No. E 17215
Exp. 6-30-14
ELECTRICAL
STATE OF CALIFORNIA

THE STATE OF CALIFORNIA OR ITS OFFICERS OR AGENTS SHALL NOT BE RESPONSIBLE FOR THE ACCURACY OR COMPLETENESS OF SCANNED COPIES OF THIS PLAN SHEET.

PROJECT NOTES:

1. THE CONTRACTOR SHALL CONTACT THE ENGINEER THREE WORKING DAYS PRIOR TO INSTALLING DETECTOR LOOPS
2. AB EXISTING INDUCTIVE LOOP DETECTORS SHOWN TO BE REPLACED SHALL BE.
3. LABEL CONDUCTOR ENDS AS PER STANDARD PLAN ES-13B.

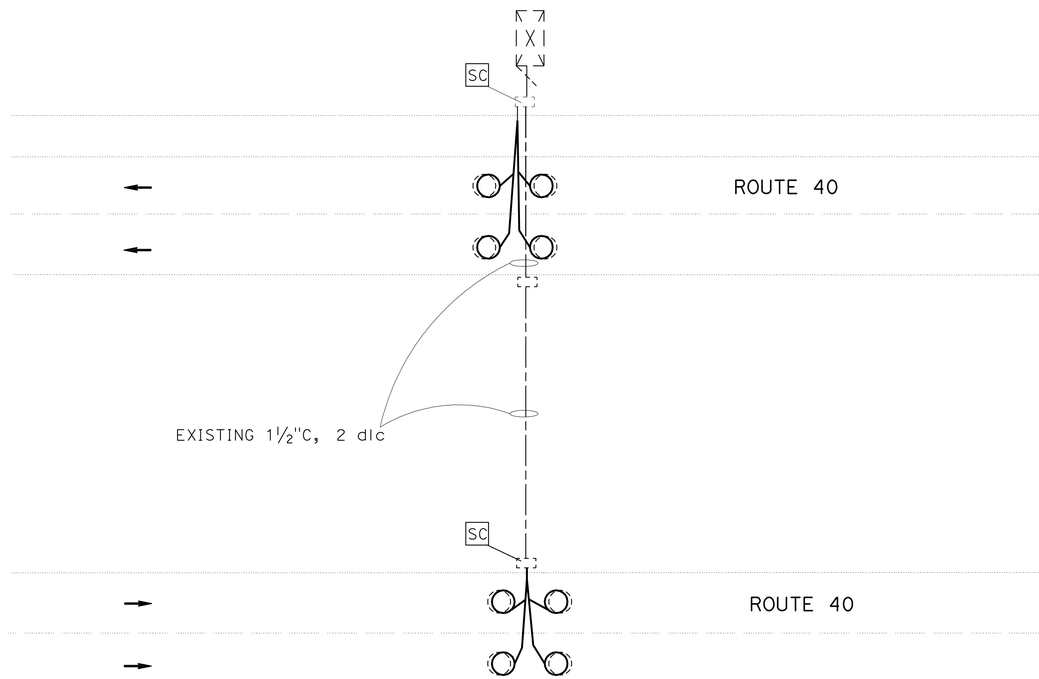

CENSUS STATION

PM 7.8

INDUCTIVE LOOP DETECTOR

NO SCALE

E-1

APPROVED FOR ELECTRICAL WORK ONLY

STATE OF CALIFORNIA - DEPARTMENT OF TRANSPORTATION
Caltrans® ELECTRICAL DESIGN B

FUNCTIONAL SUPERVISOR: FERDINAND DE LA CRUZ
CALCULATED-DESIGNED BY: LUIS PENALOZA JR.
CHECKED BY: FERDINAND DE LA CRUZ
REVISED BY
DATE REVISED

LAST REVISION DATE PLOTTED => 14-AUG-2012
08-13-12 TIME PLOTTED => 08:31

BORDER LAST REVISED 7/2/2010 | USERNAME => s125726 | DGN FILE => 80k250ua001.dgn | RELATIVE BORDER SCALE IS IN INCHES 0 1 2 3 | UNIT 2292 | PROJECT NUMBER & PHASE 08000204901

Dist	COUNTY	ROUTE	POST MILES TOTAL PROJECT	SHEET No.	TOTAL SHEETS
08	SBd	40	R3.0/R28.1	36	43

REGISTERED CIVIL ENGINEER

April 20, 2012
PLANS APPROVAL DATE

REGISTERED PROFESSIONAL ENGINEER
Roberta L. McLaughlin
No. C40375
Exp. 3-31-13
CIVIL
STATE OF CALIFORNIA

THE STATE OF CALIFORNIA OR ITS OFFICERS OR AGENTS SHALL NOT BE RESPONSIBLE FOR THE ACCURACY OR COMPLETENESS OF SCANNED COPIES OF THIS PLAN SHEET.

TO ACCOMPANY PLANS DATED 8-13-12

2010 REVISED STANDARD PLAN RSP A24A

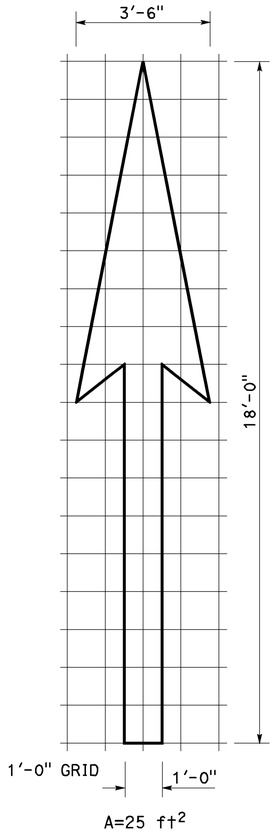

A=25 ft^2

TYPE I 18'-0" ARROW

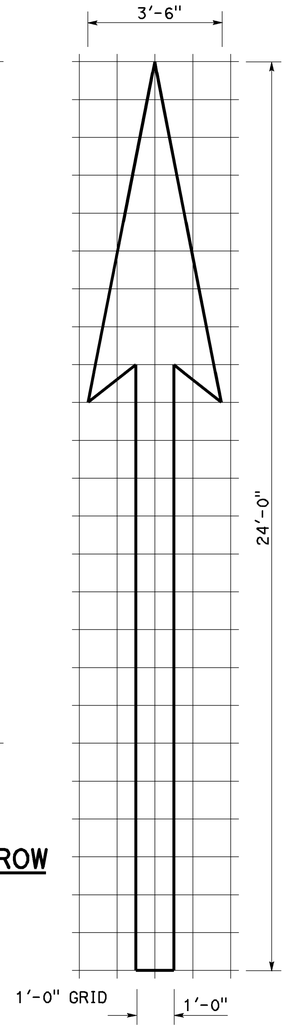

A=31 ft^2

TYPE I 24'-0" ARROW

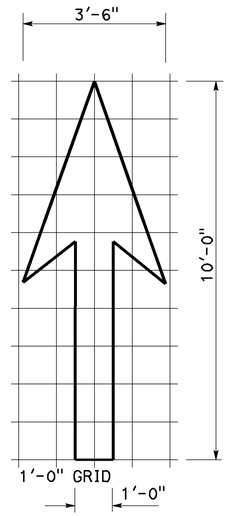

A=14 ft^2

TYPE I 10'-0" ARROW

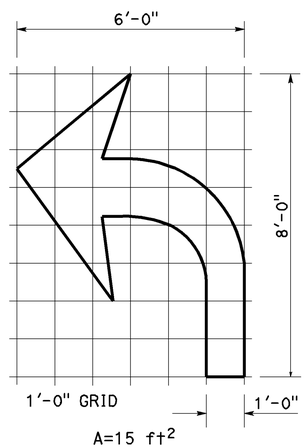

A=15 ft^2

TYPE IV (L) ARROW

(For Type IV (R) arrow, use mirror image)

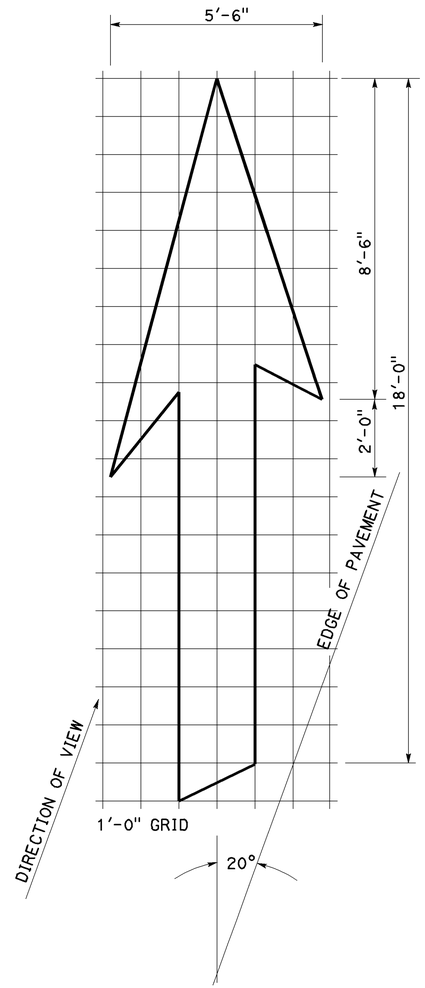

A=42 ft^2

TYPE VI ARROW

Right lane drop arrow
(For left lane, use mirror image)

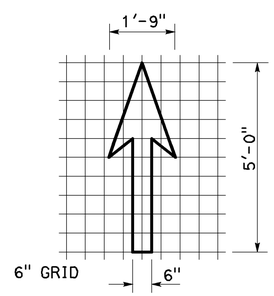

A=3.5 ft^2

BIKE LANE ARROW

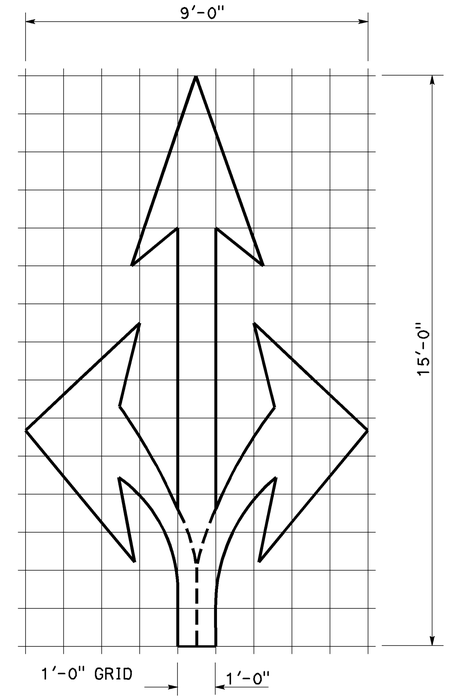

A=36 ft^2

TYPE VIII ARROW

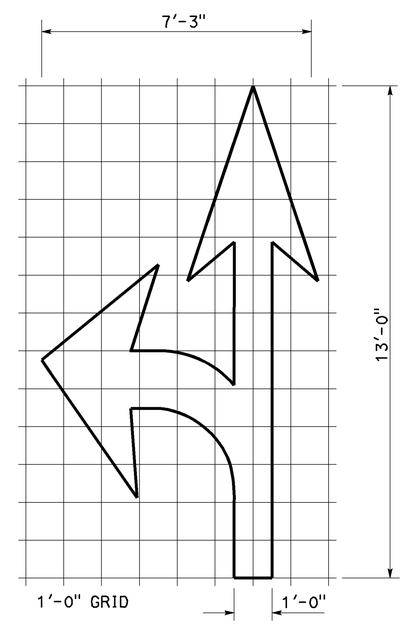

A=27 ft^2

TYPE VII (L) ARROW

(For Type VII (R) arrow, use mirror image)

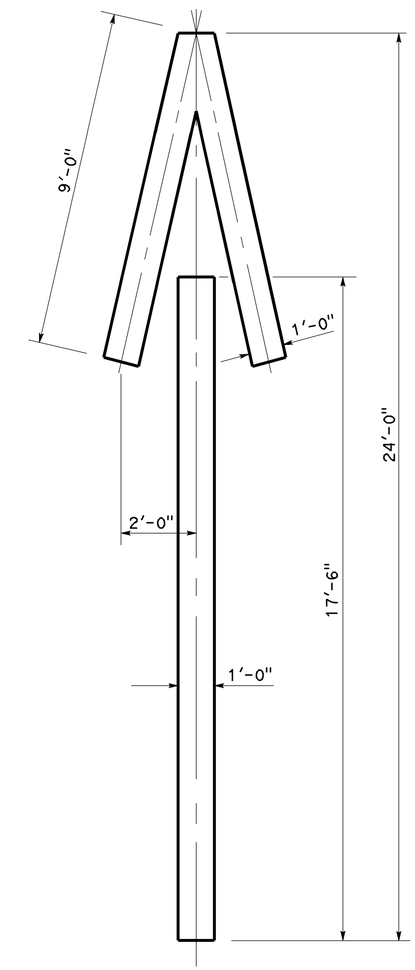

A=33 ft^2

TYPE V ARROW

NOTE:
Minor variations in dimensions may be accepted by the Engineer.

STATE OF CALIFORNIA
DEPARTMENT OF TRANSPORTATION

PAVEMENT MARKINGS ARROWS

NO SCALE

RSP A24A DATED APRIL 20, 2012 SUPERSEDES STANDARD PLAN A24A DATED MAY 20, 2011 - PAGE 13 OF THE STANDARD PLANS BOOK DATED 2010.

REVISED STANDARD PLAN RSP A24A

3-14-12

Dist	COUNTY	ROUTE	POST MILES TOTAL PROJECT	SHEET No.	TOTAL SHEETS
08	SBd	40	R3.0/R28.1	37	43

REGISTERED CIVIL ENGINEER

July 20, 2012
PLANS APPROVAL DATE

REGISTERED PROFESSIONAL ENGINEER
Roberta L. McLaughlin
No. C40375
Exp. 3-31-13
CIVIL
STATE OF CALIFORNIA

THE STATE OF CALIFORNIA OR ITS OFFICERS OR AGENTS SHALL NOT BE RESPONSIBLE FOR THE ACCURACY OR COMPLETENESS OF SCANNED COPIES OF THIS PLAN SHEET.

TO ACCOMPANY PLANS DATED 8-13-12

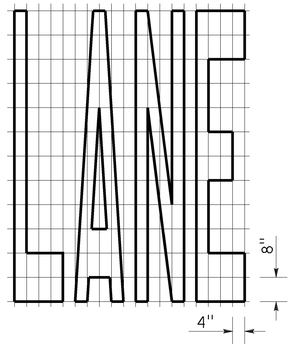

A=24 ft^2

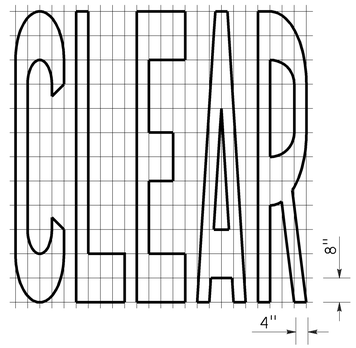

A=27 ft^2

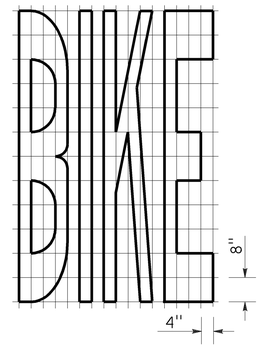

A=21 ft^2

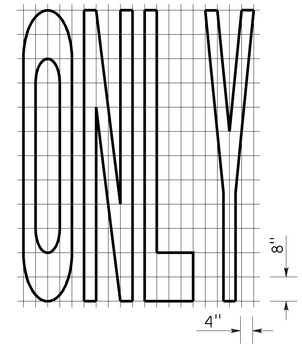

A=22 ft^2

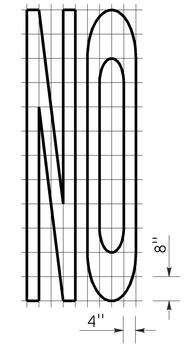

A=14 ft^2

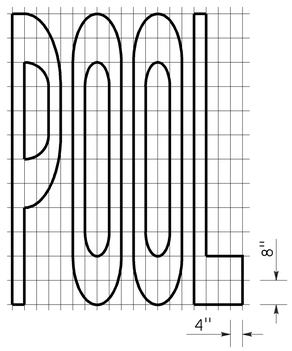

A=23 ft^2

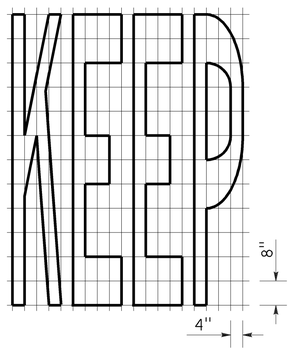

A=24 ft^2

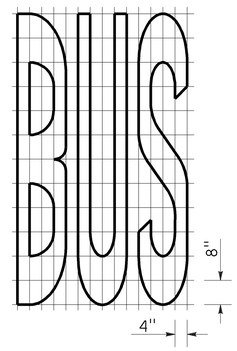

A=20 ft^2

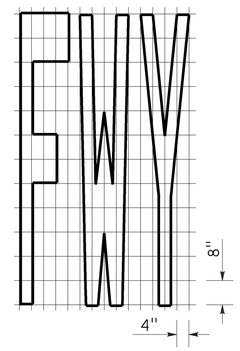

A=16 ft^2

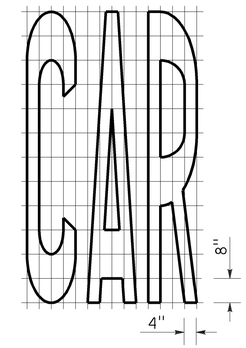

A=17 ft^2

WORD MARKINGS			
ITEM	ft^2	ITEM	ft^2
LANE	24	NO	14
POOL	23	BIKE	21
CAR	17	BUS	20
CLEAR	27	ONLY	22
KEEP	24	FWY	16

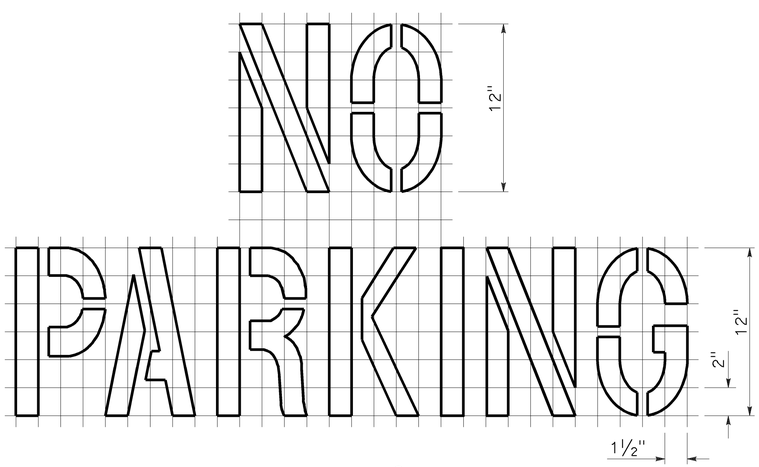

A=2 ft^2
See Notes 6 and 7

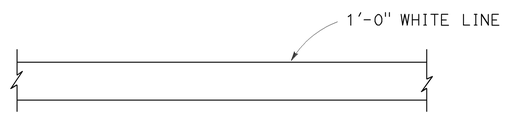

LIMIT LINE (STOP LINE)

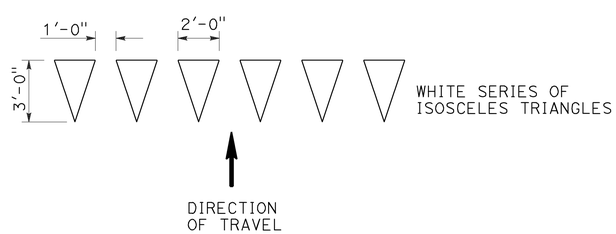

YIELD LINE

NOTES:

1. If a message consists of more than one word, it should read "UP", i.e., the first word should be nearest the driver.
2. The space between words should be at least four times the height of the characters for low speed roads, but not more than ten times the height of the characters. The space may be reduced appropriately where there is limited space because of local conditions.
3. Minor variations in dimensions may be accepted by the Engineer.
4. Portions of a letter, number or symbol may be separated by connecting segments not to exceed 2" in width.
5. The words "NO PARKING" pavement marking is to be used for parking facilities. For typical locations of markings, see Standard Plans A90A and A90B.
6. The words "NO PARKING", shall be painted in white letters no less than 1'-0" high on a contrasting background and located so that it is visible to traffic enforcement officials.

STATE OF CALIFORNIA
DEPARTMENT OF TRANSPORTATION

PAVEMENT MARKINGS WORDS, LIMIT AND YIELD LINES

NO SCALE

RSP A24E DATED JULY 20, 2012 SUPERSEDES STANDARD PLAN A24E
DATED MAY 20, 2011 - PAGE 17 OF THE STANDARD PLANS BOOK DATED 2010.

REVISED STANDARD PLAN RSP A24E

2010 REVISED STANDARD PLAN RSP A24E

6-12-12

DIST	COUNTY	ROUTE	POST MILES TOTAL PROJECT	SHEET NO.	TOTAL SHEETS
08	SBd	40	R3.0/R28.1	38	43

REGISTERED ELECTRICAL ENGINEER

January 20, 2012
PLANS APPROVAL DATE

REGISTERED PROFESSIONAL ENGINEER Jeffery G. McRae No. E14512 Exp. 6-30-12 ELECTRICAL STATE OF CALIFORNIA

THE STATE OF CALIFORNIA OR ITS OFFICERS OR AGENTS SHALL NOT BE RESPONSIBLE FOR THE ACCURACY OR COMPLETENESS OF SCANNED COPIES OF THIS PLAN SHEET.

TO ACCOMPANY PLANS DATED 8-13-12

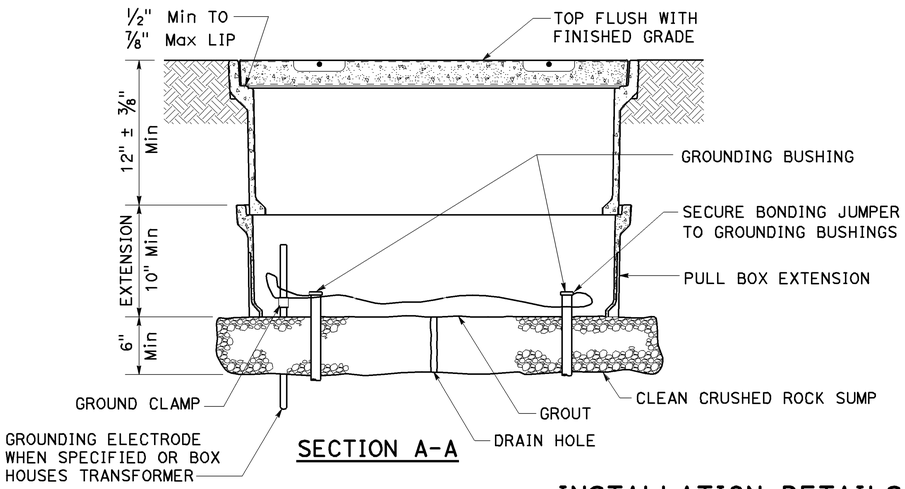

SECTION A-A

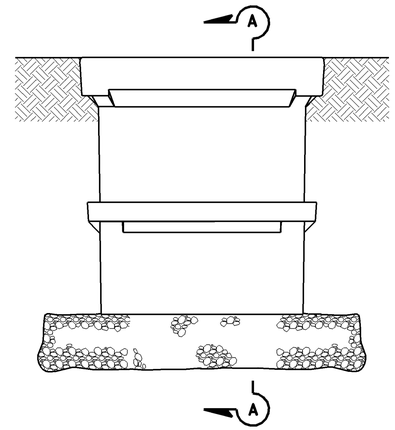

SIDE VIEW

INSTALLATION DETAILS

DETAIL A

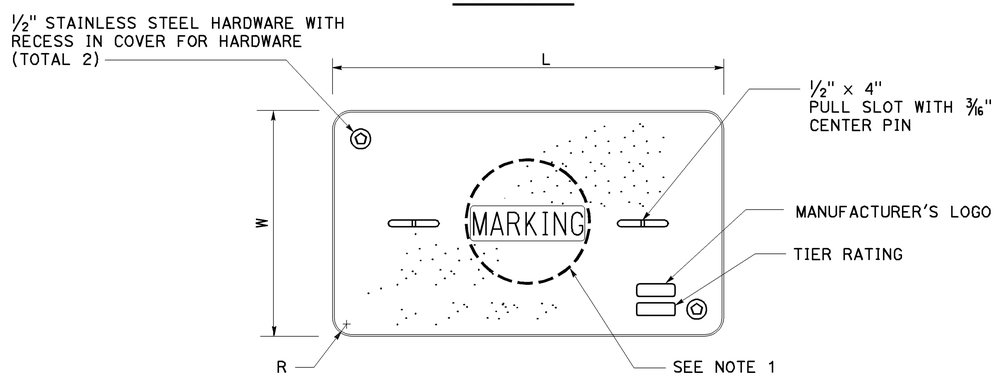

COVER TOP VIEW

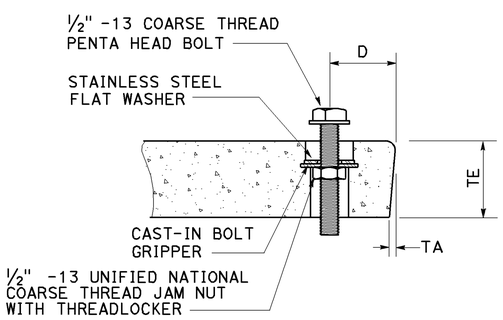

TYPICAL COVER CAPTIVE BOLT
OR SIMILAR

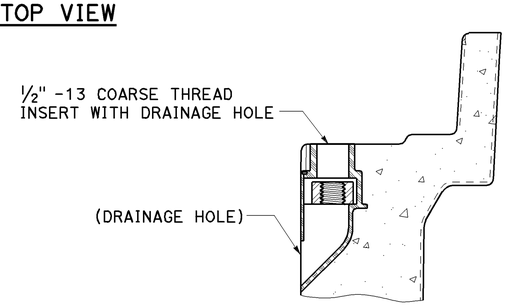

TYPICAL THREADED INSERT
OR SIMILAR

DIMENSION TABLE

PULL BOX	PULL BOX			COVER						
	MINIMUM DEPTH BOX	MINIMUM DEPTH EXTENSION	MAXIMUM WEIGHT	L	W	R	TE	TA	D	MAXIMUM WEIGHT
No. 3½	12"	N/A	40 lb	1′ - 3⅜"	10⅛"	1⅜"	2"	⅛"	1¾"	30 lb
No. 5	12"	10"	55 lb	1′ - 11¼"	1′ - 1¾"	1⅜"	2"	⅛"	1¾"	60 lb
No. 6	12"	10"	70 lb	2′ - 6½"	1′ - 5½"	1⅜"	2"	⅛"	2"	85 lb

NOTES ON PULL BOXES:

1. Pull box covers must be marked as follows: "SERVICE" Service circuits between service point and service disconnect; "SPRINKLER-CONTROL" sprinkler control circuits, 50 V or less; "CALTRANS" on all pull boxes, except pull boxes marked "SPRINKLER-CONTROL"; and "TELEPHONE" Telephone service;
   - A) No. 3½ pull box.
     - 1) "SIGNAL" - Traffic signal circuits with or without street or sign lighting circuits.
     - 2) "ST LIGHTING" - Street or sign lighting circuits where voltage is under 600 V.
   - B) No. 5, 6, 9 or 9A pull box.
     - 1) "TRAFFIC SIGNAL" - Traffic signal circuits with or without street or sign lighting circuits.
     - 2) "STREET LIGHTING" - Street or sign lighting circuits where voltage is under 600 V.
     - 3) "STREET LIGHTING-HIGH VOLTAGE" - Street or sign lighting circuits where voltage is above 600 V.
     - 4) "IRRIGATION" - Circuits to irrigation controller 120 V or more.
     - 5) "RAMP METER" - Ramp meter circuits.
     - 6) "COUNT STATION" - Count or speed monitor circuits.
     - 7) "COMMUNICATIONS" - Communication circuits.
     - 8) "TOS COMMUNICATIONS" - TOS communication line.
     - 9) "TOS POWER" - TOS power.
     - 10) "TDC POWER" - Telephone demarcation cabinet power.
     - 11) "CCTV" - Closed circuit television circuits.
     - 12) "TMS" - Traffic monitoring station circuits.
     - 13) "CMS" - Changeable message sign circuits.
     - 14) "HAR" - Highway advisory radio circuits.
2. The nominal dimensions of the opening in which the cover sets must be the same as the cover dimensions (L and W) plus ⅛" or greater.
3. Covers and boxes must be interchangeable with California Standard. When interchanged with a standard, the top surfaces must be flush within ⅛". Top outside radius of covers and pull boxes must have a ⅛" radius.
4. Pull box extension may be another pull box as long as the bottom edge of the pull box can fit into the cover opening.

STATE OF CALIFORNIA
DEPARTMENT OF TRANSPORTATION

ELECTRICAL SYSTEMS (PULL BOX)

NO SCALE

RSP ES-8A DATED JANUARY 20, 2012 SUPPLEMENTS THE STANDARD PLANS BOOK DATED 2010.

REVISED STANDARD PLAN RSP ES-8A

2010 REVISED STANDARD PLAN RSP ES-8A

01-09-12

Dist	COUNTY	ROUTE	POST MILES TOTAL PROJECT	SHEET No.	TOTAL SHEETS
08	SBd	40	R3.0/R28.1	39	43

REGISTERED CIVIL ENGINEER

April 20, 2012
PLANS APPROVAL DATE

REGISTERED PROFESSIONAL ENGINEER William K. Farnbach No. C49042 Exp. 9-30-12 CIVIL STATE OF CALIFORNIA

THE STATE OF CALIFORNIA OR ITS OFFICERS OR AGENTS SHALL NOT BE RESPONSIBLE FOR THE ACCURACY OR COMPLETENESS OF SCANNED COPIES OF THIS PLAN SHEET.

TO ACCOMPANY PLANS DATED 8-13-12

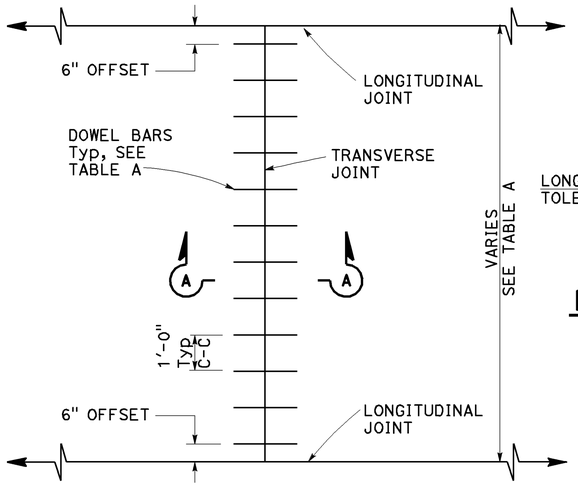

TRANSVERSE JOINT DOWEL BAR LAYOUT

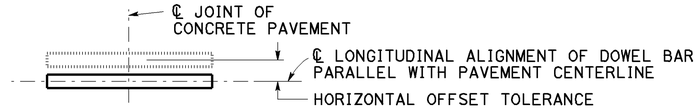

PLAN

HORIZONTAL OFFSET TOLERANCE

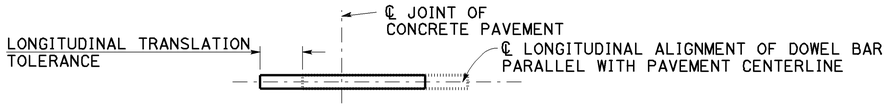

PLAN

LONGITUDINAL TRANSLATION TOLERANCE

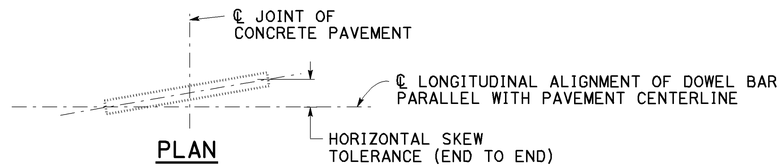

PLAN

HORIZONTAL SKEW TOLERANCE

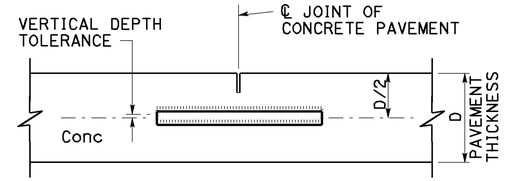

ELEVATION

VERTICAL DEPTH TOLERANCE

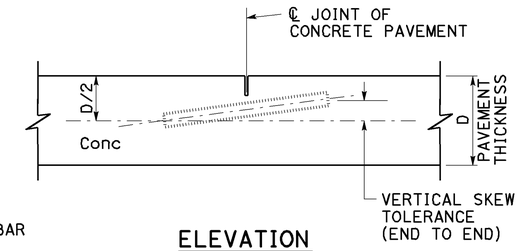

ELEVATION

VERTICAL SKEW TOLERANCE

NOTES:

1. See Standard Plan P1 for typical dowel bar placement and locations.
2. 1½" Dia dowel bars are to be used with a pavement thickness, D, equal to or greater than 0.70 feet. For pavement thickness, D, less than 0.70 feet, use 1¼" Dia dowel bars.
3. For widths not shown, see Project Plans.
4. If fresh concrete pavement is placed adjacent to existing concrete pavement, the top corner of the existing concrete pavement does not need to be rounded to the ¼" radius, as shown.
5. May also use ¾" Dia dowel bars 2'-4" ± ¼" in length. Center the length of dowel bars at the centerline of longitudinal joint.

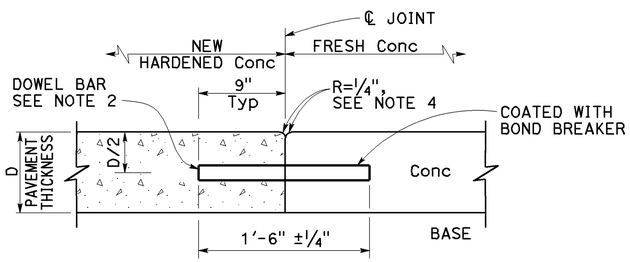

SECTION A-A

TRANSVERSE CONSTRUCTION JOINT DETAIL

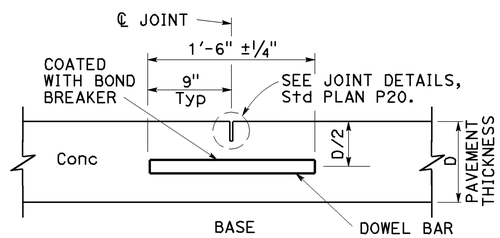

TRANSVERSE CONTRACTION JOINT

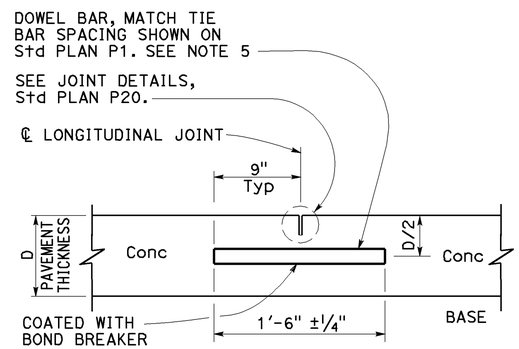

LONGITUDINAL CONTRACTION JOINT WITH DOWEL BARS

See Revised Std Plan RSP P18

TABLE A (See Note 3)

DOWEL BAR TRANSVERSE SPACING TABLE	
WIDTH BETWEEN LONGITUDINAL JOINTS	NUMBER OF DOWELS BETWEEN LONGITUDINAL JOINTS
14'-0"	14
13'-0"	13
12'-0"	12
11'-0"	11
10'-0"	10
8'-0"	8
5'-0"	5
4'-0"	4

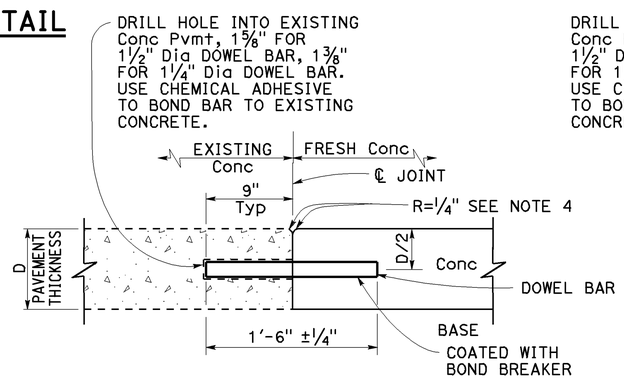

TRANSVERSE CONSTRUCTION JOINT FOR EXISTING CONCRETE PAVEMENT

Drill and bond locations

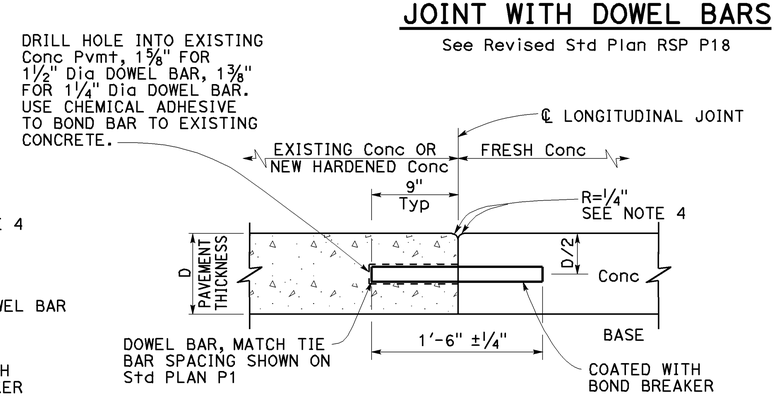

LONGITUDINAL CONSTRUCTION JOINT WITH DOWEL BARS

See Revised Std Plan RSP P18

STATE OF CALIFORNIA
DEPARTMENT OF TRANSPORTATION

CONCRETE PAVEMENT-DOWEL BAR DETAILS

NO SCALE

RSP P10 DATED APRIL 20, 2012 SUPERSEDES STANDARD PLAN P10 DATED MAY 20, 2011 - PAGE 131 OF THE STANDARD PLANS BOOK DATED 2010.

REVISED STANDARD PLAN RSP P10

2010 REVISED STANDARD PLAN RSP P10

2-22-12

Dist	COUNTY	ROUTE	POST MILES TOTAL PROJECT	SHEET No.	TOTAL SHEETS
08	SBd	40	R3.0/R28.1	40	43

William K. Farnbach
REGISTERED CIVIL ENGINEER

April 20, 2012
PLANS APPROVAL DATE

REGISTERED PROFESSIONAL ENGINEER William K. Farnbach No. C49042 Exp. 9-30-12 CIVIL STATE OF CALIFORNIA

THE STATE OF CALIFORNIA OR ITS OFFICERS OR AGENTS SHALL NOT BE RESPONSIBLE FOR THE ACCURACY OR COMPLETENESS OF SCANNED COPIES OF THIS PLAN SHEET.

TO ACCOMPANY PLANS DATED 8-13-12

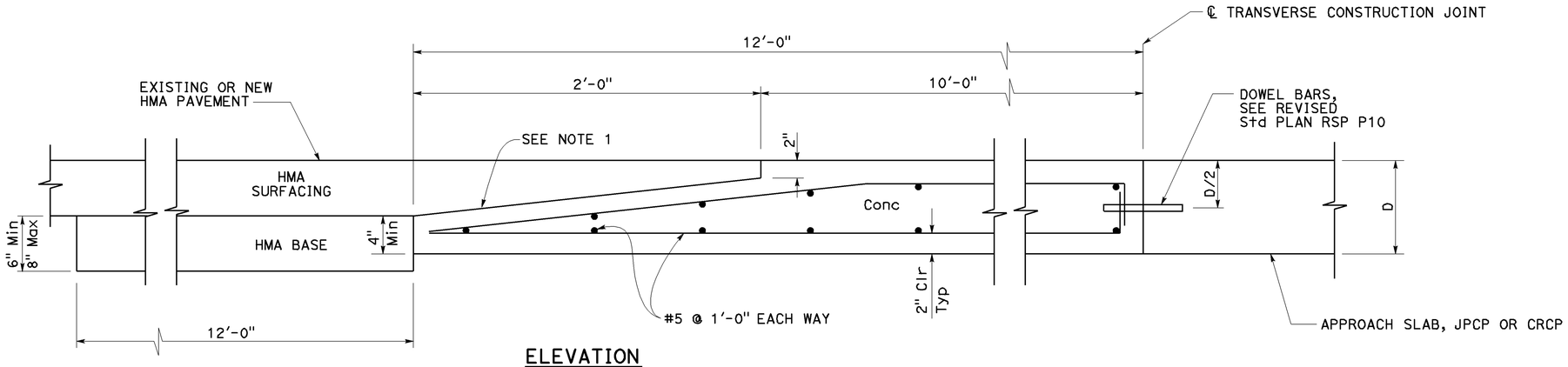

ELEVATION

CONCRETE PAVEMENT TRANSITION PANEL

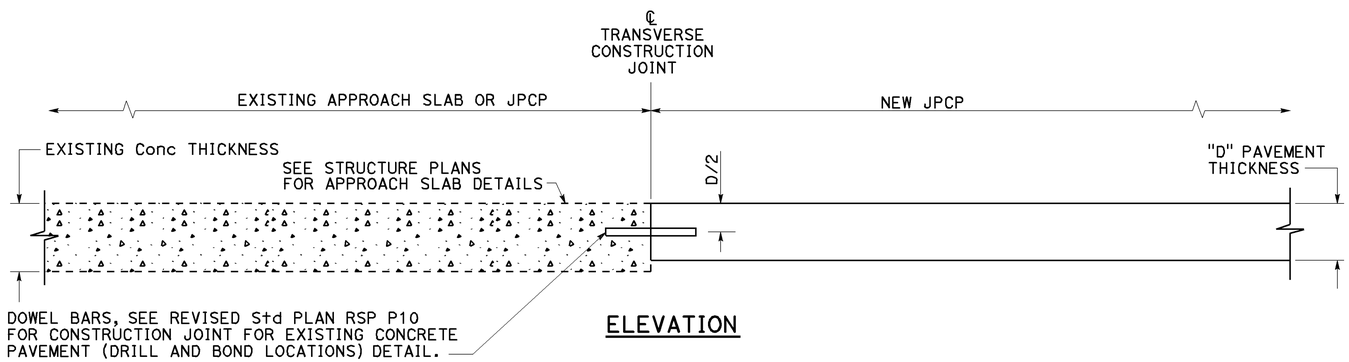

ELEVATION

TERMINAL JOINT TYPE 1

For Exist JPCP or Structure Approach Slab

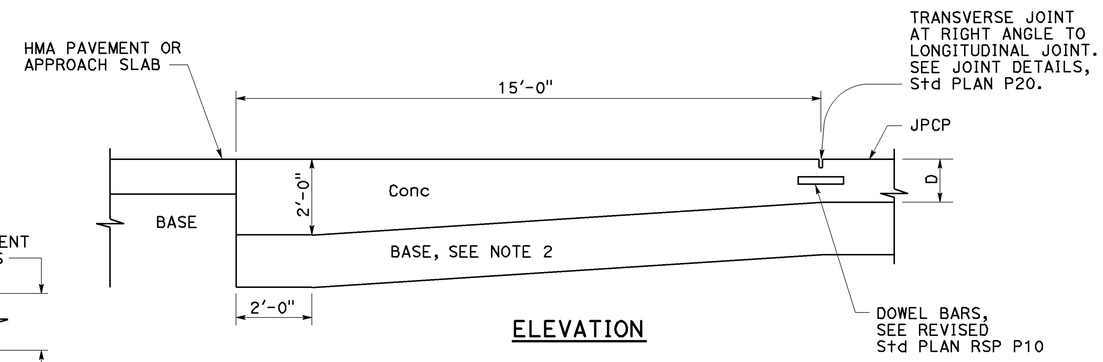

ELEVATION

PAVEMENT END ANCHOR

For HMA Pvmt or Structure Approach Slab

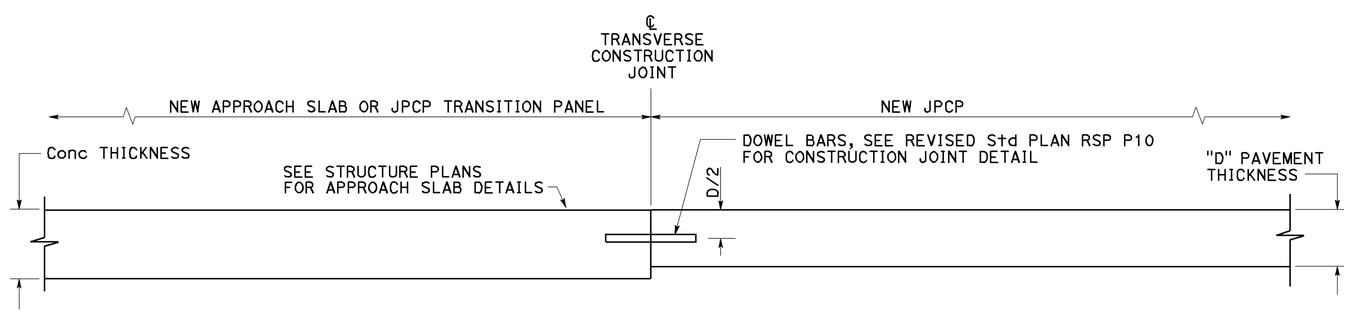

ELEVATION

TERMINAL JOINT TYPE 2

For JPCP Transition Panel or Structure Approach Slab

NOTES:

1. Heavy broom finish.
2. Maintain same base thickness as JPCP.

STATE OF CALIFORNIA
DEPARTMENT OF TRANSPORTATION

CONCRETE PAVEMENT-END PANEL PAVEMENT TRANSITIONS

NO SCALE

RSP P30 DATED APRIL 20, 2012 SUPERSEDES STANDARD PLAN P30
DATED MAY 20, 2011 - PAGE 137 OF THE STANDARD PLANS BOOK DATED 2010.

REVISED STANDARD PLAN RSP P30

2010 REVISED STANDARD PLAN RSP P30

2-22-12

DIST	COUNTY	ROUTE	POST MILES TOTAL PROJECT	SHEET No.	TOTAL SHEETS
08	SBd	40	R3.0/R28.1	41	43

REGISTERED CIVIL ENGINEER

January 20, 2012
PLANS APPROVAL DATE

REGISTERED PROFESSIONAL ENGINEER Cornelis M. Hakim No. C55610 Exp. 12-31-12 CIVIL STATE OF CALIFORNIA

THE STATE OF CALIFORNIA OR ITS OFFICERS OR AGENTS SHALL NOT BE RESPONSIBLE FOR THE ACCURACY OR COMPLETENESS OF SCANNED COPIES OF THIS PLAN SHEET.

TO ACCOMPANY PLANS DATED 8-13-12

2010 REVISED STANDARD PLAN RSP P74

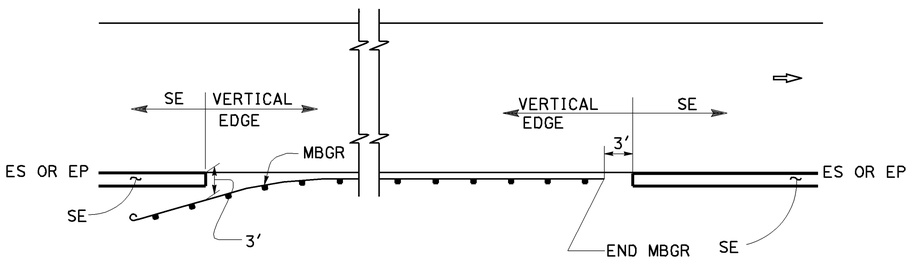

MBGR

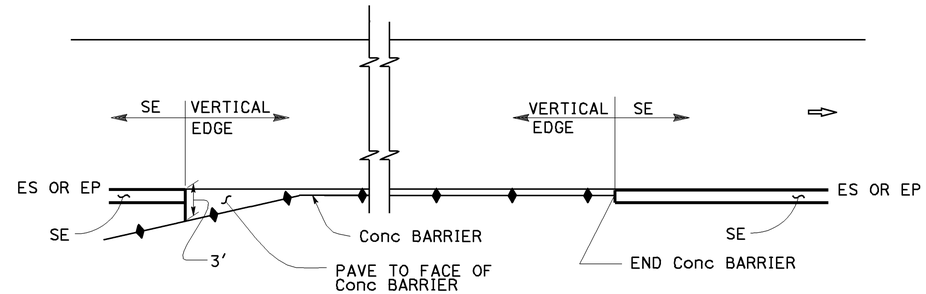

CONCRETE BARRIER

ABBREVIATIONS:

SE SAFETY EDGE

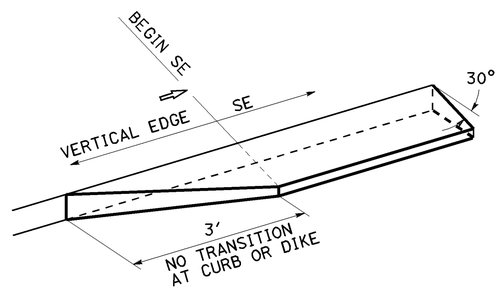

TRANSITION DETAIL FOR CONCRETE ONLY

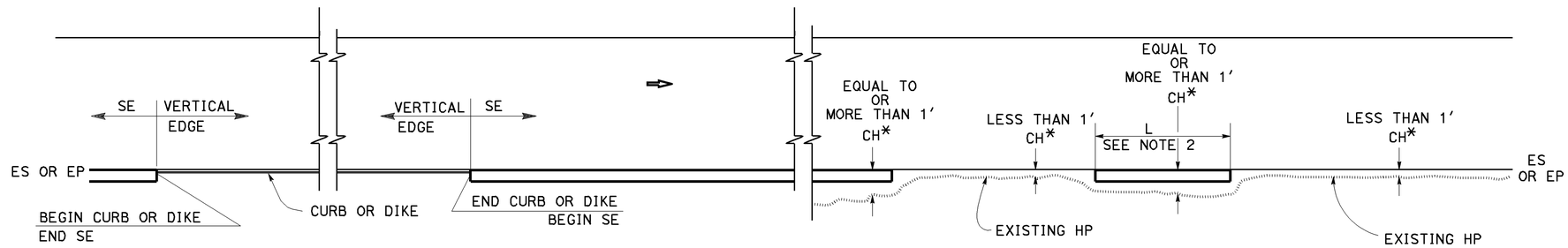

CURB OR DIKE

NARROW SIDE SLOPE

* CH = Distance from ES or EP to existing HP.

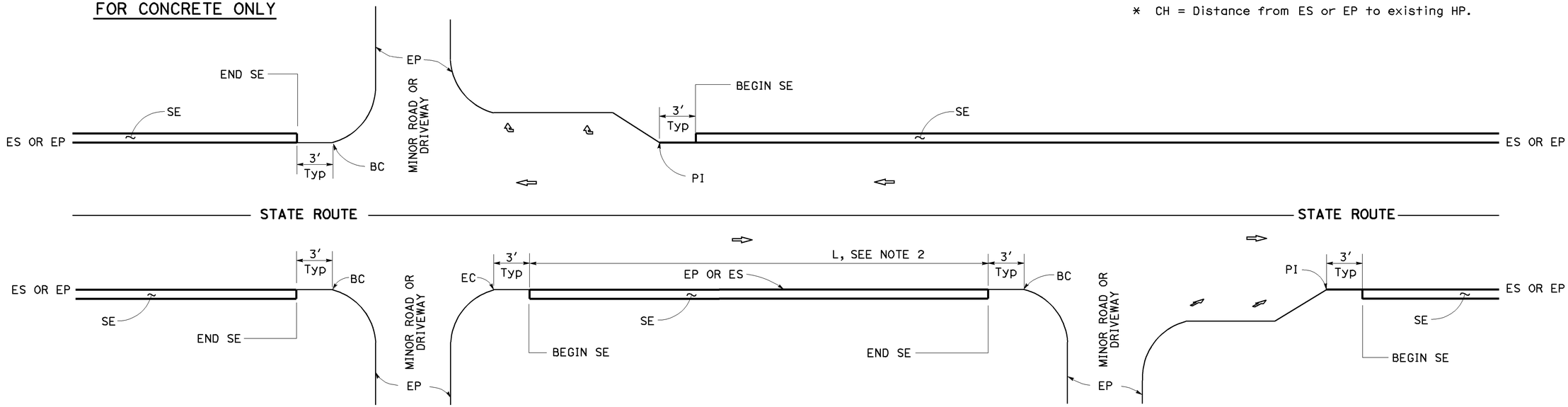

INTERSECTION

MINOR ROADWAY OR DRIVEWAY

DRIVEWAY AND INTERSECTION

STATE OF CALIFORNIA
DEPARTMENT OF TRANSPORTATION

PAVEMENT EDGE TREATMENTS

NO SCALE

RSP P74 DATED JANUARY 20, 2012 SUPPLEMENTS THE STANDARD PLANS BOOK DATED 2010.

NOTES:

1. For details not shown, see Revised Standard Plans RSP P75 and RSP P76.
2. Safety edge is optional when L is less than 30′.

REVISED STANDARD PLAN RSP P74

01-05-12

DIST	COUNTY	ROUTE	POST MILES TOTAL PROJECT	SHEET No.	TOTAL SHEETS
08	SBd	40	R3.0/R28.1	42	43

REGISTERED CIVIL ENGINEER

January 20, 2012
PLANS APPROVAL DATE

REGISTERED PROFESSIONAL ENGINEER Cornelis M. Hakim No. C55610 Exp. 12-31-12 CIVIL STATE OF CALIFORNIA

THE STATE OF CALIFORNIA OR ITS OFFICERS OR AGENTS SHALL NOT BE RESPONSIBLE FOR THE ACCURACY OR COMPLETENESS OF SCANNED COPIES OF THIS PLAN SHEET.

TO ACCOMPANY PLANS DATED 8-13-12

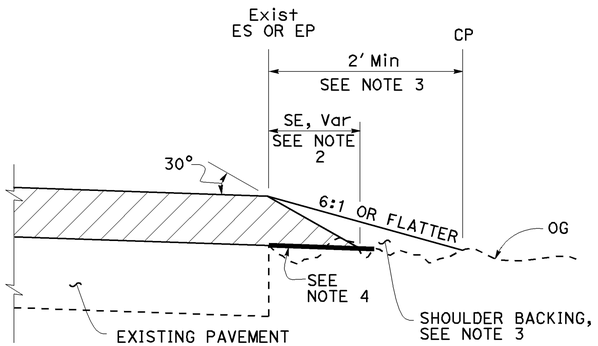

CASE A
Safety Edge

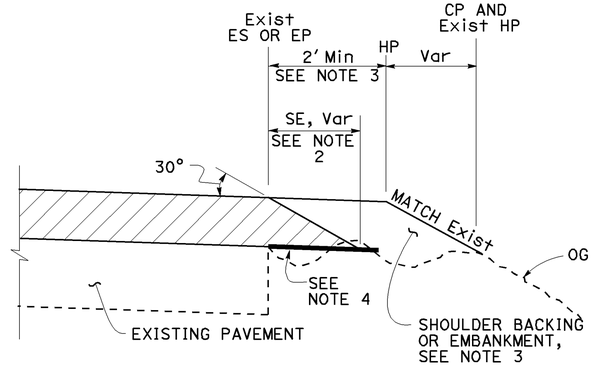

CASE B
Safety Edge

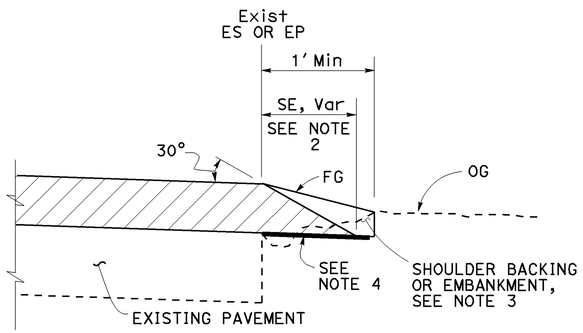

CASE C
Safety Edge

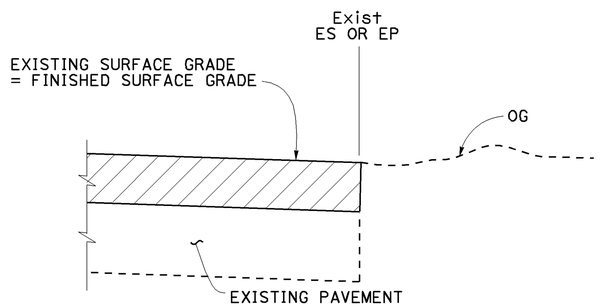

CASE D
Vertical Edge

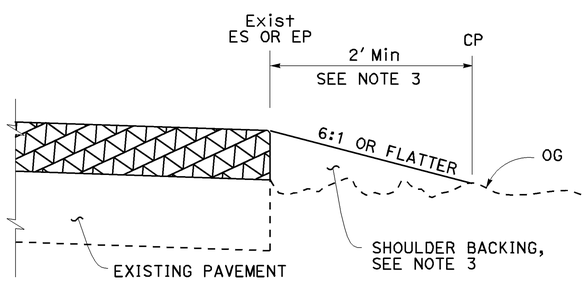

CASE E
Vertical Edge

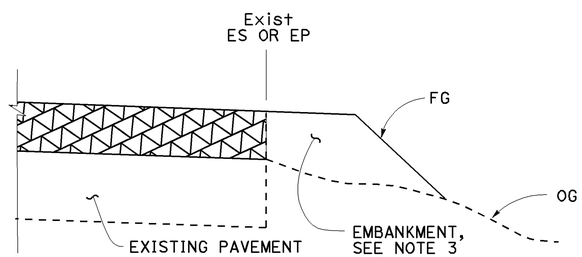

CASE F
Vertical Edge
* See Table A and Revised Std Plan RSP P74

LEGEND:

- HMA OVERLAY
- HMA OR CONCRETE OVERLAY
- CONCRETE OVERLAY

ABBREVIATIONS:

SE SAFETY EDGE
TT TOTAL THICKNESS OF SE

TABLE A
EDGE TREATMENT FOR VARIOUS OVERLAY THICKNESS AND CONDITIONS

	OVERLAY THICKNESS	
FIELD CONDITION	LESS THAN 0.15'	0.15' OR MORE
Exist SLOPE 6:1 OR FLATTER	CASE E	CASE A
Exist SLOPE 3:1 TO 6:1	CASE E	CASE B
Exist SLOPE STEEPER THAN 3:1	CASE F	CASE F
CUT SECTION (REPLACE, COLD PLANE, MILL PAVEMENT)	CASE D	CASE C

ADDITIONAL HMA OR CONCRETE QUANTITIES FOR SE/SIDE/MILE

TYPICAL CROSS SECTION	TT	TOTAL ADDITIONAL MATERIAL FOR SE/SIDE/MILE		
		HMA (TON)	CONCRETE (CY)*	CONCRETE (CY)**
TT	0.15'	NA	NA	NA
	0.20'	13.7	NA	NA
	0.30'	30.9	NA	NA
	0.40'	54.9	NA	NA
	0.45'	69.4	NA	NA
TT, 0.43'	0.50'	84.2	NA	NA
	0.60'	113.9	NA	NA
	0.70'	143.6	70.9	94.2
	0.80'	173.3	85.6	112.2
	0.90'	203.0	100.3	130.2
	1.00'	232.7	114.9	148.2
	1.10'	262.4	129.6	166.2
	1.20'	292.1	144.3	184.2

* For Detail "A"
** For Optional Detail "A"

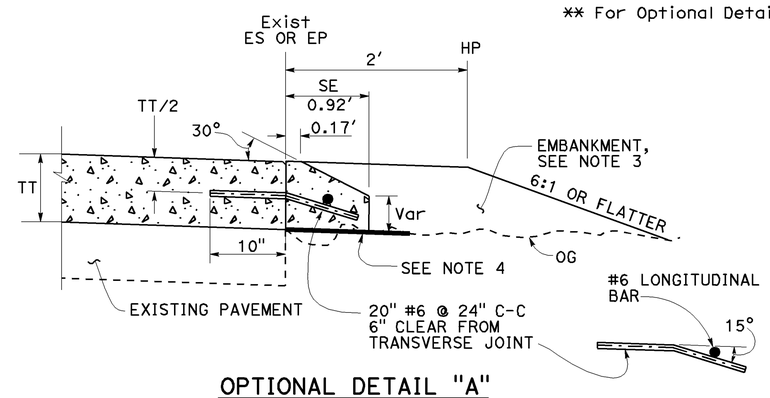

OPTIONAL DETAIL "A"
For concrete overlay
See Note 5

NOTES:

1. For limits of safety edge and vertical edge treatments, see Revised Standard Plan RSP P74.
2. Details shown for HMA overlay thickness less than 0.43'. See Detail "A" for HMA overlay thickness more than 0.43' or concrete overlay.
3. For locations and limits of shoulder backing or embankment see project plans.
4. Grade existing ground to place safety edge. 1' minimum width
5. Safety edge transverse joint must match overlay transverse joint. End of #6 longitudinal bar must be 2" ±½" clear from transverse joint.
6. Safety edge is not needed in the area of MBGR, barrier, right turn lane and acceleration lane. See Revised Standard Plan RSP P74.

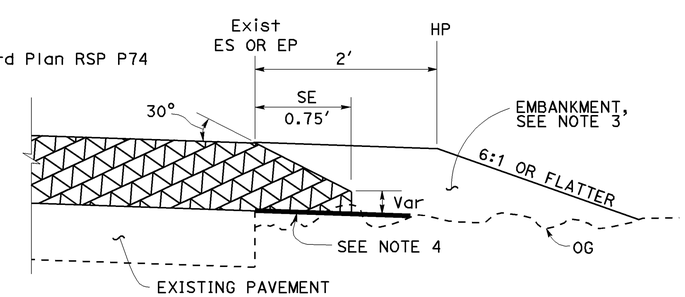

DETAIL "A"
For HMA overlay thickness more than 0.43' or concrete overlay

STATE OF CALIFORNIA
DEPARTMENT OF TRANSPORTATION

PAVEMENT EDGE TREATMENTS-OVERLAYS

NO SCALE

RSP P75 DATED JANUARY 20, 2012 SUPPLEMENTS THE STANDARD PLANS BOOK DATED 2010.

REVISED STANDARD PLAN RSP P75

2010 REVISED STANDARD PLAN RSP P75

01-09-12

DIST	COUNTY	ROUTE	POST MILES TOTAL PROJECT	SHEET No.	TOTAL SHEETS
08	SBd	40	R3.0/R28.1	43	43

REGISTERED CIVIL ENGINEER

January 20, 2012
PLANS APPROVAL DATE

REGISTERED PROFESSIONAL ENGINEER Cornelis M. Hakim No. C55610 Exp. 12-31-12 CIVIL STATE OF CALIFORNIA

THE STATE OF CALIFORNIA OR ITS OFFICERS OR AGENTS SHALL NOT BE RESPONSIBLE FOR THE ACCURACY OR COMPLETENESS OF SCANNED COPIES OF THIS PLAN SHEET.

TO ACCOMPANY PLANS DATED 8-13-12

2010 REVISED STANDARD RSP P76

LEGEND:

- HMA PAVEMENT
- HMA OR CONCRETE PAVEMENT
- CONCRETE PAVEMENT

ABBREVIATIONS:

SE SAFETY EDGE
TT TOTAL THICKNESS OF SE
HW HINGE WIDTH, DISTANCE FROM ES OR EP TO HP

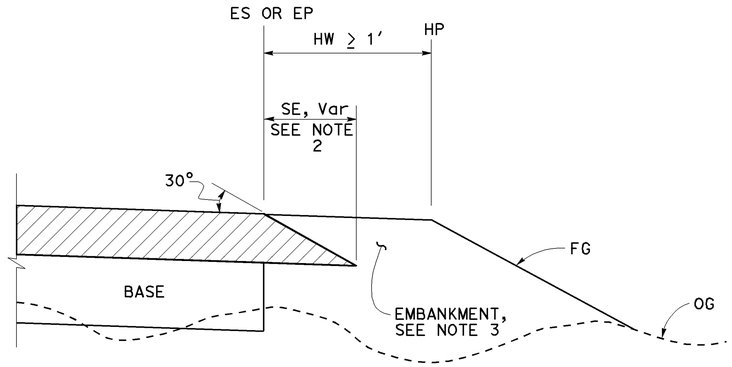

CASE K
Safety Edge - Fill Section, HW ≥ 1′

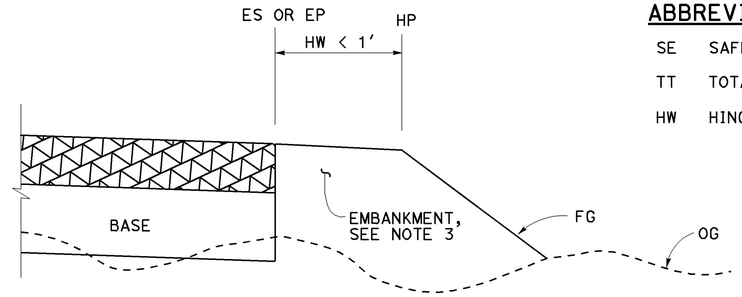

CASE L
Vertical Edge - Fill Section, HW < 1′

FILL SECTION

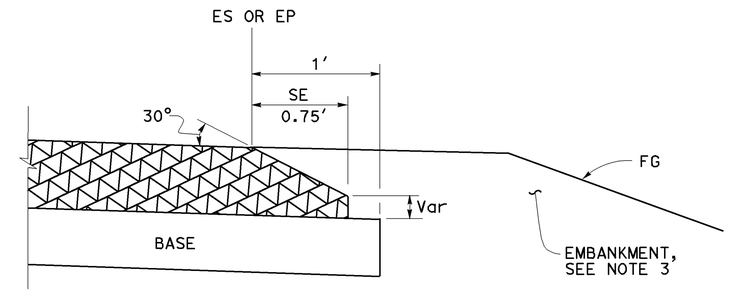

DETAIL "B"
For HMA pavement thickness more than 0.43′ or concrete pavement

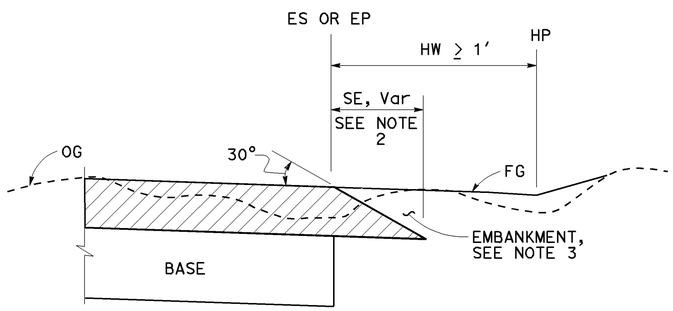

CASE M
Safety Edge - Cut Section, HW ≥ 1′

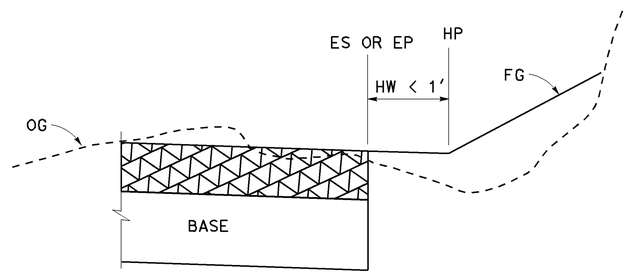

CASE N
Vertical Edge - Cut Section, HW < 1′

CUT SECTION

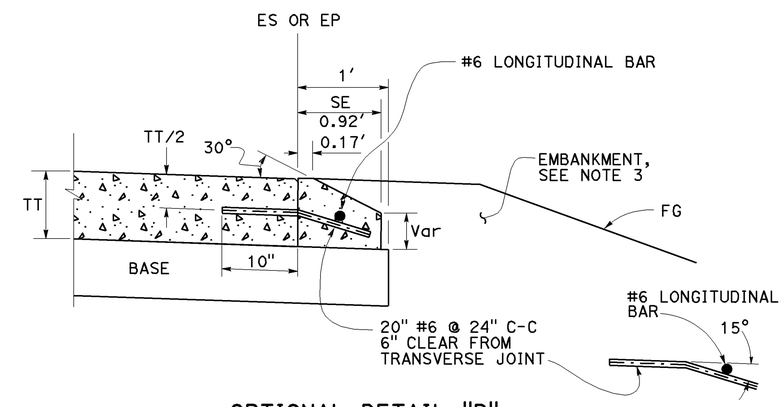

OPTIONAL DETAIL "B"
For concrete pavement
See Note 4

NOTES:

1. For limits of safety edge and vertical edge treatments, see Revised Standard Plan RSP P74
2. Details shown for HMA pavement thickness less than 0.43′. See Detail "B" for HMA pavement thickness more than 0.43′ or concrete pavement.
3. For locations and limits of embankment see project plans.
4. Safety edge transverse joint must match pavement transverse joint. End of #6 longitudinal bar must be 2" ±½" clear from transverse joint.
5. Safety edge is not needed in the area of MBGR, barrier, right turn lane and acceleration lane. See Revised Standard Plan RSP P74.

STATE OF CALIFORNIA
DEPARTMENT OF TRANSPORTATION

PAVEMENT EDGE TREATMENTS-NEW CONSTRUCTION

NO SCALE

RSP P76 DATED JANUARY 20, 2012 SUPPLEMENTS THE STANDARD PLANS BOOK DATED 2010.

REVISED STANDARD PLAN RSP P76