Dist	COUNTY	ROUTE	POST MILES TOTAL PROJECT	SHEET No.	TOTAL SHEETS
08	SBd	15	R107.3	1	263

STATE OF CALIFORNIA **ACHSIM-015-2(039)E**

DEPARTMENT OF TRANSPORTATION

PROJECT PLANS FOR CONSTRUCTION ON

STATE HIGHWAY

IN SAN BERNARDINO COUNTY
ABOUT 30 MILES EAST OF BARSTOW
AT C. V. KANE SAFETY ROADSIDE REST AREA

TO BE SUPPLEMENTED BY STANDARD PLANS DATED 2010

INDEX OF PLANS

SHEET No.	DESCRIPTION
1	TITLE AND LOCATION MAP
2-3	TYPICAL CROSS SECTIONS
4-7	LAYOUTS
8	PROFILE AND SUPERELEVATION DIAGRAM
9-11	CONSTRUCTION DETAILS
12-14	CONTOUR GRADING
15-21	DRAINAGE PLANS, PROFILES, DETAILS AND QUANTITIES
22-23	UTILITY PLANS
24	CONSTRUCTION AREA SIGNS
25-28	PAVEMENT DELINEATION AND SIGN PLANS
29-30	PAVEMENT DELINEATION QUANTITIES
31-32	SIGN DETAILS AND QUANTITIES
33	SUMMARY OF QUANTITIES
34-45	LANDSCAPE DETAILS AND QUANTITIES
46-76	REVISED STANDARD PLANS

BUILDING PLANS

77-85	GENERAL PLANS
86-160	ARCHITECTURAL PLANS
161-213	STRUCTURAL PLANS
214-225	MECHANICAL PLANS
226-253	ELECTRICAL PLANS
254-259	WATER PLANS
260-263	WASTEWATER PLANS

THE STANDARD PLANS LIST APPLICABLE TO THIS CONTRACT IS INCLUDED IN THE NOTICE TO BIDDERS AND SPECIAL PROVISIONS BOOK

LOCATION OF CONSTRUCTION

C. V. KANE SAFETY ROADSIDE REST AREA
PM R107.3

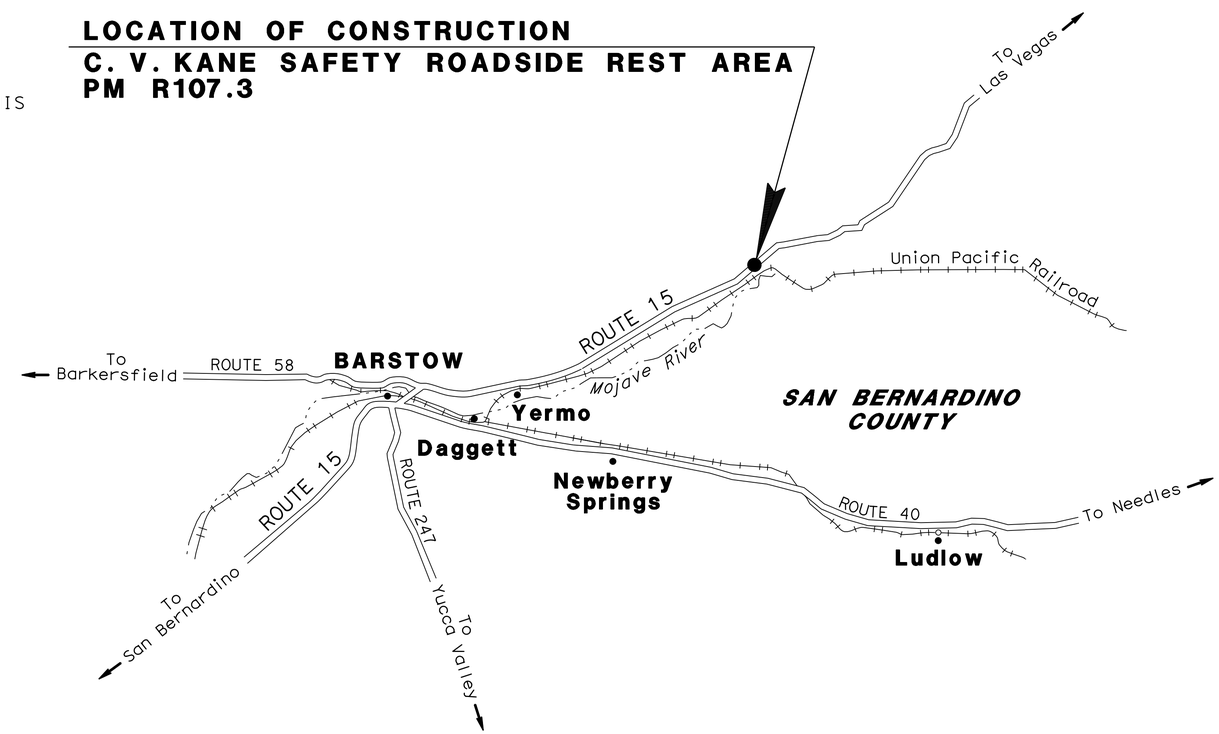

NO SCALE

THE CONTRACTOR SHALL POSSESS THE CLASS (OR CLASSES) OF LICENSE AS SPECIFIED IN THE "NOTICE TO BIDDERS."

PROJECT MANAGER: JANE TIEN

DESIGN MANAGER: GEORGE MORHIG

PROJECT ENGINEER REGISTERED CIVIL ENGINEER — DATE 6-7-16

REGISTERED PROFESSIONAL ENGINEER — GEORGE MORHIG — No. C50349 — Exp. 11-30-17 — CIVIL — STATE OF CALIFORNIA

June 13, 2016
PLANS APPROVAL DATE

THE STATE OF CALIFORNIA OR ITS OFFICERS OR AGENTS SHALL NOT BE RESPONSIBLE FOR THE ACCURACY OR COMPLETENESS OF SCANNED COPIES OF THIS PLAN SHEET.

CONTRACT No.	**08-0G8424**
PROJECT ID	**0814000184**

LAST REVISION 06-07-16

DATE PLOTTED => 31-AUG-2016
TIME PLOTTED => 15:52

Dist	COUNTY	ROUTE	POST MILES TOTAL PROJECT	SHEET No.	TOTAL SHEETS
08	SBd	15	R107.3	2	263

REGISTERED CIVIL ENGINEER 6-7-16 DATE

6-13-16
PLANS APPROVAL DATE

REGISTERED PROFESSIONAL ENGINEER GEORGE MORHIG No. C50349 Exp. 11-30-17 CIVIL STATE OF CALIFORNIA

THE STATE OF CALIFORNIA OR ITS OFFICERS OR AGENTS SHALL NOT BE RESPONSIBLE FOR THE ACCURACY OR COMPLETENESS OF SCANNED COPIES OF THIS PLAN SHEET.

NOTES:

1. DIMENSIONS SHOWN ARE SUBJECT TO TOLERANCES SPECIFIED IN THE STANDARD SPECIFICATIONS.
2. FOR HMA DIKE TYPE E DETAIL SEE REVISED Std PLAN RSP A87B.
3. FOR TYPE A1 CURB SEE REVISED Std PLAN RSP A87A.
4. SUPERELEVATIONS AS SHOWN OR AS DIRECTED BY THE ENGINEER.

DESIGN DESIGNATION (ROUTE 15)

ADT (2014)	=	2,400	D	=	12%
ADT (2034)	=	3,800	T	=	24%
DHV	=	450	V	=	65 MPH
ESAL	=	13,500,000	TI	=	12

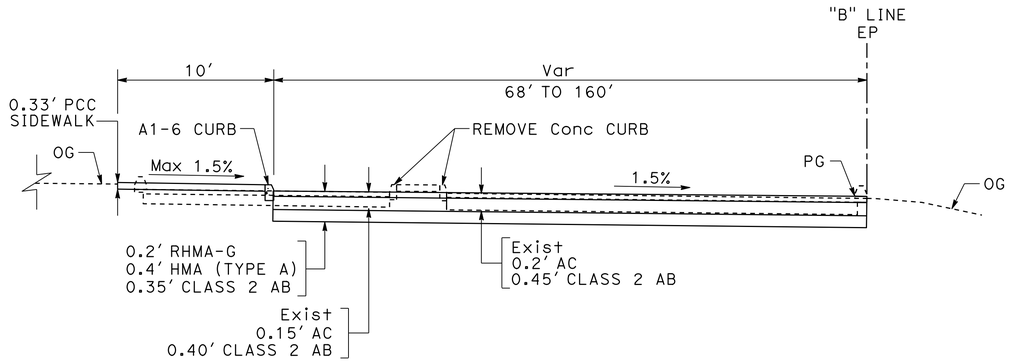

SOUTHBOUND TRUCK PARKING AREA

Sta 8+48.70 TO Sta 16+76.16

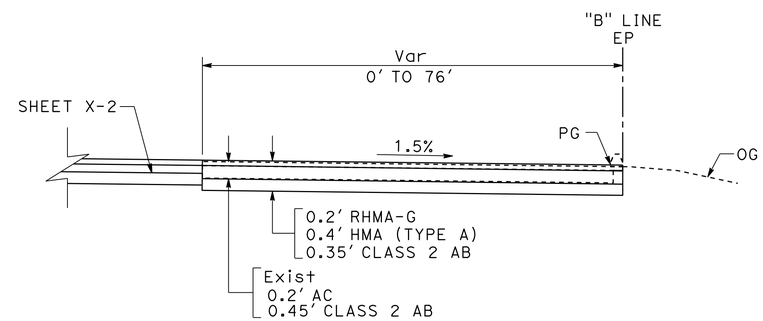

SOUTHBOUND TRUCK PARKING AREA

Sta 7+77.67 TO Sta 8+48.70
Sta 16+76.16 TO Sta 17+42.34

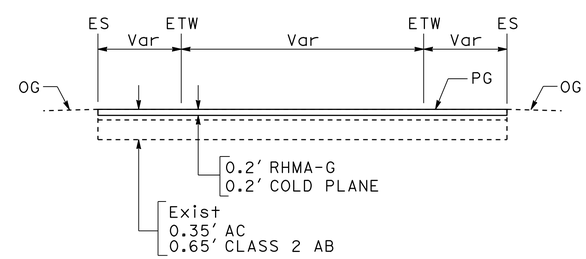

SOUTHBOUND AND NORTHBOUND ENTRANCE AND EXIT RAMPS

SEE LAYOUTS PLANS FOR LIMITS OF WORK

TYPICAL CROSS SECTIONS

NO SCALE

X-1

REVISED BY | DATE REVISED
TOM NGUYEN | GEORGE MORHIG
CALCULATED-DESIGNED BY | CHECKED BY
FUNCTIONAL SUPERVISOR | GEORGE MORHIG
STATE OF CALIFORNIA - DEPARTMENT OF TRANSPORTATION
Caltrans DESIGN

LAST REVISION 06-07-16 | DATE PLOTTED => 31-AUG-2016 | TIME PLOTTED => 15:52

Dist	COUNTY	ROUTE	POST MILES TOTAL PROJECT	SHEET No.	TOTAL SHEETS
08	SBd	15	R107.3	3	263

REGISTERED CIVIL ENGINEER 6-7-16 DATE

6-13-16
PLANS APPROVAL DATE

REGISTERED PROFESSIONAL ENGINEER GEORGE MORHIG No. C50349 Exp. 11-30-17 CIVIL STATE OF CALIFORNIA

THE STATE OF CALIFORNIA OR ITS OFFICERS OR AGENTS SHALL NOT BE RESPONSIBLE FOR THE ACCURACY OR COMPLETENESS OF SCANNED COPIES OF THIS PLAN SHEET.

NOTES:

1. DIMENSIONS SHOWN ARE SUBJECT TO TOLERANCES SPECIFIED IN THE STANDARD SPECIFICATIONS.
2. FOR HMA DIKE TYPE E DETAIL SEE REVISED Std PLAN RSP A87B.
3. FOR TYPE A1 CURB SEE REVISED Std PLAN RSP A87A.
4. SUPERELEVATIONS AS SHOWN OR AS DIRECTED BY THE ENGINEER.
5. FOR CONCRETE RIBBON GUTTER SEE DRAINAGE DETAILS SHEET DD-1.

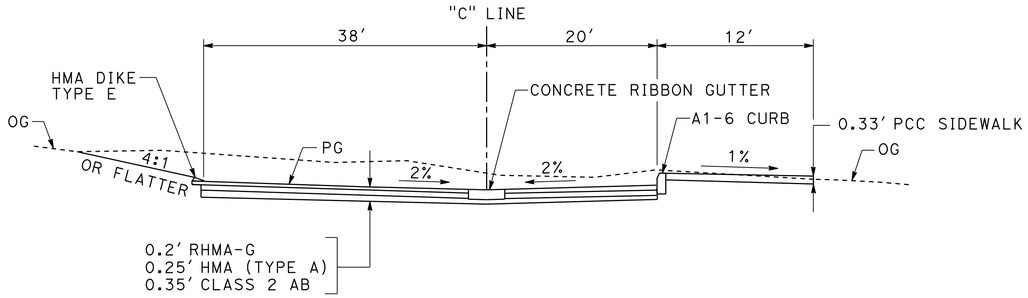

Sta 2+70.70 TO Sta 7+85.00

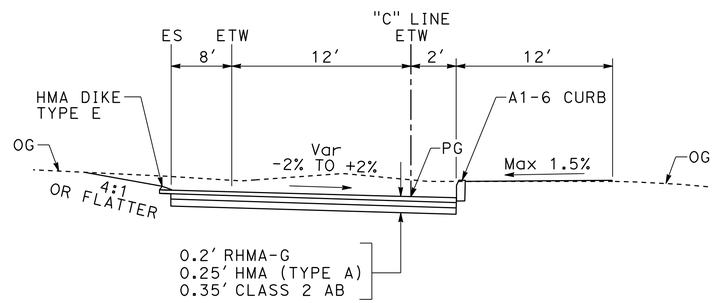

Sta 1+50.00 TO Sta 2+70.70
Sta 7+85.00 TO Sta 11+25.00

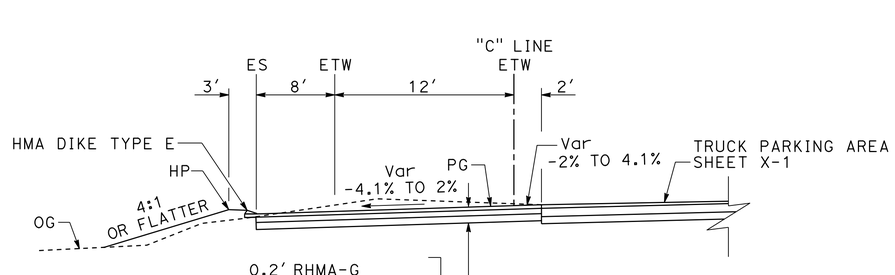

Sta 0+00.00 TO Sta 1+50.00
Sta 11+25.00 TO Sta 13+78.45

TYPICAL CROSS SECTIONS

NO SCALE

X-2

REVISED BY	DATE REVISED
TOM NGUYEN	GEORGE MORHIG

CALCULATED-DESIGNED BY / CHECKED BY

FUNCTIONAL SUPERVISOR: GEORGE MORHIG

STATE OF CALIFORNIA - DEPARTMENT OF TRANSPORTATION

Caltrans® **DESIGN**

LAST REVISION 06-07-16 | DATE PLOTTED => 31-AUG-2016 | TIME PLOTTED => 15:52

Dist	COUNTY	ROUTE	POST MILES TOTAL PROJECT	SHEET No.	TOTAL SHEETS
08	SBd	15	R107.3	4	263

REGISTERED CIVIL ENGINEER 6-7-16 DATE

6-13-16
PLANS APPROVAL DATE

REGISTERED PROFESSIONAL ENGINEER GEORGE MORHIG No. C50349 Exp. 11-30-17 CIVIL STATE OF CALIFORNIA

THE STATE OF CALIFORNIA OR ITS OFFICERS OR AGENTS SHALL NOT BE RESPONSIBLE FOR THE ACCURACY OR COMPLETENESS OF SCANNED COPIES OF THIS PLAN SHEET.

NOTE:

FOR ACCURATE RIGHT OF WAY DATA, CONTACT RIGHT OF WAY ENGINEERING AT THE DISTRICT OFFICE.

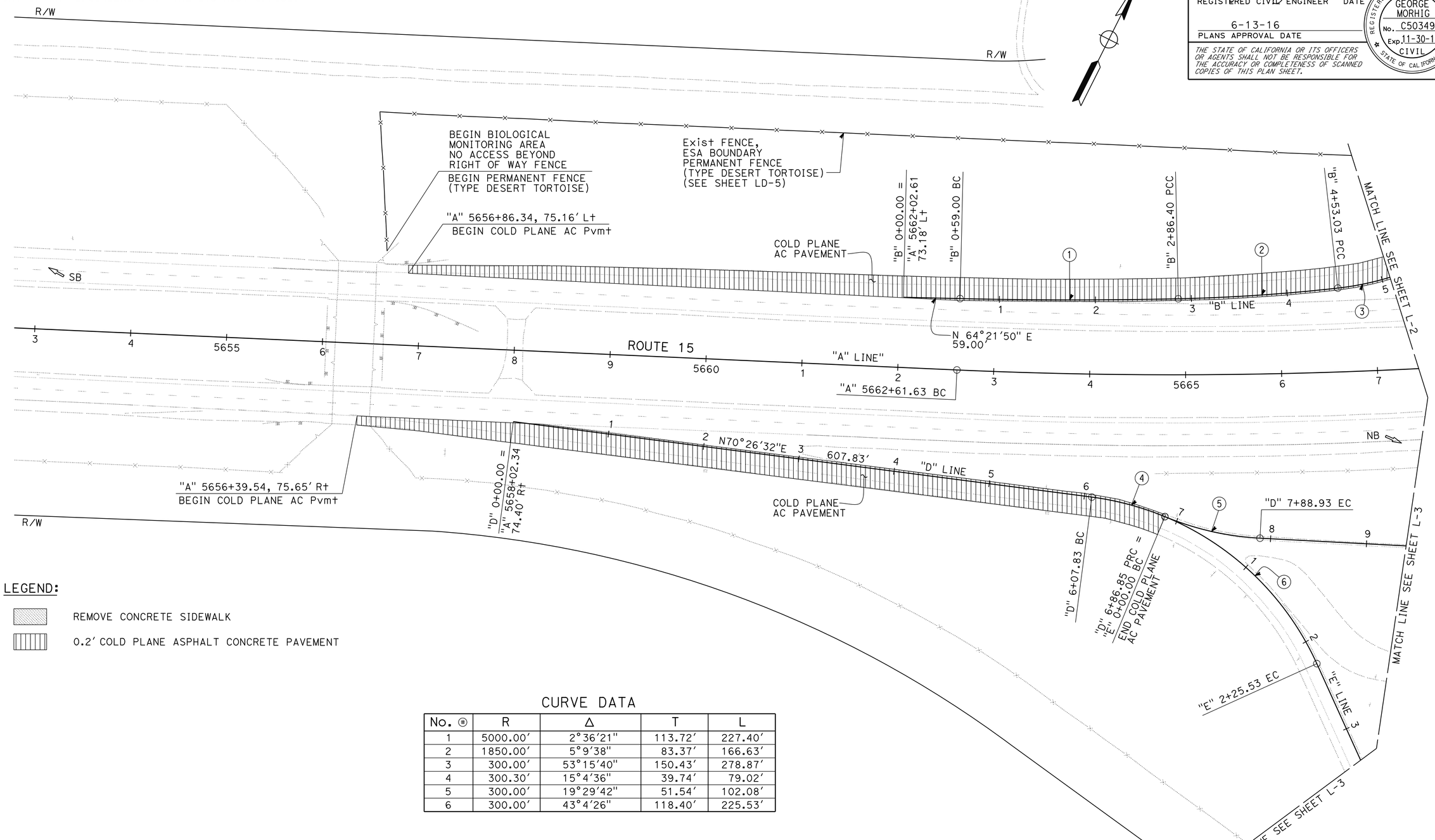

LEGEND:

REMOVE CONCRETE SIDEWALK

0.2' COLD PLANE ASPHALT CONCRETE PAVEMENT

CURVE DATA

No. ⊕	R	Δ	T	L
1	5000.00'	2°36'21"	113.72'	227.40'
2	1850.00'	5°9'38"	83.37'	166.63'
3	300.00'	53°15'40"	150.43'	278.87'
4	300.30'	15°4'36"	39.74'	79.02'
5	300.00'	19°29'42"	51.54'	102.08'
6	300.00'	43°4'26"	118.40'	225.53'

LAYOUT
SCALE: 1" = 50' **L-1**

STATE OF CALIFORNIA - DEPARTMENT OF TRANSPORTATION
Caltrans® **DESIGN**

FUNCTIONAL SUPERVISOR: GEORGE MORHIG
CALCULATED-DESIGNED BY: TOM NGUYEN
CHECKED BY: GEORGE MORHIG
REVISED BY
DATE REVISED

LAST REVISION 06-07-16 | DATE PLOTTED => 31-AUG-2016 | TIME PLOTTED => 15:53

Dist	COUNTY	ROUTE	POST MILES TOTAL PROJECT	SHEET No.	TOTAL SHEETS
08	SBd	15	R107.3	5	263

REGISTERED CIVIL ENGINEER 6-7-16 DATE

6-13-16
PLANS APPROVAL DATE

REGISTERED PROFESSIONAL ENGINEER GEORGE MORHIG No. C50349 Exp. 11-30-17 CIVIL STATE OF CALIFORNIA

THE STATE OF CALIFORNIA OR ITS OFFICERS OR AGENTS SHALL NOT BE RESPONSIBLE FOR THE ACCURACY OR COMPLETENESS OF SCANNED COPIES OF THIS PLAN SHEET.

NOTES:

1. FOR ACCURATE RIGHT OF WAY DATA, CONTACT RIGHT OF WAY ENGINEERING AT THE DISTRICT OFFICE.
2. FOR HMA DIKE TRANSITION, SEE SHEET C-1.
3. FOR CURB A1-6 LAYOUT, SEE SHEET C-1.
4. ALL OFFSETS ALONG THE CURB AND DIKE ARE MEASURED TO THE FLOWLINE.
5. FOR SIDEWALK, SEE SHEET C-2 AND C-3.
6. FOR BUILDING DEMOLITION AND CONSTRUCTION, SEE BUILDING PLANS.

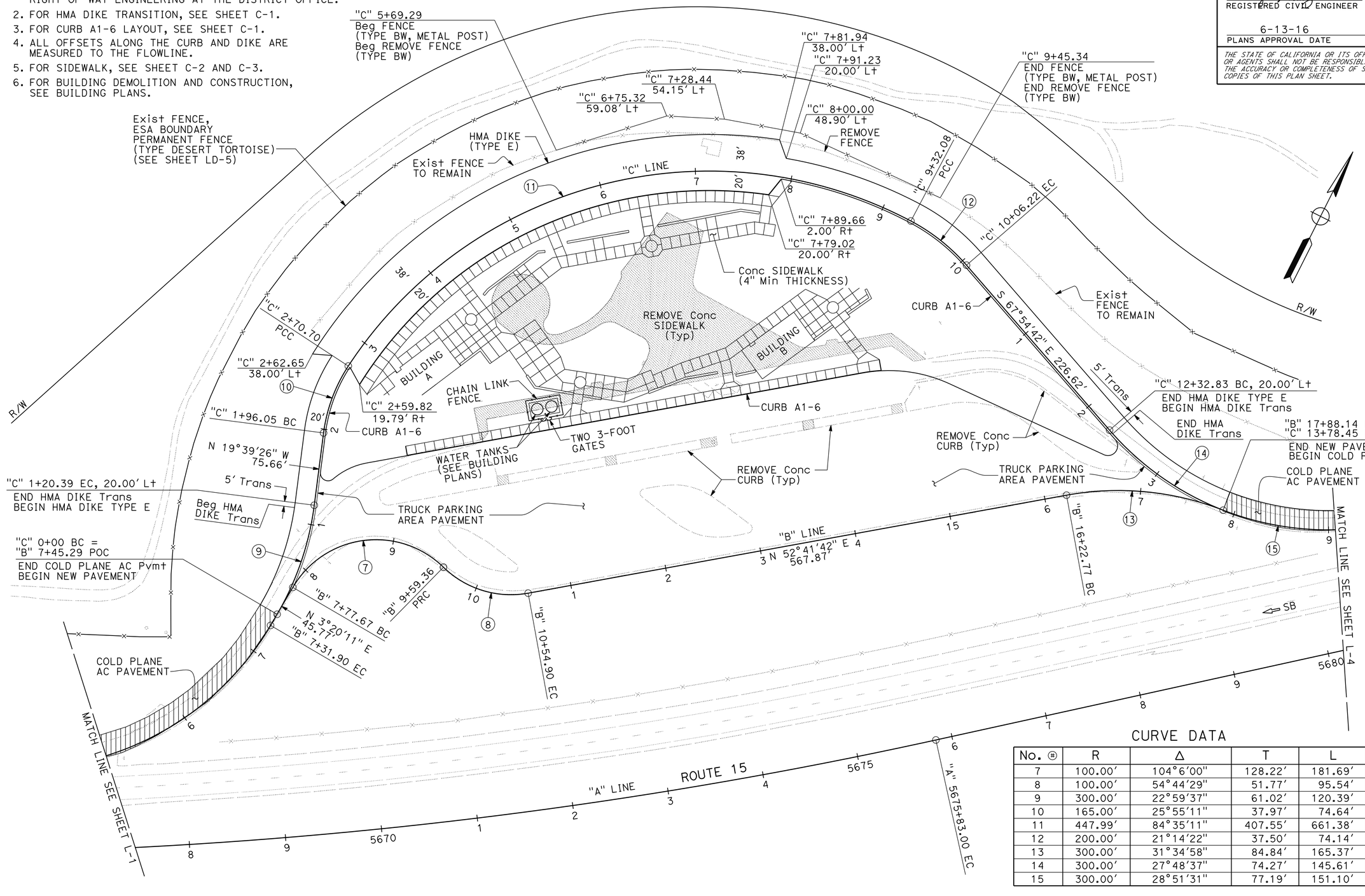

CURVE DATA

No. ⑦	R	Δ	T	L
7	100.00'	104°6'00"	128.22'	181.69'
8	100.00'	54°44'29"	51.77'	95.54'
9	300.00'	22°59'37"	61.02'	120.39'
10	165.00'	25°55'11"	37.97'	74.64'
11	447.99'	84°35'11"	407.55'	661.38'
12	200.00'	21°14'22"	37.50'	74.14'
13	300.00'	31°34'58"	84.84'	165.37'
14	300.00'	27°48'37"	74.27'	145.61'
15	300.00'	28°51'31"	77.19'	151.10'

LAYOUT

SCALE: 1" = 50'

L-2

REVISED BY	DATE REVISED
TOM NGUYEN	GEORGE MORHIG

CALCULATED-DESIGNED BY | CHECKED BY

FUNCTIONAL SUPERVISOR: GEORGE MORHIG

STATE OF CALIFORNIA - DEPARTMENT OF TRANSPORTATION

Caltrans® **DESIGN**

LAST REVISION 06-07-16 | DATE PLOTTED => 31-AUG-2016 | TIME PLOTTED => 15:53

Dist	COUNTY	ROUTE	POST MILES TOTAL PROJECT	SHEET No.	TOTAL SHEETS
08	SBd	15	R107.3	6	263

REGISTERED CIVIL ENGINEER 6-7-16 DATE

6-13-16
PLANS APPROVAL DATE

REGISTERED PROFESSIONAL ENGINEER GEORGE MORHIG No. C50349 Exp. 11-30-17 CIVIL STATE OF CALIFORNIA

THE STATE OF CALIFORNIA OR ITS OFFICERS OR AGENTS SHALL NOT BE RESPONSIBLE FOR THE ACCURACY OR COMPLETENESS OF SCANNED COPIES OF THIS PLAN SHEET.

NOTE:

FOR ACCURATE RIGHT OF WAY DATA, CONTACT RIGHT OF WAY ENGINEERING AT THE DISTRICT OFFICE.

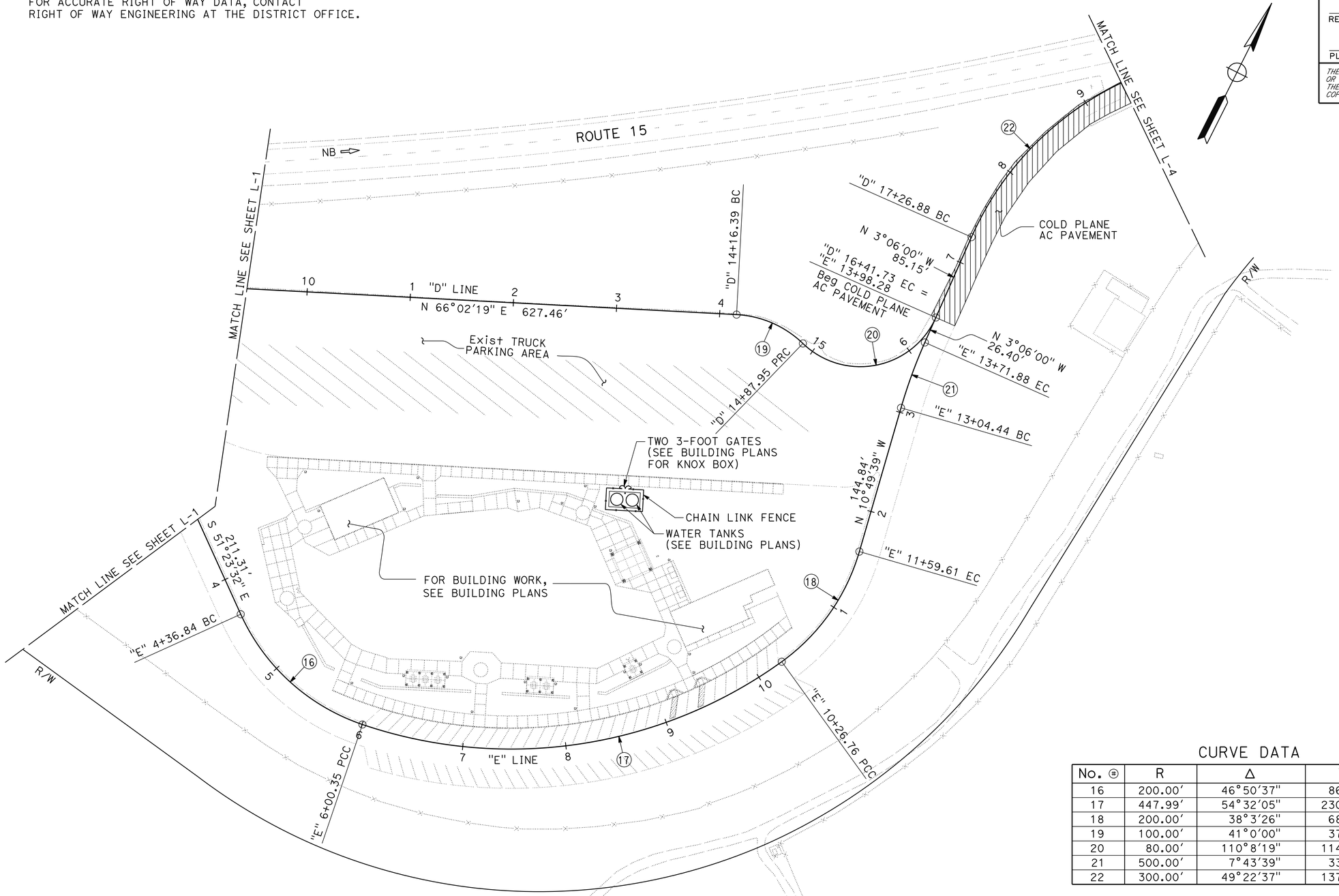

CURVE DATA

No. ⊛	R	Δ	T	L
16	200.00′	46°50′37″	86.64′	163.51′
17	447.99′	54°32′05″	230.90′	426.41′
18	200.00′	38°3′26″	68.98′	132.85′
19	100.00′	41°0′00″	37.39′	71.56′
20	80.00′	110°8′19″	114.55′	153.78′
21	500.00′	7°43′39″	33.77′	67.44′
22	300.00′	49°22′37″	137.91′	258.54′

LAYOUT

SCALE: 1" = 50′ **L-3**

STATE OF CALIFORNIA - DEPARTMENT OF TRANSPORTATION
Caltrans® **DESIGN**

FUNCTIONAL SUPERVISOR: GEORGE MORHIG

CALCULATED-DESIGNED BY: TOM NGUYEN
CHECKED BY: GEORGE MORHIG

REVISED BY
DATE REVISED

LAST REVISION 06-07-16
DATE PLOTTED => 31-AUG-2016
TIME PLOTTED => 15:53

Dist	COUNTY	ROUTE	POST MILES TOTAL PROJECT	SHEET No.	TOTAL SHEETS
08	SBd	15	R107.3	7	263

REGISTERED CIVIL ENGINEER 6-7-16 DATE

6-13-16
PLANS APPROVAL DATE

REGISTERED PROFESSIONAL ENGINEER GEORGE MORHIG No. C50349 Exp. 11-30-17 CIVIL STATE OF CALIFORNIA

THE STATE OF CALIFORNIA OR ITS OFFICERS OR AGENTS SHALL NOT BE RESPONSIBLE FOR THE ACCURACY OR COMPLETENESS OF SCANNED COPIES OF THIS PLAN SHEET.

NOTE:

FOR ACCURATE RIGHT OF WAY DATA, CONTACT RIGHT OF WAY ENGINEERING AT THE DISTRICT OFFICE.

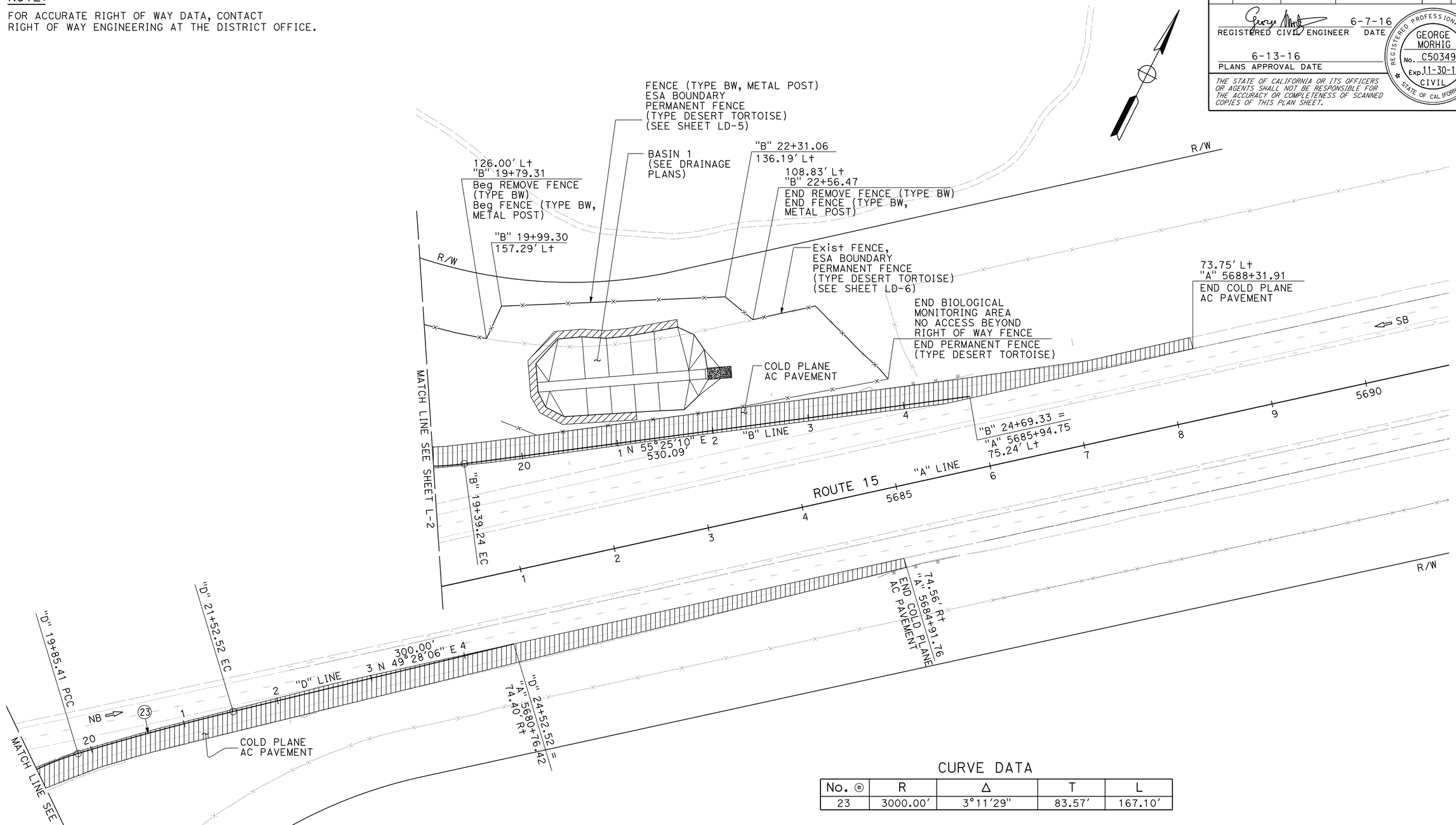

CURVE DATA

No. ⊕	R	Δ	T	L
23	3000.00'	3°11'29"	83.57'	167.10'

LAYOUT

SCALE: 1" = 50'

L-4

REVISED BY	DATE REVISED
TOM NGUYEN	GEORGE MORHIG

CALCULATED-DESIGNED BY: GEORGE MORHIG
CHECKED BY:

FUNCTIONAL SUPERVISOR: GEORGE MORHIG

STATE OF CALIFORNIA - DEPARTMENT OF TRANSPORTATION

Caltrans

DESIGN

LAST REVISION 06-07-16

DATE PLOTTED => 31-AUG-2016
TIME PLOTTED => 15:53

Dist	COUNTY	ROUTE	POST MILES TOTAL PROJECT	SHEET No.	TOTAL SHEETS
08	SBd	15	R107.3	8	263

REGISTERED CIVIL ENGINEER 6-7-16 DATE

6-13-16
PLANS APPROVAL DATE

REGISTERED PROFESSIONAL ENGINEER GEORGE MORHIG No. C50349 Exp. 11-30-17 CIVIL STATE OF CALIFORNIA

THE STATE OF CALIFORNIA OR ITS OFFICERS OR AGENTS SHALL NOT BE RESPONSIBLE FOR THE ACCURACY OR COMPLETENESS OF SCANNED COPIES OF THIS PLAN SHEET.

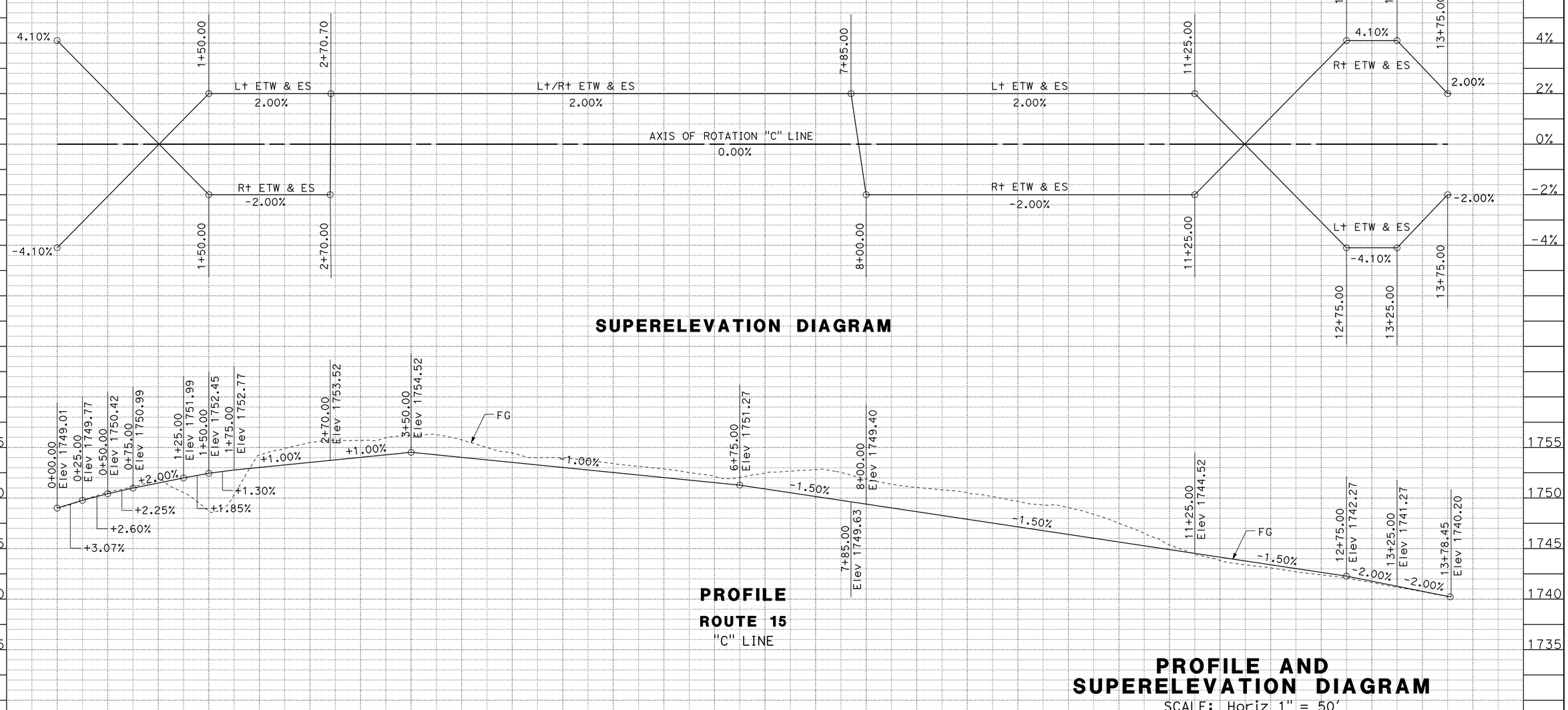

PROFILE AND SUPERELEVATION DIAGRAM

SCALE: Horiz 1" = 50'
Vert 1" = 5'

PS-1

STATE OF CALIFORNIA - DEPARTMENT OF TRANSPORTATION
Caltrans® DESIGN

FUNCTIONAL SUPERVISOR: GEORGE MORHIG
CALCULATED-DESIGNED BY: TOM NGUYEN
CHECKED BY: GEORGE MORHIG
REVISED BY
DATE REVISED

LAST REVISION 06-07-16
DATE PLOTTED => 31-AUG-2016
TIME PLOTTED => 15:53

Dist	COUNTY	ROUTE	POST MILES TOTAL PROJECT	SHEET No.	TOTAL SHEETS
08	SBd	15	R107.3	9	263

REGISTERED CIVIL ENGINEER 6-7-16 DATE

6-13-16
PLANS APPROVAL DATE

REGISTERED PROFESSIONAL ENGINEER GEORGE MORHIG No. C50349 Exp. 11-30-17 CIVIL STATE OF CALIFORNIA

THE STATE OF CALIFORNIA OR ITS OFFICERS OR AGENTS SHALL NOT BE RESPONSIBLE FOR THE ACCURACY OR COMPLETENESS OF SCANNED COPIES OF THIS PLAN SHEET.

NOTES:

1. FOR ACCURATE RIGHT OF WAY DATA, CONTACT RIGHT OF WAY ENGINEERING AT THE DISTRICT OFFICE.
2. ALL OFFSETS ALONG THE CURB AND DIKE ARE MEASURED TO THE FLOWLINE.
3. FOR EXACT LINE "C" CROSS SLOPE, SEE SUPERELEVATION DIAGRAM SHEET PS-1.

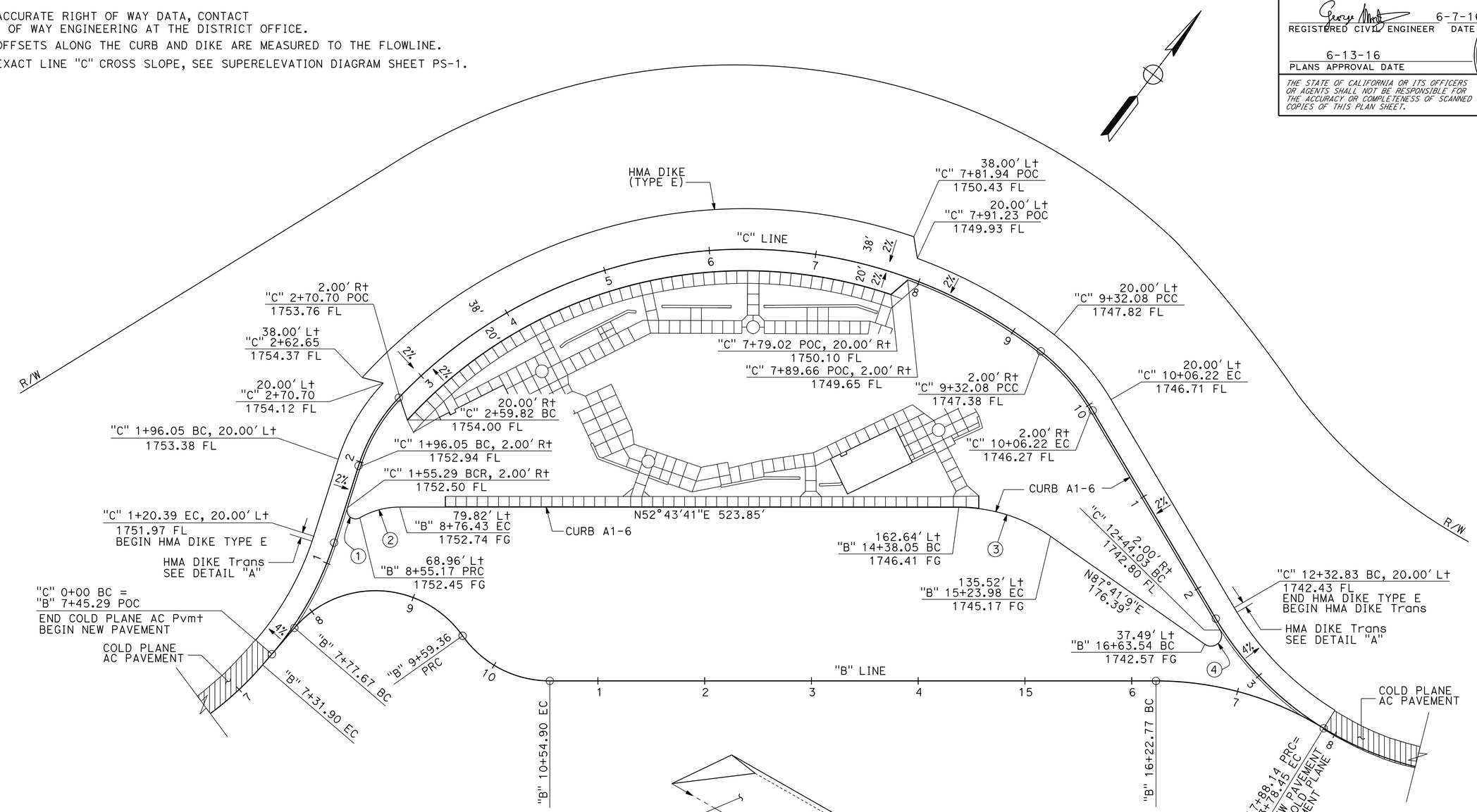

CURVE DATA

No. ⊕	R	Δ	T	L
1	8.00'	137°54'55"	20.79'	19.26'
2	73.83'	30°15'30"	19.96'	38.99'
3	150.00'	34°57'27"	47.23'	91.52'
4	10.00'	155°35'51"	46.25'	27.16'

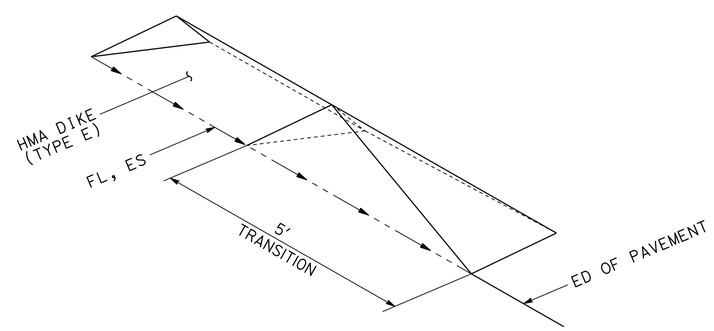

DETAIL "A"

HMA DIKE (TYPE E) TO PAVEMENT TRANSITION

CONSTRUCTION DETAILS

SCALE: 1" = 50'

C-1

STATE OF CALIFORNIA - DEPARTMENT OF TRANSPORTATION

Caltrans® **DESIGN**

FUNCTIONAL SUPERVISOR: GEORGE MORHIG

CALCULATED-DESIGNED BY: TOM NGUYEN

CHECKED BY: GEORGE MORHIG

REVISED BY

DATE REVISED

LAST REVISION 06-07-16

DATE PLOTTED => 31-AUG-2016

TIME PLOTTED => 15:53

Dist	COUNTY	ROUTE	POST MILES TOTAL PROJECT	SHEET No.	TOTAL SHEETS
08	SBd	15	R107.3	10	263

REGISTERED CIVIL ENGINEER 6-7-16 DATE

6-13-16
PLANS APPROVAL DATE

REGISTERED PROFESSIONAL ENGINEER GEORGE MORHIG No. C50349 Exp. 11-30-17 CIVIL STATE OF CALIFORNIA

THE STATE OF CALIFORNIA OR ITS OFFICERS OR AGENTS SHALL NOT BE RESPONSIBLE FOR THE ACCURACY OR COMPLETENESS OF SCANNED COPIES OF THIS PLAN SHEET.

NOTES:

1. FOR PERIMETER WALLS, SEE LANDSCAPE PLANS.
2. FOR CURB RAMPS AND ACCESSIBLE PARKING, PICNIC SHELTERS, INTERPRETIVE CENTER, WATER TANKS, BUILDING AND FINISHED FLOOR ELEVATIONS, SEE BUILDING PLANS.
3. CONTRACTION JOINTS AND CONTROL JOINTS MUST DIVIDE SLAB INTO EQUAL AREAS NOT EXCEEDING 25 SQUARE YARDS WITHOUT REENTRANT CORNERS AND WITH LENGTH TO WIDTH RATIOS NOT EXCEEDING 1.5 TO 1. JOINT SPACING MUST NOT EXCEED 15'-0".

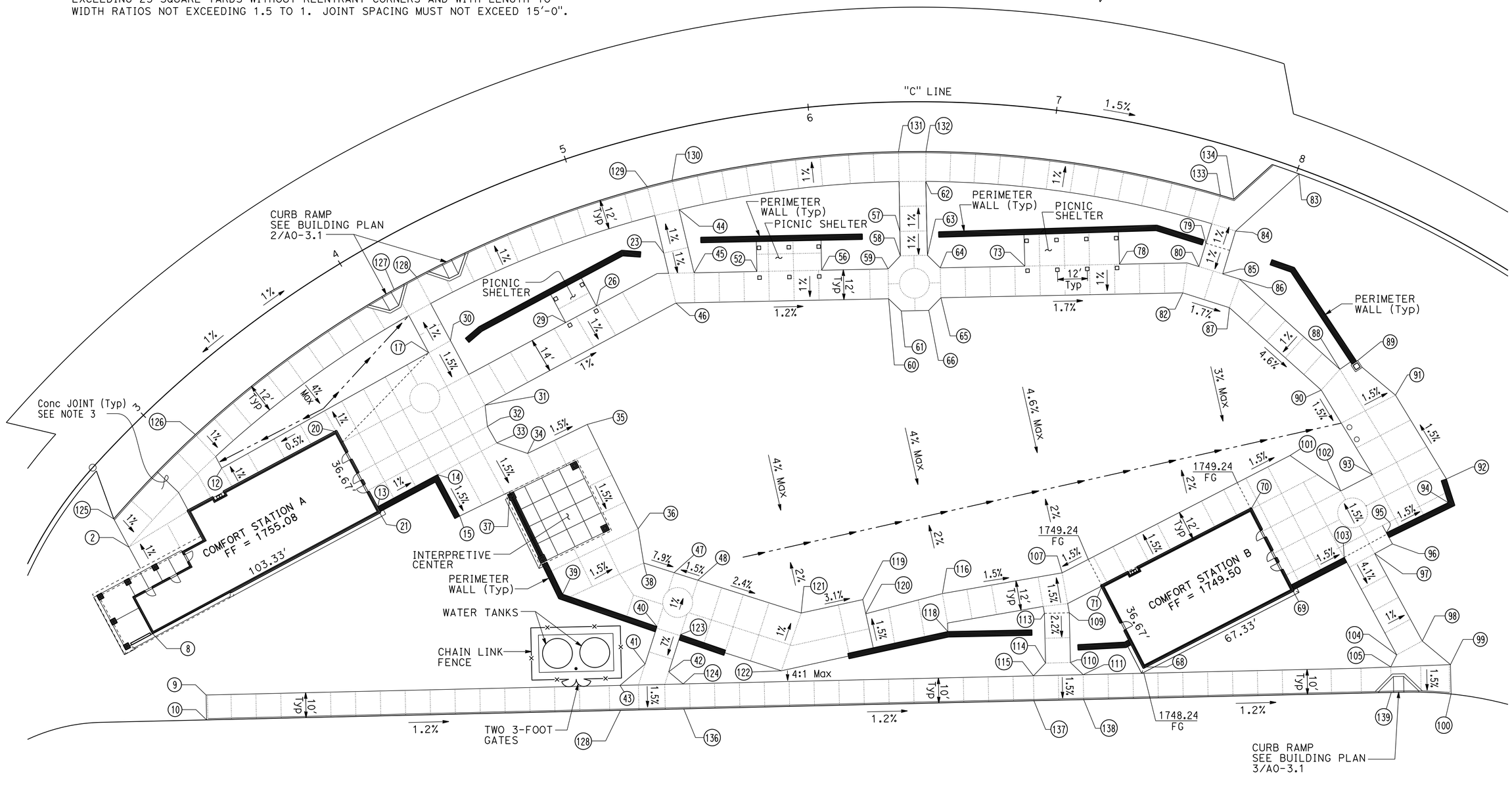

CONSTRUCTION DETAILS

SCALE: 1" = 20'

C-2

STATE OF CALIFORNIA - DEPARTMENT OF TRANSPORTATION
Caltrans DESIGN

FUNCTIONAL SUPERVISOR: GEORGE MORHIG
CALCULATED-DESIGNED BY: TOM NGUYEN
CHECKED BY: GEORGE MORHIG
REVISED BY
DATE REVISED

LAST REVISION 06-07-16
DATE PLOTTED => 31-AUG-2016
TIME PLOTTED => 15:53

Dist	COUNTY	ROUTE	POST MILES TOTAL PROJECT	SHEET No.	TOTAL SHEETS
08	SBd	15	R107.3	11	263

REGISTERED CIVIL ENGINEER 6-7-16 DATE

6-13-16
PLANS APPROVAL DATE

REGISTERED PROFESSIONAL ENGINEER GEORGE MORHIG No. C50349 Exp. 11-30-17 CIVIL STATE OF CALIFORNIA

THE STATE OF CALIFORNIA OR ITS OFFICERS OR AGENTS SHALL NOT BE RESPONSIBLE FOR THE ACCURACY OR COMPLETENESS OF SCANNED COPIES OF THIS PLAN SHEET.

POINT No. (#)	STATION	OFFSET (FT)	ELEVATION (TC/FG)
2	"C" 2+53.49	31.51 R+	1754.38
8	"C" 2+18.90	57.36 R+	1755.00
9	"B" 8+97.18	99.36 L+	1753.03
10	"B" 8+98.89	89.93 L+	1752.88
12	"C" 3+08.56	37.06 R+	1754.66
13	"C" 3+52.76	89.38 R+	1755.00
14	"C" 3+86.73	92.69 R+	1754.73
15	"C" 3+84.64	111.49 R+	1754.45
17	"C" 4+13.33	48.95 R+	1755.07
20	"C" 3+58.43	55.29 R+	1755.00
21	"C" 3+51.69	91.52 R+	1755.00
23	"C" 5+28.60	47.56 R+	1753.91
26	"C" 4+92.06	59.90 R+	1754.11
29	"C" 4+76.00	61.76 R+	1754.24
30	"C" 4+24.50	48.90 R+	1754.96
31	"C" 4+24.59	78.35 R+	1754.52
32	"C" 4+20.65	86.33 R+	1754.43
33	"C" 4+20.82	93.92 R+	1754.32
34	"C" 4+32.31	103.45 R+	1754.04
35	"C" 4+66.97	102.96 R+	1753.64
36	"C" 4+70.95	149.54 R+	1752.94
37	"C" 4+14.33	113.58 R+	1754.08
38	"C" 4+66.06	163.09 R+	1752.88
39	"C" 4+11.71	159.92 R+	1753.38
40	"B" 11+38.65	196.11 L+	1752.11
41	"B" 11+33.50	181.15 L+	1751.34
42	"B" 11+42.93	177.81 L+	1751.16
43	"B" 11+23.23	172.82 L+	1751.00
44	"C" 5+39.78	32.00 R+	1753.64
45	"C" 5+39.78	58.17 R+	1753.70
46	"C" 5+28.09	68.17 R+	1753.70
47	"C" 4+81.87	171.24 R+	1751.88
48	"C" 4+94.84	177.34 R+	1752.03
52	"C" 5+68.53	62.73 R+	1753.41
56	"C" 5+98.68	65.73 R+	1753.10
57	"C" 6+35.93	52.04 R+	1752.88

POINT No. (#)	STATION	OFFSET (FT)	ELEVATION (TC/FG)
58	"C" 6+35.91	61.86 R+	1752.78
59	"C" 6+30.81	66.99 R+	1752.79
60	"C" 6+29.81	78.99 R+	1752.67
61	"C" 6+35.86	84.02 R+	1752.56
62	"C" 6+47.51	32.00 R+	1752.57
63	"C" 6+48.56	61.69 R+	1752.67
64	"C" 6+54.63	66.67 R+	1752.54
65	"C" 6+55.30	78.65 R+	1752.42
66	"C" 6+49.45	83.84 R+	1752.45
68	"B" 13+33.78	175.20 L+	1749.42
69	"B" 13+94.37	204.59 L+	1749.42
70	"B" 13+78.36	237.58 L+	1749.42
71	"B" 13+17.78	208.19 L+	1749.42
73	"C" 6+94.33	63.70 R+	1751.97
78	"C" 7+37.55	56.90 R+	1751.35
79	"C" 7+73.01	40.19 R+	1750.89
80	"C" 7+72.94	49.97 R+	1750.79
82	"C" 7+69.22	61.92 R+	1750.81
83	"C" 8+01.10	2.00 R+	1749.85
84	"C" 7+83.83	32.00 R+	1750.66
85	"C" 7+84.20	49.91 R+	1750.64
86	"C" 7+92.14	49.82 R+	1750.54
87	"C" 7+92.05	62.00 R+	1750.49
88	"C" 8+51.14	67.74 R+	1748.34
89	"C" 8+56.50	67.74 R+	1748.40
90	"C" 8+47.51	78.56 R+	1748.23
91	"C" 8+80.06	66.33 R+	1747.63
92	"C" 9+22.68	83.53 R+	1748.22
93	"C" 8+90.36	98.51 R+	1748.82
94	"C" 9+30.30	90.80 R+	1748.35
95	"C" 9+13.18	115.07 R+	1748.76
96	"C" 9+19.36	117.38 R+	1748.67
97	"C" 9+14.39	124.62 R+	1748.75
98	"B" 14+45.91	182.98 L+	1747.10
99	"B" 14+57.03	173.25 L+	1746.85
100	"B" 14+56.98	161.43 L+	1746.70

POINT No. (#)	STATION	OFFSET (FT)	ELEVATION (TC/FG)
101	"C" 8+47.82	107.69 R+	1748.88
102	"C" 8+80.47	110.67 R+	1749.04
103	"C" 9+01.26	132.68 R+	1749.05
104	"B" 14+35.53	177.66 L+	1747.22
105	"B" 14+33.02	172.85 L+	1747.17
107	"C" 7+42.71	182.97 R+	1749.06
109	"B" 13+04.40	197.71 L+	1749.30
110	"B" 13+04.39	177.71 L+	1748.85
111	"B" 13+09.38	172.71 L+	1748.68
113	"B" 12+94.40	197.72 L+	1749.43
114	"B" 12+94.39	177.72 L+	1748.98
115	"B" 12+89.38	172.72 L+	1748.93
116	"C" 6+61.53	197.49 R+	1749.79
118	"B" 12+55.43	191.34 L+	1750.02
119	"C" 6+03.98	199.07 R+	1750.18
120	"C" 6+05.15	204.85 R+	1750.26
121	"C" 5+58.33	200.93 R+	1750.97
122	"B" 11+88.22	177.16 L+	1751.21
123	"B" 11+48.03	192.64 L+	1752.26
124	"B" 11+48.61	172.80 L+	1750.71
125	"C" 2+59.82	19.79 R+	1754.50
126	"C" 3+10.05	20.00 R+	1755.02
127	"C" 4+13.77	20.00 R+	1754.78
128	"C" 4+24.60	20.00 R+	1754.67
129	"C" 5+29.01	20.00 R+	1753.63
130	"C" 5+39.78	20.00 R+	1753.52
131	"C" 6+35.97	20.00 R+	1752.56
132	"C" 6+47.51	20.00 R+	1752.45
133	"C" 7+73.13	20.00 R+	1750.69
134	"C" 7+79.02	20.00 R+	1750.60
135	"B" 11+23.23	162.82 L+	1750.85
136	"B" 11+48.60	162.80 L+	1750.56
137	"B" 12+89.35	162.70 L+	1748.78
138	"B" 13+09.35	162.71 L+	1748.53
139	"B" 14+32.98	162.64 L+	1747.02

CONSTRUCTION DETAILS

C-3

REVISED BY | DATE REVISED
TOM NGUYEN | GEORGE MORHIG
CALCULATED-DESIGNED BY | CHECKED BY
FUNCTIONAL SUPERVISOR: GEORGE MORHIG
STATE OF CALIFORNIA - DEPARTMENT OF TRANSPORTATION
Caltrans DESIGN

LAST REVISION 06-07-16 | DATE PLOTTED => 31-AUG-2016 TIME PLOTTED => 15:53

Dist	COUNTY	ROUTE	POST MILES TOTAL PROJECT	SHEET No.	TOTAL SHEETS
08	SBd	15	R107.3	12	263

REGISTERED CIVIL ENGINEER 6-7-16 DATE

6-13-16
PLANS APPROVAL DATE

REGISTERED PROFESSIONAL ENGINEER
GEORGE MORHIG
No. C50349
Exp. 11-30-17
CIVIL
STATE OF CALIFORNIA

THE STATE OF CALIFORNIA OR ITS OFFICERS OR AGENTS SHALL NOT BE RESPONSIBLE FOR THE ACCURACY OR COMPLETENESS OF SCANNED COPIES OF THIS PLAN SHEET.

NOTE:

FOR ACCURATE RIGHT OF WAY DATA, CONTACT RIGHT OF WAY ENGINEERING AT THE DISTRICT OFFICE.

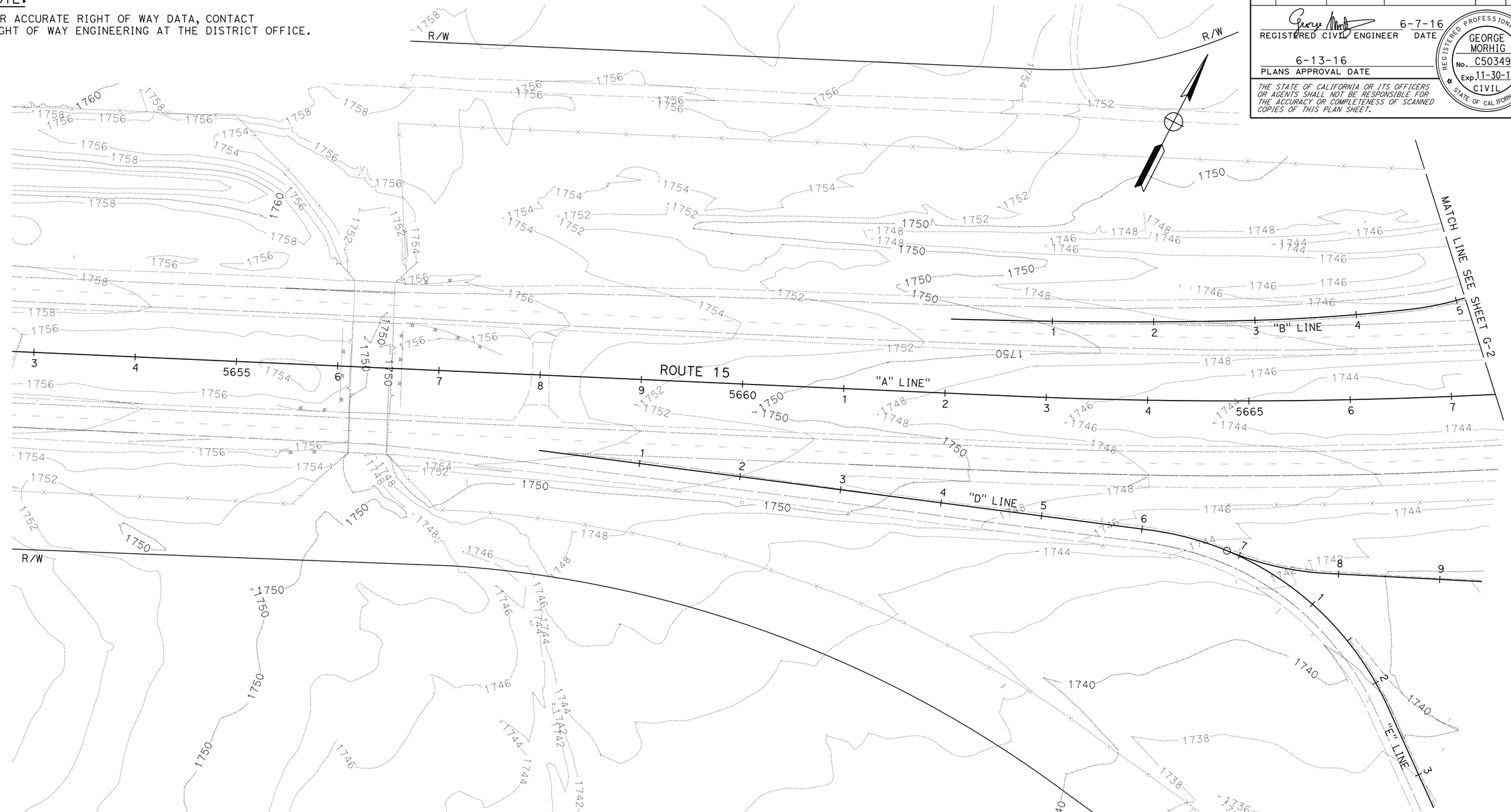

CONTOUR GRADING

SCALE: 1" = 50'

G-1

APPROVED FOR CONTOUR GRADING WORK ONLY

REVISED BY	TOM NGUYEN
DATE REVISED	
CALCULATED-DESIGNED BY	GEORGE MORHIG
CHECKED BY	
FUNCTIONAL SUPERVISOR	GEORGE MORHIG

STATE OF CALIFORNIA - DEPARTMENT OF TRANSPORTATION

Caltrans

DESIGN

LAST REVISION 06-07-16

DATE PLOTTED => 31-AUG-2016
TIME PLOTTED => 15:53

Dist	COUNTY	ROUTE	POST MILES TOTAL PROJECT	SHEET No.	TOTAL SHEETS
08	SBd	15	R107.3	13	263

REGISTERED CIVIL ENGINEER 6-7-16 DATE

6-13-16
PLANS APPROVAL DATE

REGISTERED PROFESSIONAL ENGINEER
GEORGE MORHIG
No. C50349
Exp. 11-30-17
CIVIL
STATE OF CALIFORNIA

THE STATE OF CALIFORNIA OR ITS OFFICERS OR AGENTS SHALL NOT BE RESPONSIBLE FOR THE ACCURACY OR COMPLETENESS OF SCANNED COPIES OF THIS PLAN SHEET.

NOTE:

FOR ACCURATE RIGHT OF WAY DATA, CONTACT RIGHT OF WAY ENGINEERING AT THE DISTRICT OFFICE.

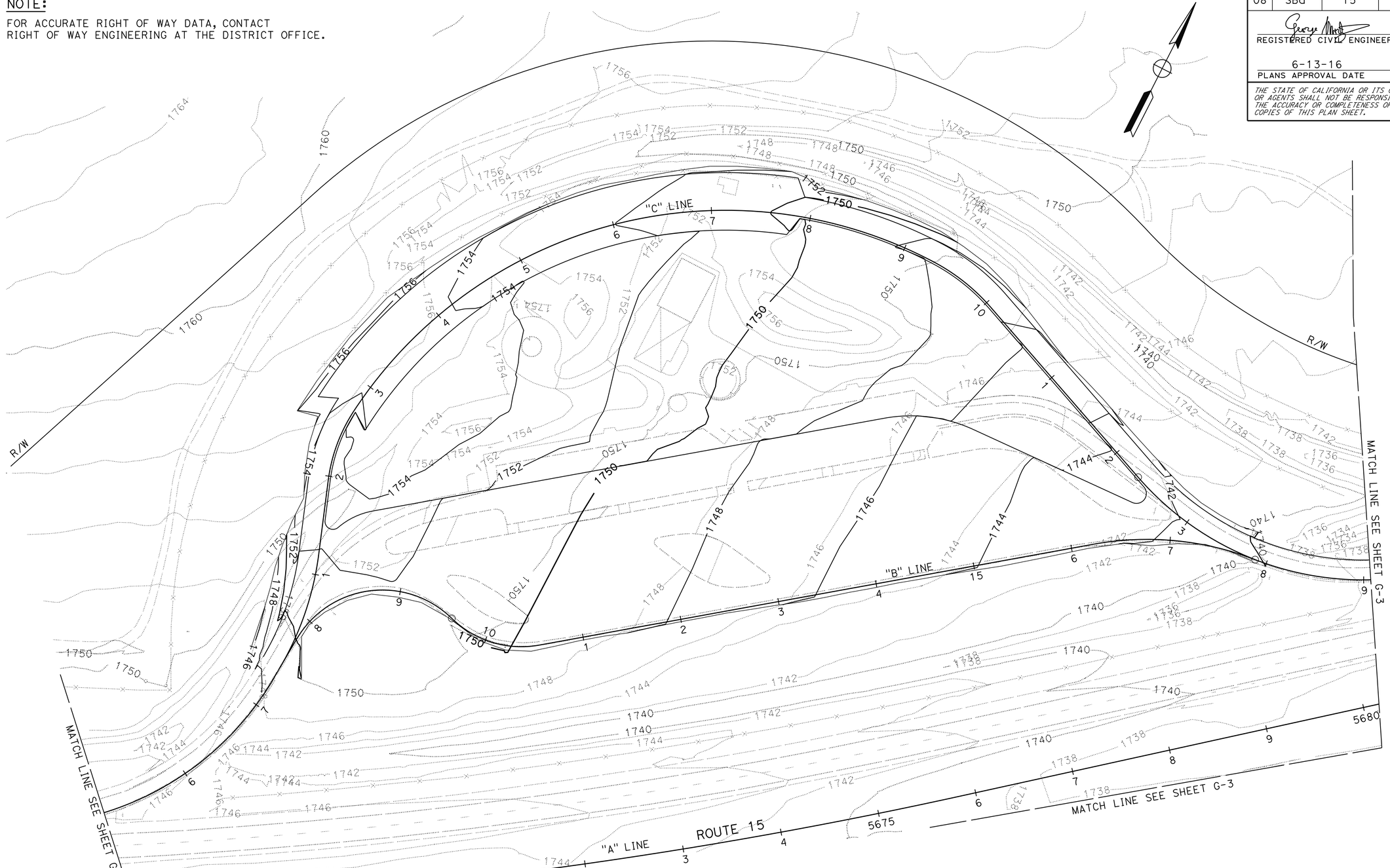

CONTOUR GRADING

SCALE: 1" = 50'

G-2

APPROVED FOR CONTOUR GRADING WORK ONLY

STATE OF CALIFORNIA - DEPARTMENT OF TRANSPORTATION
Caltrans
DESIGN

FUNCTIONAL SUPERVISOR: GEORGE MORHIG
CALCULATED-DESIGNED BY: TOM NGUYEN
CHECKED BY: GEORGE MORHIG
REVISED BY
DATE REVISED

LAST REVISION 06-07-16
DATE PLOTTED => 31-AUG-2016
TIME PLOTTED => 15:53

BORDER LAST REVISED 7/2/2010
USERNAME => s125726
DGN FILE => 0814000184hd002.dgn
RELATIVE BORDER SCALE IS IN INCHES 0 1 2 3
UNIT 2229
PROJECT NUMBER & PHASE 08140001841

Dist	COUNTY	ROUTE	POST MILES TOTAL PROJECT	SHEET No.	TOTAL SHEETS
08	SBd	15	R107.3	14	263

REGISTERED CIVIL ENGINEER 6-7-16 DATE

6-13-16
PLANS APPROVAL DATE

REGISTERED PROFESSIONAL ENGINEER
GEORGE MORHIG
No. C50349
Exp. 11-30-17
CIVIL
STATE OF CALIFORNIA

THE STATE OF CALIFORNIA OR ITS OFFICERS OR AGENTS SHALL NOT BE RESPONSIBLE FOR THE ACCURACY OR COMPLETENESS OF SCANNED COPIES OF THIS PLAN SHEET.

NOTE:

FOR ACCURATE RIGHT OF WAY DATA, CONTACT RIGHT OF WAY ENGINEERING AT THE DISTRICT OFFICE.

CONTOUR GRADING

SCALE: 1" = 50'

G-3

APPROVED FOR CONTOUR GRADING WORK ONLY

STATE OF CALIFORNIA - DEPARTMENT OF TRANSPORTATION

Caltrans

DESIGN

FUNCTIONAL SUPERVISOR: GEORGE MORHIG

CALCULATED-DESIGNED BY: TOM NGUYEN

CHECKED BY: GEORGE MORHIG

REVISED BY

DATE REVISED

LAST REVISION 06-07-16

DATE PLOTTED => 31-AUG-2016
TIME PLOTTED => 15:53

Dist	COUNTY	ROUTE	POST MILES TOTAL PROJECT	SHEET No.	TOTAL SHEETS
08	SBd	15	R107.3	15	263

REGISTERED CIVIL ENGINEER 6-7-16 DATE

6-13-16
PLANS APPROVAL DATE

REGISTERED PROFESSIONAL ENGINEER GEORGE MORHIG No. C50349 Exp. 11-30-17 CIVIL STATE OF CALIFORNIA

THE STATE OF CALIFORNIA OR ITS OFFICERS OR AGENTS SHALL NOT BE RESPONSIBLE FOR THE ACCURACY OR COMPLETENESS OF SCANNED COPIES OF THIS PLAN SHEET.

NOTE:

FOR ACCURATE RIGHT OF WAY DATA, CONTACT RIGHT OF WAY ENGINEERING AT THE DISTRICT OFFICE.

ABBREVIATION:

CFES= CONCRETE FLARED END SECTION

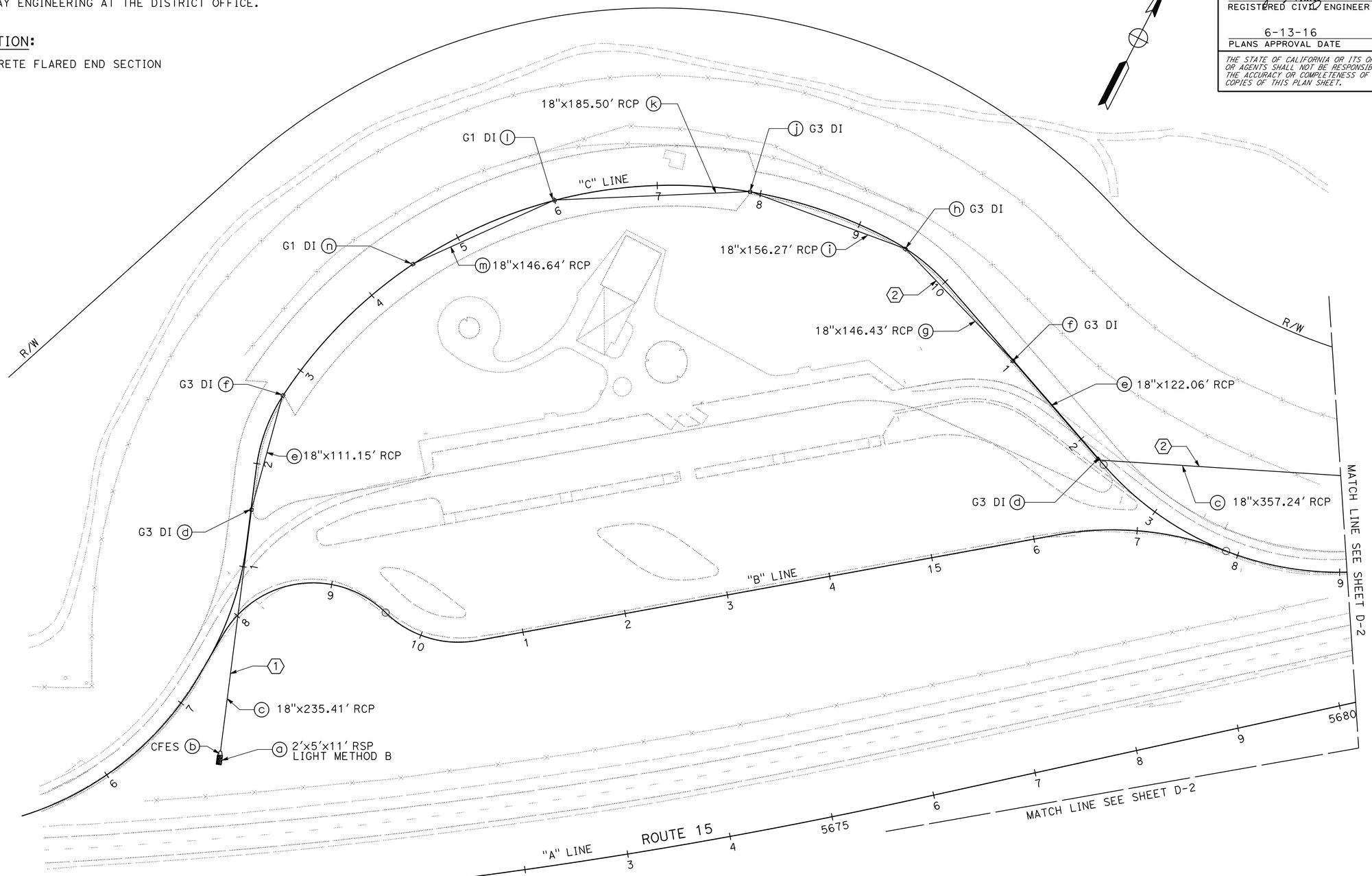

DRAINAGE PLAN

SCALE: 1" = 50'

D-1

APPROVED FOR DRAINAGE WORK ONLY

REVISED BY	DATE REVISED
TOM NGUYEN	GEORGE MORHIG
CALCULATED-DESIGNED BY	CHECKED BY
FUNCTIONAL SUPERVISOR	GEORGE MORHIG

STATE OF CALIFORNIA - DEPARTMENT OF TRANSPORTATION

Caltrans® **DESIGN**

LAST REVISION 06-07-16 | DATE PLOTTED => 31-AUG-2016 | TIME PLOTTED => 15:53

Dist	COUNTY	ROUTE	POST MILES TOTAL PROJECT	SHEET No.	TOTAL SHEETS
08	SBd	15	R107.3	16	263

REGISTERED CIVIL ENGINEER 6-7-16 DATE

6-13-16
PLANS APPROVAL DATE

REGISTERED PROFESSIONAL ENGINEER GEORGE MORHIG No. C50349 Exp. 11-30-17 CIVIL STATE OF CALIFORNIA

THE STATE OF CALIFORNIA OR ITS OFFICERS OR AGENTS SHALL NOT BE RESPONSIBLE FOR THE ACCURACY OR COMPLETENESS OF SCANNED COPIES OF THIS PLAN SHEET.

NOTE:

FOR ACCURATE RIGHT OF WAY DATA, CONTACT RIGHT OF WAY ENGINEERING AT THE DISTRICT OFFICE.

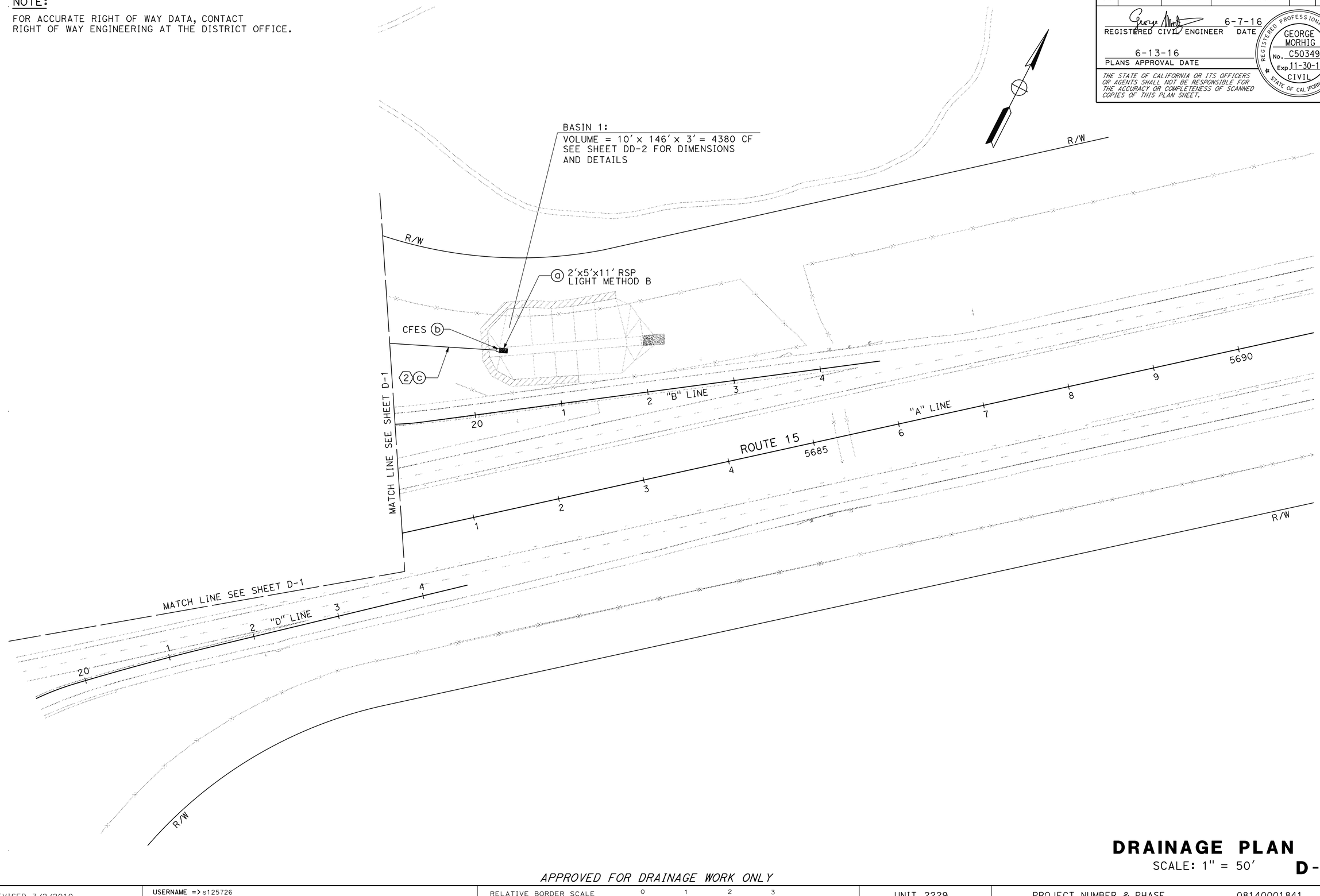

DRAINAGE PLAN

SCALE: 1" = 50'

D-2

APPROVED FOR DRAINAGE WORK ONLY

STATE OF CALIFORNIA - DEPARTMENT OF TRANSPORTATION

Caltrans® **DESIGN**

FUNCTIONAL SUPERVISOR: GEORGE MORHIG

CALCULATED-DESIGNED BY: TOM NGUYEN

CHECKED BY: GEORGE MORHIG

REVISED BY

DATE REVISED

LAST REVISION 06-07-16

DATE PLOTTED => 31-AUG-2016
TIME PLOTTED => 15:53

Dist	COUNTY	ROUTE	POST MILES TOTAL PROJECT	SHEET No.	TOTAL SHEETS
08	SBd	15	R107.3	17	263

REGISTERED CIVIL ENGINEER 6-7-16 DATE

6-13-16
PLANS APPROVAL DATE

REGISTERED PROFESSIONAL ENGINEER GEORGE MORHIG No. C50349 Exp. 11-30-17 CIVIL STATE OF CALIFORNIA

THE STATE OF CALIFORNIA OR ITS OFFICERS OR AGENTS SHALL NOT BE RESPONSIBLE FOR THE ACCURACY OR COMPLETENESS OF SCANNED COPIES OF THIS PLAN SHEET.

NOTE:

1. SEE DRAINAGE QUANTITIES SHEET FOR INFORMATION.

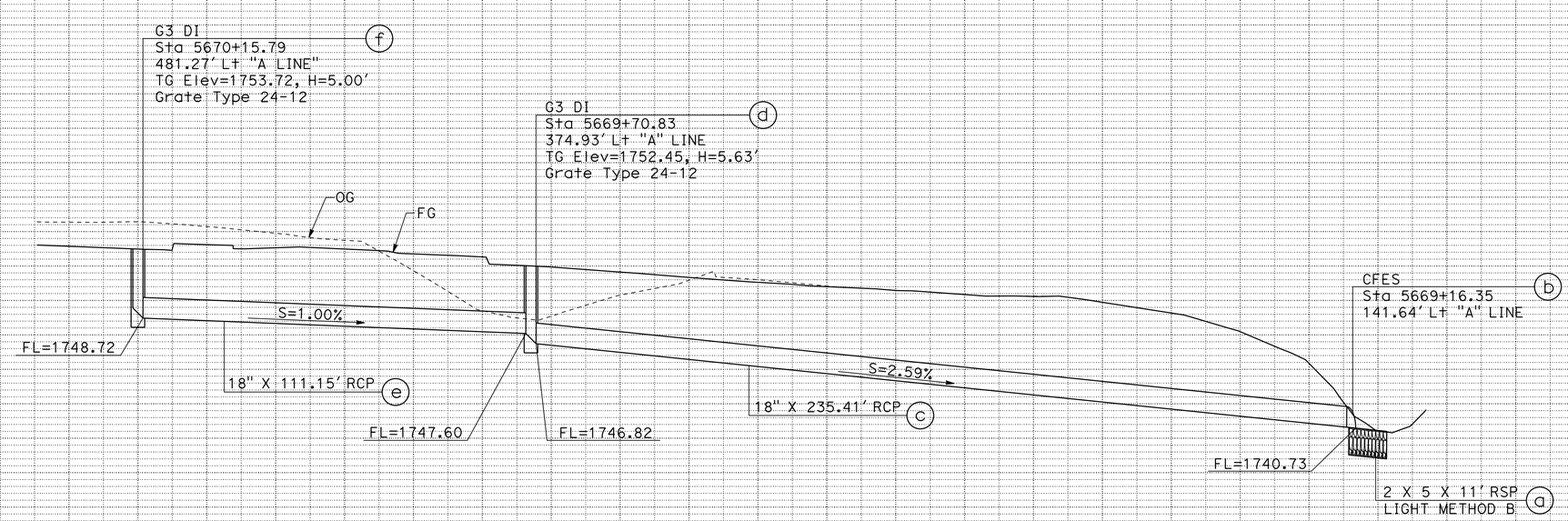

DRAINAGE SYSTEM No. 1

DRAINAGE PROFILE

SCALE: Horiz 1" = 20'
Vert 1" = 5'

DP-1

STATION		TOTAL
CY	Exc	
	Emb	

STATE OF CALIFORNIA - DEPARTMENT OF TRANSPORTATION
Caltrans® DESIGN

FUNCTIONAL SUPERVISOR: GEORGE MORHIG
CALCULATED-DESIGNED BY: TOM NGUYEN
CHECKED BY: GEORGE MORHIG
REVISED BY
DATE REVISED

LAST REVISION 06-07-16
DATE PLOTTED => 31-AUG-2016
TIME PLOTTED => 15:53

Dist	COUNTY	ROUTE	POST MILES TOTAL PROJECT	SHEET No.	TOTAL SHEETS
08	SBd	15	R107.3	18	263

REGISTERED CIVIL ENGINEER 6-7-16 DATE

6-13-16
PLANS APPROVAL DATE

REGISTERED PROFESSIONAL ENGINEER GEORGE MORHIG No. C50349 Exp. 11-30-17 CIVIL STATE OF CALIFORNIA

THE STATE OF CALIFORNIA OR ITS OFFICERS OR AGENTS SHALL NOT BE RESPONSIBLE FOR THE ACCURACY OR COMPLETENESS OF SCANNED COPIES OF THIS PLAN SHEET.

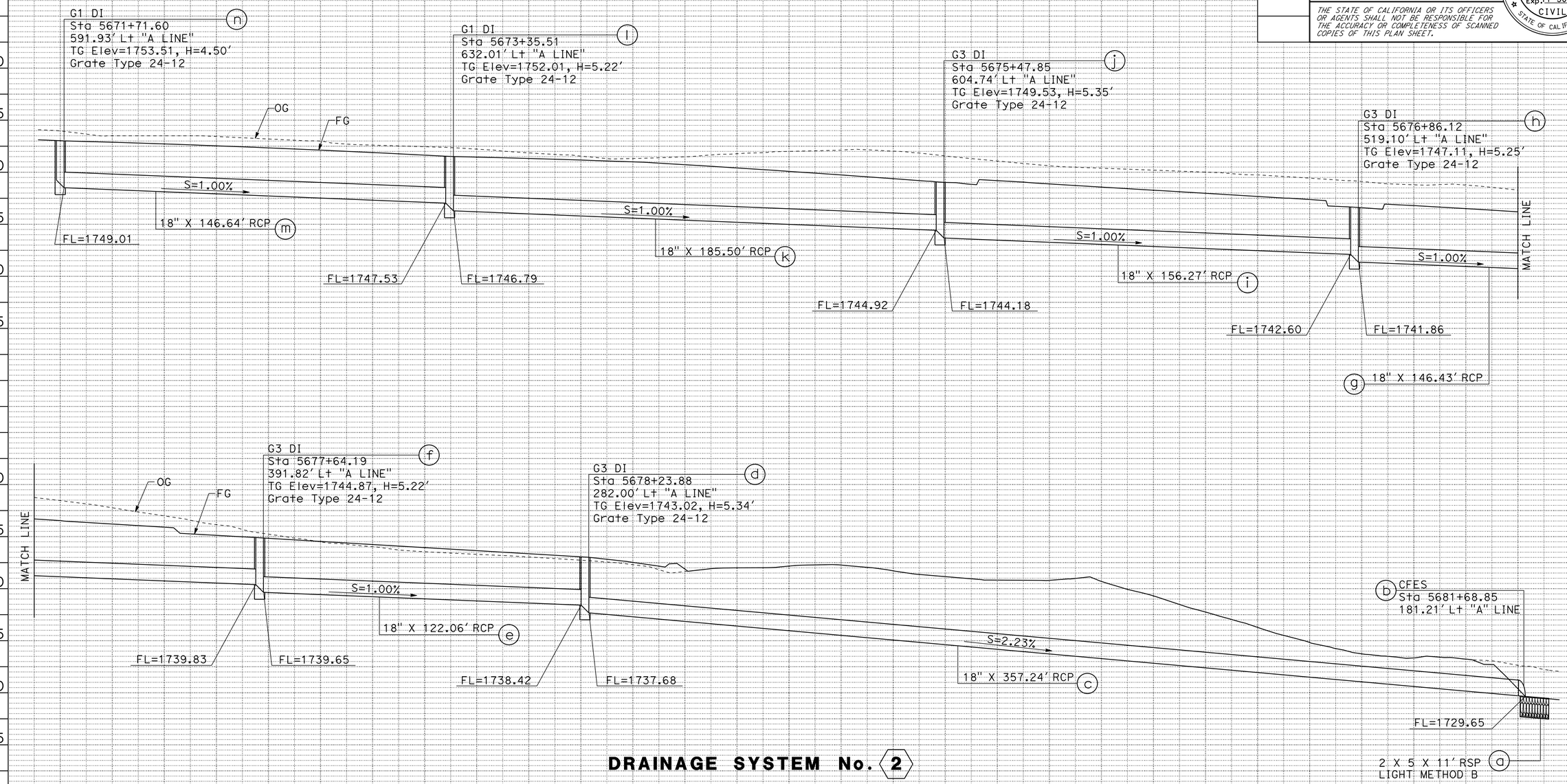

DRAINAGE SYSTEM No. 2

DRAINAGE PROFILE

SCALE: Horiz 1" = 20'
Vert 1" = 5'

DP-2

STATION	
CY	Exc
	Emb

TOTAL

REVISED BY | DATE REVISED

TOM NGUYEN | GEORGE MORHIG

CALCULATED-DESIGNED BY | CHECKED BY

FUNCTIONAL SUPERVISOR: GEORGE MORHIG

STATE OF CALIFORNIA - DEPARTMENT OF TRANSPORTATION

Caltrans® **DESIGN**

LAST REVISION 06-07-16 | DATE PLOTTED => 31-AUG-2016 | TIME PLOTTED => 15:53

Dist	COUNTY	ROUTE	POST MILES TOTAL PROJECT	SHEET No.	TOTAL SHEETS
08	SBd	15	R107.3	19	263

REGISTERED CIVIL ENGINEER 6-7-16 DATE

6-13-16
PLANS APPROVAL DATE

REGISTERED PROFESSIONAL ENGINEER GEORGE MORHIG No. C50349 Exp. 11-30-17 CIVIL STATE OF CALIFORNIA

THE STATE OF CALIFORNIA OR ITS OFFICERS OR AGENTS SHALL NOT BE RESPONSIBLE FOR THE ACCURACY OR COMPLETENESS OF SCANNED COPIES OF THIS PLAN SHEET.

NOTES:

CONCRETE RIBBON GUTTER:

1. ALL STEEL SHALL TERMINATE 1½" CLEAR OF CONCRETE SURFACE UNLESS OTHERWISE SHOWN.
2. f'_c = 4000 PSI AT 28 DAYS
3. EXPANSION JOINTS, TRANSVERSELY SHALL BE PROVIDED EVERY 20′.

ROCK SLOPE PROTECTION AT OUTLETS OF PIPE CULVERT:

1. FOR CONCRETE FLARE END SECTION (CFES), SEE Std PLAN D94B.

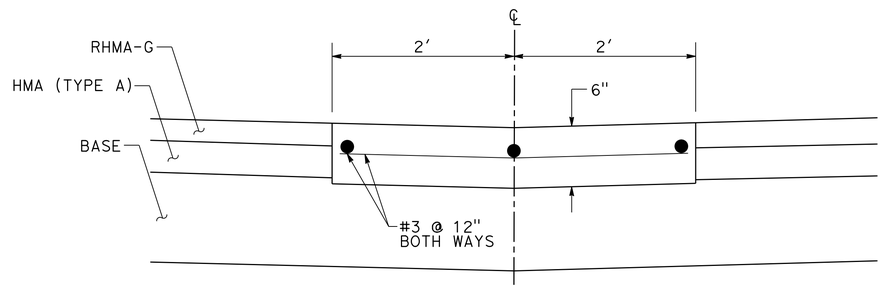

CONCRETE RIBBON GUTTER

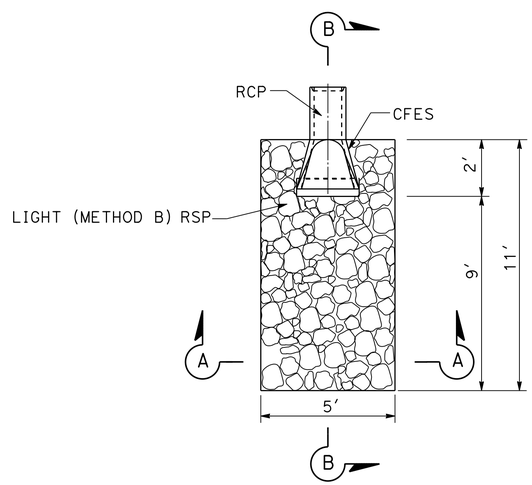

PLAN

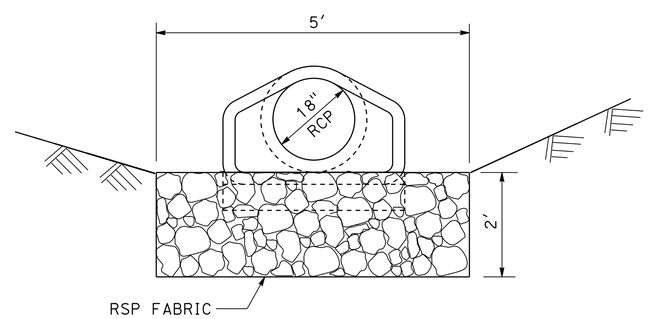

SECTION A-A

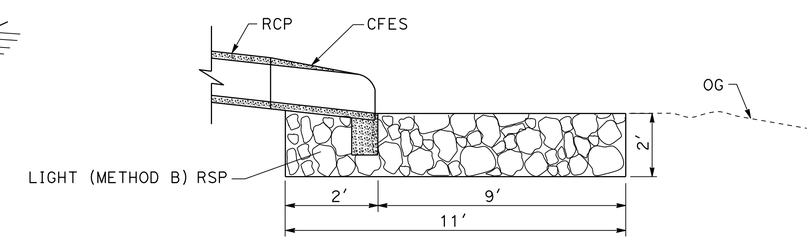

SECTION B-B

RSP AT OUTLET OF PIPE CULVERT
ROCK SLOPE PROTECTION (RSP) AT PIPE CULVERTS

DRAINAGE DETAILS
NO SCALE
DD-1

STATE OF CALIFORNIA - DEPARTMENT OF TRANSPORTATION
Caltrans
DESIGN

FUNCTIONAL SUPERVISOR: GEORGE MORHIG
CALCULATED-DESIGNED BY: TOM NGUYEN
CHECKED BY: GEORGE MORHIG
REVISED BY
DATE REVISED

LAST REVISION 06-07-16
DATE PLOTTED => 31-AUG-2016
TIME PLOTTED => 15:53

Dist	COUNTY	ROUTE	POST MILES TOTAL PROJECT	SHEET No.	TOTAL SHEETS
08	SBd	15	R107.3	20	263

REGISTERED CIVIL ENGINEER 6-7-16 DATE

6-13-16
PLANS APPROVAL DATE

REGISTERED PROFESSIONAL ENGINEER GEORGE MORHIG No. C50349 Exp. 11-30-17 CIVIL STATE OF CALIFORNIA

THE STATE OF CALIFORNIA OR ITS OFFICERS OR AGENTS SHALL NOT BE RESPONSIBLE FOR THE ACCURACY OR COMPLETENESS OF SCANNED COPIES OF THIS PLAN SHEET.

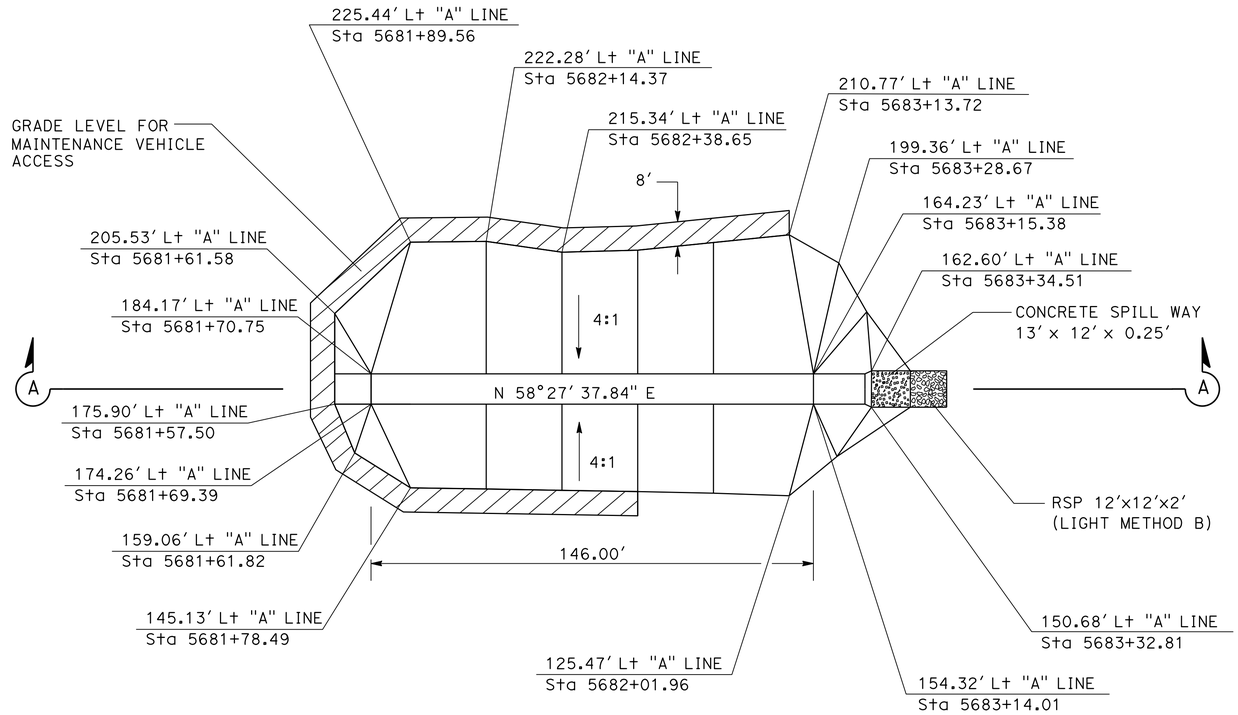

PLAN

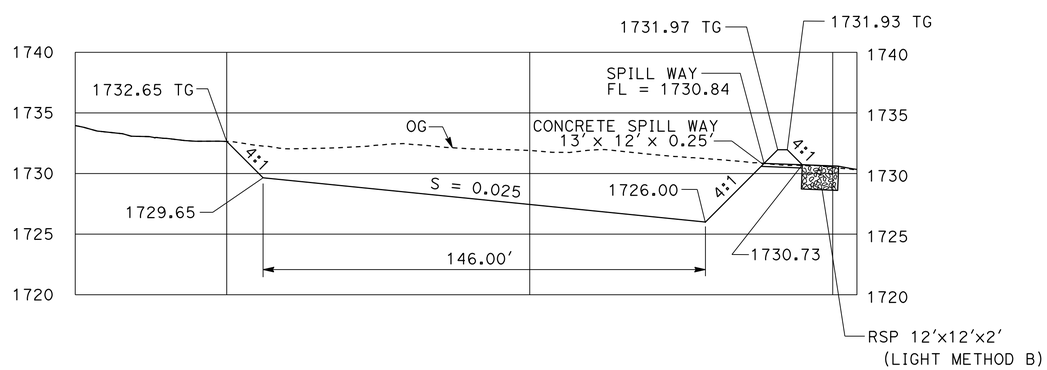

SECTION A-A

BASIN 1
VOLUME = 146' x 10' x 3' = 4380 CF

DRAINAGE DETAILS
NO SCALE

DD-2

STATE OF CALIFORNIA - DEPARTMENT OF TRANSPORTATION
Caltrans® DESIGN

FUNCTIONAL SUPERVISOR: GEORGE MORHIG
CALCULATED-DESIGNED BY: TOM NGUYEN
CHECKED BY: GEORGE MORHIG
REVISED BY
DATE REVISED

LAST REVISION 06-07-16
DATE PLOTTED => 31-AUG-2016
TIME PLOTTED => 15:53

Dist	COUNTY	ROUTE	POST MILES TOTAL PROJECT	SHEET No.	TOTAL SHEETS
08	SBd	15	R107.3	21	263

REGISTERED CIVIL ENGINEER 6-7-16 DATE

6-13-16
PLANS APPROVAL DATE

REGISTERED PROFESSIONAL ENGINEER GEORGE MORHIG No. C50349 Exp. 11-30-17 CIVIL STATE OF CALIFORNIA

THE STATE OF CALIFORNIA OR ITS OFFICERS OR AGENTS SHALL NOT BE RESPONSIBLE FOR THE ACCURACY OR COMPLETENESS OF SCANNED COPIES OF THIS PLAN SHEET.

NOTE:

1. THE PRECISE DETERMINATION OF THE FOLLOWING ITEMS WILL BE MADE BY THE ENGINEER IN THE FIELD: STATION, SKEW, LENGTH, FL ELEVATION, AND DEPTH OF STRUCTURE.

ABBREVIATION:

S - STANDARD JOINT TYPE

DRAINAGE QUANTITIES

DRAINAGE SYSTEM No.	DRAINAGE SHEET No.	DRAINAGE UNIT	STATION	DESCRIPTION	MINOR CONCRETE (MINOR STRUCTURE)	Misc IRON AND STEEL	ROCK SLOPE PROTECTION (LIGHT, METHOD B)	ROCK SLOPE PROTECTION FABRIC (CLASS 8)	(N) GRATE TYPE 24-12	(N) HEIGHT OF INLET "H"	18" REINFORCED CONCRETE PIPE	PIPE JOINT CLASSIFICATION	18" CONCRETE FLARED END SECTION
					CY	LB	CY	SQYD	EA	FT	LF		EA
1	D-1	a		RSP SEE SHEET No. DD-1			4.07	13.22					
		b		CFES									1
		c		18" RCP							235.41	S	
		d	374.93 Lt "A LINE" 5669+70.83	G3 DI	1.61	326			1	5.63			
		e		18" RCP							111.15	S	
		f	481.27 Lt "A LINE" 5670+15.79	G3 DI	1.47	326			1	5.00			
2	D-2	a		RSP SEE SHEET No. DD-1			4.07	13.22					
		b		CFES									1
		c		18" RCP							357.24	S	
	D-1	d	282.00 Lt "A LINE" 5678+23.88	G3 DI	1.54	326			1	5.34			
		e		18" RCP							122.06	S	
		f	391.82 Lt "A LINE" 5677+64.19	G3 DI	1.51	326			1	5.22			
		g		18" RCP							146.43	S	
		h	519.10 Lt "A LINE" 5676+86.12	G3 DI	1.54	326			1	5.25			
		I		18" RCP							156.27	S	
		j	604.74 Lt "A LINE" 5675+47.85	G3 DI	1.55	326			1	5.35			
		k		18" RCP							185.50	S	
		l	632.01 Lt "A LINE" 5673+35.51	G1 DI	1.43	326			1	5.22			
		m		18" RCP							146.64	S	
		n	591.93 Lt "A LINE" 5671+71.60	G1 DI	1.28	326			1	4.5			
	DD-1			CONCRETE RIBBON GUTTER	38.1								
	DD-2			BASIN 1	1.45		10.65	26.65					
				TOTAL	51.48	2608	18.79	53.09			1460.70		2

(N) - NOT A SEPARATE PAY ITEM; FOR INFORMATION ONLY.

STATE OF CALIFORNIA - DEPARTMENT OF TRANSPORTATION
Caltrans DESIGN
FUNCTIONAL SUPERVISOR GEORGE MORHIG
CALCULATED-DESIGNED BY TOM NGUYEN
CHECKED BY GEORGE MORHIG
REVISED BY
DATE REVISED

DRAINAGE QUANTITIES
DQ-1

LAST REVISION 06-07-16
DATE PLOTTED => 31-AUG-2016
TIME PLOTTED => 15:53

Dist	COUNTY	ROUTE	POST MILES TOTAL PROJECT	SHEET No.	TOTAL SHEETS
08	SBd	15	R107.3	22	263

REGISTERED CIVIL ENGINEER 6-7-16 DATE

6-13-16
PLANS APPROVAL DATE

REGISTERED PROFESSIONAL ENGINEER GEORGE MORHIG No. C50349 Exp. 11-30-17 CIVIL STATE OF CALIFORNIA

THE STATE OF CALIFORNIA OR ITS OFFICERS OR AGENTS SHALL NOT BE RESPONSIBLE FOR THE ACCURACY OR COMPLETENESS OF SCANNED COPIES OF THIS PLAN SHEET.

NOTES:

1. THE PURPOSED OF THIS MAP IS TO SHOW THE LOCATION OF THE EXISTING UNDERGROUND TELEPHONE. TOPOGRAPHIC FEATURES WERE PROVIDED BY OTHERS AND SHOULD BE USED ONLY AS AN AID FOR ORIENTATION.
2. THIS MAP DOES NOT SHOW EXISTING CALTRANS FACILITIES, WHICH MAY INCLUDE STREET LIGHT ELECTRICAL, DRAINAGE, IRRIGATION AND TRAFFIC OPERATION COMMUNICATION FACILITIES.
3. FOR ACCURATE RIGHT OF WAY DATA, CONTACT RIGHT OF WAY ENGINEERING AT THE DISTRICT OFFICE.

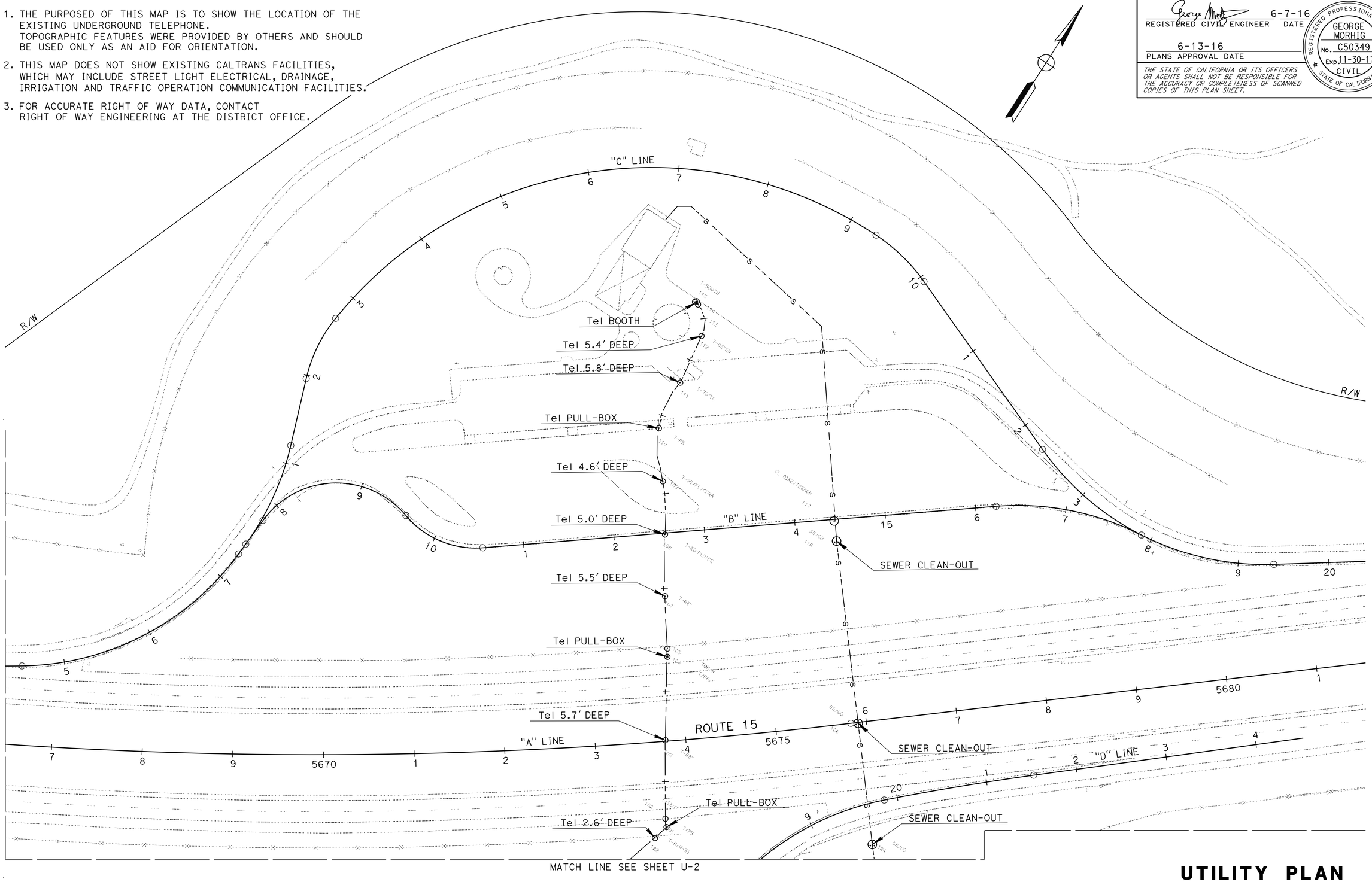

UTILITY PLAN

SCALE: 1" = 50'

U-1

THIS PLAN TO BE USED FOR UTILITY INFORMATION ONLY

STATE OF CALIFORNIA - DEPARTMENT OF TRANSPORTATION

Caltrans® **DESIGN**

FUNCTIONAL SUPERVISOR: GEORGE MORHIG

CALCULATED-DESIGNED BY: TOM NGUYEN

CHECKED BY: GEORGE MORHIG

REVISED BY

DATE REVISED

LAST REVISION 06-07-16

DATE PLOTTED => 31-AUG-2016
TIME PLOTTED => 15:53

Dist	COUNTY	ROUTE	POST MILES TOTAL PROJECT	SHEET No.	TOTAL SHEETS
08	SBd	15	R107.3	23	263

REGISTERED CIVIL ENGINEER 6-7-16 DATE

6-13-16
PLANS APPROVAL DATE

REGISTERED PROFESSIONAL ENGINEER GEORGE MORHIG No. C50349 Exp. 11-30-17 CIVIL STATE OF CALIFORNIA

THE STATE OF CALIFORNIA OR ITS OFFICERS OR AGENTS SHALL NOT BE RESPONSIBLE FOR THE ACCURACY OR COMPLETENESS OF SCANNED COPIES OF THIS PLAN SHEET.

NOTES:

1. THE PURPOSED OF THIS MAP IS TO SHOW THE LOCATION OF THE EXISTING UNDERGROUND TELEPHONE. TOPOGRAPHIC FEATURES WERE PROVIDED BY OTHERS AND SHOULD BE USED ONLY AS AN AID FOR ORIENTATION.
2. THIS MAP DOES NOT SHOW EXISTING CALTRANS FACILITIES, WHICH MAY INCLUDE STREET LIGHT ELECTRICAL, DRAINAGE, IRRIGATION AND TRAFFIC OPERATION COMMUNICATION FACILITIES.
3. FOR ACCURATE RIGHT OF WAY DATA, CONTACT RIGHT OF WAY ENGINEERING AT THE DISTRICT OFFICE.

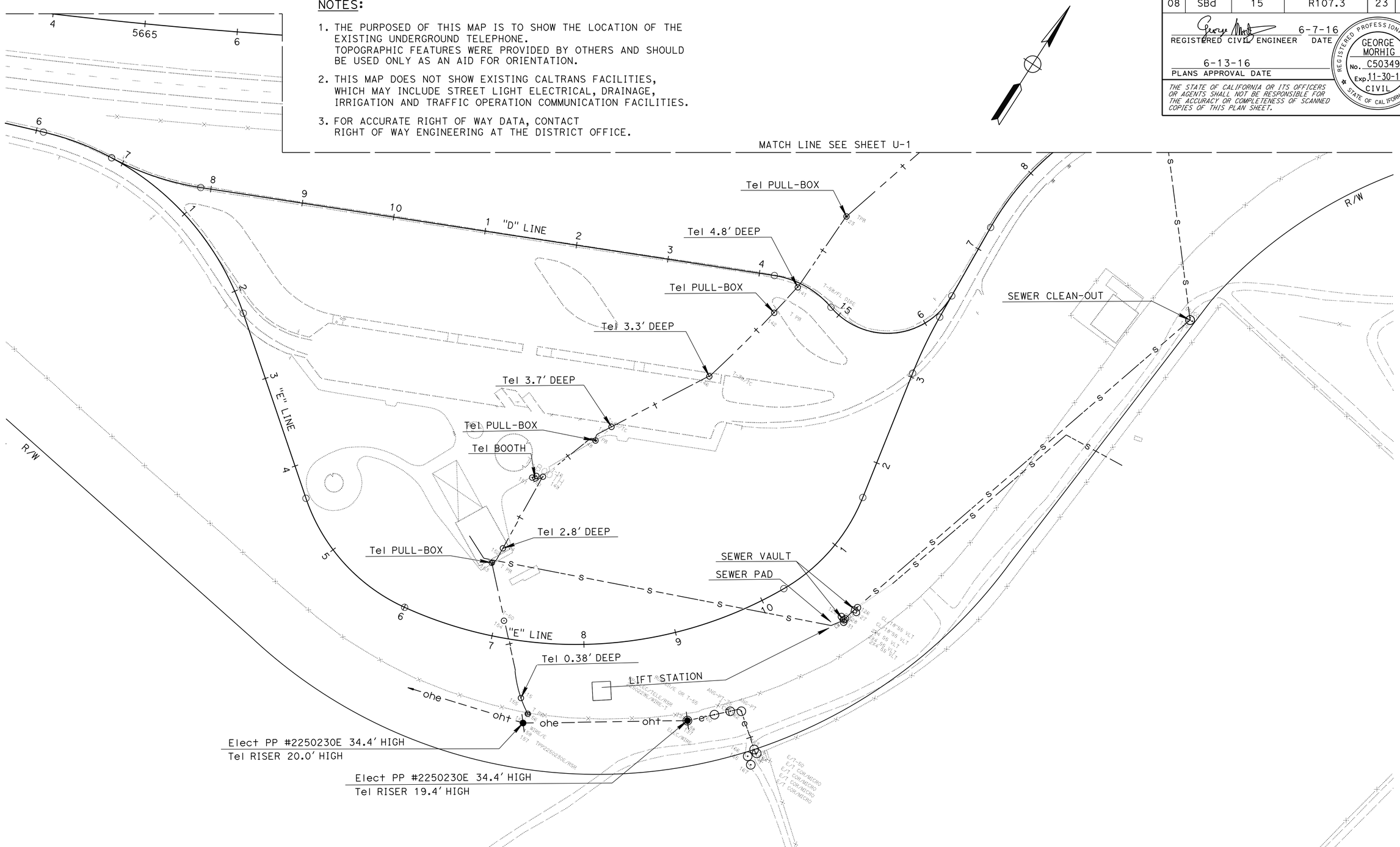

THIS PLAN TO BE USED FOR UTILITY INFORMATION ONLY

UTILITY PLAN

SCALE: 1" = 50'

U-2

STATE OF CALIFORNIA - DEPARTMENT OF TRANSPORTATION
Caltrans®
DESIGN

FUNCTIONAL SUPERVISOR: GEORGE MORHIG
CALCULATED-DESIGNED BY: TOM NGUYEN
CHECKED BY: GEORGE MORHIG
REVISED BY
DATE REVISED

LAST REVISION 06-07-16
DATE PLOTTED => 31-AUG-2016
TIME PLOTTED => 15:53

Dist	COUNTY	ROUTE	POST MILES TOTAL PROJECT	SHEET No.	TOTAL SHEETS
08	SBd	15	R107.3	24	263

REGISTERED CIVIL ENGINEER 6-7-16 DATE

6-13-16
PLANS APPROVAL DATE

REGISTERED PROFESSIONAL ENGINEER TRAN HOANG No. C54996 Exp. 6-30-18 CIVIL STATE OF CALIFORNIA

THE STATE OF CALIFORNIA OR ITS OFFICERS OR AGENTS SHALL NOT BE RESPONSIBLE FOR THE ACCURACY OR COMPLETENESS OF SCANNED COPIES OF THIS PLAN SHEET.

NOTES:

1. EXACT SIGN LOCATIONS TO BE DETERMINED BY THE ENGINEER.
2. EXIT RAMPS TO REMAIN CLOSED UNTIL THE FINAL HOT MIX ASPHALT WORK AND FINAL PAVEMENT DELINEATION IS COMPLETED.
3. NO TEMPORARY PAVEMENT DELINEATION TO BE INSTALLED AFTER HOT MIX ASPHALT WORK (RAMPS TO REMAIN CLOSED UNTIL FINAL DELINEATION).
4. CHANNELIZERS (SURFACE MOUNTED) SHALL BE INSTALLED AND REMOVED TWICE.
   FIRST TIME IS WHEN THE WORK IN REST AREA IS UNDER CONSTRUCTION.
   SECOND TIME IS AFTER THE SLURRY SEAL WORK ON THE RAMPS AND BEFORE THE FINAL DELINEATION IS COMPLETED.
   QUANTITY OF CHANNELIZER (SURFACE MOUNTED) REFLECTS TWO TIME OPERATION FOR EACH EXIT RAMP.

LEGEND:

- ONE POST SIGN
- TWO POST SIGN
- CHANNELIZER (SURFACE MOUNTED)
- PORTABLE BARRICADE (TYPE III)

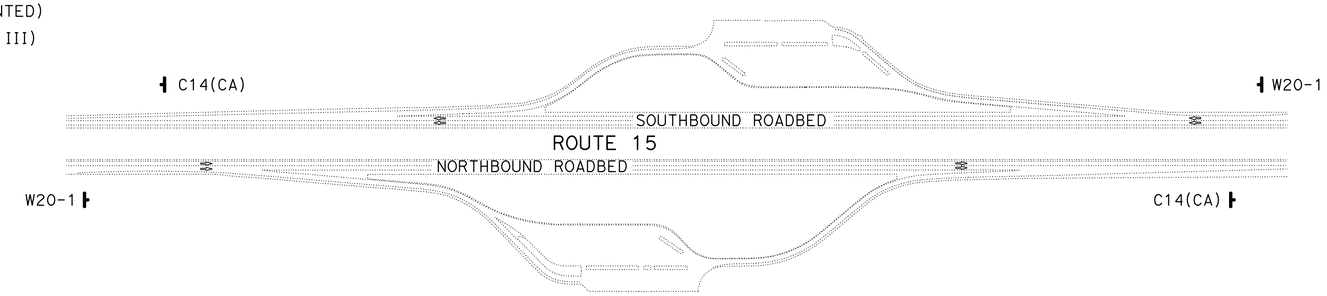

C. V. KANE SAFETY ROADSIDE REST AREA

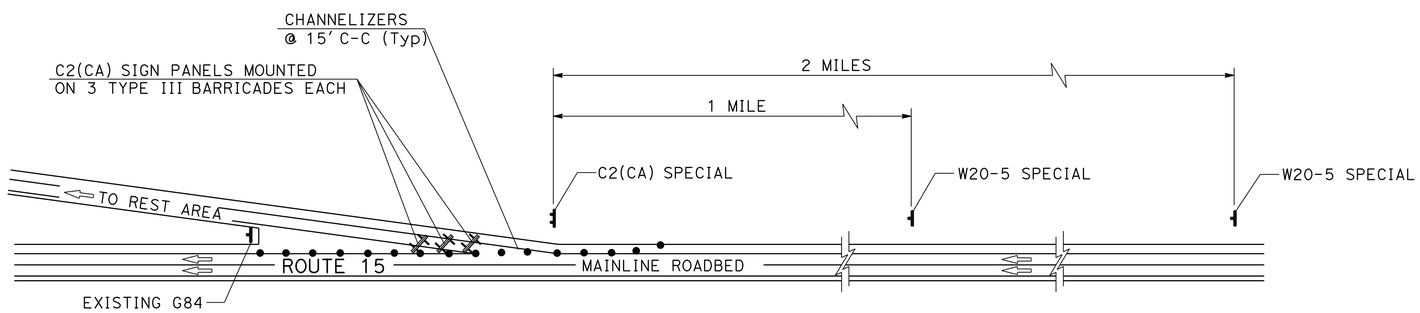

CONSTRUCTION AREA SIGNS

(TYPICAL)

W20-5 SPECIAL
48" x 48" PANEL
BLACK ON ORANGE
6" C LETTERS

C2(CA) SPECIAL
72" x 30" PANEL
BLACK ON WHITE
8" D LETTERS

STATIONARY MOUNTED CONSTRUCTION AREA SIGNS

SIGN CODE		PANEL SIZE	SIGN MESSAGE	NUMBER OF POSTS AND SIZE	No. (N) OF SIGNS
FEDERAL	CALIFORNIA				
W20-1		48" x 48"	ROAD WORK AHEAD	1 - 6" x 6"	2
	C14(CA)	48" x 24"	END ROAD WORK	1 - 4" x 6"	2
W20-5 SPECIAL		48" x 48"	REST AREA CLOSED AHEAD	1 - 6" x 6"	4
	C2(CA) SPECIAL	72" x 30"	REST AREA CLOSED	2 - 4" x 6"	2
	C2(CA)	36" x 24"	RAMP CLOSED	MOUNT ON BARRICADES	6

(N) NOT A SEPARATE PAY ITEM, FOR INFORMATION ONLY.
SIGN PANELS ARE SINGLE FACED 0.08" ALUMINUM

TYPE III BARRICADE

(EA)
6

CHANNELIZER (SURFACE MOUNTED)

(EA)
160

CONSTRUCTION AREA SIGNS

NO SCALE

CS-1

APPROVED FOR CONSTRUCTION AREA SIGN WORK ONLY

REVISED BY | DATE REVISED
HORMUZD SETHNA | TRAN HOANG
CALCULATED-DESIGNED BY | CHECKED BY
FUNCTIONAL SUPERVISOR | MARIO AMANCIO
STATE OF CALIFORNIA - DEPARTMENT OF TRANSPORTATION
Caltrans® TRAFFIC DESIGN

LAST REVISION 06-07-16 | DATE PLOTTED => 31-AUG-2016 | TIME PLOTTED => 15:53

Dist	COUNTY	ROUTE	POST MILES TOTAL PROJECT	SHEET No.	TOTAL SHEETS
08	SBd	15	R107.3	25	263

REGISTERED CIVIL ENGINEER 6-7-16 DATE

6-13-16
PLANS APPROVAL DATE

REGISTERED PROFESSIONAL ENGINEER
TRAN HOANG
No. C54996
Exp. 6-30-18
CIVIL
STATE OF CALIFORNIA

THE STATE OF CALIFORNIA OR ITS OFFICERS OR AGENTS SHALL NOT BE RESPONSIBLE FOR THE ACCURACY OR COMPLETENESS OF SCANNED COPIES OF THIS PLAN SHEET.

NOTES:

1. ALL EDGELINES INCLUDING STRIPINGS FOR PARKING STALLS TO BE SPRAYABLE THERMOPLASTIC.
2. ALL PAVEMENT MARKINGS TO BE THERMOPLASTIC.
3. SPACING BETWEEN DELINEATORS IS APPROXIMATELY 50 FEET.
4. SEE ARCHITECTURAL PLANS FOR ACCESSIBLE PARKING PAVEMENT MARKINGS AND SIGNS.

LEGEND:

- ROADSIDE SIGN (ONE POST)
- ROADSIDE SIGN (TWO POST)
- (1-1) SIGN NUMBER
- F DELINEATOR (CLASS 2) TYPE F
- G DELINEATOR (CLASS 2) TYPE G
- TYPE V ARROW (THERMOPLASTIC)

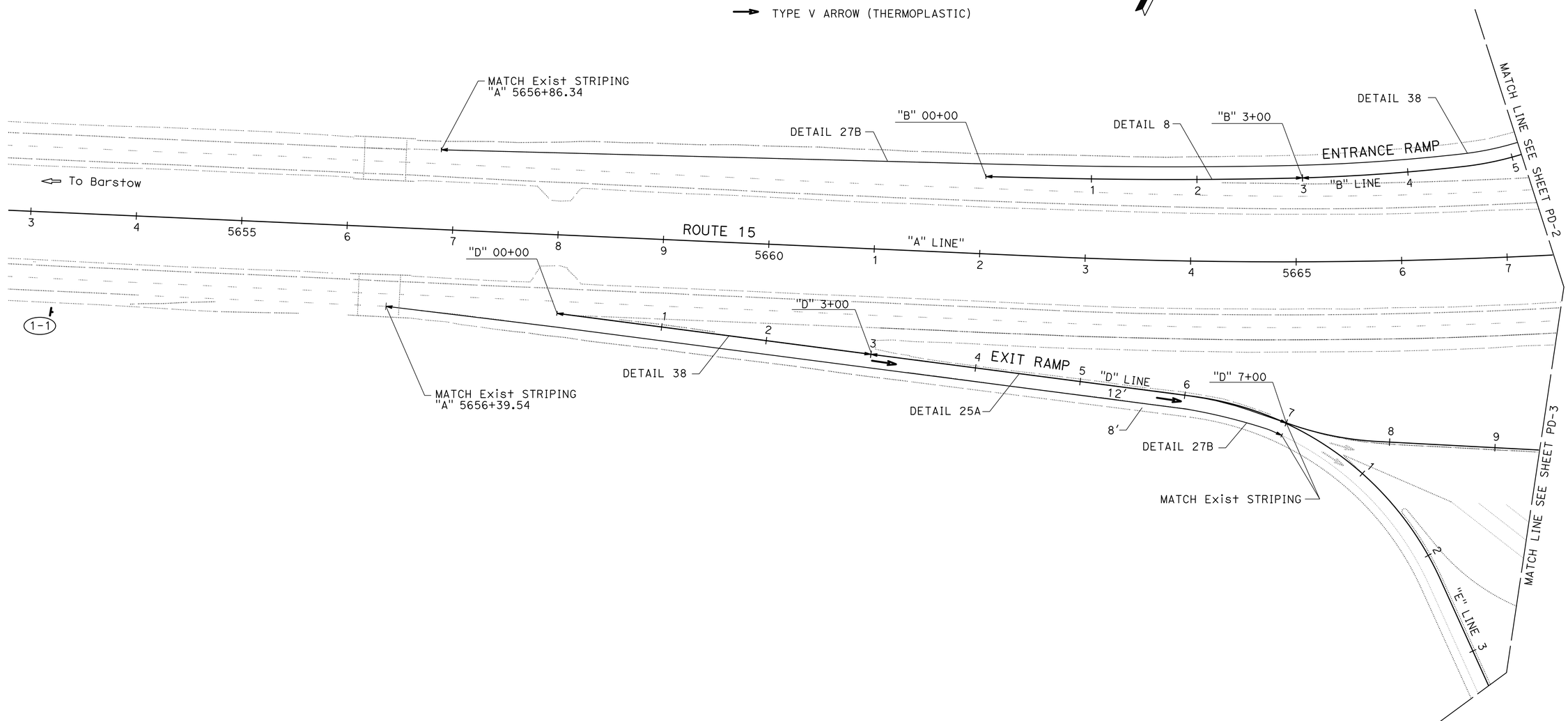

PAVEMENT DELINEATION AND SIGN PLAN

NO SCALE

PD-1

APPROVED FOR PAVEMENT DELINEATION AND SIGN WORK ONLY

REVISED BY	DATE REVISED

HORMUZD SETHNA	TRAN HOANG
CALCULATED-DESIGNED BY	CHECKED BY
FUNCTIONAL SUPERVISOR	MARIO AMANCIO

STATE OF CALIFORNIA - DEPARTMENT OF TRANSPORTATION
Caltrans® TRAFFIC DESIGN

LAST REVISION OG-07-16
DATE PLOTTED => 31-AUG-2016
TIME PLOTTED => 15:53

Dist	COUNTY	ROUTE	POST MILES TOTAL PROJECT	SHEET No.	TOTAL SHEETS
08	SBd	15	R107.3	26	263

REGISTERED CIVIL ENGINEER 6-7-16 DATE

6-13-16
PLANS APPROVAL DATE

REGISTERED PROFESSIONAL ENGINEER TRAN HOANG No. C54996 Exp. 6-30-18 CIVIL STATE OF CALIFORNIA

THE STATE OF CALIFORNIA OR ITS OFFICERS OR AGENTS SHALL NOT BE RESPONSIBLE FOR THE ACCURACY OR COMPLETENESS OF SCANNED COPIES OF THIS PLAN SHEET.

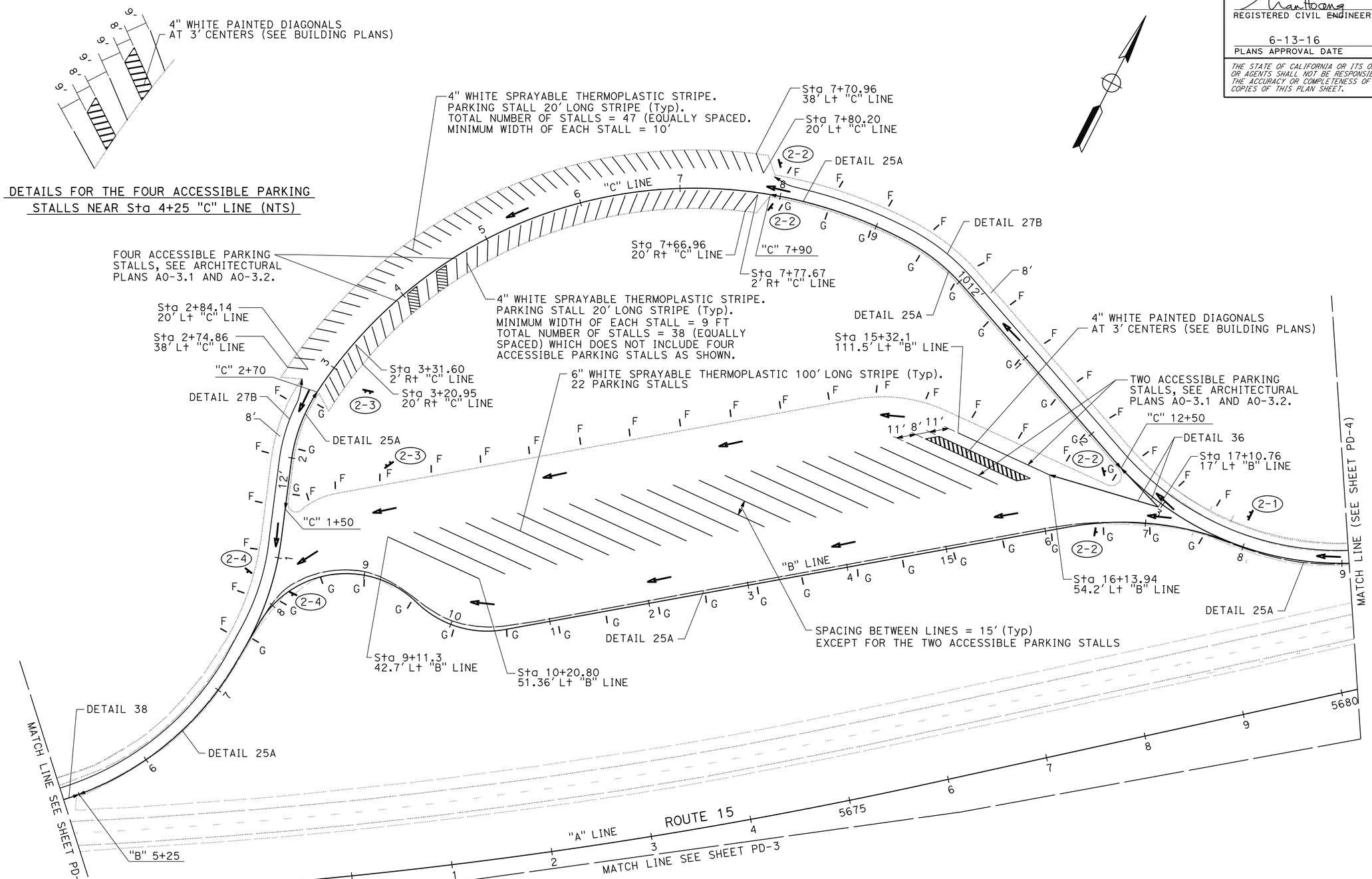

PAVEMENT DELINEATION AND SIGN PLAN

NO SCALE

PD-2

APPROVED FOR PAVEMENT DELINEATION AND SIGN WORK ONLY

STATE OF CALIFORNIA - DEPARTMENT OF TRANSPORTATION
Caltrans® TRAFFIC DESIGN

FUNCTIONAL SUPERVISOR: MARIO AMANCIO
CALCULATED-DESIGNED BY: HORMUZD SETHNA
CHECKED BY: TRAN HOANG
REVISED BY
DATE REVISED

LAST REVISION 06-07-16
DATE PLOTTED => 31-AUG-2016
TIME PLOTTED => 15:53

Dist	COUNTY	ROUTE	POST MILES TOTAL PROJECT	SHEET No.	TOTAL SHEETS
08	SBd	15	R107.3	27	263

REGISTERED CIVIL ENGINEER 6-7-16 DATE

6-13-16
PLANS APPROVAL DATE

REGISTERED PROFESSIONAL ENGINEER
TRAN HOANG
No. C54996
Exp. 6-30-18
CIVIL
STATE OF CALIFORNIA

THE STATE OF CALIFORNIA OR ITS OFFICERS OR AGENTS SHALL NOT BE RESPONSIBLE FOR THE ACCURACY OR COMPLETENESS OF SCANNED COPIES OF THIS PLAN SHEET.

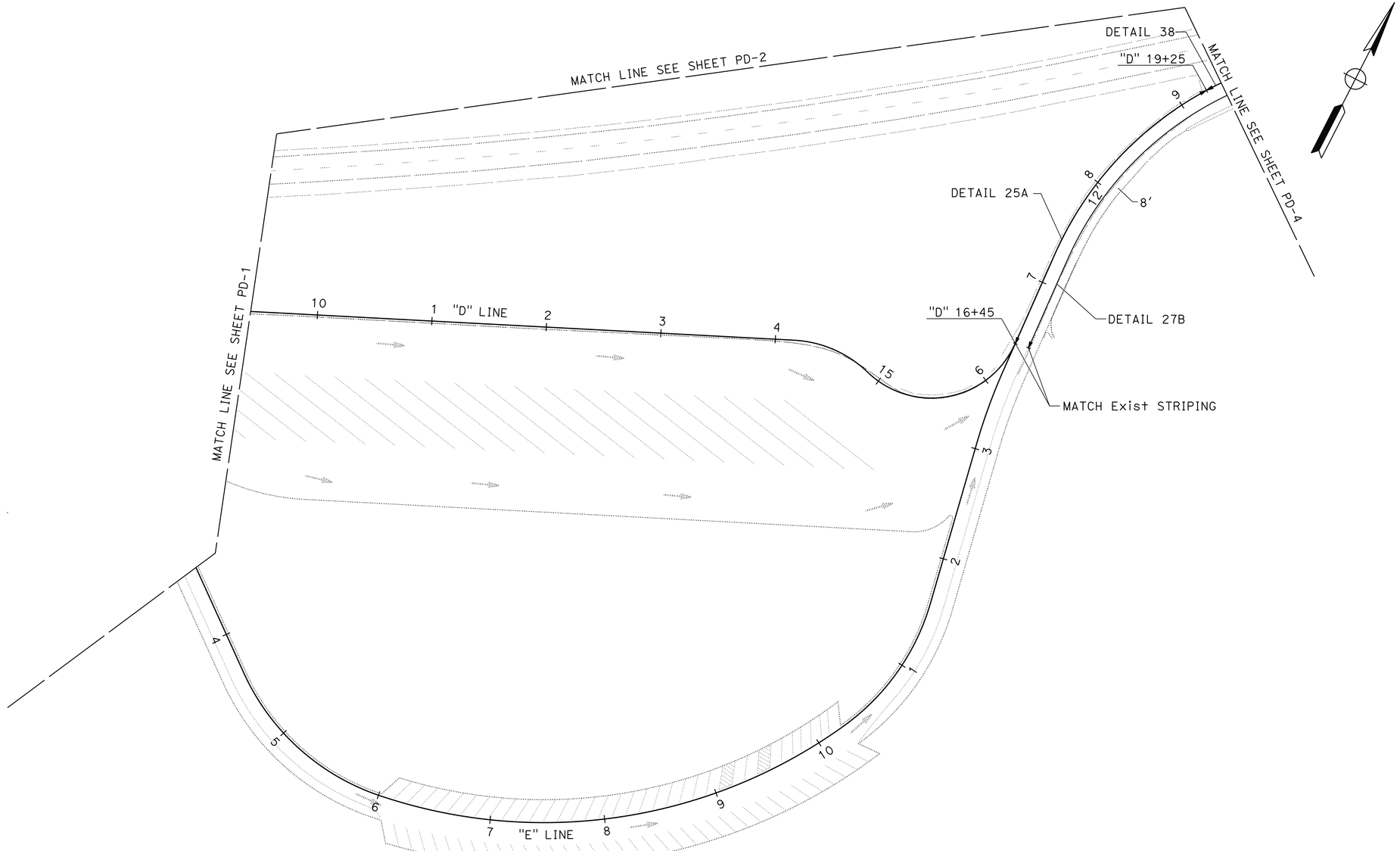

PAVEMENT DELINEATION AND SIGN PLAN

NO SCALE

PD-3

APPROVED FOR PAVEMENT DELINEATION AND SIGN WORK ONLY

STATE OF CALIFORNIA - DEPARTMENT OF TRANSPORTATION
Caltrans® TRAFFIC DESIGN

FUNCTIONAL SUPERVISOR: MARIO AMANCIO
CALCULATED-DESIGNED BY: HORMUZD SETHNA
CHECKED BY: TRAN HOANG
REVISED BY
DATE REVISED

LAST REVISION 06-07-16
DATE PLOTTED => 31-AUG-2016
TIME PLOTTED => 15:53

Dist	COUNTY	ROUTE	POST MILES TOTAL PROJECT	SHEET No.	TOTAL SHEETS
08	SBd	15	R107.3	28	263

REGISTERED CIVIL ENGINEER 6-7-16 DATE

6-13-16
PLANS APPROVAL DATE

REGISTERED PROFESSIONAL ENGINEER
TRAN HOANG
No. C54996
Exp. 6-30-18
CIVIL
STATE OF CALIFORNIA

THE STATE OF CALIFORNIA OR ITS OFFICERS OR AGENTS SHALL NOT BE RESPONSIBLE FOR THE ACCURACY OR COMPLETENESS OF SCANNED COPIES OF THIS PLAN SHEET.

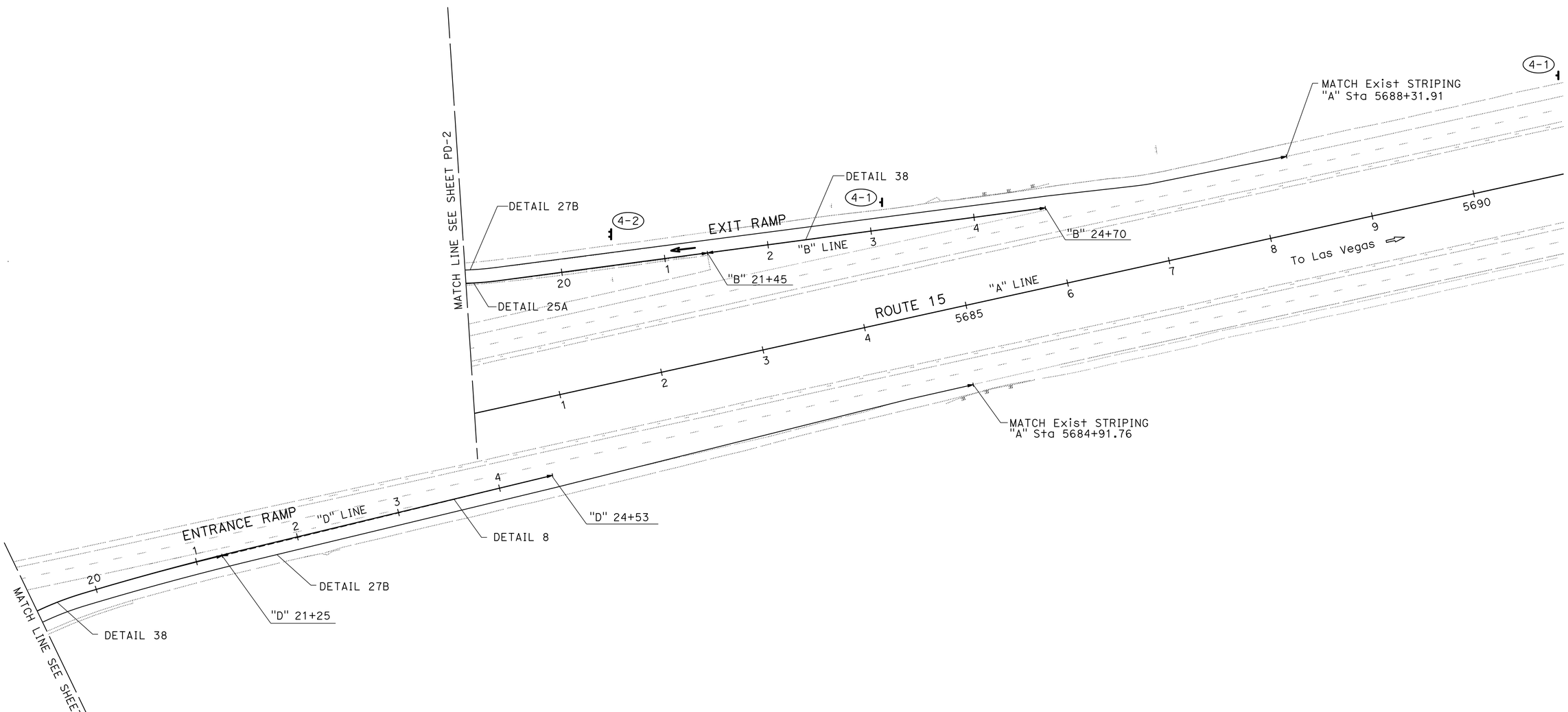

PAVEMENT DELINEATION AND SIGN PLAN

NO SCALE

PD-4

APPROVED FOR PAVEMENT DELINEATION AND SIGN WORK ONLY

REVISED BY	DATE REVISED

CALCULATED-DESIGNED BY: HORMUZD SETHNA
CHECKED BY: TRAN HOANG

FUNCTIONAL SUPERVISOR: MARIO AMANCIO

STATE OF CALIFORNIA - DEPARTMENT OF TRANSPORTATION
Caltrans® TRAFFIC DESIGN

LAST REVISION 06-07-16 | DATE PLOTTED => 31-AUG-2016 | TIME PLOTTED => 15:53

Dist	COUNTY	ROUTE	POST MILES TOTAL PROJECT	SHEET No.	TOTAL SHEETS
08	SBd	15	R107.3	29	263

REGISTERED CIVIL ENGINEER 6-7-16 DATE

6-13-16
PLANS APPROVAL DATE

REGISTERED PROFESSIONAL ENGINEER TRAN HOANG No. C54996 Exp. 6-30-18 CIVIL STATE OF CALIFORNIA

THE STATE OF CALIFORNIA OR ITS OFFICERS OR AGENTS SHALL NOT BE RESPONSIBLE FOR THE ACCURACY OR COMPLETENESS OF SCANNED COPIES OF THIS PLAN SHEET.

NOTE:

1. SEE ARCHITECTURAL PLANS FOR PAINTED PAVEMENT MARKING DISABLED PERSONS PARKING SYMBOLS.

PAVEMENT DELINEATION QUANTITIES

SHEET No.	LOCATION/STATION	DETAIL No. OR PAVEMENT MARKING	PAVEMENT MARKER RETROREFLECTIVE		DELINEATOR (CLASS 2)		THERMOPLASTIC TRAFFIC STRIPE (SPRAYABLE)				THERMOPLASTIC PAVEMENT MARKING
			TYPE G	TYPE H	TYPE F	TYPE G	4" YELLOW	4" WHITE	6" WHITE	8" WHITE	
			EA	EA	EA	EA	LF				SQFT
PD-1	"A" 5656+39.54 TO "D" 7+00	27B	-	-	-	-	-	860	-	-	-
PD-1	"D" 0+00 TO "D" 3+00	38	14	-	-	-	-	-	-	300	-
PD-1	"D" 3+00 TO "D" 7+00	25A	-	18	-	-	400	-	-	-	-
PD-1	"A" 5656+86.34 TO "B" 5+08	27B	-	-	-	-	-	1022	-	-	-
PD-1	"B" 0+00 TO "B" 3+00	8	-	-	-	-	-	300	-	-	-
PD-1	"B" 3+00 TO "B" 5+08	38	10	-	-	-	-	-	-	208	-
PD-2	"B" 5+08 TO "C" 2+74.86	27B	-	-	-	-	-	522	-	-	-
PD-2	"B" 5+08 TO "B" 5+25	38	2	-	-	-	-	-	-	17	-
PD-2	"C" 1+50 TO "C" 2+70	25A	-	7	-	-	120	-	-	-	-
PD-2	"B" 5+25 TO "B" 19+08	25A	-	59	-	-	1383	-	-	-	-
PD-2	"C" 7+90 TO "B" 19+08	27B	-	-	-	-	-	718	-	-	-
PD-2	"C" 7+90 TO "C" 12+50	25A	-	21	-	-	460	-	-	-	-
PD-2	"B" 16+13.94 TO "B" 17+10.76	36	8	-	-	-	-	-	-	166	-
PD-3	"D" 16+45 TO "D" 19+25	25A	-	13	-	-	280	-	-	-	-
PD-3	"D" 19+25 TO "D" 19+37	38	2	-	-	-	-	-	-	12	-
PD-3	"D" 16+45 TO "D" 19+37	27B	-	-	-	-	-	292	-	-	-
PD-4	"D" 19+37 TO "D" 21+25	38	9	-	-	-	-	-	-	188	-
PD-4	"D" 21+25 TO "D" 24+52.52	8	-	-	-	-	-	328	-	-	-
PD-4	"D" 19+37 TO "A" 5684+91	27B	-	-	-	-	-	932	-	-	-
PD-4	"A" 5680+15 TO "A" 5688+31.91	27B	-	-	-	-	-	816	-	-	-
PD-4	"B" 19+08 TO "B" 21+45	25A	-	11	-	-	240	-	-	-	-
PD-4	"B" 21+45 TO "B" 24+69.33	38	15	-	-	-	-	-	-	330	-
PD-2	"C" 2+75 TO "C" 7+90	4" WHITE PARKING STRIPES	-	-	-	-	-	2100	-	-	-
PD-2	"B" 9+10 TO "B" 10+20	6" WHITE PARKING STRIPES	-	-	-	-	-	-	2400	-	-
PD-1	NB REST AREA (2 LOCATIONS)	TYPE V ARROW	-	-	-	-	-	-	-	-	66
PD-2, PD-4	SB REST AREA (18 LOCATIONS)	TYPE V ARROW	-	-	-	-	-	-	-	-	594
PD-2	SB REST AREA	-	-	-	35	34	-	-	-	-	-
SUBTOTAL			60	129	35	34	2883	7890	2400	1221	660
TOTAL			189		69		14394				660

REVISED BY | DATE REVISED

HORMUZD SETHNA | TRAN HOANG

CALCULATED-DESIGNED BY | CHECKED BY

FUNCTIONAL SUPERVISOR: MARIO AMANCIO

STATE OF CALIFORNIA - DEPARTMENT OF TRANSPORTATION

Caltrans® TRAFFIC DESIGN

PAVEMENT DELINEATION QUANTITIES

PDQ-1

LAST REVISION 06-07-16 | DATE PLOTTED => 31-AUG-2016 | TIME PLOTTED => 15:53

Dist	COUNTY	ROUTE	POST MILES TOTAL PROJECT	SHEET No.	TOTAL SHEETS
08	SBd	15	R107.3	30	263

REGISTERED CIVIL ENGINEER 6-7-16 DATE

6-13-16
PLANS APPROVAL DATE

REGISTERED PROFESSIONAL ENGINEER TRAN HOANG No. C54996 Exp. 6-30-18 CIVIL STATE OF CALIFORNIA

THE STATE OF CALIFORNIA OR ITS OFFICERS OR AGENTS SHALL NOT BE RESPONSIBLE FOR THE ACCURACY OR COMPLETENESS OF SCANNED COPIES OF THIS PLAN SHEET.

REMOVE PAVEMENT DELINEATION QUANTITIES

SHEET No.	LOCATION/STATION	DETAIL No. OR PAVEMENT MARKING	REMOVE YELLOW THERMOPLASTIC TRAFFIC STRIPE (HAZARDOUS WASTE) 4" YELLOW LF
PD-1	"A" 5656+39.54 TO "D" 7+00	27B	-
PD-1	"D" 0+00 TO "D" 3+00	38	-
PD-1	"D" 3+00 TO "D" 7+00	25A	400
PD-1,2	"A" 5656+86.34 TO "B" 7+45.29	27B	-
PD-1	"B" 0+00 TO "B" 3+00	8	-
PD-1,2	"B" 3+00 TO "B" 5+25	38	-
PD-2	"B" 5+25 TO "B" 7+50	25A	225
PD-2,4	"B" 17+50 TO "A" 5688+31.91	27B	-
PD-2,4	"B" 17+50 TO "B" 21+45	25A	395
PD-4	"B" 21+45 TO "B" 24+75	38	-
PD-3,4	"D" 16+45 TO "D" 19+25	25A	280
PD-3,4	"D" 19+25 TO "D" 21+25	38	-
PD-4	"D" 21+25 TO "D" 24+52.52	8	-
PD-3,4	"D" 16+45 TO "A" 5684+91	27B	-
PD-1	NB REST AREA (2 LOCATIONS)	TYPE V ARROW	-
PD-4	SB REST AREA (2 LOCATIONS)	TYPE V ARROW	-
SUBTOTAL			1300
TOTAL			1300

PAVEMENT DELINEATION QUANTITIES

PDQ-2

STATE OF CALIFORNIA - DEPARTMENT OF TRANSPORTATION
Caltrans® TRAFFIC DESIGN

FUNCTIONAL SUPERVISOR: MARIO AMANCIO
CALCULATED-DESIGNED BY: HORMUZD SETHNA
CHECKED BY: TRAN HOANG
REVISED BY
DATE REVISED

LAST REVISION 06-07-16
DATE PLOTTED => 31-AUG-2016
TIME PLOTTED => 15:53

Dist	COUNTY	ROUTE	POST MILES TOTAL PROJECT	SHEET No.	TOTAL SHEETS
08	SBd	15	R107.3	31	263

REGISTERED CIVIL ENGINEER DATE 6-7-16

6-13-16
PLANS APPROVAL DATE

REGISTERED PROFESSIONAL ENGINEER
TRAN HOANG
No. C54996
Exp. 6-30-18
CIVIL
STATE OF CALIFORNIA

THE STATE OF CALIFORNIA OR ITS OFFICERS OR AGENTS SHALL NOT BE RESPONSIBLE FOR THE ACCURACY OR COMPLETENESS OF SCANNED COPIES OF THIS PLAN SHEET.

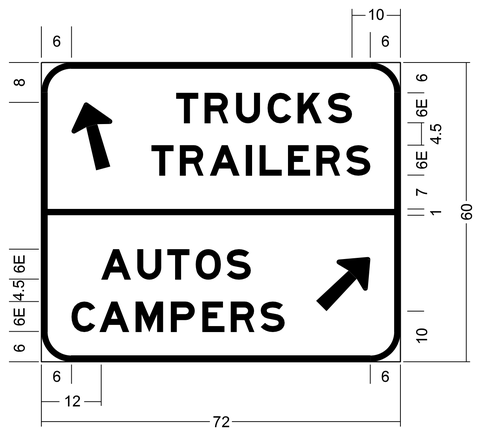

SIGN G-SPECIAL (A)

3.0" RADIUS, 1.0" BORDER;
ANGLE OF TOP LEFT ARROW IS 105 DEGREES.
ANGLE OF BOTTOM RIGHT ARROW IS 45 DEGREES.
ALL DIMENSIONS ARE IN INCHES.
COLOR: WHITE LEGEND ON GREEN BACKGROUND.
ARROW SIZE: 8.30" X 13.70"

SIGN G-SPECIAL (B)

3.0" RADIUS, 0.5" BORDER;
ALL DIMENSIONS ARE IN INCHES.
COLOR: WHITE LEGEND ON BROWN BACKGROUND.

SIGN DETAILS

NO SCALE

SD-1

STATE OF CALIFORNIA - DEPARTMENT OF TRANSPORTATION
Caltrans® TRAFFIC DESIGN

FUNCTIONAL SUPERVISOR: MARIO AMANCIO
CALCULATED-DESIGNED BY: HORMUZD SETHNA
CHECKED BY: TRAN HOANG
REVISED BY
DATE REVISED

LAST REVISION 06-07-16
DATE PLOTTED => 31-AUG-2016
TIME PLOTTED => 15:53

Dist	COUNTY	ROUTE	POST MILES TOTAL PROJECT	SHEET No.	TOTAL SHEETS
08	SBd	15	R107.3	32	263

REGISTERED CIVIL ENGINEER 6-7-16 DATE

6-13-16
PLANS APPROVAL DATE

REGISTERED PROFESSIONAL ENGINEER TRAN HOANG No. C54996 Exp. 6-30-18 CIVIL STATE OF CALIFORNIA

THE STATE OF CALIFORNIA OR ITS OFFICERS OR AGENTS SHALL NOT BE RESPONSIBLE FOR THE ACCURACY OR COMPLETENESS OF SCANNED COPIES OF THIS PLAN SHEET.

NOTES:

1. EXACT LOCATION & POSITION OF ROADSIDE SIGNS TO BE DETERMINED BY THE ENGINEER.
2. POST LENGTHS GIVEN ARE APPROXIMATE. EXACT LENGTH TO BE DETERMINED BY THE ENGINEER.

ABBREVIATIONS:

L = LENGTH OF SIGN
D = DEPTH OF SIGN

ROADSIDE SIGN QUANTITIES

SIGN No.	SIGN CODE		POST LENGTH		POST SIZE			ROADSIDE SIGN		REMARKS
			L†	R†				ONE POST	TWO POST	
	FEDERAL	CALIFORNIA	FT	FT	4"x4"	4"x6"	6"x6"	EA	EA	
1-1	W13-2 (20 MPH)		16′	-	-	X	-	1	-	
2-1		G-SPECIAL (A)	18′	18′	-	-	X	-	1	
2-2	R5-1		12′	-	X	-	-	4	-	
2-3		G-SPECIAL (B)	14′	-	-	X	-	2	-	EXACT SIZE OF POST TO BE DETERMINED IN THE FIELD BY THE ENGINEER
2-4		G92	16′	-	-	X	-	2	-	
4-1	W13-2 (20 MPH)		16′	-	-	X	-	2	-	
4-2		G-SPECIAL (A)	18′	18′	-	-	X	-	1	
TOTAL								11	2	

ROADSIDE SIGN PANEL QUANTITIES

SIGN No.	SIGN CODE		PANEL SIZE L x D	SINGLE FACED	BACKGROUND		LEGEND		PROTECTIVE OVERLAY	FURNISHED SINGLE SHEET ALUMINUM SIGN		REMARKS
					SHEETING COLOR	RETROREFLECTIVE ASTM TYPE	SHEETING COLOR	RETROREFLECTIVE ASTM TYPE	PREMIUM	FRAMED 0.080"	UNFRAMED 0.080"	
	FEDERAL	CALIFORNIA								SQFT	SQFT	
1-1	W13-2 (20 MPH)		36" x 48"	X	YELLOW	XI	BLACK	-	X	-	12.0	1 SIGN
2-1		G-SPECIAL (A)	72" x 60"	X	GREEN	XI	WHITE	XI	X	30.0	-	1 SIGN
2-2	R5-1		30" x 30"	X	WHITE/RED	VIII	-	-	X	-	25.0	4 SIGNS
2-3		G-SPECIAL (B)	42" x 24"	X	BROWN	XI	WHITE	XI	X	-	14.0	2 SIGNS
2-4		G92	48" x 30"	X	GREEN	XI	WHITE	XI	X	-	20.0	2 SIGNS
4-1	W13-2 (20 MPH)		36" x 48"	X	YELLOW	XI	BLACK	-	X	-	24.0	2 SIGNS
4-2		G-SPECIAL (A)	72" x 60"	X	GREEN	XI	WHITE	XI	X	30.0	-	1 SIGN
SHEET TOTAL (SQFT)										60.0	95.0	
GRAND TOTAL (SQFT)										60.0	95.0	

REVISED BY | DATE REVISED
HORMUZD SETHNA | TRAN HOANG
CALCULATED-DESIGNED BY | CHECKED BY
FUNCTIONAL SUPERVISOR
MARIO AMANCIO

STATE OF CALIFORNIA - DEPARTMENT OF TRANSPORTATION
Caltrans® TRAFFIC DESIGN

SIGN QUANTITIES
SQ-1

LAST REVISION 06-07-16 | DATE PLOTTED => 31-AUG-2016 TIME PLOTTED => 15:53

Dist	COUNTY	ROUTE	POST MILES TOTAL PROJECT	SHEET No.	TOTAL SHEETS
08	SBd	15	R107.3	33	263

REGISTERED CIVIL ENGINEER 6-7-16 DATE

6-13-16
PLANS APPROVAL DATE

REGISTERED PROFESSIONAL ENGINEER GEORGE MORHIG No. C50349 Exp. 11-30-17 CIVIL STATE OF CALIFORNIA

THE STATE OF CALIFORNIA OR ITS OFFICERS OR AGENTS SHALL NOT BE RESPONSIBLE FOR THE ACCURACY OR COMPLETENESS OF SCANNED COPIES OF THIS PLAN SHEET.

ROADWAY QUANTITIES

LOCATION	STATION	COLD PLANE AC PAVEMENT	REMOVE CONCRETE CURB AND SIDEWALK	CLASS 2 AGGREGATE BASE	HMA (TYPE A)	RHMA (GAP GRADED)	TACK COAT	PRIME COAT	PLACE HOT ASPHALT DIKE (TYPE E)
		SQYD	SQYD	CY	TON				LF
"B" LINE	7+77.67 - 24+69.33		450	1,468	3,286	1,643	10.5	10.0	
"C" LINE	0+00.00 - 13+78.45			633	885	714	4.6	4.3	1,183
SB ENTRANCE RAMP	SEE LAYOUT L-1, L-2	2,855				373	2.4		
SB EXIT RAMP	SEE LAYOUT L-2, L-4	2,050				268	1.7		
NB EXIT RAMP	SEE LAYOUT L-1	1,995				260	1.7		
NB ENTRANCE RAMP	SEE LAYOUT L-3, L-4	2,735				357	2.3		
TOTAL		9,635	450	2,101	4,171	3,615	23.2	14.3	1,183

TEMPORARY WATER POLLUTION CONTROL

ITEM	UNIT	TOTAL
STORM WATER ANNUAL REPORT	EA	2
TEMPORARY FIBER ROLL	LF	2,850
TEMPORARY SOIL BINDER	SQYD	2,500
TEMPORARY COVER	SQYD	10,000

MINOR CONCRETE

LOCATION	MINOR CONCRETE (MISCELLANEOUS CONSTRUCTION)		NOTE
	CURB	SIDEWALK	
	CY		
CURB AND SIDEWALKS	49	426	A1-6 SIDEWALK 4" DEPTH
TOTAL	475		

EARTHWORK

LOCATION	STATION	ROADWAY EXCAVATION	ROADWAY EMBANKMENT (N)
		CY	
"B" LINE	7+45.29 TO 7+88.14	8,549	2,492
"C" LINE	0+00.00 TO 13+78.45	4,968	382
BASIN 1		1,852	0
	TOTAL	15,369	2,874

(N) - NOT A SEPARATE PAY ITEM, FOR INFORMATION ONLY.

FENCE QUANTITIES

SHEET No.	REMOVE FENCE (TYPE BW)	FENCE (TYPE BW METAL POST)	PERMANENT FENCE (TYPE DESERT TORTOISE)	CHAIN LINK FENCE (TYPE CL-6)	3' CHAIN LINK GATE (TYPE CL-6)
	LF	LF	LF	LF	EA
L-1			1,131		
L-2	400	420	1,732	120	2
L-3				120	2
L-4	280	307	577		
TOTAL	680	727	3,440	240	4

SUMMARY OF QUANTITIES

Q-1

REVISED BY | DATE REVISED
TOM NGUYEN | GEORGE MORHIG
CALCULATED-DESIGNED BY | CHECKED BY
FUNCTIONAL SUPERVISOR: GEORGE MORHIG
STATE OF CALIFORNIA - DEPARTMENT OF TRANSPORTATION
Caltrans® DESIGN

LAST REVISION 06-07-16 | DATE PLOTTED => 31-AUG-2016 TIME PLOTTED => 15:53

Dist	COUNTY	ROUTE	POST MILES TOTAL PROJECT	SHEET No.	TOTAL SHEETS
08	SBd	15	R107.3	34	263

LICENSED LANDSCAPE ARCHITECT

6-13-16
PLANS APPROVAL DATE

LICENSED LANDSCAPE ARCHITECT JOHN J. STANTON No. 3465 Signature 3-31-18 Renewal Date 06-07-16 Date STATE OF CALIFORNIA

THE STATE OF CALIFORNIA OR ITS OFFICERS OR AGENTS SHALL NOT BE RESPONSIBLE FOR THE ACCURACY OR COMPLETENESS OF SCANNED COPIES OF THIS PLAN SHEET.

NOTE:

1. ENTIRE PROJECT LIMITS ARE DESIGNATED AS BIOLOGICAL MONITORING AREA 1 (BMA 1) FOR DESERT TORTOISE

SOUTHBOUND WALLS AND PILASTER

WALL	POINT No. ◯	WALL HEIGHT (FT)
N	1	1.50
	2	1.50
	3	1.50
	4	1.50
O	5	1.50
	6	1.50
P	7	1.50
	8	2.50
	9	3.39
Q	10	1.50
	11	1.50
	12	2.50
R	13	2.50
	14	2.50
	15	2.50

SOUTHBOUND WALLS AND PILASTER

WALL	POINT No. ◯	WALL HEIGHT (FT)
S	16	2.50
	17	2.50
	18	1.50
T	19	1.50
	20	2.50
U	21	2.50
	22	2.50
	23	1.50
V	24	2.50
	25	2.50
	26	2.50
W	27	2.50
	28	1.50
X	29	1.50
	30	2.50
	31	2.50
Y	32	5.75
	33	5.75
	34	5.75
	35	5.75
Z	36	1.83
	37	1.83

LEGEND: (SITE FACILTIES)

- PRECAST CONCRETE PICNIC TABLE AND BENCHES
- PREFABRICATED METAL BENCH
- PRECAST CONCRETE TRASH RECEPTACLE
- PRECAST CONCRETE ASH URN
- PRECAST CONCRETE TRASH RECEPTACLE (RECYCLE)
- FROST PROOF YARD HYDRANT ASSEMBLY (SEE DETAILS SHEET LD-6)
- TELEPHONE (SEE BUILDING PLANS)
- DRINKING FOUNTAIN (REFRIGERATED; SEE BUILDING PLANS)
- INTERPRETIVE SIGN BASE
- EXPANSION JOINT
- CONTROL JOINT
- PERIMETER WALL
- WALL
- (1) WALL POINTS

LANDSCAPE DETAILS
SOUTHBOUND

LD-1

LAST REVISION 06-07-16 | DATE PLOTTED => 31-AUG-2016 | TIME PLOTTED => 15:53

STATE OF CALIFORNIA - DEPARTMENT OF TRANSPORTATION
Caltrans® LANDSCAPE ARCHITECTURE

SENIOR LANDSCAPE ARCHITECT: JOHN STANTON
CALCULATED-DESIGNED BY: SYLVIA RIVAS
CHECKED BY: JOHN STANTON
REVISED BY
DATE REVISED

Dist	COUNTY	ROUTE	POST MILES TOTAL PROJECT	SHEET No.	TOTAL SHEETS
08	SBd	15	R107.3	35	263

John J. Stanton
LICENSED LANDSCAPE ARCHITECT

6-13-16
PLANS APPROVAL DATE

LICENSED LANDSCAPE ARCHITECT JOHN J. STANTON No. 3465 Signature 3-31-18 Renewal Date 06-07-16 Date STATE OF CALIFORNIA

THE STATE OF CALIFORNIA OR ITS OFFICERS OR AGENTS SHALL NOT BE RESPONSIBLE FOR THE ACCURACY OR COMPLETENESS OF SCANNED COPIES OF THIS PLAN SHEET.

NOTE:

FOR ACCURATE RIGHT OF WAY DATA, CONTACT RIGHT OF WAY ENGINEERING AT THE DISTRICT OFFICE.

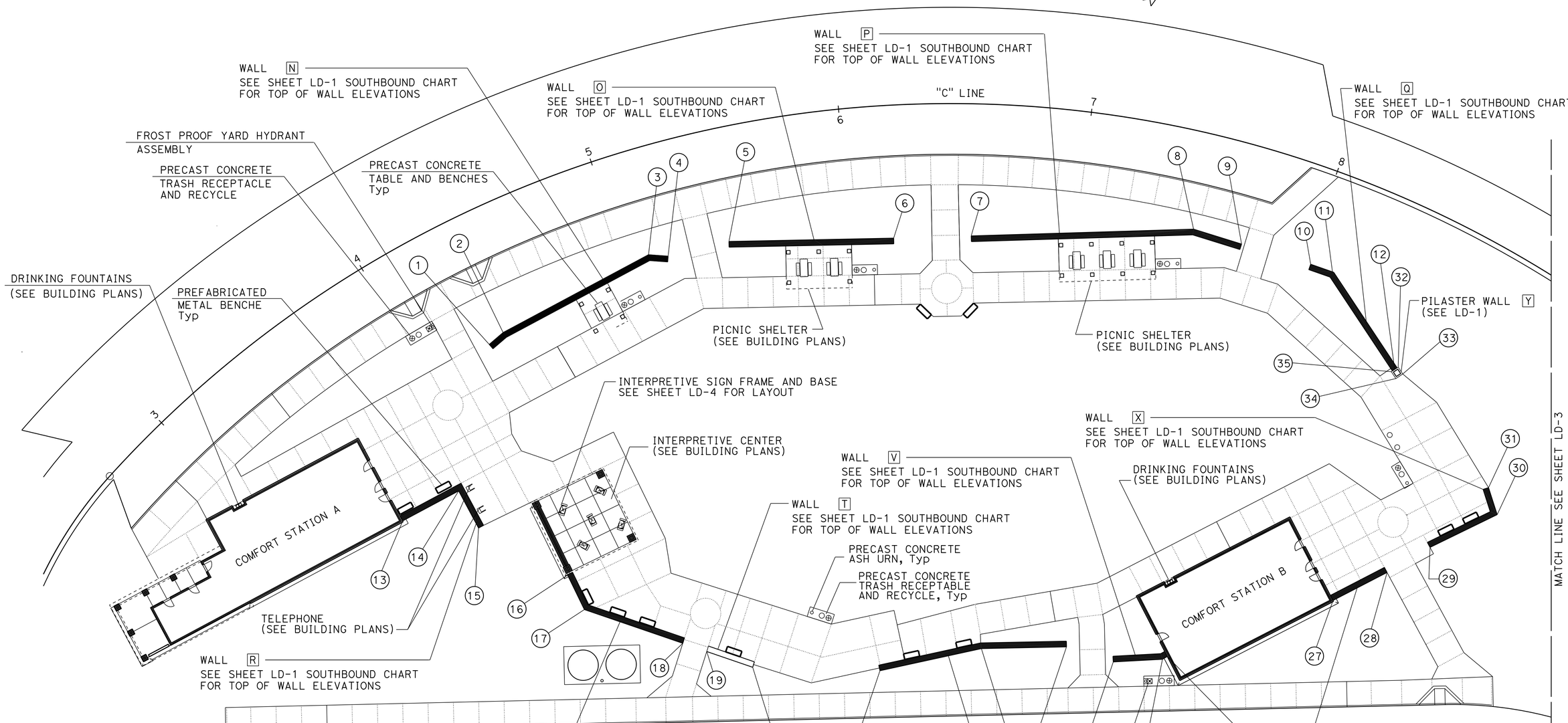

LANDSCAPE DETAILS
SOUTHBOUND
SCALE: 1' = 20'

LD-2

APPROVED FOR WALL WORK ONLY

STATE OF CALIFORNIA - DEPARTMENT OF TRANSPORTATION
Caltrans® LANDSCAPE ARCHITECTURE

SENIOR LANDSCAPE ARCHITECT: JOHN STANTON
CALCULATED-DESIGNED BY: SYLVIA RIVAS
CHECKED BY: JOHN STANTON
REVISED BY
DATE REVISED

LAST REVISION 06-07-16
DATE PLOTTED => 31-AUG-2016
TIME PLOTTED => 15:53

Dist	COUNTY	ROUTE	POST MILES TOTAL PROJECT	SHEET No.	TOTAL SHEETS
08	SBd	15	R107.3	36	263

John J. Stanton
LICENSED LANDSCAPE ARCHITECT

6-13-16
PLANS APPROVAL DATE

LICENSED LANDSCAPE ARCHITECT
JOHN J. STANTON No. 3465
Signature
3-31-18
Renewal Date
06-07-16
Date
STATE OF CALIFORNIA

THE STATE OF CALIFORNIA OR ITS OFFICERS OR AGENTS SHALL NOT BE RESPONSIBLE FOR THE ACCURACY OR COMPLETENESS OF SCANNED COPIES OF THIS PLAN SHEET.

NOTE:

FOR ACCURATE RIGHT OF WAY DATA, CONTACT RIGHT OF WAY ENGINEERING AT THE DISTRICT OFFICE.

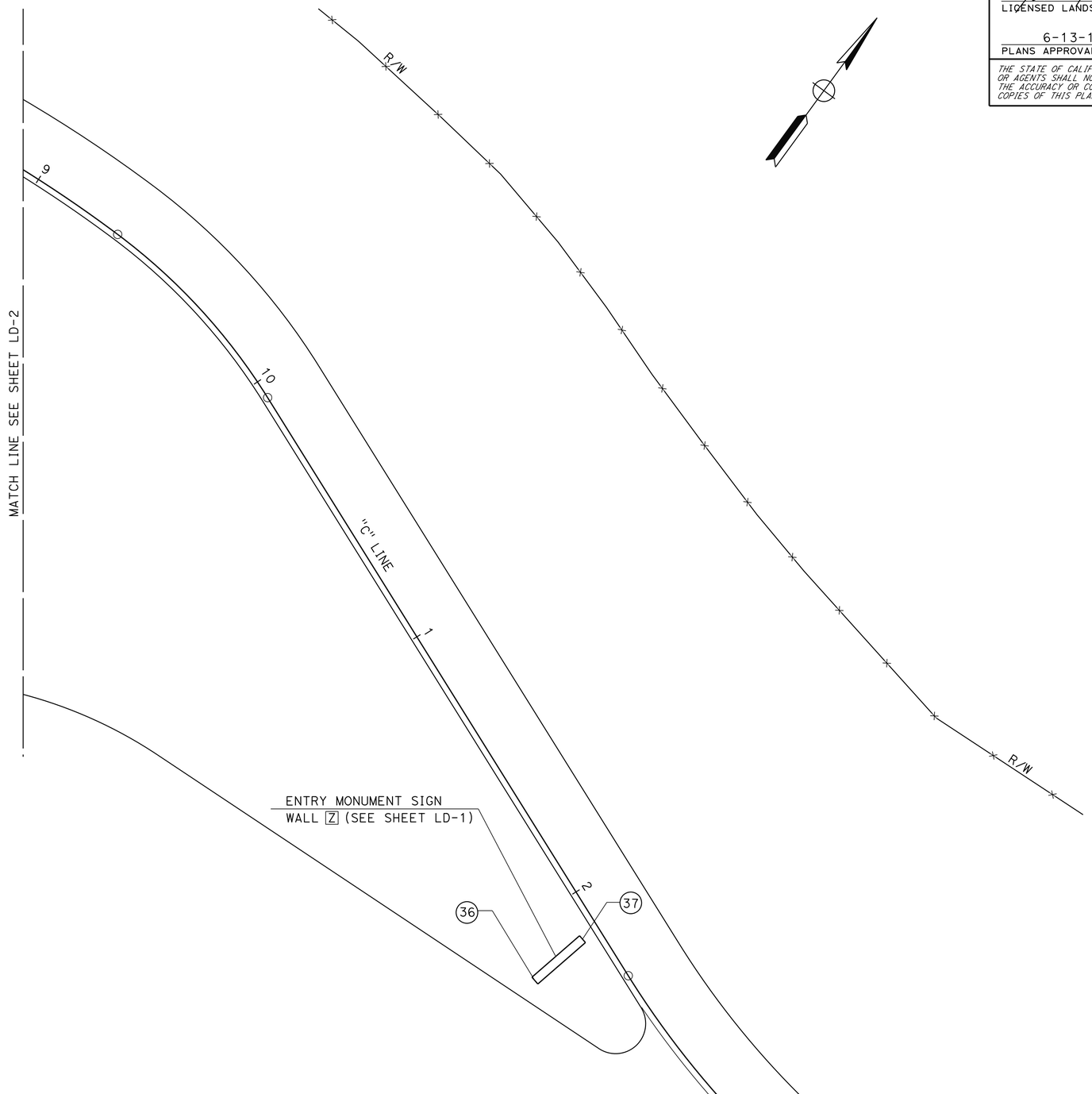

LANDSCAPE DETAILS
SOUTHBOUND
SCALE: 1' = 20'

LD-3

APPROVED FOR WALL WORK ONLY

STATE OF CALIFORNIA - DEPARTMENT OF TRANSPORTATION
Caltrans® LANDSCAPE ARCHITECTURE

SENIOR LANDSCAPE ARCHITECT: JOHN STANTON
CALCULATED-DESIGNED BY: SYLVIA RIVAS
CHECKED BY: JOHN STANTON
REVISED BY
DATE REVISED

LAST REVISION 06-07-16
DATE PLOTTED => 31-AUG-2016
TIME PLOTTED => 15:53

Dist	COUNTY	ROUTE	POST MILES TOTAL PROJECT	SHEET No.	TOTAL SHEETS
08	SBd	15	R107.3	37	263

John J. Stanton
LICENSED LANDSCAPE ARCHITECT

6-13-16
PLANS APPROVAL DATE

LICENSED LANDSCAPE ARCHITECT JOHN J. STANTON No. 3465 Signature 3-31-18 Renewal Date 06-07-16 Date STATE OF CALIFORNIA

THE STATE OF CALIFORNIA OR ITS OFFICERS OR AGENTS SHALL NOT BE RESPONSIBLE FOR THE ACCURACY OR COMPLETENESS OF SCANNED COPIES OF THIS PLAN SHEET.

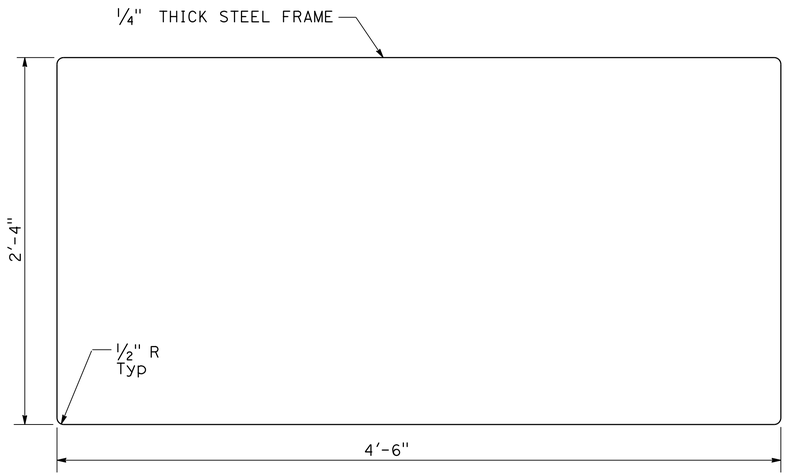

SIGN FRAME

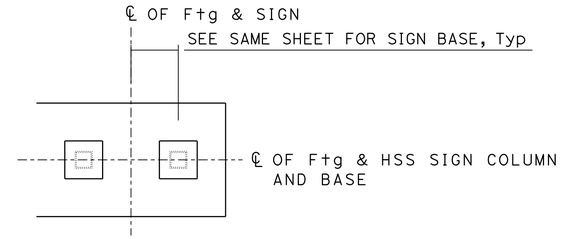

SIGN PLAN FOOTING

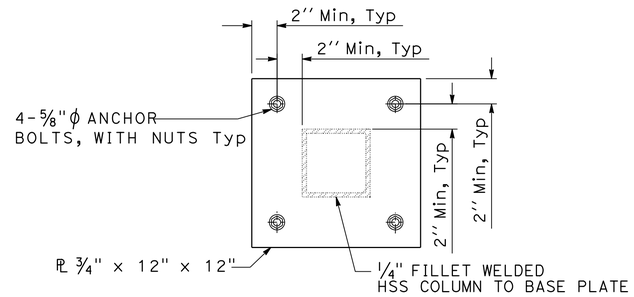

TYPICAL BASE PLATE DETAIL

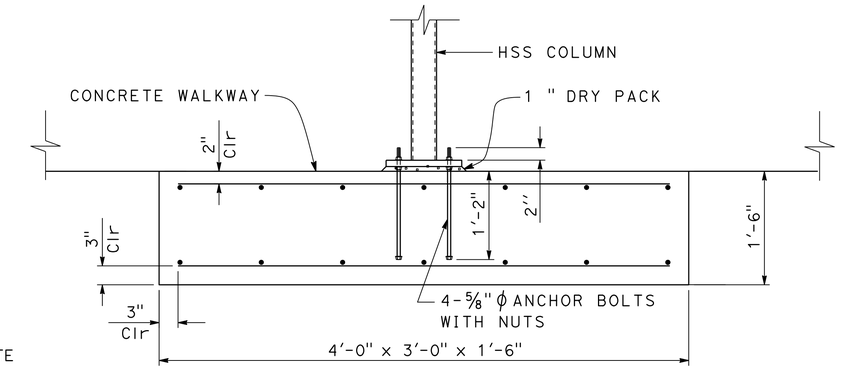

FOOTING DETAIL

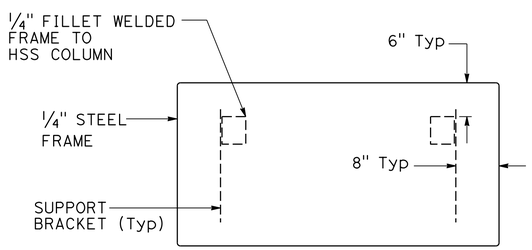

TOP VIEW

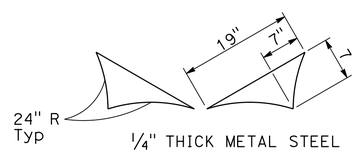

SUPPORT BRACKETS DETAIL

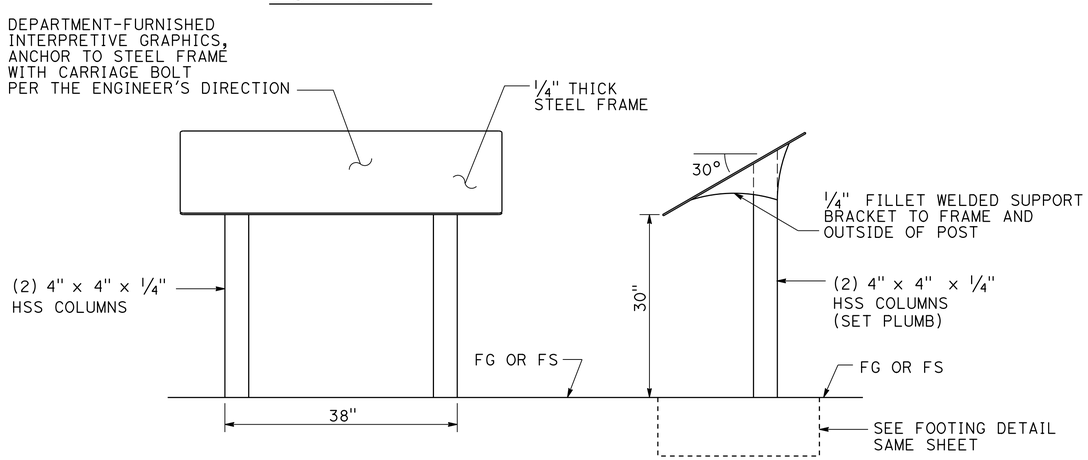

FRONT ELEVATION

SIDE ELEVATION

SIGN BASE

NOTE:

SIGN FRAME SHALL BE PLACED MINIMUM 5'-6" FROM CEMENT PLASTER FINISHED WALL AND COLUMNS (Typ)

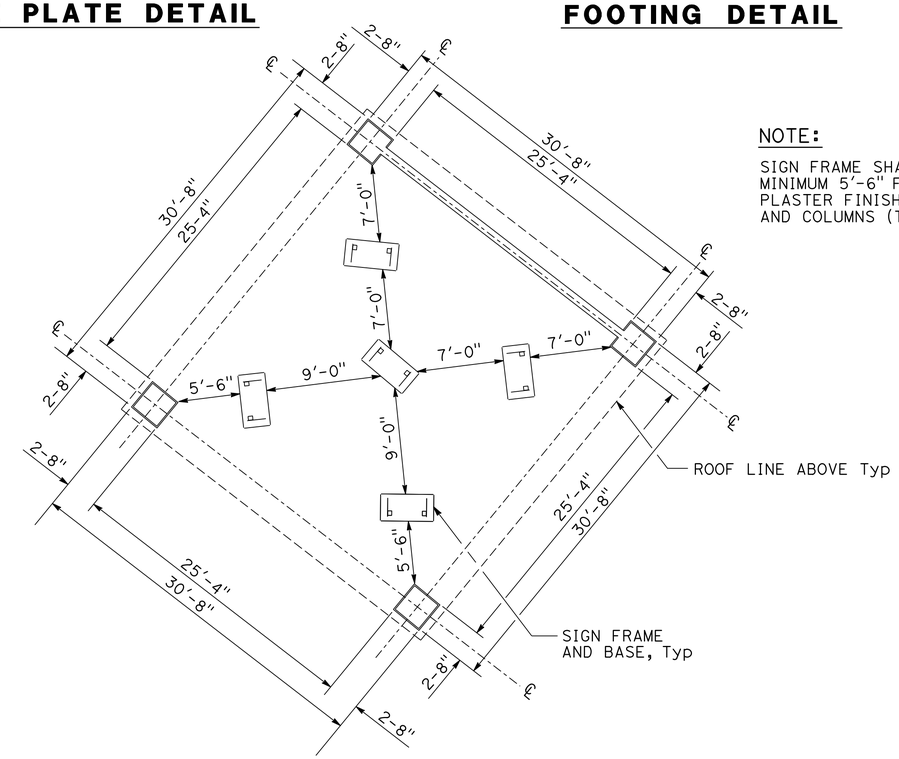

TYPICAL INTERPRETIVE CENTER SHELTER LAYOUT

LANDSCAPE DETAILS

INTERPRETIVE SIGN FRAMES, BASES & FOOTINGS

NO SCALE

LD-4

REVISED BY | DATE REVISED
SYLVIA RIVAS | JOHN STANTON
CALCULATED-DESIGNED BY | CHECKED BY
SENIOR LANDSCAPE ARCHITECT | JOHN STANTON
STATE OF CALIFORNIA - DEPARTMENT OF TRANSPORTATION
Caltrans® LANDSCAPE ARCHITECTURE

LAST REVISION 06-07-16 | DATE PLOTTED => 31-AUG-2016 TIME PLOTTED => 15:53

Dist	COUNTY	ROUTE	POST MILES TOTAL PROJECT	SHEET No.	TOTAL SHEETS
08	SBd	15	R107.3	38	263

LICENSED LANDSCAPE ARCHITECT

6-13-16
PLANS APPROVAL DATE

LICENSED LANDSCAPE ARCHITECT JOHN J. STANTON No. 3465 Signature 3-31-18 Renewal Date 06-07-16 Date STATE OF CALIFORNIA

THE STATE OF CALIFORNIA OR ITS OFFICERS OR AGENTS SHALL NOT BE RESPONSIBLE FOR THE ACCURACY OR COMPLETENESS OF SCANNED COPIES OF THIS PLAN SHEET.

NOTES:

1. FENCE OFFSET TO BE 2'-0" AT MONUMENT LOCATIONS, MEASURED AT RIGHT ANGLES TO R/W LINES. TAPER TO ACHIEVE OFFSET TO BE AT LEAST 20'-0" LONG.
2. POST DIMENSIONS AND WEIGHTS ARE MINIMUMS. LARGER SIZES MAY BE USED ON APPROVAL OF THE ENGINEER.
3. LINE POST SPACING FOR METAL POST EQUALS 10'-0" MAXIMUM. THE WIRE MESH SHALL BE EXTENDED A MINIMUM OF 24 INCHES ABOVE THE GROUND UNLESS OTHERWISE NOTED, AND SHALL BE BURIED A MINIMUM OF 12 INCHES BELOW THE GROUND.
4. ENVIRONMENTALLY SENSITIVE AREAS FOR THE DESERT TORTOISE SPECIES EXIST AT ALL LOCATIONS OUTSIDE THE R/W. AS FIRST ORDER OF WORK AND PRIOR TO ANY GROUND DISTURBING WORK, PERMANENT FENCE (TYPE DESERT TORTOISE) SHALL BE INSTALLED TO DEFINE THE BOUNDARIES OF THE ENVIRONMENTALLY SENSITIVE AREAS. PERMANENT FENCE (TYPE DESERT TORTOISE) SHALL BE INSTALLED IN THE PRESENCE OF AN AUTHORIZED BIOLOGIST AND WITHIN CALTRANS RIGHT-OF-WAY ONLY.
5. FOR NEW BARBED WIRE FENCE DETAILS, SEE Std PLAN A86.
6. PULL POST ASSEMBLY FOR PERMANENT FENCE (TYPE DESERT TORTOISE) SHALL BE AT 400' MAXIMUN INTERVALS.

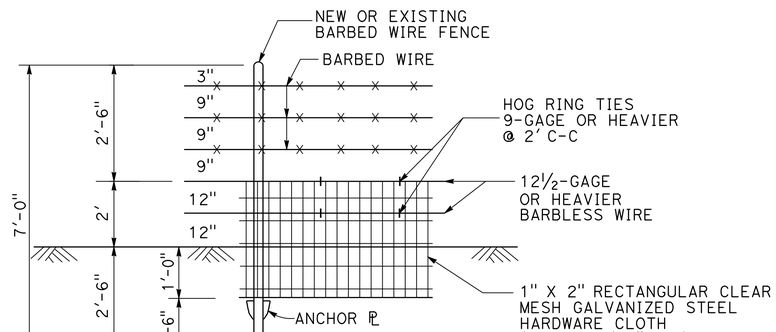

PERMANENT FENCE (TYPE DESERT TORTOISE)

INSTALL ON NEW OR EXISTING BARBED WIRE FENCE

LANDSCAPE DETAILS

NO SCALE

LD-5

STATE OF CALIFORNIA - DEPARTMENT OF TRANSPORTATION
Caltrans® LANDSCAPE ARCHITECTURE

SENIOR LANDSCAPE ARCHITECT: JOHN STANTON

CALCULATED-DESIGNED BY: SYLVIA RIVAS
CHECKED BY: JOHN STANTON

REVISED BY
DATE REVISED

LAST REVISION 06-07-16
DATE PLOTTED => 31-AUG-2016
TIME PLOTTED => 15:53

Dist	COUNTY	ROUTE	POST MILES TOTAL PROJECT	SHEET No.	TOTAL SHEETS
08	SBd	15	R107.3	39	263

LICENSED LANDSCAPE ARCHITECT

6-13-16
PLANS APPROVAL DATE

LICENSED LANDSCAPE ARCHITECT JOHN J. STANTON No. 3465 Signature 3-31-18 Renewal Date 06-07-16 Date STATE OF CALIFORNIA

THE STATE OF CALIFORNIA OR ITS OFFICERS OR AGENTS SHALL NOT BE RESPONSIBLE FOR THE ACCURACY OR COMPLETENESS OF SCANNED COPIES OF THIS PLAN SHEET.

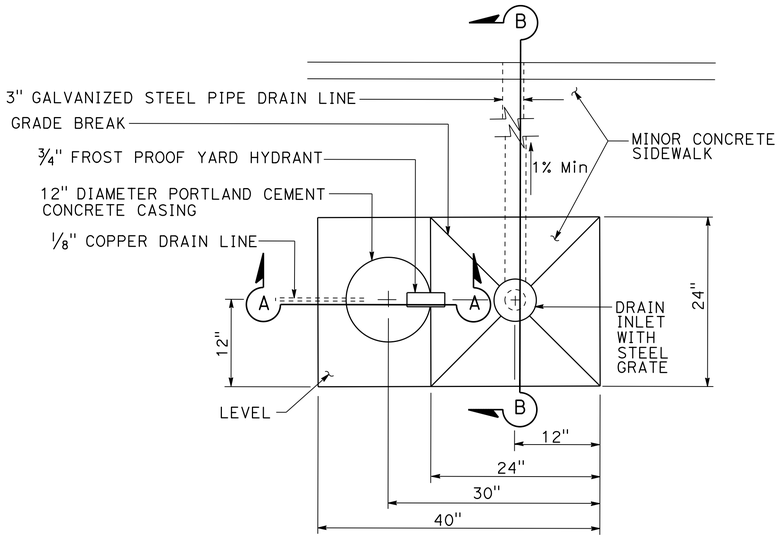

PLAN

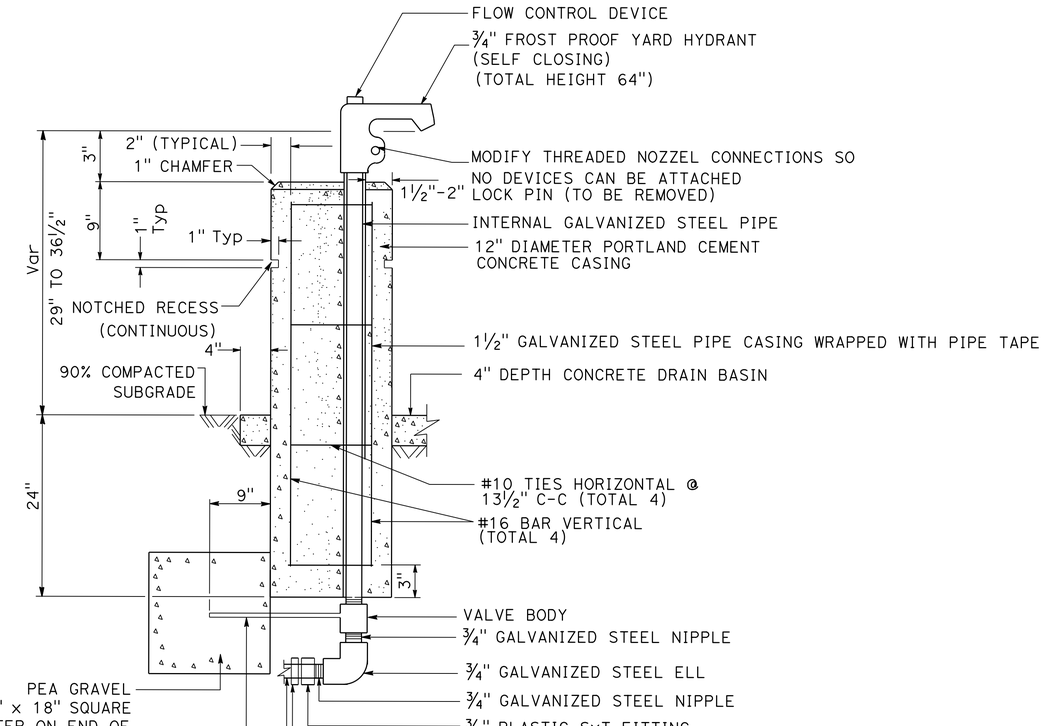

SECTION A-A

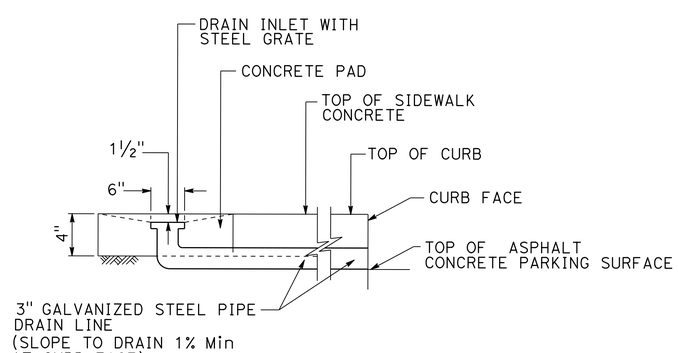

SECTION B-B

FROST PROOF YARD HYDRANT ASSEMBLY (SELF CLOSING)

LANDSCAPE DETAILS

NO SCALE

LD-6

REVISED BY	DATE REVISED

SYLVIA RIVAS — JOHN STANTON

CALCULATED-DESIGNED BY — CHECKED BY

SENIOR LANDSCAPE ARCHITECT — JOHN STANTON

STATE OF CALIFORNIA - DEPARTMENT OF TRANSPORTATION
Caltrans® LANDSCAPE ARCHITECTURE

LAST REVISION 06-07-16 | DATE PLOTTED => 31-AUG-2016 | TIME PLOTTED => 15:53

Dist	COUNTY	ROUTE	POST MILES TOTAL PROJECT	SHEET No.	TOTAL SHEETS
08	SBd	15	R107.3	40	263

LICENSED LANDSCAPE ARCHITECT

6-13-16
PLANS APPROVAL DATE

THE STATE OF CALIFORNIA OR ITS OFFICERS OR AGENTS SHALL NOT BE RESPONSIBLE FOR THE ACCURACY OR COMPLETENESS OF SCANNED COPIES OF THIS PLAN SHEET.

LICENSED LANDSCAPE ARCHITECT JOHN J. STANTON No. 3465 Signature 3-31-18 Renewal Date 06-07-16 Date STATE OF CALIFORNIA

NOTE:

1. PROVIDE KNEE SPACE AT LEAST 20" HIGH, 30" WIDE AND 19" DEEP AT EACH ACCESIBLE SEATING.

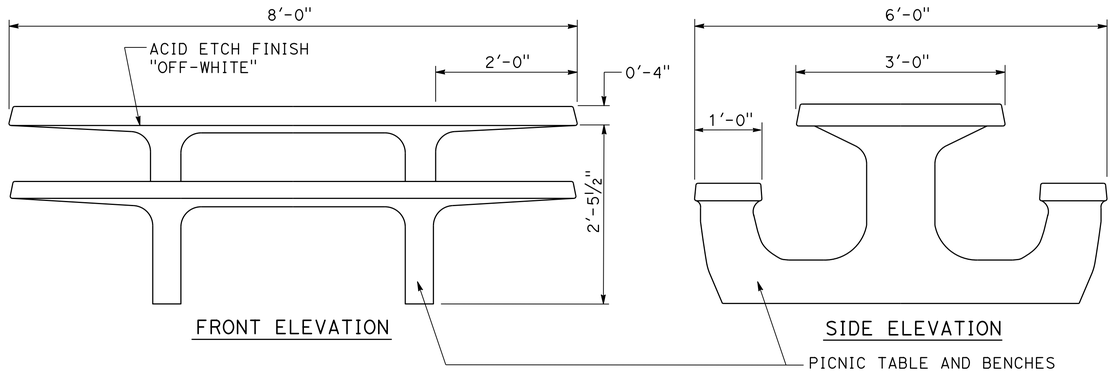

PRECAST CONCRETE PICNIC TABLE AND BENCHES
ONE PIECE CONSTRUCTION (DISABLED/WHEELCHAIR ACCESSIBLE)

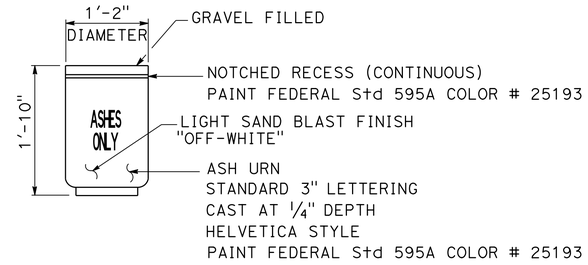

ELEVATION

PRECAST CONCRETE ASH URN
1/4" MAXIMUM SIZE GRAVEL

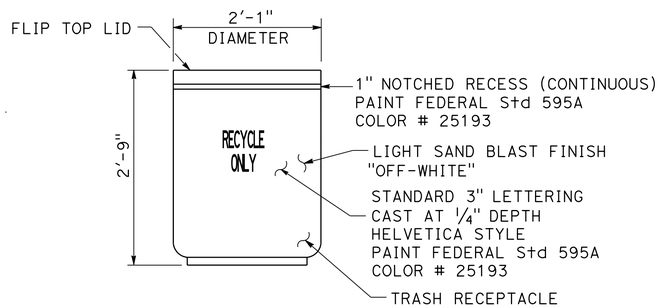

FRONT ELEVATION

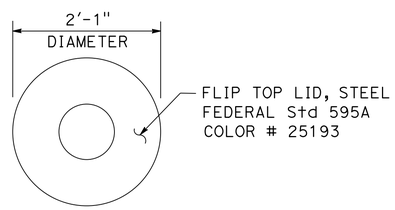

LID DETAIL

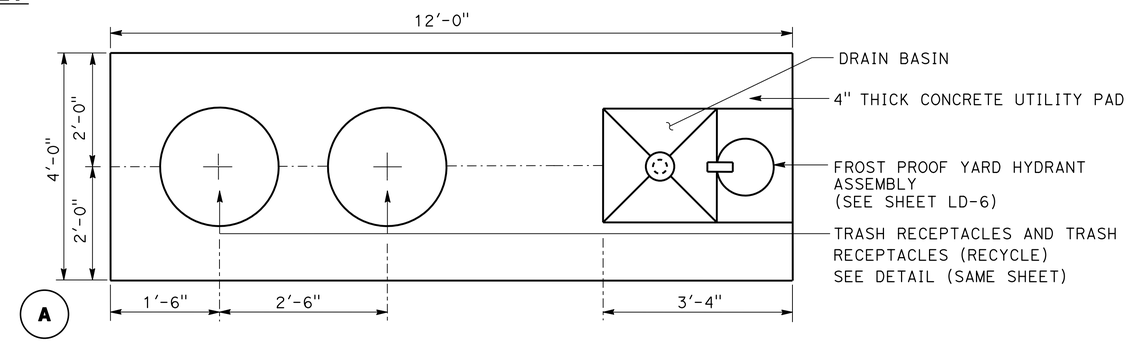

PLAN

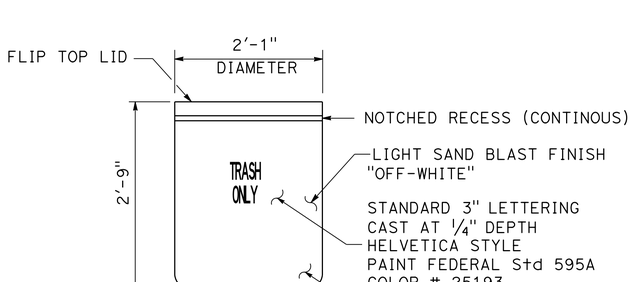

ELEVATION

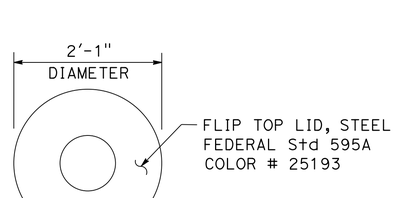

LID DETAIL

PRECAST CONCRETE TRASH RECEPTACLE

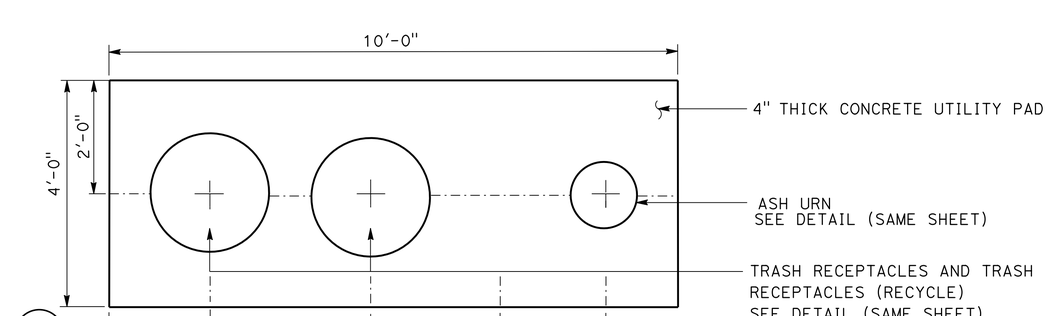

PLAN

CONCRETE UTILITY PAD
WITH TRASH RECEPTACLES AND ASH URNS/ FROST PROOF YARD HYDRANT ASSEMBLY

LANDSCAPE DETAILS

NO SCALE

LD-7

STATE OF CALIFORNIA - DEPARTMENT OF TRANSPORTATION
Caltrans® LANDSCAPE ARCHITECTURE

SENIOR LANDSCAPE ARCHITECT: JOHN STANTON
CALCULATED-DESIGNED BY: SYLVIA RIVAS
CHECKED BY: JOHN STANTON
REVISED BY
DATE REVISED

LAST REVISION 06-07-16
DATE PLOTTED => 31-AUG-2016
TIME PLOTTED => 15:53

Dist	COUNTY	ROUTE	POST MILES TOTAL PROJECT	SHEET No.	TOTAL SHEETS
08	SBd	15	R107.3	41	263

LICENSED LANDSCAPE ARCHITECT

6-13-16
PLANS APPROVAL DATE

LICENSED LANDSCAPE ARCHITECT JOHN J. STANTON No. 3465 Signature 3-31-18 Renewal Date 06-07-16 Date STATE OF CALIFORNIA

THE STATE OF CALIFORNIA OR ITS OFFICERS OR AGENTS SHALL NOT BE RESPONSIBLE FOR THE ACCURACY OR COMPLETENESS OF SCANNED COPIES OF THIS PLAN SHEET.

NOTES:

1. EXPOSED SURFACES OF MASONRY BLOCK WALL SHALL BE COVERED WITH STONE VENEER.
2. FOR WALL HEIGHT VALUES SEE LD-1.
3. ALL MASONRY BLOCKS MUST BE SOLIDLY GROUTED.
4. ALL TIES MUST COMPLY WITH CBC SECTION 1405.6 AS SPECIFIED UNDER "STONE VENEER" OF THE SPECIAL PROVISIONS.
5. FOR MASONRY BLOCK WALL, FOOTING, AND REINFORCEMENT INFORMATION NOT SHOWN, SEE Std PLANS B15-1 AND B15-2.

DESIGN NOTES:

REINFORCED CONCRETE FOR FOOTING
f'c = 4 ksi
fy = 60 ksi

REINFORCED CONCRETE FOR MASONRY UNITS
f'm = 1.5 ksi
fy = 60 ksi

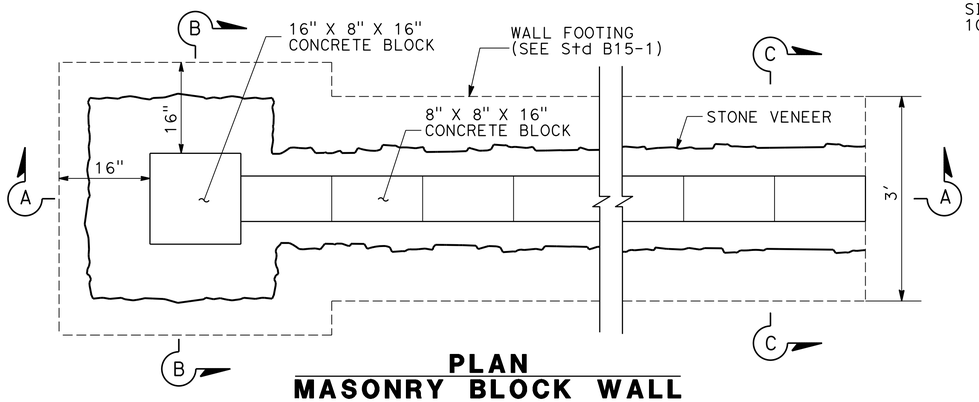

PLAN
MASONRY BLOCK WALL

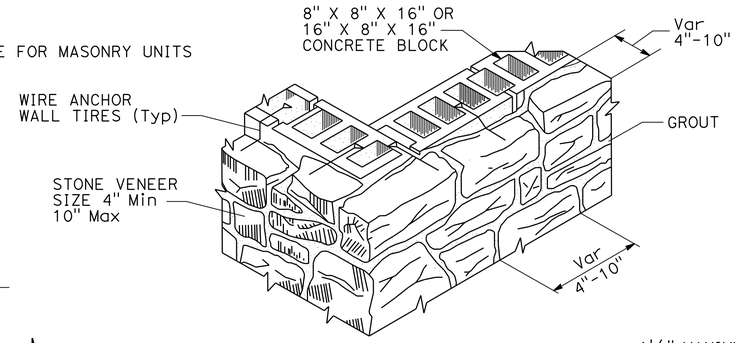

STONE VENEER
FOR WALL DETAIL

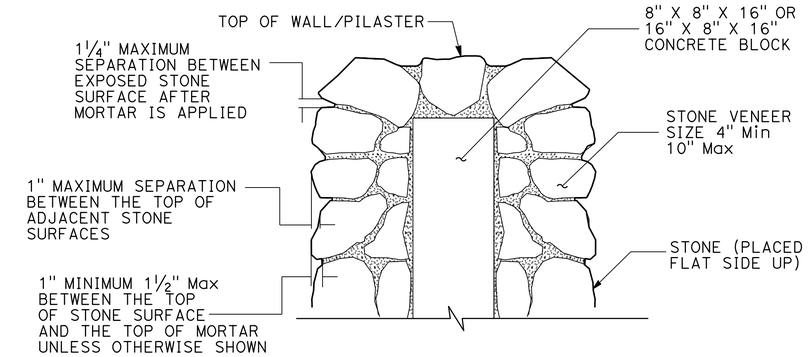

LOCAL STONE PLACEMENT
DETAIL

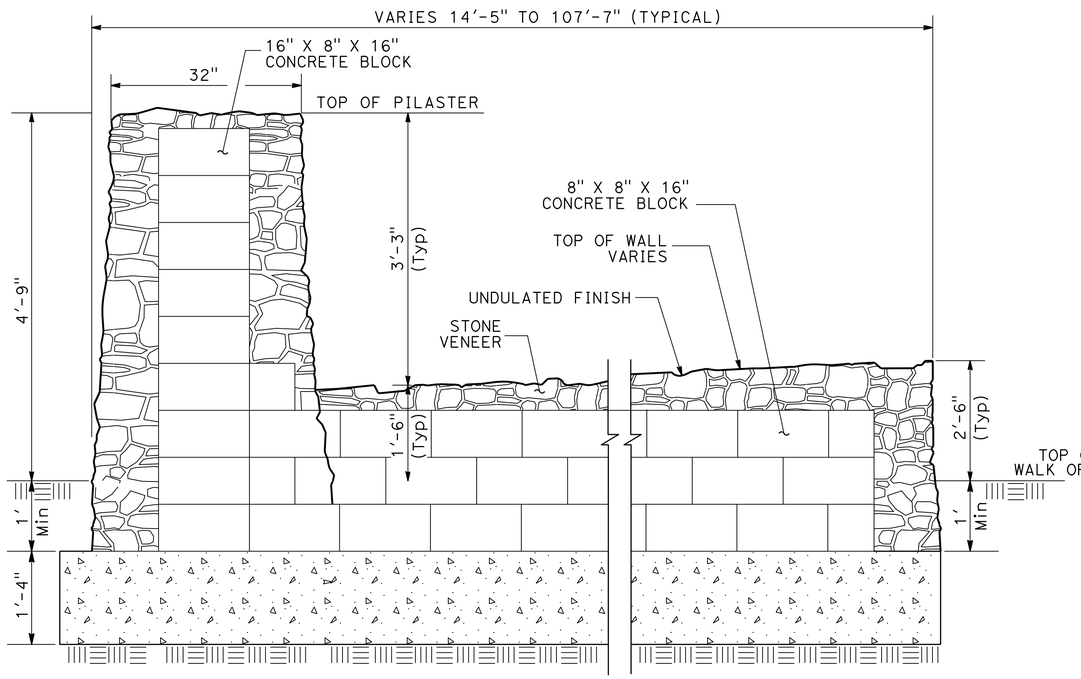

SECTION A-A

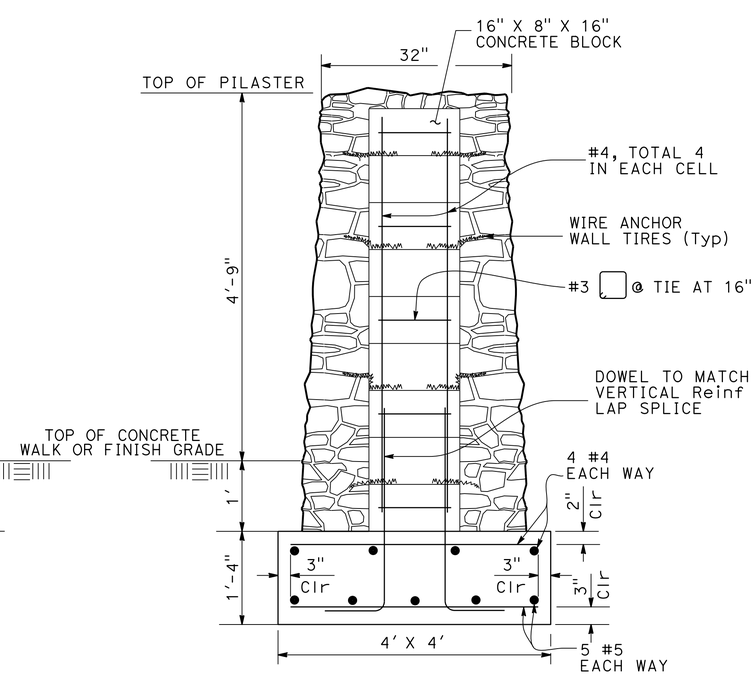

SECTION B-B

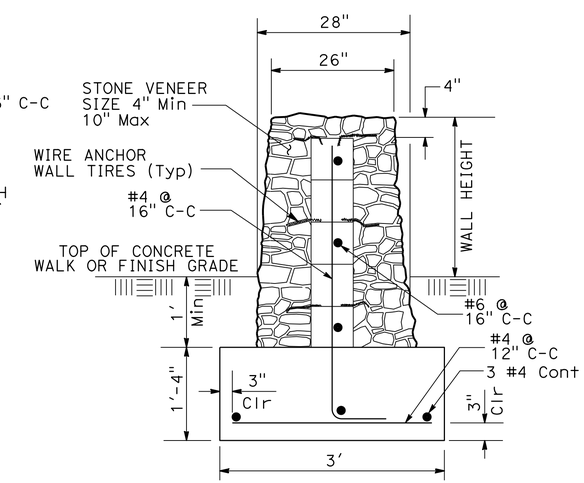

SECTION C-C

LANDSCAPE DETAILS

NO SCALE

LD-8

STATE OF CALIFORNIA - DEPARTMENT OF TRANSPORTATION
Caltrans® LANDSCAPE ARCHITECTURE

SENIOR LANDSCAPE ARCHITECT: JOHN STANTON
CALCULATED-DESIGNED BY: SYLVIA RIVAS
CHECKED BY: JOHN STANTON
REVISED BY
DATE REVISED

LAST REVISION 06-07-16
DATE PLOTTED => 31-AUG-2016
TIME PLOTTED => 15:53

Dist	COUNTY	ROUTE	POST MILES TOTAL PROJECT	SHEET No.	TOTAL SHEETS
08	SBd	15	R107.3	42	263

John J. Stanton
LICENSED LANDSCAPE ARCHITECT

6-13-16
PLANS APPROVAL DATE

LICENSED LANDSCAPE ARCHITECT JOHN J. STANTON No. 3465 Signature 3-31-18 Renewal Date 06-07-16 Date STATE OF CALIFORNIA

THE STATE OF CALIFORNIA OR ITS OFFICERS OR AGENTS SHALL NOT BE RESPONSIBLE FOR THE ACCURACY OR COMPLETENESS OF SCANNED COPIES OF THIS PLAN SHEET.

NOTES:

1. FOR MASONRY BLOCK WALL AND STONE VENEER DETAILS, SEE SHEET LD-8.

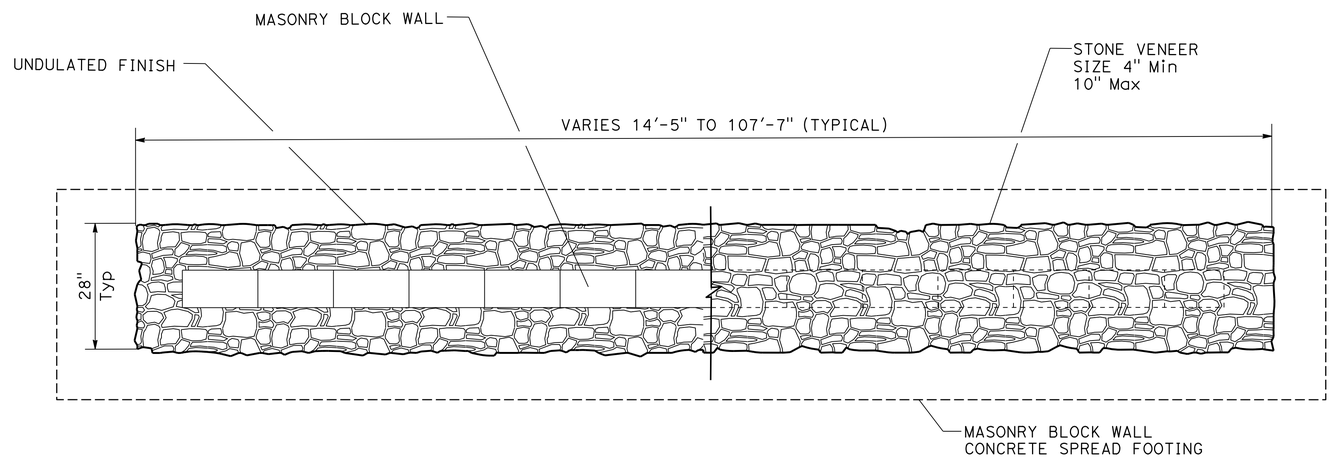

PLAN VIEW (TYPICAL)
PERIMETER WALL

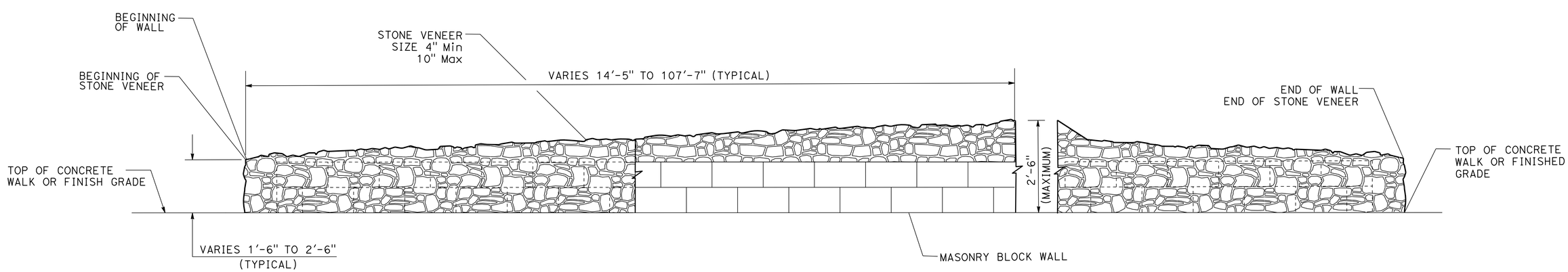

ELEVATION (TYPICAL)
PERIMETER WALL

LANDSCAPE DETAILS

NO SCALE

LD-9

STATE OF CALIFORNIA - DEPARTMENT OF TRANSPORTATION
Caltrans® LANDSCAPE ARCHITECTURE

SENIOR LANDSCAPE ARCHITECT: JOHN STANTON
CALCULATED-DESIGNED BY: SYLVIA RIVAS
CHECKED BY: JOHN STANTON
REVISED BY
DATE REVISED

LAST REVISION 06-07-16
DATE PLOTTED => 31-AUG-2016
TIME PLOTTED => 15:53

Dist	COUNTY	ROUTE	POST MILES TOTAL PROJECT	SHEET No.	TOTAL SHEETS
08	SBd	15	R107.3	43	263

John J. Stanton
LICENSED LANDSCAPE ARCHITECT

6-13-16
PLANS APPROVAL DATE

LICENSED LANDSCAPE ARCHITECT JOHN J. STANTON No. 3465 Signature 3-31-18 Renewal Date 06-07-16 Date STATE OF CALIFORNIA

THE STATE OF CALIFORNIA OR ITS OFFICERS OR AGENTS SHALL NOT BE RESPONSIBLE FOR THE ACCURACY OR COMPLETENESS OF SCANNED COPIES OF THIS PLAN SHEET.

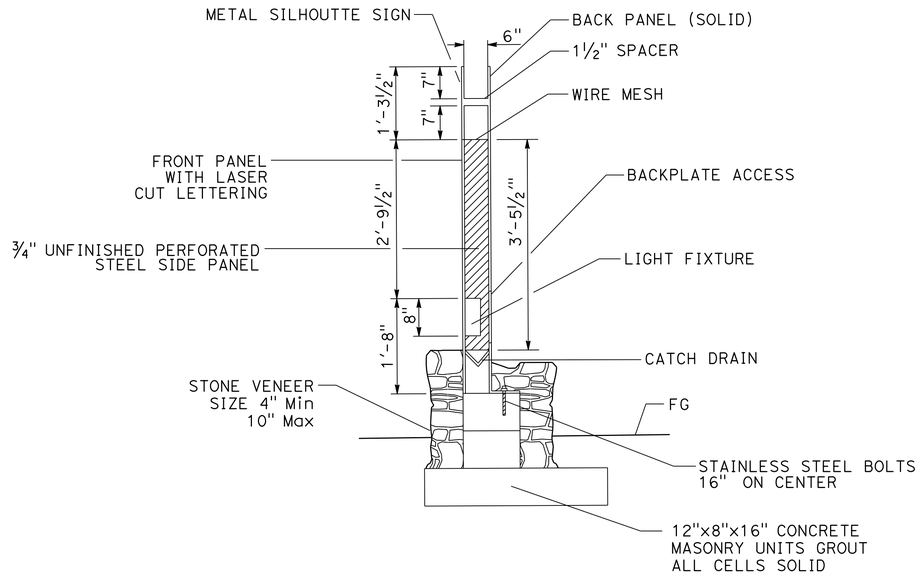

SECTION WALL "Z"
ENTRY MONUMENT SIGN

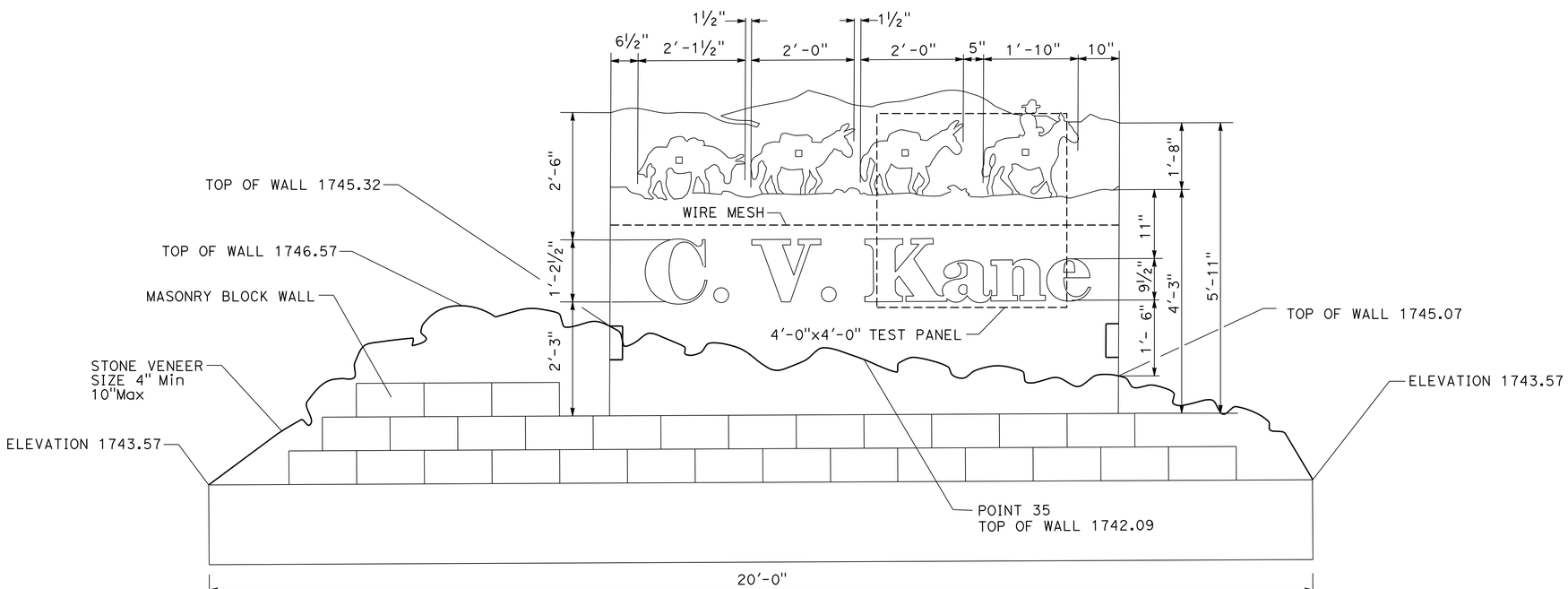

ELEVATION WALL 'Z'
ENTRY MONUMENT SIGN

LANDSCAPE DETAILS
NO SCALE

LD-10

STATE OF CALIFORNIA - DEPARTMENT OF TRANSPORTATION
Caltrans® LANDSCAPE ARCHITECTURE

SENIOR LANDSCAPE ARCHITECT: JOHN STANTON
CALCULATED-DESIGNED BY / CHECKED BY
SYLVIA RIVAS / JOHN STANTON
REVISED BY / DATE REVISED

LAST REVISION 06-07-16
DATE PLOTTED => 31-AUG-2016
TIME PLOTTED => 15:53

Dist	COUNTY	ROUTE	POST MILES TOTAL PROJECT	SHEET No.	TOTAL SHEETS
08	SBd	15	R107.3	44	263

John J. Stanton
LICENSED LANDSCAPE ARCHITECT

6-13-16
PLANS APPROVAL DATE

LICENSED LANDSCAPE ARCHITECT JOHN J. STANTON No. 3465 Signature 3-31-18 Renewal Date 06-07-16 Date STATE OF CALIFORNIA

THE STATE OF CALIFORNIA OR ITS OFFICERS OR AGENTS SHALL NOT BE RESPONSIBLE FOR THE ACCURACY OR COMPLETENESS OF SCANNED COPIES OF THIS PLAN SHEET.

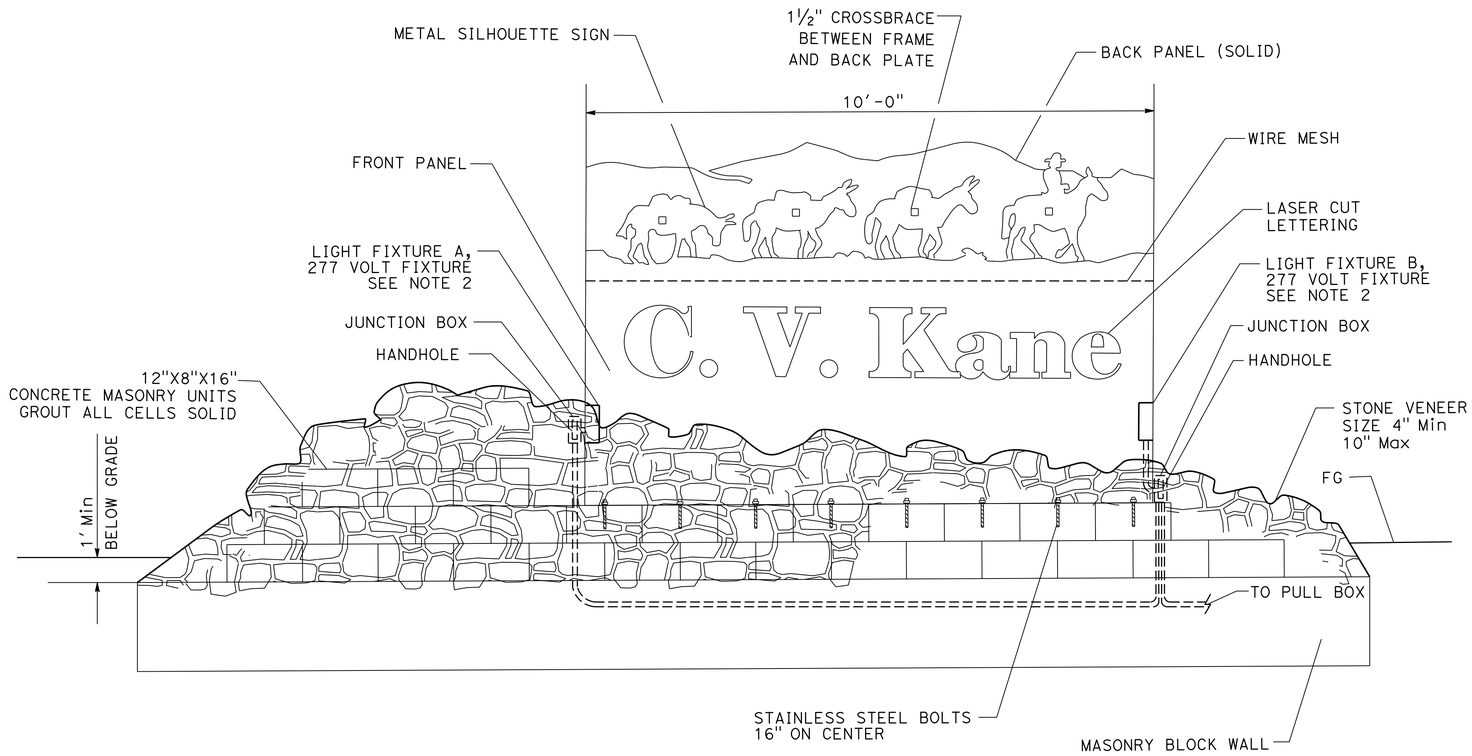

ELEVATION (TYPICAL)
ENTRY MONUMENT SIGN WITH STONE VENEER WALL 'Z'

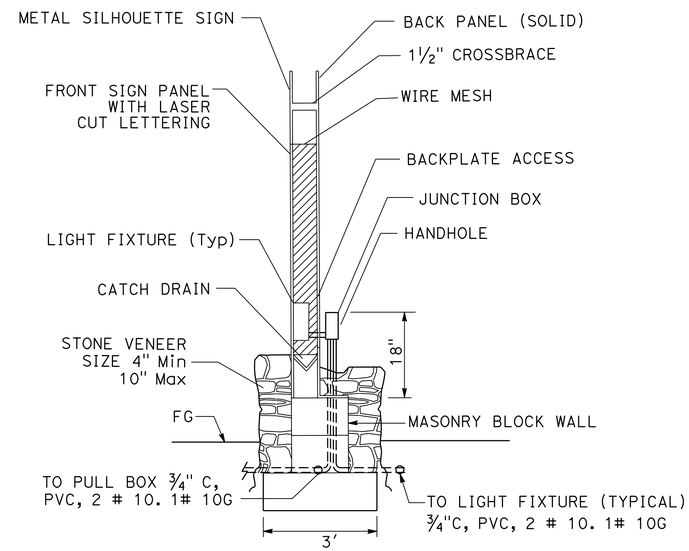

ELECTRICAL SCHEMATIC (Typ)
ENTRY MONUMENT SIGN

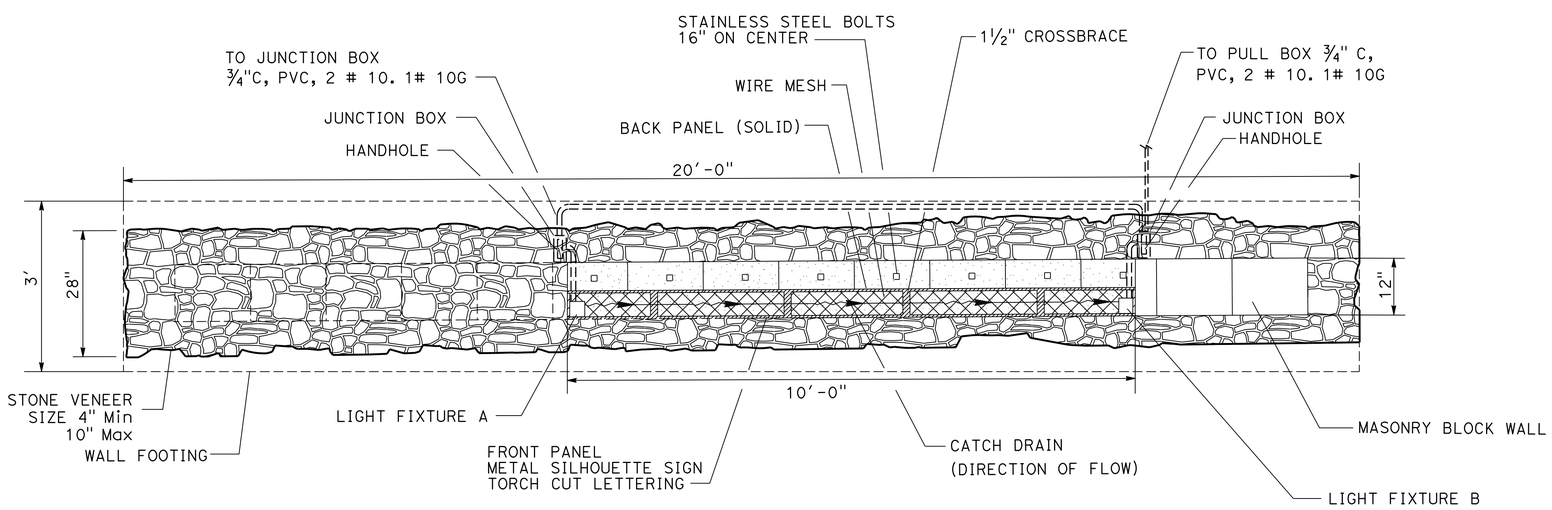

PLAN VIEW (TYPICAL)
ENTRY MONUMENT SIGN WITH STONE VENEER WALL "Z"

NOTE:

1. FOR MASONRY BLOCK WALL AND STONE VENEER DETAILS, SEE SHEET LD-8.
2. LIGHT FIXTURE SHALL BE LED, 4 FEET LONG, 277 VOLT, MAXIMUM 32 WATTS, MINIMUM 3300 DELIVERED LUMENS, CORROSION RESISTANT, IP66 RATED WEATHERPROOF FIXTURE.

LANDSCAPE DETAILS
NO SCALE

LD-11

REVISED BY	DATE REVISED
SYLVIA RIVAS	JOHN STANTON
CALCULATED-DESIGNED BY	CHECKED BY
SENIOR LANDSCAPE ARCHITECT	JOHN STANTON

STATE OF CALIFORNIA - DEPARTMENT OF TRANSPORTATION
Caltrans® LANDSCAPE ARCHITECTURE

LAST REVISION 06-07-16 | DATE PLOTTED => 31-AUG-2016 TIME PLOTTED => 15:53

Dist	COUNTY	ROUTE	POST MILES TOTAL PROJECT	SHEET No.	TOTAL SHEETS
08	SBd	15	R107.3	45	263

John J. Stanton
LICENSED LANDSCAPE ARCHITECT

6-13-16
PLANS APPROVAL DATE

LICENSED LANDSCAPE ARCHITECT
JOHN J. STANTON No. 3465
Signature
3-31-18
Renewal Date
06-07-16
Date
STATE OF CALIFORNIA

THE STATE OF CALIFORNIA OR ITS OFFICERS OR AGENTS SHALL NOT BE RESPONSIBLE FOR THE ACCURACY OR COMPLETENESS OF SCANNED COPIES OF THIS PLAN SHEET.

LANDSCAPE QUANTITIES

SHEET No.	INTERPRETIVE SIGN FRAME AND BASE	PERIMETER WALL	ENTRY MONUMENT SIGN	FROST PROOF YARD HYDRANT ASSEMBLY	PREFABRICATED METAL BENCH	PRECAST CONCRETE PICNIC TABLES & BENCHES	PRECAST CONCRETE TRASH RECEPTACLE	PRECAST CONCRETE TRASH RECEPTACLE (RECYCLE)	PRECAST CONCRETE ASH URN	PILASTER
	EA	LF	EA	EA	EA	EA	EA	EA	EA	EA
LD-2	5	570	-	2	12	6	7	7	5	1
LD-3	-	21	1	-	-	-	-	-	-	-
TOTAL	5	591	1	2	12	6	14		5	1

REVISED BY | DATE REVISED

SYLVIA RIVAS | JOHN STANTON

CALCULATED-DESIGNED BY | CHECKED BY

SENIOR LANDSCAPE ARCHITECT | JOHN STANTON

STATE OF CALIFORNIA - DEPARTMENT OF TRANSPORTATION
Caltrans® LANDSCAPE ARCHITECTURE

LAST REVISION 06-07-16 | DATE PLOTTED => 31-AUG-2016 TIME PLOTTED => 15:53

LANDSCAPE QUANTITIES
LQ-1

M

Maint	MAINTENANCE
Max	MAXIMUM
MB	METAL BEAM
MBB	METAL BEAM BARRIER
MBGR	METAL BEAM GUARD RAILING
Med	MEDIAN
MGS	MIDWEST GUARDRAIL SYSTEM
MH	MANHOLE
Min	MINIMUM
Misc	MISCELLANEOUS
Misc I & S	MISCELLANEOUS IRON AND STEEL
Mkr	MARKER
Mod	MODIFIED,
	MODIFY
Mon	MONUMENT
MP	METAL PLATE
MPGR	METAL PLATE GUARD RAILING
MR	MOVEMENT RATING
MSE	MECHANICALLY STABILIZED EMBANKMENT
Mt	MOUNTAIN, MOUNT
Mtl	MATERIAL
MVP	MAINTENANCE VEHICLE PULLOUT

N

N	NORTH
NB	NORTHBOUND
No.	NUMBER (MUST HAVE PERIOD)
Nos.	NUMBERS (MUST HAVE PERIOD)
NPS	NOMINAL PIPE SIZE
NS	NEAR SIDE
NSP	NEW STANDARD PLAN
NTS	NOT TO SCALE

O

Oblr	OBLITERATE
OC	OVERCROSSING
OD	OUTSIDE DIAMETER
OF	OUTSIDE FACE
OG	ORIGINAL GROUND
OGAC	OPEN GRADED ASPHALT CONCRETE
OGFC	OPEN GRADED FRICTION COURSE
OH	OVERHEAD
OHWM	ORDINARY HIGH WATER MARK
O-O	OUT TO OUT
Opp	OPPOSITE
OSD	OVERSIDE DRAIN

P

P	PAGE
PAP	PERFORATED ALUMINUM PIPE
PB	PULL BOX
PC	POINT OF CURVATURE,
	PRECAST
PCC	POINT OF COMPOUND CURVE,
	PORTLAND CEMENT CONCRETE
PCMS	PORTABLE CHANGEABLE MESSAGE SIGN
PCP	PERFORATED CONCRETE PIPE,
	PRESTRESSED CONCRETE PIPE
PCVC	POINT OF COMPOUND VERTICAL CURVE
PEC	PERMIT TO ENTER AND CONSTRUCT
Ped	PEDESTRIAN
Ped OC	PEDESTRIAN OVERCROSSING
Ped UC	PEDESTRIAN UNDERCROSSING
Perm Mtl	PERMEABLE MATERIAL

P continued

PG	PROFILE GRADE
PI	POINT OF INTERSECTION
PJP	PARTIAL JOINT PENETRATION
Pkwy	PARKWAY
ℙ,PL	PLATE
P/L	PROPERTY LINE
PM	POST MILE,
	TIME FROM NOON TO MIDNIGHT
PN	PAVING NOTCH
POC	POINT OF HORIZONTAL CURVE
POT	POINT OF TANGENT
POVC	POINT OF VERTICAL CURVE
PP	PIPE PILE,
	PLASTIC PIPE,
	POWER POLE
PPL	PREFORMED PERMEABLE LINER
PPP	PERFORATED PLASTIC PIPE
PRC	POINT OF REVERSE CURVE
PRF	PAVEMENT REINFORCING FABRIC
PRVC	POINT OF REVERSE VERTICAL CURVE
PS&E	PLANS, SPECIFICATIONS AND ESTIMATES
PS, P/S	PRESTRESSED
PSP	PERFORATED STEEL PIPE
PT	POINT OF TANGENCY
PVC	POLYVINYL CHLORIDE
Pvmt	PAVEMENT

Q

Qty	QUANTITY

R

R	RADIUS
R & D	REMOVE AND DISPOSE
R & S	REMOVE AND SALVAGE
R/C	RATE OF CHANGE
RCA	REINFORCED CONCRETE ARCH
RCB	REINFORCED CONCRETE BOX
RCP	REINFORCED CONCRETE PIPE
RCPA	REINFORCED CONCRETE PIPE ARCH
Rd	ROAD
Reinf	REINFORCED,
	REINFORCEMENT,
	REINFORCING
Rel	RELOCATE
Repl	REPLACEMENT
Ret	RETAINING
Rev	REVISED, REVISION
Rdwy	ROADWAY
RHMA	RUBBERIZED HOT MIX ASPHALT
Riv	RIVER
RM	ROAD-MIXED
RP	RADIUS POINT,
	REFERENCE POINT
RR	RAILROAD
RSP	ROCK SLOPE PROTECTION,
	REVISED STANDARD PLAN
Rt	RIGHT
Rte	ROUTE
RW	REDWOOD,
	RETAINING WALL
R/W	RIGHT OF WAY
Rwy	RAILWAY

S

S	SOUTH,
	SUPPLEMENT
SAE	STRUCTURE APPROACH EMBANKMENT
Salv	SALVAGE
SAPP	STRUCTURAL ALUMINUM PLATE PIPE
SB	SOUTHBOUND
SC	SAND CUSHION
SCSP	SLOTTED CORRUGATED STEEL PIPE
SD	STORM DRAIN
Sec	SECOND,
	SECTION
Sep	SEPARATION
SG	SUBGRADE
Shld	SHOULDER
Sht	SHEET
Sim	SIMILAR
℄	STATION LINE
SM	SELECTED MATERIAL
Spec	SPECIAL,
	SPECIFICATIONS
SPP	SLOTTED PLASTIC PIPE
SS	SLOPE STAKE
SSBM	STRAP AND SADDLE BRACKET METHOD
SSD	STRUCTURAL SECTION DRAIN
SSPA	STRUCTURAL STEEL PLATE ARCH
SSPP	STRUCTURAL STEEL PLATE PIPE
SSPPA	STRUCTURAL STEEL PLATE PIPE ARCH
SSRP	STEEL SPIRAL RIB PIPE
St	STREET
Sta	STATION
STBB	SINGLE THRIE BEAM BARRIER
Std	STANDARD
Str	STRUCTURE
Surf	SURFACING
SW	SIDEWALK,
	SOUND WALL
Swr	SEWER
Sym	SYMMETRICAL
S4S	SURFACE 4 SIDES

T

T	SEMI-TANGENT
Tan	TANGENT
TBB	THRIE BEAM BARRIER
Tbr	TIMBER
TC	TOP OF CURB
TCB	TRAFFIC CONTROL BOX
TCE	TEMPORARY CONSTRUCTION EASEMENT
Tel	TELEPHONE
Temp	TEMPORARY
TG	TOP OF GRADE
Tot	TOTAL
TP	TELEPHONE POLE
TPB	TREATED PERMEABLE BASE
TPM	TREATED PERMEABLE MATERIAL
Trans	TRANSITION

T continued

TS	TRANSVERSE,
	TRAFFIC SIGNAL,
	TUBULAR STEEL
Typ	TYPICAL

U

UC	UNDERCROSSING
UD	UNDERDRAIN
UG	UNDERGROUND
UON	UNLESS OTHERWISE NOTED
UP	UNDERPASS

V

V	VALVE,
	DESIGN SPEED
Var	VARIABLE,
	VARIES
VC	VERTICAL CURVE
VCP	VITRIFIED CLAY PIPE
Vert	VERTICAL
Via	VIADUCT
Vol	VOLUME

W

W	WEST,
	WIDTH
WB	WESTBOUND
WH	WEEP HOLE
WM	WIRE MESH
WS	WATER SURFACE
WSP	WELDED STEEL PIPE
Wt	WEIGHT
WV	WATER VALVE
WW	WINGWALL
WWLOL	WINGWALL LAYOUT LINE

X

X Sec	CROSS SECTION
Xing	CROSSING

Y

Yr	YEAR
Yrs	YEARS

Dist	COUNTY	ROUTE	POST MILES TOTAL PROJECT	SHEET No.	TOTAL SHEETS
08	SBd	15	R107.3	46	263

Grace M. Tsushima
REGISTERED CIVIL ENGINEER

July 19, 2013
PLANS APPROVAL DATE

REGISTERED PROFESSIONAL ENGINEER Grace M. Tsushima No. C49814 Exp. 9-30-14 CIVIL STATE OF CALIFORNIA

THE STATE OF CALIFORNIA OR ITS OFFICERS OR AGENTS SHALL NOT BE RESPONSIBLE FOR THE ACCURACY OR COMPLETENESS OF SCANNED COPIES OF THIS PLAN SHEET.

TO ACCOMPANY PLANS DATED 6-13-16

2010 REVISED STANDARD PLAN RSP A10B

UNIT OF MEASUREMENT SYMBOLS:

Some of the symbols used in the project plan quantity tables and in the Bid Item List are:

TABLE A

SYMBOL USED	DEFINITIONS
ACRE	ACRE
CF	CUBIC FOOT
CY	CUBIC YARD
EA	EACH
GAL	GALLON
LB	POUND
LF	LINEAR FOOT
SQFT	SQUARE FOOT
SQYD	SQUARE YARD
STA	100 FEET
TAB	TABLET
TON	2,000 POUNDS

Some of the symbols used in the plans other than in the project plan quantity tables are:

TABLE B

SYMBOL USED	DEFINITIONS
ksi	KIPS PER SQUARE INCH
ksf	KIPS PER SQUARE FOOT
psi	POUNDS PER SQUARE INCH
psf	POUNDS PER SQUARE FOOT
lb/ft^3, pcf	POUNDS PER CUBIC FOOT
tsf	TONS PER SQUARE FOOT
mph, MPH *	MILES PER HOUR
ø	NOMINAL DIAMETER
oz	OUNCE
lb	POUND
kip	1,000 POUNDS
cal	CALORIE
ft	FOOT OR FEET
gal	GALLON

* For use on a sign panel only

STATE OF CALIFORNIA
DEPARTMENT OF TRANSPORTATION

ABBREVIATIONS (SHEET 2 OF 2)

NO SCALE

RSP A10B DATED JULY 19, 2013 SUPERSEDES STANDARD PLAN A10B DATED MAY 20, 2011 - PAGE 2 OF THE STANDARD PLANS BOOK DATED 2010.

REVISED STANDARD PLAN RSP A10B

6-7-13

Dist	COUNTY	ROUTE	POST MILES TOTAL PROJECT	SHEET No.	TOTAL SHEETS
08	SBd	15	R107.3	47	263

REGISTERED CIVIL ENGINEER

July 19, 2013
PLANS APPROVAL DATE

REGISTERED PROFESSIONAL ENGINEER Roberta L. McLaughlin No. C40375 Exp. 3-31-15 CIVIL STATE OF CALIFORNIA

THE STATE OF CALIFORNIA OR ITS OFFICERS OR AGENTS SHALL NOT BE RESPONSIBLE FOR THE ACCURACY OR COMPLETENESS OF SCANNED COPIES OF THIS PLAN SHEET.

TO ACCOMPANY PLANS DATED 6-13-16

EXIT RAMP NEUTRAL AREA (GORE) TREATMENT

DETAIL 36

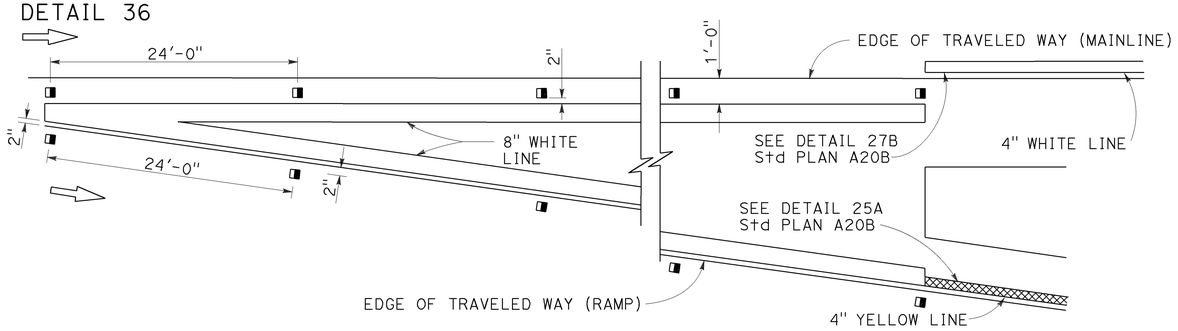

ENTRANCE RAMP NEUTRAL AREA (MERGE) TREATMENT

DETAIL 36A

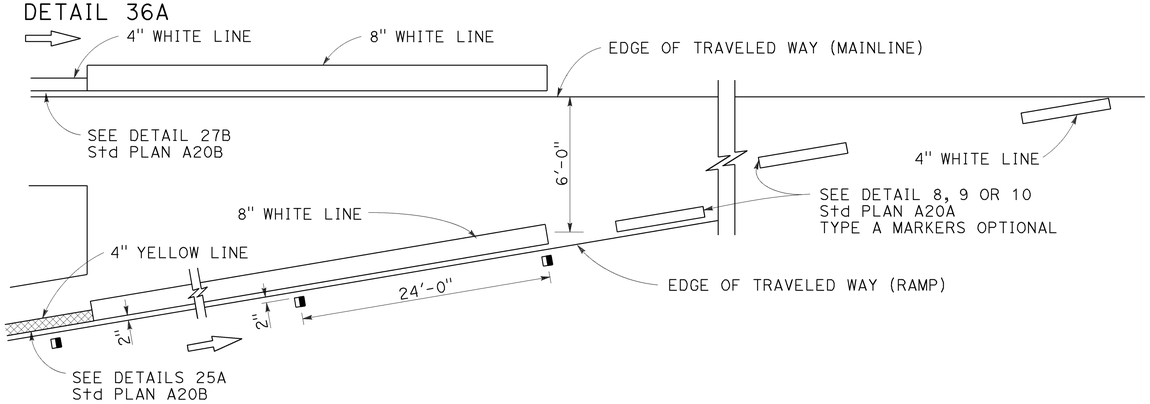

ENTRANCE RAMP NEUTRAL AREA (ACCELERATION LANE) TREATMENT

DETAIL 36B

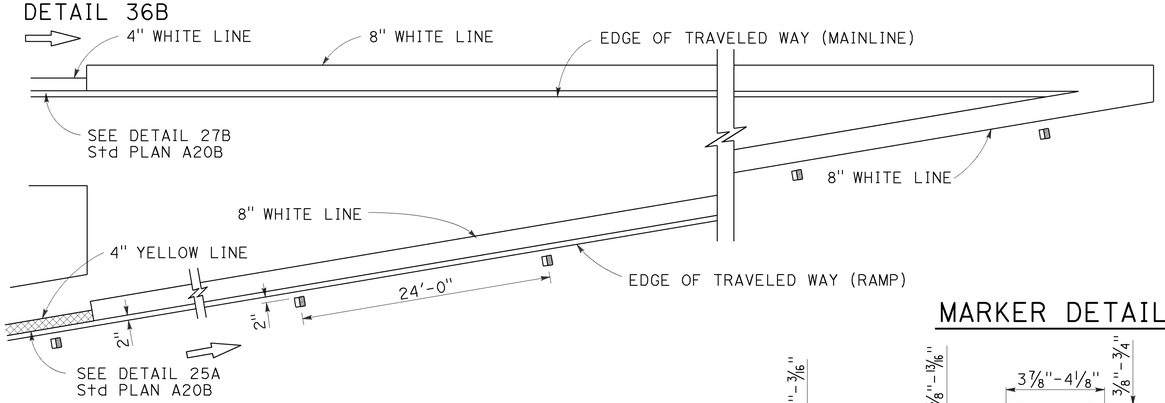

LANE DROP AT EXIT RAMPS

DETAIL 37

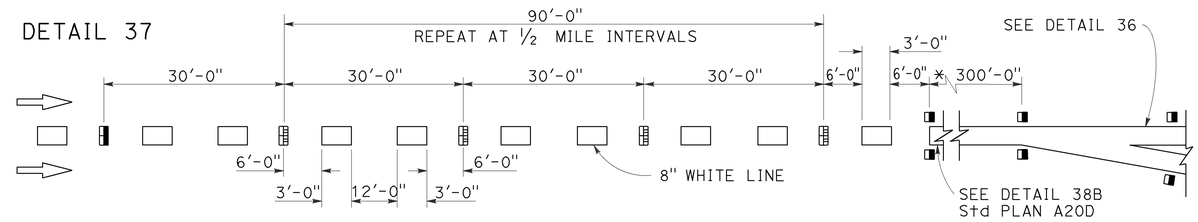

DETAIL 37A

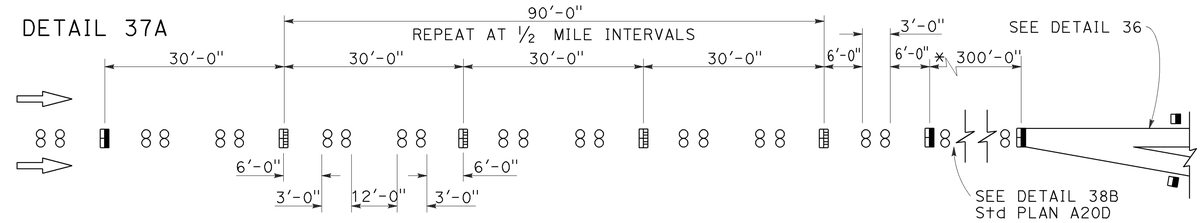

* The solid channelizing line shown may be omitted on short auxiliary lanes where weaving length is critical.

LANE DROP AT INTERSECTIONS

DETAIL 37B

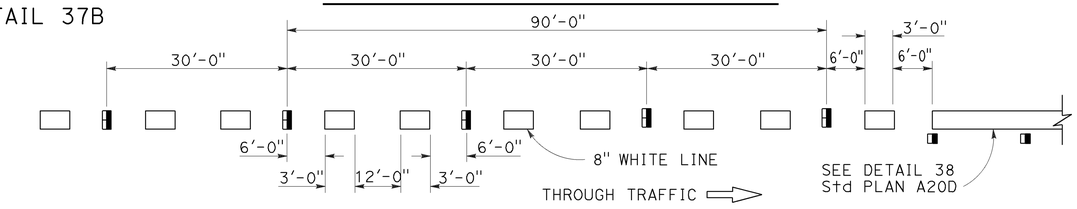

DETAIL 37C

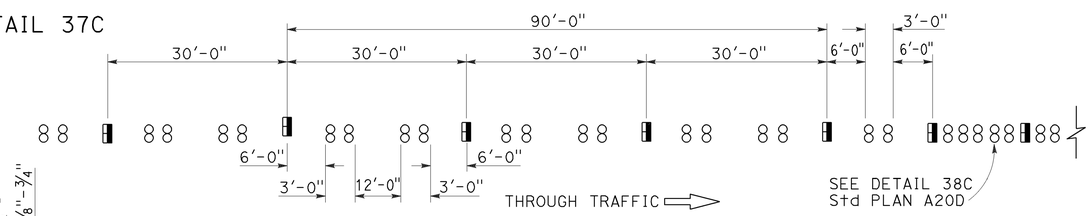

MARKER DETAILS

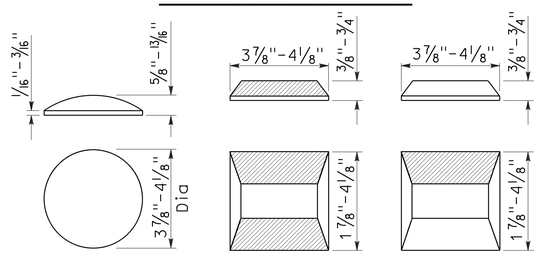

RETROREFLECTIVE FACE

LEGEND:

MARKERS

- ○ TYPE A WHITE NON-REFLECTIVE
- ⊞ TYPE C RED-CLEAR RETROREFLECTIVE
- ◨ TYPE G ONE-WAY CLEAR RETROREFLECTIVE

STATE OF CALIFORNIA
DEPARTMENT OF TRANSPORTATION

PAVEMENT MARKERS AND TRAFFIC LINE TYPICAL DETAILS

NO SCALE

RSP A20C DATED JULY 19, 2013 SUPERSEDES STANDARD PLAN A20C DATED MAY 20, 2011 - PAGE 11 OF THE STANDARD PLANS BOOK DATED 2010.

REVISED STANDARD PLAN RSP A20C

2010 REVISED STANDARD PLAN RSP A20C

4-29-13

Dist	COUNTY	ROUTE	POST MILES TOTAL PROJECT	SHEET No.	TOTAL SHEETS
08	SBd	15	R107.3	48	263

Roberta L. McLaughlin
REGISTERED CIVIL ENGINEER

April 20, 2012
PLANS APPROVAL DATE

REGISTERED PROFESSIONAL ENGINEER
Roberta L. McLaughlin
No. C40375
Exp. 3-31-13
CIVIL
STATE OF CALIFORNIA

THE STATE OF CALIFORNIA OR ITS OFFICERS OR AGENTS SHALL NOT BE RESPONSIBLE FOR THE ACCURACY OR COMPLETENESS OF SCANNED COPIES OF THIS PLAN SHEET.

TO ACCOMPANY PLANS DATED 6-13-16

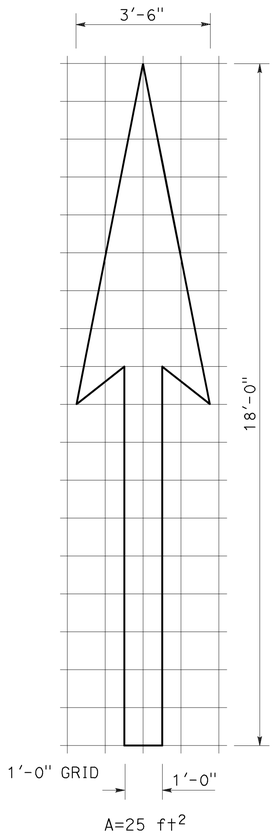

A=25 ft^2

TYPE I 18'-0" ARROW

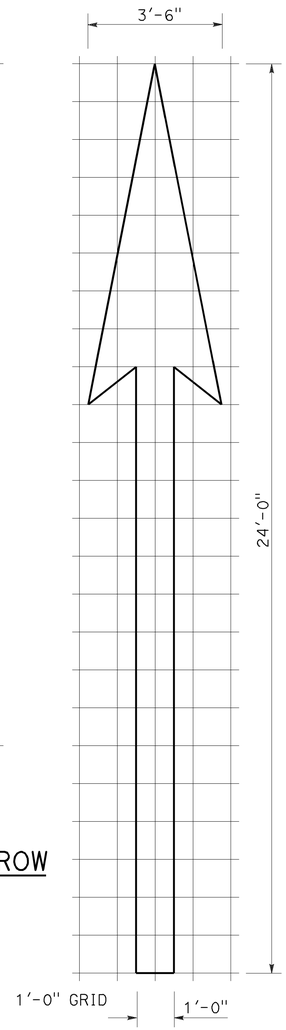

A=31 ft^2

TYPE I 24'-0" ARROW

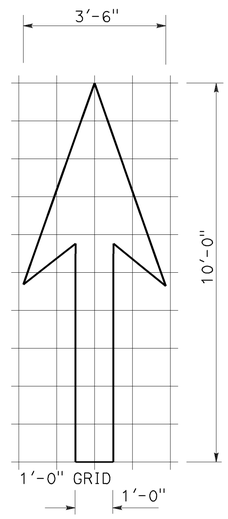

A=14 ft^2

TYPE I 10'-0" ARROW

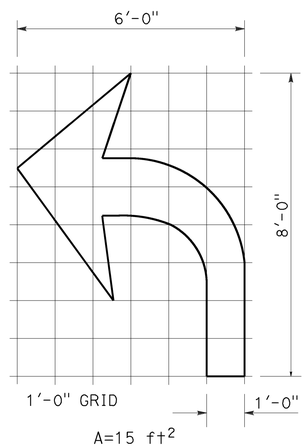

A=15 ft^2

TYPE IV (L) ARROW

(For Type IV (R) arrow, use mirror image)

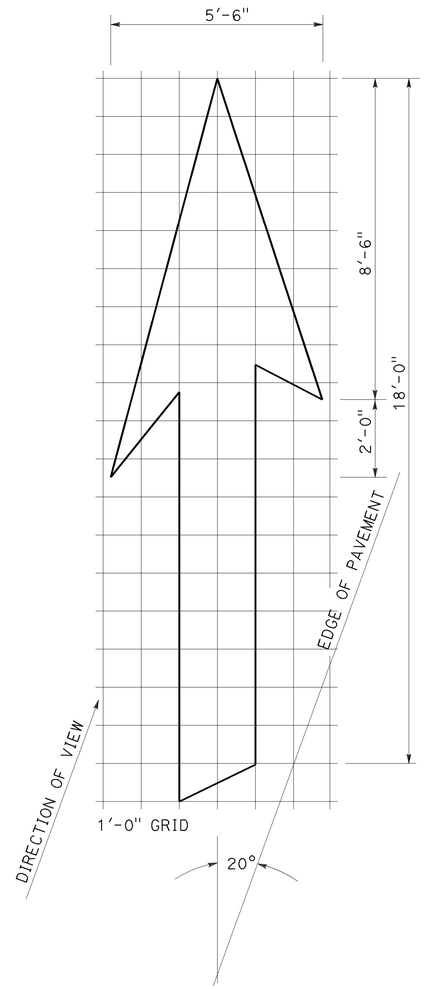

A=42 ft^2

TYPE VI ARROW

Right lane drop arrow
(For left lane, use mirror image)

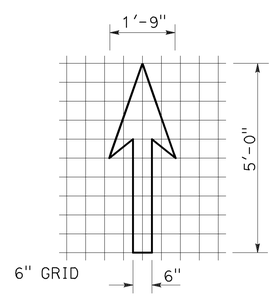

A=3.5 ft^2

BIKE LANE ARROW

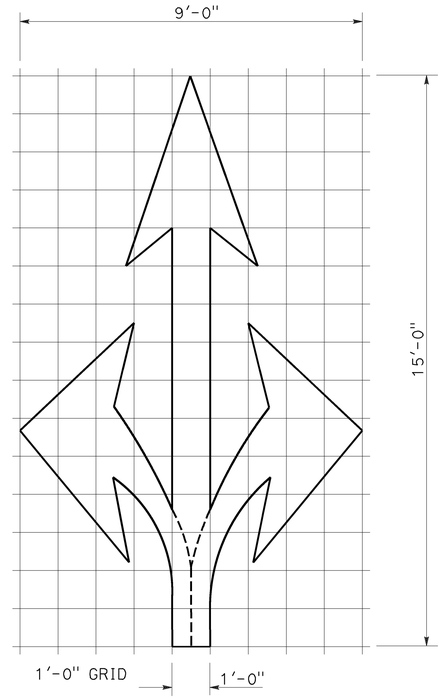

A=36 ft^2

TYPE VIII ARROW

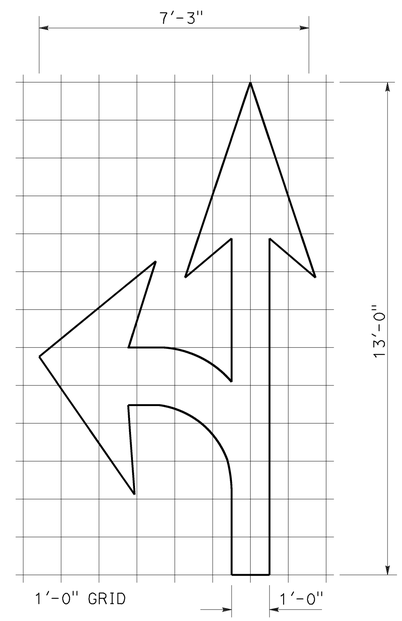

A=27 ft^2

TYPE VII (L) ARROW

(For Type VII (R) arrow, use mirror image)

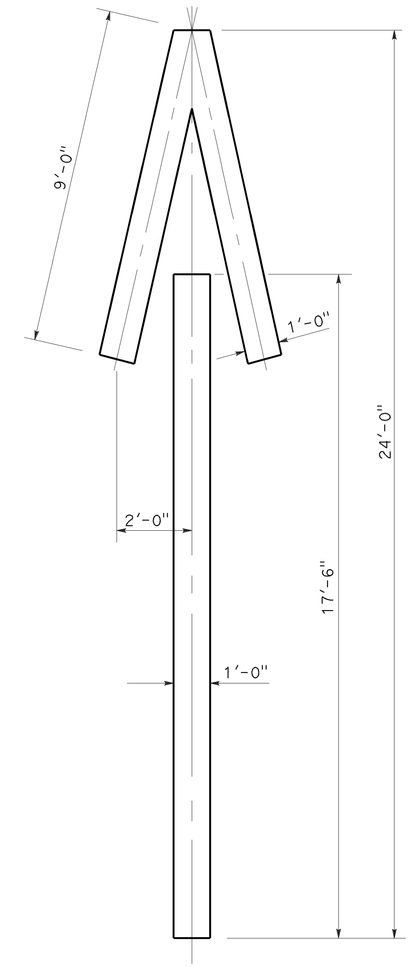

A=33 ft^2

TYPE V ARROW

NOTE:
Minor variations in dimensions may be accepted by the Engineer.

STATE OF CALIFORNIA
DEPARTMENT OF TRANSPORTATION

PAVEMENT MARKINGS ARROWS

NO SCALE

RSP A24A DATED APRIL 20, 2012 SUPERSEDES STANDARD PLAN A24A DATED MAY 20, 2011 - PAGE 13 OF THE STANDARD PLANS BOOK DATED 2010.

REVISED STANDARD PLAN RSP A24A

2010 REVISED STANDARD PLAN RSP A24A

3-14-12

Dist	COUNTY	ROUTE	POST MILES TOTAL PROJECT	SHEET No.	TOTAL SHEETS
08	SBd	15	R107.3	49	263

REGISTERED CIVIL ENGINEER

July 20, 2012
PLANS APPROVAL DATE

REGISTERED PROFESSIONAL ENGINEER
Roberta L. McLaughlin
No. C40375
Exp. 3-31-13
CIVIL
STATE OF CALIFORNIA

THE STATE OF CALIFORNIA OR ITS OFFICERS OR AGENTS SHALL NOT BE RESPONSIBLE FOR THE ACCURACY OR COMPLETENESS OF SCANNED COPIES OF THIS PLAN SHEET.

TO ACCOMPANY PLANS DATED 6-13-16

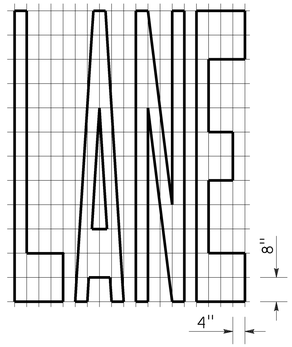

A=24 ft^2

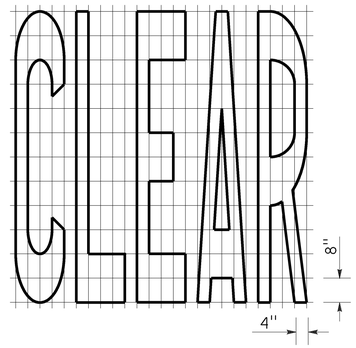

A=27 ft^2

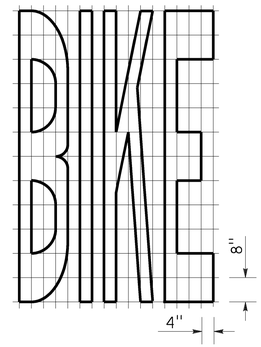

A=21 ft^2

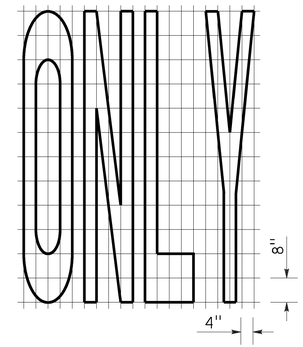

A=22 ft^2

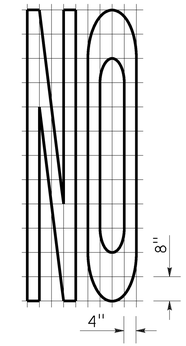

A=14 ft^2

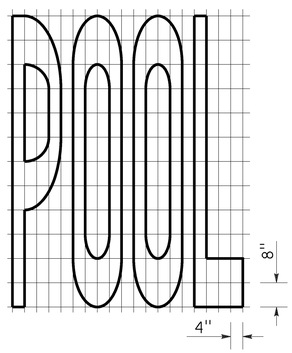

A=23 ft^2

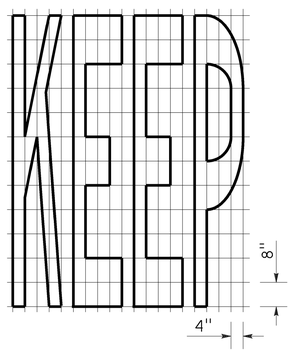

A=24 ft^2

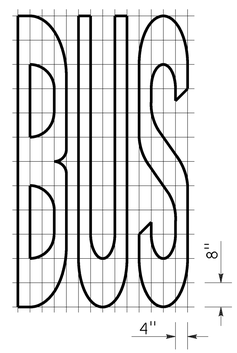

A=20 ft^2

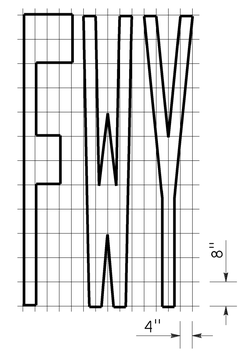

A=16 ft^2

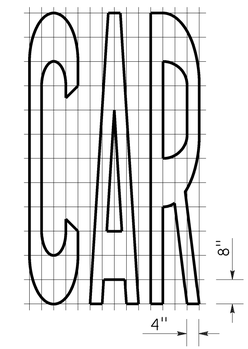

A=17 ft^2

WORD MARKINGS			
ITEM	ft^2	ITEM	ft^2
LANE	24	NO	14
POOL	23	BIKE	21
CAR	17	BUS	20
CLEAR	27	ONLY	22
KEEP	24	FWY	16

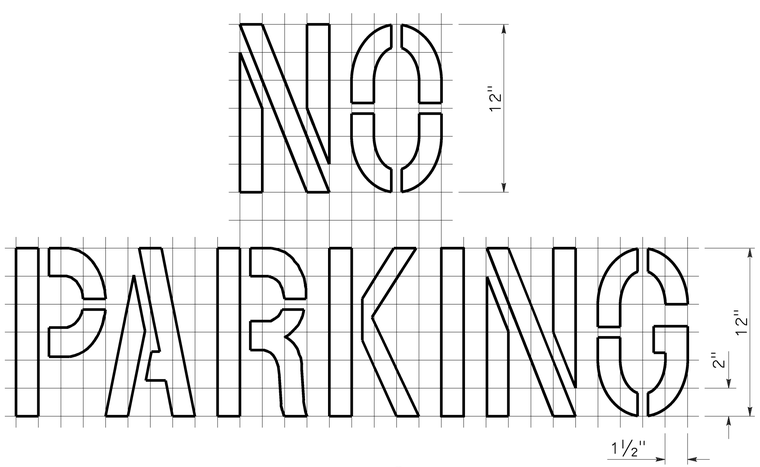

A=2 ft^2
See Notes 6 and 7

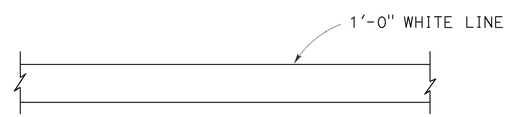

LIMIT LINE (STOP LINE)

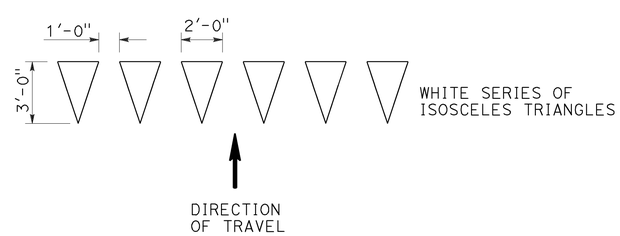

YIELD LINE

NOTES:

1. If a message consists of more than one word, it should read "UP", i.e., the first word should be nearest the driver.
2. The space between words should be at least four times the height of the characters for low speed roads, but not more than ten times the height of the characters. The space may be reduced appropriately where there is limited space because of local conditions.
3. Minor variations in dimensions may be accepted by the Engineer.
4. Portions of a letter, number or symbol may be separated by connecting segments not to exceed 2" in width.
5. The words "NO PARKING" pavement marking is to be used for parking facilities. For typical locations of markings, see Standard Plans A90A and A90B.
6. The words "NO PARKING", shall be painted in white letters no less than 1'-0" high on a contrasting background and located so that it is visible to traffic enforcement officials.

STATE OF CALIFORNIA
DEPARTMENT OF TRANSPORTATION

PAVEMENT MARKINGS WORDS, LIMIT AND YIELD LINES

NO SCALE

RSP A24E DATED JULY 20, 2012 SUPERSEDES STANDARD PLAN A24E
DATED MAY 20, 2011 - PAGE 17 OF THE STANDARD PLANS BOOK DATED 2010.

REVISED STANDARD PLAN RSP A24E

2010 REVISED STANDARD PLAN RSP A24E

6-12-12

Dist	COUNTY	ROUTE	POST MILES TOTAL PROJECT	SHEET No.	TOTAL SHEETS
08	SBd	15	R107.3	50	263

REGISTERED CIVIL ENGINEER

July 18, 2014
PLANS APPROVAL DATE

REGISTERED PROFESSIONAL ENGINEER
Carl M. Duan
No. C59976
Exp. 6-30-16
CIVIL
STATE OF CALIFORNIA

THE STATE OF CALIFORNIA OR ITS OFFICERS OR AGENTS SHALL NOT BE RESPONSIBLE FOR THE ACCURACY OR COMPLETENESS OF SCANNED COPIES OF THIS PLAN SHEET.

TO ACCOMPANY PLANS DATED 6-13-16

2010 REVISED STANDARD PLAN RSP A62DA

DESIGN NOTES:

Design: AASHTO LRFD Bridge Design Specifications, 4th edition with California Amendments. ACPA DESIGN DATA 1, October 2007. INDIRECT DESIGN METHOD

Soil: w Fe = 162 pcf Installation Type 1
w Fe = 168 pcf Installation Types 2 & 3
w = Unit weight of soil (pcf)
Fe = Soil-structure interaction factor

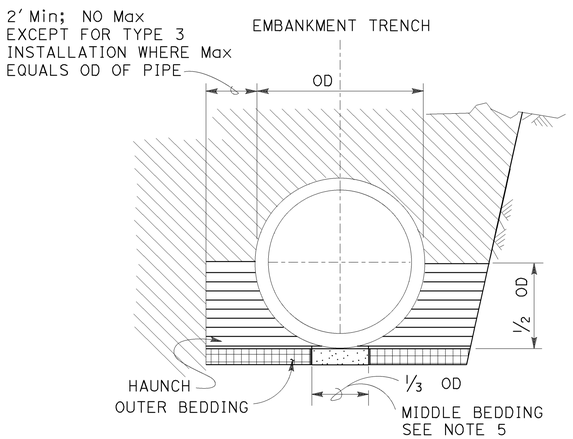

BACKFILL

LEGEND:

- ROADWAY EMBANKMENT
- STRUCTURE BACKFILL (CULVERT) FOR HAUNCH SEE NOTE 6
- STRUCTURE BACKFILL (CULVERT) FOR OUTER BEDDING SEE NOTE 6
- LOOSE BACKFILL
- STRUCTURE EXCAVATION (CULVERT)

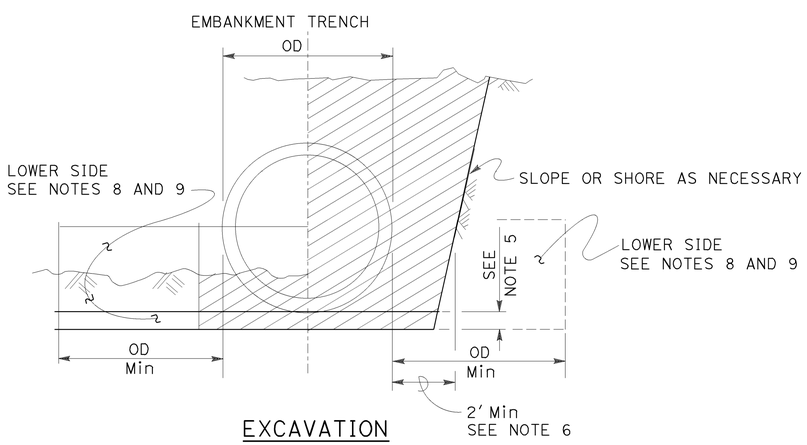

EXCAVATION

INSTALLATION TYPE 1:

The haunch and outer bedding shall be compacted to a minimum 90 percent relative compaction. In addition, the minimum sand equivalent in these areas shall be 30 and the maximum percentage passing the No. 200 sieve size shall be 12.

INSTALLATION TYPE 2:

The haunch and outer bedding shall be compacted to a minimum 90 percent relative compaction. In addition, the minimum sand equivalent in these areas shall be 25.

INSTALLATION TYPE 3:

The haunch and outer bedding shall be compacted to a minimum 85 percent relative compaction. 90 percent relative compaction will be required where the fill over the pipe is less than 4′-0″ or ½ OD. In addition, the minimum sand equivalent in these areas shall be 25 and the material shall not contain rocks, broken concrete, or other solid material exceeding 3″ in greatest dimension.

INSTALLATION TYPE 1

MINIMUM CLASS AND D-LOAD	COVER	
	60″ Dia AND SMALLER	OVER 60″ Dia TO 120″ Dia Max
CLASS II 1000D	14.9′	12.9′
CLASS III 1350D	15.0′ - 21.9′	13.0′ - 18.9′
CLASS III SPECIAL 1700D	22.0′ - 27.9′	19.0′ - 24.9′
CLASS IV 2000D	28.0′ - 32.9′	25.0′ - 29.9′
CLASS IV SPECIAL 2500D	33.0′ - 41.9′	30.0′ - 38.9′
CLASS V 3000D	42.0′ - 49.9′	39.0′ - 46.9′
CLASS V SPECIAL 3600D	50.0′ - 60.0′	47.0′ - 58.0′

INSTALLATION TYPE 2

MINIMUM CLASS AND D-LOAD	COVER	
	60″ Dia AND SMALLER	OVER 60″ Dia TO 120″ Dia Max
CLASS II 1000D	11.9′	9.9′
CLASS III 1350D	12.0′ - 15.9′	10.0′ - 14.9′
CLASS III SPECIAL 1700D	16.0′ - 20.9′	15.0′ - 19.9′
CLASS IV 2000D	21.0′ - 24.9′	20.0′ - 23.9′
CLASS IV SPECIAL 2500D	25.0′ - 31.9′	24.0′ - 30.9′
CLASS V 3000D	32.0′ - 37.9′	31.0′ - 37.9′
CLASS V SPECIAL 3600D	38.0′ - 46.0′	38.0′ - 46.0′

INSTALLATION TYPE 3

MINIMUM CLASS AND D-LOAD	COVER	
	60″ Dia AND SMALLER	OVER 60″ Dia TO 120″ Dia Max
CLASS II 1000D	8.9′	5.9′
CLASS III 1350D	9.0′ - 11.9′	6.0′ - 10.9′
CLASS III SPECIAL 1700D	12.0′ - 15.9′	11.0′ - 13.9′
CLASS IV 2000D	16.0′ - 18.9′	14.0′ - 17.9′
CLASS IV SPECIAL 2500D	19.0′ - 24.9′	18.0′ - 22.9′
CLASS V 3000D	25.0′ - 29.9′	23.0′ - 28.9′
CLASS V SPECIAL 3600D	30.0′ - 36.0′	29.0′ - 35.0′

NOTES:

1. Unless otherwise shown on the plans or specified in the special provision, the Contractor shall have the option of selecting the class of RCP and the type of installation to be used, provided the height of cover does not exceed the value shown for the RCP selected.
   Example: 24″ RCP culvert with maximum cover of 24′-0″ the options are:
   a) Class III Special or stronger with Installation Type 1.
   b) Class IV or stronger with Installation Type 2.
   c) Class IV Special or stronger with Installation Type 3.
   Cover is defined as the maximum vertical distance from top of the pipe to finished grade within the length of any given culvert.
2. The class of RCP and Installation Type selected shall be the same throughout the length of any given culvert.
3. The "length of any culvert" is defined as the culvert between:
   a) Successive drainage structure (inlets, junction boxes, headwalls, etc.).
   b) A drainage structure and the inlet or outlet end of the culvert.
   c) The inlet and outlet end of the culvert when there are no intervening drainage structures.
4. Oval and arch shaped RCP shall not be used.
5. Bedding depth: 1/25 OD Min, not less than 3″.
6. Slurry cement backfill may be substituted for backfill in the outer bedding and haunch areas. If slurry is used, the outer and middle beddings shall be omitted. Prior to installation, the soil under the middle ⅓ of the outside diameter of the pipe shall be softened by scarifying or other means to a minimum depth of 1/25 OD, but not less than 3″. Where slurry cement backfill is used, clear distance to trench wall may be reduced as set forth in the Standard Specifications.
7. Backfill shall be placed full width of excavation except where dimensions are shown for backfill width or thickness. Dimensions shown are minimum.
8. Lower side shall be suitable material as determined by the Engineer. Otherwise it shall be considered unsuitable as set forth in of the Standard Specifications. See Note 9.
9. Where the pipe is placed in a trench, if the trench walls are sloped at 5 vertical to 1 horizontal or steeper for at least 90 percent of the trench height or up to not less than 12″ from the grading plane, the firmness of the soil in the lower side need not be considered.
10. Non-reinforced precast concrete pipe sizes 3′-0″ or smaller may be placed under installation Types 1, 2 or 3.

STATE OF CALIFORNIA
DEPARTMENT OF TRANSPORTATION

EXCAVATION AND BACKFILL CONCRETE PIPE CULVERTS INDIRECT DESIGN METHOD

NO SCALE

RSP A62DA DATED JULY 18, 2014 SUPERSEDES STANDARD PLAN A62DA DATED MAY 20, 2011 - PAGE 24 OF THE STANDARD PLANS BOOK DATED 2010.

REVISED STANDARD PLAN RSP A62DA

Dist	COUNTY	ROUTE	POST MILES TOTAL PROJECT	SHEET No.	TOTAL SHEETS
08	SBd	15	R107.3	51	263

REGISTERED CIVIL ENGINEER

July 15, 2016
PLANS APPROVAL DATE

REGISTERED PROFESSIONAL ENGINEER Sukhdeep Singh Sandher No. C74893 Exp. 12-31-17 CIVIL STATE OF CALIFORNIA

THE STATE OF CALIFORNIA OR ITS OFFICERS OR AGENTS SHALL NOT BE RESPONSIBLE FOR THE ACCURACY OR COMPLETENESS OF SCANNED COPIES OF THIS PLAN SHEET.

TO ACCOMPANY PLANS DATED 6-13-16

2015 REVISED STANDARD PLAN RSP A85

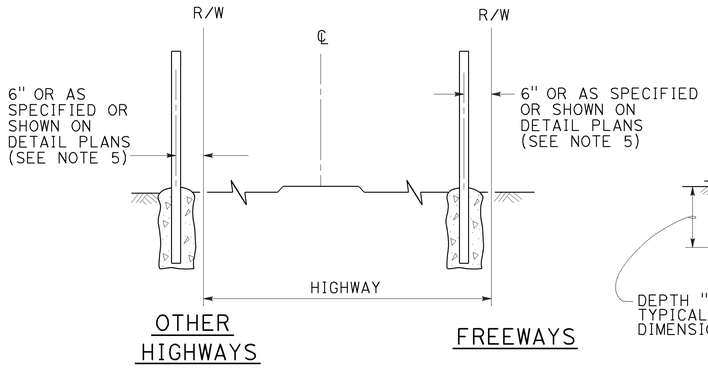

FENCE LOCATION

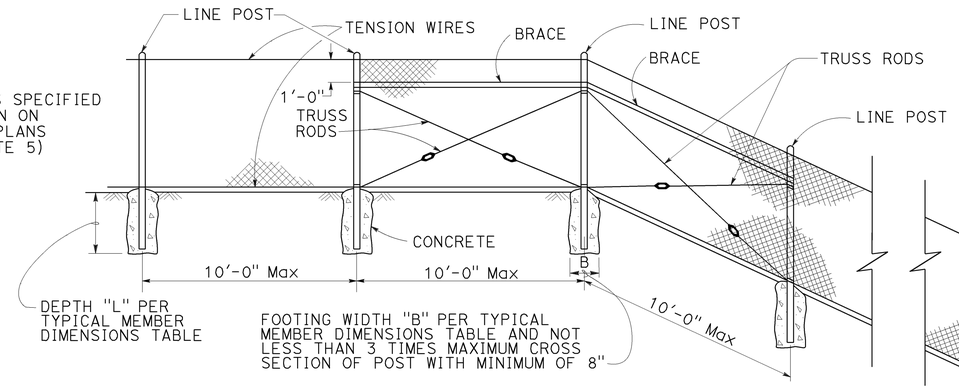

CHAIN LINK FENCE ON SHARP BREAK IN GRADE

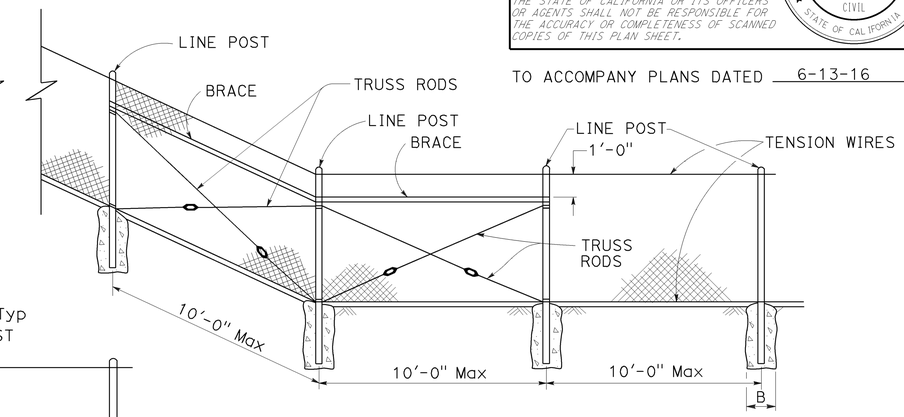

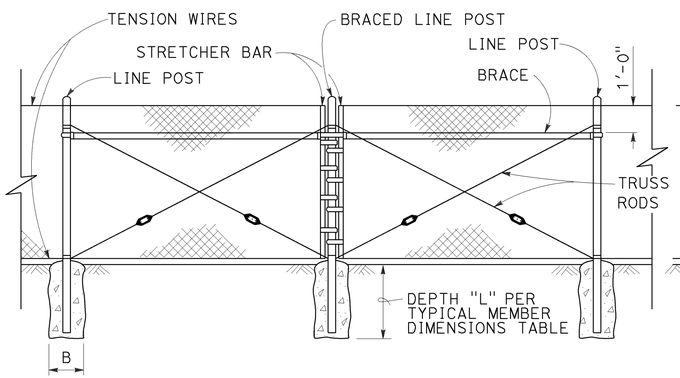

BRACED LINE POST INSTALLATION

Braced line post at intervals not exceeding 1000'

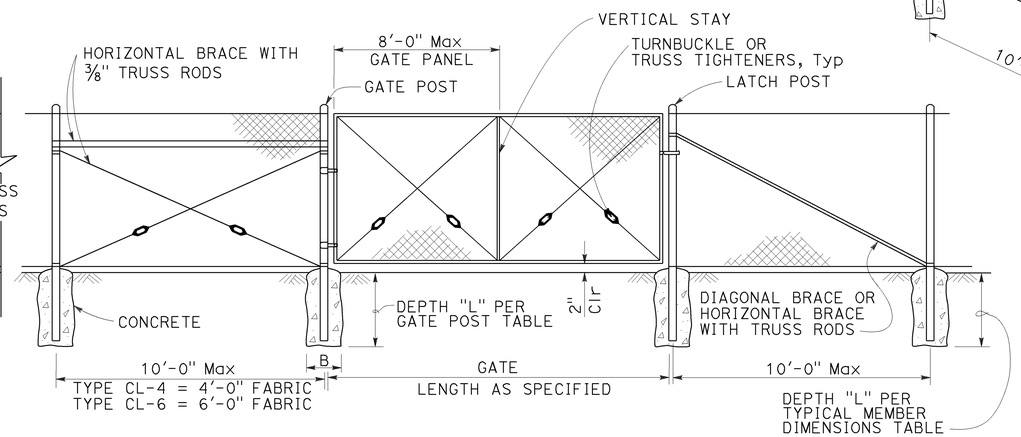

CHAIN LINK GATE INSTALLATION

GATE POST						
FENCE HEIGHT (Max)	SLATTED	B (in)	L (ft)	ROUND PIPE		
				SECTION	ROUND OD PIPE	WEIGHT (lb/ft)
5'-0"	NO	12"	2'-6"	3 Std	3.50"	7.58
6'-0"	NO	12"	2'-6"	3 Std	3.50"	7.58
8'-0"	NO	12"	3'-0"	3 Std	3.50"	7.58
10'-0"	NO	14"	3'-6"	3 Std	3.50"	7.58
5'-0"	YES	12"	3'-0"	3½ Std	4.00"	9.12
6'-0"	YES	14"	3'-6"	4 Std	4.50"	10.80
8'-0"	YES	18"	3'-6"	5 Std	5.56"	14.60
10'-0"	YES	20"	4'-0"	6 Std	6.63"	19.00

Above post dimensions and weights are minimums.
Larger sizes may be used upon approval.
Maximum Gate Width is 24'-0".

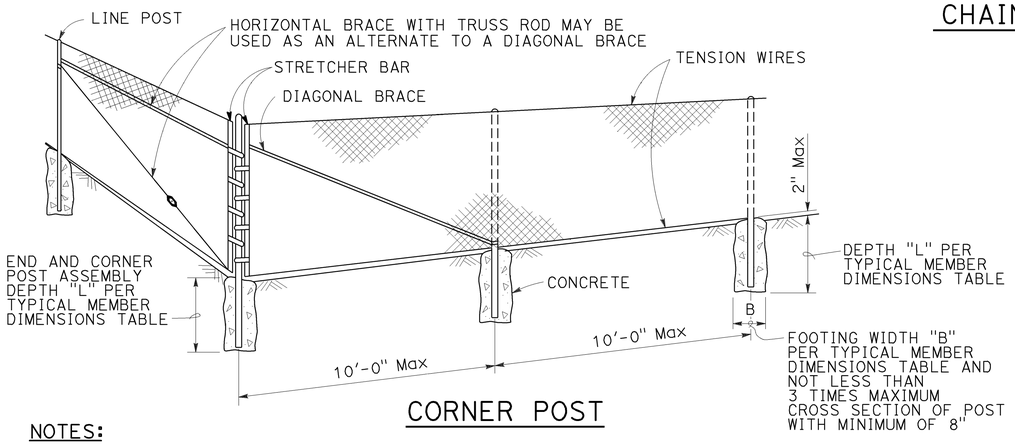

CORNER POST

TYPICAL MEMBER DIMENSIONS (See Notes)													
FENCE HEIGHT (Max)	SLATTED	B (in)	L (ft)	LINE POSTS					BRACES				
				ROUND PIPE			ROLL FORMED		ROUND PIPE			ROLL FORMED	
				SECTION	ROUND OD PIPE	WEIGHT (lb/ft)	SECTION	WEIGHT (lb/ft)	SECTION	ROUND OD PIPE	WEIGHT (lb/ft)	SECTION	WEIGHT (lb/ft)
5'-0"	NO	8"	2'-6"	1½ Std	1.90"	2.72	1.875" x 1.625"	1.85	2 Std	2.38"	3.66	1.625" x 1.250"	1.35
6'-0"	NO	10"	2'-6"	2 Std	2.38"	3.66	1.875" x 1.625"	2.40	2 Std	2.38"	3.66	1.625" x 1.250"	1.35
8'-0"	NO	12"	3'-0"	2½ Std	2.88"	5.80	3.250" x 2.500"	4.50	2 Std	2.38"	3.66	1.625" x 1.250"	1.35
10'-0"	NO	14"	3'-6"	3 Std	3.50"	7.58	3.250" x 2.500"	4.50	2½ Std	2.88"	5.80	1.625" x 1.250"	1.35
5'-0"	YES	12"	3'-0"	3½ Std	4.00"	9.12	N/A	-	2 Std	2.38"	3.66	N/A	-
6'-0"	YES	14"	3'-0"	4 Std	4.50"	10.80	N/A	-	2 Std	2.38"	3.66	N/A	-
8'-0"	YES	18"	3'-6"	5 Std	5.56"	14.60	N/A	-	2 Std	2.38"	3.66	N/A	-
10'-0"	YES	20"	4'-0"	6 Std	6.63"	19.00	N/A	-	2½ Std	2.88"	5.80	N/A	-

NOTES:

1. The table to the right shows minimum sized posts and braces complying with the specifications. Larger or heavier post and brace sizes may be used upon approval.
2. Sections shown in the tables must also comply with the strength requirements and other provisions of the Specifications.
3. Other sections which comply with the strength requirements and other provisions of the Specifications may be used upon approval.
4. Options exercised shall be uniform on any one project.
5. Offset to be 2'-0" at monument locations, measured at right angles to R/W lines. Taper to achieve offset to be at least 20'-0" long.
6. See Revised Standard Plan RSP A85B for Brace, Stretcher Bar, and Truss Tightener Details.

STATE OF CALIFORNIA
DEPARTMENT OF TRANSPORTATION

CHAIN LINK FENCE

NO SCALE

RSP A85 DATED JULY 15, 2016 SUPERSEDES STANDARD PLAN A85
DATED OCTOBER 30, 2015 - PAGE 117 OF THE STANDARD PLANS BOOK DATED 2015.

REVISED STANDARD PLAN RSP A85

6-29-16

Dist	COUNTY	ROUTE	POST MILES TOTAL PROJECT	SHEET No.	TOTAL SHEETS
08	SBd	15	R107.3	52	263

REGISTERED CIVIL ENGINEER

July 15, 2016
PLANS APPROVAL DATE

REGISTERED PROFESSIONAL ENGINEER Sukhdeep Singh Sandher No. C74893 Exp. 12-31-17 CIVIL STATE OF CALIFORNIA

THE STATE OF CALIFORNIA OR ITS OFFICERS OR AGENTS SHALL NOT BE RESPONSIBLE FOR THE ACCURACY OR COMPLETENESS OF SCANNED COPIES OF THIS PLAN SHEET.

TO ACCOMPANY PLANS DATED 6-13-16

2015 REVISED STANDARD PLAN RSP A85A

NOTES:

1. B is not less than 3 times maximum cross section of post with minimum of 8".
2. See Revised Standard Plan RSP A85 for Chain Link Fencing dimensions.
3. See Detail A on Standard Plan A86B for connection at headwall.
4. See Detail D on Standard Plan A86B for connection at headwall.

CENTER POST		
FENCE HEIGHT (Max)	SLATTED	P
ALL HEIGHTS	NO	1'-6"
5'-0"	YES	3'-0"
6'-0"	YES	3'-0"
8'-0"	YES	3'-6"
10'-0"	YES	4'-0"

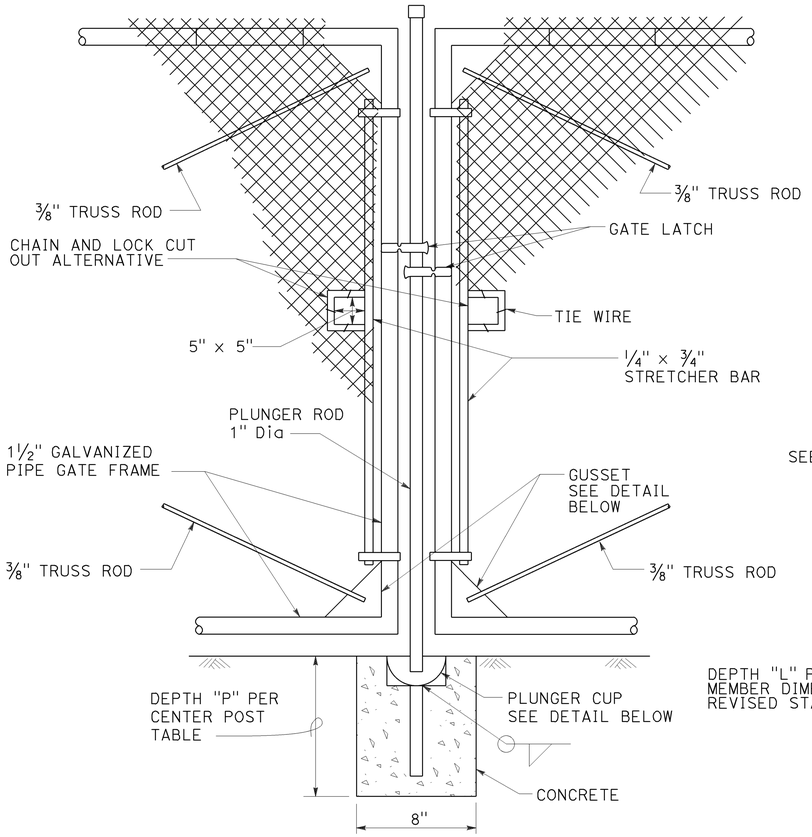

DOUBLE GATE
REMOVABLE CENTER POST

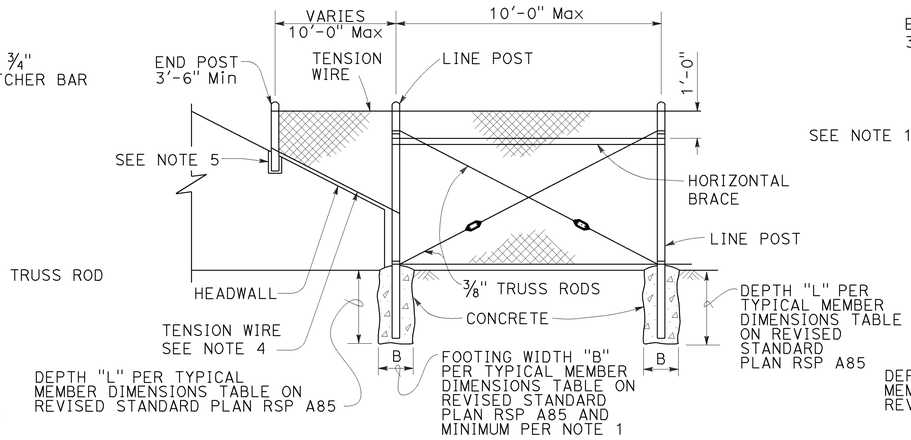

METHOD OF TYING FENCE TO HEADWALL

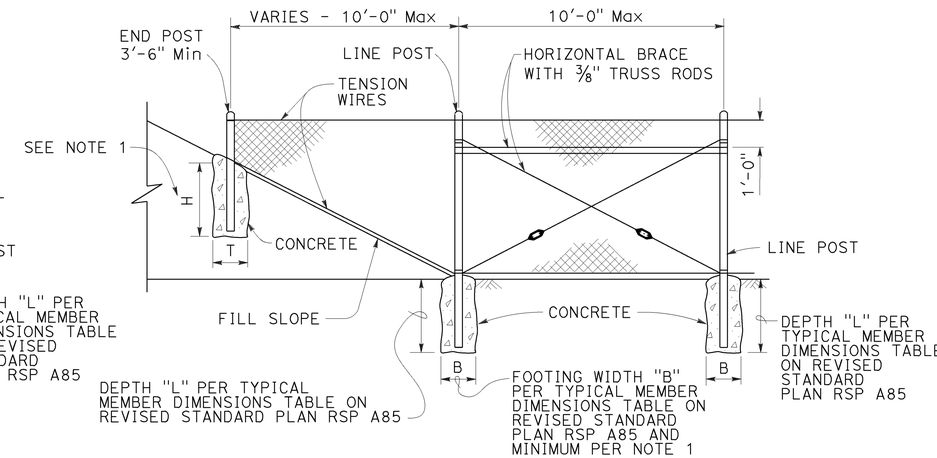

METHOD OF ERECTING FENCE FOR FILL SLOPE

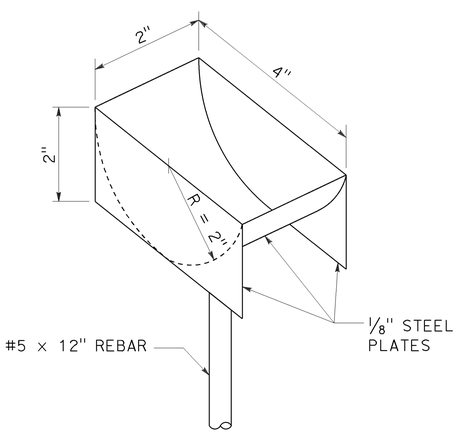

PLUNGER CUP DETAIL

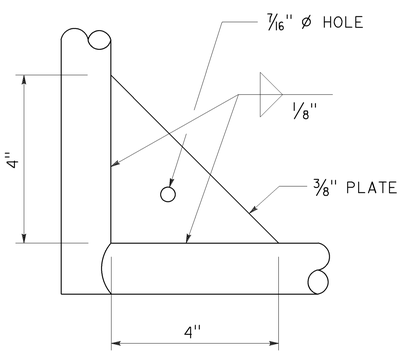

GUSSET DETAIL

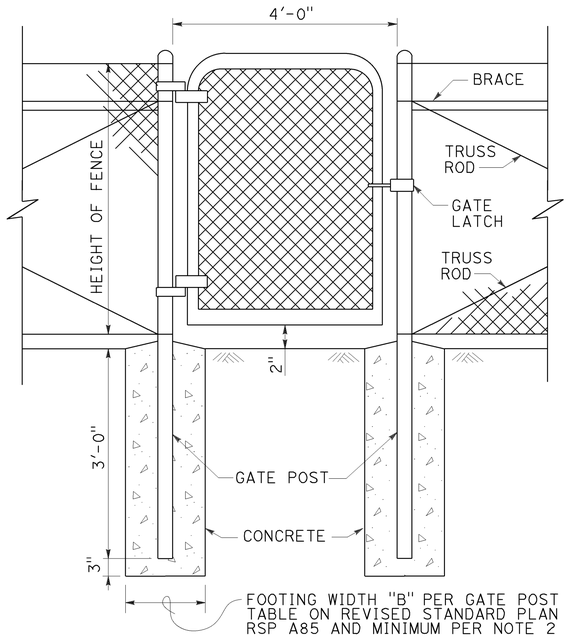

WALK GATE

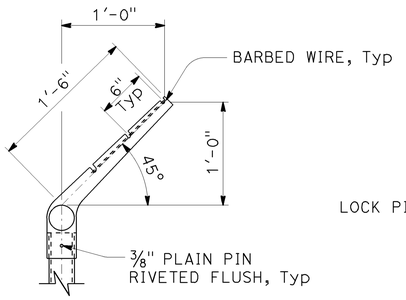

LINE POST

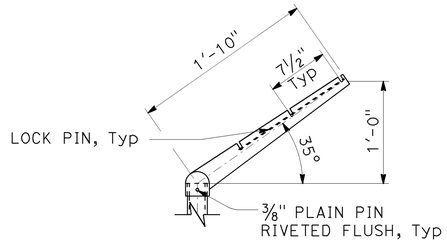

CORNER POST

BARBED WIRE POST TOP

STATE OF CALIFORNIA
DEPARTMENT OF TRANSPORTATION

CHAIN LINK FENCE DETAILS

NO SCALE

RSP A85A DATED JULY 15, 2016 SUPERSEDES STANDARD PLAN A85A
DATED OCTOBER 30, 2015 - PAGE 118 OF THE STANDARD PLANS BOOK DATED 2015.

REVISED STANDARD PLAN RSP A85A

6-24-16

Dist	COUNTY	ROUTE	POST MILES TOTAL PROJECT	SHEET No.	TOTAL SHEETS
08	SBd	15	R107.3	53	263

REGISTERED CIVIL ENGINEER

October 19, 2012
PLANS APPROVAL DATE

REGISTERED PROFESSIONAL ENGINEER Glenn DeCou No. C34547 Exp. 9-30-13 CIVIL STATE OF CALIFORNIA

THE STATE OF CALIFORNIA OR ITS OFFICERS OR AGENTS SHALL NOT BE RESPONSIBLE FOR THE ACCURACY OR COMPLETENESS OF SCANNED COPIES OF THIS PLAN SHEET.

TO ACCOMPANY PLANS DATED 6-13-16

2010 REVISED STANDARD PLAN RSP A85B

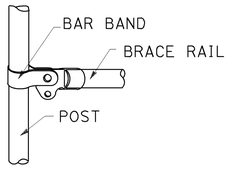

BRACE RAIL

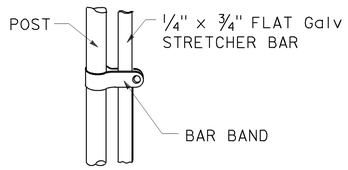

STRETCHER BAR

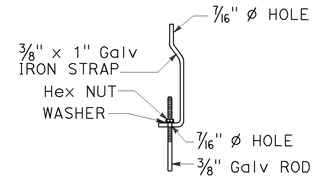

TRUSS TIGHTENER

NOTES:

1. All material for abutment connection to be galvanized.
2. The chain link fabric shall be replaced by barbed wire strands at 12" maximum centers between the double posts.
3. When the width of the culvert makes it necessary to anchor a post to the top of the culvert, a cast iron shoe or other device approved by the Engineer shall be used.
4. Fencing over stream and around headwall may also use Barbed Wire or Wire Mesh fencing with either wood post or steel post installation.
5. See Standard Plan A85 for Chain Link fence dimensions. See Standard Plan A86 for Barbed Wire and Wire Mesh fence dimensions and for wood post and steel post installation.

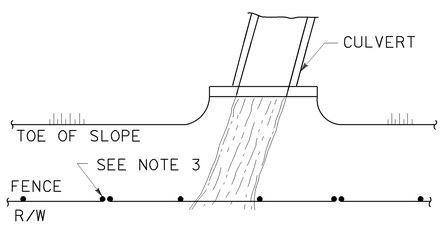

PLAN

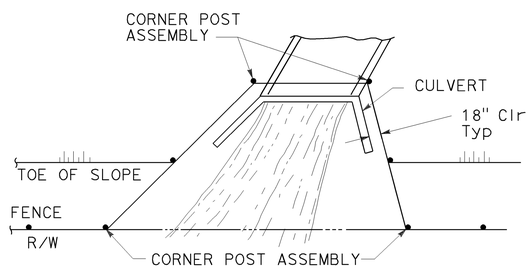

PLAN

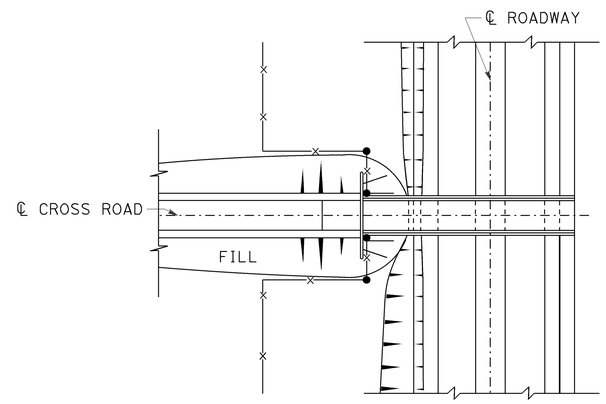

PLAN OF ROADWAY - OVERCROSSING

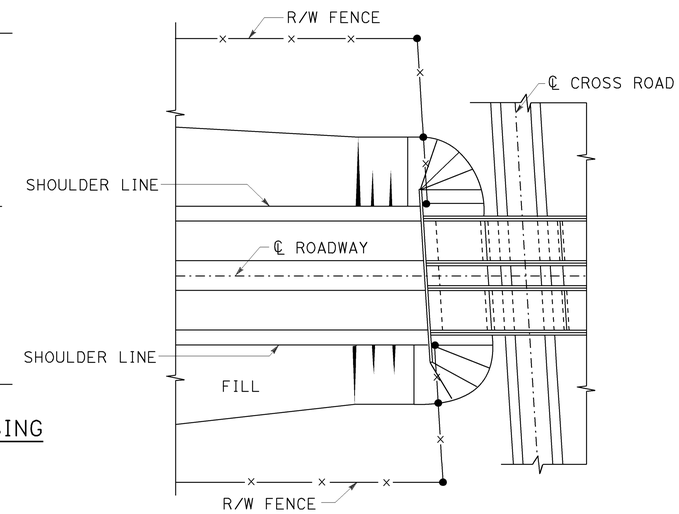

PLAN OF ROADWAY - UNDERCROSSING

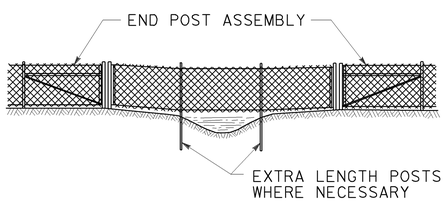

ELEVATION

INSTALLATION OVER STREAM

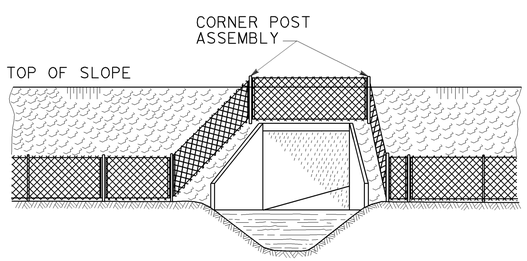

ELEVATION

INSTALLATION AROUND HEADWALL

See Note 4

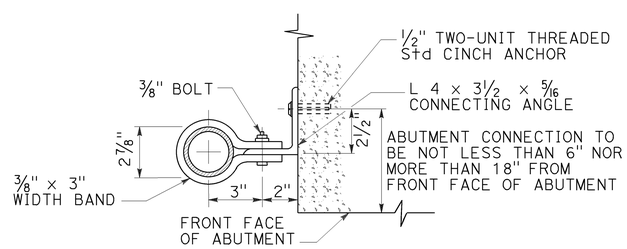

ABUTMENT CONNECTION

TYPICAL INSTALLATION AT BRIDGES

STATE OF CALIFORNIA
DEPARTMENT OF TRANSPORTATION

CHAIN LINK FENCE DETAILS

NO SCALE

RSP A85B DATED OCTOBER 19, 2012 SUPERSEDES STANDARD PLAN A85B DATED MAY 20, 2011 - PAGE 114 OF THE STANDARD PLANS BOOK DATED 2010.

REVISED STANDARD PLAN RSP A85B

7-19-12

Dist	COUNTY	ROUTE	POST MILES TOTAL PROJECT	SHEET No.	TOTAL SHEETS
08	SBd	15	R107.3	54	263

REGISTERED CIVIL ENGINEER

July 19, 2013
PLANS APPROVAL DATE

REGISTERED PROFESSIONAL ENGINEER
Michael Janzen
No. 44788
Exp. 03-31-14
CIVIL
STATE OF CALIFORNIA

THE STATE OF CALIFORNIA OR ITS OFFICERS OR AGENTS SHALL NOT BE RESPONSIBLE FOR THE ACCURACY OR COMPLETENESS OF SCANNED COPIES OF THIS PLAN SHEET.

TO ACCOMPANY PLANS DATED 6-13-16

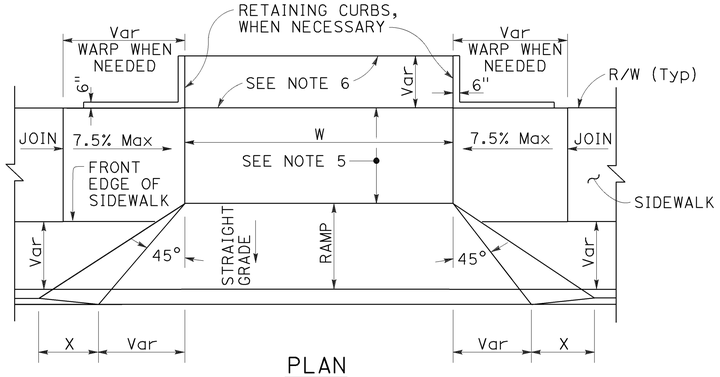

PLAN

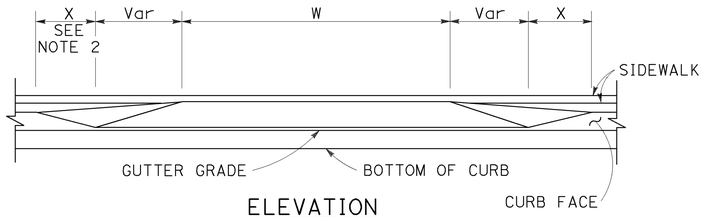

ELEVATION

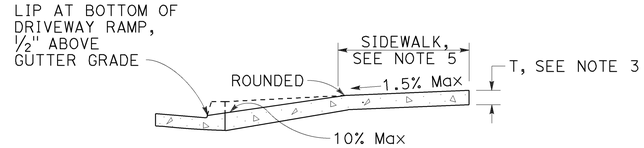

CASE A

Typical driveway, sidewalk not depressed

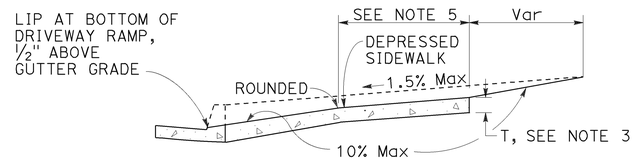

CASE B

Driveway with depressed sidewalk

SECTIONS

DRIVEWAYS

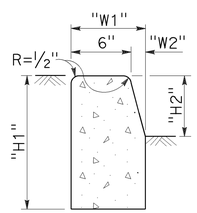

TYPE A1 CURBS

See Table A

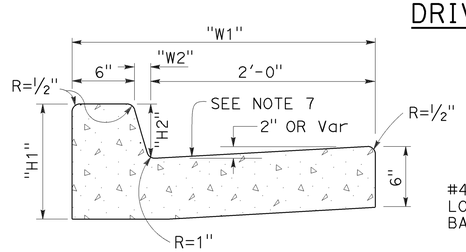

TYPE A2 CURBS

See Table A

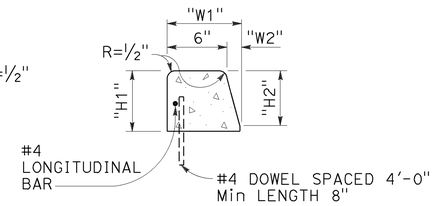

TYPE A3 CURBS

Superimposed on existing pavement
See Table A

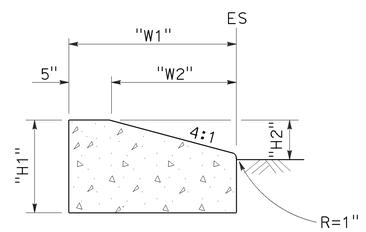

TYPE D CURBS

See Table A

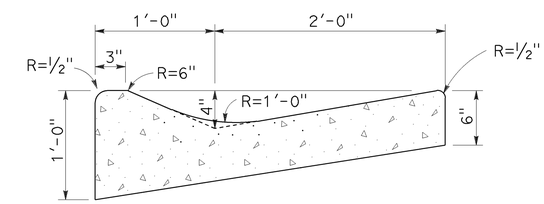

TYPE E CURB

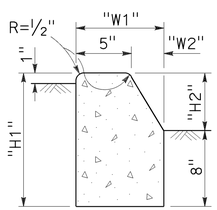

TYPE B1 CURBS

See Table A

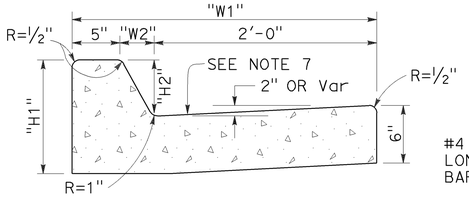

TYPE B2 CURBS

See Table A

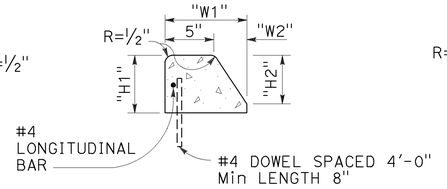

TYPE B3 CURBS

Superimposed on existing pavement
See Table A

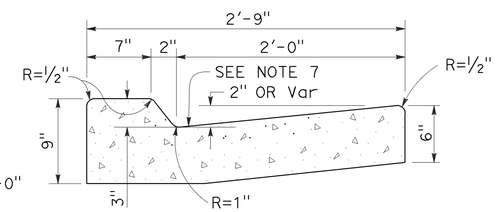

TYPE B4 CURBS

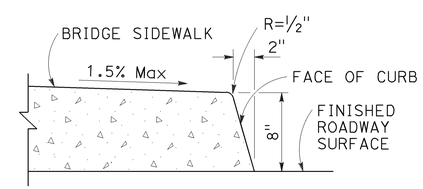

TYPE H CURB

On Bridges

CURBS

TABLE A

CURB TYPE	DIMENSIONS			
	"H1"	"H2"	"W1"	"W2"
A1-6	1'-2"	6"	7½"	1½"
A1-8	1'-4"	8"	8"	2"
A2-6	1'-0"	6"	2'-7½"	1½"
A2-8	1'-2"	8"	2'-8"	2"
A3-6	6"	5"	7¼"	1¼"
A3-8	8"	7"	7¾"	1¾"
B1-4	1'-0"	4"	7½"	2½"
B1-6	1'-2"	6"	9"	4"
B2-4	10"	4"	2'-7½"	2½"
B2-6	1'-0"	6"	2'-9"	4"
B3-4	4"	3"	7"	2"
B3-6	6"	5"	8½"	3½"
D-4	10"	4"	1'-6"	1'-1"
D-6	1'-0"	6"	2'-2"	1'-9"

CURB QUANTITIES

TYPE	CUBIC YARDS PER LINEAR FOOT
A1-6	0.02585
A1-8	0.03084
A2-6	0.05903
A2-8	0.06379
A3-6	0.01036
A3-8	0.01435
B1-4	0.02185
B1-6	0.02930
B2-4	0.05515
B2-6	0.06171
B3-4	0.00641
B3-6	0.01074
B4	0.05709
D-4	0.04083
D-6	0.06804
E	0.06661

NOTES:

1. Case A driveway section typically applies.
2. X=3'-0" except for curb heights over 10" where 4:1 slopes shall be used on curb slope.
3. Sidewalk and ramp thickness "T" at driveway shall be 4" for residental and 6" for commercial.
4. Difference in slope of the driveway ramp and the slope of a line between the gutter and a point on the roadway 5'-0" from gutter line shall not exceed 15%. Reduce driveway ramp slope, not gutter slope, where required.
5. Minimum width of clear passageway for sidewalk shall be 4'-2".
6. Retaining curbs and acquisition of construction easement may be necessary for narrow sidewalks or curb heights in excess of 6".
7. Across the pedestrian route at curb ramp locations, the gutter pan slope shall not exceed 1" of depth for each 2'-0" of width.

STATE OF CALIFORNIA
DEPARTMENT OF TRANSPORTATION

CURBS AND DRIVEWAYS

NO SCALE

RSP A87A DATED JULY 19, 2013 SUPERSEDES STANDARD PLAN A87A
DATED MAY 20, 2011 - PAGE 119 OF THE STANDARD PLANS BOOK DATED 2010.

REVISED STANDARD PLAN RSP A87A

2010 REVISED STANDARD PLAN RSP A87A

7-8-13

Dist	COUNTY	ROUTE	POST MILES TOTAL PROJECT	SHEET No.	TOTAL SHEETS
08	SBd	15	R107.3	55	263

REGISTERED CIVIL ENGINEER

January 15, 2016
PLANS APPROVAL DATE

REGISTERED PROFESSIONAL ENGINEER
Michael Janzen
No. 44788
Exp. 3-31-16
CIVIL
STATE OF CALIFORNIA

THE STATE OF CALIFORNIA OR ITS OFFICERS OR AGENTS SHALL NOT BE RESPONSIBLE FOR THE ACCURACY OR COMPLETENESS OF SCANNED COPIES OF THIS PLAN SHEET.

TO ACCOMPANY PLANS DATED 6-13-16

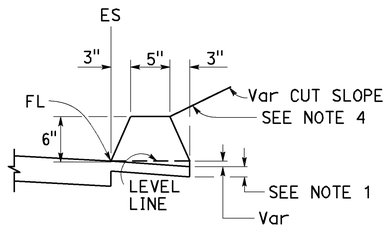

TYPE A
See Notes 3 and 5

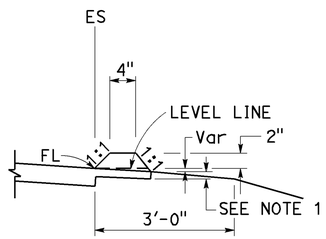

TYPE C

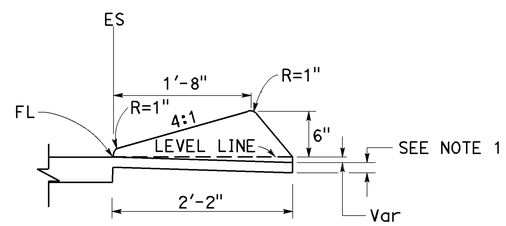

TYPE D

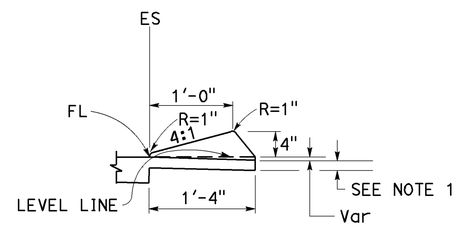

TYPE E

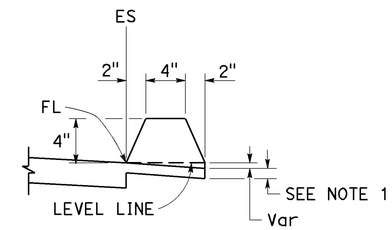

TYPE F
See Note 5

DIKES

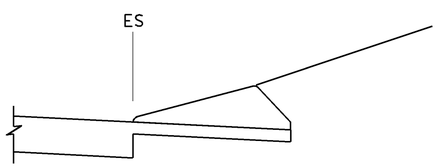

CASE C-1
Cut Slope

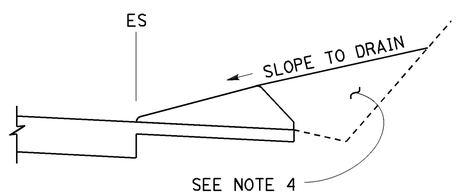

CASE C-2
Cut Slope

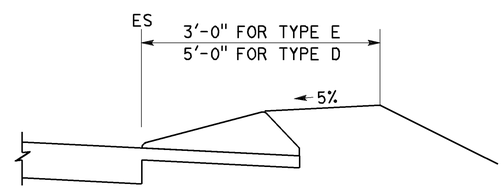

CASE F

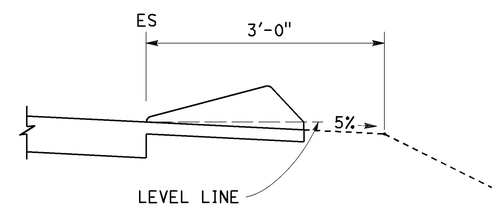

CASE R
See Note 2

TYPE D AND E BACKFILL DETAILS

NOTES:

1. For HMA shoulders only, extend top layer of HMA placed on the shoulder under dike with no joint at the ES. For projects with OGFC shoulders, do not extend OGFC under dike. See project plans for modified dike detail.
2. Case R applies to retrofit only projects where restrictive conditions do not provide enough width for Case F backfill.
3. Type A dike only to be used where restrictive slope conditions do not provide enough width to use Type D or Type E dike.
4. Fill and compact with excavated material to top of dike.
5. Use Type A or F dike, where dike is required with guardrail installations. See Revised Standard Plan RSP A77N4 for dike positioning details. See Revised Standard Plan RSP A77N3 for hinge point offsets with guardrail.

DIKE QUANTITIES

TYPE	CUBIC YARDS PER LINEAR FOOT
A	0.0135
C	0.0038
D	0.0293
E	0.0130
F	0.0066

Quantities based on 5% cross slope.

STATE OF CALIFORNIA
DEPARTMENT OF TRANSPORTATION

HOT MIX ASPHALT DIKES

NO SCALE

RSP A87B DATED JANUARY 15, 2016 SUPERSEDES RSP A87B DATED JULY 19, 2013 AND STANDARD PLAN A87B DATED MAY 20, 2011 - PAGE 120 OF THE STANDARD PLANS BOOK DATED 2010.

REVISED STANDARD PLAN RSP A87B

2010 REVISED STANDARD PLAN RSP A87B

11-17-15

Dist	COUNTY	ROUTE	POST MILES TOTAL PROJECT	SHEET No.	TOTAL SHEETS
08	SBd	15	R107.3	56	263

REGISTERED CIVIL ENGINEER

July 3, 2015
PLANS APPROVAL DATE

REGISTERED PROFESSIONAL ENGINEER
Hector David Cordova
No. C41957
Exp. 3-31-16
CIVIL
STATE OF CALIFORNIA

THE STATE OF CALIFORNIA OR ITS OFFICERS OR AGENTS SHALL NOT BE RESPONSIBLE FOR THE ACCURACY OR COMPLETENESS OF SCANNED COPIES OF THIS PLAN SHEET.

TO ACCOMPANY PLANS DATED 6-13-16

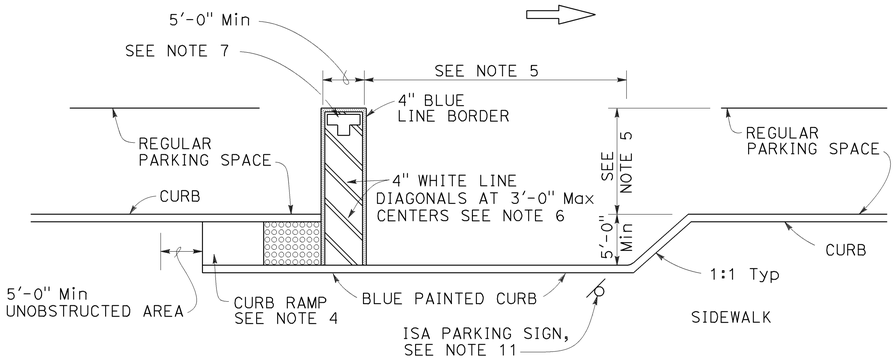

CONVENTIONAL
(See Note 9)

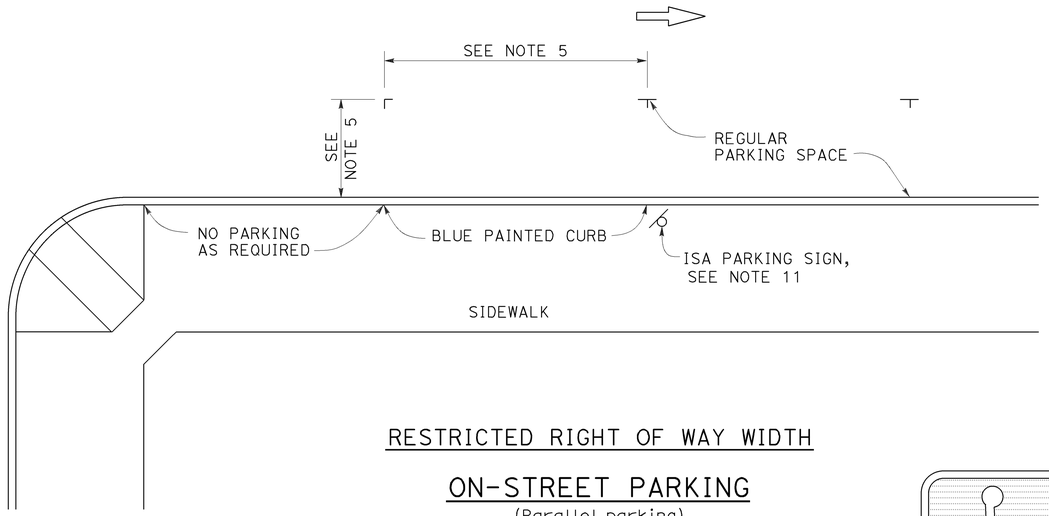

RESTRICTED RIGHT OF WAY WIDTH

ON-STREET PARKING
(Parallel parking)
(See Note 10)

SIGN R99 (CA)

SIGN R99C (CA)
See Note 3

PLAQUE R99B (CA)

SIGN R99 (CA) with PLAQUE R99B (CA)
See Note 3

PAVEMENT MARKING
See Note 7

NOTES:

1. Parking spaces shall be so located that persons with disabilities are not compelled to wheel or walk behind parked vehicles other than their own.
2. Surface slopes of accessible on-street parking spaces shall be the minimum feasible.
3. Where Plaque R99B (CA) or Sign R99C (CA) are installed, the bottom of the sign or plaque panel shall be a minimum of 7'-0" above the surrounding surface.
4. Curb ramps shall conform to the details shown on Revised Standard Plan RSP A88A.
5. Accessible on-street parking spaces shall not be smaller in length or width than that specified by the local jurisdiction for other parking spaces, but not less than 20'-0" in length and not less than 8'-0" in width.
6. Blue paint, instead of white may be used for marking accessibility aisles in areas where snow may cause white markings to not be visible.
7. The words "NO PARKING", shall be painted in white letters no less than 1'-0" high on a contrasting background and located so that it is visible to traffic enforcement officials. See Revised Standard Plan RSP A24E for square foot area for painting the words "NO PARKING".
8. There shall be no obstructions on the sidewalk adjacent to and for the full length of the parking space, except for the ISA parking sign shown.
9. The Conventional detail should be the primary choice of accessible on-street parking. However, if the sidewalk lacks adequate space to construct a standard curb ramp, the Restricted Right of Way detail should be used.
10. If the Restricted Right of Way width detail is selected and it conflicts with a bus stop or other uses, this detail may apply to the other end of the block.
11. Accessible Parking Only Sign shall be Sign R99C (CA) or Sign R99 (CA) with Plaque R99B (CA).

LEGEND

ISA = International Symbol of Accessibility

STATE OF CALIFORNIA
DEPARTMENT OF TRANSPORTATION

ACCESSIBLE PARKING ON-STREET

NO SCALE

RSP A90B DATED JULY 3, 2015 SUPERSEDES RSP A90B DATED JULY 19, 2013 SUPERSEDES AND PLAN A90B DATED MAY 20, 2011 - PAGE 124 OF THE STANDARD PLANS BOOK DATED 2010.

REVISED STANDARD PLAN RSP A90B

2010 REVISED STANDARD PLAN RSP A90B

4-30-15

Dist	COUNTY	ROUTE	POST MILES TOTAL PROJECT	SHEET No.	TOTAL SHEETS
08	SBd	15	R107.3	57	263

REGISTERED CIVIL ENGINEER

July 15, 2016
PLANS APPROVAL DATE

REGISTERED PROFESSIONAL ENGINEER Carl M. Duan No. C59976 Exp. 6-30-18 CIVIL STATE OF CALIFORNIA

THE STATE OF CALIFORNIA OR ITS OFFICERS OR AGENTS SHALL NOT BE RESPONSIBLE FOR THE ACCURACY OR COMPLETENESS OF SCANNED COPIES OF THIS PLAN SHEET.

TO ACCOMPANY PLANS DATED 6-13-16

NOTE:

1. For notes and Table 2, See Revised Standard Plan RSP D72C.

TABLE 1		
	T_1	Vert BARS
L_1 AND L_2 < 2'-10"	9"	#4 @ 12
L_1 OR L_2 > 2'-10"	12"	#5 @ 12

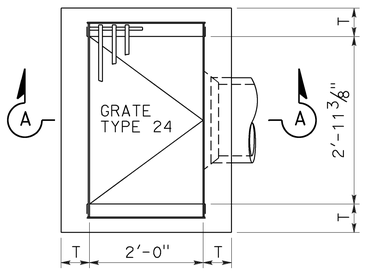

PLAN
TYPE G1

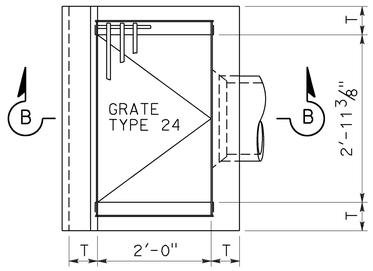

PLAN
TYPE G3

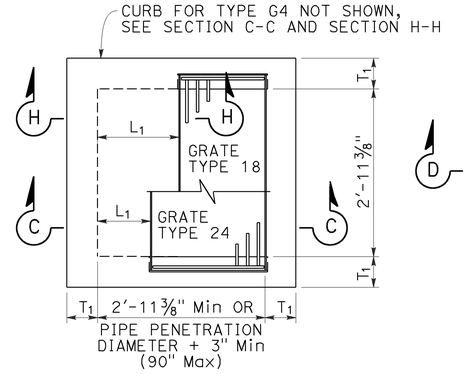

PLAN
STANDARD
TYPE G2 OR G4

FOR "L_1", "L_2" AND "T_1" VALUES, SEE "TABLE 1"

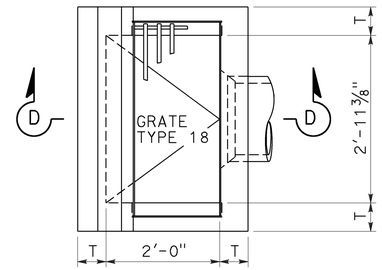

PLAN
TYPE G5

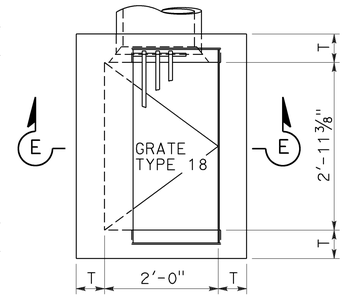

PLAN
TYPE G6

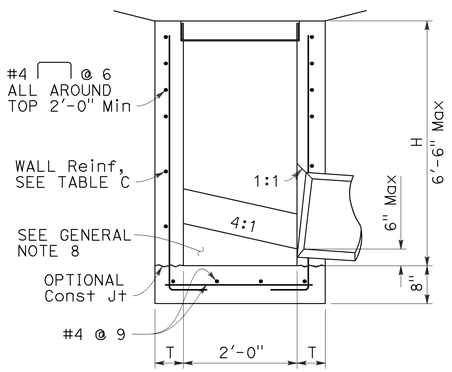

SECTION A-A

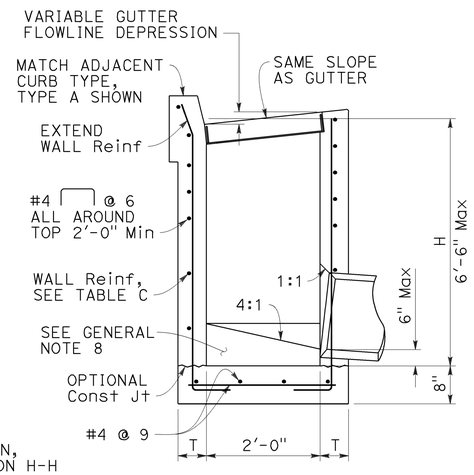

SECTION B-B

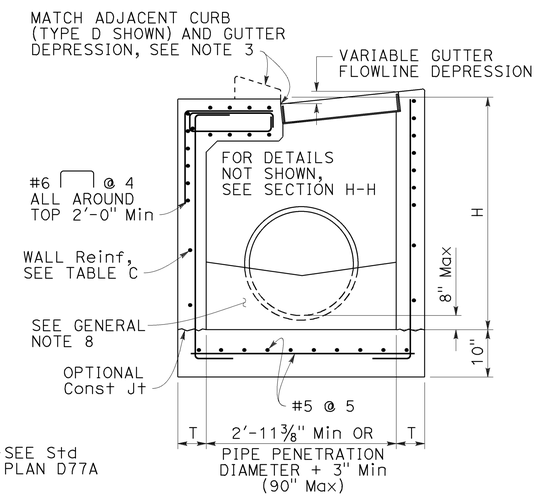

SECTION C-C

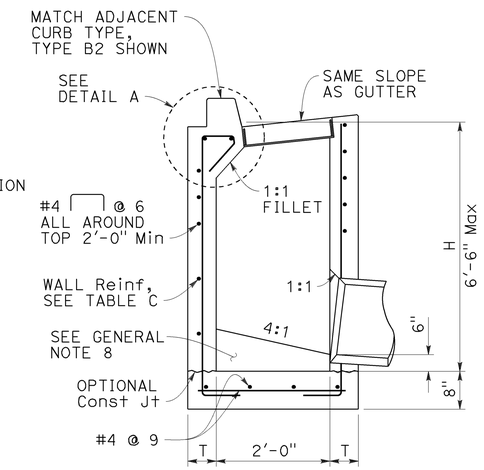

SECTION D-D

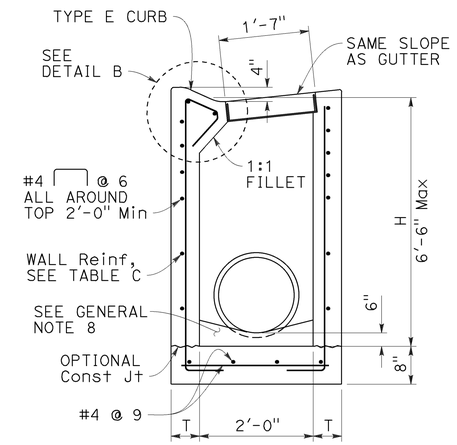

SECTION E-E

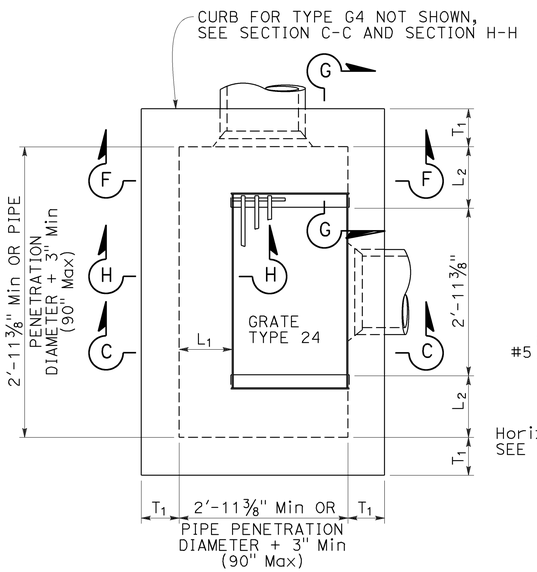

PLAN
EXPANDED
TYPE G2 OR G4

(INTEGRAL TOP ALTERNATIVE)
FOR "L" AND "T" VALUES, SEE TABLE 1

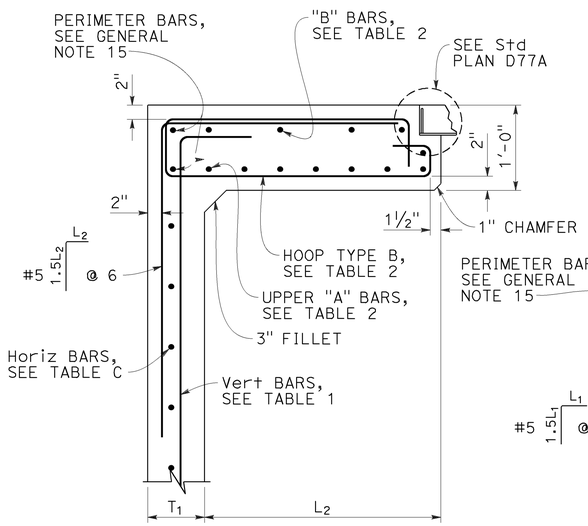

SECTION G-G

FOR "L_1", "L_2" AND "T_1" VALUES, SEE "TABLE 1"

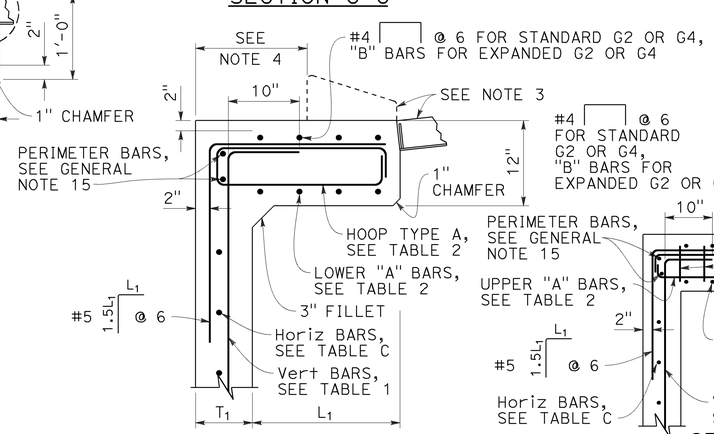

SECTION H-H

FOR "L_1", "L_2" AND "T_1" VALUES, SEE "TABLE 1"

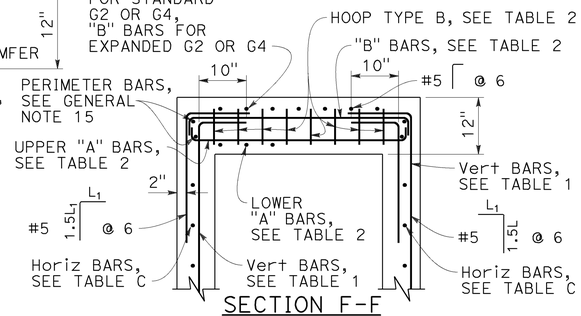

SECTION F-F

FOR "L_1", "L_2" AND "T_1" VALUES, SEE "TABLE 1"

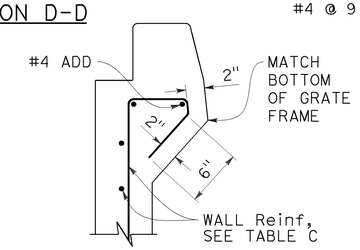

DETAIL A

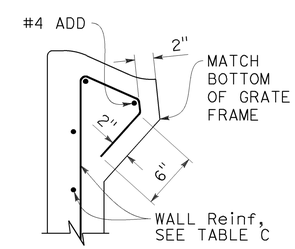

DETAIL B

STATE OF CALIFORNIA
DEPARTMENT OF TRANSPORTATION

CIP DRAINAGE INLETS TYPES G1, G2, G3, G4, G5 AND G6

NO SCALE

RSP D72A DATED JULY 15, 2016 SUPPLEMENTS THE STANDARD PLANS BOOK DATED 2015.

REVISED STANDARD PLAN RSP D72B

2015 REVISED STANDARD PLAN RSP D72B

6-20-16

Dist	COUNTY	ROUTE	POST MILES TOTAL PROJECT	SHEET No.	TOTAL SHEETS
08	SBd	15	R107.3	58	263

REGISTERED CIVIL ENGINEER

July 15, 2016
PLANS APPROVAL DATE

REGISTERED PROFESSIONAL ENGINEER
Carl M. Duan
No. C59976
Exp. 6-30-18
CIVIL
STATE OF CALIFORNIA

THE STATE OF CALIFORNIA OR ITS OFFICERS OR AGENTS SHALL NOT BE RESPONSIBLE FOR THE ACCURACY OR COMPLETENESS OF SCANNED COPIES OF THIS PLAN SHEET.

TO ACCOMPANY PLANS DATED 6-13-16

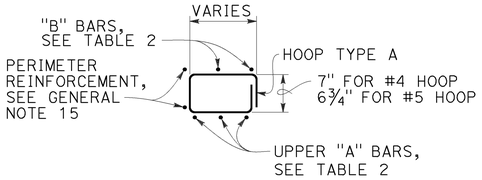

HOOP TYPE A

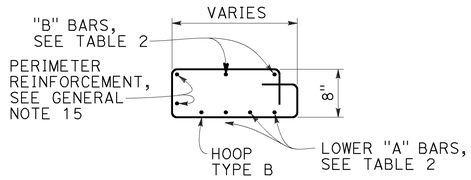

HOOP TYPE B

NOTES:

1. See Revised Standard Plan RSP D72F for General Notes and additional details. See Revised Standard Plan RSP D72G for tables and quantities.
2. Type G4 inlet can use Grate Type 18 or 24. Type G2 inlet uses Grate Type 24.
3. Type G4 inlet details are similar to Type G2 inlet details, except for the addition of a curb and sloped grate to match the adjacent curb and gutter depression.
4. Dimension will vary with different grates, curb types, box width and wall thickness.

TABLE 2 - TOP SLAB REINFORCEMENT

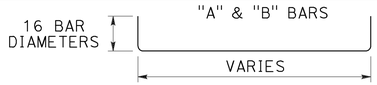

	W/ CURB	W/O CURB
"A" BARS	#4 @ 5 (2 BARS Min)	#5 @ 5 (3 BARS Min)
"B" BARS	#4 @ 10 (2 BARS Min)	#4 @ 12 (2 BARS Min)
HOOPS ("A" & "B")	#4 @ 5	#5 @ 5

ROTATE "A" AND "B" BARS SO HOOKED ENDS WILL MAINTAIN 2" CLEAR COVERAGE.

STATE OF CALIFORNIA
DEPARTMENT OF TRANSPORTATION

CIP DRAINAGE INLETS TYPES G1, G2, G3, G4, G5 AND G6

NO SCALE

RSP D72C DATED JULY 15, 2016 SUPPLEMENTS THE STANDARD PLANS BOOK DATED 2015.

REVISED STANDARD PLAN RSP D72C

2015 REVISED STANDARD PLAN RSP D72C

6-20-16

Dist	COUNTY	ROUTE	POST MILES TOTAL PROJECT	SHEET No.	TOTAL SHEETS
08	SBd	15	R107.3	59	263

REGISTERED CIVIL ENGINEER

July 15, 2016
PLANS APPROVAL DATE

REGISTERED PROFESSIONAL ENGINEER Carl M. Duan No. C59976 Exp. 6-30-18 CIVIL STATE OF CALIFORNIA

THE STATE OF CALIFORNIA OR ITS OFFICERS OR AGENTS SHALL NOT BE RESPONSIBLE FOR THE ACCURACY OR COMPLETENESS OF SCANNED COPIES OF THIS PLAN SHEET.

TO ACCOMPANY PLANS DATED 6-13-16

GENERAL NOTES:

1. "H" is measured from top of bottom slab to the normal gutter grade line undepressed at the curb face.
2. For "T" wall thickness and reinforcement, see Table C on Revised Standard Plan RSP D72G.
3. Wall reinforcement must be placed in the center of the wall thickness with horizontal bars placed on the exterior face. Bottom slab concrete cover must be 3" clear on the interior face unless otherwise noted. Top slab concrete cover must be 2" clear on the exterior face unless otherwise noted. Reinforcement spacing is in inches unless otherwise noted.
4. Steps - None required where "H" is less than 2'-6". Where "H" is 2'-6" or more, install steps with lowest rung 1'-0" above the floor and highest rung not more than 6" below bottom of lid. The distance between steps must not exceed 1'-0" and be uniform throughout the length of the wall. Place steps in the wall without an opening. Steps inserts may be substituted for the bar steps. Step inserts must comply with State Industrial Safety Requirements. See Revised Standard Plan RSP D74 for step details.
5. Pipe(s) can be placed in any wall. Adjacent to each side of the opening, place additional reinforcement equivalent to half the interupted main reinforcement. For larger pipes greater than or equal to 42" diameter, also add 4 diagonal bars, 1 bar each side. Bars must be the same size as the larger of the main vertical or horizontal bars. Extend bars one development length past the intersection with the adjacent diagonal bar, or where bars intersect mid thickness of adjacent wall bottom or top of non-continuous wall, bend ends as required into same plane.
6. Set inlet so that grate bars are parallel to direction of principal surface flow.
7. Curb section must match adjacent curb.
8. Except for inlets used as junction boxes, basin floors must have wood trowel finish and a minimum slope of 4:1, unless otherwise noted, from all directions toward outlet pipe by casting grout fill on top of the bottom slab. The additional volume to achieve the 4:1 slope may also be achieved by casting the bottom slab and fill as a composite concrete element.
9. See Standard Plans D77A and D77B for grate and frame details and weights of miscellaneous iron and steel.
10. See Standard Plans D78A and D78B for gutter depression details.
11. See Standard Plan A87A and Revised Standard Plan RSP A87B for curb and dike details.
12. Details shown apply to metal, concrete and plastic pipe(s).
13. The Contractor may use WWR instead of bar reinforcement. The ratio of bar reinforcement to WWR shall be based on the yield strength ratio.
14. Cast-in-place (CIP) inlets to be formed around all pipes/stubs intersecting the inlet, and concrete poured in one continuous operation.
15. Perimeter reinforcement must not be smaller than main bars and #4 and serves as a rigid frame to position and attach the required structural reinforcement and may be tack welded at outer corners when using ASTM A706 weldable bars.

DESIGN NOTES:

1. Design Specifications: AASHTO LRFD Bridge Design Specifications, 6th edition with 2012 Interims and Errata and CA Amendments.
2. Live Load (AASHTO LRFD 3.6.1.2):
   HL-93, consists of design truck or tandem, and design lane load.
   Dynamic Load Allowance, IM = 33%
   Multiple Presence Factor, m = 1.0
   Design lane load was excluded in Top Slab design.
   A wheel load of 8 kips without impact factor was used for top slabs that are above a curb.
3. Earth Load:
   Vertical pressure = 140 pcf
   Lateral pressure:
   = 100 pcf for walls with flat embankment
   = 140 pcf For walls with slope embankment, 1.5:1 Max
4. Downdrag: ϕ = 34° and γ_E = 120 pcf.
5. Buoyancy: γ_W = 62.4 pcf to finished grade
6. Reinforced Concrete: f'c = 3.6 ksi, fy = 60.0 ksi.
7. Soil pressures shown are factored per AASHTO LRFD and include self-weight, live load and downdrag.

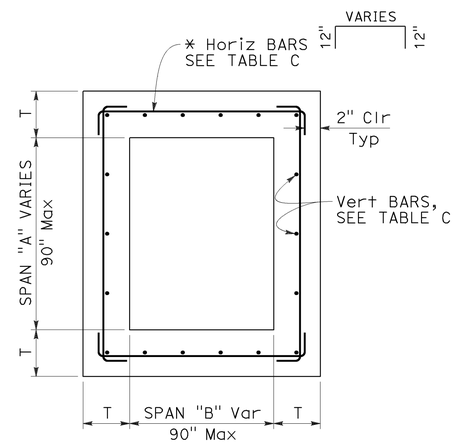

TYPICAL INLET PLAN

* ALTERNATIVE HORIZONTAL BARS

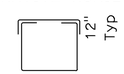

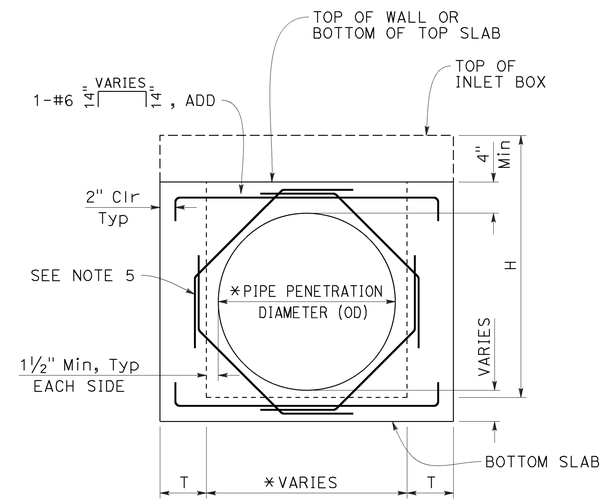

TYPICAL WALL
W/ PIPE OPENING

* SEE "SKEWED PIPE PLAN"

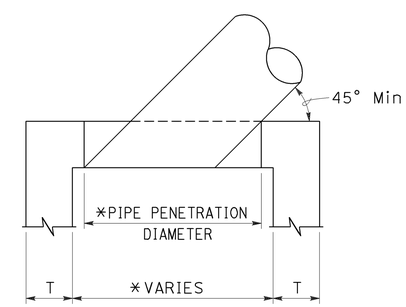

SKEWED PIPE PLAN

* ADJUST PIPE PENETRATION AND BOX WIDTH FOR SKEWED PIPES.

STATE OF CALIFORNIA
DEPARTMENT OF TRANSPORTATION

CIP DRAINAGE INLET NOTES

NO SCALE

RSP D72F DATED JULY 15, 2016 SUPPLEMENTS THE STANDARD PLANS BOOK DATED 2015.

REVISED STANDARD PLAN RSP D72F

2015 REVISED STANDARD PLAN RSP D72F

6-20-16

Dist	COUNTY	ROUTE	POST MILES TOTAL PROJECT	SHEET No.	TOTAL SHEETS
08	SBd	15	R107.3	60	263

REGISTERED CIVIL ENGINEER

July 15, 2016
PLANS APPROVAL DATE

REGISTERED PROFESSIONAL ENGINEER
Carl M. Duan
No. C59976
Exp. 6-30-18
CIVIL
STATE OF CALIFORNIA

THE STATE OF CALIFORNIA OR ITS OFFICERS OR AGENTS SHALL NOT BE RESPONSIBLE FOR THE ACCURACY OR COMPLETENESS OF SCANNED COPIES OF THIS PLAN SHEET.

TO ACCOMPANY PLANS DATED 6-13-16

TABLE A - CONCRETE QUANTITIES

TYPE	H=3'-0" TO 8'-0"		H=8'-1" TO 20'-0"	
	H=3'-0" (CY)	ADDITIONAL CONCRETE PER FOOT (CY)	H=8'-1" (CY)	ADDITIONAL CONCRETE PER FOOT (CY)
G1	0.95	0.220	SEE NOTE 2	SEE NOTE 2
G2*	2.00	0.411	5.11	0.525
G3	1.03	0.220	SEE NOTE 2	SEE NOTE 2
G4 (TYPE 18)*	2.02	0.411	5.14	0.525
G4 (TYPE 24)*	1.99	0.411	5.10	0.525
G5	1.02	0.220	SEE NOTE 2	SEE NOTE 2
G6	1.04	0.220	SEE NOTE 2	SEE NOTE 2
OS	1.53	0.278	5.08	0.504
OL7	2.06	0.278	6.17	0.566
OL10	2.85	0.278	6.85	0.566
OL14	3.81	0.278	7.78	0.566
OL21	5.71	0.278	9.62	0.566
GOL7	2.48	0.313	6.89	0.630
GOL10	3.41	0.313	7.85	0.630
GT1	1.72	0.248	SEE NOTE 2	SEE NOTE 2
GT2	2.93	0.530	7.73	0.762
GT3	1.74	0.348	SEE NOTE 2	SEE NOTE 2
GT4	2.83	0.530	7.62	0.762
GO	1.26	0.245	4.90	0.506
GDO	1.74	0.322	6.33	0.647

* Quantities are based on the minimum interior dimensions.

TABLE B - REINFORCEMENT QUANTITIES

TYPE	H=3'-0" TO 8'-0"		H=8'-1" TO 20'-0"	
	H=3'-0" (LB)	ADDITIONAL REINFORCEMENT PER FOOT (LB)	H=8'-1" (LB)	ADDITIONAL REINFORCEMENT PER FOOT (LB)
G1	118	22.20	SEE NOTE 2	SEE NOTE 2
G2*	729	86.48	1794	171.79
G3	118	22.20	SEE NOTE 2	SEE NOTE 2
G4 (TYPE 18)*	647	86.48	1675	171.79
G4 (TYPE 24)*	647	86.48	1675	171.79
G5	118	22.20	SEE NOTE 2	SEE NOTE 2
G6	118	22.20	SEE NOTE 2	SEE NOTE 2
OS	245	49.88	1057	120.77
OL7	458	50.53	1324	126.75
OL10	729	50.53	1595	126.75
OL14	982	50.53	1849	126.75
OL21	1453	50.53	2320	126.75
GOL7	644	83.57	1969	148.79
GOL10	883	83.57	2208	148.79
GT1	486	96.91	SEE NOTE 2	SEE NOTE 2
GT2	1040	117.08	2543	233.37
GT3	486	96.91	SEE NOTE 2	SEE NOTE 2
GT4	1001	117.08	2556	237.88
GO	308	32.44	1013	96.56
GDO	519	57.09	1654	165.66

* Quantities are based on the minimum interior dimensions.

TABLE D

INLET	CURB USED IN QUANTITIES
G1	-
G2	-
G3	A1-6
G4 (Type 18)	A1-6
G4 (Type 24)	A1-6
G5	B1-4
G6	½E
OS	-
OL7	-
OL10	-
OL14	-
OL21	-
GOL7	-
GOL10	-
GT1	D-6
GT2	E
GT3	A2-8
GT4	A2-8
GO	-
GDO	-

TABLE C - WALL REINFORCEMENT

TYPE	H≤8 (T=6",UON)		8<H≤20 (T=11",UON)	
	HORIZ	VERTICAL	HORIZ	VERTICAL
OS	#4 @ 8	#4 @ 6	#5 @ 6	#6 @ 4.5
OL	#4 @ 6	#4 @ 6	#5 @ 6	#6 @ 4.5
GOL	#5 @ 6	#5 @ 8	#6 @ 5	#6 @ 4.5
G1 (H≤6-6")	#3 @ 6	#3 @ 6	-	-
G2	T=9" #5 @ 5	#5 @ 5	T=11" #6 @ 4	#6 @ 4.5
G3 (H≤6-6")	#3 @ 6	#3 @ 6	-	-
G4	T=9" #5 @ 5	#5 @ 5	T=11" #6 @ 4	#6 @ 4.5
G5 (H≤6-6")	#3 @ 6	#3 @ 6	-	-
G6 (H≤6-6")	#3 @ 6	#3 @ 6	-	-
GT1 (H≤6-6")	#5 @ 6	#5 @ 6	-	-
GT2	T=8" #5 @ 6	#5 @ 6	#6 @ 4	#6 @ 4.5
GT3 (H≤6-6")	#5 @ 6	#5 @ 6	-	-
GT4	T=8" #5 @ 6	#5 @ 6	#6 @ 4	#6 @ 4.5
GO	#4 @ 9	#4 @ 6	#4 @ 6	#6 @ 4.5
GDO	#4 @ 6	#4 @ 6	#5 @ 4	#6 @ 4.5

TABLE E

SOIL PRESSURE BELOW BASE SLAB (ksf)		
TYPE	H=8'-0"	8'-0"< H ≤20'-0"
OS	2.93	5.56
OL*	2.93	5.56
GOL*	2.50	5.06
G1	3.67	-
G2	2.99	5.91
G3	3.67	-
G4	2.99	5.91
G5	3.67	-
G6	3.67	-
GT1	3.66	-
GT2	3.91	6.07
GT3	3.86	-
GT4	3.91	6.07
GO	3.42	6.11
GDO	2.52	6.95

* Main Box

NOTES:

1. No deduction or adjustment was made to the quantities of concrete and reinforcement for pipe openings, floor alternatives or curb type.
2. Maximum allowable height is 6'-6".
3. Quantities are approximate and for design purposes only.
4. Design is based on envelope of level and sloped ground.

STATE OF CALIFORNIA
DEPARTMENT OF TRANSPORTATION

CIP DRAINAGE INLET TABLES

NO SCALE

RSP D72G DATED JULY 15, 2016 SUPPLEMENTS THE STANDARD PLANS BOOK DATED 2015.

REVISED STANDARD PLAN RSP D72G

2015 REVISED STANDARD PLAN RSP D72G

6-20-16

Dist	COUNTY	ROUTE	POST MILES TOTAL PROJECT	SHEET No.	TOTAL SHEETS
08	SBd	15	R107.3	61	263

REGISTERED CIVIL ENGINEER

July 15, 2016
PLANS APPROVAL DATE

REGISTERED PROFESSIONAL ENGINEER
Carl M. Duan
No. C59976
Exp. 6-30-18
CIVIL
STATE OF CALIFORNIA

THE STATE OF CALIFORNIA OR ITS OFFICERS OR AGENTS SHALL NOT BE RESPONSIBLE FOR THE ACCURACY OR COMPLETENESS OF SCANNED COPIES OF THIS PLAN SHEET.

TO ACCOMPANY PLANS DATED 6-13-16

2015 REVISED STANDARD PLAN RSP D74

FACE ANGLE DETAIL "A"	
LENGTH OF CURB OPENING	No. OF ANCHORS
3'-6" OR LESS	2
7'-0"	3
10'-0"	4
14'-0"	5
21'-0"	7

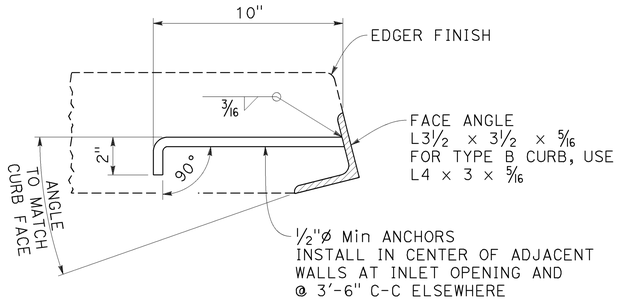

DETAIL "A"

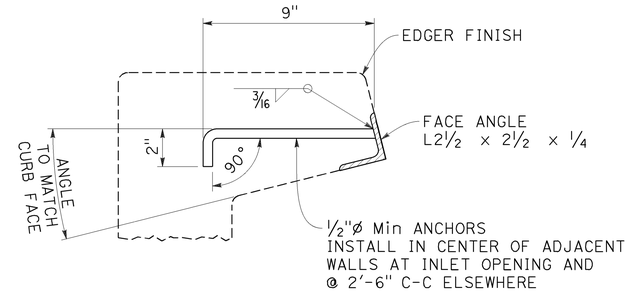

DETAIL "B"

FACE ANGLE AND ANCHOR

NOTE:

1. When shown on the project plans, place a ¾"ø plain round protection bar horizontally across the length of the opening and bend back 4" into the inlet wall on each side.

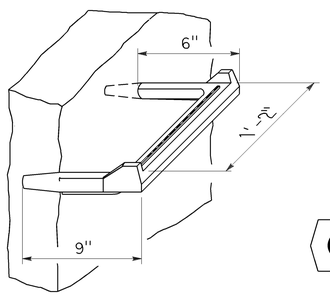

STEP INSERT

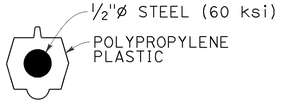

TYPICAL SECTION
(STEP INSERT)

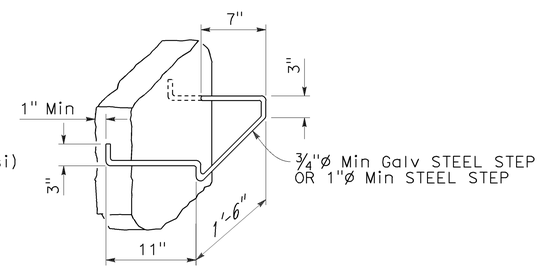

BAR STEP

STEP DETAILS

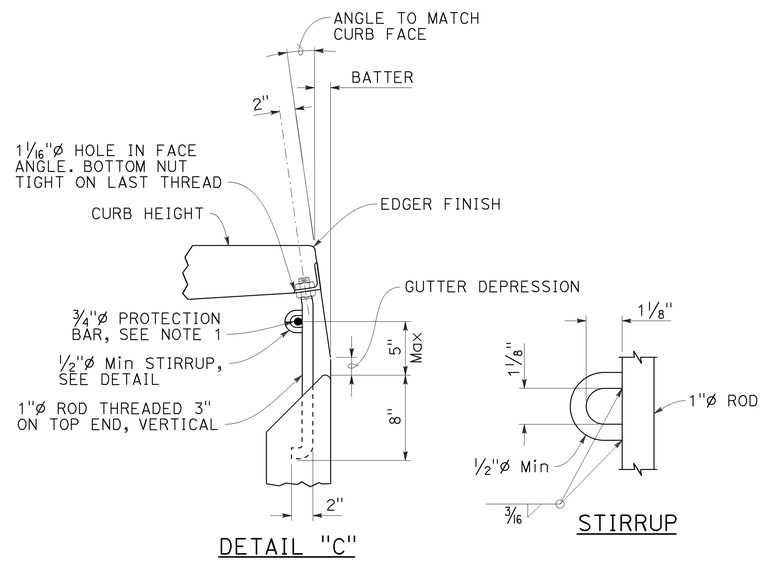

DETAIL "C"

STIRRUP

CURB SUPPORT

CURB SUPPORTS SHALL BE EVENLY SPACED AND MINIMAL IN NUMBER SUCH THAT MAXIMUM SPAN OF UNSUPPORTED CURB IS 7'-0".

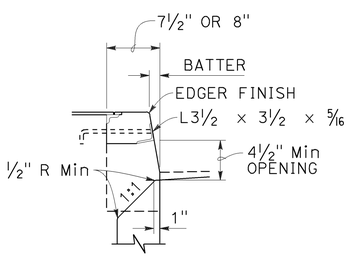

TYPE A CURBS

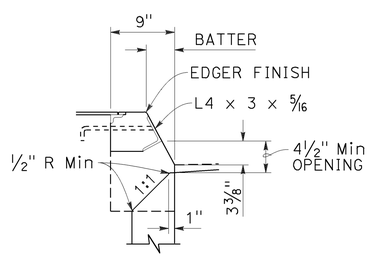

TYPE B CURBS

CURB OPENING DETAILS

STATE OF CALIFORNIA
DEPARTMENT OF TRANSPORTATION

DRAINAGE INLET DETAILS

NO SCALE

RSP D74 DATED JULY 15, 2016 SUPPLEMENTS THE STANDARD PLANS BOOK DATED 2015.

REVISED STANDARD PLAN RSP D74

6-20-16

Dist	COUNTY	ROUTE	POST MILES TOTAL PROJECT	SHEET No.	TOTAL SHEETS
08	SBd	15	R107.3	62	263

Raymond Don Tsztoo
REGISTERED CIVIL ENGINEER

April 19, 2013
PLANS APPROVAL DATE

REGISTERED PROFESSIONAL ENGINEER Raymond Don Tsztoo No. C37332 Exp. 6-30-14 CIVIL STATE OF CALIFORNIA

THE STATE OF CALIFORNIA OR ITS OFFICERS OR AGENTS SHALL NOT BE RESPONSIBLE FOR THE ACCURACY OR COMPLETENESS OF SCANNED COPIES OF THIS PLAN SHEET.

TO ACCOMPANY PLANS DATED 6-13-16

2010 REVISED STANDARD PLAN RSP D77A

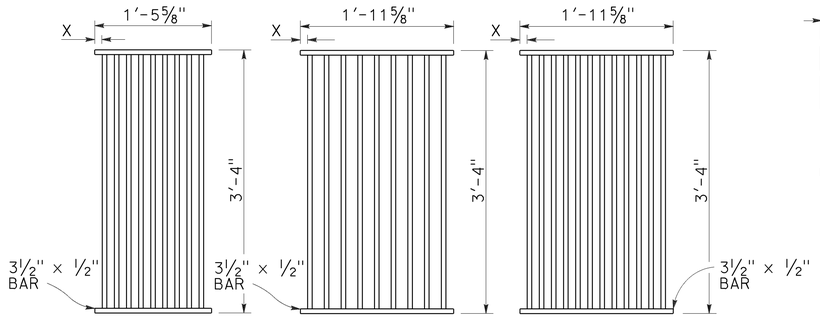

TYPE 18-9

1⅜" Clear spacing. Use within the roadbed on highways where bicycles and pedestrians are excluded.

TYPE 24-9

2" Clear spacing. Use in locations off the roadbed on all types of highways.

TYPE 24-12

1⅜" Clear spacing. Use within the roadbed on highways where bicycles and pedestrians are excluded.

RECTANGULAR GRATE DETAILS

(See table below)

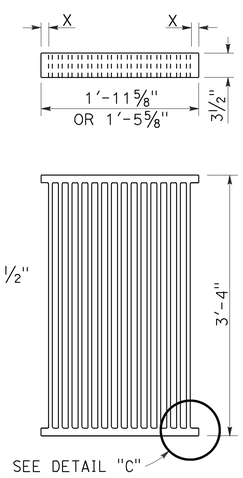

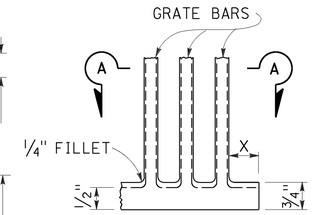

DETAIL "C"

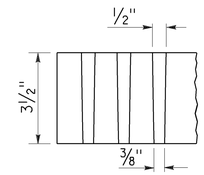

SECTION A-A

ALTERNATIVE CAST DUCTILE IRON GRATE OR CAST CARBON STEEL GRATE

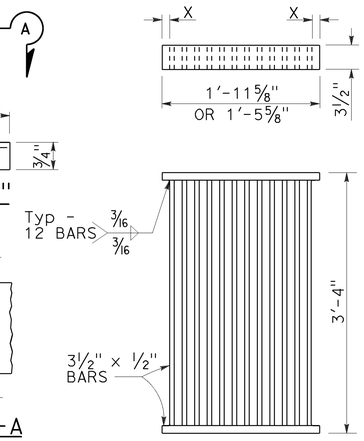

ALTERNATIVE WELDED GRATE

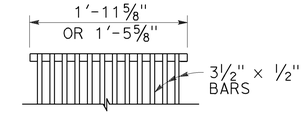

CAST END BLOCK

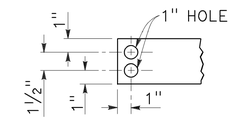

END OF BAR

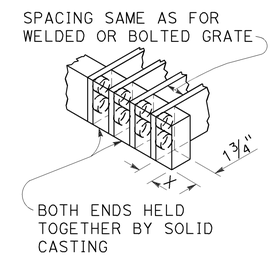

ALTERNATIVE CAST DUCTILE IRON OR CAST CARBON STEEL END BLOCK GRATE

NOTES:

1. Grate type numbers refer to approximate width of grate in inches and number of bars, respectively.
2. Contractor has the option of using cast ductile iron, cast carbon steel, welded, bolted, or cast end block grate.
3. Rounded top of bars optional on all grates.
4. Pipe inlets with a grate shall be placed so that bars parallel direction of principle surface flow.
5. Complete joint penetration butt welds may be substituted for the fillet welds on all anchors.
6. Standard square, hexagon, round or equivalent headed anchors may be substituted for the right angle hooks on the anchors shown on this plan.
7. Grate and frame weights are based on welded grates (weights of face angles, steps, protection bars, etc. are not included).
8. Connect chain to grate and frame only at locations shown on the plans. When chain is required, do not use cast ductile iron grates.

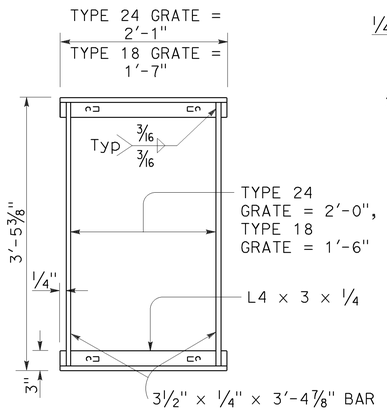

TYPICAL FRAME

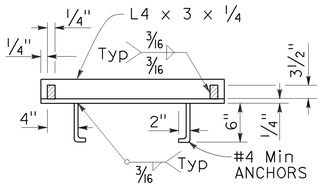

CROSS SECTION

(Thru frame)

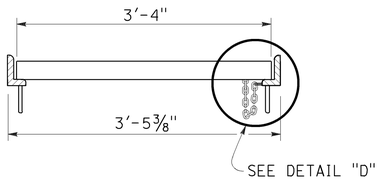

LONGITUDINAL SECTION

(Thru frame and grate)

RECTANGULAR FRAME DETAILS

(For all rectangular grates)

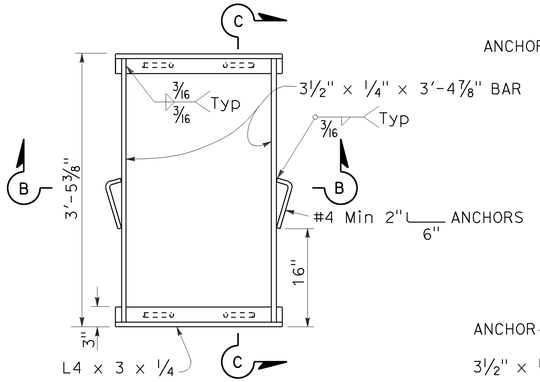

TYPICAL FRAME

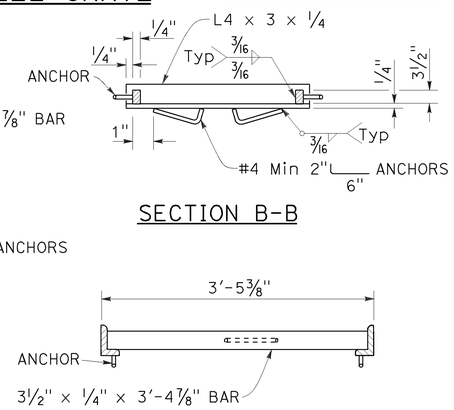

SECTION B-B

SECTION C-C

ALTERNATIVE ANCHOR FOR RECTANGULAR FRAME

(For details not shown, See Rectangular Frame Details)

INLET TYPE	GRATE TYPE	No. OF GRATES	WEIGHT LB
GDO	24-12	2	634
GOL-7	24-12	1	326
GOL-10	24-12	1	326
GO,G1,G2,G3,G4 (TYPE 24)	24-9	1	263
	24-12	1	326
G4 (TYPE 18),G5,G6	18-9	1	249
GT1	18-9	2	498
GT2	18-9	2	498
GT3	24-12	2	652
GT4	24-12	2	652
TRASH RACK			22
GRATE CHAIN			3

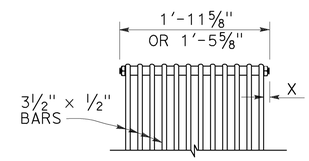

BOLTED END BLOCK

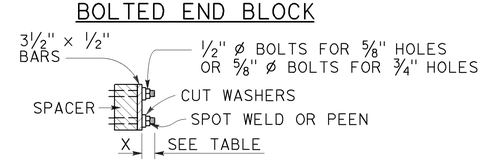

BOLTING DETAIL

ALTERNATIVE BOLTED GRATE

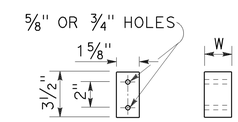

BAR SPACER

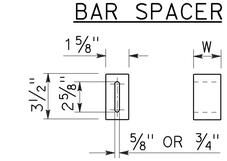

ALTERNATIVE SPACER

W = 1⅜" or 2"

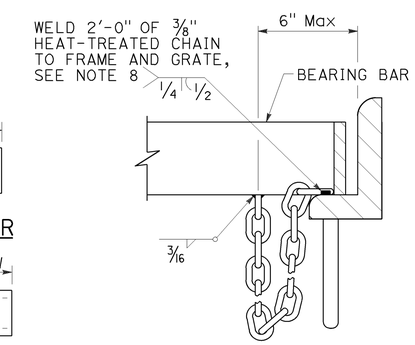

DETAIL "D"

(Steel grates only)

GRATE BAR SPACING TABLE

TYPE	No. OF BARS	CLEAR BAR SPACING	X
18-9	9	1⅜"	1 1/16"
24-9	9	2"	1 9/16"
24-12	12	1⅜"	1¼"

INLET TYPE	COVER TYPE	WEIGHT LB
OS	PLATE	174
OL-7	PLATE	170
OL-10	PLATE	170
OL-14	PLATE	170
OL-21	PLATE	170
OCP	PLATE	112
OCPI	PLATE	112
OCPI	REDWOOD	42
OMP	PLATE	177
OMPI	PLATE	177

BASIS FOR Misc IRON & STEEL FINAL PAY WEIGHTS FOR DRAINAGE INLETS

(See Note 7)

STATE OF CALIFORNIA
DEPARTMENT OF TRANSPORTATION

GRATE DETAILS No. 1

NO SCALE

RSP D77A DATED APRIL 19, 2013 SUPERSEDES RSP D77A DATED JULY 20, 2012 AND STANDARD PLAN D77A DATED MAY 20, 2011 - PAGE 164 OF THE STANDARD PLANS BOOK DATED 2010.

REVISED STANDARD PLAN RSP D77A

4-4-13

Dist	COUNTY	ROUTE	POST MILES TOTAL PROJECT	SHEET No.	TOTAL SHEETS
08	SBd	15	R107.3	63	263

REGISTERED CIVIL ENGINEER

April 19, 2013
PLANS APPROVAL DATE

Raymond Don Tsztoo No. C37332 Exp. 6-30-14 CIVIL STATE OF CALIFORNIA REGISTERED PROFESSIONAL ENGINEER

THE STATE OF CALIFORNIA OR ITS OFFICERS OR AGENTS SHALL NOT BE RESPONSIBLE FOR THE ACCURACY OR COMPLETENESS OF SCANNED COPIES OF THIS PLAN SHEET.

TO ACCOMPANY PLANS DATED 6-13-16

2010 REVISED STANDARD PLAN RSP D77B

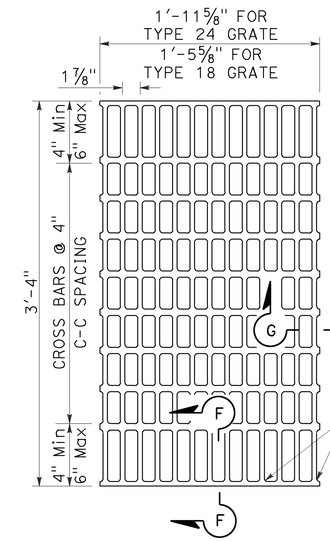

NOTES:

Bearing bars to be 3½" × ¼" bars on 1⅞" centers.

⅜"± ø Cross bars may be fillet welded, resistance welded or electroforged to bearing bars.

Weight of Type 24 grate = 141 LBS.

Weight of Type 18 grate = 107 LBS. (Type 24 grate shown).

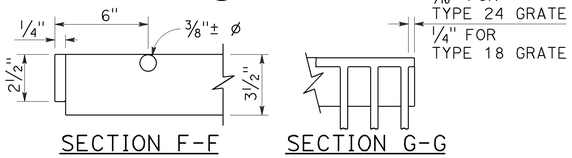

SECTION F-F SECTION G-G

TYPE 18-10 AND 24-13 GRATE

(Welded Steel)

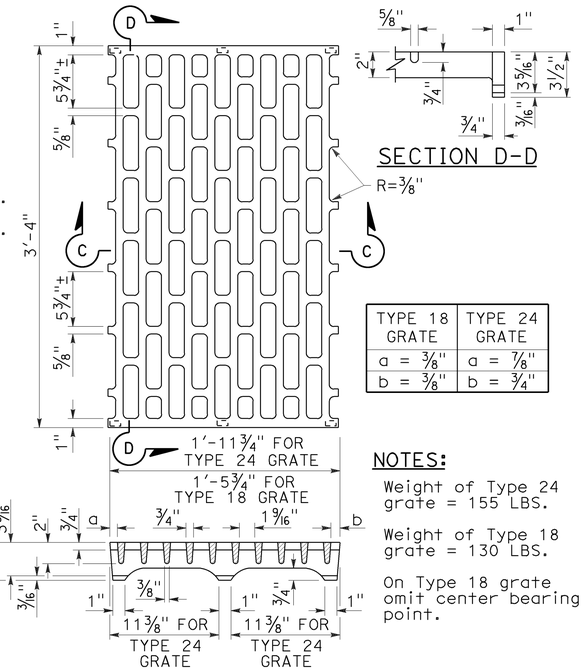

TYPE 18 GRATE	TYPE 24 GRATE
a = ⅜"	a = ⅞"
b = ⅜"	b = ¾"

NOTES:

Weight of Type 24 grate = 155 LBS.

Weight of Type 18 grate = 130 LBS.

On Type 18 grate omit center bearing point.

SECTION C-C

TYPE 18-8C AND 24-10C GRATE

(Cast ductile iron)

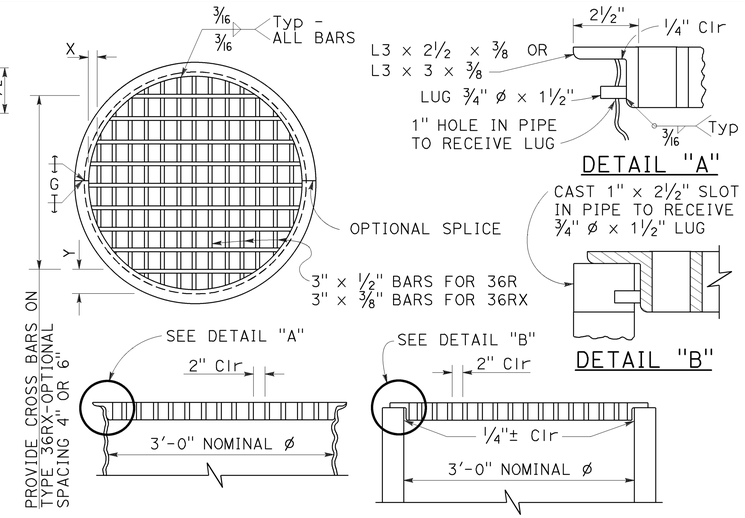

TYPE 36R AND 36RX GRATE DETAILS

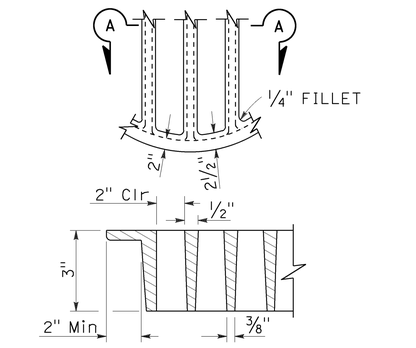

SECTION A-A

ALTERNATIVE CAST DUCTILE IRON GRATE OR CAST CARBON STEEL GRATE TYPE 36R AND 36RX

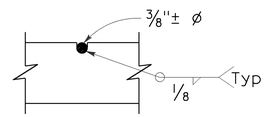

⅜"± ø Cross bars may be fillet welded, resistance welded or electroforged to bearing bars.

CROSS BAR DETAIL TYPE 36RX GRATE (WELDED STEEL)

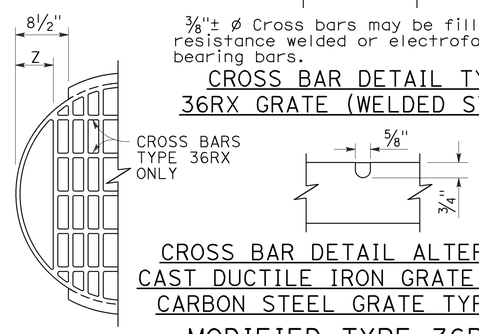

CROSS BAR DETAIL ALTERNATIVE CAST DUCTILE IRON GRATE OR CAST CARBON STEEL GRATE TYPE 36RX

MODIFIED TYPE 36R AND 36RX GRATE FOR ODI INLET

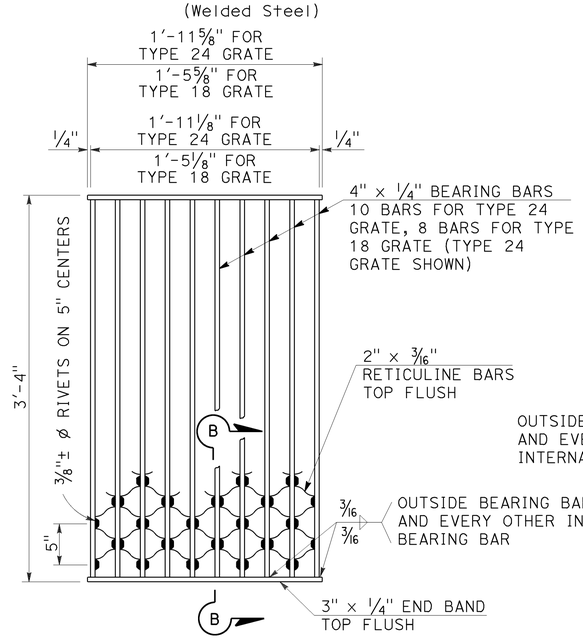

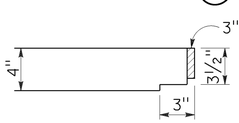

NOTES:

Weight of Type 24 grate = 182 LBS.
Weight of Type 18 grate = 145 LBS.

SECTION B-B

TYPE 18-8S AND 24-10S GRATE

(Welded Steel) Reticuline type

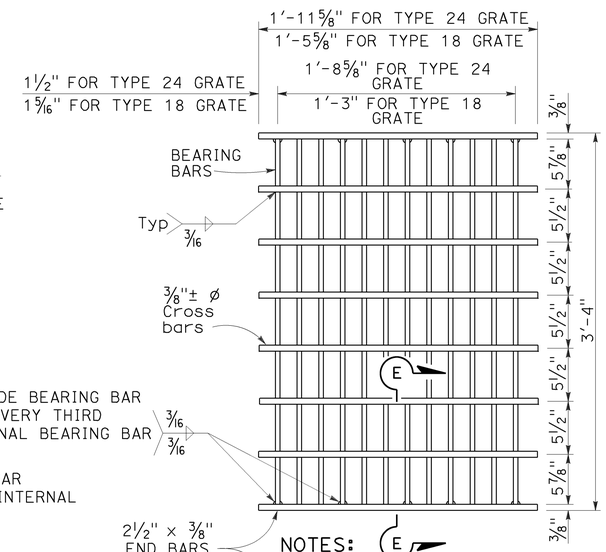

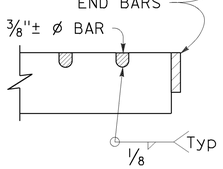

SECTION E-E

NOTES:

Bearing bars to be 3½" × ⅜" bars on 1⅞" centers.

12 Bars for Type 24 grate - 9 bars for Type 18 grates. (Type 24 grate shown).

Weight of Type 24 grate = 192 LBS.

Weight of Type 18 grate = 145 LBS.

⅜"± ø Cross bars may be fillet welded, resistance welded or electroforged to bearing bars.

TYPE 18-9X AND 24-12X GRATE

(Welded Steel)

NOTES:

1. When alternative grates are allowed - Final pay based on alternative with the lesser weight.
2. Use frame shown on Standard Plan D74A, D74B or RSP D77A as appropriate.
3. When Type 24-10S, 24-12X or 24-13 grates are used with GDO Inlets, a ¼" × 3½" × 3'-4⅞" steel bar shall be welded across the center of inlet frame to separate the individual grates.
4. See Revised Standard Plan RSP D77A for connecting chain to welded grate and frame. When chain is required, do not use cast ductile iron grate.

GRATE BAR SPACING TABLE

TYPE	No. OF BARS	CLEAR BAR SPACING	X	Y 4" SPACING	Y 6" SPACING	Z
36R	13	2"	2⅛"	-	-	-
36RX (STEEL)	15	2"	9/16"	3¾"	5¾"	-
36RX (CAST)	13	2"	2⅛"	3¾"	5¾"	-
36R Mod	12	2"	2⅛"	-	-	5"
36RX Mod (STEEL)	13	2"	9/16"	3¾"	5¾"	5 11/16"
36RX Mod (CAST)	12	2"	2⅛"	3¾"	5¾"	5"

BASIS FOR Misc IRON AND STEEL FINAL PAY WEIGHTS FOR DRAINAGE INLETS

INLET TYPE	GRATE TYPE	No. OF GRATES	WEIGHT LB
GDO (SEE NOTE 4)	24-10C	2	391
	24-10S	2	456
	24-12X	2	473
	24-13	2	374
GO,GOL,G1,G2, G3,G4 (TYPE 24)	24-10C	1	202
	24-10S	1	229
	24-12X	1	239
	24-13	1	188
G4 (TYPE 18) G5,G6	18-8S	1	187
	18-9X	1	187
	18-10	1	149
GT1,GT2	18-8S	2	374
	18-9X	2	374
	18-10	2	298
GT3,GT4	24-10C	2	404
	24-10S	2	458
	24-12X	2	478
	24-13	2	376
ODI	36RX (Mod)	1	196
GMP,GCP,GCPI	36RX	1	215
ODI	36R (Mod)	1	220
GMP,GCP,GCPI	36R	1	236
TRASH RACK			22
GRATE CHAIN			3

STATE OF CALIFORNIA
DEPARTMENT OF TRANSPORTATION

GRATE DETAILS No. 2

NO SCALE

RSP D77B DATED APRIL 19, 2013 SUPERSEDES RSP D77B DATED JULY 20, 2012 AND STANDARD PLAN D77B DATED MAY 20, 2011 - PAGE 165 OF THE STANDARD PLANS BOOK DATED 2010.

REVISED STANDARD PLAN RSP D77B

4-4-13

Dist	COUNTY	ROUTE	POST MILES TOTAL PROJECT	SHEET No.	TOTAL SHEETS
08	SBd	15	R107.3	64	263

REGISTERED CIVIL ENGINEER

July 19, 2013
PLANS APPROVAL DATE

REGISTERED PROFESSIONAL ENGINEER
Gurinderpal Bhullar
No. C48815
Exp. 9-30-14
CIVIL
STATE OF CALIFORNIA

THE STATE OF CALIFORNIA OR ITS OFFICERS OR AGENTS SHALL NOT BE RESPONSIBLE FOR THE ACCURACY OR COMPLETENESS OF SCANNED COPIES OF THIS PLAN SHEET.

TO ACCOMPANY PLANS DATED 6-13-16

2010 REVISED STANDARD PLAN RSP T9

TABLE 1

TAPER LENGTH CRITERIA AND CHANNELIZING DEVICE SPACING

SPEED (S)	MINIMUM TAPER LENGTH * FOR WIDTH OF OFFSET 12 FEET (W)				MAXIMUM CHANNELIZING DEVICE SPACING		
					X	Y	Z **
	TANGENT 2L	MERGING L	SHIFTING L/2	SHOULDER L/3	TAPER	TANGENT	CONFLICT
mph	ft	ft	ft	ft	ft	ft	ft
20	160	80	40	27	20	40	10
25	250	125	63	42	25	50	12
30	360	180	90	60	30	60	15
35	490	245	123	82	35	70	17
40	640	320	160	107	40	80	20
45	1080	540	270	180	45	90	22
50	1200	600	300	200	50	100	25
55	1320	660	330	220	55	110	27
60	1440	720	360	240	60	120	30
65	1560	780	390	260	65	130	32
70	1680	840	420	280	70	140	35

* - For other offsets, use the following merging taper length formula for L:
For speed of 40 mph or less, $L = WS^2/60$
For speed of 45 mph or more, $L = WS$

Where: L = Taper length in feet
W = Width of offset in feet
S = Posted speed limit, off-peak 85th-percentile speed prior to work starting, or the anticipated operating speed in mph

** - Use for taper and tangent sections where there are no pavement markings or where there is a conflict between existing pavement markings and channelizers (CA).

TABLE 2

LONGITUDINAL BUFFER SPACE AND FLAGGER STATION SPACING

SPEED *	Min D **	DOWNGRADE Min D ***		
		-3%	-6%	-9%
mph	ft	ft	ft	ft
20	115	116	120	126
25	155	158	165	173
30	200	205	215	227
35	250	257	271	287
40	305	315	333	354
45	360	378	400	427
50	425	446	474	507
55	495	520	553	593
60	570	598	638	686
65	645	682	728	785
70	730	771	825	891

* - Speed is posted speed limit, off-peak 85th-percentile speed prior to work starting, or the anticipated operating speed in mph

** - Longitudinal buffer space or flagger station spacing

*** - Use on sustained downgrade steeper than -3 percent and longer than 1 mile.

TABLE 3

ADVANCE WARNING SIGN SPACING

ROAD TYPE	DISTANCE BETWEEN SIGNS *		
	A	B	C
	ft	ft	ft
URBAN - 25 mph OR LESS	100	100	100
URBAN - MORE THAN 25 mph TO 40 mph	250	250	250
URBAN - MORE THAN 40 mph	350	350	350
RURAL	500	500	500
EXPRESSWAY / FREEWAY	1000	1500	2640

* - The distances are approximate, are intended for guidance purposes only, and should be applied with engineering judgment. These distances should be adjusted by the Engineer for field conditions, if necessary, by increasing or decreasing the recommmended distances.

STATE OF CALIFORNIA
DEPARTMENT OF TRANSPORTATION

TRAFFIC CONTROL SYSTEM TABLES FOR LANE AND RAMP CLOSURES

NO SCALE

RSP T9 DATED JULY 19, 2013 SUPERSEDES RSP T9 DATED APRIL 19, 2013 THAT SUPPLEMENTS THE STANDARD PLANS BOOK DATED 2010.

REVISED STANDARD PLAN RSP T9

Dist	COUNTY	ROUTE	POST MILES TOTAL PROJECT	SHEET No.	TOTAL SHEETS
08	SBd	15	R107.3	65	263

REGISTERED CIVIL ENGINEER

April 19, 2013
PLANS APPROVAL DATE

REGISTERED PROFESSIONAL ENGINEER Gurinderpal Bhullar No. C48815 Exp. 9-30-14 CIVIL STATE OF CALIFORNIA

THE STATE OF CALIFORNIA OR ITS OFFICERS OR AGENTS SHALL NOT BE RESPONSIBLE FOR THE ACCURACY OR COMPLETENESS OF SCANNED COPIES OF THIS PLAN SHEET.

TO ACCOMPANY PLANS DATED 6-13-16

NOTES:

See Revised Standard Plan RSP T9 for tables.

Use cone spacing X for taper segment, Y for tangent segment or Z for conflict situations, as approriate, per Table 1, unless X, Y, or Z cone spacing is shown on this sheet.

Unless otherwise specified in the special provisions, all temporary warning signs shall have black legend on fluorescent orange background.

California codes are designated by (CA). Otherwise, Federal (MUTCD) codes are shown.

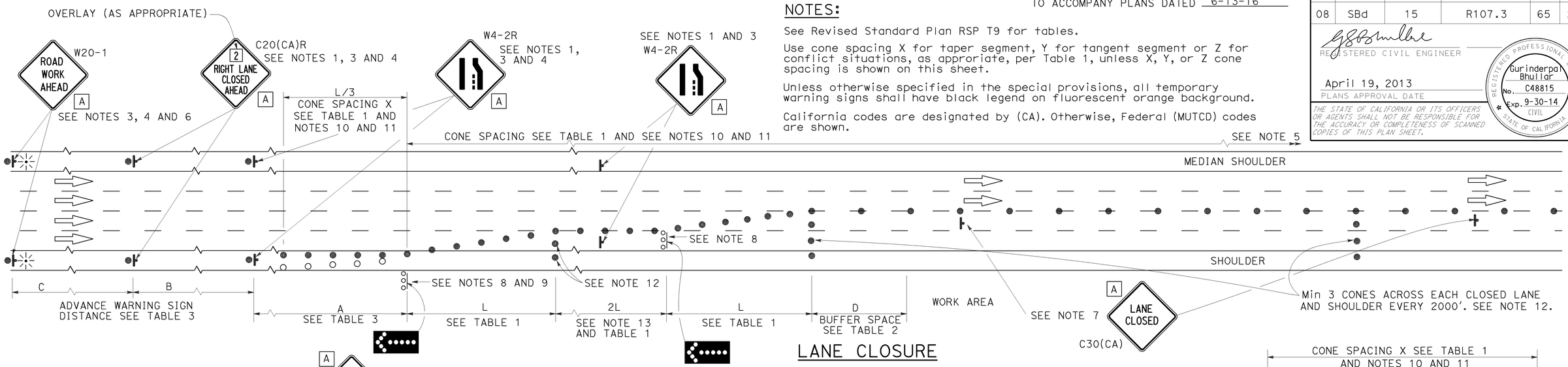

LANE CLOSURE

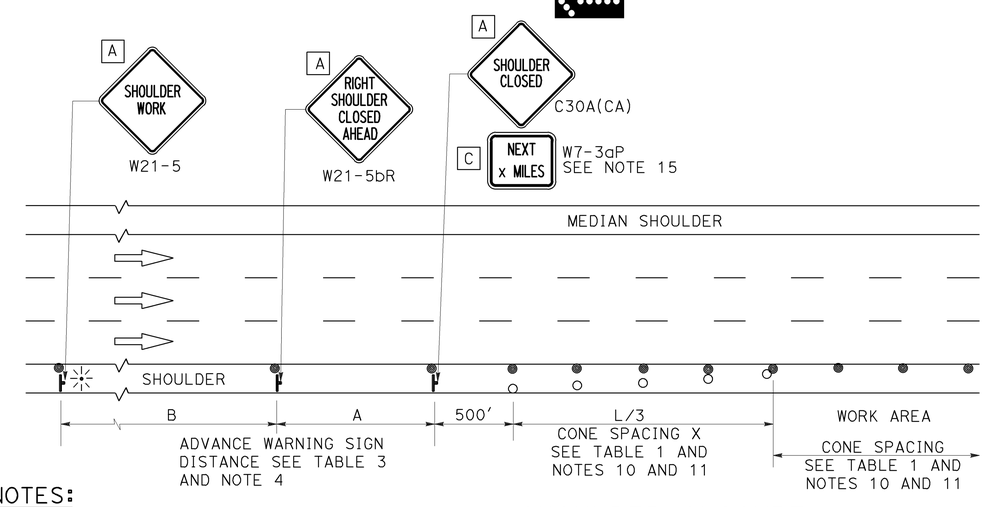

SHOULDER CLOSURE

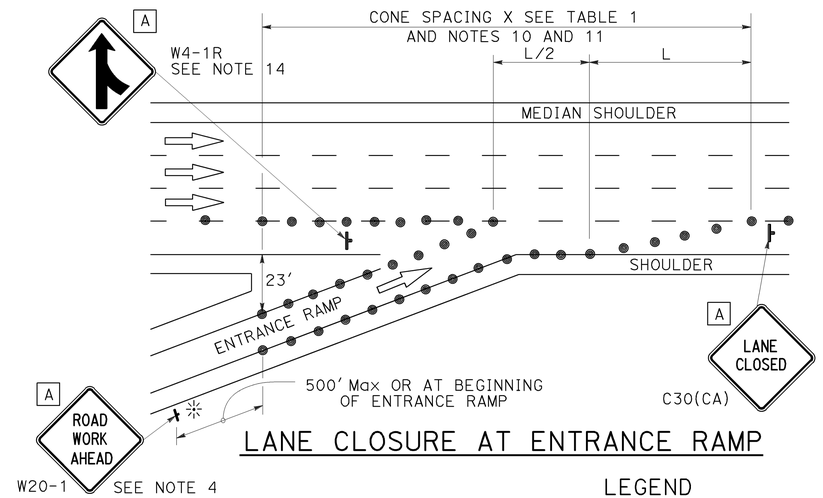

LANE CLOSURE AT ENTRANCE RAMP

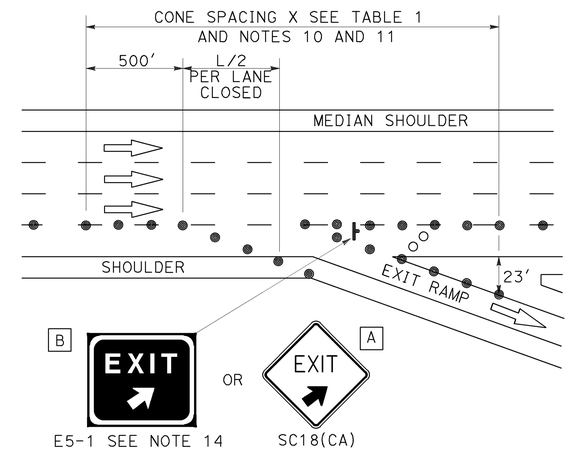

LANE CLOSURE AT EXIT RAMP

NOTES:

1. Median lane closures shall conform to the details as shown except that C20(CA)L and W4-2L signs shall be used.
2. At least one person shall be assigned to provide full time maintenance of traffic control devices for lane closures.
3. Duplicate sign installations are not required:
   a) On opposite shoulder if at least one-half of the available lanes remain open to traffic.
   b) In the median if the width of the median shoulder is less than 8' and the outside lanes are to be closed.
4. Each advance warning sign on each side of the roadway shall be equipped with at least two flags for daytime closure. Each flag shall be at least 16" x 16" in size and shall be orange or fluorescent red-orange in color. Flashing beacons shall be placed at the locations indicated for lane closure during hours of darkness.
5. A G20-2 "END ROAD WORK" sign, with minimum size of 48" x 24" as appropriate, shall be placed at the end of the lane closure unless the end of work area is obvious or ends within a larger project's limits.
6. If the W20-1 sign would follow within 2000' of a stationary W20-1 or G20-1 "ROAD WORK NEXT _____ MILES", use a C20(CA) sign for the first advance warning sign.
7. Place a C30(CA) sign every 2000' throughout length of lane closure.
8. One flashing arrow sign for each lane closed. The flashing arrow signs shall be Type I.
9. A minimum 1500' of sight distance shall be provided where possible for vehicles approaching the first flashing arrow sign. Lane closures shall not begin at top of crest vertical curve or on a horizontal curve.
10. All cones used for lane closures during the hours of darkness shall be fitted with retroreflective bands (or sleeves) as specified in the specifications.
11. Portable delineators, placed at one-half the spacing indicated for traffic cones may be used instead of cones for daytime closures only.
12. Unless otherwise specified in the special provisions, a minimum of 3 cones shall be placed transversely across each closed lane and shoulder at each location where a taper across a traffic lane ends and every 2000' as shown on the "Lane Closure" detail. Two Type II barricades may be used instead of the 3 cones. The transverse alignment of the cones or barricades on the closed shoulder may be shifted from the transverse alignment to provide access to the work.
13. Unless otherwise specified in the special provisions, the 2L tangent shown along lane lines shall be used between the L tapers required for each closed traffic lane.
14. Unless otherwise specified in the special provisions, the E5-1 or SC18(CA) and W4-1 signs shall be used as shown.
15. A W7-3aP "NEXT____ MILES" plaque must be used if theshoulder closure extends beyond the distance that can be perceived by road users.

LEGEND

- TRAFFIC CONE
- TRAFFIC CONE (OPTIONAL TAPER)
- TEMPORARY TRAFFIC CONTROL SIGN
- FLASHING ARROW SIGN (FAS)
- FAS SUPPORT OR TRAILER
- PORTABLE FLASHING BEACON

SIGN PANEL SIZE (Min)

A	48" x 48"
B	72" x 60"
C	36" x 30"

STATE OF CALIFORNIA
DEPARTMENT OF TRANSPORTATION

TRAFFIC CONTROL SYSTEM FOR LANE CLOSURE ON FREEWAYS AND EXPRESSWAYS

NO SCALE

RSP T10 DATED APRIL 19, 2013 SUPERSEDES STANDARD PLAN T10 DATED MAY 20, 2011 - PAGE 237 OF THE STANDARD PLANS BOOK DATED 2010.

REVISED STANDARD PLAN RSP T10

2010 REVISED STANDARD PLAN RSP T10

12-18-12

Dist	COUNTY	ROUTE	POST MILES TOTAL PROJECT	SHEET No.	TOTAL SHEETS
08	SBd	15	R107.3	66	263

REGISTERED CIVIL ENGINEER

April 19, 2013
PLANS APPROVAL DATE

REGISTERED PROFESSIONAL ENGINEER Gurinderpal Bhullar No. C48815 Exp. 9-30-14 CIVIL STATE OF CALIFORNIA

THE STATE OF CALIFORNIA OR ITS OFFICERS OR AGENTS SHALL NOT BE RESPONSIBLE FOR THE ACCURACY OR COMPLETENESS OF SCANNED COPIES OF THIS PLAN SHEET.

TO ACCOMPANY PLANS DATED 6-13-16

TYPICAL RAMP CLOSURES

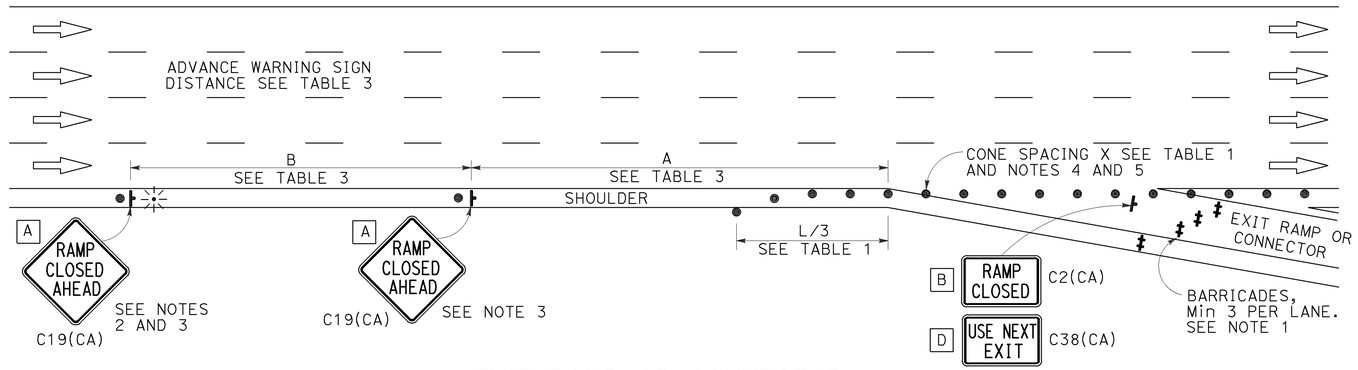

EXIT RAMP OR CONNECTOR

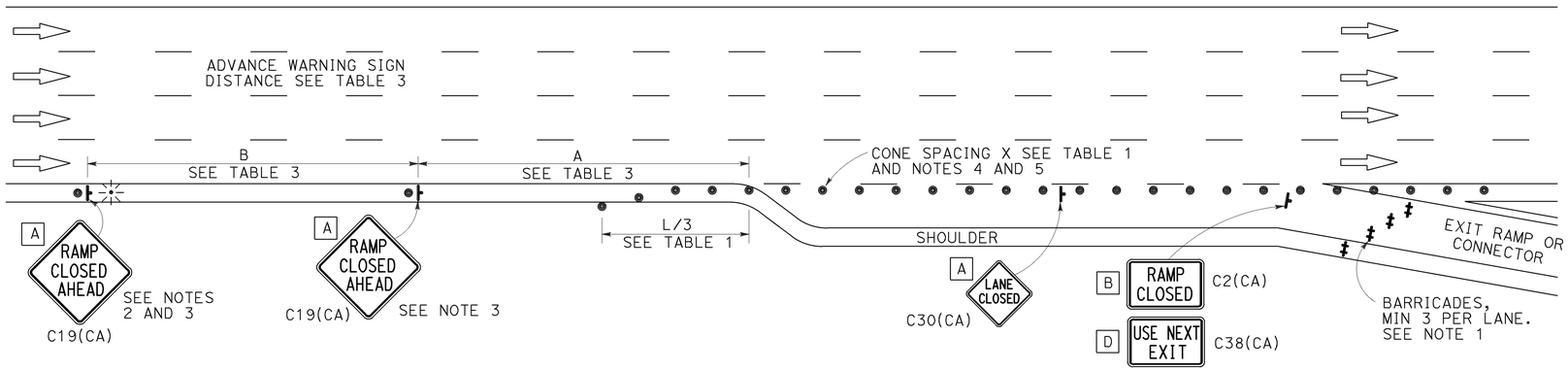

EXIT RAMP OR CONNECTOR WITH ADDITIONAL LANE

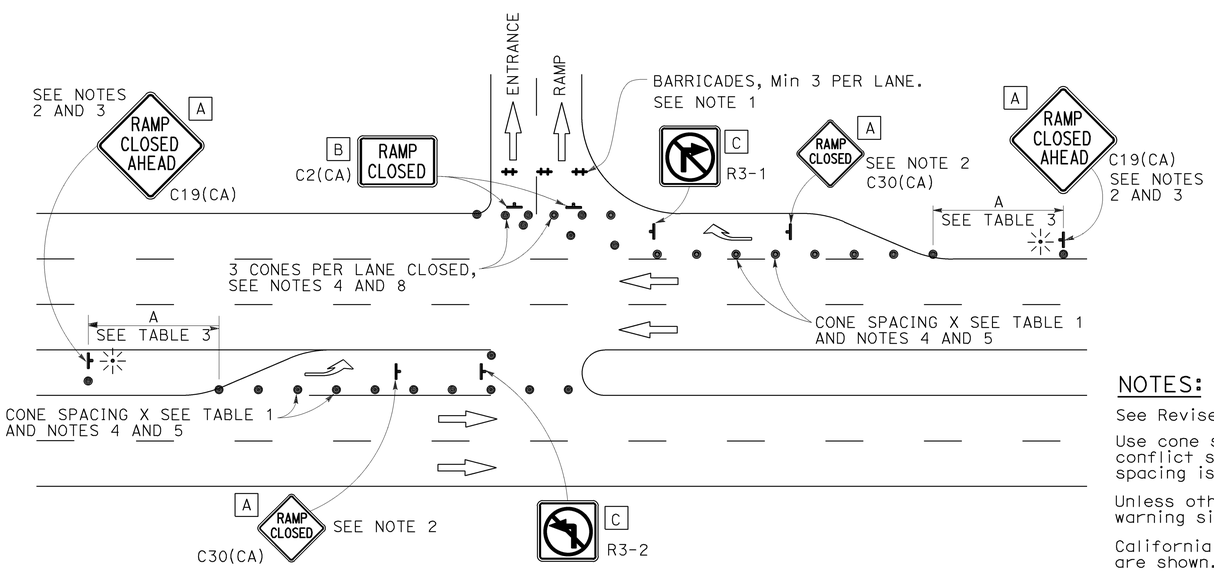

ENTRANCE RAMP WITH TURNING POCKETS

SIGN PANEL SIZE (Min)

- A 48" × 48"
- B 48" × 30"
- C 36" × 36"
- D 48" × 36"

LEGEND

- TRAFFIC CONE
- TEMPORARY TRAFFIC CONTROL SIGN
- BARRICADES
- PORTABLE FLASHING BEACON

NOTES:

1. Barricades shall be Type I, II, or III for closures lasting one week or less and Type III for closures lasting longer than one week.
2. In addition to placing the C19(CA) "RAMP CLOSED AHEAD" and C30(CA) "RAMP CLOSED" signs, black on orange overlay plates with the word "CLOSED" may be mounted, as directed by the Engineer, on all guide signs that refer to the closed ramp. The letter size on the overlay shall be the same as the guide sign.
3. Each advance C19(CA) "RAMP CLOSED AHEAD" sign shall be equipped with at least two flags for daytime closure. Each flag shall be at least 16" × 16" in size and shall be orange or fluorescent red-orange in color. A flashing beacon shall be placed on top of the first C19(CA) sign during hours of darkness.
4. All cones used for ramp closures during the hours of darkness shall be fitted with retroreflective bands (or sleeves) as specified in the specifications.
5. Portable delineators, placed at one-half the spacing indicated for traffic cones, may be used instead of cones for daytime ramp closures only.
6. At least one person shall be assigned to provide full time maintenance of traffic control devices, unless otherwise directed by the Engineer.
7. The existing "EXIT" signs shall be covered during ramp closures.
8. A minimum of 3 cones shall be placed transversely across each closed lane and shoulder.

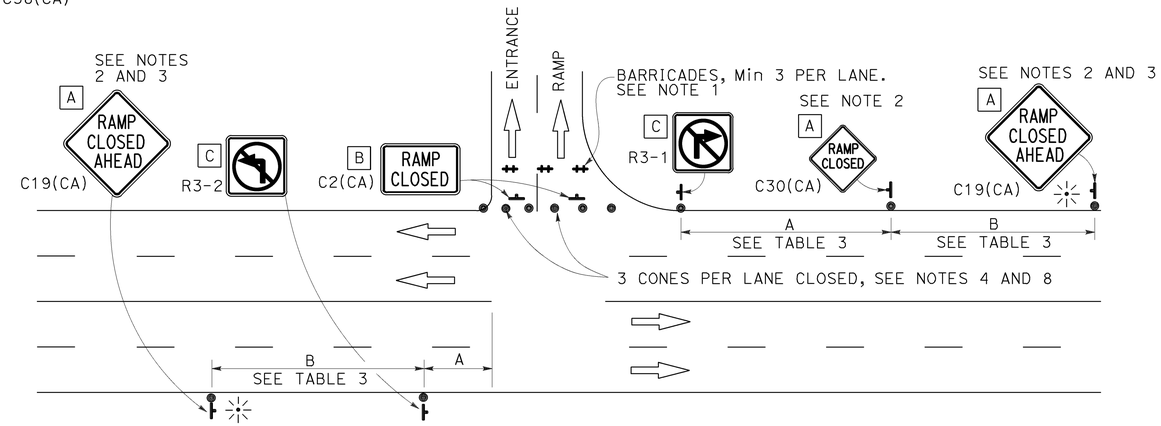

ENTRANCE RAMP WITHOUT TURNING POCKETS

NOTES:

See Revised Standard Plan RSP T9 for tables.

Use cone spacing X for taper segment, Y for tangent segment or Z for conflict situations, as approriate, per Table 1, unless X, Y, or Z cone spacing is shown on this sheet.

Unless otherwise specified in the special provisions, all temporary warning signs shall have black legend on fluorescent orange background.

California codes are designated by (CA). Otherwise, Federal (MUTCD) codes are shown.

STATE OF CALIFORNIA
DEPARTMENT OF TRANSPORTATION

TRAFFIC CONTROL SYSTEM FOR RAMP CLOSURE

NO SCALE

RSP T14 DATED APRIL 19, 2013 SUPERSEDES STANDARD PLAN T14 DATED MAY 20, 2011 - PAGE 242 OF THE STANDARD PLANS BOOK DATED 2010.

REVISED STANDARD PLAN RSP T14

2010 REVISED STANDARD PLAN RSP T14

12-18-12

Dist	COUNTY	ROUTE	POST MILES TOTAL PROJECT	SHEET No.	TOTAL SHEETS
08	SBd	15	R107.3	67	263

REGISTERED CIVIL ENGINEER

April 19, 2013
PLANS APPROVAL DATE

REGISTERED PROFESSIONAL ENGINEER Gurinderpal Bhullar No. C48815 Exp. 9-30-14 CIVIL STATE OF CALIFORNIA

THE STATE OF CALIFORNIA OR ITS OFFICERS OR AGENTS SHALL NOT BE RESPONSIBLE FOR THE ACCURACY OR COMPLETENESS OF SCANNED COPIES OF THIS PLAN SHEET.

TO ACCOMPANY PLANS DATED 6-13-16

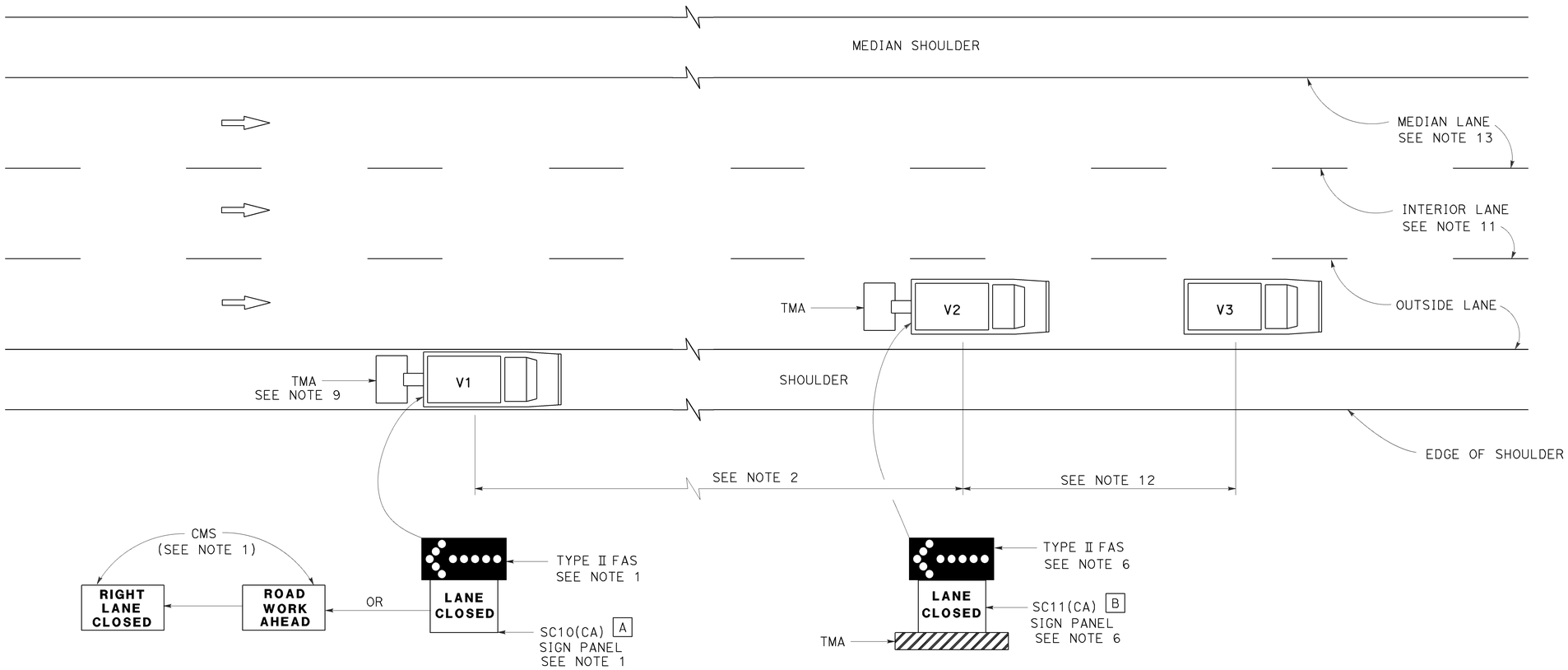

MOVING LANE CLOSURE ON MEDIAN LANE OR OUTSIDE LANE OF MULTILANE HIGHWAYS

SIGN PANEL SIZE (Min)

A 66" x 36"

B 54" x 42"

LEGEND

V1	SIGN VEHICLE
V2	SHADOW VEHICLE
V3	WORK/APPLICATION VEHICLE
	FLASHING ARROW SIGN (FAS)
CMS	CHANGEABLE MESSAGE SIGN
TMA	TRUCK-MOUNTED ATTENUATOR

NOTES:

1. Either a changeable message sign or a SC10(CA) sign panel and a Type II flashing arrow sign shall be mounted on the rear of sign vehicle V1. The changeable message sign shall be sequenced to show the "ROAD WORK AHEAD" message first, followed by the "RIGHT LANE CLOSED" message. For median lane closure, the flashing arrow symbol shall be reversed with the arrowhead on the right and the changeable message sign shall show "LEFT LANE CLOSED".
2. If traffic queues develop, sign vehicle V1 should be positioned upstream from the end of queue. Sign vehicle V1 shall be positioned where highly visible when shoulders are not available.
3. A minimum sight distance of 1500′ should be provided in advance of sign vehicle V1.
4. Sign vehicle V1 should remain at the beginning of horizontal or vertical curves until the other vehicles (V2 and V3) are far enough beyond the curve to resume the minimum sight distance of 1500′.
5. Vehicle-mounted sign panels shall have Type III or above retroreflective sheeting, black on white, or black on fluorescent orange, with 6" minimum series D letters per Caltrans sign specifications.
6. Shadow vehicle V2 shall be equipped with a truck-mounted attenuator. The sign panel shown and a Type II flashing arrow sign shall be mounted on the rear of shadow vehicle V2. For median lane closure the flashing arrow sign symbol shall be displayed with the arrowhead on the right.
7. All vehicles used for lane closures shall be equipped with two-way radios, and the vehicle operators shall maintain communication during the work or application operation.
8. All vehicles shall be equipped with flashing or rotating amber lights.
9. If sign vehicle V1 encroaches into the traffic lane due to insufficient shoulder width, sign vehicle V1 shall be equipped with a truck-mounted attenuator. Sign vehicle V1 shall stay as close to the edge of shoulder as practicable.
10. Where workers would be on foot in the work area, a stationary type lane closure (Revised Standard Plan T10, T11, etc., as applicable) shall be used instead of this plan.
11. For moving lane closure on interior lane of multilane highways, use Revised Standard Plan T16.
12. The spacing between work vehicle(s) and the shadow vehicles, and between each shadow vehicle should be minimized to deter road users from driving in between.
13. When the work/application vehicle V3 occupies the median lane, sign vehicle V1 should drive in the median shoulder and indicate left lane closed ahead.

STATE OF CALIFORNIA
DEPARTMENT OF TRANSPORTATION

TRAFFIC CONTROL SYSTEM FOR MOVING LANE CLOSURE ON MULTILANE HIGHWAYS

NO SCALE

RSP T15 DATED APRIL 19, 2013 SUPERSEDES STANDARD PLAN T15
DATED MAY 20, 2011 - PAGE 243 OF THE STANDARD PLANS BOOK DATED 2010.

REVISED STANDARD PLAN RSP T15

2010 REVISED STANDARD PLAN RSP T15

12-18-12

Dist	COUNTY	ROUTE	POST MILES TOTAL PROJECT	SHEET No.	TOTAL SHEETS
08	SBd	15	R107.3	68	263

Theresa Gabriel
REGISTERED ELECTRICAL ENGINEER

October 30, 2015
PLANS APPROVAL DATE

REGISTERED PROFESSIONAL ENGINEER Theresa Aziz Gabriel No. E15129 Exp. 6-30-16 ELECTRICAL STATE OF CALIFORNIA

THE STATE OF CALIFORNIA OR ITS OFFICERS OR AGENTS SHALL NOT BE RESPONSIBLE FOR THE ACCURACY OR COMPLETENESS OF SCANNED COPIES OF THIS PLAN SHEET.

TO ACCOMPANY PLANS DATED 6-13-16

LEGEND:

AB	ABANDON. IF APPLIED TO CONDUIT, REMOVE CONDUCTORS
BC	INSTALL PULL BOX IN EXISTING CONDUIT RUN
BP	PEDESTRIAN BARRICADE, TYPE AS INDICATED ON PLAN
CB	INSTALL CONDUIT INTO EXISTING PULL BOX
CC	CONNECT NEW AND EXISTING CONDUIT. REMOVE EXISTING CONDUCTORS AND INSTALL CONDUCTORS AS INDICATED
CF	CONDUIT TO REMAIN FOR FUTURE USE. REMOVE CONDUCTORS. INSTALL PULL TAPE
DH	DETECTOR HANDHOLE
FA	FOUNDATION TO BE ABANDONED
IS	INSTALL SIGN ON SIGNAL MAST ARM
NS	NO SLIP BASE ON STANDARD
PEC	PHOTOELECTRIC CONTROL
PEU	PHOTOELECTRIC UNIT
RC	EQUIPMENT OR MATERIAL TO BE REMOVED AND BECOME THE PROPERTY OF THE CONTRACTOR
RE	REMOVE ELECTROLIER, FUSES AND BALLAST. TAPE ENDS OF CONDUCTORS
RL	RELOCATE EQUIPMENT
RR	REMOVE AND REUSE EQUIPMENT
RS	REMOVE AND SALVAGE EQUIPMENT
SC	SPLICE NEW TO EXISTING CONDUCTORS
SD	SERVICE DISCONNECT
TSP	TELEPHONE SERVICE POINT

ABBREVIATIONS

AC+	UNDERGROUNDED CONDUCTOR
APS	ACCESSIBLE PEDESTRIAN SIGNAL
Batt	BATTERY
BBS	BATTERY BACKUP SYSTEM
BC	BOLT CIRCLE
Blk	BLACK
BP	BYPASS
BPB	BICYCLE PUSH BUTTON
C	CONDUIT
CB	CIRCUIT BREAKER
CCTV	CLOSED CIRCUIT TELEVISION
Ckt	CIRCUIT
CMS	CHANGEABLE MESSAGE SIGN
Ctid	CALTRANS IDENTIFICATION
Comm	COMMUNICATION
Cntl	CONTROL
DF	DEPARTMENT-FURNISHED
DLC	LOOP DETECTOR LEAD-IN CABLE
EMS	EXTINGUISHABLE MESSAGE SIGN
EVUC	EMERGENCY VEHICLE UNIT CABLE
EVUD	EMERGENCY VEHICLE UNIT DETECTOR
FB	FLASHING BEACON
FBCA	FLASHING BEACON CONTROL ASSEMBLY
FBS	FLASHING BEACON WITH SLIP BASE
FO	FIBER OPTIC
G	EQUIPMENT GROUNDING CONDUCTOR
GB	GROUND BUS
GFCI	GROUND FAULT CIRCUIT INTERRUPTER
Grn	GREEN
HAR	HIGHWAY ADVISORY RADIO
Hex	HEXAGONAL
HPS	HIGH PRESSURE SODIUM
IISNS	INTERNALLY ILLUMINATED STREET NAME SIGN
ISL	INDUCTION SIGN LIGHTING
LED	LIGHT EMITTING DIODE
LMA	LUMINAIRE MAST ARM
LPS	LOW PRESSURE SODIUM
Ltg	LIGHTING
Lum	LUMINAIRE
M	METERED
MAT	MAST ARM MOUNTING TOP ATTACHMENT
MAS	MAST ARM MOUNTING SIDE ATTACHMENT
MBPS	MANUAL BYPASS SWITCH
M/M	MULTIPLE TO MULTIPLE TRANSFORMER
Mtg	MOUNTING
MV	MERCURY VAPOR LIGHTING FIXTURE
MVDS	MICROWAVE VEHICLE DETECTION SYSTEM
N	NEUTRAL (GROUNDED CONDUCTOR)
NB	NEUTRAL BUS
NC	NORMALLY CLOSE
NO	NORMALLY OPEN
P	CIRCUIT BREAKER'S POLE
PB	PULL BOX
PBA	PUSH BUTTON ASSEMBLY
PEC	PHOTOELECTRIC CONTROL
Ped	PEDESTRIAN
PEU	PHOTOELECTRIC UNIT
PT	CONDUIT WITH PULL TAPE
PTR	POWER TRANSFER RELAY
RE	RELOCATED EQUIPMENT
RM	RAMP METERING
RWIS	ROADSIDE WEATHER INFORMATION SYSTEM
SB	SLIP BASE
SIC	SIGNAL INTERCONNECT CABLE
Sig	SIGNAL
SMA	SIGNAL MAST ARM
SNS	STREET NAME SIGN
SP	SERVICE POINT
TB	TERMINAL BOARD
TDC	TELEPHONE DEMARCATION CABINET
Temp	TEMPERATURE
TMS	TRAFFIC MONITORING STATION
TOS	TRAFFIC OPERATIONS SYSTEM
UPS	UNINTERRUPTABLE POWER SUPPLY
UPSC	UNINTERRUPTABLE POWER SUPPLY CONTROLLER
Veh	VEHICLE
VIVDS	VIDEO IMAGE VEHICLE DETECTION SYSTEM
Wht	WHITE
WIM	WEIGH-IN-MOTION
Xfmr	TRANSFORMER

SOFFIT AND WALL-MOUNTED LUMINAIRES

PENDANT SOFFIT LUMINAIRE, 70 W HPS UNLESS OTHERWISE SPECIFIED

FLUSH-MOUNTED SOFFIT LUMINAIRE, 70 W HPS UNLESS OTHERWISE SPECIFIED

WALL-MOUNTED LUMINAIRE, 70 W HPS UNLESS OTHERWISE SPECIFIED

EXISTING SOFFIT OR WALL-MOUNTED LUMINAIRE TO REMAIN UNMODIFIED

EXISTING SOFFIT OR WALL-MOUNTED LUMINAIRE TO BE MODIFIED AS SPECIFIED

NOTE:
Arrow indicates "street side" of luminaire.

COMMONLY USED SYMBOLS FOR UNITED STATES CUSTOMARY UNITS OF MEASUREMENT:

SYMBOL	DEFINITIONS
Ω	OHMS
min	MINUTE
s	SECOND
bps	BITS PER SECOND
Bps	BYTES PER SECOND
A	AMPERE
V	VOLT
V(dc)	VOLT (DIRECT CURRENT)
V(ac)	VOLT (ALTERNATING CURRENT)
FC	FOOT - CANDLE
W	WATTS
VA	VOLT-AMPERE
M	MEGA
k	KILO
m	MILLI
μ	MICRO
P	PICO
Hz	HERTZ

MISCELLANEOUS ELECTROLIERS

NEW	EXISTING	
		LUMINAIRE ON WOOD POLE
		NON-STANDARD ELECTROLIER (SEE PROJECT LEGEND)
		CITY ELECTROLIER
		ELECTROLIER FOUNDATION (FUTURE INSTALLATION)

NOTES:

1. LED luminaires shall be 235 W when installed on Type 21, 21D, 30, 31 and 32 Standards, unless otherwise specified. LED luminaires shall be 165 W when installed on other type standards or poles, unless otherwise specified.
2. Luminaires shall be the cutoff type, ANSI Type III medium cutoff lighting distribution, unless otherwise specified.

STANDARD ELECTROLIER

NEW	EXISTING	STANDARD TYPE
		15
		15D
		15 STRUCTURE
		15D STRUCTURE
		21
		21D
		21 STRUCTURE
		21D STRUCTURE
		30
		31
		32

STATE OF CALIFORNIA
DEPARTMENT OF TRANSPORTATION

ELECTRICAL SYSTEMS (LEGEND AND ABBREVIATIONS)

NO SCALE

RSP ES-1A DATED OCTOBER 30, 2015 SUPERSEDES RSP ES-1A DATED JULY 19, 2013 AND STANDARD PLAN ES-1A DATED MAY 20, 2011 - PAGE 425 OF THE STANDARD PLANS BOOK DATED 2010.

REVISED STANDARD PLAN RSP ES-1A

2010 REVISED STANDARD PLAN RSP ES-1A

Dist	COUNTY	ROUTE	POST MILES TOTAL PROJECT	SHEET No.	TOTAL SHEETS
08	SBd	15	R107.3	69	263

Theresa Gabriel
REGISTERED ELECTRICAL ENGINEER

April 15, 2016
PLANS APPROVAL DATE

REGISTERED PROFESSIONAL ENGINEER
Theresa Aziz Gabriel
No. E15129
Exp. 6-30-16
ELECTRICAL
STATE OF CALIFORNIA

THE STATE OF CALIFORNIA OR ITS OFFICERS OR AGENTS SHALL NOT BE RESPONSIBLE FOR THE ACCURACY OR COMPLETENESS OF SCANNED COPIES OF THIS PLAN SHEET.

TO ACCOMPANY PLANS DATED 6-13-16

EQUIPMENT IDENTIFICATION

ILLUMINATED SIGN IDENTIFICATION:

SIGN No. 12345
10 ISL SCI 1.0

- SIGN EQUIPMENT IDENTIFICATION CHARACTERS - PLACE ON POST OR STRUCTURE
- TRANSFORMER RATING (kVA)
- LIGHTING CONTROL TYPE
- NUMBER AND TYPE OF FIXTURES

} DO NOT PLACE ON STANDARD OR STRUCTURE

ELECTROLIER OR EQUIPMENT IDENTIFICATION:

L2745 - 15'-0"

- MAST ARM LENGTH, IF SHOWN. DO NOT PLACE ON STANDARD OR STRUCTURE
- EQUIPMENT IDENTIFICATION CHARACTERS - PLACE ON STANDARD OR STRUCTURE. EXISTING EQUIPMENT IDENTIFICATION CHARACTERS ARE SHOWN IN PARENTHESIS

CONDUIT AND CONDUCTOR IDENTIFICATION:

1½"C, 2#10, 15#14, 2 DLC, 12P#18 (PAIR)

- NUMBER AND SIZE OF CONDUCTORS AND CABLES
- SIZE OF CONDUIT IN INCHES

ø1, ø2, ø2P, etc.	TRAFFIC PHASE IDENTIFICATION FOR SIGNALS, DETECTORS AND PHASE DIAGRAMS
1 2 3	LEGEND NUMBERS
A B C	EQUIPMENT, SIGNAL POLES, INSTALLATION OR ITEMS
1 2 3	CONDUIT RUN NUMBERS

SIGNAL AND LIGHTING STANDARD (TYPICAL DESIGNATION):

19A - 3 - 100

- WIND VELOCITY = 100 mph
- CASE 3 ARM LOADING
- STANDARD TYPE
- STANDARD PLAN SHEET NUMBER
- DETAIL, NUMBER, SECTION, TYPE OR ELEVATION

MISCELLANEOUS EQUIPMENT

NEW	EXISTING	
CMS	cms	CHANGEABLE MESSAGE SIGN
		CLOSED CIRCUIT TELEVISION CAMERA
		HIGHWAY ADVISORY RADIO POLE AND ANTENNA
EMS	ems	LED EXTINGUISHABLE MESSAGE SIGN
M V	m v	DETECTION DEVICE M = MICROWAVE SENSOR V = VIDEO IMAGE SENSOR

WIRING DIAGRAM LEGEND

- EXTERNAL CONDUCTOR
- CONDUCTOR OR BUS
- TIE POINT
- CONTACTOR COIL
- CONTACTOR, NO CONTACT
- TERMINAL BLOCKS
- CONTACTOR, NC CONTACT
- ENCLOSURE BOND
- GROUNDING ELECTRODE
- CIRCUIT BREAKER
- RECEPTACLE

PULL BOXES

NEW	EXISTING	
		PULL BOX, No. 5 UNLESS OTHERWISE INDICATED OR NOTED
3	9A(21)	PULL BOX, ADDITIONAL DESIGNATIONS OR DESCRIPTIONS

3 No. 3½ PULL BOX
5 No. 5 PULL BOX
6 No. 6 PULL BOX
7 No. 7 PULL BOX (CEILING)
8 No. 8 PULL BOX
9 No. 9 PULL BOX (STRUCTURE)
9A No. 9A PULL BOX (STRUCTURE)

(C) COMMUNICATIONS PULL BOX
(E) PULL BOX WITH EXTENSION
(S) SPRINKLER CONTROL PULL BOX
(21) ANCHOR BOLTS AND CONDUIT FOR FUTURE INSTALLATION OF TYPE 21 STANDARD
(T) TRAFFIC PULL BOX

VEHICLE DETECTORS

5 J 9 U

- VEHICLE DETECTOR DESIGNATION
- U = UPPER
  L = LOWER
- SLOT NUMBER IN INPUT FILE
- INPUT FILE (I OR J)
- PHASE

NEW	EXISTING	
		TYPE A LOOP DETECTOR. OUTLINE OF SAW CUT SHOWN
		TYPE B LOOP DETECTOR. OUTLINE OF SAW CUT SHOWN
		TYPE C LOOP DETECTOR. OUTLINE OF SAW CUT SHOWN
		TYPE D LOOP DETECTOR. OUTLINE OF SAW CUT SHOWN
		TYPE E LOOP DETECTOR. OUTLINE OF SAW CUT SHOWN
		TYPE Q LOOP DETECTOR. OUTLINE OF SAW CUT SHOWN
DH	dh	DETECTOR HANDHOLE
		MICROWAVE OR VIDEO DETECTION ZONE

STATE OF CALIFORNIA
DEPARTMENT OF TRANSPORTATION

ELECTRICAL SYSTEMS (LEGEND AND ABBREVIATIONS)

NO SCALE

RSP ES-1C DATED APRIL 15, 2016 SUPERSEDES RSP ES-1C DATED OCTOBER 30, 2015 AND RSP ES-1C DATED JULY 19, 2013 AND STANDARD PLAN ES-1C DATED MAY 20, 2011 - PAGE 427 OF THE STANDARD PLANS BOOK DATED 2010.

REVISED STANDARD PLAN RSP ES-1C

2010 REVISED STANDARD PLAN RSP ES-1C

1-22-16

Dist	COUNTY	ROUTE	POST MILES TOTAL PROJECT	SHEET No.	TOTAL SHEETS
08	SBd	15	R107.3	70	263

Theresa Gabriel
REGISTERED ELECTRICAL ENGINEER

April 15, 2016
PLANS APPROVAL DATE

REGISTERED PROFESSIONAL ENGINEER
Theresa Aziz Gabriel
No. E15129
Exp. 6-30-16
ELECTRICAL
STATE OF CALIFORNIA

THE STATE OF CALIFORNIA OR ITS OFFICERS OR AGENTS SHALL NOT BE RESPONSIBLE FOR THE ACCURACY OR COMPLETENESS OF SCANNED COPIES OF THIS PLAN SHEET.

TO ACCOMPANY PLANS DATED 6-13-16

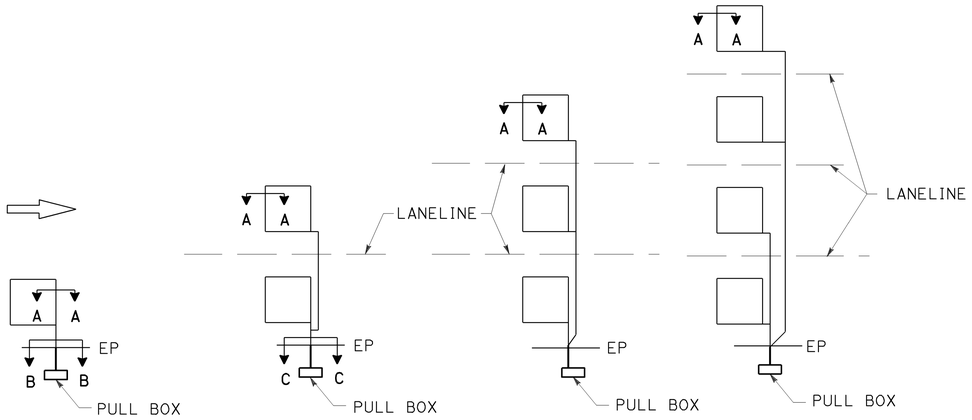

SAW CUT DETAILS

Type A loop detector configurations illustrated

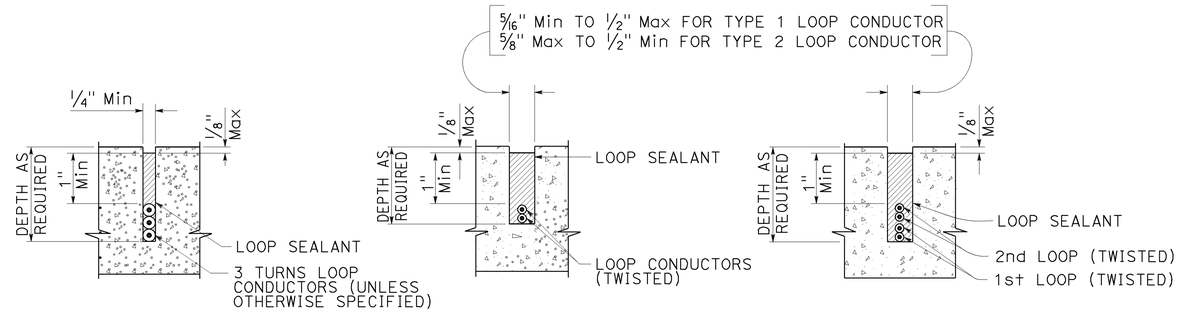

SECTION A-A SECTION B-B SECTION C-C

SLOT DETAILS - TYPE 1 AND TYPE 2 LOOP CONDUCTOR

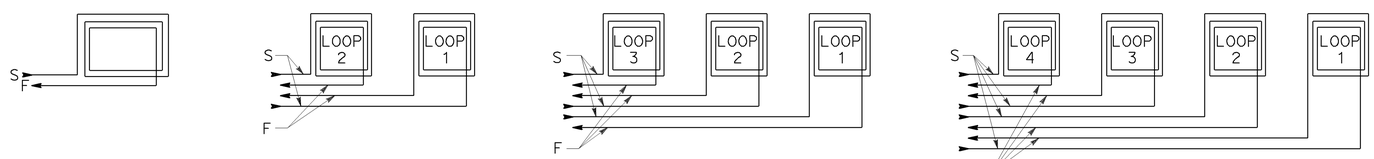

WINDING DETAILS

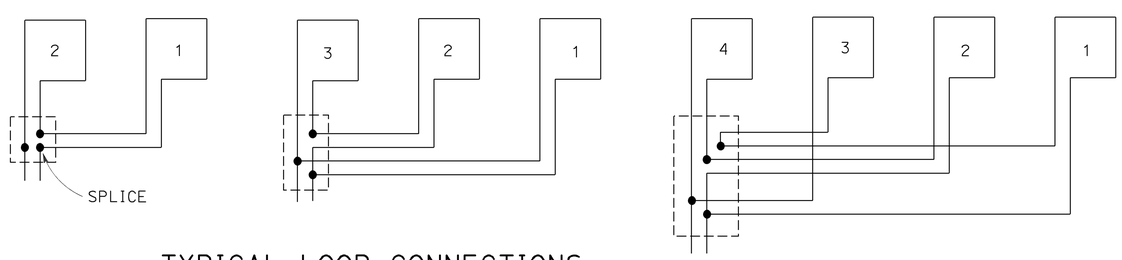

TYPICAL LOOP CONNECTIONS

Dashed lines represent the pull box

ABBREVIATIONS:

S - START
F - FINISH

STATE OF CALIFORNIA
DEPARTMENT OF TRANSPORTATION

ELECTRICAL SYSTEMS (LOOP DETECTORS)

NO SCALE

RSP ES-5A DATED APRIL 15, 2016 SUPERSEDES RSP ES-5A DATED OCTOBER 30, 2015 AND STANDARD PLAN ES-5A DATED MAY 20, 2011 - PAGE 448 OF THE STANDARD PLANS BOOK DATED 2010.

REVISED STANDARD PLAN RSP ES-5A

2010 REVISED STANDARD PLAN RSP ES-5A

1-12-16

Dist	COUNTY	ROUTE	POST MILES TOTAL PROJECT	SHEET No.	TOTAL SHEETS
08	SBd	15	R107.3	71	263

Theresa Gabriel
REGISTERED ELECTRICAL ENGINEER

April 15, 2016
PLANS APPROVAL DATE

REGISTERED PROFESSIONAL ENGINEER
Theresa Aziz Gabriel
No. E15129
Exp. 6-30-16
ELECTRICAL
STATE OF CALIFORNIA

THE STATE OF CALIFORNIA OR ITS OFFICERS OR AGENTS SHALL NOT BE RESPONSIBLE FOR THE ACCURACY OR COMPLETENESS OF SCANNED COPIES OF THIS PLAN SHEET.

TO ACCOMPANY PLANS DATED 6-13-16

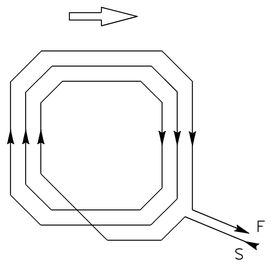

WINDING DETAIL

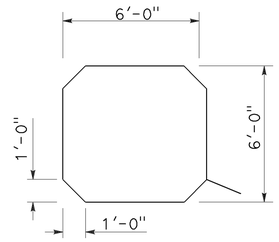

SAW CUT DETAIL

TYPE A LOOP DETECTOR CONFIGURATION

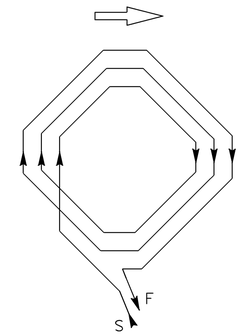

WINDING DETAIL

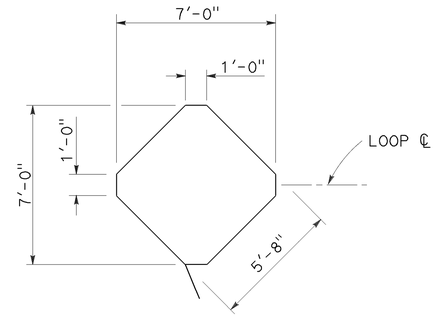

SAW CUT DETAIL

TYPE B LOOP DETECTOR CONFIGURATION

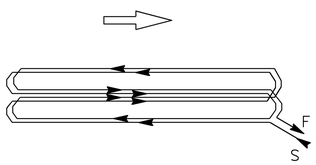

WINDING DETAIL

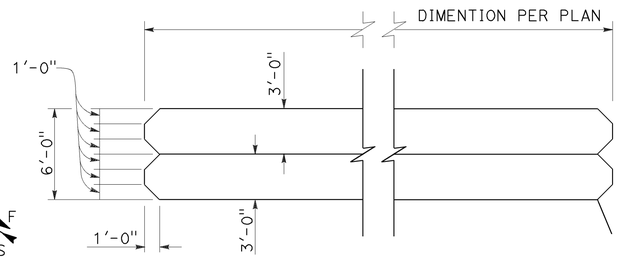

SAW CUT DETAIL

TYPE C LOOP DETECTOR CONFIGURATION

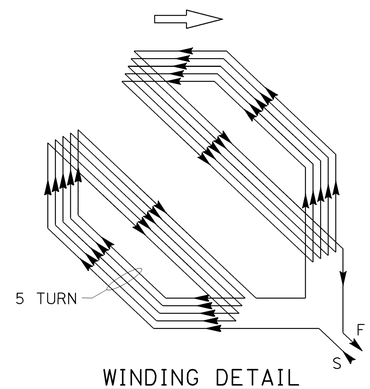

WINDING DETAIL

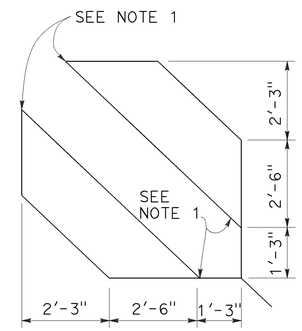

SAW CUT DETAIL

TYPE D LOOP DETECTOR CONFIGURATION

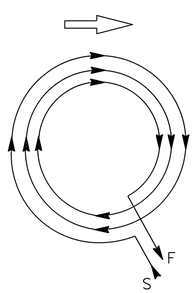

WINDING DETAIL

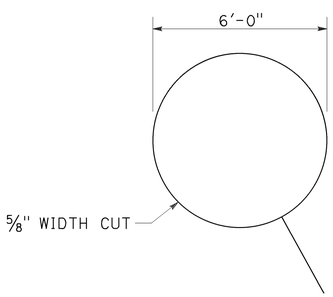

SAW CUT DETAIL

TYPE E LOOP DETECTOR CONFIGURATION

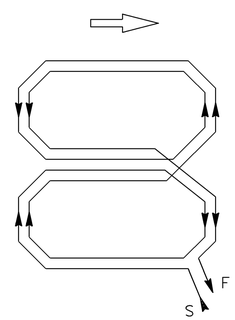

WINDING DETAIL

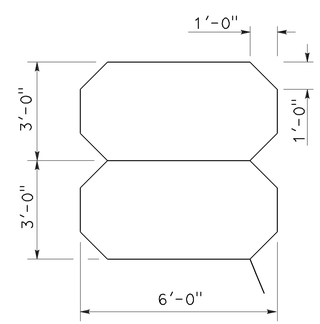

SAW CUT DETAIL

TYPE Q LOOP DETECTOR CONFIGURATION

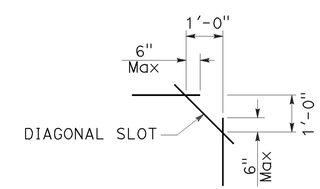

PLAN VIEW OF DIAGONAL SLOT AT CORNERS

NOTES:

1. Round corners of acute angle saw cuts to prevent damage to conductors.
2. Typical distance separating loops from edge to edge is 10' for Type A, B, D and E installation in single lane.
3. Use Type D loops for limit line detection and bicycle lanes.

STATE OF CALIFORNIA
DEPARTMENT OF TRANSPORTATION

ELECTRICAL SYSTEMS (DETECTORS)

NO SCALE

RSP ES-5B DATED APRIL 15, 2016 SUPERSEDES RSP ES-5B DATED OCTOBER 30, 2015 AND RSP ES-5B DATED JULY 19, 2013 AND STANDARD PLAN ES-5B DATED MAY 20, 2011 - PAGE 449 OF THE STANDARD PLANS BOOK DATED 2010.

REVISED STANDARD PLAN RSP ES-5B

2010 REVISED STANDARD PLAN RSP ES-5B

1-22-16

Dist	COUNTY	ROUTE	POST MILES TOTAL PROJECT	SHEET No.	TOTAL SHEETS
08	SBd	15	R107.3	72	263

REGISTERED CIVIL ENGINEER

July 15, 2016
PLANS APPROVAL DATE

Stanley P. Johnson
No. C57793
Exp. 3-31-18
CIVIL
REGISTERED PROFESSIONAL ENGINEER
STATE OF CALIFORNIA

THE STATE OF CALIFORNIA OR ITS OFFICERS OR AGENTS SHALL NOT BE RESPONSIBLE FOR THE ACCURACY OR COMPLETENESS OF SCANNED COPIES OF THIS PLAN SHEET.

TO ACCOMPANY PLANS DATED 6-13-16

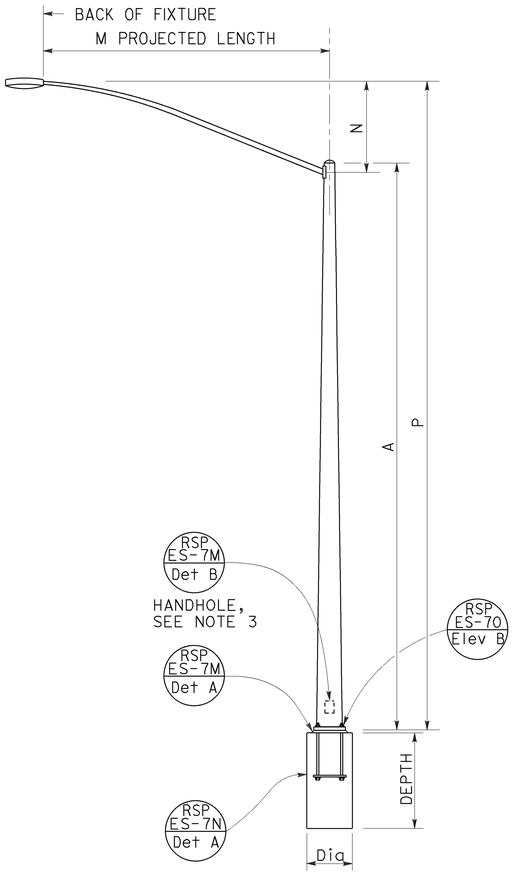

TYPE 15 AND TYPE 21
ELEVATION A

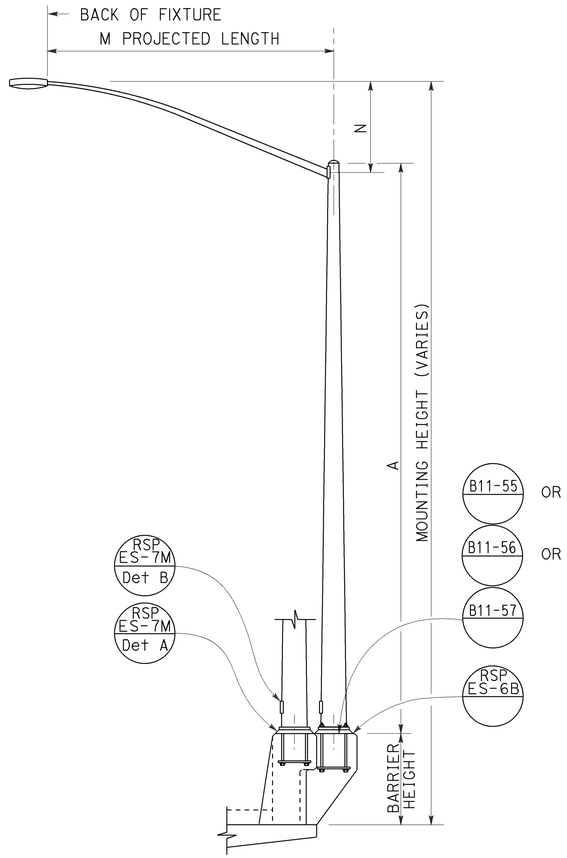

TYPE 15 AND TYPE 21 BARRIER RAIL MOUNTED
ELEVATION B

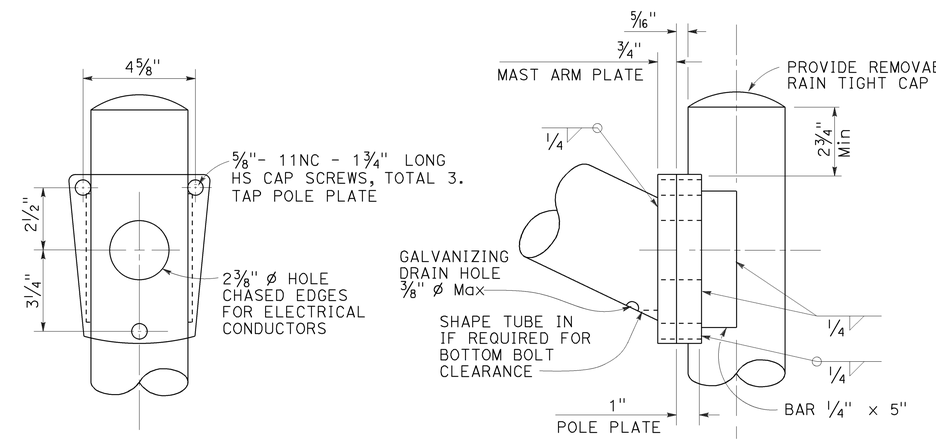

LUMINAIRE MAST ARM CONNECTION
DETAIL R

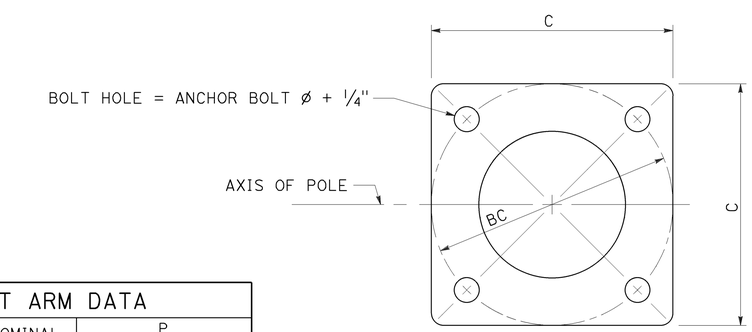

BASE PLATE
DETAIL A

POLE TYPE	POLE DATA				BASE PLATE DATA				CIDH PILE FOUNDATION	
	A HEIGHT	Min OD BASE	Min OD TOP	WALL THICKNESS	C	BC = BOLT CIRCLE	THICKNESS	ANCHOR BOLT SIZE	Dia	DEPTH
15	30'-0"	8"	3 11/16"	0.1196"	1'-0"	1'-0"	1 1/2"	1" ø x 36" *	2'-6"	6'-0"
21	35'-0"	8 5/8"	3 9/16"	0.1793"			2"	1 1/4" ø x 36" *		7'-0"

* FOR BARRIER RAIL BOLTS, SEE REVISED STANDARD PLAN RSP ES-6B.

LUMINAIRE MAST ARM DATA					
M PROJECTED LENGTH	N RISE	Min OD AT POLE	NOMINAL THICKNESS	P TYPE 15	P TYPE 21
6'-0"	2'-0"±	3 1/4"	0.1196"	31'-6"±	36'-6"±
8'-0"	2'-6"±	3 1/2"		32'-0"±	37'-0"±
10'-0"	3'-3"±	3 7/8"		32'-9"±	37'-9"±
12'-0"	4'-3"±			33'-9"±	38'-9"±
15'-0"	4'-9"±	4 1/4"		34'-3"±	39'-3"±

NOTES:

1. ☐ Indicates mast arm length to be used unless otherwise noted on the plans.
2. For Type 15-SB, use Type 15 standard with Type 30 slip base plate details, see Revised Standard Plan RSP ES-6F.
3. Handhole shall be located on the downstream side of traffic.
4. For additional notes and details, see Revised Standard Plans RSP ES-7M and RSP ES-7N.

STATE OF CALIFORNIA
DEPARTMENT OF TRANSPORTATION

ELECTRICAL SYSTEMS (LIGHTING STANDARD, TYPES 15 AND 21)

NO SCALE

RSP ES-6A DATED JULY 15, 2016 SUPERSEDES STANDARD PLAN ES-6A DATED OCTOBER 30, 2015 - PAGE 449 OF THE STANDARD PLANS BOOK DATED 2015.

REVISED STANDARD PLAN RSP ES-6A

2015 REVISED STANDARD PLAN RSP ES-6A

4-15-16

Dist	COUNTY	ROUTE	POST MILES TOTAL PROJECT	SHEET No.	TOTAL SHEETS
08	SBd	15	R107.3	73	263

REGISTERED CIVIL ENGINEER

July 15, 2016
PLANS APPROVAL DATE

REGISTERED PROFESSIONAL ENGINEER
Stanley P. Johnson
No. C57793
Exp. 3-31-18
CIVIL
STATE OF CALIFORNIA

THE STATE OF CALIFORNIA OR ITS OFFICERS OR AGENTS SHALL NOT BE RESPONSIBLE FOR THE ACCURACY OR COMPLETENESS OF SCANNED COPIES OF THIS PLAN SHEET.

TO ACCOMPANY PLANS DATED 6-13-16

2015 REVISED STANDARD PLAN RSP ES-6B

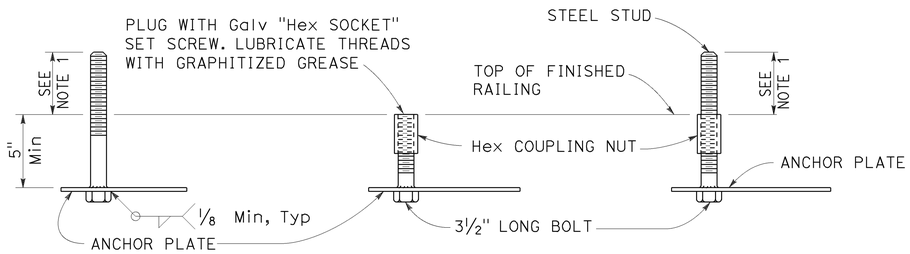

FOR IMMEDIATE INSTALLATION
DETAIL B-1

FOR FUTURE INSTALLATION WITH PLUG
DETAIL B-2

FOR INSTALLATION ON FUTURE ANCHORAGE WITH STUD
DETAIL B-3

ELECTROLIER ANCHORAGES
DETAIL B

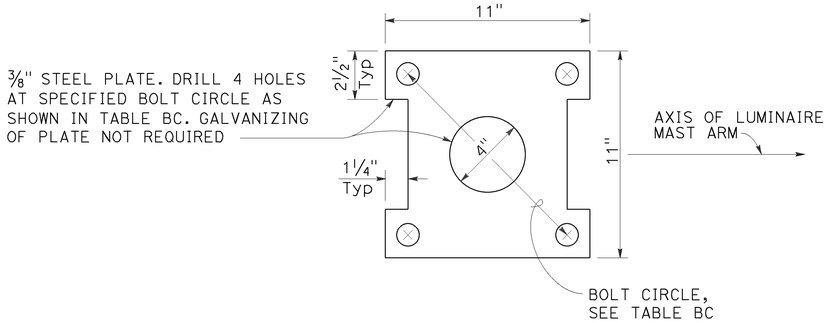

ANCHOR PLATE
DETAIL A

TABLE BC				
TYPE	BC = BOLT CIRCLE	ANCHOR BOLT DIAMETER	COUPLING NUT BASIC LENGTH	SET SCREW LENGTH DETAIL B-2
15	1'-0"	1"	3"	1 1/2"
21		1 1/4"	3 3/4"	1 7/8"

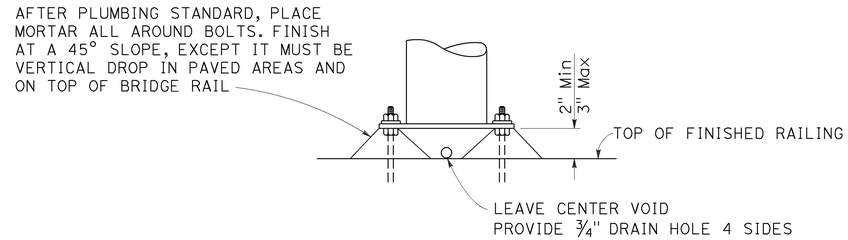

GROUTING AT ELECTROLIER
DETAIL N

NOTES:

1. Anchor bolt or stud length shall be such that thread extends 1/2" maximum above nut on level base plate after grouting. See Detail N.
2. Electrolier anchor bolts shall be held in position for pouring by means of anchor plates and suitable templates. Deviation from the true position, vertical and height shall not exceed 1/16".
3. See railing sheets for reinforcement and structural details at electroliers and pull boxes.

STATE OF CALIFORNIA
DEPARTMENT OF TRANSPORTATION

ELECTRICAL SYSTEMS (ELECTROLIER ANCHORAGE AND GROUTING FOR TYPE 15 AND TYPE 21 BARRIER RAIL MOUNTED)

NO SCALE

RSP ES-6B DATED JULY 15, 2016 SUPERSEDES STANDARD PLAN ES-6B
DATED OCTOBER 30, 2015 - PAGE 450 OF THE STANDARD PLANS BOOK DATED 2015.

REVISED STANDARD PLAN RSP ES-6B

4-15-16

Dist	COUNTY	ROUTE	POST MILES TOTAL PROJECT	SHEET No.	TOTAL SHEETS
08	SBd	15	R107.3	74	263

REGISTERED CIVIL ENGINEER

July 15, 2016
PLANS APPROVAL DATE

REGISTERED PROFESSIONAL ENGINEER Stanley P. Johnson No. C57793 Exp. 3-31-18 CIVIL STATE OF CALIFORNIA

THE STATE OF CALIFORNIA OR ITS OFFICERS OR AGENTS SHALL NOT BE RESPONSIBLE FOR THE ACCURACY OR COMPLETENESS OF SCANNED COPIES OF THIS PLAN SHEET.

TO ACCOMPANY PLANS DATED 6-13-16

2015 REVISED STANDARD PLAN RSP ES-7M

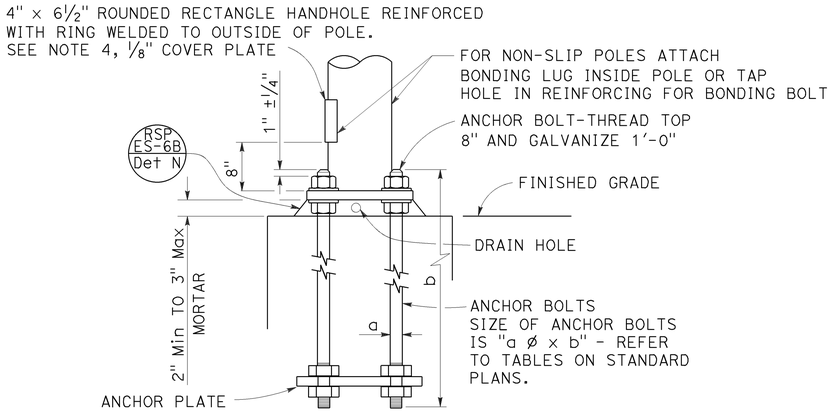

HANDHOLE AND ANCHORAGE
DETAIL A

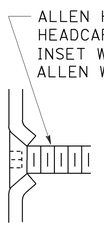

TYPICAL DETAIL
DETAIL B-1

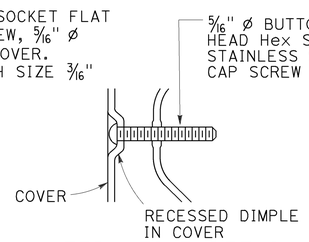

ALTERNATIVE DETAIL
DETAIL B-2

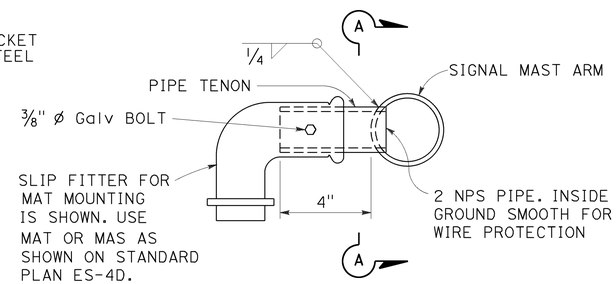

SIDE TENON
DETAIL S-1

IDENTIFICATION NUMBER

1. Attach a stamped metal tag with pole's identification number above the handhole. ¼" high number, minimum.
2. Attach a stamped metal tag with mast arm's identification number to the bottom of the signal mast arm near the pole plate. ¼" high number, minimum.

Type — Load case (Use SL for special load case) — Design wind velocity (mph) — Signal mast arm length (ft) {Near handhole: Maximum signal mast arm length for pole type; Near pole plate: Installed signal mast arm length} — Standard plan year — Only for poles or mast arms using Detail F — Only for poles or mast arms using RSP ES-7O

26A - 3 - 100 - 45 - 10 - F or FB

SAMPLE IDENTIFICATION NUMBER

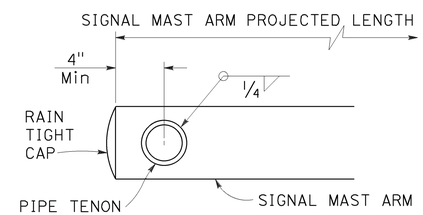

SECTION A-A

PIPE TENONS
DETAIL S

NOTES:

1. Provide a Hex nut, leveling nut and 2 washers for each bolt.
2. Luminaire mast arms shall be round, tapered steel tubes, taper of 0.1375" to 0.143-inch per foot with an end section 2⅜" OD for mounting hardware. Extensions of 2 NPS Standard pipe and 7" long may be used at the option of the manufacturer. When low pressure sodium luminaires are required, the extension shall be 1'-3".
3. Signal mast arms shall be round, tapered steel tubes, maximum taper 0.143-inch per foot.
4. Handhole reinforcement ring shall be ¼" x 2" for 0.1196" to 0.2391" thick poles, ⅜" x 2" for 0.3125" to 0.375" thick poles.
5. Handholes shall be located on the downstream side of traffic.
6. Detail F, fatigue resistant weld, is required at socket welded signal mast arm plate and pole base plate.
7. Cap screws shall be tightened by the turn-of-nut method ⅓ turn from a snug tight condition. No washer will be required.
8. Outside diameter, wall thickness, and corresponding section properties of poles and mast arms as shown in the Standard Plans are minimums. Unless otherwise specified, alternative sections shall require approval by the Engineer.
9. Design: AASHTO Standard Specifications for Structural Support for Highway Signs, Luminaires, and Traffic Signals, 6th Edition. Basic Wind Speed = 100 mph (3 seconds gust). Yearly Mean Wind Velocity = 15.6 mph.
10. Materials (Structural steel):
    fy = 55,000 psi (tapered steel tube and anchor bolts)
    fy = 50,000 psi (unless otherwise noted)
11. Materials (Reinforced concrete):
    f'c = 3,625 psi
    fy = 60,000 psi

WELD SIZE	WALL THICKNESS
⅜"	0.1196"
¼"	0.1793"
5/16"	0.2391"
⅜"	0.3125"
7/16"	0.375"

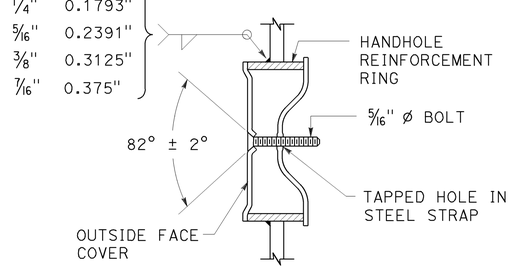

TAMPER RESISTANT HANDHOLE COVER
DETAIL B

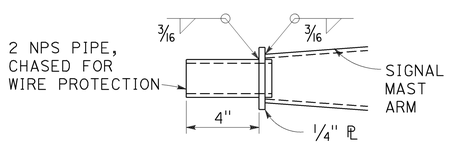

TIP TENON
DETAIL TL

This detail supersedes Detail S when so designated

WELD SIZE	WALL THICKNESS
⅛"	0.1196"
3/16"	0.1793"
¼"	0.2391"

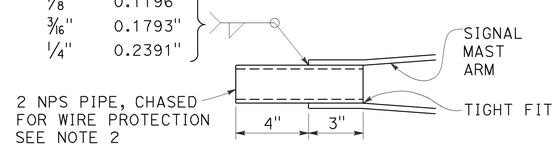

TIP TENON
DETAIL TS

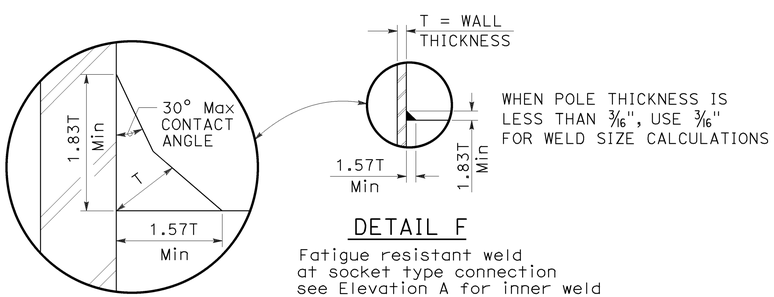

DETAIL F

Fatigue resistant weld at socket type connection see Elevation A for inner weld

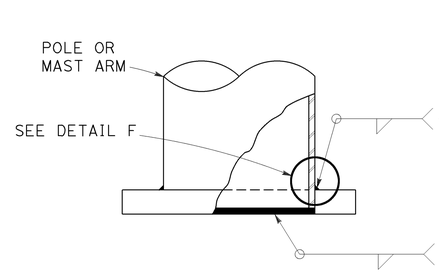

WELD SIZE	WALL THICKNESS
¼"	0.1196"
5/16"	0.1793"
⅜"	0.2391"
7/16"	0.3125"

⅛"	0.1196"
3/16"	0.1793"
¼"	0.2391"
5/16"	0.3125"

ELEVATION A

STATE OF CALIFORNIA
DEPARTMENT OF TRANSPORTATION

ELECTRICAL SYSTEMS (SIGNAL AND LIGHTING STANDARD, DETAIL No. 1)

NO SCALE

RSP ES-7M DATED JULY 15, 2016 SUPERSEDES STANDARD PLAN ES-7M DATED OCTOBER 30, 2015 - PAGE 467 OF THE STANDARD PLANS BOOK DATED 2015.

REVISED STANDARD PLAN RSP ES-7M

6-20-16

Dist	COUNTY	ROUTE	POST MILES TOTAL PROJECT	SHEET No.	TOTAL SHEETS
08	SBd	15	R107.3	75	263

REGISTERED CIVIL ENGINEER

July 15, 2016
PLANS APPROVAL DATE

REGISTERED PROFESSIONAL ENGINEER
Stanley P. Johnson
No. C57793
Exp. 3-31-18
CIVIL
STATE OF CALIFORNIA

THE STATE OF CALIFORNIA OR ITS OFFICERS OR AGENTS SHALL NOT BE RESPONSIBLE FOR THE ACCURACY OR COMPLETENESS OF SCANNED COPIES OF THIS PLAN SHEET.

TO ACCOMPANY PLANS DATED 6-13-16

2015 REVISED STANDARD PLAN RSP ES-7N

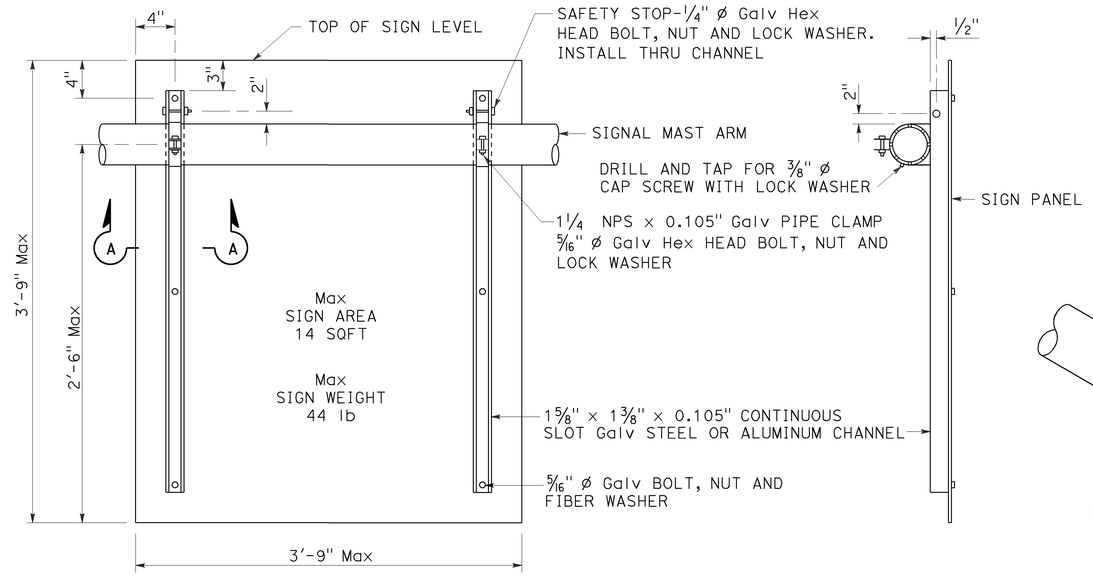

REAR VIEW

SIDE VIEW

SIGN MOUNTING DETAILS
DETAIL U

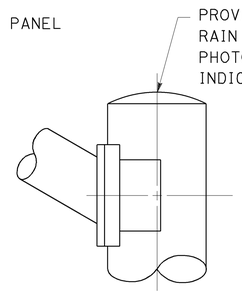

STANDARD TOP
DETAIL B-1

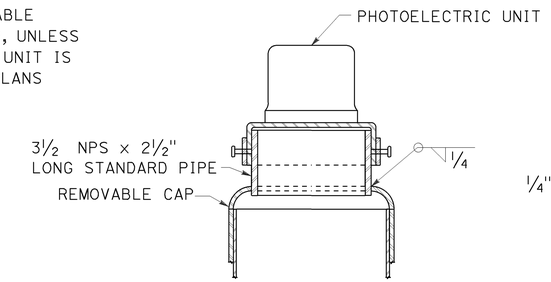

MOUNTING ADAPTER FOR
PHOTOELECTRIC UNIT
DETAIL B-2

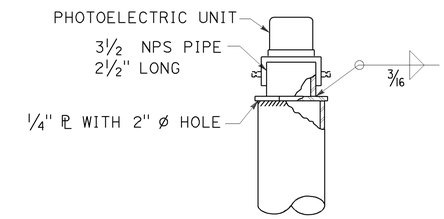

ALTERNATIVE
MOUNTING ADAPTER
DETAIL B-3

POLE TOP DETAILS
DETAIL B

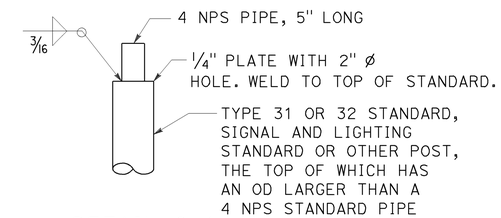

DETAIL C-1

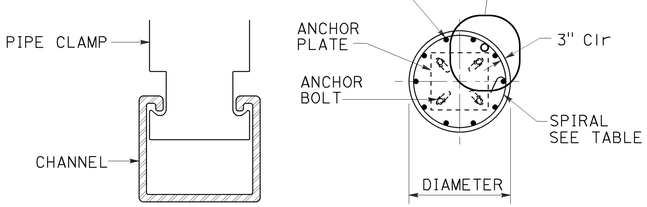

SECTION A-A

SECTION B-B

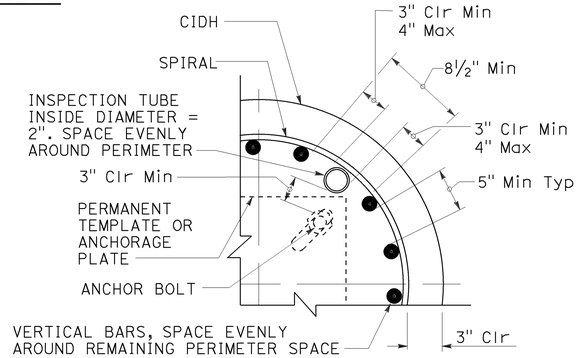

INSPECTION TUBE PLACEMENT
DETAIL I

CIDH REINFORCING AND INSPECTION TUBE SCHEDULE			
CIDH DIAMETER	VERTICAL BARS	SPIRAL	INSPECTION TUBE
2 ft	8-#5	#4 AT 6	2
2.5 ft	10-#6		4*
3 ft	12-#7	#5 AT 6	
3.5 ft	14-#8		4
4 ft	18-#9	2-#4 AT 7	5
4.5 ft	18-#9	2-#5 AT 7	5
5 ft	22-#10	2-#5 AT 7	6
6 ft	26-#11	2-#6 AT 7	7

* FOR SLIP BASE VERSIONS WITH 3 ANCHOR BOLTS USE 3 INSPECTION TUBES.

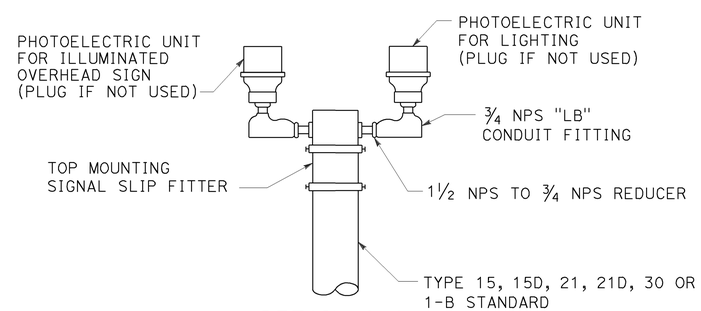

DETAIL C-2

DUAL PHOTOELECTRIC UNIT MOUNTING DETAIL
DETAIL C

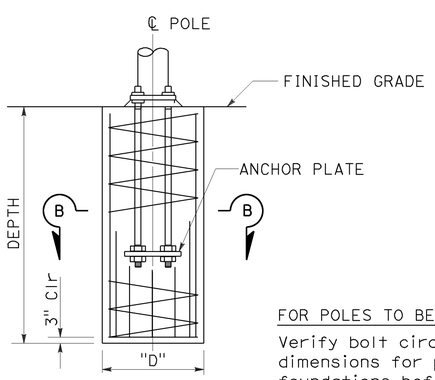

ELEVATION

FOR POLES TO BE INSTALLED ON EXISTING FOUNDATION:

Verify bolt circles, anchor bolt sizes and dependent dimensions for poles to be installed on existing foundations before fabricating the poles.

CAST-IN-DRILLED-HOLE PILE FOUNDATION, REINFORCED PILE
DETAIL A

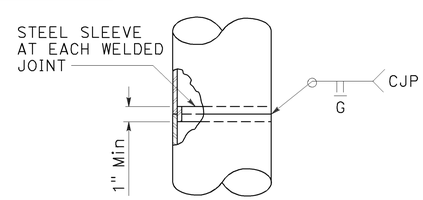

FOR UNIFORM TUBE THICKNESS
DETAIL T-1

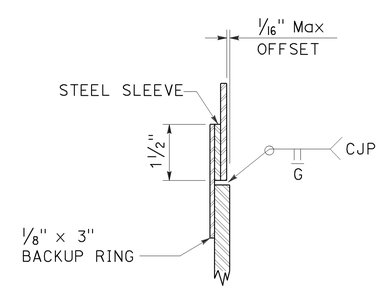

AT TUBE THICKNESS CHANGE
DETAIL T-2

POLE SPLICES
DETAIL T

STATE OF CALIFORNIA
DEPARTMENT OF TRANSPORTATION

ELECTRICAL SYSTEMS (SIGNAL AND LIGHTING STANDARD, DETAIL No. 2)

NO SCALE

RSP ES-7N DATED JULY 15, 2016 SUPERSEDES STANDARD PLAN ES-7N
DATED OCTOBER 30, 2015 - PAGE 468 OF THE STANDARD PLANS BOOK DATED 2015.

REVISED STANDARD PLAN RSP ES-7N

6-20-16

DIST	COUNTY	ROUTE	POST MILES TOTAL PROJECT	SHEET NO.	TOTAL SHEETS
08	SBd	15	R107.3	76	263

Theresa Gabriel
REGISTERED ELECTRICAL ENGINEER

April 15, 2016
PLANS APPROVAL DATE

REGISTERED PROFESSIONAL ENGINEER Theresa Aziz Gabriel No. E15129 Exp. 6-30-16 ELECTRICAL STATE OF CALIFORNIA

THE STATE OF CALIFORNIA OR ITS OFFICERS OR AGENTS SHALL NOT BE RESPONSIBLE FOR THE ACCURACY OR COMPLETENESS OF SCANNED COPIES OF THIS PLAN SHEET.

TO ACCOMPANY PLANS DATED 6-13-16

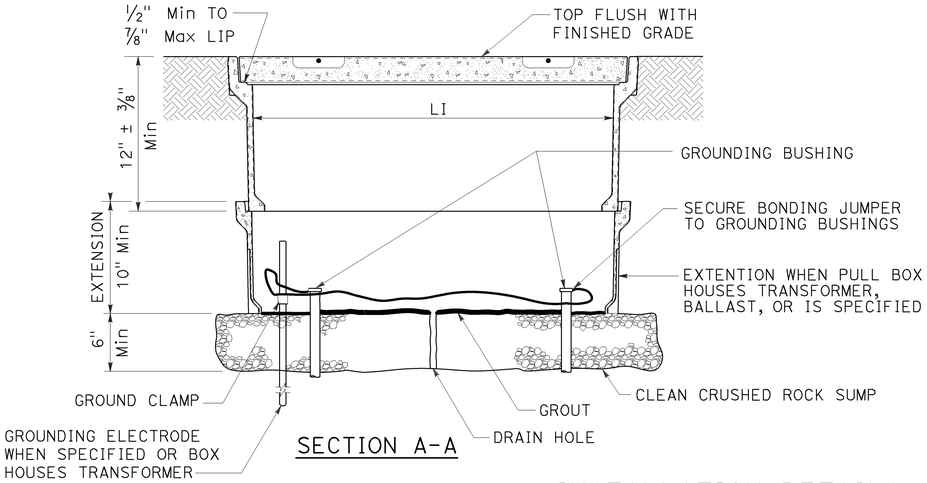

SECTION A-A

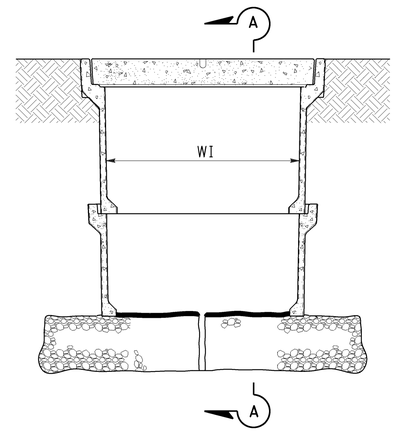

SIDE VIEW

INSTALLATION DETAILS

DETAIL A

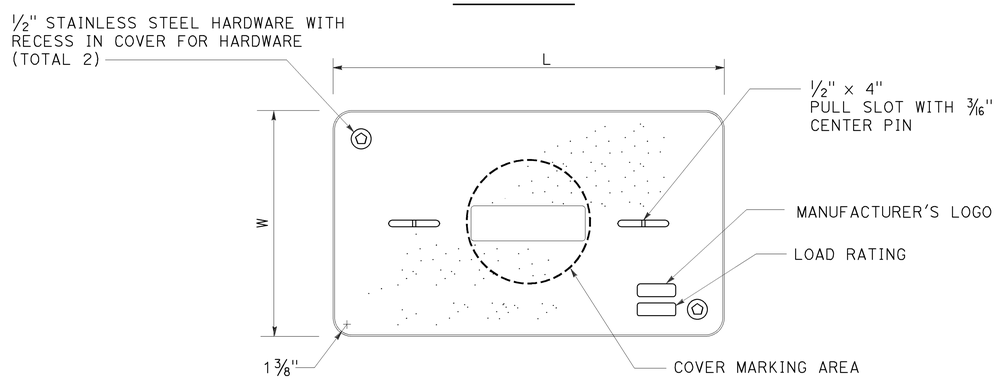

COVER TOP VIEW

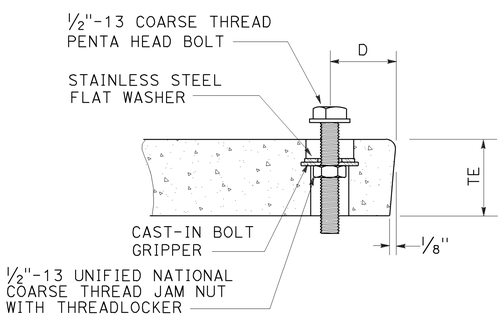

TYPICAL COVER CAPTIVE BOLT

OR SIMILAR

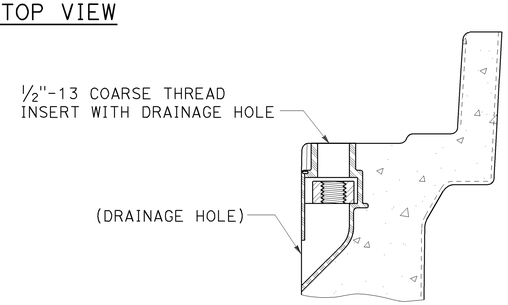

TYPICAL THREADED INSERT

OR SIMILAR

NOTES:

1. The nominal dimensions of the opening in which the cover sets shall be the same as the cover dimensions except the length and width dimensions shall be 1/8" greater.
2. Covers and boxes shall be interchangeable with California standard male and female gages. When interchanged with a standard male or female gage, the top surfaces shall be flush within 1/8". Top outside radius of covers and pull boxes shall have a 1/8" radius.
3. Dimensions for the cover for non-traffic pull box are nominal values.

DIMENSION TABLE

PULL BOX	PULL BOX					COVER				
	MINIMUM DEPTH BOX	MINIMUM DEPTH EXTENSION	MINIMUM WEIGHT	LI Min	WI Min	TE	D	L	W	MINIMUM WEIGHT
No. 3 1/2	12"	N/A	40 lb	1' - 3"	9"	1 3/4"	1 3/4"	1'-3 1/4" - 1'-3 3/8"	10" - 10 1/8"	30 lb
No. 5	12"	10"	55 lb	1' - 8"	11"	2"	1 3/4"	1'-11 1/4"	1'-1 3/4"	60 lb
No. 6	12"	10"	70 lb	2' - 4 1/4"	1' - 3 1/4"	2"	2"	2'-6 1/2"	1'-5 1/2"	85 lb

STATE OF CALIFORNIA
DEPARTMENT OF TRANSPORTATION

ELECTRICAL SYSTEMS (NON-TRAFFIC PULL BOX)

NO SCALE

RSP ES-8A DATED APRIL 15, 2016 SUPERSEDES RSP ES-8A DATED OCTOBER 30, 2015 AND RSP ES-8A DATED JULY 19, 2013 AND RSP ES-8A DATED JANUARY 20, 2012 THAT SUPPLEMENTS THE STANDARD PLANS BOOK DATED 2010.

REVISED STANDARD PLAN RSP ES-8A

2010 REVISED STANDARD PLAN RSP ES-8A

1-22-16

Dist	COUNTY	ROUTE	POST MILES TOTAL PROJECT	SHEET No.	TOTAL SHEETS
08	SBd	15	R107.3	77	263

LICENSED ARCHITECT — DATE 11/20/15

LICENSED ARCHITECT Janusz Pietrzak No. C23915 01-31-2017 RENEWAL DATE STATE OF CALIFORNIA

06-13-16
PLANS APPROVAL DATE

The State of California or its officers or agents shall not be responsible for the accuracy or completeness of scanned copies of this plan sheet.

ACCESSIBILITY DESIGN APPROVAL DOT / DES / OTA

PROJECT ID **0814000184**

Reviewed by: Y.A. WANG
Date: 05-27-16

OFFICE OF THE STATE FIRE MARSHAL APPROVED FIRE AND PANIC ONLY

Approval of this plan does not authorize or approve any omission or deviation from applicable regulations. Final approval is subject to field inspection. One set of approved plans shall be available on the project site at all times.

Reviewed by: INGRID P. ICASIANO
Approval date: 07-02-16
SFM No: 01-36-11-0066

NOTE : KNOX BOX MUST BE KNOX LOCK (#3770) FOR FIRE ACCESS

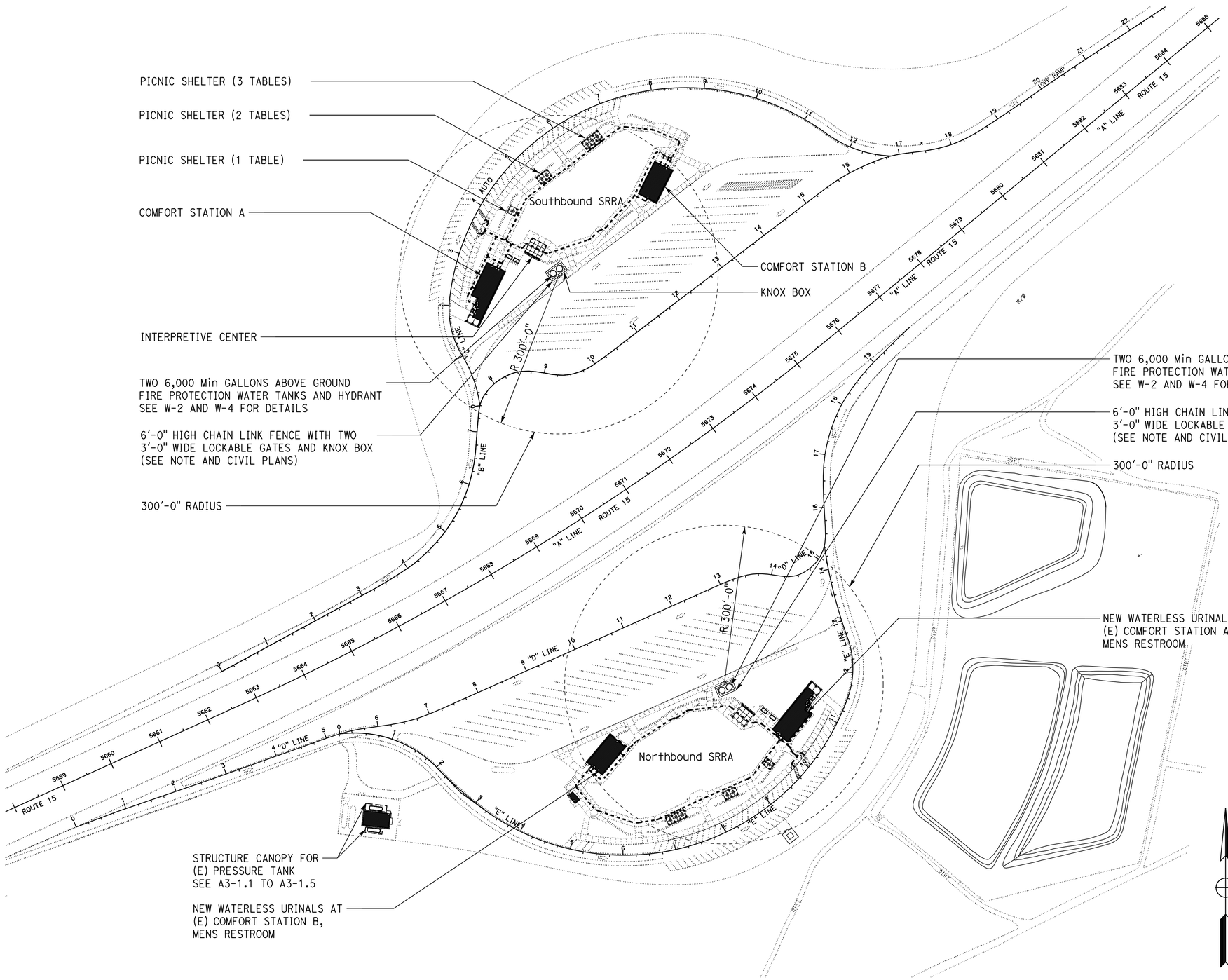

STATE OF CALIFORNIA –NATIONAL RESOURCES AGENCY — Edmond G. Brown Jr., Governor

DEPARTMENT OF FORESTRY AND FIRE PROTECTION
OFFICE OF THE STATE FIRE MARSHAL
Fire and Life Safety Division
P.O. Box 944246
SACRAMENTO, CA 94244-2460
(916) 445-8550
Website: www.fire.ca.gov

LOCAL FIRE AUTHORITY – ACCESS APPROVAL

Project: Clyde V. Kane Safety Road Side Rest Area

Address: 18 miles south of Baker, CA

CSFM File Number: 01-36-11-0049 (Only if applicable) DGS Project #: _____ (Only if applicable)

Pursuant to Title 19, California Code of Regulations, Article 3, Section 3.05, Fire Department Access and Egress, it is necessary to provide the California State Fire Marshal with written certification from the local fire authority that the above section is being met to their satisfaction.

Please return this form with all sections filled in completely. Without this form, California State Fire Marshal approval may be delayed. If you have any questions, please contact the California State Fire Marshal Plan Review Unit at (916) 445-8550.

The local fire authority shall consider the following items,

Approved	Yes	No
Fire Department Access	X	
Fire Department Connection	X	
Fire Hydrant	X	
Fire Alarm Annunciator	N/A	N/A
Fire Alarm Control Panel	N/A	N/A
Knox Box	X	
Emergency Responder Radio Coverage	N/A	N/A

Local Fire Authority: San Bernardino Co. Fire
Address: 15900 Smoke Tree St.
City/State/ZIP: Hesperia Ca.

Approval issued by: Karl L. Von Oesen
Rank/Title: Fire Prevention Specialist
Phone Number: (760) 995-8190
Signature: _____ Date: 3-23-16

Jeff DeFevere
DESIGN SUPERVISOR
Donald E. Alsey
DESIGN ARCHITECT

DESIGNER Janusz Pietrzak
DRAWN BY Robertino Quibin
CHECKED BY: Donald E. Alsey
STRUCTURAL REVIEW Donald E. Alsey

SHEET LEGEND
A-1 ARCHITECTURAL ST-1 STRUCTURAL
M-1 MECHANICAL EE-1 ELECTRICAL
W-1 WATER SS-1 WASTEWATER

STATE OF CALIFORNIA
DEPARTMENT OF TRANSPORTATION

DIVISION OF ENGINEERING SERVICES
ARCHITECTURAL AND STRUCTURAL DESIGN

BRIDGE No. 540004R/L
POST MILE R107.3

C.V. KANE SAFETY ROADSIDE REST AREA REHABILITATION
GENERAL PLAN
GENERAL PLAN

SHEET GP

TAEMWW Imperial - CCSC Rev. 04/14

ORIGINAL SCALE IN INCHES FOR REDUCED PLANS 0 1 2 3

UNIT: 3600 CONTRACT No.: 08-0G8424
PROJECT NUMBER & PHASE: 08140001841

DISREGARD PRINTS BEARING EARLIER REVISION DATES

REVISION DATES (PRELIMINARY STAGE ONLY) SHEET OF

30-AUG-2016 14:36

P:\dist_08\0814000184_cv_kane_sb_srra_upgrade\expedite\GP.dgn

Dist	COUNTY	ROUTE	POST MILES TOTAL PROJECT	SHEET No.	TOTAL SHEETS
08	SBd	15	R107.3	78	263

LICENSED ARCHITECT — DATE 11/20/15

LICENSED ARCHITECT Janusz Pietrzak No. C23915 01-31-2017 RENEWAL DATE STATE OF CALIFORNIA

06-13-16
PLANS APPROVAL DATE

The State of California or its officers or agents shall not be responsible for the accuracy or completeness of scanned copies of this plan sheet.

ACCESSIBILITY DESIGN APPROVAL
DOT / DES / OTA
PROJECT ID
0814000184
Reviewed by: Y.A. WANG
Date: 05-27-16

OFFICE OF THE STATE FIRE MARSHAL
APPROVED FIRE AND PANIC ONLY
Approval of this plan does not authorize or approve any omission or deviation from applicable regulations. Final approval is subject to field inspection. One set of approved plans shall be available on the project site at all times.
Reviewed by: INGRID P. ICASIANO
Approval date: 07-02-16
SFM No: 01-36-11-0066

SHEET INDEX

GENERAL

GP GENERAL PLAN
G1-1 SHEET INDEX
G1-2a BUILDING ABBREVIATIONS 1 OF 3
G1-2b BUILDING ABBREVIATIONS 2 OF 3
G1-2c BUILDING ABBREVIATIONS 3 OF 3
G1-3a BUILDING SYMBOLS 1 OF 3
G1-3b BUILDING SYMBOLS 2 OF 3
G1-3c BUILDING SYMBOLS 3 OF 3
G1-4 SCOPE OF WORK, DESIGN CRITERIA BUILDING DATA AND CODE ANALYSIS

ARCHITECTURAL

STRUCTURE DEMOLITION

A0-1.1 SITE PLAN
A0-1.2 COMFORT STATION FLOOR PLAN
A0-1.3 COMFORT STATION ROOF PLAN AND ELEVATIONS
A0-1.4 REMOVAL PLAN AND INTERIOR ELEVATION (NB EXISTING COMFORT STATION A)
A0-1.5 REMOVAL PLAN AND INTERIOR ELEVATION (NB EXISTING COMFORT STATION B)

SITE ACCESSIBILITY

A0-2.1 NORTHBOUND SITE PLAN
A0-2.2 SOUTHBOUND SITE PLAN

ACCESSIBILITY

A0-3.1 ACCESSIBILITY STANDARD DETAILS
A0-3.2 ACCESSIBILITY STANDARD DETAILS
A0-3.3 ACCESSIBILITY STANDARD DETAILS
A0-3.4 ACCESSIBILITY STANDARD DETAILS
A0-3.5 ACCESSIBILITY STANDARD DETAILS

SOUTHBOUND COMFORT STATION A

A1-1.1 FLOOR PLAN
A1-1.2 PARTIAL FLOOR PLAN
A1-1.3 PARTIAL FLOOR PLAN
A1-1.4 REFLECTED CEILING PLAN
A1-1.5 ROOF PLAN
A1-1.6 EXITING PLAN
A1-2.1 BUILDING SECTIONS
A1-2.2 BUILDING SECTIONS
A1-2.3 BUILDING SECTIONS
A1-2.4 BUILDING SECTIONS
A1-2.5 BUILDING SECTIONS
A1-3.1 BUILDING ELEVATIONS
A1-4.1 INTERIOR ELEVATIONS
A1-4.2 INTERIOR ELEVATIONS
A1-4.3 INTERIOR ELEVATIONS
A1-4.4 CABINET DETAILS

SOUTHBOUND COMFORT STATION B

A2-1.1 FLOOR PLAN
A2-1.2 REFLECTED CEILING PLAN
A2-1.3 ROOF PLAN
A2-1.4 EXITING PLAN
A2-2.1 BUILDING SECTIONS
A2-2.2 BUILDING SECTIONS
A2-2.3 BUILDING SECTIONS
A2-3.1 BUILDING ELEVATIONS
A2-4.1 INTERIOR ELEVATIONS
A2-4.2 INTERIOR ELEVATIONS

NORTHBOUND WATER TREATMENT BUILDING

A3-1.1 PRESSURE TANK CANOPY SITE PLAN
A3-1.2 PRESSURE TANK CANOPY FLOOR PLAN
A3-1.3 PRESSURE TANK CANOPY ROOF PLAN
A3-1.4 PRESSURE TANK CANOPY REFLECTED CEILING PLAN
A3-1.5 PRESSURE TANK CANOPY BUILDING ELEVATIONS AND SECTIONS

SOUTHBOUND PICNIC SHELTERS

A6-1.1 FLOOR PLANS
A6-1.2 ROOF PLANS
A6-1.3 REFLECTED CEILING PLAN
A6-2.1 SECTIONS AND ELEVATIONS
A6-3.1 SECTIONS

SOUTHBOUND INTERPRETIVE CENTER

A7-1.1 FLOOR PLAN AND REFLECTED CEILING PLAN
A7-1.2 LOWER ROOF PLAN AND REFLECTED CEILING PLAN
A7-1.3 UPPER ROOF PLAN AND REFLECTED CEILING PLAN
A7-2.1 BUILDING EXTERIOR ELEVATIONS
A7-3.1 BUILDING SECTION

SCHEDULES

A8-1.1 ROOM FINISH SCHEDULE
A8-1.2 SURFACE COLOR SCHEDULE
A8-2.1 DOOR SCHEDULE
A8-3.1 WINDOWS
A8-3.2 LOUVERS

DETAILS

A9-1.1 BUILDING EXTERIOR DETAILS
A9-1.2 BUILDING EXTERIOR DETAILS
A9-1.3 EXTERIOR WALL DETAILS
A9-2.1 ROOF DETAILS
A9-2.2 ROOF DETAILS
A9-2.3 ROOF DETAILS
A9-2.4 ROOF DETAILS
A9-2.5 METAL ROOFING
A9-2.6 ROOF DETAILS
A9-2.7 DOWNSPOUT
A9-3.1 INTERIOR
A9-3.2 INTERIOR
A9-4.1 DOORS
A9-4.2 DOORS
A9-5.1 WINDOWS AND LOUVERS
A9-5.2 WINDOWS AND LOUVERS
A9-5.3 WINDOWS AND LOUVERS

STRUCTURAL

ST-2 CONCRETE STANDARD
ST-3 CONCRETE MASONRY UNIT DETAILS
ST-4 CONCRETE MASONRY UNIT DETAILS
ST-5 FOUNDATION DETAILS
ST-6 FOUNDATION DETAILS
ST-7 ROOF DECK DETAILS
ST-8 ROOF FRAMING DETAILS
ST-9 ROOF FRAMING DETAILS
ST-10 ROOF FRAMING DETAILS
ST-11 ROOF FRAMING SETAILS
ST-12 ROOF FRAMING DETAILS
ST-13 ROOF FRAMING DETAILS
ST-14 ROOF FRAMING DETAILS
LOG OF TEST BORINGS 1 OF 3
LOG OF TEST BORINGS 2 OF 3
LOG OF TEST BORINGS 3 OF 3

SOUTHBOUND COMFORT STATION A

ST1-0 DESIGN CRITERIA AND DETAIL NOTES
ST1-1 FOUNDATION PLAN
ST1-2 FOUNDATION PLAN
ST1-3 ROOF FRAMING PLAN
ST1-4 ROOF FRAMING PLAN
ST1-5 PARTIAL CEILING FRAMING PLAN
ST1-6 BUILDING SECTION
ST1-7 BUILDING SECTION
ST1-8 BUILDING SECTION
ST1-9 BUILDING SECTION
ST1-10 BUILDING SECTION
ST1-11 CEILING FRAMING DETAILS
ST1-12 ROOF FRAMING DETAILS
ST1-13 ROOF FRAMING DETAILS
ST1-14 ROOF FRAMING DETAILS

SOUTHBOUND COMFORT STATION B

ST2-0 DESIGN CRITERIA AND DETAIL NOTES
ST2-1 FOUNDATION PLAN
ST2-2 ROOF FRAMING PLAN
ST2-3 BUILDING SECTION
ST2-4 BUILDING SECTION

NORTHBOUND WATER TREATMENT BUILDING

ST3-0 DESIGN CRITERIA AND DETAIL NOTES
ST3-1 FOUNDATION PLAN
ST3-2 ROOF FRAMING PLAN
ST3-3 SECTIONS
ST3-4 FOUNDATION DETAILS
ST3-5 ROOF FRAMING DETAILS

SOUTHBOUND PICNIC SHELTERS

ST6-0 DESIGN CRITERIA AND DETAIL NOTES
ST6-1 FOUNDATION PLAN
ST6-2 ROOF FRAMING PLAN
ST6-3 BUILDING SECTION

STRUCTURE 7 - INTERPRETIVE CENTER

ST7-0 DESIGN CRITERIA AND DETAIL NOTES
ST7-1 FOUNDATION PLAN AND ROOF FRAMING PLAN
ST7-2 ROOF FRAMING PLANS
ST7-3 SECTION
ST7-4 FOUNDATION DETAILS
ST7-5 ROOF FRAMING DETAILS
ST7-6 ROOF FRAMING DETAILS

MECHANICAL

SOUTHBOUND COMFORT STATION A

M1-1 DOMESTIC WATER PLAN
M1-2 SANITARY SEWER
M1-3 DOMESTIC WATER-SCHEMATIC
M1-4 SANITARY SEWER-SCHEMATIC

SOUTHBOUND COMFORT STATION B

M2-1 DOMESTIC WATER PLAN
M2-2 SANITARY SEWER PLAN
M2-3 DOMESTIC WATER-SCHEMATIC
M2-4 SANITARY SEWER-SCHEMATIC

M3-1 PLUMBING ROUGH-IN DETAILS
M3-2 MECHANICAL DETAILS

NORTHBOUND COMFORT STATIONS A AND B

M4-1 NORTH BOUND WATERLESS URINAL REPLACEMENT-SCHEMATIC
M4-2 NORTH BOUND WATERLESS URINAL REPLACEMENT-SCHEMATIC

ELECTRICAL

SITE

EE0-1.1 EXISTING SITE PLAN
EE0-1.2 MODIFIED POWER SITE PLAN
EE0-1.3 MODIFIED LOW VOLTAGE SITE PLAN
EE0-1.4 MODIFIED COMMUNICATION SITE PLAN
EE0-1-5 AREA LIGHTING PLAN
EE0-1.6 MODIFIED SINGLE LINE DIAGRAM

SOUTHBOUND COMFORT STATION A

EE1-1.1 PANEL LAYOUT
EE1-1.2 POWER PLAN
EE1-1.3 AUTOMATIC FLUSH SYSTEM
EE1-1.4 TELEPHONE PLAN
EE1-2.1 INTERIOR AND EXTERIOR LIGHTING PLAN
EE1-3.1 PANEL SCHEDULES
EE1-4.1 LOW VOLTAGE ELECTRICAL PLANS

SOUTHBOUND COMFORT STATION B

EE2-1.1 PANEL LAYOUT
EE2-1.2 POWER PLAN
EE2-1.3 AUTOMATIC FLUSH SYSTEM
EE2-2.1 INTERIOR AND EXTERIOR LIGHTING PLAN
EE2-3.1 PANEL SCHEDULES
EE2-4.1 LOW VOLTAGE ELECTRICAL PLANS

SOUTHBOUND PICNIC SHELTERS

EE3-1.1 PICNIC SHELTERS ELECTRICAL PLAN

SOUTHBOUND INTERPRETIVE CENTER

EE4-1.1 INTERPRETIVE DISPLAY ELECTRICAL PLAN

EE5-1.1 SCHEMATICS AND DETAILS 1
EE5-1.2 ELECTRICAL DETAILS 2
EE5-1.3 INTERIOR LIGHTING SCHEMATICS DIAGRAM 1
EE5-1.4 INTERIOR LIGHTING SCHEMATICS DIAGRAM 2
EE5-1.5 EXTERIOR LIGHTING SCHEMATICS DIAGRAM
EE5-1.6 LIGHTING FIXTURES SCHEDULE
EE5-1.7 LIGHTING FIXTURES MOUNTING DETAILS

WATER

W-1 EXISTING SITE PLAN
W-2 MODIFIED SITE PLAN
W-3 WATER TREATMENT BUILDING
W-4 FIRE PROTECTION WATER TANK DETAILS
W-5 WATER PIPE DETAILS
W-6 DETAILS

WASTEWATER

SS-1 EXISTING SITE PLAN
SS-2 MODIFIED SITE PLAN
SS-3 DETAILS
SS-4 MANHOLE DETAILS

	BY	CHECKED
DESIGN	Janusz Pietrzak	Donald Alsey
DETAILS	Robertino Quibin	Donald Alsey
QUANTITIES		

STATE OF CALIFORNIA
DEPARTMENT OF TRANSPORTATION

DIVISION OF ENGINEERING SERVICES
ARCHITECTURAL AND STRUCTURAL DESIGN

BRIDGE No. 540004R/L
POST MILE R107.3

C.V. KANE SAFETY ROADSIDE REST AREA REHABILITATION

SHEET INDEX

SHEET G1-1

ORIGINAL SCALE IN INCHES FOR REDUCED PLANS 0 1 2 3

UNIT: 3600 CONTRACT No.: 08-0G8424
PROJECT NUMBER & PHASE: 08140001841

DISREGARD PRINTS BEARING EARLIER REVISION DATES

REVISION DATES (PRELIMINARY STAGE ONLY) SHEET OF

TAEMWW Imperial - CCSC Rev. 04/14

30-AUG-2016 14:36

P:\dist_08\0814000184_cv_kane_sb_srra_upgrade\expedite\G1-1.dgn

Dist	COUNTY	ROUTE	POST MILES TOTAL PROJECT	SHEET No.	TOTAL SHEETS
08	SBd	15	R107.3	79	263

Donald E. Alsey 04-08-15
LICENSED ARCHITECT DATE

06-13-16
PLANS APPROVAL DATE

LICENSED ARCHITECT Donald E. Alsey No. C-26676 07-31-15 RENEWAL DATE STATE OF CALIFORNIA

The State of California or its officers or agents shall not be responsible for the accuracy or completeness of scanned copies of this plan sheet.

ACCESSIBILITY DESIGN APPROVAL DOT / DES / OTA
PROJECT ID **0814000184**
Reviewed by: Y.A. WANG
Date: 05-27-16

OFFICE OF THE STATE FIRE MARSHAL APPROVED FIRE AND PANIC ONLY
Approval of this plan does not authorize or approve any omission or deviation from applicable regulations. Final approval is subject to field inspection. One set of approved plans shall be available on the project site at all times.
Reviewed by: INGRID P. ICASIANO
Approval date: 07-02-16
SFM No: 01-36-11-0066

A

A	AMPERES
AAD	ADHESIVE ANCHORAGE DEVICE
AB	ANCHOR BOLT, AGGREGATE BASE
ABS	ACRYLONITRILE BUTADIENE STYRENE
Abv	ABOVE
A/C	AIR CONDITIONING, AIR CONDITIONING UNIT
AC	ASPHALT CONCRETE
Acous	ACOUSTICAL
ACS	AIR COMPRESSOR STARTER
AD	AIR DROP
ADA	AMERICANS WITH DISABILITIES ACT
Addl	ADDITIONAL
Adj	ADJUSTABLE
AFCI	ARC FAULT CIRCUIT INTERRUPTER
AHU	AIR HEATER UNIT
AI	ANALOG INPUT
AL	ALARM LIGHT
Alt	ALTERNATE
Alum	ALUMINUM
AO	ANALOG OUTPUT
APA	AMERICAN PLYWOOD ASSOCIATION
APC	ALTERNATIVE PIPE CULVERT
Approx	APPROXIMATE
AR	ALARM RESET
Arch	ARCHITECTURAL, ARCHITECT
Asph	ASPHALT
ATF	AUTOMATIC TRANSMISSION FLUID
ATS	AUTOMATIC TRANSFER SWITCH
Auto	AUTOMATIC
AVC	AIR VOLUME CONTROLLER
AWG	AMERICAN WIRE GAUGE

B

B-B	BACK TO BACK
BC	BARE COPPER
Bd	BOARD
BD	BUILDING DISCONNECT
BFP	BACKFLOW PREVENTER
BFV	BUTTERFLY VALVE
Bit	BITUMINOUS
Bldg	BUILDING
Blk	BLOCK
Blkg	BLOCKING
Bm	BEAM
BN	BOUNDARY NAILING
BOF	BOTTOM OF FOOTING
Bot	BOTTOM
BP	BOOSTER PUMP
Br	BRIDGE
Brk	BREAKER
BTU	BRITISH THERMAL UNIT
BTUH	BRITISH THERMAL UNIT PER HOUR
Btwn	BETWEEN
BUR	BUILT-UP-ROOFING
BV	BALANCING VALVE

C

C	CONDUIT
Cab	CABINET
Cat	CATEGORY
CB	CIRCUIT BREAKER, CATCH BASIN
CBC	CALIFORNIA BUILDING CODE
C-C	CENTER TO CENTER
CCTV	CLOSED CIRCUIT TELEVISION
CD	CONTROL DISCONNECT, CONDENSATE DRAIN
Cem	CEMENT
Cer	CERAMIC
cfm	CUBIC FEET PER MINUTE
cfs	CUBIC FEET PER SECOND
CFS	COLD-FORMED STEEL
CHWR	CHILLED WATER RETURN
CHWS	CHILLED WATER SUPPLY
CI	CAST-IRON
CIDH	CAST IN DRILLED HOLE
CIP	CAST IN PLACE
CJ	CONTROL JOINT
Ckt	CIRCUIT
CL	CHAIN LINK
Clg	CEILING
Clo	CLOSET
Clr	CLEAR
CMP	CORRUGATED METAL PIPE
CMS	CHANGEABLE MESSAGE SIGN
CMU	CONCRETE MASONRY UNIT
CO	CLEANOUT
Col	COLUMN
Comm	COMMUNICATION
Conc	CONCRETE
Conn	CONNECTION
Const	CONSTRUCTION
Cont	CONTINUOUS, CONTINUED, CONTINUE
Corr	CORRIDOR
COTF	CLEANOUT TO FLOOR, CLEANOUT THROUGH FLOOR
COTG	CLEANOUT TO GRADE, CLEANOUT THROUGH GRADE
COTW	CLEANOUT TO WALL
CP	CONTROL POINT
Cpt	CARPET
Cplg	COUPLING
CPU	CENTRAL PROCESSING UNIT
CR	CONTROL RELAY
CS	CURRENT SWITCH
Ctsk	COUNTERSUNK
CT	CERAMIC TILE
Ctr	CENTER
CV	CHECK VALVE
CW	COLD WATER PIPE, COLD WATER
cy	CUBIC YARD

D

D	DEPTH, DRAIN
DB	DRY BULB
Dbl	DOUBLE
DDC	DIRECT DIGITAL CONTROL
Demo	DEMOLISH
Det	DETAIL
DF	DRINKING FOUNTAIN,
DFR	DOUGLAS FIR
DH	DUCT HEATER
DI	DRAIN INLET, DIGITAL INPUT
Dia	DIAMETER
DIP	DUCTILE IRON PIPE
DLC	LOOP DETECTOR LEAD-IN CABLE
Dn	DOWN
DO	DIGITAL OUTPUT
DP	DRAIN PIPE, DUPLEX PLUG RECEPTACLE
Dr	DOOR
DS	DOWNSPOUT, DOOR SWITCH
Dwr	DRAWER

E

E	EAST
(E)	EXISTING
Ea	EACH
EA	EXHAUST AIR
EB	EASTBOUND
EEW	EMERGENCY EYEWASH
EF	EXHAUST FAN
EH	EXHAUST HOOD
EHD	ELECTRIC HAND DRYER
EIFS	EXTERIOR INSULATION & FINISH SYSTEM
EJ	EXPANSION JOINT
EJFM	EXPANSION JOINT FILLER MATERIAL
Elect	ELECTRICAL
Elev	ELEVATION, ELEVATION HEIGHT (OR VIEW)
Elvr	ELEVATOR
Embed	EMBEDMENT
Emer	EMERGENCY
EMS	EXTINGUISHABLE MESSAGE SIGN
EN	EDGE NAIL
ENET	ETHERNET NETWORK
Encl	ENCLOSURE
EP	EDGE OF PAVEMENT
EPB	ELECTRICAL PANELBOARD
EPDM	ETHYLENE PROPYLENE DIMONOMER PIPE
EPS	EXPANDED POLYSTYRENE
Eq	EQUAL
Equip	EQUIPMENT
ETW	EDGE OF TRAVEL WAY
EWC	ELECTRIC WATER COOLER
EWH	ELECTRIC WATER HEATER

E continued

Exp	EXPANSION
Ext	EXTERIOR

F

F	FUSE
F(ac)	AC FUSE
FACP	FIRE ALARM CONTROL PANEL
FAI	FRESH AIR INTAKE
fc	FOOTCANDLE(S)
FC	FAN COIL
FD	FLOOR DRAIN, DC FUSE
FDC	FIRE DEPARTMENT CONNECTION
FDGM	FREE DRAINING GRANULAR MATERIAL
Fdn	FOUNDATION
FE	FIRE EXTINGUISHER, FIRE EXTINGUISHER BRACKET MOUNTED
FEC	FIRE EXTINGUISHER WITH CABINET
FF	FINISH FLOOR
FG	FINISH GRADE
FH	FIRE HYDRANT
FHC	FIRE HOSE CABINET
FHMS	FLATHEAD METAL SCREW
FHWS	FLATHEAD WOOD SCREW
Fin	FINISH
FJ	FLOOR JOIST
FL	FLOW LINE, FAILURE LIGHT
Fla	FLASHER
Flash	FLASHING
Flex	FLEXIBLE CONDUIT
Flr	FLOOR
FLS	FLOW SWITCH
Fluor	FLUORESCENT
FM	FORCE MAIN
FMD	FLOW MEASURING DEVICE
FN	FACE (FIELD) NAIL
FO	FIBER OPTIC
FOB	FACE OF BUILDING
FOC	FACE OF CONCRETE
FOF	FACE OF FINISH
FOM	FACE OF MASONRY
FOS	FACE OF STUD
FR	FAILURE RESET, FLAME RESISTANT
Frmg	FRAMING
FRPP	FIBERGLASS REINFORCED PLASTIC PANEL
FS	FLOOR SINK, FLOAT SWITCH
ft	FEET, FOOT
Ftg	FOOTING
FTR	FLUE THROUGH ROOF
Furr	FURRING
Fwy	FREEWAY

G

G	GROUND
ga	GAUGE
GAC	GRANULAR ACTIVATED CARBON
gal	GALLON
Galv	GALVANIZED
GB	GRAB BAR, GROUND BUS
GFCI	GROUND-FAULT CIRCUIT INTERRUPTER
GI	GALVANIZED IRON
GLM	GLUE LAMINATED MEMBER
GLV	GLOBE VALVE
Glz	GLAZING
GPM	GALLONS PER MINUTE
Gr	GRADE
GRS	GALVANIZED RIGID STEEL
GSM	GALVANIZED SHEET METAL
GSP	GALVANIZED STEEL PIPE
GV	GATE VALVE
GWH	GAS WATER HEATER
Gyp	GYPSUM
Gyp WB	GYPSUM WALLBOARD

STANDARD DRAWING

FILE NO. .	DESIGN	BY Donald Alsey	CHECKED Robert Travis	APPROVED R E Travis
DRAWING DATE 04-15	DETAILS	BY Robertino Quibin	CHECKED Robert Travis	DESIGN SUPERVISOR
	SUBMITTED BY		, DESIGN ENGINEER	

TAEMWW Imperial - CCSC Rev. 04/14

ORIGINAL SCALE IN INCHES FOR REDUCED PLANS 0 1 2 3

STATE OF CALIFORNIA DEPARTMENT OF TRANSPORTATION

DIVISION OF ENGINEERING SERVICES ARCHITECTURAL AND STRUCTURAL DESIGN

UNIT: 3600 CONTRACT No.: 08-0G8424
PROJECT NUMBER & PHASE: 08140001841

BRIDGE No. 540004R/L
POST MILE R107.3

DISREGARD PRINTS BEARING EARLIER REVISION DATES → 05-23-14

C.V. KANE SAFETY ROADSIDE REST AREA REHABILITATION

ABBREVIATIONS — BUILDING ABBREVIATIONS 1of 3

REVISION DATES (PRELIMINARY STAGE ONLY) SHEET OF

SHEET **GI-2a**

30-AUG-2016 14:36

P:\dist_08\0814000184_cv_kane_sb_srra_upgrade\expedite\GI_2a_Building_Abbreviations_1of3.dgn

Dist	COUNTY	ROUTE	POST MILES TOTAL PROJECT	SHEET No.	TOTAL SHEETS
08	SBd	15	R107.3	80	263

Donald E. Alsey 04-08-15
LICENSED ARCHITECT DATE

06-13-16
PLANS APPROVAL DATE

LICENSED ARCHITECT Donald E. Alsey No. C-26676 07-31-15 RENEWAL DATE STATE OF CALIFORNIA

The State of California or its officers or agents shall not be responsible for the accuracy or completeness of scanned copies of this plan sheet.

ACCESSIBILITY DESIGN APPROVAL DOT / DES / OTA
PROJECT ID **0814000184**
Reviewed by: Y.A. WANG
Date: 05-27-16

OFFICE OF THE STATE FIRE MARSHAL APPROVED FIRE AND PANIC ONLY
Approval of this plan does not authorize or approve any omission or deviation from applicable regulations. Final approval is subject to field inspection. One set of approved plans shall be available on the project site at all times.
Reviewed by: INGRID P. ICASIANO
Approval date: 07-02-16
SFM No: 01-36-11-0066

H

H	HEIGHT
HB	HYDRANT BOX
HC	HOLLOW CORE
HD	HOLDOWN, HAND DRYER
Hdr	HEADER
Hdwd	HARDWOOD
Hdwr	HARDWARE
Hex	HEXAGON, HEXAGONAL
HF	HOSE FAUCET
Hgr	HANGER
HIRH	HIGH INTENSITY RADIANT HEATER
HM	HOLLOW METAL
HMA	HOT MIX ASPHALT
Horiz	HORIZONTAL
HP	HORSEPOWER
HPS	HIGH PRESSURE SODIUM
hr	HOUR
HSB	HIGH STRENGTH BOLT
HSS	HOLLOW STRUCTURAL SECTION
HVAC	HEATING, VENTILATING AND AIR CONDITIONING
HWR	HOT WATER RETURN
HWS	HOT WATER SUPPLY
Hwy	HIGHWAY
Hz	HERTZ

I

IACP	INTRUSION ALARM CONTROL PANEL
IC	IRRIGATION CONTROLLER
ICC	IRRIGATION CONTROLLER CABINET
ID	INSIDE DIAMETER
IE	INVERT ELEVATION
IFS	INTEGRATED FACILITY SYSTEM
IL	INDICATING LIGHT
in	INCH
Info	INFORMATION
Insul	INSULATION
Int	INTERIOR
IPS	INTERNATIONAL PIPE STANDARD
Irr	IRRIGATION
IR	INDUCTION RELAY
ISR	INTRINSICALLY SAFE RELAY
ISA	INTERNATIONAL SYMBOL OF ACCESSIBILITY
IWH	INSTANT WATER HEATER

J

Jan	JANITOR
JB	JUNCTION BOX
JH	JOIST HANGER
Jst	JOIST
Jt	JOINT

K

Kit	KITCHEN
KS	KITCHEN SINK
kV	KILOVOLT
kVA	KILOVOLT AMPERES
kW	KILOWATT

L

Lab	LABORATORY
Lav	LAVATORY
lb	POUND
LBF	POUND-FORCE
LC	LIGHTING CONTACTOR
LCD	LIQUID CRYSTAL DISPLAY
LCP	LIGHTING CONTROL PANEL
LD	LIGHT DISCONNECT
LDCI	LEAK DETECTOR CIRCUIT INTERRUPTER
LED	LIGHT EMITTING DIODE
LF	LINEAR FEET
LIRH	LOW INTENSITY RADIANT HEATING
LIS	LANDSCAPE IRRIGATION SYSTEM
Lkr	LOCKER
LL	LIQUID LEVEL RELAY
LLC	LIQUID LEVEL CONTROLLER
LLH	LONG LEG HORIZONTAL
LLV	LONG LEG VERTICAL
LOL	LAYOUT LINE
LP	LIGHT PANEL
LPG	LIQUIFIED PETROLEUM GAS
LPS	LOW PRESSURE SODIUM
LS	LIGHT SWITCH, LAG SCREW
LT	LIGHT TRANSFORMER
Lt	LEFT
LTO	LIGHT TRANSFORMER OVERLOAD
LTPD	LIGHT TRANSFORMER PRIMARY DISCONNECT
LTSD	LIGHT TRANSFORMER SECONDARY DISCONNECT
LVL	LAMINATED VENEER LUMBER
Lvr	LOUVER
LWR	LOW WATER RELAY

M

mA	MILLIAMPERE
Man	MANUAL
Mas	MASONRY
Max	MAXIMUM
MB	MAIN BREAKER, MACHINE BOLT
Mbr	MEMBER
MBV	MOTORIZED BALL VALVE
MC	METALLIC CONDUIT
MCC	MOTOR CONTROL CENTER
MCP	MOTOR CIRCUIT PROTECTOR
MD	MOTOR DISCONNECT
MEA	MECHANICAL EXPANSION ANCHOR
Mech	MECHANICAL
Memb	MEMBRANE

M continued

Met	METAL
Mfd	MANUFACTURED
Mfr	MANUFACTURER
Mgr	MANAGER
MH	MANHOLE, MOUNTING HEIGHT
min	MINUTE(S)
Min	MINIMUM
Mir	MIRROR
Misc	MISCELLANEOUS
MIW	MALLEABLE IRON WASHER
MO	MASONRY OPENING
MR	MASTER RELAY/STARTER
MS	MOP SINK,
MTS	MOTOR SAVER
MSB	MAIN SWITCHBOARD
MT	EMPTY CONDUIT
Mtd	MOUNTED
Mtl	MATERIAL
mts	MANUAL TRANSFER SWITCH
Mul	MULLION

N

(N)	NEW
N	NORTH, NEUTRAL
Nav	NAVIGATIONAL LIGHTS
NB	NORTHBOUND, NEUTRAL BUS
NC	NORMALLY CLOSE
ND	NAPKIN DISPOSAL
NFPA	NATIONAL FIRE PROTECTION ASSOCIATION
NIC	NOT IN CONTRACT
No.	NUMBER
NO	NORMALLY OPEN
Nom	NOMINAL
Nos.	NUMBERS
NPT	NATIONAL PIPE THREAD
NST	NATIONAL STANDARD THREAD
NSW	NEUTRAL SWITCHING BREAKER

O

Obsc	OBSCURE
OC	ON CENTER
OD	OUTSIDE DIAMETER
OFD	OVERFLOW DRAIN
Off	OFFICE
OG	ORIGINAL GROUND
OH	OPPOSITE HAND, OVER HEIGHT, OVERHEAD
OHWS	OVAL HEAD WOOD SCREW
OIT	OPERATOR INTERFACE TERMINAL
OL	OVERLOAD
Opng	OPENING

O continued

Opp	OPPOSITE
Opt	OPTION, OPTIONAL
OSA	OUTSIDE AIR
OSB	ORIENTED STRAND BOARD

P

P	PITCH, POLE (CIRCUIT BREAKER)
PB	POST BASE, PULL BOX, PUSH BUTTON
PC	POST CAP
PCC	PORTLAND CEMENT CONCRETE
PCP	PUMP CONTROL PANEL
PCWP	PRE-COOL WATER PUMP
PCWR	PRE-COOL WATER RETURN
PCWS	PRE-COOL WATER SUPPLY
PD	PUMP DISCONNECT
PDF	POWDER DRIVEN FASTENER
PEC	PHOTOELECTRIC CONTROL
PEU	PHOTOELECTRIC UNIT
PFR	PHASE FAILURE RELAY
PFRD	PHASE FAILURE RELAY DISCONNECT
Ph	PHASE
PL	PILOT LIGHT
PLam	PLASTIC LAMINATE
PLC	PROGRAMMABLE LOGIC CONTROLLER
Plywd	PLYWOOD
PMF	PRESSED METAL FRAME
Pr	PAIR
Prefab	PREFABRICATED
Prtn	PARTITION
PRV	PRESSURE REDUCING VALVE
PS	POWER SUPPLY, PRESSURE SWITCH
psi	POUNDS PER SQUARE INCH
PT	PRESSURE TREATED
Pt	POINT
PTD	PAPER TOWEL DISPENSER
PTD/R	PAPER TOWEL DISPENSER WITH RECEPTACLE
PTS	POWER TRANSFER SWITCH
PV	PHOTOVOLTAIC
PVC	POLYVINYL CHLORIDE
PWB	PREFABRICATED WOOD I BEAM

Q

QT	QUARRY TILE

STANDARD DRAWING

FILE NO. .	DESIGN BY Donald Alsey	CHECKED Robert Travis	APPROVED R E Travis DESIGN SUPERVISOR
DRAWING DATE 04-15	DETAILS BY Robertino Quibin	CHECKED Robert Travis	
	SUBMITTED BY	, DESIGN ENGINEER	

TAEMWW Imperial - CCSC Rev. 04/14

ORIGINAL SCALE IN INCHES FOR REDUCED PLANS 0 1 2 3

STATE OF CALIFORNIA DEPARTMENT OF TRANSPORTATION

DIVISION OF ENGINEERING SERVICES ARCHITECTURAL AND STRUCTURAL DESIGN

UNIT: 3600 CONTRACT No.: 08-0G8424
PROJECT NUMBER & PHASE: 08140001841

BRIDGE No. 540004R/L
POST MILE R107.3

DISREGARD PRINTS BEARING EARLIER REVISION DATES → 05-23-14

REVISION DATES (PRELIMINARY STAGE ONLY) SHEET OF

C.V. KANE SAFETY ROADSIDE REST AREA REHABILITATION

ABBREVIATIONS — BUILDING ABBREVIATIONS 2 of 3

SHEET GI-2b

30-AUG-2016 14:36

P:\dist_08\0814000184_cv_kane_sb_srra_upgrade\expedite\GI_2b_Building_Abbreviations_2of3.dgn

Dist	COUNTY	ROUTE	POST MILES TOTAL PROJECT	SHEET No.	TOTAL SHEETS
08	SBd	15	R107.3	81	263

Donald E. Alsey 04-08-15
LICENSED ARCHITECT DATE

06-13-16
PLANS APPROVAL DATE

LICENSED ARCHITECT Donald E. Alsey No. C-26676 07-31-15 RENEWAL DATE STATE OF CALIFORNIA

The State of California or its officers or agents shall not be responsible for the accuracy or completeness of scanned copies of this plan sheet.

ACCESSIBILITY DESIGN APPROVAL DOT / DES / OTA
PROJECT ID **0814000184**
Reviewed by: Y.A. WANG
Date: 05-27-16

OFFICE OF THE STATE FIRE MARSHAL APPROVED FIRE AND PANIC ONLY
Approval of this plan does not authorize or approve any omission or deviation from applicable regulations. Final approval is subject to field inspection. One set of approved plans shall be available on the project site at all times.
Reviewed by: INGRID P. ICASIANO
Approval date: 07-02-16
SFM No: 01-36-11-0066

R

R	RADIUS, RISER
RA	RETURN AIR
R&D	REMOVE AND DISPOSE
RCP	REINFORCED CONCRETE PIPE
RD	ROOF DRAIN, RECEPTACLE DISCONNECT
RDO	ROOF DRAIN OVERFLOW PIPING
RD/O	ROOF DRAIN WITH OVERFLOW
Rdwd	REDWOOD
Recept	RECEPTACLE
Ref	REFERENCE
Refg	REFRIGERATOR
Reg	REGISTER
Reinf	REINFORCED, REINFORCEMENT, REINFORCING
Rel	RELOCATED
Req	REQUIRED
Res	RESISTOR
Rfg	ROOFING
Rfswn	ROUGHSAWN
RH	ROUND HEAD, RADIANT HEATER
RHWS	ROUND HEAD WOOD SCREW
RIO	REMOTE INPUT/OUTPUT
RJ	ROOF JOIST
RLM	REDUNDANCY LINK MODULE
Rm	ROOM
RO	ROUGH OPENING
RPBP	REDUCED PRESSURE BACK FLOW PREVENTER
RPM	REVOLUTIONS PER MINUTE
RPU	RECYCLE PROCESS UNIT
Rt	RIGHT
Rte	ROUTE
RTB	RADIO TERMINAL BOARD
RV	RELIEF VALVE
RW	RETAINING WALL
R/W	RIGHT-OF-WAY
RWL	RAINWATER LEADER

S

S	SOUTH
SA	SUPPLY AIR
SB	SOUTHBOUND
SBM	STANDARD BENCH MARK
SC	SOLID CORE, STARTER COIL
Sch	SCHEDULE
SD	STORM DRAIN, SOAP DISPENSER, SERVICE DISCONNECT
SDS	SANITARY DUMP STATION
SDSTS	SELF DRILLING SELF TAPPING SCREW
Sec	SECOND(S)
SF	SUPPLY FAN
SFR	SEAL FAILURE RELAY
Sh	SHELF

S continued

Sht	SHEET
Shtg	SHEATHING
Shwr	SHOWER
Sim	SIMILAR
SL	SCORE LINE, SUMP LIGHT
SMS	SHEET METAL SCREW
SOHD	SECTIONAL OVERHEAD DOOR
SP	SEWAGE PIPE, STATIC PRESSURE
Spec	SPECIFICATIONS (s)
SPR	STANDBY POWER RECEPTACLE
SPS	STRUCTURAL PLYWOOD SHEATHING
Sq	SQUARE
sq ft	SQUARE FOOT, SQUARE FEET
SRRA	SAFETY ROADSIDE REST AREA
S/S	SERVICE SINK
SS	SANITARY SEWER, SELECTOR SWITCH
SST	STAINLESS STEEL
ST	STARTER
Sta	STATION
Stag	STAGGER(ED)
Std	STANDARD
Stl	STEEL
Sto	STORAGE
Struc	STRUCTURAL
Susp	SUSPENDED
SV	SOLENOID VALVE
SWIM	SLOW WEIGH-IN-MOTION
Sym	SYMMETRICAL

T

T	TREAD
T&B	TOP AND BOTTOM
T&G	TONGUE AND GROOVE
TB	TERMINAL BLOCK
TC	TELEPHONE CABLE
TCV	TEMPERATURE CONTROL VALVE
TD	TRENCH DRAIN
TDR	TIME DELAY RELAY
Tel	TELEPHONE
Temp	TEMPORARY, TEMPERATURE
Ter	TERRAZZO
TGLS	TOGGLE SWITCH
Thk	THICK
Thld	THRESHOLD
TJ	TOOLED JOINT
Tkbd	TACKBOARD
TM	TIME METER
TN	TOE NAIL
TNVM	TAMPON/NAPKIN VENDING MACHINE
TOF	TOP OF FRAMING

T continued

TOP	TOP OF PAVEMENT
TOS	TOE OF SLOPE
Tot	TOTAL
TOW	TOP OF WALL
TP	TRAP PRIMER
TS	TIMER SWITCH, TEMPERATURE SWITCH
TSCD	TOILET SEAT COVER DISPENSER
TSW	TEST SWITCH
TTB	TELEPHONE TERMINAL BOARD
TTD	TOILET TISSUE DISPENSER
TTD/NR	TOILET TISSUE DISPENSER/ NAPKIN RECEPTACLE
TTY	TELETYPEWRITER
TU	TERMINAL UNIT
Typ	TYPICAL

U

UH	UNIT HEATER
UL	UNDERWRITERS LABORATORIES
Unf	UNFINISHED
UPS	UNINTERRUPTED POWER SUPPLY, UNINTERRUPTIBLE POWER SUPPLY
Ur	URINAL
UV	ULTRAVIOLET

V

V	VENT, VOLT(S)
Var	VARIABLE, VARIES
VAC	VOLTAGE ALTERNATING CURRENT
VDC	VOLTAGE DIRECT CURRENT
VCP	VITRIFIED CLAY PIPE
VCT	VINYL COMPOSITION TILE
VD	VOLUME DAMPER
Vert	VERTICAL
Vest	VESTIBULE
VFD	VARIABLE FREQUENCY DRIVE
VR	VENT RISER
VTR	VENT THROUGH ROOF

W

W	WEST, WATT, WIDTH, WATER
W/O	WITHOUT
WB	WESTBOUND,
WC	WATER CLOSET
W.C.	WATER COLUMN (must have periods)
Wd	WOOD
Wdw	WINDOW

W continued

WG	WATER GAUGE
WH	WALL HEATER
WHA	WATER HAMMER ARRESTOR
WIM	WEIGH-IN-MOTION
WLS	WATER LEVEL SWITCH
WP	WORKING POINT, (USED IN ARCHITECTURAL SHEETS) WEATHERPROOF, (USED IN ELECTRICAL SHEETS) WATER PIPE, (USED IN WATER/WASTEWATER SHEETS)
WR	WATER RESISTANT
WS	WASH SINK
WSMS	WEIGH STATION MESSAGE SIGN
WSP	WELDED STEEL PIPE
Wt	WEIGHT
Wtpr	WATERPROOFING
WW	WASTEWATER
WWF	WELDED WIRE FABRIC

X

Xfmr	TRANSFORMER

Y

Yd	YARD

STANDARD DRAWING

FILE NO. .	DESIGN BY Donald Alsey	CHECKED Robert Travis	APPROVED RE Travis
DRAWING DATE 04-15	DETAILS BY Robertino Quibin	CHECKED Robert Travis	DESIGN SUPERVISOR
	SUBMITTED BY	, DESIGN ENGINEER	

TAEMWW Imperial - CCSC Rev. 04/14

ORIGINAL SCALE IN INCHES FOR REDUCED PLANS 0 1 2 3

STATE OF CALIFORNIA DEPARTMENT OF TRANSPORTATION

DIVISION OF ENGINEERING SERVICES ARCHITECTURAL AND STRUCTURAL DESIGN

UNIT: 3600 CONTRACT No.: 08-0G8424
PROJECT NUMBER & PHASE: 08140001841

BRIDGE No. 540004R/L
POST MILE R107.3

C.V. KANE SAFETY ROADSIDE REST AREA REHABILITATION

ABBREVIATIONS — BUILDING ABBREVIATIONS 3 of 3

SHEET GI-2c

DISREGARD PRINTS BEARING EARLIER REVISION DATES → 05-23-14

REVISION DATES (PRELIMINARY STAGE ONLY) SHEET OF

30-AUG-2016 14:36

P:\dist_08\0814000184_cv_kane_sb_srra_upgrade\expedite\GI_2c_Building_Abbreviations_3of3.dgn

ACCESSIBILITY DESIGN APPROVAL DOT / DES / OTA	OFFICE OF THE STATE FIRE MARSHAL APPROVED FIRE AND PANIC ONLY	Dist	COUNTY	ROUTE	POST MILES TOTAL PROJECT	SHEET No.	TOTAL SHEETS
PROJECT ID 0814000184	Approval of this plan does not authorize or approve any omission or deviation from applicable regulations. Final approval is subject to field inspection. One set of approved plans shall be available on the project site at all times.	08	SBd	15	R107.3	82	263
Reviewed by: Y.A. WANG	Reviewed by: INGRID P. ICASIANO	LICENSED ARCHITECT Donald E. Alsey			DATE 04-08-15		
Date: 05-27-16	Approval date: 07-02-16	PLANS APPROVAL DATE 06-13-16					
	SFM No: 01-36-11-0066	*The State of California or its officers or agents shall not be responsible for the accuracy or completeness of scanned copies of this plan sheet.*					

LICENSED ARCHITECT Donald E. Alsey No. C-26676 07-31-15 RENEWAL DATE STATE OF CALIFORNIA

COMMON SYMBOLS

- PLAN NORTH ARROW (PLAN NORTH)
- TRUE NORTH ARROW
- GRID LINE INDICATOR (A, 1)
- ELEVATION OR WORKING POINT
- MATCH LINE
- RM — ROOM NUMBER
- # — KEYED NOTE CALLOUT
- X — REVISION CALLOUT
- PARTIAL SECTION CUT
- FULL SECTION CUT
- 3 / ST-1 — 5b — DETAIL NUMBER OR NOTE NUMBER; ADDITIONAL REFERENCE (IF REQUIRED); SHEET NUMBER
- 4 — DETAIL NUMBER OR NOTE NUMBER; DRAWN ON SAME SHEET
- EXISTING FEATURES
- CMU WALL ON PLAN VIEWS
- CONCRETE
- SAND
- ORIGINAL GROUND
- FREE DRAINING GRANULAR MATERIAL
- BLOCKING IN SECTION OR ELEVATION
- CONTINUOUS MEMBER IN SECTION
- END OF MEMBER
- GLUE LAMINATED MEMBER SECTION
- SURFACE DRAINAGE
- X (100.00) — EXISTING SPOT GRADE IN FEET
- ℄ — CENTER LINE
- $ — STATION LINE
- ℙ — STEEL PLATE
- ø — DIAMETER OR PHASE
- ∠ — ANGLE STEEL
- ⌑ — SQUARE
- @ — AT
- ° — DEGREE
- Δ — DELTA
- ± — PLUS OR MINUS

ARCHITECTURAL SPECIFIC SYMBOLS

- D — DOOR DESIGNATION
- X — WINDOW DESIGNATION
- L# — LOUVER DESIGNATION
- C — COLOR DESIGNATION
- X## — EQUIPMENT / FURNITURE DESIGNATION
- SHADED ARROW INDICATES ELEVATION DRAWN; 2A-X.X — SHEET
- A — A — SECTION LETTER; SECTION DRAWN ON SAME SHEET
- A — ELEVATION LETTER; ELEVATION DRAWN ON SAME SHEET

STRUCTURAL SPECIFIC SYMBOLS

- BEARING WALL
- SHEAR WALL
- DROPPED SLAB ON PLAN VIEWS
- STRUCTURE BACKFILL (SHOWN ON DETAIL)
- STRUCTURE EXCAVATION (SHOWN ON DETAIL)
- LIMITS OF STRUCTURE BACKFILL (SHOWN ON PLAN VIEWS)
- X — BOTTOM OF FOOTING ELEVATION
- HOLDOWN, Typ: Simpson / USP / Equal (MANUFACTURERS ARE THOSE NOTED IN THE ORDER SHOWN)
- FRAME CONNECTOR: Simpson / USP / Equal (MANUFACTURERS ARE THOSE NOTED IN THE ORDER SHOWN)
- X XXXX — LENGTH; SHEARWALL SCHEDULE SYMBOL; REFERENCE

STANDARD DRAWING					
FILE NO. .	DESIGN	BY Donald Alsey	CHECKED Robert Travis	APPROVED RE Travis	
DRAWING DATE 04-15	DETAILS	BY Robertino Quibin	CHECKED Robert Travis	DESIGN SUPERVISOR	
	SUBMITTED BY		, DESIGN ENGINEER		

TAEMWW Imperial - CCSC Rev. 04/14

ORIGINAL SCALE IN INCHES FOR REDUCED PLANS 0 1 2 3

STATE OF CALIFORNIA DEPARTMENT OF TRANSPORTATION

DIVISION OF ENGINEERING SERVICES ARCHITECTURAL AND STRUCTURAL DESIGN

UNIT: 3600 CONTRACT No.: 08-0G8424
PROJECT NUMBER & PHASE: 08140001841

BRIDGE No. 540004R/L
POST MILE R107.3

C.V. KANE SAFETY ROADSIDE REST AREA REHABILITATION

SYMBOLS — BUILDING SYMBOLS 1of 3

SHEET GI-3a

DISREGARD PRINTS BEARING EARLIER REVISION DATES 05-27-14

REVISION DATES (PRELIMINARY STAGE ONLY) SHEET OF

30-AUG-2016 14:36

P:\dist_08\0814000184_cv_kane_sb_srra_upgrade\expedite\GI_3a_Building_Symbols_1of3.dgn

Dist	COUNTY	ROUTE	POST MILES TOTAL PROJECT	SHEET No.	TOTAL SHEETS
08	SBd	15	R107.3	83	263

Donald E. Alsey 04-08-15
LICENSED ARCHITECT DATE

06-13-16
PLANS APPROVAL DATE

LICENSED ARCHITECT Donald E. Alsey No. C-26676 07-31-15 RENEWAL DATE STATE OF CALIFORNIA

The State of California or its officers or agents shall not be responsible for the accuracy or completeness of scanned copies of this plan sheet.

ACCESSIBILITY DESIGN APPROVAL
DOT / DES / OTA
PROJECT ID
0814000184
Reviewed by: Y.A. WANG
Date: 05-27-16

OFFICE OF THE STATE FIRE MARSHAL
APPROVED FIRE AND PANIC ONLY
Approval of this plan does not authorize or approve any omission or deviation from applicable regulations. Final approval is subject to field inspection. One set of approved plans shall be available on the project site at all times.
Reviewed by: INGRID P. ICASIANO
Approval date: 07-02-16
SFM No: 01-36-11-0066

SYMBOLS FOR ELECTRICAL WIRING AND PLAN LAYOUT

SYMBOL	DESCRIPTION
	POLE-TOP ELECTROLIER
	POLE-ARM ELECTROLIER
CEILING / WALL	
(S) (S)	SURFACE FLUORESCENT, METAL HALIDE, LED, OR SODIUM VAPOR FIXTURE
(R) (R)	RECESSED FLUORESCENT, METAL HALIDE, LED, OR SODIUM VAPOR FIXTURE
(X) (X)	EXIT LIGHT
	SURFACE OR PENDANT INDIVIDUAL FLUORESCENT OR LED FIXTURE
(R)	RECESSED INDIVIDUAL FLUORESCENT OR LED FIXTURE
	SURFACE OR PENDANT CONTINUOUS ROW FLUORESCENT OR LED FIXTURES
NOTE:	A LOWER CASE LETTER NEAR GRAPHIC LIGHTING FIXTURE SYMBOL DENOTES THAT FIXTURE IS CONTROLLED BY A SIMILARLY MARKED SWITCH, AN ALPHA-NUMERIC SYMBOL NEAR GRAPHIC LIGHTING FIXTURE SYMBOL DENOTES FIXTURE TYPE, (I=INCANDESCENT, F=FLUORESCENT, MH=METAL HALIDE, H=HIGH PRESSURE SODIUM VAPOR, L=LED), DESIGN TYPE, NUMBER OF LAMPS AND WATTAGE.

EXAMPLE : (4) F2-2x32
- 32 WATT LAMPS
- 2 LAMPS
- DESIGN TYPE
- FLUORESCENT
- NUMBER OF FIXTURES

(B) (B)	BLANK OUTLET
(J) (J)	JUNCTION BOX
(D)	DROP CORD
	SINGLE RECEPTACLE OUTLET
	DUPLEX RECEPTACLE OUTLET
(GFCI)	DUPLEX RECEPTACLE OUTLET (WITH GFCI)
(GFCI) WP	DUPLEX RECEPTACLE OUTLET, WEATHERPROOF (WITH GFCI)
	SINGLE, SPECIAL PURPOSE RECEPTACLE OUTLET
	DUPLEX, SPECIAL PURPOSE RECEPTACLE OUTLET
R	RANGE OUTLET
(C)	CLOCK HANGER RECEPTACLE
(F)	FAN HANGER RECEPTACLE
	FLOOR SINGLE RECEPTACLE OUTLET
	FLOOR DUPLEX RECEPTACLE OUTLET
	FLOOR SPECIAL PURPOSE OUTLET
	FLOOR RADIO OUTLET
	FLOOR TELEPHONE OUTLET
	MULTI-FLOOR OUTLET, 2 OR MORE GANG
	MULTI-OUTLET ASSEMBLY
S	SWITCH AND SINGLE RECEPTACLE
S	SWITCH AND DUPLEX RECEPTACLE
	RADIO OUTLET
	COMMUNICATION OUTLET
	SOUND SYSTEM LOUD SPEAKER OUTLET
R	RADIO OUTLET
TV	TELEVISION OUTLET
M	MICROPHONE OUTLET
(T)	THERMOSTAT

SYMBOL	DESCRIPTION
S	SINGLE-POLE SWITCH
S_2	DOUBLE-POLE SWITCH
S_3	THREE-WAY SWITCH
S_4	FOUR-WAY SWITCH
S_{CHLF}	TWO TIMER SWITCHES, ONE SWITCH FOR LIGHT AND FAN AND ONE SWITCH FOR HEAT LAMP
S_D	DIMMER SWITCH
S_{DTS}	DIGITAL TIMER SWITCH
S_F	FAN SWITCH
S_H	HEATER SWITCH
S_{HP}	MANUAL MOTOR STARTING SWITCH, WITHOUT OVERLOAD ELEMENT
S_K	KEY OPERATED SWITCH
S_L	LIGHT SWITCH
S_M	MOTION SENSOR SWITCH
S_{MC}	MOMENTARY CONTACT SWITCH
S^O_1	OCCUPANCY SENSOR WALL SWITCH, SINGLE LEVEL
S^O_2	OCCUPANCY SENSOR WALL SWITCH, BILEVEL
S_{RC}	REMOTE CONTROL SWITCH
S_T	MANUAL MOTOR STARTING SWITCH, THERMAL OVERLOAD TYPE
S_{VS}	VARIABLE SPEED MOTOR CONTROL SWITCH
S_{WP}	WEATHERPROOF SWITCH
(TS)	TIME SWITCH
	PUSHBUTTON
L	PUSHBUTTON STATION, NC, WITH LOCKING DEVICE FOR OPEN
	PUSHBUTTON STATION MOTOR CONTROL
	BUZZER
	BELL
	COMBINATION BELL-BUZZER
(PS)	PRESSURE SWITCH
(R)	CONTROL RELAY
(FS)	FLOW SWITCH
PEU	PHOTOELECTRIC UNIT
	HAND DRYER NOZZLE
H	HAND DRYER
	FLUSH-MOUNTED PANELBOARD AND CABINET
	SURFACE-MOUNTED PANELBOARD AND CABINET
	LIGHTING PANEL
	POWER PANEL
	COMBINATION LIGHTING AND POWER
MC	MOTOR CONTROLLER
	DISCONNECT SWITCH
	CONDUIT CONCEALED IN CEILING OR WALL
	CONDUIT CONCEALED IN FLOOR
	CONDUIT EXPOSED
	CROSS-LINES INDICATE NUMBER OF #12 AWG CONDUCTORS. LONGER CROSS-LINE INDICATES 1#12 AWG (G) FOR EQUIPMENT GROUNDING CONDUCTOR. NO CROSS-LINE INDICATES 2#12 WITH 1#12 (G) UNLESS OTHERWISE NOTED. ALL CONDUIT ½" UNLESS OTHERWISE NOTED.
A1,2	HOMERUN TO PANELBOARD, ARROWS INDICATE NUMBER OF CIRCUITS, LETTER DENOTES PANELBOARD, NUMERAL DENOTES CIRCUIT

SYMBOL	DESCRIPTION
—SM—	SURFACE METAL RACEWAY
(2) ½"C, PVC, 2#12	CONDUCTOR INFO (PER CONDUIT); CONDUIT TYPE; CONDUIT SIZE; NUMBER OF CONDUITS (NO NUMBER INDICATES ONE CONDUIT)
—MC—	CONDUIT, RIGID STEEL, UNDERGROUND
—PVC—	CONDUIT, POLYVINYL CHLORIDE, UNDERGROUND
	CONDUIT, FLEXIBLE
	CONDUIT, TURN UP
	CONDUIT, TURN DOWN
	CONDUIT SEAL, EXPLOSION-PROOF
X	CONDUIT, EXPANSION JOINT
	ADAPTER, ONE TYPE CONDUIT TO ANOTHER
	POLE
(OC)	OCCUPANCY SENSOR
(P)	OCCUPANCY SENSOR POWER PACK
P	MANUAL PULL STATION
AV	AUDIO/VISUAL ALARM DEVICE
(H)	HEAT DETECTOR
(S)	SMOKE DETECTOR
(G)	GLASS BREAK DISCRIMINATOR
(C)	MAGNETIC CONTACT SWITCH-PEDESTRIAN DOOR
(C)	MAGNETIC CONTACT SWITCH-VEHICLE DOOR
K	KEYPAD FOR ALARM SYSTEM
W	COMBINATION DETECTOR (MICROWAVE/PASSIVE INFRARED)
	PULL BOX-LETTER INDICATES TYPE OF PULL BOX (E-ELECTRICAL, T-TELEPHONE, R-RADIO)
(T)	PULL BOX (TRAFFIC-RATED)-LETTER INDICATES TYPE OF PULL BOX (E-ELECTRICAL, T-TELEPHONE, R-RADIO)
CHLF	COMBINATION HEAT, LIGHT, AND FAN UNIT

EXISTING WORK

SYMBOL	DESCRIPTION
	EXISTING FLUORESCENT FIXTURE-TO REMAIN
	EXISTING FLUORESCENT FIXTURE-REMOVE
	EXISTING INCANDESCENT FIXTURE-TO REMAIN
	EXISTING INCANDESCENT FIXTURE-REMOVE
	EXISTING OUTLET-TO REMAIN
	EXISTING RECEPTACLE OUTLET-TO REMAIN
	EXISTING RECEPTACLE OUTLET-REMOVE
—E---E—	EXISTING CONDUIT AND CONDUCTORS-TO REMAIN
—X---X—	EXISTING CONDUIT AND CONDUCTORS-REMOVE
S	EXISTING SWITCH-TO REMAIN
	EXISTING SWITCH-REMOVE
(J)	EXISTING JUNCTION BOX-TO REMAIN
	EXISTING JUNCTION BOX-REMOVE

GRAPHIC SYMBOLS FOR ELECTRICAL SCHEMATICS AND DIAGRAMS

SYMBOL	DESCRIPTION
	CIRCUIT BREAKER, SINGLE-POLE
	CIRCUIT BREAKER, DOUBLE-POLE
	CIRCUIT BREAKER, THREE-POLE
GFCI	CIRCUIT BREAKER, WITH GROUND FAULT CIRCUIT INTERRUPTER
	CIRCUIT BREAKER, SINGLE-POLE, SWITCHED NEUTRAL
	CONTACT, NORMALLY OPEN
	CONTACT, NORMALLY CLOSED
	CONTACT, NORMALLY CLOSED, TIME DELAY CLOSING ON DE-ENERGIZING
	CONTACT, NORMALLY OPEN, TIME DELAY OPENING ON DE-ENERGIZING
	CONTACT, NORMALLY OPEN, TIME DELAY CLOSING ON ENERGIZING
	CONTACT, NORMALLY CLOSED, TIME DELAY OPENING ON ENERGIZING
	CONTACT, SINGLE-POLE, DOUBLE-THROW
	OPERATING COIL
	LIQUID LEVEL ACTUATED SWITCH, NORMALLY CLOSED
	LIQUID LEVEL ACTUATED SWITCH, NORMALLY OPEN
	PRESSURE ACTUATED SWITCH, NORMALLY CLOSED
	PRESSURE ACTUATED SWITCH, NORMALLY OPEN
	FLOW ACTUATED SWITCH, NORMALLY CLOSED
	FLOW ACTUATED SWITCH, NORMALLY OPEN
	TEMPERATURE ACTUATED SWITCH, NORMALLY CLOSED
	TEMPERATURE ACTUATED SWITCH, NORMALLY OPEN
	LIMIT SWITCH, NORMALLY CLOSED
	LIMIT SWITCH, NORMALLY OPEN
	PUSHBUTTON SWITCH, NORMALLY CLOSED
	PUSHBUTTON SWITCH, NORMALLY OPEN
	SWITCH, SINGLE-POLE
	SWITCH, SINGLE-POLE, DOUBLE-THROW
	SWITCH, DOUBLE-POLE
	SWITCH, DOUBLE-POLE, DOUBLE-THROW
	SWITCH, SINGLE-POLE, 3-POSITION
	TIMER SWITCH
	THERMAL OVERLOAD
	FUSE
	RESISTOR
	VARIABLE RESISTOR
	TRANSFORMER WINDING
	GROUNDING ELECTRODE
	ENCLOSURE BOND
(A)	PILOT LIGHT (A=AMBER, G=GREEN, R=RED)
(A)	INDICATING LIGHT (A=AMBER, G=GREEN, R=RED)
(G)	GENERATOR
(M)	MOTOR
(F)	FAN MOTOR

PROJECT NOTES

1. Separate grounded (Neutral) conductor must be used for each 120-volt circuit.
2. Homeruns to Panelboards must be installed as shown on the plans. Homeruns must not be combined.
3. A single insulated equipment grounding conductor, sized as required, must be installed in each conduit run.

STANDARD DRAWING

FILE NO. .	DESIGN	BY Donald Alsey	CHECKED Robert Travis	APPROVED RE Travis
DRAWING DATE 04-15	DETAILS	BY Robertino Quibin	CHECKED Robert Travis	DESIGN SUPERVISOR
	SUBMITTED BY		, DESIGN ENGINEER	

	BY	CHECKED
DESIGN		
DETAILS		
QUANTITIES		

STATE OF CALIFORNIA
DEPARTMENT OF TRANSPORTATION

DIVISION OF ENGINEERING SERVICES
ARCHITECTURAL AND STRUCTURAL DESIGN

BRIDGE No. 540004R/L
POST MILE R107.3

C.V. KANE SAFETY ROADSIDE REST AREA REHABILITATION

SYMBOLS — BUILDING SYMBOLS 2 OF 3

SHEET GI-3b

TAEMWW Imperial - CCSC Rev. 04/14

ORIGINAL SCALE IN INCHES FOR REDUCED PLANS 0 1 2 3

UNIT: 3600 CONTRACT No.: 08-0G8424
PROJECT NUMBER & PHASE: 08140001841

DISREGARD PRINTS BEARING EARLIER REVISION DATES → 05-27-14

REVISION DATES (PRELIMINARY STAGE ONLY) SHEET OF

30-AUG-2016 14:36

P:\dist_08\0814000184_cv_kane_sb_srra_upgrade\expedite\GI_3b_Building_Symbols_2of3.dgn

Dist	COUNTY	ROUTE	POST MILES TOTAL PROJECT	SHEET No.	TOTAL SHEETS
08	SBd	15	R107.3	84	263

Donald E. Alsey 04-08-15
LICENSED ARCHITECT DATE

06-13-16
PLANS APPROVAL DATE

LICENSED ARCHITECT Donald E. Alsey No. C-26676 07-31-15 RENEWAL DATE STATE OF CALIFORNIA

The State of California or its officers or agents shall not be responsible for the accuracy or completeness of scanned copies of this plan sheet.

ACCESSIBILITY DESIGN APPROVAL
DOT / DES / OTA
PROJECT ID
0814000184
Reviewed by: Y.A. WANG
Date: 05-27-16

OFFICE OF THE STATE FIRE MARSHAL
APPROVED FIRE AND PANIC ONLY
Approval of this plan does not authorize or approve any omission or deviation from applicable regulations. Final approval is subject to field inspection. One set of approved plans shall be available on the project site at all times.
Reviewed by: INGRID P. ICASIANO
Approval date: 07-02-16
SFM No: 01-36-11-0066

PIPE FITTING AND VALVE SYMBOLS

- CAP, THREADED
- ELBOW, TURNED DOWN
- ELBOW, TURNED UP
- EMERGENCY EYE WASH & SHOWER
- FLEXIBLE CONNECTION
- GAUGE COCK
- HOSE FAUCET (HF)
- MANUAL AIR VENT
- PIPE CONNECTION, TOP
- PIPE CONNECTION, BOTTOM
- PIPE CONNECTION, SIDE
- PRESSURE GAUGE (WITH VALVE AND SNUBBER)
- REDUCER, CONCENTRIC
- REDUCER, ECCENTRIC
- STRAINER
- THERMOMETER
- TRIPLE DUTY VALVE
- UNION
- UNION, INSULATING
- VALVE, BALL
- VALVE, BALANCING
- VALVE, BUTTERFLY
- VALVE, CHECK
- VALVE, 2-WAY CONTROL
- VALVE, GAS
- VALVE, GATE
- VALVE, SAFETY RELIEF
- VALVE, SOLENOID
- VALVE, PRESSURE REDUCING
- VALVE, PRESSURE/TEMPERATURE RELIEF
- VALVE, VENT
- WATER HAMMER ARRESTOR
- WATER METER

PLUMBING PIPING SYMBOLS

- COLD WATER
- HOT WATER
- HOT WATER RETURN
- CHWS — CHILLED WATER SUPPLY
- CHWR — CHILLED WATER RETURN
- CDWS — CONDENSER WATER SUPPLY
- CDWR — CONDENSER WATER RETURN
- HWS — HEATING HOT WATER SUPPLY
- HWR — HEATING HOT WATER RETURN
- A — COMPRESSED AIR
- D — EQUIPMENT DRAIN
- F — FIRE WATER
- FM — FORCE MAIN
- G — GAS
- L — LEACH LINES
- LPG — LIQUIFIED PETROLEUM GAS
- NPW — NON-POTABLE WATER
- R — RELIEF VALVE DISCHARGE PIPE
- RD — ROOF DRAIN
- RDL — RETURN DRAIN LINE
- S — SANITARY SEWER (BELOW GRADE, SITE UTILITY)
- V — VENT LINE

HVAC AND DUCTWORK SYMBOLS

- SUPPLY DUCT (UP, DOWN)
- RETURN DUCT (UP, DOWN)
- EXHAUST DUCT (UP, DOWN)
- OUTSIDE AIR DUCT (UP, DOWN)
- ROUND DUCT (UP, DOWN)
- FLEXIBLE DUCT CONNECTOR (VIBRATION ISOLATION)
- RECTANGULAR-TO-ROUND TRANSITION
- R — CHANGE OF ELEVATION - RISE IN DIRECTION OF FLOW
- D — CHANGE OF ELEVATION - DROP IN DIRECTION OF FLOW
- BALANCE DAMPER
- S — SMOKE DAMPER
- FS — FIRE/SMOKE DAMPER
- FLEXIBLE DUCT, ROUND
- RIDGID TO FLEXIBLE CONNECTION
- SA — SUPPLY AIR
- RA — RETURN AIR
- EA — EXHAUST AIR
- OA — OUTSIDE AIR
- CFM/SIZE — EXHAUST GRILLE
- CFM/SIZE — RETURN GRILLE
- CFM/SIZE — SUPPLY DIFFUSER
- CFM/SIZE — SUPPLY REGISTER
- H — HUMIDISTAT
- T — THERMOSTAT
- T_C — THERMOSTAT WITH CO_2 SENSOR
- TS — TIME SWITCH
- FE — FIRE EXTINGUISHER

STANDARD DRAWING

FILE NO. .	DESIGN	BY Donald Alsey	CHECKED Robert Travis	APPROVED RE Travis
DRAWING DATE **04-15**	DETAILS	BY Robertino Quibin	CHECKED Robert Travis	DESIGN SUPERVISOR
	SUBMITTED BY		, DESIGN ENGINEER	

STATE OF **CALIFORNIA** DEPARTMENT OF TRANSPORTATION

DIVISION OF ENGINEERING SERVICES
ARCHITECTURAL AND STRUCTURAL DESIGN

BRIDGE No. 540004R/L
POST MILE R107.3

C.V. KANE SAFETY ROADSIDE REST AREA REHABILITATION

SYMBOLS — BUILDING SYMBOLS 3 OF 3

SHEET **GI-3c**

TAEMWW Imperial - CCSC Rev. 04/14

ORIGINAL SCALE IN INCHES FOR REDUCED PLANS 0 1 2 3

UNIT: 3600 CONTRACT No.: 08-0G8424
PROJECT NUMBER & PHASE: 08140001841

DISREGARD PRINTS BEARING EARLIER REVISION DATES → 05-27-14

REVISION DATES (PRELIMINARY STAGE ONLY) SHEET OF

30-AUG-2016 14:36

P:\dist_08\0814000184_cv_kane_sb_srra_upgrade\expedite\GI_3c_Building_Symbols_3of3.dgn

Dist	COUNTY	ROUTE	POST MILES TOTAL PROJECT	SHEET No.	TOTAL SHEETS
08	SBd	15	R107.3	85	263

ACCESSIBILITY DESIGN APPROVAL
DOT / DES / OTA
PROJECT ID 0814000184
Reviewed by: Y.A. WANG
Date: 05-27-16

OFFICE OF THE STATE FIRE MARSHAL
APPROVED FIRE AND PANIC ONLY
Approval of this plan does not authorize or approve any omission or deviation from applicable regulations. Final approval is subject to field inspection. One set of approved plans shall be available on the project site at all times.
Reviewed by: INGRID P. ICASIANO
Approval date: 07-02-16
SFM No: 01-36-11-0066

LICENSED ARCHITECT 11/20/15 DATE
06-13-16 PLANS APPROVAL DATE
LICENSED ARCHITECT Janusz Pietrzak No. C23915 01-31-2017 RENEWAL DATE STATE OF CALIFORNIA

The State of California or its officers or agents shall not be responsible for the accuracy or completeness of scanned copies of this plan sheet.

OCCUPANT LOAD CALCULATION FOR SOUTHBOUND COMFORT STATION A

ROOM NAME	OCCUPANT LOAD FACTOR	OCCUPANT LOAD CALCULATION	OCCUPANT LOAD	REMARKS
WOMENS RESTROOM 001	100	836 sq ft / 100 = 8.36	8	OCCUPANT LOAD IS BASED ON B OCCUPANCY
PLUMBING CHASE 002 MECHANICAL/ELECTRICAL 003 MAINTENANCE 006	300	897 sq ft / 300 = 2.99 COMBINED FLOOR AREA OF PLUMBING CHASE MECHANICAL/ELECTRICAL AND MAINTENANCE	3	DESIGN OCCUPANT LOAD FOR PLUMBING CHASE MECHANICAL/ELECTRICAL AND MAINTENANCE MUST BE PER CBC 2013, SECTION 1004.1.1.1
MENS RESTROOM 004	100	633 sq ft / 100 = 6.33	6	OCCUPANT LOAD IS BASED ON B OCCUPANCY
FAMILY RESTROOM 005	100	75 sq ft / 100 = 0.75	1	OCCUPANT LOAD IS BASED ON B OCCUPANCY
BREAK ROOM 007	15	194 sq ft / 15 = 12.93	13	-
VENDING/STORAGE 008	300	147 sq ft / 300 = 0.49	1	-
CARPORT 009	200	144 sq ft / 200 = 0.72	1	-
TOTAL OCCUPANT LOAD			= 33	

OCCUPANT LOAD CALCULATION FOR SOUTHBOUND COMFORT STATION B

ROOM NAME	OCCUPANT LOAD FACTOR	OCCUPANT LOAD CALCULATION	OCCUPANT LOAD	REMARKS
WOMENS RESTROOM 001	100	836 sq ft / 100 = 8.36	8	OCCUPANT LOAD IS BASED ON B OCCUPANCY
PLUMBING CHASE 002 MECHANICAL/ELECTRICAL 003	300	685 sq ft / 300 = 2.28 COMBINED FLOOR AREA OF PLUMBING CHASE & MECHANICAL/ELECTRICAL	2	DESIGN OCCUPANT LOAD FOR PLUMBING CHASE AND MECHANICAL/ELECTRICAL MUST BE PER CBC 2013, SECTION 1004.1.1.1
MENS RESTROOM 004	100	633 sq ft / 100 = 6.33	6	OCCUPANT LOAD IS BASED ON B OCCUPANCY
FAMILY RESTROOM 005	100	75 sq ft / 100 = 0.75	1	OCCUPANT LOAD IS BASED ON B OCCUPANCY
TOTAL OCCUPANT LOAD			= 17	

FIRE FLOW CALCULATION PER NFPA-1142

$$\frac{\text{TOTAL VOLUME OF STRUCTURE}}{\text{OCCUPANCY HAZARD CLASSIFICATION NUMBER}} \times \text{CONSTRUCTION CLASSIFICATION NUMBER} \times 1.5 = \text{MINIMUM WATER SUPPLY}$$

$$\frac{3585.8 \text{ sq ft} \times 14.67}{7} \times 1.5 = 11{,}293 \text{ GALLONS}$$

12,000 GALLONS TOTAL TANKS PROVIDED

GENERAL NOTES

1. FIELD VERIFY ALL CONTROLLING DIMENSIONS AND EXISTING FIELD CONDITIONS BEFORE PROCEEDING WITH WORK OR ORDERING OR FABRICATING ANY MATERIALS OR ASSEMBLIES.
2. NOTIFY THE ENGINEER IN WRITING OF ANY DISCREPANCIES BETWEEN THESE PLANS AND ACTUAL MEASUREMENTS OR FIELD CONDITIONS.

FIRE ALARM PLANS

NOT APPLICABLE

SPRINKLER SYSTEM PLANS

NOT APPLICABLE

EXITING PLANS

FOR EXITING PLANS SEE A1-1.6 AND A2-1.4

STANDARD PLANS DATED 2010
(SUPPLEMENT TO BUILDING PLANS)

RSP A90B
RSP ES-1A
RSP ES-1C
RSP ES-5A
RSP ES-5B
RSP ES-6A
RSP ES-6B
RSP ES-7M
RSP ES-7N
ES-7O
RSP ES-8A

BUILDING DATA AND CODE ANALYSIS

THIS PROJECT IS IN COMPLIANCE

	OCCUPANCY	CONSTRUCTION TYPE	NO. OF STORIES	OCCUPANCY SEPARATION	BUILDING HEIGHT	BUILDING AREA	CANOPY AREA	TOTAL AREA	ALLOWABLE AREA	AREA OR HEIGHT INCREACES	FIRE SPRINKLERED	FIRE ALARM	OTHER FIRE PROTECTION SYSTEMS IF ANY	SMOKE CONTROL SYSTEM	OCCUPANT LOAD
SB COMFORT STATION A	B	V-B	1	NOT Req	14'-8"	3134.4	451.4	3585.8	9000	NO	NOT Req	NOT Req	NO	NOT Req	33
SB COMFORT STATION B	B	V-B	1	NOT Req	14'-8"	2468.9	0	2468.9	9000	NO	NOT Req	NOT Req	NO	NOT Req	17
SB PICNIC SHELTER	A-3	V-B	1	NOT Req	N/A	0	646 442 238	1326	9000	NO	NOT Req	NOT Req	NO	NOT Req	0
SBINTERPRETIVE CENTER	A-3	V-B	1	NOT Req	N/A	0	1024	1024	9000	NO	NOT Req	NOT Req	NO	NOT Req	0
NB PRESSURE TANK STRUCTURE CANOPY	U	V-B	1	NOT Req	N/A	0	-480 -320	800	5500	NO	NOT Req	NOT Req	NO	NOT Req	0

UNIT USED FOR AREA IS IN SQUARE FEET

YEAR BUILDING WAS CONSTRUCTED: THESE ARE NEW BUILDINGS
IN A HIGH FIRE HAZARD SEVERITY ZONE?: NO
SEISMIC JOINTS: NO
EMERGENCY RESPONER RADIO COVERAGE: NO

DESIGN CRITERIA

THE BUILDING WORK FOR THIS PROJECT HAS BEEN DESIGNED TO CONFORM TO THE 2013 EDITION OF TITLE 24, CALIFORNIA CODE OF REGULATIONS

TITLE 19, CCR, PUBLIC SAFETY, SFM REGULATIONS
2013 CA ADMINISTRATIVE CODE TITLE 24, PT 1
2013 CA BUILDING CODE (CBC) TITLE 24, PT 2
2013 CA ELECTRICAL CODE (CEC) TITLE 24, PT 3
2013 CA MECHANICAL CODE (CMC) TITLE 24, PT 4
2013 CA PLUMBING CODE (CPC) TITLE 24, PT 5
2013 CA ENERGY CODE CCR TITLE 24, PT 6
2013 CA FIRE CODE (CFC) CCR TITLE 24, PT 9
2013 CA GREEN BUILDING STANDARDS TITLE 24, PT 11
2013 CA REFERENCED STANDARDS TITLE 24, PT 12
2010 ADA STANDARDS
2013 NFPA 20, Pumps for Fire Protection
2013 NFPA 24, Fire Service Mains (CA Amended)
2013 NFPA 22, Water Tanks for Private Fire Protection
2012 NFPA 1142 Standard on Water supplies for Suburban and Rural Fire Fighting

SCOPE OF WORK

1. DEMOLISH EXISTING SOUTHBOUND COMFORT STATION
2. CONSTRUCT NEW SOUTHBOUND COMFORT STATIONS, PICNIC SHELTERS, INTERPRETIVE CENTER AND FIRE PROTECTION WATER TANKS.
3. REMOVE (E) URINALS IN MENS RESTROOMS AT NORTHBOUND COMFORT STATIONS AND REPLACE WITH WATERLESS URINALS
4. CONSTRUCT STRUCTURE CANOPIES FOR THE (E) PRESSURE TANKS AT THE WATER TREATMENT BUILDING.
5. SITE LIGHTING
6. ACCESSIBLE PARKING / SIGNS AND CURB RAMPS

	BY	CHECKED
DESIGN	Janusz Pietrzak	Donald Alsey
DETAILS	Robertino Quibin	Donald Alsey
QUANTITIES		

STATE OF CALIFORNIA
DEPARTMENT OF TRANSPORTATION

DIVISION OF ENGINEERING SERVICES
ARCHITECTURAL AND STRUCTURAL DESIGN

BRIDGE No. 540004R/L
POST MILE R107.3

C.V. KANE SAFETY ROADSIDE REST AREA REHABILITATION
SCOPE OF WORK, DESIGN CRITERIA BUILDING DATA AND CODE ANALYSIS

SHEET G1-4

TAEMWW Imperial - CCSC Rev. 04/14

ORIGINAL SCALE IN INCHES FOR REDUCED PLANS 0 1 2 3

UNIT: 3600 CONTRACT No.: 08-0G8424
PROJECT NUMBER & PHASE: 08140001841

DISREGARD PRINTS BEARING EARLIER REVISION DATES

REVISION DATES (PRELIMINARY STAGE ONLY) SHEET OF

30-AUG-2016 14:37

P:\dist_08\0814000184_cv_kane_sb_srra_upgrade\expedite\G1-4.dgn

Dist	COUNTY	ROUTE	POST MILES TOTAL PROJECT	SHEET No.	TOTAL SHEETS
08	SBd	15	R107.3	86	263

LICENSED ARCHITECT — DATE 11/20/15

LICENSED ARCHITECT Janusz Pietrzak No. C23915 01-31-2017 RENEWAL DATE STATE OF CALIFORNIA

06-13-16
PLANS APPROVAL DATE

The State of California or its officers or agents shall not be responsible for the accuracy or completeness of scanned copies of this plan sheet.

ACCESSIBILITY DESIGN APPROVAL DOT / DES / OTA

PROJECT ID **0814000184**

Reviewed by: Y.A. WANG
Date: 05-27-16

OFFICE OF THE STATE FIRE MARSHAL APPROVED FIRE AND PANIC ONLY

Approval of this plan does not authorize or approve any omission or deviation from applicable regulations. Final approval is subject to field inspection. One set of approved plans shall be available on the project site at all times.

Reviewed by: INGRID P. ICASIANO
Approval date: 07-02-16

SFM No: 01-36-11-0066

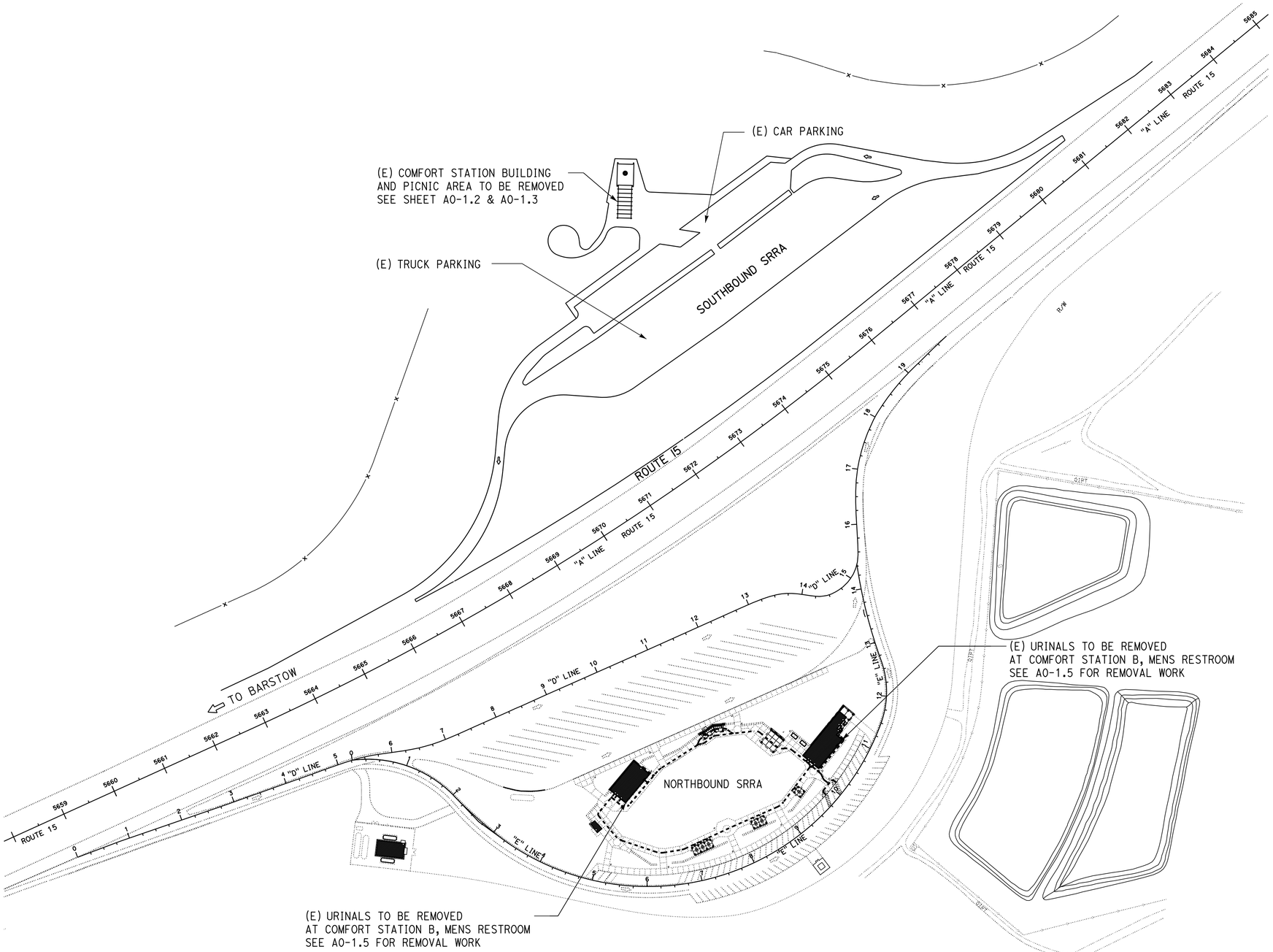

(E) SITE PLAN

SCALE 1" = 100'

DESIGN	BY Janusz Pietrzak	CHECKED Donald Alsey	
DETAILS	BY Robertino Quibin	CHECKED Donald Alsey	
QUANTITIES	BY	CHECKED	

STATE OF CALIFORNIA
DEPARTMENT OF TRANSPORTATION

DIVISION OF ENGINEERING SERVICES
ARCHITECTURAL AND STRUCTURAL DESIGN

UNIT: 3600 CONTRACT No.: 08-0G8424
PROJECT NUMBER & PHASE: 08140001841

BRIDGE No. 540004R/L
POST MILE R107.3

SOUTHBOUND (E) STRUCTURE DEMOLITION

C.V. KANE SAFETY ROADSIDE REST AREA REHABILITATION

SITE PLAN

SHEET **A0-1.1**

ORIGINAL SCALE IN INCHES FOR REDUCED PLANS 0 1 2 3

DISREGARD PRINTS BEARING EARLIER REVISION DATES →

REVISION DATES (PRELIMINARY STAGE ONLY) SHEET OF

TAEMWW Imperial - CCSC Rev. 04/14

30-AUG-2016 14:37

P:\dist_08\0814000184_cv_kane_sb_srra_upgrade\expedite\a0-11.dgn

Dist	COUNTY	ROUTE	POST MILES TOTAL PROJECT	SHEET No.	TOTAL SHEETS
08	SBd	15	R107.3	87	263

LICENSED ARCHITECT — DATE 11/20/15

LICENSED ARCHITECT Janusz Pietrzak No. C23915 01-31-2017 RENEWAL DATE STATE OF CALIFORNIA

06-13-16
PLANS APPROVAL DATE

The State of California or its officers or agents shall not be responsible for the accuracy or completeness of scanned copies of this plan sheet.

ACCESSIBILITY DESIGN APPROVAL DOT / DES / OTA
PROJECT ID **0814000184**
Reviewed by: Y.A. WANG
Date: 05-27-16

OFFICE OF THE STATE FIRE MARSHAL APPROVED FIRE AND PANIC ONLY
Approval of this plan does not authorize or approve any omission or deviation from applicable regulations. Final approval is subject to field inspection. One set of approved plans shall be available on the project site at all times.
Reviewed by: INGRID P. ICASIANO
Approval date: 07-02-16
SFM No: 01-36-11-0066

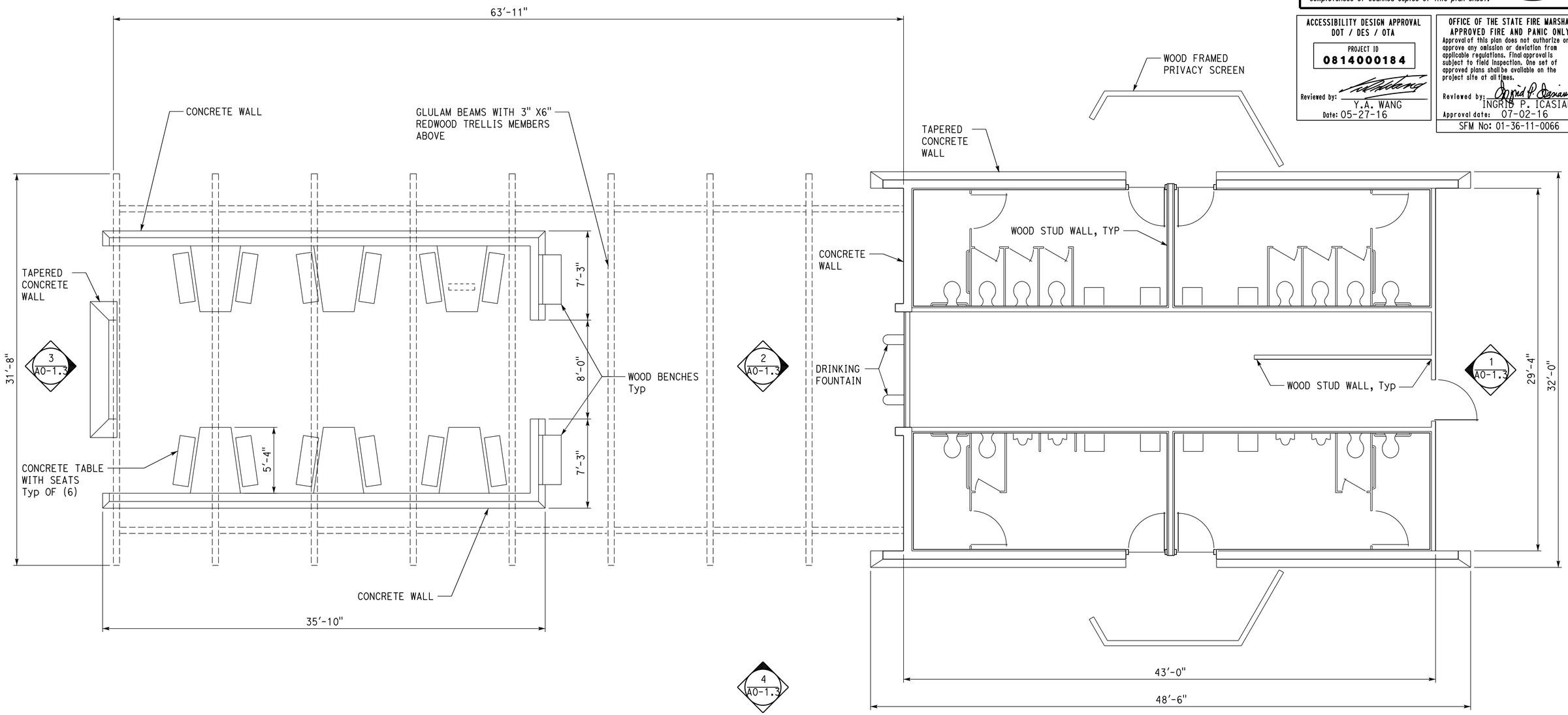

DEMOLITION FLOOR PLAN

SCALE 1/4" = 1'-0"

	BY	CHECKED
DESIGN	Janusz Pietrzak	Donald Alsey
DETAILS	Robertino Quibin	Donald Alsey
QUANTITIES		

STATE OF CALIFORNIA DEPARTMENT OF TRANSPORTATION

DIVISION OF ENGINEERING SERVICES ARCHITECTURAL AND STRUCTURAL DESIGN

BRIDGE No. 540004R/L
POST MILE R107.3

C.V. KANE SAFETY ROADSIDE REST AREA REHABILITATION
SOUTHBOUND (E) STRUCTURE DEMOLITION
COMFORT STATION FLOOR PLAN

SHEET A0-1.2

TAEMWW Imperial - CCSC Rev. 04/14

ORIGINAL SCALE IN INCHES FOR REDUCED PLANS 0 1 2 3

UNIT: 3600 CONTRACT No.: 08-0G8424
PROJECT NUMBER & PHASE: 08140001841

DISREGARD PRINTS BEARING EARLIER REVISION DATES

REVISION DATES (PRELIMINARY STAGE ONLY) SHEET OF

30-AUG-2016 14:37

P:\dist_08\0814000184_cv_kane_sb_srra_upgrade\expedite\a0-12.dgn

Dist	COUNTY	ROUTE	POST MILES TOTAL PROJECT	SHEET No.	TOTAL SHEETS
08	SBd	15	R107.3	88	263

ACCESSIBILITY DESIGN APPROVAL
DOT / DES / OTA
PROJECT ID 0814000184
Reviewed by: Y.A. WANG
Date: 05-27-16

OFFICE OF THE STATE FIRE MARSHAL
APPROVED FIRE AND PANIC ONLY
Approval of this plan does not authorize or approve any omission or deviation from applicable regulations. Final approvals subject to field inspection. One set of approved plans shall be available on the project site at all times.
Reviewed by: INGRID P. ICASIANO
Approval date: 07-02-16
SFM No: 01-36-11-0066

LICENSED ARCHITECT 11/20/15
DATE
06-13-16
PLANS APPROVAL DATE

LICENSED ARCHITECT Janusz Pietrzak No. C23915 01-31-2017 RENEWAL DATE STATE OF CALIFORNIA

The State of California or its officers or agents shall not be responsible for the accuracy or completeness of scanned copies of this plan sheet.

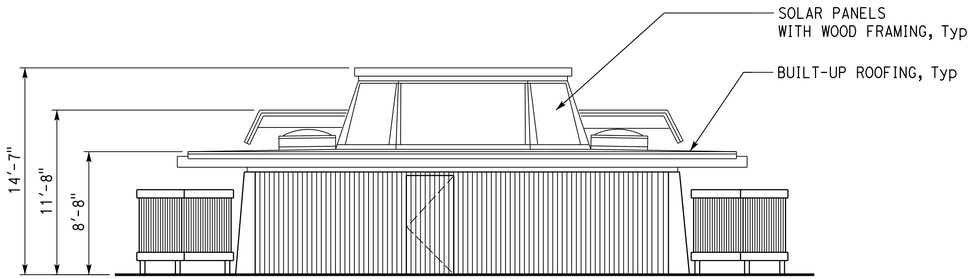

1

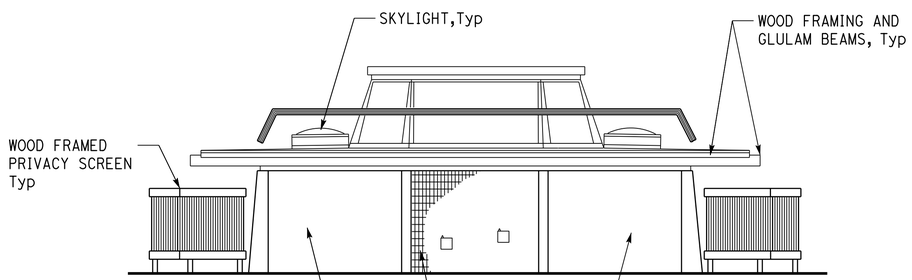

2

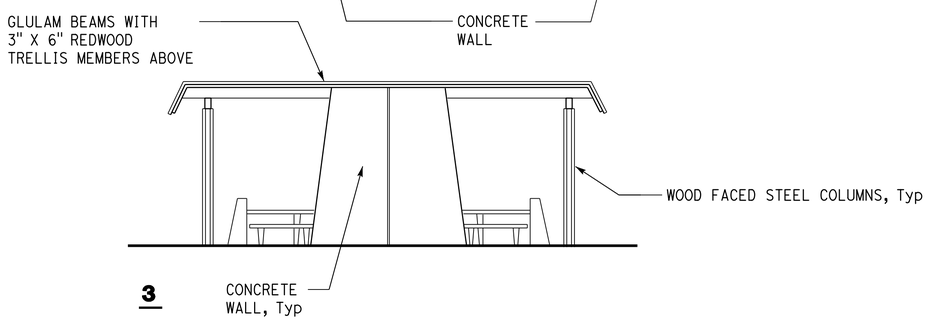

3

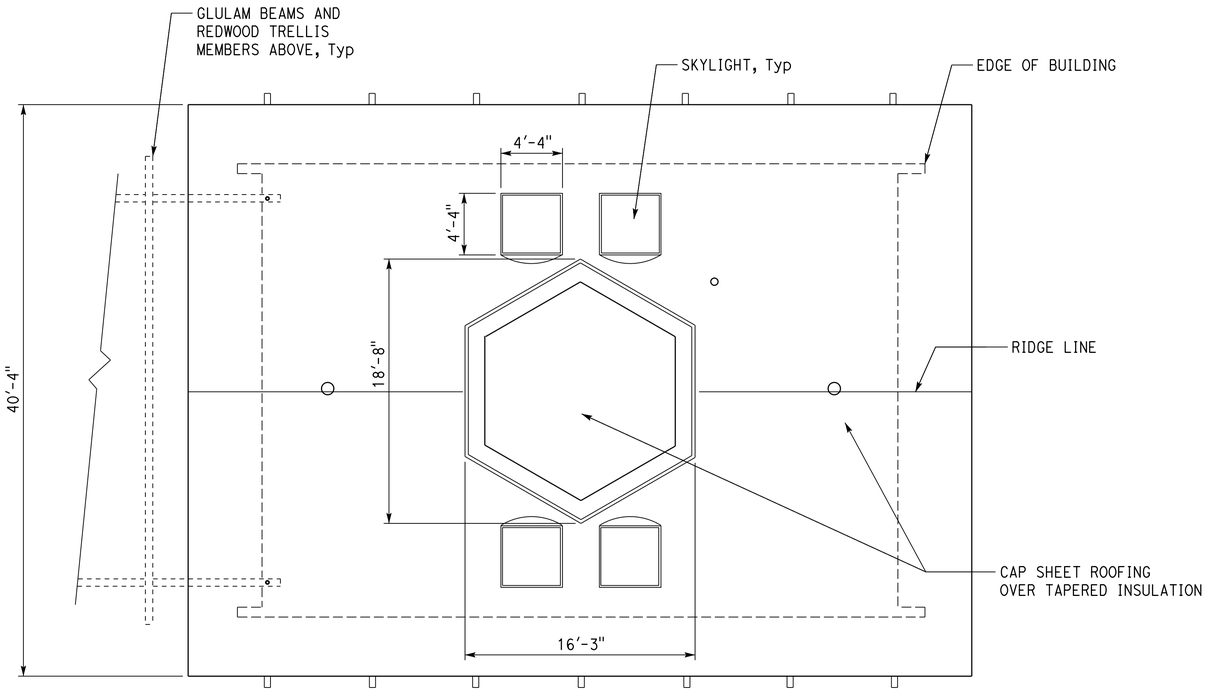

ROOF PLAN

SCALE 1/4" = 1'-0"

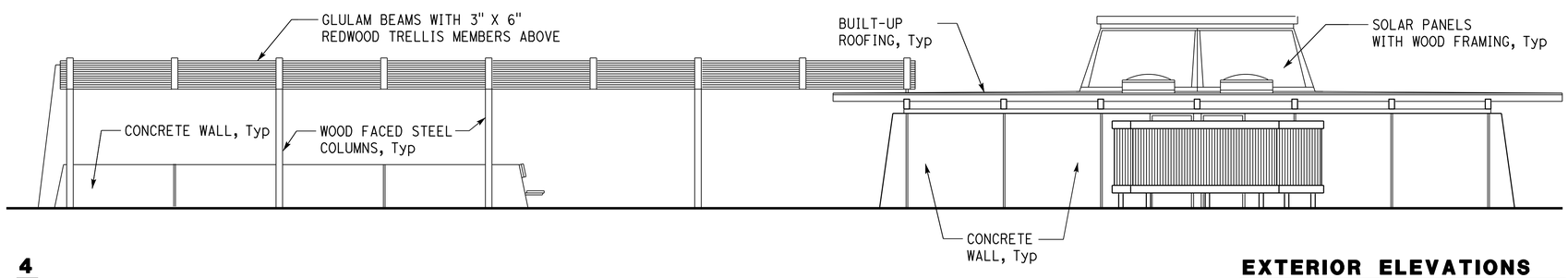

4

EXTERIOR ELEVATIONS

SCALE 1/4" = 1'-0"

NOTE:
REMOVAL INCLUDES ALL FOOTINGS AND FOUNDATION WHICH ARE NOT SHOWN.

	BY	CHECKED
DESIGN	Janusz Pietrzak	Donald Alsey
DETAILS	Robertino Quibin	Donald Alsey
QUANTITIES		

STATE OF CALIFORNIA
DEPARTMENT OF TRANSPORTATION

DIVISION OF ENGINEERING SERVICES
ARCHITECTURAL AND STRUCTURAL DESIGN

BRIDGE No. 540004R/L
POST MILE R107.3

C.V. KANE SAFETY ROADSIDE REST AREA REHABILITATION
SOUTHBOUND (E) STRUCTURE DEMOLITION
COMFORT STATION ROOF PLAN AND ELEVATIONS

SHEET A0-1.3

TAEMWW Imperial - CCSC Rev. 04/14

ORIGINAL SCALE IN INCHES FOR REDUCED PLANS 0 1 2 3

UNIT: 3600 CONTRACT No.: 08-0G8424
PROJECT NUMBER & PHASE: 08140001841

DISREGARD PRINTS BEARING EARLIER REVISION DATES

REVISION DATES (PRELIMINARY STAGE ONLY) SHEET OF

30-AUG-2016 14:37

P:\dist_08\0814000184_cv_kane_sb_srra_upgrade\expedite\a0-13.dgn

Dist	COUNTY	ROUTE	POST MILES TOTAL PROJECT	SHEET No.	TOTAL SHEETS
08	SBd	15	R107.3	89	263

LICENSED ARCHITECT — DATE 11/20/15

LICENSED ARCHITECT Janusz Pietrzak No. C23915 01-31-2017 RENEWAL DATE STATE OF CALIFORNIA

06-13-16
PLANS APPROVAL DATE

The State of California or its officers or agents shall not be responsible for the accuracy or completeness of scanned copies of this plan sheet.

ACCESSIBILITY DESIGN APPROVAL DOT / DES / OTA

PROJECT ID **0814000184**

Reviewed by: Y.A. WANG
Date: 05-27-16

OFFICE OF THE STATE FIRE MARSHAL APPROVED FIRE AND PANIC ONLY

Approval of this plan does not authorize or approve any omission or deviation from applicable regulations. Final approval is subject to field inspection. One set of approved plans shall be available on the project site at all times.

Reviewed by: INGRID P. ICASIANO
Approval date: 07-02-16

SFM No: 01-36-11-0066

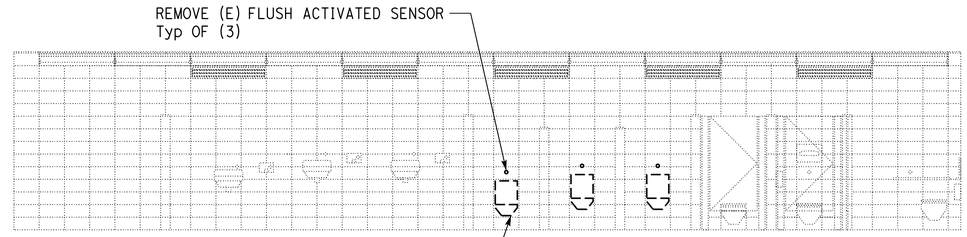

EAST

MENS RESTROOM 004

SCALE 1/4" = 1'-0"

NOTE : FOR NEW URINAL LOCATIONS AND INFORMATION SEE A1-1.2 SIMILAR

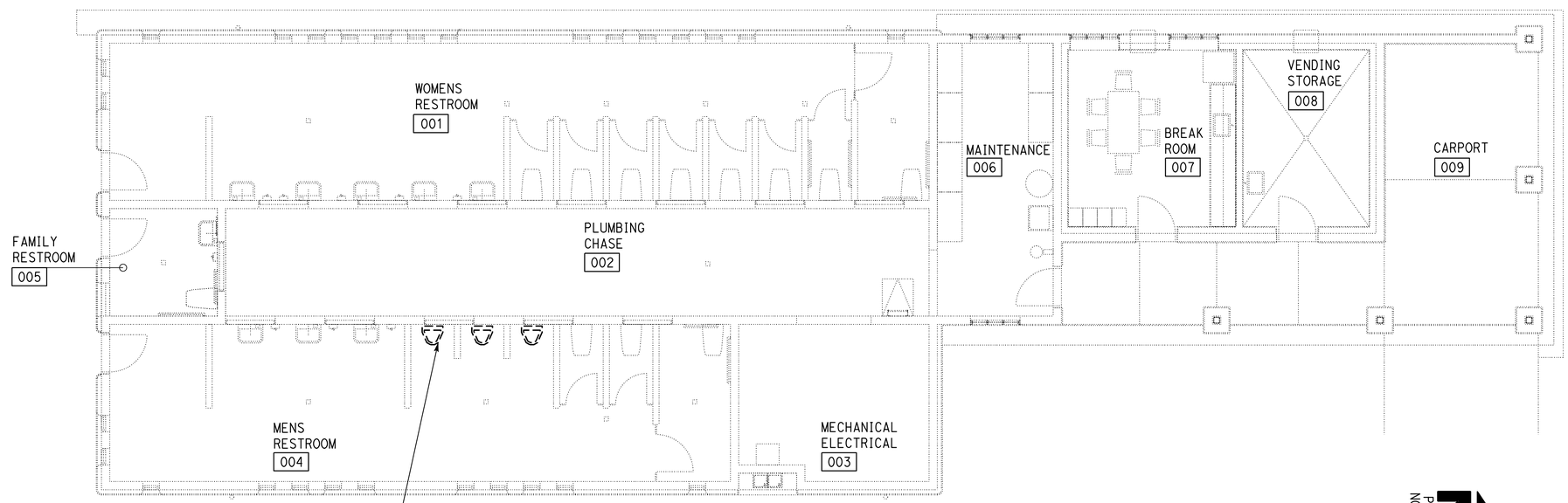

NOTE :
1. FOR NEW URINAL LOCATIONS AND INFORMATION SEE A1-1.2 SIMILAR
2. THIS FLOOR PLAN IS SIMILAR TO SOUTHBOUND COMFORT STATION A FOR MORE INFORMATION SEE A1-1.1 AND G1-4.

FLOOR PLAN

SCALE 3/16" = 1'-0"

DESIGN	BY Janusz Pietrzak	CHECKED Donald Alsey	
DETAILS	BY Robertino Quibin	CHECKED Donald Alsey	
QUANTITIES	BY	CHECKED	

STATE OF CALIFORNIA
DEPARTMENT OF TRANSPORTATION

DIVISION OF ENGINEERING SERVICES
ARCHITECTURAL AND STRUCTURAL DESIGN

BRIDGE No. 540004R/L
POST MILE R107.3

C.V. KANE SAFETY ROADSIDE REST AREA REHABILITATION

NORTHBOUND EXISTING COMFORT STATION A

REMOVAL PLAN AND INTERIOR ELEVATION

SHEET A0-1.4

TAEMWW Imperial - CCSC Rev. 04/14

ORIGINAL SCALE IN INCHES FOR REDUCED PLANS 0 1 2 3

UNIT: 3600 CONTRACT No.: 08-0G8424
PROJECT NUMBER & PHASE: 08140001841

DISREGARD PRINTS BEARING EARLIER REVISION DATES

REVISION DATES (PRELIMINARY STAGE ONLY) SHEET OF

30-AUG-2016 14:37

P:\dist_08\0814000184_cv_kane_sb_srra_upgrade\expedite\a0-14.dgn

Dist	COUNTY	ROUTE	POST MILES TOTAL PROJECT	SHEET No.	TOTAL SHEETS
08	SBd	15	R107.3	90	263

LICENSED ARCHITECT — DATE 11/20/15

LICENSED ARCHITECT Janusz Pietrzak No. C23915 01-31-2017 RENEWAL DATE STATE OF CALIFORNIA

06-13-16
PLANS APPROVAL DATE

The State of California or its officers or agents shall not be responsible for the accuracy or completeness of scanned copies of this plan sheet.

ACCESSIBILITY DESIGN APPROVAL DOT / DES / OTA

PROJECT ID **0814000184**

Reviewed by: Y.A. WANG
Date: 05-27-16

OFFICE OF THE STATE FIRE MARSHAL APPROVED FIRE AND PANIC ONLY

Approval of this plan does not authorize or approve any omission or deviation from applicable regulations. Final approval is subject to field inspection. One set of approved plans shall be available on the project site at all times.

Reviewed by: INGRID P. ICASIANO
Approval date: 07-02-16

SFM No: 01-36-11-0066

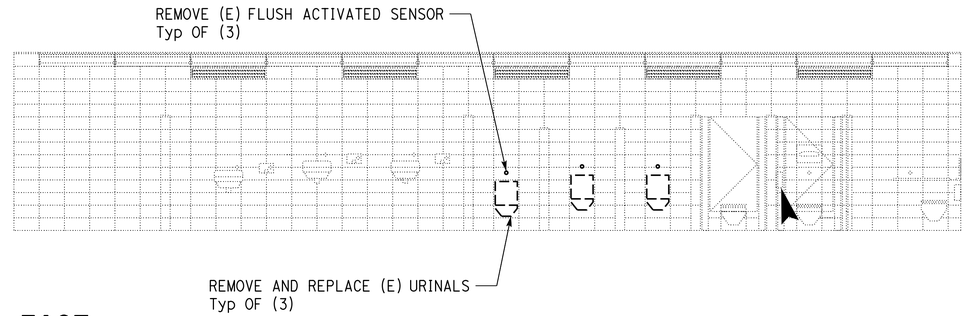

EAST

MENS RESTROOM 004

SCALE 1/4" = 1'-0"

NOTE : FOR NEW URINAL LOCATIONS AND INFORMATION SEE A2-1.1 SIMILAR

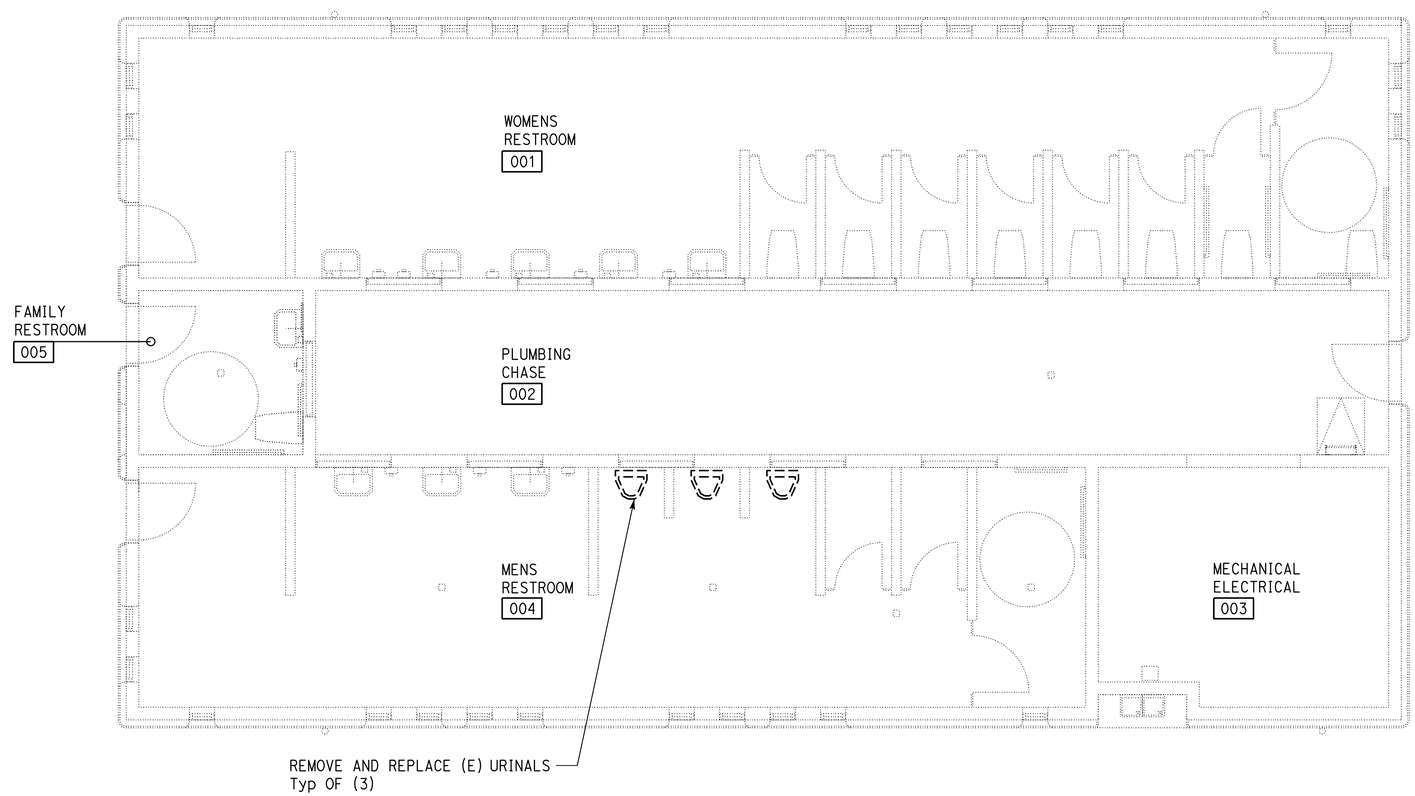

NOTE :
1. FOR NEW URINAL LOCATIONS AND INFORMATION SEE A2-1.1 SIMILAR
2. THIS FLOOR PLAN IS SIMILAR TO SOUTHBOUND COMFORT STATION B FOR MORE INFORMATION SEE A2-1.1 AND G1-4

FLOOR PLAN

SCALE 1/4" = 1'-0"

DESIGN	BY Janusz Pietrzak	CHECKED Donald Alsey	
DETAILS	BY Robertino Quibin	CHECKED Donald Alsey	
QUANTITIES	BY	CHECKED	

STATE OF **CALIFORNIA** DEPARTMENT OF TRANSPORTATION

DIVISION OF ENGINEERING SERVICES
ARCHITECTURAL AND STRUCTURAL DESIGN

BRIDGE No. 540004R/L
POST MILE R107.3

C.V. KANE SAFETY ROADSIDE REST AREA REHABILITATION

NORTHBOUND EXISTING COMFORT STATION B

REMOVAL PLAN AND INTERIOR ELEVATION

SHEET **A0-1.5**

TAEMWW Imperial - CCSC Rev. 04/14

ORIGINAL SCALE IN INCHES FOR REDUCED PLANS 0 1 2 3

UNIT: 3600 CONTRACT No.: 08-0G8424
PROJECT NUMBER & PHASE: 08140001841

DISREGARD PRINTS BEARING EARLIER REVISION DATES →

REVISION DATES (PRELIMINARY STAGE ONLY) SHEET OF

30-AUG-2016 14:37

P:\dist_08\0814000184_cv_kane_sb_srra_upgrade\expedite\a0-15.dgn

ACCESSIBILITY NOTES

1. THE ACCESSIBILITY DESIGN OF THE FACILITIES ON THE NB SRRA WAS APPROVED BY THE CALTRANS OFFICE OF TRANSPORTATION AND ARCHITECTURE ON 10/25/11, AND SUBSEQUENTLY CONSTRUCTED.
2. THE NEW WORK ON THE NB SRRA INCLUDES REPLACING (E) URINALS WITH WATERLESS FIXTURES. ACCESSIBLE FIXTURES MUST COMPLY WITH DETAIL 4 ON SHEET A0-3.4 AT THE LOCATIONS IDENTICAL TO SHEET A2-4.1.
3. PER 2013 CBC SECTION 11B-203.5, THE (E) PRESSURE TANKS ARE EXEMPT FROM THE ACCESSIBILITY LAWS. THEREFORE, THE NEW WORK OF CANOPY FOR SUCH EQUIPMENT IS ALSO EXEMPT.
4. PER 2013 CBC SECTION 11B-203.5, THE (N) FIRE WATER TANK AND ITS FENCE/GATES ARE EXEMPT FROM THE ACCESSIBILITY LAWS.

KEY NOTES:

1. (E) PUBLIC RESTROOMS
2. (E) ACCESSIBLE PARKING
3. (E) DRINKING FOUNTAINS
4. (E) PUBLIC PAY TELEPHONES
5. (E) AUTO PARKING
6. (E) TRUCK PARKING
7. (E) POT TO ACCESSIBLE PICNIC TABLES
8. (E) POT TO INTERPRETIVE CENTER
9. TWO 6,000 Min GALLONS ABOVE GROUND FIRE PROTECTION WATER TANKS AND HYDRANT, SEE W-2 AND W-4 FOR DETAILS
10. 50" LONG PAINTED RED CURB CENTER ON HYDRANT WITH "NO PARKING FIRE LANE" WHITE LETTERS PAINTED ON (E) CURB.
11. GUARD POST Typ OF (12), SEE W-4

-------- ACCESSIBLE PATH OF TRAVEL

⇦ (E) DIRECTIONAL SIGN

TOTAL (E) PARKING SPACES = 74
(E) ACCESSIBLE PARKING SPACES = 4

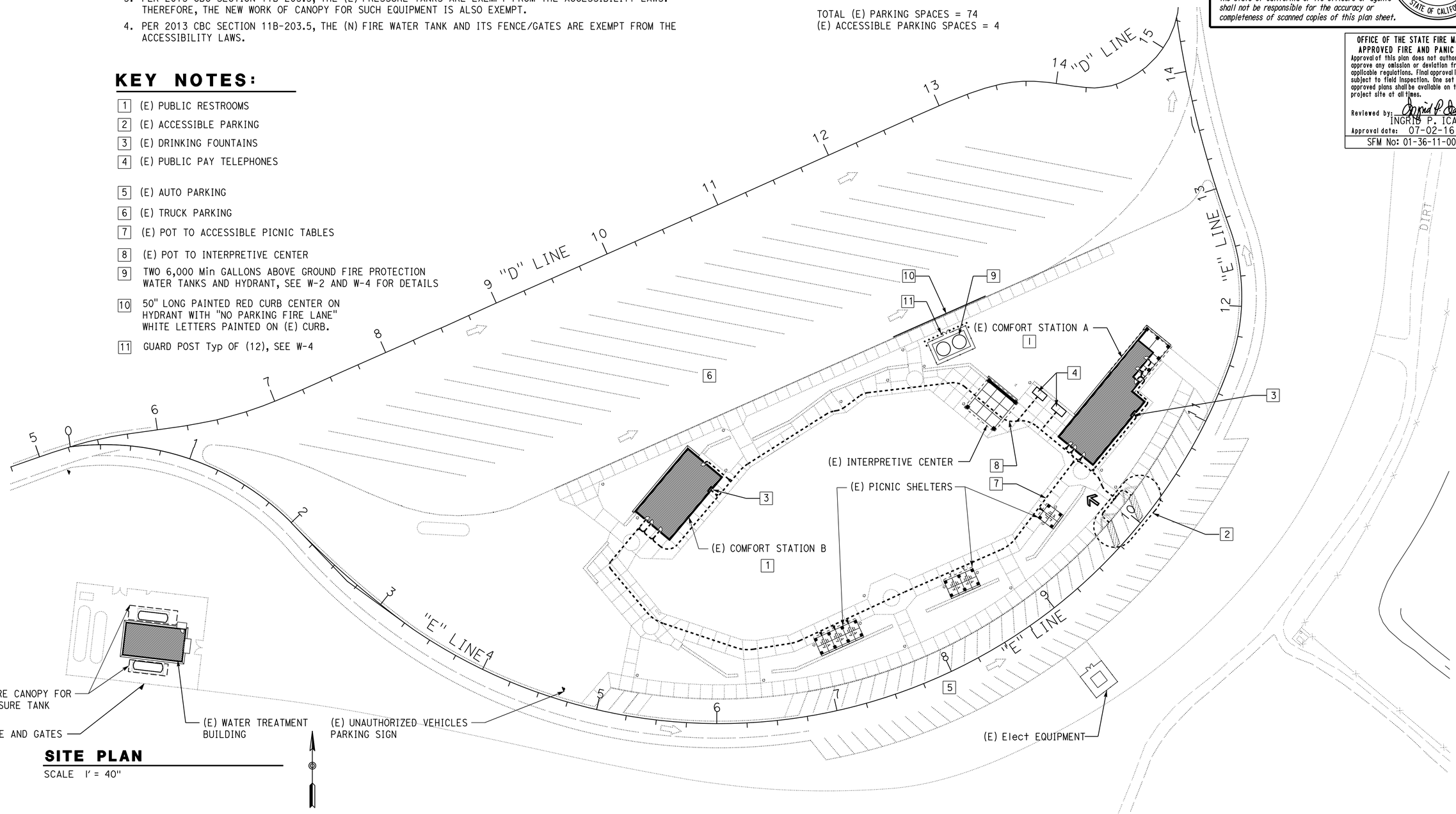

SITE PLAN

SCALE 1' = 40'

ACCESSIBILITY DESIGN APPROVAL
DOT / DES / OTA
PROJECT ID 0814000184
Reviewed by: Y.A. WANG
Date: 05-27-16

Dist	COUNTY	ROUTE	POST MILES TOTAL PROJECT	SHEET No.	TOTAL SHEETS
08	SBd	15	R107.3	91	263

LICENSED ARCHITECT 11/20/15 DATE
Janusz Pietrzak No. C23915 01-31-2017 RENEWAL DATE
06-13-16
PLANS APPROVAL DATE

The State of California or its officers or agents shall not be responsible for the accuracy or completeness of scanned copies of this plan sheet.

OFFICE OF THE STATE FIRE MARSHAL
APPROVED FIRE AND PANIC ONLY
Approval of this plan does not authorize or approve any omission or deviation from applicable regulations. Final approval is subject to field inspection. One set of approved plans shall be available on the project site at all times.
Reviewed by: INGRID P. ICASIANO
Approval date: 07-02-16
SFM No: 01-36-11-0066

DESIGN	BY Janusz Pietrzak	CHECKED Donald Alsey	
DETAILS	BY Robertino Quibin	CHECKED Donald Alsey	
QUANTITIES	BY	CHECKED	

STATE OF CALIFORNIA
DEPARTMENT OF TRANSPORTATION

DIVISION OF ENGINEERING SERVICES
ARCHITECTURAL AND STRUCTURAL DESIGN

BRIDGE No. 540004R/L
POST MILE R107.3

C.V. KANE SAFETY ROADSIDE REST AREA REHABILITATION
ACCESSIBILITY
NORTHBOUND SITE PLAN

SHEET A0-2.1

TAEMWW Imperial - CCSC Rev. 04/14

ORIGINAL SCALE IN INCHES FOR REDUCED PLANS 0 1 2 3

UNIT: 3600 CONTRACT No.: 08-0G8424
PROJECT NUMBER & PHASE: 08140001841

DISREGARD PRINTS BEARING EARLIER REVISION DATES

REVISION DATES (PRELIMINARY STAGE ONLY) SHEET OF

30-AUG-2016 16:27

P:\dist_08\0814000184_cv_kane_sb_srra_upgrade\expedite\a0-21.dgn

Dist	COUNTY	ROUTE	POST MILES TOTAL PROJECT	SHEET No.	TOTAL SHEETS
08	SBd	15	R107.3	92	263

LICENSED ARCHITECT — 11/20/15 DATE

06-13-16
PLANS APPROVAL DATE

LICENSED ARCHITECT Janusz Pietrzak No. C23915 01-31-2017 RENEWAL DATE STATE OF CALIFORNIA

The State of California or its officers or agents shall not be responsible for the accuracy or completeness of scanned copies of this plan sheet.

ACCESSIBILITY DESIGN APPROVAL DOT / DES / OTA
PROJECT ID **0814000184**
Reviewed by: Y.A. WANG
Date: 05-27-16

OFFICE OF THE STATE FIRE MARSHAL APPROVED FIRE AND PANIC ONLY
Approval of this plan does not authorize or approve any omission or deviation from applicable regulations. Final approval is subject to field inspection. One set of approved plans shall be available on the project site at all times.
Reviewed by: INGRID P. ICASIANO
Approval date: 07-02-16
SFM No: 01-36-11-0066

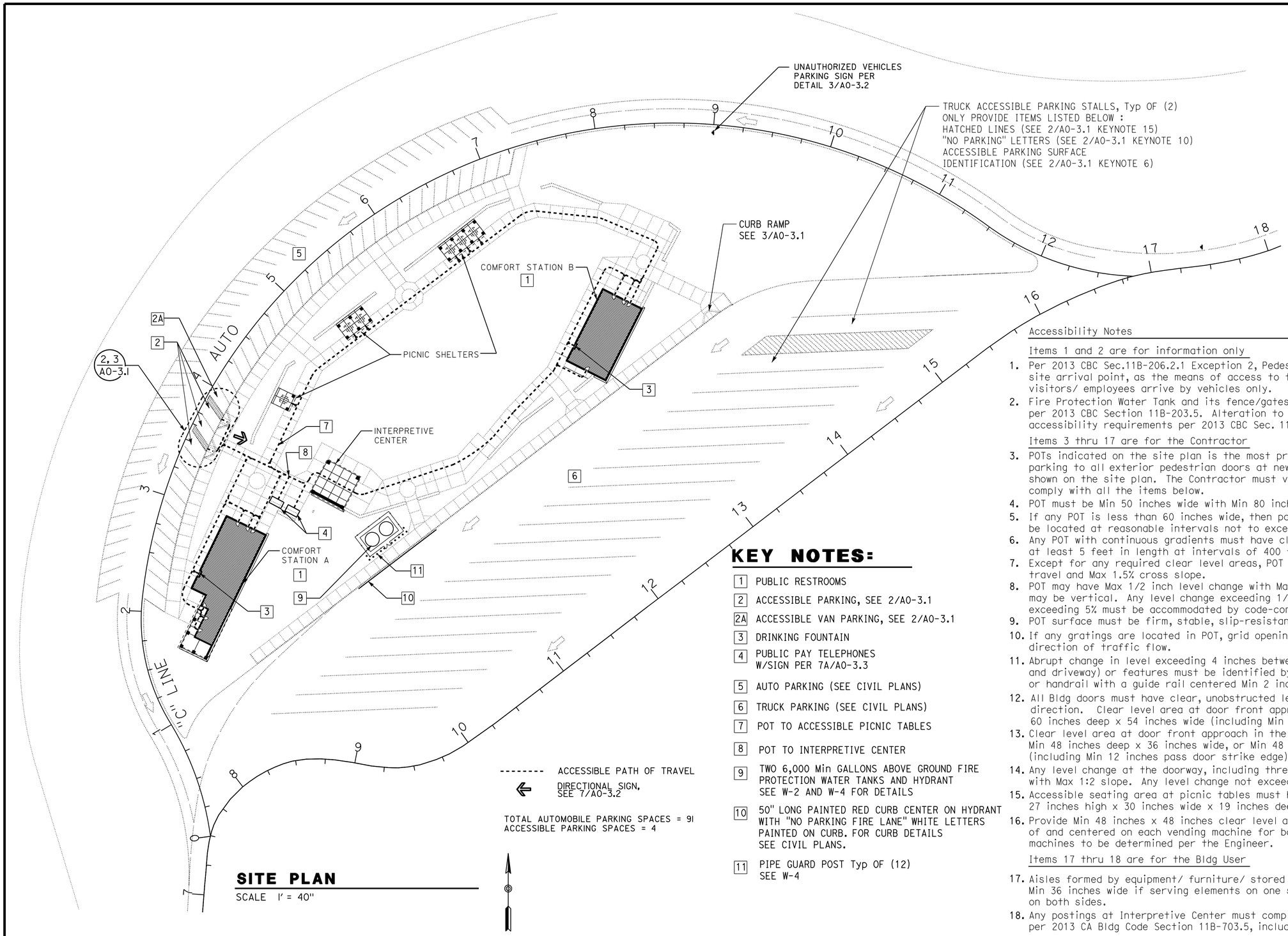

SITE PLAN

SCALE 1" = 40"

KEY NOTES:

1. PUBLIC RESTROOMS
2. ACCESSIBLE PARKING, SEE 2/A0-3.1
2A. ACCESSIBLE VAN PARKING, SEE 2/A0-3.1
3. DRINKING FOUNTAIN
4. PUBLIC PAY TELEPHONES W/SIGN PER 7A/A0-3.3
5. AUTO PARKING (SEE CIVIL PLANS)
6. TRUCK PARKING (SEE CIVIL PLANS)
7. POT TO ACCESSIBLE PICNIC TABLES
8. POT TO INTERPRETIVE CENTER
9. TWO 6,000 Min GALLONS ABOVE GROUND FIRE PROTECTION WATER TANKS AND HYDRANT SEE W-2 AND W-4 FOR DETAILS
10. 50" LONG PAINTED RED CURB CENTER ON HYDRANT WITH "NO PARKING FIRE LANE" WHITE LETTERS PAINTED ON CURB. FOR CURB DETAILS SEE CIVIL PLANS.
11. PIPE GUARD POST Typ OF (12) SEE W-4

Accessibility Notes

Items 1 and 2 are for information only

1. Per 2013 CBC Sec.11B-206.2.1 Exception 2, Pedestrian Path of Travel (POT) is not required from site arrival point, as the means of access to this freeway rest area is vehicular and all visitors/ employees arrive by vehicles only.
2. Fire Protection Water Tank and its fence/gates are exempt from the accessibility requirements per 2013 CBC Section 11B-203.5. Alteration to (E) Water Treatment Bldg is also exempt from any accessibility requirements per 2013 CBC Sec. 11B-202.4 Exception 7 and 11B-203.5.

Items 3 thru 17 are for the Contractor

3. POTs indicated on the site plan is the most practical and direct route from accessible parking to all exterior pedestrian doors at new Bldg, and to other accessible facilities as shown on the site plan. The Contractor must verify and remove any (E) barriers at POTs to comply with all the items below.
4. POT must be Min 50 inches wide with Min 80 inches head clearance.
5. If any POT is less than 60 inches wide, then passing space at least 60 inches x 60 inches must be located at reasonable intervals not to exceed 200 feet.
6. Any POT with continuous gradients must have clear level area with Max 1.5% slope in all directions at least 5 feet in length at intervals of 400 feet Max.
7. Except for any required clear level areas, POT may have Max 4.5% slope in the direction of travel and Max 1.5% cross slope.
8. POT may have Max 1/2 inch level change with Max 1:2 slope. Level change not exceeding 1/4 inch may be vertical. Any level change exceeding 1/2 inch or any slope in the direction of travel exceeding 5% must be accommodated by code-compliant curb ramp or ramp.
9. POT surface must be firm, stable, slip-resistant, W/O loose gravels, sand, chips, etc.
10. If any gratings are located in POT, grid openings in gratings must be limited to 1/2 inch in the direction of traffic flow.
11. Abrupt change in level exceeding 4 inches between POT and adjacent surfaces (excluding street and driveway) or features must be identified by Min 6-inch high warning curb, or by a guard or handrail with a guide rail centered Min 2 inches and Max 4 inches above the surface of POT.
12. All Bldg doors must have clear, unobstructed level areas on both sides with Max 1.5% slope in any direction. Clear level area at door front approach in the direction of door swing must be Min 60 inches deep x 54 inches wide (including Min 18 inches pass door strike edge).
13. Clear level area at door front approach in the direction opposite door swing must be Min 48 inches deep x 36 inches wide, or Min 48 inches deep x 48 inches wide (including Min 12 inches pass door strike edge) if door has both latch and closer.
14. Any level change at the doorway, including threshold thickness, must be Max 1/2 inch with Max 1:2 slope. Any level change not exceeding 1/4 inch may be vertical.
15. Accessible seating area at picnic tables must have knee space at least 27 inches high x 30 inches wide x 19 inches deep.
16. Provide Min 48 inches x 48 inches clear level area with Max 1.5% slope in all directions in front of and centered on each vending machine for both front and side approaches. Locations of vending machines to be determined per the Engineer.

Items 17 thru 18 are for the Bldg User

17. Aisles formed by equipment/ furniture/ stored materials/ walls at any room or space must be Min 36 inches wide if serving elements on one side, and Min 44 inches wide if serving elements on both sides.
18. Any postings at Interpretive Center must comply with visual characters requirements per 2013 CA Bldg Code Section 11B-703.5, including character height.

	BY	CHECKED
DESIGN	Janusz Pietrzak	Donald Alsey
DETAILS	Robertino Quibin	Donald Alsey
QUANTITIES		

STATE OF CALIFORNIA DEPARTMENT OF TRANSPORTATION

DIVISION OF ENGINEERING SERVICES ARCHITECTURAL AND STRUCTURAL DESIGN

BRIDGE No. 540004R/L
POST MILE R107.3

C.V. KANE SAFETY ROADSIDE REST AREA REHABILITATION
ACCESSIBILITY — SOUTHBOUND SITE PLAN

SHEET A0-2.2

TAEMWW Imperial - CCSC Rev. 04/14

ORIGINAL SCALE IN INCHES FOR REDUCED PLANS 0 1 2 3

UNIT: 3600 CONTRACT No.: 08-0G8424
PROJECT NUMBER & PHASE: 08140001841

DISREGARD PRINTS BEARING EARLIER REVISION DATES

REVISION DATES (PRELIMINARY STAGE ONLY) SHEET OF

30-AUG-2016 14:37

P:\dist_08\0814000184_cv_kane_sb_srra_upgrade\expedite\a0-22.dgn

Dist	COUNTY	ROUTE	POST MILES TOTAL PROJECT	SHEET No.	TOTAL SHEETS
08	SBd	15	R107.3	93	263

LICENSED ARCHITECT — DATE 08-28-15

PLANS APPROVAL DATE 06-13-16

LICENSED ARCHITECT Y.A. WANG No. C14891 11-30-17 RENEWAL DATE STATE OF CALIFORNIA

The State of California or its officers or agents shall not be responsible for the accuracy or completeness of scanned copies of this plan sheet.

ACCESSIBILITY DESIGN APPROVAL DOT / DES / OTA
PROJECT ID 0814000184
Reviewed by: Y.A. WANG
Date: 05-27-16

OFFICE OF THE STATE FIRE MARSHAL APPROVED FIRE AND PANIC ONLY
Approval of this plan does not authorize or approve any omission or deviation from applicable regulations. Final approval is subject to field inspection. One set of approved plans shall be available on the project site at all times.
Reviewed by: INGRID P. ICASIANO
Approval date: 07-02-16
SFM No: 01-36-11-0066

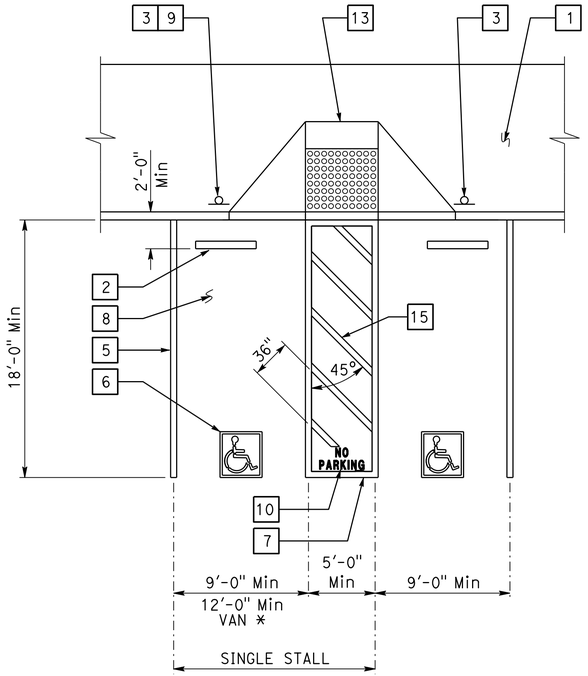

1 ACCESSIBLE PARKING STALL

* 9'-0" Min van parking allowed W/ 8'-0" Min access aisle.

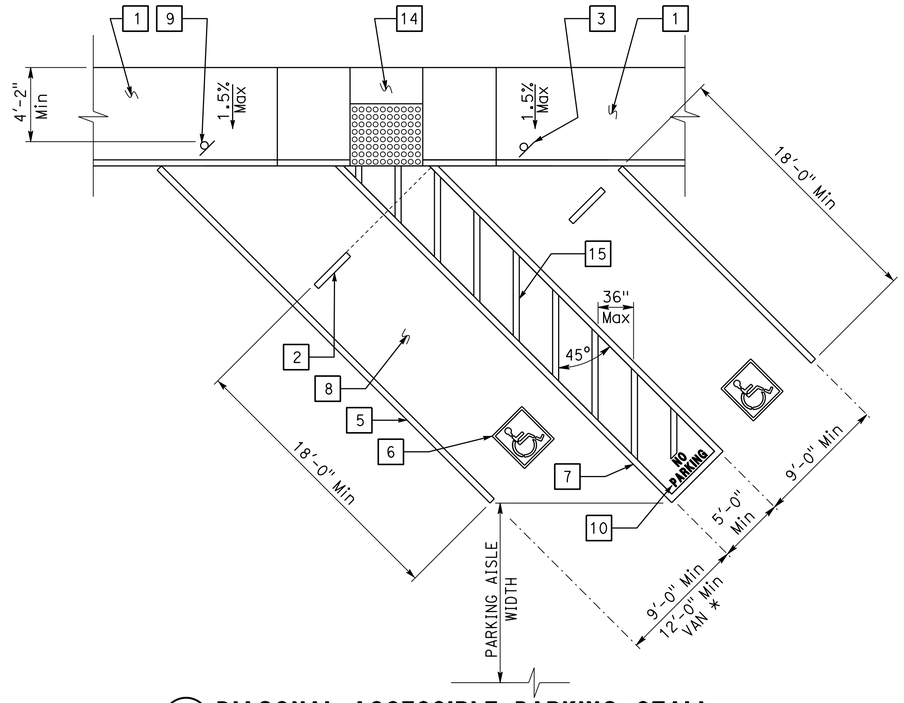

2 DIAGONAL ACCESSIBLE PARKING STALL

See plan for any variation of diagonal parking. Angle of parking stalls are indicated on plans or matching any existing angle.

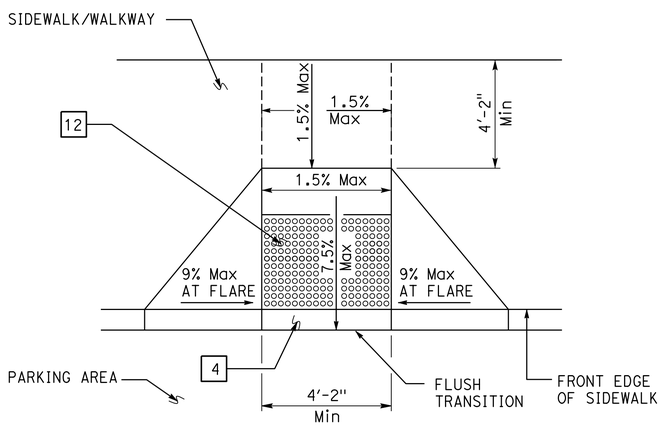

3 PERPENDICULAR CURB RAMP

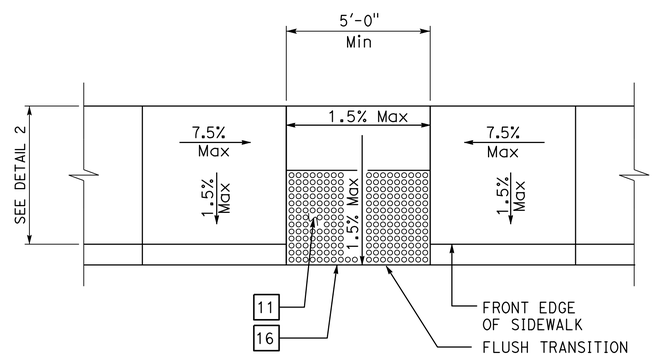

4 PARALLEL CURB RAMP

KEYED NOTE LEGEND FOR DETAILS

1. Concrete walkway (where occurs). See plans for width, layout (may vary), finish, joints and elevations.
2. Parking bumper (away from access aisle). See Specifications.
3. Accessible parking space signage. See Detail 1 on sheet A0-3.2.
4. Edge of detectable warning surface nearest street must be between 6" and 8" from flush transition at perpendicular curb ramp.
5. 4" wide white parking stall designation stripe. See site plan(s) for additional stall striping. See specifications for painting.
6. Accessible parking surface identification painted on pavement. See Detail 6 on sheet A0-3.2.
7. 4" wide blue border designating non-parking access aisle to curb ramp.
8. Maximum slope on parking stall and access aisle to be 1.5%.
9. Van accessible signage. See Details 1 & 2 on sheet A0-3.2. Access aisle must be on passenger side only.
10. "NO PARKING" in Min 12" high white letters to be placed within access aisle to curb ramp. See Standard Plan RSP A90B.
11. Turning Space with 36" deep detectable warning surface extending full width of turning space less 2" maximum on each side. See detail 5 for detectable warning surface.
12. Ramp run with 36" deep detectable warning surface extending full width of ramp run less 2" maximum on each side.
13. Perpendicular curb ramp. See Detail 3 on this sheet. Also see plans for width and layout (may vary).
14. Parallel curb ramp. See Detail 4 on this sheet. Also see plans for width and layout (may vary).
15. 4" wide hatched lines at 36" OC. Color to contrast with aisle surface, preferably blue or white.
16. Detectable warning surface must start at flush transition at parallel curb ramp.

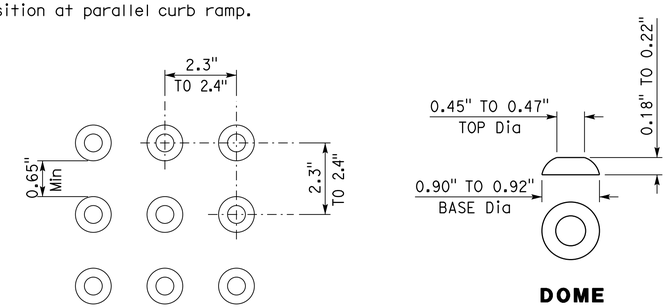

5 DETECTABLE WARNING SURFACE - TRUNCATED DOMES

DETAILS

No scale unless otherwise noted

NOTE: SPECIFIC DETAILS OR NOTES ON OTHER SHEETS SHALL PREVAIL OVER STANDARD DETAILS AND NOTES ON THIS SHEET

STANDARD DRAWING
FILE NO. __-__-_
DRAWING DATE 08-15
DESIGN BY D. Alsey CHECKED Y. A. Wang
DETAILS BY D. Good CHECKED Y. A. Wang
SUBMITTED BY Y.A. Wang
APPROVED R.E. Travis DESIGN SUPERVISOR

STATE OF CALIFORNIA DEPARTMENT OF TRANSPORTATION

DIVISION OF ENGINEERING SERVICES ARCHITECTURAL AND STRUCTURAL DESIGN

BRIDGE No. 540004R/L
POST MILE R107.3

C.V. KANE SAFETY ROADSIDE REST AREA REHABILITATION

ACCESSIBILITY — ACCESSIBILITY STANDARD DETAILS

SHEET A0-3.1

TAEMWW Imperial - CCSC Rev. 04/14

ORIGINAL SCALE IN INCHES FOR REDUCED PLANS 0 1 2 3

UNIT: 3600 CONTRACT No.: 08-0G8424
PROJECT NUMBER & PHASE: 08140001841

DISREGARD PRINTS BEARING EARLIER REVISION DATES 09-05-14

REVISION DATES (PRELIMINARY STAGE ONLY) SHEET X OF X

30-AUG-2016 14:37

P:\dist_08\0814000184_cv_kane_sb_srra_upgrade\expedite\a0_03a.dgn

Dist	COUNTY	ROUTE	POST MILES TOTAL PROJECT	SHEET No.	TOTAL SHEETS
08	SBd	15	R107.3	94	263

LICENSED ARCHITECT — DATE 08-28-15

LICENSED ARCHITECT Y.A. WANG No. C14891 11-30-17 RENEWAL DATE STATE OF CALIFORNIA

06-13-16
PLANS APPROVAL DATE

The State of California or its officers or agents shall not be responsible for the accuracy or completeness of scanned copies of this plan sheet.

ACCESSIBILITY DESIGN APPROVAL DOT / DES / OTA
PROJECT ID **0814000184**
Reviewed by: Y.A. WANG
Date: 05-27-16

OFFICE OF THE STATE FIRE MARSHAL APPROVED FIRE AND PANIC ONLY
Approval of this plan does not authorize or approve any omission or deviation from applicable regulations. Final approval is subject to field inspection. One set of approved plans shall be available on the project site at all times.
Reviewed by: INGRID P. ICASIANO
Approval date: 07-02-16
SFM No: 01-36-11-0066

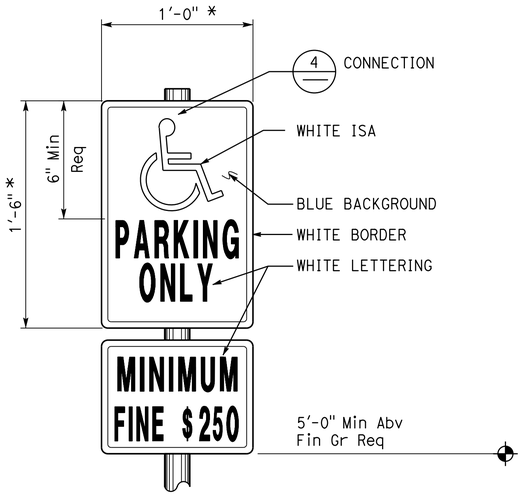

1 ACCESSIBLE PARKING SIGN

Refer to Site Plan for locations.
Combo sign may be used.
* Min area 70 Sq in Req

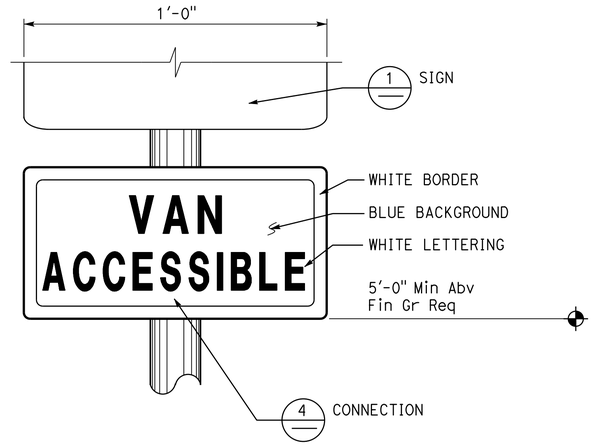

2 ACCESSIBLE VAN PARKING SIGN

Refer to Site Plan for locations.
Combo sign may be used.

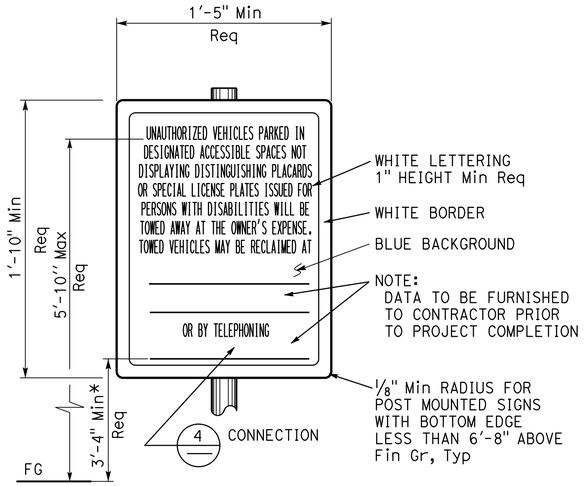

3 UNAUTHORIZED VEHICLES PARKING SIGN

Refer to Site Plan for locations. Colors may vary.
Sign must not be posted in a path of travel.
* To baseline of visual characters of numbers.

Note:
All listed sign sizes and mounting heights are recommended, unless otherwise noted as required.

Signage Note:
Visual characters (letters & numbers) in details on this sheet & not otherwise shown must comply with 2013 CBC Section 11B-703.5.

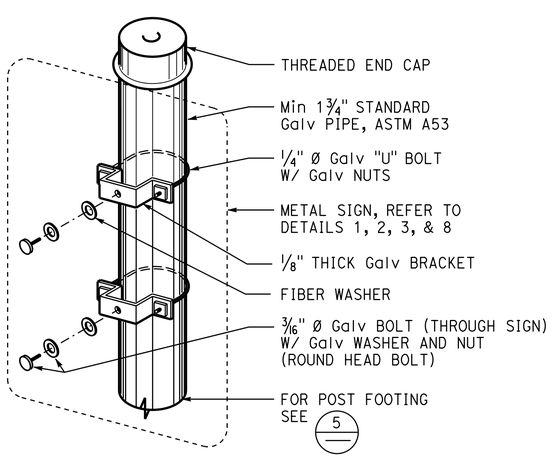

4 SIGN CONNECTION

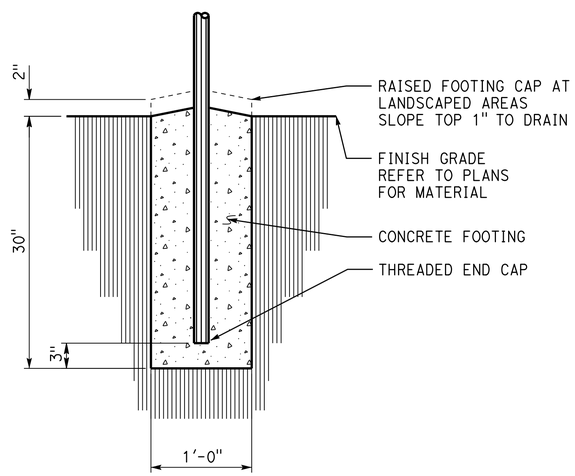

5 SIGN POST FOOTING

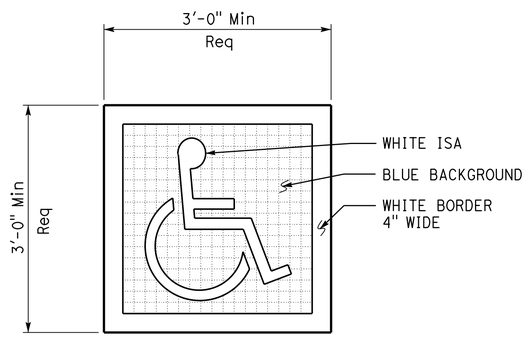

6 ACCESSIBLE PARKING SURFACE IDENTIFICATION

Refer to Details 1 and 2 on sheet A0-3.1 for locations.
Centerline of surface ID must be Max 6" from centerline of parking space.
Lower side of surface ID must align with end of parking space length.

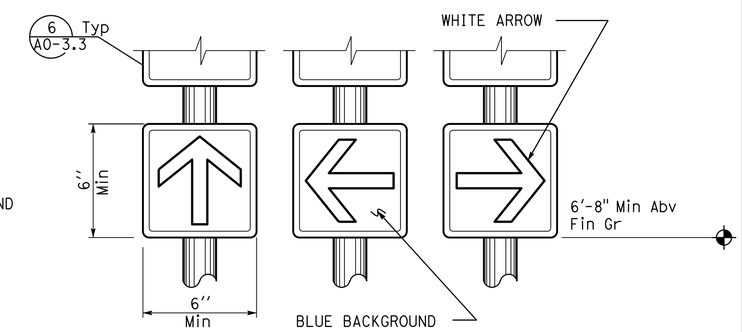

For additional information see 4

7 DIRECTIONAL SIGNS

Refer to Site Plan or General Plan for locations.
Wall or door mounted signs may be used.
Combo sign may be used.
Colors may vary.

DETAILS

No scale unless otherwise noted

NOTE: SPECIFIC DETAILS OR NOTES ON OTHER SHEETS SHALL PREVAIL OVER STANDARD DETAILS AND NOTES ON THIS SHEET

STANDARD DRAWING				
FILE NO. __-__-_	DESIGN	BY D. Alsey	CHECKED Y. A. Wang	APPROVED R.E. Travis DESIGN SUPERVISOR
DRAWING DATE 08-15	DETAILS	BY D. Good	CHECKED Y. A. Wang	
	SUBMITTED BY Y.A. Wang			

STATE OF CALIFORNIA DEPARTMENT OF TRANSPORTATION

DIVISION OF ENGINEERING SERVICES ARCHITECTURAL AND STRUCTURAL DESIGN

BRIDGE No. 540004R/L
POST MILE R107.3

C.V. KANE SAFETY ROADSIDE REST AREA REHABILITATION

ACCESSIBILITY — ACCESSIBILITY STANDARD DETAILS

SHEET A0-3.2

TAEMWW Imperial - CCSC Rev. 04/14

ORIGINAL SCALE IN INCHES FOR REDUCED PLANS 0 1 2 3

UNIT: 3600 CONTRACT No.: 08-0G8424
PROJECT NUMBER & PHASE: 08140001841

DISREGARD PRINTS BEARING EARLIER REVISION DATES → 09-05-14

REVISION DATES (PRELIMINARY STAGE ONLY) | SHEET X | OF X

30-AUG-2016 14:37

P:\dist_08\0814000184_cv_kane_sb_srra_upgrade\expedite\a0_03b.dgn

Dist	COUNTY	ROUTE	POST MILES TOTAL PROJECT	SHEET No.	TOTAL SHEETS
08	SBd	15	R107.3	95	263

LICENSED ARCHITECT — DATE 08-28-15

06-13-16
PLANS APPROVAL DATE

LICENSED ARCHITECT Y.A. WANG No. C14891 11-30-17 RENEWAL DATE STATE OF CALIFORNIA

The State of California or its officers or agents shall not be responsible for the accuracy or completeness of scanned copies of this plan sheet.

ACCESSIBILITY DESIGN APPROVAL DOT / DES / OTA
PROJECT ID 0814000184
Reviewed by: Y.A. WANG
Date: 05-27-16

OFFICE OF THE STATE FIRE MARSHAL APPROVED FIRE AND PANIC ONLY
Approval of this plan does not authorize or approve any omission or deviation from applicable regulations. Final approval is subject to field inspection. One set of approved plans shall be available on the project site at all times.
Reviewed by: INGRID P. ICASIANO
Approval date: 07-02-16
SFM No: 01-36-11-0066

1 ROOM IDENTIFICATION SIGN

Install per Detail 5.
Text varies.
See plans, Ext elevations, or door schedule for locations and text.

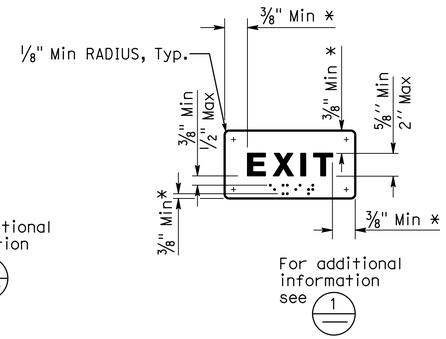

2 INTERIOR EXIT SIGN

Install per Detail 5.
Text may vary.
See plans, or door schedule for locations and text.
* From characters / Braille to any raised border or elements

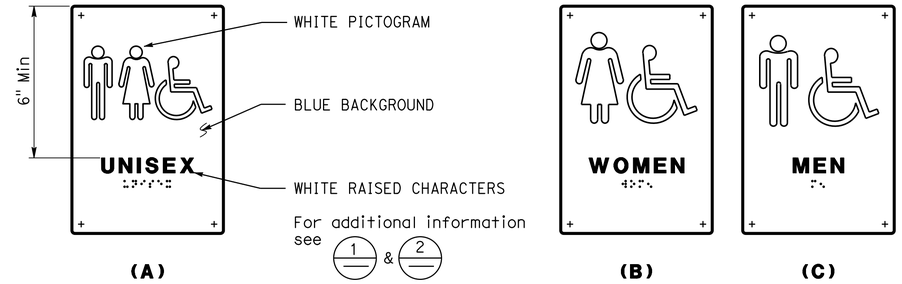

3 RESTROOM/SHOWER ROOM SIGNS

Install per Detail 5.
See Detail 7 for sign mounting height.

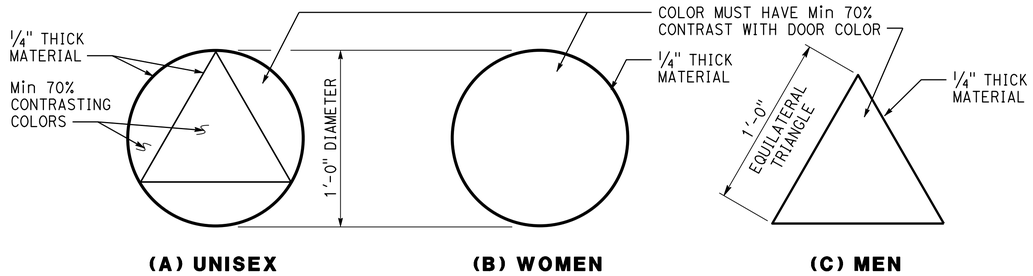

4 RESTROOM/SHOWER ROOM GEOMETRIC SYMBOLS AT DOOR

Install per Detail 5.
Any pictogram and raised characters are not required and not recommended.

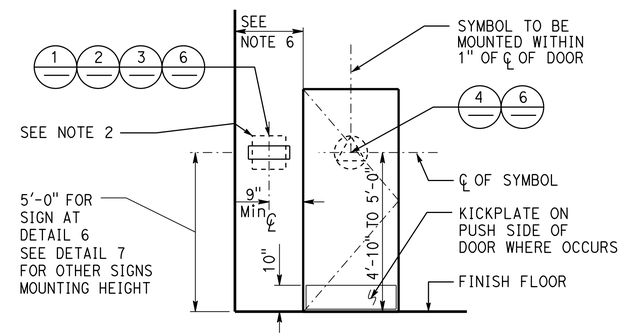

5 SIGN/SYMBOL LOCATIONS

Refer to signage notes for additional information.

SIGNAGE NOTES:

1. Locate room identification signs, exit signs, and restroom signs on wall adjacent to door on latch side. If wall space is not available on latch side, locate on nearest adjacent wall. Locate sign on inactive leaf at double doors, or to the right of right hand door at double doors with two active leafs.
2. Refer to specifications for sign material and other color selection. Except Detail 6, sign colors may vary from details.
3. See door schedule for text and sign location, unless otherwise noted.
4. Braille must be contracted (Grade 2) and compliant with 2013 CBC Section 11B-703.3.
5. Raised characters must be uppercase sans serif raised 1/32" Min. Fonts must be selected where width of letter "O" is 60% Min and 110% Max of height of letter "I". Stroke thickness of letter "I" must be 15% Max of height of the character.
6. Raised character height indicated in detail 2 is measured based on height of uppercase letter "I".
7. Raised character vertical spacing must comply with 2013 CBC Section 11B.703.2.7.
8. Provide 18"x18" Min clear floor space in front of and centered with raised characters.
9. Sign color must have a minimum of 70% contrast to door or wall color. Text and pictogram must have a minimum of 70% contrast to sign color.

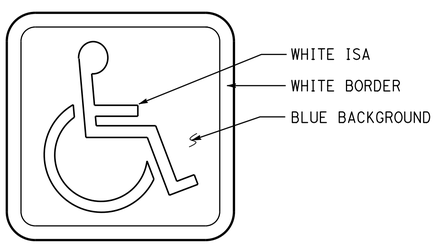

6 INTERNATIONAL SYMBOL OF ACCESSIBILITY SIGN

Install per Detail 5.
See plans, elevations, or schedule for sign locations.
Decal may be used.

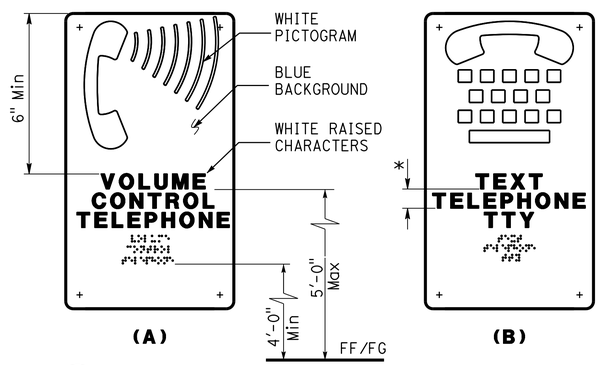

7 TELEPHONE SIGNS

Text may vary.
See plans or exterior elevations for sign locations and mounting heights.
* Line spacing must be 135% Min and 170% Max of character height.

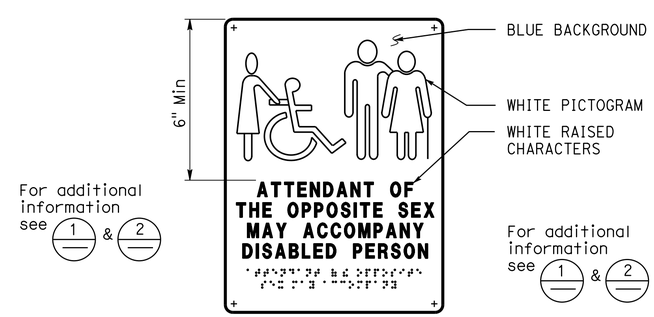

8 RESTROOM ACCOMPANY SIGN

See plans or elevations for locations.
See Detail 7 for sign mounting height and line spacing.

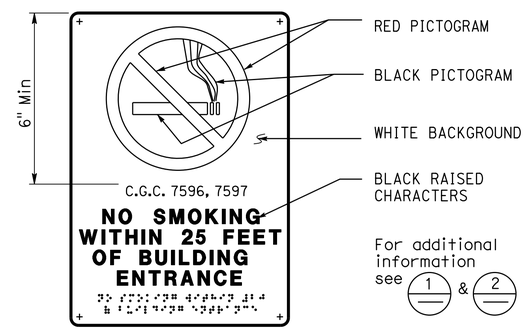

9 NO SMOKING SIGN

See plans or Ext elevations for locations.
See Detail 7 for sign mounting height and line spacing.

DETAILS

No scale unless otherwise noted

NOTE: SPECIFIC DETAILS OR NOTES ON OTHER SHEETS SHALL PREVAIL OVER STANDARD DETAILS AND NOTES ON THIS SHEET

STANDARD DRAWING
FILE NO. __-__-__ | DESIGN BY D. Alsey | CHECKED Y. A. Wang | APPROVED RE Travis
DRAWING DATE 04-16 | DETAILS BY D. Good | CHECKED Y. A. Wang | DESIGN SUPERVISOR
SUBMITTED BY Y.A. Wang

STATE OF CALIFORNIA DEPARTMENT OF TRANSPORTATION

DIVISION OF ENGINEERING SERVICES ARCHITECTURAL AND STRUCTURAL DESIGN

BRIDGE No. 540004R/L
POST MILE R107.3

C.V. KANE SAFETY ROADSIDE REST AREA REHABILITATION
ACCESSIBILITY — ACCESSIBILITY STANDARD DETAILS

SHEET A0-3.3

TAEMWW Imperial - CCSC Rev. 04/14

ORIGINAL SCALE IN INCHES FOR REDUCED PLANS 0 1 2 3

UNIT: 3600 CONTRACT No.: 08-0G8424
PROJECT NUMBER & PHASE: 08140001841

DISREGARD PRINTS BEARING EARLIER REVISION DATES → 09-05-14

REVISION DATES (PRELIMINARY STAGE ONLY) | SHEET X | OF X

30-AUG-2016 14:37

P:\dist_08\0814000184_cv_kane_sb_srra_upgrade\expedite\a0_03c.dgn

Dist	COUNTY	ROUTE	POST MILES TOTAL PROJECT	SHEET No.	TOTAL SHEETS
08	SBd	15	R107.3	96	263

LICENSED ARCHITECT — DATE 08-06-15

LICENSED ARCHITECT Y.A. WANG No. C14891 11-30-17 RENEWAL DATE STATE OF CALIFORNIA

06-13-16
PLANS APPROVAL DATE

The State of California or its officers or agents shall not be responsible for the accuracy or completeness of scanned copies of this plan sheet.

ACCESSIBILITY DESIGN APPROVAL DOT / DES / OTA
PROJECT ID 0814000184
Reviewed by: Y.A. WANG
Date: 05-27-16

OFFICE OF THE STATE FIRE MARSHAL APPROVED FIRE AND PANIC ONLY
Approval of this plan does not authorize or approve any omission or deviation from applicable regulations. Final approval is subject to field inspection. One set of approved plans shall be available on the project site at all times.
Reviewed by: INGRID P. ICASIANO
Approval date: 07-02-16
SFM No: 01-36-11-0066

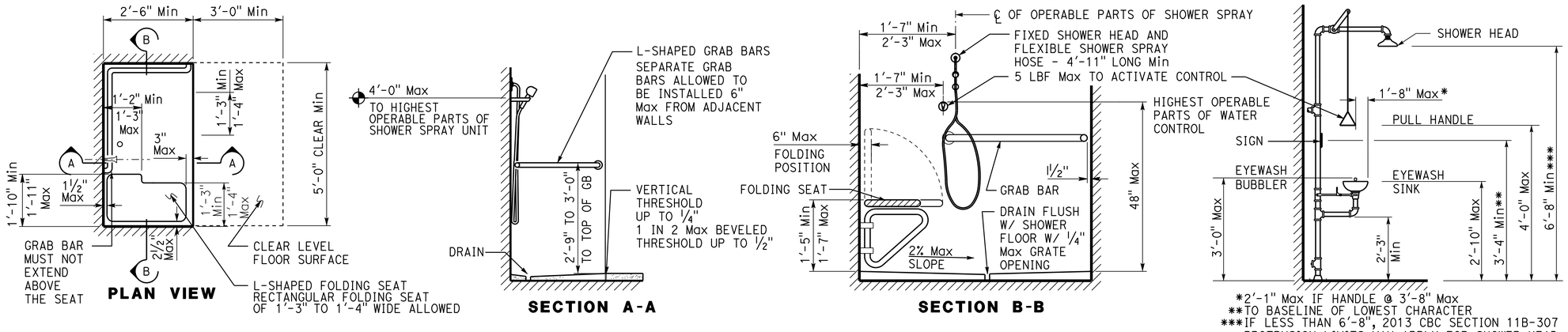

*2'-1" Max IF HANDLE @ 3'-8" Max
**TO BASELINE OF LOWEST CHARACTER
***IF LESS THAN 6'-8", 2013 CBC SECTION 11B-307 PROTRUSION LIMITS MAY APPLY FOR SHOWER HEAD.

1 SHOWER STALL

Additional standard shower head may be added to wall opposite shower seat. Locate water diverter per water control. Alternate shower stall allowed per CBC Figure 11B-608.2.3

Any soap dish must be on the control wall at 3'-4" Max above the shower floor and within reach limits from the seat.

2 EMERGENCY EYEWASH/ SHOWER

Foot pedal may be added to operate equipment

Provide Min 2'-6'' x 4'-0'' clear level area in front of and centered W/ fixture W/ 1'-5" to 1'-7" under fixture and Max 1.5% slope in all directions.

Grab bars or wing wall may be required. See Plans.

Sign must state "EMERGENCY EYEWASH/SHOWER" or similar and comply with 2013 CBC Section 11B-703.5.

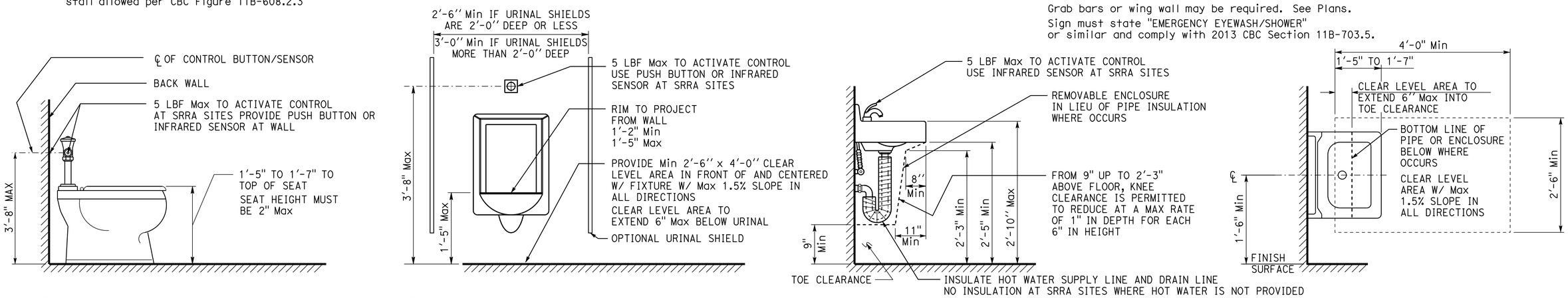

3 WATER CLOSET

See Specifications for fixture type

4 URINAL

5 LAVATORY

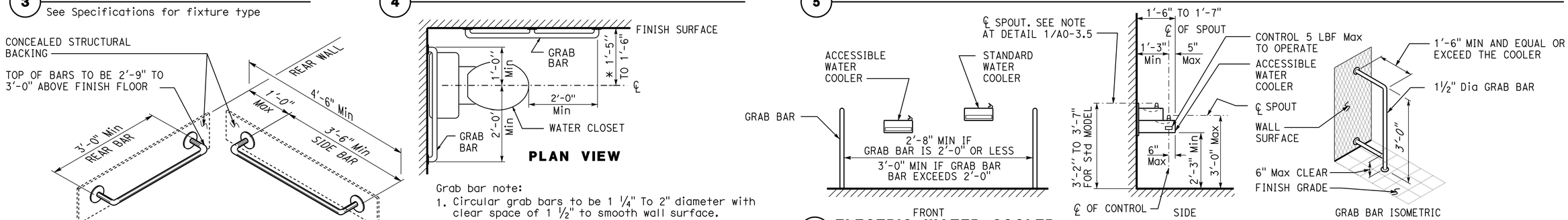

6 GRAB BARS/ WATER CLOSET

Grab bar note:
1. Circular grab bars to be 1 ¼" To 2" diameter with clear space of 1 ½" to smooth wall surface.
2. L-shaped grab bars allowed

* 1'-5" to 1'-7" at ambulatory accessible compartment.

7 ELECTRIC WATER COOLER

In lieu of grab bars, other types of wing walls may be used.

Provide Min 2'-6'' x 4'-0'' clear level area in front of and centered W/ low fixture W/ 1'-5" to 1'-7" under fixture and Max 1.5% slope in all directions.
See clear level area at detail 1/A0-3.5 for size and location.

DETAILS

No scale unless otherwise noted

NOTE: SPECIFIC DETAILS OR NOTES ON OTHER SHEETS SHALL PREVAIL OVER STANDARD DETAILS AND NOTES ON THIS SHEET

STANDARD DRAWING			
FILE NO. __-__-_	DESIGN BY D. Alsey	CHECKED Y. A. Wang	APPROVED R.E. Travis DESIGN SUPERVISOR
DRAWING DATE 08-15	DETAILS BY D. Good	CHECKED Y. A. Wang	
	SUBMITTED BY Y.A. Wang		

STATE OF CALIFORNIA DEPARTMENT OF TRANSPORTATION

DIVISION OF ENGINEERING SERVICES ARCHITECTURAL AND STRUCTURAL DESIGN

BRIDGE No. 540004R/L
POST MILE R107.3

C.V. KANE SAFETY ROADSIDE REST AREA REHABILITATION

ACCESSIBILITY — ACCESSIBILITY STANDARD DETAILS

SHEET A0-3.4

TAEMWW Imperial - CCSC Rev. 04/14

ORIGINAL SCALE IN INCHES FOR REDUCED PLANS 0 1 2 3

UNIT: 3600 CONTRACT No.: 08-0G8424
PROJECT NUMBER & PHASE: 08140001841

DISREGARD PRINTS BEARING EARLIER REVISION DATES → 09-05-14

REVISION DATES (PRELIMINARY STAGE ONLY) — SHEET X OF X

30-AUG-2016 14:37

P:\dist_08\0814000184_cv_kane_sb_srra_upgrade\expedite\a0_03d.dgn

Dist	COUNTY	ROUTE	POST MILES TOTAL PROJECT	SHEET No.	TOTAL SHEETS
08	SBd	15	R107.3	97	263

LICENSED ARCHITECT — DATE 08-28-15

LICENSED ARCHITECT Y.A. WANG No. C14891 11-30-17 RENEWAL DATE STATE OF CALIFORNIA

06-13-16
PLANS APPROVAL DATE

The State of California or its officers or agents shall not be responsible for the accuracy or completeness of scanned copies of this plan sheet.

ACCESSIBILITY DESIGN APPROVAL DOT / DES / OTA
PROJECT ID **0814000184**
Reviewed by: Y.A. WANG
Date: 05-27-16

OFFICE OF THE STATE FIRE MARSHAL APPROVED FIRE AND PANIC ONLY
Approval of this plan does not authorize or approve any omission or deviation from applicable regulations. Final approval is subject to field inspection. One set of approved plans shall be available on the project site at all times.
Reviewed by: INGRID P. ICASIANO
Approval date: 07-02-16
SFM No: 01-36-11-0066

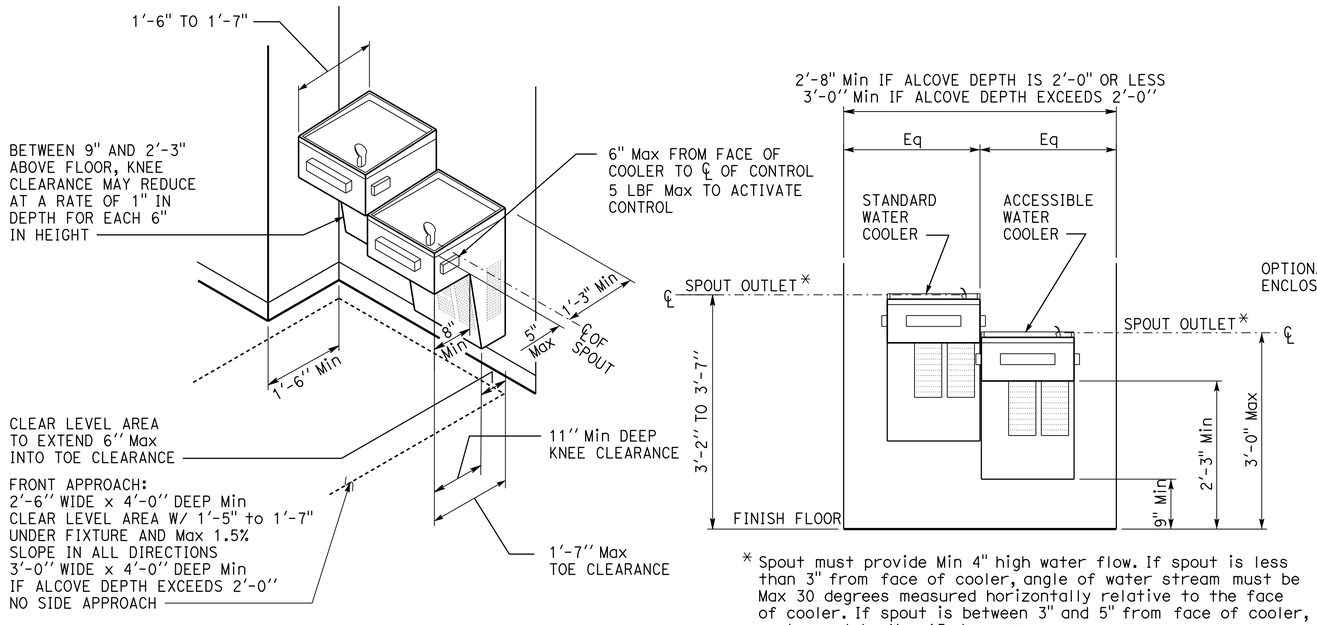

* Spout must provide Min 4" high water flow. If spout is less than 3" from face of cooler, angle of water stream must be Max 30 degrees measured horizontally relative to the face of cooler. If spout is between 3" and 5" from face of cooler, angle must be Max 15 degrees.

1 ELECTRIC WATER COOLER AT ALCOVE

Fixture type may vary.
Width of alcove may vary.
Two fixtures with separate mounting heights may be installed at separate locations.
Cooler may project 4" Max from alcove surface into any circulation path.

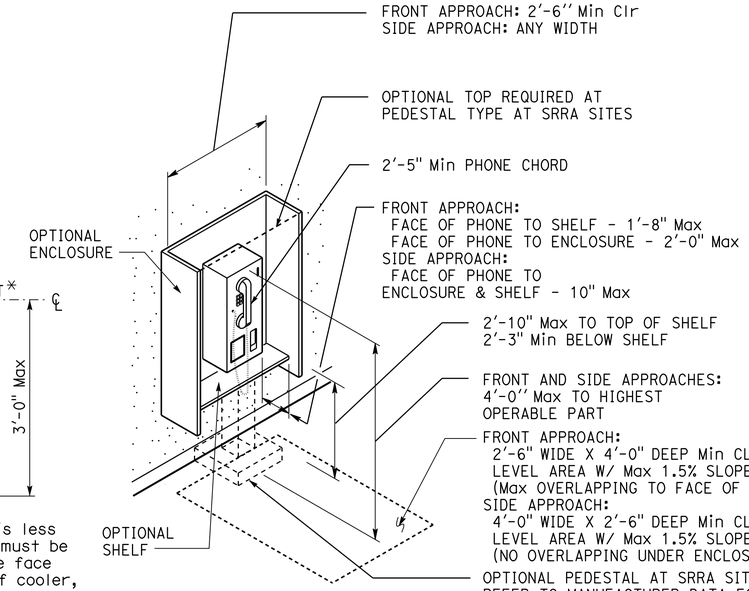

2 TELEPHONE

Notes:
1. Bench must be affixed to wall along long dimension or to floor, or provide back support 4'-0" L Min, extend from 2" Max above seat to 1'-6" Min above seat, and must be 2½" Max from rear edge of seat.
2. Bench seat surface must be slip resistant and must not accumulate water (E.G., 2% Max slope to drain) when installed in or adjacent to wet locations.

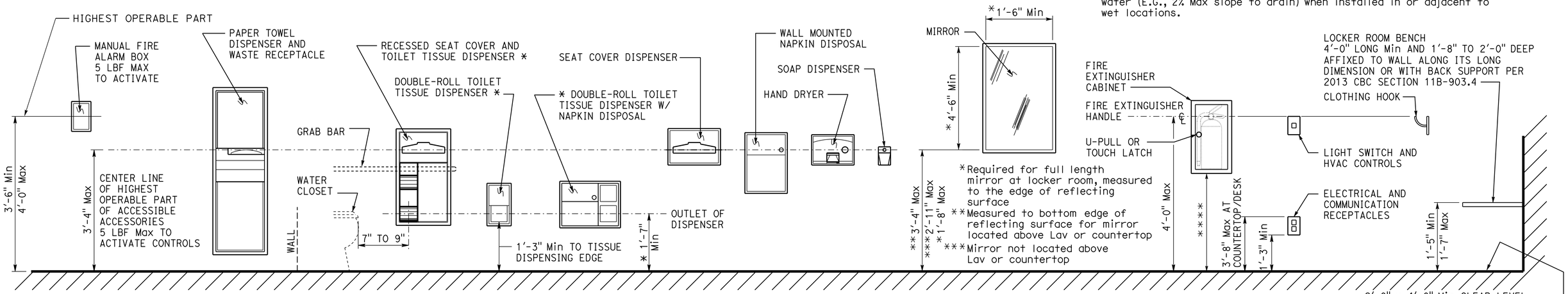

3 ACCESSORIES

DETAILS
No scale unless otherwise noted

NOTE: SPECIFIC DETAILS OR NOTES ON OTHER SHEETS SHALL PREVAIL OVER STANDARD DETAILS AND NOTES ON THIS SHEET

STANDARD DRAWING
FILE NO. __-__-_
DRAWING DATE 08-15
DESIGN BY D. Alsey CHECKED Y. A. Wang
DETAILS BY D. Good CHECKED Y. A. Wang
SUBMITTED BY Y.A. Wang
APPROVED R.E. Travis DESIGN SUPERVISOR

STATE OF CALIFORNIA DEPARTMENT OF TRANSPORTATION

DIVISION OF ENGINEERING SERVICES ARCHITECTURAL AND STRUCTURAL DESIGN

BRIDGE No. 540004R/L
POST MILE R107.3

C.V. KANE SAFETY ROADSIDE REST AREA REHABILITATION
ACCESSIBILITY — ACCESSIBILITY STANDARD DETAILS
SHEET A0-3.5

TAEMWW Imperial - CCSC Rev. 04/14

ORIGINAL SCALE IN INCHES FOR REDUCED PLANS 0 1 2 3

UNIT: 3600 CONTRACT No.: 08-0G8424
PROJECT NUMBER & PHASE: 08140001841

DISREGARD PRINTS BEARING EARLIER REVISION DATES 09-05-14

REVISION DATES (PRELIMINARY STAGE ONLY) SHEET X OF X

30-AUG-2016 14:37

P:\dist_08\0814000184_cv_kane_sb_srra_upgrade\expedite\a0_03e.dgn

ACCESSIBILITY DESIGN APPROVAL DOT / DES / OTA
PROJECT ID 0814000184
Reviewed by: Y.A. WANG
Date: 05-27-16

OFFICE OF THE STATE FIRE MARSHAL APPROVED FIRE AND PANIC ONLY
Approval of this plan does not authorize or approve any omission or deviation from applicable regulations. Final approval is subject to field inspection. One set of approved plans shall be available on the project site at all times.
Reviewed by: INGRID P. ICASIANO
Approval date: 07-02-16
SFM No: 01-36-11-0066

Dist	COUNTY	ROUTE	POST MILES TOTAL PROJECT	SHEET No.	TOTAL SHEETS
08	SBd	15	R107.3	98	263

11/20/15
LICENSED ARCHITECT DATE

06-13-16
PLANS APPROVAL DATE

LICENSED ARCHITECT Janusz Pietrzak No. C23915 01-31-2017 RENEWAL DATE STATE OF CALIFORNIA

The State of California or its officers or agents shall not be responsible for the accuracy or completeness of scanned copies of this plan sheet.

NOTES:
1. CMU SIZE IS 8" X 8" X 16", SEE STRUCTURAL SHEETS FOR MORE INFORMATION
2. FIRE EXTINGUISHER MUST BE 3A:40B:C

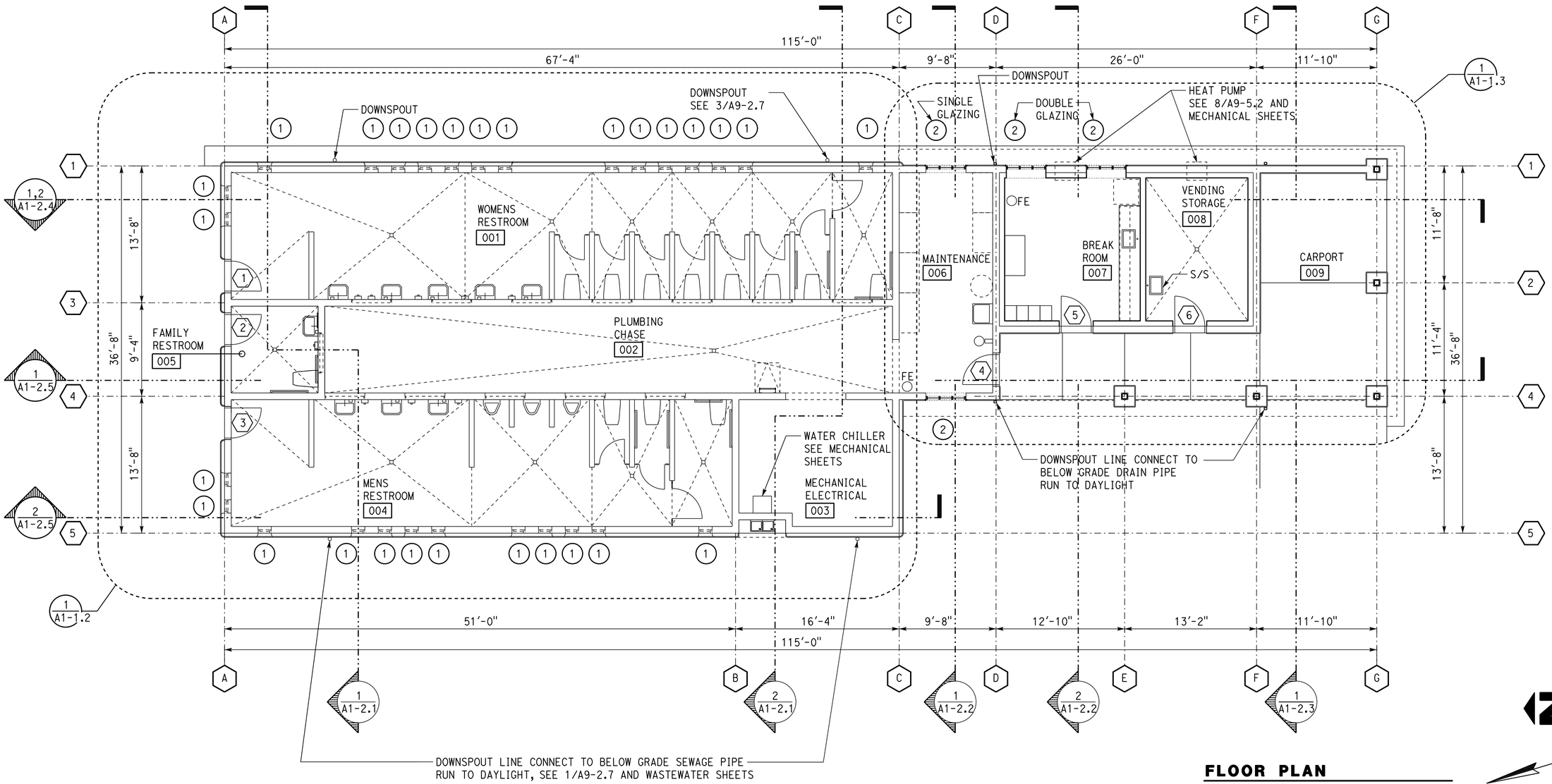

FLOOR PLAN

SCALE 3/16" = 1'-0"

DESIGN	BY Janusz Pietrzak	CHECKED Donald Alsey	
DETAILS	BY Robertino Quibin	CHECKED Donald Alsey	
QUANTITIES	BY	CHECKED	

STATE OF CALIFORNIA DEPARTMENT OF TRANSPORTATION

DIVISION OF ENGINEERING SERVICES ARCHITECTURAL AND STRUCTURAL DESIGN

BRIDGE No. 540004R/L
POST MILE R107.3

C.V. KANE SAFETY ROADSIDE REST AREA REHABILITATION
SOUTHBOUND COMFORT STATION A
FLOOR PLAN

SHEET A1-1.1

TAEMWW Imperial - CCSC Rev. 04/14

ORIGINAL SCALE IN INCHES FOR REDUCED PLANS 0 1 2 3

UNIT: 3600 CONTRACT No.: 08-0G8424
PROJECT NUMBER & PHASE: 08140001841

DISREGARD PRINTS BEARING EARLIER REVISION DATES

REVISION DATES (PRELIMINARY STAGE ONLY) SHEET OF

30-AUG-2016 14:37

P:\dist_08\0814000184_cv_kane_sb_srra_upgrade\expedite\a1-11.dgn

Dist	COUNTY	ROUTE	POST MILES TOTAL PROJECT	SHEET No.	TOTAL SHEETS
08	SBd	15	R107.3	99	263

LICENSED ARCHITECT — DATE 11/20/15

LICENSED ARCHITECT Janusz Pietrzak No. C23915 01-31-2017 RENEWAL DATE STATE OF CALIFORNIA

06-13-16
PLANS APPROVAL DATE

The State of California or its officers or agents shall not be responsible for the accuracy or completeness of scanned copies of this plan sheet.

ACCESSIBILITY DESIGN APPROVAL DOT / DES / OTA

PROJECT ID **0814000184**

Reviewed by: Y.A. WANG
Date: 05-27-16

OFFICE OF THE STATE FIRE MARSHAL APPROVED FIRE AND PANIC ONLY

Approval of this plan does not authorize or approve any omission or deviation from applicable regulations. Final approval is subject to field inspection. One set of approved plans shall be available on the project site at all times.

Reviewed by: INGRID P. ICASIANO
Approval date: 07-02-16
SFM No: 01-36-11-0066

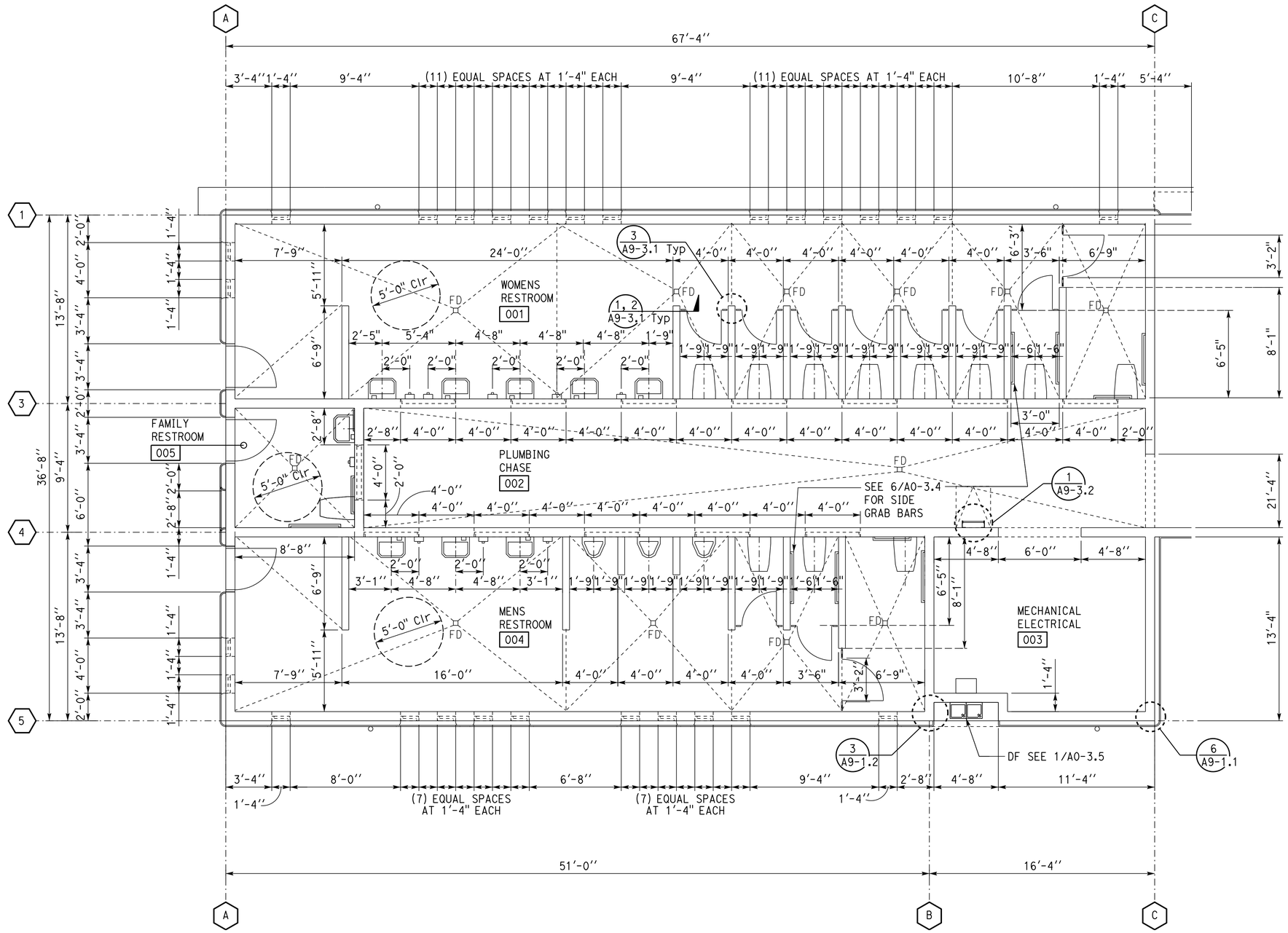

FOR CONTINUATION SEE A1-1.3

FOR CONTINUATION SEE A1-1.3

PLAN NORTH

PARTIAL FLOOR PLAN

SCALE 1/4" = 1'-0"

DESIGN	BY Janusz Pietrzak	CHECKED Donald Alsey	
DETAILS	BY Robertino Quibin	CHECKED Donald Alsey	
QUANTITIES	BY	CHECKED	

STATE OF CALIFORNIA
DEPARTMENT OF TRANSPORTATION

DIVISION OF ENGINEERING SERVICES
ARCHITECTURAL AND STRUCTURAL DESIGN

BRIDGE No. 540004R/L
POST MILE R107.3

C.V. KANE SAFETY ROADSIDE REST AREA REHABILITATION
SOUTHBOUND COMFORT STATION A
PARTIAL FLOOR PLAN

SHEET A1-1.2

TAEMWW Imperial - CCSC Rev. 04/14

ORIGINAL SCALE IN INCHES FOR REDUCED PLANS 0 1 2 3

UNIT: 3600 CONTRACT No.: 08-0G8424
PROJECT NUMBER & PHASE: 08140001841

DISREGARD PRINTS BEARING EARLIER REVISION DATES

REVISION DATES (PRELIMINARY STAGE ONLY) SHEET OF

30-AUG-2016 14:37

P:\dist_08\0814000184_cv_kane_sb_srra_upgrade\expedite\a1-12.dgn

Dist	COUNTY	ROUTE	POST MILES TOTAL PROJECT	SHEET No.	TOTAL SHEETS
08	SBd	15	R107.3	100	263

LICENSED ARCHITECT — DATE 11/20/15

LICENSED ARCHITECT Janusz Pietrzak No. C23915 01-31-2017 RENEWAL DATE STATE OF CALIFORNIA

06-13-16
PLANS APPROVAL DATE

The State of California or its officers or agents shall not be responsible for the accuracy or completeness of scanned copies of this plan sheet.

ACCESSIBILITY DESIGN APPROVAL DOT / DES / OTA
PROJECT ID **0814000184**
Reviewed by: Y.A. WANG
Date: 05-27-16

OFFICE OF THE STATE FIRE MARSHAL APPROVED FIRE AND PANIC ONLY
Approval of this plan does not authorize or approve any omission or deviation from applicable regulations. Final approval is subject to field inspection. One set of approved plans shall be available on the project site at all times.
Reviewed by: INGRID P. ICASIANO
Approval date: 07-02-16
SFM No: 01-36-11-0066

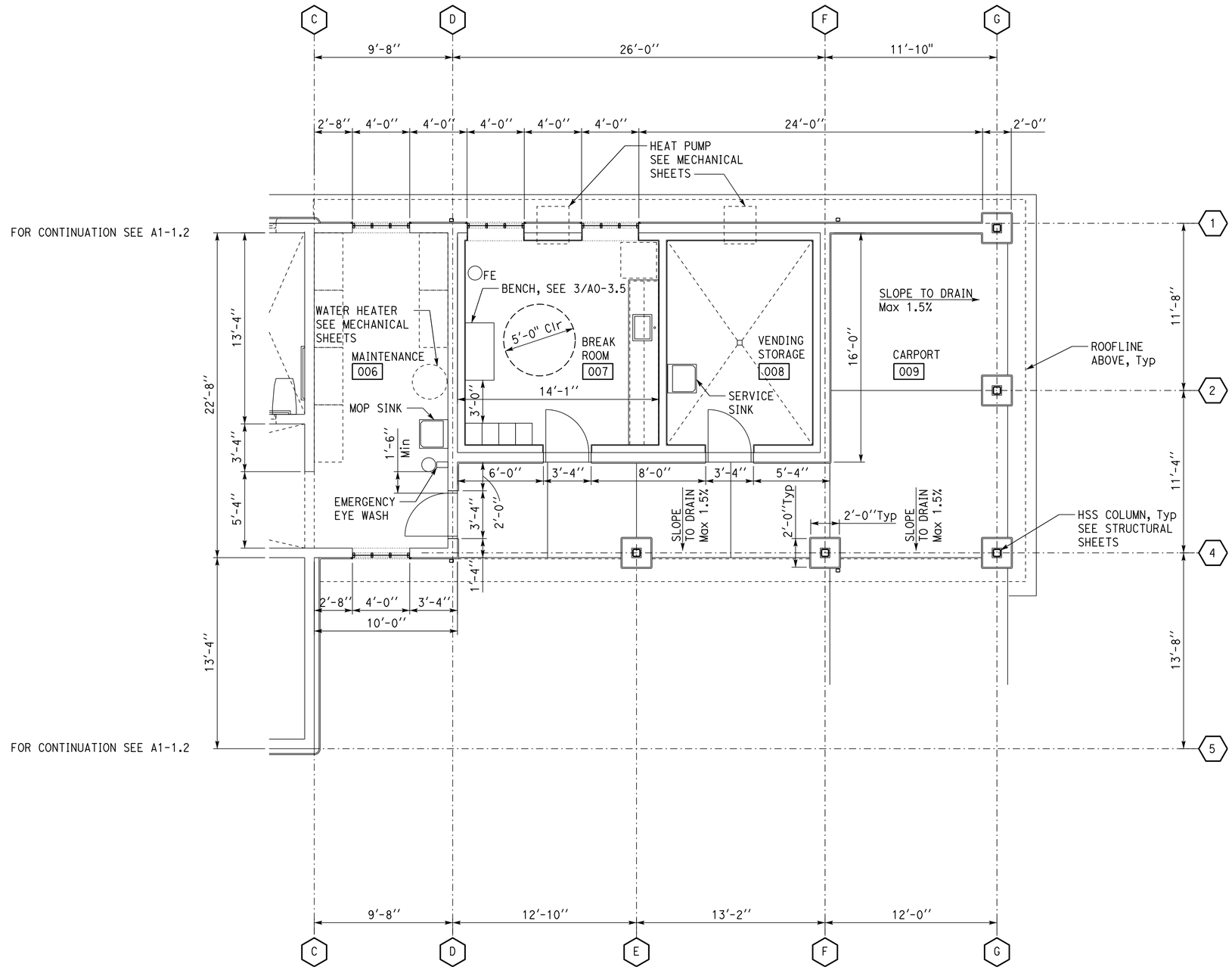

PLAN NORTH

PARTIAL FLOOR PLAN

SCALE 1/4" = 1'-0"

DESIGN	BY Janusz Pietrzak	CHECKED Donald Alsey	
DETAILS	BY Robertino Quibin	CHECKED Donald Alsey	
QUANTITIES	BY	CHECKED	

STATE OF CALIFORNIA
DEPARTMENT OF TRANSPORTATION

DIVISION OF ENGINEERING SERVICES
ARCHITECTURAL AND STRUCTURAL DESIGN

BRIDGE No. 540004R/L
POST MILE R107.3

C.V. KANE SAFETY ROADSIDE REST AREA REHABILITATION
SOUTHBOUND COMFORT STATION A
PARTIAL FLOOR PLAN

SHEET A1-1.3

TAEMWW Imperial - CCSC Rev. 04/14

ORIGINAL SCALE IN INCHES FOR REDUCED PLANS 0 1 2 3

UNIT: 3600 CONTRACT No.: 08-0G8424
PROJECT NUMBER & PHASE: 08140001841

DISREGARD PRINTS BEARING EARLIER REVISION DATES

REVISION DATES (PRELIMINARY STAGE ONLY) SHEET OF

30-AUG-2016 14:37

P:\dist_08\0814000184_cv_kane_sb_srra_upgrade\expedite\a1-13.dgn