IM-010-3(106)111E

Dist	COUNTY	ROUTE	POST MILES TOTAL PROJECT	SHEET No.	TOTAL SHEETS
08	Riv	10	R24.0/R24.3	1	55

STATE OF CALIFORNIA
DEPARTMENT OF TRANSPORTATION

PROJECT PLANS FOR CONSTRUCTION ON
STATE HIGHWAY
IN RIVERSIDE COUNTY
NEAR CABAZON
FROM 4.8 MILES EAST OF MAIN STREET
TO 1.0 MILE WEST OF ROUTE 10/111 SEPARATION

TO BE SUPPLEMENTED BY STANDARD PLANS DATED MAY 2006

INDEX OF PLANS

SHEET No.	DESCRIPTION
1	TITLE AND LOCATION MAP
2	TYPICAL CROSS SECTIONS
3-5	LAYOUTS
6-7	DRAINAGE PLANS, PROFILES, DETAILS AND QUANTITIES
8	UTILITY PLANS
9-11	STAGE CONSTRUCTION PLANS
12-14	TRAFFIC HANDLING PLANS
15	CONSTRUCTION AREA SIGNS
16-17	PAVEMENT DELINEATION PLANS, DETAILS AND QUANTITIES
18-19	SUMMARY OF QUANTITIES
20-34	REVISED AND NEW STANDARD PLANS

STRUCTURE PLANS

35-43	WEST CHANNEL STUBBY WASH (WIDEN) Br No. 56-0167L
44-55	EAST CHANNEL STUBBY WASH (WIDEN) Br No. 56-0168L

THE STANDARD PLANS LIST APPLICABLE TO THIS CONTRACT IS INCLUDED IN THE NOTICE TO BIDDERS AND SPECIAL PROVISIONS BOOK.

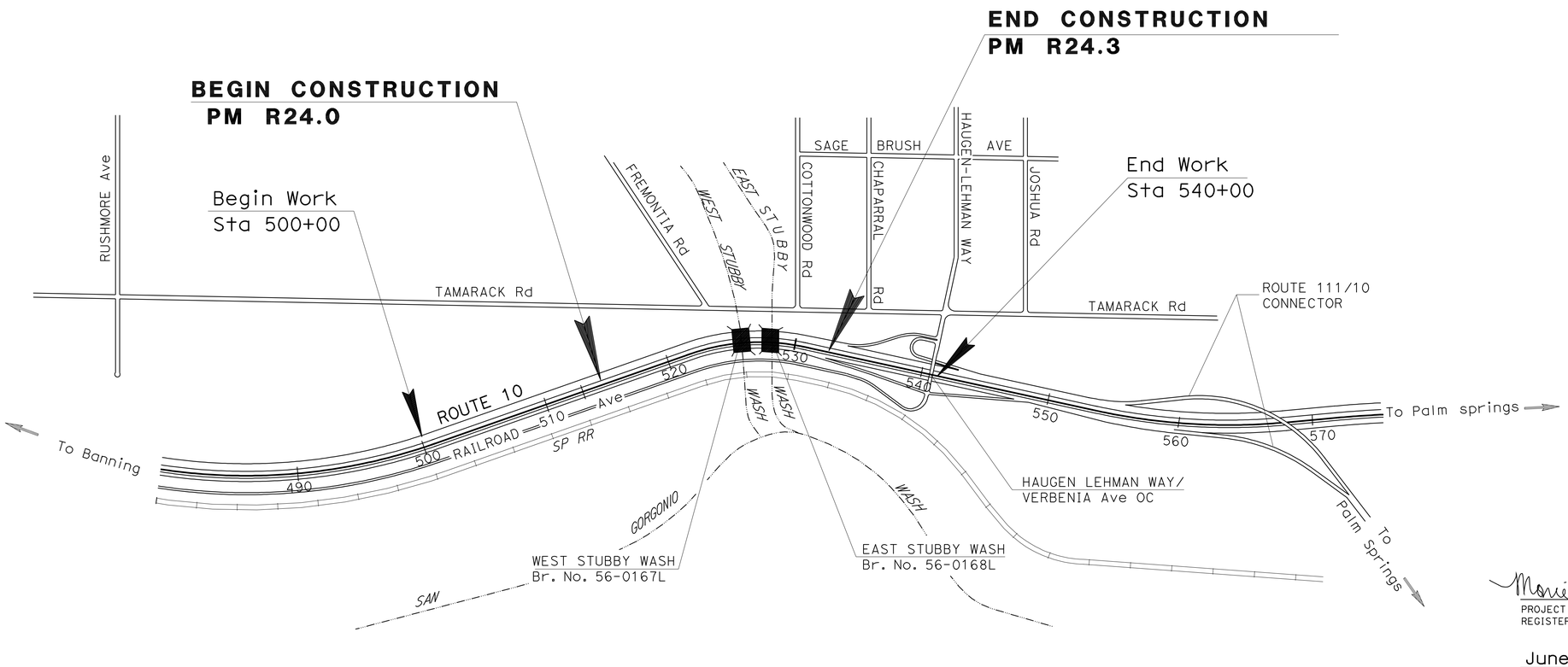

NO SCALE

THE CONTRACTOR SHALL POSSESS THE CLASS (OR CLASSES) OF LICENSE AS SPECIFIED IN THE "NOTICE TO BIDDERS."

PROJECT MANAGER: MOHAMAD MOLLAZADEZ

DESIGN ENGINEER: MONIE KEO

PROJECT ENGINEER REGISTERED CIVIL ENGINEER — DATE: 5-10-11

REGISTERED PROFESSIONAL ENGINEER — MONIE S. KEO — No. C65498 — Exp. 9-30-11 — CIVIL — STATE OF CALIFORNIA

June 6, 2011
PLANS APPROVAL DATE

THE STATE OF CALIFORNIA OR ITS OFFICERS OR AGENTS SHALL NOT BE RESPONSIBLE FOR THE ACCURACY OR COMPLETENESS OF SCANNED COPIES OF THIS PLAN SHEET.

CONTRACT No.	08-0E4104
PROJECT ID	0800000082

LAST REVISION 05-09-11 — DATE PLOTTED => 21-SEP-2011 — TIME PLOTTED => 07:54

Dist	COUNTY	ROUTE	POST MILES TOTAL PROJECT	SHEET No.	TOTAL SHEETS
08	Riv	10	R24.0/R24.3	2	55

REGISTERED CIVIL ENGINEER 5-10-11 DATE

6-6-11
PLANS APPROVAL DATE

REGISTERED PROFESSIONAL ENGINEER MONIE S. KEO No. C65498 Exp. 9-30-11 CIVIL STATE OF CALIFORNIA

THE STATE OF CALIFORNIA OR ITS OFFICERS OR AGENTS SHALL NOT BE RESPONSIBLE FOR THE ACCURACY OR COMPLETENESS OF SCANNED COPIES OF THIS PLAN SHEET.

NOTES:

1. DIMENSIONS OF THE STRUCTURAL SECTIONS ARE SUBJECT TO TOLERANCES SPECIFIED IN THE STANDARD SPECIFICATIONS.
2. SEE LAYOUT PLANS AND QUANTITY SHEETS FOR LOCATIONS, TYPE AND LENGTH OF HMA DIKE AND MBGR.

DESIGN DESIGNATION (ROUTE 10)

		YR 2009	YR 2030
ADT	=	86,500	129,400
DHV	=	9,200	12,000
T	=	19%	18%
V	=	65MPH	

TI	MAINLINE	SHOULDER	MAINLINE	SHOULDER
10 YR	12.0	7.5	14.5	9.0
20 YR	13.5	8.5	16.0	10.0

ESAL	MAINLINE	SHOULDER	MAINLINE	SHOULDER
10 YR	12,241,009	244,820	48,964,034	979,281
20 YR	31,945,738	638,915	127,782,950	2,555,659

STRUCTURAL SECTIONS

1. 0.50' HMA (TYPE A)
   0.65' CLASS 2 AB
2. Exist Shoulder
   0.17'-0.25' AC TYPE B
   0.50' CLASS 1 AS
3. Exist Pavement
   0.75' PCC
   0.33' CLASS B CTB
   0.50' CLASS 1 AS
4. Exist Pavement
   0.67' CLASS B PCC
   0.33' CLASS B CTB
   0.58' CLASS 1 AS
5. Exist Pavement
   0.25' AC TYPE B
   0.50' CLASS 2 AB
6. COLD PLANE 0.25'
   OVERLAY 0.25' HMA (TYPE A)

* MATCH EXISTING CROSS SLOPE

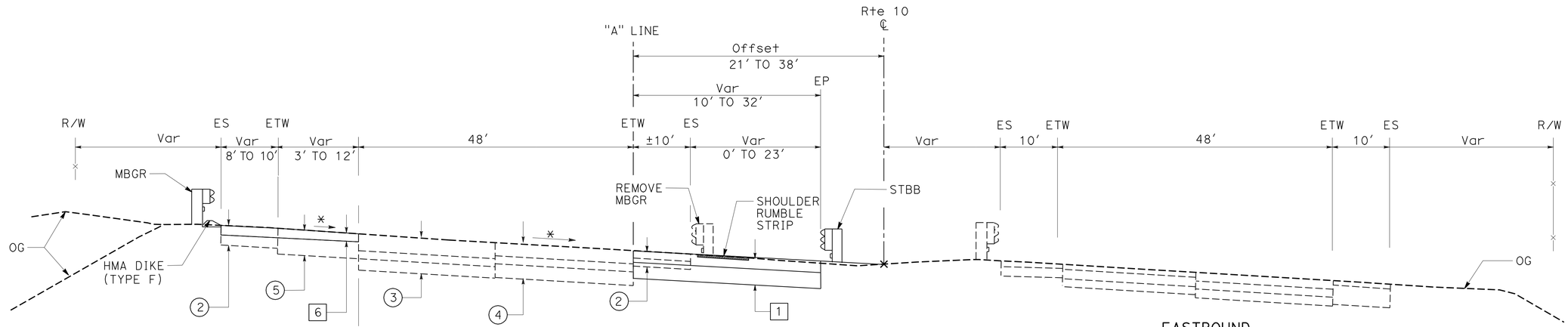

"A" Sta 526+83.40 TO "A" Sta 531+41.50

WESTBOUND

"A" Sta 526+60.11 TO "A" Sta 532+31.41

EASTBOUND

ROUTE 10

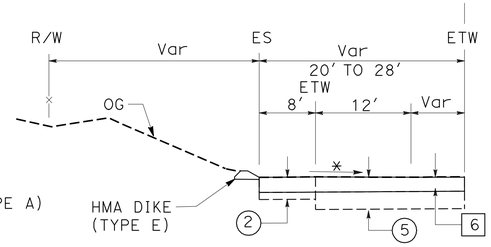

"A" Sta 531+41.50 TO "A" Sta 532+31.41

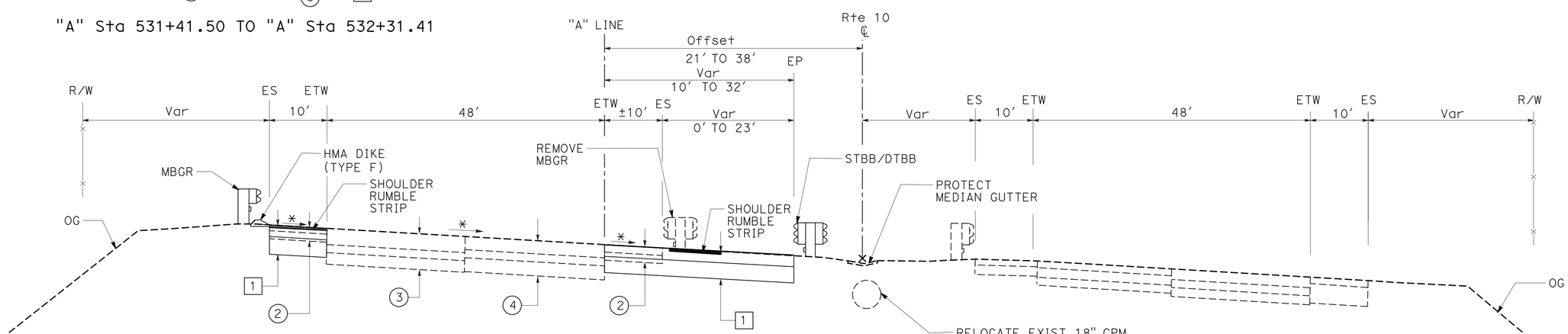

"A" Sta 519+00.00 TO "A" Sta 523+46.06
"A" Sta 524+44.35 TO "A" Sta 525+60.90

WESTBOUND

"A" Sta 517+00.00 TO "A" Sta 523+75.25
"A" Sta 524+14.14 TO "A" Sta 525+01.99

EASTBOUND

ROUTE 10

TYPICAL CROSS SECTIONS

NO SCALE

X-1

STATE OF CALIFORNIA - DEPARTMENT OF TRANSPORTATION
Caltrans® DESIGN

FUNCTIONAL SUPERVISOR: BEN AMIRI
CALCULATED-DESIGNED BY: MONIE KEO
CHECKED BY: BEN AMIRI
REVISED BY / DATE REVISED

LAST REVISION 05-09-11
DATE PLOTTED => 10-JUN-2011
TIME PLOTTED => 06:26

Dist	COUNTY	ROUTE	POST MILES TOTAL PROJECT	SHEET No.	TOTAL SHEETS
08	Riv	10	R24.0/R24.3	3	55

REGISTERED CIVIL ENGINEER 5-10-11 DATE

6-6-11
PLANS APPROVAL DATE

REGISTERED PROFESSIONAL ENGINEER MONIE S. KEO No. C65498 Exp. 9-30-11 CIVIL STATE OF CALIFORNIA

THE STATE OF CALIFORNIA OR ITS OFFICERS OR AGENTS SHALL NOT BE RESPONSIBLE FOR THE ACCURACY OR COMPLETENESS OF SCANNED COPIES OF THIS PLAN SHEET.

NOTES:

1. FOR COMPLETE RIGHT OF WAY, SEE RIGHT OF WAY RECORD MAPS IN DISTRICT OFFICE.
2. FOR DETAILS NOT SHOWN, SEE CONSTRUCTION DETAILS.

LEGEND:

- RECONSTRUCT SHOULDER
- COLD PLANE AND HMA OVERLAY
- ROADWAY "DETOUR" WIDENING
- STRUCTURE WORK (WIDENING, DECK REPLACMENT, DECK TREATMENT) (SEE STRUCTURE PLANS)
- PROTECT EXISTING VEGETATION AND TREES
- DIRECTION OF TRAFFIC

ABBREVIATIONS:

TR(WB) - TRANSITION RAILING (TYPE WB)

TR(STB) - TRANSITION RAILING (TYPE STB)

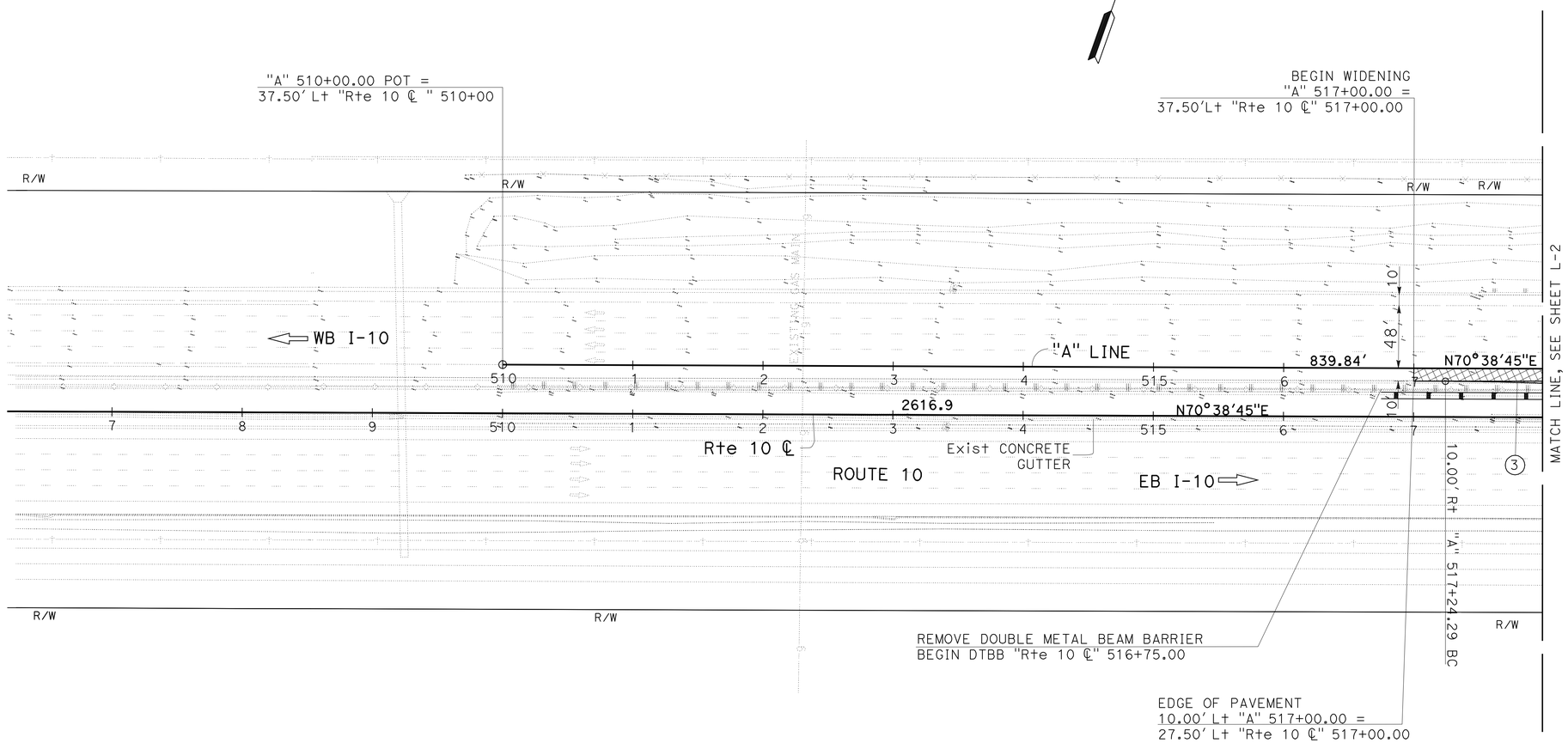

CURVE DATA

No.	R	Δ	T	L
3	2317.77'	14°18'41"	290.98'	578.94'

LAYOUT

SCALE: 1" = 50' **L-1**

STATE OF CALIFORNIA - DEPARTMENT OF TRANSPORTATION
Caltrans
DESIGN

FUNCTIONAL SUPERVISOR: BEN AMIRI
CALCULATED-DESIGNED BY: MONIE KEO
CHECKED BY: BEN AMIRI
REVISED BY
DATE REVISED

LAST REVISION 05-09-11
DATE PLOTTED => 10-JUN-2011
TIME PLOTTED => 09:54

Dist	COUNTY	ROUTE	POST MILES TOTAL PROJECT	SHEET No.	TOTAL SHEETS
08	Riv	10	R24.0/R24.3	4	55

REGISTERED CIVIL ENGINEER 5-23-11 DATE

6-6-11
PLANS APPROVAL DATE

REGISTERED PROFESSIONAL ENGINEER MONIE S. KEO No. C65498 Exp. 9-30-11 CIVIL STATE OF CALIFORNIA

THE STATE OF CALIFORNIA OR ITS OFFICERS OR AGENTS SHALL NOT BE RESPONSIBLE FOR THE ACCURACY OR COMPLETENESS OF SCANNED COPIES OF THIS PLAN SHEET.

NOTE:

FOR COMPLETE RIGHT OF WAY, SEE RIGHT OF WAY RECORD MAPS IN DISTRICT OFFICE.

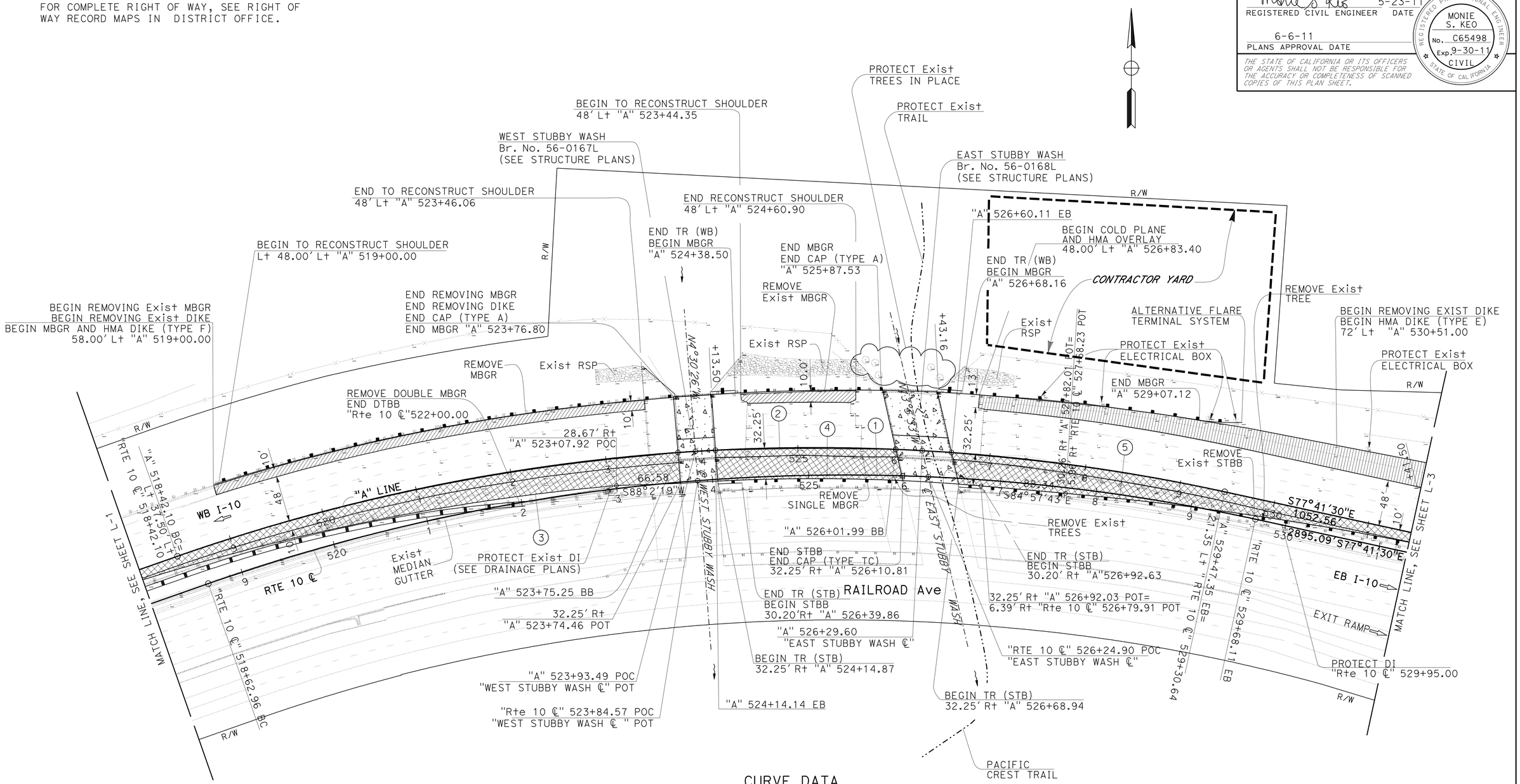

CURVE DATA

No.	R	Δ	T	L
1	1999.86'	31°39'44"	567.08'	1105.15'
2	2000.00'	31°39'46"	567.13'	1105.24'
3	2317.77'	14°18'41"	290.98'	578.94'
4	1967.75'	8°26'35"	145.25'	289.98'
5	3365.20'	7°50'12"	230.50'	460.28'

LAYOUT

SCALE: 1" = 50'

L-2

REVISED BY | DATE REVISED
MONIE KEO | BEN AMIRI
CALCULATED-DESIGNED BY | CHECKED BY
FUNCTIONAL SUPERVISOR: BEN AMIRI

STATE OF CALIFORNIA - DEPARTMENT OF TRANSPORTATION
Caltrans
DESIGN

LAST REVISION 05-20-11 | DATE PLOTTED => 10-JUN-2011 | TIME PLOTTED => 05:54

Dist	COUNTY	ROUTE	POST MILES TOTAL PROJECT	SHEET No.	TOTAL SHEETS
08	Riv	10	R24.0/R24.3	5	55

REGISTERED CIVIL ENGINEER 5-10-11 DATE

6-6-11
PLANS APPROVAL DATE

REGISTERED PROFESSIONAL ENGINEER MONIE S. KEO No. C65498 Exp. 9-30-11 CIVIL STATE OF CALIFORNIA

THE STATE OF CALIFORNIA OR ITS OFFICERS OR AGENTS SHALL NOT BE RESPONSIBLE FOR THE ACCURACY OR COMPLETENESS OF SCANNED COPIES OF THIS PLAN SHEET.

NOTE:

FOR COMPLETE RIGHT OF WAY, SEE RIGHT OF WAY RECORD MAPS IN DISTRICT OFFICE.

CURVE DATA

No.	R	Δ	T	L
5	3365.20′	7°50′12″	230.50′	460.28′

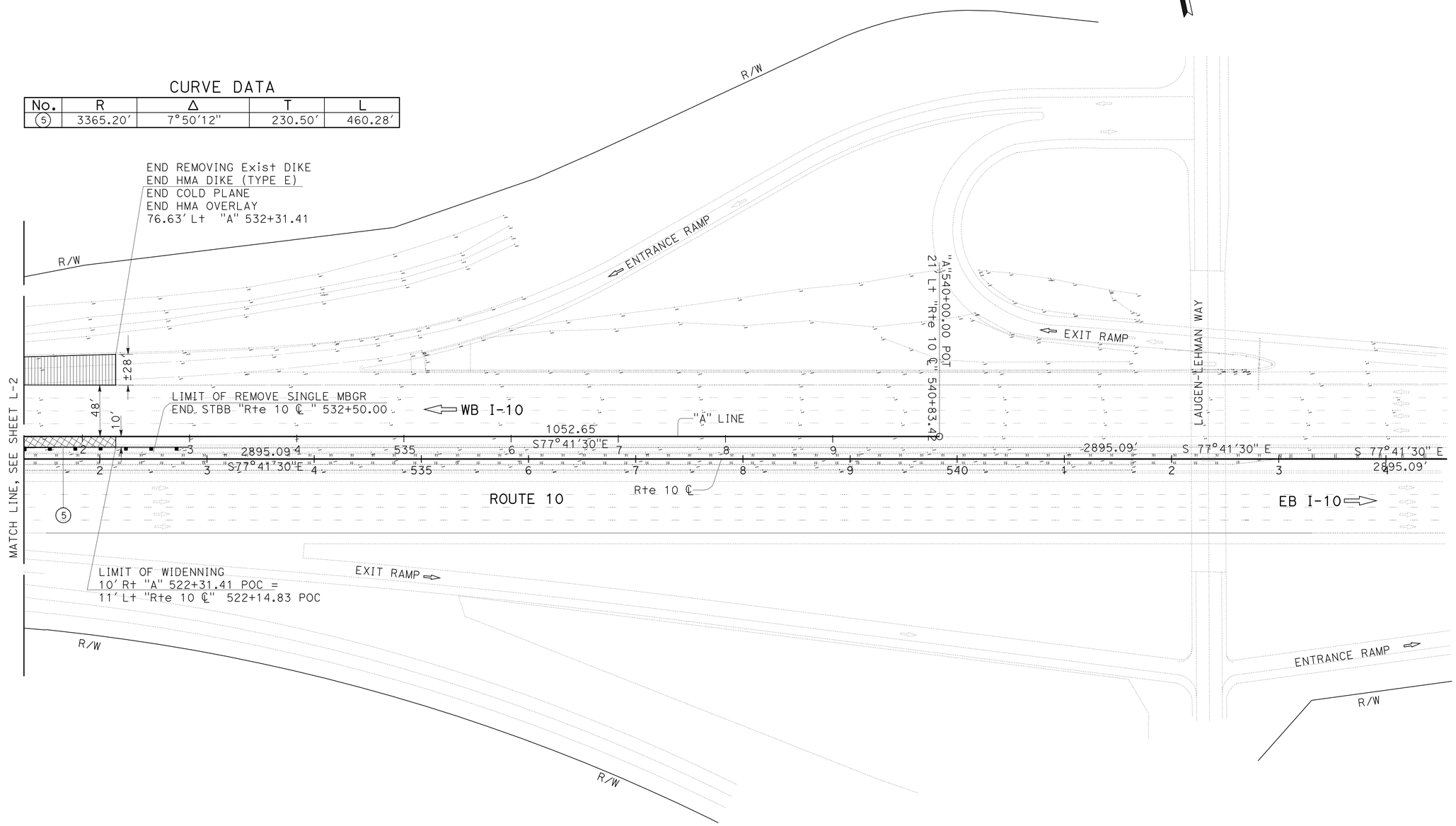

LAYOUT

SCALE: 1" = 50′ **L-3**

STATE OF CALIFORNIA - DEPARTMENT OF TRANSPORTATION

Caltrans® **DESIGN**

FUNCTIONAL SUPERVISOR: BEN AMIRI

CALCULATED-DESIGNED BY: MONIE KEO

CHECKED BY: BEN AMIRI

REVISED BY

DATE REVISED

LAST REVISION 05-09-11 | DATE PLOTTED => 10-JUN-2011 | TIME PLOTTED => 05:54

Dist	COUNTY	ROUTE	POST MILES TOTAL PROJECT	SHEET No.	TOTAL SHEETS
08	Riv	10	R24.0/R24.3	6	55

REGISTERED CIVIL ENGINEER 5-10-11 DATE

6-6-11
PLANS APPROVAL DATE

REGISTERED PROFESSIONAL ENGINEER MONIE S. KEO No. C65498 Exp. 9-30-11 CIVIL STATE OF CALIFORNIA

THE STATE OF CALIFORNIA OR ITS OFFICERS OR AGENTS SHALL NOT BE RESPONSIBLE FOR THE ACCURACY OR COMPLETENESS OF SCANNED COPIES OF THIS PLAN SHEET.

NOTE:

FOR COMPLETE RIGHT OF WAY, SEE RIGHT OF WAY RECORD MAPS IN DISTRICT OFFICE.

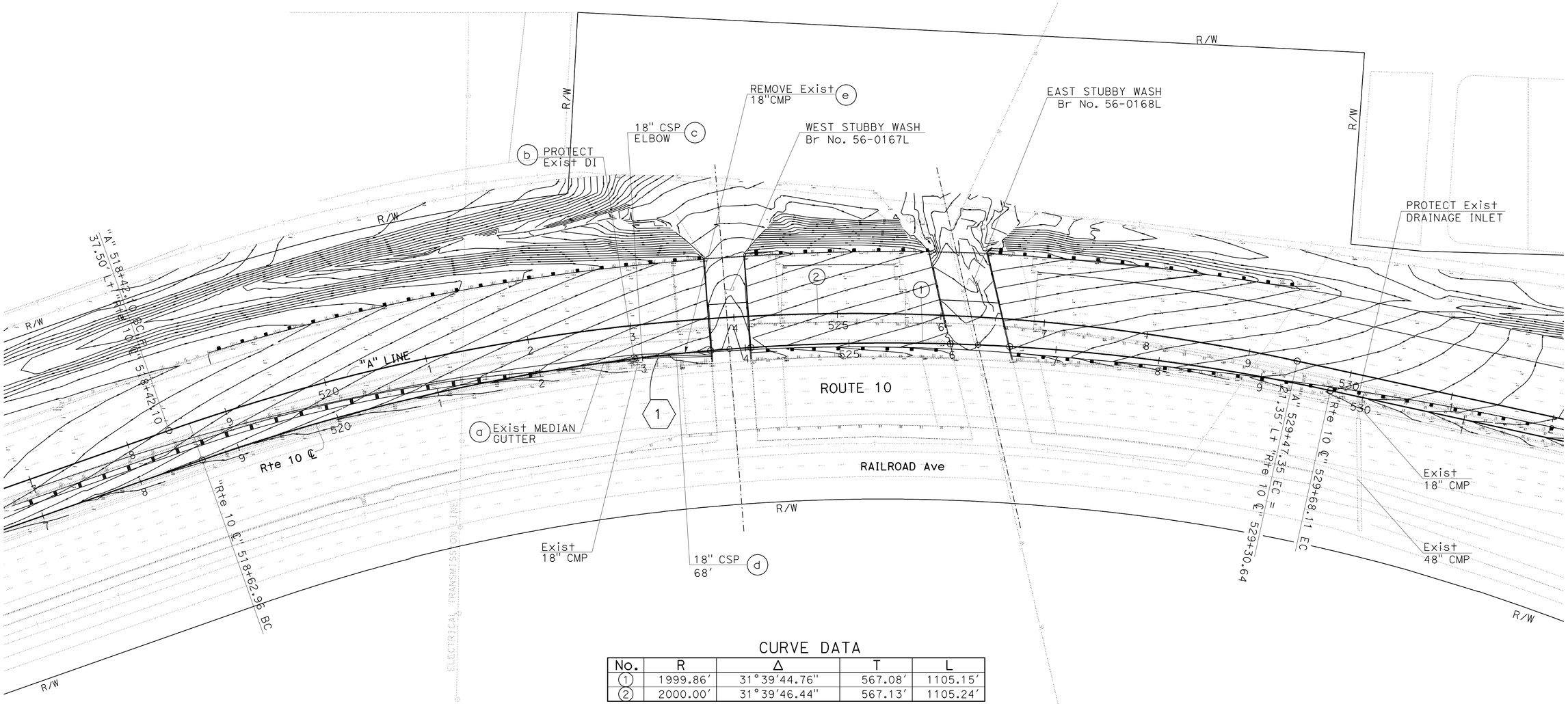

CURVE DATA

No.	R	Δ	T	L
1	1999.86′	31°39′44.76"	567.08′	1105.15′
2	2000.00′	31°39′46.44"	567.13′	1105.24′

THIS PLAN ACCURATE FOR DRAINAGE AND CONTOUR WORK ONLY

DRAINAGE AND CONTOUR GRADING PLAN

SCALE: 1" = 50′

D-1

STATE OF CALIFORNIA - DEPARTMENT OF TRANSPORTATION

Caltrans

DESIGN

FUNCTIONAL SUPERVISOR BEN AMIRI

CALCULATED-DESIGNED BY MONIE KEO

CHECKED BY BEN AMIRI

REVISED BY

DATE REVISED

LAST REVISION 05-09-11

DATE PLOTTED => 10-JUN-2011
TIME PLOTTED => 05:54

Dist	COUNTY	ROUTE	POST MILES TOTAL PROJECT	SHEET No.	TOTAL SHEETS
08	Riv	10	R24.0/R24.3	7	55

REGISTERED CIVIL ENGINEER 5-10-11 DATE

6-6-11
PLANS APPROVAL DATE

REGISTERED PROFESSIONAL ENGINEER MONIE S. KEO No. C65498 Exp. 9-30-11 CIVIL STATE OF CALIFORNIA

THE STATE OF CALIFORNIA OR ITS OFFICERS OR AGENTS SHALL NOT BE RESPONSIBLE FOR THE ACCURACY OR COMPLETENESS OF SCANNED COPIES OF THIS PLAN SHEET.

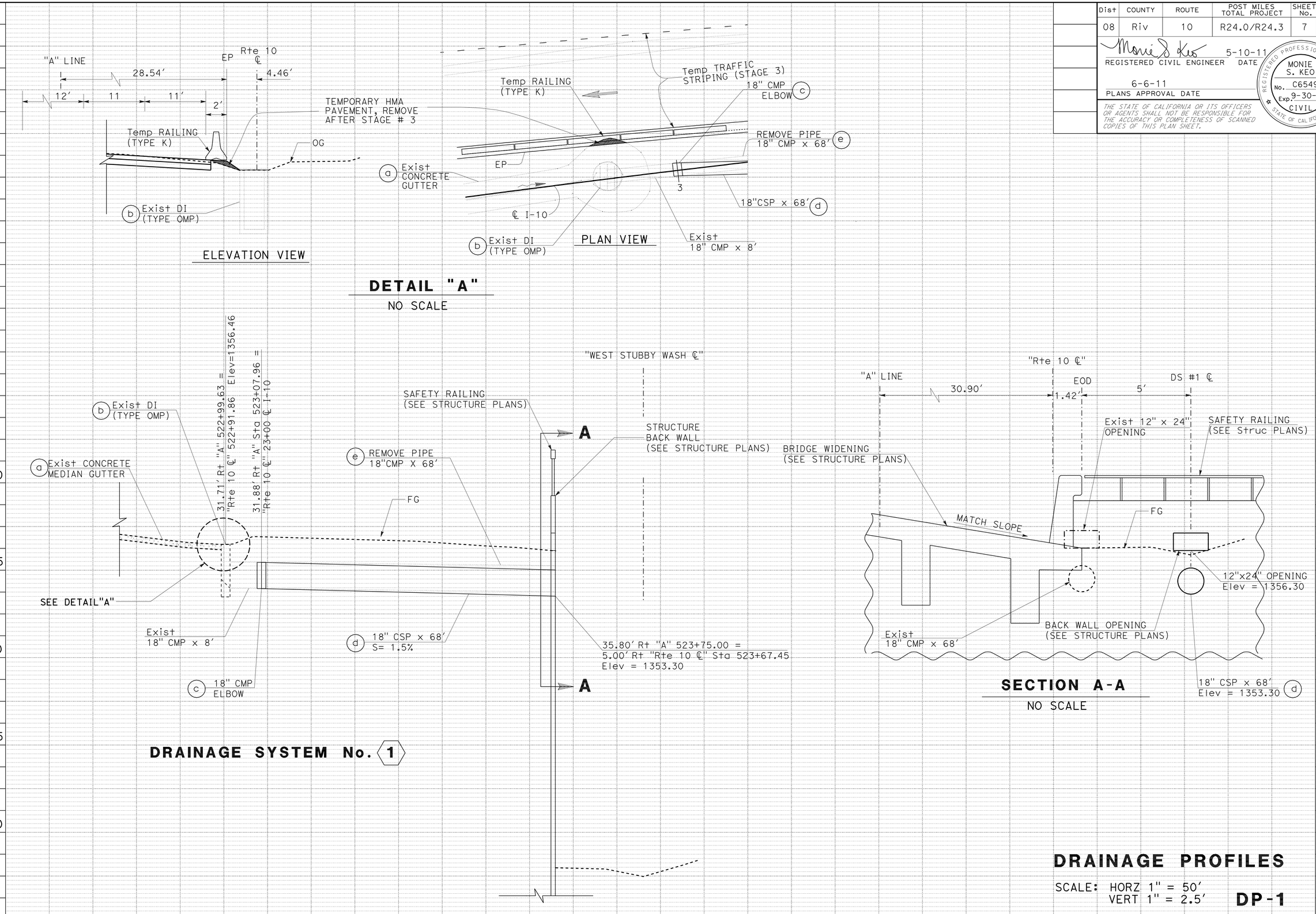

STATE OF CALIFORNIA - DEPARTMENT OF TRANSPORTATION
Caltrans
DESIGN

FUNCTIONAL SUPERVISOR: BEN AMIRI
CALCULATED-DESIGNED BY: MONIE KEO
CHECKED BY: BEN AMIRI
REVISED BY
DATE REVISED

LAST REVISION 05-09-11
DATE PLOTTED => 10-JUN-2011
TIME PLOTTED => 05:54

Dist	COUNTY	ROUTE	POST MILES TOTAL PROJECT	SHEET No.	TOTAL SHEETS
08	Riv	10	R24.0/R24.3	8	55

REGISTERED CIVIL ENGINEER 5-10-11 DATE

6-6-11
PLANS APPROVAL DATE

REGISTERED PROFESSIONAL ENGINEER MONIE S. KEO No. C65498 Exp. 9-30-11 CIVIL STATE OF CALIFORNIA

THE STATE OF CALIFORNIA OR ITS OFFICERS OR AGENTS SHALL NOT BE RESPONSIBLE FOR THE ACCURACY OR COMPLETENESS OF SCANNED COPIES OF THIS PLAN SHEET.

NOTES:

1. FOR ACCURATE RIGHT OF WAY DATA, CONTACT RIGHT OF WAY ENGINEERING AT THE DISTRICT OFFICE.
2. LOCATIONS OF UTILITY FACILITY SHOWN ON THESE PLANS ARE APPROXIMATE AND SHALL BE VERIFIED BY THE CONTRACTORS PRIOR TO CONSTRUCTION.

LEGEND:

- RECONSTRUCT PAVEMENT/SHOULDER
- COLD PLANE AND OVERLAY
- DECK REPLACEMENT AND BRIDGE WIDENING
- DETOUR WIDENING
- L# LOCATION OF UNDERGROUND UTILITY WITH EXISTING KNOWN DEPTH

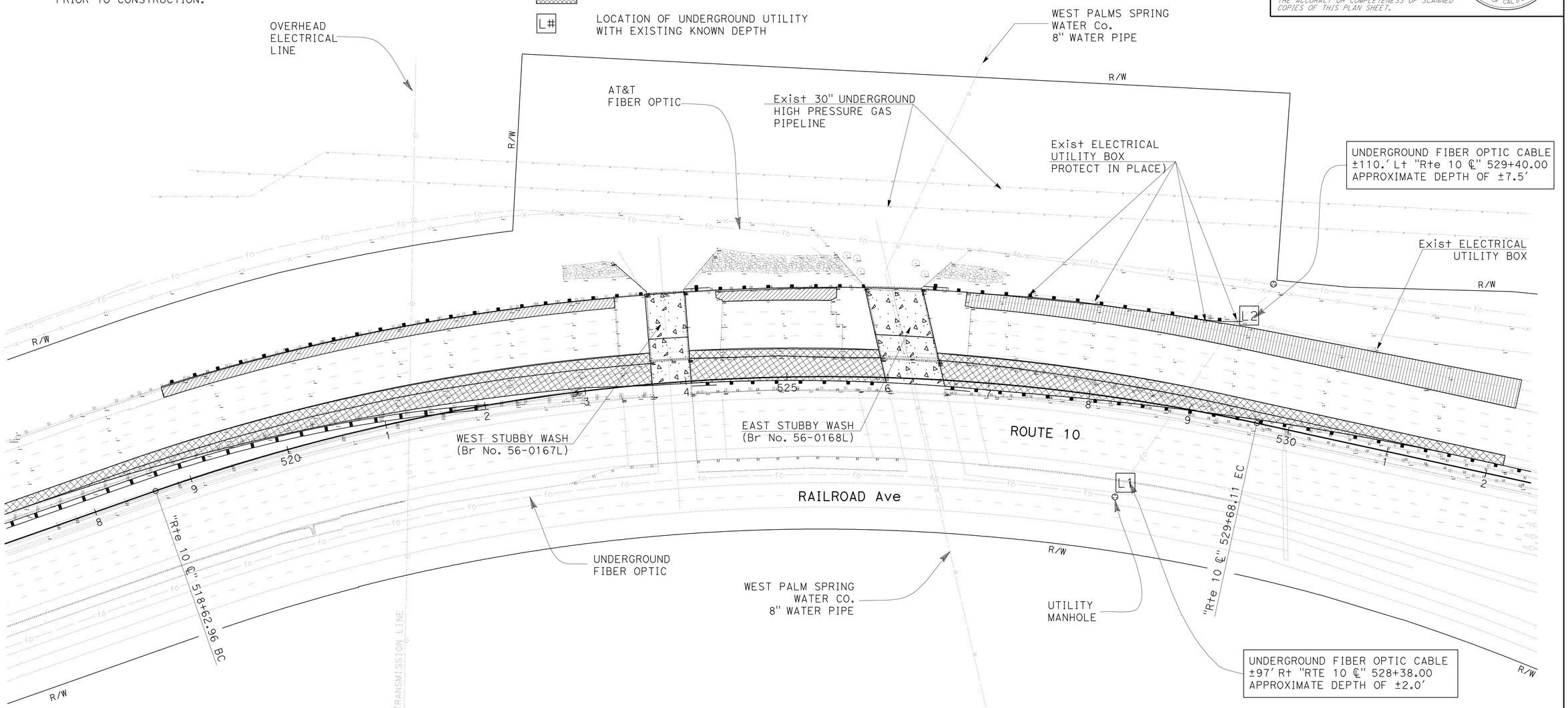

APPROXIMATE DEPTH OF EXISTING LOCATIONS OF UTILITY POTHOLING

No.	UTILITY	OFFSET DISTANCE FROM ℄ I-10	STATION	DEPTH (FT)
L1	FIBER OPTIC CABLE (GTE & SPRINT)	±97.0' RIGHT	528+38	±2.0
L2	FIBER OPTIC CABLE (GTE & SPRINT)	±110.0' LEFT	529+40	±7.5

THIS PLAN IS ACCURATE FOR UTILITY WORK ONLY

UTILITY PLAN

SCALE: 1" = 50'

U-1

STATE OF CALIFORNIA - DEPARTMENT OF TRANSPORTATION
Caltrans DESIGN

FUNCTIONAL SUPERVISOR: BEN AMIRI
CALCULATED-DESIGNED BY: MONIE KEO
CHECKED BY: BEN AMIRI
REVISED BY
DATE REVISED

LAST REVISION 05-09-11
DATE PLOTTED => 10-JUN-2011
TIME PLOTTED => 09:54

Dist	COUNTY	ROUTE	POST MILES TOTAL PROJECT	SHEET No.	TOTAL SHEETS
08	Riv	10	R24.0/R24.3	9	55

REGISTERED CIVIL ENGINEER 5-23-11 DATE

6-6-11
PLANS APPROVAL DATE

REGISTERED PROFESSIONAL ENGINEER MONIE S. KEO No. C65498 Exp. 9-30-11 CIVIL STATE OF CALIFORNIA

THE STATE OF CALIFORNIA OR ITS OFFICERS OR AGENTS SHALL NOT BE RESPONSIBLE FOR THE ACCURACY OR COMPLETENESS OF SCANNED COPIES OF THIS PLAN SHEET.

NOTES:

1. SEE TRAFFIC HANDLING PLANS FOR LANE CLOSURES OR LANE TRANSITION
2. THIS PLAN ACCURATE FOR STAGE CONSTRUCTION WORK ONLY

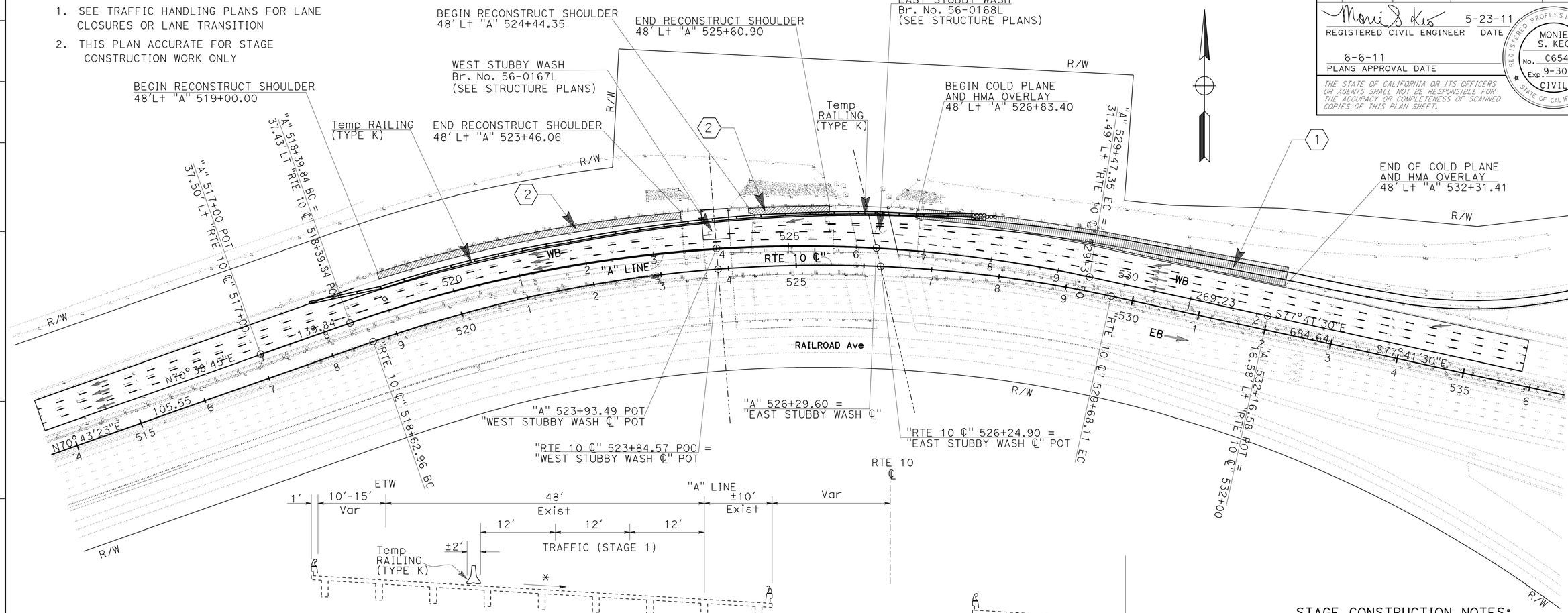

STAGE CONSTRUCTION NOTES:

1. COLD PLANE AND HMA OVERLAY (SEE TYPICAL X-SECTION AND LAYOUTS FOR MORE DETAILS)
2. RECONSTRUCT SHOULDER (SEE TYPICAL X-SECTION AND LAYOUTS FOR MORE DETAILS)

LEGEND:

- COLD PLANE AND HMA OVERLAY
- RECONSTRUCT SHOULDER
- TRAFFIC THIS STAGE
- TEMPORARY RAILING (TYPE K)
- MATCH CROSS SLOPE

STAGE CONSTRUCTION STAGE 1

NO SCALE

SC-1

STATE OF CALIFORNIA - DEPARTMENT OF TRANSPORTATION
Caltrans DESIGN

FUNCTIONAL SUPERVISOR: BEN AMIRI
CALCULATED-DESIGNED BY: MONIE KEO
CHECKED BY: BEN AMIRI
REVISED BY / DATE REVISED

LAST REVISION 05-20-11 | DATE PLOTTED => 10-JUN-2011 | TIME PLOTTED => 14:15

Dist	COUNTY	ROUTE	POST MILES TOTAL PROJECT	SHEET No.	TOTAL SHEETS
08	Riv	10	R24.0/R24.3	10	55

REGISTERED CIVIL ENGINEER 5-23-11 DATE

6-6-11
PLANS APPROVAL DATE

REGISTERED PROFESSIONAL ENGINEER MONIE S. KEO No. C65498 Exp. 9-30-11 CIVIL STATE OF CALIFORNIA

THE STATE OF CALIFORNIA OR ITS OFFICERS OR AGENTS SHALL NOT BE RESPONSIBLE FOR THE ACCURACY OR COMPLETENESS OF SCANNED COPIES OF THIS PLAN SHEET.

NOTES:

1. SEE TRAFFIC HANDLING PLANS FOR LANE CLOSURES OR LANE TRANSITION
2. THIS PLAN ACCURATE FOR STAGE CONSTRUCTION WORK ONLY

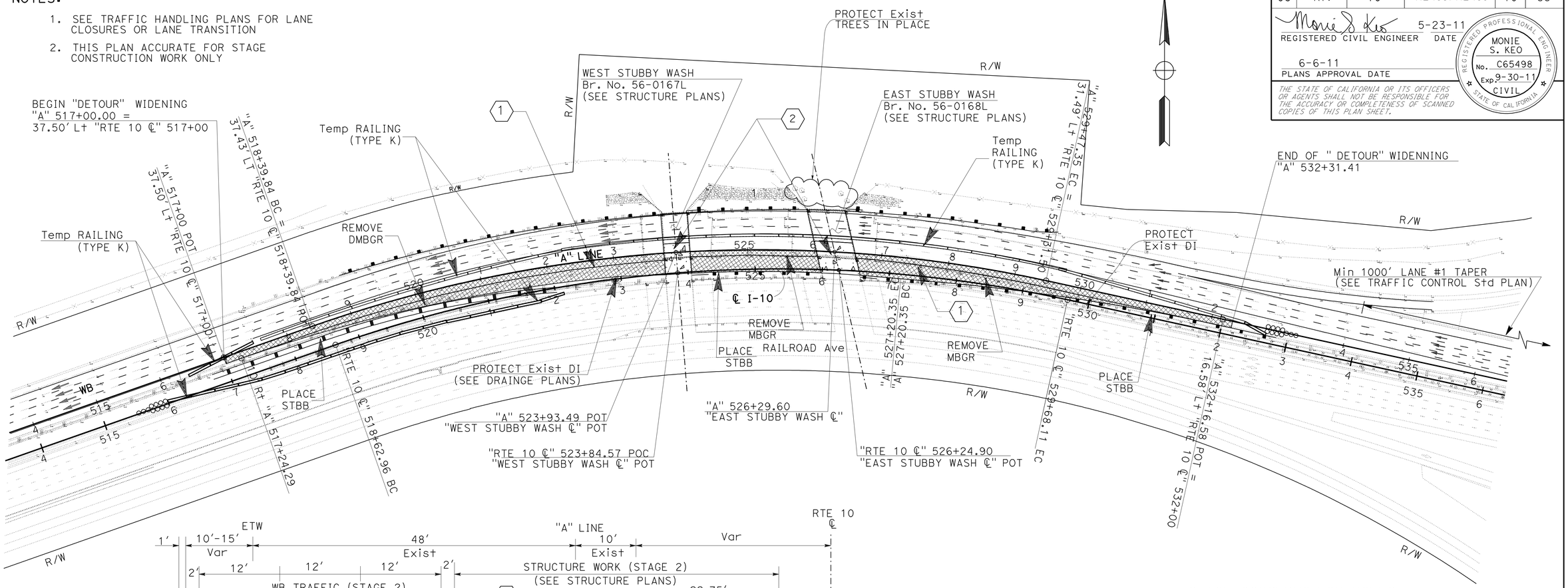

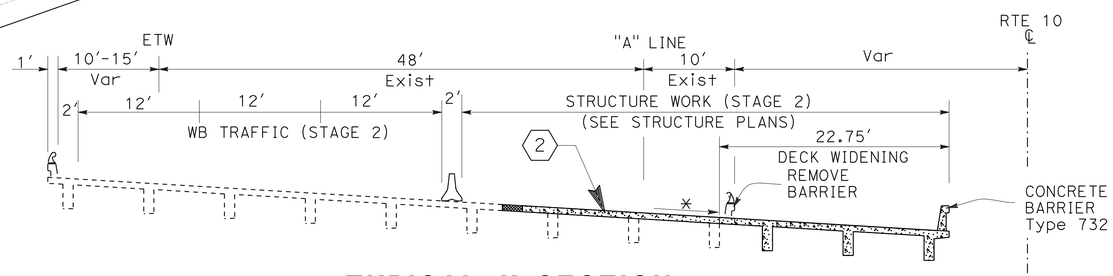

TYPICAL X-SECTION

EAST & WEST CHANNEL STUBBY WASH BRIDGE (LEFT)
(Br. No. 56-0167L & 56-0168L)

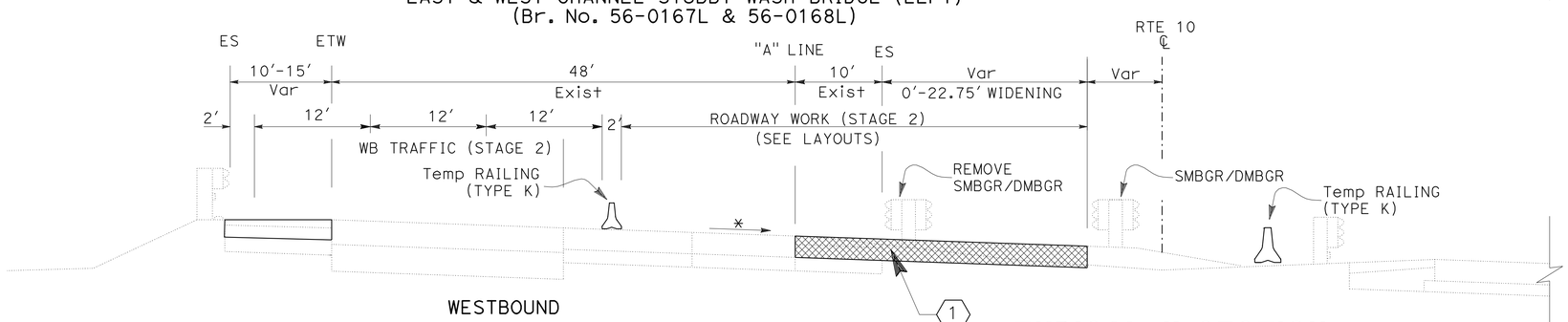

TYPICAL X-SECTION

"A" STA 517+00.00 TO "A" STA 523+75.25
"A" STA 524+14.14 TO "A" STA 525+01.99
"A" STA 526+60.11 TO "A" STA 532+31.41

STAGE CONSTRUCTION NOTES:

1. ROADWAY WORK (REMOVE Exist PAVEMENT AND CONSTRUCT "DETOUR" WIDENING, SEE LAYOUTS FOR MORE DETAILS)
2. STRUCTURE WORK (BRIDG WIDENING, DECK REPLACEMENT AND DECK TREATMENT, SEE STRUCTURE PLANS FOR MORE DETAILS)

LEGEND:

- ROADWAY WORK
- STRUCTURE WORK
- TRAFFIC THIS STAGE
- TEMPORARY RAILING (TYPE K)
- MATCH Exist CROSS SLOPE

STAGE CONSTRUCTION STAGE 2

NO SCALE

SC-2

REVISED BY | DATE REVISED
MONIE KEO | BEN AMIRI
CALCULATED-DESIGNED BY | CHECKED BY
FUNCTIONAL SUPERVISOR: BEN AMIRI

STATE OF CALIFORNIA - DEPARTMENT OF TRANSPORTATION
DESIGN
Caltrans

LAST REVISION 05-20-11 | DATE PLOTTED => 10-JUN-2011 | TIME PLOTTED => 14:16

Dist	COUNTY	ROUTE	POST MILES TOTAL PROJECT	SHEET No.	TOTAL SHEETS
08	Riv	10	R24.0/R24.3	11	55

REGISTERED CIVIL ENGINEER 5-23-11 DATE

6-6-11
PLANS APPROVAL DATE

REGISTERED PROFESSIONAL ENGINEER MONIE S. KEO No. C65498 Exp. 9-30-11 CIVIL STATE OF CALIFORNIA

THE STATE OF CALIFORNIA OR ITS OFFICERS OR AGENTS SHALL NOT BE RESPONSIBLE FOR THE ACCURACY OR COMPLETENESS OF SCANNED COPIES OF THIS PLAN SHEET.

NOTES:

1. SEE TRAFFIC HANDLING PLANS FOR LANE CLOSURES OR LANE TRANSITION
2. THIS PLAN ACCURATE FOR STAGE CONSTRUCTION WORK ONLY

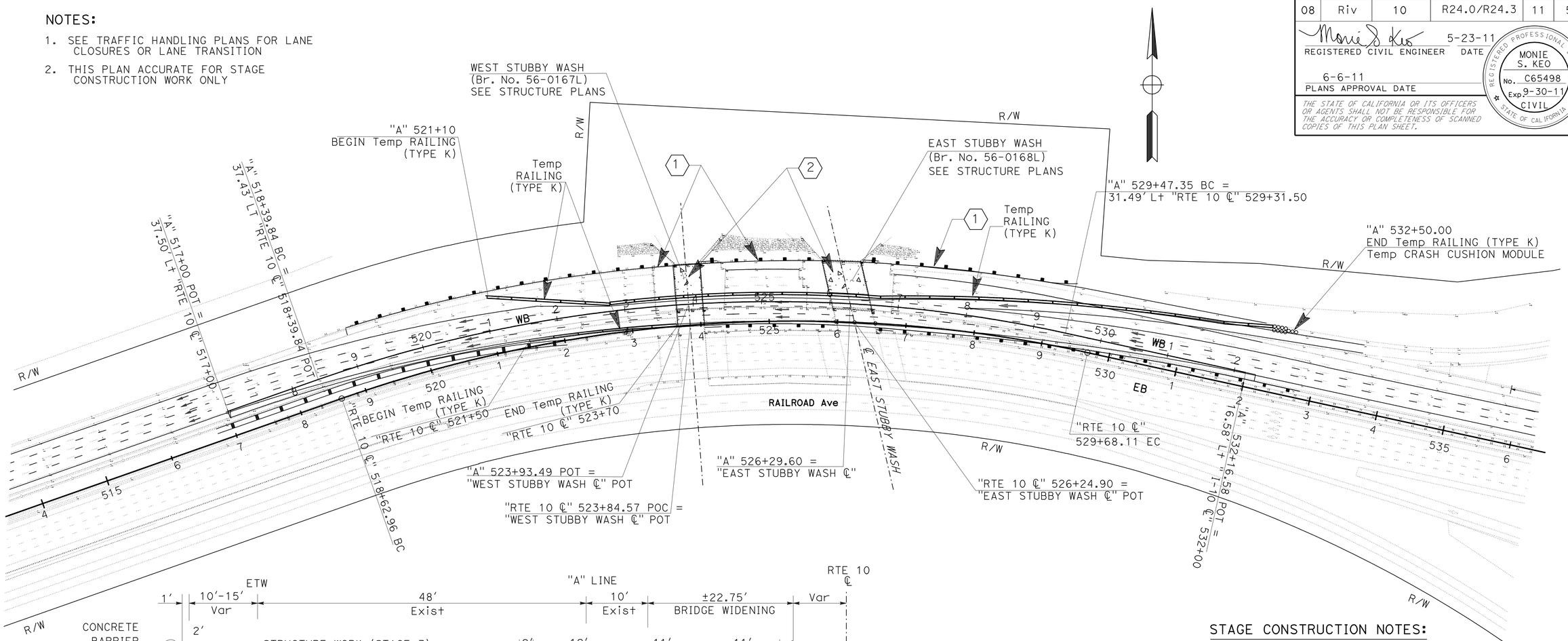

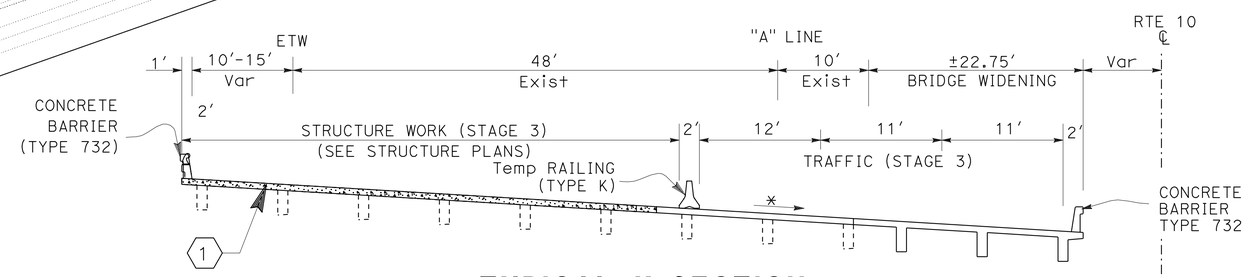

TYPICAL X-SECTION

EAST & WEST CHANNEL STUBBY WASH BRIDGE (LEFT)
(Br. No. 56-0167L & 56-0168L)

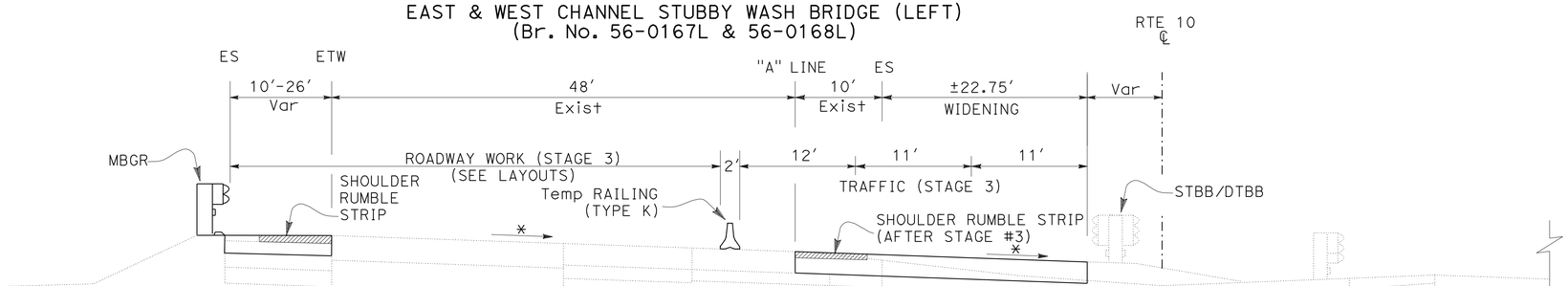

WESTBOUND

"A" STA 517+00.00 TO "A" STA 523+75.25
"A" STA 524+14.14 TO "A" STA 525+01.99
"A" STA 526+60.11 TO "A" STA 532+31.41

EASTBOUND

STAGE CONSTRUCTION NOTES:

(1) ROADWAY WORK (SEE LAYOUTS FOR MORE DETAILS)

(2) STRUCTURE WORK (SEE STRUCTURE PLANS FOR MORE DETAILS)

LEGEND:

- BRIDGE WORK
- TRAFFIC THIS STAGE
- TEMPORARY RAILING (TYPE K)
- MATCH Exist CROSS SLOPE

STAGE CONSTRUCTION STAGE 3

NO SCALE

SC-3

REVISED BY | DATE REVISED
MONIE KEO | BEN AMIRI
CALCULATED-DESIGNED BY | CHECKED BY
FUNCTIONAL SUPERVISOR: BEN AMIRI
STATE OF CALIFORNIA - DEPARTMENT OF TRANSPORTATION
DESIGN
Caltrans

LAST REVISION 05-20-11 | DATE PLOTTED => 10-JUN-2011 | TIME PLOTTED => 14:16

Dist	COUNTY	ROUTE	POST MILES TOTAL PROJECT	SHEET No.	TOTAL SHEETS
08	Riv	10	R24.0/R24.3	12	55

M.M. Kamgar Haghighi 5-23-11
REGISTERED CIVIL ENGINEER DATE

6-6-11
PLANS APPROVAL DATE

REGISTERED PROFESSIONAL ENGINEER
M.M. Kamgar
No. 58039
Exp. 6-30-12
CIVIL
STATE OF CALIFORNIA

THE STATE OF CALIFORNIA OR ITS OFFICERS OR AGENTS SHALL NOT BE RESPONSIBLE FOR THE ACCURACY OR COMPLETENESS OF SCANNED COPIES OF THIS PLAN SHEET.

LEGEND:

- COLD PLANE AND HMA OVERLAY
- RECONSTRUCT SHOULDER
- TRAFFIC THIS STAGE
- TEMPORARY RAILING (TYPE K)
- MATCH CROSS SLOPE

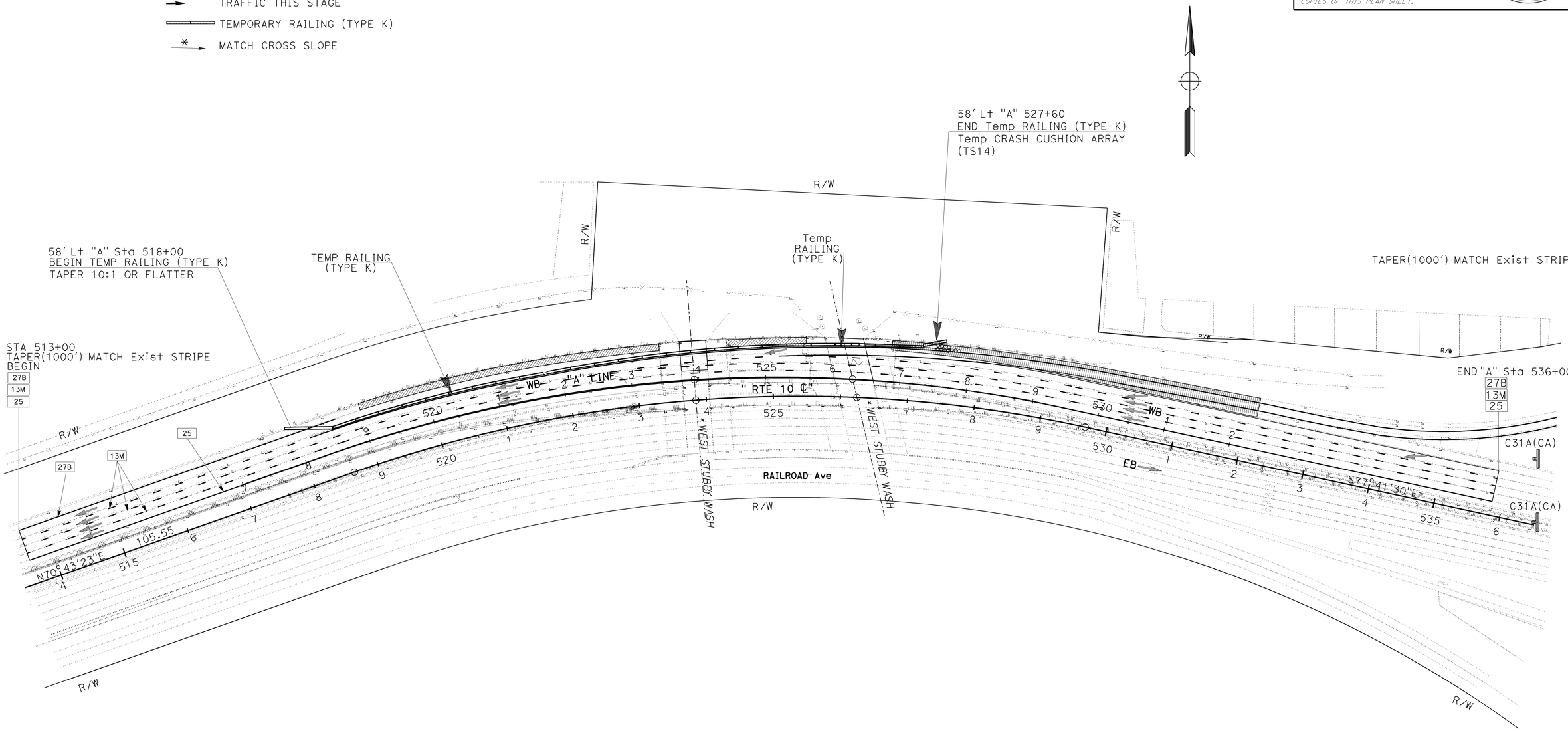

TRAFFIC HANDLING STAGE 1

NO SCALE

TH-1

THIS PLAN ACCURATE FOR TRAFFIC HANDLING WORK ONLY

STATE OF CALIFORNIA - DEPARTMENT OF TRANSPORTATION
Caltrans
DESIGN

FUNCTIONAL SUPERVISOR: LARRY SARTORI
CALCULATED-DESIGNED BY: MEHDI KAMGAR
CHECKED BY: LARRY SARTORI
REVISED BY
DATE REVISED

LAST REVISION 05-20-11
DATE PLOTTED => 10-JUN-2011
TIME PLOTTED => 14:16

Dist	COUNTY	ROUTE	POST MILES TOTAL PROJECT	SHEET No.	TOTAL SHEETS
08	Riv	10	R24.0/R24.3	13	55

M.M. Kamgar Haghighi 5-23-11
REGISTERED CIVIL ENGINEER DATE

6-6-11
PLANS APPROVAL DATE

REGISTERED PROFESSIONAL ENGINEER
M.M.KAMGAR
No. 58039
Exp. 6-30-12
CIVIL
STATE OF CALIFORNIA

THE STATE OF CALIFORNIA OR ITS OFFICERS OR AGENTS SHALL NOT BE RESPONSIBLE FOR THE ACCURACY OR COMPLETENESS OF SCANNED COPIES OF THIS PLAN SHEET.

LEGEND:

ROADWAY WORK

TRAFFIC THIS STAGE

TEMPORARY RAILING (TYPE K)

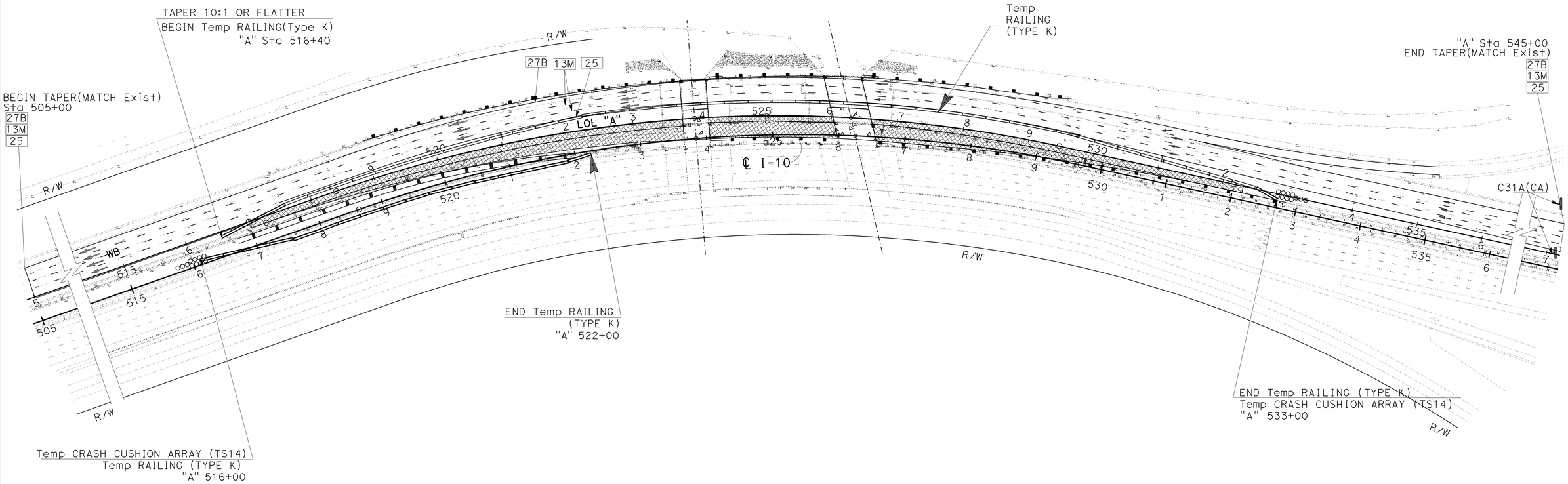

THIS PLAN ACCURATE FOR TRAFFIC HANDLING WORK ONLY

TRAFFIC HANDLING PLAN
STAGE 2

NO SCALE

TH-2

STATE OF CALIFORNIA - DEPARTMENT OF TRANSPORTATION
Caltrans®
DESIGN

FUNCTIONAL SUPERVISOR: LARRY SARTORI
CALCULATED-DESIGNED BY: MEHDI KAMGAR
CHECKED BY: LARRY SARTORI
REVISED BY
DATE REVISED

LAST REVISION 05-20-11
DATE PLOTTED => 10-JUN-2011
TIME PLOTTED => 14:16

Dist	COUNTY	ROUTE	POST MILES TOTAL PROJECT	SHEET No.	TOTAL SHEETS
08	Riv	10	R24.0/R24.3	14	55

M.M. Kamgar Haghighi 5-23-11
REGISTERED CIVIL ENGINEER DATE

6-6-11
PLANS APPROVAL DATE

REGISTERED PROFESSIONAL ENGINEER M.M. Kamgar No. 58039 Exp. 6-30-12 CIVIL STATE OF CALIFORNIA

THE STATE OF CALIFORNIA OR ITS OFFICERS OR AGENTS SHALL NOT BE RESPONSIBLE FOR THE ACCURACY OR COMPLETENESS OF SCANNED COPIES OF THIS PLAN SHEET.

LEGEND:

TRAFFIC THIS STAGE

TEMPORARY RAILING (TYPE K)

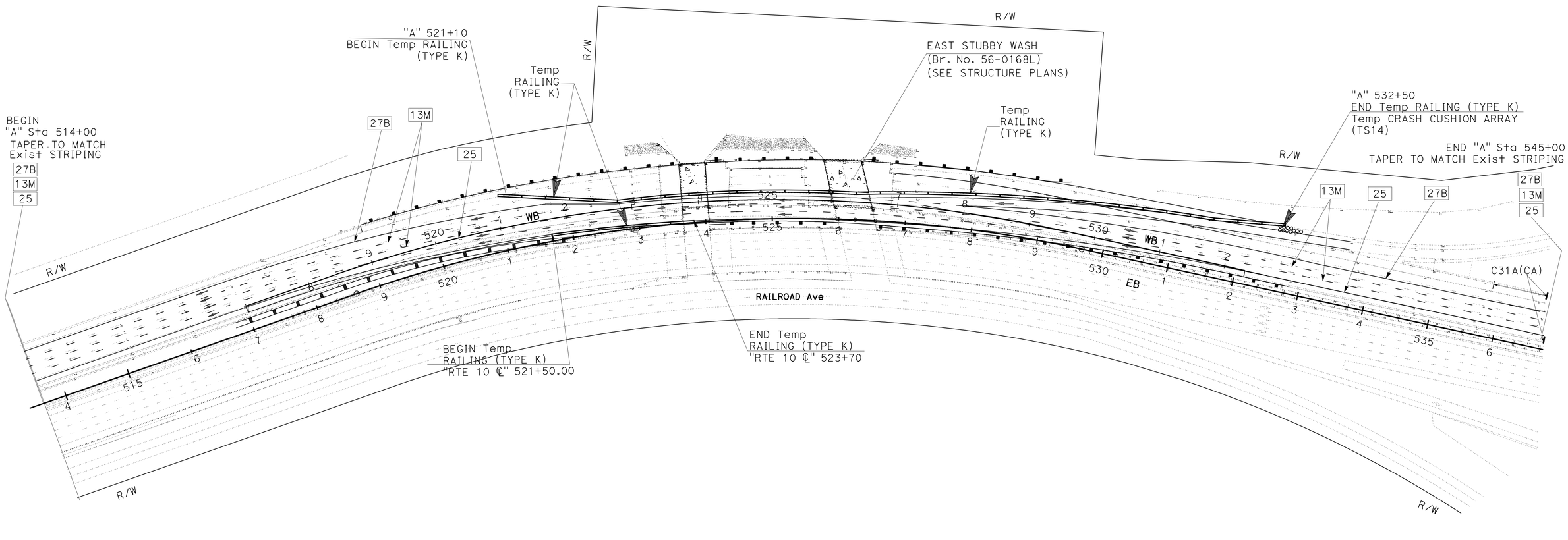

TRAFFIC HANDLING STAGE 3

NO SCALE **TH-3**

THIS PLAN ACCURATE FOR TRAFFIC HANDLING PLAN WORK ONLY

STATE OF CALIFORNIA - DEPARTMENT OF TRANSPORTATION

Caltrans® **TRAFFIC DESIGN**

FUNCTIONAL SUPERVISOR: LARRY SARTORI

CALCULATED-DESIGNED BY: MEHDI KAMGAR

CHECKED BY: LARRY SARTORI

REVISED BY

DATE REVISED

LAST REVISION 05-20-11

DATE PLOTTED => 10-JUN-2011
TIME PLOTTED => 14:16

Dist	COUNTY	ROUTE	POST MILES TOTAL PROJECT	SHEET No.	TOTAL SHEETS
08	Riv	10	R24.0/R24.3	15	55

M.M. Kamgar Haghighi 5-10-11
REGISTERED CIVIL ENGINEER DATE

6-6-11
PLANS APPROVAL DATE

REGISTERED PROFESSIONAL ENGINEER M.M.Kamgar No. 58039 Exp 6-30-12 CIVIL STATE OF CALIFORNIA

THE STATE OF CALIFORNIA OR ITS OFFICERS OR AGENTS SHALL NOT BE RESPONSIBLE FOR THE ACCURACY OR COMPLETENESS OF SCANNED COPIES OF THIS PLAN SHEET.

NOTES:

1. THE RAMP(VERBENIA Ave W/B ENTRANCE RAMP) SHALL BE CLOSED FOR THE DURATION OF THE BRIDGE CONSTRUCTION.
2. INSTALL ONE C40, AND ONE W20-1 ON 111/10 W/B CONNECTOR RAMP.

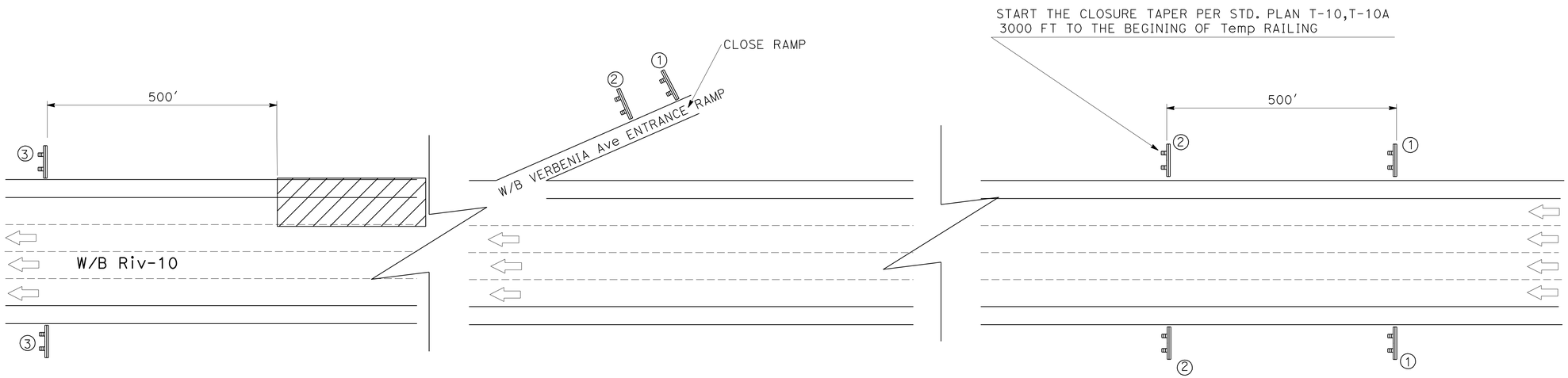

TRAFFIC HANDLING SIGNS
C31A(CA)(NO SHOULDER)
6

INSTALL ON TYPE III BARRICADE

STATIONARY MOUNTED CONSTRUCTION AREA SIGNS

SIGN NUMBER	SIGN CODE	PANEL SIZE	SIGN MESSAGE	No. OF POST AND SIZE	No. OF SIGNS
1	C40	72" X 36"	TRAFFIC FINE DOUBLES IN CONSTRUCTION ZONE	2 - 4" X 6"	4
2	W20-1	48" x 48"	BRIDGE WORK AHEAD	2 - 4" X 6"	4
3	G20-1	48" X 18"	END ROAD WORK	2 - 4" X 6"	2
				TOTAL	10

CONSTRUCTION AREA SIGN

NO SCALE

CS-1

STATE OF CALIFORNIA - DEPARTMENT OF TRANSPORTATION
Caltrans® DESIGN

FUNCTIONAL SUPERVISOR: LARRY SARTORI
CALCULATED-DESIGNED BY: MEHDI KAMGAR
CHECKED BY: LARRY SARTORI
REVISED BY
DATE REVISED

LAST REVISION 05-09-11
DATE PLOTTED => 10-JUN-2011
TIME PLOTTED => 14:17

Dist	COUNTY	ROUTE	POST MILES TOTAL PROJECT	SHEET No.	TOTAL SHEETS
08	Riv	10	R24.0/R24.3	16	55

M.M. Kamgar Haghighi 5-10-11
REGISTERED CIVIL ENGINEER DATE

6-6-11
PLANS APPROVAL DATE

REGISTERED PROFESSIONAL ENGINEER
M.M.KAMGAR
No. 58039
Exp. 6-30-12
CIVIL
STATE OF CALIFORNIA

THE STATE OF CALIFORNIA OR ITS OFFICERS OR AGENTS SHALL NOT BE RESPONSIBLE FOR THE ACCURACY OR COMPLETENESS OF SCANNED COPIES OF THIS PLAN SHEET.

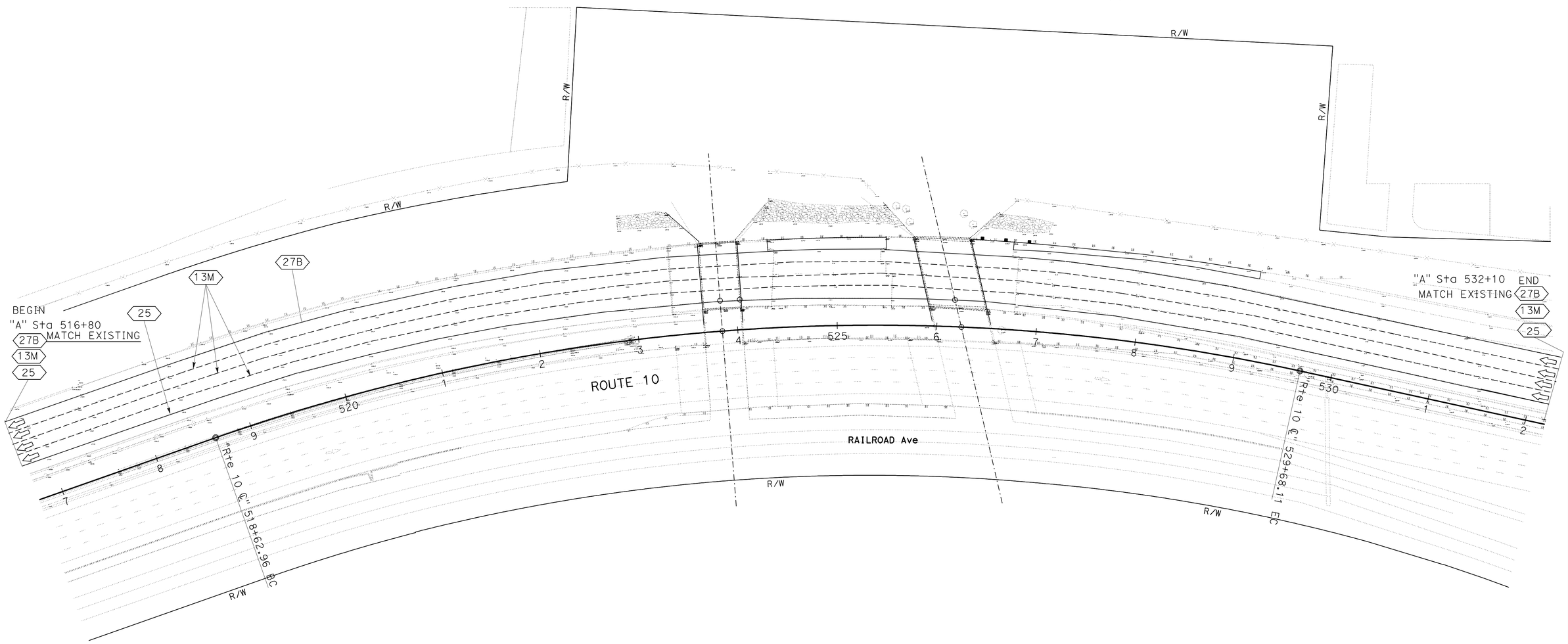

PAVEMENT DELINEATION

THIS PLAN ACCURATE FOR PAVEMENT DELINEATION WORK ONLY.

NO SCALE

PD-1

STATE OF CALIFORNIA - DEPARTMENT OF TRANSPORTATION
Caltrans®
DESIGN

FUNCTIONAL SUPERVISOR: LARRY SARTORI

CALCULATED-DESIGNED BY: Mehdi Kamgar
CHECKED BY: LARRY SARTORI

REVISED BY
DATE REVISED

LAST REVISION 05-09-11
DATE PLOTTED => 10-JUN-2011
TIME PLOTTED => 05:55

Dist	COUNTY	ROUTE	POST MILES TOTAL PROJECT	SHEET No.	TOTAL SHEETS
08	Riv	10	R24.0/R24.3	17	55

M.M. Kamgar Haghighi 5-10-11
REGISTERED CIVIL ENGINEER DATE

6-6-11
PLANS APPROVAL DATE

REGISTERED PROFESSIONAL ENGINEER
M.M.Kamgar
No. 58039
Exp. 6-30-12
CIVIL
STATE OF CALIFORNIA

THE STATE OF CALIFORNIA OR ITS OFFICERS OR AGENTS SHALL NOT BE RESPONSIBLE FOR THE ACCURACY OR COMPLETENESS OF SCANNED COPIES OF THIS PLAN SHEET.

TEMPORARY PAVEMENT DELINEATION QUANTITIES

	DETAIL No.	PAVEMENT MARKERS				TRAFFIC STRIPE (PAINT)	
		MARKER	RETROREFLECTIVE			4" WHITE	4" YELLOW
			TYPE G	TYPE C	TYPE H		
		EA				LF	
STAGE 1	13M	888	222	12		10620	
	25				150		3540
	27B					3540	
	SUBTOTAL	888	222	12	150	17700	
STAGE 2	13M	600	150	8		7080	
	25				150		3540
	27B					3540	
	SUBTOTAL	600	150	8	150	14160	
STAGE 3	13M	592	148	8		7080	
	25				148		3540
	27B					3540	
	SUBTOTAL	592	148	8	148	14160	
	TOTAL	2080	520	28	448	46020	

REMOVE PAVEMENT DELINEATION QUANTITIES

	DETAIL No.	PAVEMENT MARKERS				TRAFFIC STRIPE	REMOVE YELLOW THERMOPLASTIC TRAFFIC STRIPE
		MARKER	RETROREFLECTIVE			4" WHITE	4" YELLOW
			TYPE G	TYPE C	TYPE H		
		EA				LF	LF
	13M	888	222	12		10620	
	25				150		3540
	27B					3540	
	TOTAL	888	384			14160	3540

PAVEMENT DELINEATION QUANTITIES

DETAIL No.	PAVEMENT MARKERS					THERMOPLASTIC TRAFFIC STRIPE (SPRAYABLE)		THERMOPLASTIC TRAFFIC STRIPE
	NON REFLECTIVE	RETROREFLECTIVE				4"	4"	8"
	TYPE A	TYPE C	TYPE G	TYPE D	TYPE H	WHITE	YELLOW	WHITE
	EA					LF		LF
8						50		
13M	920	12	230			10620		
25					230		3540	
27B						3540		
36A			21					485
TOTAL	920	12	481			17750		485

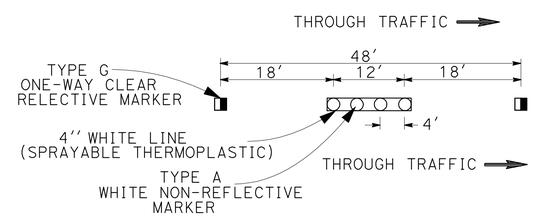

DETAIL 13 MODIFIED (13M)

INSTALL TYPE A NON-REFLECTIVE MARKER WITH STRIPING DETAIL 13M.
INSTALL TYPE A MARKER BEFORE STRIPING TO GET THE PROPER BONDING

THIS PLAN IS ACCURATE FOR QUANTITY ONLY

PAVEMENT DELINEATION & TRAFFIC HANDLING QUANTITIES

NO SCALE

PDQ-1

STATE OF CALIFORNIA - DEPARTMENT OF TRANSPORTATION
Caltrans
DESIGN

FUNCTIONAL SUPERVISOR: LARRY SARTORI
CALCULATED-DESIGNED BY: MEHDI KAMGAR
CHECKED BY: LARRY SARTORI
REVISED BY
DATE REVISED

LAST REVISION 05-09-11
DATE PLOTTED => 10-JUN-2011
TIME PLOTTED => 05:56

Dist	COUNTY	ROUTE	POST MILES TOTAL PROJECT	SHEET No.	TOTAL SHEETS
08	Riv	10	R24.0/R24.3	18	55

REGISTERED CIVIL ENGINEER 5-10-11 DATE

6-6-11
PLANS APPROVAL DATE

REGISTERED PROFESSIONAL ENGINEER MONIE S. KEO No. C65498 Exp. 9-30-11 CIVIL STATE OF CALIFORNIA

THE STATE OF CALIFORNIA OR ITS OFFICERS OR AGENTS SHALL NOT BE RESPONSIBLE FOR THE ACCURACY OR COMPLETENESS OF SCANNED COPIES OF THIS PLAN SHEET.

ROADWAY QUANTITIES

LOCATION AND DESCRIPTION	HMA (TYPE A)	CLASS 2 AGGREGATE BASE	LIQUID ASPHALT (PRIME COAT)	ROADWAY EXCAVATION	EMBANKMENT (N)
RECONSTRUCT SHOULDER	TON	CY	TON	CY	CY
48′ L+ "A" STA 519+00.00 To "A" STA 523+46.06	163.6	109	1.2	577	-
48′ L+ "A" STA 524+44.35 To "A" STA 525+60.90	46.7	31	0.4	165	-
WIDEN ROADWAY "DETOUR"					
"A" STA 517+00.00 TO "A" STA 523+75.25	488.5	324	3.6	1721	5.0
"A" STA 524+14.14 TO "A" STA 525+09.70	212.8	141	1.6	750	5.0
"A" STA 526+60.11 TO "A" STA 531+31.41	407.0	270	3.0	1435	15.0
SUBTOTAL	1318.6	875	9.8	4648	25.0
FROM HMA DIKES	5.3	-	-	-	-
FROM HMA OVERLAY	211.0	-	3.0	-	-
TOTAL	1534.9	875	12.8	4648	25.00

(N)- NOT A SEPARATE PAY ITEM

HMA DIKE QUANTITIES

STATION TO STATION (UNLESS OTHERWISE NOTED)	REMOVE AC DIKE	HMA DIKE (Type F)	HMA DIKE (Type E)	HMA (Type A)
	LF	LF	LF	TON
58′ L+ "A" STA 519+00.00 TO "A" STA 523+76.80 AT ES	452	452	-	3.0
58′ L+ "A" STA 524+13.50 To "A" STA 525+87.53 AT ES	149	149	-	1.0
76′ L+ "A" STA 530+51.00 To "A" STA 532+31.40 AT ES	180	-	180	1.3
TOTAL	781	601	180	5.3

THRIE BEAM BARRIER AND METAL BEAM GUARD RAILING QUANTITIES

STATION TO STATION (UNLESS OTHERWISE NOTED)	REMOVE ITEMS			CONSTRUCT ITEMS								
	MBGR	SBGR	DBGR	MBGR	STBB	DTBB	TRANSITION RAILING (TYPE WB)	ALTERNATIVE FLARED TERMINAL SYSTEM	TRANSITION RAILING (TYPE STB)	END CAPS (TYPE A)	END CAPS (TYPE TC)	GUARD RAILING LAYOUT (N)
	LF	LF	LF	LF	LF	LF	EA	EA	EA	EA	EA	TYPE
L+ 58′ L+ "A" STA 519+00 TO "A" STA 523+76.80 AT ES	477	-	-	477	-	-	-	1	-	1	-	12BB
58′ L+ "A" STA 524+13.73 To "A" STA 525+87.53 AT ES	175	-	-	175	-	-	1	-	-	1	-	12D
62.30′ L+ "A" STA 526+43.16 To "A" STA 529+31.41 AT ES	189	-	-	189	-	-	1	-	-	-	-	12B
"RTE 10 ℄" STA 517+00 To "RTE 10 ℄" STA 522+00 IN THE MEDIAN	-	-	500	-	-	500	-	-	-	-	-	25A
"A" STA 524+14.14 To "A" STA 526+09.70 IN THE MEDIAN	-	196	-	-	196	-	-	-	1	-	1	12D
"A" STA 526+67.60 To "A" STA 532+31.41 INTHE MEDIAN	-	564	-	-	564	-	-	-	1	-	-	12B
TOTAL	841	760	500	841	760	500	2	1	2	2	1	

(N) NOT A SEPARATE PAY ITEM, FOR INFORMATION ONLY

COLD PLANE AC PAVEMENT

LOCATION AND DESCRIPTION	0.25′ Max
	SQYD
54.50′ L+ "A" STA 526+83.40 TO 75.00′ L+ "A" STA 532+31.41	1293
TOTAL	1293

SHOULDER RUMBLE STRIP

STATION TO STATION (UNLESS OTHERWISE NOTED)	RUMBLE STRIP GROUND-IN INDENTATION
	STATION
"A" STA 517+00 TO "A" STA 523+46.06 AT ES	5
"A" STA 524+44 To "A" STA 525+60 AT ES	2
"A" STA 517+00 TO "A" STA 523+46 IN THE MEDIAN	7
"A" STA 524+14 TO "A" STA 526+09 IN THE MEDIAN	2
"A" STA 526+67 TO "A" STA 532+31 IN THE MEDIAN	6
TOTAL	22

SUMMARY OF QUANTITIES

Q-1

STATE OF CALIFORNIA - DEPARTMENT OF TRANSPORTATION
Caltrans DESIGN

FUNCTIONAL SUPERVISOR: BEN AMIRI
CALCULATED-DESIGNED BY: MONIE KEO
CHECKED BY: BEN AMIRI
REVISED BY
DATE REVISED

LAST REVISION 05-09-11
DATE PLOTTED => 10-JUN-2011
TIME PLOTTED => 05:56

Dist	COUNTY	ROUTE	POST MILES TOTAL PROJECT	SHEET No.	TOTAL SHEETS
08	Riv	10	R24.0/R24.3	19	55

REGISTERED CIVIL ENGINEER 5-23-11 DATE

6-6-11
PLANS APPROVAL DATE

REGISTERED PROFESSIONAL ENGINEER MONIE S. KEO No. C65498 Exp. 9-30-11 CIVIL STATE OF CALIFORNIA

THE STATE OF CALIFORNIA OR ITS OFFICERS OR AGENTS SHALL NOT BE RESPONSIBLE FOR THE ACCURACY OR COMPLETENESS OF SCANNED COPIES OF THIS PLAN SHEET.

DRAINAGE QUANTITIES

DRAINAGE PLAN SHEET	DRAINAGE SYSTEM No. ⬡	DRAINAGE UNIT ◯	MINOR CONCRETE (MINOR STRUCTURE) CY	HEIGHT OF INLET (NO) FT	GRATE (TYPE12-24) (N) EA	Misc IRON & STEEL LB	REMOVE PIPE LF	18" CSP (0.079" THICK) LF	STRUCTURAL BACKFILL CY	18" CSP ELBOW (2'x3') EA	CULVERT SKEW (DEGREES) RIGHT/LEFT	DESCRIPTION	STATION	DRAINAGE PLAN SHEET	DRAINAGE SYSTEM No. ⬡	DRAINAGE UNIT ◯
D-1	1	a										Exist CONCRETE GUTTER	31.50' Rt "A" Sta 522+91.86	D-1	1	a
		b										Exist DI (Type OMP)	31.50' Rt "A" Sta 522+91.86			b
		c								1	4°23'05	18" CSP ELBOW	31.50' Rt "A" Sta 523+00			c
		d						68			4°23'05	18" CSP				d
		e					68		50			REMOVE & BACKFILL CULVERT				e
Total							68	68	50	1						

(N) NOT A SEPARATE PAY ITEM, FOR INFORMATION ONLY

REMOVE TREES

STATION TO STATION (UNLESS OTHERWISE NOTED)	(N) REMOVE TREE EA
Lt 1.0' STATION 525+88 ℄ I-10 AT MEDIAN	1
Rt 1.0' STATION 526+65 ℄ I-10 AT MEDIAN	1
Lt 1.0' STATION 529+77 ℄ I-10 AT MEDIAN	1
TOTAL	3

(N) NOT A SEPARATE PAY ITEM, FOR INFORMATION ONLY

TEMPORARY WATER POLLUTION CONTROL BMP's*

TYPE/DESCRIPTION OF TEMPORARY CONSTRUCTION BMP's	UNIT	QUANTITIES
TEMPORARY CHECK DAM	LF	360
TEMPORARY FIBER ROLL	LF	600
TEMPORARY DRAINAGE INLET PROTECTION	EA	2
TEMPORARY CONSTRUCTION ENTRANCE/EXIT	EA	1

*THE QUANTITIES OF TEMPORARY WATER POLLUTION CONTROL BMPs SHOWN ON ABOVE TABLE ARE INTENDED TO BE USED AS GUIDELINES ONLY TO INSTALL TEMPORARY WATER POLLUTION CONTROL BMPs. FIELD CONDITIONS MAY NECESSITATE MODIFICATION OR RELOCATION OF BMPs AND QUANTITIES AS PER INSTRUCTION OF ENGINEER.

MISCELANEOUS ITEMS

STATION TO STATION (UNLESS OTHERWISE NOTED)	TEMPOARY RAILING (TYPE K) LF	TEMPORARY CRASH CUSHION (MODULE) EA
58' Lt "A" STA 518+00 TO "A" STA 527+60 IN STAGE 1	960	14
10' Lt "A" STA 516+40 To "A" STA 533+00 IN STAGE 2	1660	14
50' Rt "A" STA 516+00 To "A" STA 522+00 IN STAGE 2	600	14
"A" STA 521+10 TO "A" STA 532+50 IN STAGE 3	1140	14
"RTE 10 ℄" STA 521+50 TO "RTE 10 ℄" STA 523+70 IN STAGE 3 AT MEDIAN	220	-
TOTAL	4580	56

SUMMARY OF QUANTITIES

Q-2

REVISED BY | DATE REVISED
MONIE KEO | BEN AMIRI
CALCULATED-DESIGNED BY | CHECKED BY
FUNCTIONAL SUPERVISOR: BEN AMIRI
STATE OF CALIFORNIA - DEPARTMENT OF TRANSPORTATION
Caltrans® DESIGN

LAST REVISION 05-20-11 | DATE PLOTTED => 10-JUN-2011 TIME PLOTTED => 14:17

Dist	COUNTY	ROUTE	POST MILES TOTAL PROJECT	SHEET No.	TOTAL SHEETS
08	Riv	10	R24.0/R24.3	20	55

Randell D. Hiatt
REGISTERED CIVIL ENGINEER

May 20, 2011
PLANS APPROVAL DATE

REGISTERED PROFESSIONAL ENGINEER
Randell D. Hiatt
No. C50200
Exp. 6-30-11
CIVIL
STATE OF CALIFORNIA

The State of California or its officers or agents shall not be responsible for the accuracy or completeness of electronic copies of this plan sheet.

To accompany plans dated 6-6-11

NOTES:

1. When necessary to place dike in front of face of guard railing, only Type C dike may be used. For dike details, see Standard Plan A87B.
2. For standard railing post embedment, see Standard Plans A77C3.
3. Guard railing delineation to be used where shown on the Project Plans.
4. When dike or curb is placed under guard railing, the maximum height of the dike or curb shall be 4". Mountable dike should not be used. For dike and curb details, see Standard Plans A87A and A87B.
5. For details of typical distance between the face of rail and hinge point, see Standard Plan A77C3.
6. For steel line posts, use 1/4 - 20 self-tapping screws in 0.22" diameter holes or 1/4" bolts in 9/32" diameter holes.

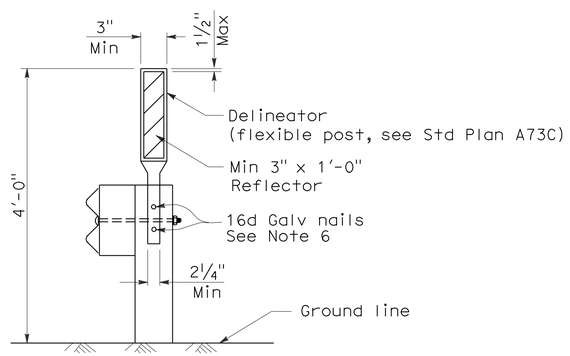

GUARD RAILING DELINEATION

See Note 3

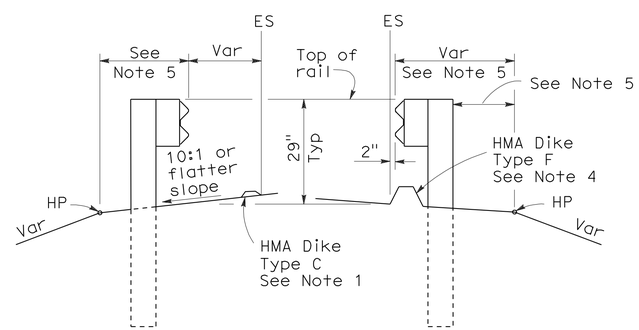

DIKE POSITIONING

See Note 1

STATE OF CALIFORNIA
DEPARTMENT OF TRANSPORTATION

METAL BEAM GUARD RAILING TYPICAL RAILING DELINEATION AND DIKE POSITIONING DETAILS

NO SCALE

RSP A77C4 DATED MAY 20, 2011 SUPERSEDES RSP A77C4 DATED JUNE 6, 2008 AND STANDARD PLAN A77C4 DATED MAY 1, 2006 - PAGE 47 OF THE STANDARD PLANS BOOK DATED MAY 2006.

REVISED STANDARD PLAN RSP A77C4

2006 REVISED STANDARD PLAN RSP A77C4

3-10-11

DIST	COUNTY	ROUTE	POST MILES TOTAL PROJECT	SHEET NO.	TOTAL SHEETS
08	Riv	10	R24.0/R24.3	21	55

Randell D. Hiatt
REGISTERED CIVIL ENGINEER

June 6, 2008
PLANS APPROVAL DATE

REGISTERED PROFESSIONAL ENGINEER
Randell D. Hiatt
No. C50200
Exp. 6-30-09
CIVIL
STATE OF CALIFORNIA

The State of California or its officers or agents shall not be responsible for the accuracy or completeness of electronic copies of this plan sheet.

To accompany plans dated 6-6-11

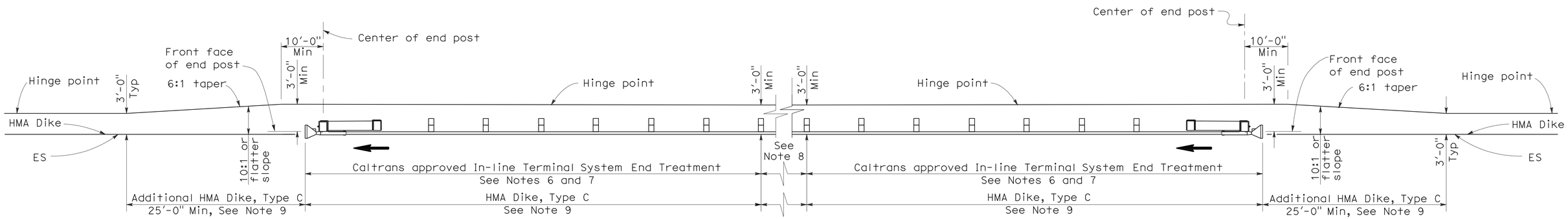

TYPE 11D LAYOUT

(EMBANKMENT GUARD RAILING INSTALLATION WITH
IN-LINE END TREATMENT AT EACH END OF RAILING)
See Note 5

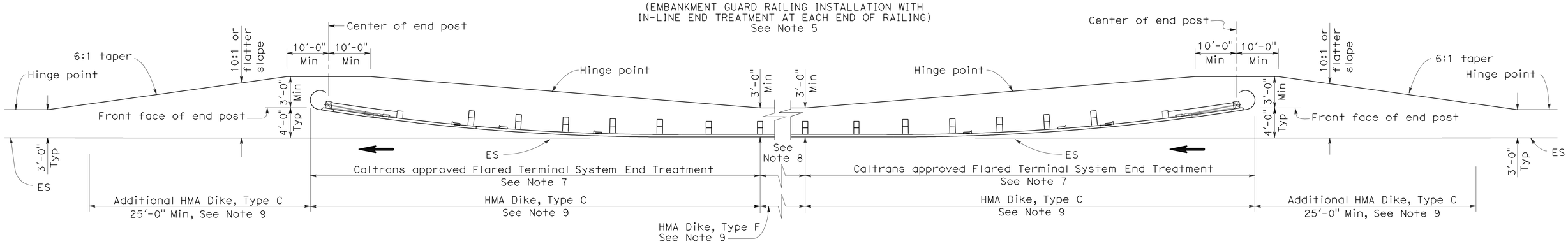

TYPE 11E LAYOUT

(EMBANKMENT GUARD RAILING INSTALLATION WITH
FLARED END TREATMENT AT EACH END OF RAILING)
See Note 5

NOTES:

1. Line post, blocks and hardware to be used are shown on Standard Plans A77A1, A77A2, A77B1, A77C1 and A77C2.
2. Guard rail post spacing to be 6'-3" center to center, except as otherwise noted.
3. Except as noted, line posts are 6" x 8" x 6'-0" wood with 6" x 8" x 1'-2" wood blocks, W6 x 9 steel posts, 6'-0" in length, with 6" x 8" x 1'-2" notched wood blocks or plastic blocks may be used for 6" x 8" x 6'-0" wood post with 6" x 8" x 1'-2" wood blocks where applicable and when specified.
4. Direction of adjacent traffic indicated by ⟶.
5. Layout Types 11D through 11L, shown on the A77E Series of Revised Standard Plans, are typically used where guard railing is recommended to shield embankment slopes and a crashworthy end treatment is required for both directions of traffic.
6. In-line Terminal System End Treatments are used where site conditions will not accommodate a flared end treatment.
7. The type of terminal system end treatment to be used will be shown on the Project Plans.
8. Dependent on site conditions (embankment height and side slope), construction of additional guard railing (length equal to multiples of 12'-6" with 6'-3" post spacing) may be advisable.
9. Where placement of dike is required with guard railing installations, see Revised Standard Plan RSP A77C4 for dike positioning details.

STATE OF CALIFORNIA
DEPARTMENT OF TRANSPORTATION

METAL BEAM GUARD RAILING TYPICAL LAYOUTS FOR EMBANKMENTS

NO SCALE

RSP A77E2 DATED JUNE 6, 2008 SUPERSEDES STANDARD PLAN A77E2
DATED MAY 1, 2006 - PAGE 49 OF THE STANDARD PLANS BOOK DATED MAY 2006.

REVISED STANDARD PLAN RSP A77E2

2006 REVISED STANDARD PLAN RSP A77E2

12-10-07

DIST	COUNTY	ROUTE	POST MILES TOTAL PROJECT	SHEET NO.	TOTAL SHEETS
08	Riv	10	R24.0/R24.3	22	55

Randell D. Hiatt
REGISTERED CIVIL ENGINEER

June 6, 2008
PLANS APPROVAL DATE

REGISTERED PROFESSIONAL ENGINEER
Randell D. Hiatt
No. C50200
Exp. 6-30-09
CIVIL
STATE OF CALIFORNIA

The State of California or its officers or agents shall not be responsible for the accuracy or completeness of electronic copies of this plan sheet.

To accompany plans dated 6-6-11

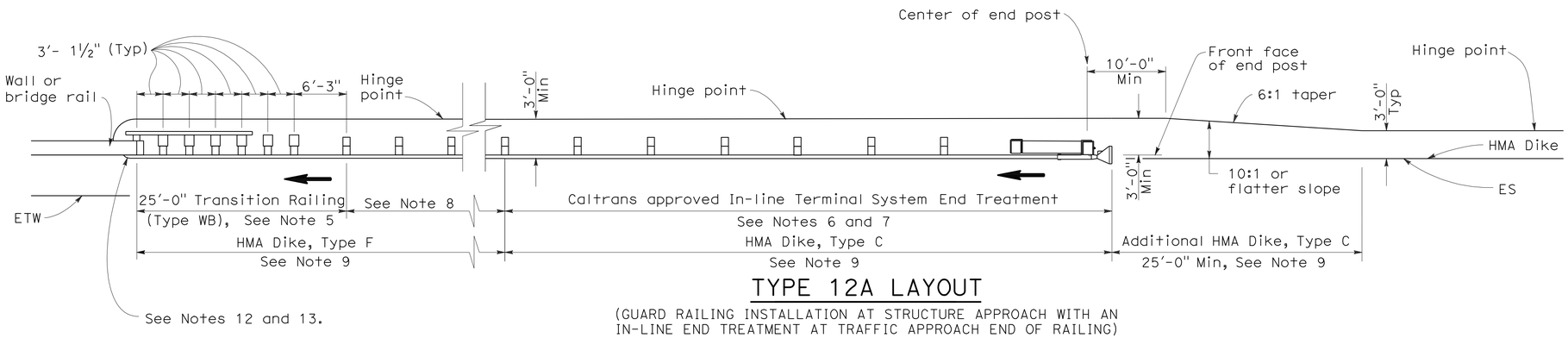

TYPE 12A LAYOUT

(GUARD RAILING INSTALLATION AT STRUCTURE APPROACH WITH AN IN-LINE END TREATMENT AT TRAFFIC APPROACH END OF RAILING)
See Notes 10

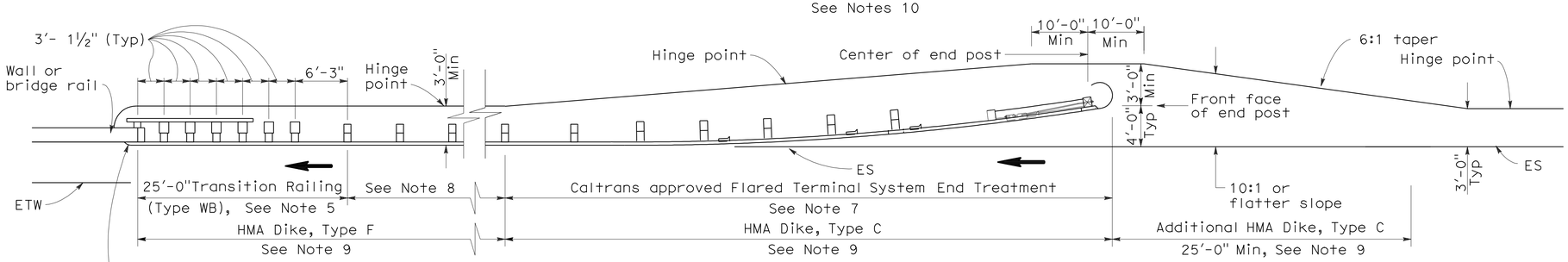

TYPE 12B LAYOUT

(GUARD RAILING INSTALLATION AT STRUCTURE APPROACH WITH A FLARED END TREATMENT AT TRAFFIC APPROACH END OF RAILING)
See Notes 10

NOTES:

1. Line post, blocks and hardware to be used are shown on Standard Plans A77A1, A77A2, A77B1, A77C1 and A77C2.
2. Guard rail post spacing to be 6'-3" center to center, except as otherwise noted.
3. Except as noted, line posts are 6" x 8" x 6'-0" wood with 6" x 8" x 1'-2" wood blocks. W6 x 9 steel posts, 6'-0" in length, with 6" x 8" x 1'-2" notched wood blocks or plastic blocks may be used for 6" x 8" x 6'-0" wood posts with 6" x 8" x 1'-2" wood blocks where applicable and when specified.
4. Direction of adjacent traffic indicated by ➡.
5. For Transition Railing (Type WB) details for Types 12A and 12B Layouts, see Standard Plan A77J4.
6. In-line Terminal System End Treatments are used where site conditions will not accommodate a flared end treatment.
7. The type of terminal system end treatment to be used will be shown on the Project Plans.
8. Dependent on site conditions (embankment height, side slopes, or other fixed objects), it may be advisable to construct additional guard railing (a length equal to multiples of 12'-6" with 6'-3" post spacing) between the transition railing and end treatment.
9. Where placement of dike is required with guard railing installations, see Revised Standard Plan RSP A77C4 for dike positioning details.
10. Type 12A or Type 12B Layouts are typically used:
    a. To the right of approaching traffic, at the end of a structure, on two-lane conventional highway where the roadbed width across the structure is less than 40 feet.
    b. To the left of approaching traffic, at the end of a structure, on two-lane conventional highway where the roadbed width across the structure is less than 40 feet.
    c. To the right of approaching traffic at the end of each structure on multilane freeways or expressways with separate adjacent or parallel bridges.
    d. To the right of approaching traffic at the end of the structure on multilane freeways or expressways with decked median on the bridge.
11. See Revised Standard Plan RSP A77F3 for typical layout used left of approaching traffic at the ends of each structure on multilane freeways or expressways with separate adjacent or parallel bridges.
12. For additional details of typical connections to bridge rail, see Connection Detail AA on Revised Standard Plans RSP A77J1 and RSP A77J2 and Connection Detail FF on Standard Plans A77K1 and A77K2.
13. For additional details of a typical connection to walls or abutments, see Standard Plan A77J3.

STATE OF CALIFORNIA
DEPARTMENT OF TRANSPORTATION

METAL BEAM GUARD RAILING TYPICAL LAYOUTS FOR STRUCTURE APPROACH

NO SCALE

RSP A77F1 DATED JUNE 6, 2008 SUPERSEDES STANDARD PLAN A77F1
DATED MAY 1, 2006 - PAGE 54 OF THE STANDARD PLANS BOOK DATED MAY 2006.

REVISED STANDARD PLAN RSP A77F1

2006 REVISED STANDARD PLAN RSP A77F1

Dist	COUNTY	ROUTE	POST MILES TOTAL PROJECT	SHEET No.	TOTAL SHEETS
08	Riv	10	R24.0/R24.3	23	55

Randell D. Hiatt
REGISTERED CIVIL ENGINEER

May 20, 2011
PLANS APPROVAL DATE

REGISTERED PROFESSIONAL ENGINEER
Randell D. Hiatt
No. C50200
Exp. 6-30-11
CIVIL
STATE OF CALIFORNIA

To accompany plans dated 6-6-11

The State of California or its officers or agents shall not be responsible for the accuracy or completeness of electronic copies of this plan sheet.

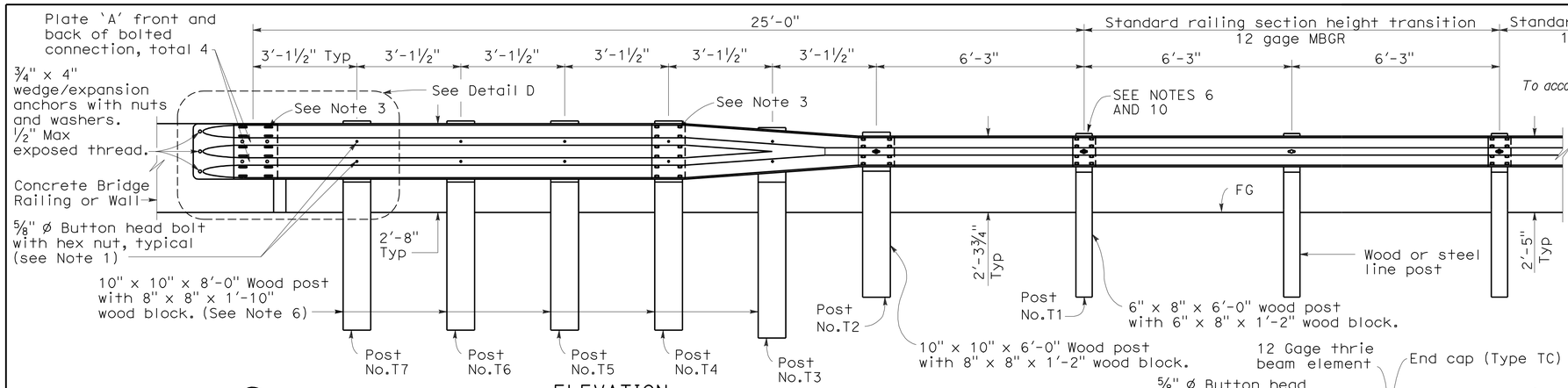

ELEVATION

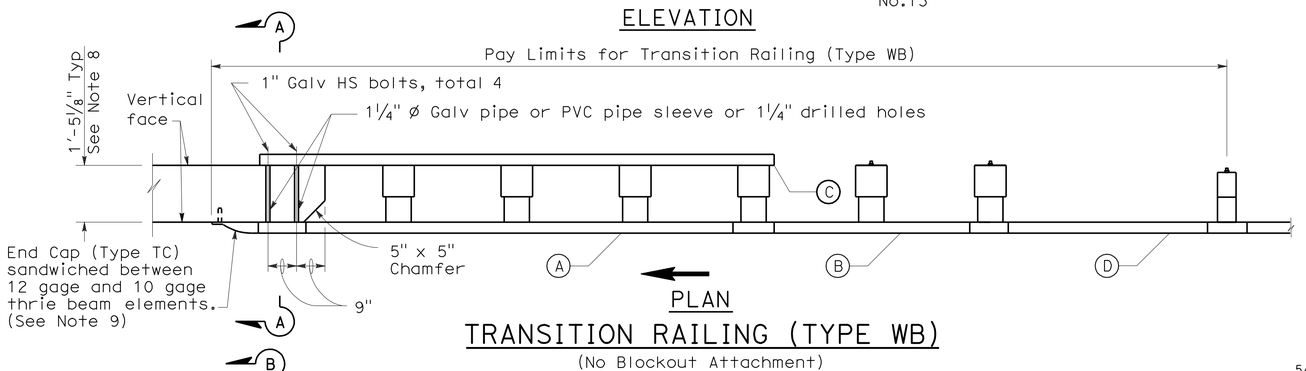

PLAN

TRANSITION RAILING (TYPE WB)

(No Blockout Attachment)

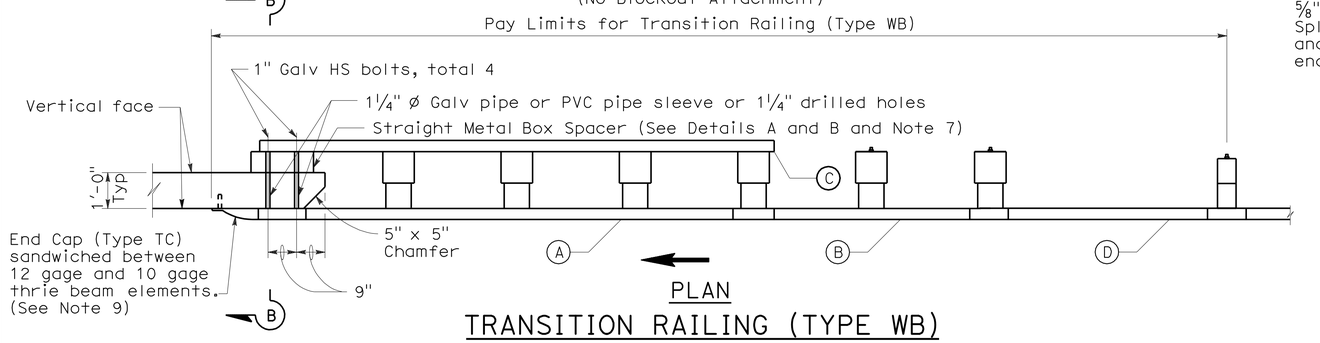

PLAN

TRANSITION RAILING (TYPE WB)

(Blockout Attachment)

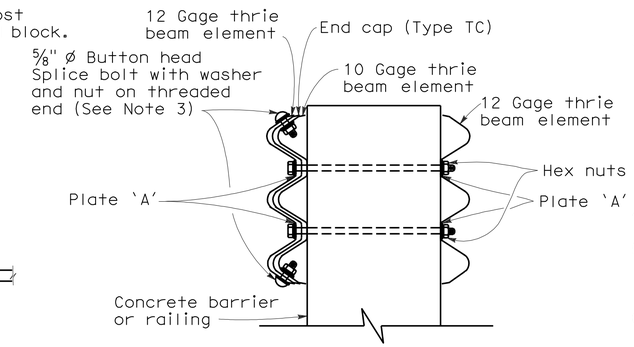

SECTION A-A

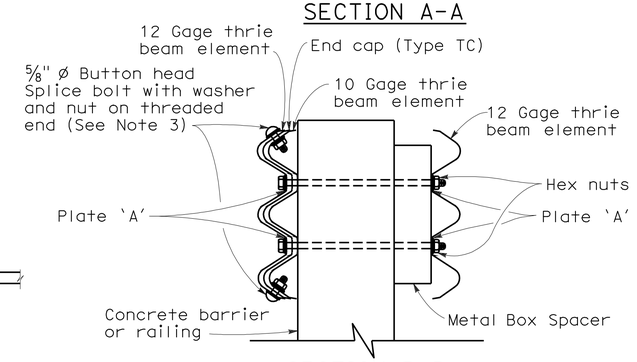

SECTION B-B

NOTES:

1. Use ⅝" ø Button head bolts and hex nuts for connections to posts. No washer on rail face for bolted connections to post.
2. The nested rail elements, end cap, and 'W' beam to thrie beam element may be spliced together prior to bolting the elements to the wood post and concrete barrier or railing.
3. Exterior splice bolt holes for rail element splices at Post No. T4 and the connection to the concrete barrier or railing shall be the standard 29/32" x 1⅛" slot size. Interior splice bolt holes at these locations may be increased up to 1¼" ø. Only the top 2 and the bottom 2 splice bolts with washers and nuts are required for rail splices at Post No. T4 and the connection to the concrete barrier or railing.
4. Direction of adjacent traffic indicated by ⟶.
5. The top elevation of Posts No. T2 through No. T7 shall not project more than 1" above the top elevation of the rail element.
6. Typically, the railing connected to Transition Railing (Type WB) will be either standard railing section of metal beam guard railing with height transition ratio of 120:1 or an approved Caltrans end treatment attached to Post No. T1.
7. The depth of the metal box spacer varies from the 5⅛" to 1½" and is dependent on the width of the concrete railing or wall. The combined dimension for the depth of the metal box spacer plus the width of railing or wall is typically 17⅛". Where the space between the backside of the concrete railing or wall and the rear thrie beam element is less than 1½", metal plates similar to Plate 'A' are to be used as spacers.
8. Where the width of the concrete railing or wall is greater than 17⅛", wood blocks are to be used to fill the space created between the backside of Posts No. T4 through No. T7 and the rear thrie beam element. These wood blocks shall be 8" in width and 1'-2" in length. The dimension between the front thrie beam element and the rear thrie beam element is to match the width of the concrete railing or wall.
9. End cap may be installed over 12 gage and 10 gage thrie beam elements where transition railing is installed on the departure end of bridge railing.
10. Conform standard railing section height to 2'-3¾" at Post No. T1 using height transition ratio of 120:1.

LEGEND

(A) Nested thrie beam elements (one 12 gage element nested over one 10 gage element).

(B) One 10 gage "W" beam to thrie beam element.

(C) One 12 gage thrie beam element.

(D) One 10 gage "W" beam rail element (7'-3½" length)

10 gage = 0.135" thick

12 gage = 0.108" thick

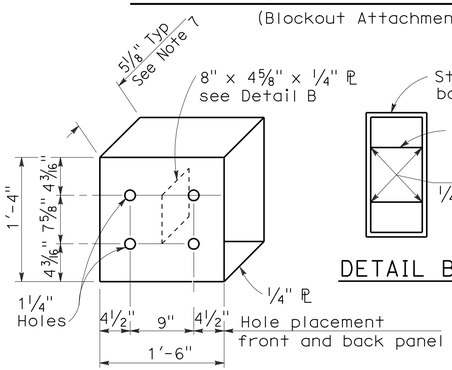

DETAIL A

STRAIGHT METAL BOX SPACER

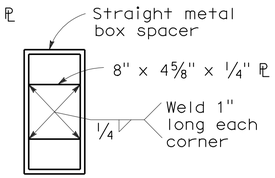

DETAIL B

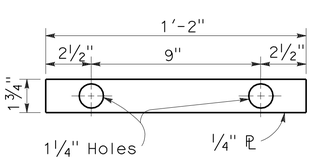

DETAIL C

PLATE 'A'

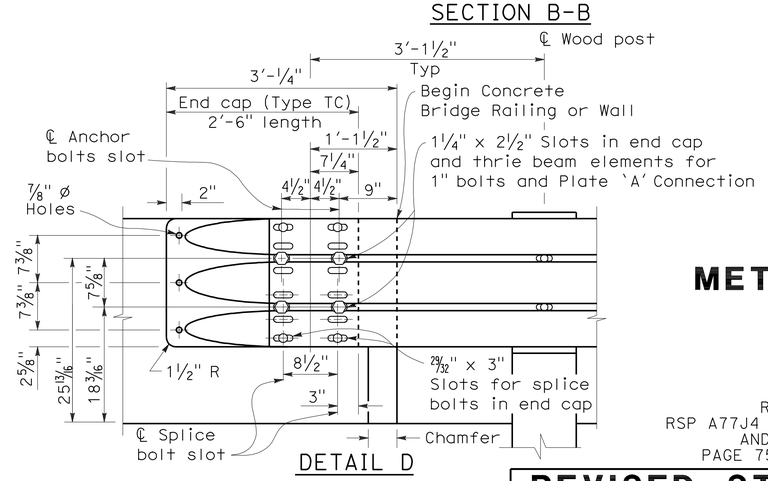

DETAIL D

STATE OF CALIFORNIA
DEPARTMENT OF TRANSPORTATION

METAL BEAM GUARD RAILING TRANSITION RAILING (TYPE WB)

NO SCALE

RSP A77J4 DATED MAY 20, 2011 SUPERSEDES
RSP A77J4 DATED JUNE 5, 2009, RSP A77J4 DATED JUNE 6, 2008
AND STANDARD PLAN A77J4 DATED MAY 1, 2006 -
PAGE 75 OF THE STANDARD PLANS BOOK DATED MAY 2006.

REVISED STANDARD PLAN RSP A77J4

2006 REVISED STANDARD PLAN RSP A77J4

5-14-09

DIST	COUNTY	ROUTE	POST MILES TOTAL PROJECT	SHEET No.	TOTAL SHEETS
08	Riv	10	R24.0/R24.3	24	55

Randell D. Hiatt
REGISTERED CIVIL ENGINEER

June 6, 2008
PLANS APPROVAL DATE

REGISTERED PROFESSIONAL ENGINEER
Randell D. Hiatt
No. C50200
Exp. 6-30-09
CIVIL
STATE OF CALIFORNIA

The State of California or its officers or agents shall not be responsible for the accuracy or completeness of electronic copies of this plan sheet.

To accompany plans dated 6-6-11

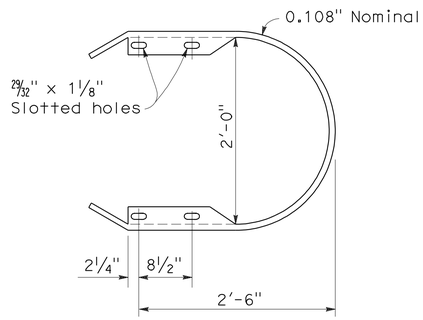

RETURN CAP
(TYPE TA)

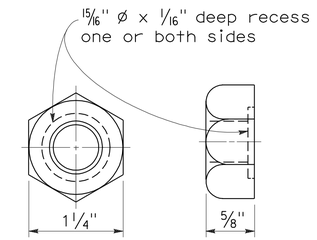

5/8" ø RECESS NUT

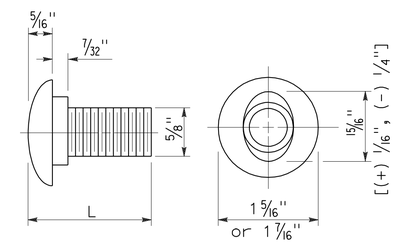

5/8" ø BUTTON HEAD BOLT

L	THREAD LENGTH
1 1/4"	full thread length
2"	full thread length
9 1/2"	4" Min thread length
18"	4" Min thread length

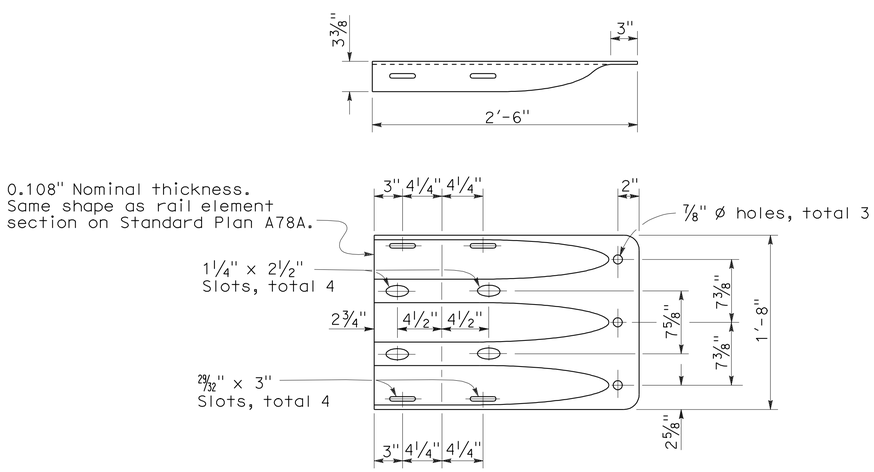

END CAP
(TYPE TC)

STATE OF CALIFORNIA
DEPARTMENT OF TRANSPORTATION

THRIE BEAM BARRIER STANDARD HARDWARE DETAILS

NO SCALE

RSP A78C1 DATED JUNE 6, 2008 SUPERSEDES STANDARD PLAN A78C1
DATED MAY 1, 2006 - PAGE 85 OF THE STANDARD PLANS BOOK DATED MAY 2006.

REVISED STANDARD PLAN RSP A78C1

2006 REVISED STANDARD PLAN RSP A78C1

4-21-08

DIST	COUNTY	ROUTE	POST MILES TOTAL PROJECT	SHEET NO.	TOTAL SHEETS
08	Riv	10	R24.0/R24.3	25	55

Randell D. Hiatt
REGISTERED CIVIL ENGINEER

June 6, 2008
PLANS APPROVAL DATE

REGISTERED PROFESSIONAL ENGINEER
Randell D. Hiatt
No. C50200
Exp. 6-30-09
CIVIL
STATE OF CALIFORNIA

The State of California or its officers or agents shall not be responsible for the accuracy or completeness of electronic copies of this plan sheet.

To accompany plans dated 6-6-11

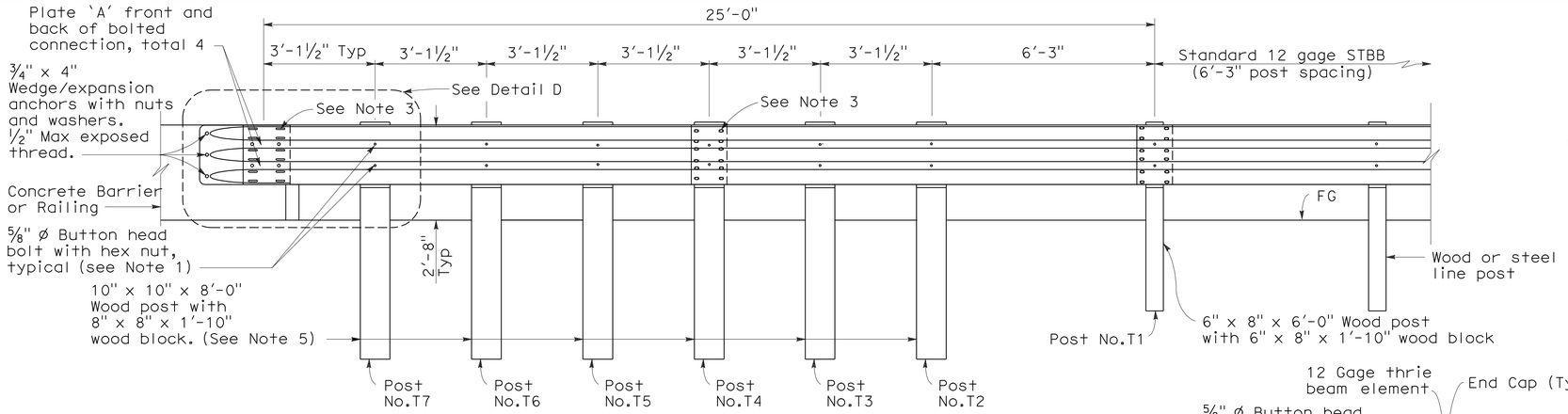

ELEVATION

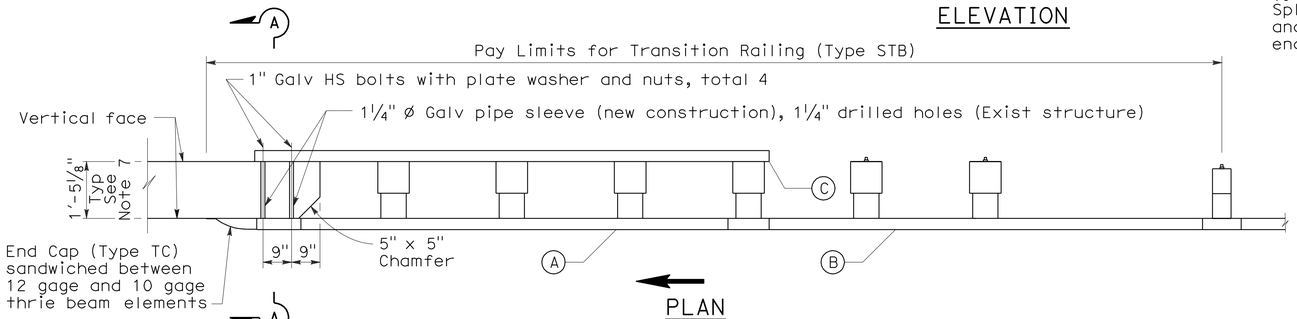

PLAN

TRANSITION RAILING (TYPE STB)

(No Blockout Attachment)

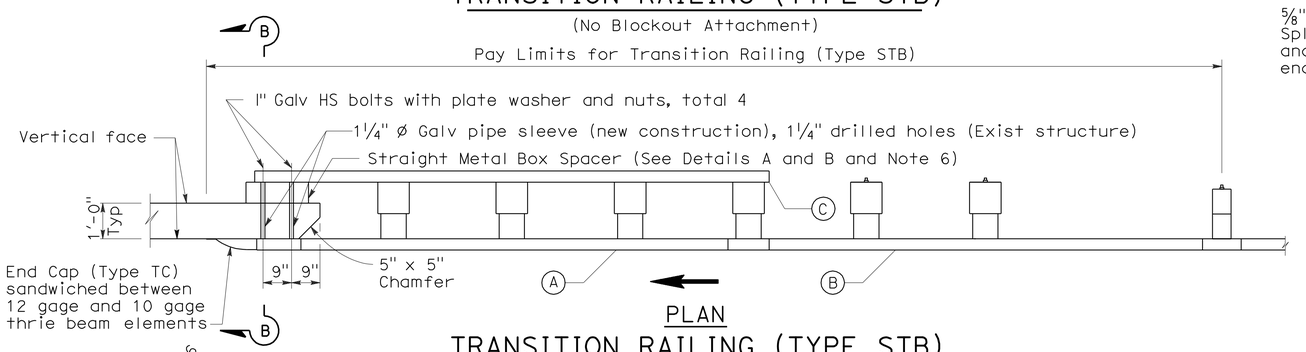

PLAN

TRANSITION RAILING (TYPE STB)

(Blockout Attachment)

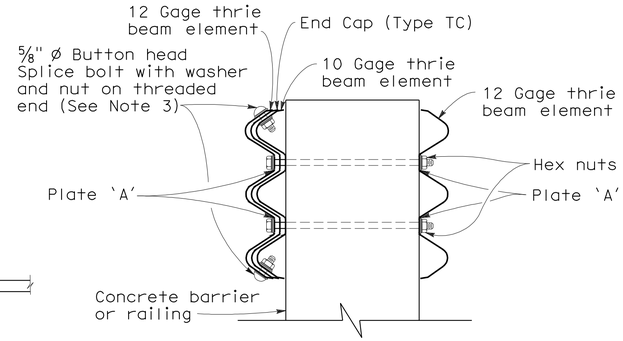

SECTION A-A

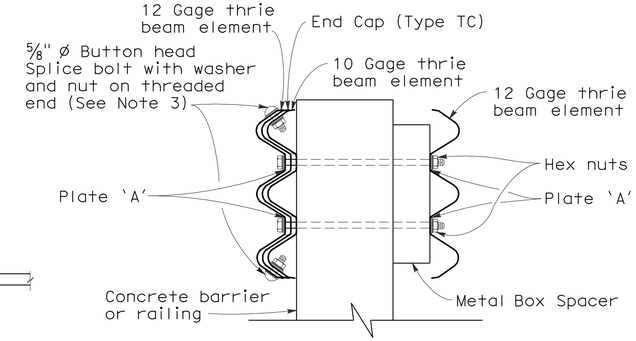

SECTION B-B

LEGEND

(A) Nested thrie beam elements (one 12 gage element nested over one 10 gage element).

(B) One 10 gage thrie beam element.

(C) One 12 gage thrie beam element.

10 gage = 0.135" thick

12 gage = 0.108" thick

NOTES:

1. Use ⅝" ø Button head bolts and hex nuts for connection to posts. No washer on rail face for bolted connections to post.
2. The nested rail elements, end cap and single 10 gage thrie beam element, may be spliced together prior to bolting the elements to the wood post and concrete barrier or railing.
3. Exterior splice bolt holes for rail element splices at Post No.T4 and the connection to the concrete barrier or railing shall be the standard 29/32" x 1⅛" slot size. Interior splice bolt holes at these locations may be increased up to 1¼" ø. Only the top 2 and the bottom 2 splice bolts with washers and nuts are required for rail splices at Post No.T4 and the connection to the concrete barrier or railing.
4. Direction of adjacent traffic indicated by ⟶.
5. The top elevation of Post Nos.T2 through T7 shall not project more than 1" above the top elevation of the rail element.
6. The depth of the metal box spacer varies from the 5⅛" to 1½" and is dependent on the width of the concrete railing or wall. The combined dimension for the depth of the metal box spacer plus the width of railing or wall is typically 17⅛". Where the space between the backside of the concrete railing or wall and the rear thrie beam element is less than 1½" metal plates similar to Plate 'A' are to be used as spacers.
7. Where the width of the concrete railing or wall is greater than 17⅛", wood blocks are to be used to fill the space created between the backside of Post No.4 through No.7 and the rear thrie beam element. These wood blocks shall be 8" in width and 1'-2" in length. The dimension between the front thrie beam element and the rear thrie beam element is to match the width of the concrete railing or wall.
8. For details of End Cap (Type TC), see Revised Standard Plan RSP A78C1.

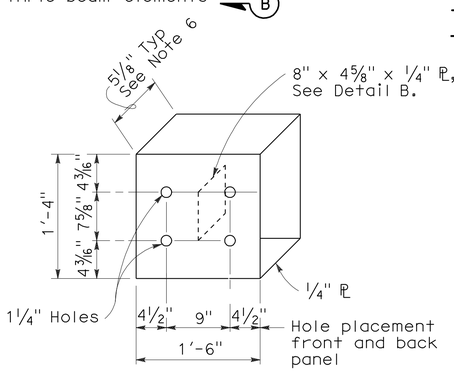

DETAIL A

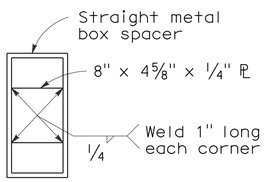

DETAIL B

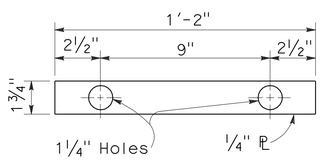

DETAIL C

STRAIGHT METAL BOX SPACER

PLATE 'A'

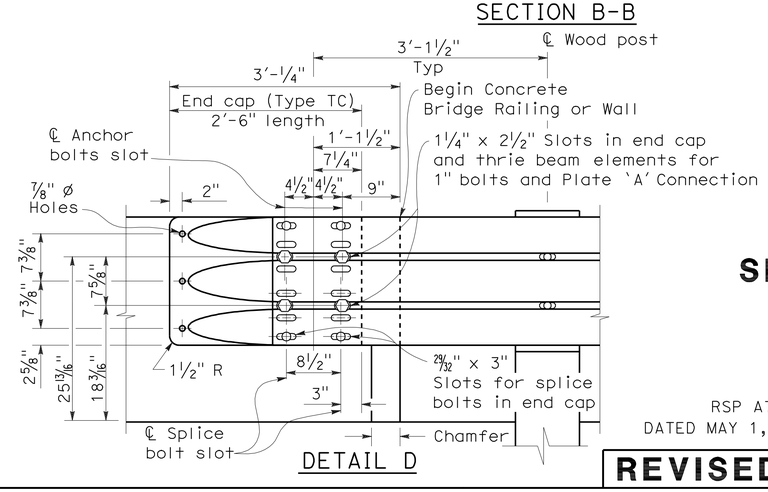

DETAIL D

STATE OF CALIFORNIA
DEPARTMENT OF TRANSPORTATION

SINGLE THRIE BEAM BARRIER TRANSITION RAILING (TYPE STB)

NO SCALE

RSP A78J DATED JUNE 6, 2008 SUPERSEDES STANDARD PLAN A78J
DATED MAY 1, 2006 - PAGE 97 OF THE STANDARD PLANS BOOK DATED MAY 2006.

REVISED STANDARD PLAN RSP A78J

2006 REVISED STANDARD PLAN RSP A78J

5-1-08

DIST	COUNTY	ROUTE	POST MILES TOTAL PROJECT	SHEET NO.	TOTAL SHEETS
08	Riv	10	R24.0/R24.3	26	55

Randell D. Hiatt
REGISTERED CIVIL ENGINEER

June 6, 2008
PLANS APPROVAL DATE

REGISTERED PROFESSIONAL ENGINEER
Randell D. Hiatt
No. C50200
Exp. 6-30-09
CIVIL
STATE OF CALIFORNIA

The State of California or its officers or agents shall not be responsible for the accuracy or completeness of electronic copies of this plan sheet.

To accompany plans dated 6-6-11

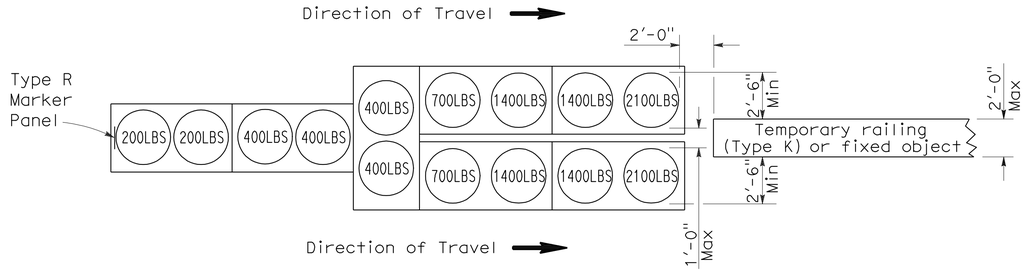

ARRAY 'TU14'

Approach speed 45 mph or more

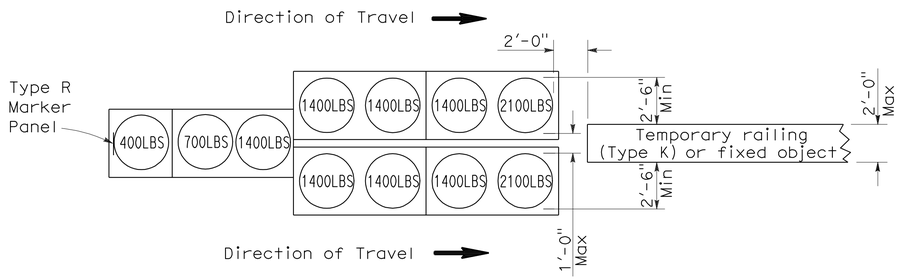

ARRAY 'TU11'

Approach speed less than 45 mph

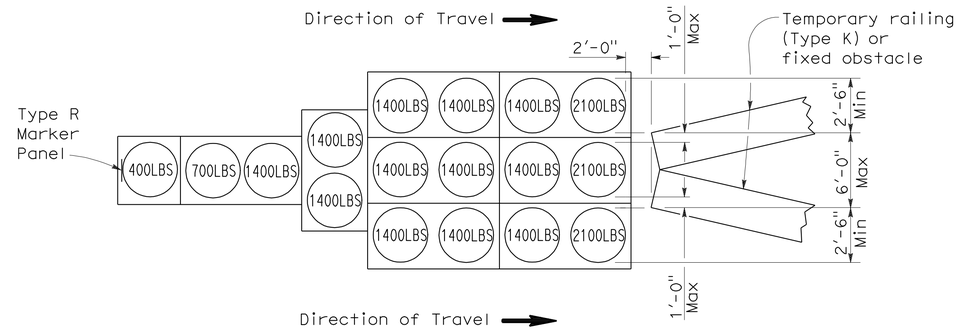

ARRAY 'TU17'

Approach speed less than 45 mph

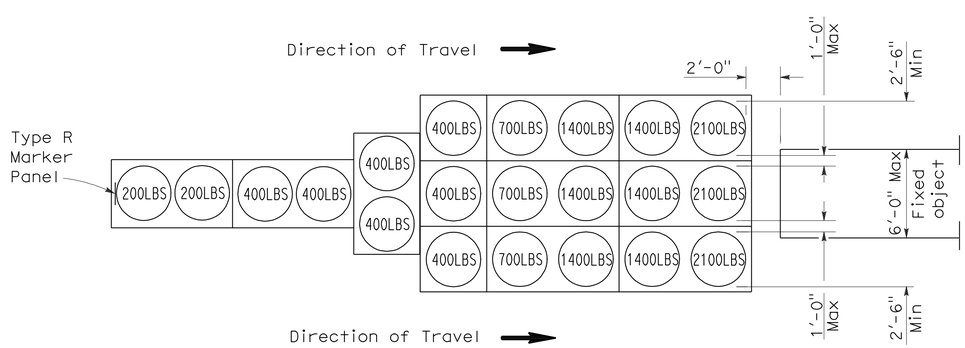

ARRAY 'TU21'

Approach speed 45 mph or more

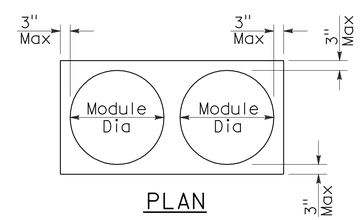

PLAN

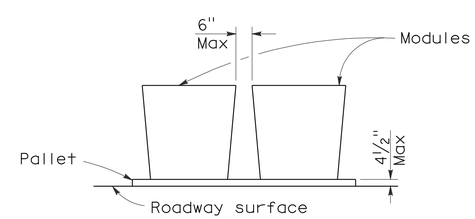

ELEVATION

CRASH CUSHION PALLET DETAIL

See Note 7

NOTES:

1. (XXX) Indicates sand filled module location and weight of sand in pounds for each module. Module spacing is based on the greater diameter of the module.
2. All sand weights are nominal.
3. Temporary crash cushion arrays shall not encroach on the traveled way.
4. Place the top of Type R marker panel 1" below the module lid.
5. Refer to Standard Plan A73B for marker details.
6. Approach speeds indicated conform to NCHRP 350 Report criteria.
7. Use of pallets is optional.

STATE OF CALIFORNIA
DEPARTMENT OF TRANSPORTATION

TEMPORARY CRASH CUSHION, SAND FILLED (UNIDIRECTIONAL)

NO SCALE

RSP T1A DATED JUNE 6, 2008 SUPERSEDES STANDARD PLAN T1A
DATED MAY 1, 2006 - PAGE 211 OF THE STANDARD PLANS BOOK DATED MAY 2006.

REVISED STANDARD PLAN RSP T1A

2006 REVISED STANDARD PLAN RSP T1A

DIST	COUNTY	ROUTE	POST MILES TOTAL PROJECT	SHEET NO.	TOTAL SHEETS
08	Riv	10	R24.0/R24.3	27	55

Randell D. Hiatt
REGISTERED CIVIL ENGINEER

June 6, 2008
PLANS APPROVAL DATE

REGISTERED PROFESSIONAL ENGINEER
Randell D. Hiatt
No. C50200
Exp. 6-30-09
CIVIL
STATE OF CALIFORNIA

The State of California or its officers or agents shall not be responsible for the accuracy or completeness of electronic copies of this plan sheet.

To accompany plans dated 6-6-11

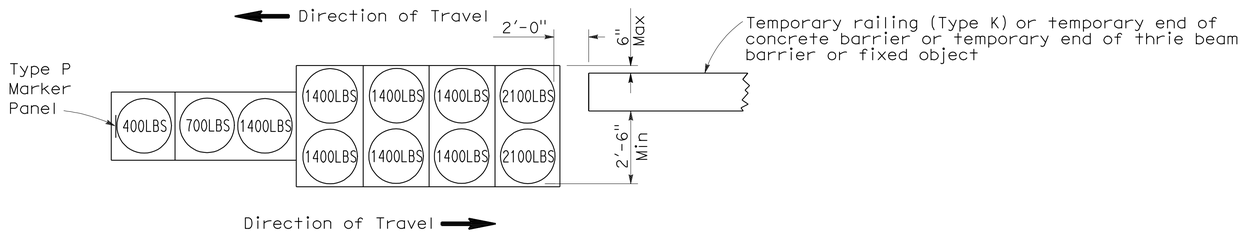

ARRAY 'TB11'

Approach speed less than 45 mph

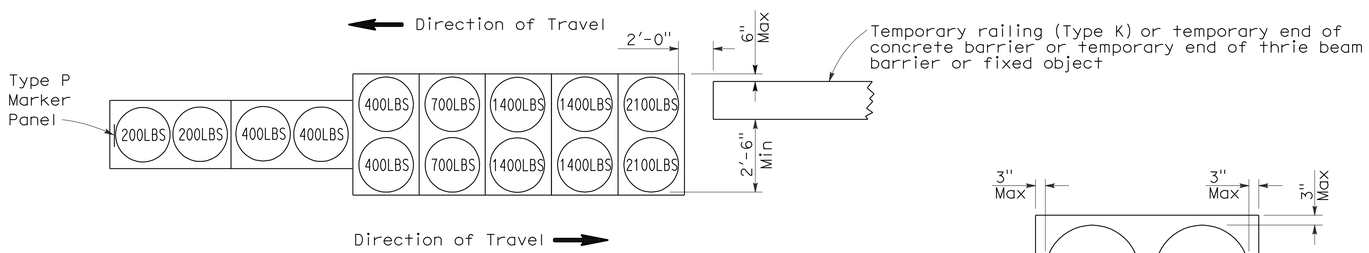

ARRAY 'TB14'

Approach speed 45 mph or more

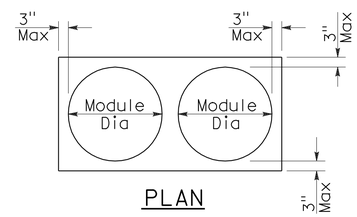

PLAN

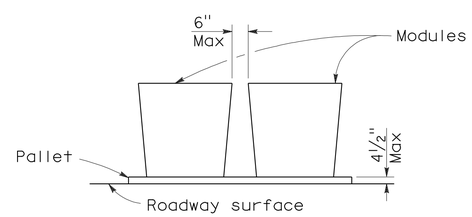

ELEVATION

CRASH CUSHION PALLET DETAIL

See Note 7

NOTES:

1. (XXX) Indicates sand filled module location and weight of sand in pounds for each module. Module spacing is based on the greater diameter of the module.
2. All sand weights are nominal.
3. Temporary crash cushion arrays shall not encroach on the traveled way.
4. Place the Type P marker panel so that the bottom of the panel rests upon the pallet.
5. Refer to Standard Plan A73B for marker details.
6. Approach speeds indicated conform to NCHRP 350 Report criteria.
7. Use of pallets is optional.

STATE OF CALIFORNIA
DEPARTMENT OF TRANSPORTATION

TEMPORARY CRASH CUSHION, SAND FILLED (BIDIRECTIONAL)

NO SCALE

RSP T1B DATED JUNE 6, 2008 SUPERSEDES STANDARD PLAN T1B
DATED MAY 1, 2006 - PAGE 212 OF THE STANDARD PLANS BOOK DATED MAY 2006.

REVISED STANDARD PLAN RSP T1B

2006 REVISED STANDARD PLAN RSP T1B

5-15-08

DIST	COUNTY	ROUTE	POST MILES TOTAL PROJECT	SHEET NO.	TOTAL SHEETS
08	Riv	10	R24.0/R24.3	28	55

Randell D. Hiatt
REGISTERED CIVIL ENGINEER

June 6, 2008
PLANS APPROVAL DATE

REGISTERED PROFESSIONAL ENGINEER
Randell D. Hiatt
No. C50200
Exp. 6-30-09
CIVIL
STATE OF CALIFORNIA

The State of California or its officers or agents shall not be responsible for the accuracy or completeness of electronic copies of this plan sheet.

To accompany plans dated 6-6-11

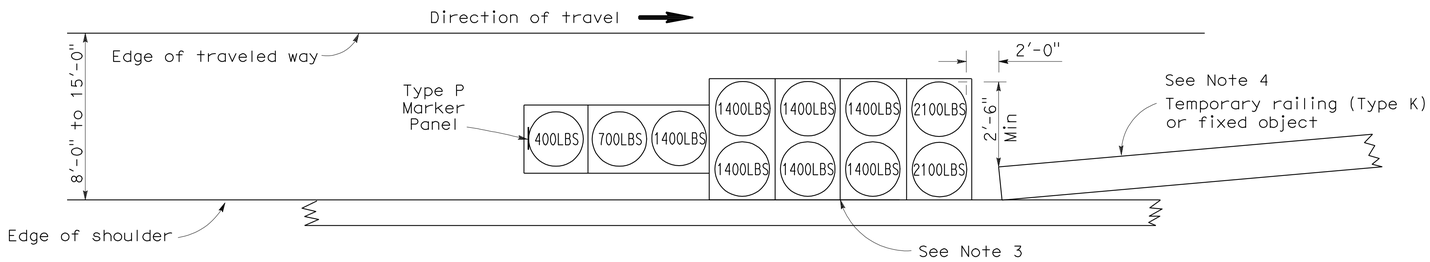

ARRAY 'TS11'

Approach speed less than 45 mph
See Note 9

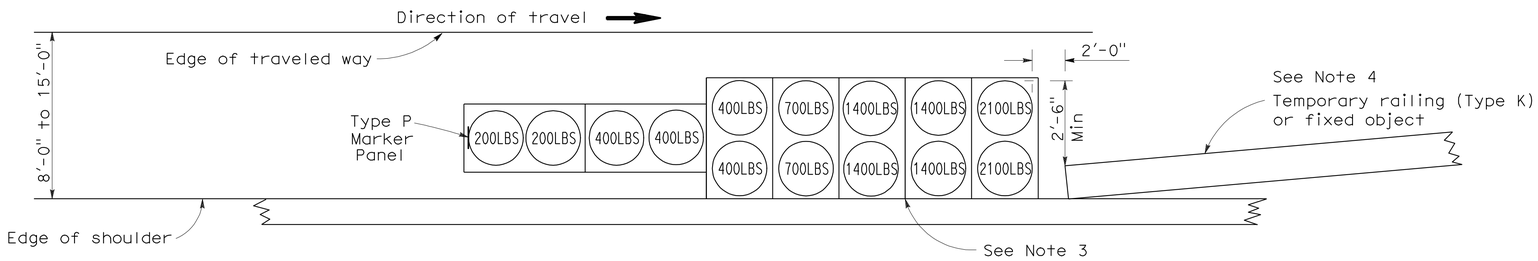

ARRAY 'TS14'

Approach speed 45 mph or more
See Note 9

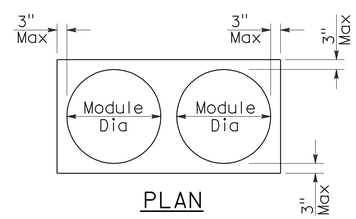

PLAN

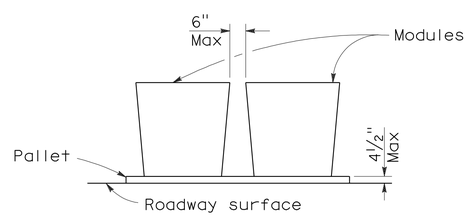

ELEVATION

CRASH CUSHION PALLET DETAIL

See Note 11

NOTES:

1. (XXX) Indicates sand filled module location and weight of sand in pounds for each module. Module spacing is based on the greater diameter of the module.
2. All sand weights are nominal.
3. The temporary crash cushion arrays shown on this plan shall be used only in locations where there will be traffic on one side of the temporary crash cushion array.
4. If the fixed object or approach end of the temporary railing is less than 15'-0" from the edge of traveled way, a temporary crash cushion is required in a construction or work zone.
5. Temporary crash cushion arrays shall not encroach on the traveled way.
6. Arrays for median shoulders shall conform to details shown on this plan for outside shoulders.
7. Place the Type P marker panel so that the bottom of the panel rests upon the pallet and faces traffic.
8. Refer to Standard Plan A73B for marker details.
9. For shoulder widths less than 8'-0", appropriate approved crash cushion protection, other than sand filled modules, shall be provided at fixed objects and at approach ends of temporary railing. The specific type of crash cushion shall be as shown on the project plans or as specified in the Special Provisions, or if not shown on the project plans or specified in the Special Provisions, shall be as approved by the Engineer.
10. Approach speeds indicated conform to NCHRP 350 Report criteria.
11. Use of pallets is optional.

STATE OF CALIFORNIA
DEPARTMENT OF TRANSPORTATION

TEMPORARY CRASH CUSHION, SAND FILLED (SHOULDER INSTALLATIONS)

NO SCALE

RSP T2 DATED JUNE 6, 2008 SUPERSEDES STANDARD PLAN T2
DATED MAY 1, 2006 - PAGE 213 OF THE STANDARD PLANS BOOK DATED MAY 2006.

REVISED STANDARD PLAN RSP T2

2006 REVISED STANDARD PLAN RSP T2

5-15-08

DIST	COUNTY	ROUTE	POST MILES TOTAL PROJECT	SHEET NO.	TOTAL SHEETS
08	Riv	10	R24.0/R24.3	29	55

LICENSED LANDSCAPE ARCHITECT

April 3, 2009
PLANS APPROVAL DATE

The State of California or its officers or agents shall not be responsible for the accuracy or completeness of electronic copies of this plan sheet.

LICENSED LANDSCAPE ARCHITECT — Robert B. Schott — Signature — 11-30-10 Renewal Date — 2-25-09 Date — STATE OF CALIFORNIA

To accompany plans dated 6-6-11

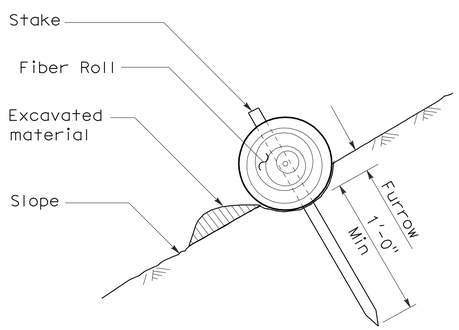

SECTION

TEMPORARY FIBER ROLL (TYPE 1)

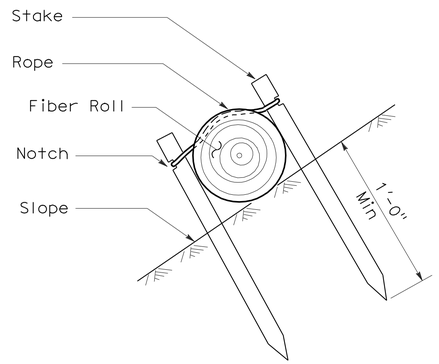

SECTION

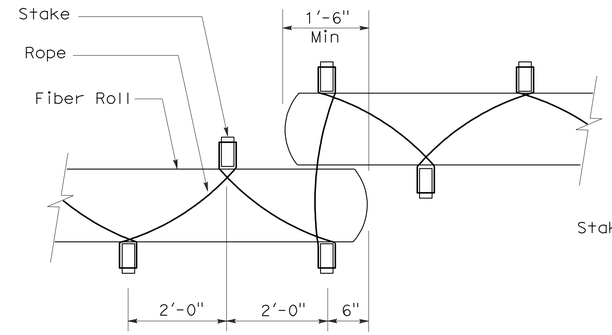

PLAN

TEMPORARY FIBER ROLL (TYPE 2)

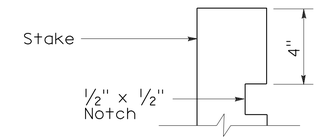

ELEVATION

STAKE NOTCH DETAIL

NOTES:

1. Temporary fiber roll spacing varies depending upon slope inclination.
2. Installations shown in the perspectives are for slope inclination of 10:1 and steeper.

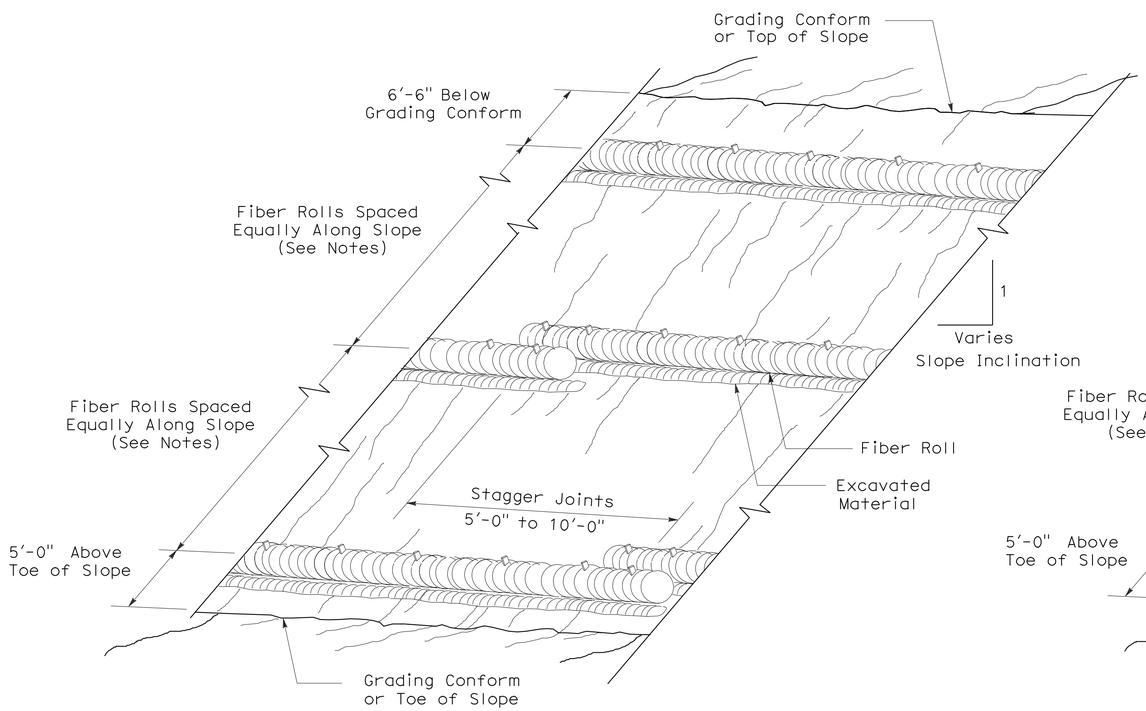

PERSPECTIVE

TEMPORARY FIBER ROLL (TYPE 1)

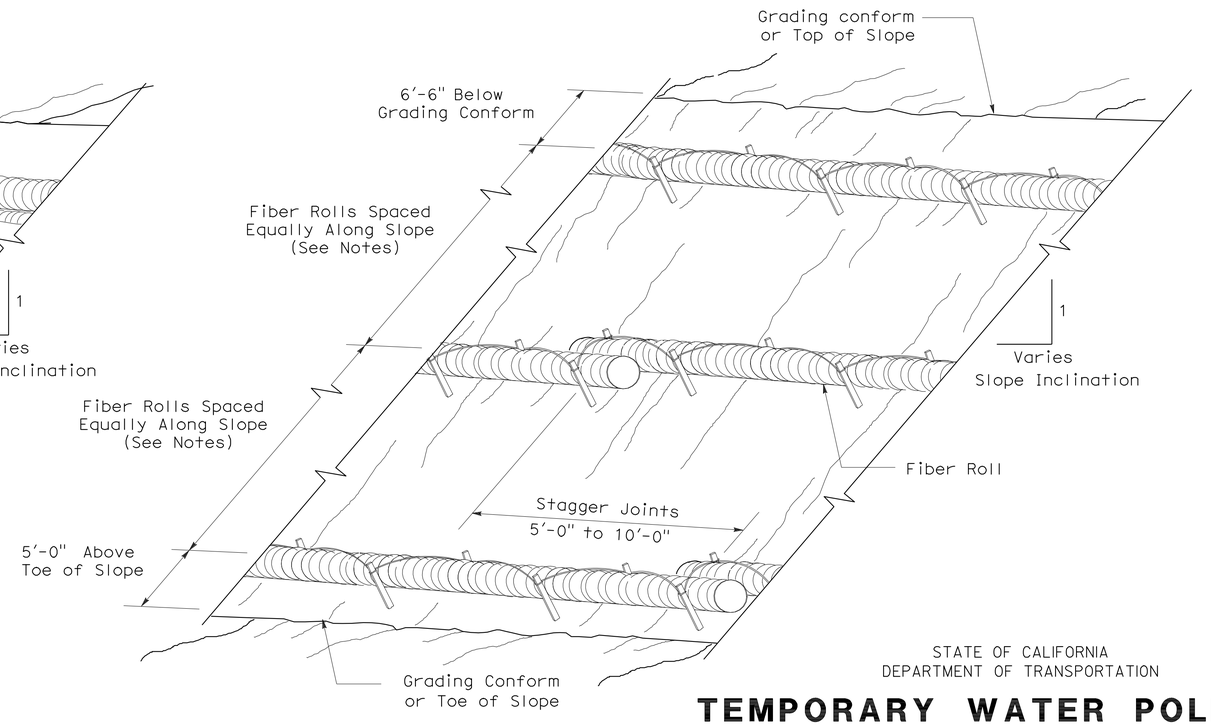

PERSPECTIVE

TEMPORARY FIBER ROLL (TYPE 2)

STATE OF CALIFORNIA
DEPARTMENT OF TRANSPORTATION

TEMPORARY WATER POLLUTION CONTROL DETAILS (TEMPORARY FIBER ROLL)

NO SCALE

RSP T56 DATED APRIL 3, 2009 SUPERSEDES STANDARD PLAN T56
DATED MAY 1, 2006 - PAGE 232 OF THE STANDARD PLANS BOOK DATED MAY 2006.

REVISED STANDARD PLAN RSP T56

2006 REVISED STANDARD PLAN RSP T56

2-23-09

DIST	COUNTY	ROUTE	POST MILES TOTAL PROJECT	SHEET NO.	TOTAL SHEETS
08	Riv	10	R24.0/R24.3	30	55

LICENSED LANDSCAPE ARCHITECT

August 15, 2008
PLANS Approval DATE

The State of California or its officers or agents shall not be responsible for the accuracy or completeness of electronic copies of this plan sheet.

LICENSED LANDSCAPE ARCHITECT Robert B. Schott 3895 Signature 11-04-08 Renewal Date 08-11-08 Date STATE OF CALIFORNIA

To accompany plans dated 6-6-11

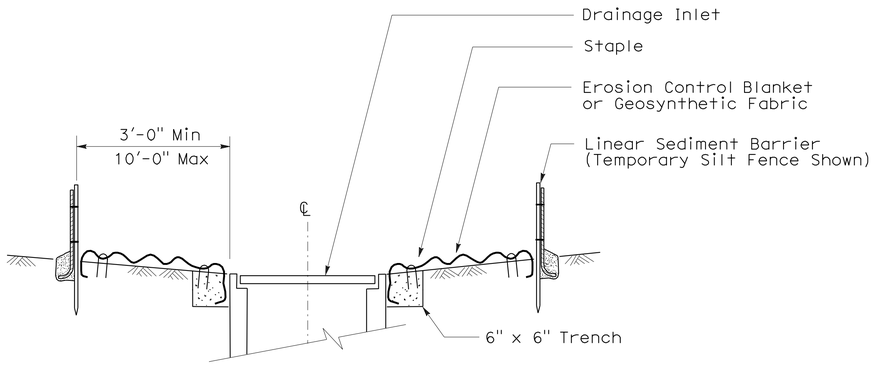

SECTION A-A

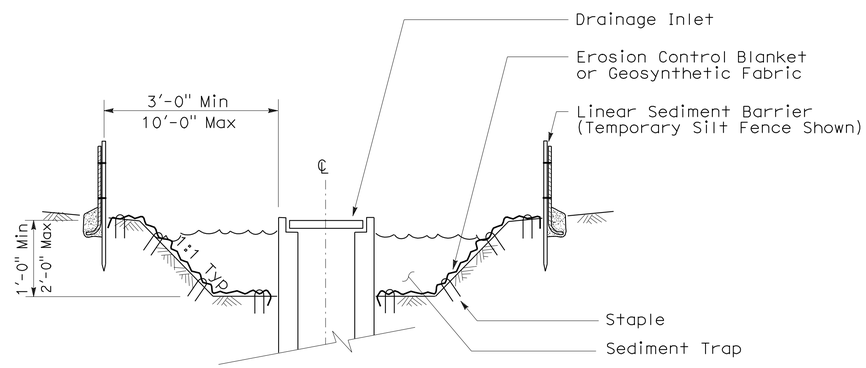

SECTION B-B

NOTES:

1. See Standard Plan T51 for Temporary Silt Fence.
2. Dimensions may vary to fit field conditions.

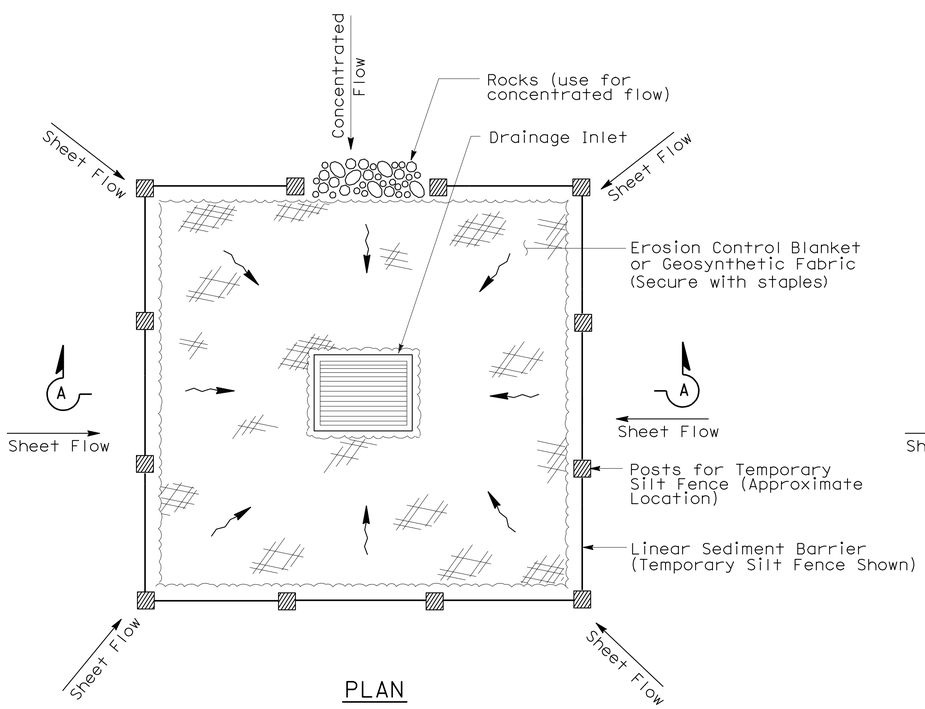

PLAN

TEMPORARY DRAINAGE INLET PROTECTION (TYPE 1)

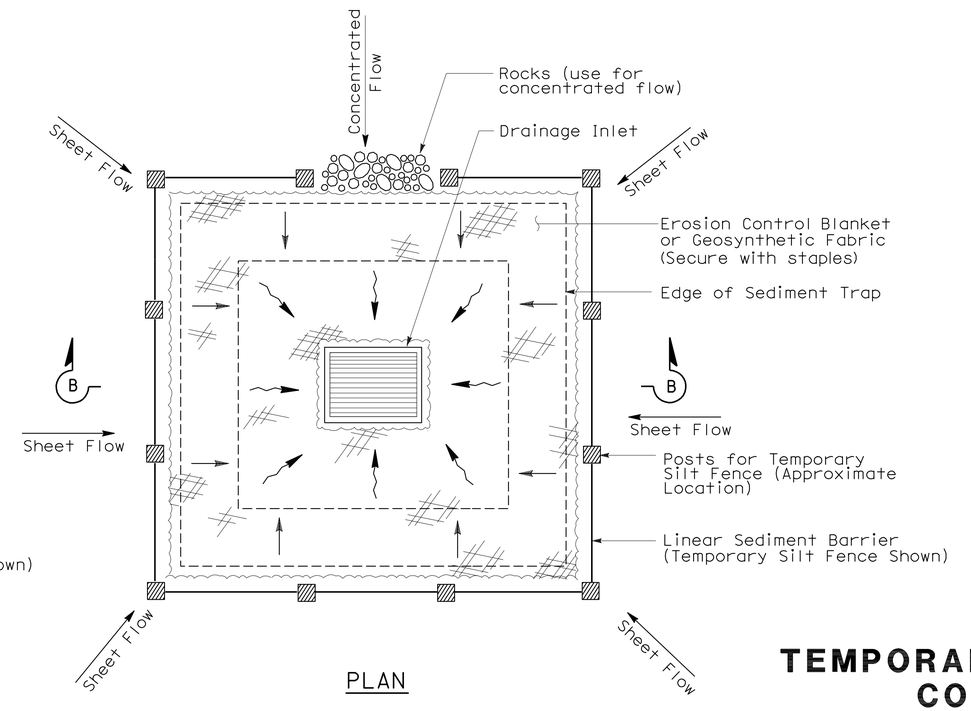

PLAN

TEMPORARY DRAINAGE INLET PROTECTION (TYPE 2) (EXCAVATED SEDIMENT TRAP)

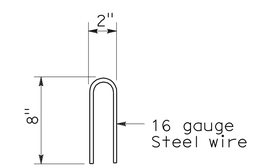

STAPLE DETAIL

STATE OF CALIFORNIA
DEPARTMENT OF TRANSPORTATION

TEMPORARY WATER POLLUTION CONTROL DETAILS (TEMPORARY DRAINAGE INLET PROTECTION)

NO SCALE

NSP T61 DATED AUGUST 15, 2008 SUPPLEMENTS THE STANDARD PLANS BOOK DATED MAY 2006.

NEW STANDARD PLAN NSP T61

2006 NEW STANDARD PLAN NSP T61

7-11-08

DIST	COUNTY	ROUTE	POST MILES TOTAL PROJECT	SHEET NO.	TOTAL SHEETS
08	Riv	10	R24.0/R24.3	31	55

LICENSED LANDSCAPE ARCHITECT

August 15, 2008
PLANS APPROVAL DATE

LICENSED LANDSCAPE ARCHITECT — Robert B. Schott — Signature — 11-04-08 Renewal Date — 08-11-08 Date — STATE OF CALIFORNIA

The State of California or its officers or agents shall not be responsible for the accuracy or completeness of electronic copies of this plan sheet.

To accompany plans dated 6-6-11

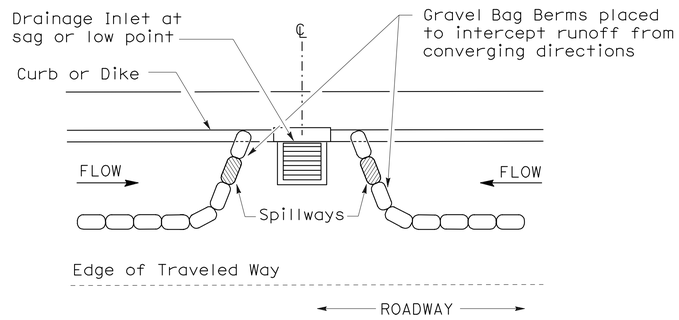

PLAN

CONFIGURATION FOR SAG POINT INLET (GRAVEL BAG BERM)

GRAVEL BAG BERM (TYPE 3A) SPACING TABLE

SLOPE OF ROADWAY (PERCENT)	1 to 3.9	4 to 5.9	6 to 7.9	8 to 10	10+
INTERVAL BETWEEN BERM	100′	75′	50′	25′	12′

For slope of less than 1%, install barriers only if erosion/sediment is prevalent

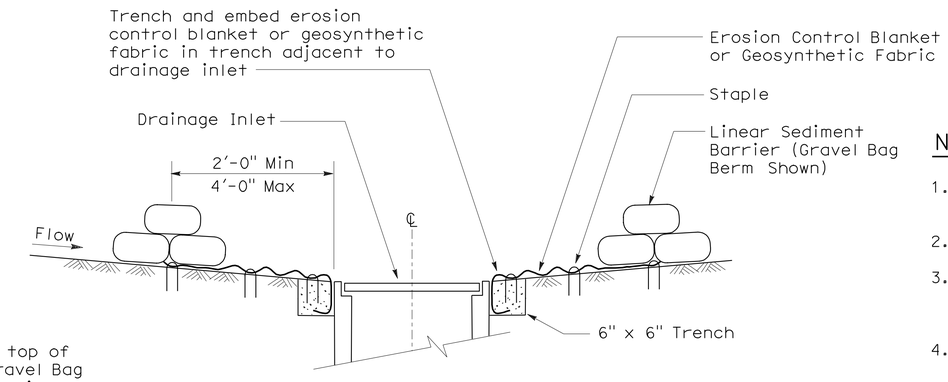

SECTION A-A

NOTES:

1. Place safety cones adjacent to drainage inlet protection.
2. Dimensions may vary to fit field conditions.
3. Install a minimum of 3 gravel bag berms upstream of each drainage inlet to be protected.
4. Position erosion control blanket or geosynthetic fabric at edge of concrete apron and secure in trench.
5. Erosion control blanket or geosynthetic fabric is not required if the area adjacent to the drainage inlet is vegetated or paved.

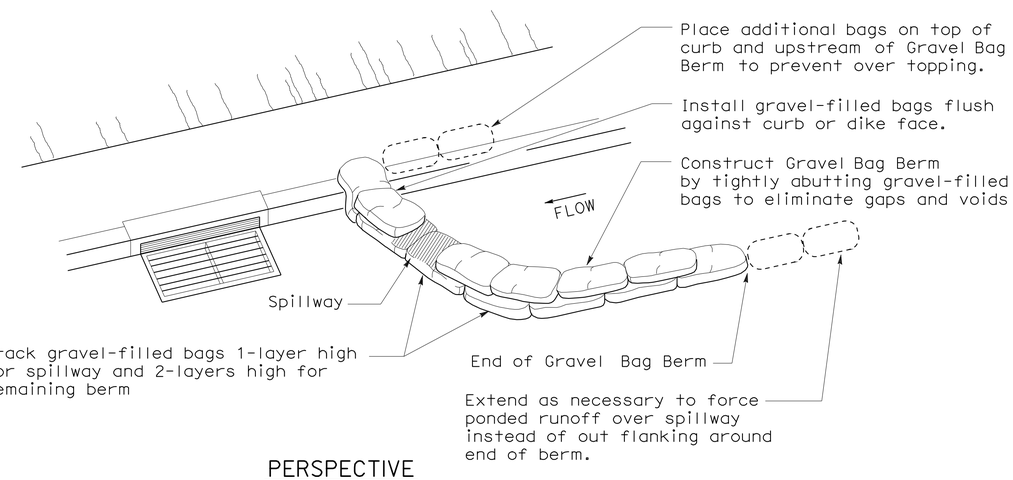

PERSPECTIVE

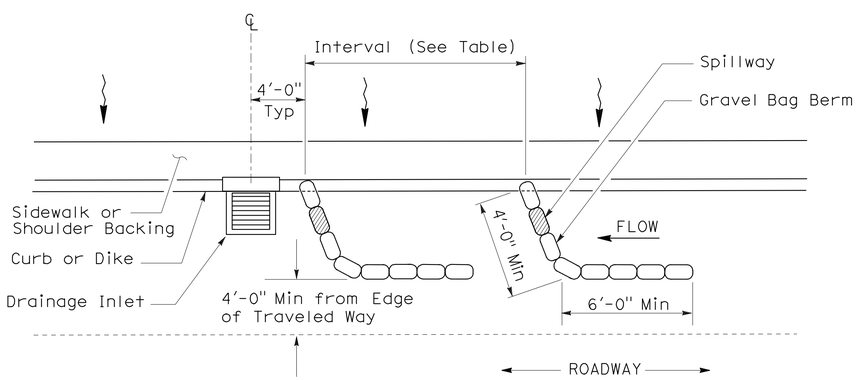

PLAN

TEMPORARY DRAINAGE INLET PROTECTION (TYPE 3A) (GRAVEL BAG BERM)

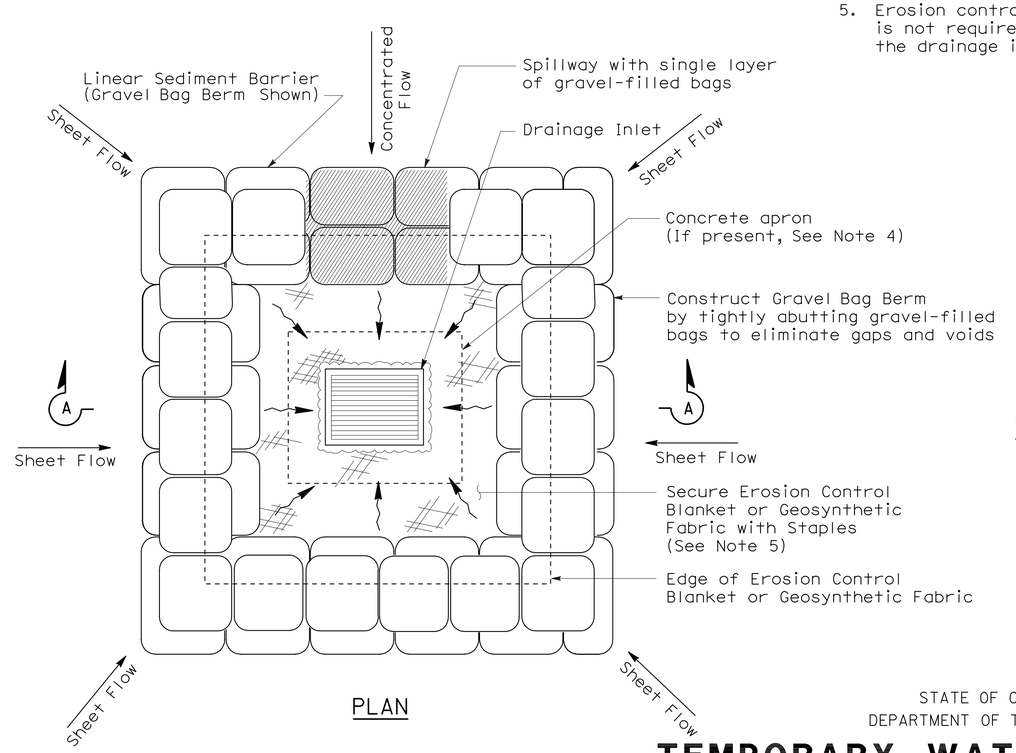

PLAN

TEMPORARY DRAINAGE INLET PROTECTION (TYPE 3B)

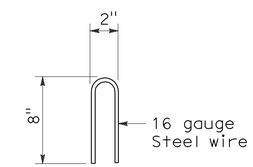

STAPLE DETAIL

STATE OF CALIFORNIA
DEPARTMENT OF TRANSPORTATION

TEMPORARY WATER POLLUTION CONTROL DETAILS (TEMPORARY DRAINAGE INLET PROTECTION)

NO SCALE

NSP T62 DATED AUGUST 15, 2008 SUPPLEMENTS THE STANDARD PLANS BOOK DATED MAY 2006.

NEW STANDARD PLAN NSP T62

2006 NEW STANDARD PLAN NSP T62

7-11-08

DIST	COUNTY	ROUTE	POST MILES TOTAL PROJECT	SHEET NO.	TOTAL SHEETS
08	Riv	10	R24.0/R24.3	32	55

LICENSED LANDSCAPE ARCHITECT

August 15, 2008
PLANS APPROVAL DATE

The State of California or its officers or agents shall not be responsible for the accuracy or completeness of electronic copies of this plan sheet.

LICENSED LANDSCAPE ARCHITECT Robert B. Schott 3625 Signature 11-04-08 Renewal Date 08-11-08 Date STATE OF CALIFORNIA

To accompany plans dated 6-6-11

FLEXIBLE SEDIMENT BARRIER SPACING TABLE

SLOPE OF ROADWAY (PERCENT)	0 to 0.9	1 to 1.9	2 to 2.9	3 to 4	5+
INTERVAL BETWEEN BARRIERS	50′	35′	30′	25′	20′
ANGLE FROM FACE OF CURB	70°	70°	70°	45°	45°
SUGGESTED BARRIER LENGTH	6′	6′	6′	6′	6′

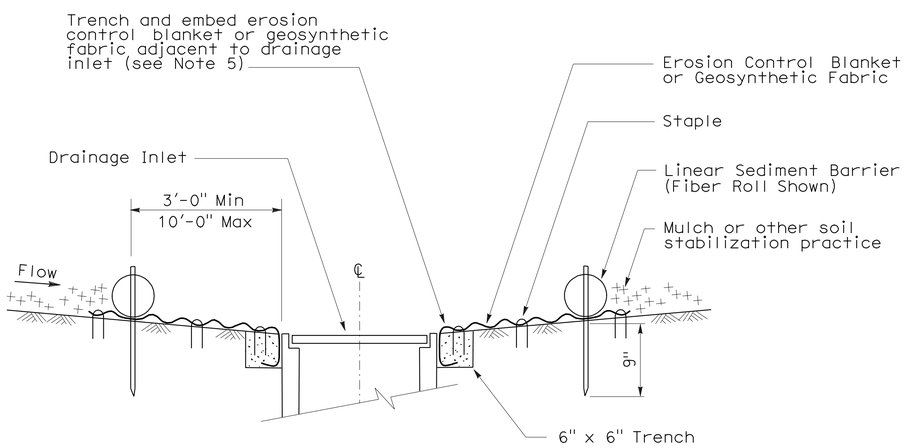

SECTION A-A

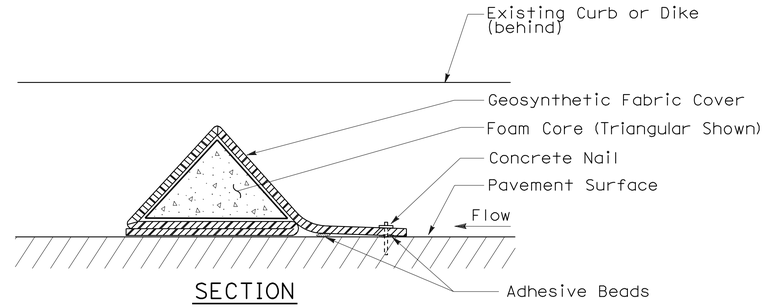

SECTION

FLEXIBLE SEDIMENT BARRIER DETAIL (FOAM BARRIER SHOWN)

NOTES:

1. See Standard Plan T51 for Temporary Silt Fence.
2. Dimensions may vary to fit field conditions.
3. Install a minimum of 3 flexible sediment barriers upstream of each drainage inlet to be protected.
4. Position erosion control blanket or geosynthetic fabric at edge of concrete apron and secure in trench.
5. Erosion control blanket or geosynthetic fabric is not required if the area adjacent to the drainage inlet is vegetated.

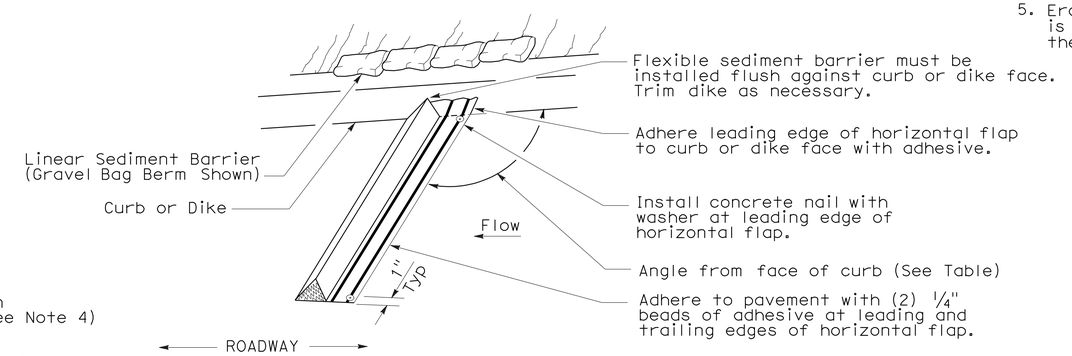

PERSPECTIVE

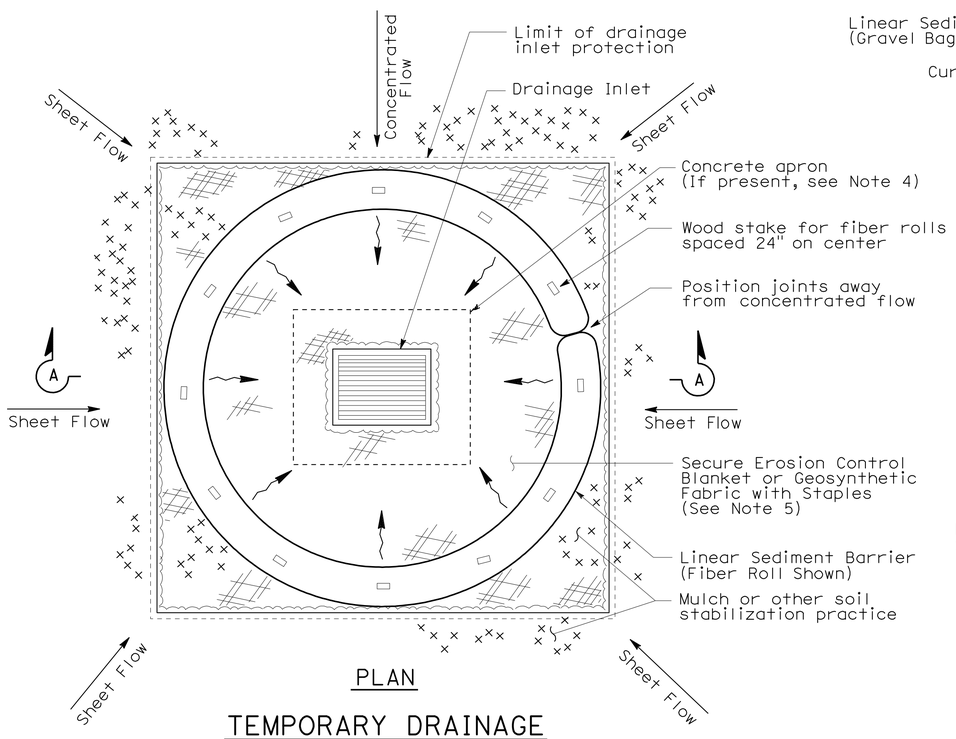

PLAN

TEMPORARY DRAINAGE INLET PROTECTION (TYPE 4A)

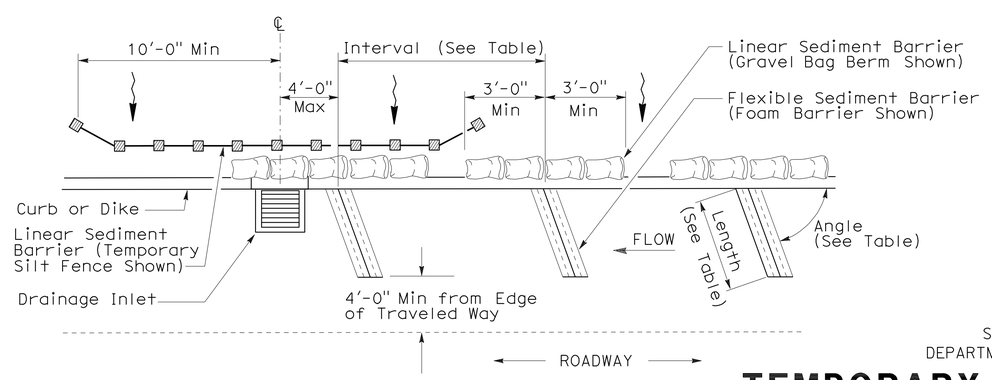

PLAN

TEMPORARY DRAINAGE INLET PROTECTION (TYPE 4B) FLEXIBLE SEDIMENT BARRIER

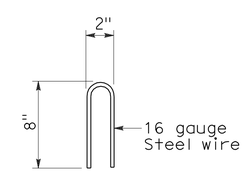

STAPLE DETAIL

STATE OF CALIFORNIA
DEPARTMENT OF TRANSPORTATION

TEMPORARY WATER POLLUTION CONTROL DETAILS (TEMPORARY DRAINAGE INLET PROTECTION)

NO SCALE

NSP T63 DATED AUGUST 15, 2008 SUPPLEMENTS THE STANDARD PLANS BOOK DATED MAY 2006.

NEW STANDARD PLAN NSP T63

2006 NEW STANDARD PLAN NSP T63

7-11-08

DIST	COUNTY	ROUTE	POST MILES TOTAL PROJECT	SHEET NO.	TOTAL SHEETS
08	Riv	10	R24.0/R24.3	33	55

LICENSED LANDSCAPE ARCHITECT

August 15, 2008
PLANS APPROVAL DATE

LICENSED LANDSCAPE ARCHITECT
Robert B. Schott 3625
Signature
11-04-08
Renewal Date
08-11-08
Date
STATE OF CALIFORNIA

The State of California or its officers or agents shall not be responsible for the accuracy or completeness of electronic copies of this plan sheet.

To accompany plans dated 6-6-11

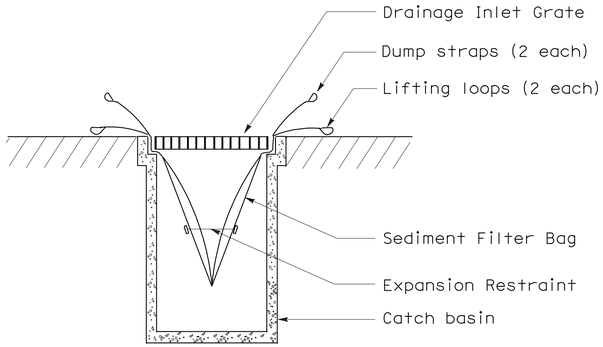

SECTION B-B

SEDIMENT FILTER BAG DETAIL

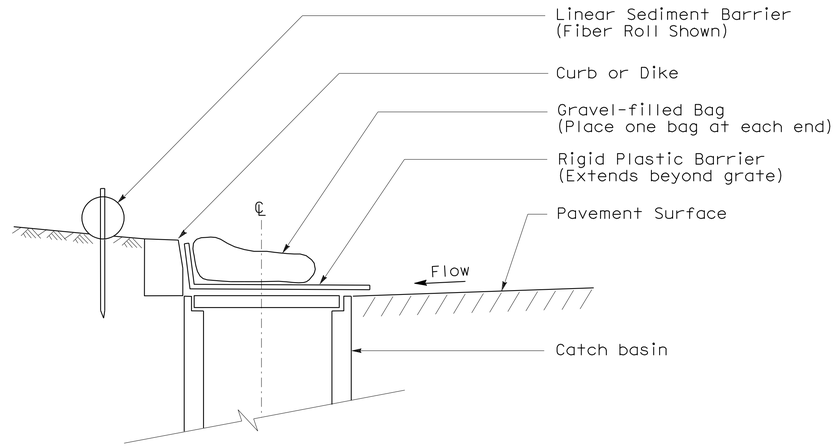

SECTION

TEMPORARY DRAINAGE INLET PROTECTION (TYPE 6A) (CATCH BASIN WITH GRATE)

NOTES:

1. See Standard Plan T51 for Temporary Silt Fence.
2. Dimensions may vary to fit field conditions.

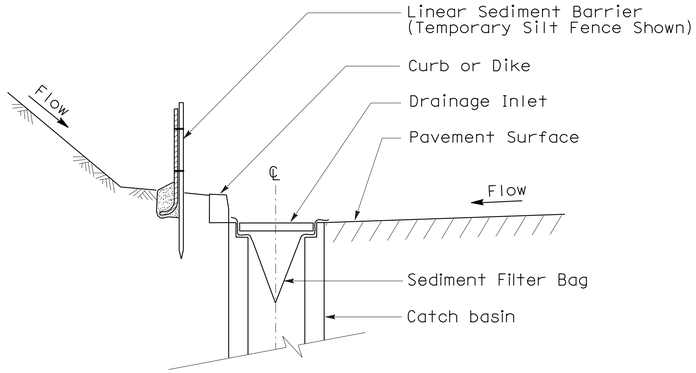

SECTION A-A

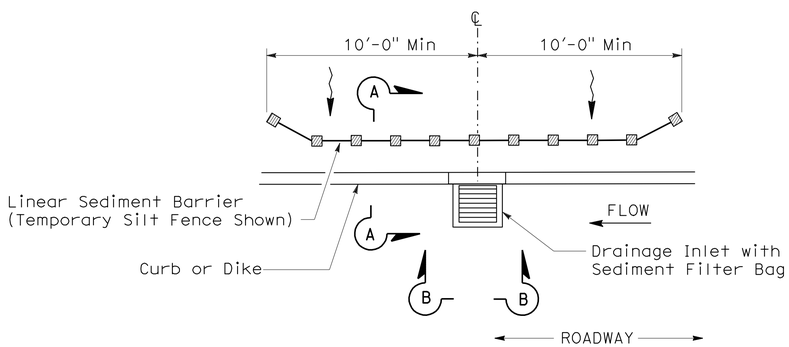

PLAN

TEMPORARY DRAINAGE INLET PROTECTION (TYPE 5) (SEDIMENT FILTER BAG)

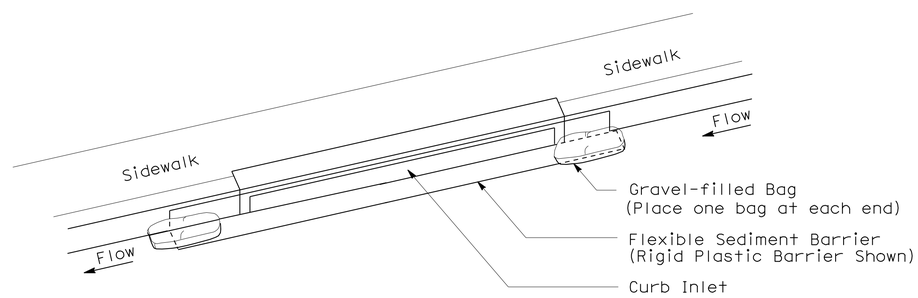

PERSPECTIVE

TEMPORARY DRAINAGE INLET PROTECTION (TYPE 6B) (CURB INLET WITHOUT GRATE)

STATE OF CALIFORNIA
DEPARTMENT OF TRANSPORTATION

TEMPORARY WATER POLLUTION CONTROL DETAILS (TEMPORARY DRAINAGE INLET PROTECTION)

NO SCALE

NSP T64 DATED AUGUST 15, 2008 SUPPLEMENTS
THE STANDARD PLANS BOOK DATED MAY 2006.

NEW STANDARD PLAN NSP T64

2006 NEW STANDARD PLAN NSP T64

7-11-08

DIST	COUNTY	ROUTE	POST MILES TOTAL PROJECT	SHEET NO.	TOTAL SHEETS
08	Riv	10	R24.0/R24.3	34	55

REGISTERED CIVIL ENGINEER

October 5, 2007
PLANS APPROVAL DATE

REGISTERED PROFESSIONAL ENGINEER Efthymios Delis No. C51434 Exp. 6-30-08 CIVIL STATE OF CALIFORNIA

The State of California or its officers or agents shall not be responsible for the accuracy or completeness of electronic copies of this plan sheet.

To accompany plans dated 6-6-11

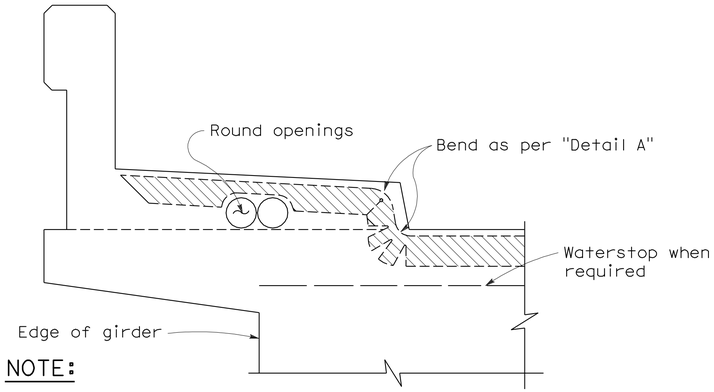

NOTE:

Type "B" seal shown. Type "A" seals to comform to the general path of seal shown, cuts for bending not required. Bend Type "A" seals 3" up into curb or barrier rail on only the low end of the seal.

CONCRETE BARRIER AND SIDEWALK

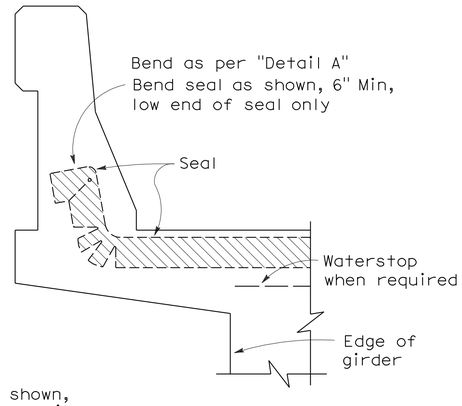

CONCRETE BARRIER

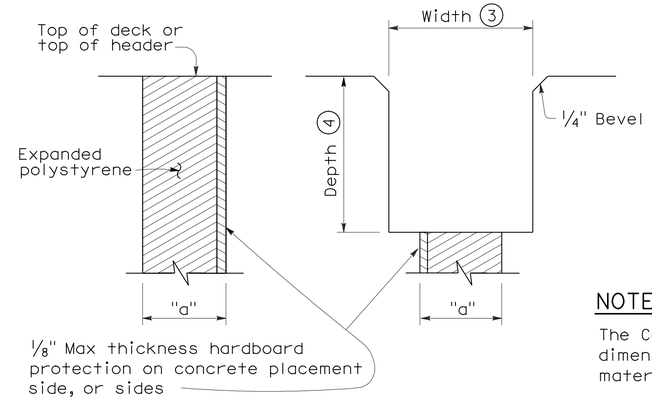

FORMING DETAIL SAWCUT DETAIL

NOTE:

The Contractor shall verify all controlling field dimensions before ordering or fabricatiing any material.

JOINT SEALS DETAILS

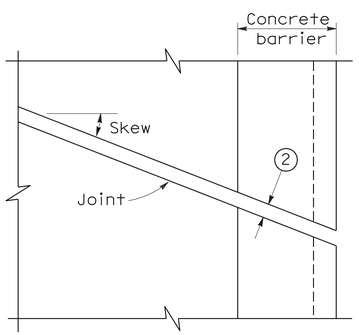

PLAN OF JOINT (SKEW ≤ 20°)

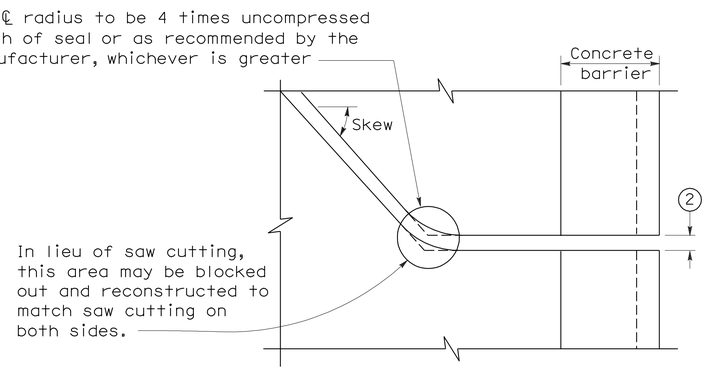

PLAN OF JOINT (SKEW > 20°)

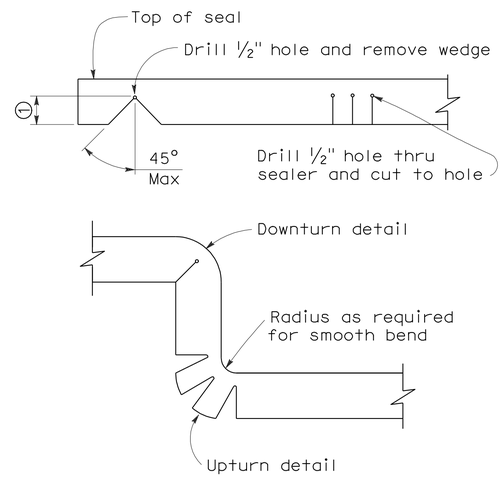

DETAIL A

NOTES:

1. Make smooth cuts from the bottom of seal to 1½" clear of top leaving at least one complete cell between the top of the cut and top of the seal. When necessary cut back of seal to clear conduit and round openings.
2. Opening in barrier to match width of sawn deck joint.
3. Sawcut groove widths shall be as ordered by the Engineer.
4. Depth of sawcut: Type A - Depth to be 2" minimum.
   Type B - Depth to be equal to or greater than the depth of seal measured along the contact surface, when compressed to minimum width position (W_2) plus dimensions shown.
5. MR (movement rating) as shown on other plan sheets.
6. Other depths must be approved by the Engineer.

DIMENSIONS "a" OF JOINT REQUIRED

Movement Rating (MR) (5)	Bridge Type	"a" Dimension Deck Concrete Placed		
		Winter	Fall-Spring	Summer
2"	All except CIP/PS	1½"	1¼"	¾"
	CIP/PS	1¼"	1"	½"
1½"	All except CIP/PS	1¼"	1"	½"
	CIP/PS	1"	¾"	½"
1"	All except CIP/PS	1"	¾"	½"
	CIP/PS	¾"	½"	½"
½"	All except CIP/PS	¾"	¾"	½"
	CIP/PS	½"	½"	½"

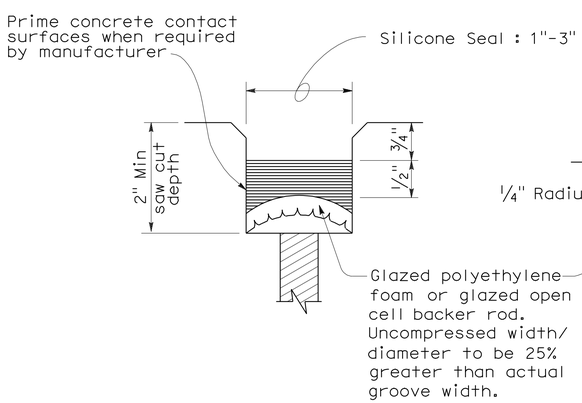

TYPE A SEAL

Movement rating : Silicone = 1" Max

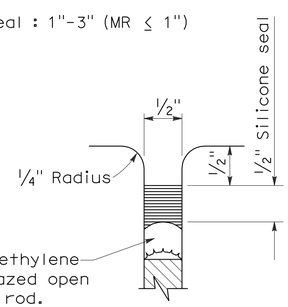

TYPE AL SEAL

Longitudinal joints only

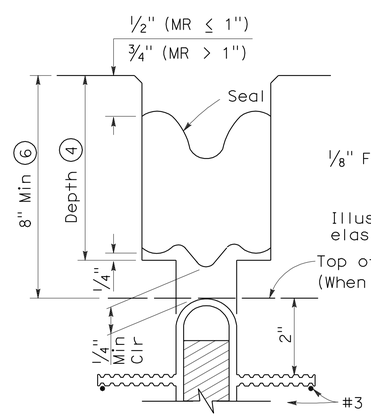

TYPE B JOINT SEAL
IN MINIMUM WIDTH POSITION (W_2)

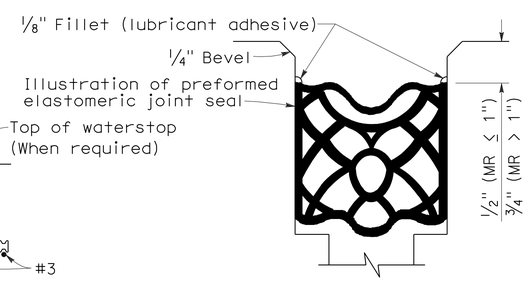

TYPE B SEAL

Movement Rating ≤ 2"

STATE OF CALIFORNIA
DEPARTMENT OF TRANSPORTATION

JOINT SEALS (MAXIMUM MOVEMENT RATING = 2")

NO SCALE

RSP B6-21 DATED OCTOBER 5, 2007 SUPERSEDES STANDARD PLAN B6-21 DATED MAY 1, 2006 - PAGE 258 OF THE STANDARD PLANS BOOK DATED MAY 2006.

REVISED STANDARD PLAN RSP B6-21

2006 REVISED STANDARD PLAN RSP B6-21

5-8-07

DIST	COUNTY	ROUTE	POST MILES TOTAL PROJECT	SHEET NO.	TOTAL SHEETS
08	Riv	10	R24.0/R24.3	35	55

REGISTERED CIVIL ENGINEER 3-2-11 DATE

6-6-11
PLANS APPROVAL DATE

REGISTERED PROFESSIONAL ENGINEER TIMOTHY J. POWELL No. C 61037 Exp. 12-31-12 CIVIL STATE OF CALIFORNIA

THE STATE OF CALIFORNIA OR ITS OFFICERS OR AGENTS SHALL NOT BE RESPONSIBLE FOR THE ACCURACY OR COMPLETENESS OF ELECTRONIC COPIES OF THIS PLAN SHEET.

PROFILE GRADE

NO SCALE

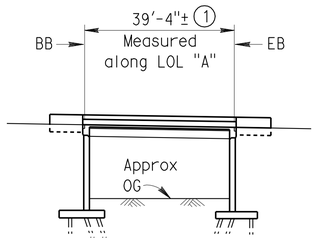

ELEVATION

1" = 20'

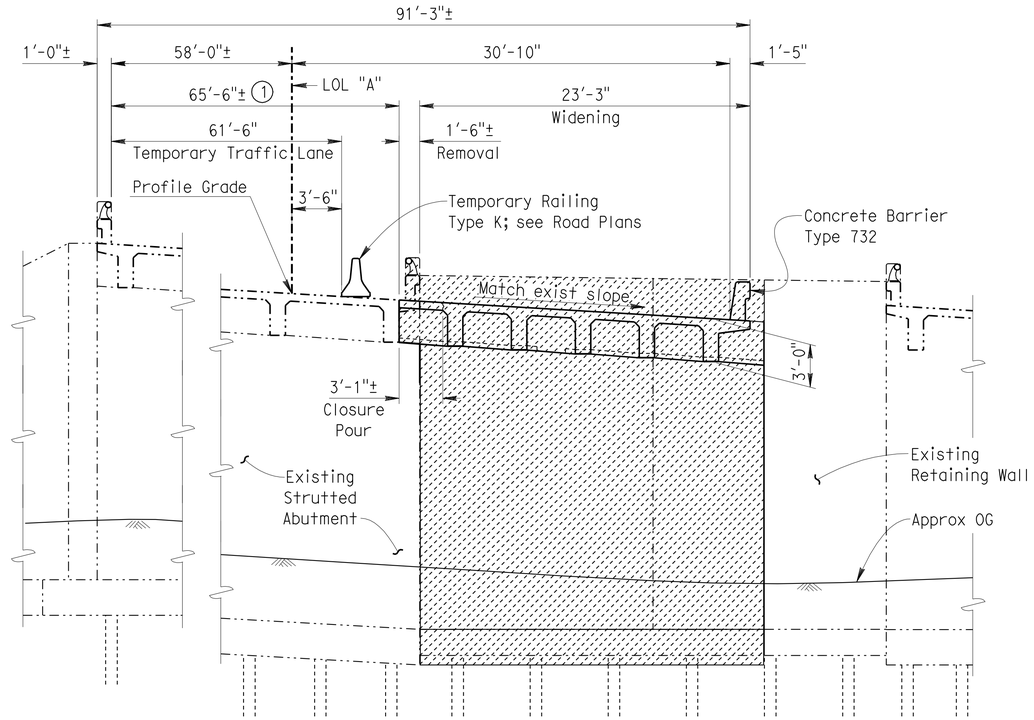

TYPICAL SECTION

3/16" = 1'

NOTES: (APPLY TO ALL SHEETS)

Indicates existing.

THE CONTRACTOR SHALL VERIFY ALL CONTROLLING FIELD DIMENSIONS BEFORE ORDERING OR FABRICATING ANY MATERIAL.

STANDARD PLAN SHEET NUMBER
DETAIL NUMBER

NOTES: (APPLY TO THIS SHEET ONLY)

or 1

Indicates limits of clean and treat existing concrete bridge deck with high molecular weight methacrylate. Prior to bridge deck treatment, remove unsound concrete and patch deck. See MISCELLANEOUS DETAILS sheet.

Indicates limits of Bridge Removal (portion): existing concrete barrier, deck overhang, end diaprhragm and retaining wall.

See Road Plans for construction staging.

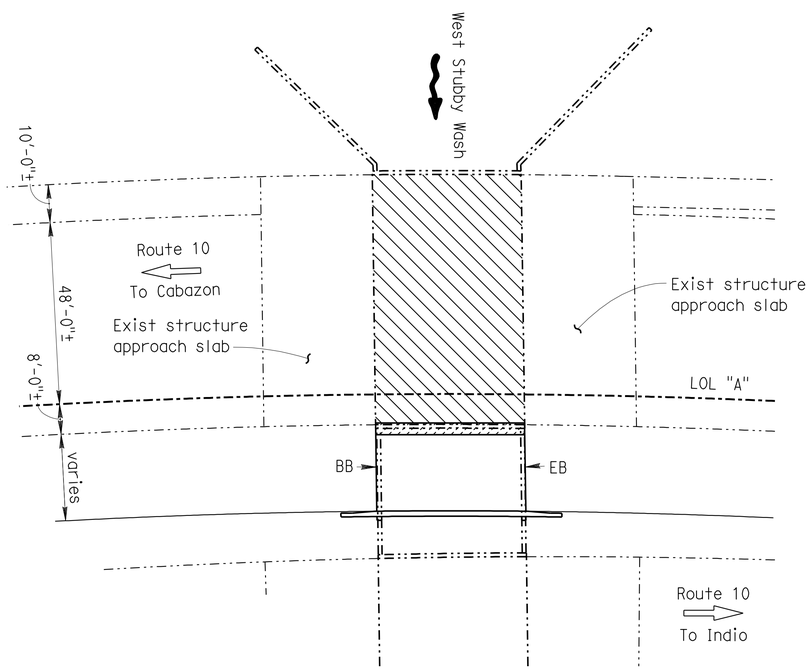

PLAN

1" = 20'

QUANTITIES

SALVAGE METAL BRIDGE RAILING	39	LF
REMOVE UNSOUND CONCRETE	32	CF
CLEAN BRIDGE DECK	2,576	SQFT
BRIDGE REMOVAL (PORTION), LOCATION A	LUMP	SUM
STRUCTURE EXCAVATION (BRIDGE)	425	CY
STRUCTURE BACKFILL (BRIDGE)	416	CY
STRUCTURAL CONCRETE, BRIDGE FOOTING	52	CY
STRUCTURAL CONCRETE, BRIDGE	97	CY
RAPID SETTING CONCRETE (PATCH)	32	CF
BAR REINFORCING STEEL (BRIDGE)	38,000	LB
TREAT BRIDGE DECK	2,576	SQFT
FURNISH BRIDGE DECK TREATMENT MATERIAL	29	GAL
CONCRETE BARRIER (TYPE 732)	58	LF

INDEX TO PLANS

SHEET NO.	TITLE
1	GENERAL PLAN
2	FOUNDATION PLAN
3	ABUTMENT DETAILS NO. 1
4	ABUTMENT DETAILS NO. 2
5	ABUTMENT DETAILS NO. 3
6	ABUTMENT DETAILS NO. 4
7	ABUTMENT DETAILS NO. 5
8	TYPICAL SECTION
9	GIRDER LAYOUT & REINFORCEMENT

STANDARD PLANS DATED MAY 2006

SHEET NO.	TITLE
A10A	ACRONYMS AND ABBREVIATIONS (SHEET 1 OF 2)
A10B	ACRONYMS AND ABBREVIATIONS (SHEET 2 OF 2)
A62C	LIMITS OF PAYMENT FOR EXCAVATION AND BACKFILL - BRIDGE
B0-1	BRIDGE DETAILS
B0-3	BRIDGE DETAILS
B0-5	BRIDGE DETAILS
B6-1	T-BEAM DETAILS
B11-55	CONCRETE BARRIER TYPE 732

Michael J. Lee 3-2-11
DESIGN ENGINEER

	BY	CHECKED		BY	CHECKED
DESIGN	Tim Powell	M.J. Lee	LAYOUT	G.F. Bidwell	M.J. Lee
DETAILS	G.F. Bidwell	M.J. Lee	SPECIFICATIONS	Mingxia Pan	PLANS AND SPECIFICATIONS COMPARED Tim Powell
QUANTITIES	Tim Powell	M.J. Lee			

STATE OF CALIFORNIA
DEPARTMENT OF TRANSPORTATION

DIVISION OF MAINTENANCE
STRUCTURE MAINTENANCE DESIGN

BRIDGE NO. 56-0167L
POST MILE R24.20

WEST CHANNEL STUBBY WASH (WIDEN)

GENERAL PLAN

STRUCTURES MAINTENANCE GENERAL PLAN & DETAIL SHEET (ENGLISH) (REV. 10/17/07)

ORIGINAL SCALE IN INCHES FOR REDUCED PLANS 0 1 2 3

UNIT: X
PROJECT NUMBER & PHASE: 0800000082

DISREGARD PRINTS BEARING EARLIER REVISION DATES → REVISION DATES 11-17-10 12-16-10 2-1-11 3-2-11

SHEET 1 OF 9

FILE => 08-0e4101_56-0167_01.dgn
CONTRACT NO.: 08-0E4101 PROJECT ID: X

USERNAME => trmikes1 DATE PLOTTED => 10-JUN-2011 TIME PLOTTED => 05:58

DIST	COUNTY	ROUTE	POST MILES TOTAL PROJECT	SHEET NO.	TOTAL SHEETS
08	Riv	10	R24.0/R24.3	36	55

REGISTERED CIVIL ENGINEER 3-2-11 DATE

6-6-11
PLANS APPROVAL DATE

REGISTERED PROFESSIONAL ENGINEER TIMOTHY J. POWELL No. C 61037 Exp. 12-31-12 CIVIL STATE OF CALIFORNIA

THE STATE OF CALIFORNIA OR ITS OFFICERS OR AGENTS SHALL NOT BE RESPONSIBLE FOR THE ACCURACY OR COMPLETENESS OF ELECTRONIC COPIES OF THIS PLAN SHEET.

CURVE DATA				
No.	R	Δ	T	L
1	1999.86	31°39′45″	567.08	1105.15
2	2000.00	31°39′46″	567.13	1105.24

Bridge #56-0167L Location
③ - 88.84′ Lt. ℄, Sta.523+66.88, Elev.=1361.38′ ±
④ - 22.95′ Lt. ℄, Sta.523+66.61, Elev.=1357.38′ ±
⑤ - 88.20′ Lt. ℄, Sta.524.04.59, Elev.=1360.74′ ±
⑥ - 22.42′ Lt. ℄, Sta.524+05.29, Elev.=1356.80′ ±

Ⓐ STA. 523+93.34 "LTETW" LINE = STA. 11+80.04 "WESTSTUBB" LINE

Ⓑ STA.523+84 "℄ RTE 10" = STA. 11+50.28 "WESTSTUBB" LINE

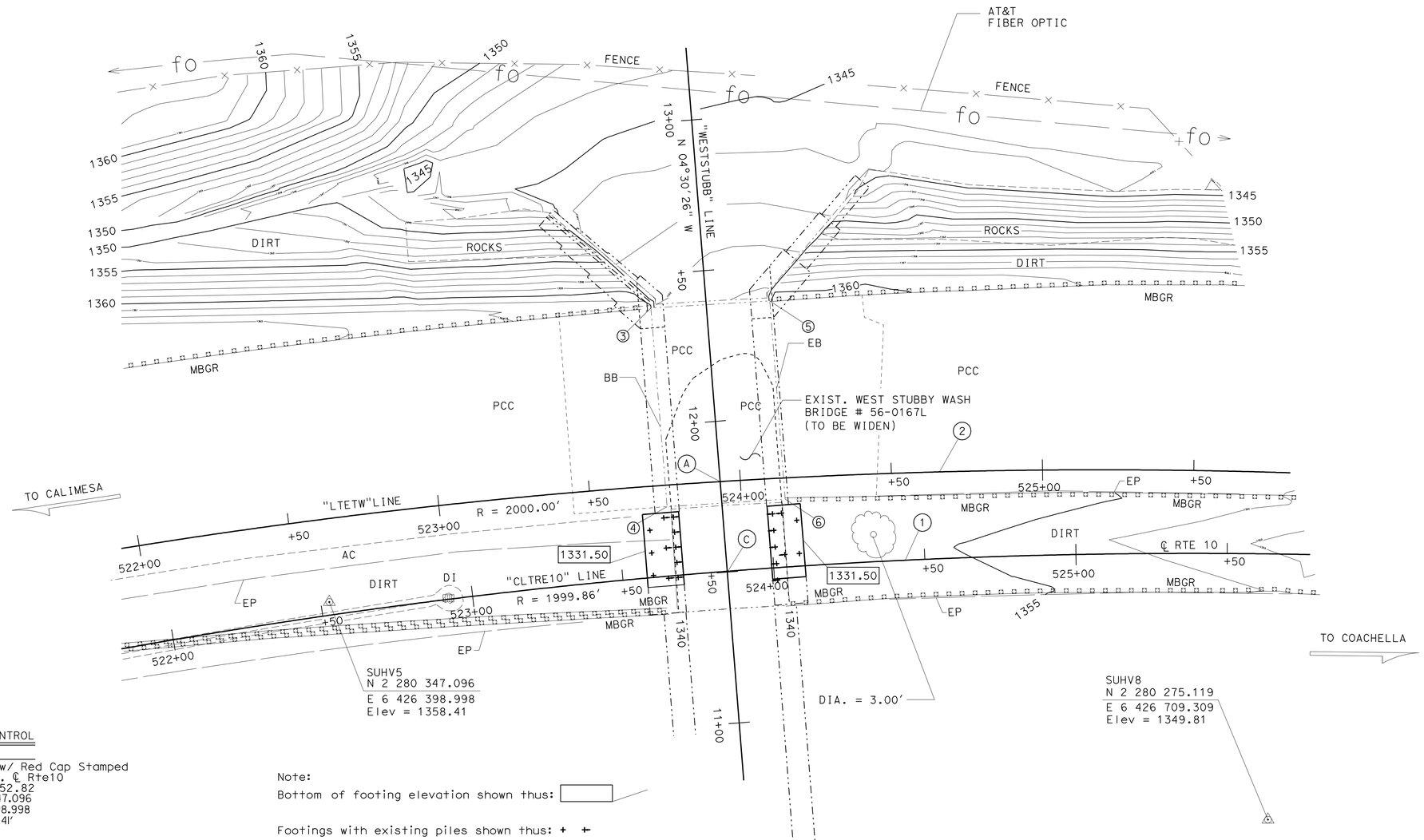

SURVEY CONTROL

SUHV5
Fnd 1"IP w/ Red Cap Stamped
4.34Ft Lt. ℄ Rte10
Sta. 522+52.82
N 2 280 347.096
E 6 426 398.998
Elev = 1358.41′

SUHV8
Fnd 1"IP w/ Red Cap Stamped
87.89Ft Rt. ℄ Rte 10
Sta. 525+64.63
N 2 280 275.119
E 6 426 709.309
Elev. = 1349.81′

Note:
Bottom of footing elevation shown thus: [ ]

Footings with existing piles shown thus: + +

For existing pile layout see ABUTMENT DETAILS NO. 1 and ABUTMENT DETAILS NO. 2 sheets.

NOTES:

UNDERGROUND UTILITIES AS SHOWN ARE APPROXIMATE

PRELIMINARY INVESTIGATION SECTION

SCALE	VERT.DATUM NGVD29	PHOTOGRAMMETRY AS OF: X		
1:20	HORZ.DATUM NAD83(1992.88)	SURVEYED BY T.PHUNG 11/10	CHECKED BY T. PHUNG 11/10	
ALIGNMENT TIES Ties Dist.Trav.Sheets		DRAFTED BY S. ABASSY 12/10	CHECKED BY S. ALIVIO 12/10	

STRUCTURES MAINTENANCE GENERAL PLAN & DETAIL SHEET (ENGLISH) (REV. 10/17/07)

DESIGN	BY Tim Powell	CHECKED M.J. Lee
DETAILS	BY G.F. Bidwell	CHECKED M.J. Lee
QUANTITIES	BY Tim Powell	CHECKED M.J. Lee

ORIGINAL SCALE IN INCHES FOR REDUCED PLANS 0 1 2 3

STATE OF CALIFORNIA
DEPARTMENT OF TRANSPORTATION

DIVISION OF MAINTENANCE
STRUCTURE MAINTENANCE DESIGN

UNIT: X
PROJECT NUMBER & PHASE: 0800000082

BRIDGE NO. 56-0167L
POST MILE R24.20

WEST CHANNEL STUBBY WASH (WIDEN)

FOUNDATION PLAN

DISREGARD PRINTS BEARING EARLIER REVISION DATES
REVISION DATES: 11-17-10 12-10-10 2-1-11 3-2-11

SHEET 2 OF 9

FILE => 08-0e4101_56-0167_02.dgn
CONTRACT NO.: 08-0E4101 PROJECT ID: X

USERNAME => trmikest DATE PLOTTED => 10-JUN-2011 TIME PLOTTED => 06:58

DIST	COUNTY	ROUTE	POST MILES TOTAL PROJECT	SHEET NO.	TOTAL SHEETS
08	Riv	10	R24.0/R24.3	37	55

REGISTERED CIVIL ENGINEER — DATE: 3-2-11

6-6-11
PLANS APPROVAL DATE

REGISTERED PROFESSIONAL ENGINEER — TIMOTHY J. POWELL — No. C 61037 — Exp. 12-31-12 — CIVIL — STATE OF CALIFORNIA

THE STATE OF CALIFORNIA OR ITS OFFICERS OR AGENTS SHALL NOT BE RESPONSIBLE FOR THE ACCURACY OR COMPLETENESS OF ELECTRONIC COPIES OF THIS PLAN SHEET.

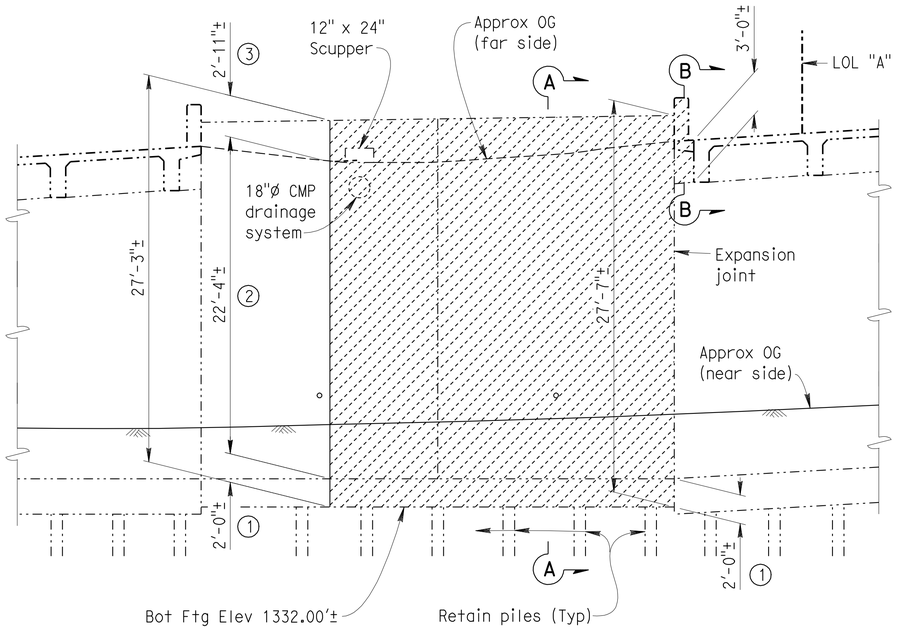

PARTIAL ELEVATION

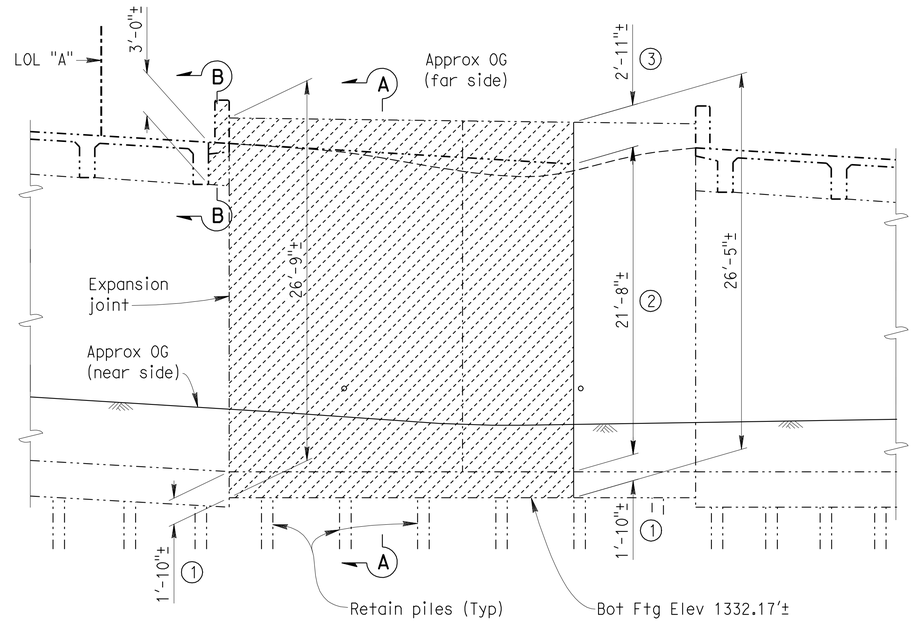

PARTIAL ELEVATION

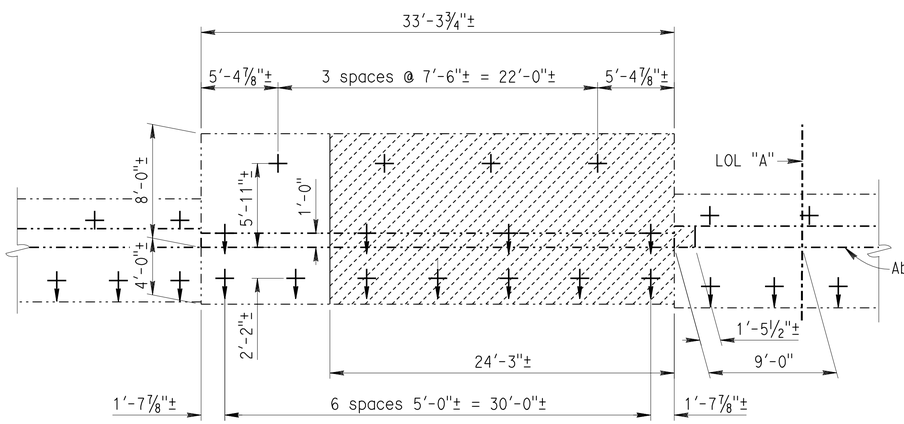

PARTIAL PLAN

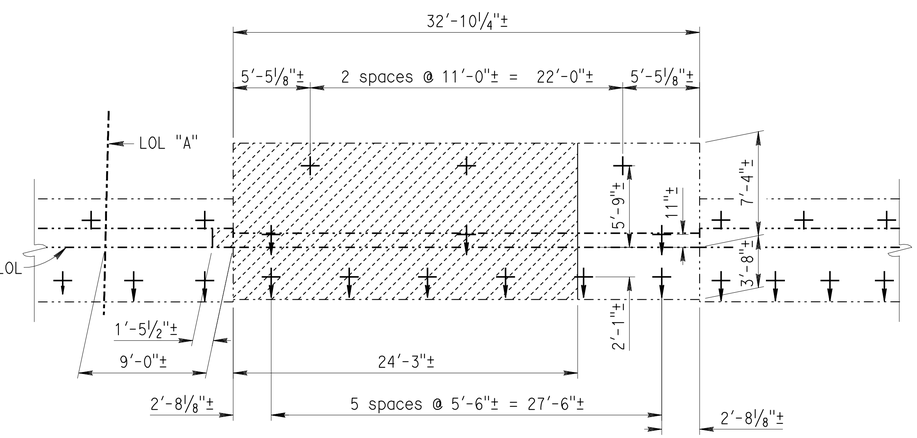

PARTIAL PLAN

ABUTMENT 1 - EXISTING

3/16" = 1'

ABUTMENT 2 - EXISTING

3/16" = 1'

NOTES: (APPLY TO THIS SHEET ONLY)

Indicates limits of remove existing concrete. Retain all existing piles.

(1) Indicates limits of retain sufficent length for splice #4 Tot 7 longitudinal reinforcing steel in retaining wall footing.

(2) Indicates limits of retain sufficent length for splice #4 @ 18 (exterior face) and #4 @ 36 (batter face) longitudinal reinforcing steel in retaining wall.

(3) Indicates limits of remove longitudinal reinforcing steel referenced in Note 2 to 1" below face of concrete surface.

Indicates location of existing vertical HP10x42 piles.

Indicates location of existing battered HP10x42 piles. Arrow points in direction of batter.

See ABUTMENT DETAILS NO. 3 sheet for "SECTION A-A". See ABUTMENT DETAILS NO. 5 sheet for "SECTION B-B".

DESIGN	BY Tim Powell	CHECKED M.J. Lee	
DETAILS	BY G.F. Bidwell	CHECKED M.J. Lee	
QUANTITIES	BY Tim Powell	CHECKED M.J. Lee	

STATE OF CALIFORNIA
DEPARTMENT OF TRANSPORTATION

DIVISION OF MAINTENANCE
STRUCTURE MAINTENANCE DESIGN

BRIDGE NO. 56-0167L
POST MILE R24.20

WEST CHANNEL STUBBY WASH (WIDEN)

ABUTMENT DETAILS NO. 1

STRUCTURES MAINTENANCE GENERAL PLAN & DETAIL SHEET (ENGLISH) (REV. 10/17/07)

ORIGINAL SCALE IN INCHES FOR REDUCED PLANS 0 1 2 3

UNIT: X
PROJECT NUMBER & PHASE: 0800000082

DISREGARD PRINTS BEARING EARLIER REVISION DATES

REVISION DATES: 11-17-10 12-16-10 2-1-11 3-2-11

SHEET 3 OF 9

FILE => 08-0e4101_56-0167_03.dgn

CONTRACT NO.: 08-0E4101 PROJECT ID: X

USERNAME => trmikesl DATE PLOTTED => 10-JUN-2011 TIME PLOTTED => 05:58

DIST	COUNTY	ROUTE	POST MILES TOTAL PROJECT	SHEET NO.	TOTAL SHEETS
08	Riv	10	R24.0/R24.3	38	55

REGISTERED CIVIL ENGINEER 3-2-11 DATE

6-6-11
PLANS APPROVAL DATE

REGISTERED PROFESSIONAL ENGINEER TIMOTHY J. POWELL No. C 61037 Exp. 12-31-12 CIVIL STATE OF CALIFORNIA

THE STATE OF CALIFORNIA OR ITS OFFICERS OR AGENTS SHALL NOT BE RESPONSIBLE FOR THE ACCURACY OR COMPLETENESS OF ELECTRONIC COPIES OF THIS PLAN SHEET.

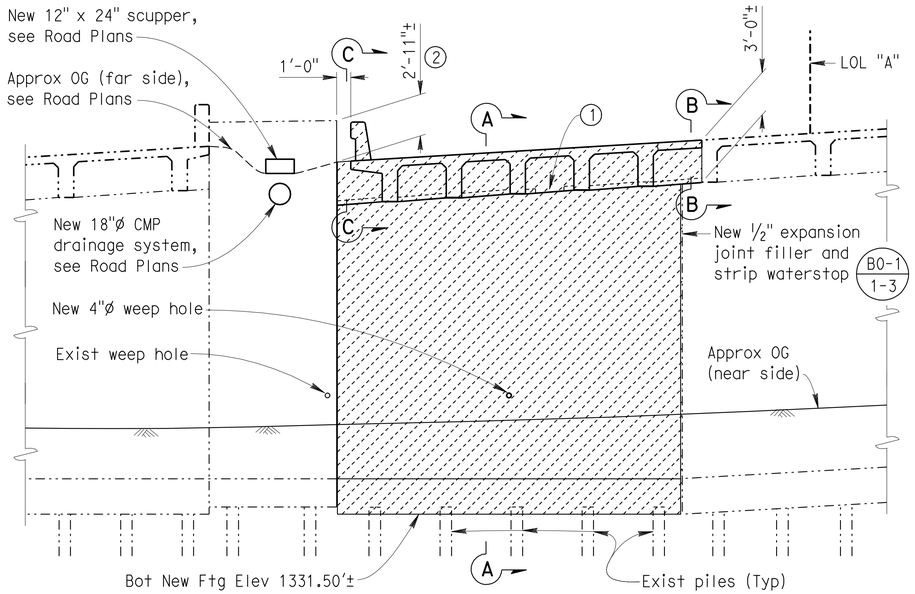

PARTIAL ELEVATION

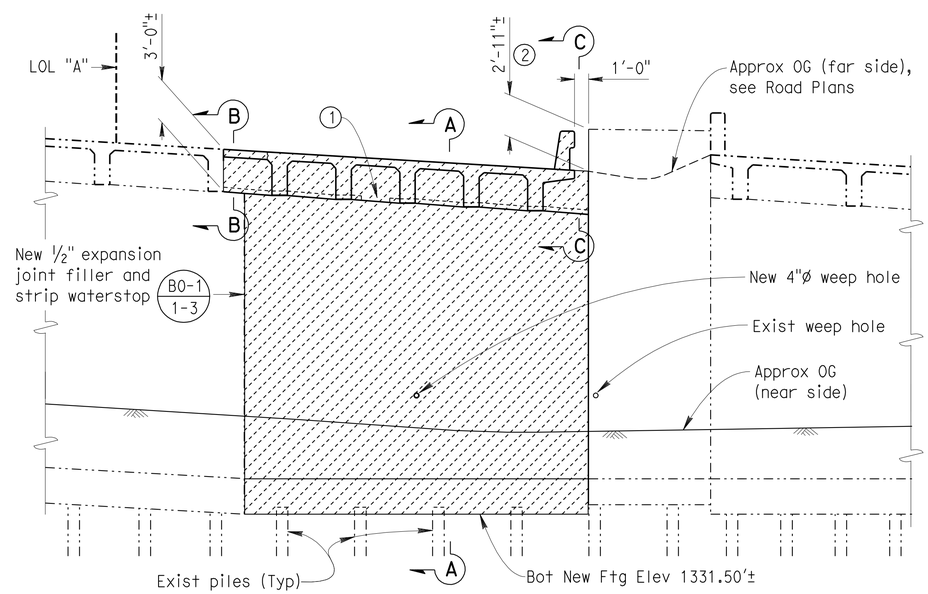

PARTIAL ELEVATION

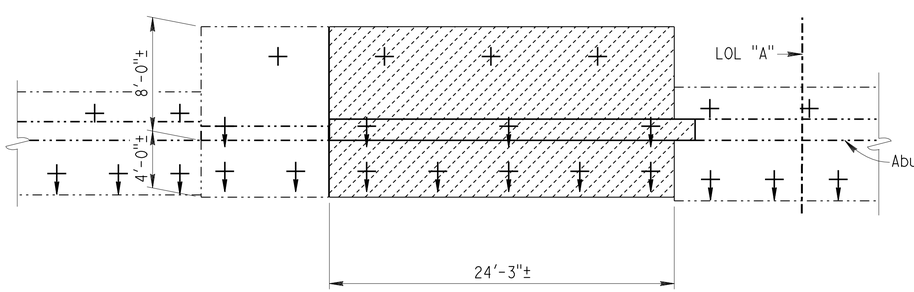

PARTIAL PLAN

ABUTMENT 1 - RECONSTRUCTION

3/16" = 1'

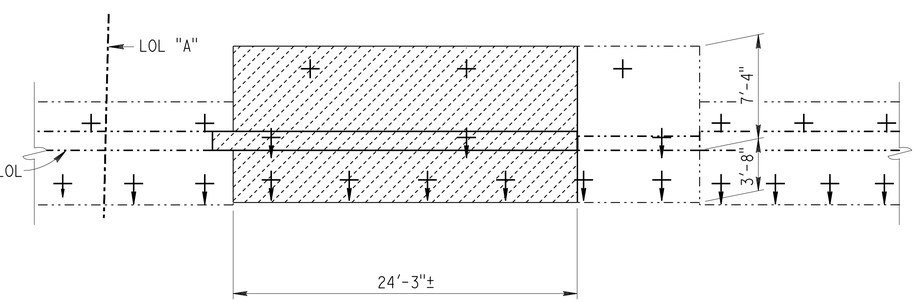

PARTIAL PLAN

ABUTMENT 2 - RECONSTRUCTION

3/16" = 1'

NOTES: (APPLY TO THIS SHEET ONLY)

Indicates limits of place new concrete. Retain all existing piles.

(1) Indicates location of 2' key. See "DETAIL A" on ABUTMENT DETAILS NO. 3 sheet.

(2) Indicates limits of refinish existing concrete surface by patching with mortar.

+ Indicates location of existing vertical HP10x42 piles. For spacing see ABUTMENT DETAILS NO. 1 sheet.

+ Indicates location of existing battered HP10x42 piles. Arrow points in direction of batter. For spacing see ABUTMENT DETAILS NO. 1 sheet.

See ABUTMENT DETAILS NO. 3 sheet for "SECTION A-A". See ABUTMENT DETAILS NO. 5 sheet for "SECTION B-B" and "SECTION C-C".

DESIGN	BY Tim Powell	CHECKED M.J. Lee	
DETAILS	BY G.F. Bidwell	CHECKED M.J. Lee	
QUANTITIES	BY Tim Powell	CHECKED M.J. Lee	

STATE OF CALIFORNIA DEPARTMENT OF TRANSPORTATION

DIVISION OF MAINTENANCE STRUCTURE MAINTENANCE DESIGN

BRIDGE NO. 56-0167L
POST MILE R24.20

WEST CHANNEL STUBBY WASH (WIDEN)

ABUTMENT DETAILS NO. 2

STRUCTURES MAINTENANCE GENERAL PLAN & DETAIL SHEET (ENGLISH) (REV. 10/17/07)

ORIGINAL SCALE IN INCHES FOR REDUCED PLANS 0 1 2 3

UNIT: X
PROJECT NUMBER & PHASE: 0800000082

DISREGARD PRINTS BEARING EARLIER REVISION DATES

REVISION DATES: 11-17-10 12-10-10 2-1-11 3-2-11

SHEET 4 OF 9

FILE => 08-0e4101_56-0167_04.dgn

CONTRACT NO.: 08-0E4101 PROJECT ID: X

USERNAME => trmikesl DATE PLOTTED => 10-JUN-2011 TIME PLOTTED => 05:58

DIST	COUNTY	ROUTE	POST MILES TOTAL PROJECT	SHEET NO.	TOTAL SHEETS
08	Riv	10	R24.0/R24.3	39	55

REGISTERED CIVIL ENGINEER 3-2-11 DATE

6-6-11
PLANS APPROVAL DATE

REGISTERED PROFESSIONAL ENGINEER TIMOTHY J. POWELL No. C 61037 Exp. 12-31-12 CIVIL STATE OF CALIFORNIA

THE STATE OF CALIFORNIA OR ITS OFFICERS OR AGENTS SHALL NOT BE RESPONSIBLE FOR THE ACCURACY OR COMPLETENESS OF ELECTRONIC COPIES OF THIS PLAN SHEET.

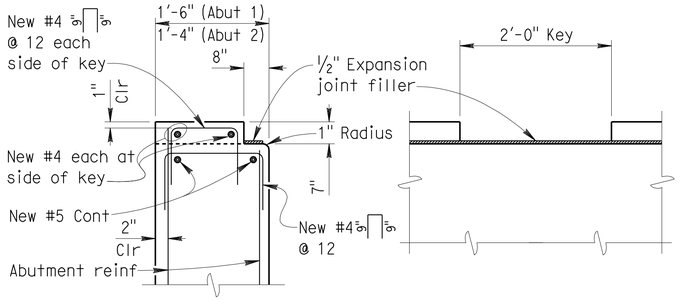

SECTION ELEVATION

DETAIL A

1" = 1'

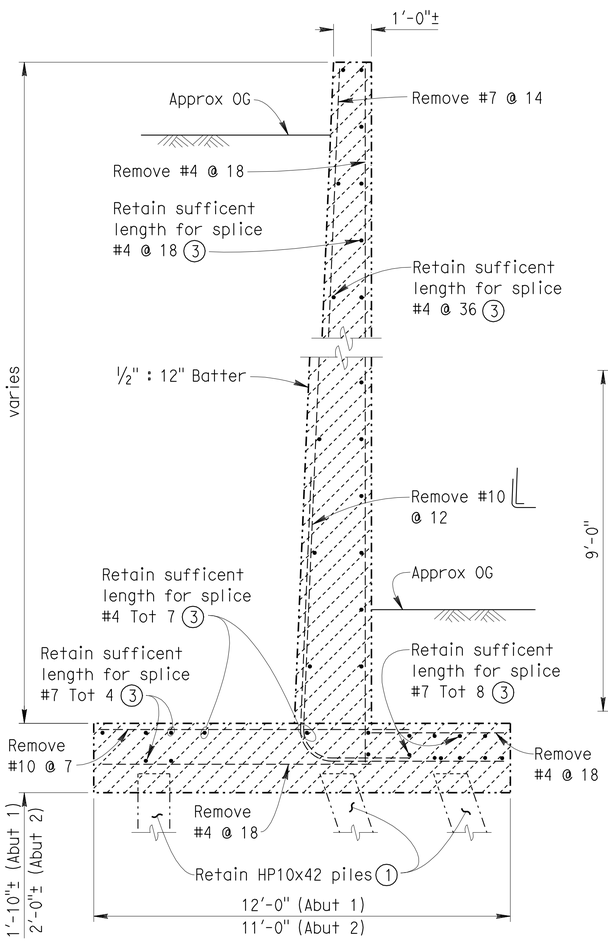

EXISTING

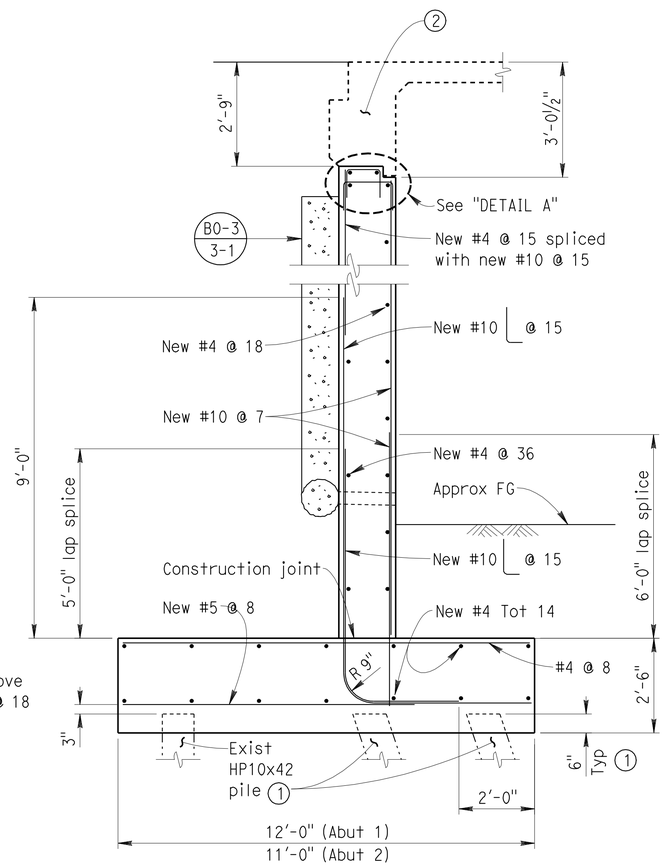

RECONSTRUCTION

SECTION A-A

1/2" = 1'

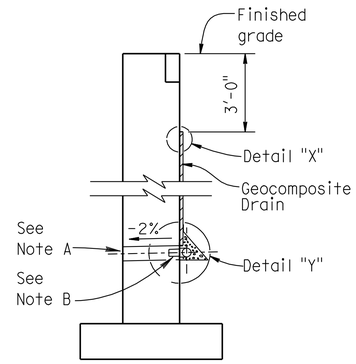

WALL SECTION

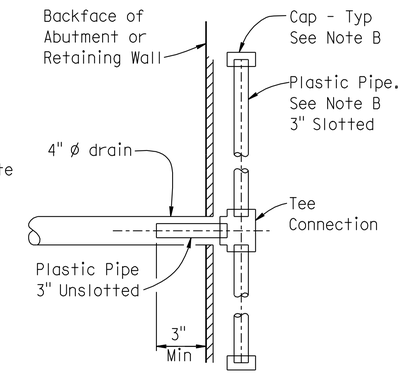

SECTION X-X

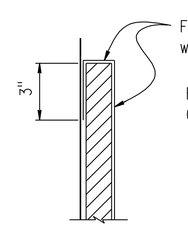

DETAIL "X"

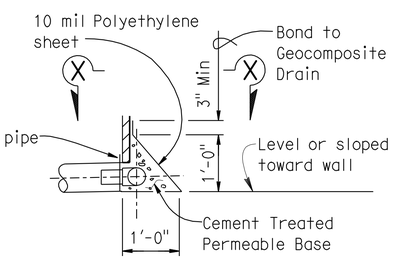

DETAIL "Y"

WEEP HOLE AND GEOCOMPOSITE DRAIN

ALTERNATIVE TO BRIDGE DETAIL (B0-3 / 3-1)

Notes:

A. 4" Ø drains at intermediate sag points and at 25' Max C-C (9' C-C for Type 3 and 9'-3" C-C for Type 4 retaining walls). For walls adjacent to sidewalks or curbs, provide 4" cast iron or asbestos cement pipe under the sidewalk to discharge through curb face. Exposed wall drains shall be located 3"± above finished grade.

B. Geocomposite drain, cement treated permeable base, and 3" slotted plastic pipe continuous behind retaining wall or abutment. Cap ends of pipe. Provide "Tee" connection at each 4" Ø drain.

C. Connect the low end of plastic pipe to the main outlet pipe as applicable.

NOTES: (APPLY TO THIS SHEET ONLY)

Indicates limits of remove existing concrete and reinforcing steel. Retain all existing piles.

(1) Cut off tops of existing steel piles sufficient to provide 6" embedment in new footing. Also see "STEEL PILE ANCHOR" detail.

(2) For details see "SECTION A-A" on ABUTMENT DETAILS NO. 5 sheet.

(3) See ABUTMENT DETAILS NO. 1 sheet for limits of retain existing reinforcing.

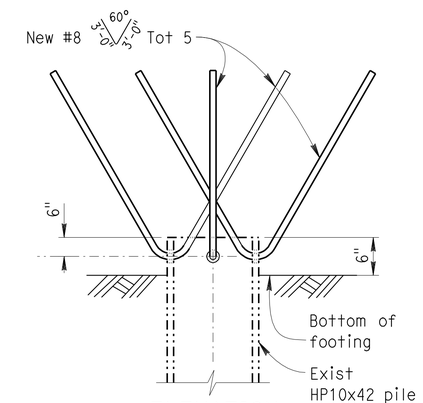

ELEVATION

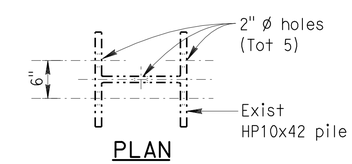

PLAN

(200 kip Pile)

STEEL PILE ANCHOR

DESIGN CAPACITY:
Tension = 200 kips
(Nominal axial reistance)
NO SCALE

DESIGN	BY Tim Powell	CHECKED M.J. Lee	
DETAILS	BY G.F. Bidwell	CHECKED M.J. Lee	
QUANTITIES	BY Tim Powell	CHECKED M.J. Lee	

STATE OF CALIFORNIA DEPARTMENT OF TRANSPORTATION

DIVISION OF MAINTENANCE STRUCTURE MAINTENANCE DESIGN

BRIDGE NO. 56-0167L
POST MILE R24.20

WEST CHANNEL STUBBY WASH (WIDEN)

ABUTMENT DETAILS NO. 3

STRUCTURES MAINTENANCE GENERAL PLAN & DETAIL SHEET (ENGLISH) (REV. 10/17/07)

ORIGINAL SCALE IN INCHES FOR REDUCED PLANS 0 1 2 3

UNIT: X
PROJECT NUMBER & PHASE: 0800000082

DISREGARD PRINTS BEARING EARLIER REVISION DATES

REVISION DATES: 11-17-10 12-16-10 2-1-11 3-2-11

SHEET 5 OF 9

CONTRACT NO.: 08-0E4101 PROJECT ID: X

FILE => 08-0e4101_56-0167_05.dgn

USERNAME => trmikest DATE PLOTTED => 10-JUN-2011 TIME PLOTTED => 05:59

DIST	COUNTY	ROUTE	POST MILES TOTAL PROJECT	SHEET NO.	TOTAL SHEETS
08	Riv	10	R24.0/R24.3	40	55

REGISTERED CIVIL ENGINEER 3-2-11 DATE

6-6-11
PLANS APPROVAL DATE

REGISTERED PROFESSIONAL ENGINEER TIMOTHY J. POWELL No. C 61037 Exp. 12-31-12 CIVIL STATE OF CALIFORNIA

THE STATE OF CALIFORNIA OR ITS OFFICERS OR AGENTS SHALL NOT BE RESPONSIBLE FOR THE ACCURACY OR COMPLETENESS OF ELECTRONIC COPIES OF THIS PLAN SHEET.

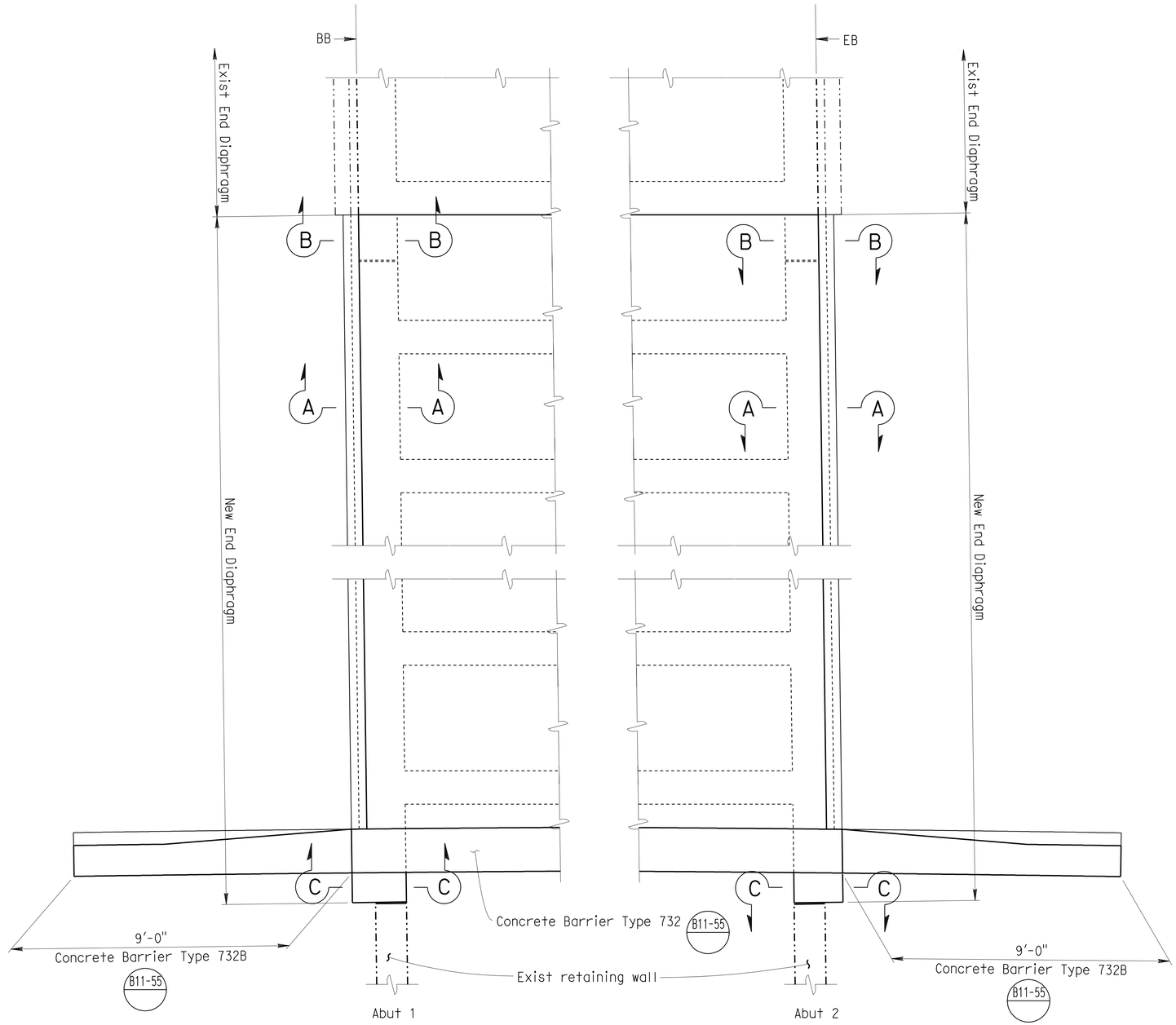

END DIAPHRAGM PLAN

1/2" = 1'

NOTES: (APPLY TO THIS SHEET ONLY)

See ABUTMENT DETAILS NO. 5 sheet for "SECTION A-A", "SECTION B-B" and "SECTION C-C".

	BY	CHECKED
DESIGN	Tim Powell	M.J. Lee
DETAILS	G.F. Bidwell	M.J. Lee
QUANTITIES	Tim Powell	M.J. Lee

STATE OF CALIFORNIA
DEPARTMENT OF TRANSPORTATION

DIVISION OF MAINTENANCE
STRUCTURE MAINTENANCE DESIGN

BRIDGE NO. 56-0167L
POST MILE R24.20

WEST CHANNEL STUBBY WASH (WIDEN)

ABUTMENT DETAILS NO. 4

STRUCTURES MAINTENANCE GENERAL PLAN & DETAIL SHEET (ENGLISH) (REV. 10/17/07)

ORIGINAL SCALE IN INCHES FOR REDUCED PLANS 0 1 2 3

UNIT: X
PROJECT NUMBER & PHASE: 0800000082

DISREGARD PRINTS BEARING EARLIER REVISION DATES

REVISION DATES: 11-17-10 12-16-10 2-1-11 3-2-11

SHEET 6 OF 9

FILE => 08-0e4101_56-0167_06.dgn

CONTRACT NO.: 08-0E4101 PROJECT ID: X

USERNAME => trmikes1 DATE PLOTTED => 10-JUN-2011 TIME PLOTTED => 05:59

DIST	COUNTY	ROUTE	POST MILES TOTAL PROJECT	SHEET NO.	TOTAL SHEETS
08	Riv	10	R24.0/R24.3	41	55

REGISTERED CIVIL ENGINEER 3-2-11 DATE

6-6-11
PLANS APPROVAL DATE

REGISTERED PROFESSIONAL ENGINEER TIMOTHY J. POWELL No. C 61037 Exp. 12-31-12 CIVIL STATE OF CALIFORNIA

THE STATE OF CALIFORNIA OR ITS OFFICERS OR AGENTS SHALL NOT BE RESPONSIBLE FOR THE ACCURACY OR COMPLETENESS OF ELECTRONIC COPIES OF THIS PLAN SHEET.

NOTES: (APPLY TO THIS SHEET ONLY)

Indicates limits of remove existing concrete and reinforcing steel. Retain all existing piles.

See ABUTMENT DETAILS NO. 3 sheet for "DETAIL A".

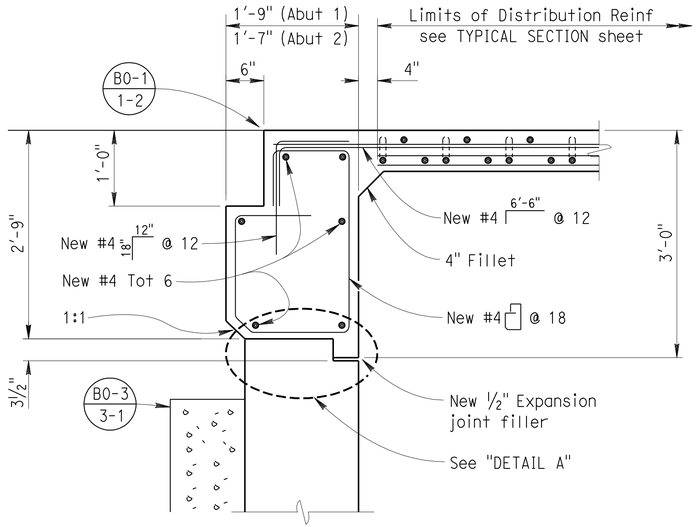

SECTION A-A

1" = 1'

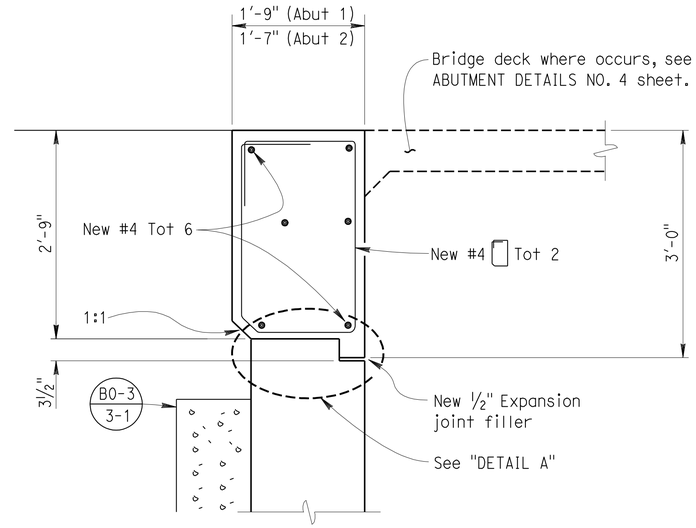

SECTION C-C

1" = 1'

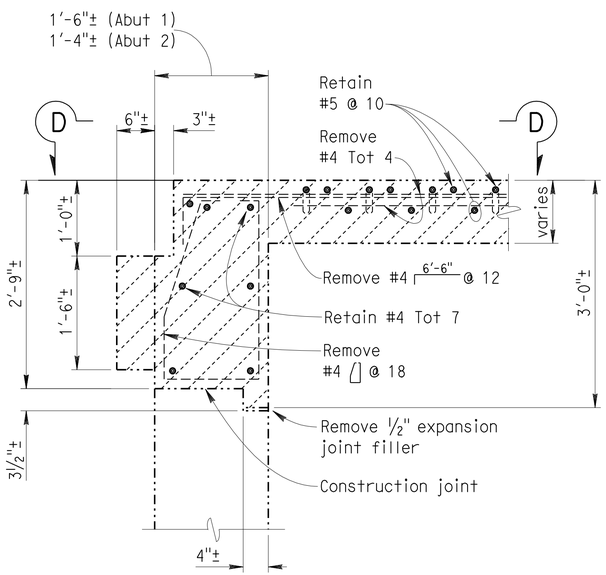

EXISTING

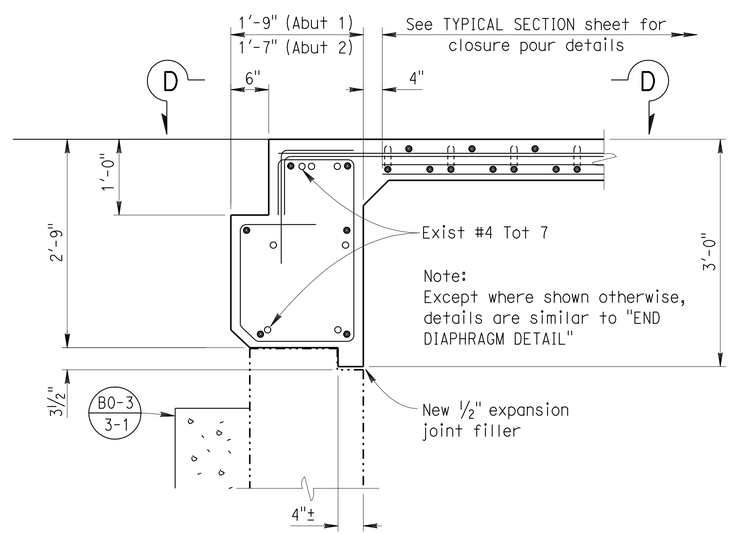

RECONSTRUCTION

SECTION B-B

1" = 1'

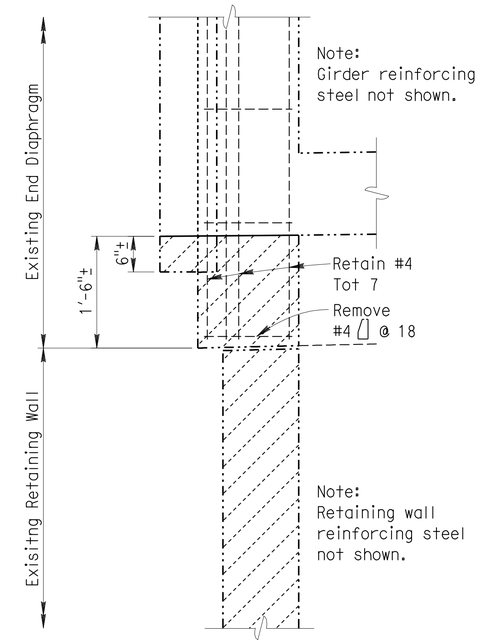

EXISTING

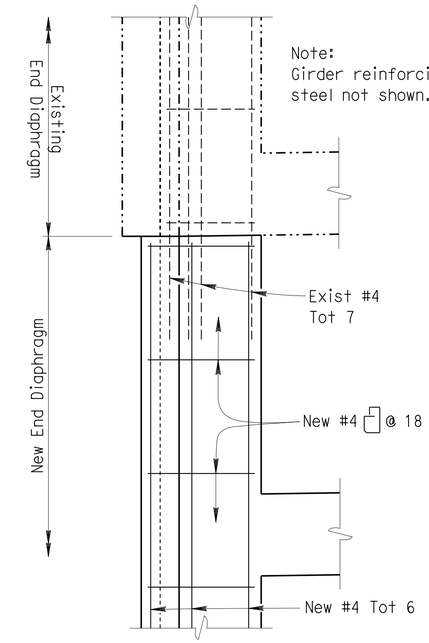

RECONSTRUCTION

SECTION D-D

1" = 1'

DESIGN	BY Tim Powell	CHECKED M.J. Lee	
DETAILS	BY G.F. Bidwell	CHECKED M.J. Lee	
QUANTITIES	BY Tim Powell	CHECKED M.J. Lee	

STATE OF CALIFORNIA DEPARTMENT OF TRANSPORTATION

DIVISION OF MAINTENANCE
STRUCTURE MAINTENANCE DESIGN

BRIDGE NO. 56-0167L
POST MILE R24.20

WEST CHANNEL STUBBY WASH (WIDEN)

ABUTMENT DETAILS NO. 5

STRUCTURES MAINTENANCE GENERAL PLAN & DETAIL SHEET (ENGLISH) (REV. 10/17/07)

ORIGINAL SCALE IN INCHES FOR REDUCED PLANS 0 1 2 3

UNIT: X
PROJECT NUMBER & PHASE: 0800000082

DISREGARD PRINTS BEARING EARLIER REVISION DATES

REVISION DATES: 11-17-10 12-10-10 2-1-11 3-2-11

SHEET 7 OF 9

FILE => 08-0e4101_56-0167_07.dgn

CONTRACT NO.: 08-0E4101 PROJECT ID: X

USERNAME => trmikesl DATE PLOTTED => 10-JUN-2011 TIME PLOTTED => 05:59

DIST	COUNTY	ROUTE	POST MILES TOTAL PROJECT	SHEET NO.	TOTAL SHEETS
08	Riv	10	R24.0/R24.3	42	55

REGISTERED CIVIL ENGINEER 3-2-11 DATE

6-6-11
PLANS APPROVAL DATE

THE STATE OF CALIFORNIA OR ITS OFFICERS OR AGENTS SHALL NOT BE RESPONSIBLE FOR THE ACCURACY OR COMPLETENESS OF ELECTRONIC COPIES OF THIS PLAN SHEET.

REGISTERED PROFESSIONAL ENGINEER TIMOTHY J. POWELL No. C 61037 Exp. 12-31-12 CIVIL STATE OF CALIFORNIA

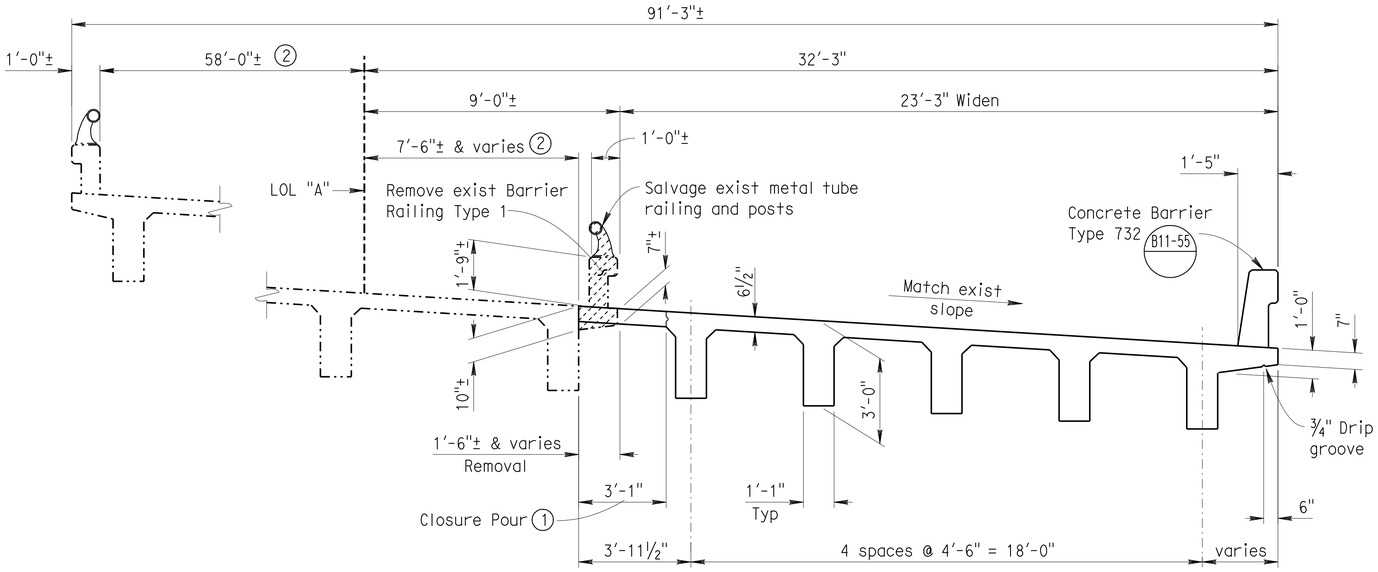

TYPICAL SECTION

3/8" = 1'

FALSEWORK RELEASE

Alternative 1:

Falsework shall be released as soon as permitted by the specifications. Closure pour shall not be placed sooner than 60 days after the falsework had been released.

Alternative 2:

Falsework shall not be released less than 28 days after the last concrete has been placed. Closure pour shall not be placed sooner than 14 days after the falsework has been released.

When Falsework Release Alternative 2 is used, camber values are 0.75 times those shown.

NOTES: (APPLY TO THIS SHEET ONLY)

Indicates limits of remove existing concrete and longitudinal reinforcing steel. Retain existing transverse reinforcing steel.

① Closure pour shall not be placed until Concrete Barrier Type 732 is completed.

② Indicates limits of treat deck.

See GIRDER LAYOUT & REINFORCEMENT sheet for "DETAIL B".

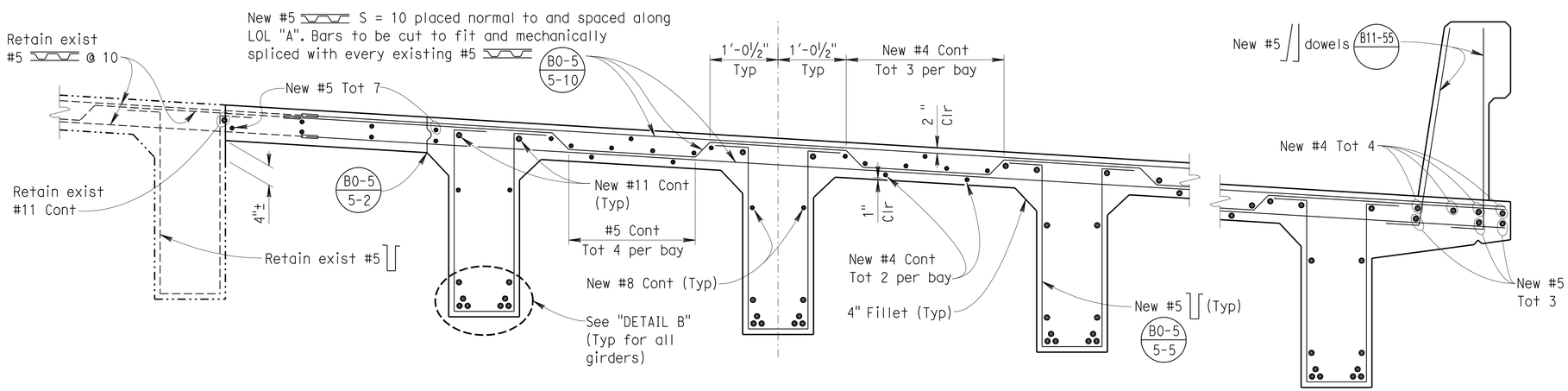

PARTIAL TYPICAL SECTION

B0-5 5-15 B6-1

1" = 1'

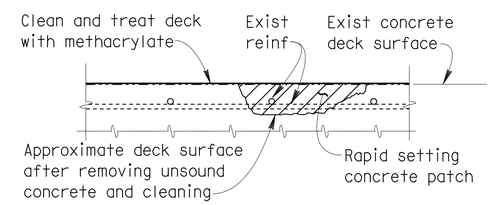

DECK REPAIR DETAIL

Reinforcement may be encountered during deck concrete removal.
NO SCALE

DECK REPAIR TABLE

REMOVE UNSOUND CONCRETE AND PATCH WITH RAPID SETTING CONCRETE

APPROXIMATE AREA DAMAGED (PERCENT)	APPROXIMATE DEPTH (INCHES)
2	3

Locations to be determined by the Engineer. For details see "DECK REPAIR DETAIL".

	BY	CHECKED
DESIGN	Tim Powell	M.J. Lee
DETAILS	G.F. Bidwell	M.J. Lee
QUANTITIES	Tim Powell	M.J. Lee

STATE OF CALIFORNIA DEPARTMENT OF TRANSPORTATION

DIVISION OF MAINTENANCE STRUCTURE MAINTENANCE DESIGN

BRIDGE NO. 56-0167L
POST MILE R24.20

WEST CHANNEL STUBBY WASH (WIDEN)

TYPICAL SECTION

STRUCTURES MAINTENANCE GENERAL PLAN & DETAIL SHEET (ENGLISH) (REV. 10/17/07)

ORIGINAL SCALE IN INCHES FOR REDUCED PLANS 0 1 2 3

UNIT: X
PROJECT NUMBER & PHASE: 0800000082

DISREGARD PRINTS BEARING EARLIER REVISION DATES

REVISION DATES: 11-17-10 12-10-10 2-1-11 3-2-11

SHEET 8 OF 9

CONTRACT NO.: 08-0E4101 PROJECT ID: X

FILE => 08-0e4101_56-0167_08.dgn

USERNAME => trmikesl DATE PLOTTED => 10-JUN-2011 TIME PLOTTED => 05:59

DIST	COUNTY	ROUTE	POST MILES TOTAL PROJECT	SHEET NO.	TOTAL SHEETS
08	Riv	10	R24.0/R24.3	43	55

REGISTERED CIVIL ENGINEER 3-2-11 DATE

6-6-11
PLANS APPROVAL DATE

THE STATE OF CALIFORNIA OR ITS OFFICERS OR AGENTS SHALL NOT BE RESPONSIBLE FOR THE ACCURACY OR COMPLETENESS OF ELECTRONIC COPIES OF THIS PLAN SHEET.

REGISTERED PROFESSIONAL ENGINEER TIMOTHY J. POWELL No. C 61037 Exp. 12-31-12 CIVIL STATE OF CALIFORNIA

GENERAL NOTES
LOAD FACTOR DESIGN

DESIGN: BRIDGE DESIGN SPECIFICATIONS (1996 AASHTO with Interims and Revisions by CALTRANS).

DEAD LOAD: Includes 35 psf for future wearing surface.

LIVE LOADING: HL93 and permit design load.

CONCRETE: fy = 60 ksi
f'c = 3.6 ksi
n = 8

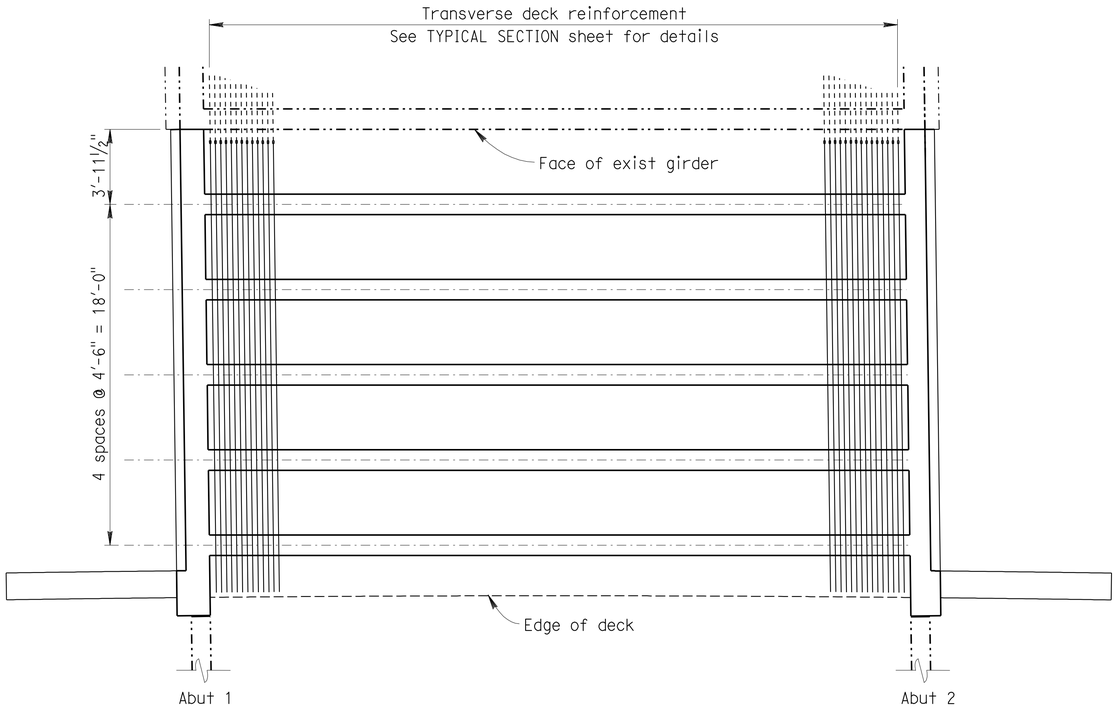

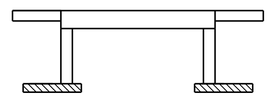

Structural Concrete, Bridge
Structural Concrete, Bridge Footing

CONCRETE STRENGTH AND TYPE LIMITS

NO SCALE

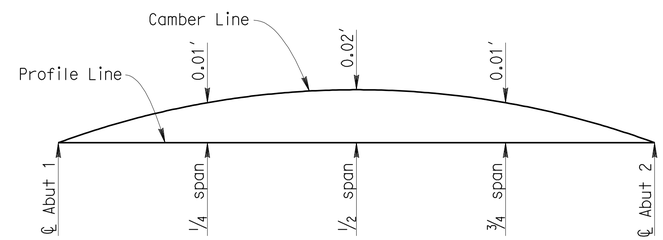

Camber diagram for deflection at time of falsework removal.
For ultimate deflection multiply values shown by 3.

CAMBER DIAGRAM

NO SCALE

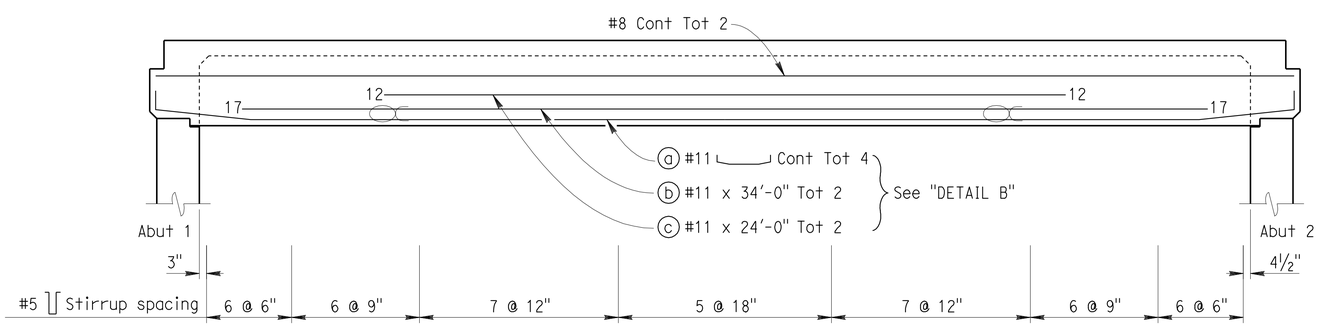

NOTE:
All reinforcement #11 unless otherwise noted. Numbers at the ends of bars indicate distance in feet from ℄ Span.

Bundled bars indicated thusly:

GIRDER ELEVATION

NO SCALE

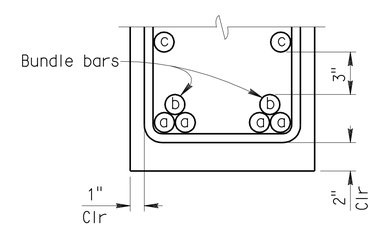

DETAIL B

NO SCALE

DESIGN	BY Tim Powell	CHECKED M.J. Lee	
DETAILS	BY G.F. Bidwell	CHECKED M.J. Lee	
QUANTITIES	BY Tim Powell	CHECKED M.J. Lee	

STATE OF CALIFORNIA
DEPARTMENT OF TRANSPORTATION

DIVISION OF MAINTENANCE
STRUCTURE MAINTENANCE DESIGN

BRIDGE NO. 56-0167L
POST MILE R24.20

WEST CHANNEL STUBBY WASH (WIDEN)
GIRDER LAYOUT & REINFORCEMENT

STRUCTURES MAINTENANCE GENERAL PLAN & DETAIL SHEET (ENGLISH) (REV. 10/17/07)

ORIGINAL SCALE IN INCHES FOR REDUCED PLANS 0 1 2 3

UNIT: X
PROJECT NUMBER & PHASE: 0800000082

DISREGARD PRINTS BEARING EARLIER REVISION DATES → 11-17-10 12-16-10 2-1-11 3-2-11

REVISION DATES

SHEET 9 OF 9

FILE => 08-0e4101_56-0167_09.dgn

CONTRACT NO.: 08-0E4101 PROJECT ID: X

USERNAME => trmikes1 DATE PLOTTED => 10-JUN-2011 TIME PLOTTED => 05:59

DIST	COUNTY	ROUTE	POST MILES TOTAL PROJECT	SHEET NO.	TOTAL SHEETS
08	Riv	10	R24.0/R24.3	44	55

T J Powell 3-2-11
REGISTERED CIVIL ENGINEER DATE

6-6-11
PLANS APPROVAL DATE

REGISTERED PROFESSIONAL ENGINEER TIMOTHY J. POWELL No. C 61037 Exp. 12-31-12 CIVIL STATE OF CALIFORNIA

THE STATE OF CALIFORNIA OR ITS OFFICERS OR AGENTS SHALL NOT BE RESPONSIBLE FOR THE ACCURACY OR COMPLETENESS OF ELECTRONIC COPIES OF THIS PLAN SHEET.

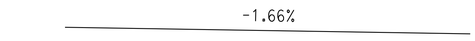

PROFILE GRADE

NO SCALE

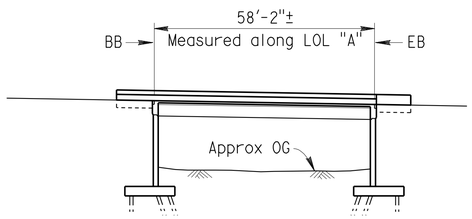

ELEVATION

1" = 20'

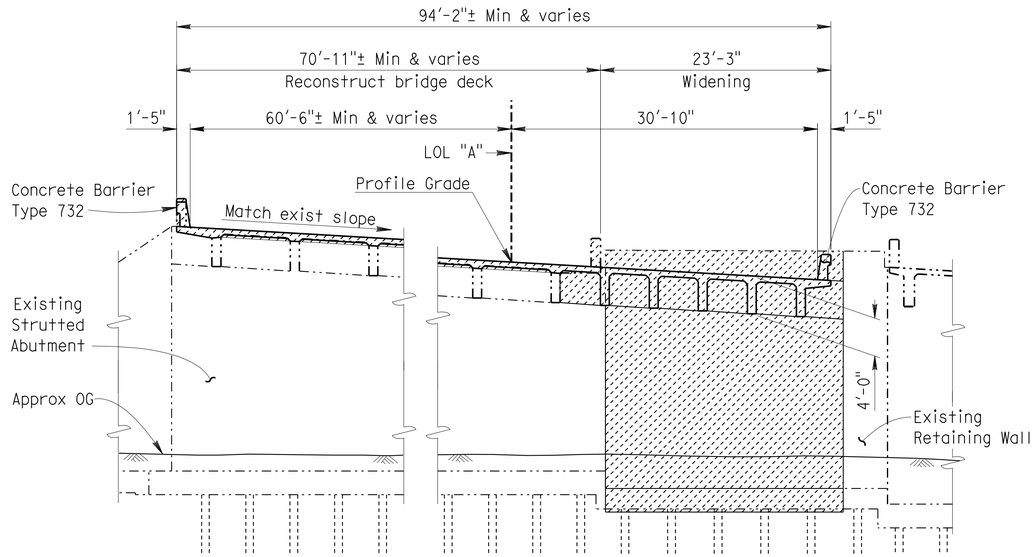

TYPICAL SECTION

1/8" = 1'

NOTES: (APPLY TO ALL SHEETS)

Indicates existing.

THE CONTRACTOR SHALL VERIFY ALL CONTROLLING FIELD DIMENSIONS BEFORE ORDERING OR FABRICATING ANY MATERIAL.

STANDARD PLAN SHEET NUMBER
DETAIL NUMBER

NOTES: (APPLY TO THIS SHEET ONLY)

Indicates limits of Bridge Removal (portion): existing concrete barriers, deck, end diaphragms and retaining walls.

Inidcates location of remove existing joint seal and place new joint seal. For details see ABUTMENT DETAILS NO. 6 sheet.

See DECK CONTOURS sheet for Temporary Supports and "GENERAL NOTES LOAD FACTOR DESIGN".

See Road Plans for construction staging.

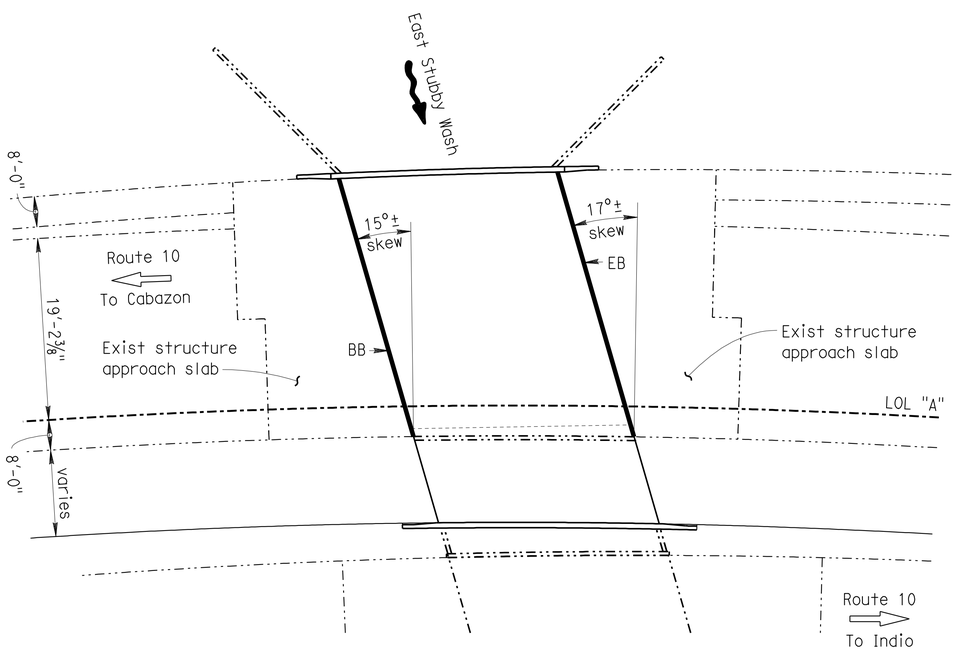

PLAN

1" = 20'

QUANTITIES

TEMPORARY SUPPORT	LUMP	SUM
SALVAGE METAL BRIDGE RAILING	140	LF
BRIDGE REMOVAL (PORTION), LOCATION B	LUMP	SUM
STRUCTURE EXCAVATION (BRIDGE)	505	CY
STRUCTURE BACKFILL (BRIDGE)	503	CY
STRUCTURAL CONCRETE, BRIDGE FOOTING	62	CY
STRUCTURAL CONCRETE, BRIDGE	245	CY
JOINT SEAL (MR 1/2")	148	LF
BAR REINFORCING STEEL (BRIDGE)	73,400	LB
CONCRETE BARRIER (TYPE 732)	152	LF

INDEX TO PLANS

SHEET NO.	TITLE
1	GENERAL PLAN
2	FOUNDATION PLAN
3	DECK CONTOURS
4	ABUTMENT DETAILS NO. 1
5	ABUTMENT DETAILS NO. 2
6	ABUTMENT DETAILS NO. 3
7	ABUTMENT DETAILS NO. 4
8	ABUTMENT DETAILS NO. 5
9	ABUTMENT DETAILS NO. 6
10	TYPICAL SECTION NO. 1
11	TYPICAL SECTION NO. 2
12	GIRDER LAYOUT & REINFORCEMENT

STANDARD PLANS DATED MAY 2006

SHEET NO.	TITLE
A10A	ACRONYMS AND ABBREVIATIONS (SHEET 1 OF 2)
A10B	ACRONYMS AND ABBREVIATIONS (SHEET 2 OF 2)
A62C	LIMITS OF PAYMENT FOR EXCAVATION AND BACKFILL - BRIDGE
B0-1	BRIDGE DETAILS
B0-3	BRIDGE DETAILS
B0-5	BRIDGE DETAILS
B6-1	T-BEAM DETAILS
RSP B6-21	JOINT SEALS (MAXIMUM MOVEMENT RATING = 2")
B11-55	CONCRETE BARRIER TYPE 732

Michael J. Lee 3-2-11
DESIGN ENGINEER

	BY	CHECKED		BY	CHECKED
DESIGN	Tim Powell	M.J. Lee	LAYOUT	G.F. Bidwell	M.J. Lee
DETAILS	G.F. Bidwell	M.J. Lee	SPECIFICATIONS	Mingxia Pan	PLANS AND SPECIFICATIONS COMPARED: Tim Powell
QUANTITIES	Tim Powell	M.J. Lee			

STATE OF CALIFORNIA
DEPARTMENT OF TRANSPORTATION

DIVISION OF MAINTENANCE
STRUCTURE MAINTENANCE DESIGN

BRIDGE NO. 56-0168L
POST MILE R24.24

EAST CHANNEL STUBBY WASH (WIDEN)

GENERAL PLAN

STRUCTURES MAINTENANCE GENERAL PLAN & DETAIL SHEET (ENGLISH) (REV. 10/17/07)

ORIGINAL SCALE IN INCHES FOR REDUCED PLANS 0 1 2 3

UNIT: X
PROJECT NUMBER & PHASE: 0800000082

DISREGARD PRINTS BEARING EARLIER REVISION DATES 12-23-10 2-1-11 3-2-11

REVISION DATES

SHEET 1 OF 12

FILE => 08-0e4101_56-0168_01.dgn

CONTRACT NO.: 08-0E4101 PROJECT ID: X

USERNAME => ttmikes1 DATE PLOTTED => 10-JUN-2011 TIME PLOTTED => 05:59

DIST	COUNTY	ROUTE	POST MILES TOTAL PROJECT	SHEET NO.	TOTAL SHEETS
08	Riv	10	R24.0/R24.3	45	55

REGISTERED CIVIL ENGINEER 3-2-11 DATE

6-6-11
PLANS APPROVAL DATE

THE STATE OF CALIFORNIA OR ITS OFFICERS OR AGENTS SHALL NOT BE RESPONSIBLE FOR THE ACCURACY OR COMPLETENESS OF ELECTRONIC COPIES OF THIS PLAN SHEET.

REGISTERED PROFESSIONAL ENGINEER TIMOTHY J. POWELL No. C 61037 Exp. 12-31-12 CIVIL STATE OF CALIFORNIA

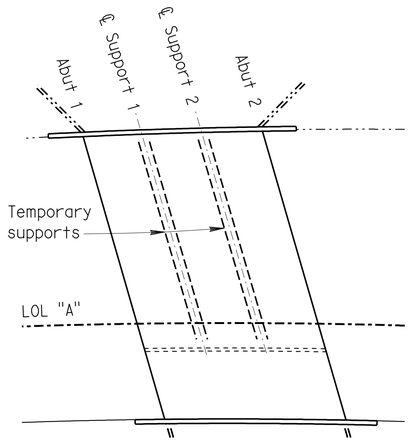

PLAN

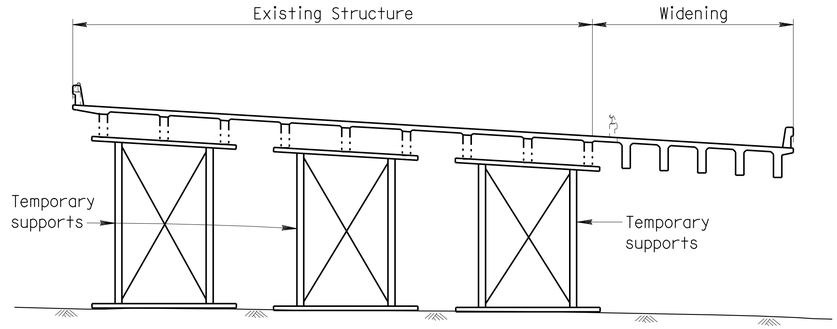

TYPICAL SECTION

TEMPORARY SUPPORTS

LOCATIONS SHOWN FOR ILLUSTRATIVE PURPOSES ONLY.
NO SCALE

TEMPORARY SUPPORT TABLE			
LOCATION	DL + LL + I (k)	DL (k)	LATERAL LOAD (k)
Support 1 1/3 Span	443	143	22
Support 2 2/3 Span	443	143	22

The maximum allowable transverse displacement of the superstructure measured at the girder soffit relative to the base of the temporary support is 1". The differential vertical lift between jacks shall not exceed 1/16". The temporary support shall be jacked to provide a snug fit with the bridge girders.

GENERAL NOTES
LOAD FACTOR DESIGN

DESIGN: BRIDGE DESIGN SPECIFICATIONS (1996 AASHTO with Interims and Revisions by CALTRANS).

DEAD LOAD: Includes 35 psf for future wearing surface.

LIVE LOADING: HL93 and permit design load.

CONCRETE: fy = 60 ksi
f'c = 3.6 ksi
n = 8

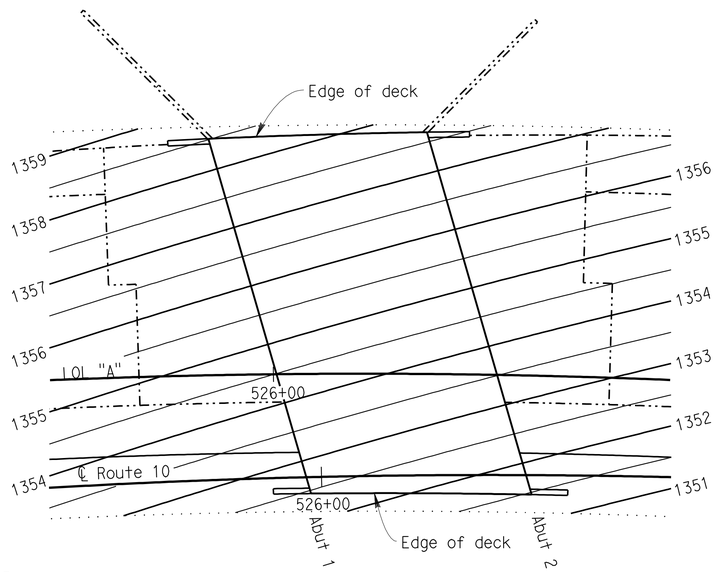

DECK CONTOUR NOTES:

1. Contours indicate top of deck elevation.
2. Contour interval = 0.50 feet
3. Contours do not include camber

DECK CONTOURS

1" = 20'

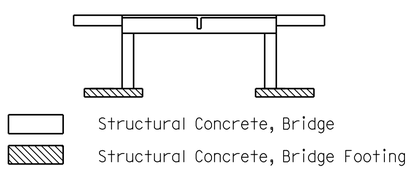

CONCRETE STRENGTH AND TYPE LIMITS

NO SCALE

FALSEWORK RELEASE

Alternative 1:
Falsework shall be released as soon as permitted by the specifications. Closure pour shall not be placed sooner than 60 days after the falsework had been released.

Alternative 2:
Falsework shall not be released less than 28 days after the last concrete has been placed. Closure pour shall not be placed sooner than 14 days after the falsework has been released.

When Falsework Release Alternative 2 is used, camber values are 0.75 times those shown.

	BY	CHECKED
DESIGN	Tim Powell	M.J. Lee
DETAILS	G.F. Bidwell	M.J. Lee
QUANTITIES	Tim Powell	M.J. Lee

STATE OF CALIFORNIA
DEPARTMENT OF TRANSPORTATION

DIVISION OF MAINTENANCE
STRUCTURE MAINTENANCE DESIGN

BRIDGE NO. 56-0168L
POST MILE R24.24

EAST CHANNEL STUBBY WASH (WIDEN)
DECK CONTOURS

STRUCTURES MAINTENANCE GENERAL PLAN & DETAIL SHEET (ENGLISH) (REV. 10/17/07)

ORIGINAL SCALE IN INCHES FOR REDUCED PLANS 0 1 2 3

UNIT: X
PROJECT NUMBER & PHASE: 0800000082

DISREGARD PRINTS BEARING EARLIER REVISION DATES 12-23-10 2-1-11 3-2-11

REVISION DATES

SHEET 2 OF 12

FILE => 08-0e4101_56-0168_02.dgn

CONTRACT NO.: 08-0E4101 PROJECT ID: X

USERNAME => trmikesl DATE PLOTTED => 10-JUN-2011 TIME PLOTTED => 05:59

DIST	COUNTY	ROUTE	POST MILES TOTAL PROJECT	SHEET NO.	TOTAL SHEETS
08	Riv	10	R24.0/R24.3	46	55

REGISTERED CIVIL ENGINEER 3-2-11 DATE

6-6-11
PLANS APPROVAL DATE

REGISTERED PROFESSIONAL ENGINEER TIMOTHY J. POWELL No. C 61037 Exp. 12-31-12 CIVIL STATE OF CALIFORNIA

THE STATE OF CALIFORNIA OR ITS OFFICERS OR AGENTS SHALL NOT BE RESPONSIBLE FOR THE ACCURACY OR COMPLETENESS OF ELECTRONIC COPIES OF THIS PLAN SHEET.

CURVE DATA				
No.	R	Δ	T	L
1	1999.86	31°39′45"	567.08	1105.15
2	2000.00	31°39′46"	567.13	1105.24

(A) STA. 526+29.56 "LTETW" LINE =
STA. 11+84.58 "EASTSTUBB" LINE

(B) STA.526+24.65 "℄ RTE 10" =
STA. 11+57.40 "EASTSTUBB" LINE

Bridge #56-0168L Location
③ - 88.45′ Lt. ℄, Sta.525+75.41, Elev.=1357.96′ ±
④ - 19.43′ Lt. ℄, Sta.525+92.01, Elev.=1348.34′ ±
⑤ - 88.64′ Lt. ℄, Sta.526+30.03, Elev.=1357.12′ ±
⑥ - 18.44′ Lt. ℄, Sta.526+49.50, Elev.=1352.66′ ±

Note:
Bottom of footing elevation shown thus:

Footings with existing piles shown thus: + +

For existing pile layout see ABUTMENT DETAILS NO. 1 and ABUTMENT DETAILS NO. 2 sheets.

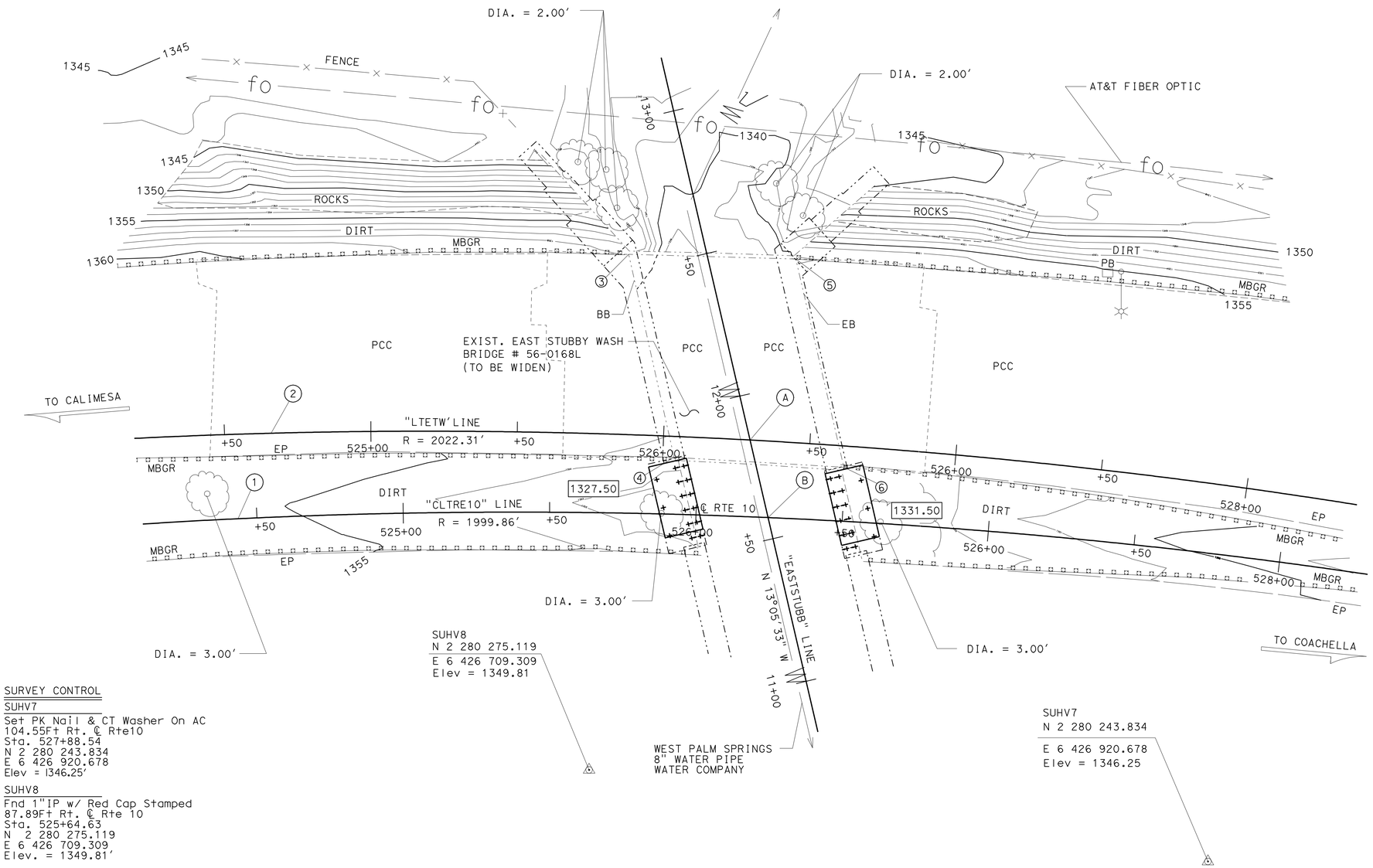

SURVEY CONTROL

SUHV7
Set PK Nail & CT Washer On AC
104.55Ft Rt. ℄ Rte10
Sta. 527+88.54
N 2 280 243.834
E 6 426 920.678
Elev = 1346.25′

SUHV8
Fnd 1"IP w/ Red Cap Stamped
87.89Ft Rt. ℄ Rte 10
Sta. 525+64.63
N 2 280 275.119
E 6 426 709.309
Elev. = 1349.81′

NOTES:

UNDERGROUND UTILITIES AS SHOWN ARE APPROXIMATE

PRELIMINARY INVESTIGATION SECTION

SCALE 1:20	VERT.DATUM NGVD29	PHOTOGRAMMETRY AS OF: X			
HORZ.DATUM NAD83(1992.88)		SURVEYED	BY T.PHUNG 11/10	CHECKED	BY T. PHUNG 11/10
ALIGNMENT TIES Ties Dist.Trav.Sheets		DRAFTED	BY S. ABASSY 12/10	CHECKED	BY S. ALIVIO 12/10

STRUCTURES MAINTENANCE GENERAL PLAN & DETAIL SHEET (ENGLISH) (REV. 10/17/07)

DESIGN	BY Tim Powell	CHECKED M.J. Lee	
DETAILS	BY G.F. Bidwell	CHECKED M.J. Lee	
QUANTITIES	BY Tim Powell	CHECKED M.J. Lee	

ORIGINAL SCALE IN INCHES FOR REDUCED PLANS 0 1 2 3

STATE OF CALIFORNIA
DEPARTMENT OF TRANSPORTATION

DIVISION OF MAINTENANCE
STRUCTURE MAINTENANCE DESIGN

UNIT: X
PROJECT NUMBER & PHASE: 0800000082

BRIDGE NO. 56-0168L
POST MILE R24.24

EAST CHANNEL STUBBY WASH (WIDEN)

FOUNDATION PLAN

DISREGARD PRINTS BEARING EARLIER REVISION DATES

REVISION DATES: 12-23-10 2-1-11 3-2-11

SHEET 3 OF 12

FILE => 08-0E4101_56-0168_03.dgn

CONTRACT NO.: 08-0E4101 PROJECT ID: X

USERNAME => trmikest DATE PLOTTED => 10-JUN-2011 TIME PLOTTED => 06:00

DIST	COUNTY	ROUTE	POST MILES TOTAL PROJECT	SHEET NO.	TOTAL SHEETS
08	Riv	10	R24.0/R24.3	47	55

REGISTERED CIVIL ENGINEER 3-2-11 DATE

6-6-11
PLANS APPROVAL DATE

THE STATE OF CALIFORNIA OR ITS OFFICERS OR AGENTS SHALL NOT BE RESPONSIBLE FOR THE ACCURACY OR COMPLETENESS OF ELECTRONIC COPIES OF THIS PLAN SHEET.

REGISTERED PROFESSIONAL ENGINEER TIMOTHY J. POWELL No. C 61037 Exp. 12-31-12 CIVIL STATE OF CALIFORNIA

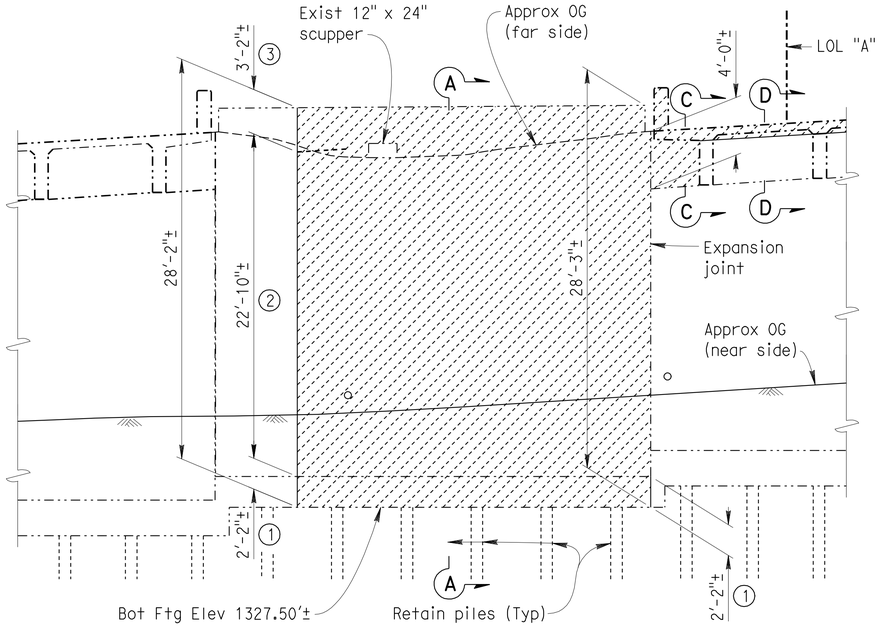

PARTIAL ELEVATION

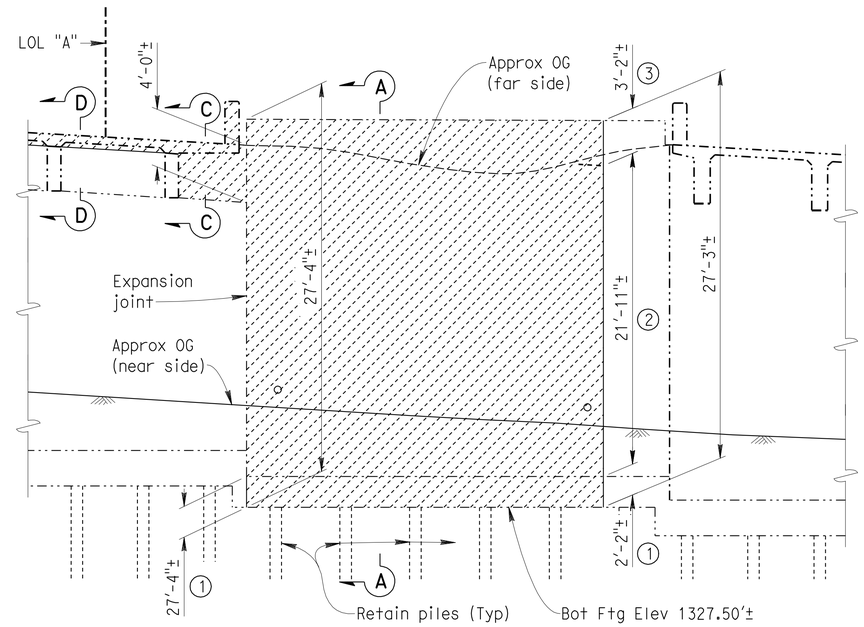

PARTIAL ELEVATION

NOTES: (APPLY TO THIS SHEET ONLY)

Indicates limits of remove existing concrete. Retain all existing piles.

(1) Indicates limits of retain sufficent length for splice #4 Tot 7 longitudinal reinforcing steel in retaining wall footing.

(2) Indicates limits of retain sufficent length for splice #4 @ 18 (exterior face) and #4 @ 36 (batter face) longitudinal reinforcing steel in retaining wall.

(3) Indicates limits of remove longitudinal reinforcing steel referenced in Note 2 to 1" below face of concrete surface.

+ Indicates location of existing vertical HP10x42 piles.

+ Indicates location of existing battered HP10x42 piles. Arrow points in direction of batter.

See ABUTMENT DETAILS NO. 3 sheet for "SECTION A-A". See ABUTMENT DETAILS NO. 5 sheet for "SECTION C-C". See ABUTMENT DETAILS NO. 6 sheet for "SECTION D-D".

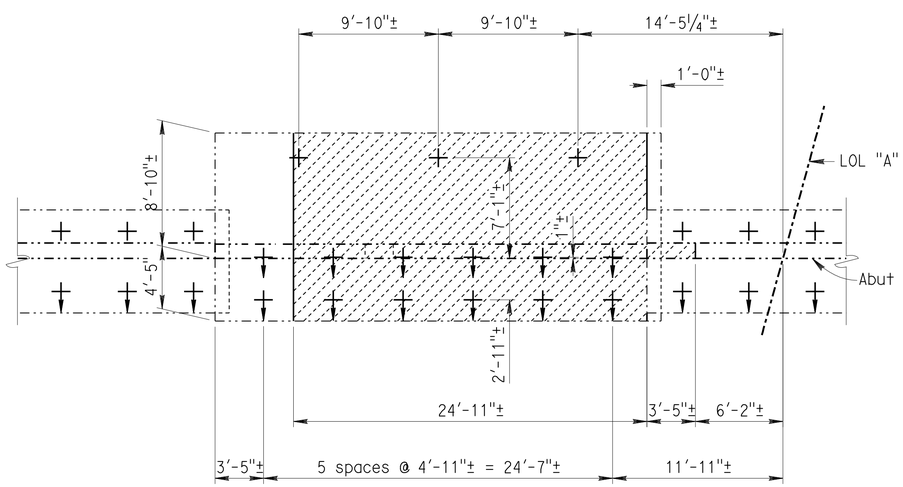

PARTIAL PLAN

ABUTMENT 1 - EXISTING

3/16" = 1'

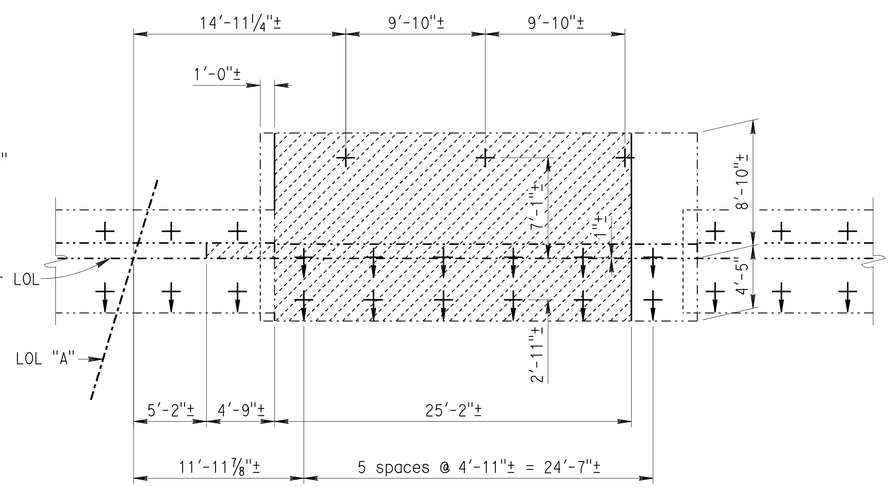

PARTIAL PLAN

ABUTMENT 2 - EXISTING

3/16" = 1'

DESIGN	BY Tim Powell	CHECKED M.J. Lee	
DETAILS	BY G.F. Bidwell	CHECKED M.J. Lee	
QUANTITIES	BY Tim Powell	CHECKED M.J. Lee	

STATE OF CALIFORNIA
DEPARTMENT OF TRANSPORTATION

DIVISION OF MAINTENANCE
STRUCTURE MAINTENANCE DESIGN

BRIDGE NO. 56-0168L
POST MILE R24.24

EAST CHANNEL STUBBY WASH (WIDEN)

ABUTMENT DETAILS NO. 1

STRUCTURES MAINTENANCE GENERAL PLAN & DETAIL SHEET (ENGLISH) (REV. 10/17/07)

ORIGINAL SCALE IN INCHES FOR REDUCED PLANS 0 1 2 3

UNIT: X
PROJECT NUMBER & PHASE: 0800000082

DISREGARD PRINTS BEARING EARLIER REVISION DATES

REVISION DATES: ~~12-23-10~~ ~~2-1-11~~ 3-2-11

SHEET 4 OF 12

FILE => 08-0e4101_56-0168_04.dgn

CONTRACT NO.: 08-0E4101 PROJECT ID: X

USERNAME => trmikesl DATE PLOTTED => 10-JUN-2011 TIME PLOTTED => 06:00

DIST	COUNTY	ROUTE	POST MILES TOTAL PROJECT	SHEET NO.	TOTAL SHEETS
08	Riv	10	R24.0/R24.3	48	55

REGISTERED CIVIL ENGINEER 3-2-11 DATE

6-6-11
PLANS APPROVAL DATE

REGISTERED PROFESSIONAL ENGINEER TIMOTHY J. POWELL No. C 61037 Exp. 12-31-12 CIVIL STATE OF CALIFORNIA

THE STATE OF CALIFORNIA OR ITS OFFICERS OR AGENTS SHALL NOT BE RESPONSIBLE FOR THE ACCURACY OR COMPLETENESS OF ELECTRONIC COPIES OF THIS PLAN SHEET.

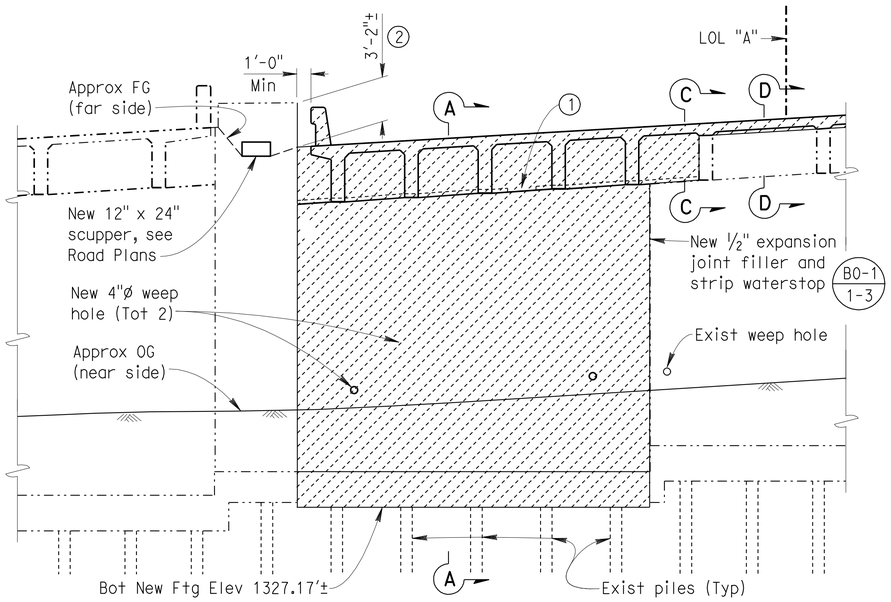

PARTIAL ELEVATION

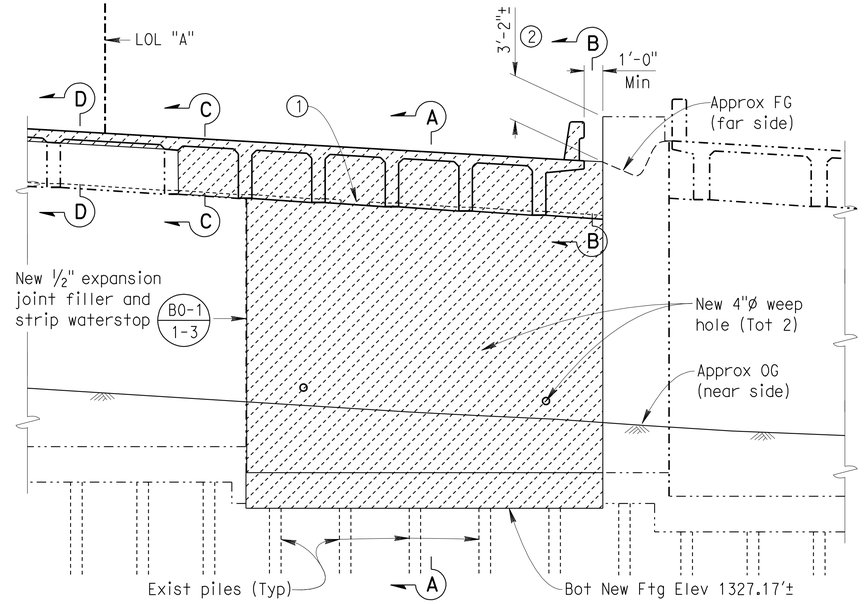

PARTIAL ELEVATION

NOTES: (APPLY TO THIS SHEET ONLY)

Indicates limits of place new concrete. Retain all existing piles.

(1) Indicates location of 2' key. See "DETAIL A" on ABUTMENT DETAILS NO. 3 sheet.

(2) Indicates limits of refinish existing concrete surface by patching with mortar.

+ Indicates location of existing vertical HP10x42 piles. For spacing see ABUTMENT DETAILS NO. 1 sheet.

+ Indicates location of existing battered HP10x42 piles. Arrow points in direction of batter. For spacing see ABUTMENT DETAILS NO. 1 sheet.

See ABUTMENT DETAILS NO. 3 sheet for "SECTION A-A". See ABUTMENT DETAILS NO. 5 sheet for "SECTION B-B" and "SECTION C-C". See ABUTMENT DETAILS NO. 6 sheet for "SECTION D-D".

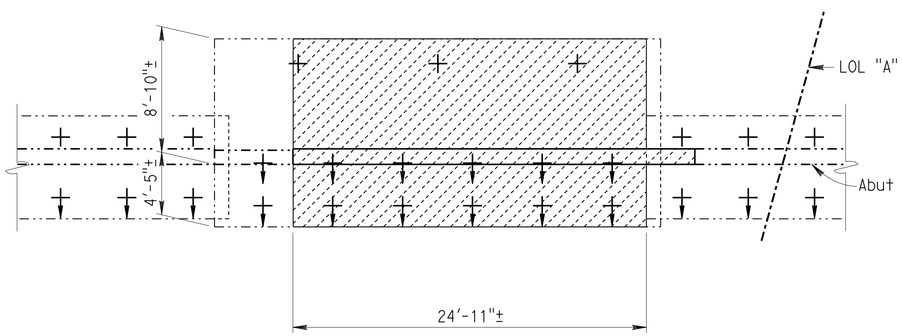

PARTIAL PLAN

ABUTMENT 1 - RECONSTRUCTION

3/16" = 1'

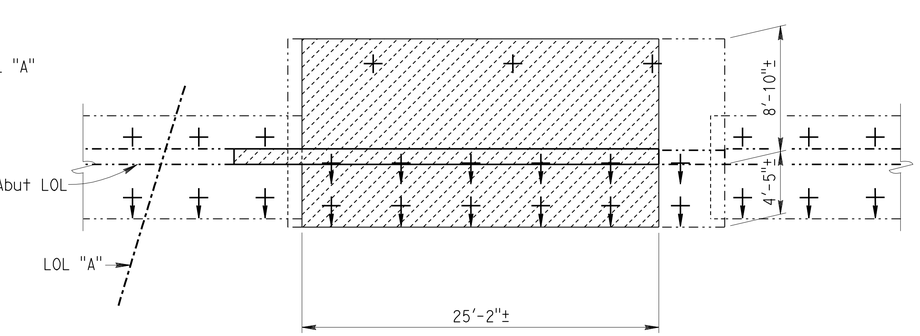

PARTIAL PLAN

ABUTMENT 2 - RECONSTRUCTION

3/16" = 1'

DESIGN	BY Tim Powell	CHECKED M.J. Lee	
DETAILS	BY G.F. Bidwell	CHECKED M.J. Lee	
QUANTITIES	BY Tim Powell	CHECKED M.J. Lee	

STATE OF CALIFORNIA DEPARTMENT OF TRANSPORTATION

DIVISION OF MAINTENANCE
STRUCTURE MAINTENANCE DESIGN

BRIDGE NO. 56-0168L
POST MILE R24.24

EAST CHANNEL STUBBY WASH (WIDEN)

ABUTMENT DETAILS NO. 2

STRUCTURES MAINTENANCE GENERAL PLAN & DETAIL SHEET (ENGLISH) (REV. 10/17/07)

ORIGINAL SCALE IN INCHES FOR REDUCED PLANS 0 1 2 3

UNIT: X
PROJECT NUMBER & PHASE: 0800000082

DISREGARD PRINTS BEARING EARLIER REVISION DATES

REVISION DATES: ~~12-23-10~~ ~~2-1-11~~ 3-2-11

SHEET 5 OF 12

FILE => 08-0e4101_56-0168_05.dgn

CONTRACT NO.: 08-0E4101 PROJECT ID: X

USERNAME => trmikesl DATE PLOTTED => 10-JUN-2011 TIME PLOTTED => 06:00

DIST	COUNTY	ROUTE	POST MILES TOTAL PROJECT	SHEET NO.	TOTAL SHEETS
08	Riv	10	R24.0/R24.3	49	55

REGISTERED CIVIL ENGINEER 3-2-11 DATE

6-6-11
PLANS APPROVAL DATE

REGISTERED PROFESSIONAL ENGINEER TIMOTHY J. POWELL No. C 61037 Exp. 12-31-12 CIVIL STATE OF CALIFORNIA

THE STATE OF CALIFORNIA OR ITS OFFICERS OR AGENTS SHALL NOT BE RESPONSIBLE FOR THE ACCURACY OR COMPLETENESS OF ELECTRONIC COPIES OF THIS PLAN SHEET.

NOTES: (APPLY TO THIS SHEET ONLY)

Indicates limits of remove existing concrete and reinforcing steel. Retain all existing piles.

1. Cut off tops of existing steel piles sufficient to provide 6" embedment in new footing. Also see "STEEL PILE ANCHOR" detail.
2. For details see "SECTION A-A" on ABUTMENT DETAILS NO. 5 sheet.
3. See ABUTMENT DETAILS NO. 1 sheet for limits of retain existing reinforcing.

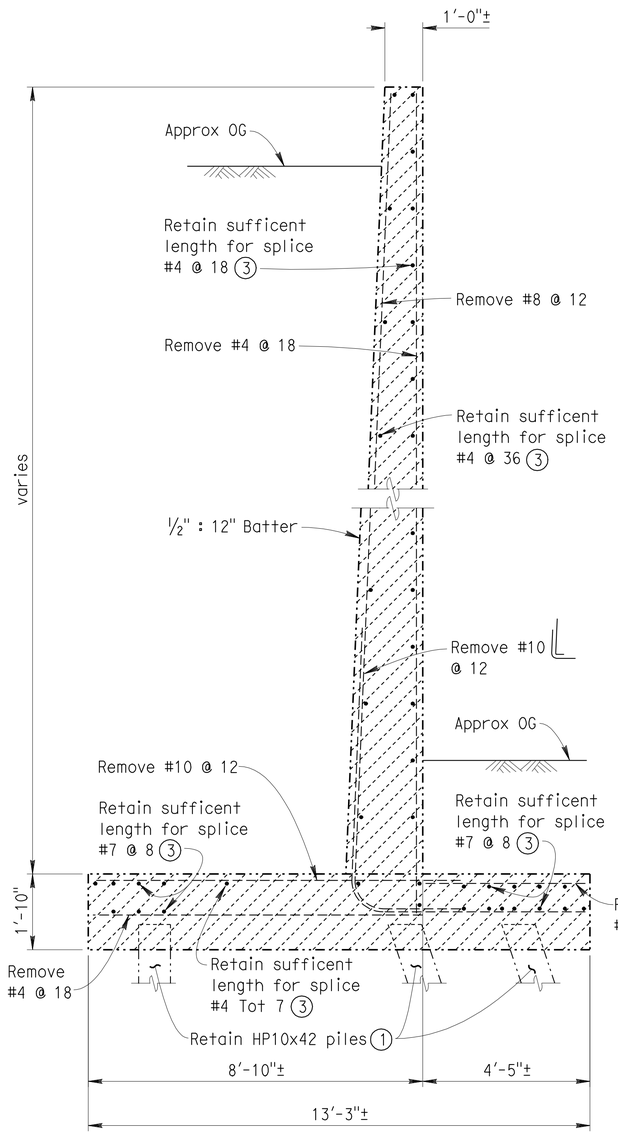

EXISTING

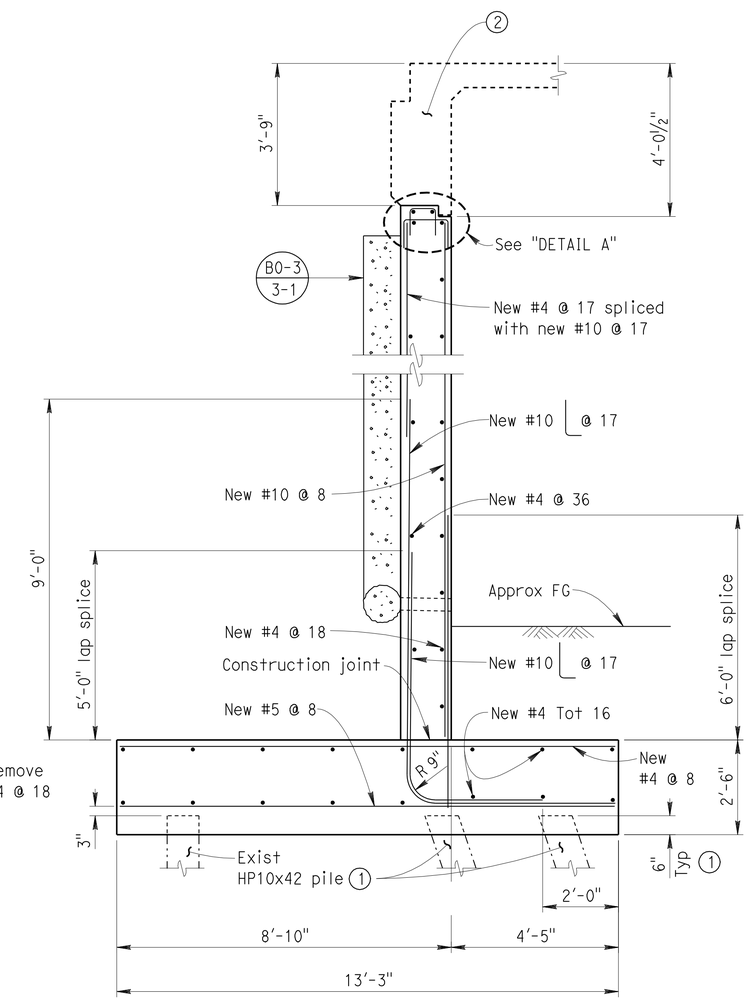

RECONSTRUCTION

SECTION A-A

½" = 1'

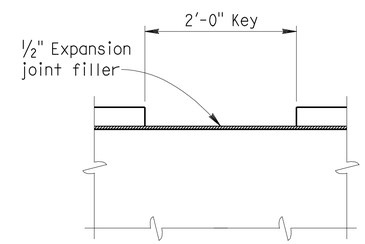

ELEVATION

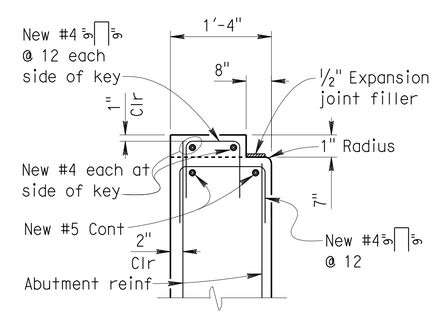

SECTION

DETAIL A

1" = 1'

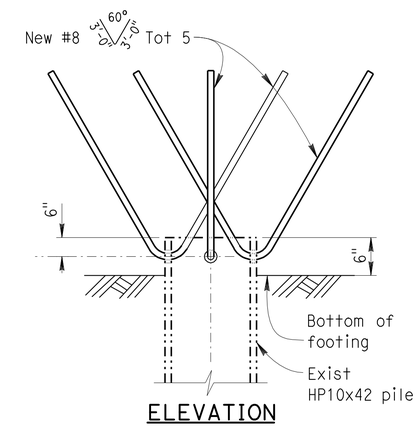

ELEVATION

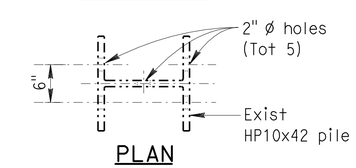

PLAN

(200 kip Pile)

STEEL PILE ANCHOR

DESIGN CAPACITY:
Tension = 200 kips
(Nominal axial reistance)
NO SCALE

DESIGN	BY Tim Powell	CHECKED M.J. Lee	
DETAILS	BY G.F. Bidwell	CHECKED M.J. Lee	
QUANTITIES	BY Tim Powell	CHECKED M.J. Lee	

STATE OF CALIFORNIA
DEPARTMENT OF TRANSPORTATION

DIVISION OF MAINTENANCE
STRUCTURE MAINTENANCE DESIGN

BRIDGE NO. 56-0168L
POST MILE R24.24

EAST CHANNEL STUBBY WASH (WIDEN)

ABUTMENT DETAILS NO. 3

STRUCTURES MAINTENANCE GENERAL PLAN & DETAIL SHEET (ENGLISH) (REV. 10/17/07)

ORIGINAL SCALE IN INCHES FOR REDUCED PLANS 0 1 2 3

UNIT: X
PROJECT NUMBER & PHASE: 0800000082

DISREGARD PRINTS BEARING EARLIER REVISION DATES → REVISION DATES 12-23-10 2-1-11 3-2-11

SHEET 6 OF 12

FILE => 08-0e4101_56-0168_06.dgn

CONTRACT NO.: 08-0E4101 PROJECT ID: X

USERNAME => trmikest DATE PLOTTED => 10-JUN-2011 TIME PLOTTED => 06:00

DIST	COUNTY	ROUTE	POST MILES TOTAL PROJECT	SHEET NO.	TOTAL SHEETS
08	Riv	10	R24.0/R24.3	50	55

REGISTERED CIVIL ENGINEER 3-2-11 DATE

6-6-11
PLANS APPROVAL DATE

REGISTERED PROFESSIONAL ENGINEER TIMOTHY J. POWELL No. C 61037 Exp. 12-31-12 CIVIL STATE OF CALIFORNIA

THE STATE OF CALIFORNIA OR ITS OFFICERS OR AGENTS SHALL NOT BE RESPONSIBLE FOR THE ACCURACY OR COMPLETENESS OF ELECTRONIC COPIES OF THIS PLAN SHEET.

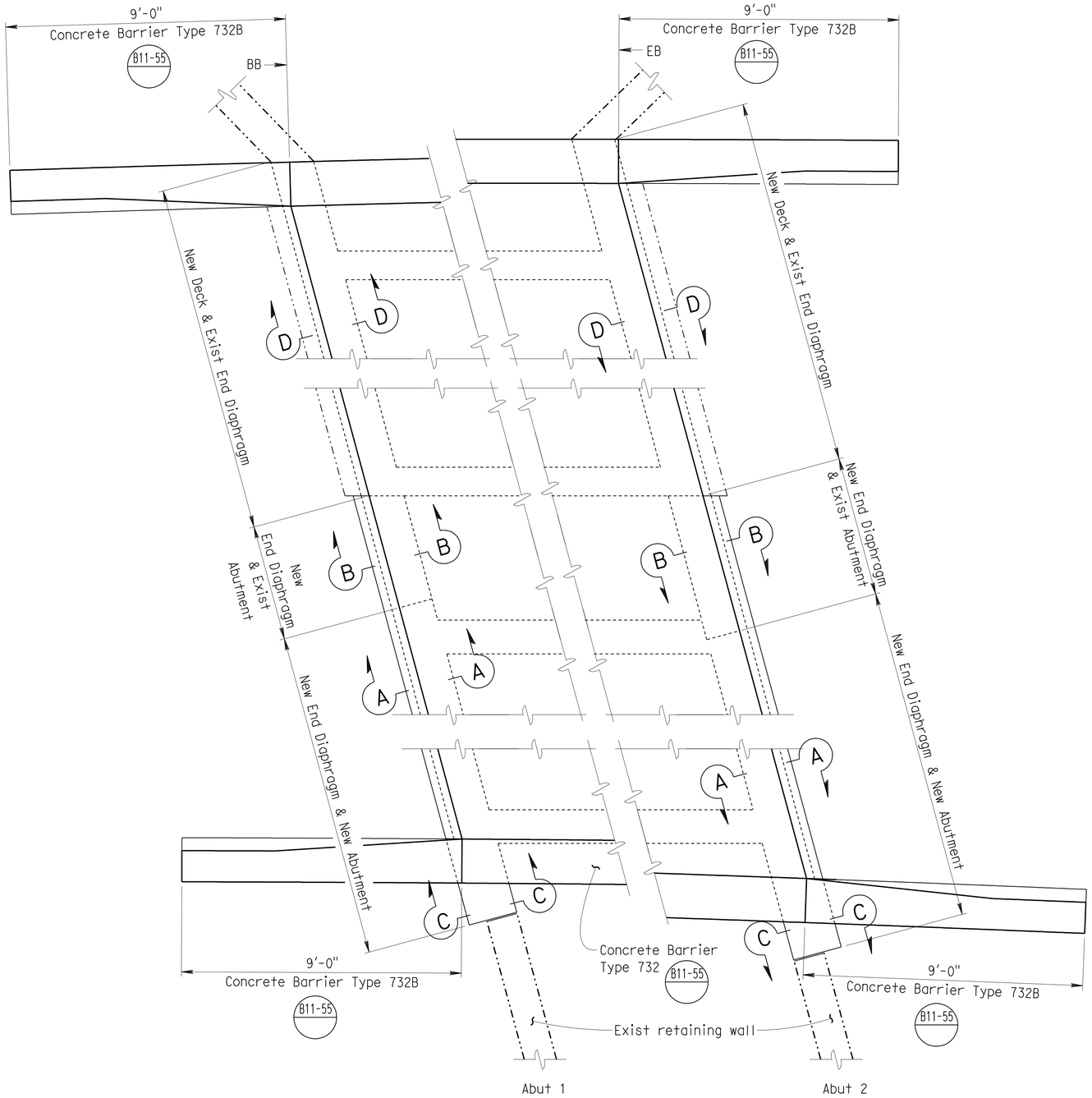

END DIAPHRAGM PLAN

1/2" = 1'

NOTES: (APPLY TO THIS SHEET ONLY)

See ABUTMENT DETAILS NO. 5 sheet for "SECTION A-A", "SECTION B-B" and "SECTION C-C". See ABUTMENT DETAILS NO. 6 sheet for "SECTION D-D".

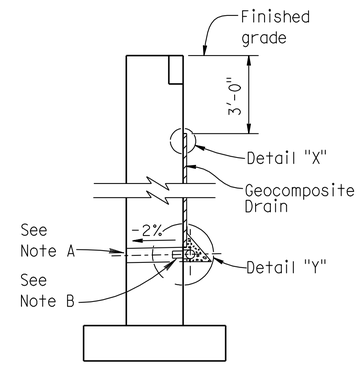

WALL SECTION

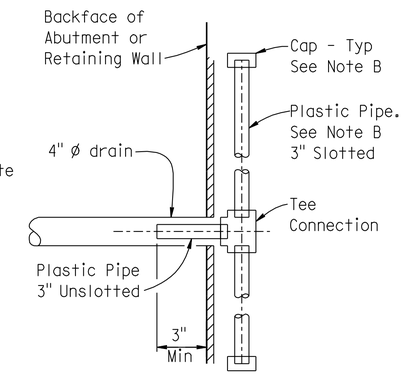

SECTION X-X

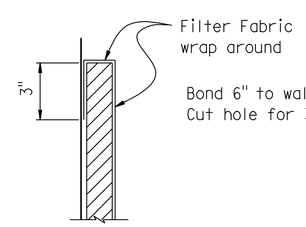

DETAIL "X"

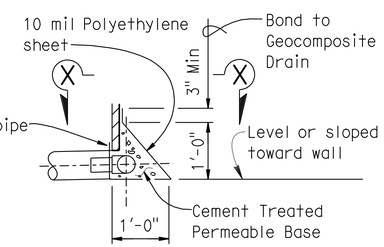

DETAIL "Y"

WEEP HOLE AND GEOCOMPOSITE DRAIN

ALTERNATIVE TO BRIDGE DETAIL B0-3 / 3-1

Notes:

A. 4" ø drains at intermediate sag points and at 25' Max C-C (9' C-C for Type 3 and 9'-3" C-C for Type 4 retaining walls). For walls adjacent to sidewalks or curbs, provide 4" cast iron or asbestos cement pipe under the sidewalk to discharge through curb face. Exposed wall drains shall be located 3"± above finished grade.

B. Geocomposite drain, cement treated permeable base, and 3" slotted plastic pipe continuous behind retaining wall or abutment. Cap ends of pipe. Provide "Tee" connection at each 4" ø drain.

C. Connect the low end of plastic pipe to the main outlet pipe as applicable.

DESIGN	BY Tim Powell	CHECKED M.J. Lee	
DETAILS	BY G.F. Bidwell	CHECKED M.J. Lee	
QUANTITIES	BY Tim Powell	CHECKED M.J. Lee	

STATE OF CALIFORNIA DEPARTMENT OF TRANSPORTATION

DIVISION OF MAINTENANCE STRUCTURE MAINTENANCE DESIGN

BRIDGE NO. 56-0168L
POST MILE R24.24

EAST CHANNEL STUBBY WASH (WIDEN)

ABUTMENT DETAILS NO. 4

STRUCTURES MAINTENANCE GENERAL PLAN & DETAIL SHEET (ENGLISH) (REV. 10/17/07)

ORIGINAL SCALE IN INCHES FOR REDUCED PLANS 0 1 2 3

UNIT: X
PROJECT NUMBER & PHASE: 0800000082

DISREGARD PRINTS BEARING EARLIER REVISION DATES

REVISION DATES: ~~12-23-10~~ ~~2-1-11~~ 3-2-11

SHEET 7 OF 12

FILE => 08-0e4101_56-0168_07.dgn

CONTRACT NO.: 08-0E4101 PROJECT ID: X

USERNAME => trmikes; DATE PLOTTED => 10-JUN-2011 TIME PLOTTED => 06:00

DIST	COUNTY	ROUTE	POST MILES TOTAL PROJECT	SHEET NO.	TOTAL SHEETS
08	Riv	10	R24.0/R24.3	51	55

REGISTERED CIVIL ENGINEER 3-2-11 DATE

6-6-11
PLANS APPROVAL DATE

REGISTERED PROFESSIONAL ENGINEER TIMOTHY J. POWELL No. C 61037 Exp. 12-31-12 CIVIL STATE OF CALIFORNIA

THE STATE OF CALIFORNIA OR ITS OFFICERS OR AGENTS SHALL NOT BE RESPONSIBLE FOR THE ACCURACY OR COMPLETENESS OF ELECTRONIC COPIES OF THIS PLAN SHEET.

NOTES: (APPLY TO THIS SHEET ONLY)

Indicates limits of remove existing concrete.

See ABUTMENT DETAILS NO. 3 sheet for "DETAIL A".

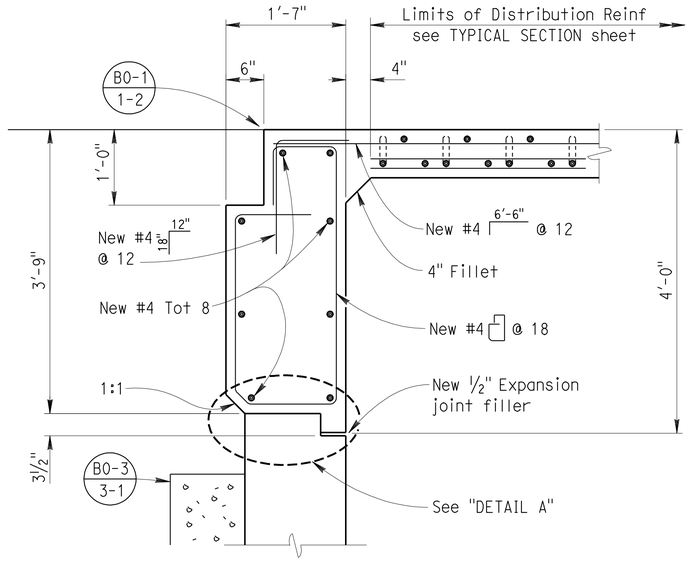

SECTION A-A

1" = 1'

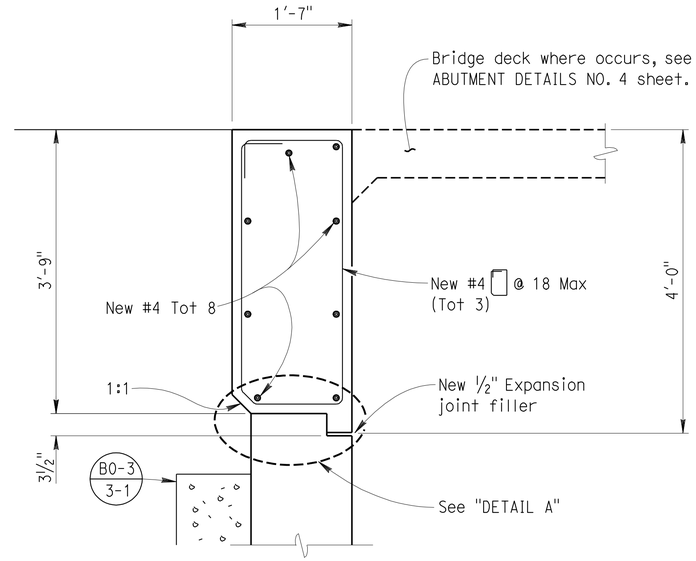

SECTION B-B

1" = 1'

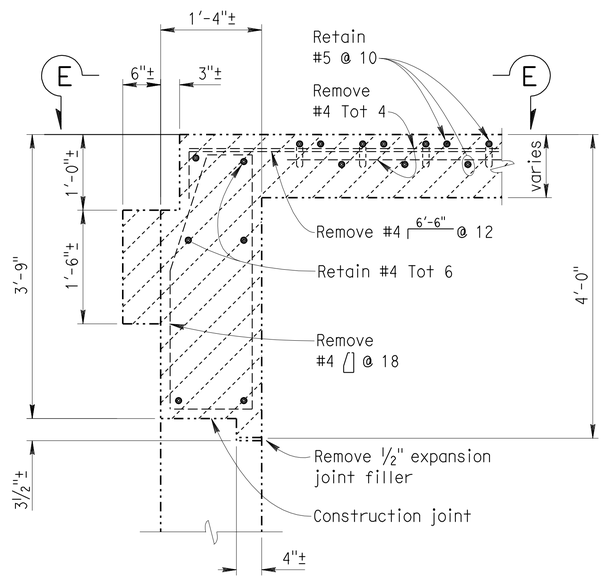

EXISTING

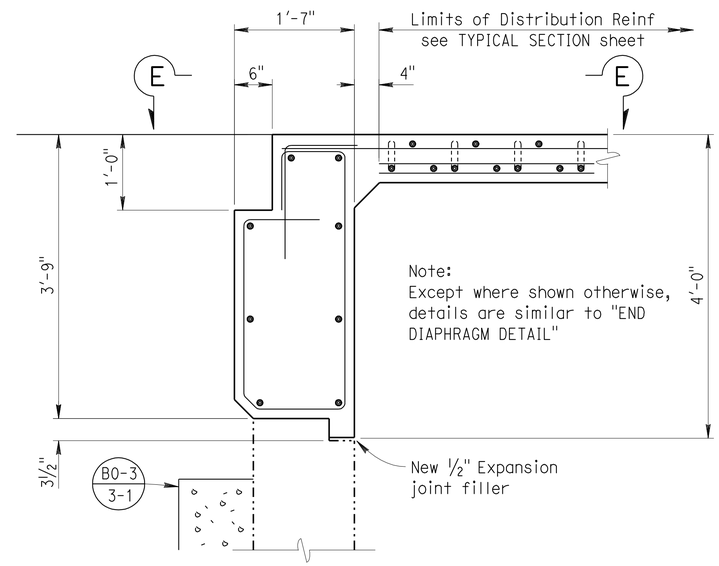

RECONSTRUCTION

SECTION C-C

1" = 1'

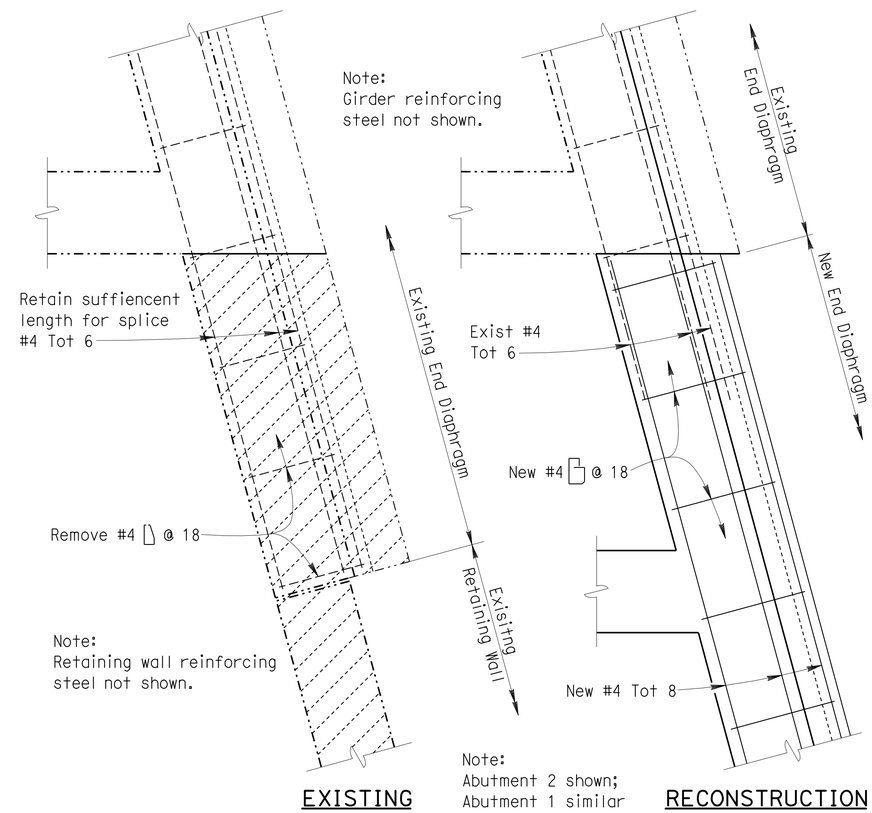

EXISTING RECONSTRUCTION

SECTION E-E

1" = 1'

DESIGN	BY Tim Powell	CHECKED M.J. Lee	
DETAILS	BY G.F. Bidwell	CHECKED M.J. Lee	
QUANTITIES	BY Tim Powell	CHECKED M.J. Lee	

STATE OF CALIFORNIA
DEPARTMENT OF TRANSPORTATION

DIVISION OF MAINTENANCE
STRUCTURE MAINTENANCE DESIGN

BRIDGE NO. 56-0168L
POST MILE R24.24

EAST CHANNEL STUBBY WASH (WIDEN)

ABUTMENT DETAILS NO. 5

STRUCTURES MAINTENANCE GENERAL PLAN & DETAIL SHEET (ENGLISH) (REV. 10/17/07)

ORIGINAL SCALE IN INCHES FOR REDUCED PLANS 0 1 2 3

UNIT: X
PROJECT NUMBER & PHASE: 0800000082

DISREGARD PRINTS BEARING EARLIER REVISION DATES

REVISION DATES: 12-23-10 2-1-11 3-2-11

SHEET 8 OF 12

CONTRACT NO.: 08-0E4101 PROJECT ID: X

FILE => 08-0e4101_56-0168_08.dgn

USERNAME => trmikes1 DATE PLOTTED => 10-JUN-2011 TIME PLOTTED => 06:00

DIST	COUNTY	ROUTE	POST MILES TOTAL PROJECT	SHEET NO.	TOTAL SHEETS
08	Riv	10	R24.0/R24.3	52	55

TJ Powell 3-2-11
REGISTERED CIVIL ENGINEER DATE

6-6-11
PLANS APPROVAL DATE

REGISTERED PROFESSIONAL ENGINEER TIMOTHY J. POWELL No. C 61037 Exp. 12-31-12 CIVIL STATE OF CALIFORNIA

THE STATE OF CALIFORNIA OR ITS OFFICERS OR AGENTS SHALL NOT BE RESPONSIBLE FOR THE ACCURACY OR COMPLETENESS OF ELECTRONIC COPIES OF THIS PLAN SHEET.

JOINT SEAL TABLE

LOCATION		MINIMUM "MR" (inches)	APPROXIMATE LENGTH (feet)	EXISTING WATERSTOP	APPROXIMATE DEPTH TO CLEAN EXPANSION JOINT (inches)	APPROXIMATE DEPTH OF JOINT SPALLS (inches)✳	APPROXIMATE WIDTH OF JOINT SPALLS (inches)✳	APPROXIMATE LENGTH OF JOINT SPALLS (FEET)✳
Abut 1	PN	½	72.0	No	12.0	3.0	6.0	2.0
Abut 2	PN	½	74.0	No	12.0	3.0	6.0	2.0

LEGEND:
PN = Paving Notch
✳ = Location to be determined by the Engineer, see "JOINT REPAIR DETAIL"

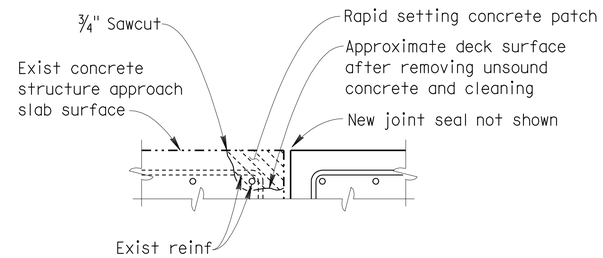

JOINT REPAIR

JOINT REPAIR DETAIL

Reinforcement may be encountered during concrete removal and is to remain undamaged.
NO SCALE

NOTES: (APPLY TO THIS SHEET ONLY)

Indicates limits of remove existing concrete.

The following note applies to JOINT SEAL TYPE A:

Install Type A joint seal 3" up into curb or rail on the low side of the deck where joint matches curb or rail joint. For details not shown see RSP B6-21

The following notes apply to JOINT SEAL TYPE B:

1) Seal must satisfy both minimum Movement Rating (MR) and minimum W1 requirements.

2) Minimum W1 is the calculated maximum width of the joint based on field measurements. After the joints have been cleaned, minimum W1 is to be calculated by the Engineer.

3) W1 shall be the smaller of the values determined as follows:

   A) 0.85 times the manufacturer's designed minimum uncompressed width of the seal.

   B) The width of the seal on the third successive test cycle of the pressure deflection test, when compressed to an average pressure of 3 psi.

4) Bend Type B joint seal 6" up into curb or rail on the low side of the deck where deck joint matches curb or rail joint.

5) For details not shown see RSP B6-21

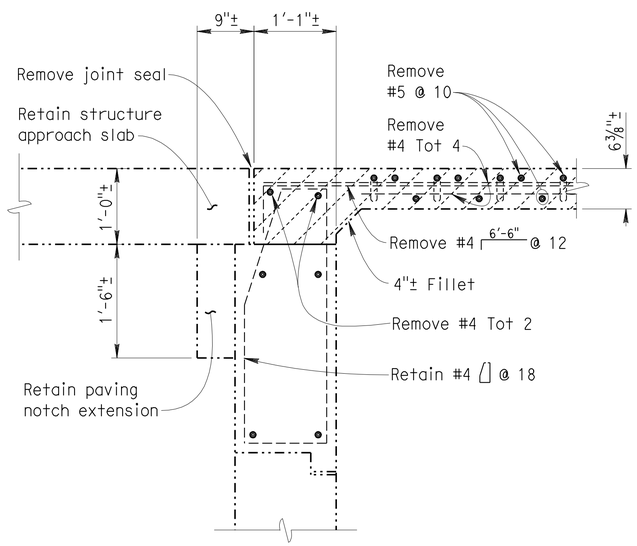

EXISTING

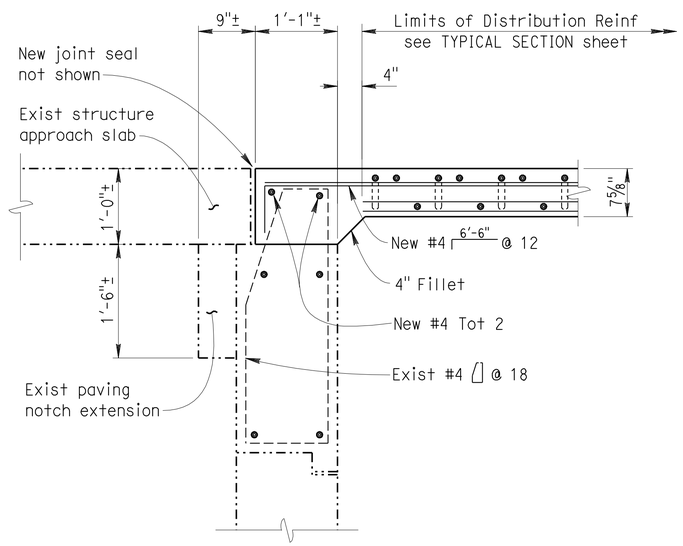

RECONSTRUCTION

SECTION D-D

1" = 1'

DESIGN	BY Tim Powell	CHECKED M.J. Lee	
DETAILS	BY G.F. Bidwell	CHECKED M.J. Lee	
QUANTITIES	BY Tim Powell	CHECKED M.J. Lee	

STATE OF CALIFORNIA
DEPARTMENT OF TRANSPORTATION

DIVISION OF MAINTENANCE
STRUCTURE MAINTENANCE DESIGN

BRIDGE NO. 56-0168L
POST MILE R24.24

EAST CHANNEL STUBBY WASH (WIDEN)

ABUTMENT DETAILS NO. 6

STRUCTURES MAINTENANCE GENERAL PLAN & DETAIL SHEET (ENGLISH) (REV. 10/17/07)

ORIGINAL SCALE IN INCHES FOR REDUCED PLANS 0 1 2 3

UNIT: X
PROJECT NUMBER & PHASE: 0800000082

DISREGARD PRINTS BEARING EARLIER REVISION DATES

REVISION DATES: 12-23-10 2-1-11 3-2-11

SHEET 9 OF 12

FILE => 08-0e4101_56-0168_09.dgn

CONTRACT NO.: 08-0E4101 PROJECT ID: X

USERNAME => trmikesl DATE PLOTTED => 10-JUN-2011 TIME PLOTTED => 06:00

DIST	COUNTY	ROUTE	POST MILES TOTAL PROJECT	SHEET NO.	TOTAL SHEETS
08	Riv	10	R24.0/R24.3	53	55

REGISTERED CIVIL ENGINEER 3-2-11 DATE

6-6-11
PLANS APPROVAL DATE

REGISTERED PROFESSIONAL ENGINEER TIMOTHY J. POWELL No. C 61037 Exp. 12-31-12 CIVIL STATE OF CALIFORNIA

THE STATE OF CALIFORNIA OR ITS OFFICERS OR AGENTS SHALL NOT BE RESPONSIBLE FOR THE ACCURACY OR COMPLETENESS OF ELECTRONIC COPIES OF THIS PLAN SHEET.

NOTES: (APPLY TO THIS SHEET ONLY)

Indicates limits of remove existing concrete and longitudinal and transverse deck reinforcing steel. Retain existing girder stirrups.

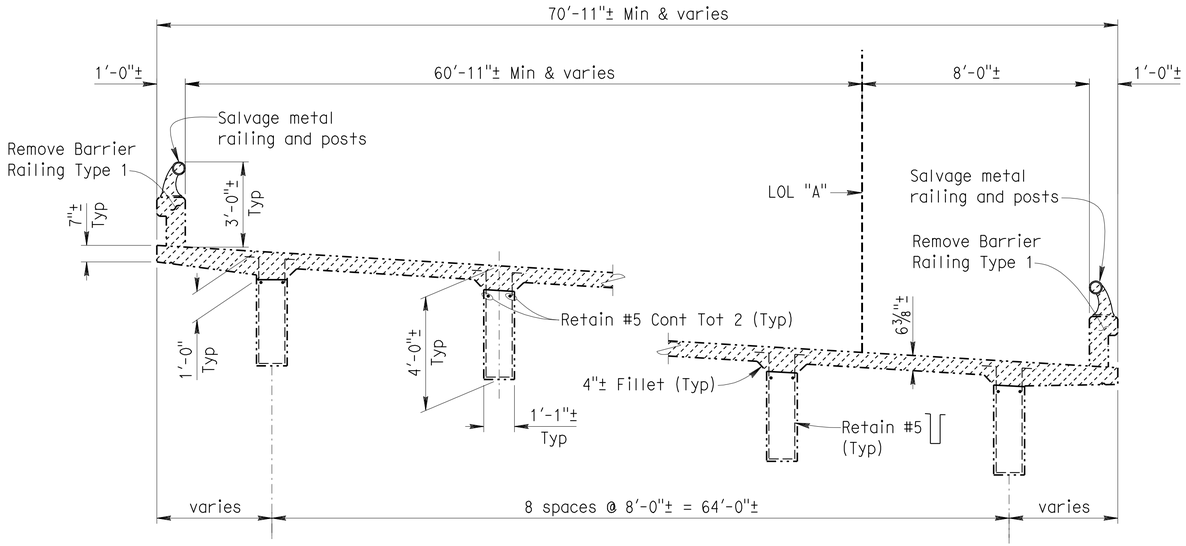

TYPICAL SECTION - EXISTING

3/8" = 1'

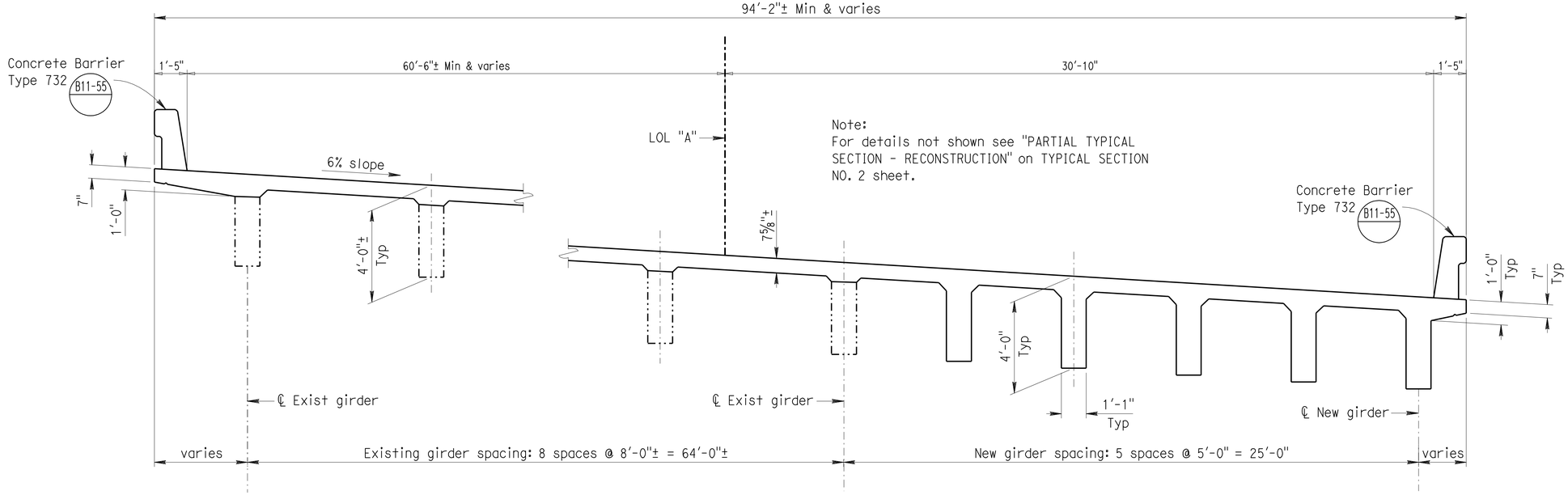

TYPICAL SECTION - RECONSTRUCTION

3/8" = 1'

DESIGN	BY Tim Powell	CHECKED M.J. Lee	
DETAILS	BY G.F. Bidwell	CHECKED M.J. Lee	
QUANTITIES	BY Tim Powell	CHECKED M.J. Lee	

STATE OF CALIFORNIA
DEPARTMENT OF TRANSPORTATION

DIVISION OF MAINTENANCE
STRUCTURE MAINTENANCE DESIGN

BRIDGE NO. 56-0168L
POST MILE R24.24

EAST CHANNEL STUBBY WASH (WIDEN)

TYPICAL SECTION NO. 1

STRUCTURES MAINTENANCE GENERAL PLAN & DETAIL SHEET (ENGLISH) (REV. 10/17/07)

ORIGINAL SCALE IN INCHES FOR REDUCED PLANS 0 1 2 3

UNIT: X
PROJECT NUMBER & PHASE: 0800000082

DISREGARD PRINTS BEARING EARLIER REVISION DATES

REVISION DATES: ~~12-23-10~~ ~~2-1-11~~ 3-2-11

SHEET 10 OF 12

FILE => 08-0e4101_56-0168_10.dgn

CONTRACT NO.: 08-0E4101 PROJECT ID: X

USERNAME => trmikesl DATE PLOTTED => 10-JUN-2011 TIME PLOTTED => 06:01

DIST	COUNTY	ROUTE	POST MILES TOTAL PROJECT	SHEET NO.	TOTAL SHEETS
08	Riv	10	R24.0/R24.3	54	55

REGISTERED CIVIL ENGINEER 3-2-11 DATE

6-6-11
PLANS APPROVAL DATE

REGISTERED PROFESSIONAL ENGINEER TIMOTHY J. POWELL No. C 61037 Exp. 12-31-12 CIVIL STATE OF CALIFORNIA

THE STATE OF CALIFORNIA OR ITS OFFICERS OR AGENTS SHALL NOT BE RESPONSIBLE FOR THE ACCURACY OR COMPLETENESS OF ELECTRONIC COPIES OF THIS PLAN SHEET.

NOTES: (APPLY TO THIS SHEET ONLY)

See GIRDER LAYOUT & REINFORCEMENT sheet for "DETAIL B".

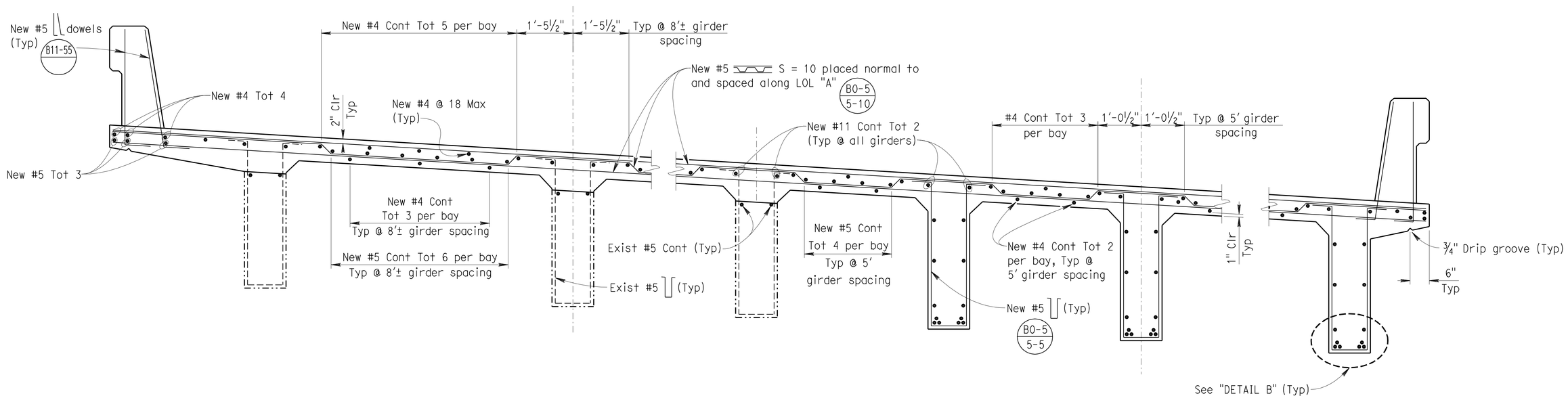

PARTIAL TYPICAL SECTION - RECONSTRUCTION

B0-5 5-15 B6-1

¾" = 1'

DESIGN	BY Tim Powell	CHECKED M.J. Lee	
DETAILS	BY G.F. Bidwell	CHECKED M.J. Lee	
QUANTITIES	BY Tim Powell	CHECKED M.J. Lee	

STATE OF CALIFORNIA DEPARTMENT OF TRANSPORTATION

DIVISION OF MAINTENANCE STRUCTURE MAINTENANCE DESIGN

BRIDGE NO. 56-0168L
POST MILE R24.24

EAST CHANNEL STUBBY WASH (WIDEN)

TYPICAL SECTION NO. 2

STRUCTURES MAINTENANCE GENERAL PLAN & DETAIL SHEET (ENGLISH) (REV. 10/17/07)

ORIGINAL SCALE IN INCHES FOR REDUCED PLANS 0 1 2 3

UNIT: X
PROJECT NUMBER & PHASE: 0800000082

DISREGARD PRINTS BEARING EARLIER REVISION DATES → 12-23-10 2-1-11 3-2-11

REVISION DATES

SHEET 11 OF 12

CONTRACT NO.: 08-0E4101 PROJECT ID: X

FILE => 08-0e4101_56-0168_11.dgn

USERNAME => rtrmikes1 DATE PLOTTED => 10-JUN-2011 TIME PLOTTED => 06:01

DIST	COUNTY	ROUTE	POST MILES TOTAL PROJECT	SHEET NO.	TOTAL SHEETS
08	Riv	10	R24.0/R24.3	55	55

REGISTERED CIVIL ENGINEER 3-2-11 DATE

6-6-11
PLANS APPROVAL DATE

REGISTERED PROFESSIONAL ENGINEER TIMOTHY J. POWELL No. C 61037 Exp. 12-31-12 CIVIL STATE OF CALIFORNIA

THE STATE OF CALIFORNIA OR ITS OFFICERS OR AGENTS SHALL NOT BE RESPONSIBLE FOR THE ACCURACY OR COMPLETENESS OF ELECTRONIC COPIES OF THIS PLAN SHEET.

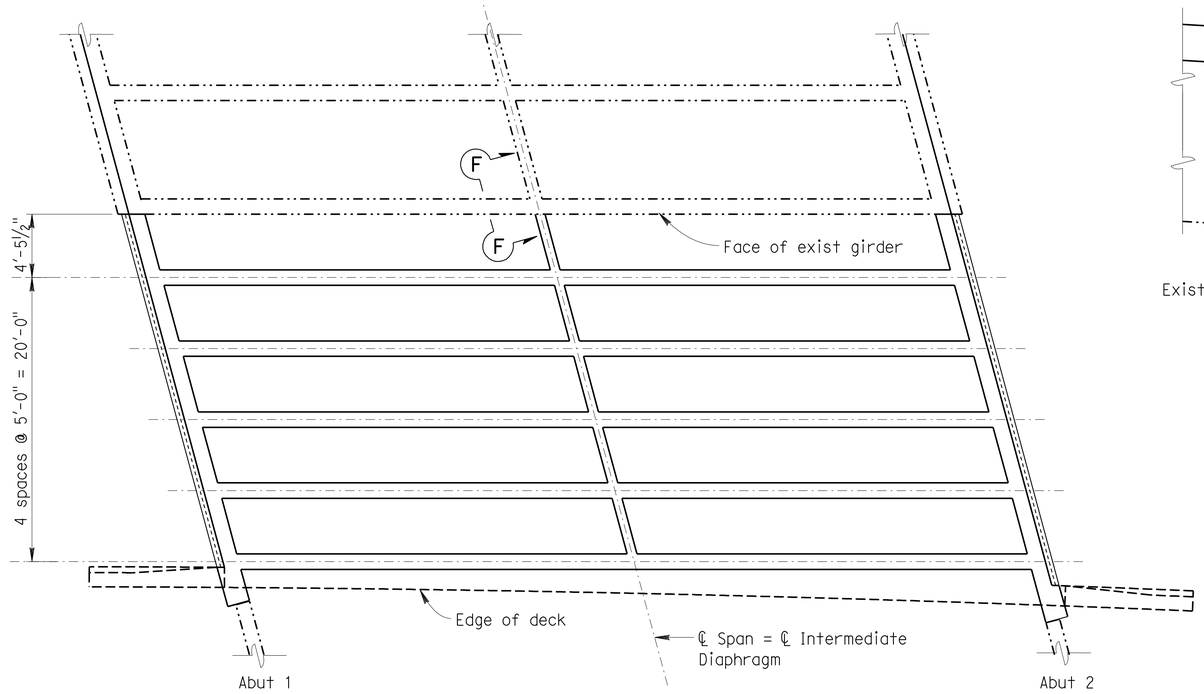

GIRDER LAYOUT

NO SCALE

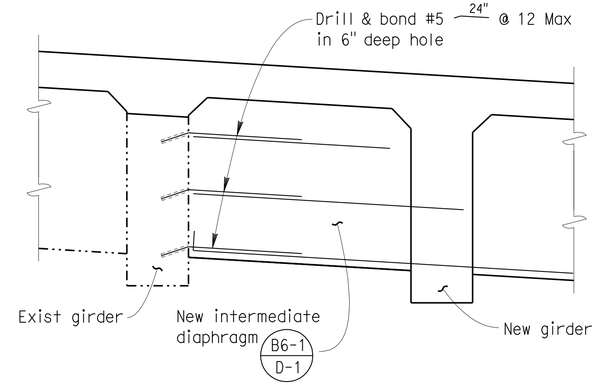

SECTION F-F

NO SCALE

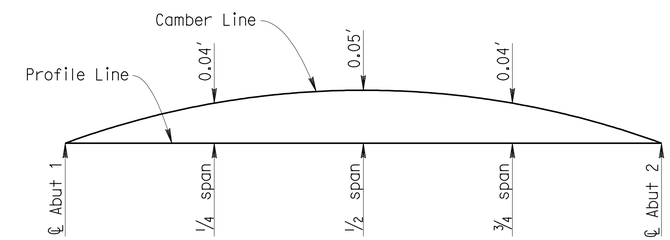

Camber diagram for deflection at time of falsework removal.
For ultimate deflection multiply values shown by 3.

CAMBER DIAGRAM

NO SCALE

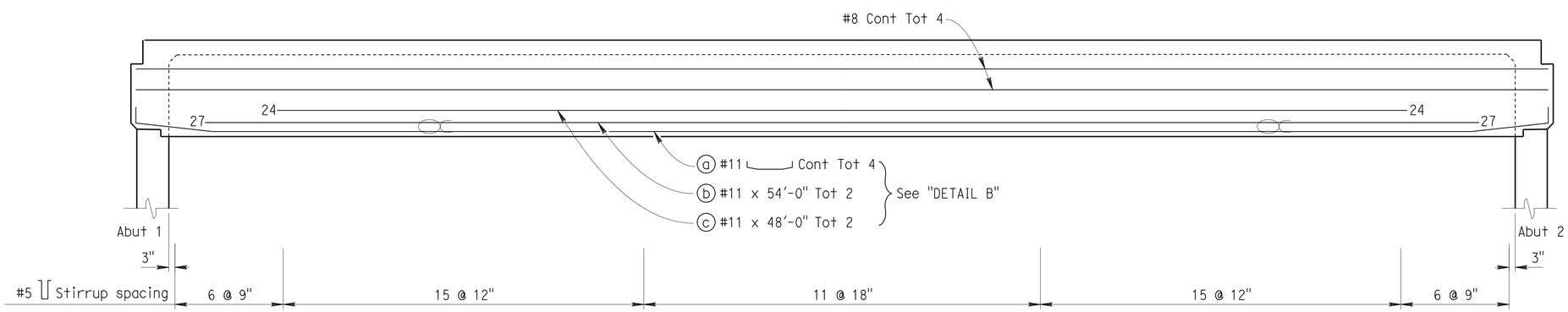

NOTE:
All reinforcement #11 unless otherwise noted. Numbers at the ends of bars indicate distance in feet from ℄ Span.

Bundled bars indicated thusly:

GIRDER ELEVATION

NO SCALE

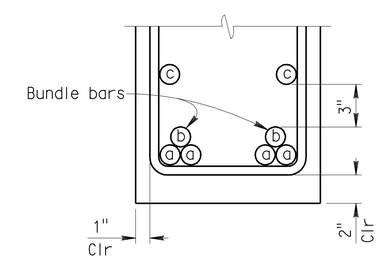

DETAIL B

NO SCALE

DESIGN	BY Tim Powell	CHECKED M.J. Lee	
DETAILS	BY G.F. Bidwell	CHECKED M.J. Lee	
QUANTITIES	BY Tim Powell	CHECKED M.J. Lee	

STATE OF CALIFORNIA
DEPARTMENT OF TRANSPORTATION

DIVISION OF MAINTENANCE
STRUCTURE MAINTENANCE DESIGN

BRIDGE NO. 56-0168L
POST MILE R24.24

EAST CHANNEL STUBBY WASH (WIDEN)
GIRDER LAYOUT & REINFORCEMENT

STRUCTURES MAINTENANCE GENERAL PLAN & DETAIL SHEET (ENGLISH) (REV. 10/17/07)

ORIGINAL SCALE IN INCHES FOR REDUCED PLANS 0 1 2 3

UNIT: X
PROJECT NUMBER & PHASE: 0800000082

DISREGARD PRINTS BEARING EARLIER REVISION DATES

REVISION DATES: 12-23-10 2-1-11 3-2-11

SHEET 12 OF 12

FILE => 08-0E4101_56-0168_12.dgn

CONTRACT NO.: 08-0E4101 PROJECT ID: X

USERNAME => trmikesl DATE PLOTTED => 10-JUN-2011 TIME PLOTTED => 06:01