ACHSSTPH-P002(036)E

Dist	COUNTY	ROUTE	POST MILES TOTAL PROJECT	SHEET No.	TOTAL SHEETS
08	SBd	2	0.9/2.4	1	94

STATE OF CALIFORNIA
DEPARTMENT OF TRANSPORTATION

PROJECT PLANS FOR CONSTRUCTION ON
STATE HIGHWAY
IN SAN BERNARDINO COUNTY
IN WRIGHTWOOD
FROM 0.2 MILE EAST OF RIVERA DRIVE
TO 0.1 MILE EAST OF SHEEP CREEK DRIVE

TO BE SUPPLEMENTED BY STANDARD PLANS DATED MAY 2006

INDEX OF PLANS

SHEET No.	DESCRIPTION
1	TITLE AND LOCATION MAP
2-3	TYPICAL CROSS SECTIONS
4-8	LAYOUTS
9-13	CONSTRUCTION DETAILS
14-24	DRAINAGE PLANS, PROFILES, DETAILS AND QUANTITIES
25-29	UTILITY PLANS
30	CONSTRUCTION AREA SIGNS
31-40	TRAFFIC HANDLING PLANS AND QUANTITIES
41-46	PAVEMENT DELINEATION PLANS AND QUANTITIES
47-52	SIGN PLANS AND QUANTITIES
53	SUMMARY OF QUANTITIES
54-73	HIGHWAY PLANTING
74-86	REVISED AND NEW STANDARD PLANS

STRUCTURE PLANS

87-94	SWARTHOUT CREEK BRIDGE (WIDEN) Br No. 54-0359

THE STANDARD PLANS LIST APPLICABLE TO THIS CONTRACT IS INCLUDED IN THE NOTICE TO BIDDERS AND SPECIAL PROVISIONS BOOK.

LOCATION MAP

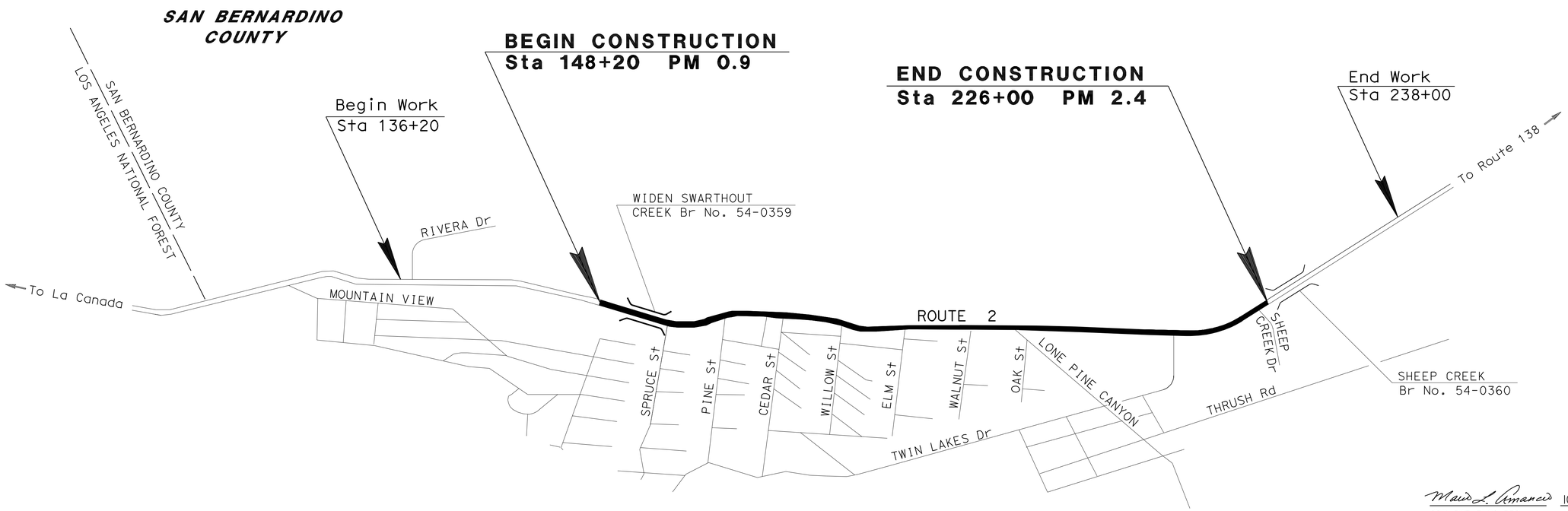

NO SCALE

THE CONTRACTOR SHALL POSSESS THE CLASS (OR CLASSES) OF LICENSE AS SPECIFIED IN THE "NOTICE TO BIDDERS."

PROJECT MANAGER: Y. KIM
DESIGN ENGINEER: MARIO AMANCIO

Mario L. Amancio 10-30-09
PROJECT ENGINEER REGISTERED CIVIL ENGINEER — DATE

REGISTERED PROFESSIONAL ENGINEER
MARIO AMANCIO
No. C65908
Exp. 6-30-10
CIVIL
STATE OF CALIFORNIA

January 25, 2010
PLANS APPROVAL DATE

THE STATE OF CALIFORNIA OR ITS OFFICERS OR AGENTS SHALL NOT BE RESPONSIBLE FOR THE ACCURACY OR COMPLETENESS OF SCANNED COPIES OF THIS PLAN SHEET.

LAST REVISION 10-30-09
DATE PLOTTED => 06-APR-2010
TIME PLOTTED => 09:03

CONTRACT No. 08-0C0204

Dist	COUNTY	ROUTE	POST MILES TOTAL PROJECT	SHEET No.	TOTAL SHEETS
08	SBd	2	0.9/2.4	2	94

REGISTERED CIVIL ENGINEER 10-30-09 DATE

1-25-10
PLANS APPROVAL DATE

REGISTERED PROFESSIONAL ENGINEER MARIO AMANCIO No. C65908 Exp. 6-30-10 CIVIL STATE OF CALIFORNIA

THE STATE OF CALIFORNIA OR ITS OFFICERS OR AGENTS SHALL NOT BE RESPONSIBLE FOR THE ACCURACY OR COMPLETENESS OF SCANNED COPIES OF THIS PLAN SHEET.

NOTES:

1. DIMENSIONS OF THE STRUCTURAL SECTIONS ARE SUBJECT TO TOLERANCES SPECIFIED IN THE STANDARD SPECIFICATION.
2. SUPERELEVATION AS SHOWN OR AS DIRECTED BY THE ENGINEER.
3. SEE BRIDGE PLANS FOR BRIDGE DETAILS.

DESIGN DESIGNATION (ROUTE 2)

2006 ADT = 5790 D = 55%
2030 ADT = 12300 T = 2%
DHV = 1350 V = 50 MPH

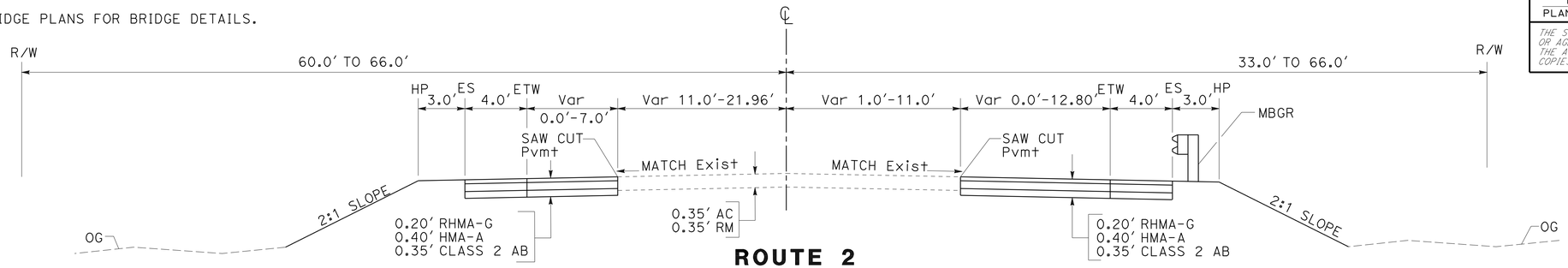

ROUTE 2
Sta 188+50 TO 196+30

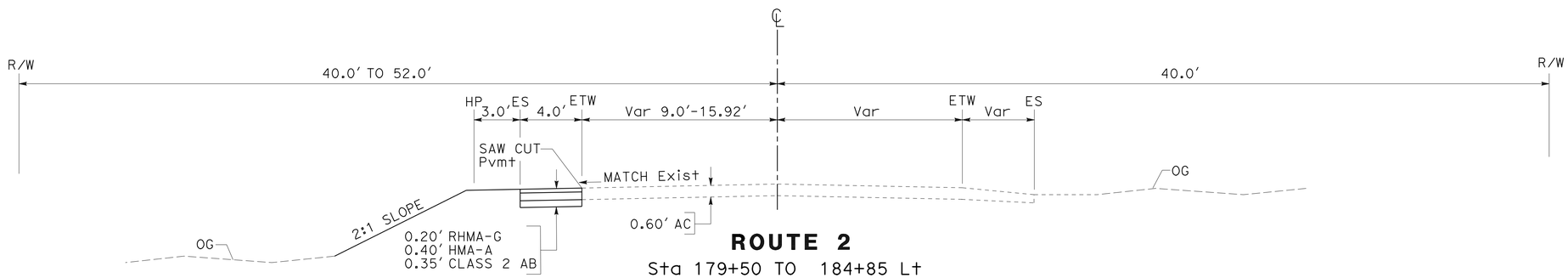

ROUTE 2
Sta 179+50 TO 184+85 Lt

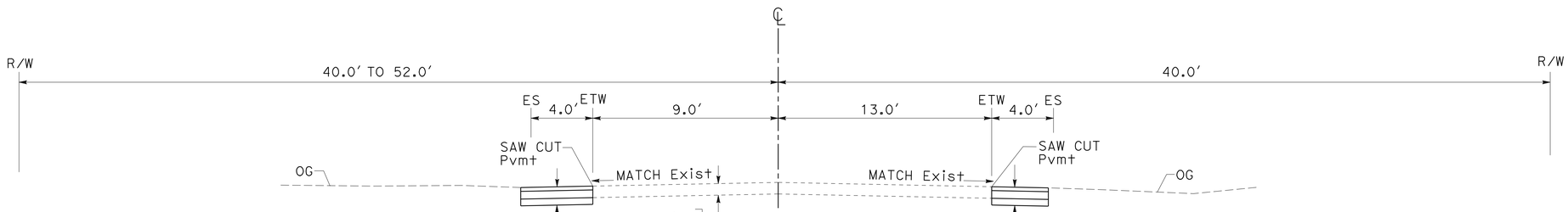

ROUTE 2
Sta 168+50 TO 173+00 Lt
Sta 168+50 TO 172+00 Rt

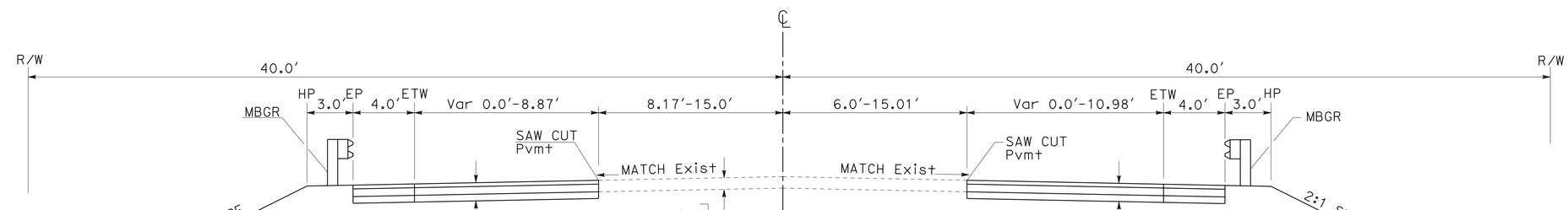

ROUTE 2
Sta 148+20.00 TO 151+78.70
Sta 151+97.42 TO 157+50.00

TYPICAL CROSS SECTION
NO SCALE

X-1

STATE OF CALIFORNIA - DEPARTMENT OF TRANSPORTATION
Caltrans® DESIGN

FUNCTIONAL SUPERVISOR: MARIO AMANCIO
CALCULATED-DESIGNED BY: ALI TAHA
CHECKED BY: MARIO AMANCIO
REVISED BY / DATE REVISED

LAST REVISION 10-30-09 | DATE PLOTTED => 29-JAN-2010 | TIME PLOTTED => 14:19

Dist	COUNTY	ROUTE	POST MILES TOTAL PROJECT	SHEET No.	TOTAL SHEETS
08	SBd	2	0.9/2.4	3	94

REGISTERED CIVIL ENGINEER 10-30-09 DATE

1-25-10
PLANS APPROVAL DATE

REGISTERED PROFESSIONAL ENGINEER MARIO AMANCIO No. C65908 Exp. 6-30-10 CIVIL STATE OF CALIFORNIA

THE STATE OF CALIFORNIA OR ITS OFFICERS OR AGENTS SHALL NOT BE RESPONSIBLE FOR THE ACCURACY OR COMPLETENESS OF SCANNED COPIES OF THIS PLAN SHEET.

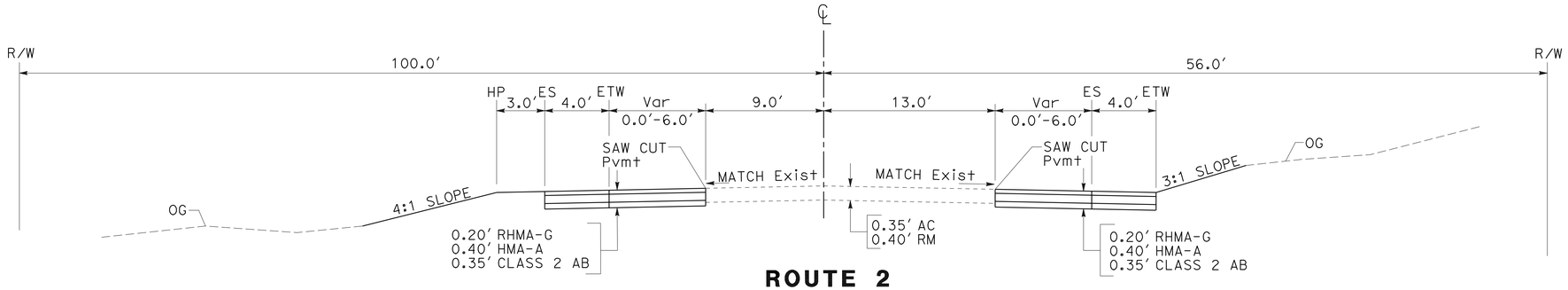

ROUTE 2
Sta 217+75 TO 226+00

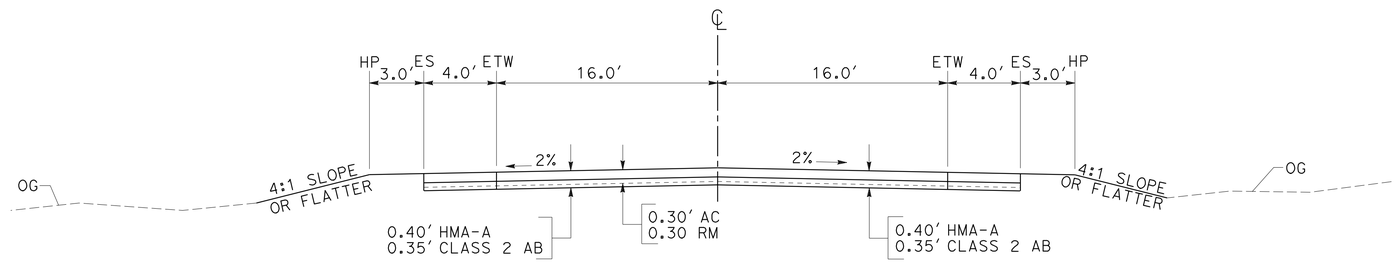

SHEEP CREEK Dr
Sta 00+24 TO 00+46

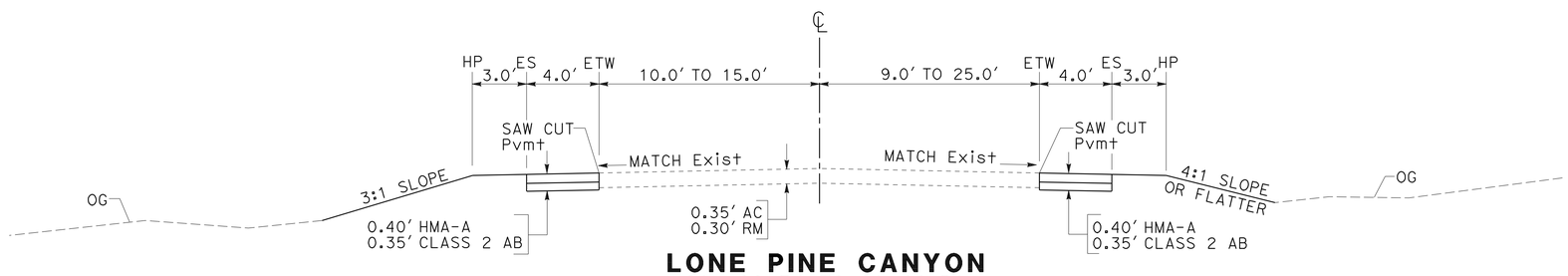

LONE PINE CANYON
Sta 00+34 TO 01+44 Rt
Sta 00+34 TO 00+77 Lt

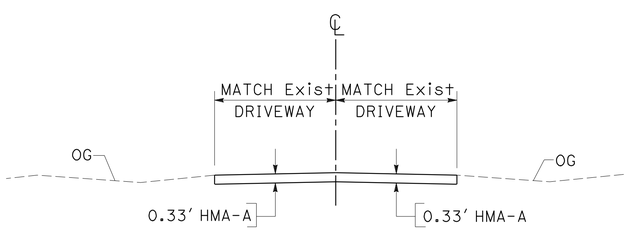

DRIVEWAYS 1 TO 15

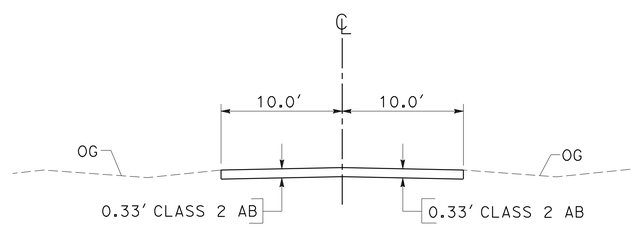

DRIVEWAYS 16 TO 17

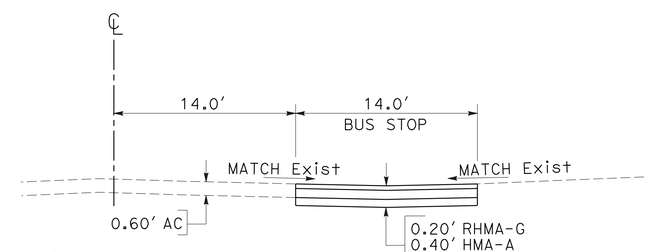

ROUTE 2
Sta 153+00 TO 155+17 Rt

TYPICAL CROSS SECTION
NO SCALE

X-2

STATE OF CALIFORNIA - DEPARTMENT OF TRANSPORTATION
Caltrans® DESIGN

FUNCTIONAL SUPERVISOR: MARIO AMANCIO
CALCULATED-DESIGNED BY: ALI TAHA
CHECKED BY: MARIO AMANCIO
REVISED BY
DATE REVISED

LAST REVISION 10-30-09
DATE PLOTTED => 29-JAN-2010
TIME PLOTTED => 14:19

Dist	COUNTY	ROUTE	POST MILES TOTAL PROJECT	SHEET No.	TOTAL SHEETS
08	SBd	2	0.9/2.4	4	94

REGISTERED CIVIL ENGINEER 10-30-09 DATE

1-25-10
PLANS APPROVAL DATE

REGISTERED PROFESSIONAL ENGINEER
MARIO AMANCIO
No. C65908
Exp. 6-30-10
CIVIL
STATE OF CALIFORNIA

THE STATE OF CALIFORNIA OR ITS OFFICERS OR AGENTS SHALL NOT BE RESPONSIBLE FOR THE ACCURACY OR COMPLETENESS OF SCANNED COPIES OF THIS PLAN SHEET.

NOTE: FOR COMPLETE RIGHT OF WAY DATA, SEE RIGHT OF WAY RECORD MAPS AT DISTRICT OFFICE.

LEGEND:

CONSTRUCT LANE AND SHOULDER

CURVE DATA

No.	R	Δ	T	L
1	449.87′	8°28′06"	33.31′	66.49′
2	1174.27′	31°24′39"	330.19′	643.76′

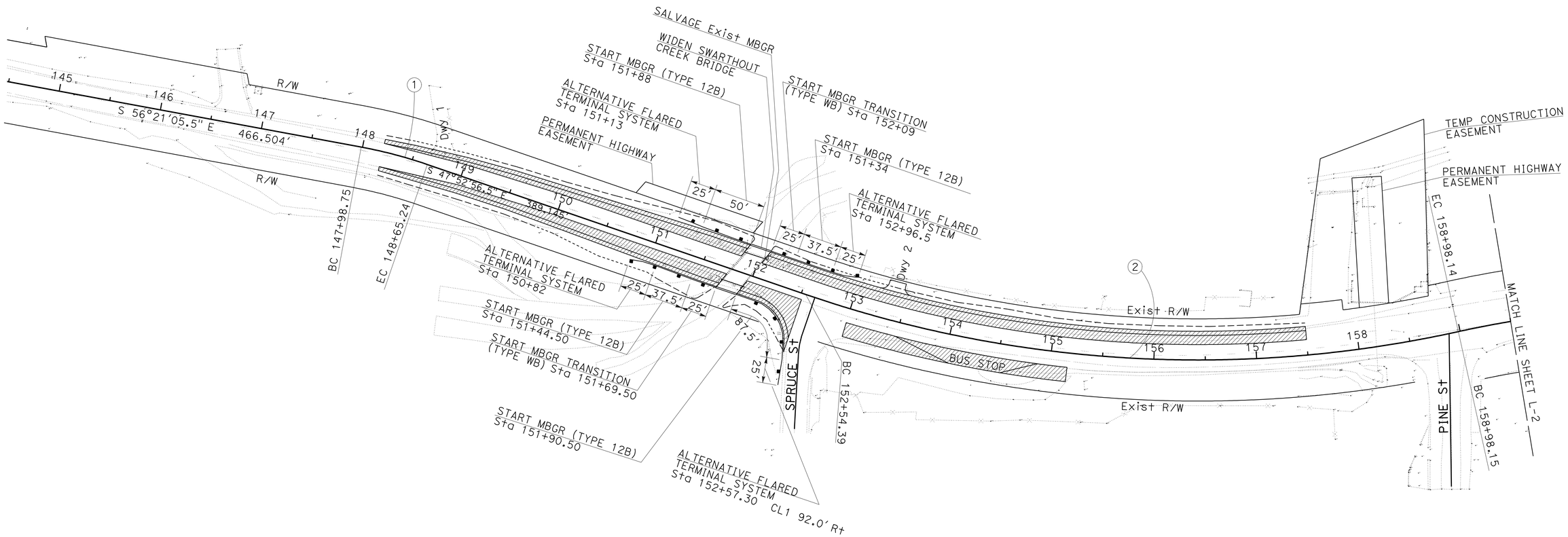

LAYOUT

SCALE: 1" = 50′

L-1

STATE OF CALIFORNIA - DEPARTMENT OF TRANSPORTATION
Caltrans
DESIGN

FUNCTIONAL SUPERVISOR: MARIO AMANCIO
CALCULATED-DESIGNED BY: ALI TAHA
CHECKED BY: MARIO AMANCIO
REVISED BY
DATE REVISED

LAST REVISION 10-30-09
DATE PLOTTED => 29-JAN-2010
TIME PLOTTED => 14:19

Dist	COUNTY	ROUTE	POST MILES TOTAL PROJECT	SHEET No.	TOTAL SHEETS
08	SBd	2	0.9/2.4	5	94

Mario L. Amancio 10-30-09
REGISTERED CIVIL ENGINEER DATE

1-25-10
PLANS APPROVAL DATE

REGISTERED PROFESSIONAL ENGINEER
MARIO AMANCIO
No. C65908
Exp. 6-30-10
CIVIL
STATE OF CALIFORNIA

THE STATE OF CALIFORNIA OR ITS OFFICERS OR AGENTS SHALL NOT BE RESPONSIBLE FOR THE ACCURACY OR COMPLETENESS OF SCANNED COPIES OF THIS PLAN SHEET.

NOTE: FOR COMPLETE RIGHT OF WAY DATA, SEE RIGHT OF WAY RECORD MAPS AT DISTRICT OFFICE.

CURVE DATA

No.	R	Δ	T	L
3	1002.51′	12°4′39″	106.05′	211.32′
4	799.75′	12°22′43″	86.73′	172.78′
5	499.83′	22°29′54″	99.42′	196.27′

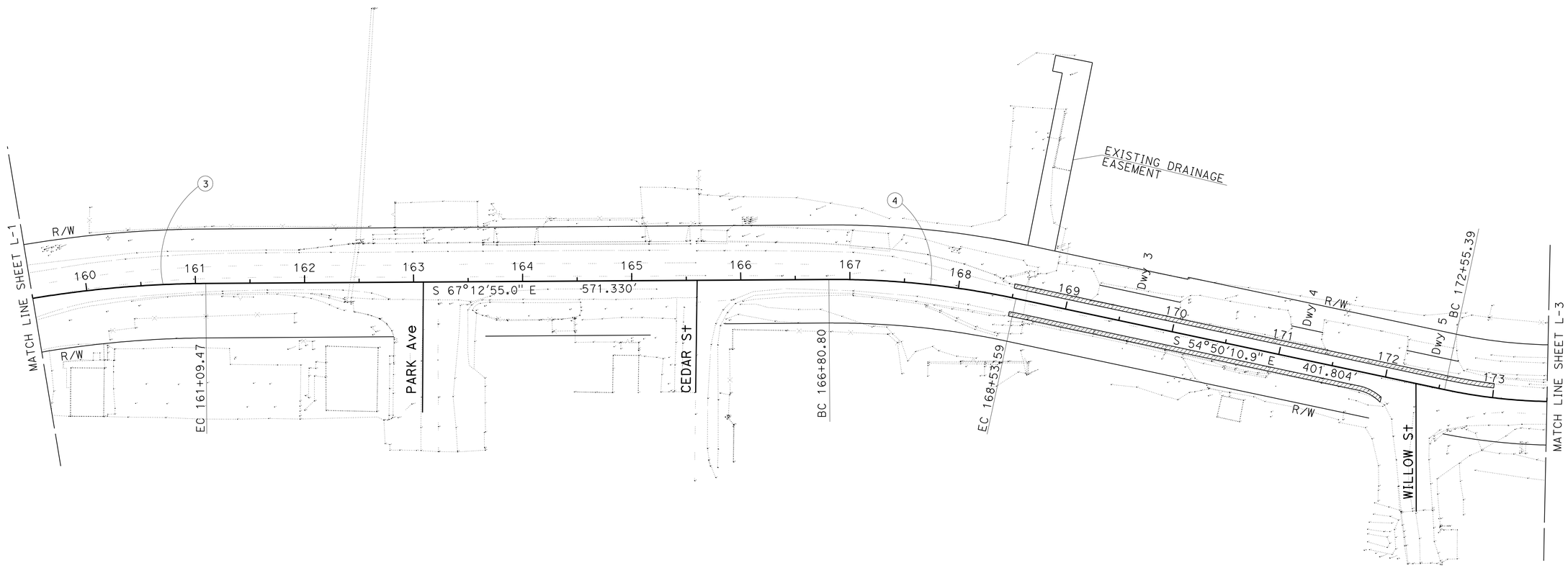

LAYOUT

SCALE: 1″ = 50′

L-2

STATE OF CALIFORNIA - DEPARTMENT OF TRANSPORTATION
Caltrans
DESIGN

FUNCTIONAL SUPERVISOR: MARIO AMANCIO
CALCULATED-DESIGNED BY: ALI TAHA
CHECKED BY: MARIO AMANCIO
REVISED BY
DATE REVISED

LAST REVISION 10-30-09
DATE PLOTTED => 29-JAN-2010
TIME PLOTTED => 14:19

Dist	COUNTY	ROUTE	POST MILES TOTAL PROJECT	SHEET No.	TOTAL SHEETS
08	SBd	2	0.9/2.4	6	94

Mario L. Amancio 10-30-09
REGISTERED CIVIL ENGINEER DATE

1-25-10
PLANS APPROVAL DATE

REGISTERED PROFESSIONAL ENGINEER
MARIO AMANCIO
No. C65908
Exp. 6-30-10
CIVIL
STATE OF CALIFORNIA

THE STATE OF CALIFORNIA OR ITS OFFICERS OR AGENTS SHALL NOT BE RESPONSIBLE FOR THE ACCURACY OR COMPLETENESS OF SCANNED COPIES OF THIS PLAN SHEET.

NOTE: FOR COMPLETE RIGHT OF WAY DATA, SEE RIGHT OF WAY RECORD MAPS AT DISTRICT OFFICE.

CURVE DATA

No.	R	Δ	T	L
6	999.65′	8°58′30″	78.45′	156.59′

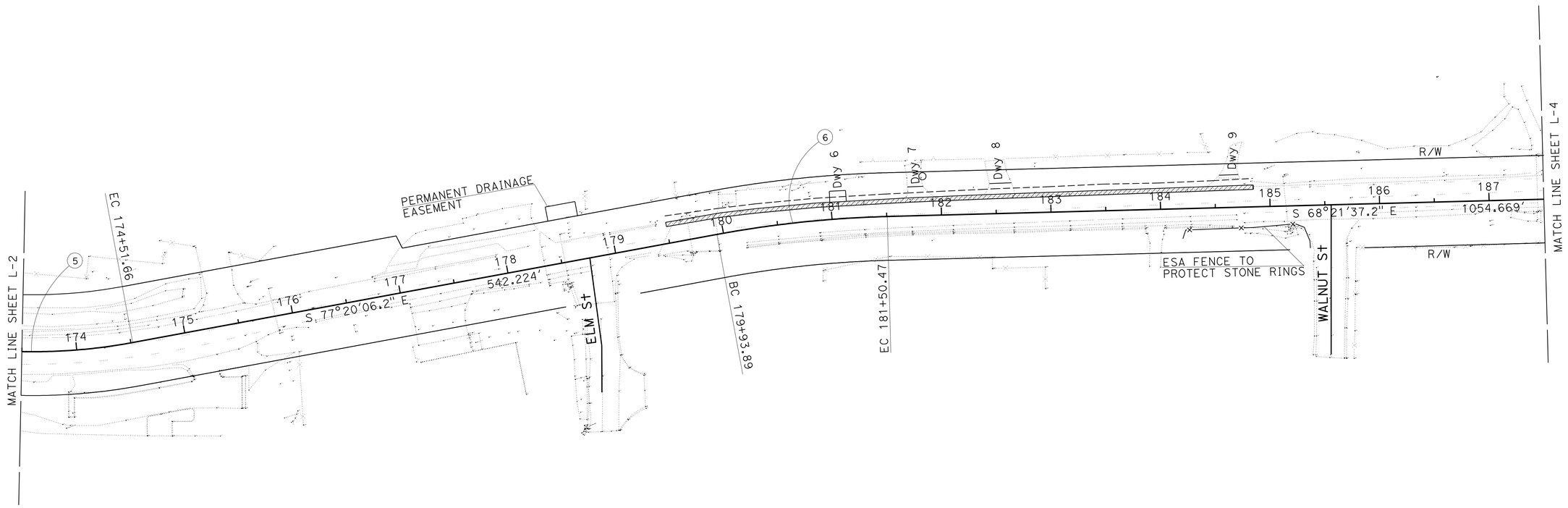

LAYOUT

SCALE: 1″ = 50′

L-3

STATE OF CALIFORNIA - DEPARTMENT OF TRANSPORTATION
Caltrans®
DESIGN

FUNCTIONAL SUPERVISOR: MARIO AMANCIO
CALCULATED-DESIGNED BY: ALI TAHA
CHECKED BY: MARIO AMANCIO
REVISED BY
DATE REVISED

LAST REVISION 10-30-09
DATE PLOTTED => 29-JAN-2010
TIME PLOTTED => 14:19

Dist	COUNTY	ROUTE	POST MILES TOTAL PROJECT	SHEET No.	TOTAL SHEETS
08	SBd	2	0.9/2.4	7	94

Mario L. Amancio 10-30-09
REGISTERED CIVIL ENGINEER DATE

1-25-10
PLANS APPROVAL DATE

REGISTERED PROFESSIONAL ENGINEER
MARIO AMANCIO
No. C65908
Exp. 6-30-10
CIVIL
STATE OF CALIFORNIA

THE STATE OF CALIFORNIA OR ITS OFFICERS OR AGENTS SHALL NOT BE RESPONSIBLE FOR THE ACCURACY OR COMPLETENESS OF SCANNED COPIES OF THIS PLAN SHEET.

NOTE: FOR COMPLETE RIGHT OF WAY DATA, SEE RIGHT OF WAY RECORD MAPS AT DISTRICT OFFICE.

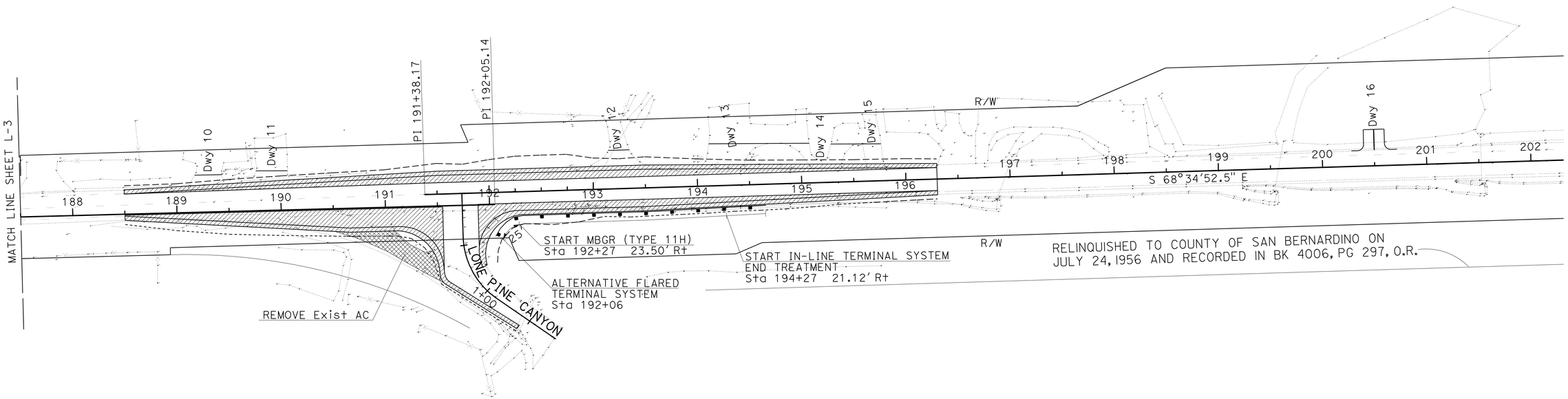

LAYOUT

SCALE: 1" = 50'

L-4

REVISED BY	ALI TAHA
DATE REVISED	MARIO AMANCIO
CALCULATED-DESIGNED BY	
CHECKED BY	
FUNCTIONAL SUPERVISOR	MARIO AMANCIO

STATE OF CALIFORNIA - DEPARTMENT OF TRANSPORTATION

Caltrans®

DESIGN

LAST REVISION 10-30-09 | DATE PLOTTED => 29-JAN-2010 | TIME PLOTTED => 14:19

Dist	COUNTY	ROUTE	POST MILES TOTAL PROJECT	SHEET No.	TOTAL SHEETS
08	SBd	2	0.9/2.4	8	94

Mario L. Amancio 10-30-09
REGISTERED CIVIL ENGINEER DATE

1-25-10
PLANS APPROVAL DATE

REGISTERED PROFESSIONAL ENGINEER
MARIO AMANCIO
No. C65908
Exp. 6-30-10
CIVIL
STATE OF CALIFORNIA

THE STATE OF CALIFORNIA OR ITS OFFICERS OR AGENTS SHALL NOT BE RESPONSIBLE FOR THE ACCURACY OR COMPLETENESS OF SCANNED COPIES OF THIS PLAN SHEET.

NOTE: FOR COMPLETE RIGHT OF WAY DATA, SEE RIGHT OF WAY RECORD MAPS AT DISTRICT OFFICE.

CURVE DATA

No.	R	Δ	T	L
7	1299.56′	38°0′54″	447.66′	862.24′

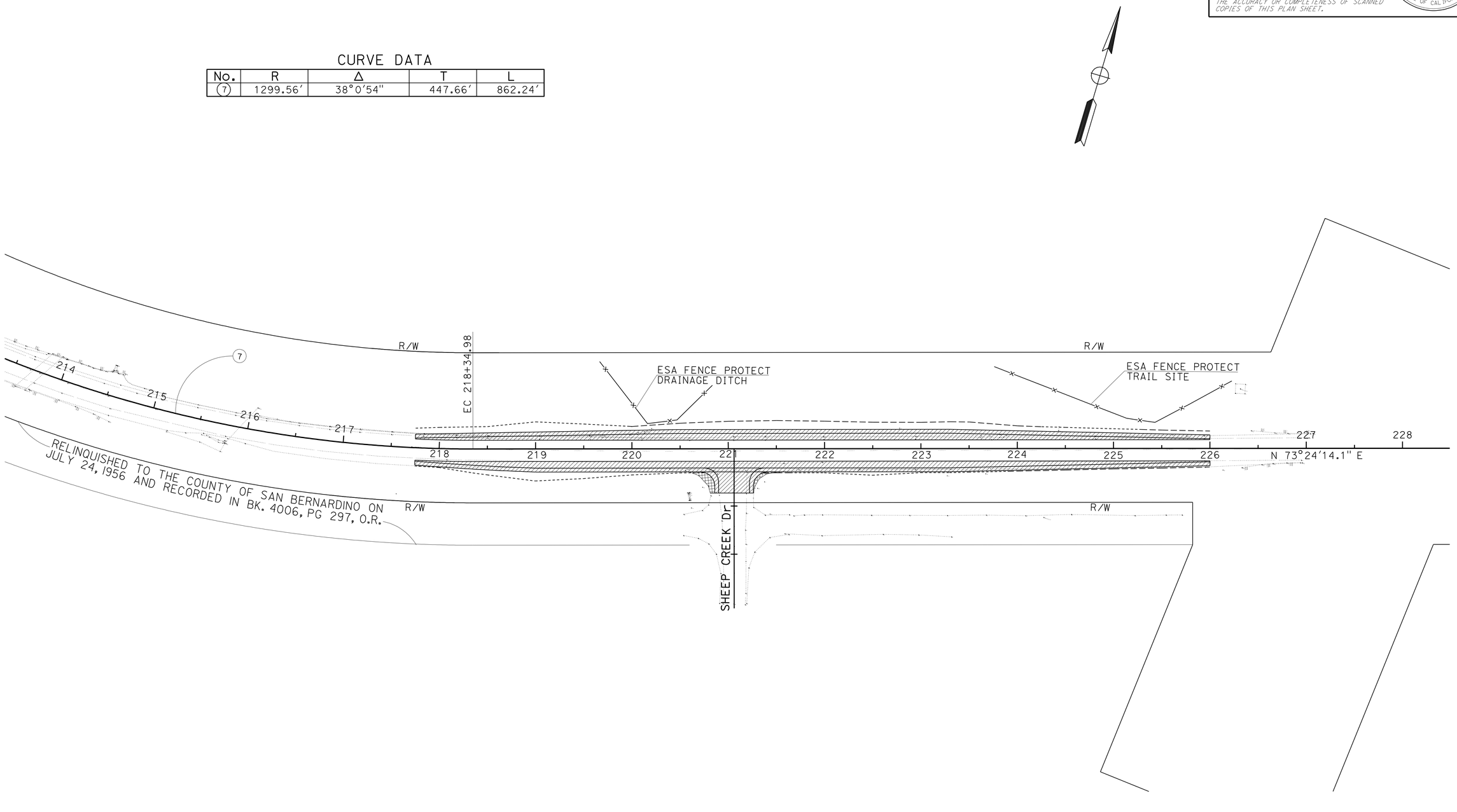

LAYOUT

SCALE: 1″ = 50′

L-5

REVISED BY	DATE REVISED

CALCULATED-DESIGNED BY: ALI TAHA
CHECKED BY: MARIO AMANCIO
FUNCTIONAL SUPERVISOR: MARIO AMANCIO

STATE OF CALIFORNIA - DEPARTMENT OF TRANSPORTATION
Caltrans®
DESIGN

LAST REVISION 10-30-09 | DATE PLOTTED => 29-JAN-2010 | TIME PLOTTED => 14:19

Dist	COUNTY	ROUTE	POST MILES TOTAL PROJECT	SHEET No.	TOTAL SHEETS
08	SBd	2	0.9/2.4	9	94

REGISTERED CIVIL ENGINEER 10-30-09 DATE

1-25-10
PLANS APPROVAL DATE

REGISTERED PROFESSIONAL ENGINEER
MARIO AMANCIO
No. C65908
Exp. 6-30-10
CIVIL
STATE OF CALIFORNIA

THE STATE OF CALIFORNIA OR ITS OFFICERS OR AGENTS SHALL NOT BE RESPONSIBLE FOR THE ACCURACY OR COMPLETENESS OF SCANNED COPIES OF THIS PLAN SHEET.

LEGEND:

CONSTRUCT NEW PAVEMENT

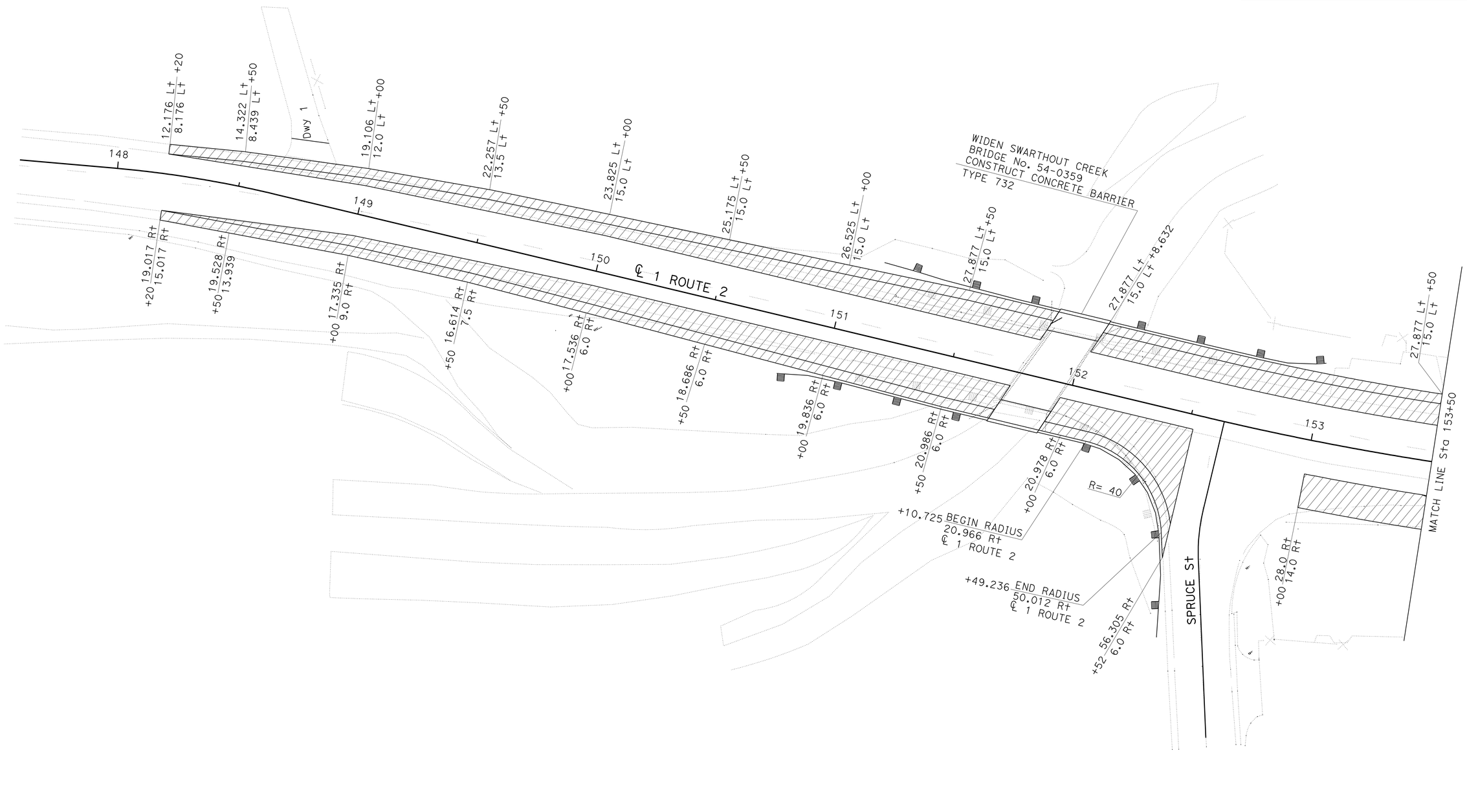

CONSTRUCTION DETAILS

SCALE: 1" = 20'

C-1

STATE OF CALIFORNIA - DEPARTMENT OF TRANSPORTATION
Caltrans
DESIGN

FUNCTIONAL SUPERVISOR: MARIO AMANCIO
CALCULATED-DESIGNED BY: ALI TAHA
CHECKED BY: MARIO AMANCIO
REVISED BY
DATE REVISED

LAST REVISION 10-30-09
DATE PLOTTED => 29-JAN-2010
TIME PLOTTED => 14:19

Dist	COUNTY	ROUTE	POST MILES TOTAL PROJECT	SHEET No.	TOTAL SHEETS
08	SBd	2	0.9/2.4	10	94

Mario L. Amancio 10-30-09
REGISTERED CIVIL ENGINEER DATE

1-25-10
PLANS APPROVAL DATE

REGISTERED PROFESSIONAL ENGINEER
MARIO AMANCIO
No. C65908
Exp. 6-30-10
CIVIL
STATE OF CALIFORNIA

THE STATE OF CALIFORNIA OR ITS OFFICERS OR AGENTS SHALL NOT BE RESPONSIBLE FOR THE ACCURACY OR COMPLETENESS OF SCANNED COPIES OF THIS PLAN SHEET.

CONSTRUCTION DETAILS

SCALE: 1" = 20'

C-2

REVISED BY	DATE REVISED

CALCULATED-DESIGNED BY	CHECKED BY
ALI TAHA	MARIO AMANCIO

FUNCTIONAL SUPERVISOR: MARIO AMANCIO

STATE OF CALIFORNIA - DEPARTMENT OF TRANSPORTATION

Caltrans

DESIGN

LAST REVISION 10-30-09 | DATE PLOTTED => 29-JAN-2010 | TIME PLOTTED => 14:20

Dist	COUNTY	ROUTE	POST MILES TOTAL PROJECT	SHEET No.	TOTAL SHEETS
08	SBd	2	0.9/2.4	11	94

Mario L. Amancio 10-30-09
REGISTERED CIVIL ENGINEER DATE

1-25-10
PLANS APPROVAL DATE

REGISTERED PROFESSIONAL ENGINEER
MARIO AMANCIO
No. C65908
Exp. 6-30-10
CIVIL
STATE OF CALIFORNIA

THE STATE OF CALIFORNIA OR ITS OFFICERS OR AGENTS SHALL NOT BE RESPONSIBLE FOR THE ACCURACY OR COMPLETENESS OF SCANNED COPIES OF THIS PLAN SHEET.

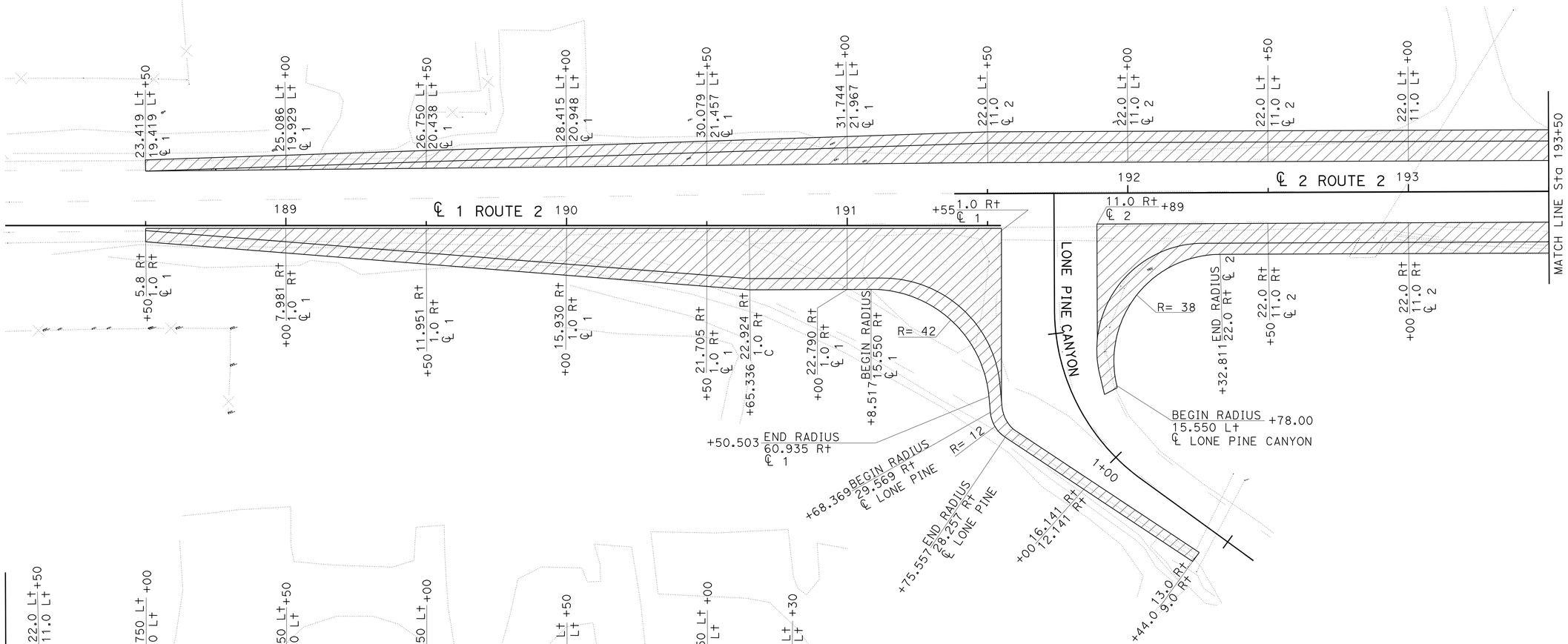

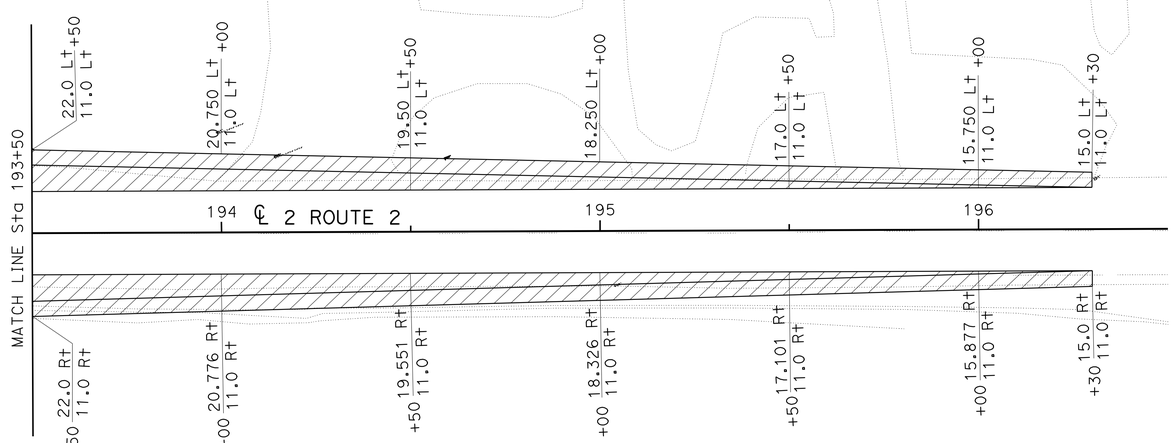

CONSTRUCTION DETAILS

SCALE: 1" = 20'

C-3

STATE OF CALIFORNIA - DEPARTMENT OF TRANSPORTATION
Caltrans
DESIGN

FUNCTIONAL SUPERVISOR: MARIO AMANCIO
CALCULATED-DESIGNED BY: ALI TAHA
CHECKED BY: MARIO AMANCIO
REVISED BY
DATE REVISED

LAST REVISION 10-30-09
DATE PLOTTED => 29-JAN-2010
TIME PLOTTED => 14:20

Dist	COUNTY	ROUTE	POST MILES TOTAL PROJECT	SHEET No.	TOTAL SHEETS
08	SBd	2	0.9/2.4	12	94

REGISTERED CIVIL ENGINEER 10-30-09 DATE

1-25-10
PLANS APPROVAL DATE

REGISTERED PROFESSIONAL ENGINEER
MARIO AMANCIO
No. C65908
Exp. 6-30-10
CIVIL
STATE OF CALIFORNIA

THE STATE OF CALIFORNIA OR ITS OFFICERS OR AGENTS SHALL NOT BE RESPONSIBLE FOR THE ACCURACY OR COMPLETENESS OF SCANNED COPIES OF THIS PLAN SHEET.

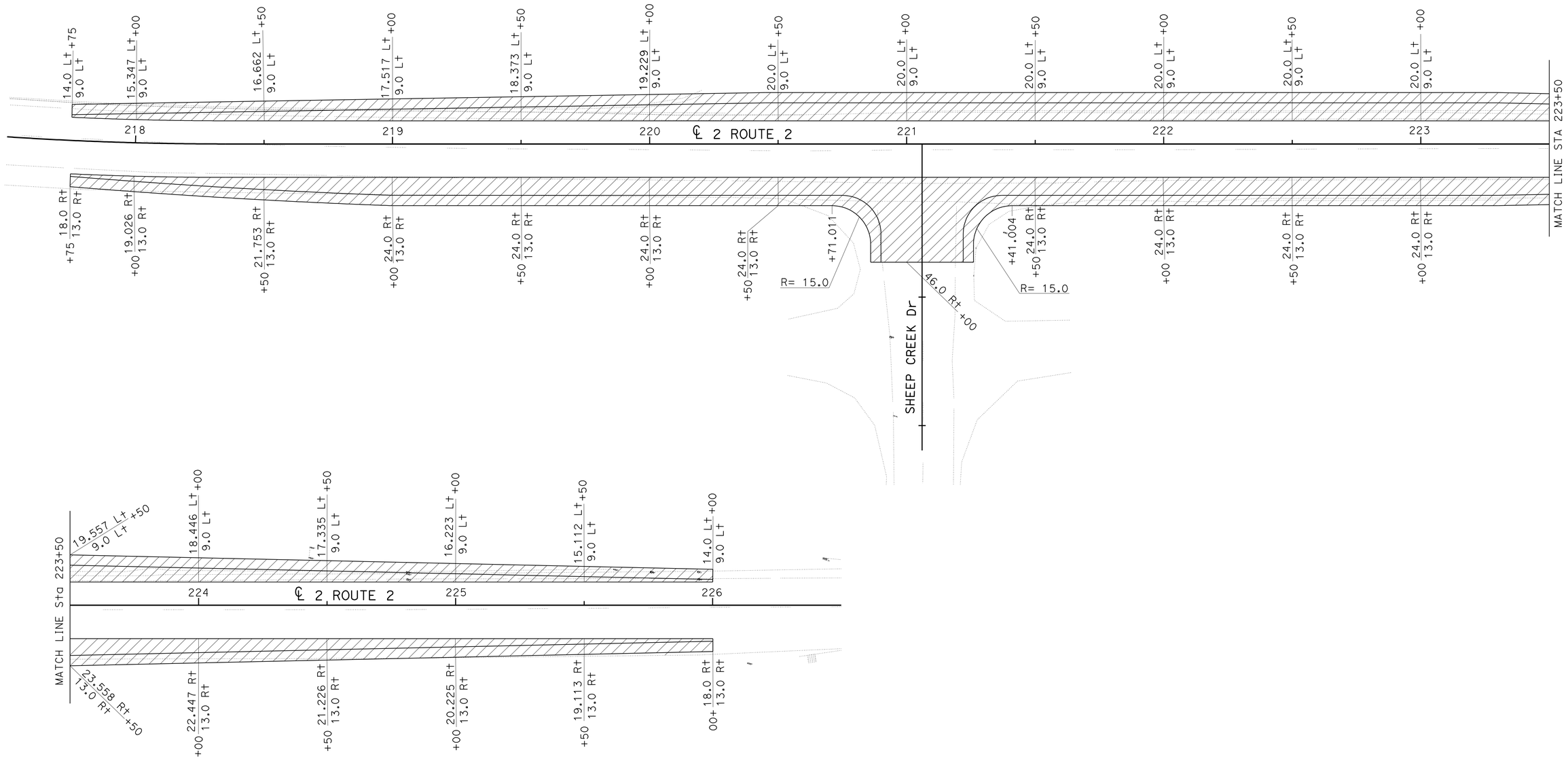

CONSTRUCTION DETAILS

SCALE: 1 = 20′

C-4

STATE OF CALIFORNIA - DEPARTMENT OF TRANSPORTATION
Caltrans
DESIGN

FUNCTIONAL SUPERVISOR: MARIO AMANCIO
CALCULATED-DESIGNED BY: ALI TAHA
CHECKED BY: MARIO AMANCIO
REVISED BY
DATE REVISED

LAST REVISION 10-30-09
DATE PLOTTED => 29-JAN-2010
TIME PLOTTED => 14:20

Dist	COUNTY	ROUTE	POST MILES TOTAL PROJECT	SHEET No.	TOTAL SHEETS
08	SBd	2	0.9/2.4	13	94

REGISTERED CIVIL ENGINEER 10-30-09 DATE

1-25-10
PLANS APPROVAL DATE

REGISTERED PROFESSIONAL ENGINEER MARIO AMANCIO No. C65908 Exp. 6-30-10 CIVIL STATE OF CALIFORNIA

THE STATE OF CALIFORNIA OR ITS OFFICERS OR AGENTS SHALL NOT BE RESPONSIBLE FOR THE ACCURACY OR COMPLETENESS OF SCANNED COPIES OF THIS PLAN SHEET.

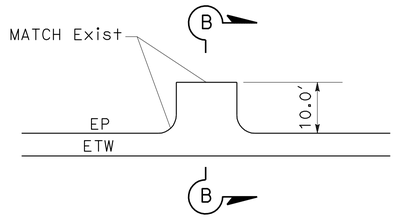

℄ ROUTE 2

DRIVEWAY 1, 2, 6, 7, 8, 9, 10, 11

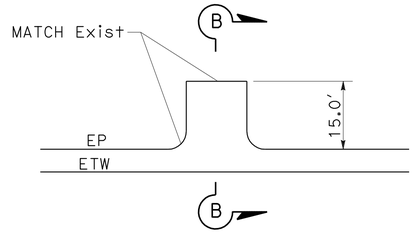

℄ ROUTE 2

DRIVEWAY 3, 4, 5, 12, 13, 14, AND 15

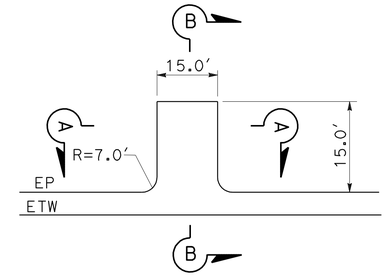

℄ ROUTE 2

DRIVEWAY 16 STA 210+50

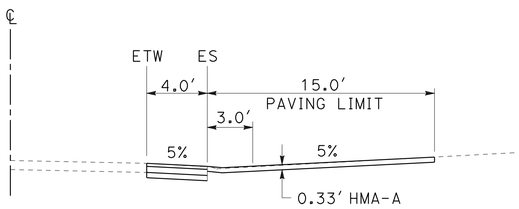

SECTION B-B

DRIVEWAY 3, 4 AND 5

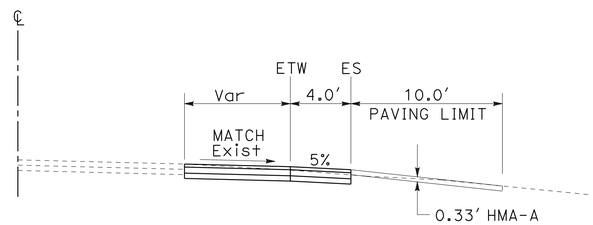

SECTION B-B

DRIVEWAY 10 AND 11

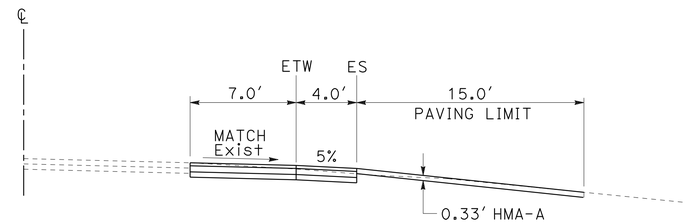

SECTION B-B

DRIVEWAY 12

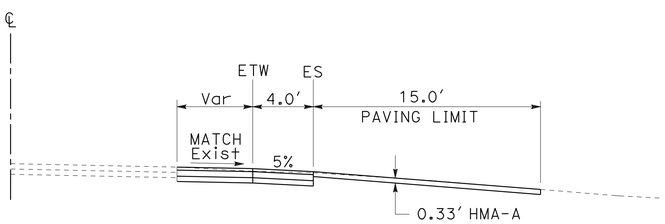

SECTION B-B

DRIVEWAY 13, 14 AND 15

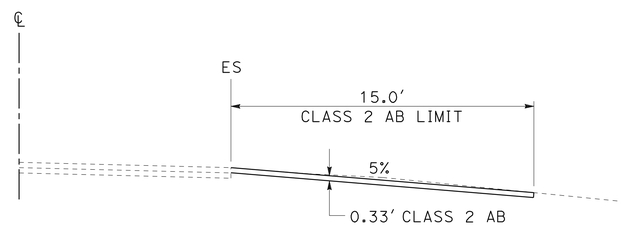

SECTION B-B

DRIVEWAY 16 STA 210+50

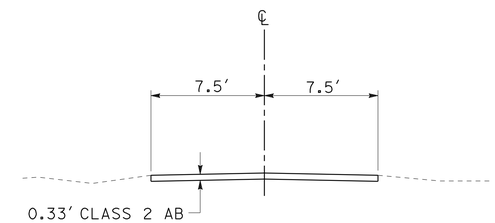

SECTION A-A

DRIVEWAY 16

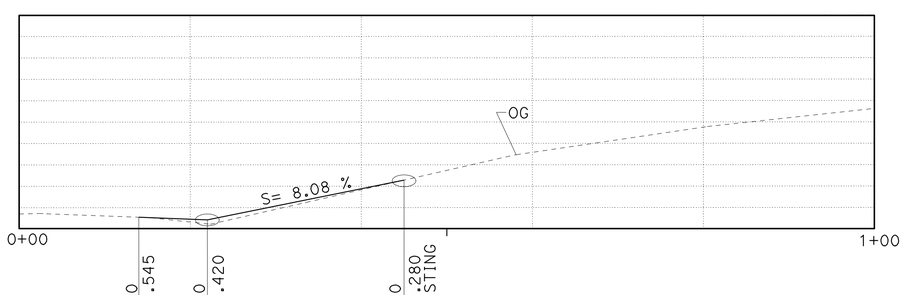

PROFILE

SHEEP CREEK Dr

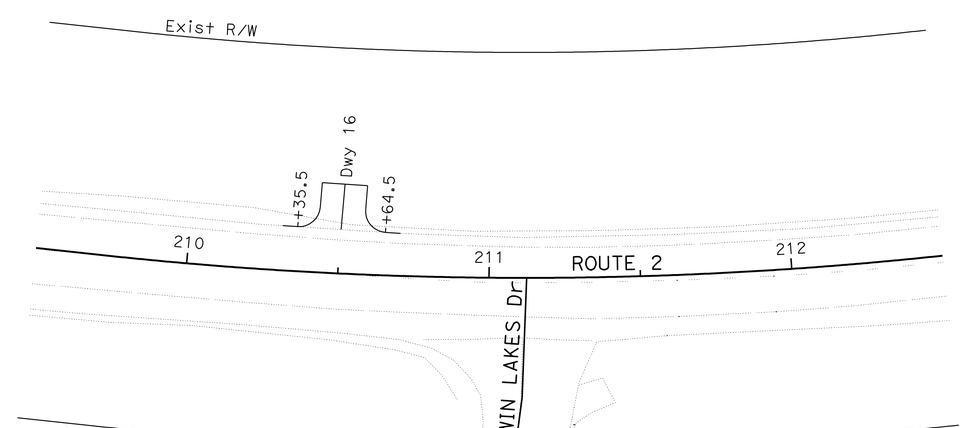

PLAN VIEW

CONSTRUCTION DETAILS

NO SCALE

C-5

STATE OF CALIFORNIA - DEPARTMENT OF TRANSPORTATION

Caltrans® **DESIGN**

FUNCTIONAL SUPERVISOR: MARIO AMANCIO

CALCULATED-DESIGNED BY: ALI TAHA

CHECKED BY: MARIO AMANCIO

REVISED BY | DATE REVISED

LAST REVISION 10-30-09 | DATE PLOTTED => 29-JAN-2010 | TIME PLOTTED => 14:20

Dist	COUNTY	ROUTE	POST MILES TOTAL PROJECT	SHEET No.	TOTAL SHEETS
08	SBd	2	0.9/2.4	14	94

REGISTERED CIVIL ENGINEER 10-30-09 DATE

1-25-10
PLANS APPROVAL DATE

REGISTERED PROFESSIONAL ENGINEER
MARIO AMANCIO
No. C65908
Exp. 6-30-10
CIVIL
STATE OF CALIFORNIA

THE STATE OF CALIFORNIA OR ITS OFFICERS OR AGENTS SHALL NOT BE RESPONSIBLE FOR THE ACCURACY OR COMPLETENESS OF SCANNED COPIES OF THIS PLAN SHEET.

NOTE: FOR COMPLETE RIGHT OF WAY DATA, SEE RIGHT OF WAY RECORD MAPS AT DISTRICT OFFICE.

CURVE DATA

No.	R	Δ	T	L
1	449.87′	8°28′06″	33.31′	66.49′
2	1174.27′	31°24′39″	330.19′	643.76′

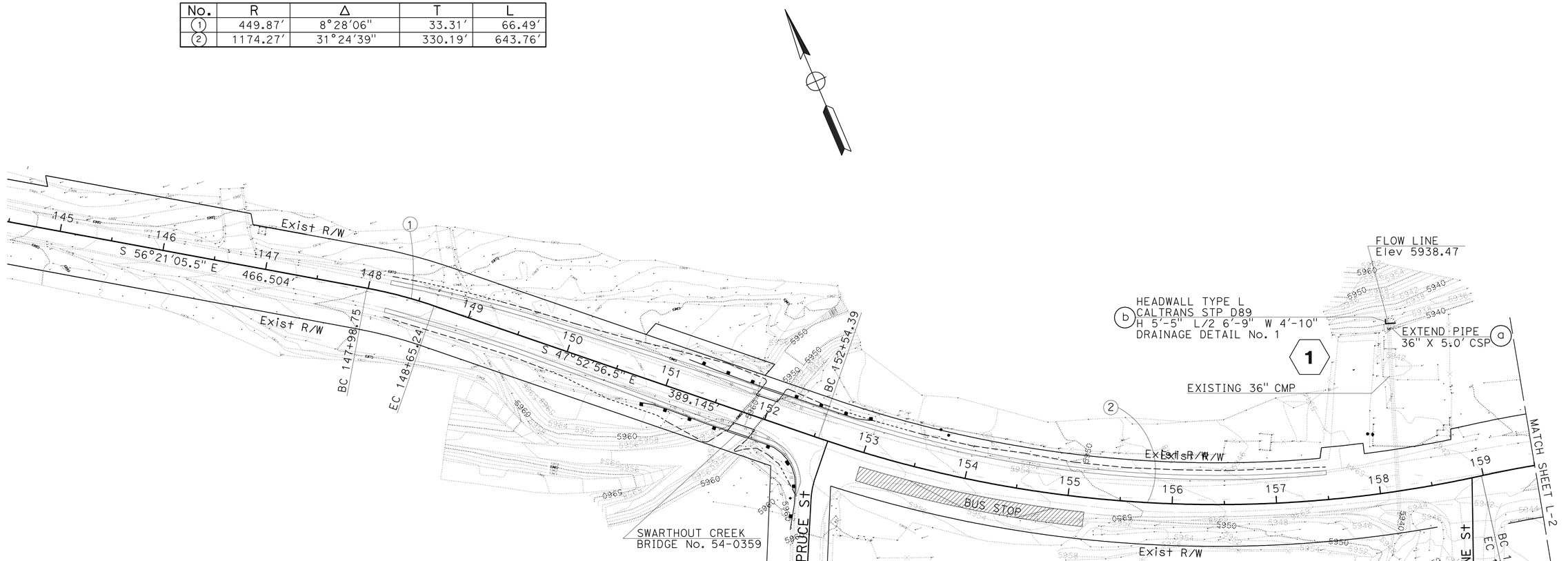

DRAINAGE PLAN

SCALE: 1″ = 50′ **D-1**

THIS PLAN ACCURATE FOR DRAINAGE WORK ONLY

STATE OF CALIFORNIA - DEPARTMENT OF TRANSPORTATION
Caltrans
DESIGN

FUNCTIONAL SUPERVISOR: MARIO AMANCIO
CALCULATED-DESIGNED BY: ALI TAHA
CHECKED BY: MARIO AMANCIO
REVISED BY
DATE REVISED

LAST REVISION 10-30-09
DATE PLOTTED => 29-JAN-2010
TIME PLOTTED => 14:20

Dist	COUNTY	ROUTE	POST MILES TOTAL PROJECT	SHEET No.	TOTAL SHEETS
08	SBd	2	0.9/2.4	15	94

Mario L. Amancio 10-30-09
REGISTERED CIVIL ENGINEER DATE

1-25-10
PLANS APPROVAL DATE

REGISTERED PROFESSIONAL ENGINEER
MARIO AMANCIO
No. C65908
Exp. 6-30-10
CIVIL
STATE OF CALIFORNIA

THE STATE OF CALIFORNIA OR ITS OFFICERS OR AGENTS SHALL NOT BE RESPONSIBLE FOR THE ACCURACY OR COMPLETENESS OF SCANNED COPIES OF THIS PLAN SHEET.

NOTE: FOR COMPLETE RIGHT OF WAY DATA, SEE RIGHT OF WAY RECORD MAPS AT DISTRICT OFFICE.

CURVE DATA

No.	R	Δ	T	L
3	1002.51′	12°4′39"	106.05′	211.32′
4	799.75′	12°22′43"	86.73′	172.78′
5	499.83′	22°29′54"	99.42′	196.27′

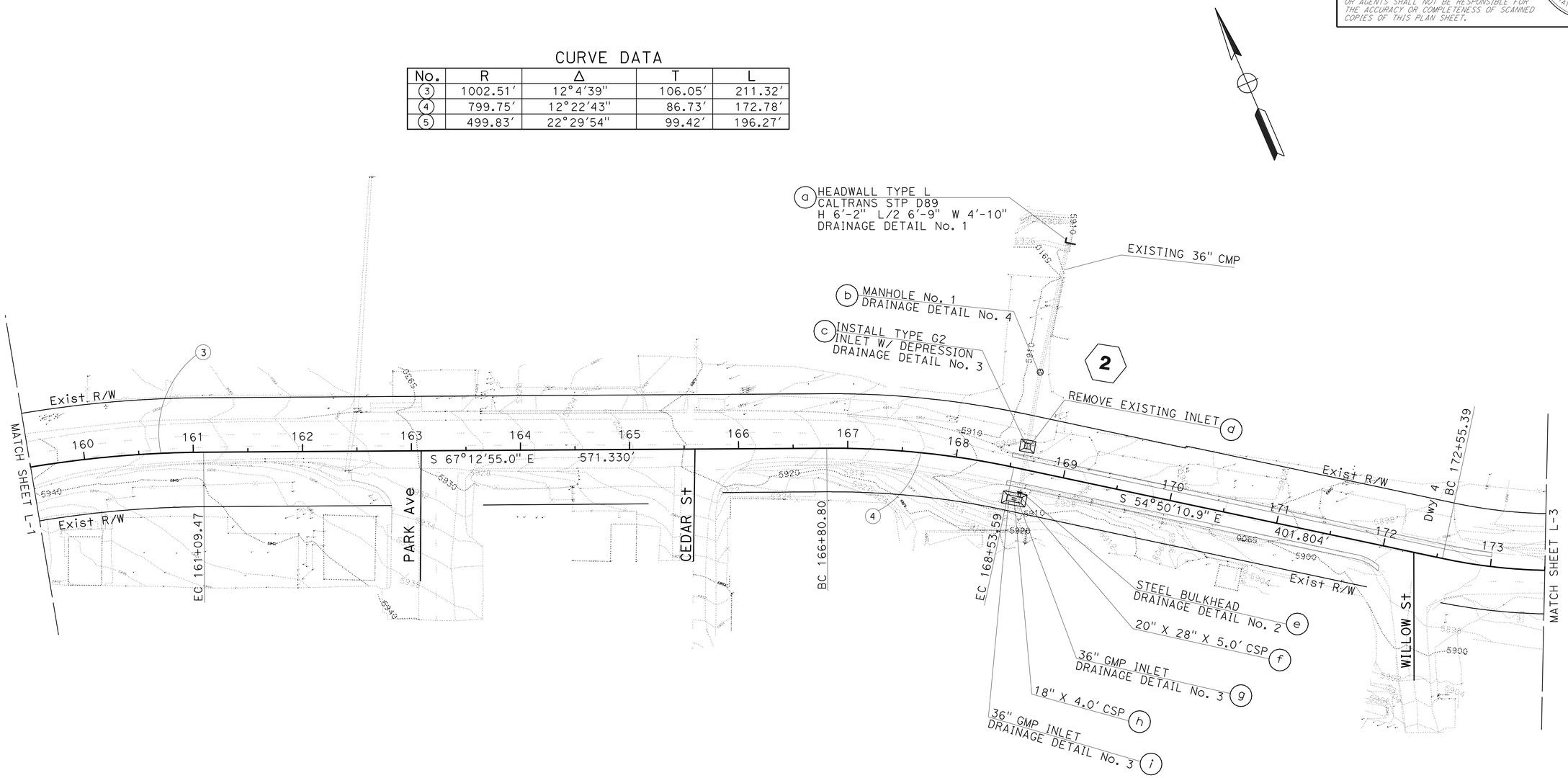

THIS PLAN ACCURATE FOR DRAINAGE WORK ONLY

DRAINAGE PLAN

SCALE: 1" = 50′ **D-2**

STATE OF CALIFORNIA - DEPARTMENT OF TRANSPORTATION
Caltrans® **DESIGN**

FUNCTIONAL SUPERVISOR: MARIO AMANCIO
CALCULATED-DESIGNED BY: ALI TAHA
CHECKED BY: MARIO AMANCIO
REVISED BY
DATE REVISED

LAST REVISION 10-30-09
DATE PLOTTED => 29-JAN-2010
TIME PLOTTED => 14:20

Dist	COUNTY	ROUTE	POST MILES TOTAL PROJECT	SHEET No.	TOTAL SHEETS
08	SBd	2	0.9/2.4	16	94

REGISTERED CIVIL ENGINEER 10-30-09 DATE

1-25-10
PLANS APPROVAL DATE

REGISTERED PROFESSIONAL ENGINEER
MARIO AMANCIO
No. C65908
Exp. 6-30-10
CIVIL
STATE OF CALIFORNIA

THE STATE OF CALIFORNIA OR ITS OFFICERS OR AGENTS SHALL NOT BE RESPONSIBLE FOR THE ACCURACY OR COMPLETENESS OF SCANNED COPIES OF THIS PLAN SHEET.

NOTE: FOR COMPLETE RIGHT OF WAY DATA, SEE RIGHT OF WAY RECORD MAPS AT DISTRICT OFFICE.

CURVE DATA

No.	R	Δ	T	L
6	999.65′	8°58′30″	78.45′	156.59′

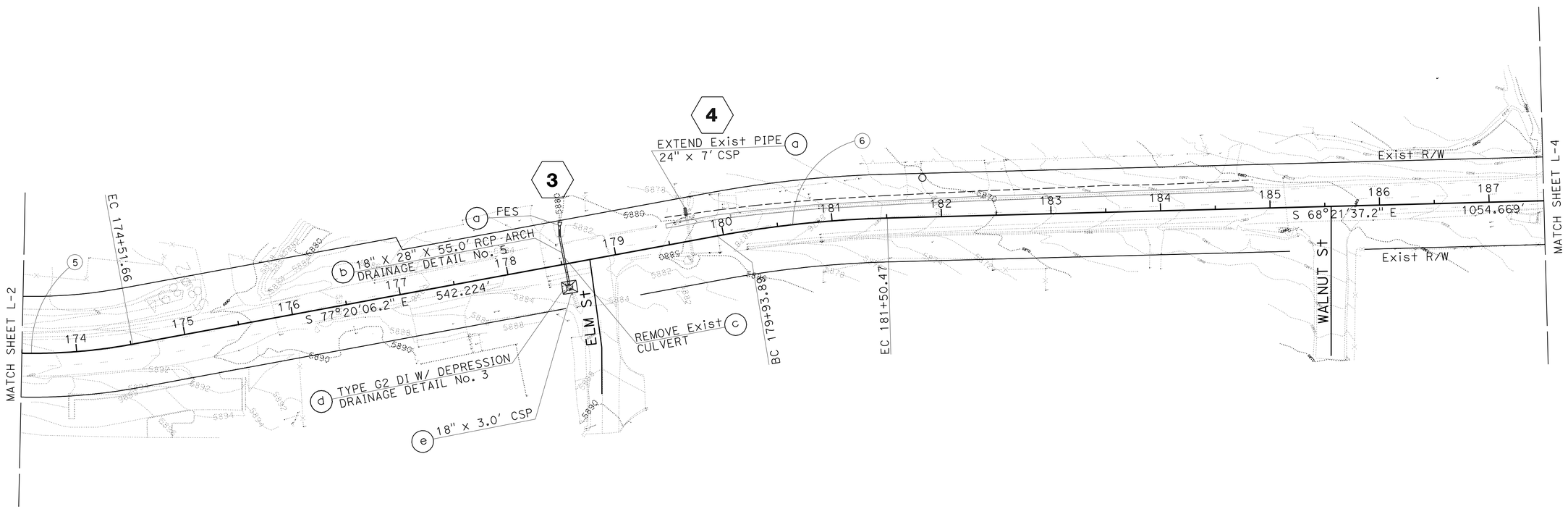

DRAINAGE PLAN

SCALE: 1" = 50′ **D-3**

THIS PLAN ACCURATE FOR DRAINAGE WORK ONLY

STATE OF CALIFORNIA - DEPARTMENT OF TRANSPORTATION
Caltrans
DESIGN

FUNCTIONAL SUPERVISOR: MARIO AMANCIO
CALCULATED-DESIGNED BY: ALI TAHA
CHECKED BY: MARIO AMANCIO
REVISED BY
DATE REVISED

LAST REVISION 10-30-09
DATE PLOTTED => 29-JAN-2010
TIME PLOTTED => 14:20

Dist	COUNTY	ROUTE	POST MILES TOTAL PROJECT	SHEET No.	TOTAL SHEETS
08	SBd	2	0.9/2.4	17	94

Mario L. Amancio 10-30-09
REGISTERED CIVIL ENGINEER DATE

1-25-10
PLANS APPROVAL DATE

REGISTERED PROFESSIONAL ENGINEER
MARIO AMANCIO
No. C65908
Exp. 6-30-10
CIVIL
STATE OF CALIFORNIA

THE STATE OF CALIFORNIA OR ITS OFFICERS OR AGENTS SHALL NOT BE RESPONSIBLE FOR THE ACCURACY OR COMPLETENESS OF SCANNED COPIES OF THIS PLAN SHEET.

NOTE: FOR COMPLETE RIGHT OF WAY DATA, SEE RIGHT OF WAY RECORD MAPS AT DISTRICT OFFICE.

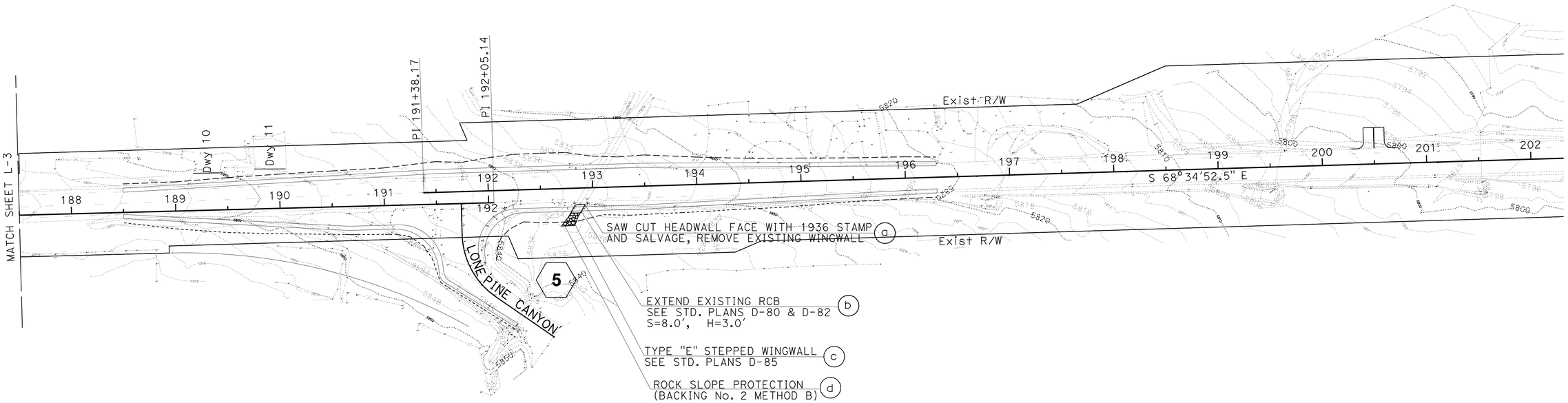

DRAINAGE PLAN

SCALE: 1" = 50'

D-4

THIS PLAN ACCURATE FOR DRAINAGE WORK ONLY

STATE OF CALIFORNIA - DEPARTMENT OF TRANSPORTATION
Caltrans
DESIGN

FUNCTIONAL SUPERVISOR: MARIO AMANCIO
CALCULATED-DESIGNED BY: ALI TAHA
CHECKED BY: MARIO AMANCIO
REVISED BY
DATE REVISED

LAST REVISION 10-30-09
DATE PLOTTED => 29-JAN-2010
TIME PLOTTED => 14:20

Dist	COUNTY	ROUTE	POST MILES TOTAL PROJECT	SHEET No.	TOTAL SHEETS
08	SBd	2	0.9/2.4	18	94

REGISTERED CIVIL ENGINEER 10-30-09 DATE

1-25-10
PLANS APPROVAL DATE

REGISTERED PROFESSIONAL ENGINEER
MARIO AMANCIO
No. C65908
Exp. 6-30-10
CIVIL
STATE OF CALIFORNIA

THE STATE OF CALIFORNIA OR ITS OFFICERS OR AGENTS SHALL NOT BE RESPONSIBLE FOR THE ACCURACY OR COMPLETENESS OF SCANNED COPIES OF THIS PLAN SHEET.

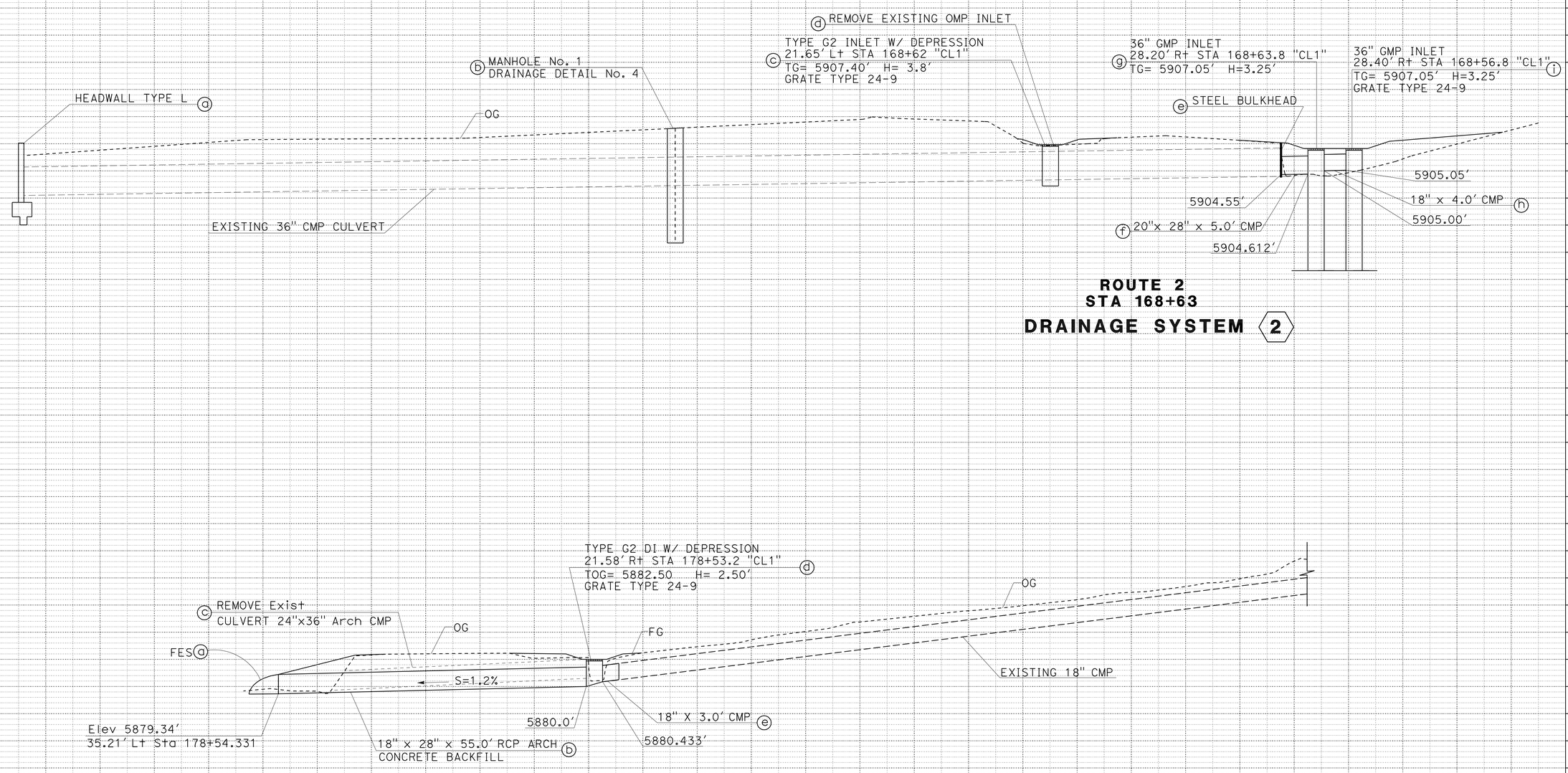

DRAINAGE PROFILE

SCALE: Horiz 1" = 5'
Vert 1" = 10'

DP-1

STATION		TOTAL
CY	Exc	
	Emb	

STATE OF CALIFORNIA - DEPARTMENT OF TRANSPORTATION
Caltrans DESIGN

FUNCTIONAL SUPERVISOR: MARIO AMANCIO
CALCULATED-DESIGNED BY: ALI TAHA
CHECKED BY: MARIO AMANCIO
REVISED BY / DATE REVISED

LAST REVISION 10-30-09
DATE PLOTTED => 29-JAN-2010
TIME PLOTTED => 14:21

Dist	COUNTY	ROUTE	POST MILES TOTAL PROJECT	SHEET No.	TOTAL SHEETS
08	SBd	2	0.9/2.4	19	94

Mario L. Amancio 10-30-09
REGISTERED CIVIL ENGINEER DATE

1-25-10
PLANS APPROVAL DATE

REGISTERED PROFESSIONAL ENGINEER
MARIO AMANCIO
No. C65908
Exp. 6-30-10
CIVIL
STATE OF CALIFORNIA

THE STATE OF CALIFORNIA OR ITS OFFICERS OR AGENTS SHALL NOT BE RESPONSIBLE FOR THE ACCURACY OR COMPLETENESS OF SCANNED COPIES OF THIS PLAN SHEET.

NOTES:

1. THE PIPE HEADWALLS ("L" TYPE) ARE PER CALTRANS STANDARD PLAN No. D-89
2. ALL REINFORCING STEEL SHALL BE # 4 BARS AT 1'-6" Max SPACING EACH WAY.

HEADWALL DIMENSIONS					
SYSTEM	UNIT	X	Y	θ	REMARKS
1	b	9.875'	4'-10"	90°	SEE STD. PLANS D-89, USE H= 5'-5"
2	a	9.125'	4'-10"	90°	SEE STD. PLANS D-89, USE H= 6'-2"

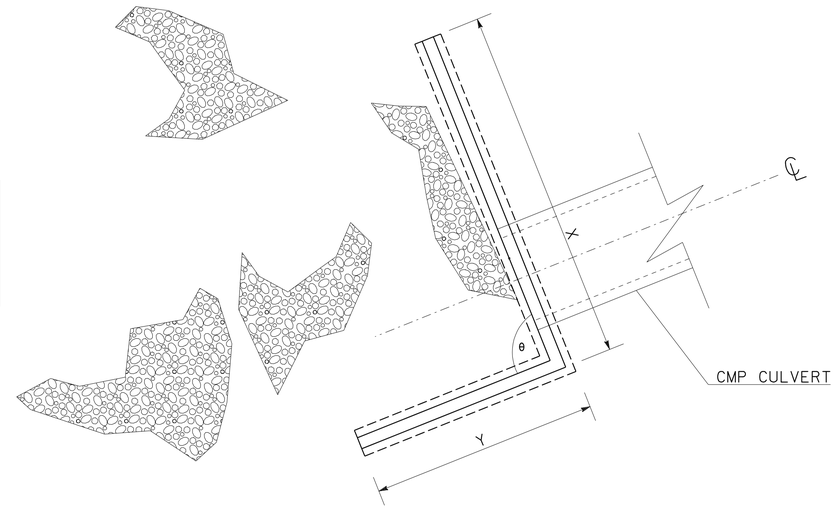

PIPE HEADWALLS
DRAINAGE DETAIL No. 1

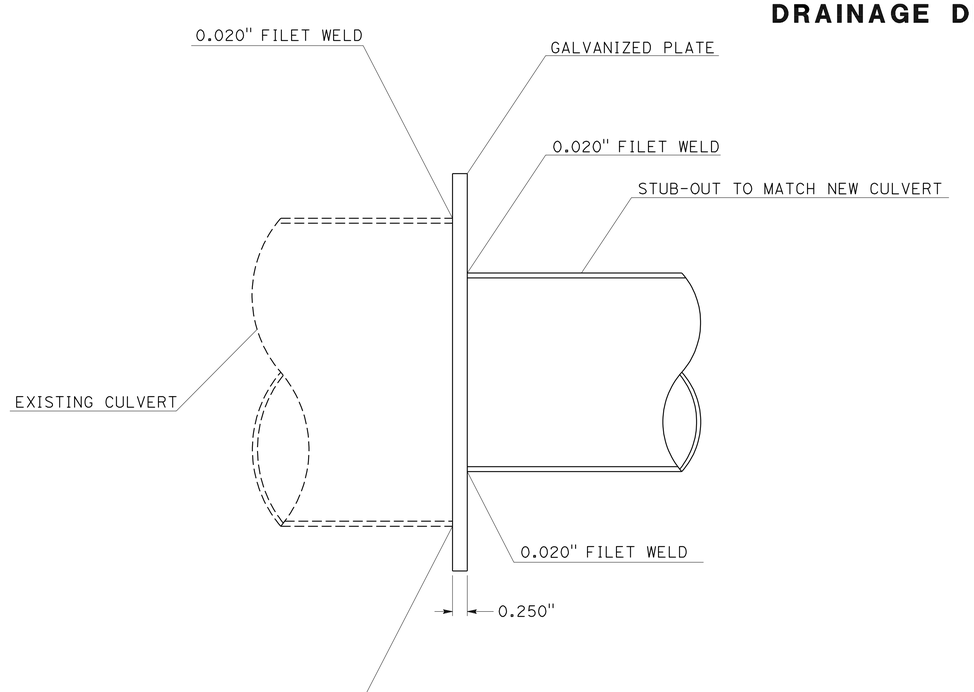

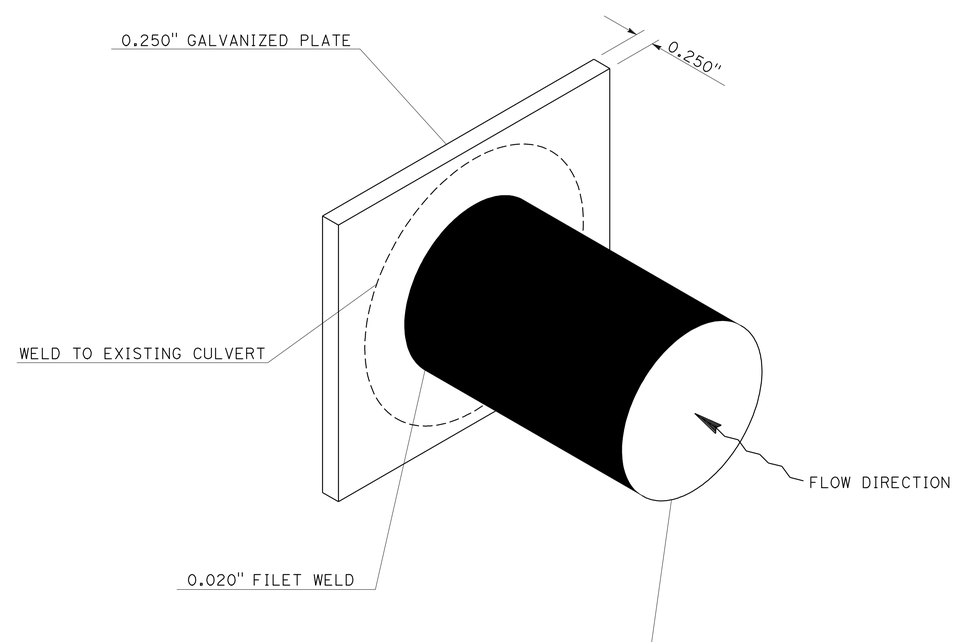

BULKHEAD PLATE
DRAINAGE DETAIL No. 2

DRAINAGE DETAIL
NO SCALE **DD-1**

STATE OF CALIFORNIA - DEPARTMENT OF TRANSPORTATION
Caltrans® DESIGN

FUNCTIONAL SUPERVISOR: MARIO AMANCIO
CALCULATED-DESIGNED BY: ALI TAHA
CHECKED BY: MARIO AMANCIO
REVISED BY
DATE REVISED

LAST REVISION 10-30-09
DATE PLOTTED => 29-JAN-2010
TIME PLOTTED => 14:21

Dist	COUNTY	ROUTE	POST MILES TOTAL PROJECT	SHEET No.	TOTAL SHEETS
08	SBd	2	0.9/2.4	20	94

Mario L. Amancio 10-30-09
REGISTERED CIVIL ENGINEER DATE

1-25-10
PLANS APPROVAL DATE

REGISTERED PROFESSIONAL ENGINEER
MARIO AMANCIO
No. C65908
Exp. 6-30-10
CIVIL
STATE OF CALIFORNIA

THE STATE OF CALIFORNIA OR ITS OFFICERS OR AGENTS SHALL NOT BE RESPONSIBLE FOR THE ACCURACY OR COMPLETENESS OF SCANNED COPIES OF THIS PLAN SHEET.

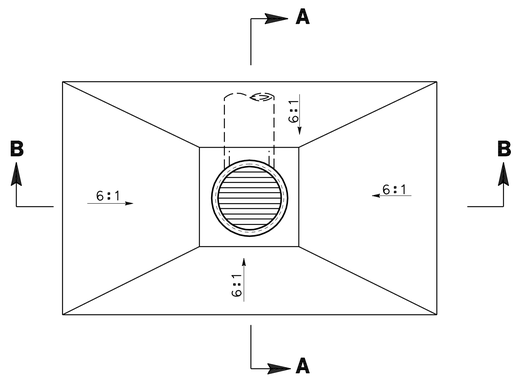

PLAN

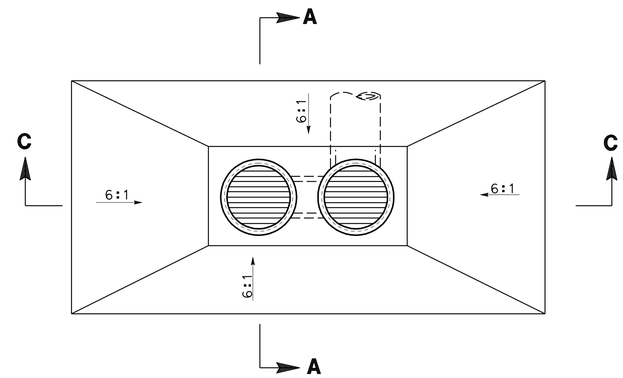

PLAN

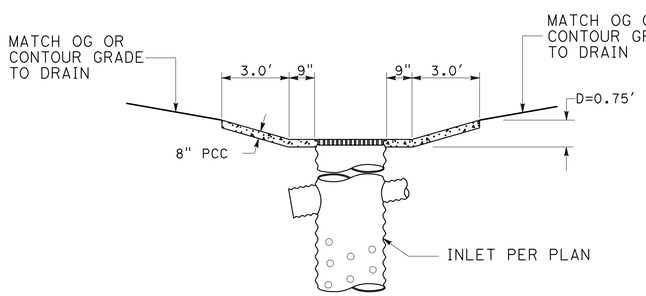

SECTION A-A

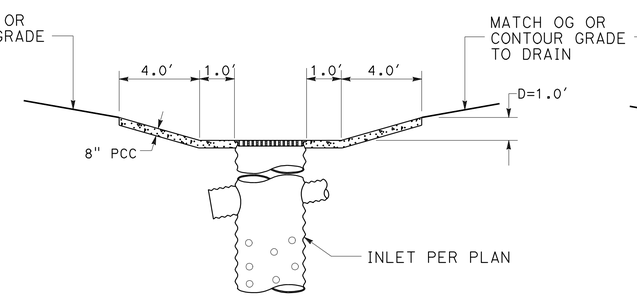

SECTION B-B

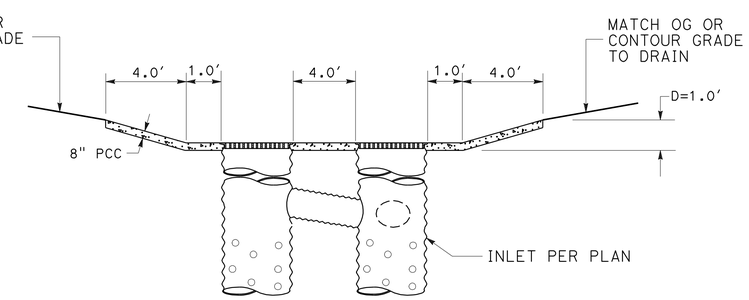

SECTION C-C

INLET APRON/DEPRESSION
DRAINAGE DETAIL No. 3

DRAINAGE DETAIL
NO SCALE
DD-2

REVISED BY	DATE REVISED

CALCULATED-DESIGNED BY	ALI TAHA
CHECKED BY	MARIO AMANCIO
FUNCTIONAL SUPERVISOR	MARIO AMANCIO

STATE OF CALIFORNIA - DEPARTMENT OF TRANSPORTATION
Caltrans®
DESIGN

LAST REVISION 10-30-09
DATE PLOTTED => 29-JAN-2010
TIME PLOTTED => 14:21

Dist	COUNTY	ROUTE	POST MILES TOTAL PROJECT	SHEET No.	TOTAL SHEETS
08	SBd	2	0.9/2.4	21	94

REGISTERED CIVIL ENGINEER 10-30-09 DATE

1-25-10
PLANS APPROVAL DATE

REGISTERED PROFESSIONAL ENGINEER MARIO AMANCIO No. C65908 Exp. 6-30-10 CIVIL STATE OF CALIFORNIA

THE STATE OF CALIFORNIA OR ITS OFFICERS OR AGENTS SHALL NOT BE RESPONSIBLE FOR THE ACCURACY OR COMPLETENESS OF SCANNED COPIES OF THIS PLAN SHEET.

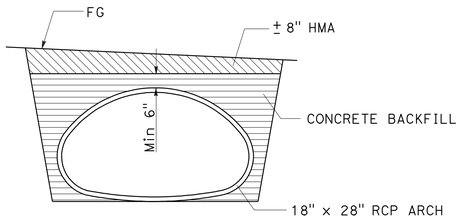

NOTES:

1. FOR ADDITIONAL EXCAVATION AND BACKFILL INFORMATION REFER TO CALTRANS STANDARD PLAN A62D AND STANDARD SPECIFICATIONS SECTION 65 AND 90.

ARCH REINFORCED CONCRETE PIPE CULVERT

DRAINAGE DETAIL No. 5

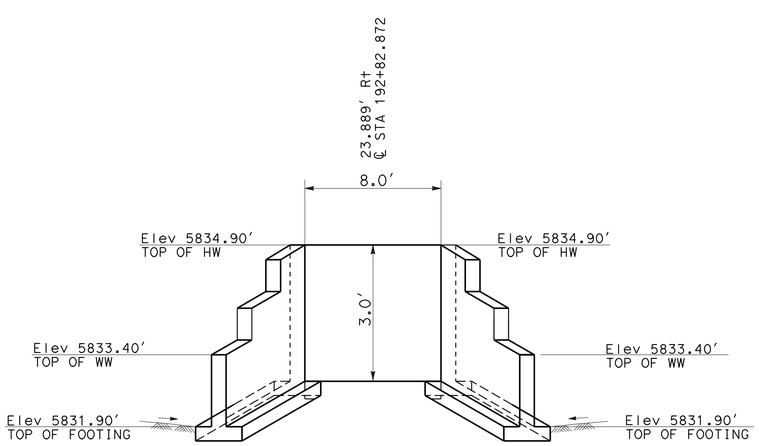

DRAINAGE SYSTEM 5

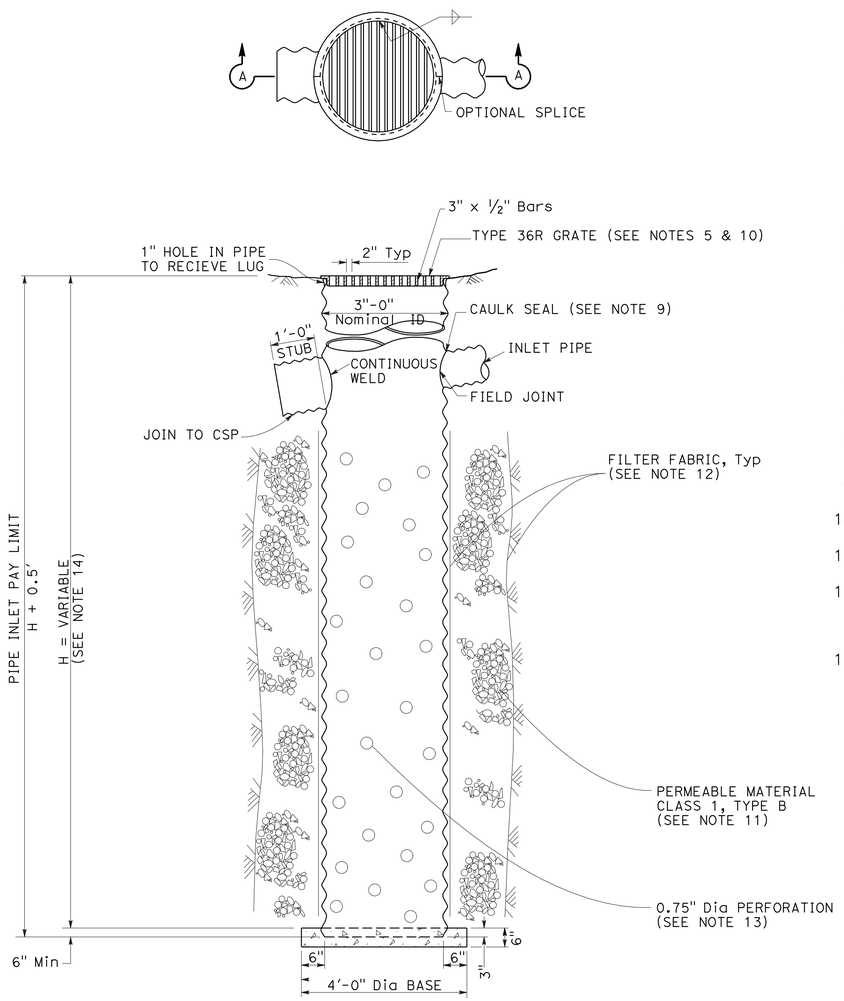

SECTION A-A

TYPE GMP

STEEL PIPE INLET WITH GRATE

NOTES:

1. FOR DETAILS OF LADDER AND STEPS AND WHEN LADDER OR STEPS ARE REQUIRED, SEE STANDARD PLAN D75C.
2. INLET PIPES SHALL NOT PROTRUDE INTO BASIN.
3. EXCEPT FOR INLETS USED FOR JUNCTION BOXES, BASIN FLOORS SHALL HAVE MINIMUM SLOPE OF 1:4 FROM ALL DIRECTIONS TOWARD OUTLET PIPE, AND A WOOD TROWEL FINISH.
4. SEE STANDARD PLANS RSP D77A and D77B FOR GRATE AND FRAME DETAILS AND MASS OF MISCELLANEOUS IRON AND STEEL.
5. DESIGNATION OF TYPE OMPI PIPE INLETS ON PLANS INDICATES TRASH RACKS ARE TO BE FURNISHED AND INSTALLED ON ALL SIDE OPENINGS. SEE STANDARD PLAN D75C FOR TRASH RACK DETAILS
6. MORE THAN ONE SIDE OPENING MAY BE REQUIRED. LOCATION AND NUMBER AS ORDERED BY THE ENGINEER.
7. CHAIN TO BE PROVIDED WHEN SPECIFIED.
8. CAULK SEAL WITH PLIABLE MIXTURE OF SAND, PORTLAND CEMENT, AND EMULSIFIED ASPHALT (MIXTURE OF 1 PART PORTLAND CEMENT, 3-5 PARTS SAND, AND 1½ PARTS SSI EMULSIFIED ASPHALT.)
9. PLACE PIPE SO BARS OF GRATE WILL BE PARALLEL WITH MAIN SURFACE FLOW.
10. PLACE CLASS 1, TYPE B, PERMEABLE MATERIAL AROUND THE CMP RISER, STARTING BELOW THE FLOW LINE OF THE LOWEST LATERAL PIPE.
11. PLACE FILTER FABRIC BOTH AROUND THE PIPE AND ALSO THE OUTSIDE OF GRAVEL PACK. SEE SECTION 88 OF CALTRANS STD. SPECIFICATIONS.
12. DRILL OR PUNCH 0.75" DIA. PERFORATIONS @ 20" O.C., EACH WAY, EITHER IN THE INSIDE CRESTS OR IN THE FLAT TANGENT PORTION OF ALL CORRUGATION BUT NOT IN BOTH LOCATIONS IN A GIVEN LENGTH OF PIPE. STAGGER HOLES IN THE BOTH DIRECTIONS.
13. THE HEIGHT SHALL BE 10.0'. UNLESS OTHERWISE SHOWN ON THE PLANS OR AS DIRECTED BY THE RESIDENT ENGINEER.

DRAINAGE DETAIL

NO SCALE

DD-3

STATE OF CALIFORNIA - DEPARTMENT OF TRANSPORTATION
Caltrans
DESIGN

FUNCTIONAL SUPERVISOR: MARIO AMANCIO
CALCULATED-DESIGNED BY: ALI TAHA
CHECKED BY: MARIO AMANCIO
REVISED BY
DATE REVISED

LAST REVISION 10-30-09
DATE PLOTTED => 29-JAN-2010
TIME PLOTTED => 14:21

Dist	COUNTY	ROUTE	POST MILES TOTAL PROJECT	SHEET No.	TOTAL SHEETS
08	SBd	2	0.9/2.4	22	94

REGISTERED CIVIL ENGINEER 10-30-09 DATE

1-25-10
PLANS APPROVAL DATE

REGISTERED PROFESSIONAL ENGINEER MARIO AMANCIO No. C65908 Exp. 6-30-10 CIVIL STATE OF CALIFORNIA

THE STATE OF CALIFORNIA OR ITS OFFICERS OR AGENTS SHALL NOT BE RESPONSIBLE FOR THE ACCURACY OR COMPLETENESS OF SCANNED COPIES OF THIS PLAN SHEET.

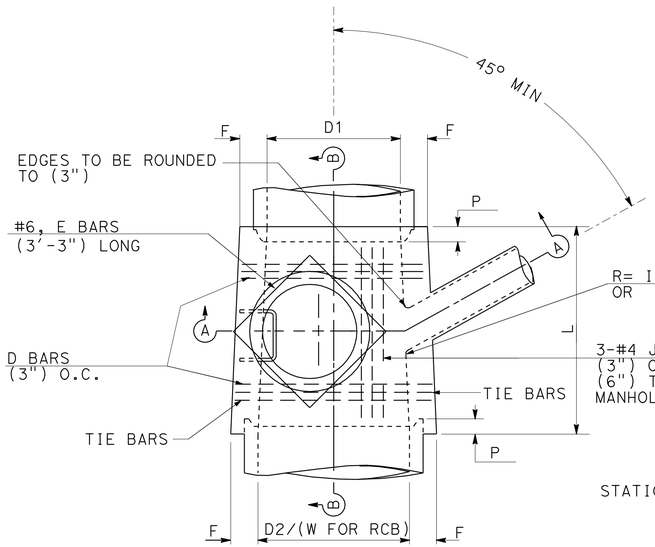

PLAN

(SHAFT NOT SHOWN)

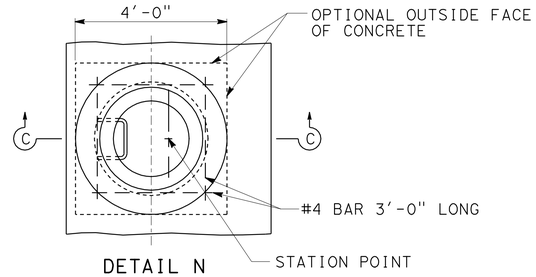

DETAIL N

(SHAFT NOT SHOWN)

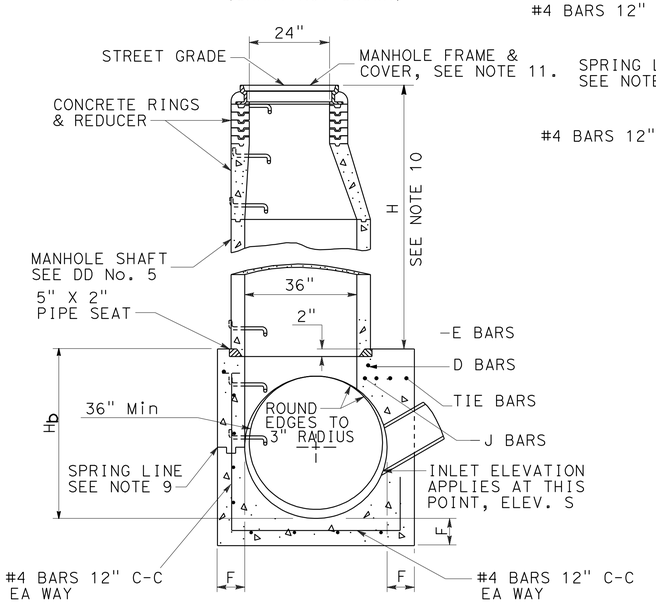

SECTION A-A

FOR PRECAST CONC PIPE MM (SEE NOTE 10)

TABLE OF VALUES FOR F	
D2 (in)	F (in)
36"	6½"
42"	7½"
48"	8"
54"	9"
60"	9½"
66"	10¼"
72"	11"
78"	11¾"
84"	12½"
90"	13¼"
96"	14"

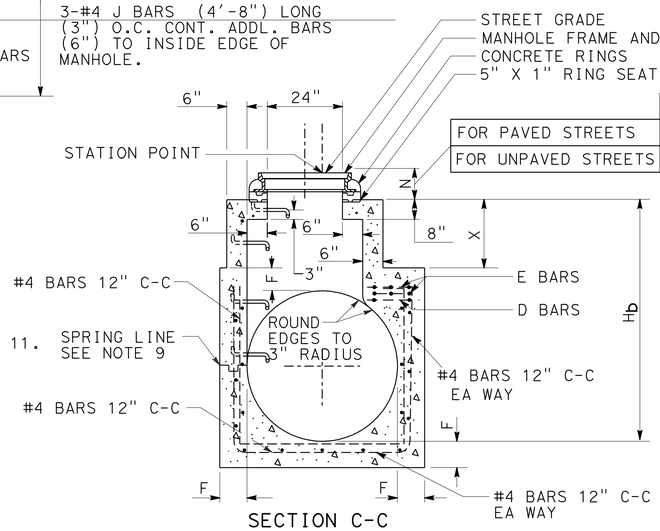

	Max	Min
FOR PAVED STREETS	11"	8½"
FOR UNPAVED STREETS	16"	15"

SECTION C-C

FOR PRECAST CONC PIPE Inches (SEE NOTE 10)

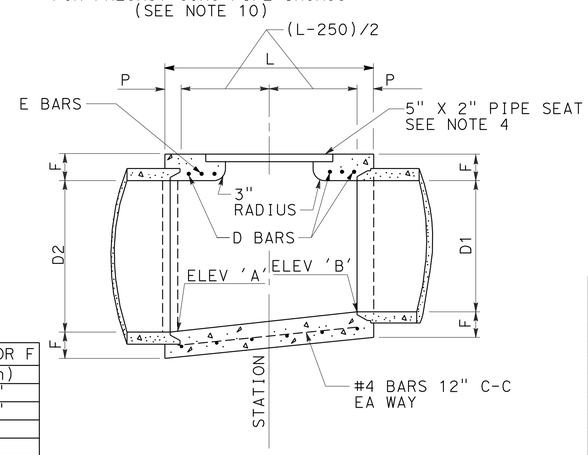

SECTION B-B

MANHOLE No. 1
36" PIPE AND LARGER

DRAINAGE DETAIL No.4

NOTES

1. VALUES FOR ELEV 'A' & 'B' ARE SHOWN ON THE DRAINAGE PLAN. VALUES FOR 'Hb' & 'H' OR 'Hb' & X, ARE ALSO SHOWN ON DRAINAGE PLANS OR IN THE TABLE ON THIS SHEET.
2. CENTER OF MANHOLE SHAFT SHALL BE LOCATED OVER CENTERLINE OF STORM DRAIN WHEN DIAMETER 'D1' IS 4'-0" OR LESS, IN WHICH CASE PLACE E BAR SYMMETRICALLY AROUND SHAFT AT 45° WITH CENTERLINE.
3. LENGTH 'L' AND EMBEDMENT P: SHALL HAVE THE FOLLOWING VALUES UNLESS OTHERWISE SHOWN ON PLAN. FOR D2=2400 mm (96") OR LESS, L= 1650 mm (66"), P=125 mm (5"); D2 OVER 2400 mm (96"), L=1800 mm (72"), P=200 mm (8"). L MAY BE INCREASED OR LOCATION OF MANHOLE SHIFTED TO MEET PIPE ENDS. WHEN L IS GREATER THAN THAT SHOWN ABOVE IS SPECIFIED, D BARS SHALL BE CONTINUED 150 mm (6") O.C.
4. THICKNESS OF 'F' SHALL VARY WHEN NECESSARY TO PROVIDE LEVEL PIPESEAT, BUT SHALL NOT BE LESS THAN TABULAR VALUES FOR 'F' SHOWN ON THIS PLAN.
5. REINFORCING STEEL SHALL BE 0.5" CLEAR FROM FACE OF CONCRETE UNLESS SHOWN OTHERWISE SIZES AND LENGTHS ARE SHOWN IN TABLE BELOW.
6. UNLESS OTHERWISE SHOWN, STEPS SHALL BE PLACED 1.0' ON CENTERS. THE LOWEST STEP SHALL BE NOT MORE THAN 1'-4" ABOVE THE LEDGE AT SIDE OF MANHOLE FLOOR.
7. RINGS, REDUCER, AND PIPE FOR ACCESS SHAFT SHALL BE SEATED IN 1:2 CEMENT MORTAR AND NEATLY POINTED OR WIPED INSIDE THE SHAFT.
8. FLOOR OF MANHOLE SHALL BE STEEL-TROWELED TO SPRING LINE.
9. BODY OF MANHOLE SHALL BE POURED IN ONE CONTINOUS OPERATION, EXCEPT THAT THE CONTRACTOR SHALL HAVE THE OPTION OF PLACING AT THE SPRING LINE A CONSTRUCTION JOINT WITH A LONGITUDINAL KEYWAY.
10. WHEN DEPTH OF MANHOLE FROM STREET GRADE TO TOP OF BOX IS LESS THAN 35" FOR PAVED STREETS OR 42" FOR UNPAVED STREETS, CONSTRUCT MONOLITHIC SHAFT AS PER SECTION C-C AND DETAIL N. WHEN DIAMETER 'D' IS 40" OR LESS, CENTER OF SHAFT SHALL BE LOCATED AS PER NOTE 2.
11. MANHOLE FRAME AND COVER PER STANDARD PLAN B7-11 DETAIL 'U45'.
12. STEPS SHALL BE 19 mm (3/4") ROUND, GALVANIZED STEEL AND ANCHORED NOT LESS THAN 150 mm (6") IN THE WALLS OR STRUCTURE. UNLESS OTHERWISE SHOWN, THE SPACING SHALL BE 400 mm (16") OR 425 mm (17") O.C. THE LOWEST STEP SHALL NOT BE MORE THAN 750 mm (2'-6") ABOVE THE INVERT.
13. D BARS SHALL BE PLACED 3" C-C. E BARS SHALL BE SPACED 4" C-C. TIE BARS SHALL BE 10 SPACED 18" C-C OR LESS.
14. WHEN 'L' GREATER THAN 5'-5" IS SPECIFIED ON DRAINAGE PLAN, CONTINUE D BARS AT 6" C-C.
15. LENGTHS SHOWN IN TABLE ARE FOR LONGEST BARS. WHERE SHORTER BARS ARE REQUIRED, BEND OR CUT TO MEET FIELD REQUIREMENTS.
16. CONCRETE SHALL BE MINOR CONCRETE.

STEEL TABLE						
	D BARS			E BARS		
D2 (in)	No. REQ	SIZE	LENGTH (in)	No. REQ	SIZE	LENGTH (in)
36"	6	#4	46"	4	#4	33"
42"	6	"	54"	4	"	38"
48"	6	"	61"	4	"	43"
54"	6	"	69"	6	"	61"
60"	6	"	76"	6	"	72"
66"	6	"	84"	8	"	80"
72"	6	"	91"	8	"	80"
78"	6	"	99"	8	"	80"
84"	6	"	106"	10	"	80"
90"	6	#6	114"	10	"	80"
96"	6	"	121"	10	"	80"

DRAINAGE DETAIL

NO SCALE

DD-4

REVISED BY | DATE REVISED
ALI TAHA | MARIO AMANCIO
CALCULATED-DESIGNED BY | CHECKED BY
FUNCTIONAL SUPERVISOR | MARIO AMANCIO
STATE OF CALIFORNIA - DEPARTMENT OF TRANSPORTATION
Caltrans
DESIGN

LAST REVISION 10-30-09
DATE PLOTTED => 29-JAN-2010
TIME PLOTTED => 14:21

Dist	COUNTY	ROUTE	POST MILES TOTAL PROJECT	SHEET No.	TOTAL SHEETS
08	SBd	2	0.9/2.4	23	94

REGISTERED CIVIL ENGINEER 10-30-09 DATE

1-25-10
PLANS APPROVAL DATE

REGISTERED PROFESSIONAL ENGINEER MARIO AMANCIO No. C65908 Exp. 6-30-10 CIVIL STATE OF CALIFORNIA

THE STATE OF CALIFORNIA OR ITS OFFICERS OR AGENTS SHALL NOT BE RESPONSIBLE FOR THE ACCURACY OR COMPLETENESS OF SCANNED COPIES OF THIS PLAN SHEET.

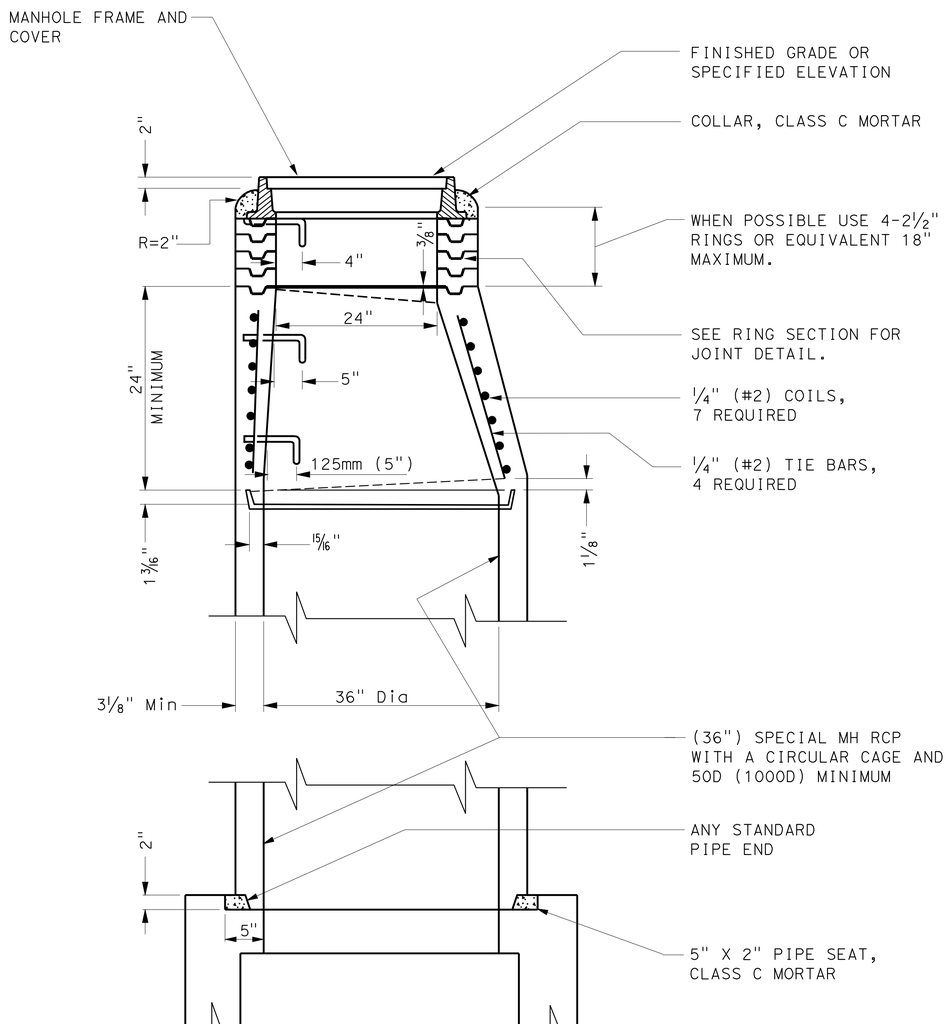

REINFORCED CONCRETE ECCENTRIC MANHOLE SHAFT

NOTES:

1. UNLESS OTHERWISE INDICATED THIS STRUCTURE SHALL CONFORM TO ASTM C 478M (ASTM C 478) AND ALL CONCRETE SHALL BE PER SSPWC.
2. ALL JOINTS SHALL BE SEALED BY FILLING THE ANNULAR SPACES WITH CLASS C MORTAR. THE INSIDE OF THE SHAFT AT EACH JOINT SHALL BE WIPED CLEAN OF EXCESS MORTAR.
3. PROTECTIVE PLASTIC LINER (T LOCK) OR ENINEER-APPROVED COATINGS WHERE REQUIRED BY THE PROJECT DRAWINGS SHALL BE IN ACCORDANCE WITH SSPWC AND THE MANUFACTURER'S DIRECTIONS.
4. STEPS SHALL CONFORM TO DRAINAGE DETAIL NO. 3, NOTE 10. THE TOP STEP SHALL BE PLACED DIRECTLY BENEATH THE MANHOLE FRAME. UNLESS OTHERWISE SHOWN, STEPS SHALL BE UNIFORMLY SPACED 350mm (14") TO 375mm (15") O.C.
5. THE ECCENTRIC MANHOLE SHAFT REDUCER AND RINGS MAY BE PLAIN CONCRETE. FOR PLAIN CONCRETE SECTIONS THE MINIMUM THICKNESS SHALL BE 150mm (6").
6. THE PRECAST CONCRETE MANHOLE STRUCTURES WILL BE INSPECTED BY THE ENGINEER WHO WILL INDICATE ACCEPTANCE FOR SHIPMENT TO THE JOB BY MARKING THE STRUCTURES WITH THE AGENCY'S STAMP.
7. THE VERTICAL SIDES OF THE MANHOLE SHAFT AND THE ECCENTRIC REDUCER SHALL BE LOCATED ABOVE AND IN LINE WITH THE SIDE OF THE STORM DRAIN CONDUIT.
8. CONSTRUCT MANHOLE SAFETY LEDGE PER DRAINAGE DETAIL No. 27 IF DEPTH OF MANHOLE TO INVERT IS GREATER THAN 6m (20') AND MANHOLE SHAFT IS GREATER THAN 3m (10').
9. THE MANHOLE SHAFT DETAIL IS PER AMERICAN PUBLIC WORKS ASSOCIATION - SOUTHERN CALIFORNIA CHAPTER'S MANHOLE SHAFT DETAIL, STANDARD PLAN NO. 324.

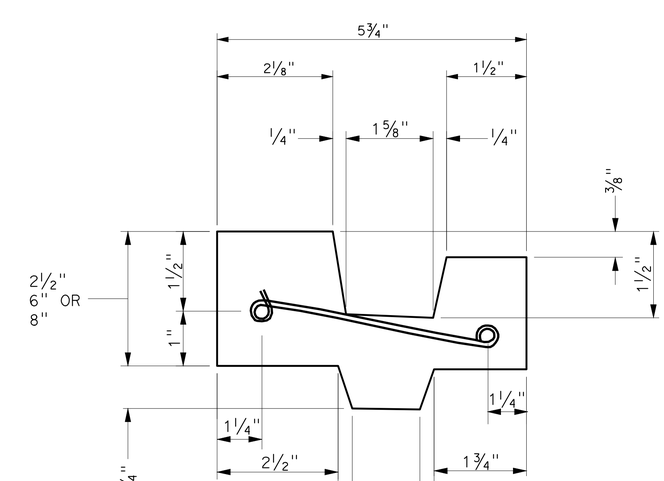

CROSS SECTION OF REINFORCED CONCRETE RING

MANHOLE SHAFT WITH ECCENTRIC REDUCER
DRAINAGE DETAIL No. 4

DRAINAGE DETAIL
NO SCALE **DD-5**

STATE OF CALIFORNIA - DEPARTMENT OF TRANSPORTATION
Caltrans® DESIGN

FUNCTIONAL SUPERVISOR: MARIO AMANCIO
CALCULATED-DESIGNED BY: ALI TAHA
CHECKED BY: MARIO AMANCIO
REVISED BY
DATE REVISED

LAST REVISION 10-30-09
DATE PLOTTED => 29-JAN-2010
TIME PLOTTED => 14:21

Dist	COUNTY	ROUTE	POST MILES TOTAL PROJECT	SHEET No.	TOTAL SHEETS
08	SBd	2	0.9/2.4	24	94

Mario L. Amancio 10-30-09
REGISTERED CIVIL ENGINEER DATE

1-25-10
PLANS APPROVAL DATE

REGISTERED PROFESSIONAL ENGINEER
MARIO AMANCIO
No. C65908
Exp. 6-30-10
CIVIL
STATE OF CALIFORNIA

THE STATE OF CALIFORNIA OR ITS OFFICERS OR AGENTS SHALL NOT BE RESPONSIBLE FOR THE ACCURACY OR COMPLETENESS OF SCANNED COPIES OF THIS PLAN SHEET.

DRAINAGE QUANTITIES

DRAINAGE SYSTEM NO.	DRAINAGE UNIT	28" X 20" CORRUGATED STEEL PIPE ARCH (0.079" THICK)	REMOVE CULVERT	REMOVE Inlet "Exist OMP"	REMOVE CONCRETE (STRUCTURE) HW & WW	CLASS 1 AGGREGATE SUBBASE (PERMEABLE MATERIAL)	STRUCTURAL CONCRETE (BOX CULVERT)	CONCRETE BACKFILL	MINOR CONCRETE (MINOR STRUCTURE)	BAR REINFORCING STEEL, "L" Headwall	BAR REINFORCING STEEL (BOX CULVET)	18" BITUMINOUS COATED CSP (0.079")	24" BITUMINOUS COATED CSP (0.079")	36" BITUMINOUS COATED CSP (0.079")	18" X 28" REINFORCED CONCRETE PIPE ARCH	FILTER FABRIC	36" CORRUGATED STEEL PIPE INLET (0.168" THICK)	18" x 28" CONCRETE FLARED END ARCH SECTION	36" PRECAST CONCRETE PIPE MANHOLE "Shaft Reducer"	ROCK SLOPE PROTECTION (Backing No. 2 Method B)	MISC. IRON & STEEL	FRAME, GRATES & COVERS		42" X 42" X 0.25" GALVANIZED STEEL PLATE "STEEL BULKHEAD"	ROCK SLOPE PROTECTION FABRIC	DESCRIPTION	STATION
																						24-9 (N)	MH FRAME & COVER (N)				
		FT	FT	EA	LS	CY	CY	CY	CY	LB	LB	FT	FT	FT	FT	SQFT	FT	EA	FT	CY	LB	EA	EA	LB	SQFT		
1	a													5.0												36" CSP (0.079" Thick)	Sta 158+17 Lt
1	b								2.42	175																HEADWALL Type L H= 5'-5" W= 4'-10"	Sta 158+17 Lt
2	a								2.80	232																HEADWALL Type L H= 6'-2" W= 4'-10"	Sta 168+63 Lt
2	b								2.52										3.28		440		1			MANHOLE No. 1, DRAINAGE DETAIL No. 4	Sta 168+63 Lt
2	c								3.58												263	1				Type G2 INLET W/ DEPRESSION	Sta 168+63 Lt
2	d			1																						REMOVE EXISTING INLET	Sta 168+63 Rt
2	e																							150		STEEL BULKHEAD DETAIL No. 2	Sta 168+63 Rt
2	f	5.0																								28" X 20" CSP (ARCH)	STA 168+63 Rt
2	g					4.0			2.50							225	9.80				263	1				36" GMP INLET	Sta 168+63 Rt
2	h											4.0														18" CSP	Sta 168+63 Rt
2	i					4.0										225	9.80				263	1				36" GMP INLET	Sta 168+63 Rt
3	a								2.50									1								18" X 28" CONCRETE FLARED END ARCH SECTION	Sta 178+53
3	b							4.0							55.0											18" x 28" RCP ARCH / CONCRETE BACKFILL	Sta 178+53
3	c		46																							REMOVE EXISTING CULVERT 2'x3' Arch CMP	Sta 178+53
3	d								4.25												263	1				Type G2 INLET W/ DEPRESSION	Sta 178+53
3	e											3.0														18" CSP	Sta 178+53
4	a												7.0													24" CSP	Sta 179+69.5 Lt
5	a				1																					SAWCUT HEADWALL FACE W/ 1936 STAMP AND SALVAGE, REMOVE EXISTING WINGWALL	Sta 192+87.5 Rt
5	b						16.92																			EXTEND EXISTING RCB W/ TYPE E STEPPED WW	Sta 192+87.5 Rt
5	c										2258															EXTEND EXISTING RCB W/ TYPE E STEPPED WW	Sta 192+87.5 Rt
5	d																			7.4					28	ROCK SLOPE PROTECTION 2' DEPTH	Sta 192+87.5 Rt
TOTAL		5.0	46	1	1	8.0	16.92	4.0	20.57	407	2258	7.0	7.0	5.0	55.0	450	19.60	1	3.28	7.4	1492	4	1	150	28		

(N) - NOT A SEPARATE PAY ITEM, FOR INFORMATION ONLY.

REVISED BY	DATE REVISED

CALCULATED-DESIGNED BY	ALI TAHA
CHECKED BY	MARIO AMANCIO
FUNCTIONAL SUPERVISOR	MARIO AMANCIO

STATE OF CALIFORNIA - DEPARTMENT OF TRANSPORTATION
Caltrans
DESIGN

DRAINAGE QUANTITIES
DQ-1

LAST REVISION 10-30-09
DATE PLOTTED => 29-JAN-2010
TIME PLOTTED => 14:21

Dist	COUNTY	ROUTE	POST MILES TOTAL PROJECT	SHEET No.	TOTAL SHEETS
08	SBd	2	0.9/2.4	25	94

Mario L. Amancio 10-30-09
REGISTERED CIVIL ENGINEER DATE

1-25-10
PLANS APPROVAL DATE

REGISTERED PROFESSIONAL ENGINEER
MARIO AMANCIO
No. C65908
Exp. 6-30-10
CIVIL
STATE OF CALIFORNIA

THE STATE OF CALIFORNIA OR ITS OFFICERS OR AGENTS SHALL NOT BE RESPONSIBLE FOR THE ACCURACY OR COMPLETENESS OF SCANNED COPIES OF THIS PLAN SHEET.

NOTE: FOR COMPLETE RIGHT OF WAY DATA, SEE RIGHT OF WAY RECORD MAPS AT DISTRICT OFFICE.

LEGEND:

SCE - INDICATE SOUTHERN CALIFORNIA EDISON
PP - INDICATE POWER POLE
TL - INDICATE TELECOMMUNICATION
CMP - INDICATE CORRUGATED METAL PIPE
PED - INDICATE PEDESTAL TELEPHONE
WM - INDICATE WATER METER
WV - INDICATE WATER VALVE
FH - INDICATE FIRE HYDRANT

LEGEND UTILITY PATTERNING:

—— - - - tv —— —— —— - - -(oh)—— INDICATE EXISTING OVERHEAD TELEVISION LINES
—— - e —— —— -(oh)—— INDICATE EXISTING OVERHEAD ELECTRICAL LINES
—— - e —— —— - e —— INDICATE EXISTING UNDERGROUND ELECTRICAL LINES
—— - - t —— —— - - t —— INDICATE EXISTING TELEPHONE LINE EXISTING
- —— w —— —— —— w —— INDICATE EXISTING UNDERGROUND WATER LINES
—— - g —— - —— - g —— INDICATE EXISTING UNDERGROUND GAS LINES

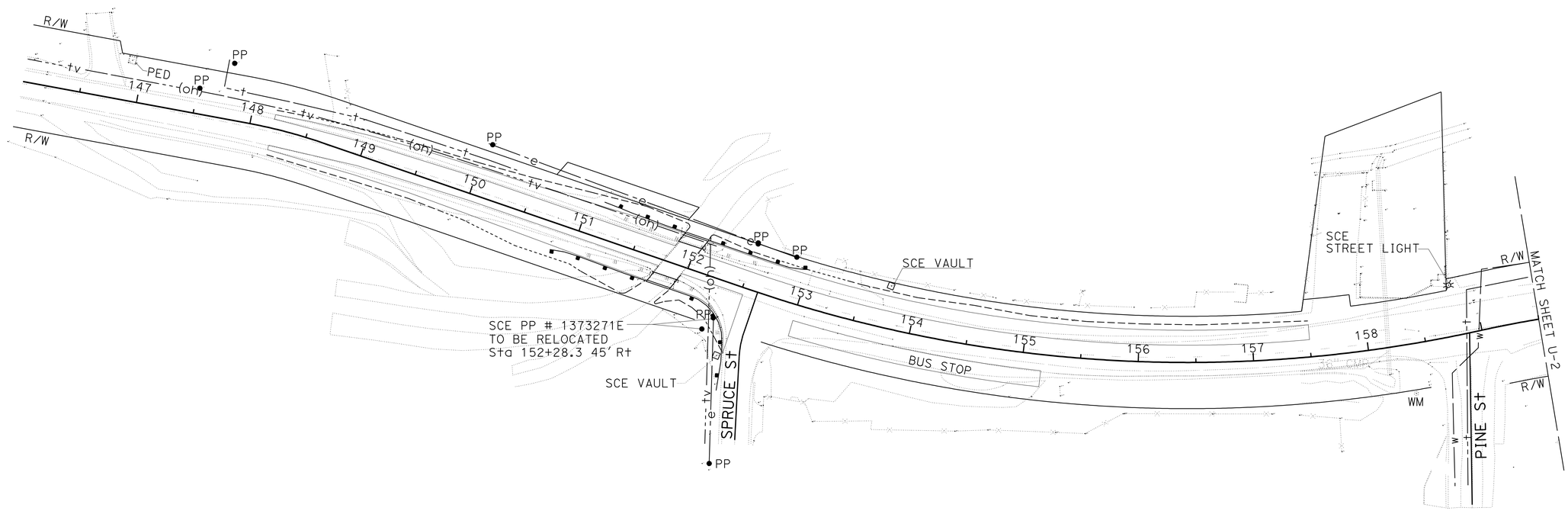

UTILITY PLAN

SCALE: 1" = 50'

U-1

THIS PLAN ACCURATE FOR UTILITY WORK ONLY

STATE OF CALIFORNIA - DEPARTMENT OF TRANSPORTATION
Caltrans
DESIGN

FUNCTIONAL SUPERVISOR: MARIO AMANCIO
CALCULATED-DESIGNED BY: ALI TAHA
CHECKED BY: MARIO AMANCIO
REVISED BY
DATE REVISED

LAST REVISION 10-30-09
DATE PLOTTED => 29-JAN-2010
TIME PLOTTED => 14:21

Dist	COUNTY	ROUTE	POST MILES TOTAL PROJECT	SHEET No.	TOTAL SHEETS
08	SBd	2	0.9/2.4	26	94

Mario L. Amancio 10-30-09
REGISTERED CIVIL ENGINEER DATE

1-25-10
PLANS APPROVAL DATE

REGISTERED PROFESSIONAL ENGINEER
MARIO AMANCIO
No. C65908
Exp. 6-30-10
CIVIL
STATE OF CALIFORNIA

THE STATE OF CALIFORNIA OR ITS OFFICERS OR AGENTS SHALL NOT BE RESPONSIBLE FOR THE ACCURACY OR COMPLETENESS OF SCANNED COPIES OF THIS PLAN SHEET.

NOTE: FOR COMPLETE RIGHT OF WAY DATA, SEE RIGHT OF WAY RECORD MAPS AT DISTRICT OFFICE.

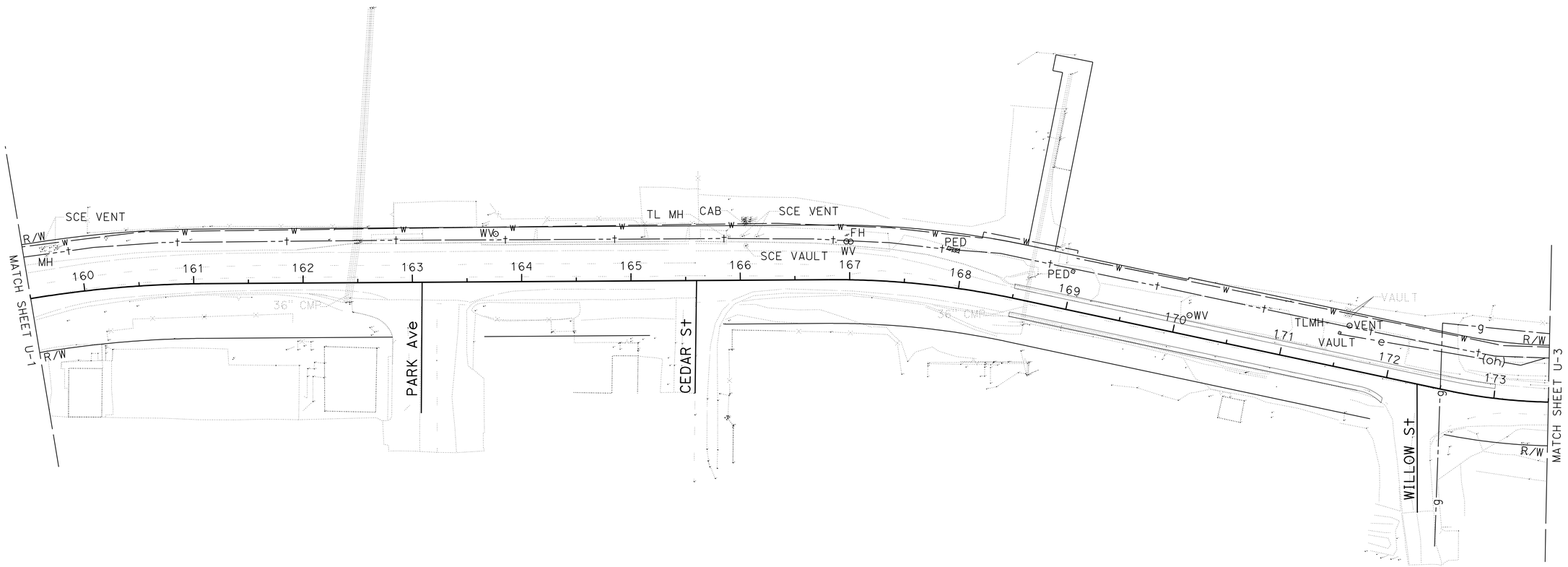

THIS PLAN ACCURATE FOR UTILITY INFORMATION ONLY

UTILITY PLAN

SCALE: 1" = 50'

U-2

STATE OF CALIFORNIA - DEPARTMENT OF TRANSPORTATION
Caltrans®
DESIGN

FUNCTIONAL SUPERVISOR: MARIO AMANCIO
CALCULATED-DESIGNED BY: ALI TAHA
CHECKED BY: MARIO AMANCIO
REVISED BY
DATE REVISED

LAST REVISION 10-30-09
DATE PLOTTED => 29-JAN-2010
TIME PLOTTED => 14:22

Dist	COUNTY	ROUTE	POST MILES TOTAL PROJECT	SHEET No.	TOTAL SHEETS
08	SBd	2	0.9/2.4	27	94

Mario L. Amancio 10-30-09
REGISTERED CIVIL ENGINEER DATE

1-25-10
PLANS APPROVAL DATE

REGISTERED PROFESSIONAL ENGINEER
MARIO AMANCIO
No. C65908
Exp. 6-30-10
CIVIL
STATE OF CALIFORNIA

THE STATE OF CALIFORNIA OR ITS OFFICERS OR AGENTS SHALL NOT BE RESPONSIBLE FOR THE ACCURACY OR COMPLETENESS OF SCANNED COPIES OF THIS PLAN SHEET.

NOTE: FOR COMPLETE RIGHT OF WAY DATA, SEE RIGHT OF WAY RECORD MAPS AT DISTRICT OFFICE.

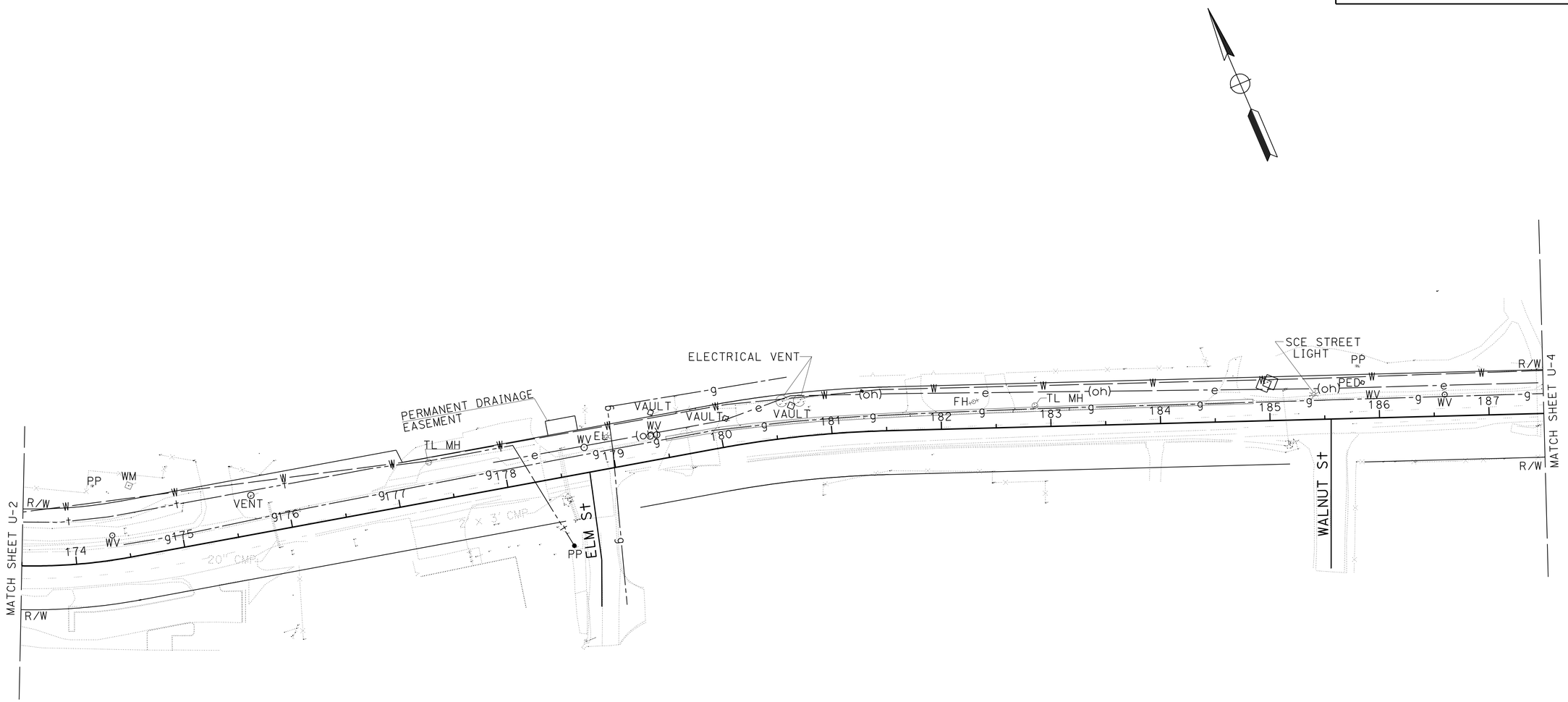

THIS PLAN ACCURATE FOR UTILITY INFORMATION ONLY

UTILITY PLAN

SCALE: 1" = 50'

U-3

STATE OF CALIFORNIA - DEPARTMENT OF TRANSPORTATION
Caltrans
DESIGN

FUNCTIONAL SUPERVISOR: MARIO AMANCIO
CALCULATED-DESIGNED BY: ALI TAHA
CHECKED BY: MARIO AMANCIO
REVISED BY
DATE REVISED

LAST REVISION 10-30-09
DATE PLOTTED => 29-JAN-2010
TIME PLOTTED => 14:22

Dist	COUNTY	ROUTE	POST MILES TOTAL PROJECT	SHEET No.	TOTAL SHEETS
08	SBd	2	0.9/2.4	28	94

Mario L. Amancio 10-30-09
REGISTERED CIVIL ENGINEER DATE

1-25-10
PLANS APPROVAL DATE

REGISTERED PROFESSIONAL ENGINEER
MARIO AMANCIO
No. C65908
Exp. 6-30-10
CIVIL
STATE OF CALIFORNIA

THE STATE OF CALIFORNIA OR ITS OFFICERS OR AGENTS SHALL NOT BE RESPONSIBLE FOR THE ACCURACY OR COMPLETENESS OF SCANNED COPIES OF THIS PLAN SHEET.

NOTE: FOR COMPLETE RIGHT OF WAY DATA, SEE RIGHT OF WAY RECORD MAPS AT DISTRICT OFFICE.

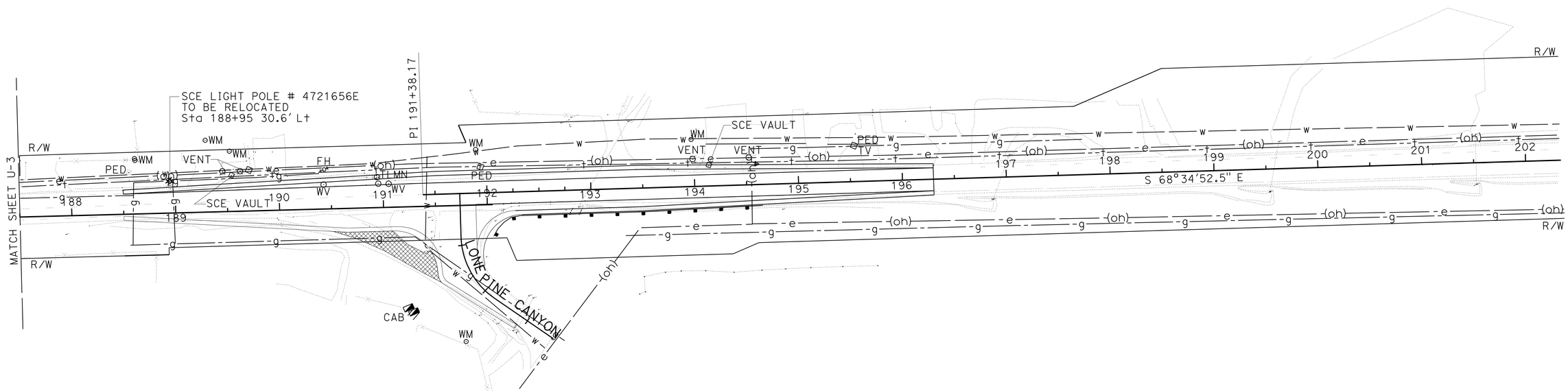

UTILITY PLAN

SCALE: 1" = 50'

U-4

THIS PLAN ACCURATE FOR UTILITY WORK ONLY

STATE OF CALIFORNIA - DEPARTMENT OF TRANSPORTATION

DESIGN

FUNCTIONAL SUPERVISOR: MARIO AMANCIO

CALCULATED-DESIGNED BY: ALI TAHA

CHECKED BY: MARIO AMANCIO

REVISED BY

DATE REVISED

LAST REVISION 10-30-09

DATE PLOTTED => 29-JAN-2010
TIME PLOTTED => 14:22

Dist	COUNTY	ROUTE	POST MILES TOTAL PROJECT	SHEET No.	TOTAL SHEETS
08	SBd	2	0.9/2.4	29	94

Mario L. Amancio 10-30-09
REGISTERED CIVIL ENGINEER DATE

1-25-10
PLANS APPROVAL DATE

REGISTERED PROFESSIONAL ENGINEER
MARIO AMANCIO
No. C65908
Exp. 6-30-10
CIVIL
STATE OF CALIFORNIA

THE STATE OF CALIFORNIA OR ITS OFFICERS OR AGENTS SHALL NOT BE RESPONSIBLE FOR THE ACCURACY OR COMPLETENESS OF SCANNED COPIES OF THIS PLAN SHEET.

NOTE: FOR COMPLETE RIGHT OF WAY DATA, SEE RIGHT OF WAY RECORD MAPS AT DISTRICT OFFICE.

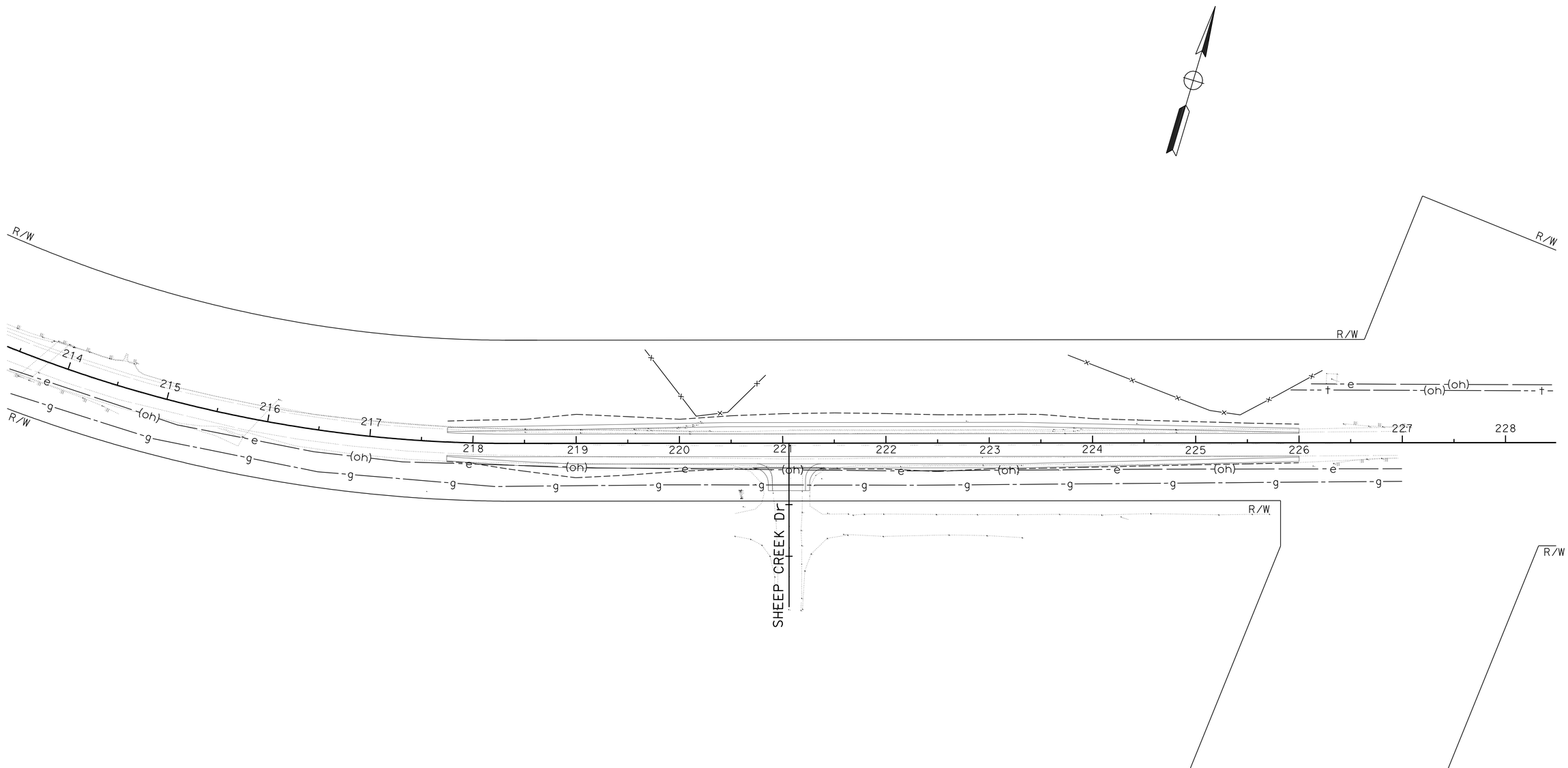

UTILITY PLAN

SCALE: 1" = 50'

U-5

THIS PLAN ACCURATE FOR UTILITY INFORMATION ONLY

STATE OF CALIFORNIA - DEPARTMENT OF TRANSPORTATION
Caltrans
DESIGN

FUNCTIONAL SUPERVISOR: MARIO AMANCIO
CALCULATED-DESIGNED BY: ALI TAHA
CHECKED BY: MARIO AMANCIO
REVISED BY
DATE REVISED

LAST REVISION 10-30-09
DATE PLOTTED => 29-JAN-2010
TIME PLOTTED => 14:22

Dist	COUNTY	ROUTE	POST MILES TOTAL PROJECT	SHEET No.	TOTAL SHEETS
08	SBd	2	0.9/2.4	30	94

REGISTERED CIVIL ENGINEER 10-30-09 DATE

1-25-10
PLANS APPROVAL DATE

REGISTERED PROFESSIONAL ENGINEER TRAN HOANG No. 54996 Exp. 6-30-10 CIVIL STATE OF CALIFORNIA

THE STATE OF CALIFORNIA OR ITS OFFICERS OR AGENTS SHALL NOT BE RESPONSIBLE FOR THE ACCURACY OR COMPLETENESS OF SCANNED COPIES OF THIS PLAN SHEET.

LEGEND:

- CONSTRUCTION AREA
- CONSTRUCTION AREA SIGN (ONE POST)
- CONSTRUCTION AREA SIGN (TWO POST)
- (X) CONSTRUCTION AREA SIGN LETTER
- PORTABLE CHANGEABLE MESSAGE SIGN(PCMS)

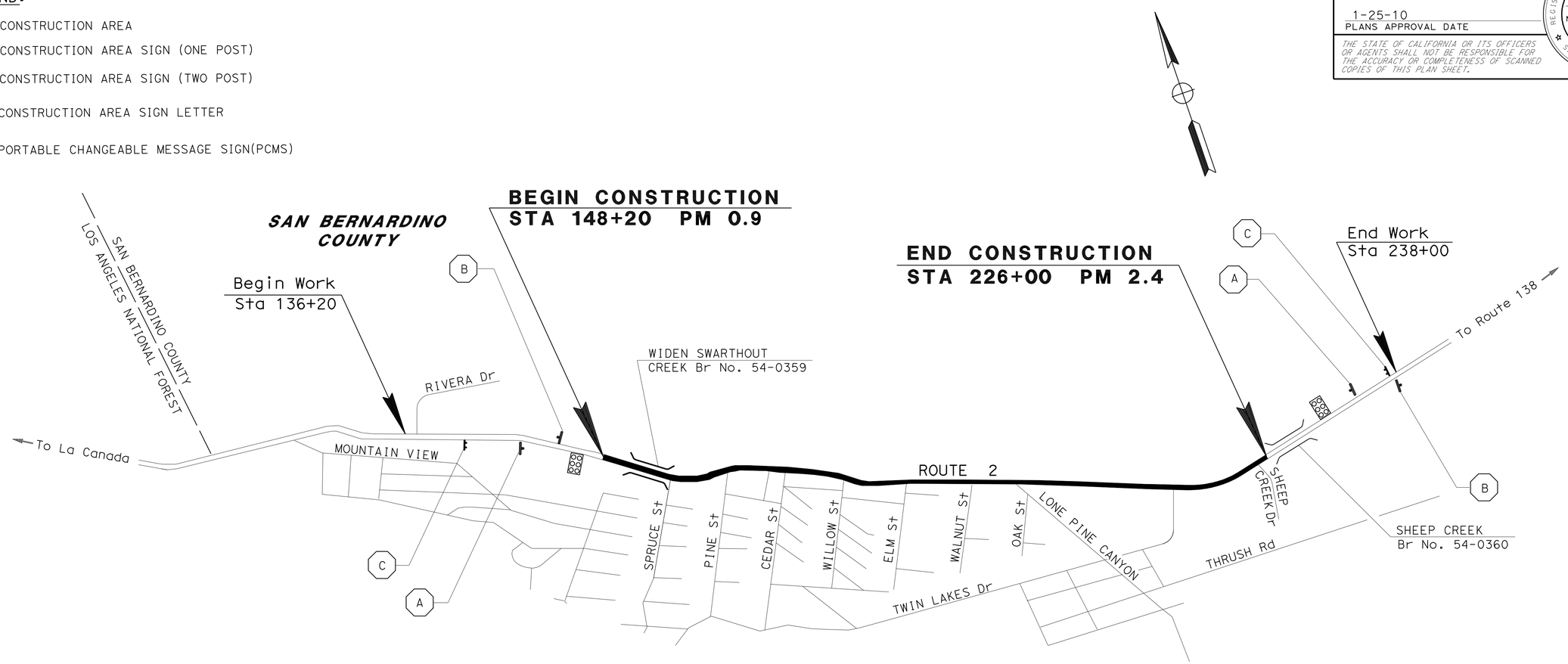

CONSTRUCTION AREA SIGNS

SIGN No.	SIGN CODE	PANEL SIZE (IN X IN)	No. OF POSTS POST SIZE (IN X IN)	SIGN MESSAGE	No. OF SIGNS ONE POST	No. OF SIGNS TWO POST
A	W20-1	36 X 36	1 - 4 X 6	ROAD WORK AHEAD	2	
B	G20-2	36 X 18	1 - 4 X 4	END ROAD WORK	2	
C	C40(CA)	72 X 36	2 - 4 X 6	TRAFFIC FINES DOUBLED IN CONSTRUCTION ZONE		2

PCMS
EA
2

NOTES:

1. LOCATIONS OF CONSTRUCTION AREA SIGNS, PCMS ARE APPROXIMATE. EXACT LOCATIONS OF THE CONSTRUCTION AREA SIGNS AND PCMS WILL BE DETERMINED BY THE ENGINEER.
2. CONTRACTOR SHALL MAINTAIN AND PROVIDE TRAFFIC ACCESS TO LOCAL BUSINESSES.

CONSTRUCTION AREA SIGNS

NO SCALE

CS-1

THIS PLAN ACCURATE FOR CONSTRUCTION AREA SIGN WORK ONLY

REVISED BY | DATE REVISED
DARYUSH NAMI | LARRY SARTORI
CALCULATED-DESIGNED BY | CHECKED BY
FUNCTIONAL SUPERVISOR: LARRY SARTORI

STATE OF CALIFORNIA - DEPARTMENT OF TRANSPORTATION
Caltrans TRAFFIC DESIGN B

LAST REVISION 10-30-09 | DATE PLOTTED => 29-JAN-2010 | TIME PLOTTED => 14:22

Dist	COUNTY	ROUTE	POST MILES TOTAL PROJECT	SHEET No.	TOTAL SHEETS
08	SBd	2	0.9/2.4	31	94

REGISTERED CIVIL ENGINEER 10-30-09 DATE

1-25-10
PLANS APPROVAL DATE

REGISTERED PROFESSIONAL ENGINEER TRAN HOANG No. 54996 Exp. 6-30-10 CIVIL STATE OF CALIFORNIA

THE STATE OF CALIFORNIA OR ITS OFFICERS OR AGENTS SHALL NOT BE RESPONSIBLE FOR THE ACCURACY OR COMPLETENESS OF SCANNED COPIES OF THIS PLAN SHEET.

NOTE: FOR COMPLETE RIGHT OF WAY DATA, SEE RIGHT OF WAY RECORD MAPS AT DISTRICT OFFICE.

LEGEND:

- CONSTRUCTION AREA
- ROUTE 2 WB CONSTRUCTION AREA SPRUCE LOCATION STAGE 1 PHASE 1
- CONSTRUCTION AREA SIGN
- DIRECTION OF TRAVEL
- (xx) TEMPORARY STRIPING (PAINT) DETAIL No.
- CHANNELIZERS @ 15' SPACING (OR AS NOTED)
- SIGN ON TYPE II BARRICADE @ 50' SPACING

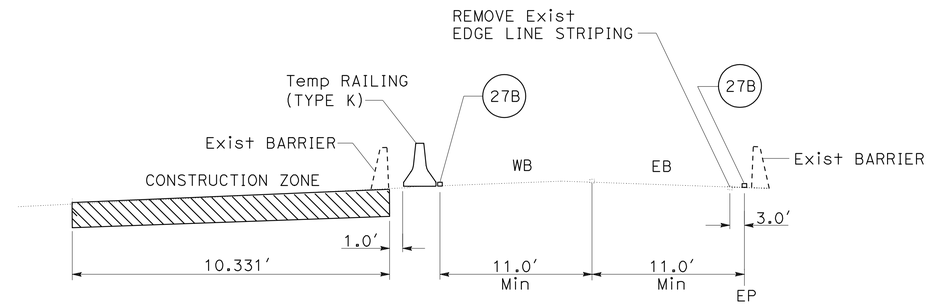

SECTION A-A

SEE ALSO SHEET X-1
SWARTHOUT CREEK BRIDGE

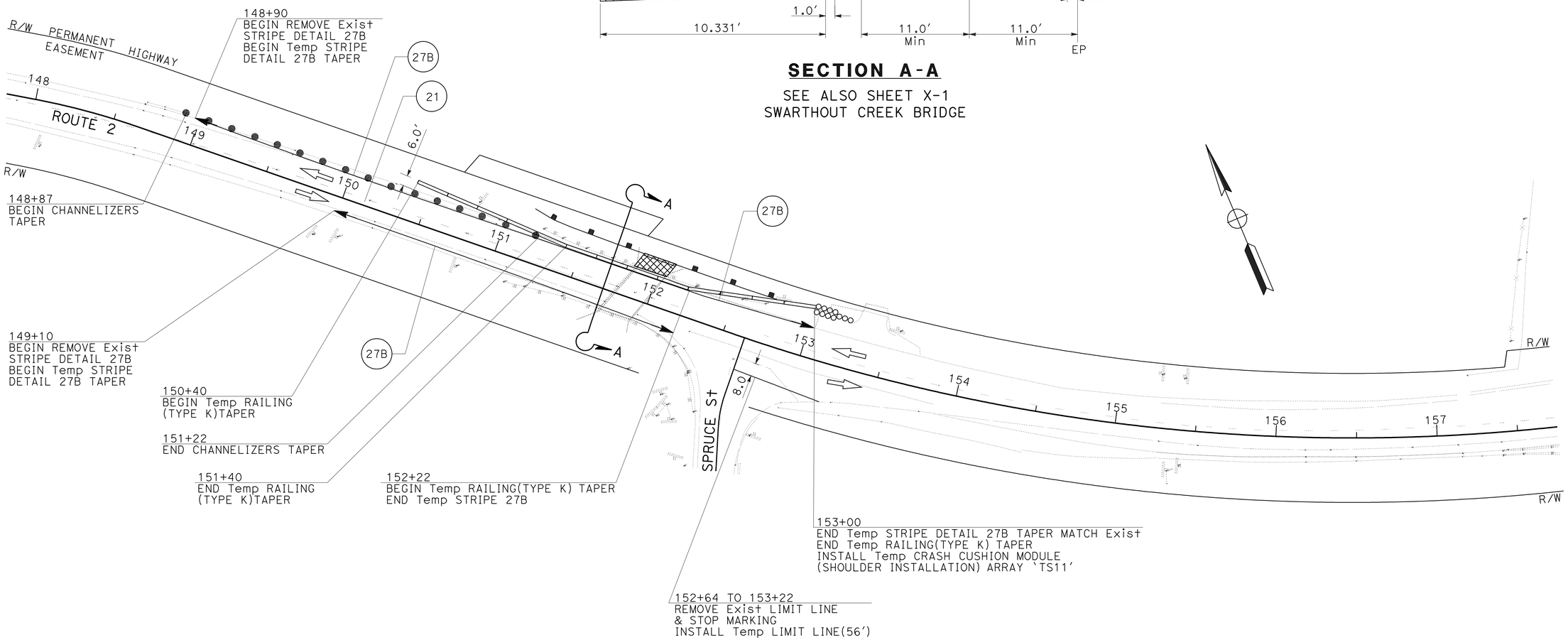

ROUTE 2 CONSTRUCTION ZONE SPRUCE LOCATION

STAGE 1 WB PHASE 1

Sta 151+78.7 TO 151+97.4

NOTE:

1. FOR SETTING THE TEMPORARY RAILING, CHANNELIZERS, CRASH CUSHIONS, AND TEMPORARY STRIPING REFER TO STANDARD PLAN T13 FOR TRAFFIC CONTROL REQUIREMENT.
2. FOR STAGE 1 PHASE 2 FROM Sta 148+20 TO Sta 157+50, USE TRAFFIC CONTROL SYSTEM T13 WHEN ACTUAL WORK IS IN PROGRESS.

TRAFFIC HANDLING PLAN

NO SCALE

TH-1

THIS PLAN ACCURATE FOR TRAFFIC HANDLING WORK ONLY

STATE OF CALIFORNIA - DEPARTMENT OF TRANSPORTATION
Caltrans TRAFFIC DESIGN B

FUNCTIONAL SUPERVISOR: LARRY SARTORI
CALCULATED-DESIGNED BY: DARYUSH NAMI
CHECKED BY: LARRY SARTORI
REVISED BY
DATE REVISED

LAST REVISION 10-30-09
DATE PLOTTED => 29-JAN-2010
TIME PLOTTED => 14:22

Dist	COUNTY	ROUTE	POST MILES TOTAL PROJECT	SHEET No.	TOTAL SHEETS
08	SBd	2	0.9/2.4	32	94

REGISTERED CIVIL ENGINEER 10-30-09 DATE

1-25-10
PLANS APPROVAL DATE

REGISTERED PROFESSIONAL ENGINEER TRAN HOANG No. 54996 Exp. 6-30-10 CIVIL STATE OF CALIFORNIA

THE STATE OF CALIFORNIA OR ITS OFFICERS OR AGENTS SHALL NOT BE RESPONSIBLE FOR THE ACCURACY OR COMPLETENESS OF SCANNED COPIES OF THIS PLAN SHEET.

NOTE: FOR COMPLETE RIGHT OF WAY DATA, SEE RIGHT OF WAY RECORD MAPS AT DISTRICT OFFICE.

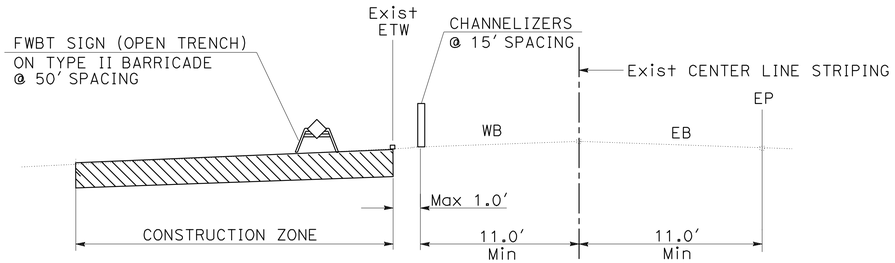

SECTION B-B

SEE ALSO SHEET X-1

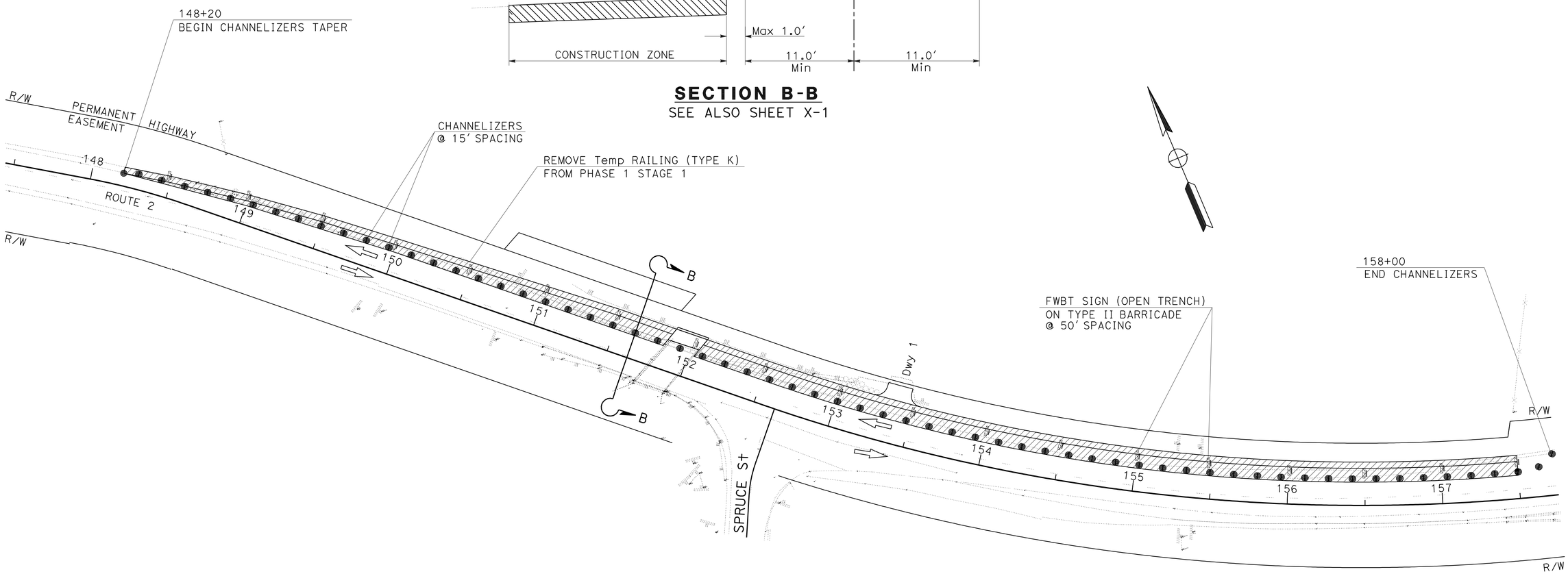

ROUTE 2 CONSTRUCTION ZONE SPRUCE LOCATION

STAGE 1 WB PHASE 2

Sta 148+20 TO Sta 157+50

NOTE:

1. FOR STAGE 1 PHASE 2 FROM Sta 148+20 TO Sta 157+50, USE TRAFFIC CONTROL SYSTEM T13, WHEN ACTUAL WORK IS IN PROGRESS.

THIS PLAN ACCURATE FOR TRAFFIC HANDLING WORK ONLY

TRAFFIC HANDLING PLAN

NO SCALE

TH-2

STATE OF CALIFORNIA - DEPARTMENT OF TRANSPORTATION
Caltrans® TRAFFIC DESIGN B

FUNCTIONAL SUPERVISOR: LARRY SARTORI
CALCULATED-DESIGNED BY: DARYUSH NAMI
CHECKED BY: LARRY SARTORI
REVISED BY
DATE REVISED

LAST REVISION 10-30-09
DATE PLOTTED => 29-JAN-2010
TIME PLOTTED => 14:22

Dist	COUNTY	ROUTE	POST MILES TOTAL PROJECT	SHEET No.	TOTAL SHEETS
08	SBd	2	0.9/2.4	33	94

REGISTERED CIVIL ENGINEER 10-30-09 DATE

1-25-10
PLANS APPROVAL DATE

REGISTERED PROFESSIONAL ENGINEER TRAN HOANG No. 54996 Exp. 6-30-10 CIVIL STATE OF CALIFORNIA

THE STATE OF CALIFORNIA OR ITS OFFICERS OR AGENTS SHALL NOT BE RESPONSIBLE FOR THE ACCURACY OR COMPLETENESS OF SCANNED COPIES OF THIS PLAN SHEET.

NOTE: FOR COMPLETE RIGHT OF WAY DATA, SEE RIGHT OF WAY RECORD MAPS AT DISTRICT OFFICE.

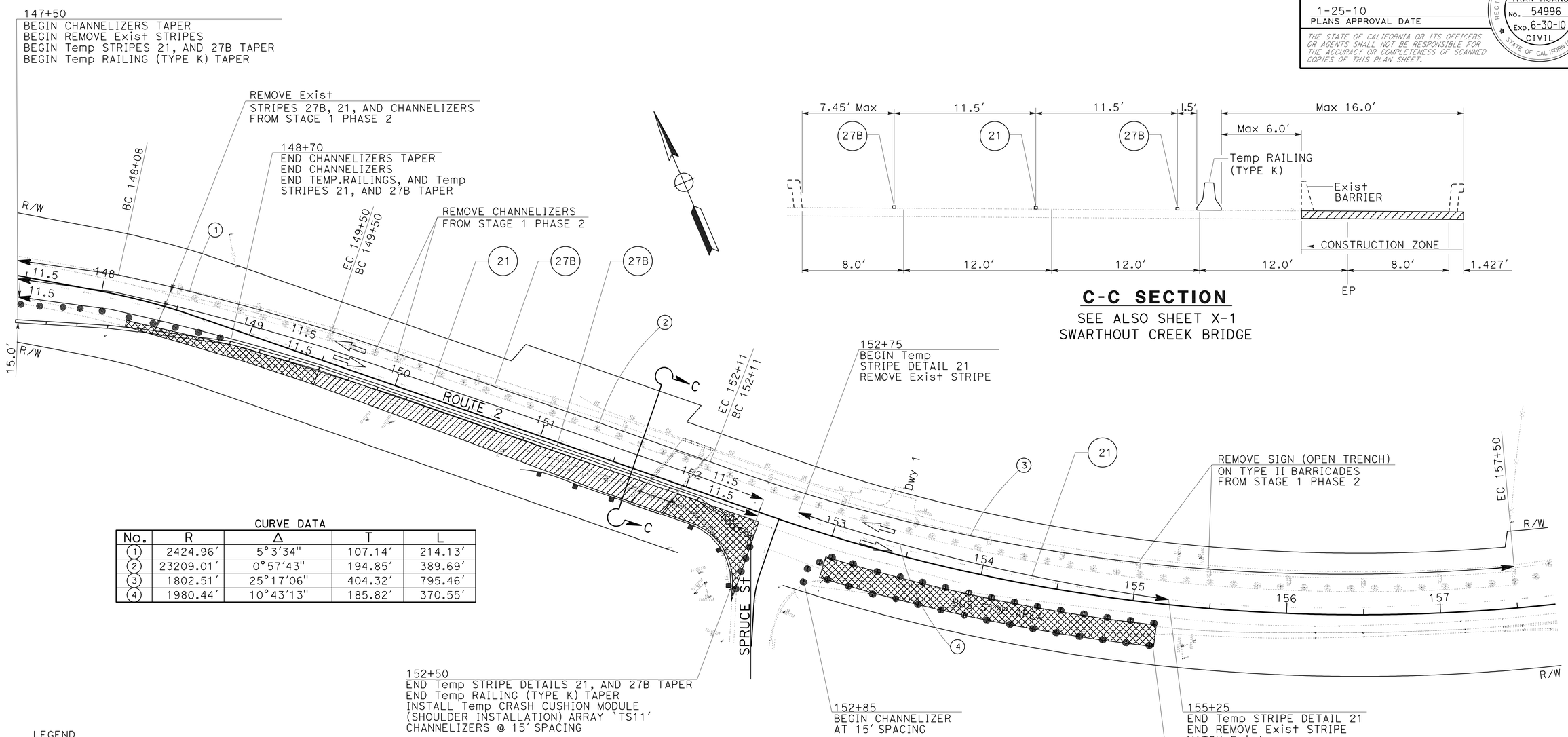

C-C SECTION

SEE ALSO SHEET X-1
SWARTHOUT CREEK BRIDGE

CURVE DATA

No.	R	Δ	T	L
1	2424.96'	5°3'34"	107.14'	214.13'
2	23209.01'	0°57'43"	194.85'	389.69'
3	1802.51'	25°17'06"	404.32'	795.46'
4	1980.44'	10°43'13"	185.82'	370.55'

LEGEND

EB CONSTRUCTION PHASE 1

EB CONSTRUCTION PHASE 2

ROUTE 2 EB CONSTRUCTION ZONE SPRUCE LOCATION

STAGE 2 EB PHASE 1 AND PHASE 2

Sta 147+50 TO 157+50

NOTES:

1. FOR SETTING THE Temp RAILING, CHANNELIZERS, CRASH CUSHIONS, AND Temp STRIPING REFER TO STANDARD PLAN T13 FOR TRAFFIC CONTROL REQUIREMENT.
2. FOR STAGE 2 PHASE 2 FROM Sta 148+20 TO Sta 149+50, AND FROM Sta 152+00 TO 90' SOUTH OF Sta 152+50 , USE TRAFFIC CONTROL SYSTEM T13, WHEN ACTUAL WORK IS IN PROGRESS AS NEEDED.
3. FOR CONSTRUCTION ON BUS STOP FROM Sta 153+00 TO Sta 155+20, ALSO USE TRAFFIC CONTROL T13 AS NEEDED.

TRAFFIC HANDLING PLAN

NO SCALE

TH-3

THIS PLAN ACCURATE FOR TRAFFIC HANDLING WORK ONLY

STATE OF CALIFORNIA - DEPARTMENT OF TRANSPORTATION
Caltrans TRAFFIC DESIGN B

FUNCTIONAL SUPERVISOR: LARRY SARTORI
CALCULATED-DESIGNED BY: DARYUSH NAMI
CHECKED BY: LARRY SARTORI
REVISED BY / DATE REVISED

LAST REVISION 10-30-09
DATE PLOTTED => 29-JAN-2010
TIME PLOTTED => 14:22

Dist	COUNTY	ROUTE	POST MILES TOTAL PROJECT	SHEET No.	TOTAL SHEETS
08	SBd	2	0.9/2.4	34	94

REGISTERED CIVIL ENGINEER 10-30-09 DATE

1-25-10
PLANS APPROVAL DATE

REGISTERED PROFESSIONAL ENGINEER TRAN HOANG No. 54996 Exp. 6-30-10 CIVIL STATE OF CALIFORNIA

THE STATE OF CALIFORNIA OR ITS OFFICERS OR AGENTS SHALL NOT BE RESPONSIBLE FOR THE ACCURACY OR COMPLETENESS OF SCANNED COPIES OF THIS PLAN SHEET.

NOTE: FOR COMPLETE RIGHT OF WAY DATA, SEE RIGHT OF WAY RECORD MAPS AT DISTRICT OFFICE.

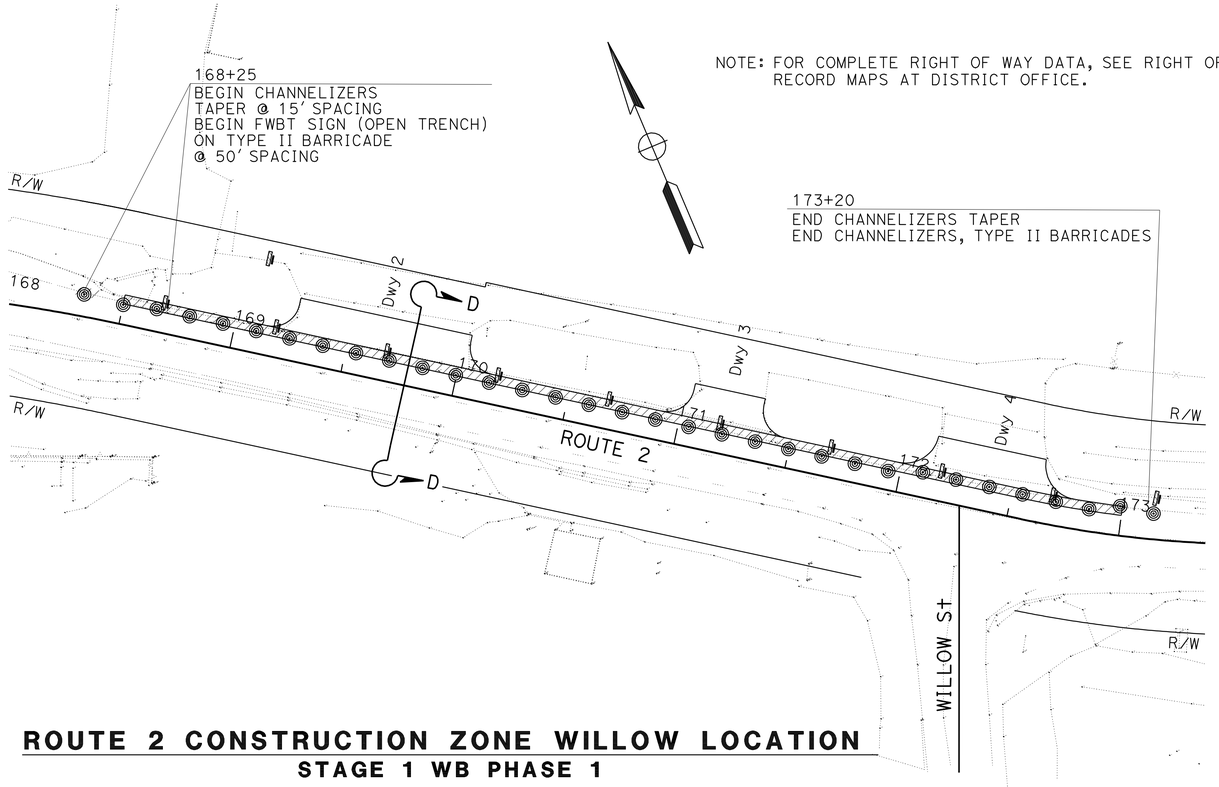

ROUTE 2 CONSTRUCTION ZONE WILLOW LOCATION

STAGE 1 WB PHASE 1

Sta 168+50 TO 173+00 Lt

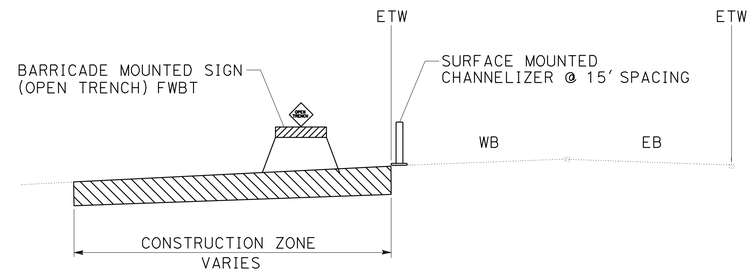

SECTION D-D

Sta 168+50 TO 173+00 Lt

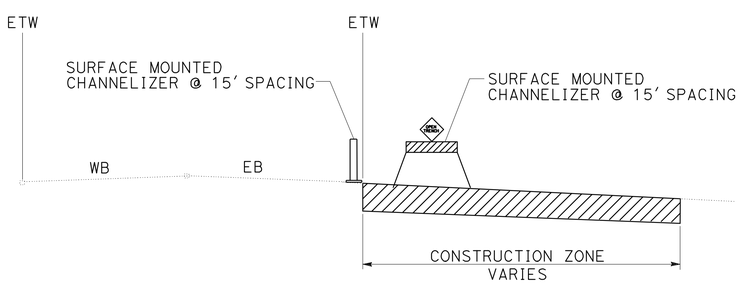

SECTION E-E

Sta 168+50 TO 172+00 Rt

NOTE:

1. USE STANDARD PLAN T13 FOR TRAFFIC CONTROL ON ROUTE 2 FOR LANE CLOSURES WHEN ACTUAL WORK IS IN PROGRESS.

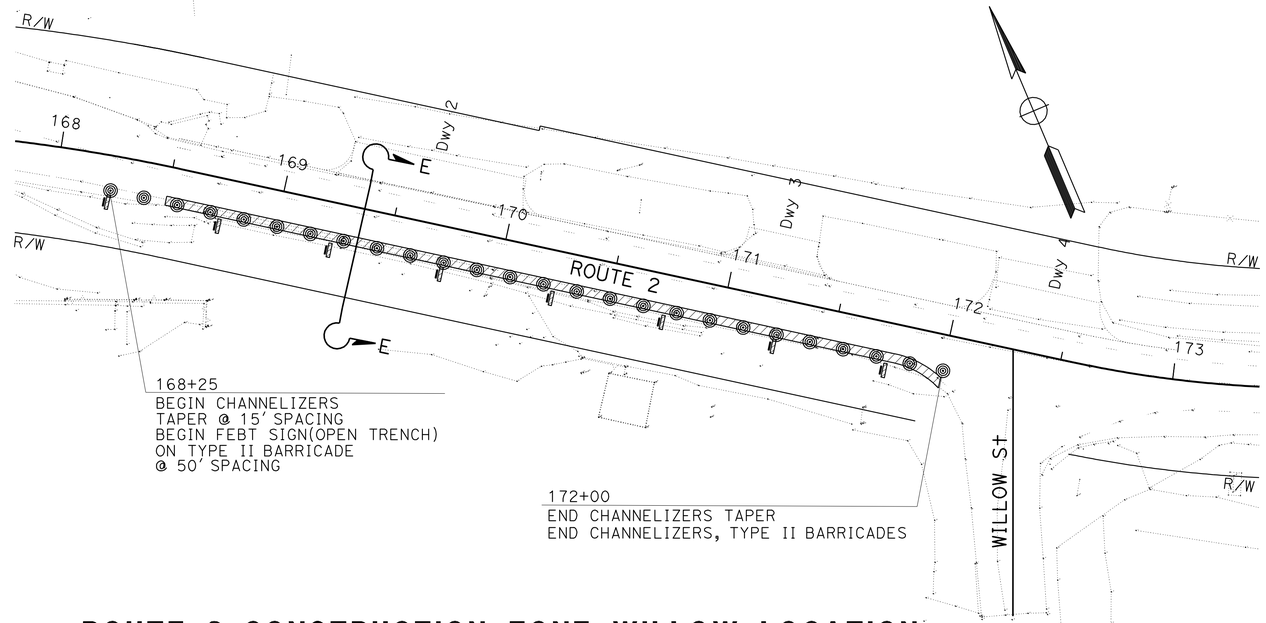

ROUTE 2 CONSTRUCTION ZONE WILLOW LOCATION

STAGE 2 EB PHASE 2

TRAFFIC HANDLING PLAN

NO SCALE

TH-4

THIS PLAN ACCURATE FOR TRAFFIC HANDLING WORK ONLY

STATE OF CALIFORNIA - DEPARTMENT OF TRANSPORTATION
Caltrans TRAFFIC DESIGN B

FUNCTIONAL SUPERVISOR: LARRY SARTORI
CALCULATED-DESIGNED BY: DARYUSH NAMI
CHECKED BY: LARRY SARTORI
REVISED BY / DATE REVISED

LAST REVISION 10-30-09
DATE PLOTTED => 29-JAN-2010
TIME PLOTTED => 14:22

Dist	COUNTY	ROUTE	POST MILES TOTAL PROJECT	SHEET No.	TOTAL SHEETS
08	SBd	2	0.9/2.4	35	94

REGISTERED CIVIL ENGINEER 10-30-09 DATE

1-25-10
PLANS APPROVAL DATE

REGISTERED PROFESSIONAL ENGINEER TRAN HOANG No. 54996 Exp. 6-30-10 CIVIL STATE OF CALIFORNIA

THE STATE OF CALIFORNIA OR ITS OFFICERS OR AGENTS SHALL NOT BE RESPONSIBLE FOR THE ACCURACY OR COMPLETENESS OF SCANNED COPIES OF THIS PLAN SHEET.

NOTE: FOR COMPLETE RIGHT OF WAY DATA, SEE RIGHT OF WAY RECORD MAPS AT DISTRICT OFFICE.

NOTE:

1. USE STANDARD PLAN T13 FOR TRAFFIC CONTROL ON ROUTE 2 FOR LANE CLOSURES WHEN ACTUAL WORK IS IN PROGRESS.

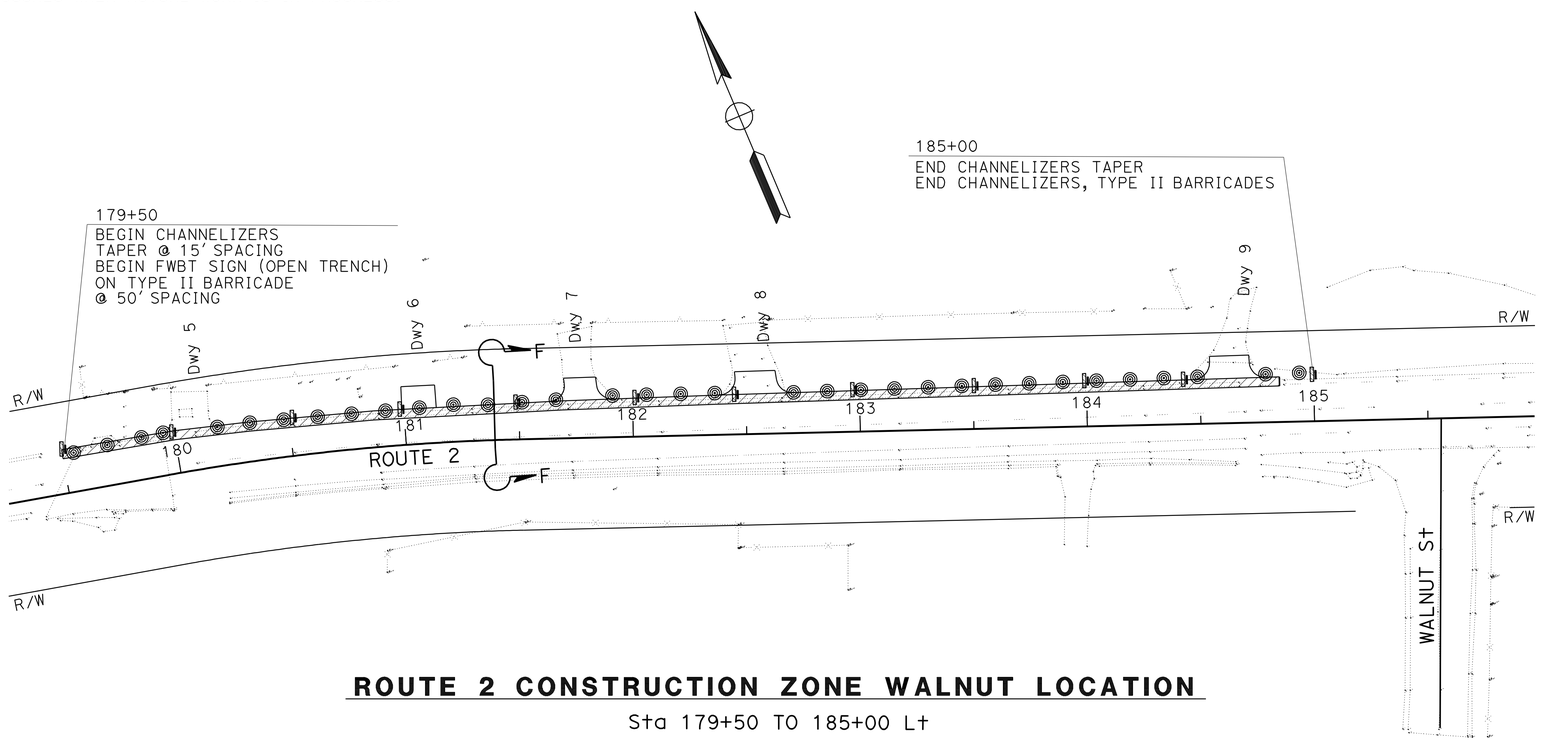

ROUTE 2 CONSTRUCTION ZONE WALNUT LOCATION

Sta 179+50 TO 185+00 Lt

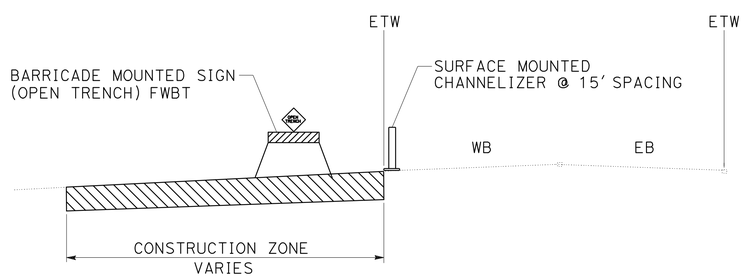

SECTION F-F

Sta 179+50 TO 185+00 Lt

THIS PLAN ACCURATE FOR TRAFFIC HANDLING WORK ONLY

TRAFFIC HANDLING PLAN

NO SCALE

TH-5

STATE OF CALIFORNIA - DEPARTMENT OF TRANSPORTATION
Caltrans TRAFFIC DESIGN B

FUNCTIONAL SUPERVISOR: LARRY SARTORI
CALCULATED-DESIGNED BY: DARYUSH NAMI
CHECKED BY: LARRY SARTORI
REVISED BY
DATE REVISED

LAST REVISION 10-30-09
DATE PLOTTED => 29-JAN-2010
TIME PLOTTED => 14:23

Dist	COUNTY	ROUTE	POST MILES TOTAL PROJECT	SHEET No.	TOTAL SHEETS
08	SBd	2	0.9/2.4	36	94

REGISTERED CIVIL ENGINEER 10-30-09 DATE

1-25-10
PLANS APPROVAL DATE

REGISTERED PROFESSIONAL ENGINEER TRAN HOANG No. 54996 Exp. 6-30-10 CIVIL STATE OF CALIFORNIA

THE STATE OF CALIFORNIA OR ITS OFFICERS OR AGENTS SHALL NOT BE RESPONSIBLE FOR THE ACCURACY OR COMPLETENESS OF SCANNED COPIES OF THIS PLAN SHEET.

NOTE: FOR COMPLETE RIGHT OF WAY DATA, SEE RIGHT OF WAY RECORD MAPS AT DISTRICT OFFICE.

NOTE:

1. USE STANDARD PLAN T13 FOR TRAFFIC CONTROL ON ROUTE 2 FOR LANE CLOSURES WHEN ACTUAL WORK IS IN PROGRESS.

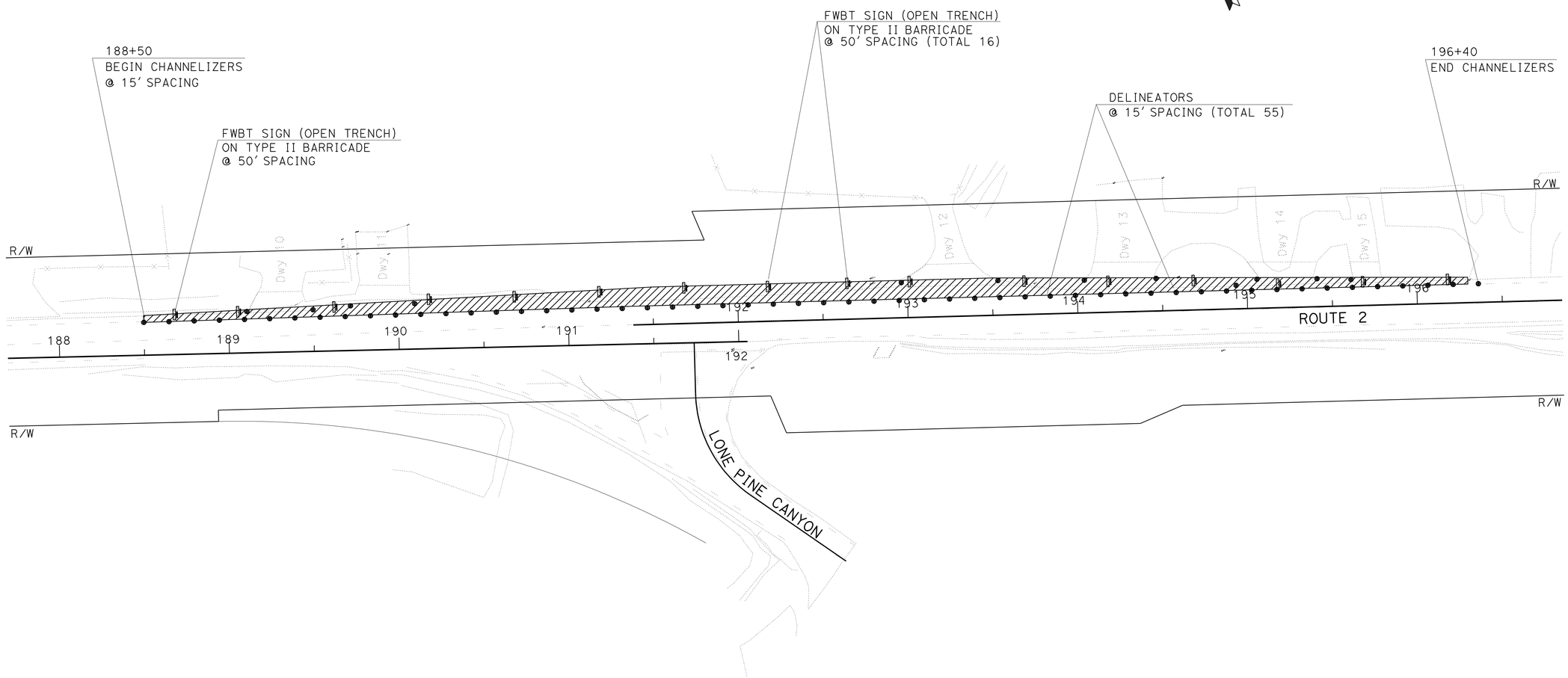

STAGE 1 TRAFFIC HANDLING (LONE PINE LOCATION)

THIS PLAN ACCURATE FOR TRAFFIC HANDLING WORK ONLY

TRAFFIC HANDLING PLAN

NO SCALE

TH-6

STATE OF CALIFORNIA - DEPARTMENT OF TRANSPORTATION

Caltrans® **TRAFFIC DESIGN B**

FUNCTIONAL SUPERVISOR: LARRY SARTORI

CALCULATED-DESIGNED BY: DARYUSH NAMI

CHECKED BY: LARRY SARTORI

REVISED BY

DATE REVISED

LAST REVISION 10-30-09

DATE PLOTTED => 29-JAN-2010

TIME PLOTTED => 14:23

Dist	COUNTY	ROUTE	POST MILES TOTAL PROJECT	SHEET No.	TOTAL SHEETS
08	SBd	2	0.9/2.4	37	94

REGISTERED CIVIL ENGINEER 10-30-09 DATE

1-25-10
PLANS APPROVAL DATE

REGISTERED PROFESSIONAL ENGINEER
TRAN HOANG
No. 54996
Exp. 6-30-10
CIVIL
STATE OF CALIFORNIA

THE STATE OF CALIFORNIA OR ITS OFFICERS OR AGENTS SHALL NOT BE RESPONSIBLE FOR THE ACCURACY OR COMPLETENESS OF SCANNED COPIES OF THIS PLAN SHEET.

NOTE: FOR COMPLETE RIGHT OF WAY DATA, SEE RIGHT OF WAY RECORD MAPS AT DISTRICT OFFICE.

NOTE:

1. USE STANDARD PLAN T13 FOR TRAFFIC CONTROL ON ROUTE 2 FOR LANE CLOSURES DURING CONSTRUCTION ONLY.

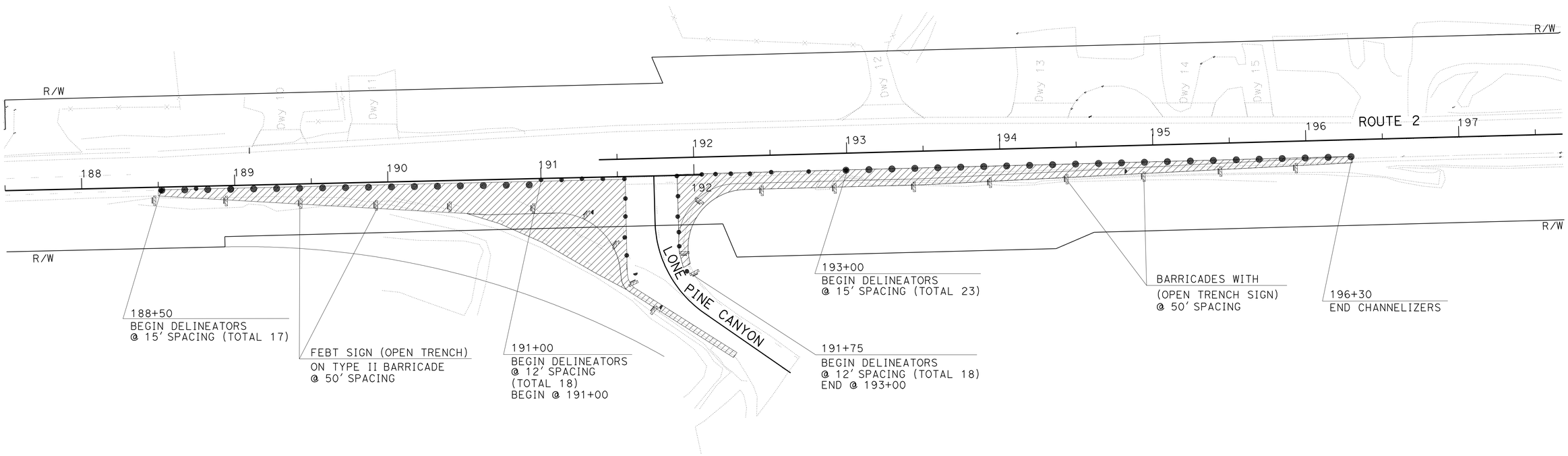

STAGE 2 TRAFFIC HANDLING (LONE PINE LOCATION)

THIS PLAN ACCURATE FOR TRAFFIC HANDLING WORK ONLY

TRAFFIC HANDLING PLAN

NO SCALE

TH-7

REVISED BY	DATE REVISED

CALCULATED-DESIGNED BY	DARYUSH NAMI
CHECKED BY	LARRY SARTORI
FUNCTIONAL SUPERVISOR	LARRY SARTORI

STATE OF CALIFORNIA - DEPARTMENT OF TRANSPORTATION
Caltrans TRAFFIC DESIGN B

LAST REVISION 10-30-09
DATE PLOTTED => 29-JAN-2010
TIME PLOTTED => 14:23

Dist	COUNTY	ROUTE	POST MILES TOTAL PROJECT	SHEET No.	TOTAL SHEETS
08	SBd	2	0.9/2.4	38	94

REGISTERED CIVIL ENGINEER 10-30-09 DATE

1-25-10
PLANS APPROVAL DATE

REGISTERED PROFESSIONAL ENGINEER TRAN HOANG No. 54996 Exp. 6-30-10 CIVIL STATE OF CALIFORNIA

THE STATE OF CALIFORNIA OR ITS OFFICERS OR AGENTS SHALL NOT BE RESPONSIBLE FOR THE ACCURACY OR COMPLETENESS OF SCANNED COPIES OF THIS PLAN SHEET.

NOTE: FOR COMPLETE RIGHT OF WAY DATA, SEE RIGHT OF WAY RECORD MAPS AT DISTRICT OFFICE.

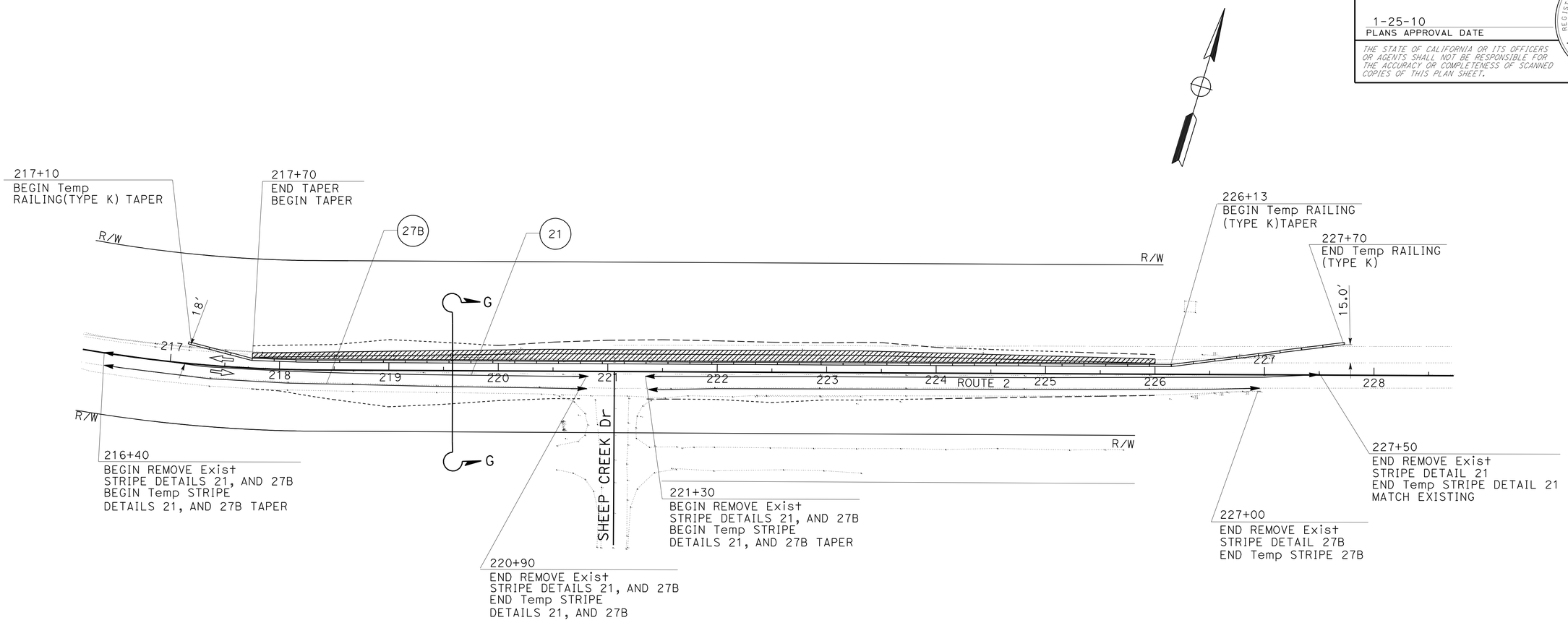

ROUTE 2 CONSTRUCTION ZONE SHEEP CREEK LOCATION

STAGE 1 WB

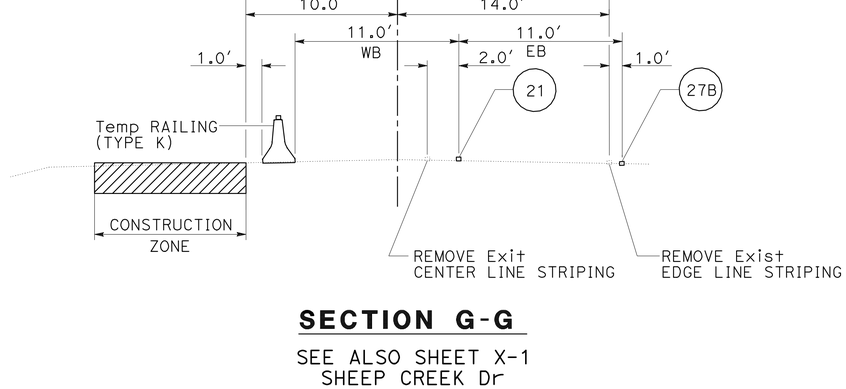

SECTION G-G

SEE ALSO SHEET X-1
SHEEP CREEK Dr

THIS PLAN ACCURATE FOR TRAFFIC HANDLING WORK ONLY

TRAFFIC HANDLING PLAN

NO SCALE

TH-8

REVISED BY	DATE REVISED

CALCULATED-DESIGNED BY	CHECKED BY
DARYUSH NAMI	LARRY SARTORI

FUNCTIONAL SUPERVISOR: LARRY SARTORI

STATE OF CALIFORNIA - DEPARTMENT OF TRANSPORTATION
Caltrans® TRAFFIC DESIGN B

LAST REVISION 10-30-09 | DATE PLOTTED => 29-JAN-2010 TIME PLOTTED => 14:23

Dist	COUNTY	ROUTE	POST MILES TOTAL PROJECT	SHEET No.	TOTAL SHEETS
08	SBd	2	0.9/2.4	39	94

REGISTERED CIVIL ENGINEER 10-30-09 DATE

1-25-10
PLANS APPROVAL DATE

REGISTERED PROFESSIONAL ENGINEER TRAN HOANG No. 54996 Exp. 6-30-10 CIVIL STATE OF CALIFORNIA

THE STATE OF CALIFORNIA OR ITS OFFICERS OR AGENTS SHALL NOT BE RESPONSIBLE FOR THE ACCURACY OR COMPLETENESS OF SCANNED COPIES OF THIS PLAN SHEET.

NOTE: FOR COMPLETE RIGHT OF WAY DATA, SEE RIGHT OF WAY RECORD MAPS AT DISTRICT OFFICE.

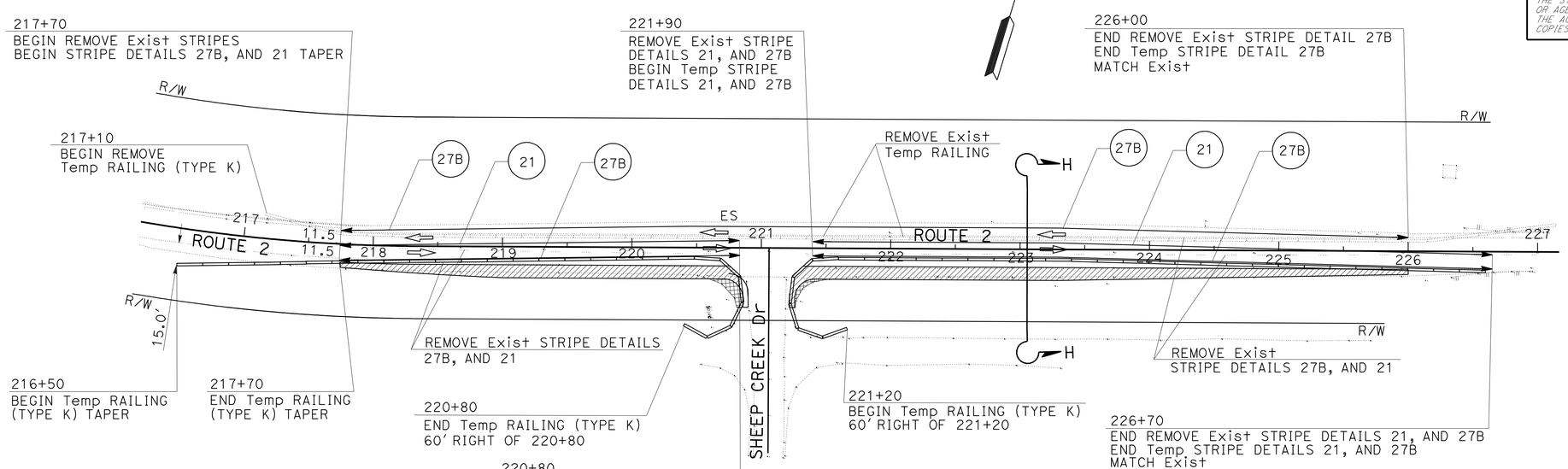

ROUTE 2 CONSTRUCTION ZONE SHEEP CREEK LOCATION

STAGE 2 EB PHASE 1

STA 217+75 TO 226+00

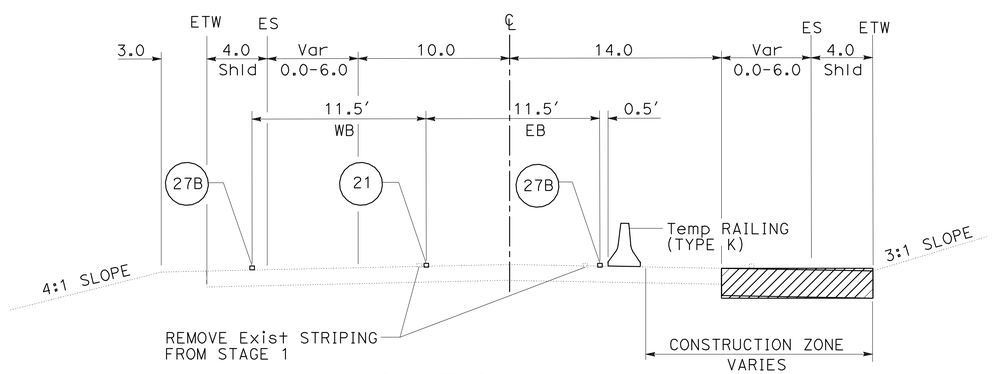

SECTION H-H

SEE ALSO SHEET X-1
Sta 217+75 TO 226+00

NOTES:

1. FOR SETTING THE TEMPORARY RAILING, CHANNELIZERS, CRASH CUSHIONS, AND TEMPORARY STRIPING REFER TO STANDARD PLAN T13 FOR TRAFFIC CONTROL REQUIRMENT.
2. FOR STAGE 2 PHASE 2 ACTUAL WORK FROM Sta 217+70 TO Sta 226+00, USE TRAFFIC CONTROL SYSTEM T13.

THIS PLAN ACCURATE FOR TRAFFIC HANDLING WORK ONLY

TRAFFIC HANDLING PLAN

NO SCALE

TH-9

STATE OF CALIFORNIA - DEPARTMENT OF TRANSPORTATION
Caltrans® TRAFFIC DESIGN B

FUNCTIONAL SUPERVISOR: LARRY SARTORI
CALCULATED-DESIGNED BY: DARYUSH NAMI
CHECKED BY: LARRY SARTORI
REVISED BY
DATE REVISED

LAST REVISION 10-30-09 | DATE PLOTTED => 29-JAN-2010 | TIME PLOTTED => 14:23

Dist	COUNTY	ROUTE	POST MILES TOTAL PROJECT	SHEET No.	TOTAL SHEETS
08	SBd	2	0.9/2.4	40	94

REGISTERED CIVIL ENGINEER 10-30-09 DATE

1-25-10
PLANS APPROVAL DATE

REGISTERED PROFESSIONAL ENGINEER
TRAN HOANG
No. 54996
Exp. 6-30-10
CIVIL
STATE OF CALIFORNIA

THE STATE OF CALIFORNIA OR ITS OFFICERS OR AGENTS SHALL NOT BE RESPONSIBLE FOR THE ACCURACY OR COMPLETENESS OF SCANNED COPIES OF THIS PLAN SHEET.

TRAFFIC HANDLING QUANTITY

SHEET No.	TEMPORARY TRAFFIC STRIPE (PAINT)	TYPE II BARRICADE	CHANNELIZERS (SURFACE MOUNTED)	TEMPORARY RAILING (TYPE K)	TEMPORARY RAILING (TYPE K) MARKER (N)	TEMPORARY CRASH CUSHION MODULE
	FT	EA	EA	FT		EA
TH-1	760		16	260	13	11
TH-2		20	66			
TH-3	2250		48	500	25	11
TH-4		18	57			
TH-5		11	37			
TH-6		16	55			
TH-7		21	77			
TH-8	2170			1060	53	
TH-9	2700			1100	55	
TOTAL	7880	86	356	2920	146	22

(N) - NOT A SEPARATE PAY ITEM, FOR INFORMATION ONLY

TRAFFIC HANDLING QUANTITIES
THQ-1

STATE OF CALIFORNIA - DEPARTMENT OF TRANSPORTATION
Caltrans® TRAFFIC DESIGN B

FUNCTIONAL SUPERVISOR: LARRY SARTORI
CALCULATED-DESIGNED BY: DARYUSH NAMI
CHECKED BY: LARRY SARTORI
REVISED BY
DATE REVISED

LAST REVISION 10-30-09
DATE PLOTTED => 29-JAN-2010
TIME PLOTTED => 14:23

Dist	COUNTY	ROUTE	POST MILES TOTAL PROJECT	SHEET No.	TOTAL SHEETS
08	SBd	2	0.9/2.4	41	94

REGISTERED CIVIL ENGINEER 10-30-09 DATE

1-25-10
PLANS APPROVAL DATE

REGISTERED PROFESSIONAL ENGINEER TRAN HOANG No. 54996 Exp. 6-30-10 CIVIL STATE OF CALIFORNIA

THE STATE OF CALIFORNIA OR ITS OFFICERS OR AGENTS SHALL NOT BE RESPONSIBLE FOR THE ACCURACY OR COMPLETENESS OF SCANNED COPIES OF THIS PLAN SHEET.

NOTE: FOR COMPLETE RIGHT OF WAY DATA, SEE RIGHT OF WAY RECORD MAPS AT DISTRICT OFFICE.

LEGEND:

- CROSSWALK (1' WIDE STRIPES @ 45° EVERY 5 FEET)
- BEGIN/END TRAFFIC STRIPE
- DIRECTION OF TRAFFIC
- (XX) TRAFFIC STRIPE
- (XX) CURVE NUMBER
- MARKER
- TYPE IV ARROW

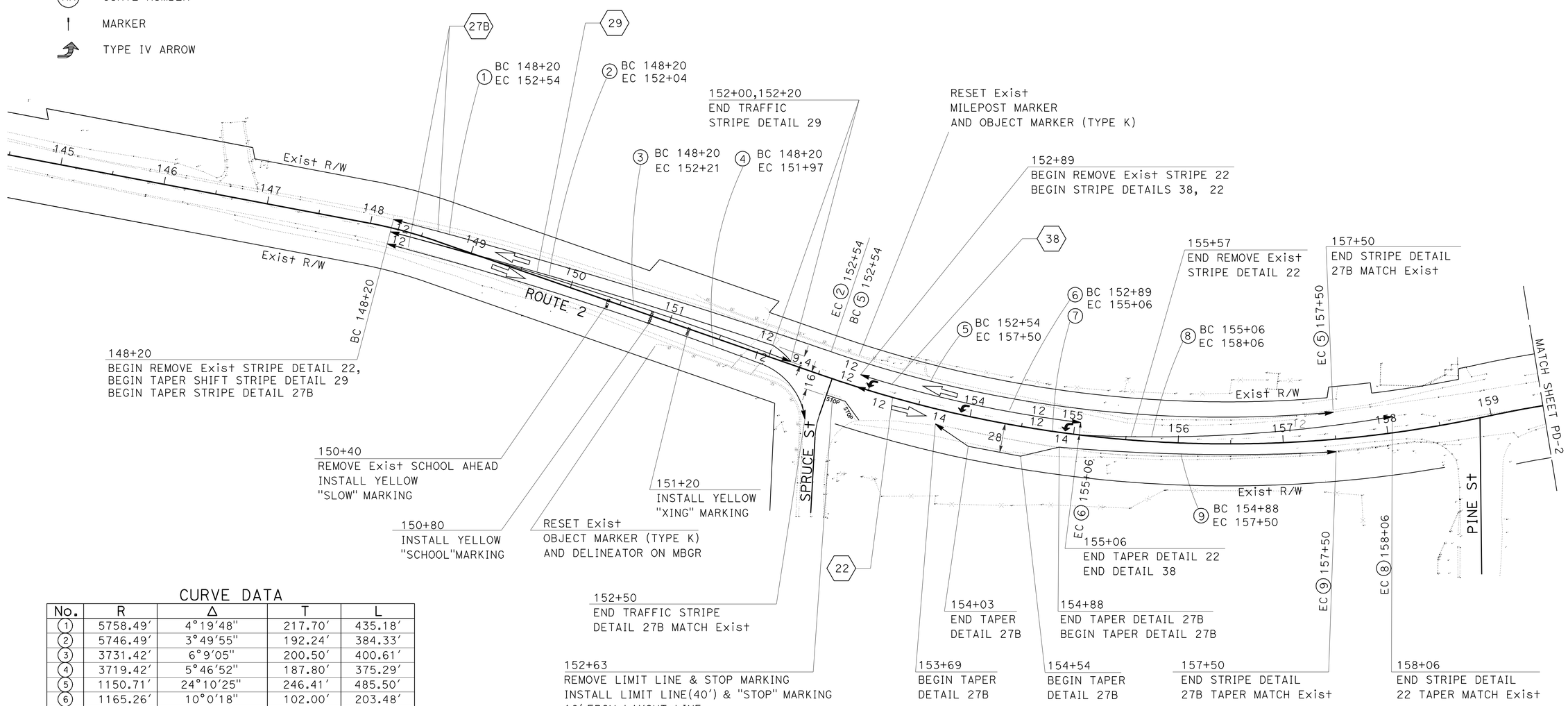

CURVE DATA

No.	R	Δ	T	L
1	5758.49'	4°19'48"	217.70'	435.18'
2	5746.49'	3°49'55"	192.24'	384.33'
3	3731.42'	6°9'05"	200.50'	400.61'
4	3719.42'	5°46'52"	187.80'	375.29'
5	1150.71'	24°10'25"	246.41'	485.50'
6	1165.26'	10°0'18"	102.00'	203.48'
7	1177.14'	10°0'18"	103.04'	205.55'
8	1345.03'	12°44'44"	150.22'	299.21'
9	1876.81'	8°3'23"	132.17'	263.90'

PAVEMENT DELINEATION PLAN

NO SCALE

PD-1

THIS PLAN ACCURATE FOR PAVEMENT DELINEATION WORK ONLY

STATE OF CALIFORNIA - DEPARTMENT OF TRANSPORTATION
Caltrans® TRAFFIC DESIGN B

FUNCTIONAL SUPERVISOR: LARRY SARTORI
CALCULATED-DESIGNED BY: DARYUSH NAMI
CHECKED BY: LARRY SARTORI
REVISED BY
DATE REVISED

LAST REVISION 10-30-09
DATE PLOTTED => 29-JAN-2010
TIME PLOTTED => 14:23

Dist	COUNTY	ROUTE	POST MILES TOTAL PROJECT	SHEET No.	TOTAL SHEETS
08	SBd	2	0.9/2.4	42	94

REGISTERED CIVIL ENGINEER 10-30-09 DATE

1-25-10
PLANS APPROVAL DATE

REGISTERED PROFESSIONAL ENGINEER
TRAN HOANG
No. 54996
Exp. 6-30-10
CIVIL
STATE OF CALIFORNIA

THE STATE OF CALIFORNIA OR ITS OFFICERS OR AGENTS SHALL NOT BE RESPONSIBLE FOR THE ACCURACY OR COMPLETENESS OF SCANNED COPIES OF THIS PLAN SHEET.

NOTE: FOR COMPLETE RIGHT OF WAY DATA, SEE RIGHT OF WAY RECORD MAPS AT DISTRICT OFFICE.

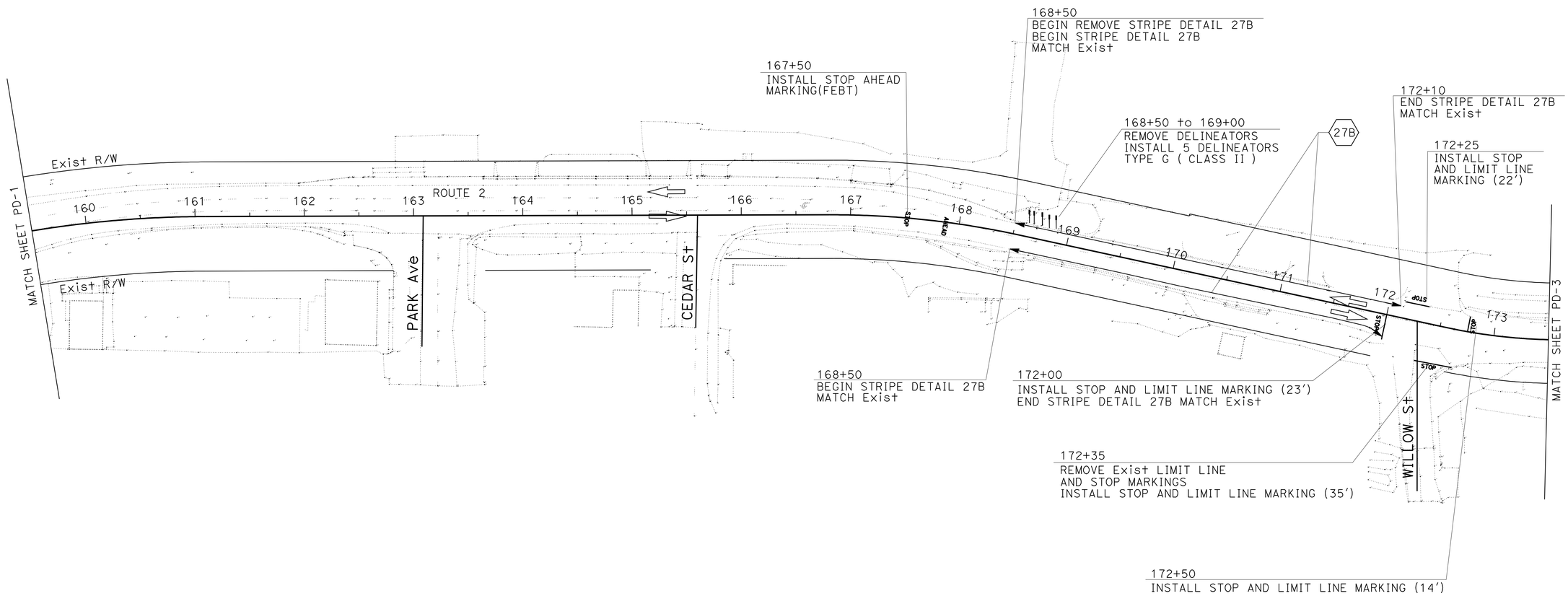

PAVEMENT DELINEATION PLAN

NO SCALE

PD-2

THIS PLAN ACCURATE FOR PAVEMENT DELINEATION WORK ONLY

STATE OF CALIFORNIA - DEPARTMENT OF TRANSPORTATION
Caltrans® TRAFFIC DESIGN B

FUNCTIONAL SUPERVISOR: LARRY SARTORI
CALCULATED-DESIGNED BY: DARYUSH NAMI
CHECKED BY: LARRY SARTORI
REVISED BY
DATE REVISED

LAST REVISION 10-30-09
DATE PLOTTED => 29-JAN-2010
TIME PLOTTED => 14:23

Dist	COUNTY	ROUTE	POST MILES TOTAL PROJECT	SHEET No.	TOTAL SHEETS
08	SBd	2	0.9/2.4	43	94

REGISTERED CIVIL ENGINEER 10-30-09 DATE

1-25-10
PLANS APPROVAL DATE

REGISTERED PROFESSIONAL ENGINEER TRAN HOANG No. 54996 Exp. 6-30-10 CIVIL STATE OF CALIFORNIA

THE STATE OF CALIFORNIA OR ITS OFFICERS OR AGENTS SHALL NOT BE RESPONSIBLE FOR THE ACCURACY OR COMPLETENESS OF SCANNED COPIES OF THIS PLAN SHEET.

NOTE: FOR COMPLETE RIGHT OF WAY DATA, SEE RIGHT OF WAY RECORD MAPS AT DISTRICT OFFICE.

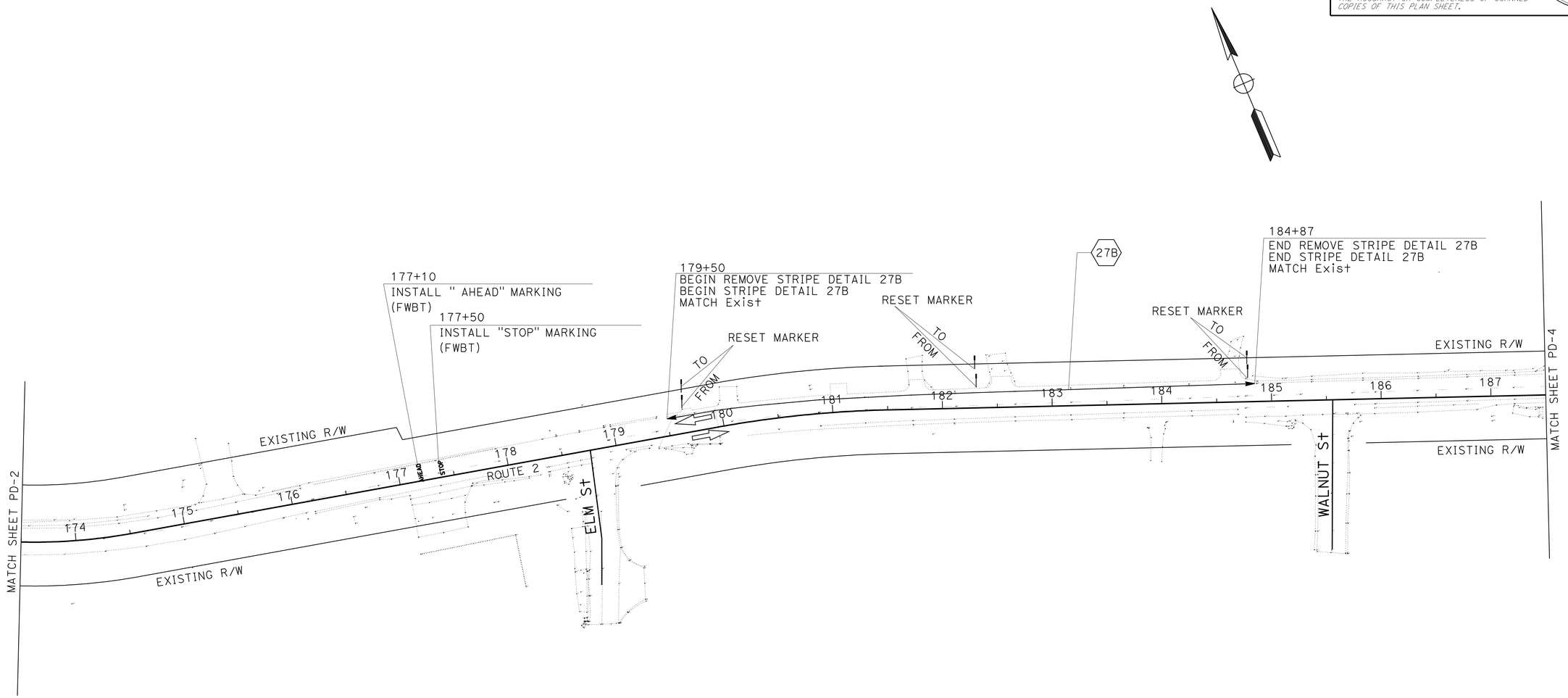

PAVEMENT DELINEATION PLAN

NO SCALE

PD-3

THIS PLAN ACCURATE FOR PAVEMENT DELINEATION WORK ONLY

STATE OF CALIFORNIA - DEPARTMENT OF TRANSPORTATION
Caltrans® TRAFFIC DESIGN B

FUNCTIONAL SUPERVISOR: LARRY SARTORI
CALCULATED-DESIGNED BY: DARYUSH NAMI
CHECKED BY: LARRY SARTORI
REVISED BY
DATE REVISED

LAST REVISION 10-30-09
DATE PLOTTED => 29-JAN-2010
TIME PLOTTED => 14:24

Dist	COUNTY	ROUTE	POST MILES TOTAL PROJECT	SHEET No.	TOTAL SHEETS
08	SBd	2	0.9/2.4	44	94

REGISTERED CIVIL ENGINEER 10-30-09 DATE

1-25-10
PLANS APPROVAL DATE

REGISTERED PROFESSIONAL ENGINEER TRAN HOANG No. 54996 Exp. 6-30-10 CIVIL STATE OF CALIFORNIA

THE STATE OF CALIFORNIA OR ITS OFFICERS OR AGENTS SHALL NOT BE RESPONSIBLE FOR THE ACCURACY OR COMPLETENESS OF SCANNED COPIES OF THIS PLAN SHEET.

NOTE: FOR COMPLETE RIGHT OF WAY DATA, SEE RIGHT OF WAY RECORD MAPS AT DISTRICT OFFICE.

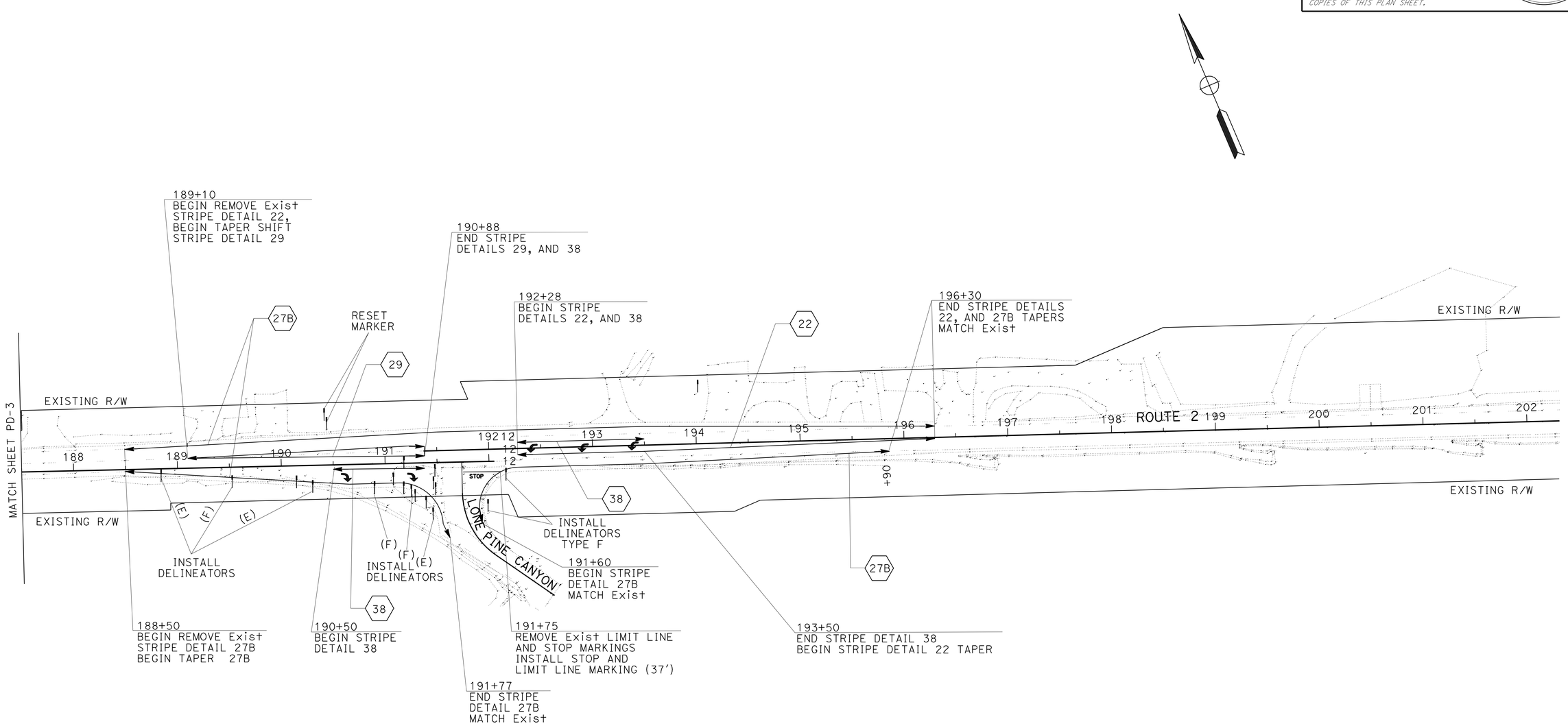

PAVEMENT DELINEATION PLAN

NO SCALE

PD-4

THIS PLAN ACCURATE FOR PAVEMENT DELINEATION WORK ONLY

STATE OF CALIFORNIA - DEPARTMENT OF TRANSPORTATION

Caltrans® **TRAFFIC DESIGN B**

FUNCTIONAL SUPERVISOR: LARRY SARTORI

CALCULATED-DESIGNED BY: DARYUSH NAMI

CHECKED BY: LARRY SARTORI

REVISED BY

DATE REVISED

LAST REVISION 10-30-09

DATE PLOTTED => 29-JAN-2010

TIME PLOTTED => 14:24

Dist	COUNTY	ROUTE	POST MILES TOTAL PROJECT	SHEET No.	TOTAL SHEETS
08	SBd	2	0.9/2.4	45	94

REGISTERED CIVIL ENGINEER 10-30-09 DATE

1-25-10
PLANS APPROVAL DATE

REGISTERED PROFESSIONAL ENGINEER TRAN HOANG No. 54996 Exp. 6-30-10 CIVIL STATE OF CALIFORNIA

THE STATE OF CALIFORNIA OR ITS OFFICERS OR AGENTS SHALL NOT BE RESPONSIBLE FOR THE ACCURACY OR COMPLETENESS OF SCANNED COPIES OF THIS PLAN SHEET.

NOTE: FOR COMPLETE RIGHT OF WAY DATA, SEE RIGHT OF WAY RECORD MAPS AT DISTRICT OFFICE.

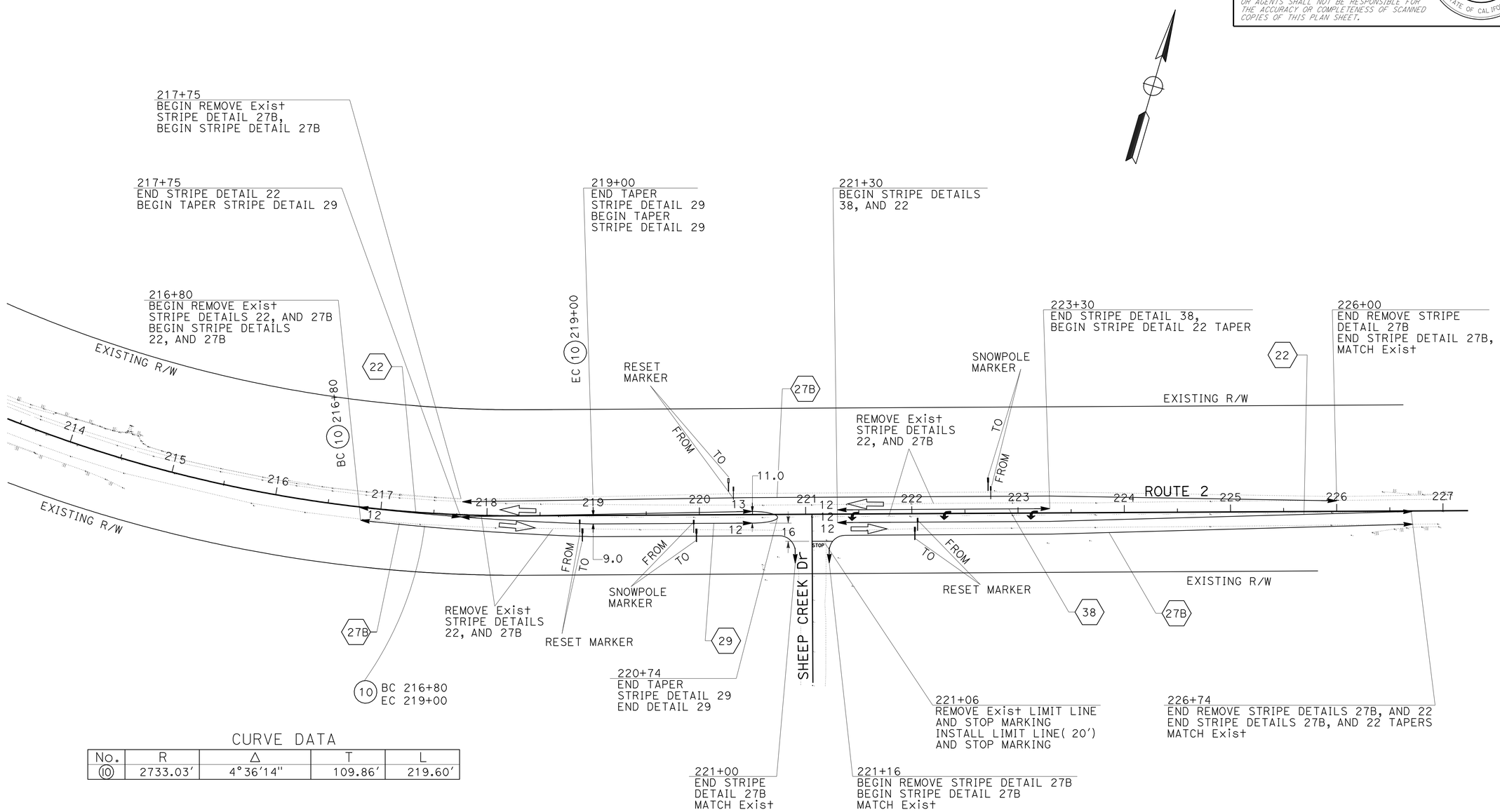

CURVE DATA

No.	R	Δ	T	L
(10)	2733.03′	4°36′14″	109.86′	219.60′

PAVEMENT DELINEATION PLAN

NO SCALE

PD-5

THIS PLAN ACCURATE FOR PAVEMENT DELINEATION WORK ONLY

STATE OF CALIFORNIA - DEPARTMENT OF TRANSPORTATION
Caltrans TRAFFIC DESIGN B

FUNCTIONAL SUPERVISOR: LARRY SARTORI
CALCULATED-DESIGNED BY: DARYUSH NAMI
CHECKED BY: LARRY SARTORI
REVISED BY
DATE REVISED

LAST REVISION 10-30-09
DATE PLOTTED => 29-JAN-2010
TIME PLOTTED => 14:24

Dist	COUNTY	ROUTE	POST MILES TOTAL PROJECT	SHEET No.	TOTAL SHEETS
08	SBd	2	0.9/2.4	46	94

REGISTERED CIVIL ENGINEER 10-30-09 DATE

1-25-10
PLANS APPROVAL DATE

REGISTERED PROFESSIONAL ENGINEER TRAN HOANG No. 54996 Exp. 6-30-10 CIVIL STATE OF CALIFORNIA

THE STATE OF CALIFORNIA OR ITS OFFICERS OR AGENTS SHALL NOT BE RESPONSIBLE FOR THE ACCURACY OR COMPLETENESS OF SCANNED COPIES OF THIS PLAN SHEET.

PAVEMENT DELINEATION QUANTITIES

LOCATION & DIRECTION					DETAIL No. OR PAVEMENT MARKING	REMOVE THERMOPLASTIC PAVEMENT MARKING	REMOVE YELLOW THERMOPLASTIC TRAFFIC STRIPE (HAZARDOUS WASTE)	REMOVE TRAFFIC STRIPE	PAVEMENT MARKER RECESSED (RETROREFLECTIVE REFLECTIVE) TYPE		THERMOPLASTIC TRAFFIC STRIPE (SPRAYABLE)			THERMOPLASTIC PAVEMENT MARKING
SHEET No.	FROM STA	TO STA	LOCATION	Dir			YELLOW	WHITE	G	D	4" YELLOW	4" WHITE	8" WHITE	
						SQFT	FT	FT	EA	EA	FT			SQFT
PD-1	148+20	157+50	Rte 2	WB	27B			930				930		
PD-1	148+20	152+20	Rte 2	EB	29		400			38	828			
PD-1	150+40		Rte 2	FEBT	SCHOOL AHEAD	141								
PD-1	150+40		Rte 2	FEBT	SLOW									23.0
PD-1	150+80		Rte 2	FEBT	SCHOOL									35.0
PD-1	151+20		Rte 2	FEBT	XING									21.0
PD-1	148+20	157+50	Rte 2	EB	27B			930				930		
PD-1	152+89	153+44	Rte 2	WB	38				4				55	
PD-1	152+89	153+44	Rte 2	WB	22		55			8	55			
PD-1	153+44	155+57	Rte 2	EB	29		213			20	426			
PD-1	152+89	153+44	Rte 2	FWBT	TYPE IV ARROW (L)									30.0
PD-1	153+63		Rte 2	FNBT	STOP	44								44.0
PD-1	153+63		Rte 2	FNBT	LIMIT LINE (40')	40								40.0
PD-2	167+50		Rte 2	FEBT	STOP									22.0
PD-2	167+90		Rte 2	FEBT	AHEAD									31.0
PD-2	168+50	172+10	Rte 2	WB	27B			360				360		
PD-2	168+50	172+00	Rte 2	EB	27B			350				350		
PD-2	172+00		Rte 2	FEBT	STOP									22.0
PD-2	172+00		Rte 2	FEBT	LIMIT LINE (23')									23.0
PD-2	172+10		Rte 2	FSBT	STOP									22.0
PD-2	172+10		Rte 2	FSBT	LIMIT LINE (22')									22.0
PD-2	172+35		Rte 2	FNBT	STOP									22.0
PD-2	172+35		Rte 2	FNBT	LIMIT LINE (35')									35.0
PD-2	172+50		Rte 2	FWBT	STOP									22.0
PD-2	172+50		Rte 2	FWBT	LIMIT LINE (14')									14.0
PD-3	177+50		Rte 2	FWBT	STOP									22.0
PD-3	177+10		Rte 2	FWBT	AHEAD									31.0
PD-3	179+50	184+87	Rte 2	WB	27B			537				537		
PD-4	188+50	196+30	Rte 2	WB	27B			780				780		
PD-4	188+50	191+77	Rte 2	EB	27B			327				327		
PD-4	191+60	195+90	Rte 2	EB	27B			430				430		
PD-4	189+10	190+88	Rte 2	EB	29		178			18	356			
PD-4	190+50	190+88	Rte 2	EB	38				6				38	
PD-4	190+50	190+88	Rte 2	FEBT	TYPE IV ARROW (RIGHT)									30.0
PD-4	191+75		Rte 2	FNBT	STOP	51								22.0
PD-4	191+75		Rte 2	FNBT	LIMIT LINE (37')	37								37.0
PD-4	192+28	193+50	Rte 2	WB	38				14				122	
PD-4	192+28	196+30	Rte 2	WB	22		402			36	402			
PD-4	192+28	193+50	Rte 2	FWBT	TYPE IV ARROW (L)									45.0
PD-5	216+80	221+00	Rte 2	EB	27B			420				420		
PD-5	221+16	226+74	Rte 2	EB	27B			558				558		
PD-5	217+75	226+00	Rte 2	WB	27B			825				825		
PD-5	221+06		Rte 2	FNBT	STOP	51								22.0
PD-5	221+06		Rte 2	FNBT	LIMIT LINE (20')	20								20.0
PD-5	216+80	217+75	Rte 2	WB	22		95			10	95			
PD-5	217+75	220+74	Rte 2	EB	29		299			28	598			
PD-5	221+30	223+30	Rte 2	WB	38				20				200	
PD-5	221+30	226+74	Rte 2	EB	22		544			48	544			
PD-5	221+30	223+30	Rte 2	FWBT	TYPE IV ARROW (L)									45.0
SUB TOTAL						384	2186	6447	44	206	3304	6447	415	702.0
TOTAL						384	2186	6447	250		10466			702

RESET MARKERS AND DELINEATORS

SHEET No.	EA
PD-1	4
PD-3	3
PD-4	1
PD-5	2
TOTAL	10

DELINEATION CLASS 2

SHEET No.	EA
PD-2	5
PD-3	8
TOTAL	13

SNOW POLE MARKER

SHEET No.	EA
PD-5	2

REVISED BY | DATE REVISED
DARYUSH NAMI | LARRY SARTORI
CALCULATED-DESIGNED BY | CHECKED BY
FUNCTIONAL SUPERVISOR | LARRY SARTORI
STATE OF CALIFORNIA - DEPARTMENT OF TRANSPORTATION
Caltrans® TRAFFIC DESIGN B

PAVEMENT DELINEATION QUANTITIES

PDQ-1

LAST REVISION 10-30-09 | DATE PLOTTED => 29-JAN-2010 | TIME PLOTTED => 14:24

Dist	COUNTY	ROUTE	POST MILES TOTAL PROJECT	SHEET No.	TOTAL SHEETS
08	SBd	2	0.9/2.4	47	94

REGISTERED CIVIL ENGINEER 10-30-09 DATE

1-25-10
PLANS APPROVAL DATE

REGISTERED PROFESSIONAL ENGINEER TRAN HOANG No. 54996 Exp. 6-30-10 CIVIL STATE OF CALIFORNIA

THE STATE OF CALIFORNIA OR ITS OFFICERS OR AGENTS SHALL NOT BE RESPONSIBLE FOR THE ACCURACY OR COMPLETENESS OF SCANNED COPIES OF THIS PLAN SHEET.

NOTE: FOR COMPLETE RIGHT OF WAY DATA, SEE RIGHT OF WAY RECORD MAPS AT DISTRICT OFFICE.

LEGEND:

- DIRECTION OF TRAFFIC
- ROADSIDE SIGN (ONE POST)
- ROADSIDE SIGN (TWO POST)
- XX — SIGN NUMBER

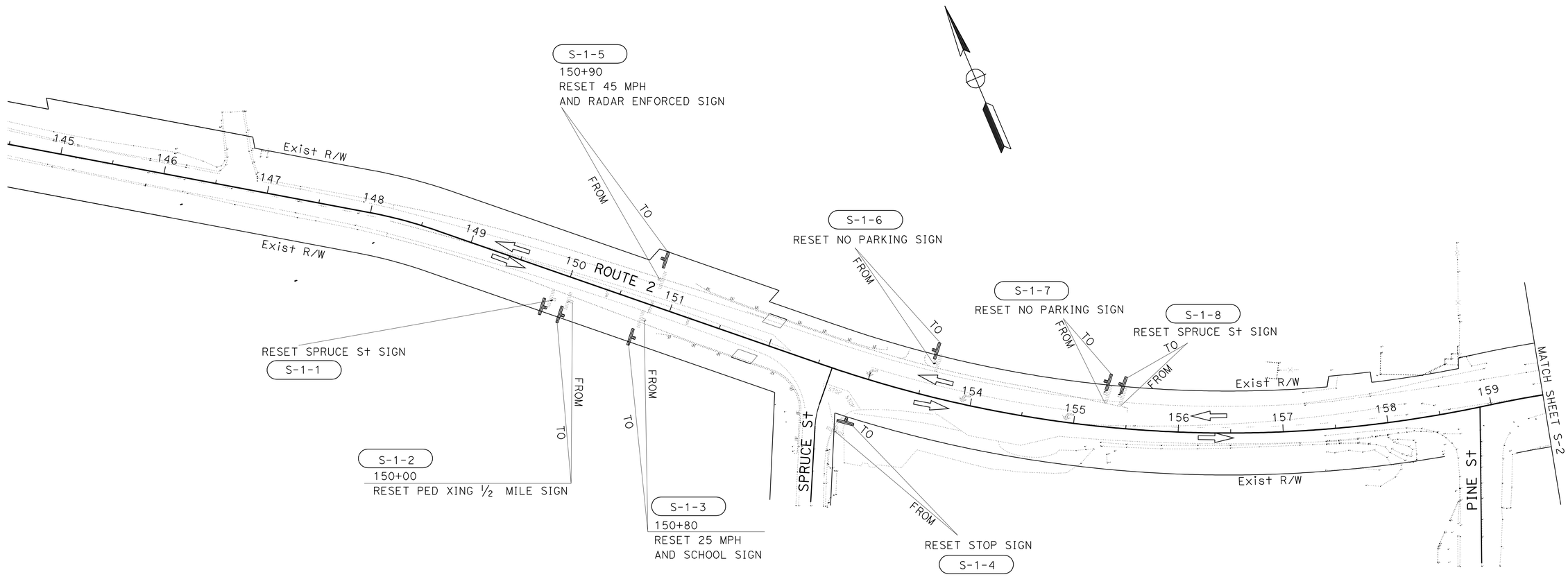

THIS PLAN ACCURATE FOR SIGN WORK ONLY

SIGN PLAN
NO SCALE **S-1**

STATE OF CALIFORNIA - DEPARTMENT OF TRANSPORTATION
Caltrans TRAFFIC DESIGN B

FUNCTIONAL SUPERVISOR: LARRY SARTORI
CALCULATED-DESIGNED BY: DARYUSH NAMI
CHECKED BY: LARRY SARTORI
REVISED BY / DATE REVISED

LAST REVISION 10-30-09 | DATE PLOTTED => 29-JAN-2010 | TIME PLOTTED => 14:24

Dist	COUNTY	ROUTE	POST MILES TOTAL PROJECT	SHEET No.	TOTAL SHEETS
08	SBd	2	0.9/2.4	48	94

REGISTERED CIVIL ENGINEER 10-30-09 DATE

1-25-10
PLANS APPROVAL DATE

REGISTERED PROFESSIONAL ENGINEER
TRAN HOANG
No. 54996
Exp. 6-30-10
CIVIL
STATE OF CALIFORNIA

THE STATE OF CALIFORNIA OR ITS OFFICERS OR AGENTS SHALL NOT BE RESPONSIBLE FOR THE ACCURACY OR COMPLETENESS OF SCANNED COPIES OF THIS PLAN SHEET.

NOTE: FOR COMPLETE RIGHT OF WAY DATA, SEE RIGHT OF WAY RECORD MAPS AT DISTRICT OFFICE.

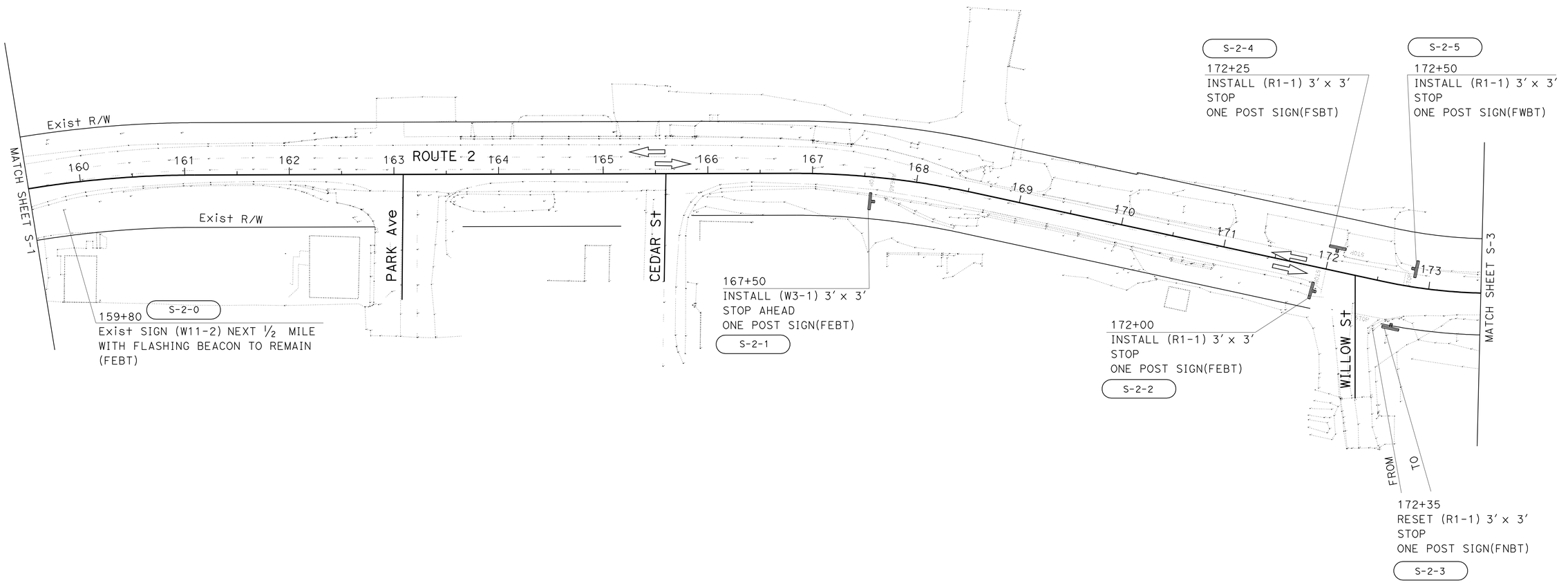

SIGN PLAN

NO SCALE

S-2

THIS PLAN ACCURATE FOR SIGN WORK ONLY

STATE OF CALIFORNIA - DEPARTMENT OF TRANSPORTATION

Caltrans® TRAFFIC DESIGN B

FUNCTIONAL SUPERVISOR: LARRY SARTORI

CALCULATED-DESIGNED BY: DARYUSH NAMI

CHECKED BY: LARRY SARTORI

REVISED BY

DATE REVISED

LAST REVISION 10-30-09

DATE PLOTTED => 29-JAN-2010

TIME PLOTTED => 14:24

Dist	COUNTY	ROUTE	POST MILES TOTAL PROJECT	SHEET No.	TOTAL SHEETS
08	SBd	2	0.9/2.4	49	94

REGISTERED CIVIL ENGINEER 10-30-09 DATE

1-25-10
PLANS APPROVAL DATE

REGISTERED PROFESSIONAL ENGINEER TRAN HOANG No. 54996 Exp. 6-30-10 CIVIL STATE OF CALIFORNIA

THE STATE OF CALIFORNIA OR ITS OFFICERS OR AGENTS SHALL NOT BE RESPONSIBLE FOR THE ACCURACY OR COMPLETENESS OF SCANNED COPIES OF THIS PLAN SHEET.

NOTE: FOR COMPLETE RIGHT OF WAY DATA, SEE RIGHT OF WAY RECORD MAPS AT DISTRICT OFFICE.

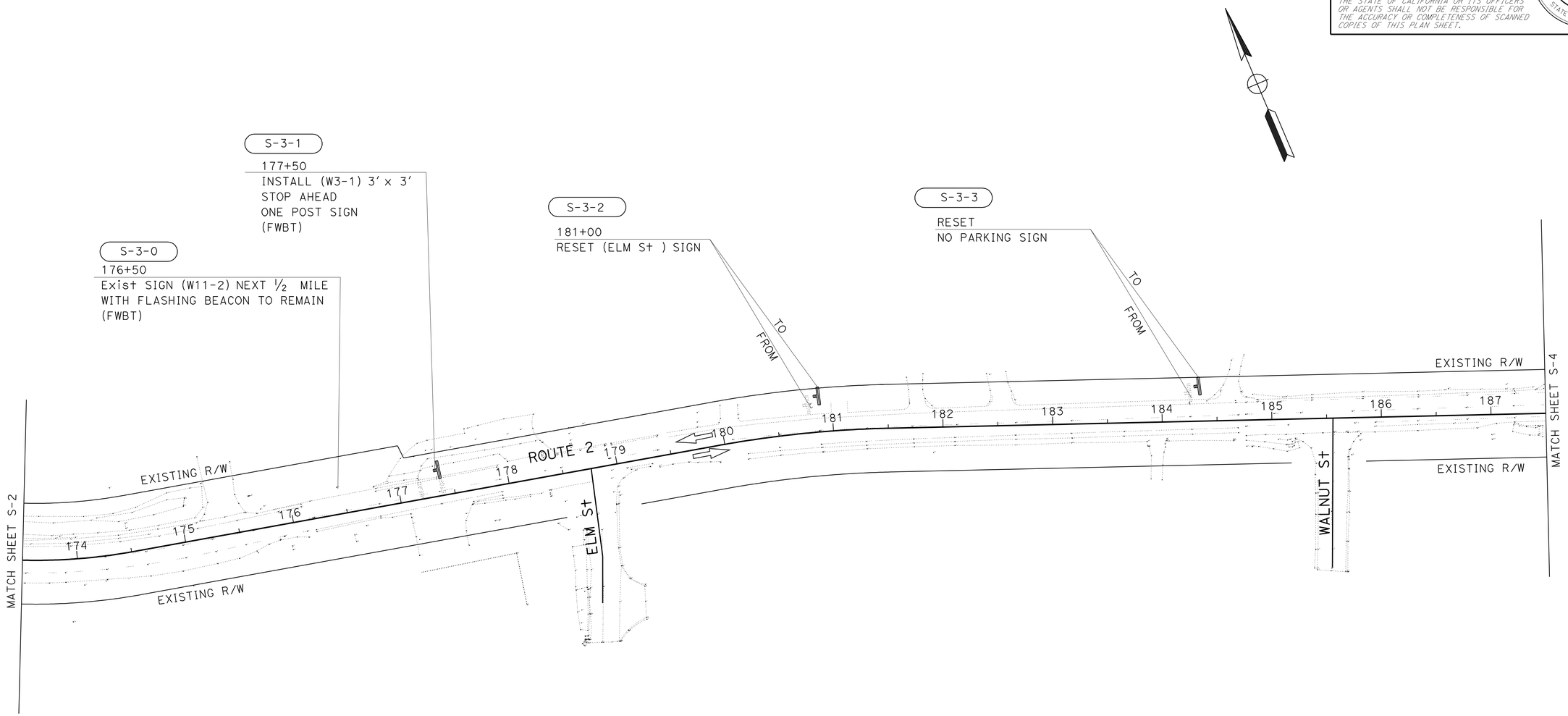

THIS PLAN ACCURATE FOR SIGN WORK ONLY

SIGN PLAN

NO SCALE

S-3

STATE OF CALIFORNIA - DEPARTMENT OF TRANSPORTATION

Caltrans® **TRAFFIC DESIGN B**

FUNCTIONAL SUPERVISOR: LARRY SARTORI

CALCULATED-DESIGNED BY: DARYUSH NAMI

CHECKED BY: LARRY SARTORI

REVISED BY

DATE REVISED

LAST REVISION 10-30-09

DATE PLOTTED => 29-JAN-2010

TIME PLOTTED => 14:24

Dist	COUNTY	ROUTE	POST MILES TOTAL PROJECT	SHEET No.	TOTAL SHEETS
08	SBd	2	0.9/2.4	50	94

REGISTERED CIVIL ENGINEER 10-30-09 DATE

1-25-10
PLANS APPROVAL DATE

REGISTERED PROFESSIONAL ENGINEER
TRAN HOANG
No. 54996
Exp. 6-30-10
CIVIL
STATE OF CALIFORNIA

THE STATE OF CALIFORNIA OR ITS OFFICERS OR AGENTS SHALL NOT BE RESPONSIBLE FOR THE ACCURACY OR COMPLETENESS OF SCANNED COPIES OF THIS PLAN SHEET.

NOTE: FOR COMPLETE RIGHT OF WAY DATA, SEE RIGHT OF WAY RECORD MAPS AT DISTRICT OFFICE.

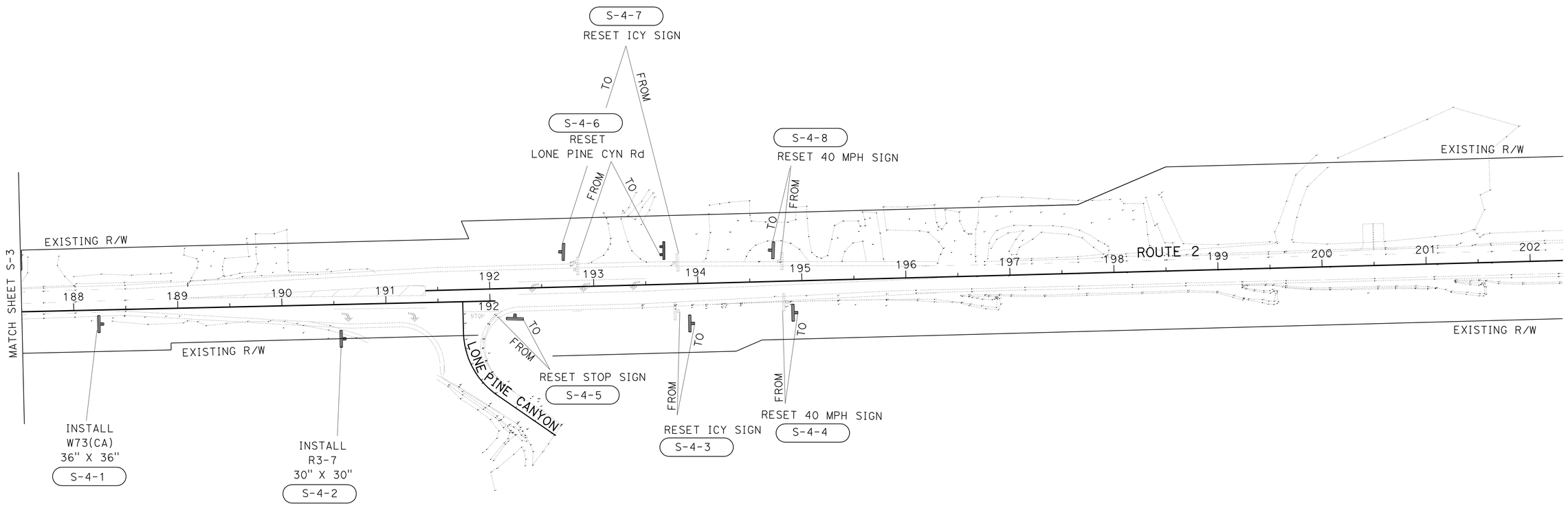

THIS PLAN ACCURATE FOR SIGN WORK ONLY

SIGN PLAN

NO SCALE

S-4

STATE OF CALIFORNIA - DEPARTMENT OF TRANSPORTATION

TRAFFIC DESIGN B

FUNCTIONAL SUPERVISOR: LARRY SARTORI

CALCULATED-DESIGNED BY: DARYUSH NAMI

CHECKED BY: LARRY SARTORI

REVISED BY

DATE REVISED

LAST REVISION 10-30-09 | DATE PLOTTED => 29-JAN-2010 | TIME PLOTTED => 14:25

Dist	COUNTY	ROUTE	POST MILES TOTAL PROJECT	SHEET No.	TOTAL SHEETS
08	SBd	2	0.9/2.4	51	94

REGISTERED CIVIL ENGINEER 10-30-09 DATE

1-25-10
PLANS APPROVAL DATE

REGISTERED PROFESSIONAL ENGINEER
TRAN HOANG
No. 54996
Exp. 6-30-10
CIVIL
STATE OF CALIFORNIA

THE STATE OF CALIFORNIA OR ITS OFFICERS OR AGENTS SHALL NOT BE RESPONSIBLE FOR THE ACCURACY OR COMPLETENESS OF SCANNED COPIES OF THIS PLAN SHEET.

NOTE: FOR COMPLETE RIGHT OF WAY DATA, SEE RIGHT OF WAY RECORD MAPS AT DISTRICT OFFICE.

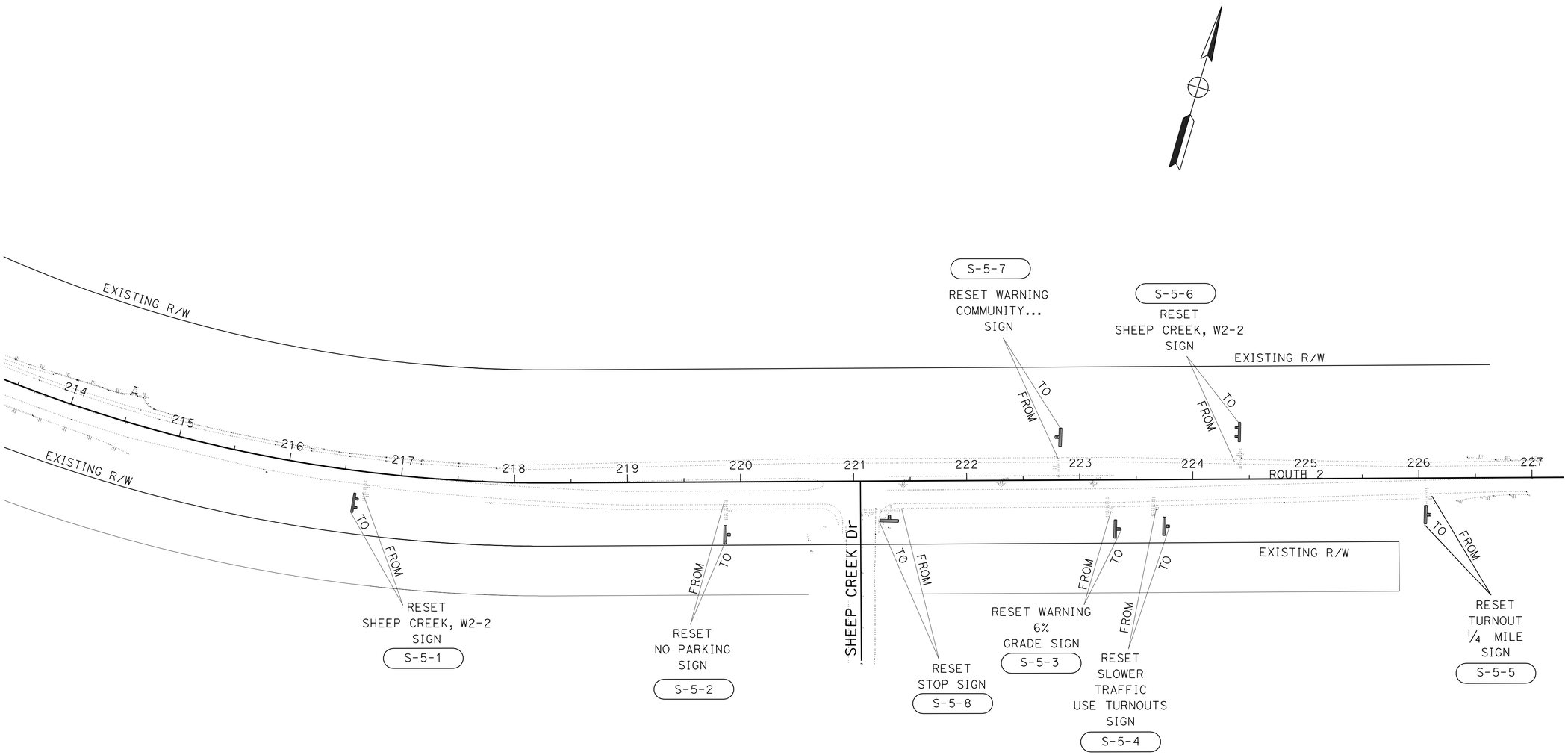

THIS PLAN ACCURATE FOR SIGN WORK ONLY

SIGN PLAN

NO SCALE

S-5

STATE OF CALIFORNIA - DEPARTMENT OF TRANSPORTATION
Caltrans TRAFFIC DESIGN B

FUNCTIONAL SUPERVISOR: LARRY SARTORI
CALCULATED-DESIGNED BY: DARYUSH NAMI
CHECKED BY: LARRY SARTORI
REVISED BY
DATE REVISED

LAST REVISION 10-30-09
DATE PLOTTED => 29-JAN-2010
TIME PLOTTED => 14:25

Dist	COUNTY	ROUTE	POST MILES TOTAL PROJECT	SHEET No.	TOTAL SHEETS
08	SBd	2	0.9/2.4	52	94

REGISTERED CIVIL ENGINEER 10-30-09 DATE

1-25-10
PLANS APPROVAL DATE

REGISTERED PROFESSIONAL ENGINEER TRAN HOANG No. 54996 Exp. 6-30-10 CIVIL STATE OF CALIFORNIA

THE STATE OF CALIFORNIA OR ITS OFFICERS OR AGENTS SHALL NOT BE RESPONSIBLE FOR THE ACCURACY OR COMPLETENESS OF SCANNED COPIES OF THIS PLAN SHEET.

SIGN PANEL MATERIAL SUMMARY

SIGN No.	SIGN CODE	SIGN SIZE (IN X IN)	SINGLE FACED	SIGN FACING MATERIAL: BACKGROUND: SHEETING COLOR	BACKGROUND: RETROREFLECTIVE & ASTM TYPE	LEGEND: SHEETING COLOR	LEGEND: RETROREFLECTIVE & ASTM TYPE	PROTECTIVE FILM: STANDARD	PROTECTIVE FILM: PREMIUM	FURNISH SINGLE SHEET ALUMINUM SIGN (0.08" UNFRAMED) SQFT	REMARKS
S-2-1	W3-1	36 X 36	X	YELLOW	IV	RED/BLACK	IV		X	9	STOP AHEAD
S-2-2	R1-1	36 X 36	X	RED	IV	WHITE	IV		X	9	STOP
S-2-4	R1-1	36 X 36	X	RED	IV	WHITE	IV		X	9	STOP
S-2-5	R1-1	36 X 36	X	RED	IV	WHITE	IV		X	9	STOP
S-3-1	W3-1	36 X 36	X	YELLOW	IV	RED/BLACK	IV		X	9	STOP AHEAD
S-4-1	W73A(CA)	36 X 36	X	YELLOW	IV	BLACK	IV		X	9	RIGHT LANE TURNS RIGHT AHEAD
S-4-2	R3-7	30 X 30	X	WHITE	IV	BLACK	IV		X	6	RIGHT LANE MUST TURN RIGHT
							TOTAL			60	

ROADSIDE SIGN QUANTITIES

SIGN No.	STATION	DIRECTION	SIGN CODE	SIGN SIZE L X D IN X IN	POST LENGTH LEFT	POST LENGTH RIGHT	POST SIZE 4 X 6	POST SIZE 6 X 6	POST SIZE 6 X 8	RESET ONE POST	RESET TWO POST	ONE POST	REMARKS
					FT	FT	IN X IN			EA	EA	EA	
S-1-1	149+90	FEBT	D3-1							1			SPRUCE St
S-1-2	150+00	FEBT	W11-2 & W7-3A							1			PED XING NEXT 1/2 MILE
S-1-3	150+80	FEBT	S4-3 & R2 & R72							1			SCHOOL/ SPEED LIMIT 25MPH /WHEN CHILDREN ARE PRESENT
S-1-4	153+00	FNBT	R1-1							1			STOP
S-1-5	150+80	FWBT	R2& R48-1							1			SPEED LIMIT 45 /RADAR ENFORCED
S-1-6	151+20	FWBT	R26(CA)							1			NO PARKING ANY TIME
S-1-7	148+20	FWBT	R26(CA)							1			NO PARKING ANY TIME
S-1-8	152+89	FWBT	D3-1							1			SPRUCE St
S-2-1	167+50	FEBT	W3-1	36 X 36	11		1					1	STOP AHEAD
S-2-2	172+00	FEBT	R1-1	36 X 36	11		1					1	STOP
S-2-3	172+35	FNBT	R1-1							1			STOP
S-2-4	172+25	FSBT	R1-1	36 X 36	11		1					1	STOP
S-2-5	172+50	FWBT	R1-1	36 X 36	11		1					1	STOP
S-3-1	177+50	FWBT	W3-1	36 X 36	11		1					1	STOP AHEAD
S-3-2	181+00	FWBT	D3-1							1			ELM St
S-3-3	184+40	FWBT	R26(CA)							1			NO PARKING ANY TIME
S-4-1	188+20	FEBT	W73A(CA)	36 X 36	11		1					1	RIGHT LANE TURNS RIGHT AHEAD
S-4-2	190+50	FEBT	R3-7	30 X 30	11		1					1	RIGHT LANE MUST TURN RIGHT
S-4-3	193+75	FEBT	W43(CA)							1			ICY
S-4-4	194+80	FEBT	R2							1			SPEED LIMIT 40
S-4-5	192+10	FNBT	R1-1							1			STOP
S-4-6	192+80	FWBT	D3-1								1		LONE PINE CYN Rd
S-4-7	193+75	FWBT	W43(CA)							1			ICY
S-4-8	194+80	FWBT	R2							1			SPEED LIMIT 40
S-5-1	216+70	FEBT	D3-1, W2-2								1		SHEEP CREEK ROAD & SIDE ROAD(TWO POST)
S-5-2	219+90	FEBT	R26(CA)							1			NO PARKING ANY TIME
S-5-3	223+30	FEBT	W7-1B & W7-3							1			HILL SYMBOL & GRADE
S-5-4	223+70	FEBT	R52(CA)							1			SLOWER TRAFFIC USE TURNOUTS
S-5-5	226+00	FEBT	R50(CA)							1			TURNOUT 1/4 MILE
S-5-6	221+30	FNBT	R1-1							1			STOP
S-5-7	222+80	FWBT	LOCAL SIGN							1			NEIGHBORHOOD WATCH
S-5-8	224+50	FWBT	D3-1, W2-2								1		SHEEP CREEK ROAD & SIDE ROAD (TWO POST)
					TOTAL					22	3	7	

NOTE:
1. CONTRACTOR SHALL VERIFY ALL FIELD CONDITIONS BEFORE SIGN FABRICATION.

SIGN QUANTITIES
SQ-1

REVISED BY | DATE REVISED
DARYUSH NAMI | LARRY SARTORI
CALCULATED-DESIGNED BY | CHECKED BY
FUNCTIONAL SUPERVISOR
LARRY SARTORI

STATE OF CALIFORNIA - DEPARTMENT OF TRANSPORTATION
Caltrans® TRAFFIC DESIGN B

LAST REVISION 10-30-09
DATE PLOTTED => 29-JAN-2010
TIME PLOTTED => 14:33

Dist	COUNTY	ROUTE	POST MILES TOTAL PROJECT	SHEET No.	TOTAL SHEETS
08	SBd	2	0.9/2.4	53	94

Mario L. Amancio 10-30-09
REGISTERED CIVIL ENGINEER DATE

1-25-10
PLANS APPROVAL DATE

REGISTERED PROFESSIONAL ENGINEER
MARIO AMANCIO
No. C65908
Exp. 6-30-10
CIVIL
STATE OF CALIFORNIA

THE STATE OF CALIFORNIA OR ITS OFFICERS OR AGENTS SHALL NOT BE RESPONSIBLE FOR THE ACCURACY OR COMPLETENESS OF SCANNED COPIES OF THIS PLAN SHEET.

ROADWAY QUANTITIES

STATION	L+/R+	HOT MIX ASPHALT (TYPE A)	RUBBERIZED HOT MIX ASPHALT (GAP GRADED)	CLASS 2 AGGREGATE BASE	PRIME COAT	TACK COAT	ROADWAY EXCAVATION
		TON	TON	CY	TON	TON	CY
Sta 148+20 TO 151+75	R+	109	54	49	0.40	0.34	255
Sta 148+20 TO 151+87	L+	115	58	52	0.43	0.43	150
Sta 151+91 TO 152+50	R+	36	18	16	0.14	0.11	85
Sta 152+04 TO 157+50	L+	198	99	90	0.75	0.63	270
Sta 153+00 TO 155+17	R+	87	44	40	0.32	0.29	54
Sta 168+50 TO 172+00	R+	40	20	18	0.15	0.13	18
Sta 168+50 TO 173+00	L+	52	26	23	0.20	0.16	27
Sta 179+50 TO 184+85	L+	62	31	28	0.23	0.20	49
Sta 188+50 TO 196+30	R+	295	147	133	1.12	0.95	126
Sta 188+50 TO 196+30	L+	188	94	85	0.72	0.60	145
Sta 217+75 TO 226+00	R+	255	128	115	0.95	0.82	122
Sta 217+75 TO 226+00	L+	219	109	99	0.84	0.70	284
DRIVEWAYS	L+	161		3			
TOTAL		1817	667	751	6.25	5.30	1585

DRIVEWAYS

LOCATION	L+/R+	WIDTH	LENGTH	AREA	HMA (TYPE A)	CLASS 2 (AB)
		FT	FT	SQFT	TON	CY
Sta 148+76	L+	19	10	190	4.5	
Sta 153+37	L+	20	10	200	4.8	
Sta 169+60	L+	78	15	1170	28.0	
Sta 171+20	L+	34	15	510	12.2	
Sta 172+38	L+	55	15	825	19.9	
Sta 181+07	L+	15	10	150	3.6	
Sta 181+80	L+	18	10	180	4.3	
Sta 182+55	L+	23	10	230	5.5	
Sta 184+64	L+	25	10	250	6.0	
Sta 189+30	L+	30	10	300	7.2	
Sta 189+94	L+	32	10	320	7.7	
Sta 193+26	L+	40	15	600	14.4	
Sta 194+25	L+	58	15	750	18.2	
Sta 195+22	L+	45	15	675	16.75	
Sta 195+72	L+	22	15	330	8.13	
Sta 210+50	L+	15	15	246		3
TOTAL					161.0 *	3 *

* INCLUDED UNDER ROADWAY QUANTITIES FOR (HMA [TYPE A])

METAL BEAM GUARD RAILING

STATION	LOCATION	METAL BEAM GUARD RAILING (WOOD POST)	ALTERNATIVE FLARED TERMINAL SYSTEM	TRANSITION RAILING (TYPE WB)	IN-LINE TERMINAL SYSTEM END TREATMENT	SALVAGE METAL BEAM GUARD RAILING
		LF	EA	EA	EA	LF
Sta 150+82 TO 151+69.50	R+	37.5	1	1		
Sta 151+13 TO 151+88	L+	50.0	1			
Sta 151+90.50 TO 152+57.30	R+	87.5	1			
Sta 152+09 TO 152+96.50	L+	37.5	1	1		
Sta 151+11 TO 152+47	R+					157
Sta 151+24 TO 152+70	L+					145
Sta 192+06 TO 194+65.50	R+	200.0	1		1	
TOTAL		412.50	5	2	1	302

REMOVE ASPHALT CONCRETE

	L+/R+	AREA (N)	REMOVE ASPHALT CONCRETE
		SQFT	CY
Sta 148+20 TO 151+75	R+	1350	30
Sta 148+20 TO 151+87	L+	1580	35
Sta 151+91 TO 152+50	R+	850	19
Sta 152+04 TO 157+50	L+	2935	66
Sta 153+00 TO 155+16	R+	2400	53
Sta 168+50 TO 172+00	R+	1400	31
Sta 168+50 TO 173+00	L+	4425	72
Sta 179+50 TO 184+85	L+	1400	31
Sta 188+50 TO 196+30	R+	6824	177
Sta 188+50 TO 196+30	L+	2800	73
Sta 217+75 TO 226+00	R+	6625	184
Sta 217+75 TO 226+00	L+	2225	62
TOTAL			833

(N) FOR INFORMATION ONLY.

ADJUST FRAME AND COVER TO GRADE

LOCATION	R+/L+	FEATURES	ADJUST FRAME & GRATE TO GRADE
			(EA)
Sta 179+99	L+	WATER VALVE	1
Sta 190+43	L+	WATER VALVE	1
Sta 190+94	L+	WATER VALVE	1
Sta 190+95	L+	MANHOLE	1
Sta 191+06	L+	WATER VALVE	1
Sta 194+14	L+	MANHOLE	1
TOTAL			6

TEMPORARY WATER POLLUTION CONTROL

DESCRIPTION	UNIT	QUANTITIES
TEMPORARY FIBER ROLLS	LF	500
TEMPORARY FENCE (TYPE ESA)	LF	800
TEMPORARY CONCRETE WASHOUT (PORTABLE)	LS	LUMP SUM
TEMPORARY DRAINAGE INLET PROTECTION	EA	3

LANDSCAPING QUANTITIES

DESCRIPTION	ROCK COBBLE SEATING WALL	RUSTIC LOG BENCH	DECOMPOSED GRANITE (TRAIL)	VILLAGE TRAIL INTERPRATIVE SIGN	MULCH	MOVE IN/OUT (EROSION CONTROL)	WILD FLOWER SEEDING
	LF	EA	SQYD	EA	CY	EA	ACRE
STA 153+00 TO 226+00	35	2	3433	2	731	3	3
TOTAL	35	2	3433	2	731	3	3

SUMMARY OF QUANTITIES

Q-1

STATE OF CALIFORNIA - DEPARTMENT OF TRANSPORTATION
Caltrans® DESIGN

FUNCTIONAL SUPERVISOR: MARIO AMANCIO
CALCULATED-DESIGNED BY: ALI TAHA
CHECKED BY: MARIO AMANCIO
REVISED BY
DATE REVISED

LAST REVISION 10-30-09
DATE PLOTTED => 29-JAN-2010
TIME PLOTTED => 14:25

Dist	COUNTY	ROUTE	POST MILES TOTAL PROJECT	SHEET No.	TOTAL SHEETS
08	SBd	2	0.9/2.4	54	94

LICENSED LANDSCAPE ARCHITECT

1-25-10
PLANS APPROVAL DATE

LICENSED LANDSCAPE ARCHITECT — RAY A. DESSELLE — No. 3015 — Signature — Renewal Date 11-30-09 — Date 10-30-09 — STATE OF CALIFORNIA

THE STATE OF CALIFORNIA OR ITS OFFICERS OR AGENTS SHALL NOT BE RESPONSIBLE FOR THE ACCURACY OR COMPLETENESS OF SCANNED COPIES OF THIS PLAN SHEET.

ABBREVIATIONS

AMEND — amendment
B & B — balled and burlapped
Dia — diameter
EA — each
LB — pound
Oz — ounce
Ft — foot/feet
SQFT — square feet
SQYD — square yard
CF — cubic feet
Max — maximum
Min — minimum
NCN — no common name
No. — number
Pkt — packet
PLT ESTB — plant establishment
Pvmt — pavement
R/W — right of way
SF — state furnished
TRVD — traveled

NOTE:
Underlined portions of botanical name indicate abbreviations used on Planting Plans.

PLANT LIST AND PLANTING SPECIFICATIONS

PLANT GROUP	PLANT No.	SYMBOL	BOTANICAL NAME	COMMON NAME	SIZE	QUANTITY EACH ①	HOLE SIZE (INCH) Dia	HOLE SIZE (INCH) DEPTH	BASIN TYPE	IRON SULFATE	SOIL AMEND	COMMERCIAL FERTILIZER PLANTING	COMMERCIAL FERTILIZER PLT ESTB	BASIN MULCH	STAKING	PLANTING LIMITS MINIMUM DISTANCE (Ft) FROM TRVD WAY	PVMT	FENCE	WALL	PAVED DITCH	EARTH DITCH	ON CENTER (Ft)	REMARKS
E	1		NARCISSUS 'KING ALFRED'	KING ALFRED DAFFODIL	5.5"-7" BULB	5,000	⑧		-	-	-	-	-	-	-	-	-	-	-	-	-	⑥	BULB
	2		TULIPA BAKERI	LILAC WONDER	2"-3" BULB	2,500			-	-	-	-	-	-	-	-	-	-	-	-	-	⑥	BULB
U	4		CALOCEDRUS DECURRENS	INCENSE CEDAR	No. 15	4	30	30	I	-	2 CF	-	-	2 CF	⑨	20	15	-	-	-	-	④	TREE
	5		CERCIS OCCIDENTALIS	WESTERN REDBUD	No. 15	3	30	30	I	-	2 CF	-	-	2 CF	⑨	20	15	-	-	-	-	④	TREE

ENVIRONMENTALLY SENSITIVE AREA (ESA) / EXISTING TREE LEGEND

SYMBOL	
	ENVIRONMENTALLY SENSITIVE AREA (ESA) PROTECT IN PLACE
	ENVIRONMENTALLY SENSITIVE AREA (ESA) PROTECT IN PLACE TO HAVE SUPERVISED PRUNING WITHIN STATE RIGHT OF WAY
	EXISTING TREE - PROTECT IN PLACE

LEGEND:

DECOMPOSED GRANITE (TRAIL)

MULCH & WILD FLOWER SEEDING AREAS
1. APPLY MULCH (2" THICK)
2. APPLY WILD FLOWER SEEDING (DRY APPLY)

APPLICABLE WHEN CIRCLED:

① - Quantities shown are "per plant" unless shown as SQFT or SQYD application rates.
2 - Sufficient to receive root ball.
3 - Does not apply to mulch areas.
④ - As shown on plans.
5 - Unless otherwise shown on plans.
⑥ - Bulbs to be planted at Community Entry Sign area and randomly 1 foot adjacent to Community Trail.
7 - See Special Provisions.
⑧ - Plant two to three times as deep as the bulbs is tall and plant with the nose of the bulb upward and the root planted downward.
⑨ - See Standard Plans for Staking Detail.

PLANT LIST
PL-1

REVISED BY | DATE REVISED
TIM WANDS | MIKE STIVERS
CALCULATED-DESIGNED BY | CHECKED BY
SENIOR LANDSCAPE ARCHITECT | RAY DESSELLE
STATE OF CALIFORNIA - DEPARTMENT OF TRANSPORTATION
Caltrans LANDSCAPE ARCHITECTURE B

LAST REVISION 10-30-09 | DATE PLOTTED => 29-JAN-2010 | TIME PLOTTED => 14:25

Dist	COUNTY	ROUTE	POST MILES TOTAL PROJECT	SHEET No.	TOTAL SHEETS
08	SBd	2	0.9/2.4	55	94

LICENSED LANDSCAPE ARCHITECT

1-25-10
PLANS APPROVAL DATE

LICENSED LANDSCAPE ARCHITECT
RAY J. DESSELLE No. 3016
Signature
11-30-09
Renewal Date
10-30-09
Date
STATE OF CALIFORNIA

THE STATE OF CALIFORNIA OR ITS OFFICERS OR AGENTS SHALL NOT BE RESPONSIBLE FOR THE ACCURACY OR COMPLETENESS OF SCANNED COPIES OF THIS PLAN SHEET.

NOTE: FOR COMPLETE RIGHT OF WAY DATA, SEE RIGHT OF WAY RECORD MAPS AT DISTRICT OFFICE.

NOTES:

1. DIMENSIONS ARE MEASURED FROM THE EDGE OF SHOULDER
2. WILDFLOWER SEEDING AREAS SHALL BE APPLIED TO THE EDGE OF SHOULDER

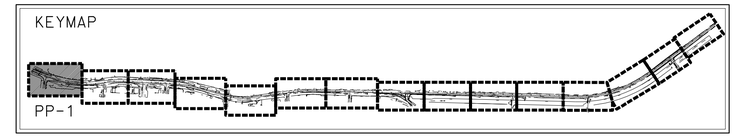

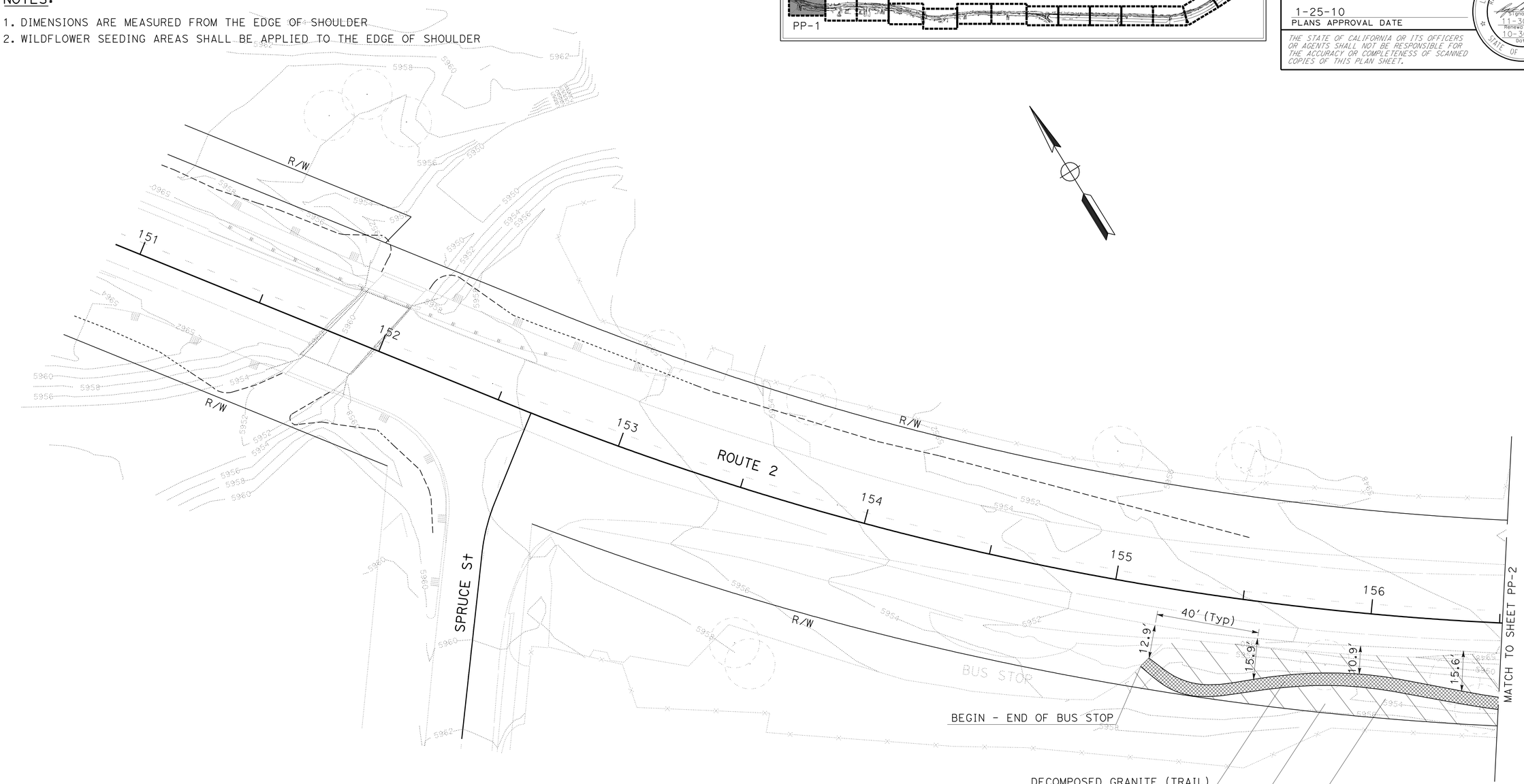

PLANTING PLAN

SCALE: 1" = 20'

PP-1

THIS PLAN ACCURATE FOR LANDSCAPE WORK ONLY

STATE OF CALIFORNIA - DEPARTMENT OF TRANSPORTATION
Caltrans® LANDSCAPE ARCHITECTURE B

SENIOR LANDSCAPE ARCHITECT: RAY DESSELLE
CALCULATED-DESIGNED BY: TIM WANDS
CHECKED BY: MIKE STIVERS
REVISED BY
DATE REVISED

LAST REVISION 10-30-09
DATE PLOTTED => 29-JAN-2010
TIME PLOTTED => 14:25

Dist	COUNTY	ROUTE	POST MILES TOTAL PROJECT	SHEET No.	TOTAL SHEETS
08	SBd	2	0.9/2.4	56	94

LICENSED LANDSCAPE ARCHITECT

1-25-10
PLANS APPROVAL DATE

LICENSED LANDSCAPE ARCHITECT
RAY J. DESSELLE No. 3015
Signature
11-30-09
Renewal Date
10-30-09
Date
STATE OF CALIFORNIA

THE STATE OF CALIFORNIA OR ITS OFFICERS OR AGENTS SHALL NOT BE RESPONSIBLE FOR THE ACCURACY OR COMPLETENESS OF SCANNED COPIES OF THIS PLAN SHEET.

NOTE: FOR COMPLETE RIGHT OF WAY DATA, SEE RIGHT OF WAY RECORD MAPS AT DISTRICT OFFICE.

KEYMAP

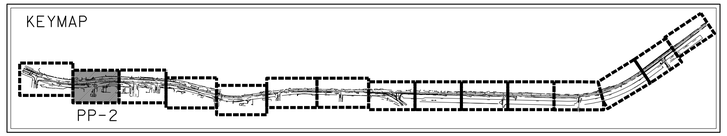

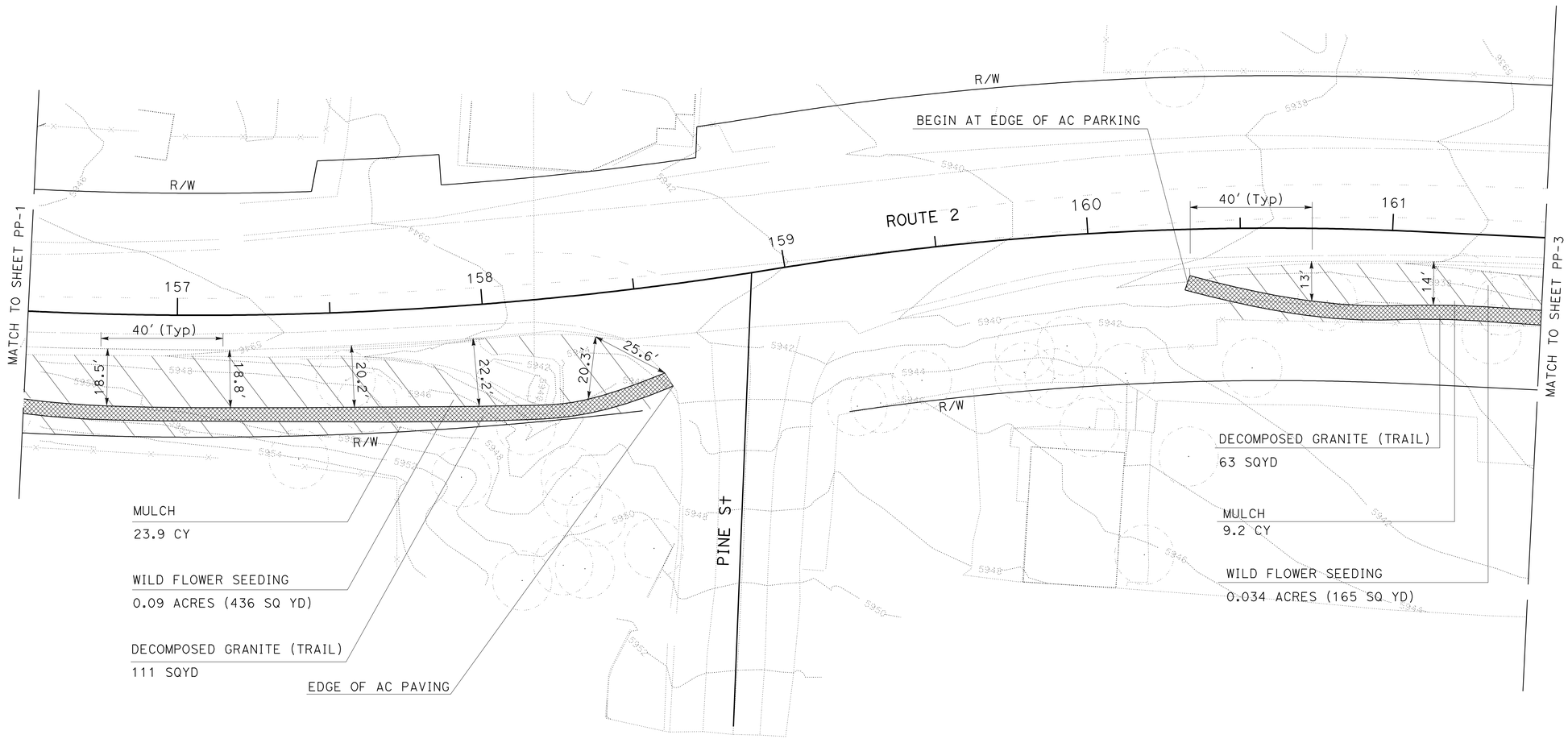

PLANTING PLAN

SCALE: 1" = 20'

PP-2

THIS PLAN ACCURATE FOR LANDSCAPE WORK ONLY

CALCULATED-DESIGNED BY	TIM WANDS
CHECKED BY	MIKE STIVERS
SENIOR LANDSCAPE ARCHITECT	RAY DESSELLE
REVISED BY	
DATE REVISED	

STATE OF CALIFORNIA - DEPARTMENT OF TRANSPORTATION
Caltrans® LANDSCAPE ARCHITECTURE B

LAST REVISION 10-30-09
DATE PLOTTED => 29-JAN-2010
TIME PLOTTED => 14:25

Dist	COUNTY	ROUTE	POST MILES TOTAL PROJECT	SHEET No.	TOTAL SHEETS
08	SBd	2	0.9/2.4	57	94

LICENSED LANDSCAPE ARCHITECT

1-25-10
PLANS APPROVAL DATE

THE STATE OF CALIFORNIA OR ITS OFFICERS OR AGENTS SHALL NOT BE RESPONSIBLE FOR THE ACCURACY OR COMPLETENESS OF SCANNED COPIES OF THIS PLAN SHEET.

LICENSED LANDSCAPE ARCHITECT
RAY J. DESSELLE No. 3015
Signature
11-30-09
Renewal Date
10-30-09
Date
STATE OF CALIFORNIA

NOTE: FOR COMPLETE RIGHT OF WAY DATA, SEE RIGHT OF WAY RECORD MAPS AT DISTRICT OFFICE.

KEYMAP

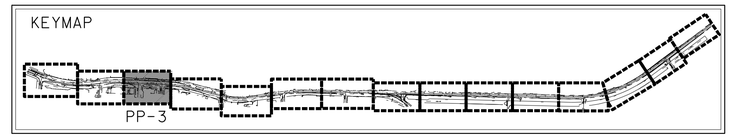

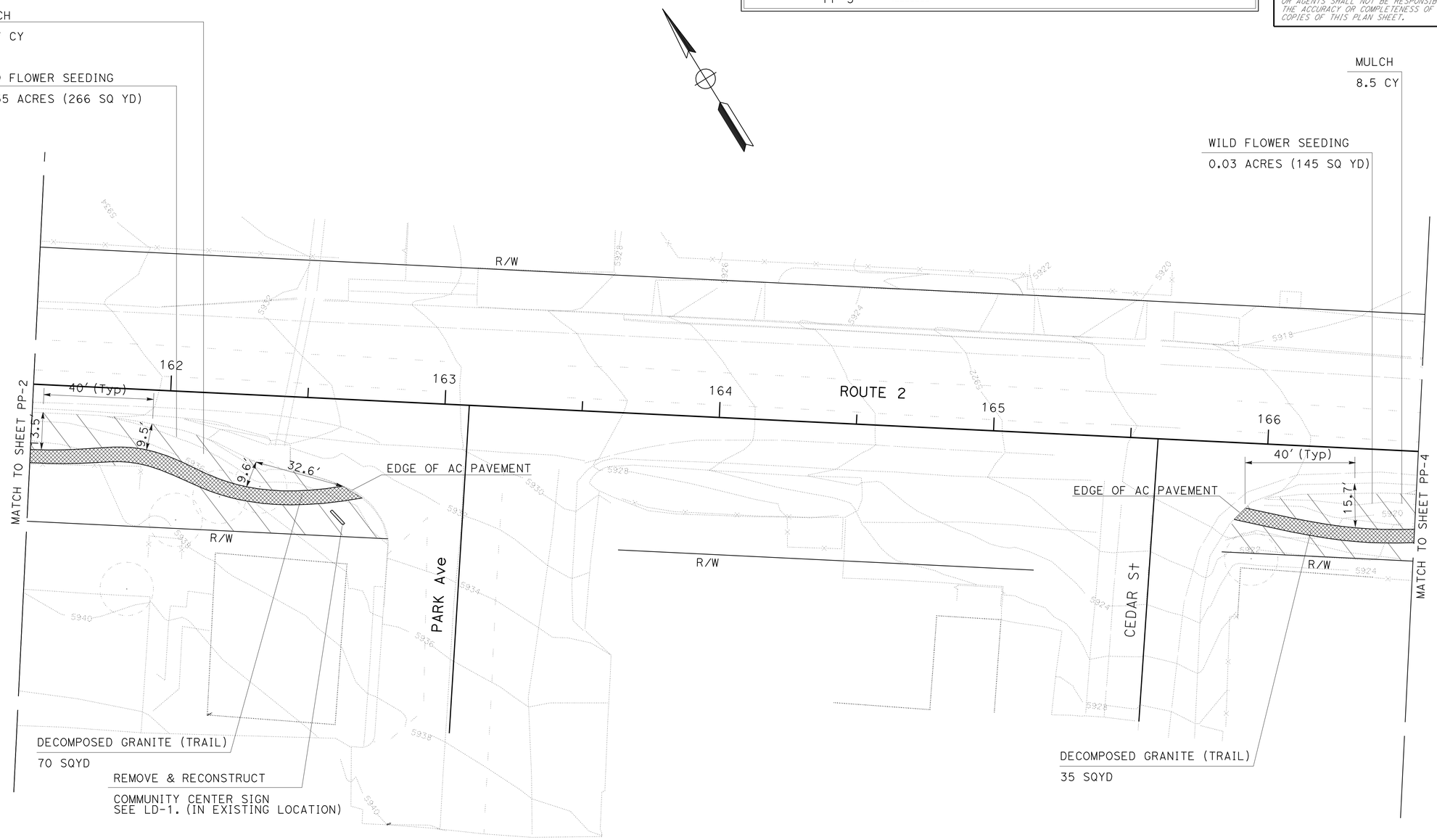

PLANTING PLAN

SCALE: 1" = 20'

PP-3

THIS PLAN ACCURATE FOR LANDSCAPE WORK ONLY

STATE OF CALIFORNIA - DEPARTMENT OF TRANSPORTATION
Caltrans® LANDSCAPE ARCHITECTURE B

SENIOR LANDSCAPE ARCHITECT: RAY DESSELLE
CALCULATED-DESIGNED BY: TIM WANDS
CHECKED BY: MIKE STIVERS
REVISED BY
DATE REVISED

LAST REVISION 10-30-09
DATE PLOTTED => 29-JAN-2010
TIME PLOTTED => 14:26

Dist	COUNTY	ROUTE	POST MILES TOTAL PROJECT	SHEET No.	TOTAL SHEETS
08	SBd	2	0.9/2.4	58	94

LICENSED LANDSCAPE ARCHITECT

1-25-10
PLANS APPROVAL DATE

LICENSED LANDSCAPE ARCHITECT — RAY T. DESSELLE, No. 2416 — Signature — 11-30-09 Renewal Date — 10-30-09 Date — STATE OF CALIFORNIA

THE STATE OF CALIFORNIA OR ITS OFFICERS OR AGENTS SHALL NOT BE RESPONSIBLE FOR THE ACCURACY OR COMPLETENESS OF SCANNED COPIES OF THIS PLAN SHEET.

NOTE: FOR COMPLETE RIGHT OF WAY DATA, SEE RIGHT OF WAY RECORD MAPS AT DISTRICT OFFICE.

KEYMAP

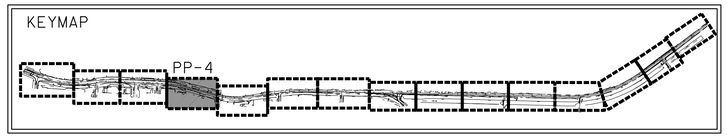

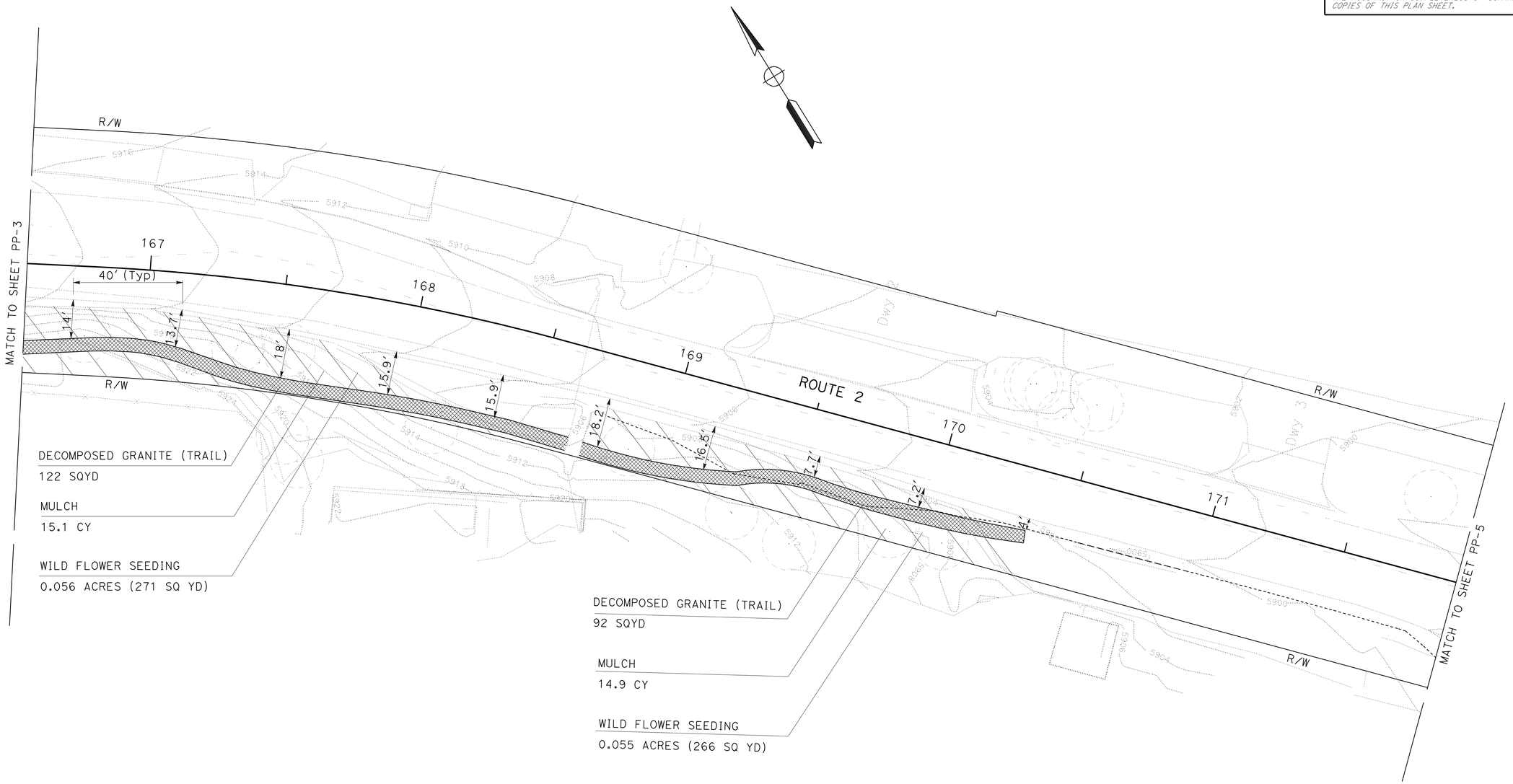

PLANTING PLAN

SCALE: 1" = 20'

PP-4

THIS PLAN ACCURATE FOR LANDSCAPE WORK ONLY

STATE OF CALIFORNIA - DEPARTMENT OF TRANSPORTATION
Caltrans® LANDSCAPE ARCHITECTURE B

SENIOR LANDSCAPE ARCHITECT: RAY DESSELLE

CALCULATED-DESIGNED BY: TIM WANDS
CHECKED BY: MIKE STIVERS

REVISED BY | DATE REVISED

LAST REVISION 10-30-09 | DATE PLOTTED => 29-JAN-2010 | TIME PLOTTED => 14:26

BORDER LAST REVISED 4/11/2008 | RELATIVE BORDER SCALE IS IN INCHES 0 1 2 3 | USERNAME => trienard | DGN FILE => 80c020ti004.dgn | CU 08341 | EA 0C0201

Dist	COUNTY	ROUTE	POST MILES TOTAL PROJECT	SHEET No.	TOTAL SHEETS
08	SBd	2	0.9/2.4	59	94

LICENSED LANDSCAPE ARCHITECT

1-25-10
PLANS APPROVAL DATE

LICENSED LANDSCAPE ARCHITECT
RAY A. DESSELLE No. 3016
Signature
11-30-09
Renewal Date
10-30-09
Date
STATE OF CALIFORNIA

THE STATE OF CALIFORNIA OR ITS OFFICERS OR AGENTS SHALL NOT BE RESPONSIBLE FOR THE ACCURACY OR COMPLETENESS OF SCANNED COPIES OF THIS PLAN SHEET.

NOTE: FOR COMPLETE RIGHT OF WAY DATA, SEE RIGHT OF WAY RECORD MAPS AT DISTRICT OFFICE.

KEYMAP

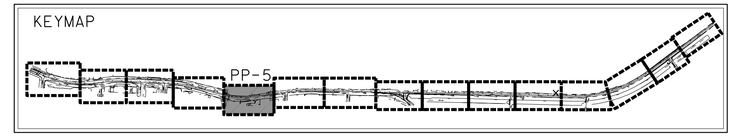

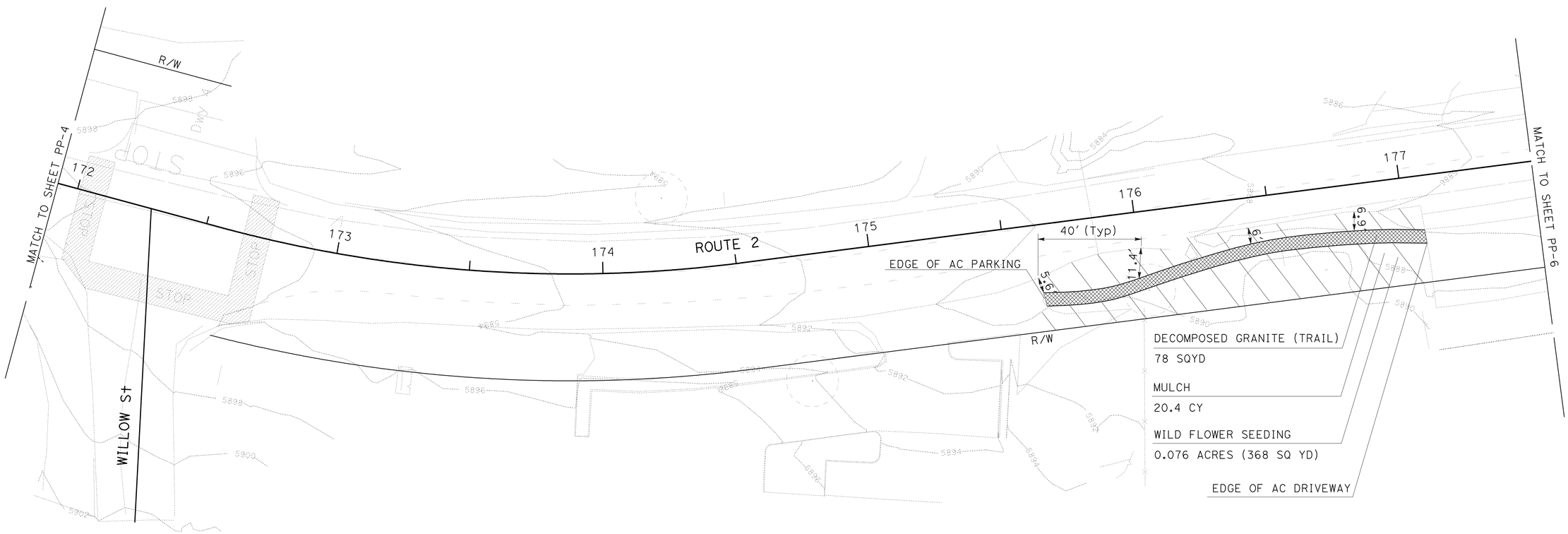

PLANTING PLAN

SCALE: 1" = 20'

PP-5

THIS PLAN ACCURATE FOR LANDSCAPE WORK ONLY

STATE OF CALIFORNIA - DEPARTMENT OF TRANSPORTATION
Caltrans® LANDSCAPE ARCHITECTURE B

SENIOR LANDSCAPE ARCHITECT: RAY DESSELLE

CALCULATED-DESIGNED BY: TIM WANDS
CHECKED BY: MIKE STIVERS

REVISED BY
DATE REVISED

LAST REVISION 10-30-09
DATE PLOTTED => 29-JAN-2010
TIME PLOTTED => 14:26

Dist	COUNTY	ROUTE	POST MILES TOTAL PROJECT	SHEET No.	TOTAL SHEETS
08	SBd	2	0.9/2.4	60	94

LICENSED LANDSCAPE ARCHITECT

1-25-10
PLANS APPROVAL DATE

LICENSED LANDSCAPE ARCHITECT
RAY A. DESSELLE No. 3016
Signature
11-30-09
Renewal Date
10-30-09
Date
STATE OF CALIFORNIA

THE STATE OF CALIFORNIA OR ITS OFFICERS OR AGENTS SHALL NOT BE RESPONSIBLE FOR THE ACCURACY OR COMPLETENESS OF SCANNED COPIES OF THIS PLAN SHEET.

NOTE: FOR COMPLETE RIGHT OF WAY DATA, SEE RIGHT OF WAY RECORD MAPS AT DISTRICT OFFICE.

KEYMAP

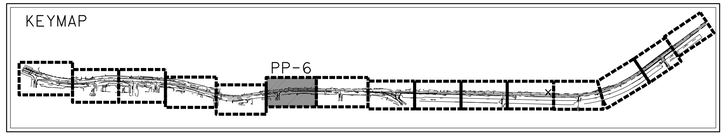

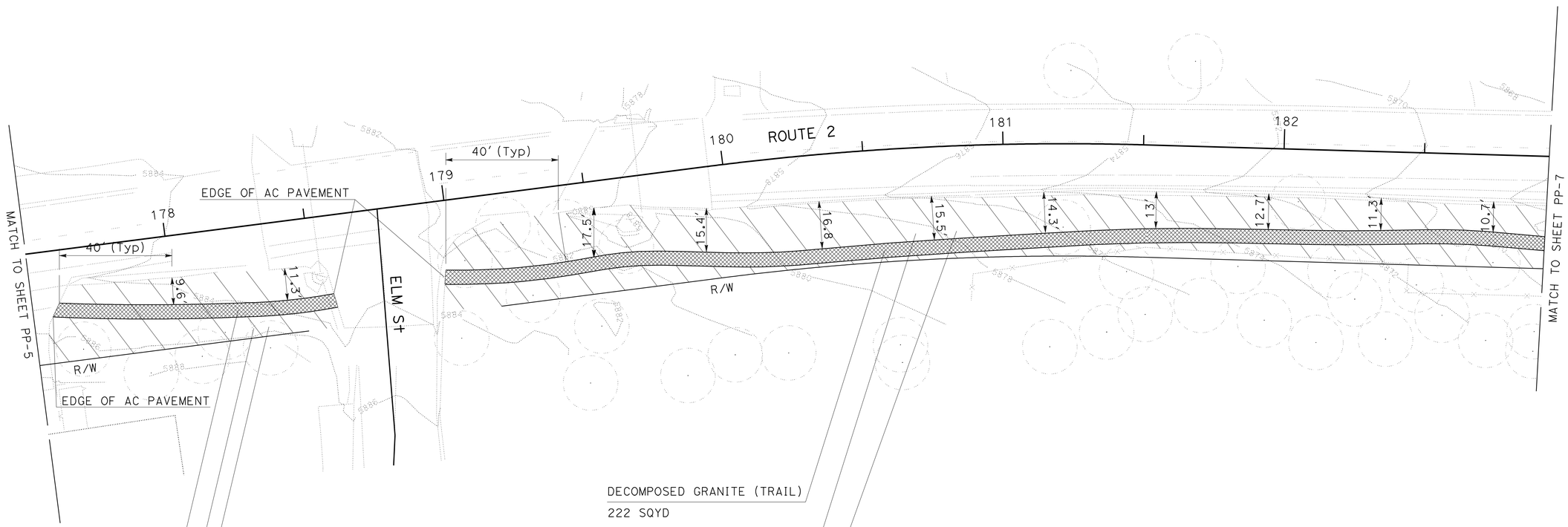

DECOMPOSED GRANITE (TRAIL)
57 SQYD

MULCH
11.8 CY

WILD FLOWER SEEDING
0.044 ACRES (213 SQ YD)

DECOMPOSED GRANITE (TRAIL)
222 SQYD

MULCH
45.4 CY

WILD FLOWER SEEDING
0.17 ACRES (823 SQ YD)

PLANTING PLAN

SCALE: 1" = 20'

PP-6

THIS PLAN ACCURATE FOR LANDSCAPE WORK ONLY

STATE OF CALIFORNIA - DEPARTMENT OF TRANSPORTATION
Caltrans® LANDSCAPE ARCHITECTURE B

SENIOR LANDSCAPE ARCHITECT: RAY DESSELLE

CALCULATED-DESIGNED BY: TIM WANDS
CHECKED BY: MIKE STIVERS

REVISED BY
DATE REVISED

LAST REVISION 10-30-09
DATE PLOTTED => 29-JAN-2010
TIME PLOTTED => 14:26

Dist	COUNTY	ROUTE	POST MILES TOTAL PROJECT	SHEET No.	TOTAL SHEETS
08	SBd	2	0.9/2.4	61	94

LICENSED LANDSCAPE ARCHITECT

1-25-10
PLANS APPROVAL DATE

LICENSED LANDSCAPE ARCHITECT
RAY A. DESSELLE No. 3015
Signature
11-30-09
Renewal Date
10-30-09
Date
STATE OF CALIFORNIA

THE STATE OF CALIFORNIA OR ITS OFFICERS OR AGENTS SHALL NOT BE RESPONSIBLE FOR THE ACCURACY OR COMPLETENESS OF SCANNED COPIES OF THIS PLAN SHEET.

NOTE: FOR COMPLETE RIGHT OF WAY DATA, SEE RIGHT OF WAY RECORD MAPS AT DISTRICT OFFICE.

KEYMAP

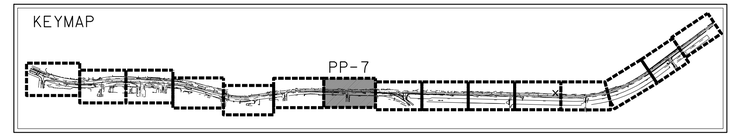

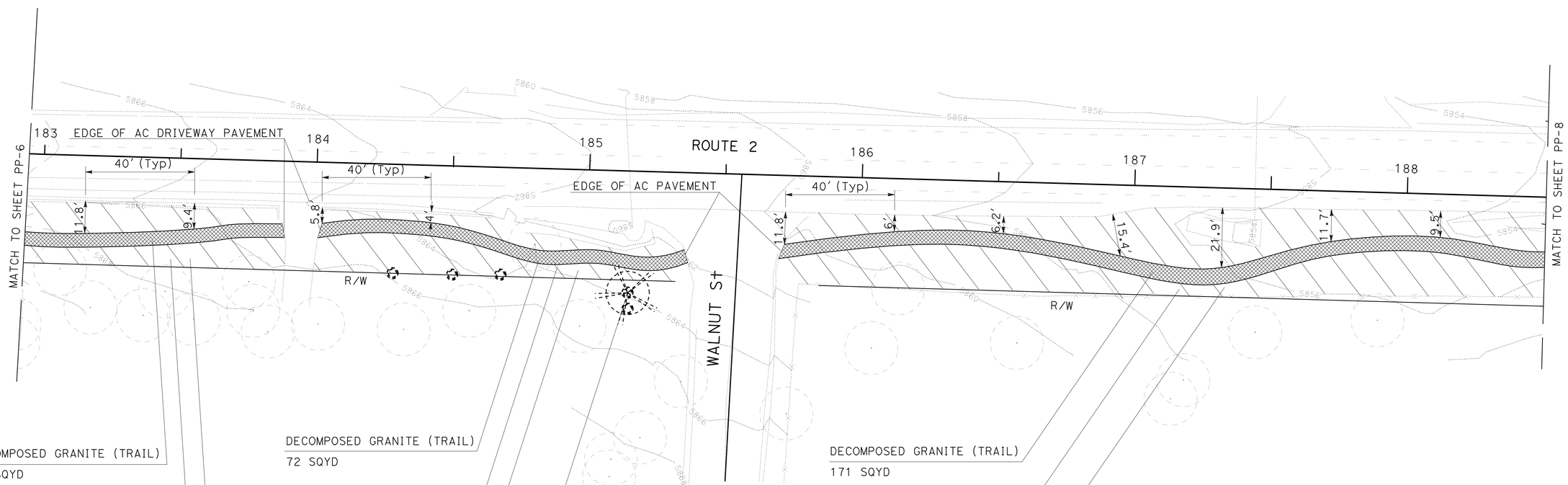

DECOMPOSED GRANITE (TRAIL)
53 SQYD

MULCH
10.2 CY

WILD FLOWER SEEDING
0.038 ACRES (184 SQ YD)

DECOMPOSED GRANITE (TRAIL)
72 SQYD

MULCH
11.1 CY

WILD FLOWER SEEDING
0.041 ACRES (198 SQ YD)

PRUNE OVERHANG
WITHIN RIGHT OF WAY

DECOMPOSED GRANITE (TRAIL)
171 SQYD

MULCH
34.5

WILD FLOWER SEEDING
0.14 ACRES (678 SQ YD)

PLANTING PLAN

SCALE: 1" = 20'

PP-7

THIS PLAN ACCURATE FOR LANDSCAPE WORK ONLY

STATE OF CALIFORNIA - DEPARTMENT OF TRANSPORTATION
Caltrans® LANDSCAPE ARCHITECTURE B

SENIOR LANDSCAPE ARCHITECT: RAY DESSELLE
CALCULATED-DESIGNED BY: TIM WANDS
CHECKED BY: MIKE STIVERS
REVISED BY
DATE REVISED

LAST REVISION 10-30-09
DATE PLOTTED => 29-JAN-2010
TIME PLOTTED => 14:26

Dist	COUNTY	ROUTE	POST MILES TOTAL PROJECT	SHEET No.	TOTAL SHEETS
08	SBd	2	0.9/2.4	62	94

LICENSED LANDSCAPE ARCHITECT

1-25-10
PLANS APPROVAL DATE

LICENSED LANDSCAPE ARCHITECT — RAY T. DESSELLE — No. 3015 — Signature 11-30-09 Renewal Date — 10-30-09 Date — STATE OF CALIFORNIA

THE STATE OF CALIFORNIA OR ITS OFFICERS OR AGENTS SHALL NOT BE RESPONSIBLE FOR THE ACCURACY OR COMPLETENESS OF SCANNED COPIES OF THIS PLAN SHEET.

NOTE: FOR COMPLETE RIGHT OF WAY DATA, SEE RIGHT OF WAY RECORD MAPS AT DISTRICT OFFICE.

KEYMAP

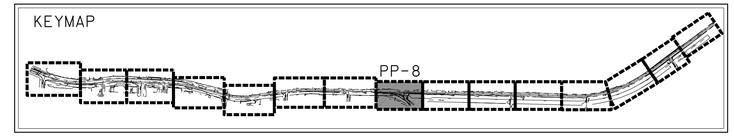

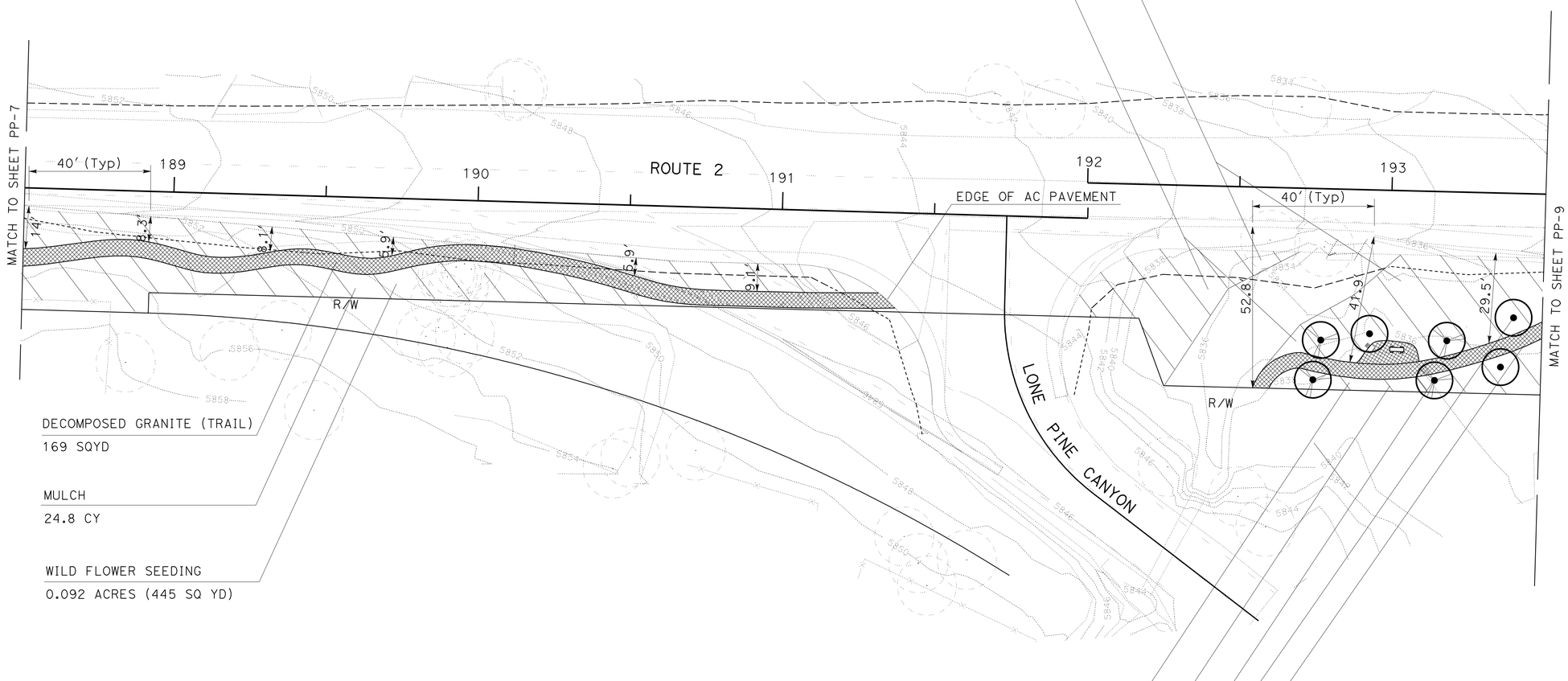

THIS PLAN ACCURATE FOR LANDSCAPE WORK ONLY

PLANTING PLAN

SCALE: 1" = 20'

PP-8

REVISED BY	
DATE REVISED	
TIM WANDS	CALCULATED-DESIGNED BY
MIKE STIVERS	CHECKED BY
SENIOR LANDSCAPE ARCHITECT	
RAY DESSELLE	

STATE OF CALIFORNIA - DEPARTMENT OF TRANSPORTATION

Caltrans® LANDSCAPE ARCHITECTURE B

LAST REVISION 10-30-09 | DATE PLOTTED => 29-JAN-2010 | TIME PLOTTED => 14:26

Dist	COUNTY	ROUTE	POST MILES TOTAL PROJECT	SHEET No.	TOTAL SHEETS
08	SBd	2	0.9/2.4	63	94

LICENSED LANDSCAPE ARCHITECT

1-25-10
PLANS APPROVAL DATE

LICENSED LANDSCAPE ARCHITECT
RAY T. DESSELLE No. 2416
Signature
11-30-09
Renewal Date
10-30-09
Date
STATE OF CALIFORNIA

THE STATE OF CALIFORNIA OR ITS OFFICERS OR AGENTS SHALL NOT BE RESPONSIBLE FOR THE ACCURACY OR COMPLETENESS OF SCANNED COPIES OF THIS PLAN SHEET.

NOTE: FOR COMPLETE RIGHT OF WAY DATA, SEE RIGHT OF WAY RECORD MAPS AT DISTRICT OFFICE.

KEYMAP

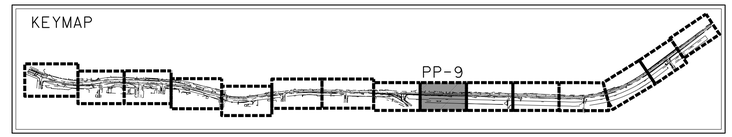

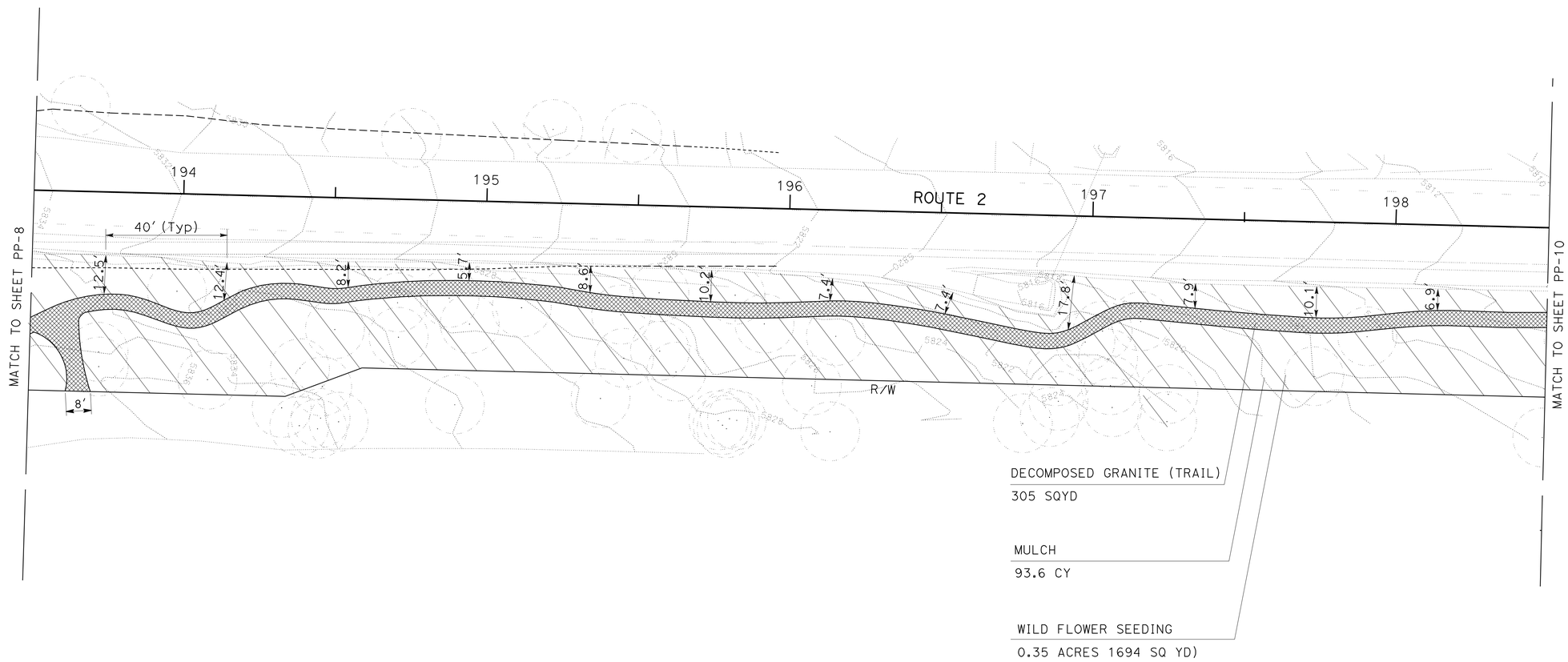

PLANTING PLAN

SCALE: 1" = 20'

PP-9

THIS PLAN ACCURATE FOR LANDSCAPE WORK ONLY

STATE OF CALIFORNIA - DEPARTMENT OF TRANSPORTATION
LANDSCAPE ARCHITECTURE B

SENIOR LANDSCAPE ARCHITECT: RAY DESSELLE
CALCULATED-DESIGNED BY: TIM WANDS
CHECKED BY: MIKE STIVERS
REVISED BY
DATE REVISED

LAST REVISION 10-30-09
DATE PLOTTED => 29-JAN-2010
TIME PLOTTED => 14:26

Dist	COUNTY	ROUTE	POST MILES TOTAL PROJECT	SHEET No.	TOTAL SHEETS
08	SBd	2	0.9/2.4	64	94

LICENSED LANDSCAPE ARCHITECT

1-25-10
PLANS APPROVAL DATE

LICENSED LANDSCAPE ARCHITECT
RAY T. DESSELLE No. 3015
Signature
11-30-09
Renewal Date
10-30-09
Date
STATE OF CALIFORNIA

THE STATE OF CALIFORNIA OR ITS OFFICERS OR AGENTS SHALL NOT BE RESPONSIBLE FOR THE ACCURACY OR COMPLETENESS OF SCANNED COPIES OF THIS PLAN SHEET.

NOTE: FOR COMPLETE RIGHT OF WAY DATA, SEE RIGHT OF WAY RECORD MAPS AT DISTRICT OFFICE.

KEYMAP

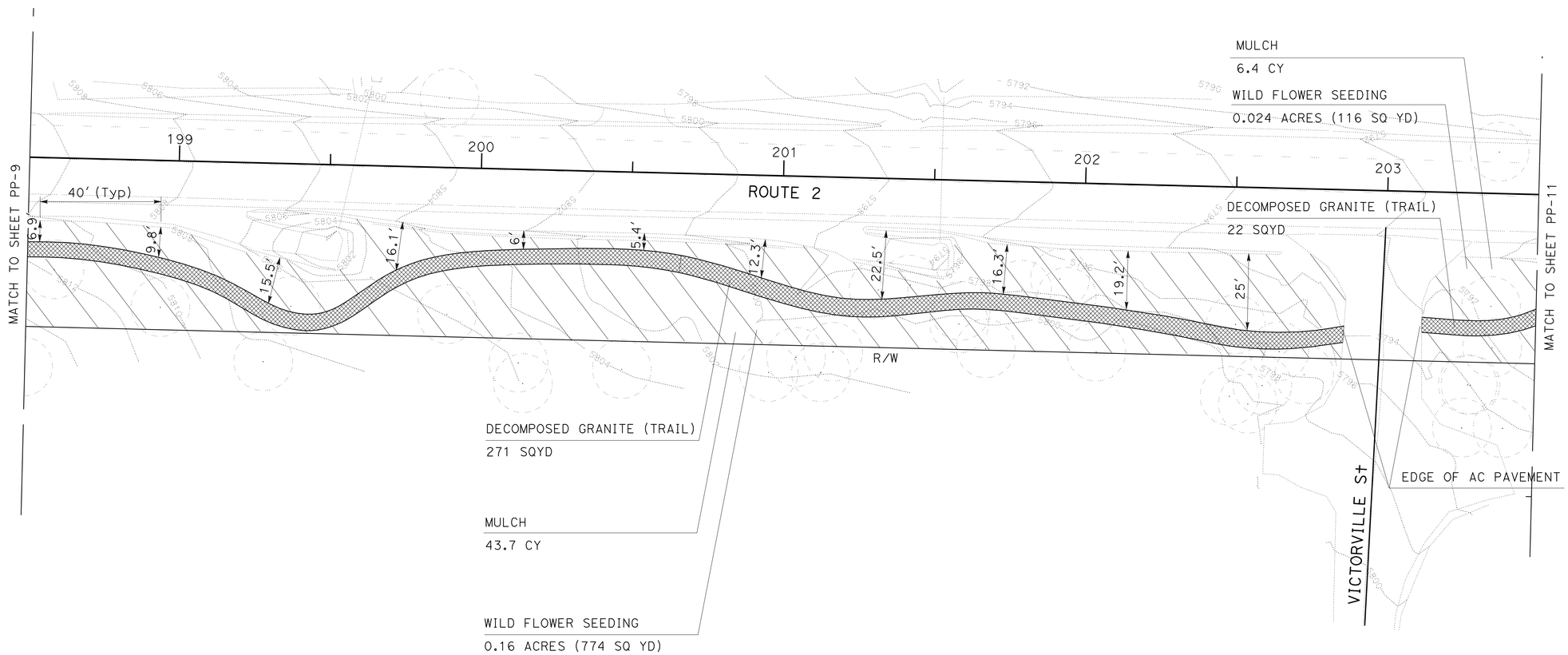

PLANTING PLAN

SCALE: 1" = 20'

PP-10

THIS PLAN ACCURATE FOR LANDSCAPE WORK ONLY

STATE OF CALIFORNIA - DEPARTMENT OF TRANSPORTATION
Caltrans® LANDSCAPE ARCHITECTURE B

SENIOR LANDSCAPE ARCHITECT: RAY DESSELLE
CALCULATED-DESIGNED BY: TIM WANDS
CHECKED BY: MIKE STIVERS
REVISED BY
DATE REVISED

LAST REVISION 10-30-09
DATE PLOTTED => 29-JAN-2010
TIME PLOTTED => 14:26

Dist	COUNTY	ROUTE	POST MILES TOTAL PROJECT	SHEET No.	TOTAL SHEETS
08	SBd	2	0.9/2.4	65	94

LICENSED LANDSCAPE ARCHITECT

1-25-10
PLANS APPROVAL DATE

LICENSED LANDSCAPE ARCHITECT
RAY T. DESSELLE No. 3015
Signature
11-30-09
Renewal Date
10-30-09
Date
STATE OF CALIFORNIA

THE STATE OF CALIFORNIA OR ITS OFFICERS OR AGENTS SHALL NOT BE RESPONSIBLE FOR THE ACCURACY OR COMPLETENESS OF SCANNED COPIES OF THIS PLAN SHEET.

NOTE: FOR COMPLETE RIGHT OF WAY DATA, SEE RIGHT OF WAY RECORD MAPS AT DISTRICT OFFICE.

KEYMAP

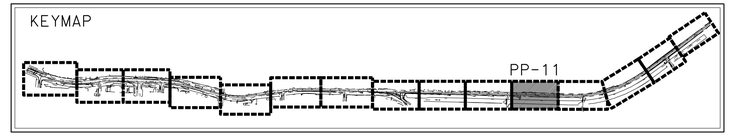

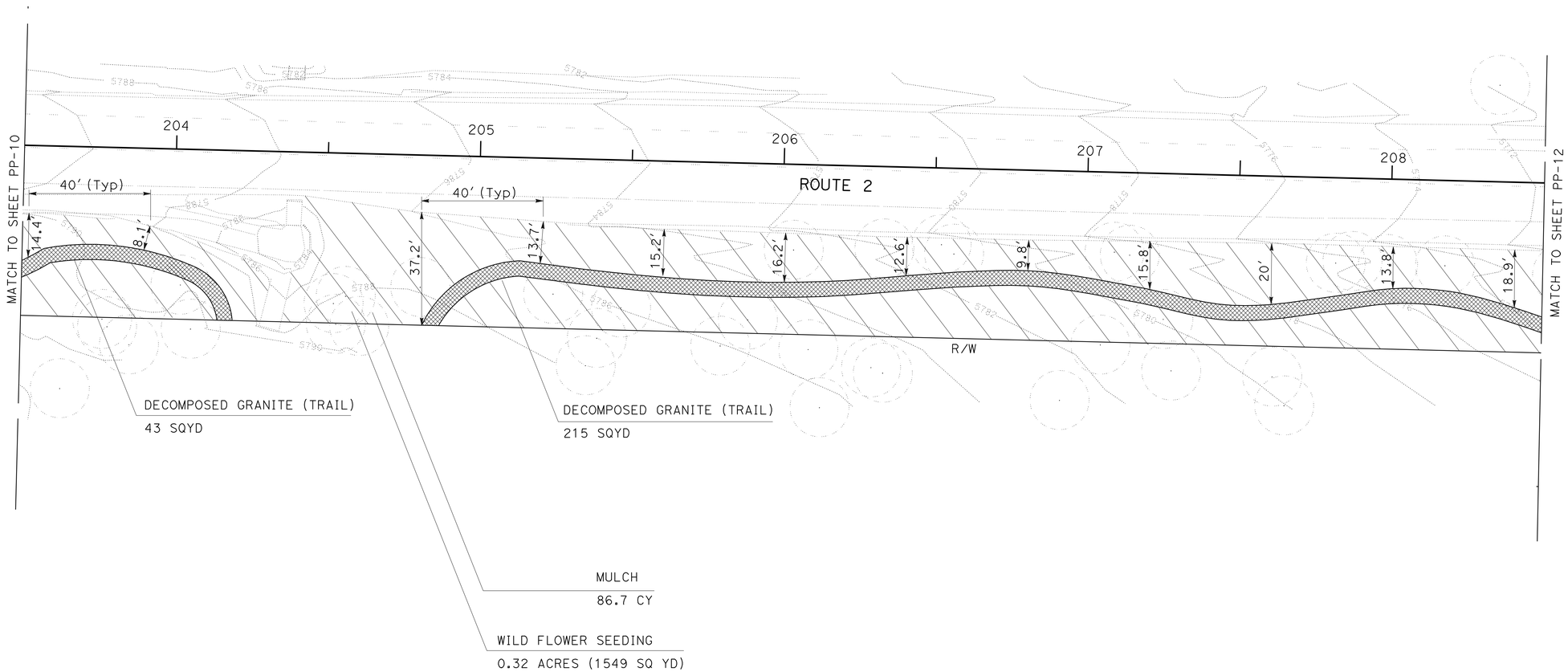

PLANTING PLAN

SCALE: 1" = 20'

PP-11

THIS PLAN ACCURATE FOR LANDSCAPE WORK ONLY

STATE OF CALIFORNIA - DEPARTMENT OF TRANSPORTATION
Caltrans® LANDSCAPE ARCHITECTURE B

SENIOR LANDSCAPE ARCHITECT: RAY DESSELLE

CALCULATED-DESIGNED BY: TIM WANDS
CHECKED BY: MIKE STIVERS

REVISED BY
DATE REVISED

LAST REVISION 10-30-09
DATE PLOTTED => 29-JAN-2010
TIME PLOTTED => 14:27

Dist	COUNTY	ROUTE	POST MILES TOTAL PROJECT	SHEET No.	TOTAL SHEETS
08	SBd	2	0.9/2.4	66	94

LICENSED LANDSCAPE ARCHITECT

1-25-10
PLANS APPROVAL DATE

LICENSED LANDSCAPE ARCHITECT
RAY J. DESSELLE No. 3015
Signature
11-30-09
Renewal Date
10-30-09
Date
STATE OF CALIFORNIA

THE STATE OF CALIFORNIA OR ITS OFFICERS OR AGENTS SHALL NOT BE RESPONSIBLE FOR THE ACCURACY OR COMPLETENESS OF SCANNED COPIES OF THIS PLAN SHEET.

NOTE: FOR COMPLETE RIGHT OF WAY DATA, SEE RIGHT OF WAY RECORD MAPS AT DISTRICT OFFICE.

KEYMAP

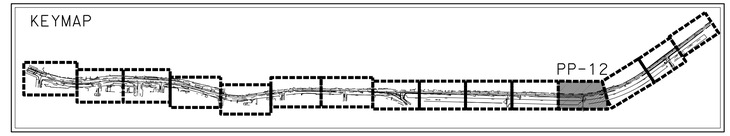

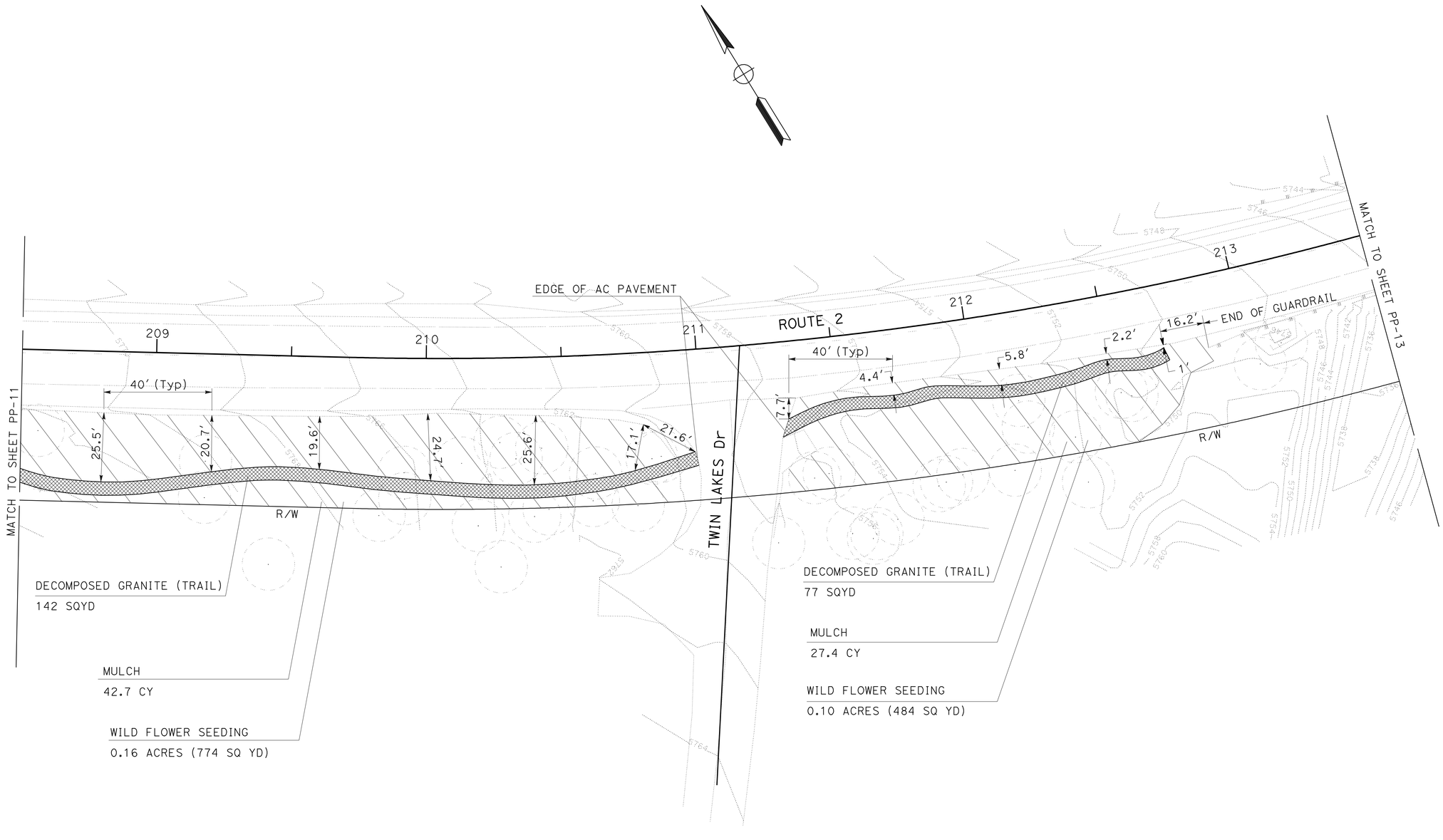

PLANTING PLAN

SCALE: 1" = 20'

PP-12

THIS PLAN ACCURATE FOR LANDSCAPE WORK ONLY

REVISED BY	DATE REVISED

CALCULATED-DESIGNED BY: TIM WANDS
CHECKED BY: MIKE STIVERS
SENIOR LANDSCAPE ARCHITECT: RAY DESSELLE

STATE OF CALIFORNIA - DEPARTMENT OF TRANSPORTATION
Caltrans® LANDSCAPE ARCHITECTURE B

LAST REVISION 10-30-09 | DATE PLOTTED => 29-JAN-2010 | TIME PLOTTED => 14:27

Dist	COUNTY	ROUTE	POST MILES TOTAL PROJECT	SHEET No.	TOTAL SHEETS
08	SBd	2	0.9/2.4	67	94

LICENSED LANDSCAPE ARCHITECT

1-25-10
PLANS APPROVAL DATE

LICENSED LANDSCAPE ARCHITECT
RAY J. DESSELLE No. 2413
Signature
11-30-09
Renewal Date
10-30-09
Date
STATE OF CALIFORNIA

THE STATE OF CALIFORNIA OR ITS OFFICERS OR AGENTS SHALL NOT BE RESPONSIBLE FOR THE ACCURACY OR COMPLETENESS OF SCANNED COPIES OF THIS PLAN SHEET.

NOTE: FOR COMPLETE RIGHT OF WAY DATA, SEE RIGHT OF WAY RECORD MAPS AT DISTRICT OFFICE.

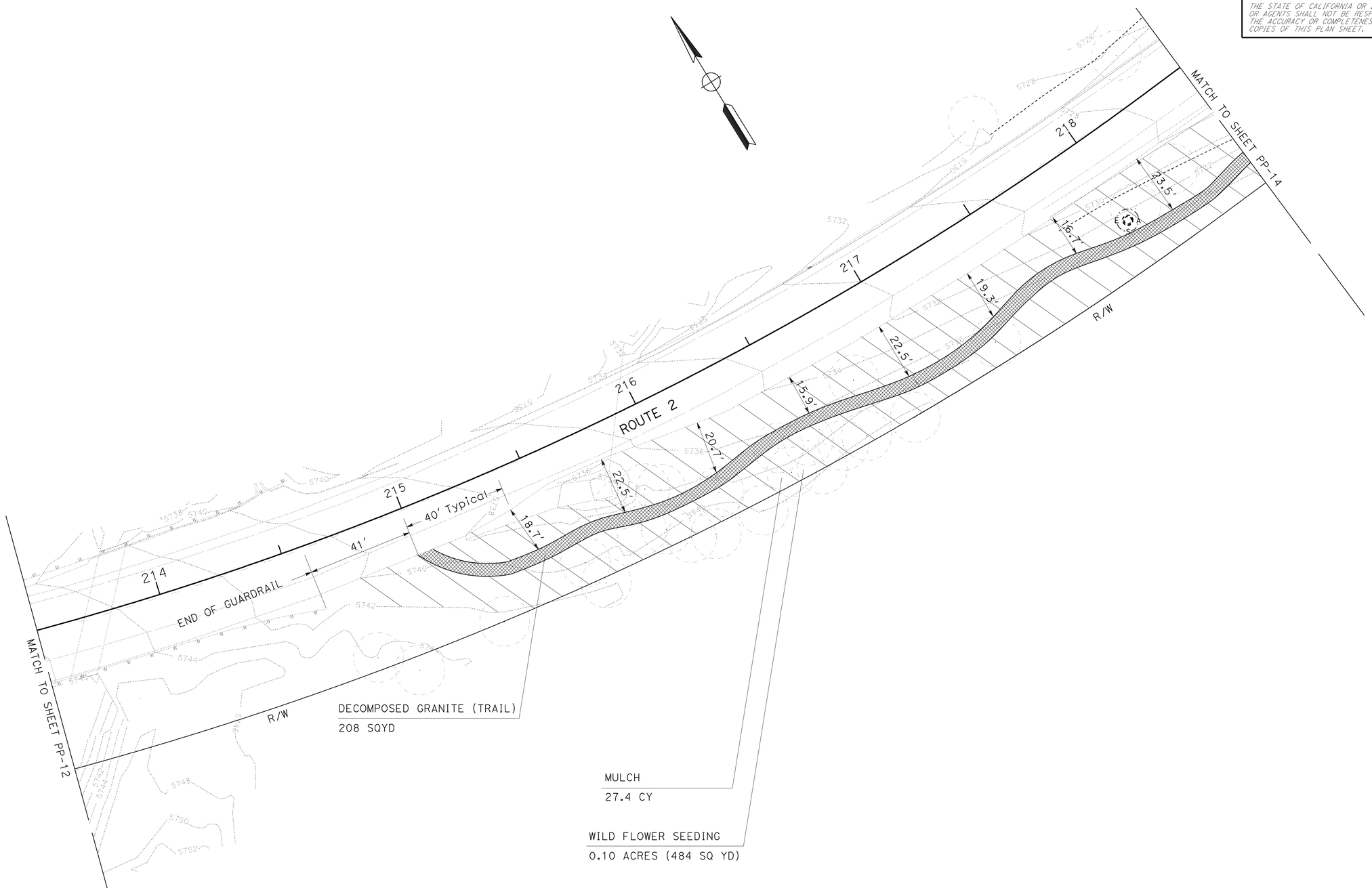

PLANTING PLAN

SCALE: 1" = 20'

PP-13

THIS PLAN ACCURATE FOR LANDSCAPE WORK ONLY

STATE OF CALIFORNIA - DEPARTMENT OF TRANSPORTATION
Caltrans® LANDSCAPE ARCHITECTURE B

SENIOR LANDSCAPE ARCHITECT: RAY DESSELLE
CALCULATED-DESIGNED BY: TIM WANDS
CHECKED BY: MIKE STIVERS
REVISED BY
DATE REVISED

LAST REVISION 10-30-09
DATE PLOTTED => 29-JAN-2010
TIME PLOTTED => 14:27

Dist	COUNTY	ROUTE	POST MILES TOTAL PROJECT	SHEET No.	TOTAL SHEETS
08	SBd	2	0.9/2.4	68	94

LICENSED LANDSCAPE ARCHITECT

1-25-10
PLANS APPROVAL DATE

LICENSED LANDSCAPE ARCHITECT
RAY J. DESSELLE No. 3015
Signature
11-30-09
Renewal Date
10-30-09
Date
STATE OF CALIFORNIA

THE STATE OF CALIFORNIA OR ITS OFFICERS OR AGENTS SHALL NOT BE RESPONSIBLE FOR THE ACCURACY OR COMPLETENESS OF SCANNED COPIES OF THIS PLAN SHEET.

NOTE: FOR COMPLETE RIGHT OF WAY DATA, SEE RIGHT OF WAY RECORD MAPS AT DISTRICT OFFICE.

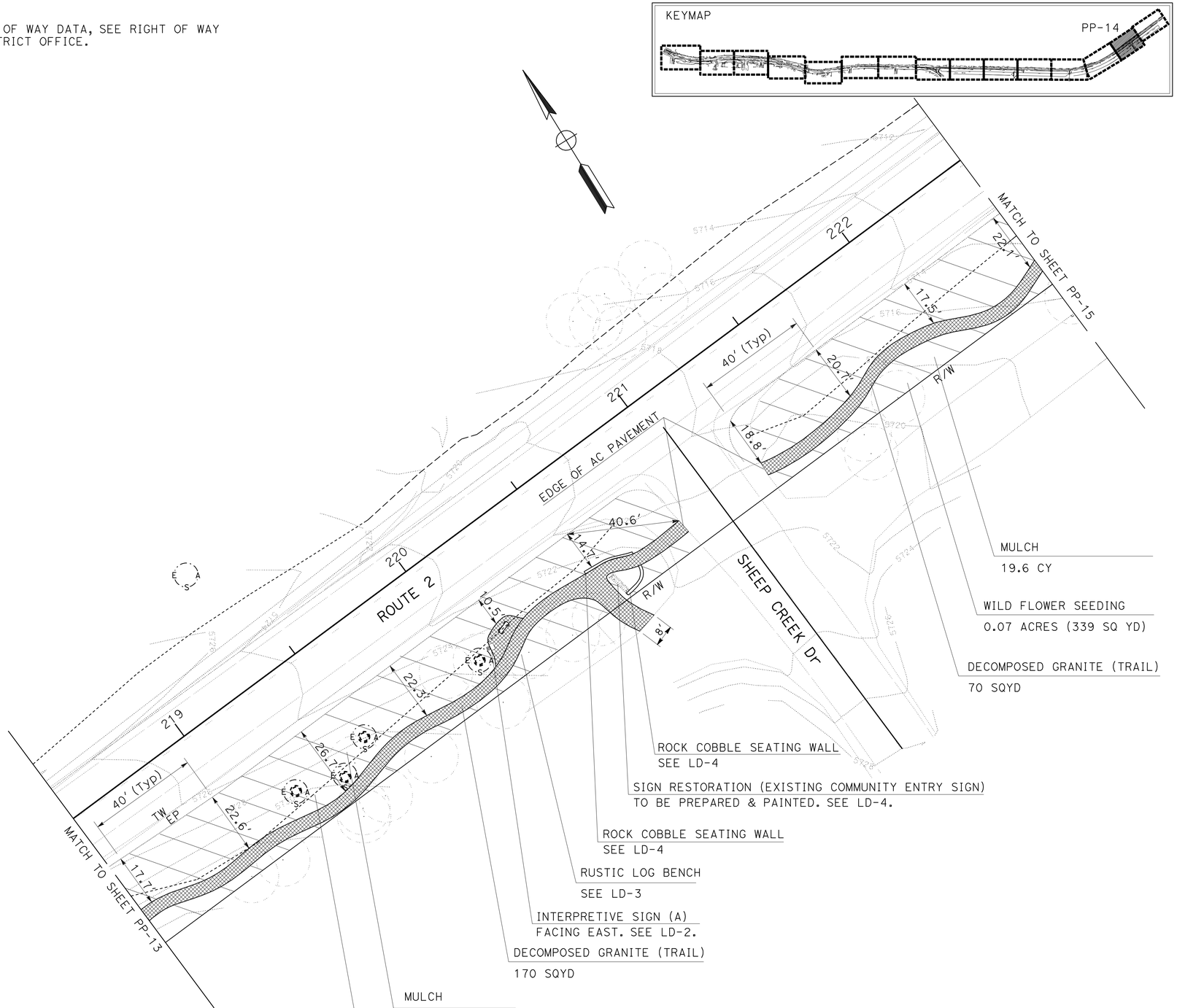

PLANTING PLAN

SCALE: 1" = 20'

PP-14

THIS PLAN ACCURATE FOR LANDSCAPE WORK ONLY

STATE OF CALIFORNIA - DEPARTMENT OF TRANSPORTATION
Caltrans® LANDSCAPE ARCHITECTURE B

SENIOR LANDSCAPE ARCHITECT: RAY DESSELLE
CALCULATED-DESIGNED BY: TIM WANDS
CHECKED BY: MIKE STIVERS
REVISED BY
DATE REVISED

LAST REVISION 10-30-09
DATE PLOTTED => 29-JAN-2010
TIME PLOTTED => 14:27

Dist	COUNTY	ROUTE	POST MILES TOTAL PROJECT	SHEET No.	TOTAL SHEETS
08	SBd	2	0.9/2.4	69	94

LICENSED LANDSCAPE ARCHITECT

1-25-10
PLANS APPROVAL DATE

LICENSED LANDSCAPE ARCHITECT — RAY T. DESSELLE — No. 3015 — Signature — 11-30-09 Renewal Date — 10-30-09 Date — STATE OF CALIFORNIA

THE STATE OF CALIFORNIA OR ITS OFFICERS OR AGENTS SHALL NOT BE RESPONSIBLE FOR THE ACCURACY OR COMPLETENESS OF SCANNED COPIES OF THIS PLAN SHEET.

NOTE: FOR COMPLETE RIGHT OF WAY DATA, SEE RIGHT OF WAY RECORD MAPS AT DISTRICT OFFICE.

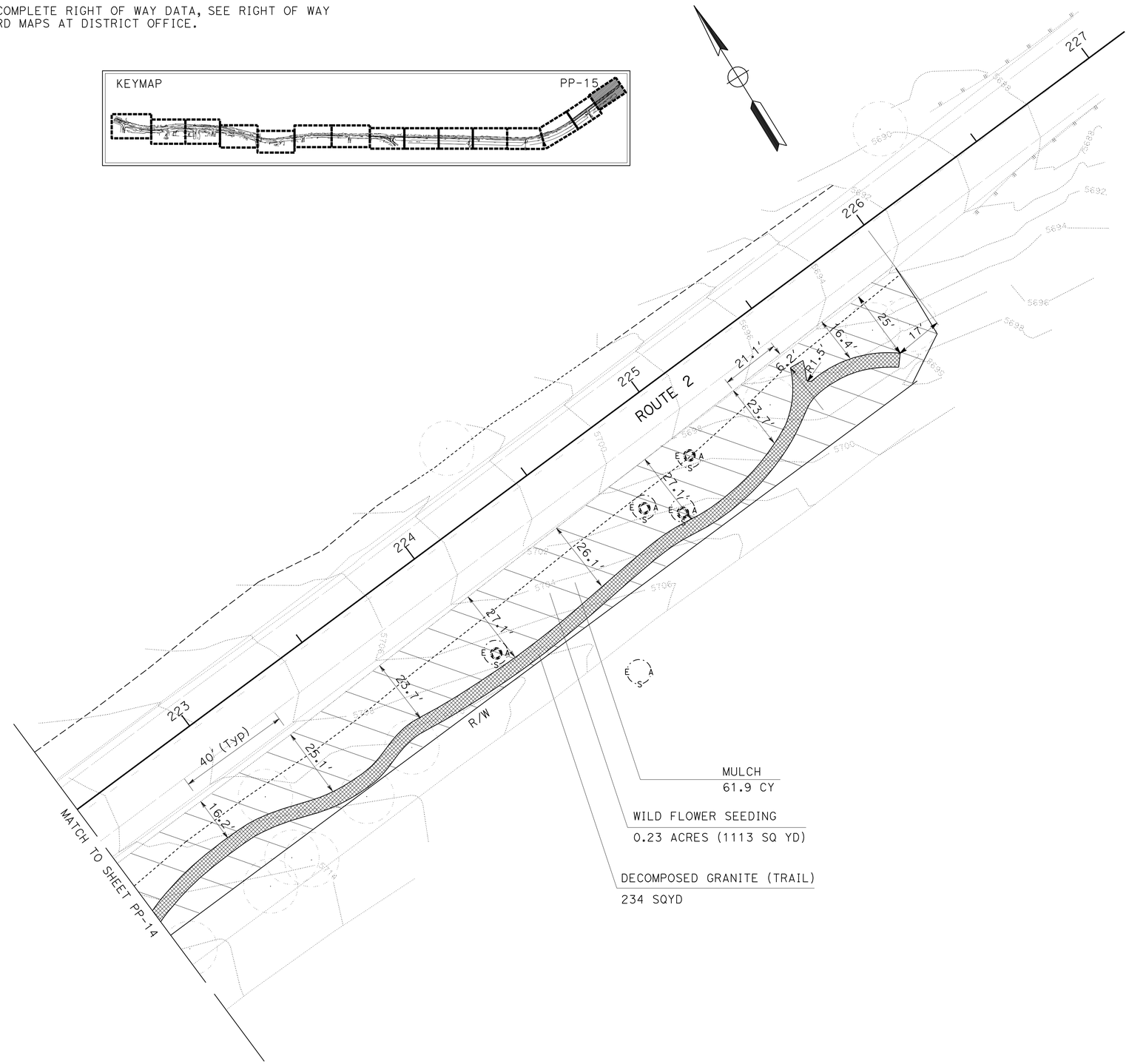

PLANTING PLAN

SCALE: 1" = 20'

PP-15

THIS PLAN ACCURATE FOR LANDSCAPE WORK ONLY

STATE OF CALIFORNIA - DEPARTMENT OF TRANSPORTATION
Caltrans® LANDSCAPE ARCHITECTURE B

SENIOR LANDSCAPE ARCHITECT: RAY DESSELLE
CALCULATED-DESIGNED BY: TIM WANDS
CHECKED BY: MIKE STIVERS
REVISED BY
DATE REVISED

LAST REVISION 10-30-09
DATE PLOTTED => 29-JAN-2010
TIME PLOTTED => 14:27

Dist	COUNTY	ROUTE	POST MILES TOTAL PROJECT	SHEET No.	TOTAL SHEETS
08	SBd	2	0.9/2.4	70	94

LICENSED LANDSCAPE ARCHITECT

1-25-10
PLANS APPROVAL DATE

LICENSED LANDSCAPE ARCHITECT — RAY T. DESSELLE — No. 3015 — Signature — 11-30-09 Renewal Date — 10-30-09 Date — STATE OF CALIFORNIA

THE STATE OF CALIFORNIA OR ITS OFFICERS OR AGENTS SHALL NOT BE RESPONSIBLE FOR THE ACCURACY OR COMPLETENESS OF SCANNED COPIES OF THIS PLAN SHEET.

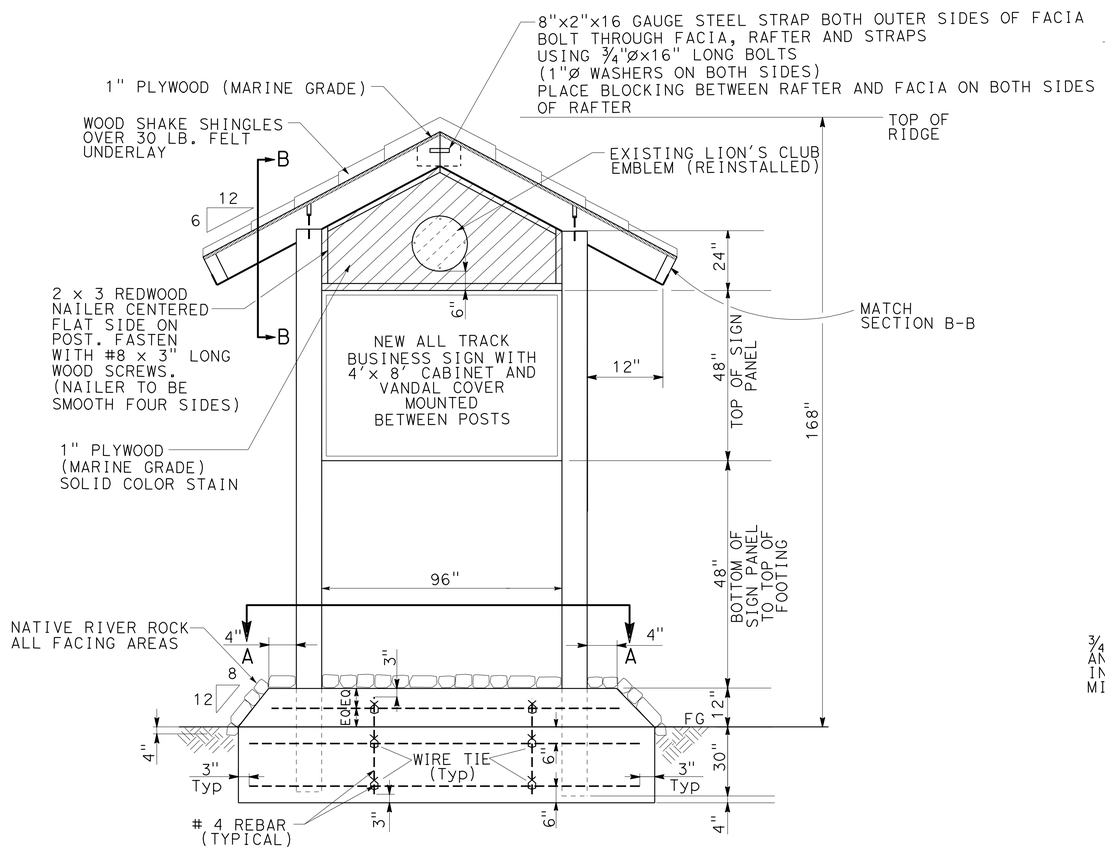

SECTION/ELEVATION

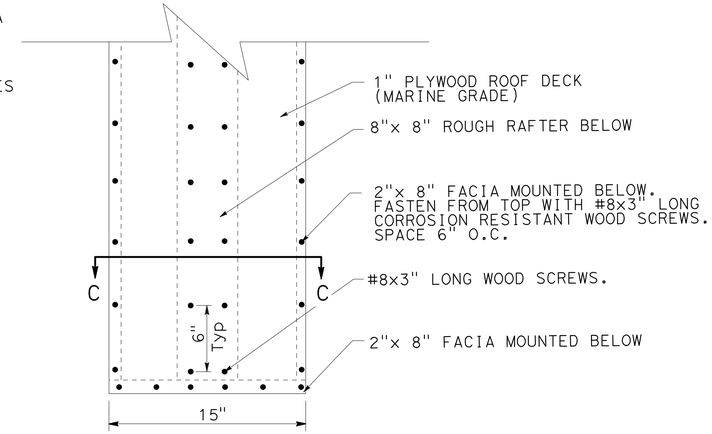

TYPICAL ROOF PLAN

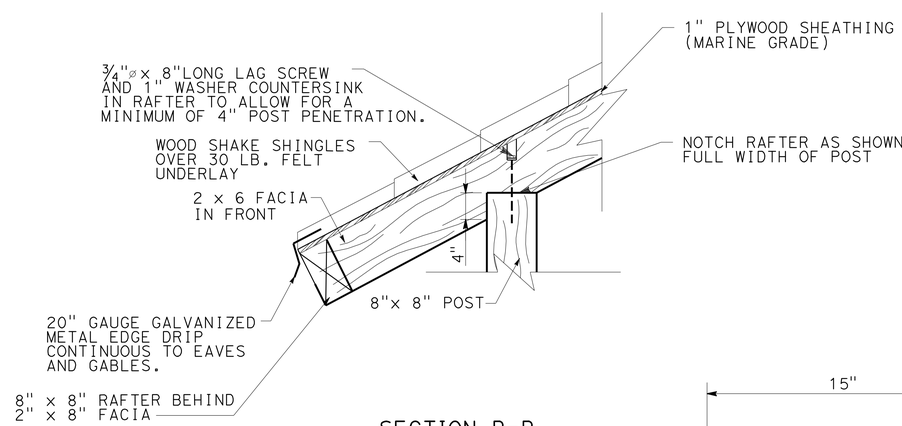

SECTION B-B

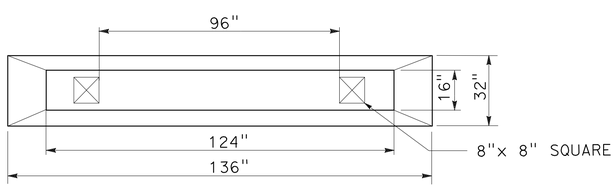

SECTION A-A

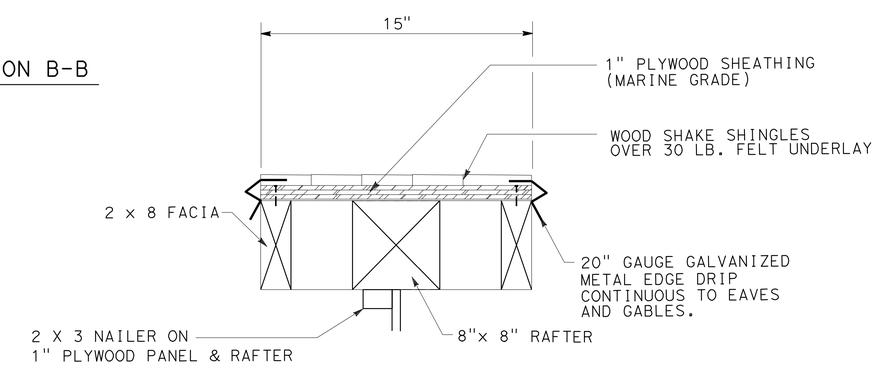

SECTION C-C

NOTES:

1. TIMBER DIMENSIONS ARE NOMINAL.
2. ALL LUMBER SHALL BE ROUGH SAWN UNLESS OTHERWISE NOTED.
3. ALL HARDWARE AND CONNECTORS SHALL BE GALVANIZED AND CORROSION RESISTANT.
4. MATCH COMMUNITY ENTRY SIGN FOUNDATION ROCK WORK.

LANDSCAPE DETAILS
COMMUNITY CENTER SIGN
NO SCALE

LD-1

STATE OF CALIFORNIA - DEPARTMENT OF TRANSPORTATION
Caltrans® LANDSCAPE ARCHITECTURE B
SENIOR LANDSCAPE ARCHITECT: RAY DESSELLE
CALCULATED-DESIGNED BY: TIM WANDS
CHECKED BY: MIKE STIVERS
REVISED BY
DATE REVISED

LAST REVISION 10-30-09
DATE PLOTTED => 29-JAN-2010
TIME PLOTTED => 14:27

Dist	COUNTY	ROUTE	POST MILES TOTAL PROJECT	SHEET No.	TOTAL SHEETS
08	SBd	2	0.9/2.4	71	94

LICENSED LANDSCAPE ARCHITECT

1-25-10
PLANS APPROVAL DATE

LICENSED LANDSCAPE ARCHITECT RAY T. DESSELLE No. 3315 Signature 11-30-09 Renewal Date 10-30-09 Date STATE OF CALIFORNIA

THE STATE OF CALIFORNIA OR ITS OFFICERS OR AGENTS SHALL NOT BE RESPONSIBLE FOR THE ACCURACY OR COMPLETENESS OF SCANNED COPIES OF THIS PLAN SHEET.

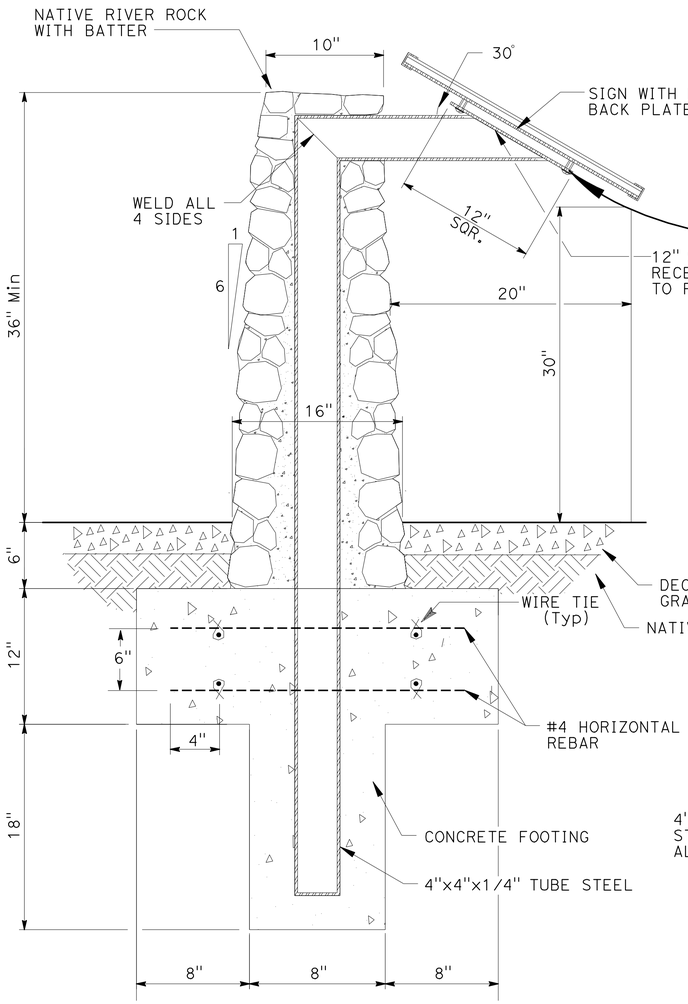

SECTION/ELEVATION

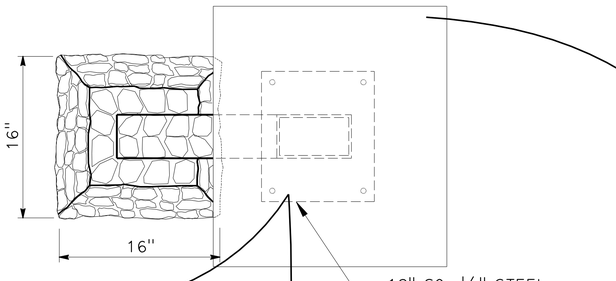

PLAN VIEW

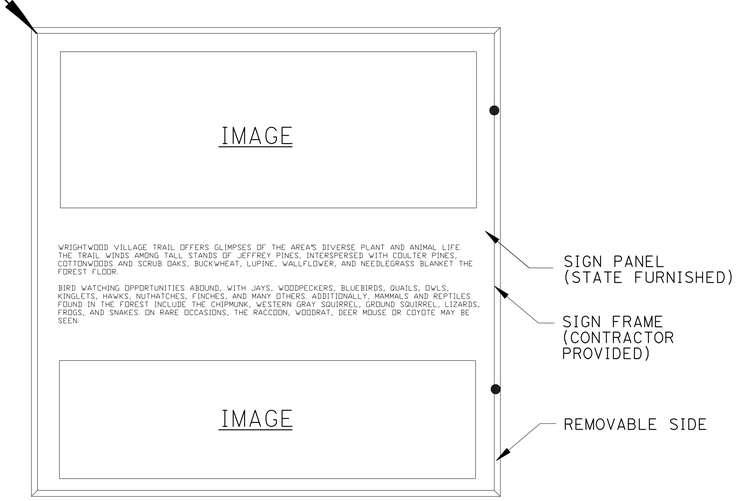

PLAN VIEW

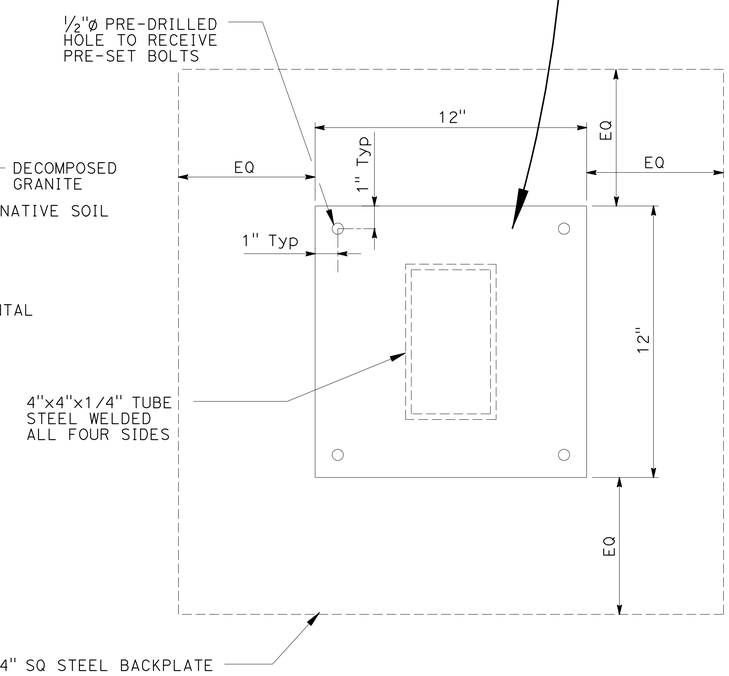

1/4" STEEL RECEIVER PLATE

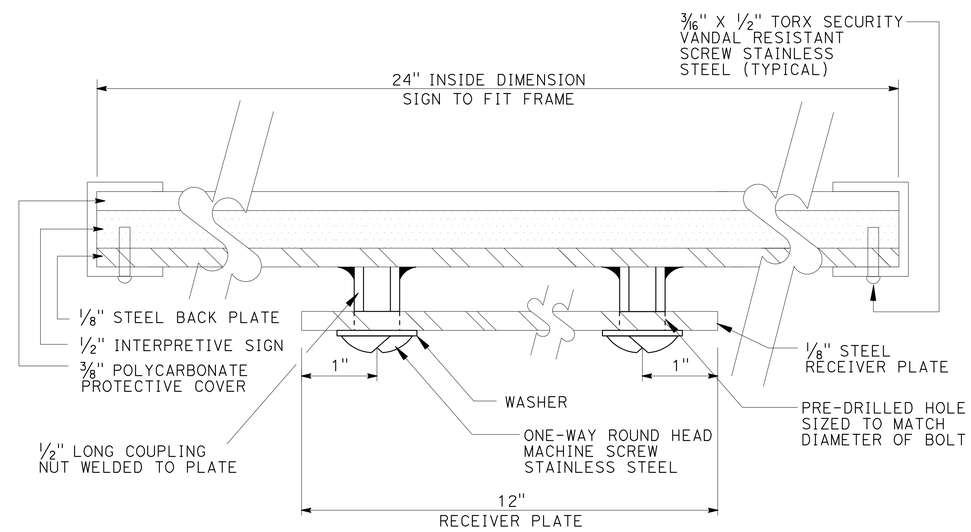

ENLARGED SIGN BACKPLATE

SECTION

NOTES:

1. INTERPRETIVE SIGN PANEL PROVIDED BY THE STATE.
2. SIGN FRAME IS COMPRISED OF 1" U CHANNEL WELDED ON 3 SIDES TO 1/8" THICK STEEL BACK PLATE. ONE SIDE IS TO BE REMOVABLE FOR SIGN INSERTION. REMOVEABLE SIDE TO BE ATTACHED WITH VANDAL RESISTANT HARDWARE. THREADED NUT WELDED TO BACK PLATE SHALL ALIGN WITH HOLES IN RECEIVER PLATE SHOP DRAWING SUBMITTAL REQUIRED.
3. SIGN FRAME AND BACK PLATE SHALL BE CORROSION RESISTANT AND POWDER COATED BLACK.
4. CONTRACTOR SHALL PROVIDE TO STATE 2 WRENCHES FOR VANDAL-RESISTANT HARDWARE.

LANDSCAPE DETAILS
VILLAGE TRAIL INTERPRETIVE SIGN
NO SCALE

LD-2

REVISED BY	DATE REVISED

TIM WANDS — MIKE STIVERS — CALCULATED-DESIGNED BY — CHECKED BY

SENIOR LANDSCAPE ARCHITECT — RAY DESSELLE

STATE OF CALIFORNIA - DEPARTMENT OF TRANSPORTATION
Caltrans® LANDSCAPE ARCHITECTURE B

LAST REVISION 10-30-09 — DATE PLOTTED => 29-JAN-2010 — TIME PLOTTED => 14:27

Dist	COUNTY	ROUTE	POST MILES TOTAL PROJECT	SHEET No.	TOTAL SHEETS
08	SBd	2	0.9/2.4	72	94

LICENSED LANDSCAPE ARCHITECT

1-25-10
PLANS APPROVAL DATE

LICENSED LANDSCAPE ARCHITECT — RAY T. DESSELLE — No. 3015 — Signature — Renewal Date 11-30-09 — Date 10-30-09 — STATE OF CALIFORNIA

THE STATE OF CALIFORNIA OR ITS OFFICERS OR AGENTS SHALL NOT BE RESPONSIBLE FOR THE ACCURACY OR COMPLETENESS OF SCANNED COPIES OF THIS PLAN SHEET.

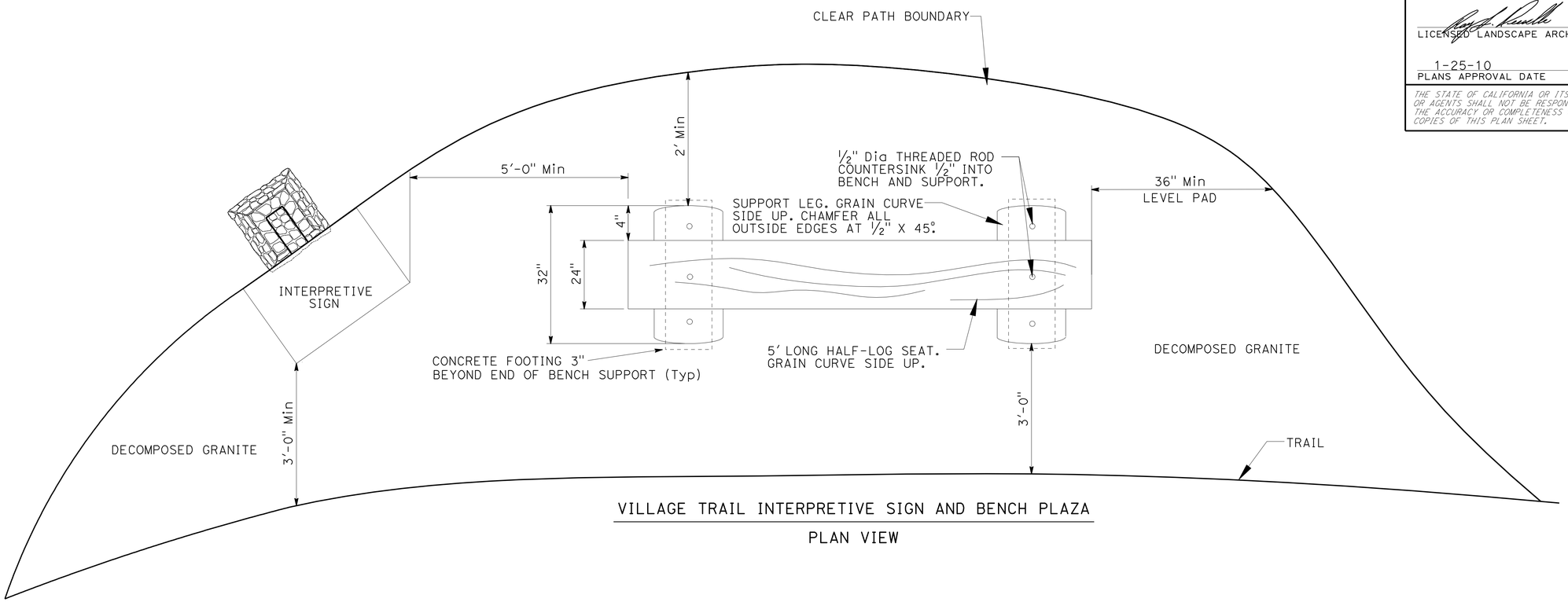

VILLAGE TRAIL INTERPRETIVE SIGN AND BENCH PLAZA

PLAN VIEW

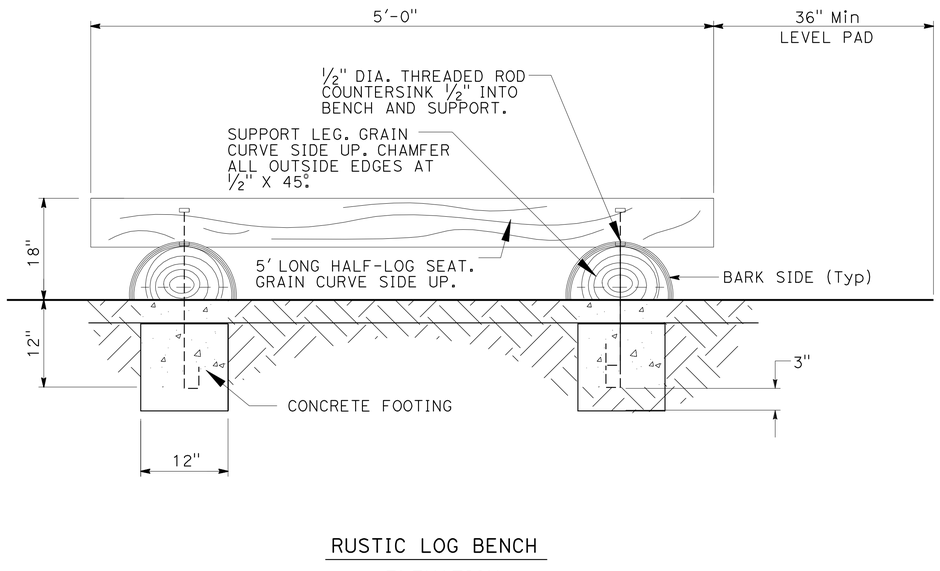

RUSTIC LOG BENCH

ELEVATION

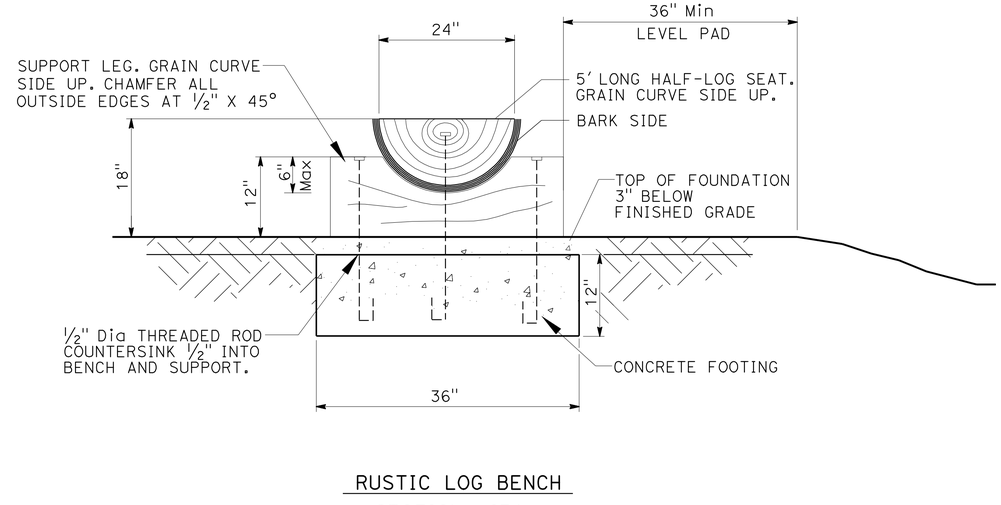

RUSTIC LOG BENCH

SECTION VIEW

LANDSCAPE DETAILS

NO SCALE

LD-3

STATE OF CALIFORNIA - DEPARTMENT OF TRANSPORTATION
Caltrans® LANDSCAPE ARCHITECTURE B

SENIOR LANDSCAPE ARCHITECT: RAY DESSELLE
CALCULATED-DESIGNED BY: TIM WANDS
CHECKED BY: MIKE STIVERS
REVISED BY
DATE REVISED

LAST REVISION 10-30-09 | DATE PLOTTED => 29-JAN-2010 | TIME PLOTTED => 14:28

Dist	COUNTY	ROUTE	POST MILES TOTAL PROJECT	SHEET No.	TOTAL SHEETS
08	SBd	2	0.9/2.4	73	94

LICENSED LANDSCAPE ARCHITECT

1-25-10
PLANS APPROVAL DATE

LICENSED LANDSCAPE ARCHITECT — RAY A. DESSELLE — No. 3015 — Signature — Renewal Date 11-30-09 — Date 10-30-09 — STATE OF CALIFORNIA

THE STATE OF CALIFORNIA OR ITS OFFICERS OR AGENTS SHALL NOT BE RESPONSIBLE FOR THE ACCURACY OR COMPLETENESS OF SCANNED COPIES OF THIS PLAN SHEET.

SIGN RESTORATION
COMMUNITY ENTRY SIGN
FOR REFERENCE ONLY
(WOOD STRUCTURE)

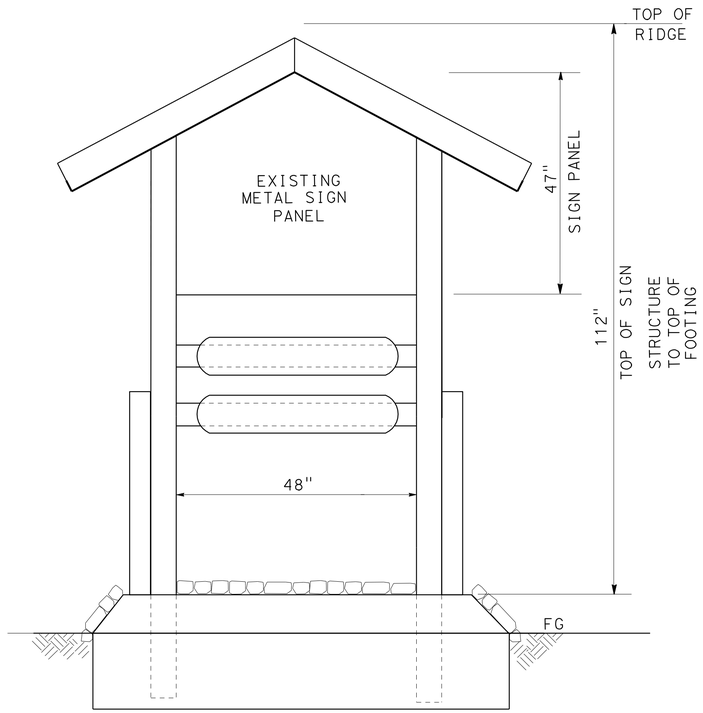

SIGN RESTORATION
COMMUNITY ENTRY SIGN PANEL
(METAL) (MATCH EXISTING COLORS)

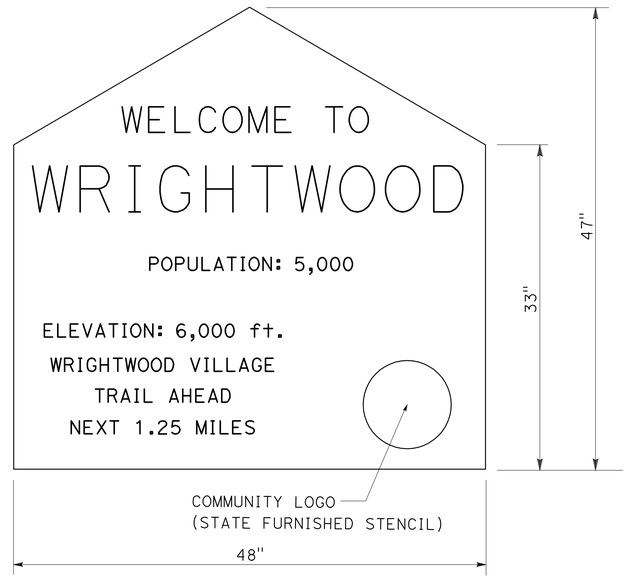

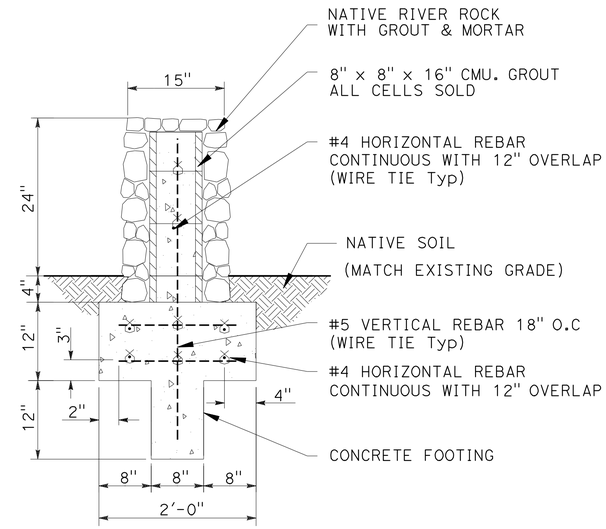

COMMUNITY ENTRY SIGN RESTORATION

SECTION/ELEVATION

ROCK COBBLE SEATING WALL

SECTION/ELEVATION

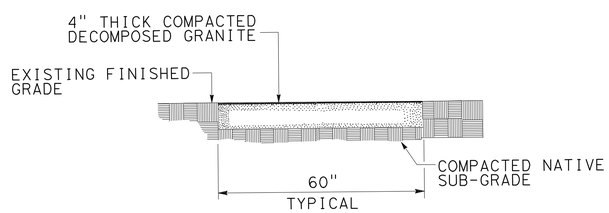

DECOMPOSED GRANITE (TRAIL)

SECTION

NOTE:

1. WHERE TRAIL IS ADJACENT TO AC PAVEMENT, TRAIL SHALL HAVE A SMOOTH JOINT WITHOUT TRIPPING HAZARDS. CROSS SLOPE OF TRAIL SHALL NOT EXCEED 1:20.

LANDSCAPE DETAILS

NO SCALE

LD-4

STATE OF CALIFORNIA - DEPARTMENT OF TRANSPORTATION
Caltrans® LANDSCAPE ARCHITECTURE B

SENIOR LANDSCAPE ARCHITECT: RAY DESSELLE
CALCULATED-DESIGNED BY: TIM WANDS
CHECKED BY: MIKE STIVERS
REVISED BY
DATE REVISED

LAST REVISION 10-30-09
DATE PLOTTED => 29-JAN-2010
TIME PLOTTED => 14:28

DIST	COUNTY	ROUTE	POST MILES TOTAL PROJECT	SHEET NO.	TOTAL SHEETS
08	SBd	2	0.9/2.4	74	94

REGISTERED CIVIL ENGINEER

November 17, 2006
PLANS APPROVAL DATE

REGISTERED PROFESSIONAL ENGINEER Dallas Forester No. C37765 Exp. 12-31-06 CIVIL STATE OF CALIFORNIA

The State of California or its officers or agents shall not be responsible for the accuracy or completeness of electronic copies of this plan sheet.

To accompany plans dated 1-25-10

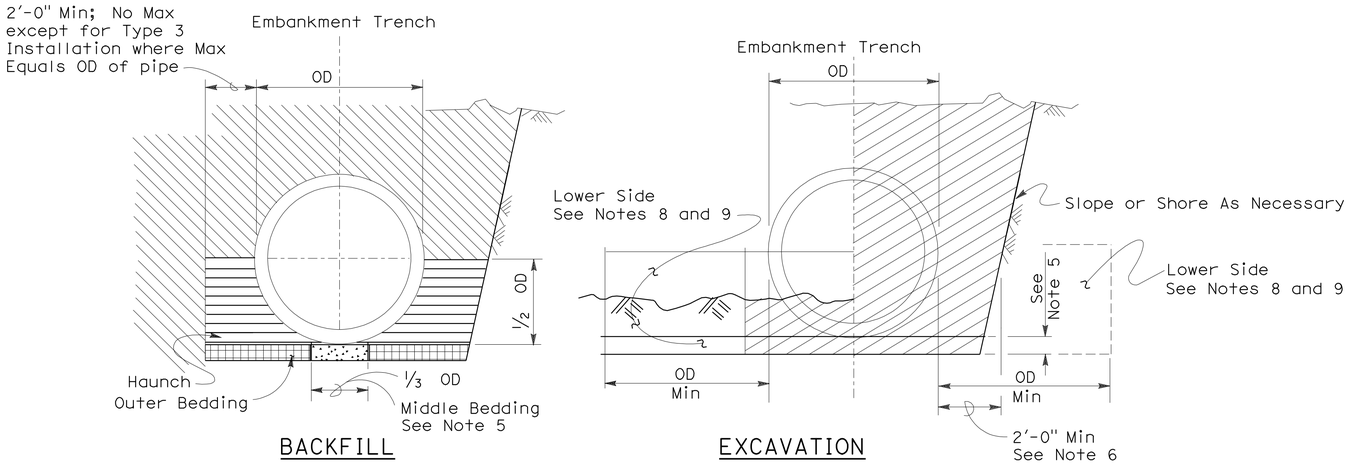

Roadway Embankment

Structure Backfill (Culvert) See Note 6

Structure Backfill (Culvert) See Note 6

Loose Backfill

Excavation Structure (Culvert)

TYPE 1 INSTALLATION:

The haunch and outer bedding shall be compacted to a minimum 90 percent relative compaction. In addition, the minimum sand equivalent in these areas shall be 30 and the maximum percentage passing the 75 μm sieve size shall be 12.

TYPE 2 INSTALLATION:

The haunch and outer bedding shall be compacted to a minimum 90 percent relative compaction. In addition, the minimum sand equivalent in these areas shall be 25.

TYPE 3 INSTALLATION:

The haunch and outer bedding shall be compacted to a minimum 85 percent relative compaction. 90 percent relative compaction will be required where the fill over the pipe is less than 4'-0" or 1/2 OD.

NOTES:

1. Unless otherwise shown on the plans or specified in the special provision, the Contractor shall have the option of selecting the class of RCP and the type of installation to be used, provided the height of cover does not exceed the value shown for the RCP selected.
   Example: 24" RCP culvert with maximum cover of 19'-0" the options are:
   a) Class III or stronger with Installation Type 1.
   b) Class III Special or stronger with Installation Type 2.
   c) Class IV Special or stronger with Installation Type 3.
   Cover is defined as the maximum vertical distance from top of the pipe to finished grade within the length of any given culvert.
2. The class of RCP and Installation Type selected shall be the same throughout the length of any given culvert.
3. The "length of any culvert" is defined as the culvert between:
   a) Successive drainage structure (inlets, junction boxes, headwalls, etc.).
   b) A drainage structure and the inlet or outlet end of the culvert.
   c) The inlet and outlet end of the culvert when there are no intervening drainage structures.
4. Oval and arch shaped RCP shall not be used.
5. 1/25 OD Min, not less than 3".
6. Slurry cement backfill may be substituted for backfill in the outer bedding and haunch areas. If slurry is used the outer and middle beddings shall be omitted. Prior to installation the soil under the middle 1/3 of the outside diameter of the pipe shall be softened by scarifying or other means to a minimum depth of 1/25 OD, but not less than 3". Where slurry cement backfill is used clear distance to trench wall may be reduced as set forth in Section 19-3.062 of the Standard Specifications.
7. Backfill shall be placed full width of excavation except where dimensions are shown for backfill width or thickness. Dimensions shown are minimums.
8. Lower side shall be suitable material as determined by the Engineer. Otherwise it shall be considered unsuitable as set forth in Section 19-2.02 of the Standard Specifications. See Note 9.
9. Where the pipe is placed in a trench, if the trench walls are sloped at 5 vertical to 1 horizontal or steeper for at least 90 percent of the trench height or up to not less than 12" from the grading plane, the firmness of the soil in the lower side need not be considered.
10. Non-reinforced precast concrete pipe sizes 3'-0" or smaller may be placed under installation Types 1, 2 or 3.

INSTALLATION TYPE 1

MINIMUM CLASS AND D-LOAD	COVER	
	108" Dia AND SMALLER	OVER 108" Dia
Class II 1000D	14.9'	12.9'
Class III 1350D	15.0' - 20.9'	13.0' - 18.9'
Class III Special 1700D	21.0' - 26.9'	19.0' - 24.9'
Class IV 2000D	27.0' - 31.9'	25.0' - 29.9'
Class IV Special 2500D	32.0' - 40.9'	30.0' - 38.9'
Class V 3000D	41.0' - 49.9'	39.0' - 46.9'
Class V Special 3600D	50.0' - 59.0'	47.0' - 58.0'

INSTALLATION TYPE 2

MINIMUM CLASS AND D-LOAD	COVER
Class II 1000D	9.9'
Class III 1350D	10.0'- 14.9'
Class III Special 1700D	15.0' - 19.9'
Class IV 2000D	20.0' - 24.9'
Class IV Special 2500D	25.0' - 31.9'
Class V 3000D	32.0' - 38.9'
Class V Special 3600D	39.0' - 47.0'

INSTALLATION TYPE 3

MINIMUM CLASS AND D-LOAD	COVER	
	48" Dia AND SMALLER	OVER 48" Dia
Class II 1000D	7.9'	5.9'
Class III 1350D	8.0' - 10.9'	6.0' - 8.9'
Class III Special 1700D	11.0' - 14.9'	9.0' - 12.9'
Class IV 2000D	15.0' - 17.9'	13.0' - 15.9'
Class IV Special 2500D	18.0' - 21.9'	16.0' - 19.9'
Class V 3000D	22.0' - 26.9'	20.0' - 24.9'
Class V Special 3600D	30.0' - 33.0'	25.0' - 31.0'

STATE OF CALIFORNIA
DEPARTMENT OF TRANSPORTATION

EXCAVATION AND BACKFILL CONCRETE PIPE CULVERTS

NO SCALE

RSP A62DA DATED NOVEMBER 17, 2006 SUPERSEDES STANDARD PLAN A62DA DATED MAY 1, 2006 - PAGE 20 OF THE STANDARD PLANS BOOK DATED MAY 2006.

REVISED STANDARD PLAN RSP A62DA

2006 REVISED STANDARD PLAN RSP A62DA

10-26-06

DIST	COUNTY	ROUTE	POST MILES TOTAL PROJECT	SHEET NO.	TOTAL SHEETS
08	SBd	2	0.9/2.4	75	94

Randell D. Hiatt
REGISTERED CIVIL ENGINEER

June 6, 2008
PLANS APPROVAL DATE

REGISTERED PROFESSIONAL ENGINEER
Randell D. Hiatt
No. C50200
Exp. 6-30-09
CIVIL
STATE OF CALIFORNIA

The State of California or its officers or agents shall not be responsible for the accuracy or completeness of electronic copies of this plan sheet.

To accompany plans dated 1-25-10

NOTES:

1. When necessary to place dike in front of face of guard railing, only Type C dike may be used. For dike details, see Standard Plan A87B.
2. For standard railing post embedment, see Standard Plans A77C3.
3. Guard railing delineation to be used where shown on the Project Plans.
4. When dike or curb is placed under guard railing, the maximum height of the dike or curb shall be 4". Mountable dike should not be used. For dike and curb details, see Revised Standard Plans RSP A87A and Standard Plan A87B.
5. For details of typical distance between the face of rail and hinge point, see Standard Plan A77C3.

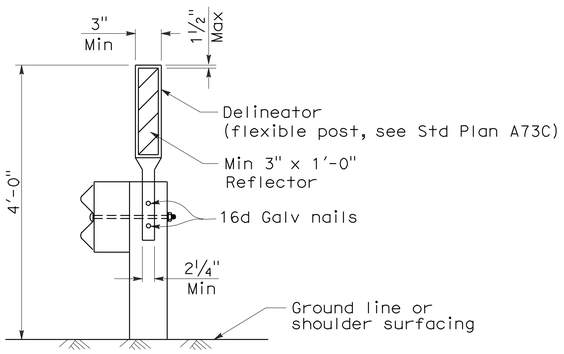

GUARD RAILING DELINEATION

See Note 3

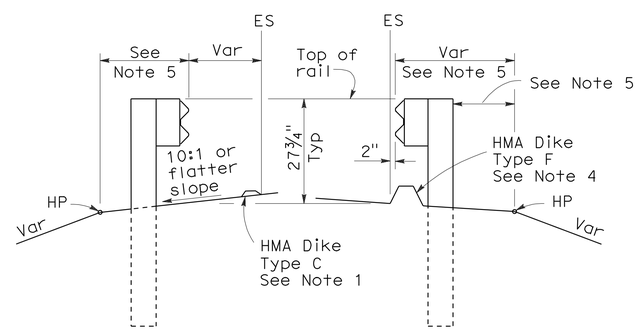

DIKE POSITIONING

See Note 1

STATE OF CALIFORNIA
DEPARTMENT OF TRANSPORTATION

METAL BEAM GUARD RAILING TYPICAL RAILING DELINEATION AND DIKE POSITIONING DETAILS

NO SCALE

RSP A77C4 DATED JUNE 6, 2008 SUPERSEDES STANDARD PLAN A77C4
DATED MAY 1, 2006 - PAGE 47 OF THE STANDARD PLANS BOOK DATED MAY 2006.

REVISED STANDARD PLAN RSP A77C4

2006 REVISED STANDARD PLAN RSP A77C4

12-10-07

DIST	COUNTY	ROUTE	POST MILES TOTAL PROJECT	SHEET NO.	TOTAL SHEETS
08	SBd	2	0.9/2.4	76	94

REGISTERED CIVIL ENGINEER

June 6, 2008
PLANS APPROVAL DATE

REGISTERED PROFESSIONAL ENGINEER Raymond Don Tsztoo No. C37332 Exp. 6-30-08 CIVIL STATE OF CALIFORNIA

The State of California or its officers or agents shall not be responsible for the accuracy or completeness of electronic copies of this plan sheet.

To accompany plans dated 1-25-10

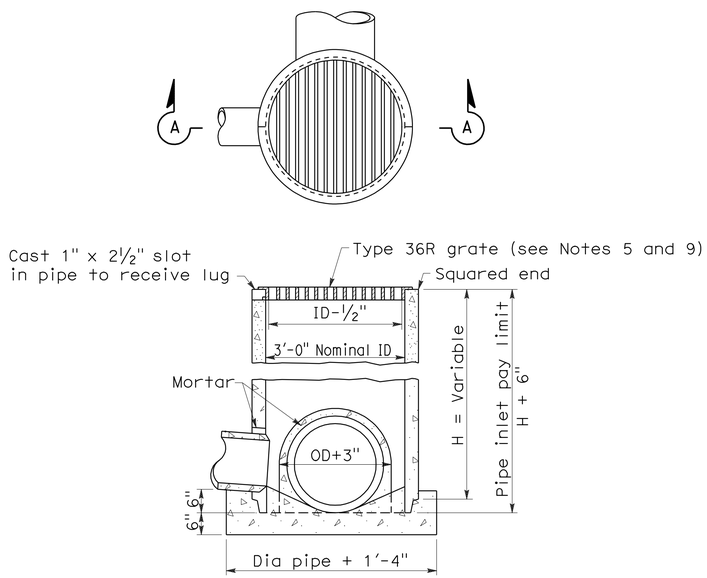

SECTION A-A

TYPE GCP

CONCRETE PIPE INLET WITH GRATE

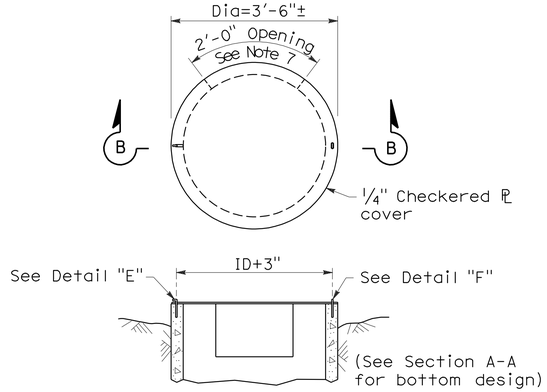

SECTION B-B

TYPE OCP or OCPI

CONCRETE PIPE INLET WITH STEEL COVER
(See Note 6)

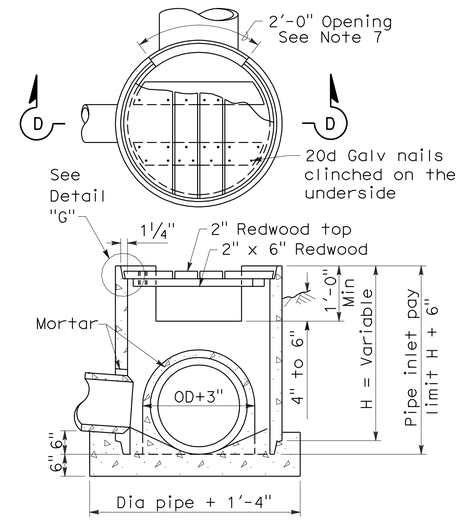

SECTION D-D

TYPE OCP or OCPI

CONCRETE PIPE INLET WITH REDWOOD COVER
(See Notes 6 and 10)

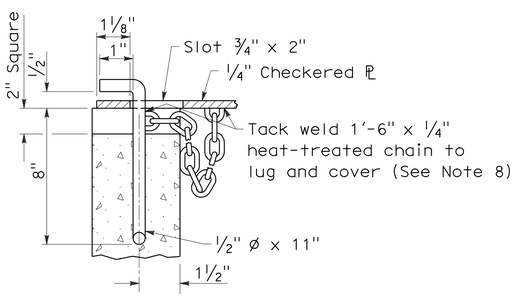

DETAIL "E"

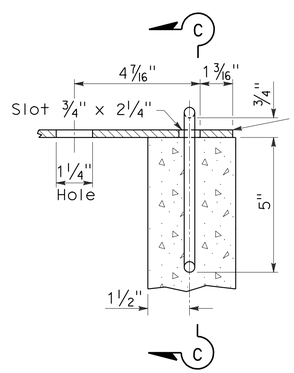

DETAIL "F"

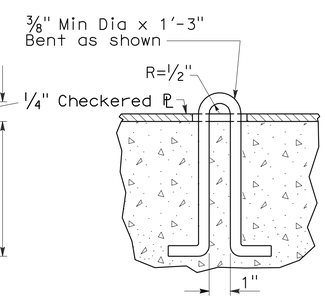

SECTION C-C

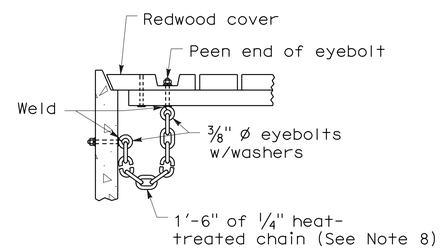

DETAIL "G"

NOTES:

1. For details of steel pipe inlets, see Standard Plan D75A.
2. For details of ladder and steps and when ladder or steps are required, see Standard Plan D75C.
3. Inlet pipes shall not protrude into basin.
4. Except for inlets used for junction boxes, basin floors shall have minimum slope of 4:1 from all directions toward outlet pipe, and a wood trowel finish.
5. See Revised Standard Plan RSP D77A and Standard Plan D77B for Grate and Frame Details and Weights of Miscellaneous Iron and Steel.
6. Designation of Type OCPI pipe inlets on plans indicates trash racks are to be furnished and installed on all side openings. See Standard Plan D75C for Trash Rack details.
7. More than one side opening may be required. Location and number as ordered by the Engineer. Opening may be cast in pipe.
8. Chain to be provided when specified.
9. Place pipe so bars of grate will be parallel with main surface flow.
10. Redwood covers shall only be placed at locations designated on the plans.

STATE OF CALIFORNIA
DEPARTMENT OF TRANSPORTATION

CONCRETE PIPE INLETS

NO SCALE

RSP D75B DATED JUNE 6, 2008 SUPERSEDES STANDARD PLAN D75B
DATED MAY 1, 2006 - PAGE 153 OF THE STANDARD PLANS BOOK DATED MAY 2006.

REVISED STANDARD PLAN RSP D75B

2006 REVISED STANDARD PLAN RSP D75B

5-20-08

DIST	COUNTY	ROUTE	POST MILES TOTAL PROJECT	SHEET NO.	TOTAL SHEETS
08	SBd	2	0.9/2.4	77	94

Raymond Don Tsztoo
REGISTERED CIVIL ENGINEER

January 18, 2008
PLANS APPROVAL DATE

REGISTERED PROFESSIONAL ENGINEER Raymond Don Tsztoo No. C37332 Exp. 6-30-08 CIVIL STATE OF CALIFORNIA

The State of California or its officers or agents shall not be responsible for the accuracy or completeness of electronic copies of this plan sheet.

To accompany plans dated 1-25-10

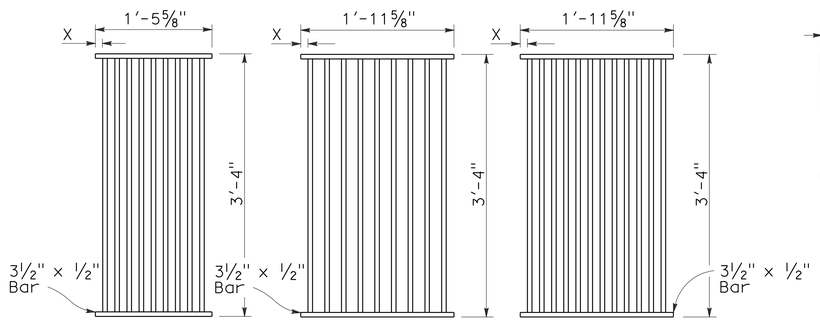

TYPE 18-9

1⅜" Clear spacing. Use within the roadbed on highways where bicycles and pedestrians are excluded.

TYPE 24-9

2" Clear spacing. Use in locations off the roadbed on all types of highways.

TYPE 24-12

1⅜" Clear spacing. Use within the roadbed on highways where bicycles and pedestrians are excluded.

RECTANGULAR GRATE DETAILS

(See table below)

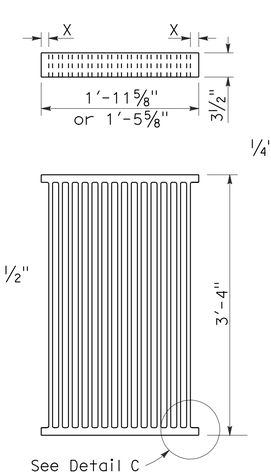

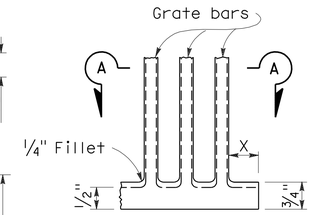

DETAIL C

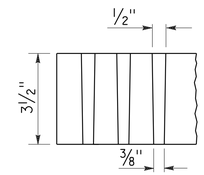

SECTION A-A

ALTERNATIVE CAST NODULAR IRON GRATE OR CAST STEEL GRATE

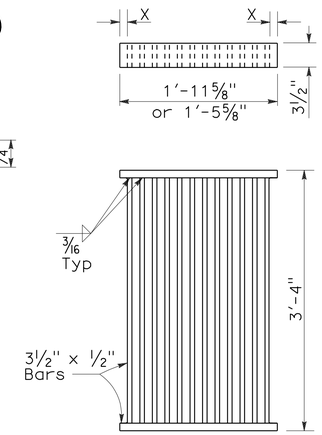

ALTERNATIVE WELDED GRATE

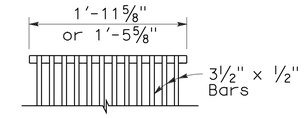

CAST END BLOCK

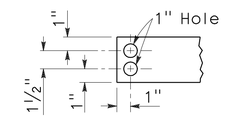

END OF BAR

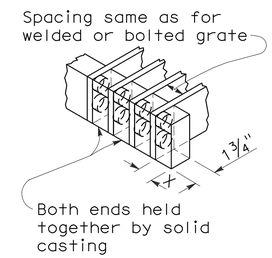

ALTERNATIVE CAST NODULAR IRON OR CAST STEEL END BLOCK GRATE

NOTES:

1. Grate type numbers refer to approximate width of grate in inches and number of bars, respectively.
2. Contractor has the option of using cast nodular iron, cast steel, welded, bolted, or cast end block grate.
3. See Special Provisions for requirements pertaining to galvanizing or asphalt dipping of grates and frames.
4. Rounded top of bars optional on all grates.
5. Pipe inlets with a grate shall be placed so that bars parallel direction of principle surface flow.
6. Full penetration butt welds may be substituted for the fillet welds on all anchors.
7. Standard square, hexagon, round or equivalent headed anchors may be substituted for the right angle hooks on the anchors shown on this plan.
8. Grate and frame weights are based on welded grates (weights of face angles, steps, protection bars, etc. are not included).

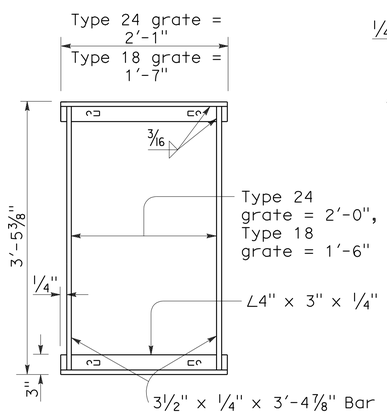

TYPICAL FRAME

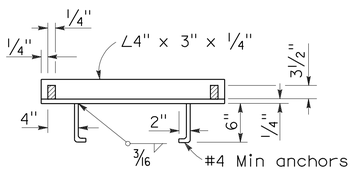

CROSS SECTION

(Thru frame)

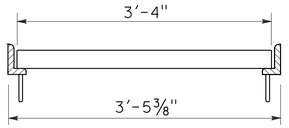

LONGITUDINAL SECTION

(Thru frame and grate)

RECTANGULAR FRAME DETAILS

(For all rectangular grates)

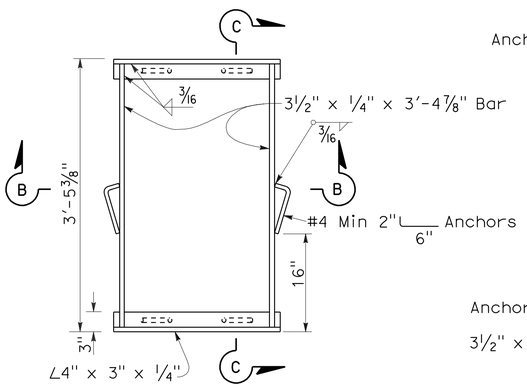

TYPICAL FRAME

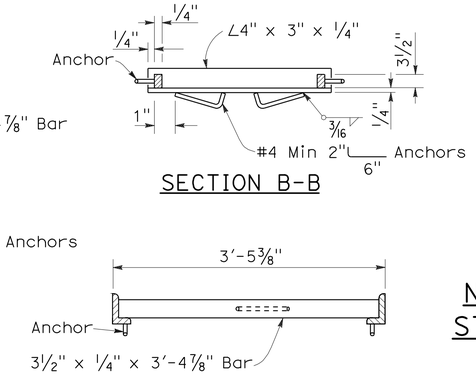

SECTION B-B

SECTION C-C

ALTERNATIVE ANCHOR FOR RECTANGULAR FRAME

(For details not shown, See Rectangular Frame Details)

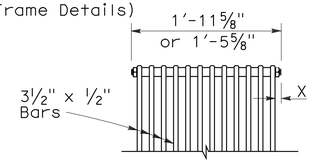

BOLTED END BLOCK

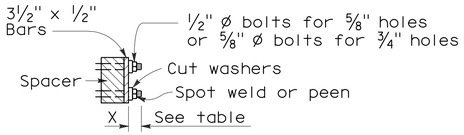

BOLTING DETAIL

ALTERNATIVE BOLTED GRATE

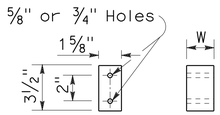

BAR SPACER

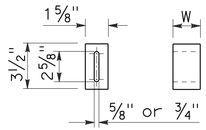

ALTERNATIVE SPACER

W = 1⅜" or 2"

GRATE BAR SPACING TABLE

TYPE	No. OF BARS	CLEAR BAR SPACING	X
18-9	9	1⅜"	1 1/16"
24-9	9	2"	1 9/16"
24-12	12	1⅜"	1¼"

INLET TYPE	COVER TYPE	WEIGHT LB
OS	PLATE	174
OL-7	PLATE	170
OL-10	PLATE	170
OL-14	PLATE	170
OL-21	PLATE	170
OCP	PLATE	112
OCPI	PLATE	112
OCPI	REDWOOD	42
OMP	PLATE	177
OMPI	PLATE	177

INLET TYPE	GRATE TYPE	No. OF GRATES	WEIGHT LB
GDO	24-12	2	634
GOL-7	24-12	1	326
GOL-10	24-12	1	326
GO,G1,G2,G3,G4 (TYPE 24)	24-9	1	263
	24-12	1	326
G4 (TYPE 18),G5,G6	18-9	1	249
GT1	18-9	2	498
GT2	18-9	2	498
GT3	24-12	2	652
GT4	24-12	2	652
TRASH RACK			22

BASIS FOR MISC IRON & STEEL FINAL PAY WEIGHTS FOR DRAINAGE INLETS

(See General Notes, No 8)

STATE OF CALIFORNIA
DEPARTMENT OF TRANSPORTATION

GRATE DETAILS

NO SCALE

RSP D77A DATED JANUARY 18, 2008 SUPERSEDES STANDARD PLAN D77A
DATED MAY 1, 2006 - PAGE 155 OF THE STANDARD PLANS BOOK DATED MAY 2006.

REVISED STANDARD PLAN RSP D77A

2006 REVISED STANDARD PLAN RSP D77A

12-14-07

DIST	COUNTY	ROUTE	POST MILES TOTAL PROJECT	SHEET NO.	TOTAL SHEETS
08	SBd	2	0.9/2.4	78	94

LICENSED LANDSCAPE ARCHITECT

June 5, 2009
PLANS APPROVAL DATE

The State of California or its officers or agents shall not be responsible for the accuracy or completeness of electronic copies of this plan sheet.

LICENSED LANDSCAPE ARCHITECT — Gregory A. Balzer 2576 — 10 (renewal) 2-28-11 (renewal) date 5-14-09 date — STATE OF CALIFORNIA

To accompany plans dated 1-25-10

A

AB	aggregate base
ABS	acrylonitrile-butadiene-styrene
AC	asphalt concrete
Adj	adjacent/adjustable
AIC	auxiliary irrigation controller
Alt	alternative
AMEND	amendment
ARV	air release valve
AUTO	automatic
AUX	auxiliary
AVB	atmospheric vacuum breaker

B

B&B	balled and burlapped
B/B	brass/bronze
B/B/PL	brass/bronze/plastic
B/PL	brass/plastic
BFM	bonded fiber matrix
Bit Ctd	bituminous coated
BP	booster pump
BPA	backflow preventer assembly
BPAE	backflow preventer assembly in enclosure
BPE	backflow preventer enclosure
BV	ball valve

C

CAP	corrugated aluminum pipe
CARV	combination air release valve
CCA	cam coupler assembly
CEC	controller enclosure cabinet
CHDPE	corrugated high density polyethylene
CL	chain link
CNC	control and neutral conductors
Conc	concrete
Cond	conduit
CSP	corrugated steel pipe
CST	center strip
CV	check valve

D

Dia	diameter
DIP	ductile iron pipe
DN	diameter nominal

E

EA	each
Elect	electric/electrical
Elev	elevation
ENCL	enclosure
EP	edge of pavement
ES	edge of shoulder
EST	end strip
ESTB	establishment
ETW	edge of traveled way

F

F	full circle
F/P	full/part circle
FAU	filter assembly unit
FCV	flow control valve
FERT	fertilizer
FG	finished grade
FIPT	female iron pipe thread
FIS	fertilizer injector system
FL	flow line
FM	flow monitor
FS	flow sensor
Ft	foot/feet
FV	flush valve

G

GAL	Gallon(s)
Galv	galvanized
GARV	garden valve
GPH	gallons per hour
GPM	gallons per minute
GSP	galvanized steel pipe
GV	gate valve

H

H	half circle
HB	hose bib
HDPE	high density polyethylene
HP	horsepower/hinge point
HPL	high pressure line
Hwy	highway

I

IC	irrigation controller
ICC	irrigation controller(s) in controller enclosure cabinet
ID	inside diameter
In	inches
IFS	irrigation filtration system
IPS	iron pipe size
IPT	iron pipe thread
Irr	irrigation

L

L	length
LF	linear foot

M

Max	maximum
MBGR	metal beam guard railing
MCV	manual control valve
MIC	master irrigation controller
Min	minimum
MIPT	male iron pipe thread
Misc	miscellaneous
Mtl	material
MVP	maintenance vehicle pullout

N

NCN	no common name
NL	nozzle line
No.	number
NPT	national pipe thread

O

O/C	on center
OD	outside diameter
Oz	ounce

P

P	part circle
PB	pull box
PCC	portland cement concrete
PE	polyethylene
Pkt	packet
PL	plastic
PLT	plant/planting
PLT ESTB	plant establishment
PM	post mile
PR	pressure rated
PRLV	pressure relief valve
PSFM	polymer stabilized fiber matrix
PSI	pounds per square inch
PRV	pressure reducing valve
PVC	polyvinyl chloride
Pvmt	pavement

Q

Q	quarter circle
QCV	quick coupling valve

R

R	radius
RCP	reinforced concrete pipe
RCV	remote control valve
RCVM	remote control valve (master)
RCVMF	remote control valve (master) w/ flow meter
RCW	recycled/reclaimed water
RECP	rolled erosion control product
REQ	required
R/W	right of way

S

S	slip
SCC	sprinkler control conduit
SCH	schedule
SF	state-furnished
Shld	shoulder
SQFT	square foot/feet
SQYD	square yard(s)
SST	side strip
Sta	station
Std	standard
SW	sidewalk/sound wall

T

T	third circle/thread
TLS	truck loading standpipe
TQ	three quarter circle
TRM	turf reinforcement mat
TRVD	traveled
TT	two third circle
Typ	typical

U

UG	underground

V

VAU	valve assembly unit

W

W	width
W/	with
WM	water meter
WS	wye strainer
WSP	welded steel pipe
WWM	welded wire mesh

NOTE:

FOR ADDITIONAL ABBREVIATIONS, SEE STANDARD PLANS A10A AND A10B.

STATE OF CALIFORNIA
DEPARTMENT OF TRANSPORTATION

PLANTING AND IRRIGATION ABBREVIATIONS

NO SCALE

RSP H1 DATED JUNE 5, 2009 SUPERSEDES STANDARD PLAN H1
DATED MAY 1, 2006 - PAGE 201 OF THE STANDARD PLANS BOOK DATED MAY 2006.

REVISED STANDARD PLAN RSP H1

2006 REVISED STANDARD PLAN RSP H1

5-28-09

DIST	COUNTY	ROUTE	POST MILES TOTAL PROJECT	SHEET NO.	TOTAL SHEETS
08	SBd	2	0.9/2.4	79	94

Randell D. Hiatt
REGISTERED CIVIL ENGINEER

June 6, 2008
PLANS APPROVAL DATE

REGISTERED PROFESSIONAL ENGINEER
Randell D. Hiatt
No. C50200
Exp. 6-30-09
CIVIL
STATE OF CALIFORNIA

The State of California or its officers or agents shall not be responsible for the accuracy or completeness of electronic copies of this plan sheet.

To accompany plans dated 1-25-10

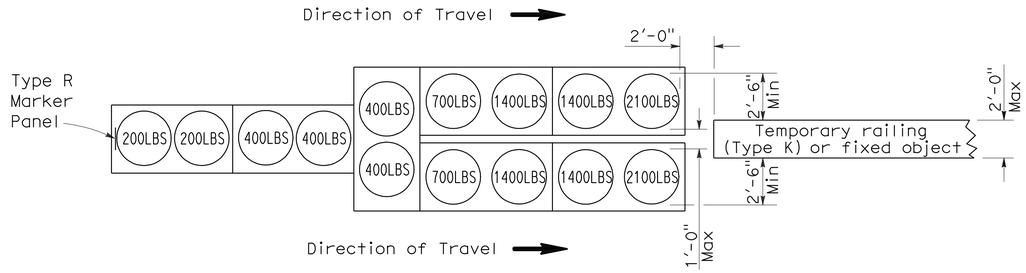

ARRAY 'TU14'

Approach speed 45 mph or more

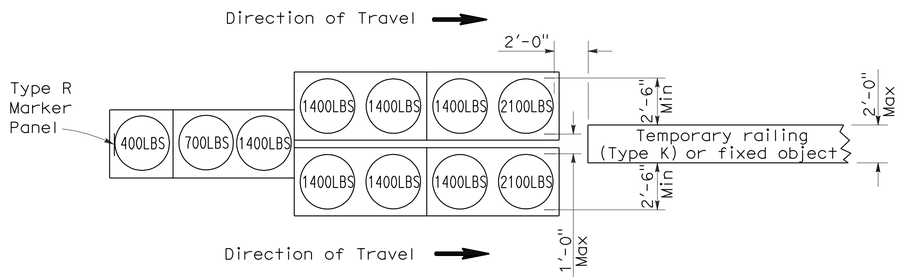

ARRAY 'TU11'

Approach speed less than 45 mph

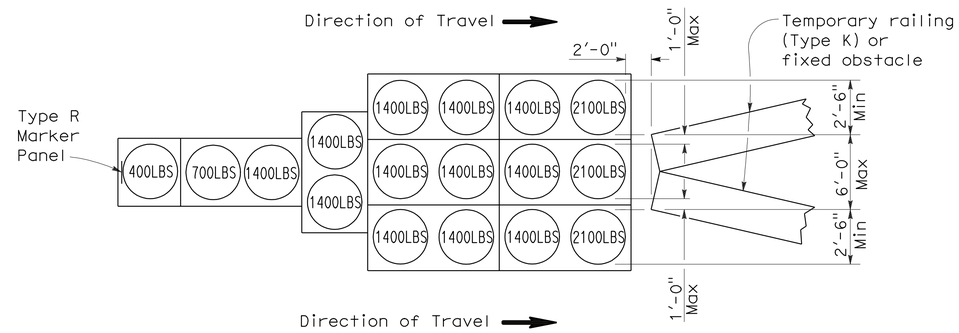

ARRAY 'TU17'

Approach speed less than 45 mph

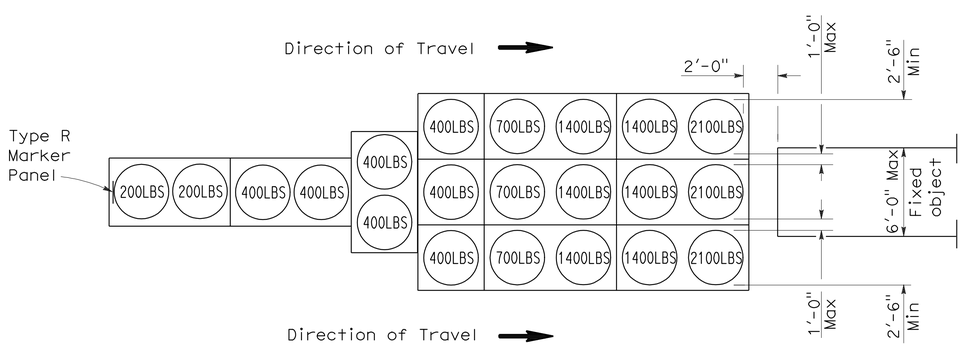

ARRAY 'TU21'

Approach speed 45 mph or more

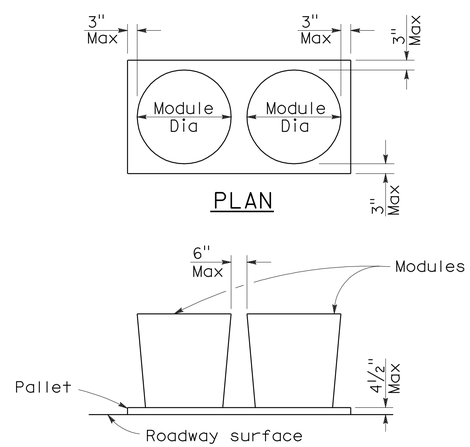

CRASH CUSHION PALLET DETAIL

See Note 7

NOTES:

1. (XXX) Indicates sand filled module location and weight of sand in pounds for each module. Module spacing is based on the greater diameter of the module.
2. All sand weights are nominal.
3. Temporary crash cushion arrays shall not encroach on the traveled way.
4. Place the top of Type R marker panel 1" below the module lid.
5. Refer to Standard Plan A73B for marker details.
6. Approach speeds indicated conform to NCHRP 350 Report criteria.
7. Use of pallets is optional.

STATE OF CALIFORNIA
DEPARTMENT OF TRANSPORTATION

TEMPORARY CRASH CUSHION, SAND FILLED (UNIDIRECTIONAL)

NO SCALE

RSP T1A DATED JUNE 6, 2008 SUPERSEDES STANDARD PLAN T1A
DATED MAY 1, 2006 - PAGE 211 OF THE STANDARD PLANS BOOK DATED MAY 2006.

REVISED STANDARD PLAN RSP T1A

2006 REVISED STANDARD PLAN RSP T1A

5-15-08

DIST	COUNTY	ROUTE	POST MILES TOTAL PROJECT	SHEET NO.	TOTAL SHEETS
08	SBd	2	0.9/2.4	80	94

Randell D. Hiatt
REGISTERED CIVIL ENGINEER

June 6, 2008
PLANS APPROVAL DATE

REGISTERED PROFESSIONAL ENGINEER
Randell D. Hiatt
No. C50200
Exp. 6-30-09
CIVIL
STATE OF CALIFORNIA

The State of California or its officers or agents shall not be responsible for the accuracy or completeness of electronic copies of this plan sheet.

To accompany plans dated 1-25-10

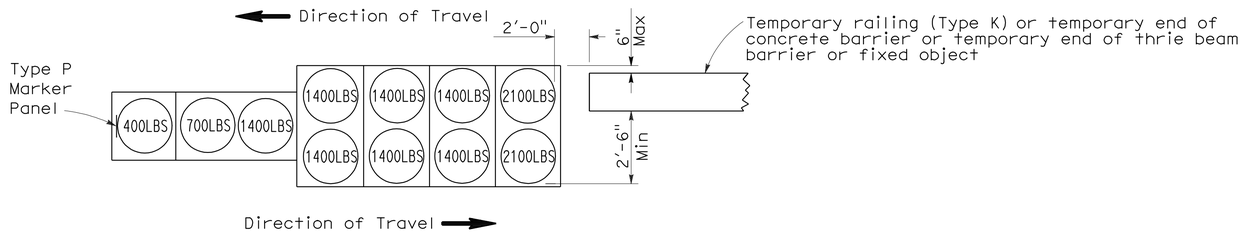

ARRAY 'TB11'

Approach speed less than 45 mph

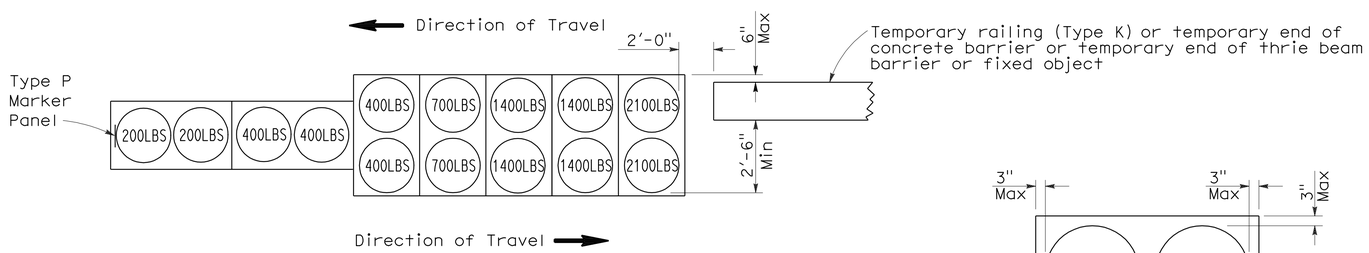

ARRAY 'TB14'

Approach speed 45 mph or more

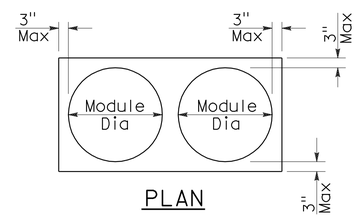

PLAN

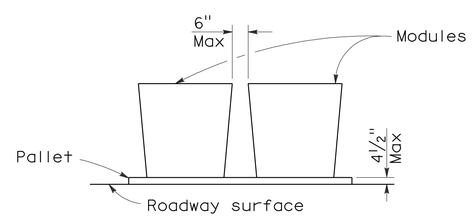

ELEVATION

CRASH CUSHION PALLET DETAIL

See Note 7

NOTES:

1. (XXX) Indicates sand filled module location and weight of sand in pounds for each module. Module spacing is based on the greater diameter of the module.
2. All sand weights are nominal.
3. Temporary crash cushion arrays shall not encroach on the traveled way.
4. Place the Type P marker panel so that the bottom of the panel rests upon the pallet.
5. Refer to Standard Plan A73B for marker details.
6. Approach speeds indicated conform to NCHRP 350 Report criteria.
7. Use of pallets is optional.

STATE OF CALIFORNIA
DEPARTMENT OF TRANSPORTATION

TEMPORARY CRASH CUSHION, SAND FILLED (BIDIRECTIONAL)

NO SCALE

RSP T1B DATED JUNE 6, 2008 SUPERSEDES STANDARD PLAN T1B
DATED MAY 1, 2006 - PAGE 212 OF THE STANDARD PLANS BOOK DATED MAY 2006.

REVISED STANDARD PLAN RSP T1B

2006 REVISED STANDARD PLAN RSP T1B

5-15-08

DIST	COUNTY	ROUTE	POST MILES TOTAL PROJECT	SHEET NO.	TOTAL SHEETS
08	SBd	2	0.9/2.4	81	94

Randell D. Hiatt
REGISTERED CIVIL ENGINEER

June 6, 2008
PLANS APPROVAL DATE

REGISTERED PROFESSIONAL ENGINEER
Randell D. Hiatt
No. C50200
Exp. 6-30-09
CIVIL
STATE OF CALIFORNIA

The State of California or its officers or agents shall not be responsible for the accuracy or completeness of electronic copies of this plan sheet.

To accompany plans dated 1-25-10

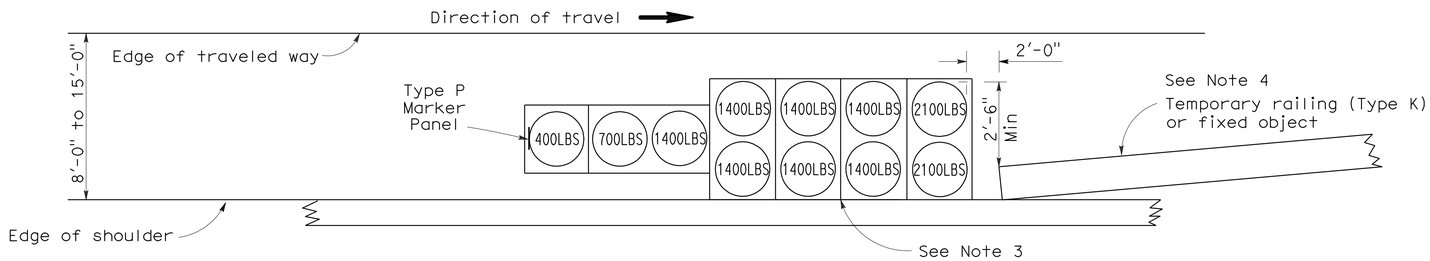

ARRAY 'TS11'

Approach speed less than 45 mph
See Note 9

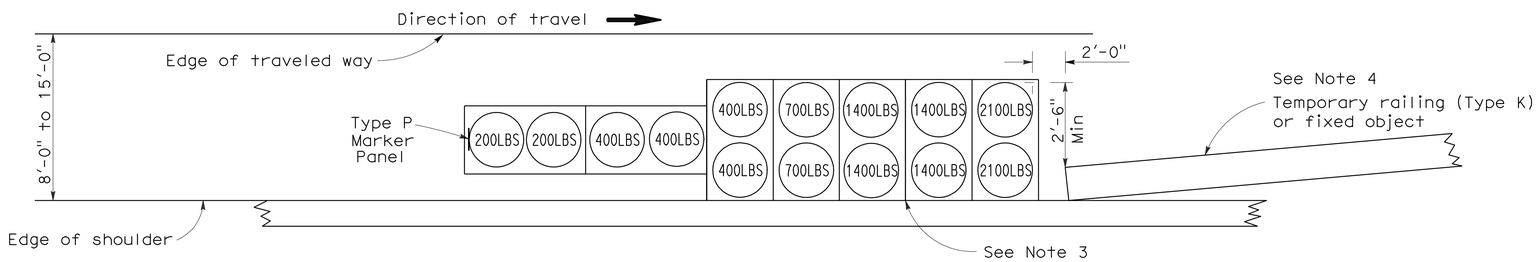

ARRAY 'TS14'

Approach speed 45 mph or more
See Note 9

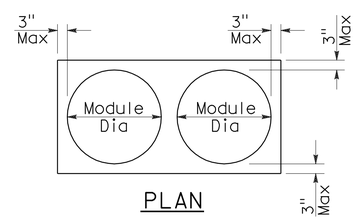

PLAN

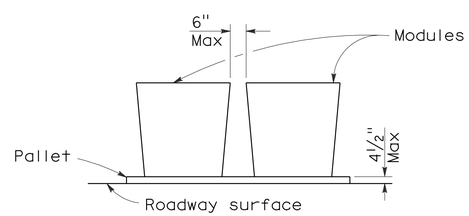

ELEVATION

CRASH CUSHION PALLET DETAIL

See Note 11

NOTES:

1. (XXX) Indicates sand filled module location and weight of sand in pounds for each module. Module spacing is based on the greater diameter of the module.
2. All sand weights are nominal.
3. The temporary crash cushion arrays shown on this plan shall be used only in locations where there will be traffic on one side of the temporary crash cushion array.
4. If the fixed object or approach end of the temporary railing is less than 15'-0" from the edge of traveled way, a temporary crash cushion is required in a construction or work zone.
5. Temporary crash cushion arrays shall not encroach on the traveled way.
6. Arrays for median shoulders shall conform to details shown on this plan for outside shoulders.
7. Place the Type P marker panel so that the bottom of the panel rests upon the pallet and faces traffic.
8. Refer to Standard Plan A73B for marker details.
9. For shoulder widths less than 8'-0", appropriate approved crash cushion protection, other than sand filled modules, shall be provided at fixed objects and at approach ends of temporary railing. The specific type of crash cushion shall be as shown on the project plans or as specified in the Special Provisions, or if not shown on the project plans or specified in the Special Provisions, shall be as approved by the Engineer.
10. Approach speeds indicated conform to NCHRP 350 Report criteria.
11. Use of pallets is optional.

STATE OF CALIFORNIA
DEPARTMENT OF TRANSPORTATION

TEMPORARY CRASH CUSHION, SAND FILLED (SHOULDER INSTALLATIONS)

NO SCALE

RSP T2 DATED JUNE 6, 2008 SUPERSEDES STANDARD PLAN T2
DATED MAY 1, 2006 - PAGE 213 OF THE STANDARD PLANS BOOK DATED MAY 2006.

REVISED STANDARD PLAN RSP T2

2006 REVISED STANDARD PLAN RSP T2

5-15-08

DIST	COUNTY	ROUTE	POST MILES TOTAL PROJECT	SHEET NO.	TOTAL SHEETS
08	SBd	2	0.9/2.4	82	94

Robert B Schott
LICENSED LANDSCAPE ARCHITECT

April 3, 2009
PLANS APPROVAL DATE

LICENSED LANDSCAPE ARCHITECT — Robert B. Schott 3625 — Registration Date 11-30-10 — Renewal Date 2-25-09 Date — STATE OF CALIFORNIA

The State of California or its officers or agents shall not be responsible for the accuracy or completeness of electronic copies of this plan sheet.

To accompany plans dated 1-25-10

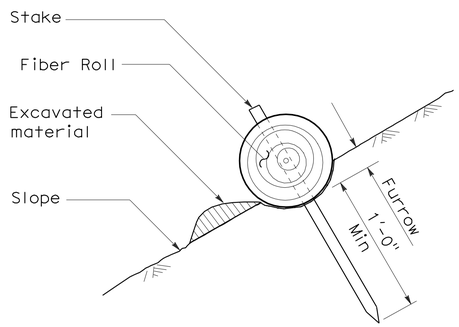

SECTION

TEMPORARY FIBER ROLL (TYPE 1)

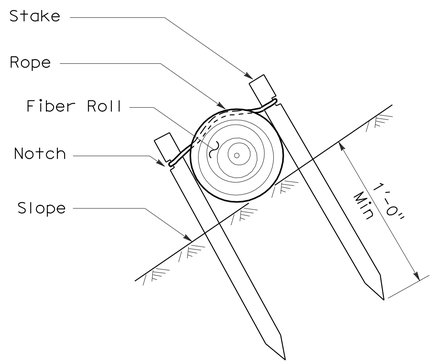

SECTION

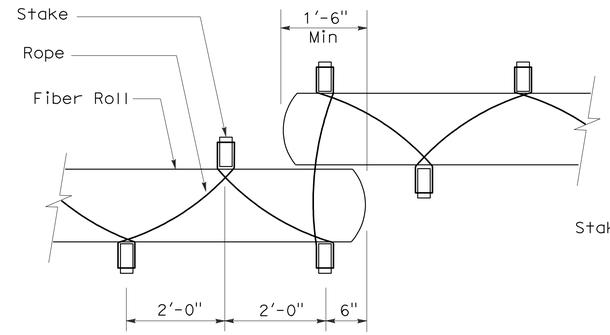

PLAN

TEMPORARY FIBER ROLL (TYPE 2)

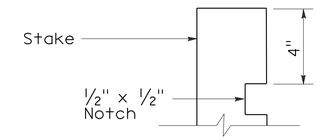

ELEVATION

STAKE NOTCH DETAIL

NOTES:

1. Temporary fiber roll spacing varies depending upon slope inclination.
2. Installations shown in the perspectives are for slope inclination of 10:1 and steeper.

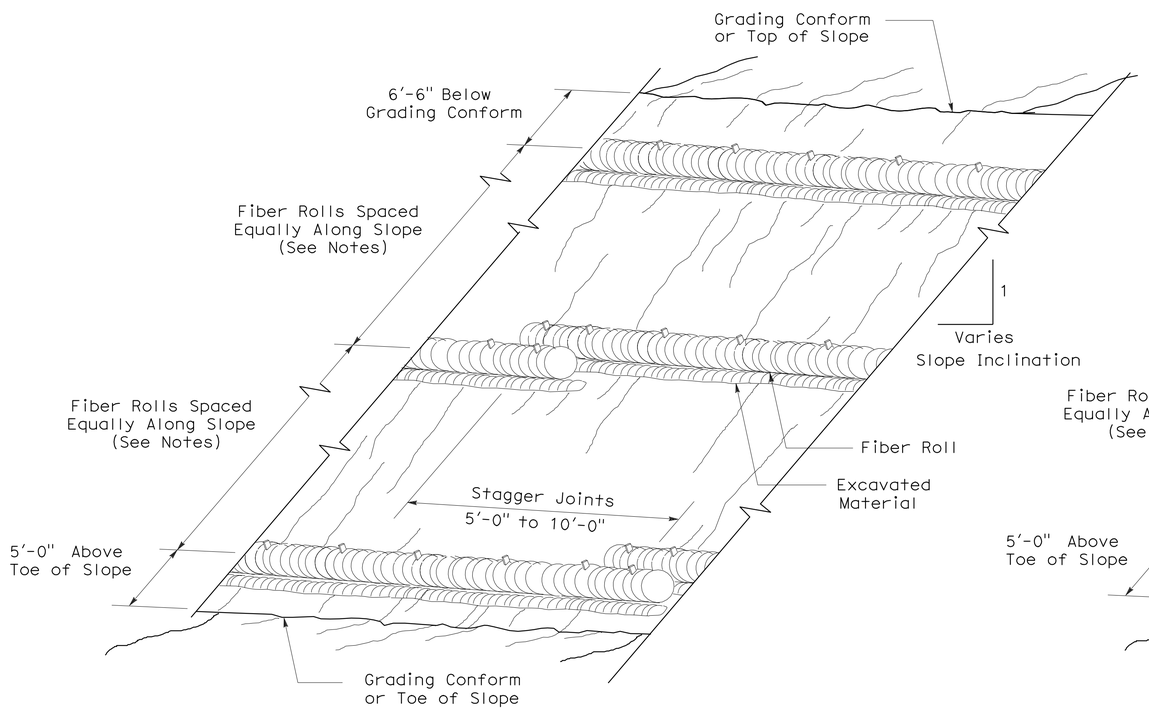

PERSPECTIVE

TEMPORARY FIBER ROLL (TYPE 1)

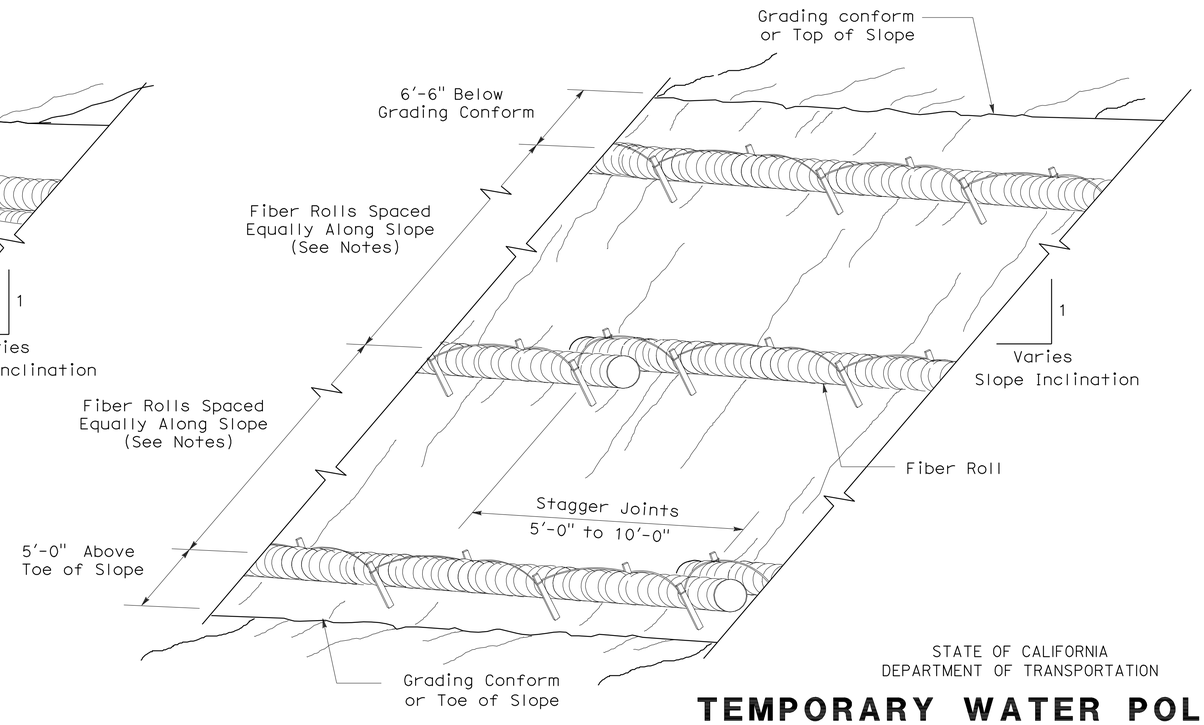

PERSPECTIVE

TEMPORARY FIBER ROLL (TYPE 2)

STATE OF CALIFORNIA
DEPARTMENT OF TRANSPORTATION

TEMPORARY WATER POLLUTION CONTROL DETAILS (TEMPORARY FIBER ROLL)

NO SCALE

RSP T56 DATED APRIL 3, 2009 SUPERSEDES STANDARD PLAN T56
DATED MAY 1, 2006 - PAGE 232 OF THE STANDARD PLANS BOOK DATED MAY 2006.

REVISED STANDARD PLAN RSP T56

2006 REVISED STANDARD PLAN RSP T56

DIST	COUNTY	ROUTE	POST MILES TOTAL PROJECT	SHEET NO.	TOTAL SHEETS
08	SBd	2	0.9/2.4	83	94

Robert B Schott
LICENSED LANDSCAPE ARCHITECT

August 15, 2008
PLANS Approval DATE

LICENSED LANDSCAPE ARCHITECT
Robert B. Schott 3625
Robert B Schott
Signature
11-04-08
Renewal Date
08-11-08
Date
STATE OF CALIFORNIA

The State of California or its officers or agents shall not be responsible for the accuracy or completeness of electronic copies of this plan sheet.

To accompany plans dated 1-25-10

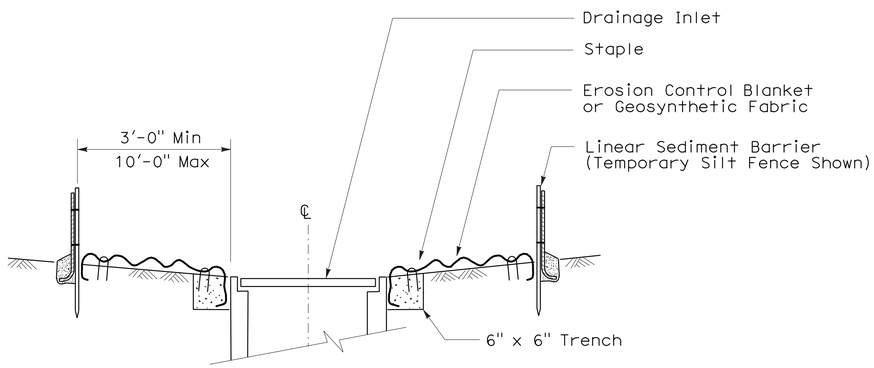

SECTION A-A

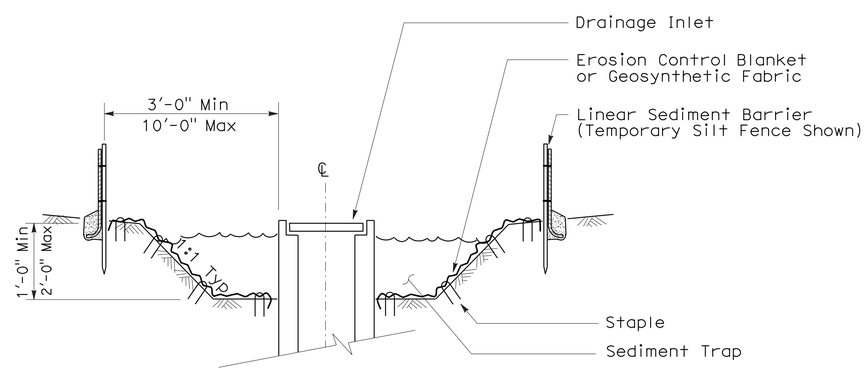

SECTION B-B

NOTES:

1. See Standard Plan T51 for Temporary Silt Fence.
2. Dimensions may vary to fit field conditions.

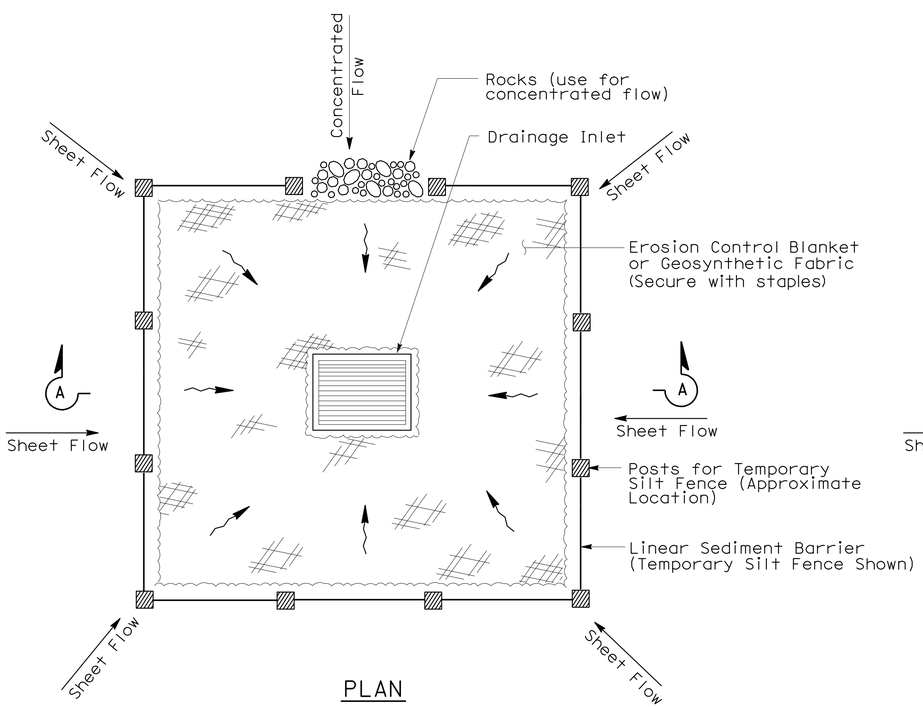

PLAN

TEMPORARY DRAINAGE
INLET PROTECTION (TYPE 1)

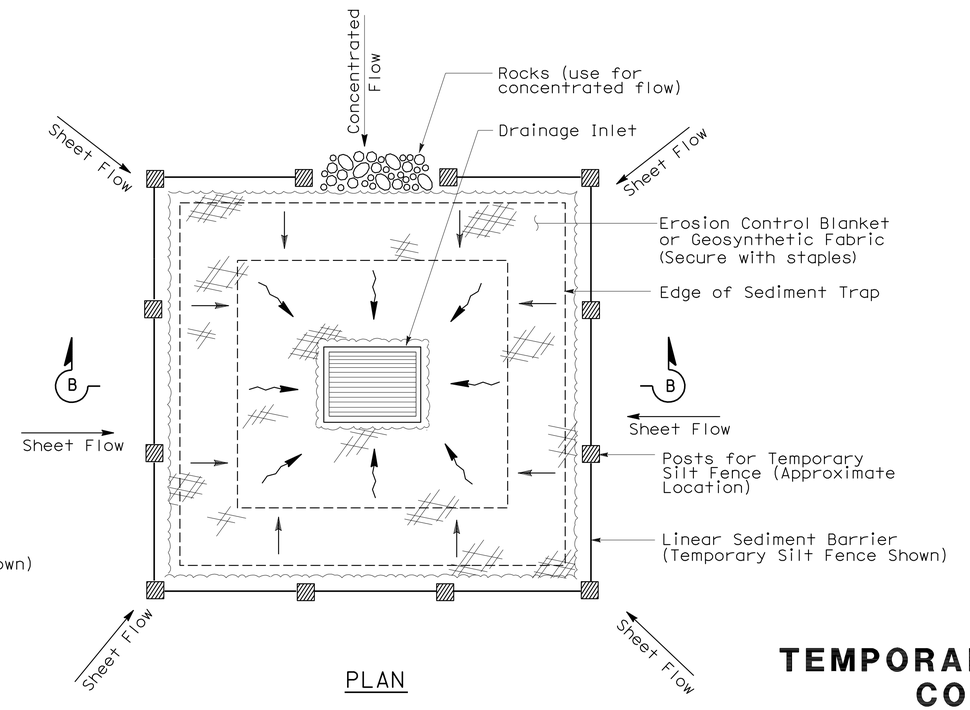

PLAN

TEMPORARY DRAINAGE
INLET PROTECTION (TYPE 2)
(EXCAVATED SEDIMENT TRAP)

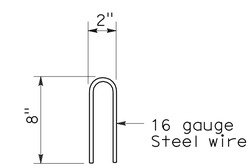

STAPLE DETAIL

STATE OF CALIFORNIA
DEPARTMENT OF TRANSPORTATION

TEMPORARY WATER POLLUTION CONTROL DETAILS (TEMPORARY DRAINAGE INLET PROTECTION)

NO SCALE

NSP T61 DATED AUGUST 15, 2008 SUPPLEMENTS
THE STANDARD PLANS BOOK DATED MAY 2006.

NEW STANDARD PLAN NSP T61

2006 NEW STANDARD PLAN NSP T61

7-11-08

DIST	COUNTY	ROUTE	POST MILES TOTAL PROJECT	SHEET NO.	TOTAL SHEETS
08	SBd	2	0.9/2.4	84	94

LICENSED LANDSCAPE ARCHITECT

August 15, 2008
PLANS APPROVAL DATE

The State of California or its officers or agents shall not be responsible for the accuracy or completeness of electronic copies of this plan sheet.

LICENSED LANDSCAPE ARCHITECT — Robert B. Schott — Signature — 11-04-08 Renewal Date — 08-11-08 Date — STATE OF CALIFORNIA

To accompany plans dated 1-25-10

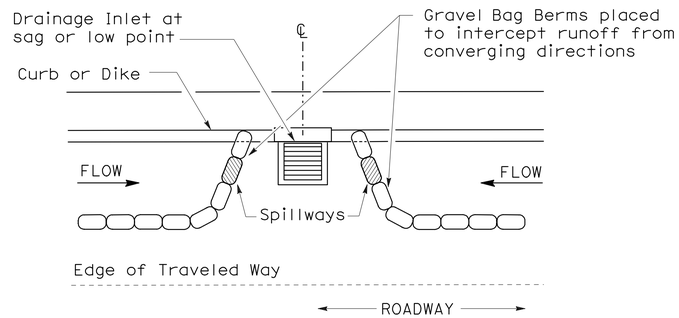

PLAN

CONFIGURATION FOR SAG POINT INLET (GRAVEL BAG BERM)

GRAVEL BAG BERM (TYPE 3A) SPACING TABLE

SLOPE OF ROADWAY (PERCENT)	1 to 3.9	4 to 5.9	6 to 7.9	8 to 10	10+
INTERVAL BETWEEN BERM	100′	75′	50′	25′	12′

For slope of less than 1%, install barriers only if erosion/sediment is prevalent

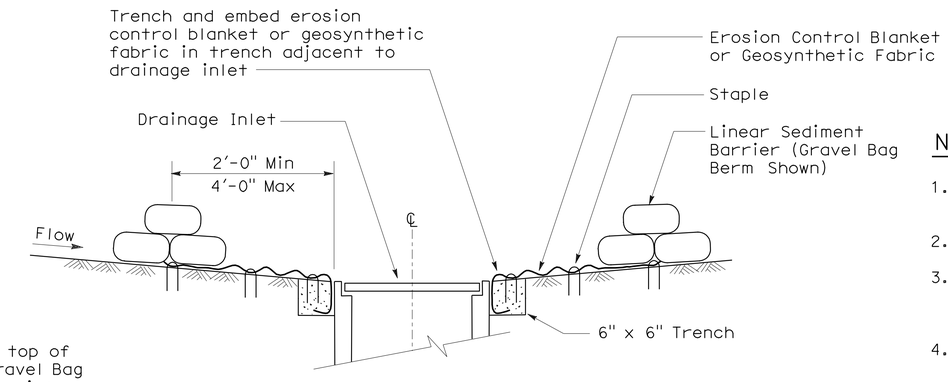

SECTION A-A

NOTES:

1. Place safety cones adjacent to drainage inlet protection.
2. Dimensions may vary to fit field conditions.
3. Install a minimum of 3 gravel bag berms upstream of each drainage inlet to be protected.
4. Position erosion control blanket or geosynthetic fabric at edge of concrete apron and secure in trench.
5. Erosion control blanket or geosynthetic fabric is not required if the area adjacent to the drainage inlet is vegetated or paved.

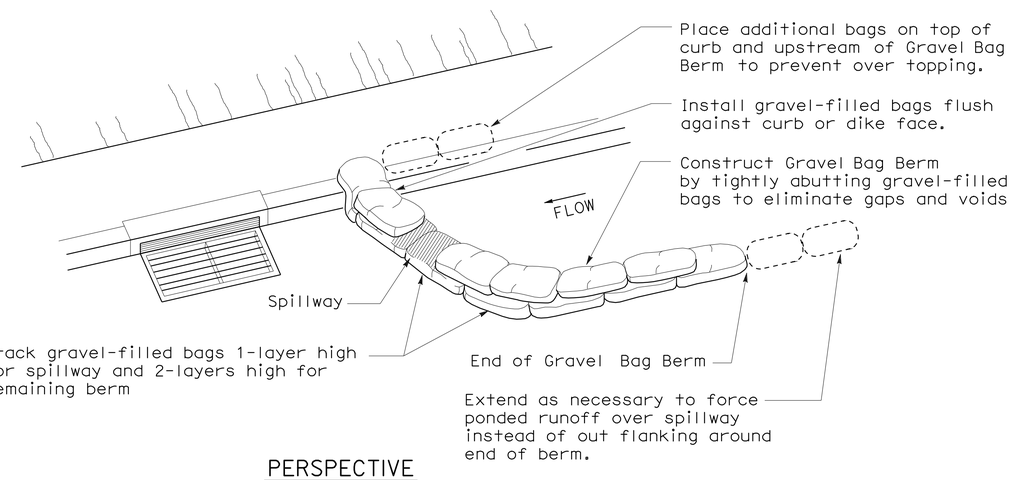

PERSPECTIVE

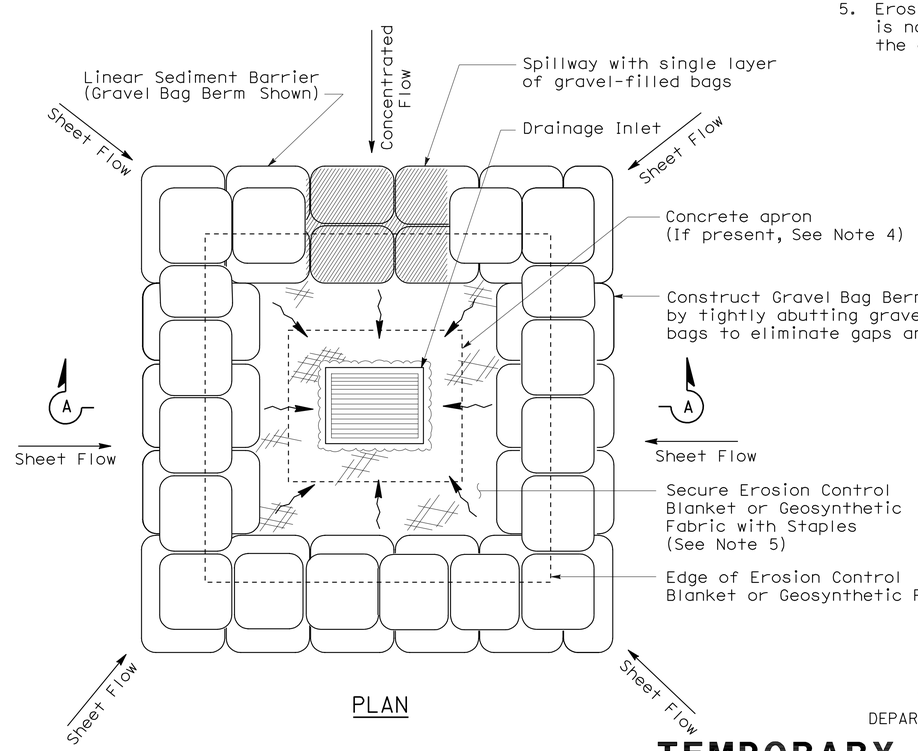

PLAN

TEMPORARY DRAINAGE INLET PROTECTION (TYPE 3B)

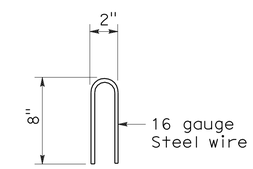

STAPLE DETAIL

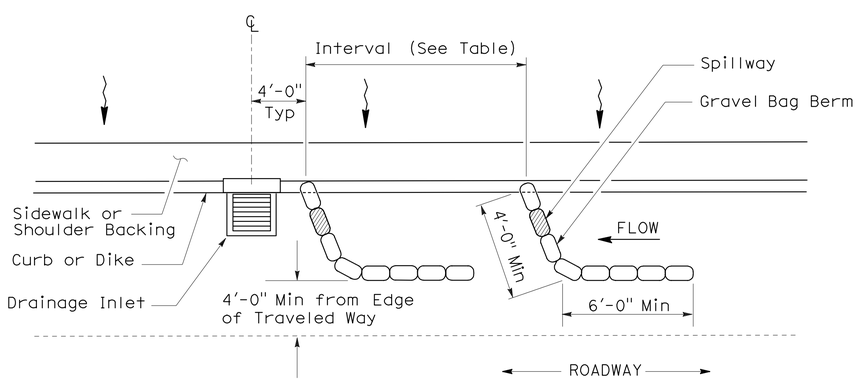

PLAN

TEMPORARY DRAINAGE INLET PROTECTION (TYPE 3A) (GRAVEL BAG BERM)

STATE OF CALIFORNIA
DEPARTMENT OF TRANSPORTATION

TEMPORARY WATER POLLUTION CONTROL DETAILS (TEMPORARY DRAINAGE INLET PROTECTION)

NO SCALE

NSP T62 DATED AUGUST 15, 2008 SUPPLEMENTS THE STANDARD PLANS BOOK DATED MAY 2006.

NEW STANDARD PLAN NSP T62

2006 NEW STANDARD PLAN NSP T62

7-11-08

DIST	COUNTY	ROUTE	POST MILES TOTAL PROJECT	SHEET NO.	TOTAL SHEETS
08	SBd	2	0.9/2.4	85	94

Robert B Schott
LICENSED LANDSCAPE ARCHITECT

August 15, 2008
PLANS APPROVAL DATE

LICENSED LANDSCAPE ARCHITECT Robert B. Schott 3625 Signature 11-04-08 Renewal Date 08-11-08 Date STATE OF CALIFORNIA

The State of California or its officers or agents shall not be responsible for the accuracy or completeness of electronic copies of this plan sheet.

To accompany plans dated 1-25-10

2006 NEW STANDARD PLAN NSP T63

FLEXIBLE SEDIMENT BARRIER SPACING TABLE

SLOPE OF ROADWAY (PERCENT)	0 to 0.9	1 to 1.9	2 to 2.9	3 to 4	5+
INTERVAL BETWEEN BARRIERS	50′	35′	30′	25′	20′
ANGLE FROM FACE OF CURB	70°	70°	70°	45°	45°
SUGGESTED BARRIER LENGTH	6′	6′	6′	6′	6′

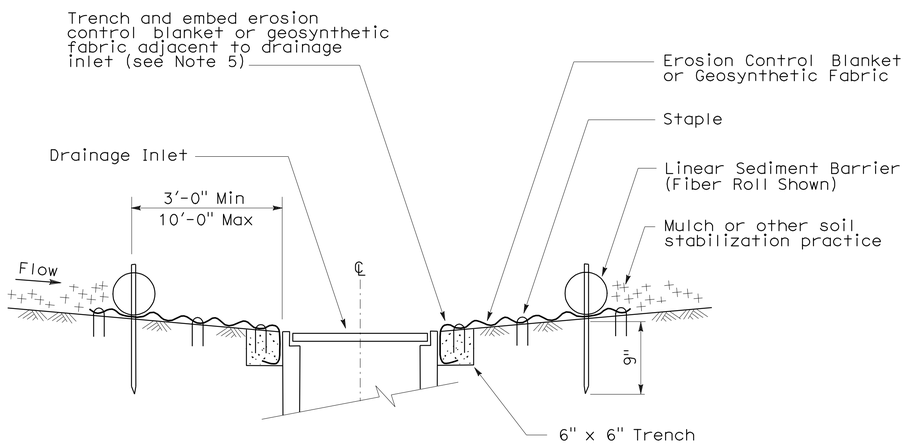

SECTION A-A

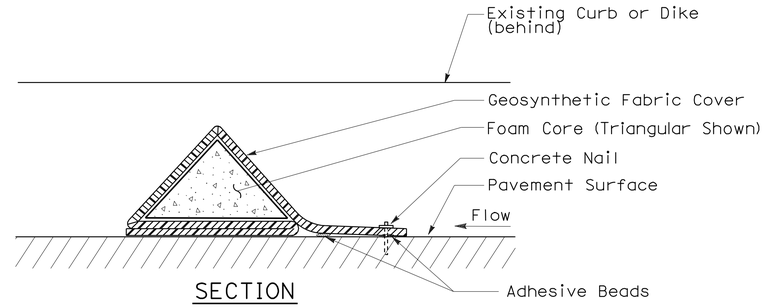

SECTION

FLEXIBLE SEDIMENT BARRIER DETAIL (FOAM BARRIER SHOWN)

NOTES:

1. See Standard Plan T51 for Temporary Silt Fence.
2. Dimensions may vary to fit field conditions.
3. Install a minimum of 3 flexible sediment barriers upstream of each drainage inlet to be protected.
4. Position erosion control blanket or geosynthetic fabric at edge of concrete apron and secure in trench.
5. Erosion control blanket or geosynthetic fabric is not required if the area adjacent to the drainage inlet is vegetated.

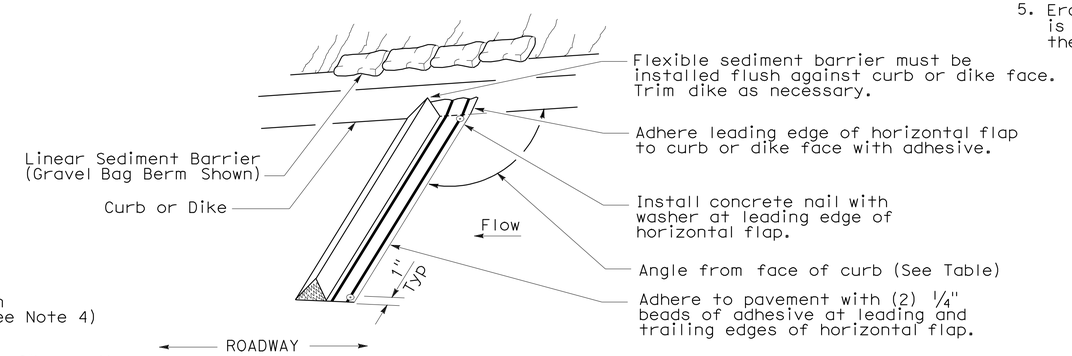

PERSPECTIVE

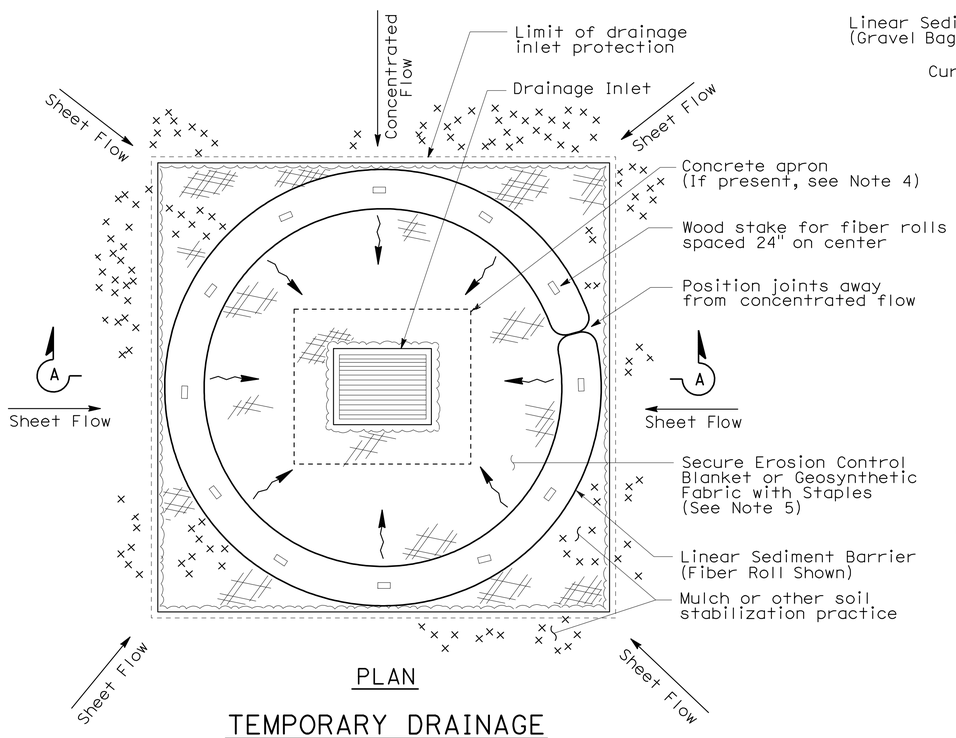

PLAN

TEMPORARY DRAINAGE INLET PROTECTION (TYPE 4A)

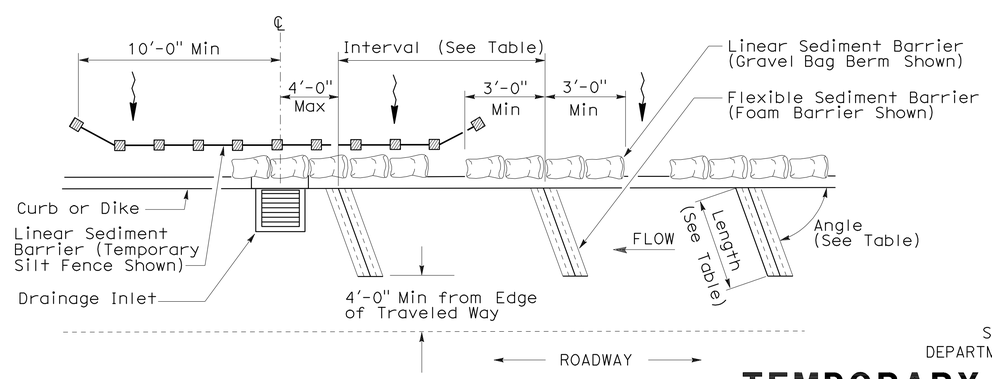

PLAN

TEMPORARY DRAINAGE INLET PROTECTION (TYPE 4B) FLEXIBLE SEDIMENT BARRIER

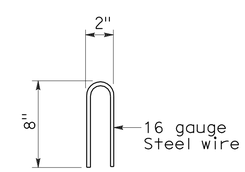

STAPLE DETAIL

STATE OF CALIFORNIA
DEPARTMENT OF TRANSPORTATION

TEMPORARY WATER POLLUTION CONTROL DETAILS (TEMPORARY DRAINAGE INLET PROTECTION)

NO SCALE

NSP T63 DATED AUGUST 15, 2008 SUPPLEMENTS THE STANDARD PLANS BOOK DATED MAY 2006.

NEW STANDARD PLAN NSP T63

7-11-08

DIST	COUNTY	ROUTE	POST MILES TOTAL PROJECT	SHEET NO.	TOTAL SHEETS
08	SBd	2	0.9/2.4	86	94

LICENSED LANDSCAPE ARCHITECT

August 15, 2008
PLANS APPROVAL DATE

The State of California or its officers or agents shall not be responsible for the accuracy or completeness of electronic copies of this plan sheet.

LICENSED LANDSCAPE ARCHITECT — Robert B. Schott — Signature — 11-04-08 Renewal Date — 08-11-08 Date — STATE OF CALIFORNIA

To accompany plans dated 1-25-10

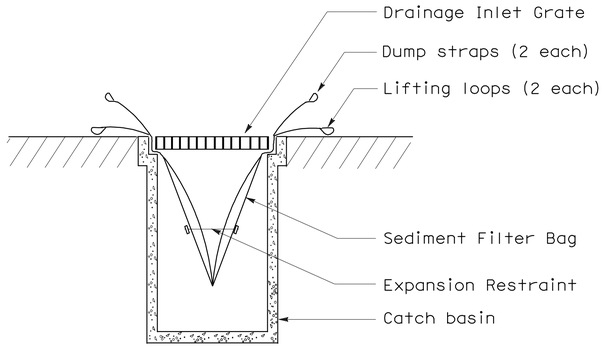

SECTION B-B

SEDIMENT FILTER BAG DETAIL

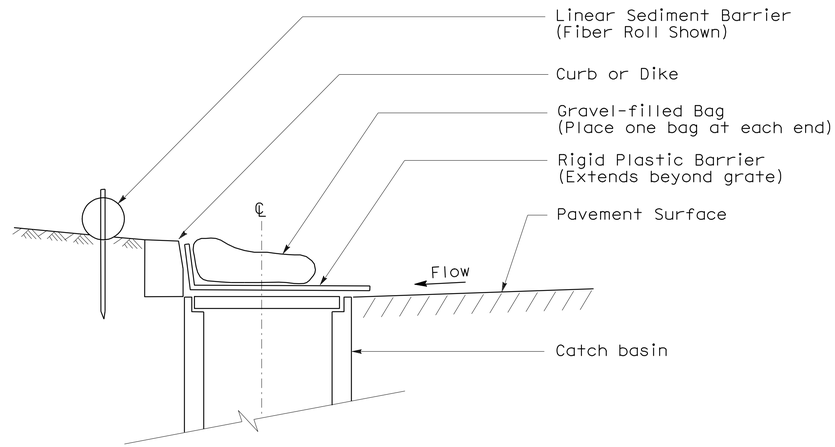

SECTION

TEMPORARY DRAINAGE INLET PROTECTION (TYPE 6A) (CATCH BASIN WITH GRATE)

NOTES:

1. See Standard Plan T51 for Temporary Silt Fence.
2. Dimensions may vary to fit field conditions.

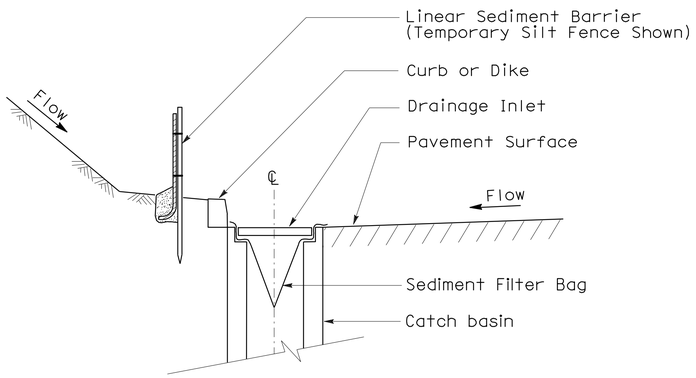

SECTION A-A

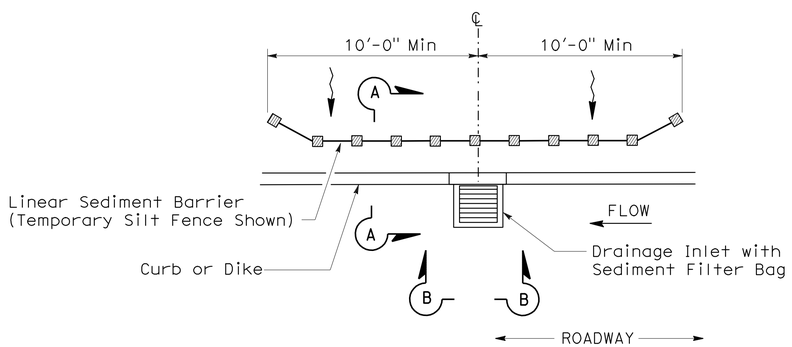

PLAN

TEMPORARY DRAINAGE INLET PROTECTION (TYPE 5) (SEDIMENT FILTER BAG)

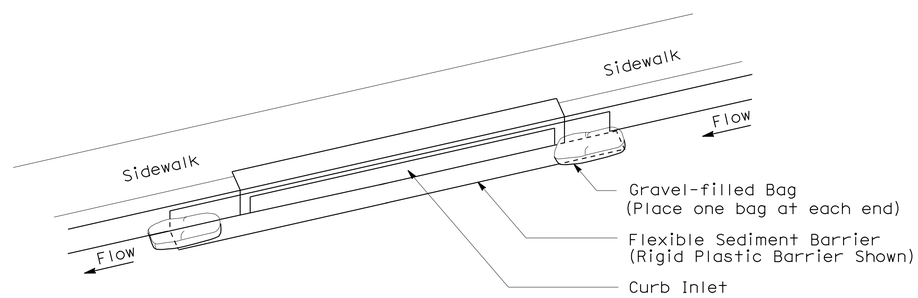

PERSPECTIVE

TEMPORARY DRAINAGE INLET PROTECTION (TYPE 6B) (CURB INLET WITHOUT GRATE)

STATE OF CALIFORNIA
DEPARTMENT OF TRANSPORTATION

TEMPORARY WATER POLLUTION CONTROL DETAILS (TEMPORARY DRAINAGE INLET PROTECTION)

NO SCALE

NSP T64 DATED AUGUST 15, 2008 SUPPLEMENTS
THE STANDARD PLANS BOOK DATED MAY 2006.

NEW STANDARD PLAN NSP T64

2006 NEW STANDARD PLAN NSP T64

7-11-08

DIST	COUNTY	ROUTE	POST MILES TOTAL PROJECT	SHEET No	TOTAL SHEETS
08	SBd	2	0.9/2.4	87	94

REGISTERED CIVIL ENGINEER — DATE 9-17-09

1-25-10
PLANS APPROVAL DATE

REGISTERED PROFESSIONAL ENGINEER — LARRY WU No. C057035 Exp. 6-30-11 CIVIL — STATE OF CALIFORNIA

The State of California or its officers or agents shall not be responsible for the accuracy or completeness of electronic copies of this plan sheet.

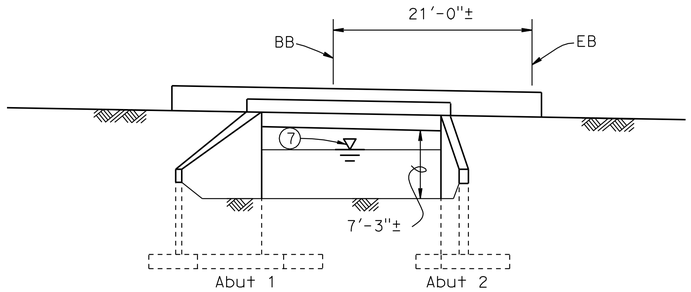

NOTES:

1. Paint "Swarthout Creek Bridge"
2. Paint "Br. No. 54-0359"
3. Remove existing concrete barrier and refinish portion of bridge deck.
4. Hot Mix Asphalt overlay, match existing AC overlay
5. Temporary Railing Type K, See "Road Plans"
6. MBGR, See "Road Plans"
7. For "Hydrologic Summary", see "Foundation Plan" sheet

Legend:

- Indicates new construction
- Indicates existing structure
- Indicates existing structure removal
- Indicates limits of Deck Seal and Hot Mix Asphalt (Type B)

Datum Elev 5935.00 151+60 151+80 152+00 152+20

ELEVATION

1/8"=1'-0"

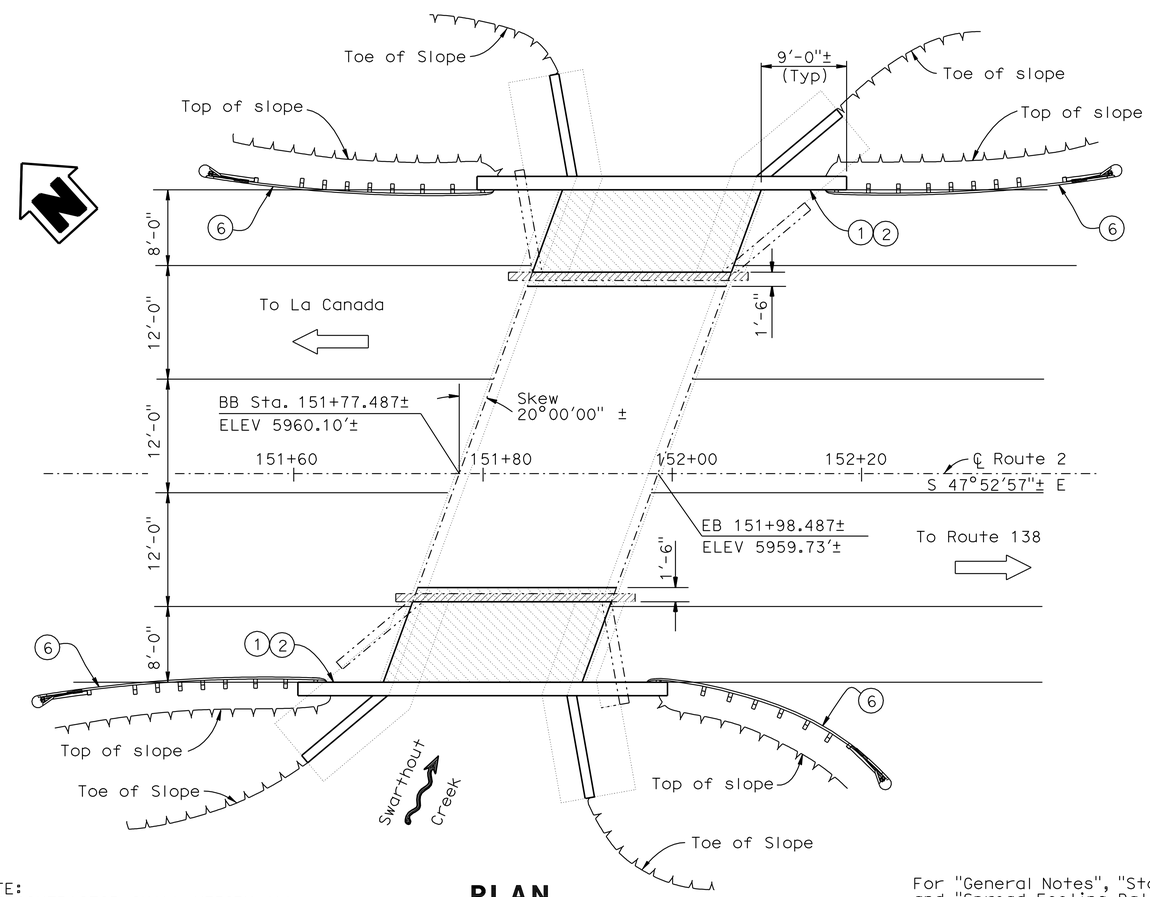

PLAN

1/8"=1'-0"

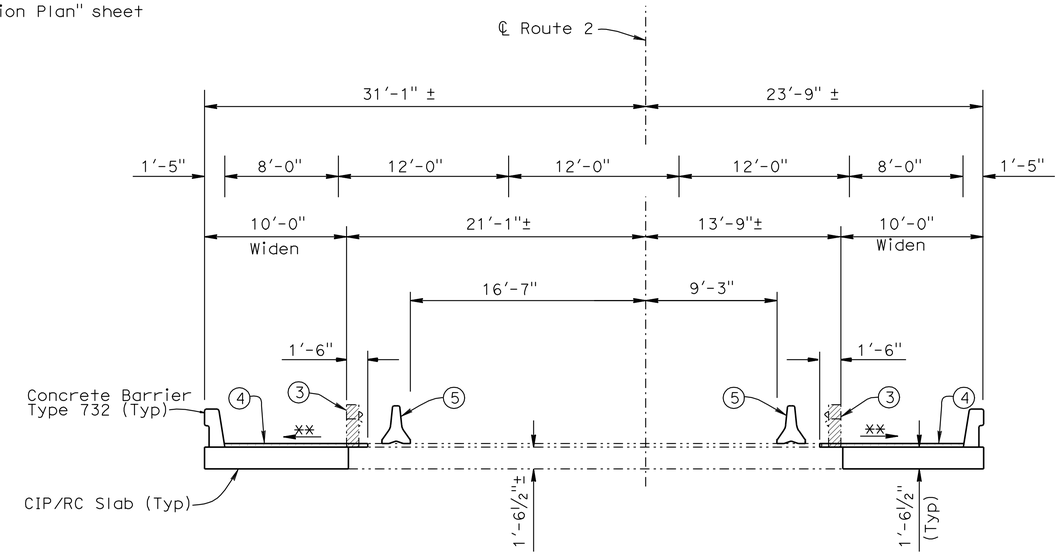

** Match existing cross slope

TYPICAL SECTION

3/16"=1'-0"

INDEX TO PLANS

SHEET NO.	TITLE
1.	GENERAL PLAN
2.	GENERAL NOTES
3.	FOUNDATION PLAN
4.	ABUTMENT LAYOUT
5.	ABUTMENT DETAILS
6.	SLAB REINFORCEMENT DETAILS
7.	LOG OF TEST BORINGS 1 of 2
8.	LOG OF TEST BORINGS 2 of 2

QUANTITIES

BRIDGE REMOVAL (PORTION)	LUMP SUM	
STRUCTURE EXCAVATION (TYPE D)	330	CY
STRUCTURE BACKFILL (BRIDGE)	260	CY
HOT MIX ASPHALT (TYPE B)	10	TON
STRUCTURAL CONCRETE, BRIDGE FOOTING	33	CY
STRUCTURAL CONCRETE, BRIDGE	80	CY
DRILL AND BOND DOWEL	124	LF
REFINISH BRIDGE DECK	63	SQFT
BAR REINFORCING STEEL (BRIDGE)	19,800	LB
BAR REINFORCING STEEL (EPOXY COATED) (BRIDGE)	3,590	LB
DECK SEAL	424	SQFT
CONCRETE BARRIER (TYPE 732)	78	LF

NOTE:
THE CONTRACTOR SHALL VERIFY ALL CONTROLLING FIELD DIMENSIONS BEFORE ORDERING OR FABRICATING ANY MATERIAL

For "General Notes", "Standard Plans" and "Spread Footing Data", see "General Notes" sheet

RYAN STILTZ
DESIGN ENGINEER

	BY	CHECKED
DESIGN	F. Chen	L. Wu
DETAILS	Y. Tang	L. Wu
QUANTITIES	F. Chen	L. Wu

LOAD & RESISTANCE FACTOR DESIGN — LIVE LOADING: HL93 W/"LOW-BOY"; PERMIT DESIGN VEHICLE

	BY	CHECKED
LAYOUT	F. Chen	L. Wu
SPECIFICATIONS	T. Kershell	PLANS AND SPECS COMPARED T. Kershell

STATE OF CALIFORNIA
DEPARTMENT OF TRANSPORTATION

DIVISION OF ENGINEERING SERVICES
STRUCTURE DESIGN
DESIGN BRANCH 10

BRIDGE NO. 54-0359
POST MILE 1.0

SWARTHOUT CREEK BRIDGE (WIDEN)
GENERAL PLAN

ORIGINAL SCALE IN INCHES FOR REDUCED PLANS 0 1 2 3

CU 08
EA 0C0201

DISREGARD PRINTS BEARING EARLIER REVISION DATES

REVISION DATES: 1-28-09 3-19-09 4-08-09 4-24-09 6-17-09

SHEET 1 OF 8

STRUCTURES DESIGN GENERAL PLAN SHEET (ENGLISH) (REV.07-24-06)

FILE => 540359agp01.dgn

USERNAME => rfrenard DATE PLOTTED => 29-JAN-2010 TIME PLOTTED => 14:30

DIST	COUNTY	ROUTE	POST MILES TOTAL PROJECT	SHEET No	TOTAL SHEETS
08	SBd	2	0.9/2.4	88	94

REGISTERED CIVIL ENGINEER — DATE 9-17-09

1-25-10
PLANS APPROVAL DATE

REGISTERED PROFESSIONAL ENGINEER — LARRY WU — No. C057035 — Exp. 6-30-11 — CIVIL — STATE OF CALIFORNIA

The State of California or its officers or agents shall not be responsible for the accuracy or completeness of electronic copies of this plan sheet.

STANDARD PLANS DATED MAY 2006

A10A, A10B	ACRONYMS AND ABBREVIATIONS
A10C, A10D	SYMBOLS
A62C	LIMITS OF PAYMENT FOR EXCAVATION AND BACKFILL-BRIDGE
BO-1	BRIDGE DETAILS
B11-55	CONCRETE BARRIER TYPE 732

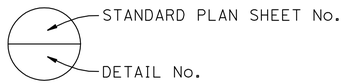

SPREAD FOOTING DATA TABLE

SUPPORT LOCATION	WORKING STRESS DESIGN (WSD)		LOAD AND RESISTANCE FACTOR DESIGN (LRFD)		
			SERVICE	STRENGTH	EXTREME
	Permissible Gross Contact Stress (Settlement) (ksf)	Allowable Gross Bearing Capacity (ksf)	Permissible Net Contact Stress (ksf)	Factored Gross Nominal Bearing Resistance $\phi_{b=0.45}$ (ksf)	Factored Gross Nominal Bearing Resistance $\phi_{b=0.45}$ (ksf)
Abut 1	28.0	7.0	N/A	N/A	N/A
Abut 2	28.0	7.0	N/A	N/A	N/A

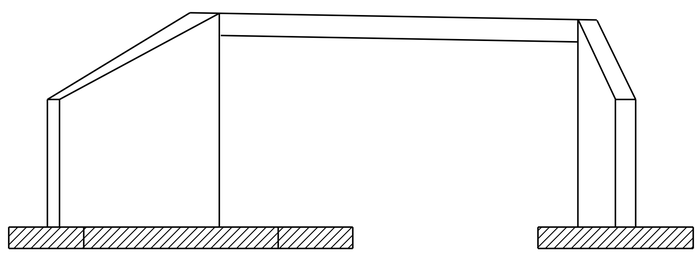

Structural Concrete, Bridge.
Structural Concrete, Bridge Footing.

CONCRETE STRENGTH AND TYPE LIMITS

NO SCALE

GENERAL NOTES
LOAD AND RESISTANCE FACTOR DESIGN

DESIGN: AASHTO LRFD BRIDGE DESIGN SPECIFICATIONS, 3rd Edition with 2006 Interims and CALTRANS Amendments, V3.06.01.

SEISMIC DESIGN: Caltrans Seismic Design Criteria (SDC) Version 1.4, July, 2006

DEAD LOAD: Includes 35 Psf for future wearing surface.

LIVE LOADING: HL93 with alternative and permit design load.

SEISMIC LOADING: CALTRANS SDC ARS Curve : Figure B.8 (Soil Profile Type D) Spectrum Peak Rock Acceleration = 0.7 g, 20% increase due to fault proximity.

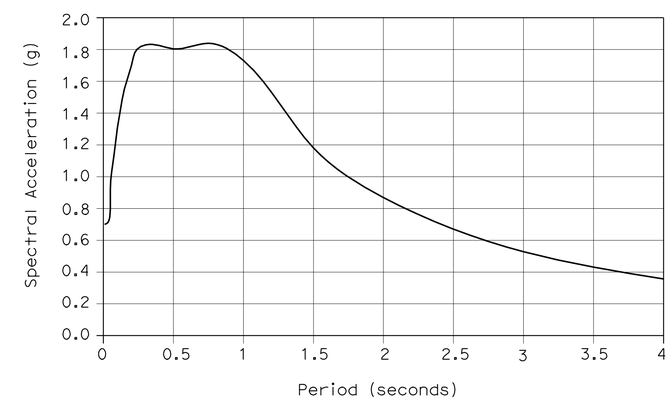

Modified CALTRANS SDC ARS Curve:
Type D Soil Profile, Magnitude Mw=8.0, 5% Damping

REINFORCED CONCRETE:
f_y = 60 ksi
f'_c = 3600 psi, unless otherwise noted
n = 8

DESIGN	BY F. Chen	CHECKED L. Wu	
DETAILS	BY Y. Tang	CHECKED L. Wu	
QUANTITIES	BY F. Chen	CHECKED L. Wu	

STATE OF CALIFORNIA
DEPARTMENT OF TRANSPORTATION

DIVISION OF ENGINEERING SERVICES
STRUCTURE DESIGN
DESIGN BRANCH 10

BRIDGE NO. 54-0359
POST MILE 1.0

SWARTHOUT CREEK BRIDGE (WIDEN)
GENERAL NOTES

STRUCTURES DESIGN DETAIL SHEET (ENGLISH) (REV. 10/25/05)

ORIGINAL SCALE IN INCHES FOR REDUCED PLANS 0 1 2 3

CU 08
EA 0C0201

DISREGARD PRINTS BEARING EARLIER REVISION DATES 4-09-09

REVISION DATES

SHEET 2 OF 8

FILE => 540359bgnotes02.dgn

USERNAME => rfrienord DATE PLOTTED => 29-JAN-2010 TIME PLOTTED => 14:30

DIST	COUNTY	ROUTE	POST MILES TOTAL PROJECT	SHEET No	TOTAL SHEETS
08	SBd	2	0.9/2.4	89	94

REGISTERED CIVIL ENGINEER — DATE 9-16-05

1-25-10
PLANS APPROVAL DATE

The State of California or its officers or agents shall not be responsible for the accuracy or completeness of electronic copies of this plan sheet.

REGISTERED PROFESSIONAL ENGINEER — LARRY WU — No. C057035 — Exp. 6-30-11 — CIVIL — STATE OF CALIFORNIA

HYDROLOGIC SUMMARY

DRAINAGE AREA: _____ SQUARE MILES

	DESIGN FLOOD	BASE FLOOD	OVERTOPPING FLOOD
FREQUENCY (YEARS)	50	100	
DISCHARGE (CUBIC FEET PER SECOND)	3350	4740	
WATER SURFACE Elev AT BRIDGE	5956.5	5957.8	

FLOOD PLAIN DATA ARE BASED UPON INFORMATION AVAILABLE WHEN THE PLANS WERE PREPARED AND ARE SHOWN TO MEET FEDERAL REQUIREMENTS. THE ACCURACY OF SAID INFORMATION IS NOT WARRANTED BY THE STATE AND INTERESTED OR AFFECTED PARTIES SHOULD MAKE THEIR OWN INVESTIGATIONS.

(A) Sta 151+87.89 "℄ RTE 02" =
Sta 1+06.40 Approx "℄ CREEK"

CURVE DATA				
No.	R	Δ	T	L
1	1174.27	31°24′38"	330.19	643.76
2	80.00	04°32′57"	3.18	6.35
3	80.00	19°07′03"	13.47	26.69
4	90.00	22°04′12"	17.55	34.67
5	90.00	05°44′34"	4.51	9.02
6	100.00	18°02′15"	15.87	31.48

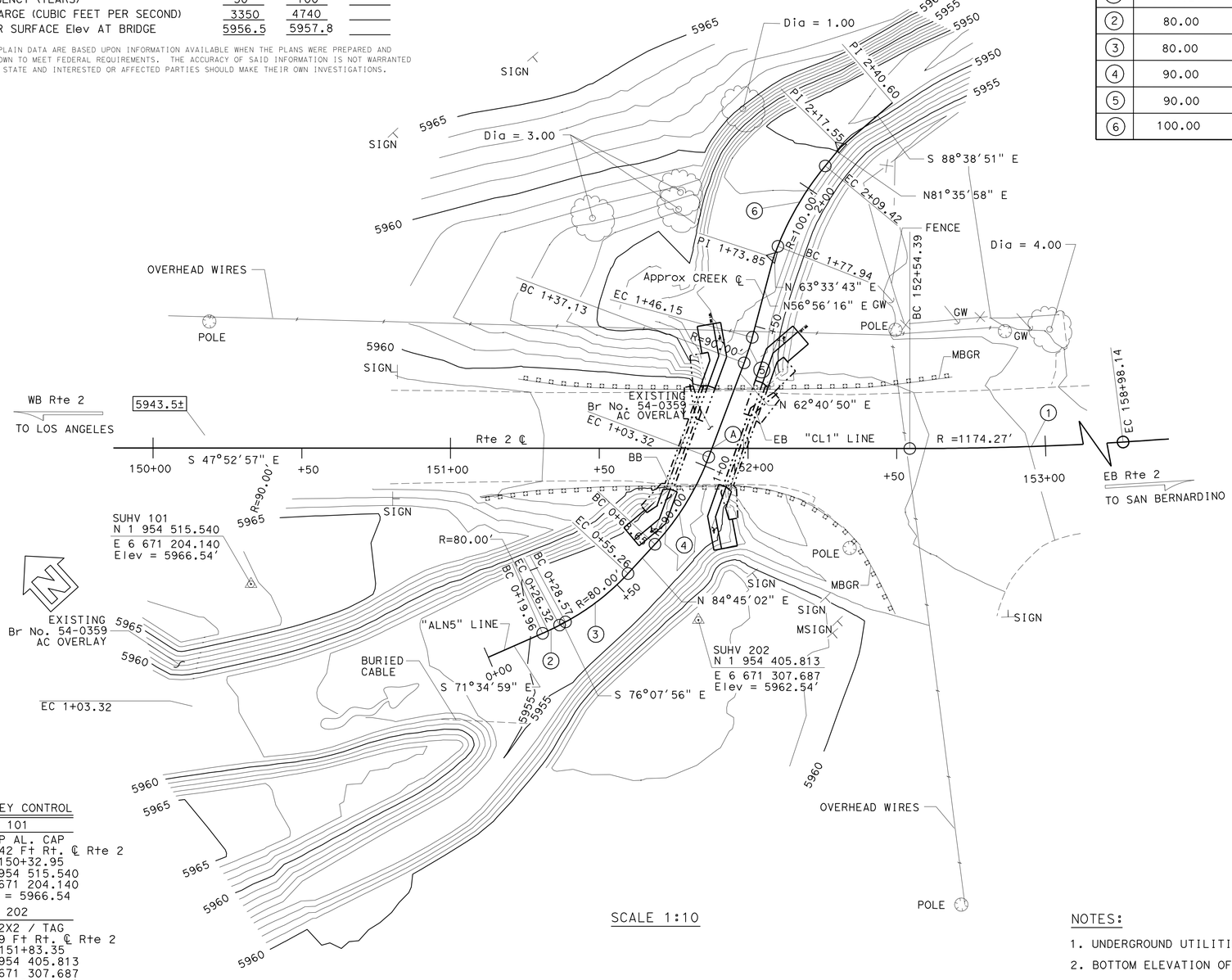

SCALE 1:10

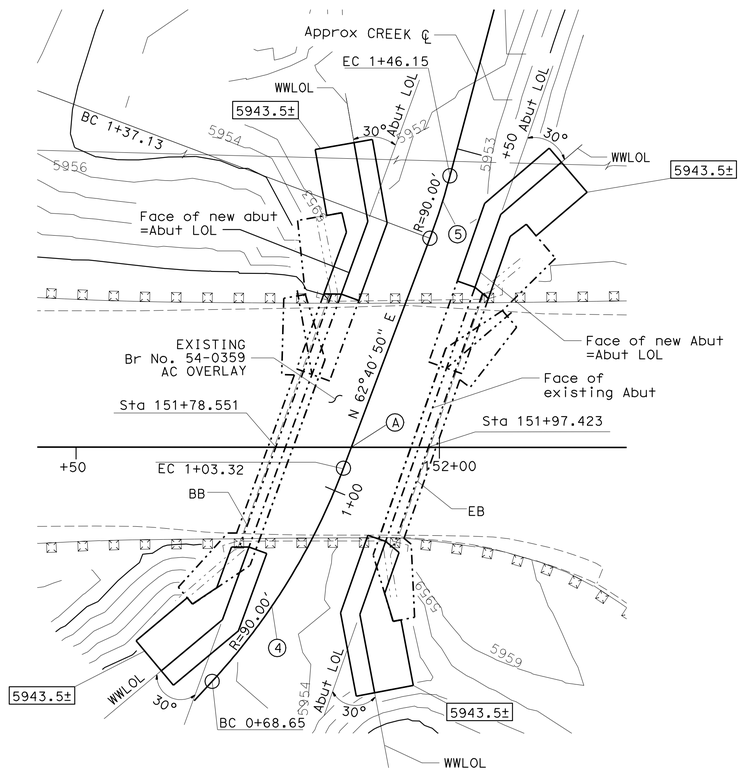

SCALE 1:5

SURVEY CONTROL

SUHV 101
1" IP AL. CAP
45.742 Ft Rt. ℄ Rte 2
Sta 150+32.95
N 1 954 515.540
E 6 671 204.140
Elev = 5966.54

SUHV 202
SET 2X2 / TAG
57.69 Ft Rt. ℄ Rte 2
Sta 151+83.35
N 1 954 405.813
E 6 671 307.687
Elev = 5962.54′

NOTE:
THE CONTRACTOR SHALL VERIFY ALL CONTROLLING FIELD DIMENSIONS BEFORE ORDERING OR FABRICATING ANY MATERIAL

NOTES:

1. UNDERGROUND UTILITIES AS SHOWN ARE APPROXIMATE.
2. BOTTOM ELEVATION OF NEW FOOTING TO MATCH BOTTOM ELEVATION OF EXISTING FOOTING.

LEGEND:

INDICATES BOTTOM OF FOOTING ELEVATION

PRELIMINARY INVESTIGATION SECTION

SCALE	VERT.DATUM NAVD 88	PHOTOGRAMMETRY AS OF: X			
	HORZ.DATUM NAD 83 (1991.35)	SURVEYED	BY T.PHONG/C.STEWART	CHECKED	BY C.STEWART 02/2009
ALIGNMENT TIES Dist. Trav. Sheets		DRAFTED	BY S.ABASSY 03/2009	CHECKED	BY L.MANABO 03/2009

	BY	CHECKED
DESIGN	F.Chen	L. Wu
DETAILS	Y. Tang	L. Wu
QUANTITIES	F. Chen	L. Wu

STATE OF CALIFORNIA
DEPARTMENT OF TRANSPORTATION

DIVISION OF ENGINEERING SERVICES
STRUCTURE DESIGN
DESIGN BRANCH 10

BRIDGE NO. 54-0359
POST MILE 1.0

SWARTHOUT CREEK (WIDENING)
FOUNDATION PLAN

STRUCTURES FOUNDATION PLAN SHEET (ENGLISH) (REV. 10/25/05)

ORIGINAL SCALE IN INCHES FOR REDUCED PLANS 0 1 2 3

CU 08
EA 0C0201

DISREGARD PRINTS BEARING EARLIER REVISION DATES

REVISION DATES: 03/18/09 4-16-09 6-17-09

SHEET 3 OF 8

FILE => 540359efp103.dgn

USERNAME => trlenard DATE PLOTTED => 29-JAN-2010 TIME PLOTTED => 14:30

DIST	COUNTY	ROUTE	POST MILES TOTAL PROJECT	SHEET No	TOTAL SHEETS
08	SBd	2	0.9/2.4	90	94

REGISTERED CIVIL ENGINEER 9-17-09 DATE

1-25-10
PLANS APPROVAL DATE

REGISTERED PROFESSIONAL ENGINEER LARRY WU No. C057035 Exp. 6-30-11 CIVIL STATE OF CALIFORNIA

The State of California or its officers or agents shall not be responsible for the accuracy or completeness of electronic copies of this plan sheet.

LEGEND:

- Denotes new construction
- Denotes existing structure
- Denotes existing structure removal

NOTES:

1. For "Section C-C", see "Abutment Details" sheet.
2. Abutment 1 shown, Abutment 2 similar.

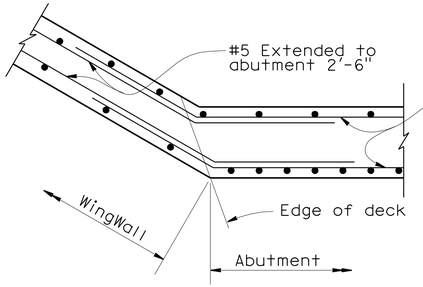

NOTES:

1. For abutment reinf, see "Section A-A".
2. For wingwall reinf, see "Section C-C" on "Abutment Details" sheet.

SECTION B-B

SCALE: 3/4"=1'-0"

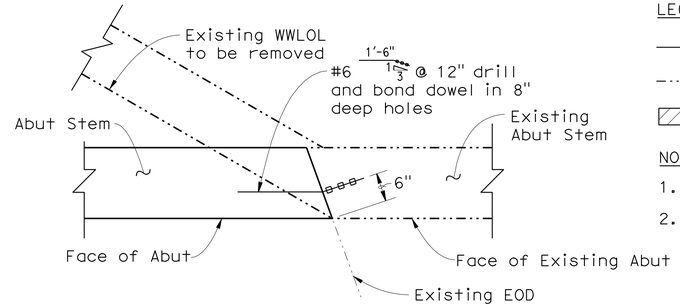

SECTION E-E

SCALE: 3/4"=1'-0"

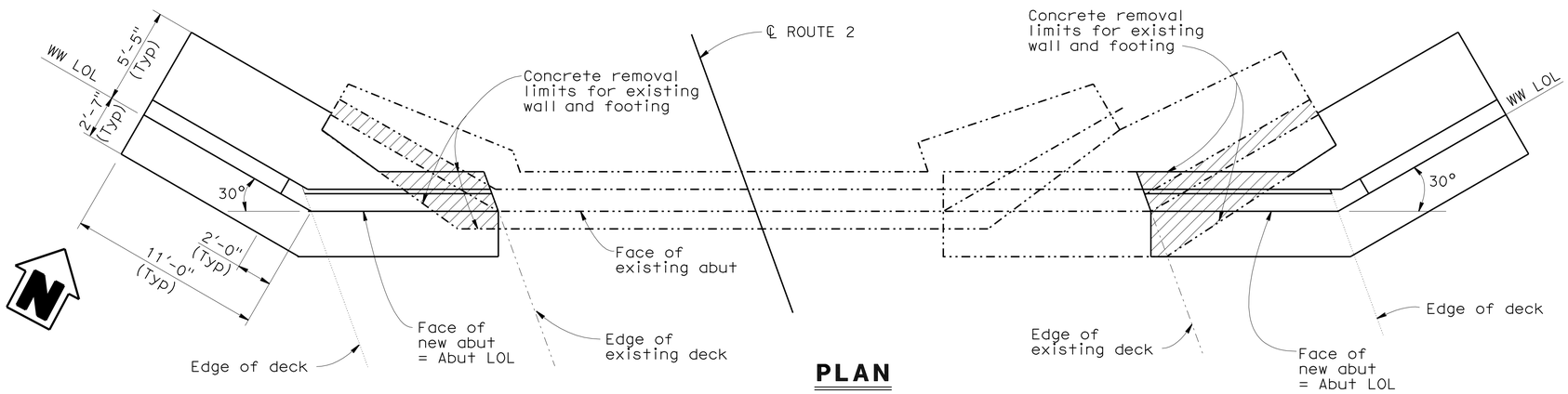

PLAN

SCALE: 1/4"=1'-0"

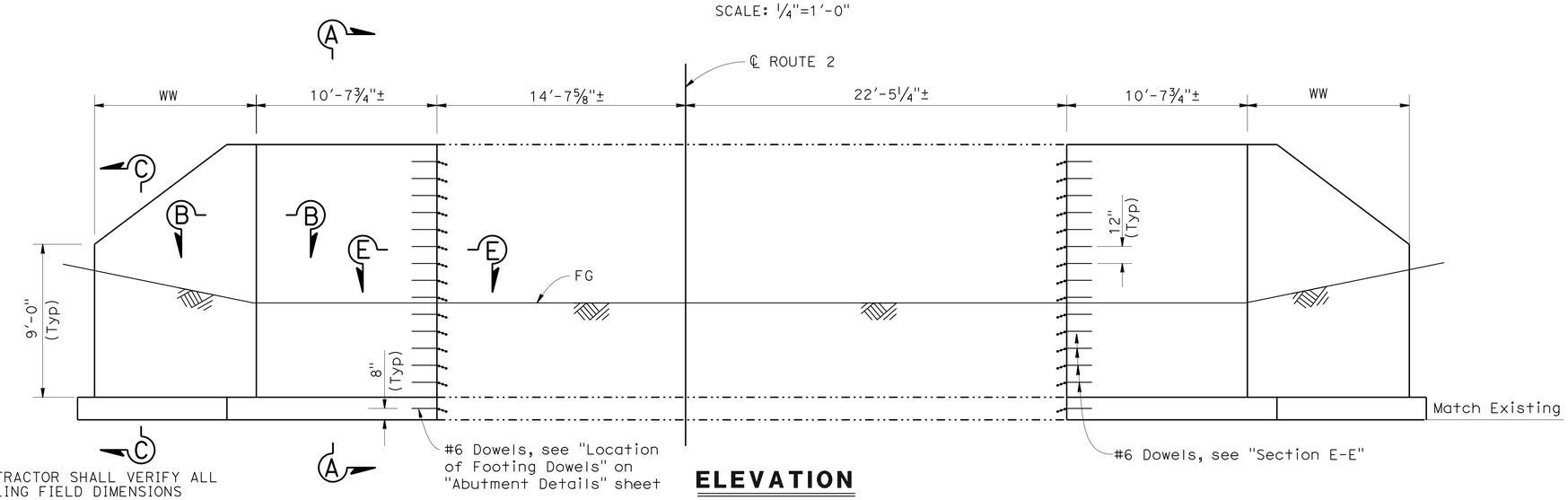

ELEVATION

SCALE: 1/4"=1'-0"

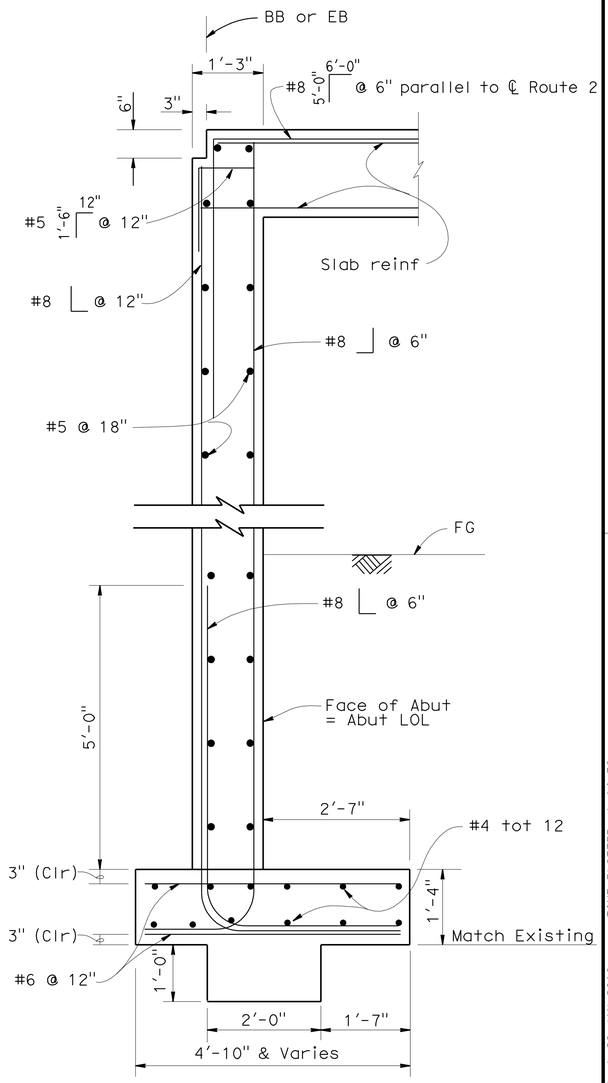

SECTION A-A

SCALE: 3/4"=1'-0"

NOTE:
THE CONTRACTOR SHALL VERIFY ALL CONTROLLING FIELD DIMENSIONS BEFORE ORDERING OR FABRICATING ANY MATERIAL.

	BY	CHECKED
DESIGN	F. Chen	L. Wu
DETAILS	Y. Tang	L. Wu
QUANTITIES	F. Chen	L. Wu

STATE OF CALIFORNIA
DEPARTMENT OF TRANSPORTATION

DIVISION OF ENGINEERING SERVICES
STRUCTURE DESIGN
DESIGN BRANCH 10

BRIDGE NO. 54-0359
POST MILE 1.0

SWARTHOUT CREEK BRIDGE (WIDEN)
ABUTMENT LAYOUT

STRUCTURES DESIGN DETAIL SHEET (ENGLISH) (REV. 10/25/05)

ORIGINAL SCALE IN INCHES FOR REDUCED PLANS 0 1 2 3

CU 08
EA 0C0201

DISREGARD PRINTS BEARING EARLIER REVISION DATES 03-24-09 04-13-09

REVISION DATES

SHEET 4 OF 8

FILE => 540359fa_1o04.dgn

USERNAME => trienard DATE PLOTTED => 29-JAN-2010 TIME PLOTTED => 14:30

DIST	COUNTY	ROUTE	POST MILES TOTAL PROJECT	SHEET No	TOTAL SHEETS
08	SBd	2	0.9/2.4	91	94

REGISTERED CIVIL ENGINEER — DATE 9-17-09

1-25-10
PLANS APPROVAL DATE

REGISTERED PROFESSIONAL ENGINEER — LARRY WU — No. C057035 — Exp. 6-30-11 — CIVIL — STATE OF CALIFORNIA

The State of California or its officers or agents shall not be responsible for the accuracy or completeness of electronic copies of this plan sheet.

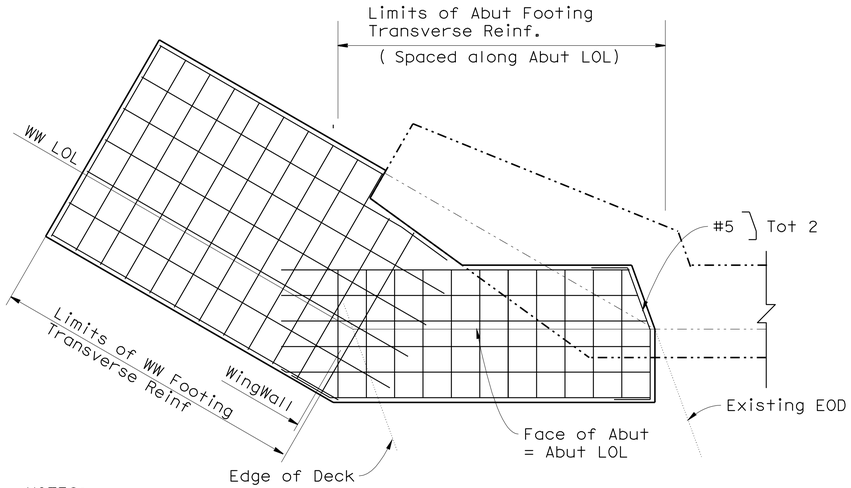

NOTES:

1. Extend Abut Footing longitudinal reinf to WW Footing 2'-0".
2. Extend WW Footing longitudinal reinf to Abut Footing 2'-0".

FOOTING REINFORCEMENT BRIDGE RIGHT

SCALE: 3/8" = 1'-0"

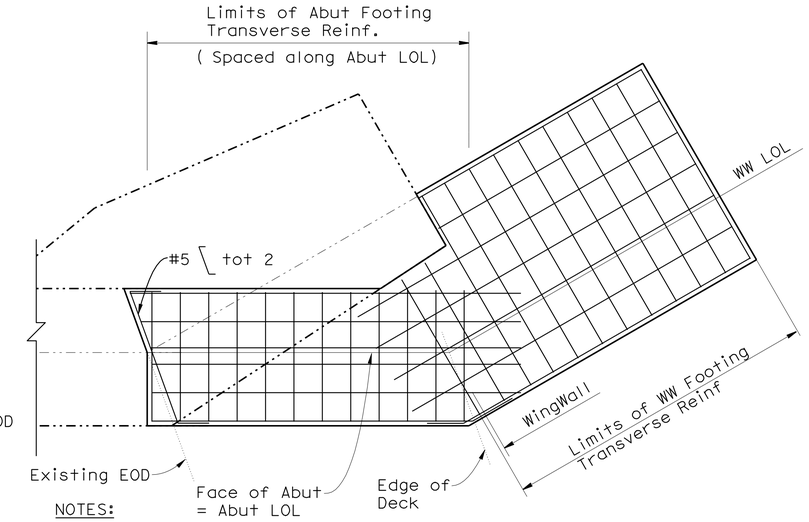

NOTES:

1. Extend Abut Footing longitudinal reinf to WW Footing 2'-0".
2. Extend WW Footing longitudinal reinf to Abut Footing 2'-0".

FOOTING REINFORCEMENT BRIDGE LEFT

SCALE: 3/8" = 1'-0"

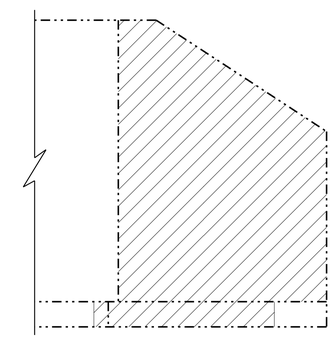

ELEVATION D-D

SCALE: 1/4" = 1'-0"

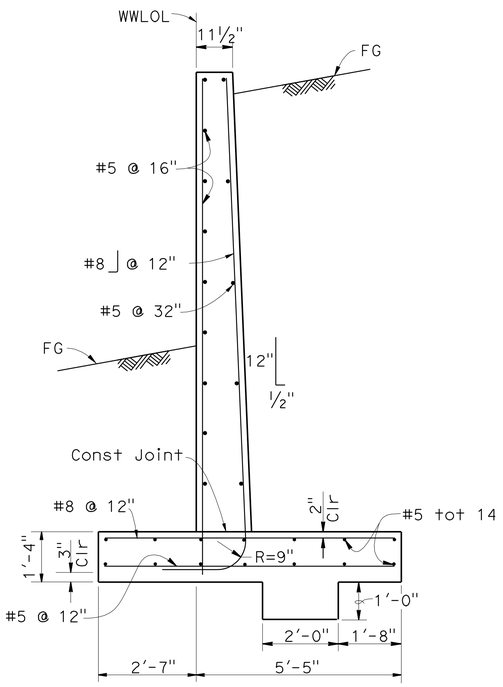

SECTION C-C

SCALE: 1/2" = 1'-0"

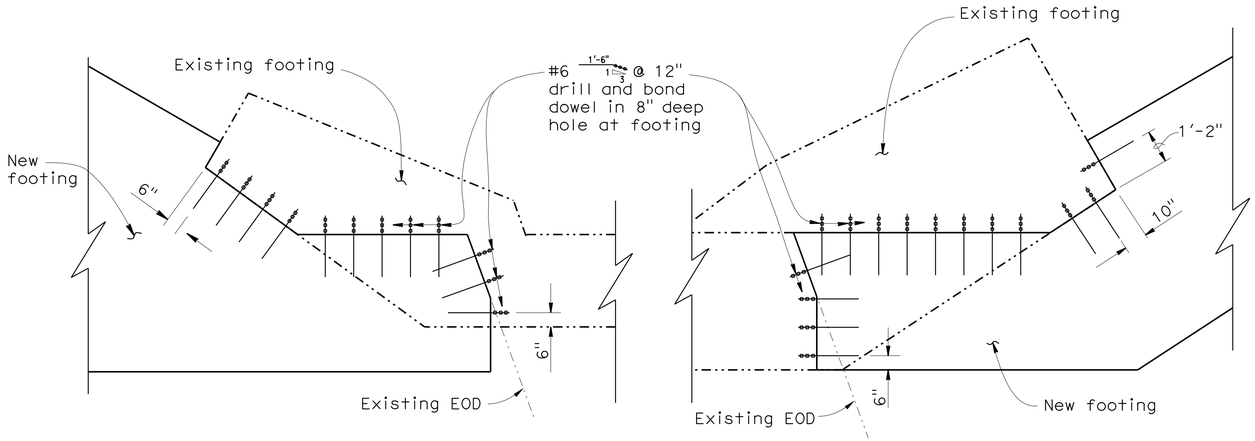

LOCATION OF FOOTING DOWELS

SCALE: 3/8" = 1'-0"

NOTES:

1. For location of "Section C-C", see "Abutment Layout" sheet.
2. Abutment 1 shown, Abutment 2 similar.

LEGEND:

- Denotes new construction
- Denotes existing structure
- Denotes existing structure removal

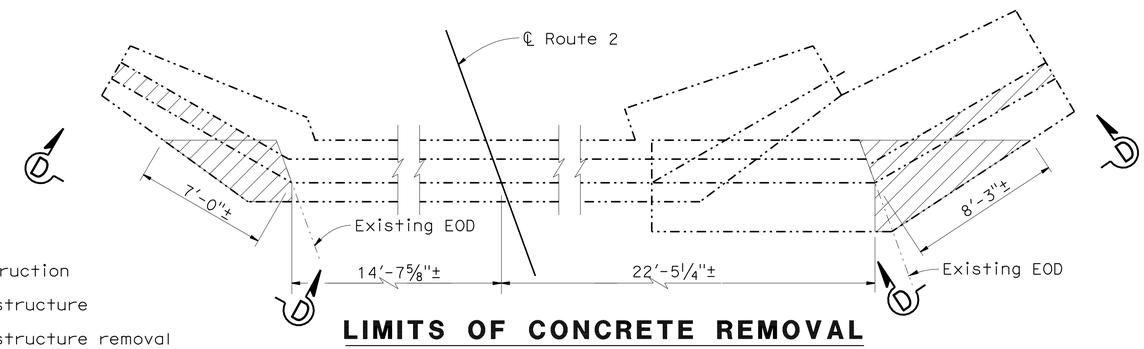

LIMITS OF CONCRETE REMOVAL

SCALE: 1/4" = 1'-0"

NOTE:
THE CONTRACTOR SHALL VERIFY ALL CONTROLING FIELD DIMENSIONS BEFORE ORDERING OR FABRICATING ANY MATERIAL.

	BY	CHECKED
DESIGN	F. Chen	L. Wu
DETAILS	Y. Tang	L. Wu
QUANTITIES	F. Chen	L. Wu

STATE OF CALIFORNIA
DEPARTMENT OF TRANSPORTATION

DIVISION OF ENGINEERING SERVICES
STRUCTURE DESIGN
DESIGN BRANCH 10

BRIDGE NO. 54-0359
POST MILE 1.0

SWARTHOUT CREEK BRIDGE (WIDEN)
ABUTMENT DETAILS

STRUCTURES DESIGN DETAIL SHEET (ENGLISH) (REV. 10/25/05)

ORIGINAL SCALE IN INCHES FOR REDUCED PLANS 0 1 2 3

CU 08
EA 0C0201

DISREGARD PRINTS BEARING EARLIER REVISION DATES

REVISION DATES: 03-30-09 04-14-09 4-22-09

SHEET 5 OF 8

FILE => 540359fadt05.dgn

USERNAME => friehard DATE PLOTTED => 29-JAN-2010 TIME PLOTTED => 14:31

DIST	COUNTY	ROUTE	POST MILES TOTAL PROJECT	SHEET No	TOTAL SHEETS
08	SBd	2	0.9/2.4	92	94

REGISTERED CIVIL ENGINEER 9-17-09 DATE

1-25-10
PLANS APPROVAL DATE

REGISTERED PROFESSIONAL ENGINEER LARRY WU No. C057035 Exp. 6-30-11 CIVIL STATE OF CALIFORNIA

The State of California or its officers or agents shall not be responsible for the accuracy or completeness of electronic copies of this plan sheet.

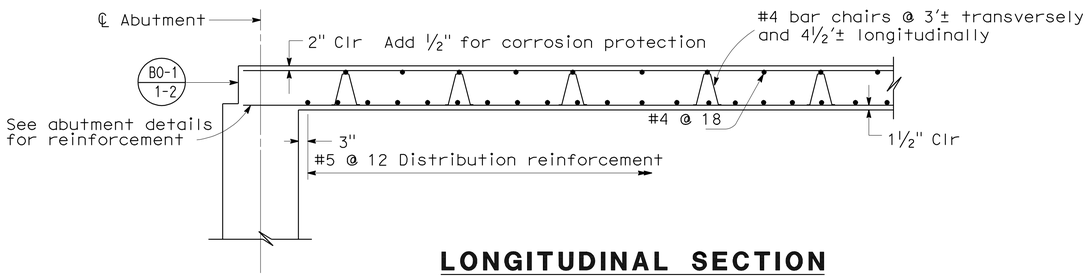

LONGITUDINAL SECTION

NO SCALE

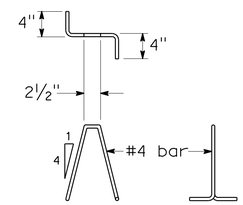

BAR CHAIR DETAIL

NO SCALE

LEGEND:

- Denotes new construction
- Denotes existing structure
- Denotes existing structure removal

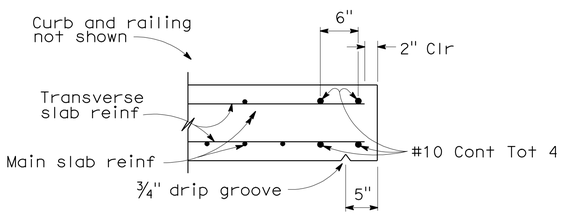

DETAIL A

NO SCALE

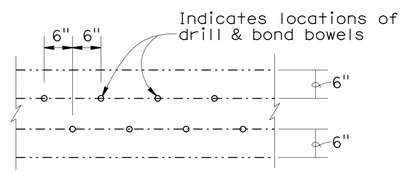

SECTION F-F

SCALE: 3/4"=1'-0"

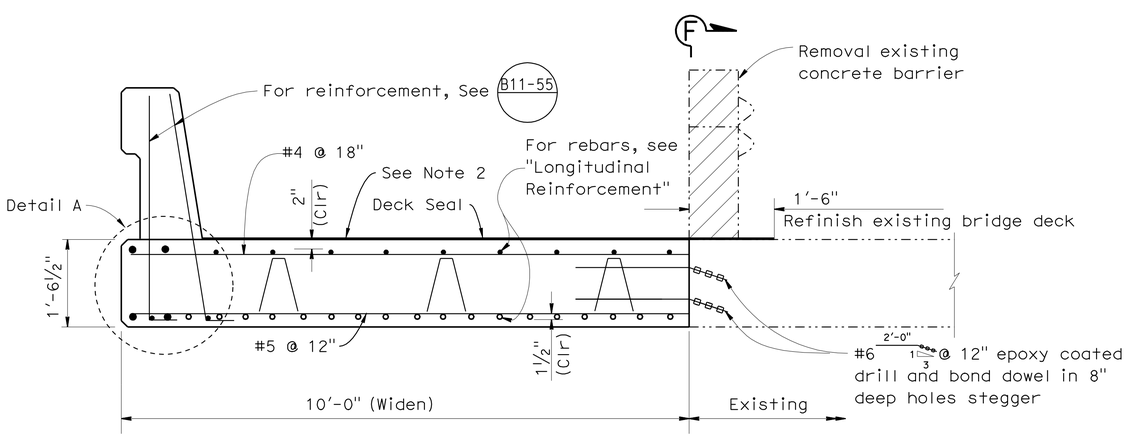

NOTES:

1. Top slab reinf and barrier reinf to be epoxy - coated.
2. Hot Mix Asphalt overlay (4"±) not shown for clarity.
3. Left slab shown, Right slab similar.

TYPICAL SECTION

SCALE: 3/4"=1'-0"

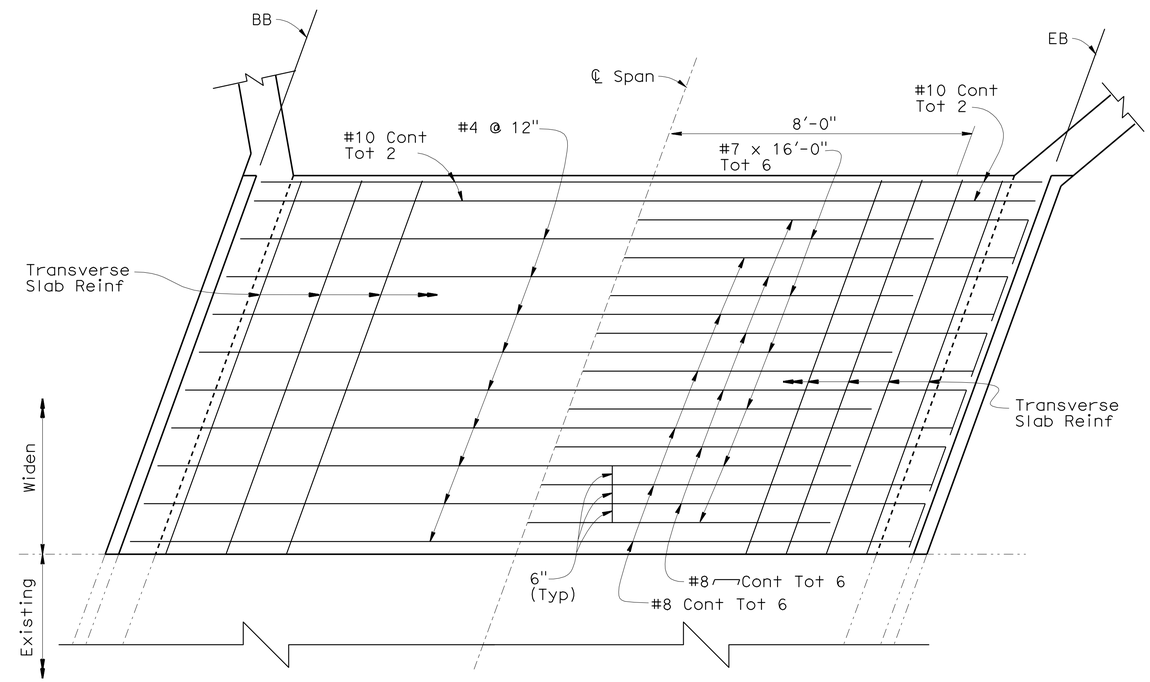

TOP SLAB

BOTTOM SLAB

LONGITUDINAL REINFORCEMENT

SCALE: 1/2"=1'-0"

NOTES:

1. No lap splices allowed in top & bottom reinforcement.
2. Left widening shown, Right widening similar.

NOTE:
THE CONTRACTOR SHALL VERIFY ALL CONTROLING FIELD DIMENSIONS BEFORE ORDERING OR FABRICATING ANY MATERIAL.

	BY	CHECKED
DESIGN	F. Chen	L. Wu
DETAILS	Y. Tang	L. Wu
QUANTITIES	F. Chen	L. Wu

STATE OF CALIFORNIA
DEPARTMENT OF TRANSPORTATION

DIVISION OF ENGINEERING SERVICES
STRUCTURE DESIGN
DESIGN BRANCH 10

BRIDGE NO. 54-0359
POST MILE 1.0

SWARTHOUT CREEK BRIDGE (WIDEN)
SLAB REINFORCEMENT DETAILS

STRUCTURES DESIGN DETAIL SHEET (ENGLISH) (REV. 10/25/05)

ORIGINAL SCALE IN INCHES FOR REDUCED PLANS 0 1 2 3

CU 08
EA 0C0201

DISREGARD PRINTS BEARING EARLIER REVISION DATES

REVISION DATES: 04-16-09 4-24-09 6-17-09

SHEET 6 OF 8

FILE => 540359wsr06.dgn

USERNAME => friehard DATE PLOTTED => 29-JAN-2010 TIME PLOTTED => 14:31

DIST	COUNTY	ROUTE	KILOMETER POST TOTAL PROJECT	SHEET No	TOTAL SHEETS
08	SBd	2	0.9/2.4	93	94

CERTIFIED ENGINEERING GEOLOGIST 6-18-09

1-25-10
PLANS APPROVAL DATE

PROFESSIONAL GEOLOGIST Chris Hoadley No. 2309 Exp. 11-23-09 CERTIFIED ENGINEERING GEOLOGIST STATE OF CALIFORNIA

The State of California or its officers or agents shall not be responsible for the accuracy or completeness of electronic copies of this plan sheet.

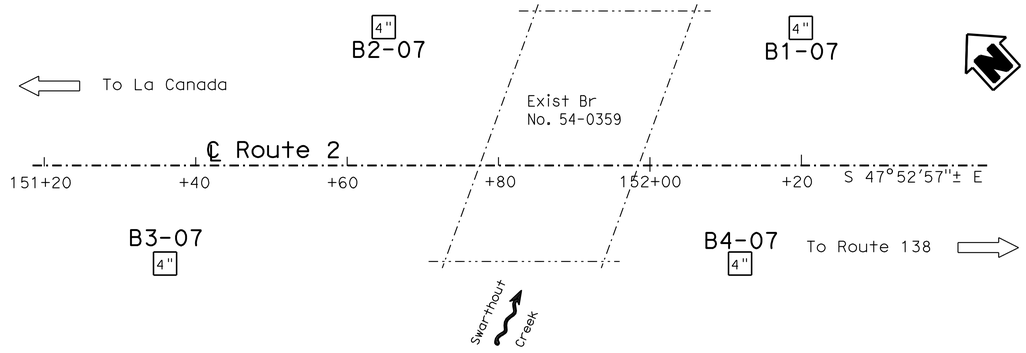

PLAN
1"=10'

BENCH MARK
Elev provided by district.

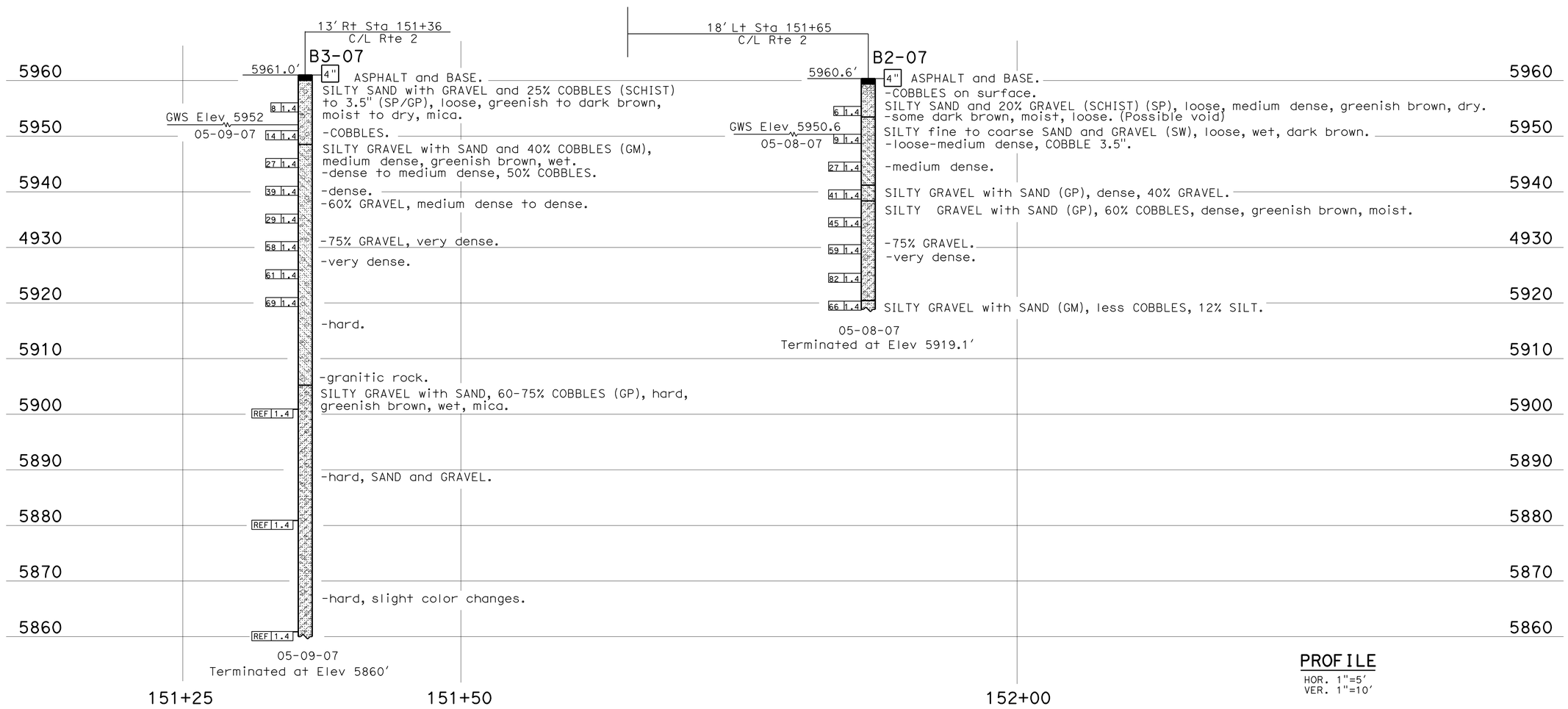

PROFILE
HOR. 1"=5'
VER. 1"=10'

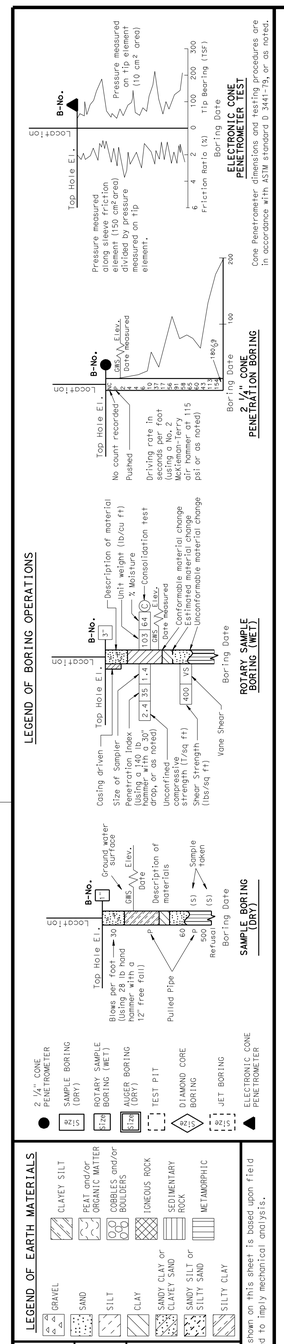

CONSISTENCY CLASSIFICATION FOR SOILS
According to the Standard Penetration Test

SPT N-Value (Blows/foot)	Granular	SPT N-Value (Blows/foot)	Cohesive
0-4	Very Loose	<2	Very Soft
5-10	Loose	2-4	Soft
11-30	Medium Dense	5-8	Medium stiff
31-50	Dense	9-15	Stiff
>50	Very Dense	16-30	Very Stiff
		31-60	Hard
		>60	Very Hard

NOTE: Classification of earth material as shown on this sheet is based upon field inspection and is not to be construed to imply mechanical analysis.

ENGINEERING SERVICES	GEOTECHNICAL SERVICES
DRAWN BY	W. Tang 06/09
CHECKED BY	C. Hoadley

FIELD INVESTIGATION BY: C. Hoadley

STATE OF CALIFORNIA DEPARTMENT OF TRANSPORTATION

DIVISION OF ENGINEERING SERVICES STRUCTURE DESIGN
DESIGN BRANCH

BRIDGE NO. 54-0359
POST MILE 1.0

SWARTHOUT CREEK BRIDGE (WIDEN)
LOG OF TEST BORINGS 1 OF 2

CU 08
EA 0C0201

DISREGARD PRINTS BEARING EARLIER REVISION DATES 06-18-09

REVISION DATES (PRELIMINARY STAGE ONLY)

SHEET 7 OF 8

ORIGINAL SCALE IN INCHES FOR REDUCED PLANS 0 1 2 3

OGS LOG OF TEST BORINGS SHEET (ENGLISH) (REV. 5/25/07)

FILE => 540359zltb107.dgn

USERNAME => frleonard DATE PLOTTED => 29-JAN-2010 TIME PLOTTED => 14:31

DIST	COUNTY	ROUTE	KILOMETER POST TOTAL PROJECT	SHEET No	TOTAL SHEETS
08	SBd	2	0.9/2.4	94	94

CERTIFIED ENGINEERING GEOLOGIST 6-18-09

1-25-10
PLANS APPROVAL DATE

PROFESSIONAL GEOLOGIST Chris Hoadley No. 2309 Exp. 11-23-09 CERTIFIED ENGINEERING GEOLOGIST STATE OF CALIFORNIA

The State of California or its officers or agents shall not be responsible for the accuracy or completeness of electronic copies of this plan sheet.

LEGEND OF BORING OPERATIONS

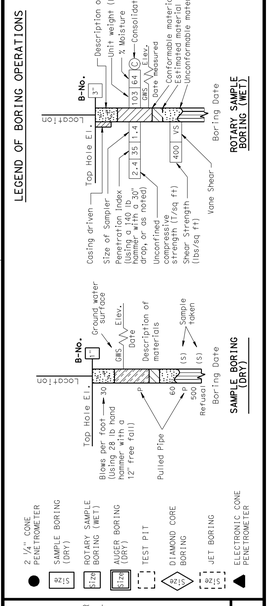

LEGEND OF EARTH MATERIALS

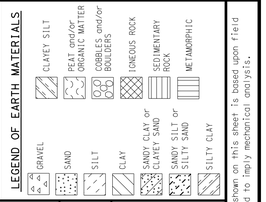

CONSISTENCY CLASSIFICATION FOR SOILS

According to the Standard Penetration Test

SPT N-Value (Blows/ Foot)	Granular	SPT N-Value (Blows/ Foot)	Cohesive
0-4	Very Loose	<2	Very Soft
5-10	Loose	2-4	Soft
11-30	Medium Dense	5-8	Medium stiff
31-50	Dense	9-15	Stiff
>50	Very Dense	16-30	Very Stiff
		31-60	Hard
		>60	Very Hard

NOTE: Classification of earth material as shown on this sheet is based upon field inspection and is not to be construed to imply mechanical analysis.

FOR PLAN VIEW, SEE
"LOG OF TEST BORINGS" 1 OF 2

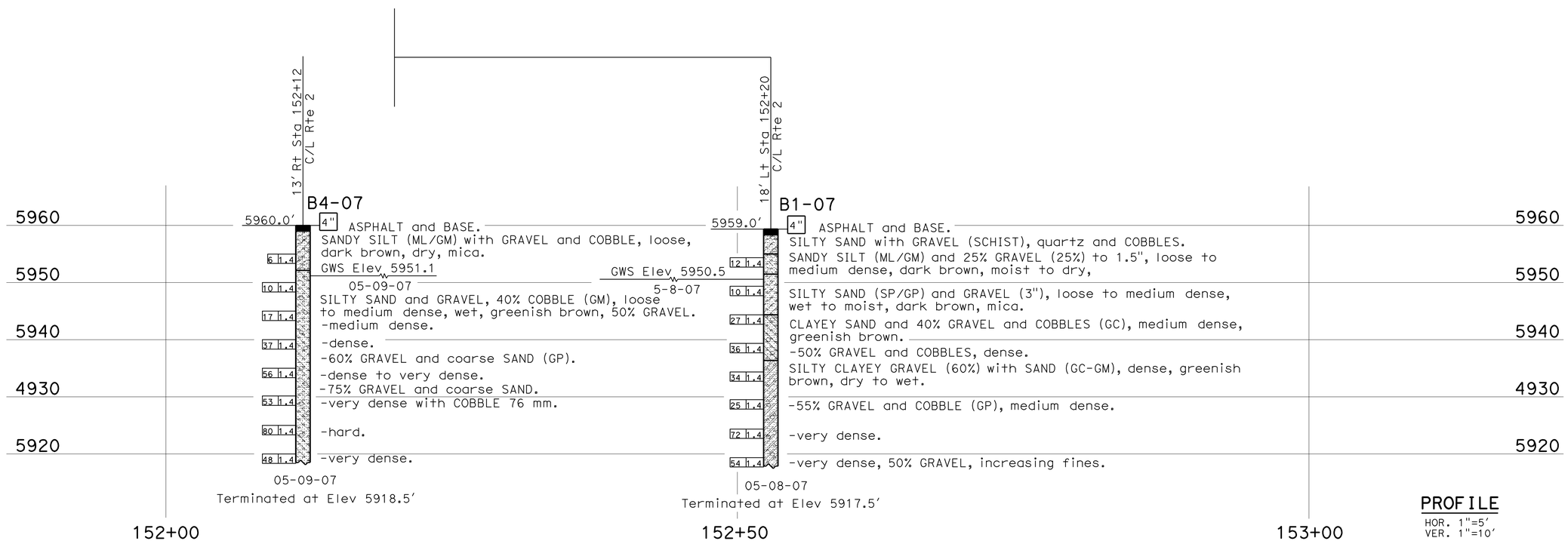

ENGINEERING SERVICES	GEOTECHNICAL SERVICES
DRAWN BY	W. Tang 06/09
CHECKED BY	C. Hoadley

FIELD INVESTIGATION BY: C. Hoadley

STATE OF CALIFORNIA DEPARTMENT OF TRANSPORTATION

DIVISION OF ENGINEERING SERVICES STRUCTURE DESIGN DESIGN BRANCH

BRIDGE NO. 54-0359
POST MILE 1.0

SWARTHOUT CREEK BRIDGE (WIDEN)
LOG OF TEST BORINGS 2 OF 2

CU 08
EA 0C0201

DISREGARD PRINTS BEARING EARLIER REVISION DATES

REVISION DATES (PRELIMINARY STAGE ONLY): 06-18-09

SHEET 8 OF 8

ORIGINAL SCALE IN INCHES FOR REDUCED PLANS 0 1 2 3

OGS LOG OF TEST BORINGS SHEET (ENGLISH) (REV. 5/25/07)

FILE => 540359zltb208.dgn

USERNAME => trlenard DATE PLOTTED => 29-JAN-2010 TIME PLOTTED => 14:31