| Dist | COUNTY | ROUTE | POST MILES TOTAL PROJECT | SHEET No. | TOTAL SHEETS |
|---|---|---|---|---|---|
| 07 | LA | 19, 22, 47, 91, 110, *etc.* | Var | 1 | 54 |

ACBRSTP-X037(xxx)E

STATE OF CALIFORNIA
# DEPARTMENT OF TRANSPORTATION

# PROJECT PLANS FOR CONSTRUCTION ON
# STATE HIGHWAY

## IN LOS ANGELES COUNTY
## AT VARIOUS LOCATIONS

TO BE SUPPLEMENTED BY STANDARD PLANS DATED MAY 2006

INDEX OF PLANS


| SHEET No. | DESCRIPTION |
|---|---|
| 1 | TITLE AND LOCATION MAP |
| 2 | LOCATIONS OF CONSTRUCTION |
| 3 | CONSTRUCTION DETAILS |
| 4-5 | CONSTRUCTION AREA SIGNS |
| 6 | TRAFFIC HANDLING PLAN |
| 7-13 | TRAFFIC HANDLING DETAILS |
| 14 | PAVEMENT DELINEATION DETAILS |
| 15-22 | PAVEMENT DELINEATION QUANTITIES |
| 23 | SIGN QUANTITIES |
| 24 | SUMMARY OF QUANTITIES |
| 25-36 | REVISED STANDARD PLANS |

STRUCTURE PLANS

| | |
|---|---|
| 37-54 | ROUTE 19, 22, 47, 91, 110, 405, 605, 710 BRIDGES |


THE STANDARD PLANS LIST APPLICABLE TO THIS CONTRACT IS INCLUDED IN THE NOTICE TO BIDDERS AND SPECIAL PROVISIONS BOOK.

NOTE:

THE TABLE OF LOCATIONS OF CONSTRUCTION IN SHOWN ON THE LOCATIONS OF CONSTRUCTION SHEET.

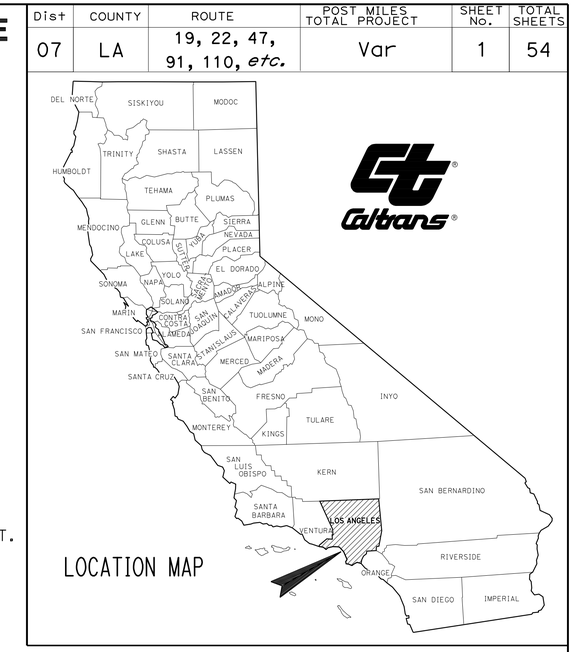


LOCATION MAP

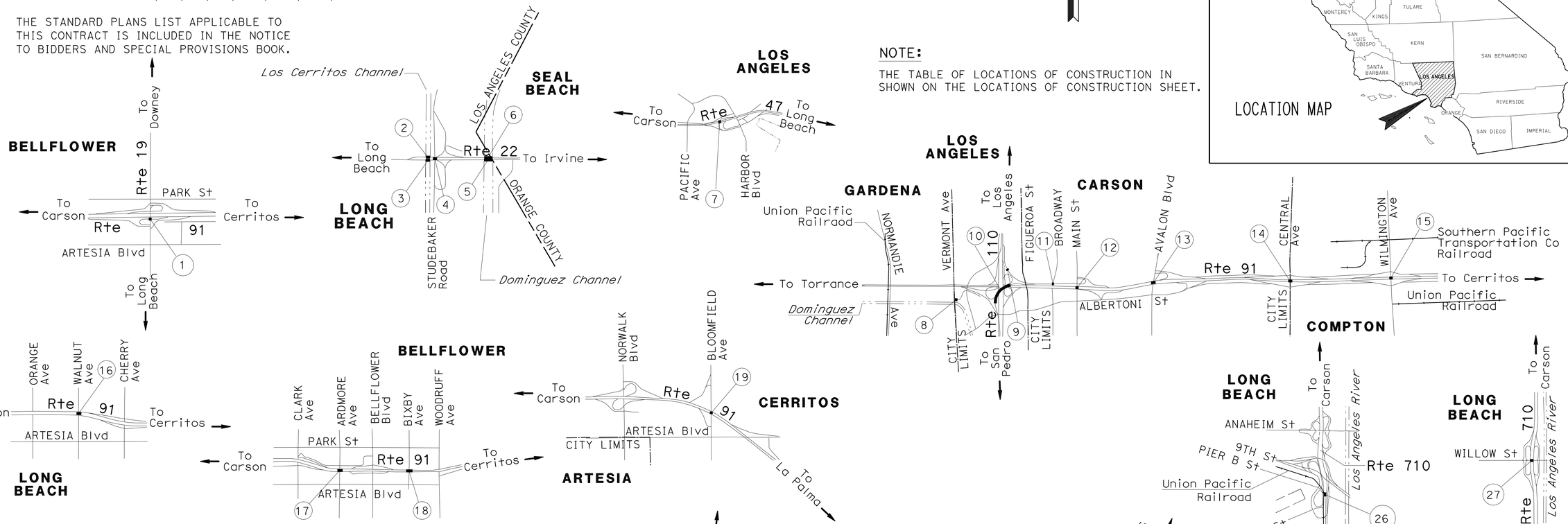


NO SCALE

THE CONTRACTOR SHALL POSSESS THE CLASS (OR CLASSES) OF LICENSE AS SPECIFIED IN THE "NOTICE TO BIDDERS."

PROJECT MANAGER CHRISTIAN SAM

DESIGN ENGINEER HAMID SAADATNEJADI

4-1-12
PROJECT ENGINEER REGISTERED CIVIL ENGINEER — DATE

May 7, 2012
PLANS APPROVAL DATE

REGISTERED PROFESSIONAL ENGINEER KEVIN KWAN No. 68219 Exp. 9-30-13 CIVIL STATE OF CALIFORNIA

*THE STATE OF CALIFORNIA OR ITS OFFICERS OR AGENTS SHALL NOT BE RESPONSIBLE FOR THE ACCURACY OR COMPLETENESS OF SCANNED COPIES OF THIS PLAN SHEET.*

| CONTRACT No. | 07-4Y7504 |
|---|---|
| PROJECT ID | 0700001896 |

LAST REVISION 04-07-12 DATE PLOTTED => 15-JUN-2012 TIME PLOTTED => 10:20

| Dist | COUNTY | ROUTE | POST MILES TOTAL PROJECT | SHEET No. | TOTAL SHEETS |
|---|---|---|---|---|---|
| 07 | LA | 19, 22, 47, 91, 110, etc. | Var | 2 | 54 |

REGISTERED CIVIL ENGINEER 4-1-12 DATE

5-7-12
PLANS APPROVAL DATE

REGISTERED PROFESSIONAL ENGINEER KEVIN KWAN No. 68219 Exp. 9-30-13 CIVIL STATE OF CALIFORNIA

*THE STATE OF CALIFORNIA OR ITS OFFICERS OR AGENTS SHALL NOT BE RESPONSIBLE FOR THE ACCURACY OR COMPLETENESS OF SCANNED COPIES OF THIS PLAN SHEET.*

# LOCATIONS OF CONSTRUCTION

| Loc (No.) | ROUTE | POST MILE | BRIDGE No. | DESCRIPTION |
|---|---|---|---|---|
| 1 | 19 | R6.03 | 53-1760F | S19-E91 CONNECTOR OC |
| 2 | 22 | 1.09 | 53-0215L | LOS CERRITOS CHANNEL |
| 3 | 22 | 1.09 | 53-0215R | LOS CERRITOS CHANNEL |
| 4 | 22 | 1.14 | 53-1427 | STUDEBAKER ROAD OC |
| 5 | 22 | 1.42 | 53-0302R | SAN GABRIEL RIVER |
| 6 | 22 | 1.42 | 53-0302L | SAN GABRIEL RIVER |
| 7 | 47 | R0.72 | 53-0807 | HARBOR BOULEVARD OFF-RAMP UC |
| 8 | 91 | 6.03 | 53-2760Y | DOMINGUEZ CHANNEL |
| 9 | 91 | R6.39 | 53-2666F | W91-N110 CONNECTOR OC |
| 10 | 91 | R6.40 | 53-2549H | W91-S110 CONNECTOR OC |
| 11 | 91 | R6.73 | 53-2663F | W91-N110 CONNECTOR (BROADWAY) |
| 12 | 91 | R6.90 | 53-2547 | MAIN STREET UC |
| 13 | 91 | R7.44 | 53-2458 | AVALON BOULEVARD UC |
| 14 | 91 | R8.43 | 53-2459 | CENTRAL AVENUE OC |
| 15 | 91 | R9.15 | 53-1865 | WILMINGTON AVENUE OC |
| 16 | 91 | R12.84 | 53-2127 | WALNUT AVENUE UC |
| 17 | 91 | R15.39 | 53-1757 | ARDMORE AVENUE UC |
| 18 | 91 | R15.87 | 53-1719 | BIXBY AVENUE UC |
| 19 | 91 | R19.17 | 53-1433 | BLOOMFIELD AVENUE OC |
| 20 | 110 | 2.5 | 53-0977 | UNION OIL OH |
| 21 | 110 | R5.11 | 53-0967 | WEST WATSON OH |
| 22 | 110 | 10.32 | 53-0957 | 168TH STREET UC |
| 23 | 405 | 10.54 | 53-1171 | CARSON STREET UC |
| 24 | 405 | R12.94 | 53-1045F | S405-N110/110 SEPARATION |
| 25 | 605 | R8.38 | 53-1653 | FIRESTONE BOULEVARD UC |
| 26 | 710 | M5.95 | 53-2934 | HARBOR SCENIC DRIVE OH |
| 27 | 710 | 7.89 | 53-0726 | WILLOW STREET OC |

REVISED BY | DATE REVISED

KEVIN KWAN | HAMID SAADATNEJADI

CALCULATED-DESIGNED BY | CHECKED BY

FUNCTIONAL SUPERVISOR: HAMID SAADATNEJADI

STATE OF CALIFORNIA - DEPARTMENT OF TRANSPORTATION
Caltrans MAINTENANCE ENGINEERING

LOCATIONS OF CONSTRUCTION

LC-1

LAST REVISION 05-07-12 | DATE PLOTTED => 15-JUN-2012 TIME PLOTTED => 10:20

| Dist | COUNTY | ROUTE | POST MILES TOTAL PROJECT | SHEET No. | TOTAL SHEETS |
|---|---|---|---|---|---|
| 07 | LA | 19, 22, 47, 91, 110, etc. | Var | 3 | 54 |

REGISTERED CIVIL ENGINEER 4-1-12 DATE

5-7-12
PLANS APPROVAL DATE

REGISTERED PROFESSIONAL ENGINEER KEVIN KWAN No. 68219 Exp. 9-30-13 CIVIL STATE OF CALIFORNIA

*THE STATE OF CALIFORNIA OR ITS OFFICERS OR AGENTS SHALL NOT BE RESPONSIBLE FOR THE ACCURACY OR COMPLETENESS OF SCANNED COPIES OF THIS PLAN SHEET.*

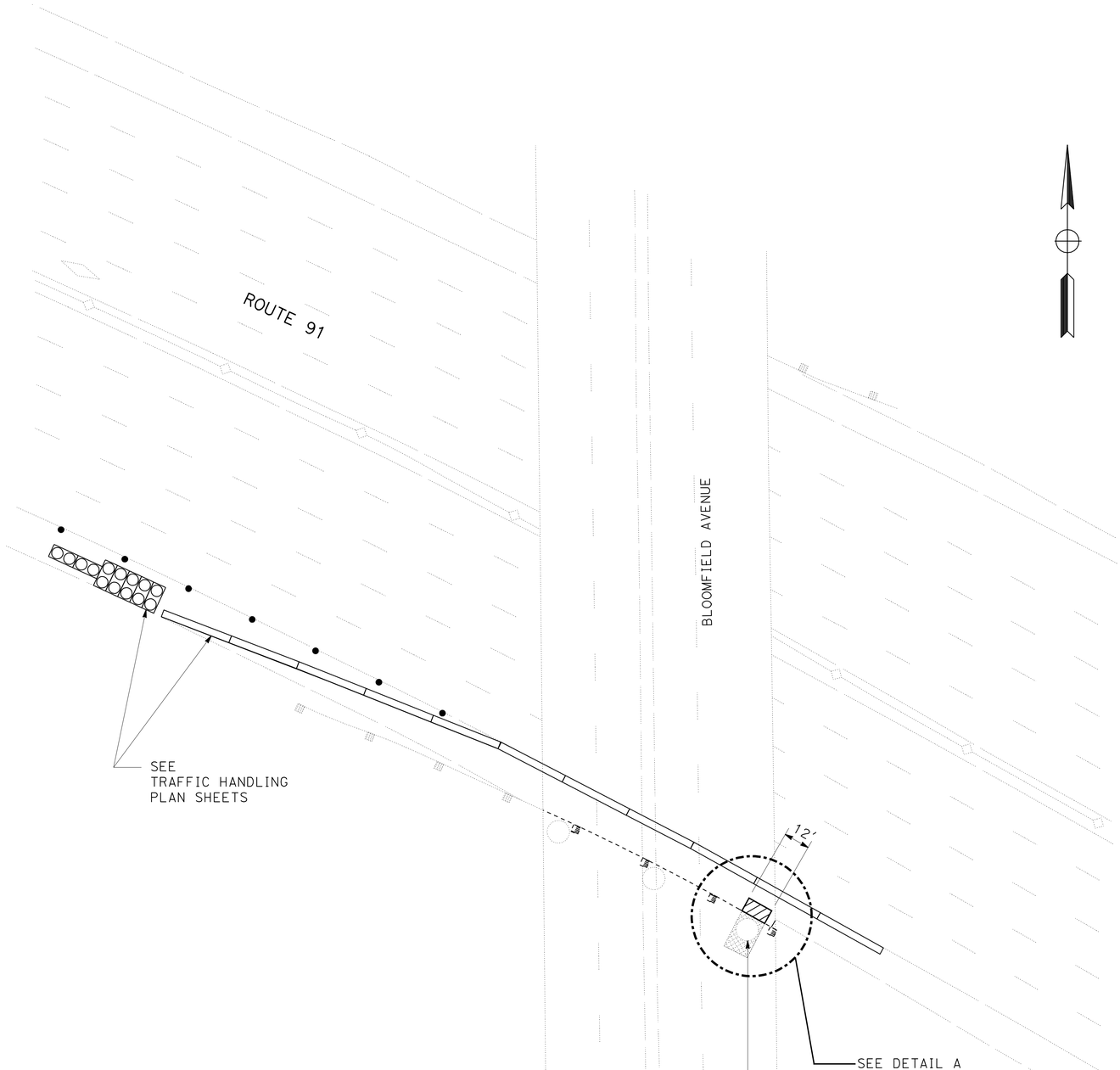


LEGEND:

ROADWAY EXCAVATION

STRUCTURE EXCAVATION AND BACKFILL
(SEE BRIDGE PLANS FOR DETAILS)

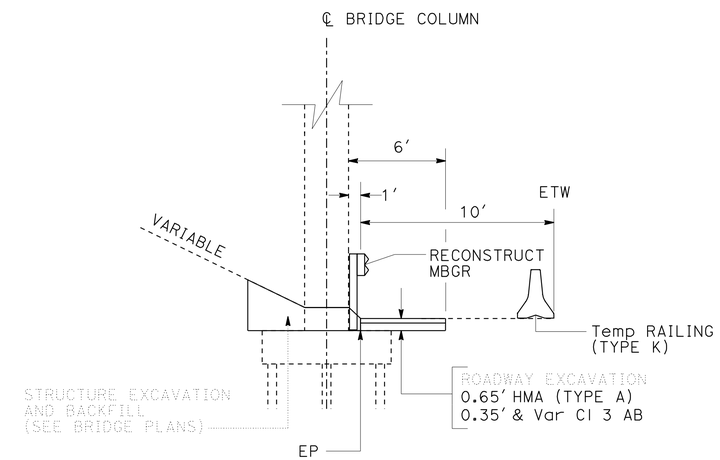


**DETAIL A**

# CONSTRUCTION DETAILS

NO SCALE

**C-1**

STATE OF CALIFORNIA - DEPARTMENT OF TRANSPORTATION
Caltrans MAINTENANCE ENGINEERING

FUNCTIONAL SUPERVISOR: HAMID SAADATNEJADI
CALCULATED-DESIGNED BY: KEVIN KWAN
CHECKED BY: HAMID SAADATNEJADI
REVISED BY
DATE REVISED

LAST REVISION 05-07-12
DATE PLOTTED => 15-JUN-2012
TIME PLOTTED => 10:20

| Dist | COUNTY | ROUTE | POST MILES TOTAL PROJECT | SHEET No. | TOTAL SHEETS |
|---|---|---|---|---|---|
| 07 | LA | 19, 22, 47, 91, 110, etc. | Var | 4 | 54 |

REGISTERED CIVIL ENGINEER 4-1-12 DATE

5-7-12
PLANS APPROVAL DATE

REGISTERED PROFESSIONAL ENGINEER KEVIN KWAN No. 68219 Exp. 9-30-13 CIVIL STATE OF CALIFORNIA

*THE STATE OF CALIFORNIA OR ITS OFFICERS OR AGENTS SHALL NOT BE RESPONSIBLE FOR THE ACCURACY OR COMPLETENESS OF SCANNED COPIES OF THIS PLAN SHEET.*

NOTES:

1. LOCATIONS OF CONSTRUCTION AREA SIGNS SHOWN ARE APPROXIMATE. EXACT LOCATIONS WILL BE DETERMINED BY THE ENGINEER.
2. "TRAFFIC FINES DOUBLED IN CONSTRUCTION ZONES" SIGNS SHALL BE PLACED APPROXIMATELY 500 FEET IN ADVANCE OF "ROAD WORK AHEAD" SIGNS OR AS DETERMINED BY THE ENGINEER.
3. SEE SHEET LC-1 FOR LOCATIONS OF CONSTRUCTION.
4. SEE SHEET TH-1 FOR LOCATION OF W21-5bR SIGN.

## CONSTRUCTION AREA SIGNS (STATIONARY MOUNTED)

| SIGN NUMBER | SIGN CODE | PANEL SIZE | SIGN MESSAGE | NUMBER OF POSTS AND SIZE | NUMBER OF SIGNS |
|---|---|---|---|---|---|
| A | W20-1 | 48" X 48" | ROAD WORK AHEAD | 1-6" x 6" | 37 |
| B | G20-2 | 48" X 24" | END ROAD WORK | 1-4" x 6" | 30 |
| C | C40 (CA) | 144" X 60" | TRAFFIC FINES DOUBLED IN CONSTRUCTION ZONES | 2-6" x 6" | 15 |
| D | W21-5bR | 48" X 48" | RIGHT SHOULDER CLOSED AHEAD | 1-6" x 6" | 1 |

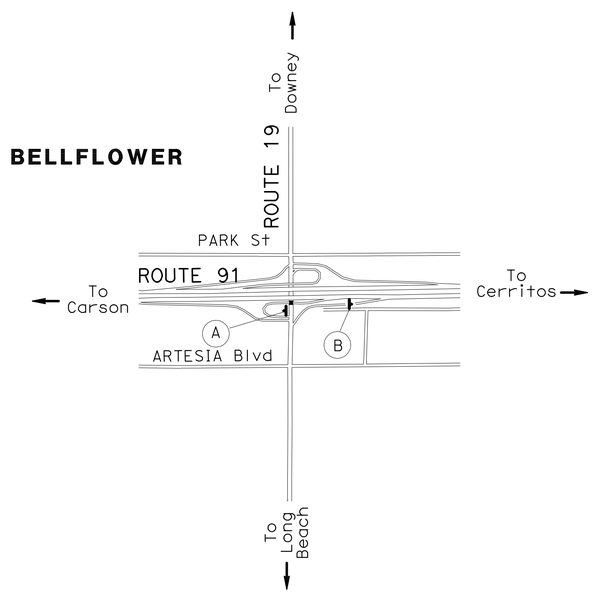


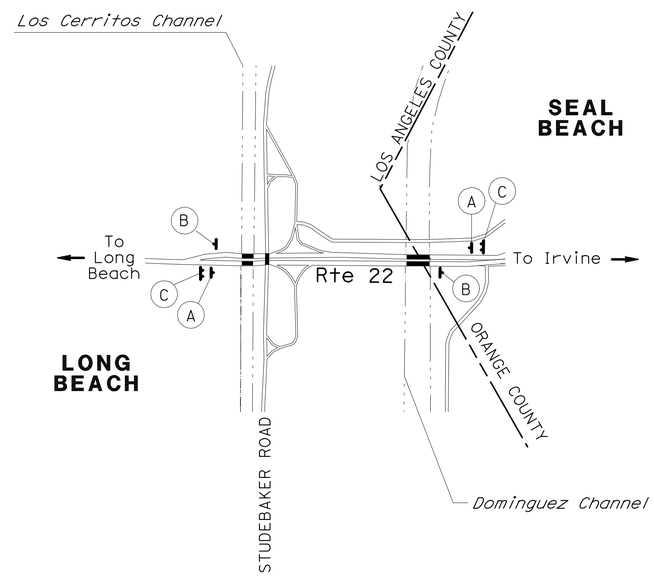


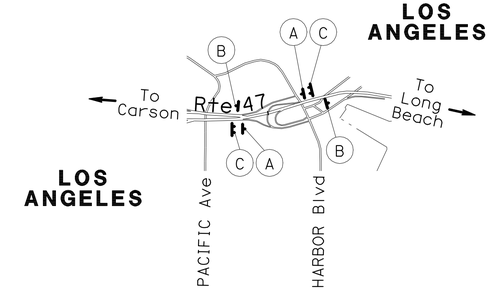


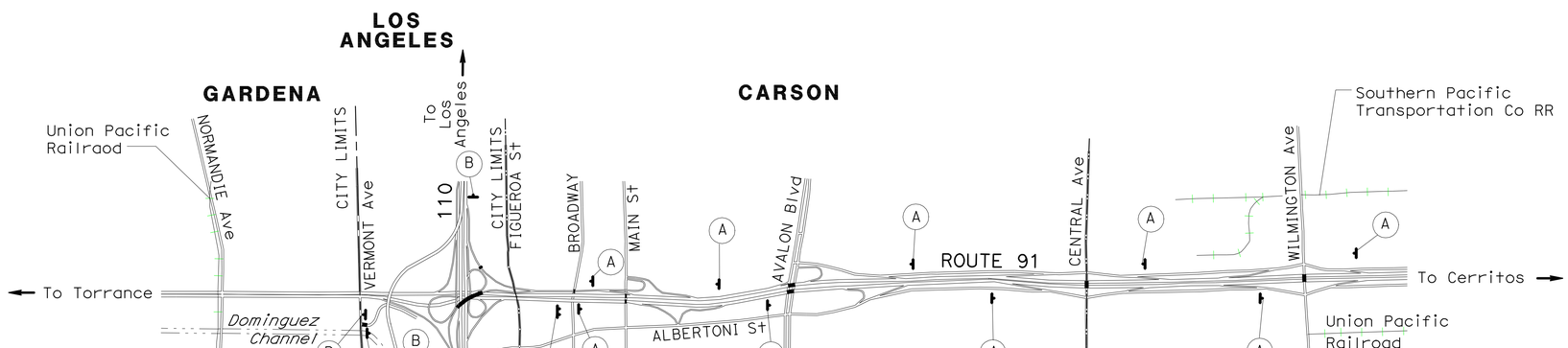


## CONSTRUCTION AREA SIGNS

NO SCALE

CS-1

*APPROVED FOR CONSTRUCTION AREA SIGN WORK ONLY*

STATE OF CALIFORNIA - DEPARTMENT OF TRANSPORTATION
Caltrans MAINTENANCE ENGINEERING

FUNCTIONAL SUPERVISOR: HAMID SAADATNEJADI
CALCULATED-DESIGNED BY: KEVIN KWAN
CHECKED BY: HAMID SAADATNEJADI
REVISED BY
DATE REVISED

LAST REVISION 05-07-12
DATE PLOTTED => 15-JUN-2012
TIME PLOTTED => 10:21

| Dist | COUNTY | ROUTE | POST MILES TOTAL PROJECT | SHEET No. | TOTAL SHEETS |
|---|---|---|---|---|---|
| 07 | LA | 19, 22, 47, 91, 110, etc. | Var | 5 | 54 |

REGISTERED CIVIL ENGINEER 4-1-12 DATE

5-7-12
PLANS APPROVAL DATE

REGISTERED PROFESSIONAL ENGINEER KEVIN KWAN No. 68219 Exp. 9-30-13 CIVIL STATE OF CALIFORNIA

*THE STATE OF CALIFORNIA OR ITS OFFICERS OR AGENTS SHALL NOT BE RESPONSIBLE FOR THE ACCURACY OR COMPLETENESS OF SCANNED COPIES OF THIS PLAN SHEET.*

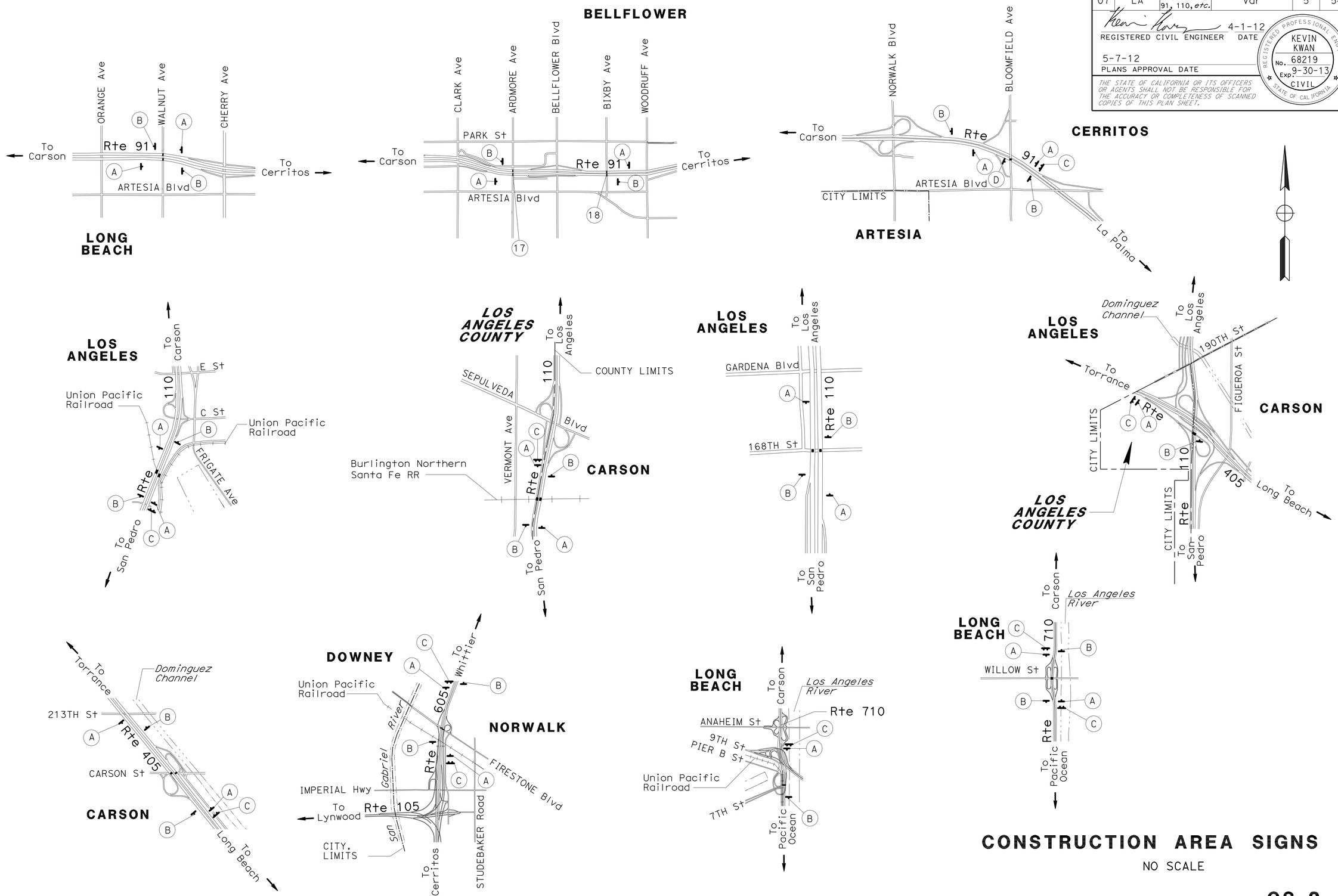


# CONSTRUCTION AREA SIGNS

NO SCALE

*APPROVED FOR CONSTRUCTION AREA SIGN WORK ONLY*

**CS-2**

| REVISED BY | DATE REVISED |
|---|---|
| | |

| CALCULATED-DESIGNED BY | CHECKED BY |
|---|---|
| KEVIN KWAN | HAMID SAADATNEJADI |

| FUNCTIONAL SUPERVISOR |
|---|
| HAMID SAADATNEJADI |

STATE OF CALIFORNIA - DEPARTMENT OF TRANSPORTATION
Caltrans MAINTENANCE ENGINEERING

LAST REVISION 05-07-12 | DATE PLOTTED => 15-JUN-2012 TIME PLOTTED => 10:21

| Dist | COUNTY | ROUTE | POST MILES TOTAL PROJECT | SHEET No. | TOTAL SHEETS |
|---|---|---|---|---|---|
| 07 | LA | 19, 22, 47, 91, 110, *etc.* | Var | 6 | 54 |

4-1-12
REGISTERED CIVIL ENGINEER DATE

5-7-12
PLANS APPROVAL DATE

REGISTERED PROFESSIONAL ENGINEER
KEVIN KWAN
No. 68219
Exp. 9-30-13
CIVIL
STATE OF CALIFORNIA

*THE STATE OF CALIFORNIA OR ITS OFFICERS OR AGENTS SHALL NOT BE RESPONSIBLE FOR THE ACCURACY OR COMPLETENESS OF SCANNED COPIES OF THIS PLAN SHEET.*

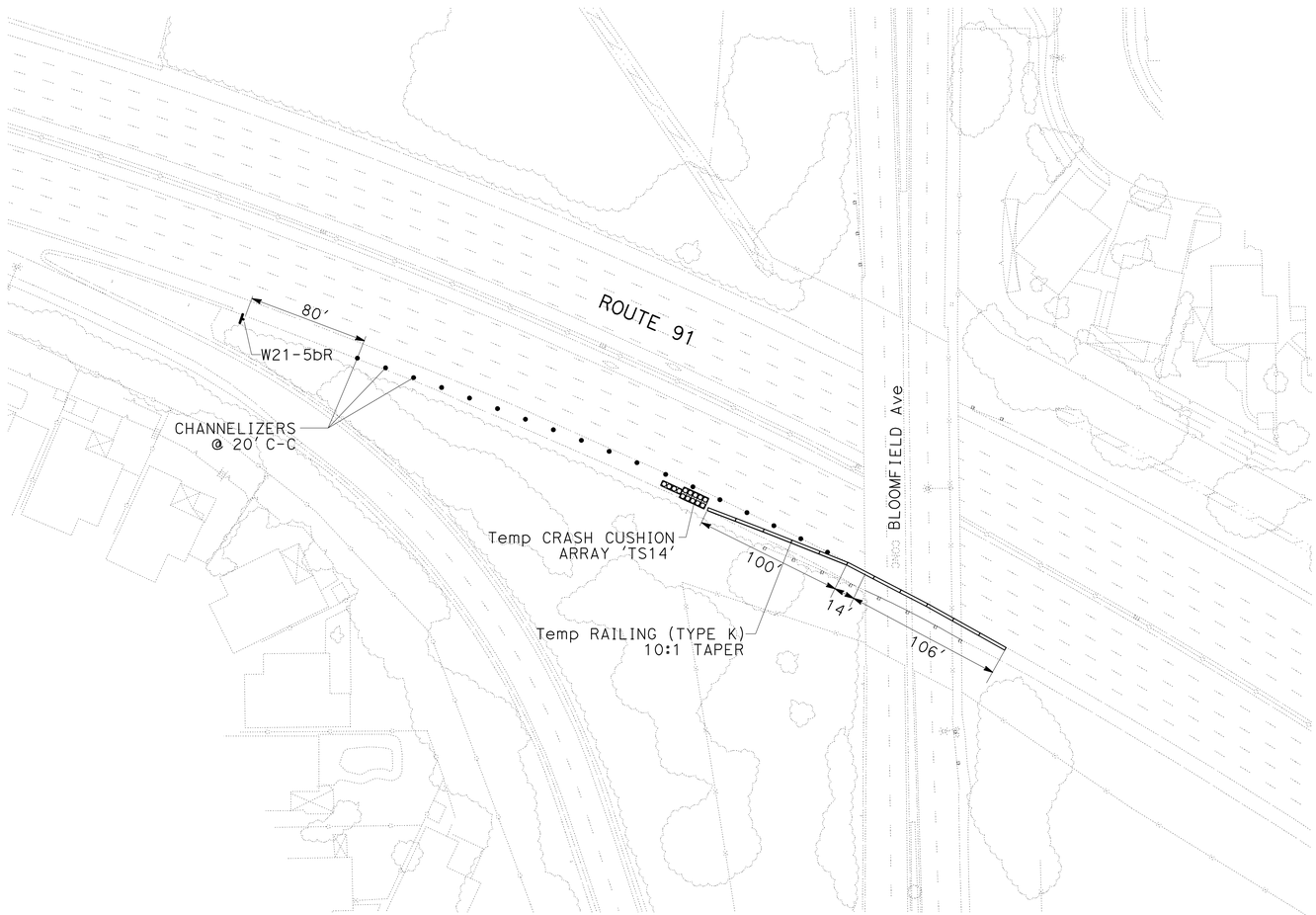


# TRAFFIC HANDLING PLAN

NO SCALE

**TH-1**

*APPROVED FOR TRAFFIC HANDLING WORK ONLY*

| REVISED BY | DATE REVISED |
|---|---|
| | |

| CALCULATED-DESIGNED BY | KEVIN KWAN |
|---|---|
| CHECKED BY | HAMID SAADATNEJADI |
| FUNCTIONAL SUPERVISOR | HAMID SAADATNEJADI |

STATE OF CALIFORNIA - DEPARTMENT OF TRANSPORTATION
Caltrans MAINTENANCE ENGINEERING

LAST REVISION 05-07-12 | DATE PLOTTED => 15-JUN-2012 | TIME PLOTTED => 10:21

| Dist | COUNTY | ROUTE | POST MILES TOTAL PROJECT | SHEET No. | TOTAL SHEETS |
|---|---|---|---|---|---|
| 07 | LA | 19, 22, 47, 91, 110, etc. | Var | 7 | 54 |

Denis Katayama 12-6-11
REGISTERED CIVIL ENGINEER DATE

5-7-12
PLANS APPROVAL DATE

REGISTERED PROFESSIONAL ENGINEER D.S. KATAYAMA No. C50648 Exp. 9-30-13 CIVIL STATE OF CALIFORNIA

*THE STATE OF CALIFORNIA OR ITS OFFICERS OR AGENTS SHALL NOT BE RESPONSIBLE FOR THE ACCURACY OR COMPLETENESS OF SCANNED COPIES OF THIS PLAN SHEET.*

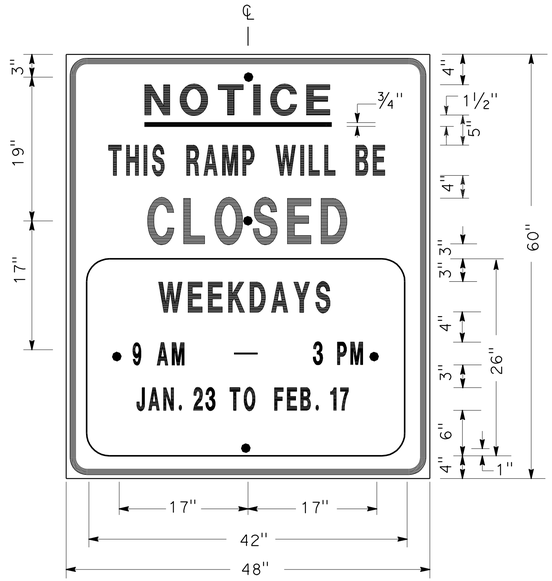


SIGN SP-1

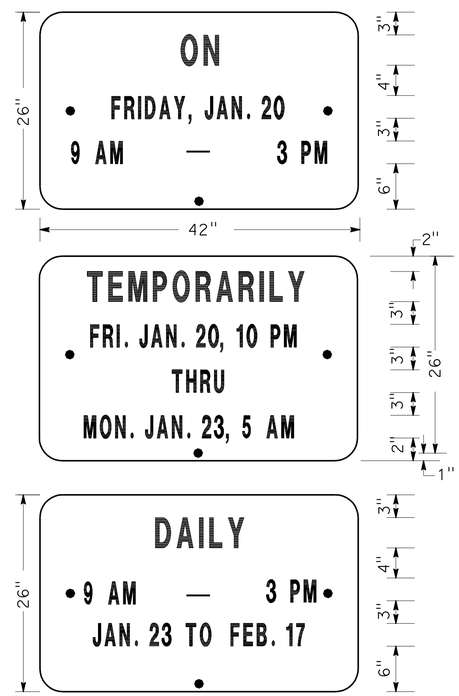


ALTERNATE OVERLAY PANELS (TYPICAL)

## SPECIAL ADVANCE NOTICE PUBLICITY SIGN

NOTES: (SIGN SP-1)

1. SIGNS SHALL HAVE ORANGE RETROREFLECTORIZED BACKGROUND WITH BLACK BORDER AND LETTERS.
2. BOLT HOLES SHALL BE 3/8" DIAMETER.
3. BASE MATERIAL SHALL BE ALUMINUM (MINIMUM 0.06").
4. SIGNS SHALL BE MOUNTED WITH BOTTOMS OF SIGNS A MINIMUM OF 6' ABOVE GROUND.

| SIZE | BORDER WIDTH | MARGIN WIDTH | LETTER SIZE | | | | | CORNER RADIUS |
|---|---|---|---|---|---|---|---|---|
| | | | LINE 1 | LINE 2* | LINE 3 | LINE 4 | LINE 5,6 & 7* | |
| 48"x60" | 1 1/4" | 3/4" | 4E | 4D | 6E | 4D | | 3" |
| 42"x26" | OVERLAY | | | | | | 3D | 1 1/2" |
| * CONDENSED SPACING IF NECESSARY | | | | | | | | |

SIGN SP-4

NOTES: (SIGN SP-4)

1. LETTERS - 6" SERIES C.
2. LETTERS AND BORDERS - BLACK ON RETROREFLECTORIZED WHITE BACKGROUND.
3. BASE MATERIAL SHALL BE ALUMINUM (MINIMUM 0.06").
4. SIGNS SHALL BE PLACED AT RAMP ENTRANCES IN ADDITION TO SIGNS POSTED IN ACCORDANCE WITH STANDARD PLAN T14.

## SPECIAL SIGN FOR ENTRANCE RAMP CLOSURES

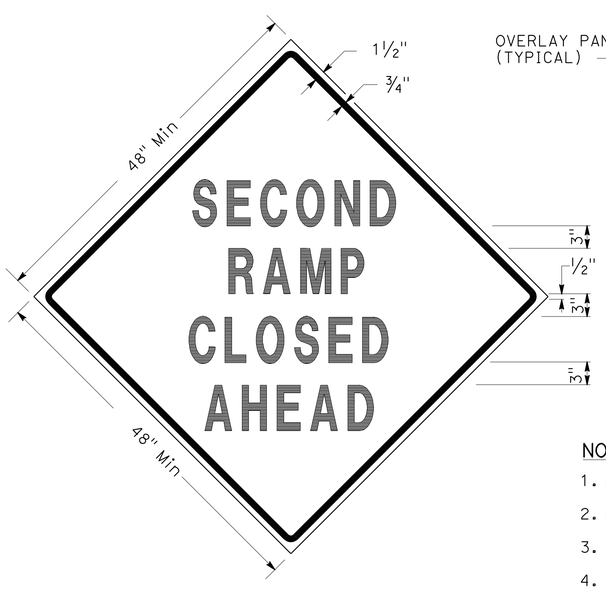


SIGN SP-3

SIGN SP-5

NOTES: (SIGNS SP-3 & SP-5)

1. LETTERS - 6" SERIES D.
2. LETTERS AND BORDERS - BLACK ON RETROREFLECTORIZED ORANGE BACKGROUND.
3. BASE MATERIAL SHALL BE ALUMINUM (MINIMUM 0.06").
4. SIGNS SHALL BE MOUNTED WITH BOTTOMS OF SIGNS A MINIMUM OF 6' ABOVE GROUND.

## SPECIAL SIGN FOR EXIT RAMP CLOSURES

# TRAFFIC HANDLING DETAILS
## TRAFFIC CONTROL SYSTEM FOR RAMP CLOSURES, DETOUR SIGNS AND MISCELLANEOUS DETAILS
## SHEET 1 OF 2

NO SCALE

**THD-1**

STATE OF CALIFORNIA - DEPARTMENT OF TRANSPORTATION
Caltrans® DTM

FUNCTIONAL SUPERVISOR: JOHN YANG
CALCULATED-DESIGNED BY: ALBERT K YU
CHECKED BY: JOCELYN C CHIANG
REVISED BY: JC
DATE REVISED: 7/10

LAST REVISION 05-07-12 | DATE PLOTTED => 15-JUN-2012 | TIME PLOTTED => 10:21

| Dist | COUNTY | ROUTE | POST MILES TOTAL PROJECT | SHEET No. | TOTAL SHEETS |
|---|---|---|---|---|---|
| 07 | LA | 19, 22, 47, 91, 110, etc. | Var | 8 | 54 |

Denis Katayama 12-6-11
REGISTERED CIVIL ENGINEER DATE

5-7-12
PLANS APPROVAL DATE

REGISTERED PROFESSIONAL ENGINEER D.S. KATAYAMA No. C50648 Exp. 9-30-13 CIVIL STATE OF CALIFORNIA

*THE STATE OF CALIFORNIA OR ITS OFFICERS OR AGENTS SHALL NOT BE RESPONSIBLE FOR THE ACCURACY OR COMPLETENESS OF SCANNED COPIES OF THIS PLAN SHEET.*

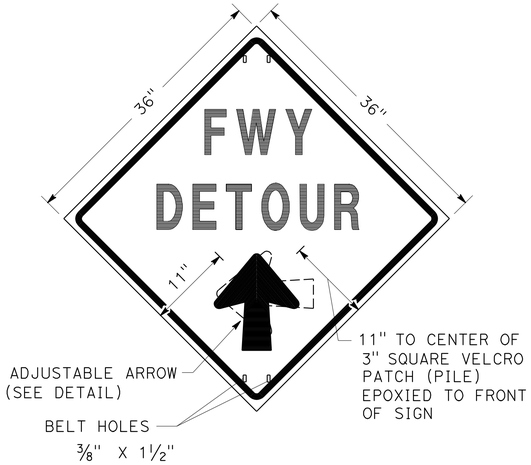


SIGN SP-2

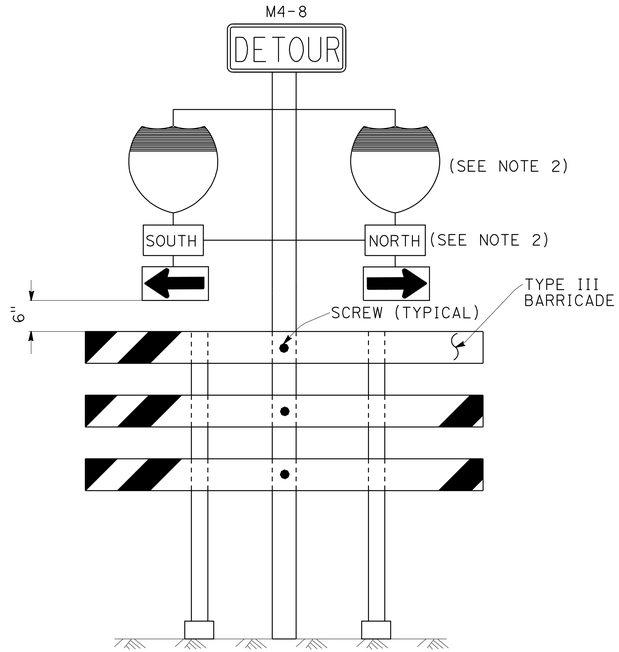


SIGN SP-6 (SEE NOTE 1)

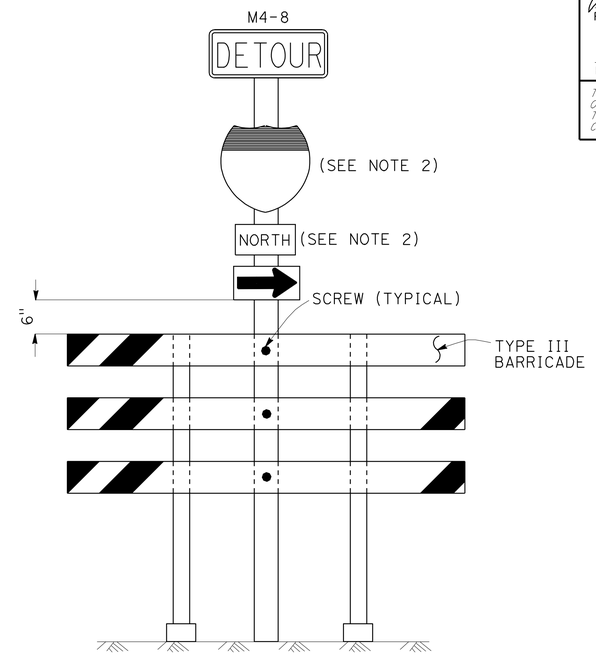


SIGN SP-7 (SEE NOTE 1)

NOTES: (SIGN SP-2)

1. LETTERS -6" SERIES E.
2. LETTERS, BORDER AND ARROW - BLACK ON RETROREFLECTORIZED ORANGE BACKGROUND.
3. BASE MATERIAL FOR SIGNS AND ARROWS SHALL BE ALUMINUM (MINIMUM 0.06").
4. BELTS (LUGGAGE STRAPS) SHALL BE 1" WIDE BY 48" LONG, MADE OF COTTON OR POLYPROPYLENE WEB MATERIAL.
5. SIGNS SHALL BE MOUNTED WITH BOTTOMS OF SIGNS A MINIMUM OF 6' ABOVE GROUND EXCEPT AS OTHERWISE SHOWN ON OTHER TRAFFIC HANDLING DETAILS PLANS.

ABBREVIATION

(CA) CALIFORNIA CODE

NOTES: (SIGNS SP-6 & SP-7)

1. IN LIEU OF PLACING SIGNS ON TYPE III BARRICADES, SIGNS, INCLUDING POSTS, MAY BE PLACED INTO THE GROUND OR FASTENED ONTO ELECTROLIERS.
2. USE APPROPRIATE ROUTE SHIELD [G26-2(CA), G27-2(CA), G28-2(CA)] AND CARDINAL DIRECTION [NORTH (M3-1), SOUTH (M3-3), EAST (M3-2), WEST (M3-4)]

## SPECIAL PORTABLE FREEWAY DETOUR SIGNS

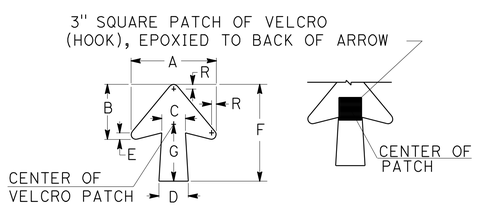


| DIMENSIONS | | | | | | | |
|---|---|---|---|---|---|---|---|
| A | B | C | D | E | F | G | R |
| 11 1/4" | 7 1/4" | 3 1/8" | 4" | 7/8" | 13" | 7 1/2" | 5/8" |

SPECIAL PORTABLE FREEWAY DETOUR SIGN

## ADJUSTABLE ARROW DETAIL

# TRAFFIC HANDLING DETAILS

## TRAFFIC CONTROL SYSTEM FOR RAMP CLOSURES, DETOUR SIGNS AND MISCELLANEOUS DETAILS

## SHEET 2 OF 2

NO SCALE

THD-2

STATE OF CALIFORNIA - DEPARTMENT OF TRANSPORTATION
Caltrans DTM

FUNCTIONAL SUPERVISOR: JOHN YANG
CALCULATED-DESIGNED BY: ALBERT K YU
CHECKED BY: JOCELYN C CHIANG
REVISED BY: JC
DATE REVISED: 7/10

LAST REVISION 05-07-12 | DATE PLOTTED => 15-JUN-2012 | TIME PLOTTED => 10:21

| Dist | COUNTY | ROUTE | POST MILES TOTAL PROJECT | SHEET No. | TOTAL SHEETS |
|---|---|---|---|---|---|
| 07 | LA | 19, 22, 47, 91, 110, *etc.* | Var | 9 | 54 |

Denis Katayama 12-6-11
REGISTERED CIVIL ENGINEER DATE

5-7-12
PLANS APPROVAL DATE

REGISTERED PROFESSIONAL ENGINEER D.S. KATAYAMA No. C50648 Exp. 9-30-13 CIVIL STATE OF CALIFORNIA

*THE STATE OF CALIFORNIA OR ITS OFFICERS OR AGENTS SHALL NOT BE RESPONSIBLE FOR THE ACCURACY OR COMPLETENESS OF SCANNED COPIES OF THIS PLAN SHEET.*

## NOTES:

1. LANE CLOSURES SHALL NOT BE PLACED ON CREST VERTICAL CURVES OR ON HORIZONTAL CURVES.
2. PCMS SHALL BE ACTIVATED PRIOR TO TRAFFIC CONTROL ACTIVITIES ON THE HOV LANE.
3. A MINIMUM SIGHT DISTANCE OF 1500′ SHALL BE PROVIDED IN ADVANCE OF PCMS.
4. VEHICLE-MOUNTED SIGN PANELS SHALL BE TYPE III OR IV RETROREFLECTORIZED SHEETING, BLACK ON WHITE OR BLACK ON ORANGE WITH 8" MINIMUM SERIES D LETTERS PER CALTRANS SIGN SPECIFICATIONS.
5. PLACE PCMS ON THE MEDIAN SHOULDER WHERE SUFFICIENT ROOM (SUCH AS CHP ENFORCEMENT AREAS) EXISTS.

## LEGEND

| | |
|---|---|
| V1, V2 | SHADOW VEHICLE |
| V3 | WORK/APPLICATION VEHICLE |
| | PORTABLE CHANGEABLE MESSAGE SIGN (PCMS) |
| | DIRECTION OF TRAVEL |
| | HOV LANE |

## ABBREVIATIONS

| | |
|---|---|
| FAS | FLASHING ARROW SIGN |
| IAV | IMPACT ATTENUATOR VEHICLE |
| CMS | CHANGEABLE MESSAGE SIGN |
| (CA) | CALIFORNIA CODE |
| PCMS | PORTABLE CHANGEABLE MESSAGE SIGN |
| HOV | HIGH OCCUPANCY VEHICLE |

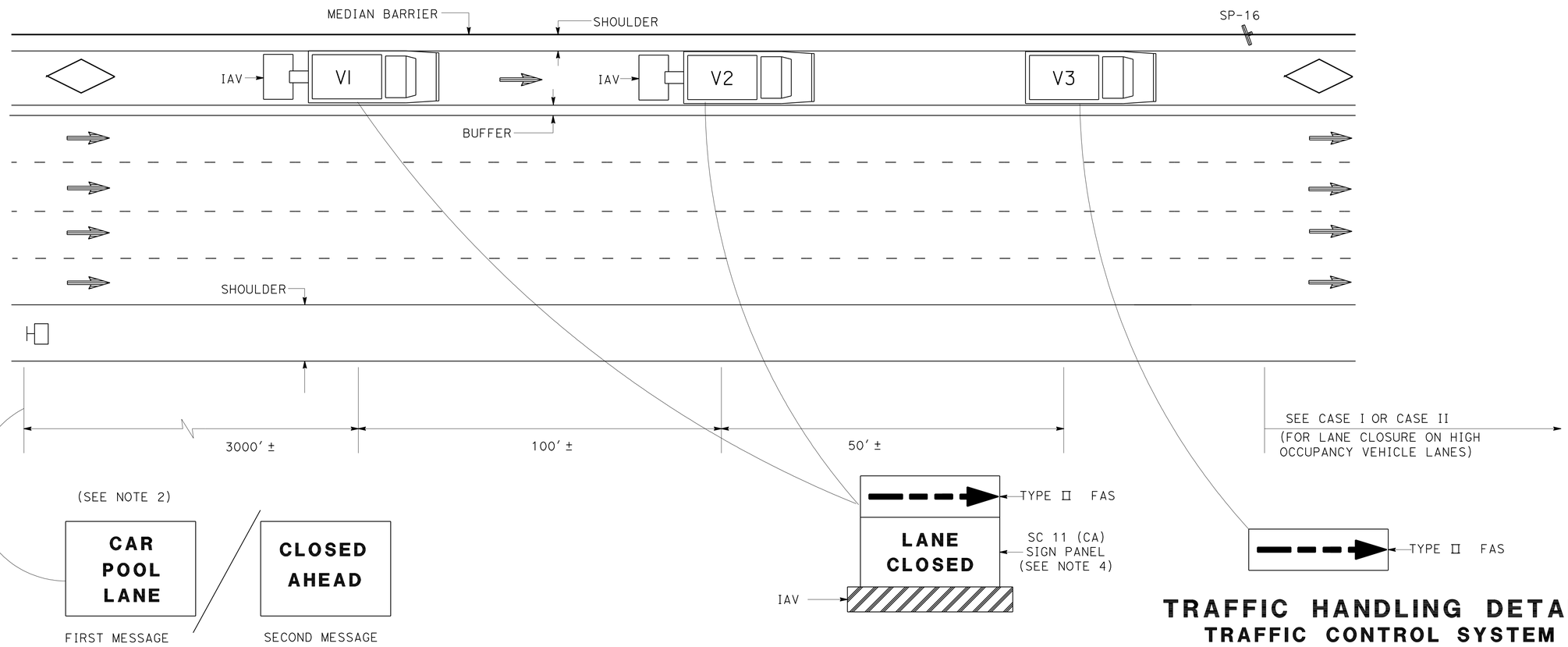


**PCMS/TRUCK MOUNTED CMS**
(SEE NOTE 5)

# TRAFFIC HANDLING DETAILS
## TRAFFIC CONTROL SYSTEM FOR HIGH OCCUPANCY VEHICLE LANES WITH MEDIAN SHOULDERS LESS THAN 8 FEET

NO SCALE

**THD-3**

STATE OF CALIFORNIA - DEPARTMENT OF TRANSPORTATION
Caltrans
DTM

FUNCTIONAL SUPERVISOR: XXXXXX
CALCULATED-DESIGNED BY: ALBERT K YU
CHECKED BY: JOCELYN C CHIANG
REVISED BY: JC
DATE REVISED: 7/10

LAST REVISION DATE PLOTTED => 15-JUN-2012
TIME PLOTTED => 10:21
05-07-12

| Dist | COUNTY | ROUTE | POST MILES TOTAL PROJECT | SHEET No. | TOTAL SHEETS |
|---|---|---|---|---|---|
| 07 | LA | 19, 22, 47, 91, 110, *etc.* | Var | 10 | 54 |

Denis Katayama 12-6-11
REGISTERED CIVIL ENGINEER DATE

5-7-12
PLANS APPROVAL DATE

REGISTERED PROFESSIONAL ENGINEER D.S. KATAYAMA No. C50648 Exp. 9-30-13 CIVIL STATE OF CALIFORNIA

*THE STATE OF CALIFORNIA OR ITS OFFICERS OR AGENTS SHALL NOT BE RESPONSIBLE FOR THE ACCURACY OR COMPLETENESS OF SCANNED COPIES OF THIS PLAN SHEET.*

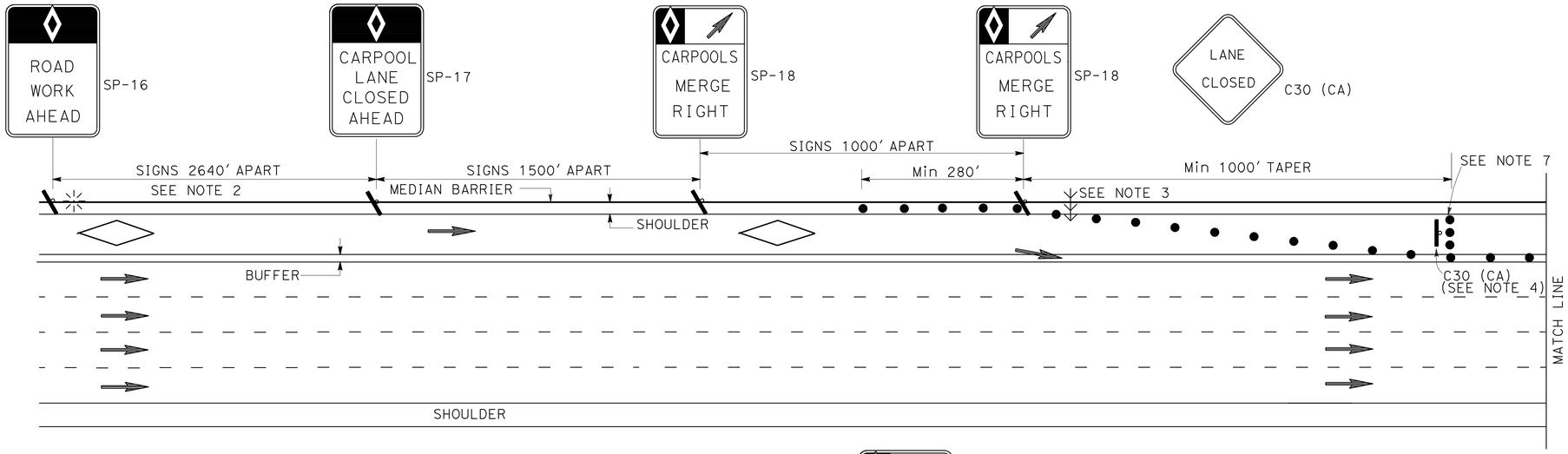


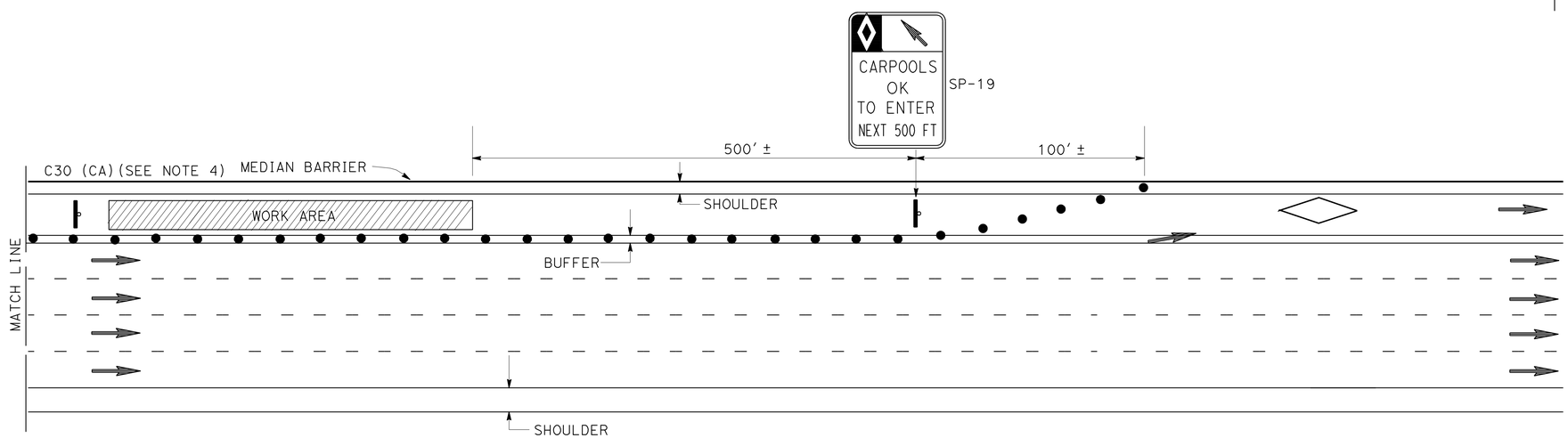


## ABBREVIATIONS

(CA) CALIFORNIA CODE

HOV HIGH OCCUPANCY VEHICLE

## NOTES: FOR CASE I AND CASE II

1. AT LEAST ONE PERSON SHALL BE ASSIGNED TO FULL TIME MAINTENANCE OF TRAFFIC CONTROL DEVICES ON NIGHT LANE CLOSURES OR DAY-TIME CLOSURES EXCEEDING 1 MILE LENGTH, INCLUDING TAPERS.
2. ADVANCE WARNING SIGN INSTALLATIONS SHALL BE EQUIPPED WITH FLAGS FOR DAYTIME CLOSURES. TYPE B HIGH INTENSITY FLASHING WARNING LIGHTS SHALL BE USED ON SP-16 SIGNS DURING NIGHT LANE CLOSURES. FLAGS AND WARNING LIGHTS SHALL BE ATTACHED TO SIGNS AS APPROVED BY THE ENGINEER.
3. THE FLASHING ARROW SIGN SHALL BE TYPE I.
4. PLACE C30 (CA) SIGNS EVERY 2000' THROUGHOUT THE LENGTH OF LANE CLOSURE.
5. A MINIMUM 1500' OF SIGHT DISTANCE SHALL BE PROVIDED WHERE POSSIBLE FOR VEHICLES APPROACHING THE FLASHING ARROW SIGN. LANE CLOSURES SHALL NOT BE PLACED ON CREST VERTICAL CURVES OR ON HORIZONTAL CURVES.
6. PORTABLE DELINEATORS PLACED AT ONE-HALF THE SPACING INDICATED FOR TRAFFIC CONES MAY BE USED INSTEAD OF CONES FOR DAYTIME CLOSURES.
7. A MINIMUM OF 3 CONES SHALL BE PLACED TRANSVERSELY ACROSS CLOSED LANES WHERE TAPERS END AND EVERY 2000'. TWO TYPE II BARRICADES MAY BE USED INSTEAD OF 3 CONES. THE ALIGNMENT OF CONES OR BARRICADES MAY BE SHIFTED FROM THE TRANSVERSE ALIGNMENT TO PROVIDE ACCESS TO WORK.
8. IF AN INGRESS/EGRESS AREA IS WITHIN 5250' UPSTREAM OR DOWNSTREAM OF THE WORK AREA, LANE CLOSURES SHALL BE EXTENDED TO THAT AREA AS SHOWN IN CASE II.
9. SIGNS SP-16, 17, 18, AND 19 MAY BE OVERLAID ON EXISTING CARPOOL SIGNS IN MEDIANS AS APPROVED BY THE ENGINEER.
10. SIGNS SP-16, 17, 18, AND C30 (CA) SHALL BE BLACK ON ORANGE BACKGROUND. SIGN SP-19 SHALL BE BLACK ON WHITE BACKGROUND. DIAMONDS ON SIGNS SHALL BE WHITE.
11. FOR CLOSURE OF LANE(S) ADJACENT TO HOV LANES, SEE CASE II.
12. THE MAXIMUM SPACING BETWEEN CONES SHALL BE APPROXIMATELY 50' IN TAPERS AND 100' ON TANGENTS.

## LEGEND

- CONE
- FLASHING BEACON
- HOV LANE
- FLASHING ARROW SIGN
- PORTABLE SIGN
- DIRECTION OF TRAVEL

## SIGN PANEL

SIZE (MIN)

SP-16 36" X 54"
SP-17 36" X 54"
SP-18 36" X 48"
SP-19 36" X 60"
C30 (CA) 30" X 30"
G20-2 48" X 24"

# TRAFFIC HANDLING DETAILS
## TRAFFIC CONTROL SYSTEM FOR HIGH OCCUPANCY VEHICLE LANES AT NON-INGRESS/EGRESS AREAS
## CASE I
NO SCALE

**THD-4**

| FUNCTIONAL SUPERVISOR | CALCULATED-DESIGNED BY | CHECKED BY | REVISED BY | DATE REVISED |
|---|---|---|---|---|
| XXXXXX | ALBERT K YU | JOCELYN C CHIANG | JC | 7/10 |

STATE OF CALIFORNIA - DEPARTMENT OF TRANSPORTATION
Caltrans DTM

LAST REVISION 05-07-12 | DATE PLOTTED => 15-JUN-2012 | TIME PLOTTED => 10:21

| Dist | COUNTY | ROUTE | POST MILES TOTAL PROJECT | SHEET No. | TOTAL SHEETS |
|---|---|---|---|---|---|
| 07 | LA | 19, 22, 47, 91, 110, etc. | Var | 11 | 54 |

Denis Katayama 12-6-11
REGISTERED CIVIL ENGINEER DATE

5-7-12
PLANS APPROVAL DATE

REGISTERED PROFESSIONAL ENGINEER D.S. KATAYAMA No. C50648 Exp. 9-30-13 CIVIL STATE OF CALIFORNIA

*THE STATE OF CALIFORNIA OR ITS OFFICERS OR AGENTS SHALL NOT BE RESPONSIBLE FOR THE ACCURACY OR COMPLETENESS OF SCANNED COPIES OF THIS PLAN SHEET.*

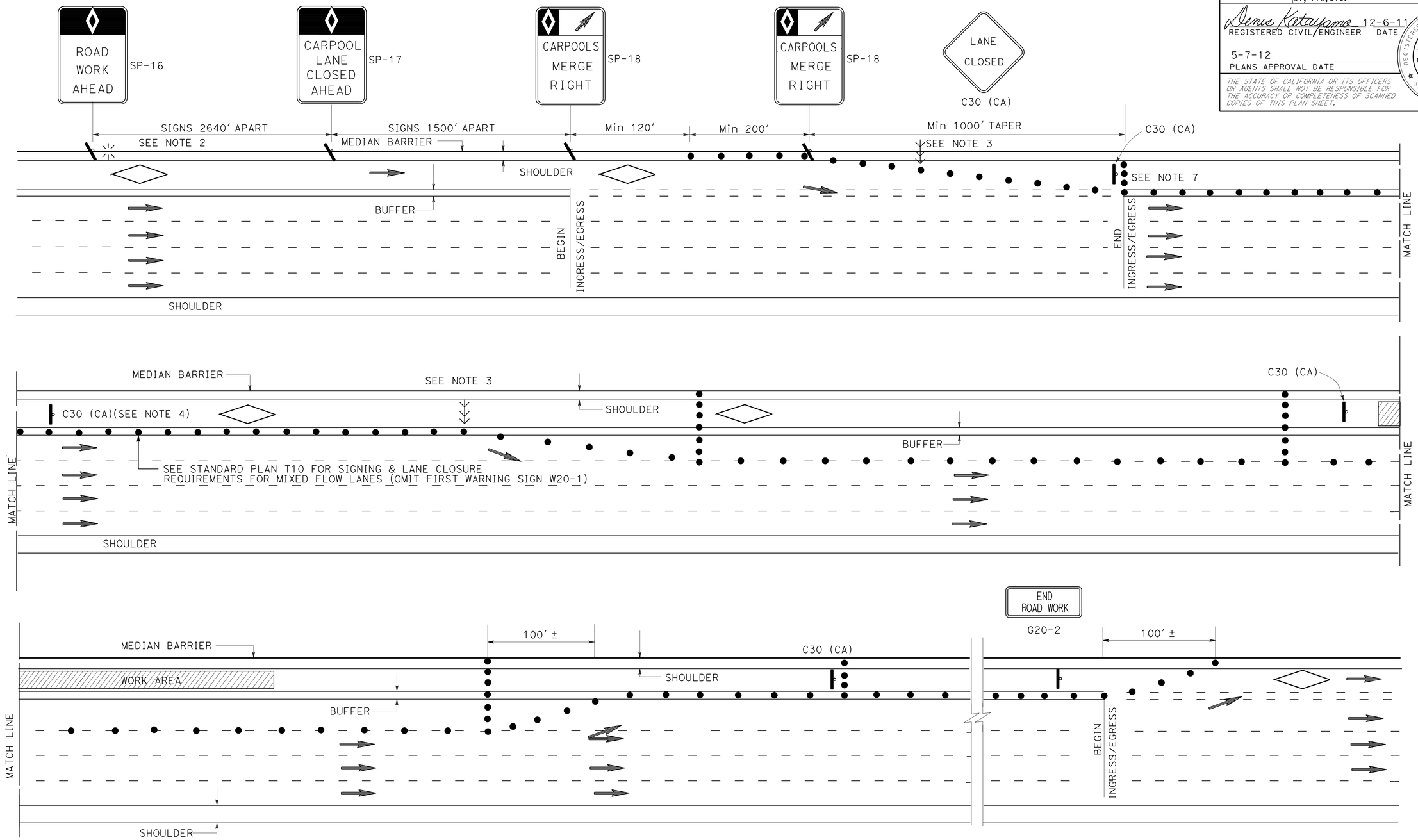


NOTES:

1. SEE CASE I FOR NOTES, LEGENDS AND ABBREVIATIONS FOR THIS SHEET.
2. CLOSURES OF ONE MIXED FLOW TRAFFIC LANE ADJACENT TO HOV LANE SHOWN. MULTIPLE MIXED FLOW LANE CLOSURES ARE SIMILAR.

# TRAFFIC HANDLING DETAILS
## TRAFFIC CONTROL SYSTEM FOR HIGH OCCUPANCY VEHICLE LANES AND ADJACENT FREEWAY LANES BETWEEN INGRESS/EGRESS AREAS
## CASE II

NO SCALE

THD-5

| REVISED BY | DATE REVISED |
|---|---|
| JC | 7/10 |

ALBERT K YU
JOCELYN C CHIANG

CALCULATED-DESIGNED BY
CHECKED BY

FUNCTIONAL SUPERVISOR
XXXXXX

STATE OF CALIFORNIA - DEPARTMENT OF TRANSPORTATION
DTM
Caltrans

LAST REVISION 05-07-12 | DATE PLOTTED => 15-JUN-2012 | TIME PLOTTED => 10:21

| Dist | COUNTY | ROUTE | POST MILES TOTAL PROJECT | SHEET No. | TOTAL SHEETS |
|---|---|---|---|---|---|
| 07 | LA | 19, 22, 47, 91, 110, etc. | Var | 12 | 54 |

Denis Katayama 12-6-11
REGISTERED CIVIL ENGINEER DATE

5-7-12
PLANS APPROVAL DATE

REGISTERED PROFESSIONAL ENGINEER D.S. KATAYAMA No. C50648 Exp. 9-30-13 CIVIL STATE OF CALIFORNIA

THE STATE OF CALIFORNIA OR ITS OFFICERS OR AGENTS SHALL NOT BE RESPONSIBLE FOR THE ACCURACY OR COMPLETENESS OF SCANNED COPIES OF THIS PLAN SHEET.

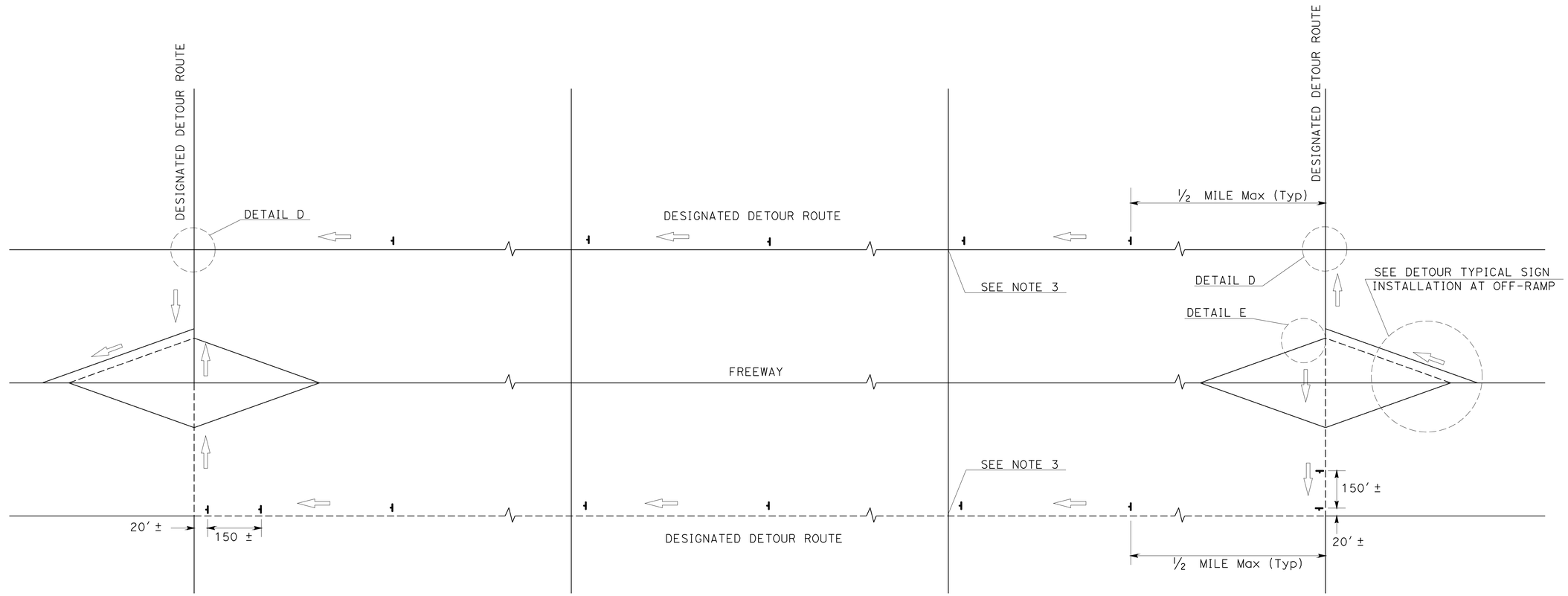


## TYPICAL DETOUR SIGN INSTALLATION ALONG DESIGNATED DETOUR ROUTE

LEGEND

- TEMPORARY SIGN (SP-2)
- AND/OR DESIGNATED DETOUR ROUTE
- DIRECTION OF TRAVEL

NOTES:

1. SP-2 SIGNS SHALL NOT BE INSTALLED ON BARRICADES EXCEPT AS OTHERWISE SHOWN.
2. SIGN LOCATIONS ARE APPROXIMATE. EXACT LOCATIONS WILL BE DETERMINED BY THE ENGINEER.
3. SP-2 SIGNS SHALL BE POSTED AT SIGNALIZED INTERSECTIONS ALONG THE DESIGNATED DETOUR ROUTE OR ½ MILE MAXIMUM APART.

# TRAFFIC HANDLING DETAILS

## TRAFFIC CONTROL SYSTEM FOR DETOUR SIGN INSTALLATION ALONG DESIGNATED DETOUR ROUTE

SHEET 1 OF 2

NO SCALE

THD-6

STATE OF CALIFORNIA - DEPARTMENT OF TRANSPORTATION
Caltrans
DTM

FUNCTIONAL SUPERVISOR: JOHN YANG
CALCULATED-DESIGNED BY: ALBERT K YU
CHECKED BY: JOCELYN C CHIANG
REVISED BY: JC
DATE REVISED: 7/10

LAST REVISION 05-07-12 | DATE PLOTTED => 15-JUN-2012 | TIME PLOTTED => 10:22

| Dist | COUNTY | ROUTE | POST MILES TOTAL PROJECT | SHEET No. | TOTAL SHEETS |
|---|---|---|---|---|---|
| 07 | LA | 19, 22, 47, 91, 110, *etc.* | Var | 13 | 54 |

Denis Katayama 12-6-11
REGISTERED CIVIL ENGINEER DATE

5-7-12
PLANS APPROVAL DATE

REGISTERED PROFESSIONAL ENGINEER D.S. KATAYAMA No. C50648 Exp. 9-30-13 CIVIL STATE OF CALIFORNIA

*THE STATE OF CALIFORNIA OR ITS OFFICERS OR AGENTS SHALL NOT BE RESPONSIBLE FOR THE ACCURACY OR COMPLETENESS OF SCANNED COPIES OF THIS PLAN SHEET.*

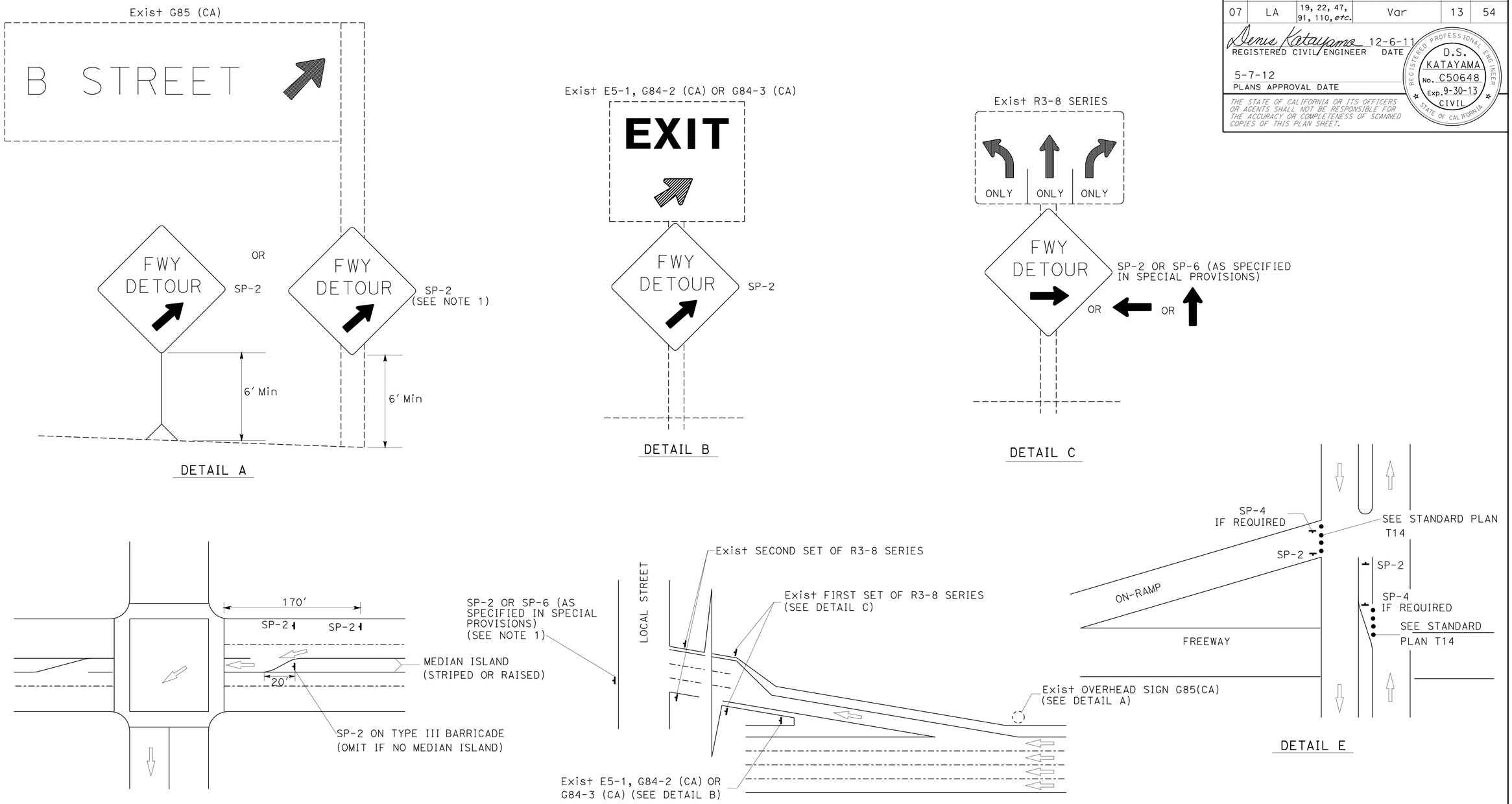


## TYPICAL DETOUR SIGN INSTALLATION AT OFF-RAMP

NOTES:

1. TEMPORARY SIGNS MAY BE STRAPPED ON EXISTING ELECTROLIER, SIGNAL POSTS, OR SIGN POSTS.
2. OMIT DETAIL A AND DETAIL B FOR FULL FREEWAY CLOSURES.
3. SEE TRAFFIC HANDLING DETAILS PLAN-TRAFFIC CONTROL SYSTEM FOR RAMP CLOSURES, DETOUR SIGNS AND MISCELLANEOUS DETAILS SHEET 2 OF 2 FOR SP-6.

ABBREVIATIONS

(CA) CALIFORNIA CODE

LEGENDS

- TRAFFIC CONE
- TEMPORARY SIGN
- DIRECTION OF TRAVEL
- EXISTING OVERHEAD SIGN

# TRAFFIC HANDLING DETAILS
## TRAFFIC CONTROL SYSTEM FOR DETOUR SIGN INSTALLATION ALONG DESIGNATED DETOUR ROUTE
## SHEET 2 OF 2
NO SCALE

THD-7

STATE OF CALIFORNIA - DEPARTMENT OF TRANSPORTATION
DTM
Caltrans®

FUNCTIONAL SUPERVISOR: JOHN YANG
CALCULATED-DESIGNED BY: ALBERT K YU
CHECKED BY: JOCELYN C CHIANG
REVISED BY: JC
DATE REVISED: 8/10

LAST REVISION 05-07-12
DATE PLOTTED => 15-JUN-2012
TIME PLOTTED => 10:22

| Dist | COUNTY | ROUTE | POST MILES TOTAL PROJECT | SHEET No. | TOTAL SHEETS |
|---|---|---|---|---|---|
| 07 | LA | 19, 22, 47, 91, 110, etc. | Var | 14 | 54 |

REGISTERED CIVIL ENGINEER 4-1-12 DATE

5-7-12
PLANS APPROVAL DATE

REGISTERED PROFESSIONAL ENGINEER KEVIN KWAN No. 68219 Exp. 9-30-13 CIVIL STATE OF CALIFORNIA

*THE STATE OF CALIFORNIA OR ITS OFFICERS OR AGENTS SHALL NOT BE RESPONSIBLE FOR THE ACCURACY OR COMPLETENESS OF SCANNED COPIES OF THIS PLAN SHEET.*

NOTE:

1. FOR DETAIL 13/14 (MODIFIED), PLACE 4" WIDE THERMOPLASTIC TRAFFIC STRIPE ON TOP OF TYPE A NON-REFLECTIVE MARKERS.

LEGEND:

- TYPE C RED-CLEAR RETROREFLECTIVE MARKER OR TYPE G ONE-WAY CLEAR RETROREFLECTIVE MARKER
- TYPE H ONE-WAY YELLOW RETROREFLECTIVE MARKER
- WHITE STRIPE (THERMOPLASTIC)
- 3" BLACK CONTRAST STRIPE (PAINT)
- 4" YELLOW STRIPE (THERMOPLASTIC)
- 2-TYPE G ONE-WAY CLEAR RETROREFLECTIVE MARKERS
- DIRECTION OF TRAVEL

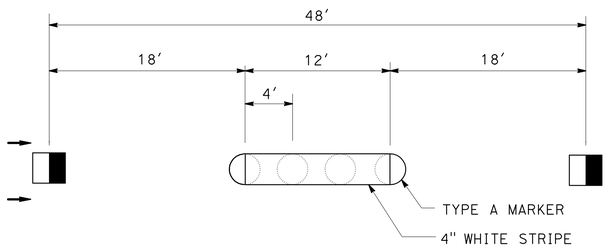


## DETAIL 13/14 (MODIFIED)

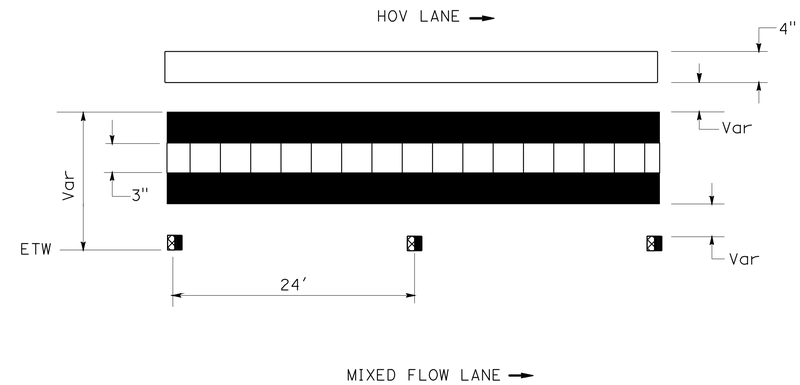


## HOV STRIPING DETAIL

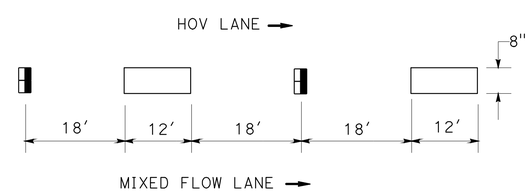


## INGRESS/EGRESS STRIPING DETAIL

# PAVEMENT DELINEATION DETAILS

NO SCALE

PDD-1

STATE OF CALIFORNIA - DEPARTMENT OF TRANSPORTATION
Caltrans MAINTENANCE ENGINEERING

FUNCTIONAL SUPERVISOR: HAMID SAADATNEJADI
CALCULATED-DESIGNED BY: KEVIN KWAN
CHECKED BY: HAMID SAADATNEJADI
REVISED BY / DATE REVISED

LAST REVISION 05-07-12 | DATE PLOTTED => 15-JUN-2012 | TIME PLOTTED => 10:22

| Dist | COUNTY | ROUTE | POST MILES TOTAL PROJECT | SHEET No. | TOTAL SHEETS |
|---|---|---|---|---|---|
| 07 | LA | 19, 22, 47, 91, 110, etc. | Var | 15 | 54 |

REGISTERED CIVIL ENGINEER 4-1-12 DATE

5-7-12
PLANS APPROVAL DATE

REGISTERED PROFESSIONAL ENGINEER KEVIN KWAN No. 68219 Exp. 9-30-13 CIVIL STATE OF CALIFORNIA

*THE STATE OF CALIFORNIA OR ITS OFFICERS OR AGENTS SHALL NOT BE RESPONSIBLE FOR THE ACCURACY OR COMPLETENESS OF SCANNED COPIES OF THIS PLAN SHEET.*

NOTE:

1. SEE SHEET LC-1 FOR LOCATIONS OF CONSTRUCTION.

## PAVEMENT DELINEATION QUANTITIES

| LOCATION (No.) | POST MILE | DESCRIPTION | REMOVE YELLOW THERMOPLASTIC TRAFFIC STRIPE (HAZARDOUS WASTE) | | | | | | | REMOVE THERMOPLASTIC TRAFFIC STRIPE | | | | | | | | | | | | REMOVE PAINTED TRAFFIC STRIPE |
|---|---|---|---|---|---|---|---|---|---|---|---|---|---|---|---|---|---|---|---|---|---|---|
| | | | Det 21 | Det 22 | Det 25 | Det 25A | Det 28 | Det 29 | | Det 8 | Det 9 | Det 13/14 (Mod) | Det 27B | Det 36 | Det 36A | Det 38 | Det 38A | Det 38B | Det 37 | | | |
| | | | 4" (DOUBLE YELLOW) | 4" (DOUBLE YELLOW) | 4" (YELLOW) | 4" (YELLOW) | 4" (DOUBLE DOUBLE YELLOW) | 4" (DOUBLE DOUBLE YELLOW) | 4" (DOUBLE YELLOW) | 4" (BROKEN 17-7) (WHITE) | 4" (BROKEN 17-7) (WHITE) | 4" (BROKEN 36-12) (WHITE) | 4" (WHITE) | 8" (WHITE) | 8" (WHITE) | 8" (WHITE) | 8" (WHITE) | 8" (WHITE) | 8" (BROKEN 12-3) (WHITE) | 4" (WHITE) | 8" (BROKEN 36-12) (WHITE) | 3" PAINTED BLACK TRAFFIC STRIPE |
| | | | LF | LF | LF | LF | LF | LF | LF | LF | LF | LF | LF | LF | LF | LF | LF | LF | LF | LF | LF | LF |
| 1 | R6.03 | S19-E91 CONNECTOR OC | | | 178 | | | | | | | | 178 | | | | | | | | | |
| 2 | 1.09 | LOS CERRITOS CHANNEL | | | 188 | | | | | | | 94 | 188 | | | | | | | | | |
| 3 | 1.09 | LOS CERRITOS CHANNEL | | | 188 | | | | | | | 47 | 188 | | | | | | | | | |
| 4 | 1.14 | STUDEBAKER ROAD OC | | 492 | | | | | | | 144 | | | | | | | | | | | 246 |
| 5 | 1.42 | SAN GABRIEL RIVER | | | 335 | | | | | | | 84 | 335 | | | | | | | | | |
| 7 | R0.72 | HARBOR BOULEVARD OFF-RAMP UC | | | 286 | | | | | | | 72 | 286 | | | | | | | | | |
| 8 | 6.03 | DOMINGUEZ CHANNEL | 75 | | | | | | | | | | | | | | | | | | | |
| 9 | R6.39 | W91-N110 CONNECTOR OC | | | | 74 | | | | | | | 74 | | | | | | | | | |
| 10 | R6.40 | W91-S110 CONNECTOR OC | | | | 3,240 | | | | 104 | | 753 | 3,333 | | 186 | | | | 278 | | | |
| 11 | R6.73 | W91-N110 CONNECTOR (BROADWAY) | | | | 205 | | | | | | 52 | 205 | | | | | | 70 | | | |
| 13 | R7.44 | AVALON BOULEVARD UC | | | 430 | | | | 860 | | | 376 | 430 | | | | | | 86 | 430 | | |
| 14 | R8.43 | CENTRAL AVENUE OC | 290 | | | | 464 | | | | 143 | | | | | 908 | 386 | | | 13 | | 369 |
| 15 | R9.15 | WILMINGTON AVENUE OC | | 434 | | | | 204 | | | 152 | | | | | 1044 | 430 | | | | | |
| 16 | R12.84 | WALNUT AVENUE UC | | | 228 | | | | 228 | | | 200 | 228 | | | | | 72 | 30 | 114 | 108 | |
| 17 | R15.39 | ARDMORE AVENUE UC | | | 204 | | | | 408 | | | 178 | 204 | | | | | | 82 | 204 | | |
| 18 | R15.87 | BIXBY AVENUE UC | | | 224 | | | | 448 | | | 196 | 224 | | | | | 224 | | 224 | | |
| | | SHEET SUBTOTAL | 365 | 926 | 2,261 | 3,519 | 464 | 204 | 1,944 | 104 | 439 | 2,052 | 5,873 | | 186 | 1952 | 816 | 296 | 546 | 985 | 108 | 615 |

PAVEMENT DELINEATION QUANTITIES

PDQ-1

STATE OF CALIFORNIA - DEPARTMENT OF TRANSPORTATION
Caltrans MAINTENANCE ENGINEERING

FUNCTIONAL SUPERVISOR: HAMID SAADATNEJADI
CALCULATED-DESIGNED BY: KEVIN KWAN
CHECKED BY: HAMID SAADATNEJADI
REVISED BY / DATE REVISED

LAST REVISION 05-07-12 | DATE PLOTTED => 15-JUN-2012 | TIME PLOTTED => 10:22

| Dist | COUNTY | ROUTE | POST MILES TOTAL PROJECT | SHEET No. | TOTAL SHEETS |
|---|---|---|---|---|---|
| 07 | LA | 19, 22, 47, 91, 110, etc. | Var | 16 | 54 |

REGISTERED CIVIL ENGINEER 4-1-12 DATE

5-7-12
PLANS APPROVAL DATE

REGISTERED PROFESSIONAL ENGINEER KEVIN KWAN No. 68219 Exp. 9-30-13 CIVIL STATE OF CALIFORNIA

*THE STATE OF CALIFORNIA OR ITS OFFICERS OR AGENTS SHALL NOT BE RESPONSIBLE FOR THE ACCURACY OR COMPLETENESS OF SCANNED COPIES OF THIS PLAN SHEET.*

## PAVEMENT DELINEATION QUANTITIES

| LOCATION (No.) | POST MILE | DESCRIPTION | REMOVE YELLOW THERMOPLASTIC TRAFFIC STRIPE (HAZARDOUS WASTE) | | | | | | | REMOVE THERMOPLASTIC TRAFFIC STRIPE | | | | | | | | | | | | REMOVE PAINTED TRAFFIC STRIPE |
|---|---|---|---|---|---|---|---|---|---|---|---|---|---|---|---|---|---|---|---|---|---|---|
| | | | Det 21 | Det 22 | Det 25 | Det 25A | Det 28 | Det 29 | | Det 8 | Det 9 | Det 13/14 (Mod) | Det 27B | Det 36 | Det 36A | Det 38 | Det 38A | Det 38B | Det 37 | | | |
| | | | 4" (DOUBLE YELLOW) | 4" (DOUBLE YELLOW) | 4" (YELLOW) | 4" (YELLOW) | 4" (DOUBLE YELLOW) | 4" (DOUBLE YELLOW) | 4" (DOUBLE YELLOW) | 4" (BROKEN 17-7) (WHITE) | 4" (BROKEN 17-7) (WHITE) | 4" (BROKEN 36-12) (WHITE) | 4" (WHITE) | 8" (WHITE) | 8" (WHITE) | 8" (WHITE) | 8" (WHITE) | 8" (WHITE) | 8" (BROKEN 12-3) (WHITE) | 4" (WHITE) | 8" (BROKEN 36-12) (WHITE) | 3" PAINTED BLACK TRAFFIC STRIPE |
| | | | LF | LF | LF | LF | LF | LF | LF | LF | LF | LF | LF | LF | LF | LF | LF | LF | LF | LF | LF | LF |
| 23 | 10.54 | CARSON STREET UC | | | 420 | | | | 840 | | | 315 | 420 | 1376 | | | | | | 420 | | |
| 24 | R12.94 | S405-N110/110 SEPARATION | | | | 234 | | | | | | | 234 | | | | | | | | | |
| 25 | R8.38 | FIRESTONE BOULEVARD | | | | | | | | | | | | | | | | | | | | |
| 26 | M5.95 | HARBOR SCENIC DRIVE OH | | | 776 | | | | | | | 291 | 776 | | | | | | 156 | | | |
| SHEET SUBTOTAL | | | | | 1,196 | 234 | | | 840 | | | 606 | 1,430 | 1376 | | | | | 156 | 420 | | |
| TOTAL | | | 11,953 | | | | | | | 17,345 | | | | | | | | | | | | 615 |

## PAVEMENT DELINEATION QUANTITIES

**PDQ-2**

STATE OF CALIFORNIA - DEPARTMENT OF TRANSPORTATION
Caltrans MAINTENANCE ENGINEERING

FUNCTIONAL SUPERVISOR: HAMID SAADATNEJADI
CALCULATED-DESIGNED BY: KEVIN KWAN
CHECKED BY: HAMID SAADATNEJADI
REVISED BY
DATE REVISED

LAST REVISION 05-07-12 | DATE PLOTTED => 15-JUN-2012 | TIME PLOTTED => 10:22

| Dist | COUNTY | ROUTE | POST MILES TOTAL PROJECT | SHEET No. | TOTAL SHEETS |
|---|---|---|---|---|---|
| 07 | LA | 19, 22, 47, 91, 110, etc. | Var | 17 | 54 |

REGISTERED CIVIL ENGINEER 4-1-12 DATE

5-7-12
PLANS APPROVAL DATE

REGISTERED PROFESSIONAL ENGINEER KEVIN KWAN No. 68219 Exp. 9-30-13 CIVIL STATE OF CALIFORNIA

*THE STATE OF CALIFORNIA OR ITS OFFICERS OR AGENTS SHALL NOT BE RESPONSIBLE FOR THE ACCURACY OR COMPLETENESS OF SCANNED COPIES OF THIS PLAN SHEET.*

# PAVEMENT DELINEATION QUANTITIES

| LOCATION (No.) | POST MILE | DESCRIPTION | REMOVE PAVEMENT MARKER | | | | | | | | | | | | | | | REMOVE THERMOPLASTIC PAVEMENT MARKING | | |
|---|---|---|---|---|---|---|---|---|---|---|---|---|---|---|---|---|---|---|---|---|
| | | | Det 13/14 (Mod) TYPE A (NON-REFLECTIVE) | Det 9 TYPE G (RETROREFLECTIVE) | Det 13/14 (Mod) TYPE G/C (RETROREFLECTIVE) | Det 22 TYPE D (RETROREFLECTIVE) | Det 25 TYPE H (RETROREFLECTIVE) | Det 25A TYPE H (RETROREFLECTIVE) | Det 29 TYPE D (RETROREFLECTIVE) | Det 36 TYPE G (RETROREFLECTIVE) | Det 36A TYPE G (RETROREFLECTIVE) | Det 37 TYPE G\C (RETROREFLECTIVE) | Det 38 TYPE G (RETROREFLECTIVE) | Det 38B TYPE G (RETROREFLECTIVE) | 4" DOUBLE YELLOW TYPE H (RETROREFLECTIVE) | 4" WHITE TYPE G (RETROREFLECTIVE) | 8" (BROKEN 36-12) TYPE G (RETROREFLECTIVE) | TYPE IV ARROW | DIAGONAL | STOP |
| | | | EA | EA | EA | EA | EA | EA | EA | EA | EA | EA | EA | EA | EA | EA | EA | SQFT | SQFT | SQFT |
| 1 | R6.03 | S19-E91 CONNECTOR OC | | | | | 5 | | | | | | | | | | | | 30 | |
| 2 | 1.09 | LOS CERRITOS CHANNEL | 31 | | 9 | | 5 | | | | | | | | | | | | 113 | |
| 3 | 1.09 | LOS CERRITOS CHANNEL | 16 | | 5 | | 5 | | | | | | | | | | | | | |
| 4 | 1.14 | STUDEBAKER ROAD OC | | 12 | | 43 | | | | | | | | | | | | | | |
| 5 | 1.42 | SAN GABRIEL RIVER | 28 | | 8 | | 8 | | | | | | | | | | | | | |
| 7 | R0.72 | HARBOR BOULEVARD OFF-RAMP UC | 24 | | 8 | | 8 | | | | | | | | | | | | | |
| 8 | 6.03 | DOMINGUEZ CHANNEL | | | | | | | | | | | | | | | | 15 | | 22 |
| 9 | R6.39 | W91-N110 CONNECTOR OC | | | | | | 4 | | | | | | | | | | | 40 | |
| 10 | R6.40 | W91-S110 CONNECTOR OC | 251 | | 64 | | | 136 | | | 5 | 46 | | | | | | | | |
| 11 | R6.73 | W91-N110 CONNECTOR (BROADWAY) | 17 | | 5 | | | 10 | | | | 16 | | | | | | | | |
| 13 | R7.44 | AVALON BOULEVARD UC | 126 | | 33 | | 10 | | | | | 16 | | | 38 | | | | | |
| 14 | R8.43 | CENTRAL AVENUE OC | | 12 | | | | | | | | | 21 | | | 2 | | 75 | | |
| 15 | R9.15 | WILMINGTON AVENUE OC | | 12 | | 38 | | | 11 | | | | 24 | | | | | 90 | | |
| 16 | R12.84 | WALNUT AVENUE UC | 67 | | 19 | | 6 | | | | | 7 | | 5 | 11 | | 11 | | | |
| 17 | R15.39 | ARDMORE AVENUE UC | 60 | | 17 | | 6 | | | | | 18 | | | 20 | | | | | |
| 18 | R15.87 | BIXBY AVENUE UC | 65 | | 18 | | 6 | | | | | | | 11 | 20 | | | | | |
| | | SHEET SUBTOTAL | 685 | 36 | 186 | 81 | 59 | 150 | 11 | | 5 | 103 | 45 | 16 | 89 | 2 | 11 | 180 | 183 | 22 |

PAVEMENT DELINEATION QUANTITIES

PDQ-3

STATE OF CALIFORNIA - DEPARTMENT OF TRANSPORTATION
Caltrans MAINTENANCE ENGINEERING

FUNCTIONAL SUPERVISOR: HAMID SAADATNEJADI
CALCULATED-DESIGNED BY: KEVIN KWAN
CHECKED BY: HAMID SAADATNEJADI
REVISED BY
DATE REVISED

LAST REVISION 05-07-12
DATE PLOTTED => 15-JUN-2012
TIME PLOTTED => 10:22

| Dist | COUNTY | ROUTE | POST MILES TOTAL PROJECT | SHEET No. | TOTAL SHEETS |
|---|---|---|---|---|---|
| 07 | LA | 19, 22, 47, 91, 110, etc. | Var | 18 | 54 |

REGISTERED CIVIL ENGINEER 4-1-12 DATE

5-7-12
PLANS APPROVAL DATE

REGISTERED PROFESSIONAL ENGINEER KEVIN KWAN No. 68219 Exp. 9-30-13 CIVIL STATE OF CALIFORNIA

*THE STATE OF CALIFORNIA OR ITS OFFICERS OR AGENTS SHALL NOT BE RESPONSIBLE FOR THE ACCURACY OR COMPLETENESS OF SCANNED COPIES OF THIS PLAN SHEET.*

# PAVEMENT DELINEATION QUANTITIES

| LOCATION (No.) | POST MILE | DESCRIPTION | REMOVE PAVEMENT MARKER | | | | | | | | | | | | | | | REMOVE THERMOPLASTIC PAVEMENT MARKING | | |
|---|---|---|---|---|---|---|---|---|---|---|---|---|---|---|---|---|---|---|---|---|
| | | | Det 13/14 (Mod) | Det 9 | Det 13/14 (Mod) | Det 22 | Det 25 | Det 25A | Det 29 | Det 36 | Det 36A | Det 37 | Det 38 | Det 38B | | | | | | |
| | | | TYPE A (NON-REFLECTIVE) | TYPE G (RETROREFLECTIVE) | TYPE G/C (RETROREFLECTIVE) | TYPE D (RETROREFLECTIVE) | TYPE H (RETROREFLECTIVE) | TYPE H (RETROREFLECTIVE) | TYPE D (RETROREFLECTIVE) | TYPE G (RETROREFLECTIVE) | TYPE G (RETROREFLECTIVE) | TYPE G\C (RETROREFLECTIVE) | TYPE G (RETROREFLECTIVE) | TYPE G (RETROREFLECTIVE) | 4" DOUBLE YELLOW TYPE H (RETROREFLECTIVE) | 4" WHITE TYPE G (RETROREFLECTIVE) | 8" (BROKEN 36-12) TYPE G (RETROREFLECTIVE) | TYPE IV ARROW | DIAGONAL | STOP |
| | | | EA | EA | EA | EA | EA | EA | EA | EA | EA | EA | EA | EA | EA | EA | EA | SQFT | SQFT | SQFT |
| 23 | 10.54 | CARSON STREET UC | 106 | | 28 | | 10 | | | 30 | | | | | 38 | | | | | |
| 24 | R12.94 | S405-N110/110 SEPARATION | | | | | | 6 | | | | | | | | | | | 121 | |
| 25 | R8.38 | FIRESTONE BOULEVARD | | | | | | | | | | | | | | | | | | |
| 26 | M5.95 | HARBOR SCENIC DRIVE OH | 97 | | 26 | | 18 | | | | | 28 | | | | | | | | |
| | | SHEET SUBTOTAL | 203 | | 54 | | 28 | 6 | | 30 | | 28 | | | 38 | | | | 121 | |
| | | TOTAL | 1,866 | | | | | | | | | | | | | | | 506 | | |

STATE OF CALIFORNIA - DEPARTMENT OF TRANSPORTATION
Caltrans MAINTENANCE ENGINEERING

FUNCTIONAL SUPERVISOR: HAMID SAADATNEJADI
CALCULATED-DESIGNED BY: KEVIN KWAN
CHECKED BY: HAMID SAADATNEJADI
REVISED BY
DATE REVISED

## PAVEMENT DELINEATION QUANTITIES

PDQ-4

LAST REVISION 05-07-12
DATE PLOTTED => 15-JUN-2012
TIME PLOTTED => 10:22

| Dist | COUNTY | ROUTE | POST MILES TOTAL PROJECT | SHEET No. | TOTAL SHEETS |
|---|---|---|---|---|---|
| 07 | LA | 19, 22, 47, 91, 110, etc. | Var | 19 | 54 |

REGISTERED CIVIL ENGINEER 4-1-12 DATE

5-7-12
PLANS APPROVAL DATE

REGISTERED PROFESSIONAL ENGINEER KEVIN KWAN No. 68219 Exp. 9-30-13 CIVIL STATE OF CALIFORNIA

*THE STATE OF CALIFORNIA OR ITS OFFICERS OR AGENTS SHALL NOT BE RESPONSIBLE FOR THE ACCURACY OR COMPLETENESS OF SCANNED COPIES OF THIS PLAN SHEET.*

# PAVEMENT DELINEATION QUANTITIES

| LOCATION (No.) | POST MILE | DESCRIPTION | THERMOPLASTIC TRAFFIC STRIPE | | | | | | | | | | | | | | | | | | | PAINTED TRAFFIC STRIPE |
|---|---|---|---|---|---|---|---|---|---|---|---|---|---|---|---|---|---|---|---|---|---|---|
| | | | Det 8 | Det 9 | Det 13/14 (Mod) | Det 21 | Det 22 | Det 25 | Det 25A | Det 27B | Det 28 | Det 29 | | | Det 36 | Det 36A | Det 38 | Det 38A | Det 38B | Det 37 | | |
| | | | 4" (BROKEN 17-7) (WHITE) | 4" (BROKEN 17-7) (WHITE) | 4" (BROKEN 36-12) (WHITE) | 4" (DOUBLE YELLOW) | 4" (DOUBLE YELLOW) | 4" (YELLOW) | 4" (YELLOW) | 4" (WHITE) | 4" (DOUBLE DOUBLE YELLOW) | 4" (DOUBLE DOUBLE YELLOW) | 4" (DOUBLE YELLOW) | 4" (WHITE) | 8" (WHITE) | 8" (WHITE) | 8" (WHITE) | 8" (WHITE) | 8" (WHITE) | 8" (BROKEN 12-3) (WHITE) | 8" (BROKEN 36-12) (WHITE) | 3" PAINTED BLACK TRAFFIC STRIPE |
| | | | LF | LF | LF | LF | LF | LF | LF | LF | LF | LF | LF | LF | LF | LF | LF | LF | LF | LF | LF | LF |
| 1 | R6.03 | S19-E91 CONNECTOR OC | | | | | | 178 | | 178 | | | | | | | | | | | | |
| 2 | 1.09 | LOS CERRITOS CHANNEL | | | 376 | | | 188 | | 188 | | | | | | | | | | | | |
| 3 | 1.09 | LOS CERRITOS CHANNEL | | | 188 | | | 188 | | 188 | | | | | | | | | | | | |
| 4 | 1.14 | STUDEBAKER ROAD OC | | 492 | | | 492 | | | | | | | | | | | | | | | 246 |
| 5 | 1.42 | SAN GABRIEL RIVER | | | 335 | | | 335 | | 335 | | | | | | | | | | | | |
| 7 | R0.72 | HARBOR BOULEVARD OFF-RAMP UC | | | 286 | | | 286 | | 286 | | | | | | | | | | | | |
| 8 | 6.03 | DOMINGUEZ CHANNEL | | | | 75 | | | | | | | | | | | | | | | | |
| 9 | R6.39 | W91-N110 CONNECTOR OC | | | | | | | 74 | 74 | | | | | | | | | | | | |
| 10 | R6.40 | W91-S110 CONNECTOR OC | 355 | | 3,010 | | | | 3,240 | 3,333 | | | | | | 93 | | | | 693 | | |
| 11 | R6.73 | W91-N110 CONNECTOR (BROADWAY) | | | 205 | | | | 205 | 205 | | | | | | | | | | 175 | | |
| 13 | R7.44 | AVALON BOULEVARD UC | | | 1,505 | | | 430 | | 430 | | | 860 | 430 | | | | | | 215 | | |
| 14 | R8.43 | CENTRAL AVENUE OC | | 491 | | 290 | | | | | 464 | | | 13 | | | 454 | 193 | | | | 369 |
| 15 | R9.15 | WILMINGTON AVENUE OC | | 522 | | | 434 | | | | | 204 | | | | | 522 | 215 | | | | |
| 16 | R12.84 | WALNUT AVENUE UC | | | 798 | | | 228 | | 228 | | | 228 | 114 | | | | | 36 | 75 | 215 | |
| 17 | R15.39 | ARDMORE AVENUE UC | | | 714 | | | 204 | | 204 | | | 408 | 204 | | | | | | 204 | | |
| 18 | R15.87 | BIXBY AVENUE UC | | | 784 | | | 224 | | 224 | | | 448 | 224 | | | | | 112 | | | |
| | | SHEET SUBTOTAL | 355 | 1,505 | 8,201 | 365 | 926 | 2,261 | 3,519 | 5,873 | 464 | 204 | 1,944 | 985 | | 93 | 976 | 408 | 148 | 1,362 | 215 | 615 |

PAVEMENT DELINEATION QUANTITIES

PDQ-5

REVISED BY | DATE REVISED
KEVIN KWAN | HAMID SAADATNEJADI
CALCULATED-DESIGNED BY | CHECKED BY
FUNCTIONAL SUPERVISOR: HAMID SAADATNEJADI
STATE OF CALIFORNIA - DEPARTMENT OF TRANSPORTATION
Caltrans MAINTENANCE ENGINEERING

LAST REVISION 05-07-12 | DATE PLOTTED => 15-JUN-2012 | TIME PLOTTED => 10:22

| Dist | COUNTY | ROUTE | POST MILES TOTAL PROJECT | SHEET No. | TOTAL SHEETS |
|---|---|---|---|---|---|
| 07 | LA | 19, 22, 47, 91, 110, etc. | Var | 20 | 54 |

REGISTERED CIVIL ENGINEER 4-1-12 DATE

5-7-12
PLANS APPROVAL DATE

REGISTERED PROFESSIONAL ENGINEER KEVIN KWAN No. 68219 Exp. 9-30-13 CIVIL STATE OF CALIFORNIA

*THE STATE OF CALIFORNIA OR ITS OFFICERS OR AGENTS SHALL NOT BE RESPONSIBLE FOR THE ACCURACY OR COMPLETENESS OF SCANNED COPIES OF THIS PLAN SHEET.*

# PAVEMENT DELINEATION QUANTITIES

| LOCATION (No.) | POST MILE | DESCRIPTION | THERMOPLASTIC TRAFFIC STRIPE | | | | | | | | | | | | | | | | | | | PAINTED TRAFFIC STRIPE |
|---|---|---|---|---|---|---|---|---|---|---|---|---|---|---|---|---|---|---|---|---|---|---|
| | | | Det 8 | Det 9 | Det 13/14 (Mod) | Det 21 | Det 22 | Det 25 | Det 25A | Det 27B | Det 28 | Det 29 | | | Det 36 | Det 36A | Det 38 | Det 38A | Det 38B | Det 37 | | |
| | | | 4" (BROKEN 17-7) (WHITE) | 4" (BROKEN 17-7) (WHITE) | 4" (BROKEN 36-12) (WHITE) | 4" (DOUBLE YELLOW) | 4" (DOUBLE YELLOW) | 4" (YELLOW) | 4" (YELLOW) | 4" (WHITE) | 4" (DOUBLE DOUBLE YELLOW) | 4" (DOUBLE DOUBLE YELLOW) | 4" (DOUBLE YELLOW) | 4" (WHITE) | 8" (WHITE) | 8" (WHITE) | 8" (WHITE) | 8" (WHITE) | 8" (WHITE) | 8" (BROKEN 12-3) (WHITE) | 8" (BROKEN 36-12) (WHITE) | 3" PAINTED BLACK TRAFFIC STRIPE |
| | | | LF | LF | LF | LF | LF | LF | LF | LF | LF | LF | LF | LF | LF | LF | LF | LF | LF | LF | LF | LF |
| 23 | 10.54 | CARSON STREET UC | | | 1,260 | | | 420 | | 420 | | | 840 | 420 | 688 | | | | | | | |
| 24 | R12.94 | S405-N110/110 SEPARATION | | | | | | | 234 | 234 | | | | | | | | | | | | |
| 25 | R8.38 | FIRESTONE BOULEVARD | | | | | | | | | | | | | | | | | | | | |
| 26 | M5.95 | HARBOR SCENIC DRIVE OH | | | 1,164 | | | 776 | | 776 | | | | | | | | | | 388 | | |
| SHEET SUBTOTAL | | | | | 2,424 | | | 1,196 | 234 | 1,430 | | | 840 | 420 | 688 | | | | | 388 | | |
| TOTAL | | | 1,860 | | 10,625 | 20,661 | | | | | | | | | 2,313 | | | | | 1,750 | 215 | 615 |

PAVEMENT DELINEATION QUANTITIES

PDQ-6

STATE OF CALIFORNIA - DEPARTMENT OF TRANSPORTATION
Caltrans MAINTENANCE ENGINEERING

FUNCTIONAL SUPERVISOR: HAMID SAADATNEJADI
CALCULATED-DESIGNED BY: KEVIN KWAN
CHECKED BY: HAMID SAADATNEJADI
REVISED BY
DATE REVISED

LAST REVISION 05-07-12
DATE PLOTTED => 15-JUN-2012
TIME PLOTTED => 10:22

| Dist | COUNTY | ROUTE | POST MILES TOTAL PROJECT | SHEET No. | TOTAL SHEETS |
|---|---|---|---|---|---|
| 07 | LA | 19, 22, 47, 91, 110, etc. | Var | 21 | 54 |

REGISTERED CIVIL ENGINEER 4-1-12 DATE

5-7-12
PLANS APPROVAL DATE

REGISTERED PROFESSIONAL ENGINEER KEVIN KWAN No. 68219 Exp. 9-30-13 CIVIL STATE OF CALIFORNIA

*THE STATE OF CALIFORNIA OR ITS OFFICERS OR AGENTS SHALL NOT BE RESPONSIBLE FOR THE ACCURACY OR COMPLETENESS OF SCANNED COPIES OF THIS PLAN SHEET.*

# PAVEMENT DELINEATION QUANTITIES

| LOCATION (No.) | POST MILE | DESCRIPTION | PAVEMENT MARKER | | | | | | | | | | | | | | | THERMOPLASTIC PAVEMENT MARKING | | |
|---|---|---|---|---|---|---|---|---|---|---|---|---|---|---|---|---|---|---|---|---|
| | | | NON-REFLECTIVE | RETROREFLECTIVE | | | | | | | | | | | | | | | | |
| | | | Det 13/14 (Mod) | Det 9 | Det 13/14 (Mod) | Det 22 | Det 25 | Det 25A | Det 29 | Det 36 | Det 36A | Det 37 | Det 38 | Det 38B | | | | | | |
| | | | TYPE A | TYPE G | TYPE G/C | TYPE D | TYPE H | TYPE H | TYPE D | TYPE G | TYPE G | TYPE G\C | TYPE G | TYPE G | 4" DOUBLE YELLOW TYPE H | 4" WHITE TYPE G | 8" (BROKEN 36-12) TYPE G | TYPE IV ARROW | DIAGONAL | STOP |
| | | | EA | EA | EA | EA | EA | EA | EA | EA | EA | EA | EA | EA | EA | EA | EA | SQFT | SQFT | SQFT |
| 1 | R6.03 | S19-E91 CONNECTOR OC | | | | | 5 | | | | | | | | | | | | 30 | |
| 2 | 1.09 | LOS CERRITOS CHANNEL | 31 | | 9 | | 5 | | | | | | | | | | | | 113 | |
| 3 | 1.09 | LOS CERRITOS CHANNEL | 16 | | 5 | | 5 | | | | | | | | | | | | | |
| 4 | 1.14 | STUDEBAKER ROAD OC | | 12 | | 43 | | | | | | | | | | | | | | |
| 5 | 1.42 | SAN GABRIEL RIVER | 28 | | 8 | | 8 | | | | | | | | | | | | | |
| 7 | R0.72 | HARBOR BOULEVARD OFF-RAMP UC | 24 | | 8 | | 8 | | | | | | | | | | | | | |
| 8 | 6.03 | DOMINGUEZ CHANNEL | | | | | | | | | | | | | | | | 15 | | 22 |
| 9 | R6.39 | W91-N110 CONNECTOR OC | | | | | | 4 | | | | | | | | | | | 40 | |
| 10 | R6.40 | W91-S110 CONNECTOR OC | 251 | | 64 | | | 136 | | | 5 | 46 | | | | | | | | |
| 11 | R6.73 | W91-N110 CONNECTOR (BROADWAY) | 17 | | 6 | | | 10 | | | | 16 | | | | | | | | |
| 13 | R7.44 | AVALON BOULEVARD UC | 126 | | 33 | | 10 | | | | | 16 | | | 38 | | | | | |
| 14 | R8.43 | CENTRAL AVENUE OC | | 12 | | | | | | | | | 21 | | | 2 | | 75 | | |
| 15 | R9.15 | WILMINGTON AVENUE OC | | 12 | | 38 | | | 11 | | | | 24 | | | | | 90 | | |
| 16 | R12.84 | WALNUT AVENUE UC | 67 | | 19 | | 6 | | | | | 7 | | 5 | 11 | | 11 | | | |
| 17 | R15.39 | ARDMORE AVENUE UC | 60 | | 17 | | 6 | | | | | 18 | | | 20 | | | | | |
| 18 | R15.87 | BIXBY AVENUE UC | 65 | | 18 | | 6 | | | | | | | 11 | 20 | | | | | |
| | | SHEET SUBTOTAL | 685 | 36 | 186 | 81 | 59 | 150 | 11 | | 5 | 103 | 45 | 16 | 89 | 2 | 11 | 180 | 183 | 22 |

PAVEMENT DELINEATION QUANTITIES

PDQ-7

REVISED BY | DATE REVISED
KEVIN KWAN | HAMID SAADATNEJADI
CALCULATED-DESIGNED BY | CHECKED BY
FUNCTIONAL SUPERVISOR: HAMID SAADATNEJADI
STATE OF CALIFORNIA - DEPARTMENT OF TRANSPORTATION
Caltrans MAINTENANCE ENGINEERING

LAST REVISION 05-07-12 | DATE PLOTTED => 15-JUN-2012 TIME PLOTTED => 10:22

| Dist | COUNTY | ROUTE | POST MILES TOTAL PROJECT | SHEET No. | TOTAL SHEETS |
|---|---|---|---|---|---|
| 07 | LA | 19, 22, 47, 91, 110, etc. | Var | 22 | 54 |

REGISTERED CIVIL ENGINEER 4-1-12 DATE

5-7-12
PLANS APPROVAL DATE

REGISTERED PROFESSIONAL ENGINEER KEVIN KWAN No. 68219 Exp. 9-30-13 CIVIL STATE OF CALIFORNIA

*THE STATE OF CALIFORNIA OR ITS OFFICERS OR AGENTS SHALL NOT BE RESPONSIBLE FOR THE ACCURACY OR COMPLETENESS OF SCANNED COPIES OF THIS PLAN SHEET.*

# PAVEMENT DELINEATION QUANTITIES

| LOCATION (No.) | POST MILE | DESCRIPTION | PAVEMENT MARKER | | | | | | | | | | | | | | | THERMOPLASTIC PAVEMENT MARKING | | |
|---|---|---|---|---|---|---|---|---|---|---|---|---|---|---|---|---|---|---|---|---|
| | | | NON-REFLECTIVE | RETROREFLECTIVE | | | | | | | | | | | | | | | | |
| | | | Det 13/14 (Mod) | Det 9 | Det 13/14 (Mod) | Det 22 | Det 25 | Det 25A | Det 29 | Det 36 | Det 36A | Det 37 | Det 38 | Det 38B | | | | | | |
| | | | TYPE A | TYPE G | TYPE G/C | TYPE D | TYPE H | TYPE H | TYPE D | TYPE G | TYPE G | TYPE G\C | TYPE G | TYPE G | 4" DOUBLE YELLOW TYPE H | 4" WHITE TYPE G | 8" (BROKEN 36-12) TYPE G | TYPE IV ARROW | DIAGONAL | STOP |
| | | | EA | EA | EA | EA | EA | EA | EA | EA | EA | EA | EA | EA | EA | EA | EA | SQFT | SQFT | SQFT |
| 23 | 10.54 | CARSON STREET UC | 106 | | 28 | | 10 | | | 30 | | | | | 38 | | | | | |
| 24 | R12.94 | S405-N110/110 SEPARATION | | | | | | 6 | | | | | | | | | | | 121 | |
| 25 | R8.38 | FIRESTONE BOULEVARD | | | | | | | | | | | | | | | | | | |
| 26 | M5.95 | HARBOR SCENIC DRIVE OH | 97 | | 26 | | 18 | | | | | 28 | | | | | | | | |
| | | SHEET SUBTOTAL | 203 | | 54 | | 28 | 6 | | 30 | | 28 | | | 38 | | | | 121 | |
| | | TOTAL | 888 | 978 | | | | | | | | | | | | | | 506 | | |

PAVEMENT DELINEATION QUANTITIES

PDQ-8

STATE OF CALIFORNIA - DEPARTMENT OF TRANSPORTATION
Caltrans MAINTENANCE ENGINEERING

FUNCTIONAL SUPERVISOR: HAMID SAADATNEJADI
CALCULATED-DESIGNED BY: KEVIN KWAN
CHECKED BY: HAMID SAADATNEJADI
REVISED BY
DATE REVISED

LAST REVISION 05-07-12 | DATE PLOTTED => 15-JUN-2012 | TIME PLOTTED => 10:23

| Dist | COUNTY | ROUTE | POST MILES TOTAL PROJECT | SHEET No. | TOTAL SHEETS |
|---|---|---|---|---|---|
| 07 | LA | 19, 22, 47, 91, 110, etc. | Var | 23 | 54 |

REGISTERED CIVIL ENGINEER 4-1-12 DATE

5-7-12
PLANS APPROVAL DATE

REGISTERED PROFESSIONAL ENGINEER KEVIN KWAN No. 68219 Exp. 9-30-13 CIVIL STATE OF CALIFORNIA

*THE STATE OF CALIFORNIA OR ITS OFFICERS OR AGENTS SHALL NOT BE RESPONSIBLE FOR THE ACCURACY OR COMPLETENESS OF SCANNED COPIES OF THIS PLAN SHEET.*

NOTE:

1. EXACT LOCATION AND POSITION OF ROADSIDE SIGNS WILL BE DETERMINED BY THE ENGINEER.

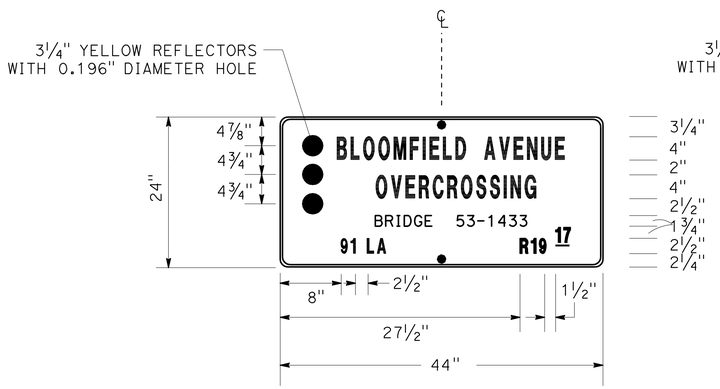


**LOCATION (19)**

NO SCALE

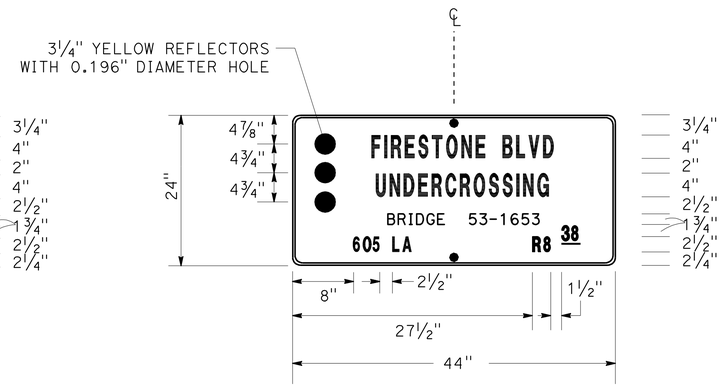


**LOCATION (25)**

NO SCALE

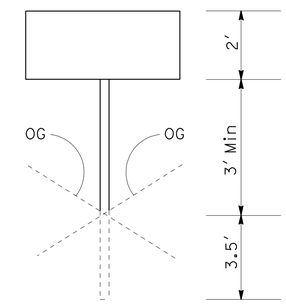


**G11-5 (CA) SIGN INSTALLATION DETAIL**

NO SCALE

**ROADSIDE SIGNS**

| Loc No. | DIRECTION | ROUTE | POST MILE | BRIDGE No. | DESCRIPTION | SIGN CODE | PANEL SIZE | NUMBER OF POSTS AND SIZE | NUMBER OF SIGNS |
|---|---|---|---|---|---|---|---|---|---|
| 19 | WB | 91 | R19.17 | 53-1433 | BLOOMFIELD AVENUE OC | G11-5 (CA) | 44" X 24" | 1-4" x 4" | 1 |
| 25 | SB | 605 | R8.38 | 53-1653 | FIRESTONE BOULEVARD UC | G11-5 (CA) | 44" X 24" | 1-4" x 4" | 1 |
| | | | | | | | | TOTAL | 2 |

# SIGN QUANTITIES

SQ-1

STATE OF CALIFORNIA - DEPARTMENT OF TRANSPORTATION
Caltrans MAINTENANCE ENGINEERING

FUNCTIONAL SUPERVISOR: HAMID SAADATNEJADI
CALCULATED-DESIGNED BY: KEVIN KWAN
CHECKED BY: HAMID SAADATNEJADI
REVISED BY
DATE REVISED

LAST REVISION 05-07-12
DATE PLOTTED => 15-JUN-2012
TIME PLOTTED => 10:23

| Dist | COUNTY | ROUTE | POST MILES TOTAL PROJECT | SHEET No. | TOTAL SHEETS |
|---|---|---|---|---|---|
| 07 | LA | 19, 22, 47, 91, 110, etc. | Var | 24 | 54 |

REGISTERED CIVIL ENGINEER 4-1-12 DATE

5-7-12
PLANS APPROVAL DATE

REGISTERED PROFESSIONAL ENGINEER KEVIN KWAN No. 68219 Exp. 9-30-13 CIVIL STATE OF CALIFORNIA

*THE STATE OF CALIFORNIA OR ITS OFFICERS OR AGENTS SHALL NOT BE RESPONSIBLE FOR THE ACCURACY OR COMPLETENESS OF SCANNED COPIES OF THIS PLAN SHEET.*

## ROADWAY QUANTITIES

| LOC No. | DESCRIPTION | BRIDGE No. | POST MILE | ROADWAY EXCAVATION | HOT MIX ASPHALT (TYPE A) | CLASS 3 AGGREGATE BASE | RECONSTRUCT METAL BEAM GUARD RAILING | TEMPORARY RAILING (TYPE K) | GUARD RAILING DELINEATOR | CHANNELIZER (SURFACE MOUNTED) | TEMPORARY CRASH CUSHION MODULE |
|---|---|---|---|---|---|---|---|---|---|---|---|
| | | | | CY | TON | CY | LF | LF | EA | EA | EA |
| 19 | BLOOMFIELD AVENUE OC | 53-1433 | R19.17 | 2.3 | 3.2 | 0.8 | 12 | 220 | 1 | 18 | 14 |

## SUMMARY OF QUANTITIES

Q-1

STATE OF CALIFORNIA - DEPARTMENT OF TRANSPORTATION
Caltrans MAINTENANCE ENGINEERING

FUNCTIONAL SUPERVISOR: HAMID SAADATNEJADI
CALCULATED-DESIGNED BY: KEVIN KWAN
CHECKED BY: HAMID SAADATNEJADI
REVISED BY
DATE REVISED

LAST REVISION 05-07-12
DATE PLOTTED => 15-JUN-2012
TIME PLOTTED => 10:23

| DIST | COUNTY | ROUTE | POST MILES TOTAL PROJECT | SHEET NO. | TOTAL SHEETS |
|---|---|---|---|---|---|
| 07 | LA | 19,22,47,91 110, etc. | Var | 25 | 54 |

LICENSED LANDSCAPE ARCHITECT

April 3, 2009
PLANS APPROVAL DATE

*The State of California or its officers or agents shall not be responsible for the accuracy or completeness of electronic copies of this plan sheet.*

LICENSED LANDSCAPE ARCHITECT — Robert B. Schott 3635 — Signature — 11-30-10 Renewal Date — 2-25-09 Date — STATE OF CALIFORNIA

*To accompany plans dated* 5-7-12

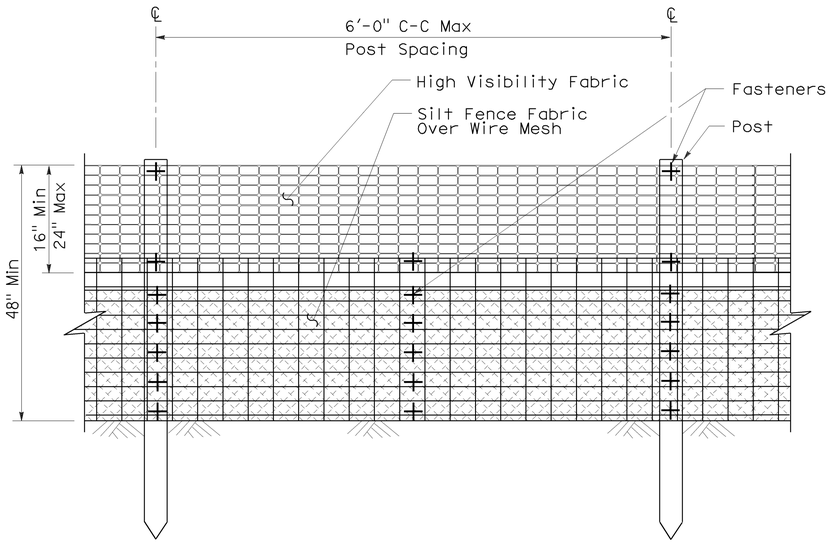


ELEVATION

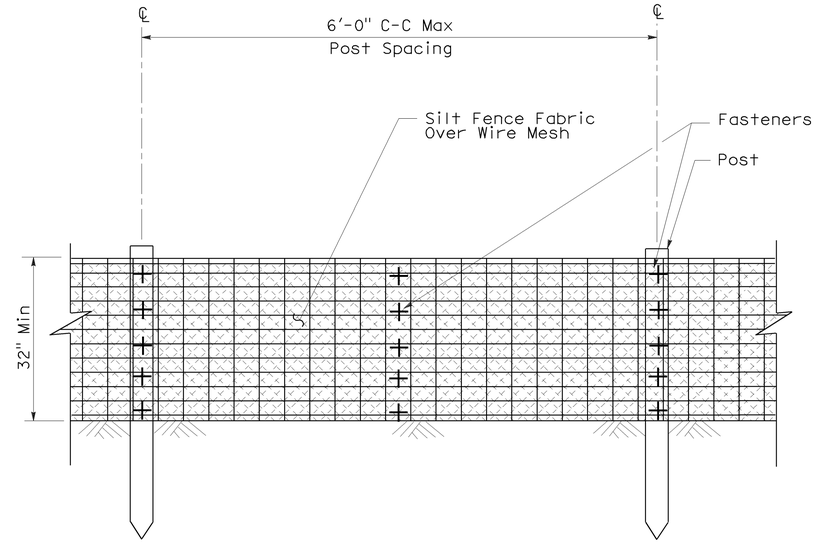


ELEVATION

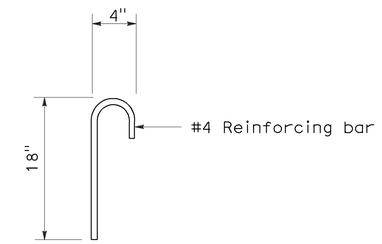


ANCHOR

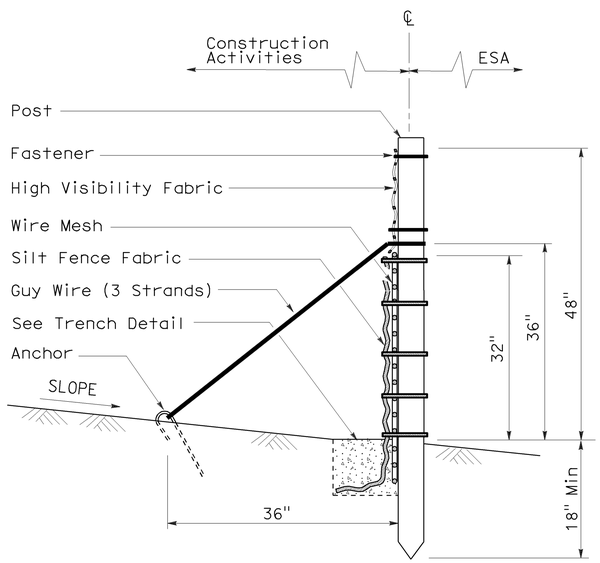


SECTION

TEMPORARY REINFORCED SILT FENCE (TYPE 1)

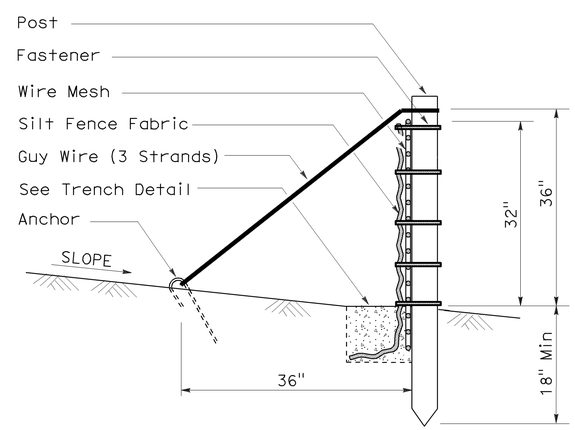


SECTION

TEMPORARY REINFORCED SILT FENCE (TYPE 2)

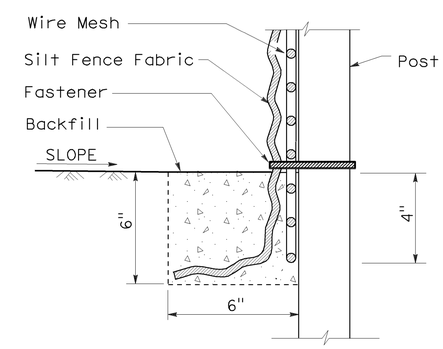


SECTION

TRENCH DETAIL

STATE OF CALIFORNIA
DEPARTMENT OF TRANSPORTATION

# TEMPORARY WATER POLLUTION CONTROL DETAILS (TEMPORARY REINFORCED SILT FENCE)

NO SCALE

NSP T60 DATED APRIL 3, 2009 SUPPLEMENTS
THE STANDARD PLANS BOOK DATED MAY 2006.

**NEW STANDARD PLAN NSP T60**

**2006 NEW STANDARD PLAN NSP T60**

1-7-09

| DIST | COUNTY | ROUTE | POST MILES TOTAL PROJECT | SHEET NO. | TOTAL SHEETS |
|---|---|---|---|---|---|
| 07 | LA | 19,22,47,91 110, etc. | Var | 26 | 54 |

LICENSED LANDSCAPE ARCHITECT

August 15, 2008
PLANS Approval DATE

*The State of California or its officers or agents shall not be responsible for the accuracy or completeness of electronic copies of this plan sheet.*

LICENSED LANDSCAPE ARCHITECT Robert B. Schott 3635 Signature 11-04-08 Renewal Date 08-11-08 Date STATE OF CALIFORNIA

*To accompany plans dated* 5-7-12

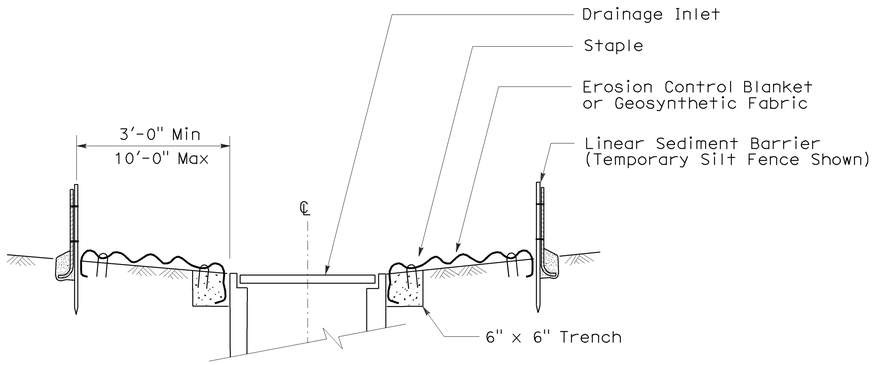


SECTION A-A

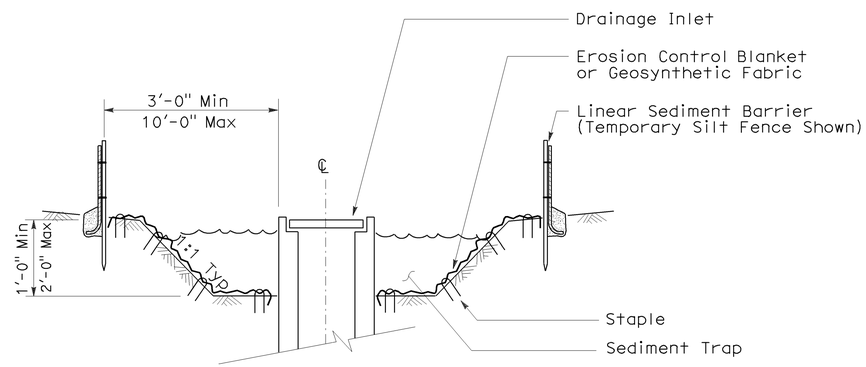


SECTION B-B

## NOTES:

1. See Standard Plan T51 for Temporary Silt Fence.
2. Dimensions may vary to fit field conditions.

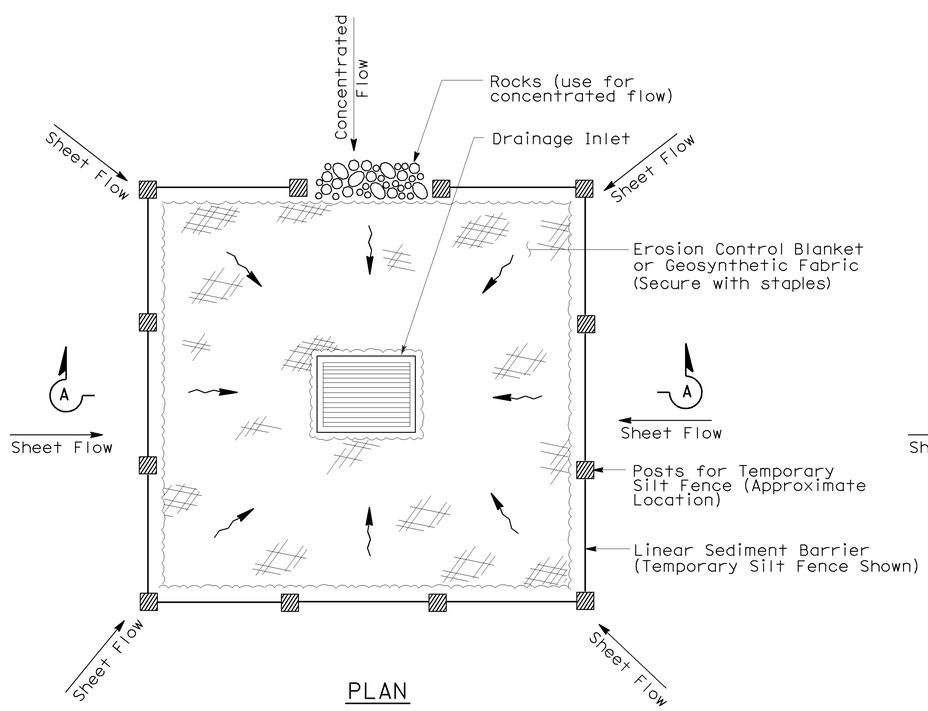


PLAN

TEMPORARY DRAINAGE INLET PROTECTION (TYPE 1)

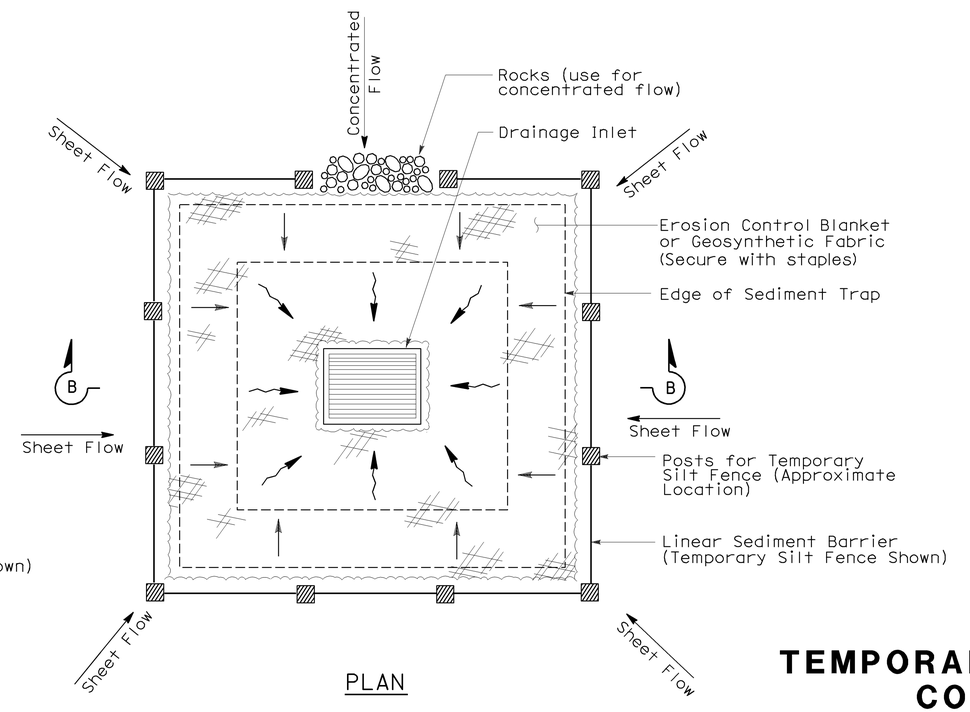


PLAN

TEMPORARY DRAINAGE INLET PROTECTION (TYPE 2) (EXCAVATED SEDIMENT TRAP)

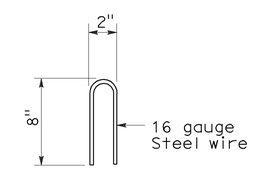


STAPLE DETAIL

STATE OF CALIFORNIA
DEPARTMENT OF TRANSPORTATION

# TEMPORARY WATER POLLUTION CONTROL DETAILS (TEMPORARY DRAINAGE INLET PROTECTION)

NO SCALE

Nsp t61 dated august 15, 2008 supplements the standard plans book dated may 2006.

**NEW STANDARD PLAN NSP T61**

**2006 NEW STANDARD PLAN NSP T61**

7-11-08

| DIST | COUNTY | ROUTE | POST MILES TOTAL PROJECT | SHEET NO. | TOTAL SHEETS |
|---|---|---|---|---|---|
| 07 | LA | 19,22,47,91 110, etc. | Var | 27 | 54 |

LICENSED LANDSCAPE ARCHITECT

August 15, 2008
PLANS APPROVAL DATE

*The State of California or its officers or agents shall not be responsible for the accuracy or completeness of electronic copies of this plan sheet.*

LICENSED LANDSCAPE ARCHITECT — Robert B. Schott — Signature — 11-04-08 Renewal Date — 08-11-08 Date — STATE OF CALIFORNIA

*To accompany plans dated* 5-7-12

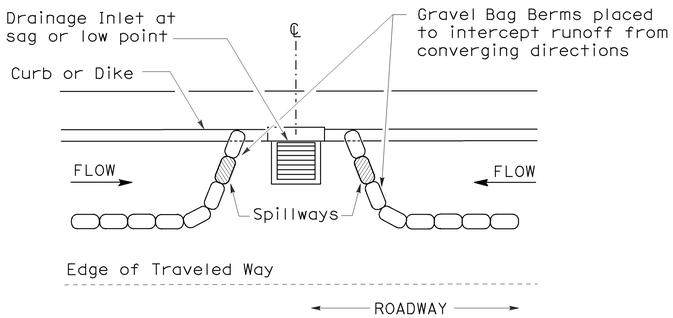


PLAN

## CONFIGURATION FOR SAG POINT INLET (GRAVEL BAG BERM)

## GRAVEL BAG BERM (TYPE 3A) SPACING TABLE

| SLOPE OF ROADWAY (PERCENT) | 1 to 3.9 | 4 to 5.9 | 6 to 7.9 | 8 to 10 | 10+ |
|---|---|---|---|---|---|
| INTERVAL BETWEEN BERM | 100′ | 75′ | 50′ | 25′ | 12′ |

For slope of less than 1%, install barriers only if erosion/sediment is prevalent

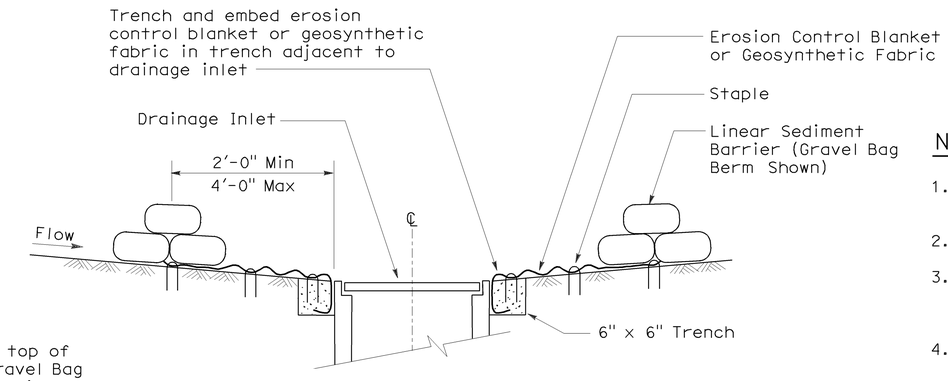


SECTION A-A

## NOTES:

1. Place safety cones adjacent to drainage inlet protection.
2. Dimensions may vary to fit field conditions.
3. Install a minimum of 3 gravel bag berms upstream of each drainage inlet to be protected.
4. Position erosion control blanket or geosynthetic fabric at edge of concrete apron and secure in trench.
5. Erosion control blanket or geosynthetic fabric is not required if the area adjacent to the drainage inlet is vegetated or paved.

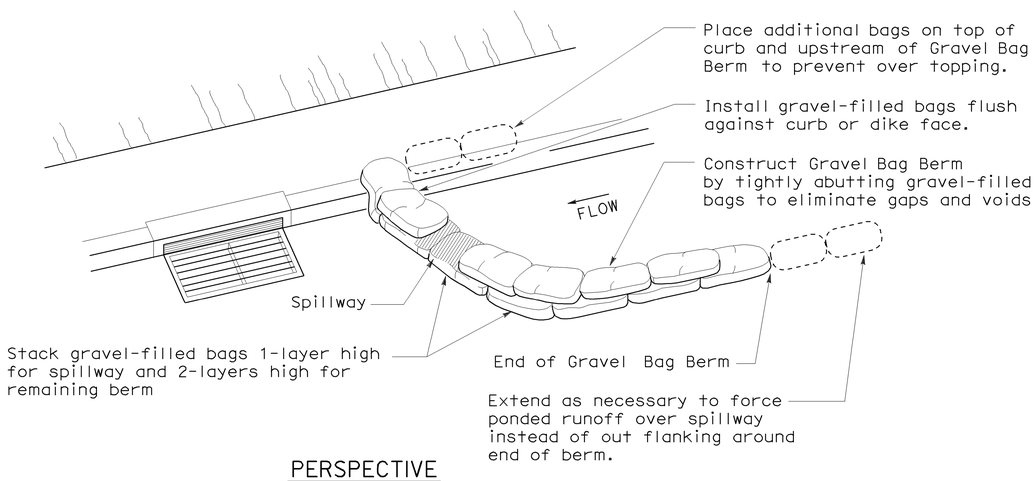


PERSPECTIVE

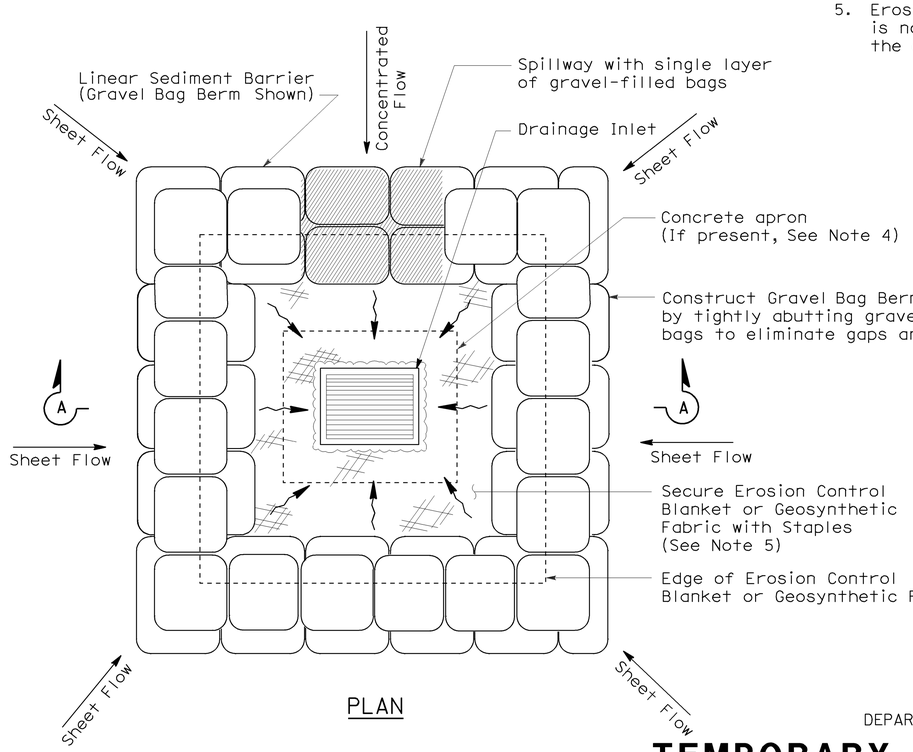


PLAN

## TEMPORARY DRAINAGE INLET PROTECTION (TYPE 3B)

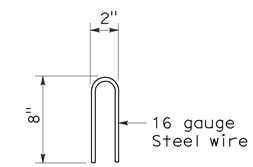


STAPLE DETAIL

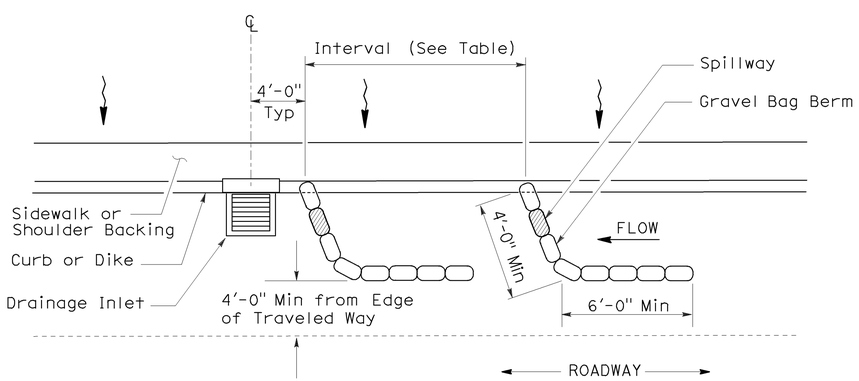


PLAN

## TEMPORARY DRAINAGE INLET PROTECTION (TYPE 3A) (GRAVEL BAG BERM)

STATE OF CALIFORNIA
DEPARTMENT OF TRANSPORTATION

# TEMPORARY WATER POLLUTION CONTROL DETAILS (TEMPORARY DRAINAGE INLET PROTECTION)

NO SCALE

NSP T62 DATED AUGUST 15, 2008 SUPPLEMENTS THE STANDARD PLANS BOOK DATED MAY 2006.

**NEW STANDARD PLAN NSP T62**

**2006 NEW STANDARD PLAN NSP T62**

7-11-08

| DIST | COUNTY | ROUTE | POST MILES TOTAL PROJECT | SHEET NO. | TOTAL SHEETS |
|---|---|---|---|---|---|
| 07 | LA | 19,22,47,91 110, etc. | Var | 28 | 54 |

LICENSED LANDSCAPE ARCHITECT

August 15, 2008
PLANS APPROVAL DATE

*The State of California or its officers or agents shall not be responsible for the accuracy or completeness of electronic copies of this plan sheet.*

LICENSED LANDSCAPE ARCHITECT — Robert B. Schott — 3635 — Signature — 11-04-08 Renewal Date — 08-11-08 Date — STATE OF CALIFORNIA

*To accompany plans dated* 5-7-12

## FLEXIBLE SEDIMENT BARRIER SPACING TABLE

| SLOPE OF ROADWAY (PERCENT) | 0 to 0.9 | 1 to 1.9 | 2 to 2.9 | 3 to 4 | 5+ |
|---|---|---|---|---|---|
| INTERVAL BETWEEN BARRIERS | 50′ | 35′ | 30′ | 25′ | 20′ |
| ANGLE FROM FACE OF CURB | 70° | 70° | 70° | 45° | 45° |
| SUGGESTED BARRIER LENGTH | 6′ | 6′ | 6′ | 6′ | 6′ |

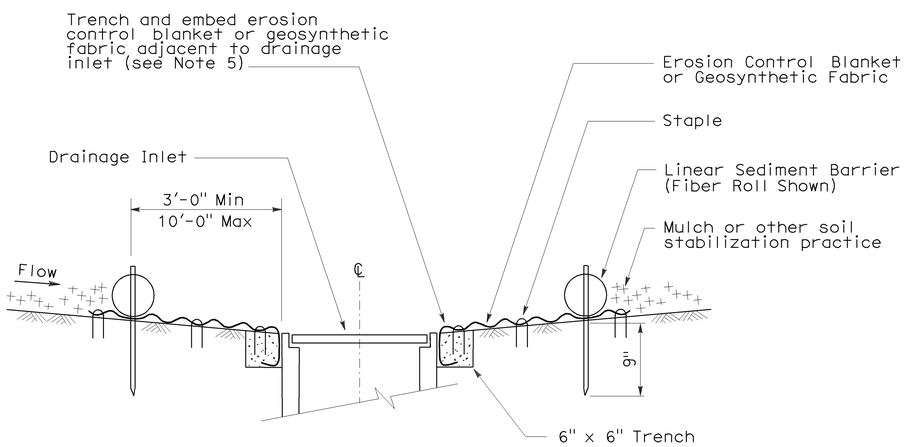


SECTION A-A

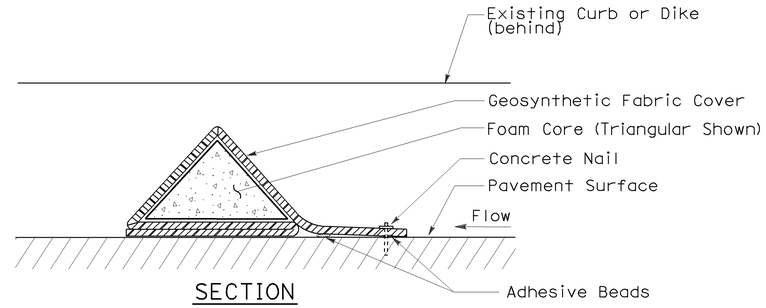


SECTION

## FLEXIBLE SEDIMENT BARRIER DETAIL (FOAM BARRIER SHOWN)

## NOTES:

1. See Standard Plan T51 for Temporary Silt Fence.
2. Dimensions may vary to fit field conditions.
3. Install a minimum of 3 flexible sediment barriers upstream of each drainage inlet to be protected.
4. Position erosion control blanket or geosynthetic fabric at edge of concrete apron and secure in trench.
5. Erosion control blanket or geosynthetic fabric is not required if the area adjacent to the drainage inlet is vegetated.

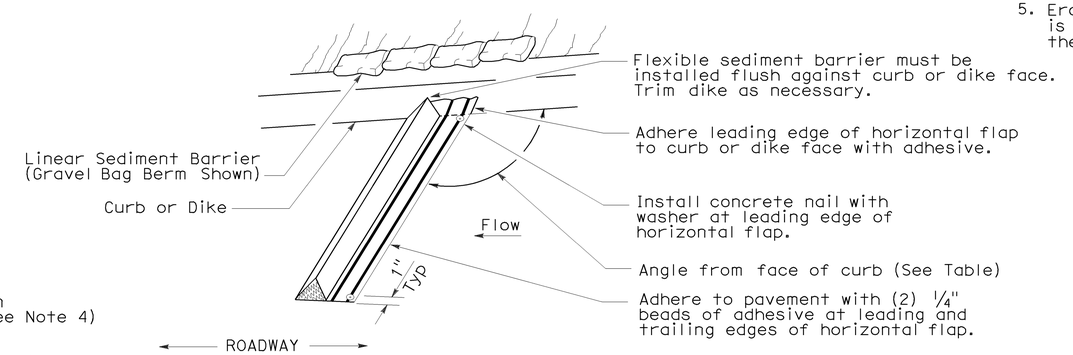


PERSPECTIVE

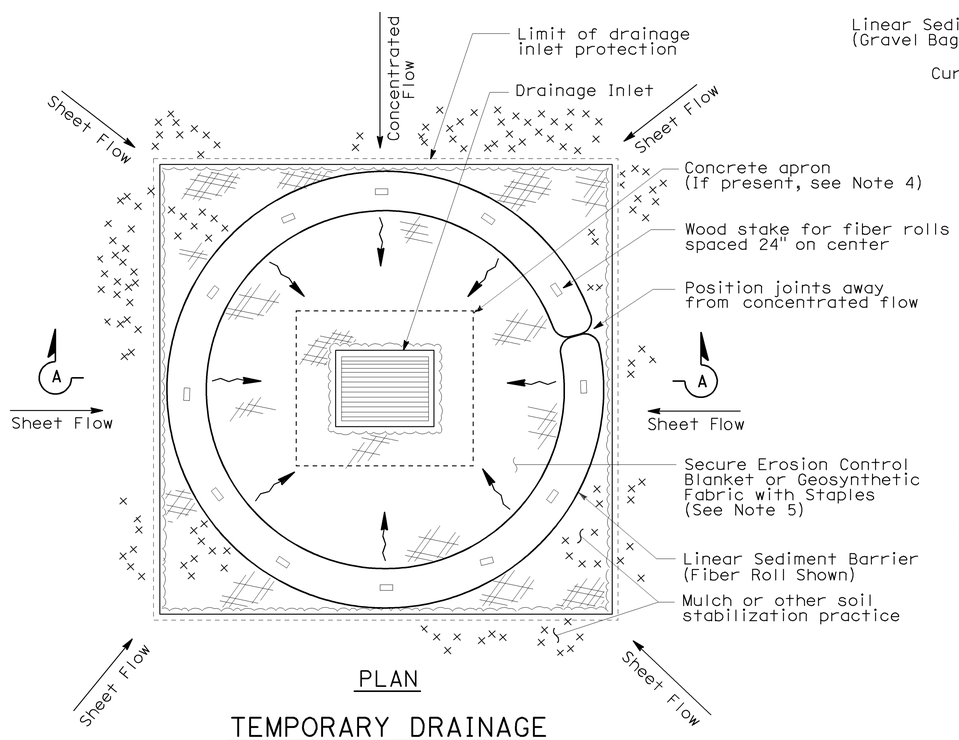


PLAN

## TEMPORARY DRAINAGE INLET PROTECTION (TYPE 4A)

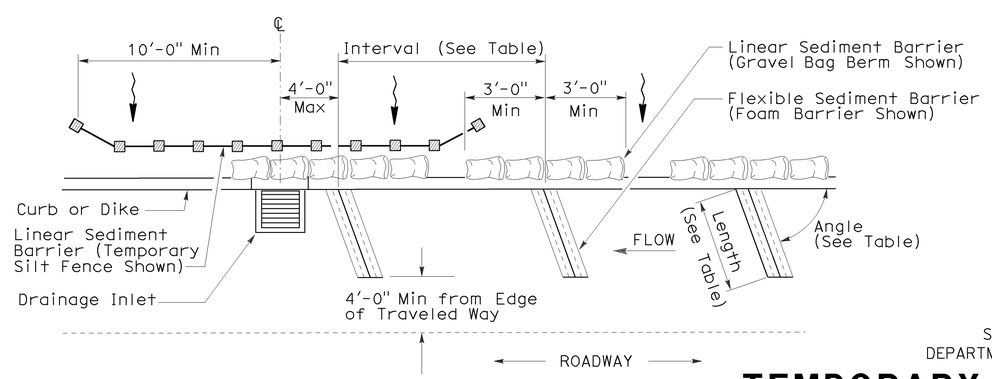


PLAN

## TEMPORARY DRAINAGE INLET PROTECTION (TYPE 4B) FLEXIBLE SEDIMENT BARRIER

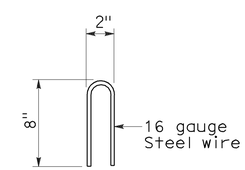


STAPLE DETAIL

STATE OF CALIFORNIA
DEPARTMENT OF TRANSPORTATION

# TEMPORARY WATER POLLUTION CONTROL DETAILS (TEMPORARY DRAINAGE INLET PROTECTION)

NO SCALE

NSP T63 DATED AUGUST 15, 2008 SUPPLEMENTS THE STANDARD PLANS BOOK DATED MAY 2006.

**NEW STANDARD PLAN NSP T63**

**2006 NEW STANDARD PLAN NSP T63**

7-11-08

| DIST | COUNTY | ROUTE | POST MILES TOTAL PROJECT | SHEET NO. | TOTAL SHEETS |
|---|---|---|---|---|---|
| 07 | LA | 19,22,47,91 110, etc. | Var | 29 | 54 |

LICENSED LANDSCAPE ARCHITECT

August 15, 2008
PLANS APPROVAL DATE

*The State of California or its officers or agents shall not be responsible for the accuracy or completeness of electronic copies of this plan sheet.*

LICENSED LANDSCAPE ARCHITECT Robert B. Schott 3635 Signature 11-04-08 Renewal Date 08-11-08 Date STATE OF CALIFORNIA

*To accompany plans dated* 5-7-12

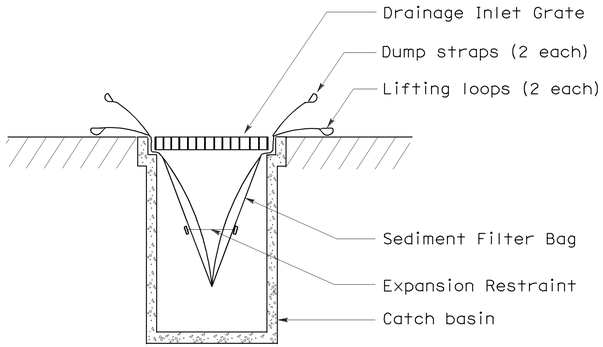


SECTION B-B

## SEDIMENT FILTER BAG DETAIL

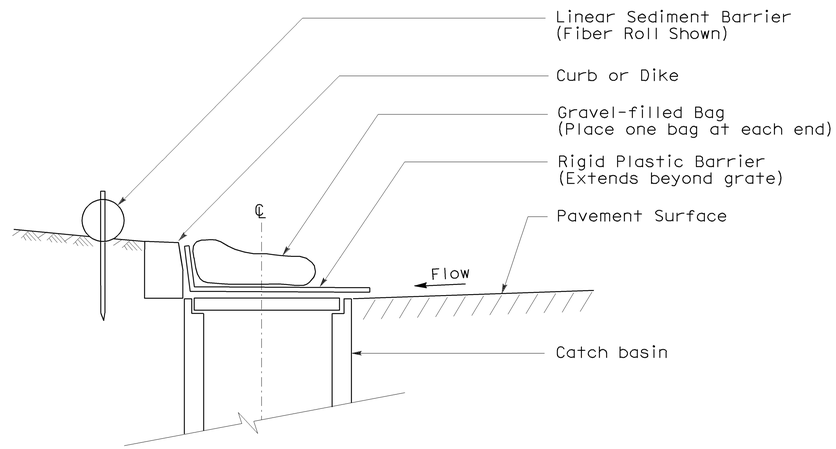


SECTION

## TEMPORARY DRAINAGE INLET PROTECTION (TYPE 6A) (CATCH BASIN WITH GRATE)

NOTES:

1. See Standard Plan T51 for Temporary Silt Fence.
2. Dimensions may vary to fit field conditions.

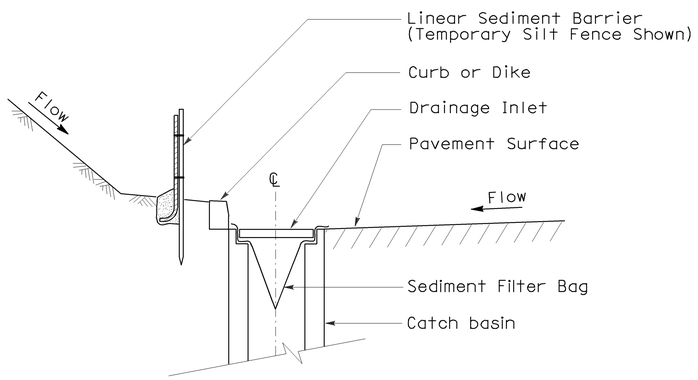


SECTION A-A

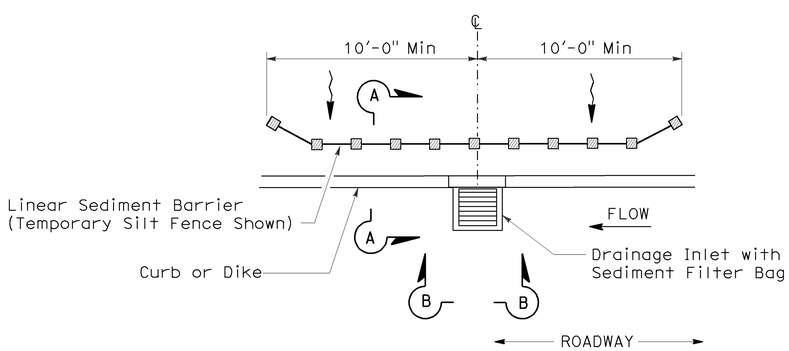


PLAN

## TEMPORARY DRAINAGE INLET PROTECTION (TYPE 5) (SEDIMENT FILTER BAG)

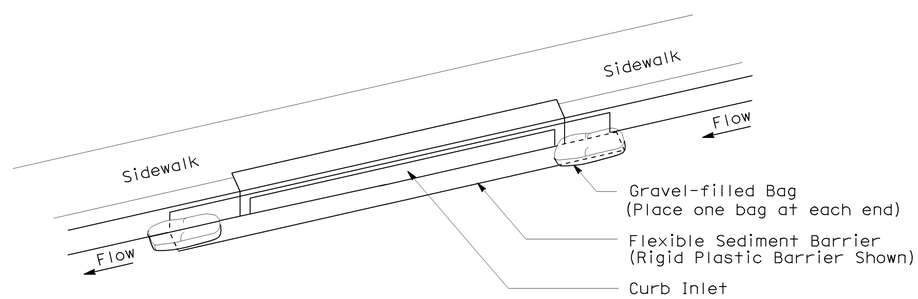


PERSPECTIVE

## TEMPORARY DRAINAGE INLET PROTECTION (TYPE 6B) (CURB INLET WITHOUT GRATE)

STATE OF CALIFORNIA
DEPARTMENT OF TRANSPORTATION

# TEMPORARY WATER POLLUTION CONTROL DETAILS (TEMPORARY DRAINAGE INLET PROTECTION)

NO SCALE

NSP T64 DATED AUGUST 15, 2008 SUPPLEMENTS THE STANDARD PLANS BOOK DATED MAY 2006.

**NEW STANDARD PLAN NSP T64**

**2006 NEW STANDARD PLAN NSP T64**

7-11-08

| Dist | COUNTY | ROUTE | POST MILES TOTAL PROJECT | SHEET No. | TOTAL SHEETS |
|---|---|---|---|---|---|
| 07 | LA | 19,22,47,91 110, etc. | Var | 30 | 54 |

Randell D. Hiatt
REGISTERED CIVIL ENGINEER

May 20, 2011
PLANS APPROVAL DATE

REGISTERED PROFESSIONAL ENGINEER Randell D. Hiatt No. C50200 Exp. 6-30-11 CIVIL STATE OF CALIFORNIA

*The State of California or its officers or agents shall not be responsible for the accuracy or completeness of electronic copies of this plan sheet.*

*To accompany plans dated* 5-7-12

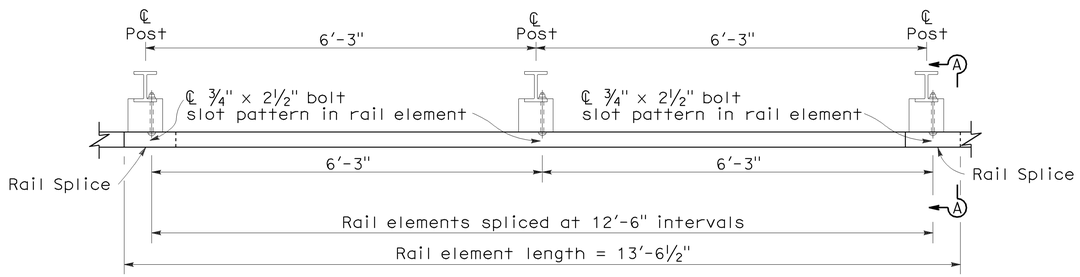


PLAN

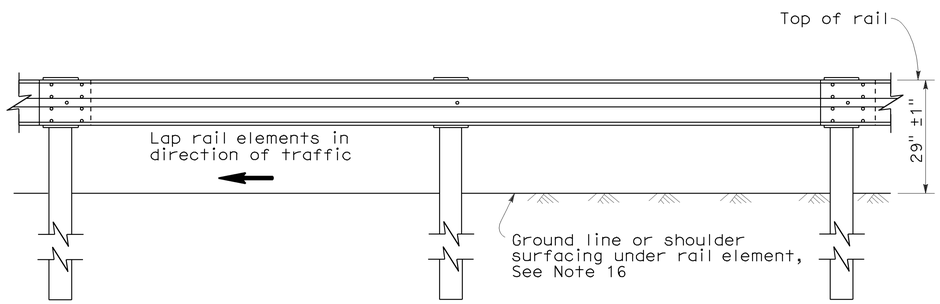


ELEVATION

## METAL BEAM GUARD RAILING WITH STEEL POSTS AND NOTCHED WOOD OR NOTCHED RECYCLED PLASTIC BLOCKS

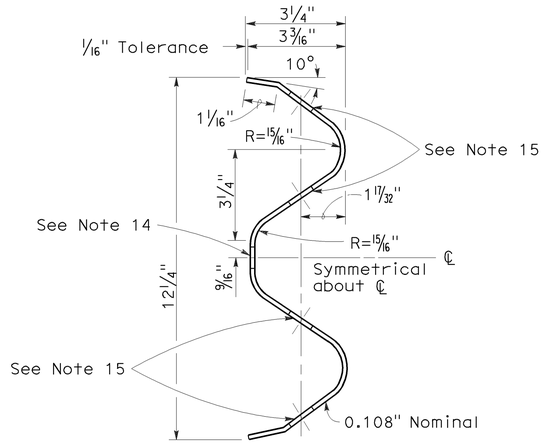


SECTION THRU RAIL ELEMENT

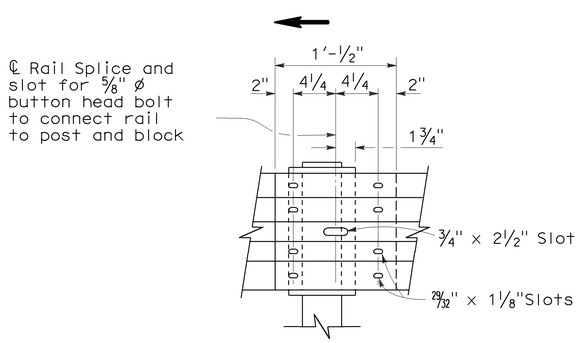


ELEVATION

## RAIL ELEMENT SPLICE DETAIL

a) Connect the over lapped end of the rail elements with ⅝" ø x 1⅜" button head oval shoulder splice bolts inserted into the 29⁄32" x 1⅛" slots and bolted together with ⅝" ø recessed hex nuts. Recess of hex nut points toward rail element. A total of 8 bolts and nuts are to be used at each rail splice connection.

b) The ends of the rail elements are to be overlapped in the direction of traffic (see details).

c) Where end cap is to be attached to the end of a rail element, a total of 4 of the above described splice bolts and nuts are to be used.

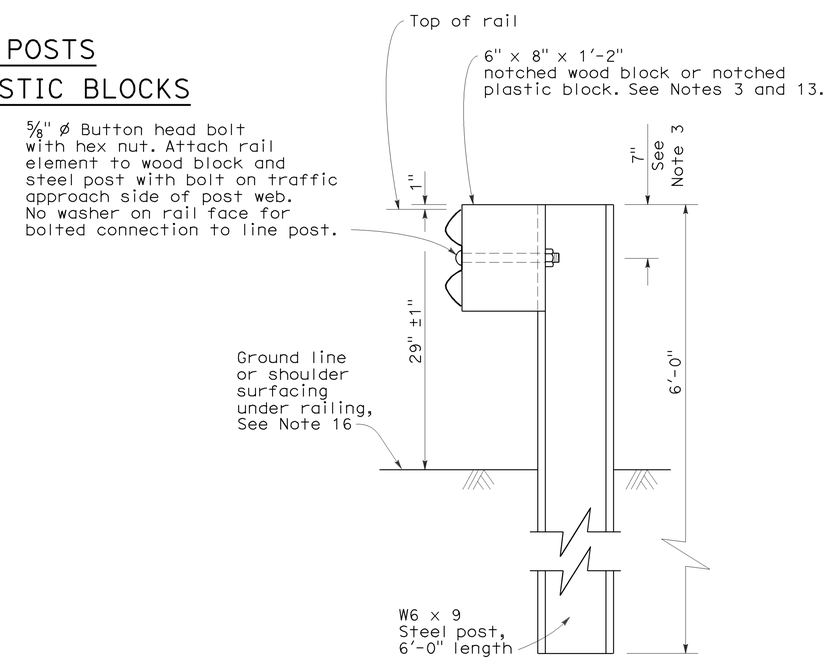


SECTION A-A

## TYPICAL STEEL LINE POST INSTALLATION

See Note 4

## NOTES:

1. For details of wood post installations, see Standard Plan A77A1.
2. For details of standard hardware used to construct guard railing, see Standard Plan A77B1.
3. For details of steel posts and notched wood blocks used to construct guard railing, see Standard Plan A77C2.
4. For additional installation details, see Standard Plan A77C3.
5. Guard railing post spacing to be 6'-3" center to center, except as otherwise noted.
6. For guard railing typical layouts, see the A77E, A77F and A77G Series of Standard Plans.
7. For terminal system end treatment details, see the A77L Series of Standard Plans. To connect railing to terminal system end treatment, transition the top of railing height at a ratio of 120:1 to terminal system end treatment height plus one 12'-6" standard railing section at the transitioned height for a horizontal connection to the end treatment.
8. For guard railing end anchor details, see Standard Plans A77H1 and A77I2.
9. For details of guard railing transition to bridge railing, see Standard Plan A77J4.
10. For additional details of guard railing connection to bridge railings, see Standard Plans A77J1, A77J2 and A77K1.
11. For dike positioning and guard railing delineation details, see Standard Plan A77C4.
12. Direction of adjacent traffic indicated by → .
13. Notched face of block faces steel post.
14. Slotted hole for bolted connection of rail element to block and post. See "Section Thru Rail Element".
15. Slotted holes for splice bolts to overlap ends of rail element. See "Section Thru Rail Element".
16. Install posts in soil.

STATE OF CALIFORNIA
DEPARTMENT OF TRANSPORTATION

# METAL BEAM GUARD RAILING STANDARD RAILING SECTION (STEEL POST WITH NOTCHED WOOD OR NOTCHED RECYCLED PLASTIC BLOCK)

NO SCALE

RSP A77A2 DATED MAY 20, 2011 SUPERSEDES STANDARD PLAN A77A2 DATED MAY 1, 2006 - PAGE 42 OF THE STANDARD PLANS BOOK DATED MAY 2006.

**REVISED STANDARD PLAN RSP A77A2**

**2006 REVISED STANDARD PLAN RSP A77A2**

5-4-11

To accompany plans dated 5-7-12

| Dist | COUNTY | ROUTE | POST MILES TOTAL PROJECT | SHEET No. | TOTAL SHEETS |
|---|---|---|---|---|---|
| 07 | LA | 19,22,47,91 110, etc. | Var | 31 | 54 |

Randell D. Hiatt
REGISTERED CIVIL ENGINEER

May 20, 2011
PLANS APPROVAL DATE

REGISTERED PROFESSIONAL ENGINEER
Randell D. Hiatt
No. C50200
Exp. 6-30-11
CIVIL
STATE OF CALIFORNIA

The State of California or its officers or agents shall not be responsible for the accuracy or completeness of electronic copies of this plan sheet.

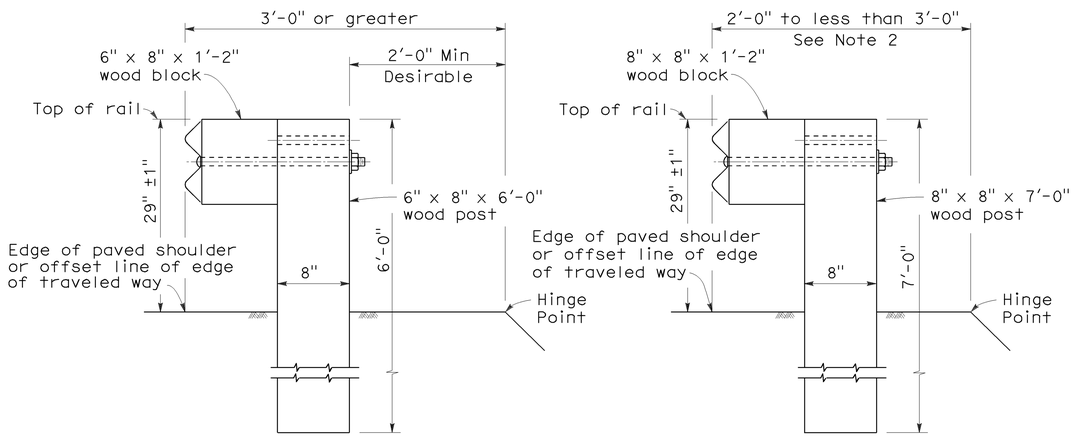


DETAIL A
TYPICAL ROADWAY INSTALLATION
See Note 1

DETAIL B
NARROW ROADWAY INSTALLATION
See Note 1

POST EMBEDMENT

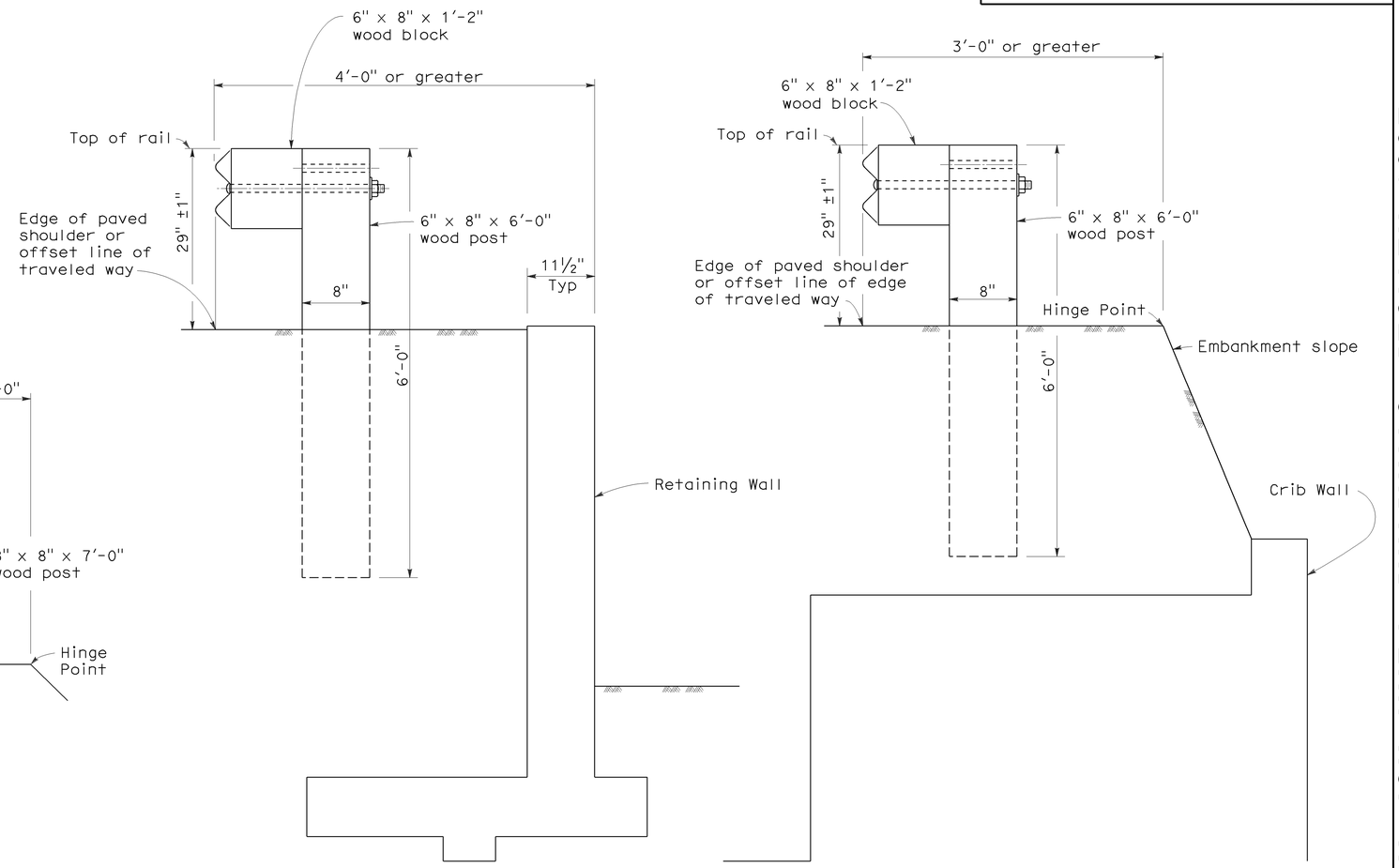


DETAIL C

DETAIL D

INSTALLATION AT EARTH RETAINING WALLS

NOTES:

1. These installation details also applicable to steel line post installations. For Detail A, C, and D, where steel line post installations are constructed, W6 x 9 steel post, 6'-0" in length, with 6" x 8" x 1'-2" notched wood blocks or notched recycled plastic blocks are to be used in place of the size of wood post and wood block shown. For Detail B, where steel line post installations are constructed, W6 x 9 steel post, 7'-0" in length, with 6" x 8" x 1'-2" notched wood blocks or notched recycled plastic blocks are to be used in place of the size of wood post and wood block shown. For additional installation details, see Standard Plans A77A1 and A77A2.
2. Where the distance between the face of the rail and the hinge point is less than 2'-0", see the Project Plans for special details.
3. For dike positioning with guard railing installations, see Standard Plan A77C4.

STATE OF CALIFORNIA
DEPARTMENT OF TRANSPORTATION

# METAL BEAM GUARD RAILING TYPICAL LINE POST EMBEDMENT AND HINGE POINT OFFSET DETAILS

NO SCALE

RSP A77C3 DATED MAY 20, 2011 SUPERSEDES STANDARD PLAN A77C3
DATED MAY 1, 2006 - PAGE 46 OF THE STANDARD PLANS BOOK DATED MAY 2006.

**REVISED STANDARD PLAN RSP A77C3**

**2006 REVISED STANDARD PLAN RSP A77C3**

3-10-11

| Dist | COUNTY | ROUTE | POST MILES TOTAL PROJECT | SHEET No. | TOTAL SHEETS |
|---|---|---|---|---|---|
| 07 | LA | 19,22,47,91 110, *etc.* | Var | 32 | 54 |

Randell D. Hiatt
REGISTERED CIVIL ENGINEER

May 20, 2011
PLANS APPROVAL DATE

REGISTERED PROFESSIONAL ENGINEER
Randell D. Hiatt
No. C50200
Exp. 6-30-11
CIVIL
STATE OF CALIFORNIA

*The State of California or its officers or agents shall not be responsible for the accuracy or completeness of electronic copies of this plan sheet.*

*To accompany plans dated* 5-7-12

## NOTES:

1. When necessary to place dike in front of face of guard railing, only Type C dike may be used. For dike details, see Standard Plan A87B.
2. For standard railing post embedment, see Standard Plans A77C3.
3. Guard railing delineation to be used where shown on the Project Plans.
4. When dike or curb is placed under guard railing, the maximum height of the dike or curb shall be 4". Mountable dike should not be used. For dike and curb details, see Standard Plans A87A and A87B.
5. For details of typical distance between the face of rail and hinge point, see Standard Plan A77C3.
6. For steel line posts, use ¼ - 20 self-tapping screws in 0.22" diameter holes or ¼" bolts in 9/32" diameter holes.

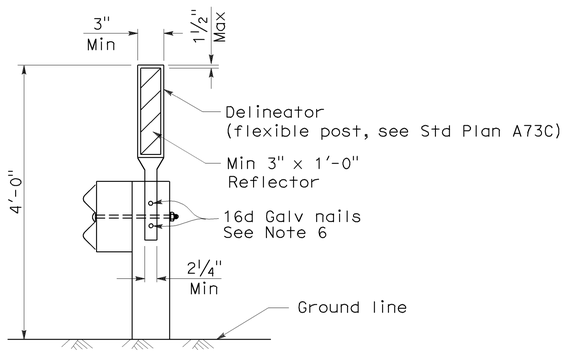


GUARD RAILING DELINEATION

See Note 3

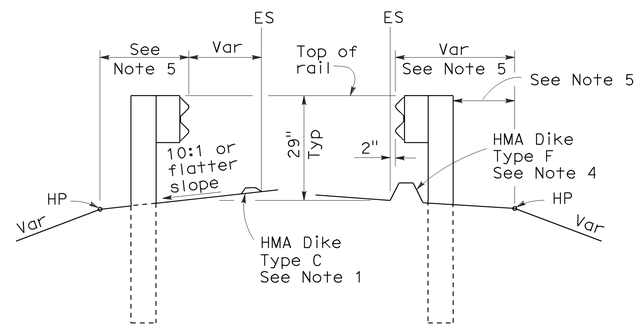


DIKE POSITIONING

See Note 1

STATE OF CALIFORNIA
DEPARTMENT OF TRANSPORTATION

# METAL BEAM GUARD RAILING TYPICAL RAILING DELINEATION AND DIKE POSITIONING DETAILS

NO SCALE

RSP A77C4 DATED MAY 20, 2011 SUPERSEDES RSP A77C4 DATED JUNE 6, 2008 AND STANDARD PLAN A77C4 DATED MAY 1, 2006 - PAGE 47 OF THE STANDARD PLANS BOOK DATED MAY 2006.

**REVISED STANDARD PLAN RSP A77C4**

**2006 REVISED STANDARD PLAN RSP A77C4**

3-10-11

| DIST | COUNTY | ROUTE | POST MILES TOTAL PROJECT | SHEET NO. | TOTAL SHEETS |
|---|---|---|---|---|---|
| 07 | LA | 19,22,47,91 110, etc. | Var | 33 | 54 |

Randell D. Hiatt
REGISTERED CIVIL ENGINEER

June 6, 2008
PLANS APPROVAL DATE

REGISTERED PROFESSIONAL ENGINEER
Randell D. Hiatt
No. C50200
Exp. 6-30-09
CIVIL
STATE OF CALIFORNIA

*The State of California or its officers or agents shall not be responsible for the accuracy or completeness of electronic copies of this plan sheet.*

*To accompany plans dated* 5-7-12

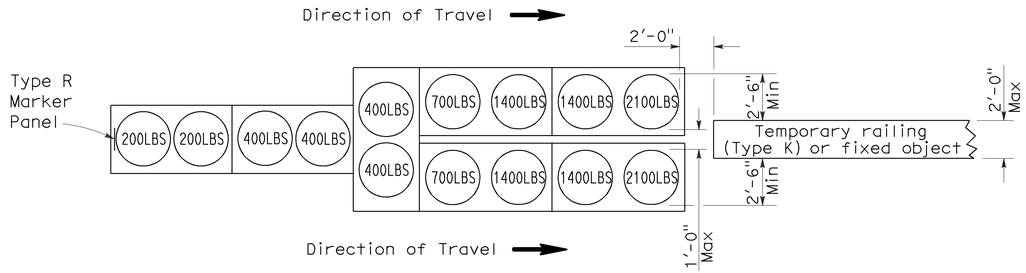


## ARRAY 'TU14'

Approach speed 45 mph or more

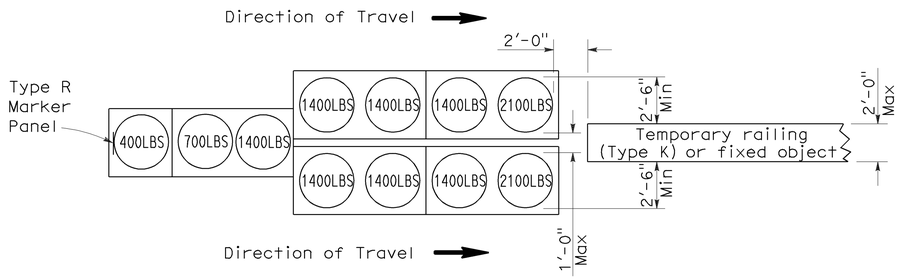


## ARRAY 'TU11'

Approach speed less than 45 mph

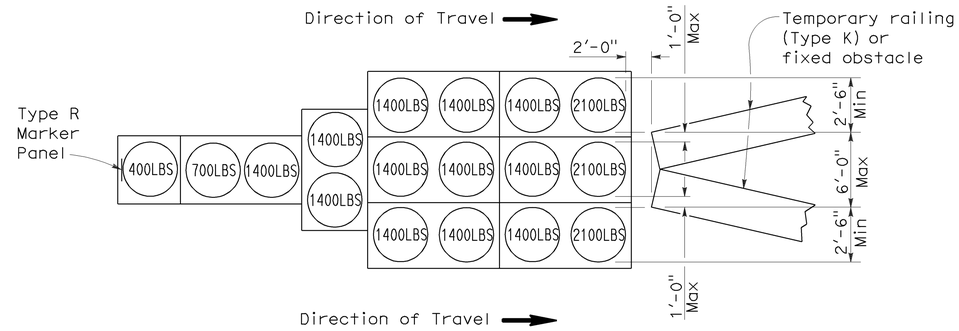


## ARRAY 'TU17'

Approach speed less than 45 mph

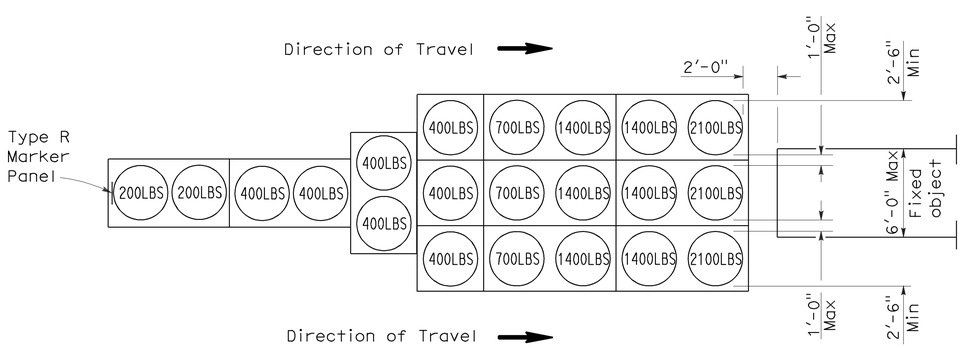


## ARRAY 'TU21'

Approach speed 45 mph or more

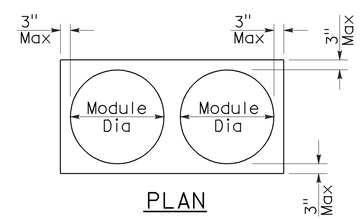


## PLAN

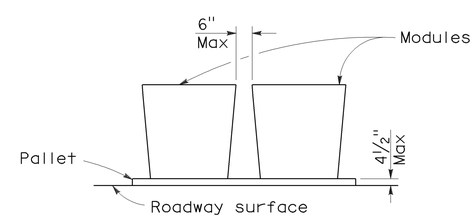


## ELEVATION

## CRASH CUSHION PALLET DETAIL

See Note 7

## NOTES:

1. (XXX) Indicates sand filled module location and weight of sand in pounds for each module. Module spacing is based on the greater diameter of the module.
2. All sand weights are nominal.
3. Temporary crash cushion arrays shall not encroach on the traveled way.
4. Place the top of Type R marker panel 1" below the module lid.
5. Refer to Standard Plan A73B for marker details.
6. Approach speeds indicated conform to NCHRP 350 Report criteria.
7. Use of pallets is optional.

STATE OF CALIFORNIA
DEPARTMENT OF TRANSPORTATION

# TEMPORARY CRASH CUSHION, SAND FILLED (UNIDIRECTIONAL)

NO SCALE

RSP T1A DATED JUNE 6, 2008 SUPERSEDES STANDARD PLAN T1A
DATED MAY 1, 2006 - PAGE 211 OF THE STANDARD PLANS BOOK DATED MAY 2006.

**REVISED STANDARD PLAN RSP T1A**

**2006 REVISED STANDARD PLAN RSP T1A**

| DIST | COUNTY | ROUTE | POST MILES TOTAL PROJECT | SHEET NO. | TOTAL SHEETS |
|---|---|---|---|---|---|
| 07 | LA | 19,22,47,91 110, etc. | Var | 34 | 54 |

REGISTERED CIVIL ENGINEER

October 5, 2007
PLANS APPROVAL DATE

REGISTERED PROFESSIONAL ENGINEER Efthymios Delis No. C51434 Exp. 6-30-08 CIVIL STATE OF CALIFORNIA

*The State of California or its officers or agents shall not be responsible for the accuracy or completeness of electronic copies of this plan sheet.*

*To accompany plans dated* 5-7-12

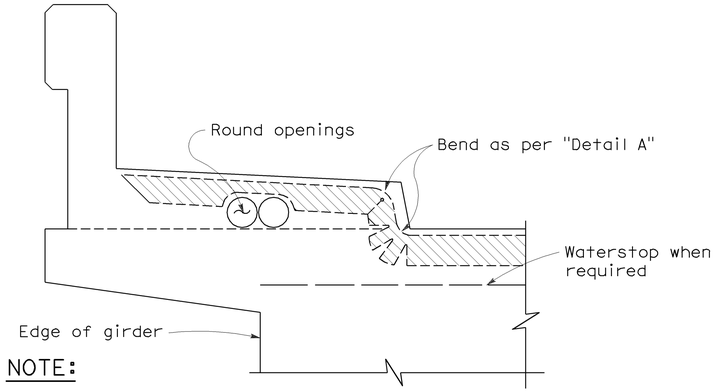


NOTE:

Type "B" seal shown. Type "A" seals to comform to the general path of seal shown, cuts for bending not required. Bend Type "A" seals 3" up into curb or barrier rail on only the low end of the seal.

CONCRETE BARRIER AND SIDEWALK

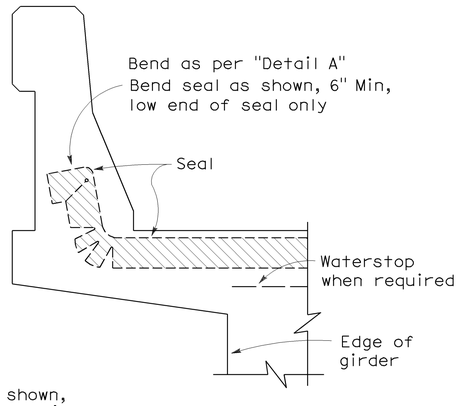


CONCRETE BARRIER

## JOINT SEALS DETAILS

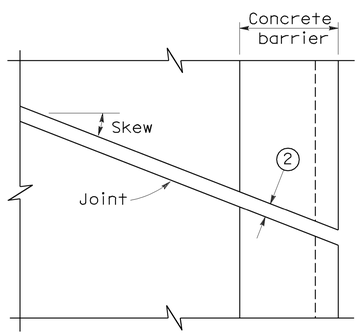


PLAN OF JOINT (SKEW ≤ 20°)

Min ℄ radius to be 4 times uncompressed width of seal or as recommended by the manufacturer, whichever is greater

In lieu of saw cutting, this area may be blocked out and reconstructed to match saw cutting on both sides.

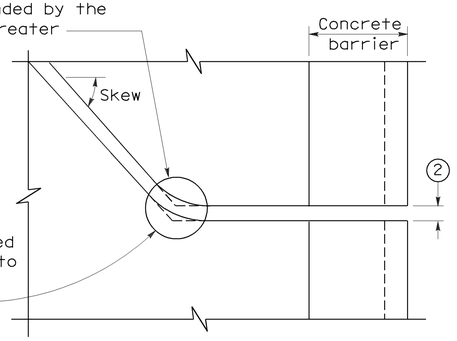


PLAN OF JOINT (SKEW > 20°)

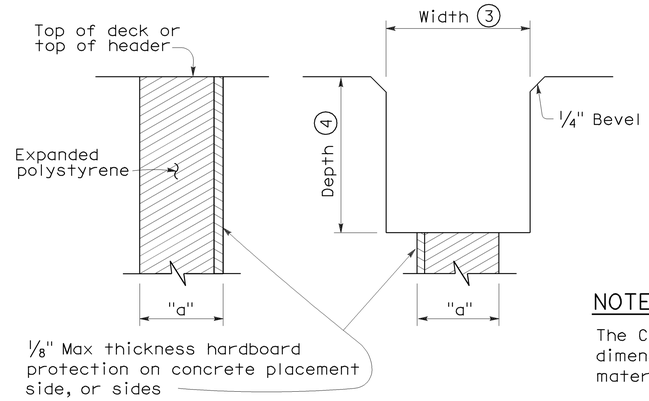


FORMING DETAIL SAWCUT DETAIL

NOTE:

The Contractor shall verify all controlling field dimensions before ordering or fabricatiing any material.

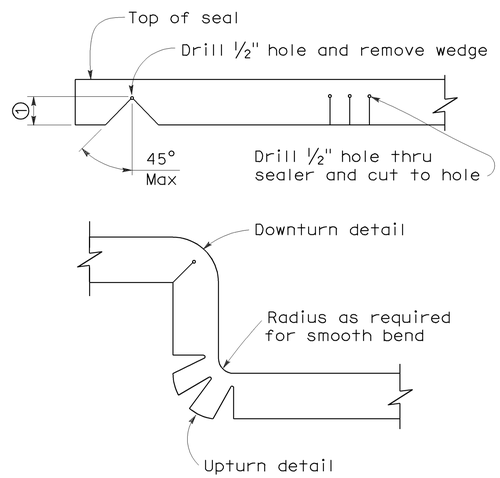


DETAIL A

NOTES:

1. Make smooth cuts from the bottom of seal to 1½" clear of top leaving at least one complete cell between the top of the cut and top of the seal. When necessary cut back of seal to clear conduit and round openings.
2. Opening in barrier to match width of sawn deck joint.
3. Sawcut groove widths shall be as ordered by the Engineer.
4. Depth of sawcut: Type A - Depth to be 2" minimum.
   Type B - Depth to be equal to or greater than the depth of seal measured along the contact surface, when compressed to minimum width position ($W_2$) plus dimensions shown.
5. MR (movement rating) as shown on other plan sheets.
6. Other depths must be approved by the Engineer.

DIMENSIONS "a" OF JOINT REQUIRED

| Movement Rating (MR) 5 | Bridge Type | "a" Dimension Deck Concrete Placed | | |
|---|---|---|---|---|
| | | Winter | Fall-Spring | Summer |
| 2" | All except CIP/PS | 1½" | 1¼" | ¾" |
| | CIP/PS | 1¼" | 1" | ½" |
| 1½" | All except CIP/PS | 1¼" | 1" | ½" |
| | CIP/PS | 1" | ¾" | ½" |
| 1" | All except CIP/PS | 1" | ¾" | ½" |
| | CIP/PS | ¾" | ½" | ½" |
| ½" | All except CIP/PS | ¾" | ¾" | ½" |
| | CIP/PS | ½" | ½" | ½" |

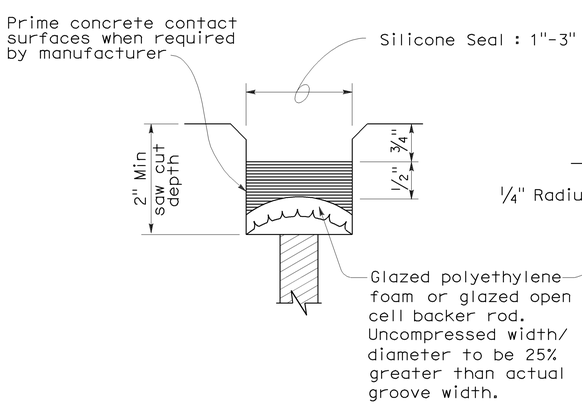


TYPE A SEAL

Movement rating : Silicone = 1" Max

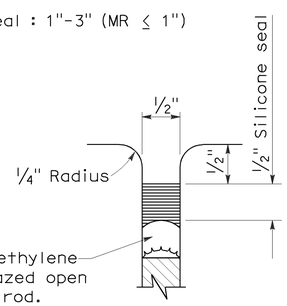


TYPE AL SEAL

Longitudinal joints only

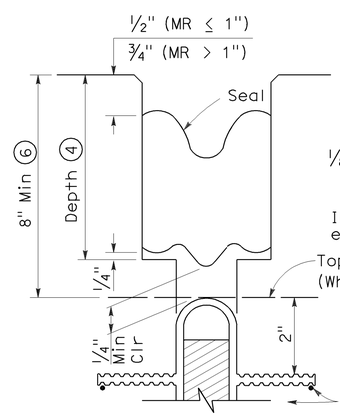


TYPE B JOINT SEAL
IN MINIMUM WIDTH POSITION ($W_2$)

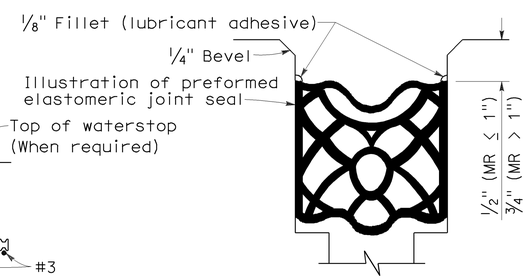


TYPE B SEAL

Movement Rating ≤ 2"

STATE OF CALIFORNIA
DEPARTMENT OF TRANSPORTATION

# JOINT SEALS (MAXIMUM MOVEMENT RATING = 2")

NO SCALE

RSP B6-21 DATED OCTOBER 5, 2007 SUPERSEDES STANDARD PLAN B6-21 DATED MAY 1, 2006 - PAGE 258 OF THE STANDARD PLANS BOOK DATED MAY 2006.

**REVISED STANDARD PLAN RSP B6-21**

**2006 REVISED STANDARD PLAN RSP B6-21**

5-8-07

| DIST | COUNTY | ROUTE | POST MILES TOTAL PROJECT | SHEET NO. | TOTAL SHEETS |
|---|---|---|---|---|---|
| 07 | LA | 19,22,47,91 110, etc. | Var | 35 | 54 |

Randell D. Hiatt
REGISTERED CIVIL ENGINEER

June 6, 2008
PLANS APPROVAL DATE

REGISTERED PROFESSIONAL ENGINEER
Randell D. Hiatt
No. C50200
Exp. 6-30-09
CIVIL
STATE OF CALIFORNIA

*The State of California or its officers or agents shall not be responsible for the accuracy or completeness of electronic copies of this plan sheet.*

*To accompany plans dated* 5-7-12

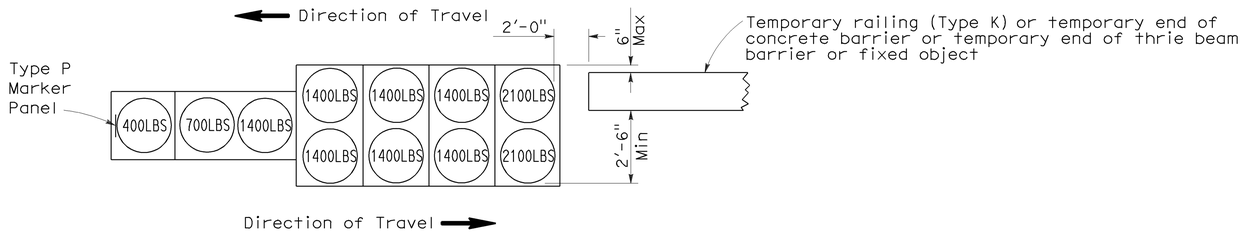


ARRAY 'TB11'

Approach speed less than 45 mph

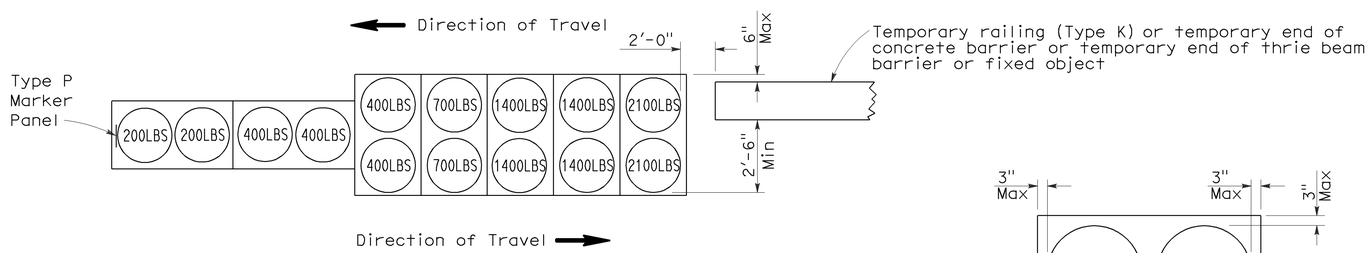


ARRAY 'TB14'

Approach speed 45 mph or more

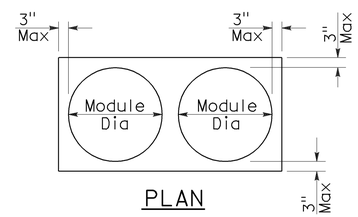


PLAN

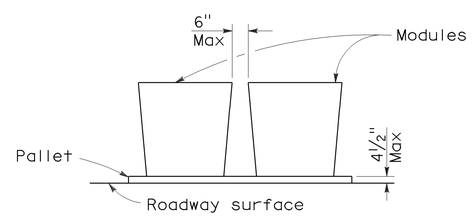


ELEVATION

CRASH CUSHION PALLET DETAIL

See Note 7

NOTES:

1. (XXX) Indicates sand filled module location and weight of sand in pounds for each module. Module spacing is based on the greater diameter of the module.
2. All sand weights are nominal.
3. Temporary crash cushion arrays shall not encroach on the traveled way.
4. Place the Type P marker panel so that the bottom of the panel rests upon the pallet.
5. Refer to Standard Plan A73B for marker details.
6. Approach speeds indicated conform to NCHRP 350 Report criteria.
7. Use of pallets is optional.

STATE OF CALIFORNIA
DEPARTMENT OF TRANSPORTATION

# TEMPORARY CRASH CUSHION, SAND FILLED (BIDIRECTIONAL)

NO SCALE

RSP T1B DATED JUNE 6, 2008 SUPERSEDES STANDARD PLAN T1B
DATED MAY 1, 2006 - PAGE 212 OF THE STANDARD PLANS BOOK DATED MAY 2006.

**REVISED STANDARD PLAN RSP T1B**

**2006 REVISED STANDARD PLAN RSP T1B**

5-15-08

| DIST | COUNTY | ROUTE | POST MILES TOTAL PROJECT | SHEET NO. | TOTAL SHEETS |
|---|---|---|---|---|---|
| 07 | LA | 19,22,47,91 110, *etc.* | Var | 36 | 54 |

Randell D. Hiatt
REGISTERED CIVIL ENGINEER

June 6, 2008
PLANS APPROVAL DATE

REGISTERED PROFESSIONAL ENGINEER
Randell D. Hiatt
No. C50200
Exp. 6-30-09
CIVIL
STATE OF CALIFORNIA

*The State of California or its officers or agents shall not be responsible for the accuracy or completeness of electronic copies of this plan sheet.*

*To accompany plans dated* 5-7-12

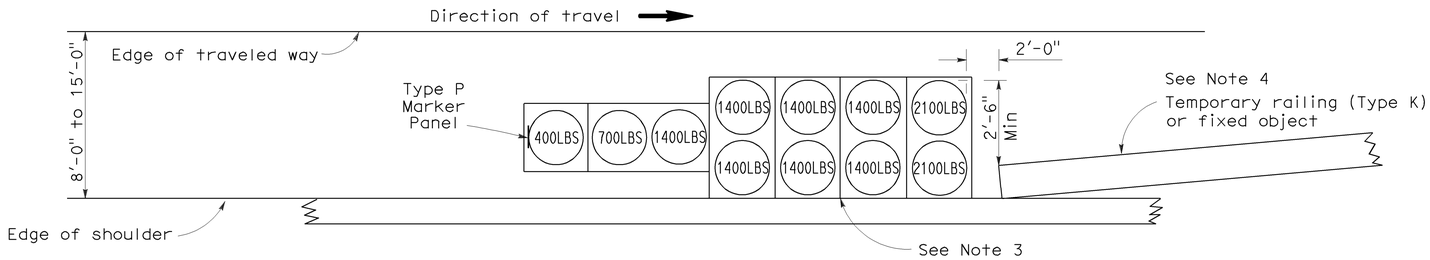


## ARRAY 'TS11'

Approach speed less than 45 mph
See Note 9

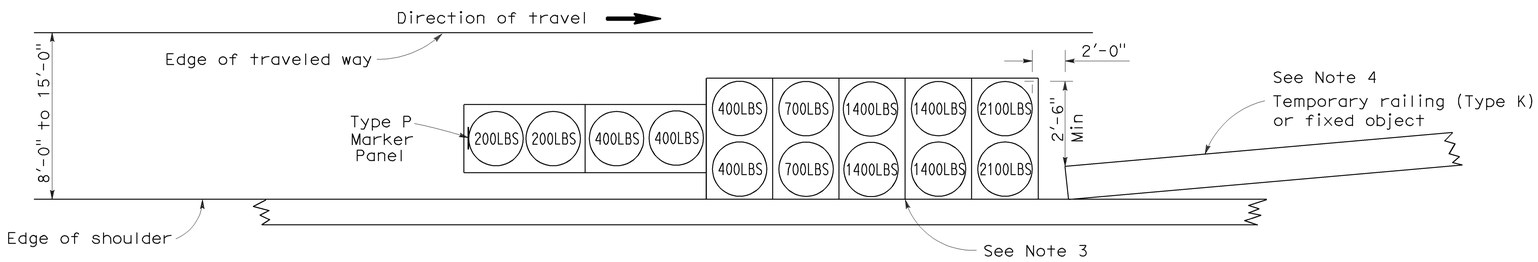


## ARRAY 'TS14'

Approach speed 45 mph or more
See Note 9

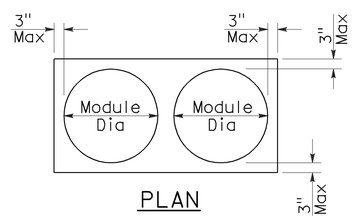


PLAN

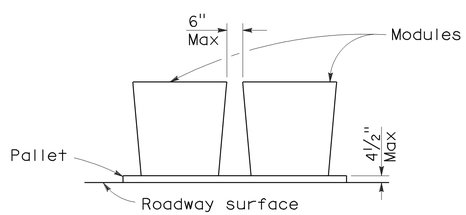


ELEVATION

## CRASH CUSHION PALLET DETAIL

See Note 11

## NOTES:

1. (XXX) Indicates sand filled module location and weight of sand in pounds for each module. Module spacing is based on the greater diameter of the module.
2. All sand weights are nominal.
3. The temporary crash cushion arrays shown on this plan shall be used only in locations where there will be traffic on one side of the temporary crash cushion array.
4. If the fixed object or approach end of the temporary railing is less than 15'-0" from the edge of traveled way, a temporary crash cushion is required in a construction or work zone.
5. Temporary crash cushion arrays shall not encroach on the traveled way.
6. Arrays for median shoulders shall conform to details shown on this plan for outside shoulders.
7. Place the Type P marker panel so that the bottom of the panel rests upon the pallet and faces traffic.
8. Refer to Standard Plan A73B for marker details.
9. For shoulder widths less than 8'-0", appropriate approved crash cushion protection, other than sand filled modules, shall be provided at fixed objects and at approach ends of temporary railing. The specific type of crash cushion shall be as shown on the project plans or as specified in the Special Provisions, or if not shown on the project plans or specified in the Special Provisions, shall be as approved by the Engineer.
10. Approach speeds indicated conform to NCHRP 350 Report criteria.
11. Use of pallets is optional.

STATE OF CALIFORNIA
DEPARTMENT OF TRANSPORTATION

# TEMPORARY CRASH CUSHION, SAND FILLED (SHOULDER INSTALLATIONS)

NO SCALE

RSP T2 DATED JUNE 6, 2008 SUPERSEDES STANDARD PLAN T2
DATED MAY 1, 2006 - PAGE 213 OF THE STANDARD PLANS BOOK DATED MAY 2006.

**REVISED STANDARD PLAN RSP T2**

**2006 REVISED STANDARD PLAN RSP T2**

| DIST | COUNTY | ROUTE | POST MILES TOTAL PROJECT | SHEET No. | TOTAL SHEETS |
|---|---|---|---|---|---|
| 07 | LA | 19,22,47,91 110, etc. | Var | 37 | 54 |

REGISTERED CIVIL ENGINEER 01/09/12 DATE

5-7-12
PLANS APPROVAL DATE

REGISTERED PROFESSIONAL ENGINEER VINH DUC L. DANG No. C65096 Exp. 09/30/13 CIVIL STATE OF CALIFORNIA

*The State of California or its officers or agents shall not be responsible for the accuracy or completeness of electronic copies of this plan sheet.*

## INDEX TO PLANS

| SHEET NO. | TITLE |
|---|---|
| 1 | GENERAL PLAN NO. 1 |
| 2 | GENERAL PLAN NO. 2 |
| 3 | GENERAL PLAN NO. 3 |
| 4 | GENERAL PLAN NO. 4 |
| 5 | GENERAL PLAN NO. 5 |
| 6 | GENERAL PLAN NO. 6 |
| 7 | GENERAL PLAN NO. 7 |
| 8 | GENERAL PLAN NO. 8 |
| 9 | GENERAL PLAN NO. 9 |
| 10 | GENERAL PLAN NO. 10 |
| 11 | GENERAL PLAN NO. 11 |
| 12 | GENERAL PLAN NO. 12 |
| 13 | GENERAL PLAN NO. 13 |
| 14 | GENERAL PLAN NO. 14 |
| 15 | MISCELLANEOUS DETAILS NO. 1 |
| 16 | MISCELLANEOUS DETAILS NO. 2 |
| 17 | MISCELLANEOUS DETAILS NO. 3 |
| 18 | STRUCTURE APPROACH TYPE R(30D) |

## STANDARD PLANS DATED MAY 2006

| SHEET NO. | TITLE |
|---|---|
| A10A | ACRONYMS AND ABBREVIATIONS (SHEET 1 OF 2) |
| A10B | ACRONYMS AND ABBREVIATIONS (SHEET 2 OF 2) |
| A10C | SYMBOLS (SHEET 1 OF 2) |
| A10D | SYMBOLS (SHEET 2 OF 2) |
| RSP B6-21 | JOINT SEALS (MAXIMUM MOVEMENT RATING = 2") |

STANDARD PLAN SHEET NO.

DETAIL NO.

## LEGEND:

Indicates existing.

Indicates direction of traffic.

Indicates limits of prepare concrete bridge deck surface and treat existing bridge deck with high molecular weight methacrylate. Prior to bridge deck treatment, remove unsound concrete and patch with rapid setting concrete.

LOS CERRITOS CHANNEL BRIDGE NO. 53-0215L/R

QUANTITIES

| | | |
|---|---|---|
| REMOVE UNSOUND CONCRETE | 39 | CF |
| PREPARE CONCRETE BRIDGE DECK SURFACE | 15,525 | SQFT |
| RAPID SETTING CONCRETE PATCH | 39 | CF |
| TREAT BRIDGE DECK | 15,525 | SQFT |
| PUBLIC SAFETY PLAN | LUMP | SUM |
| FURNISH BRIDGE DECK TREATMENT MATERIAL | 195 | GAL |

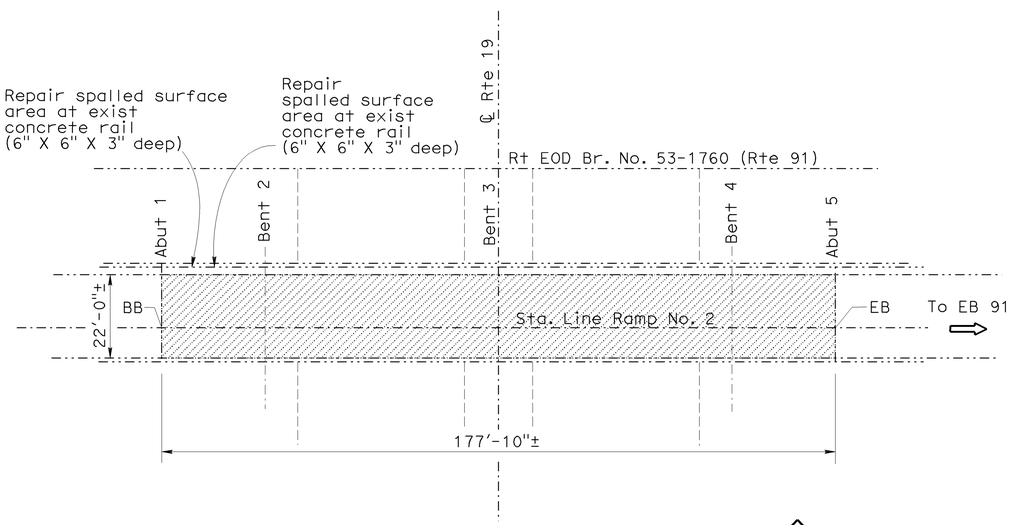


## S19-E91 CONNECTOR OC

Br No. 53-1760F, Rte 19, PM 6.03
1" = 20'

S19-E91 CONNECTOR OVERCROSSING BRIDGE NO. 53-1760F

QUANTITIES

| | | |
|---|---|---|
| REMOVE UNSOUND CONCRETE | 10 | CF |
| PREPARE CONCRETE BRIDGE DECK SURFACE | 3,915 | SQFT |
| RAPID SETTING CONCRETE PATCH | 10 | CF |
| REPAIR SPALLED SURFACE AREA | 2 | SQFT |
| TREAT BRIDGE DECK | 3,915 | SQFT |
| FURNISH BRIDGE DECK TREATMENT MATERIAL | 49 | GAL |

NOTE:
THE CONTRACTOR SHALL VERIFY ALL CONTROLLING FIELD DIMENSIONS BEFORE ORDERING OR FABRICATING ANY MATERIAL. EXISTING UTILITY FACILITIES HAVE NOT BEEN PLOTTED ON THESE PLANS.

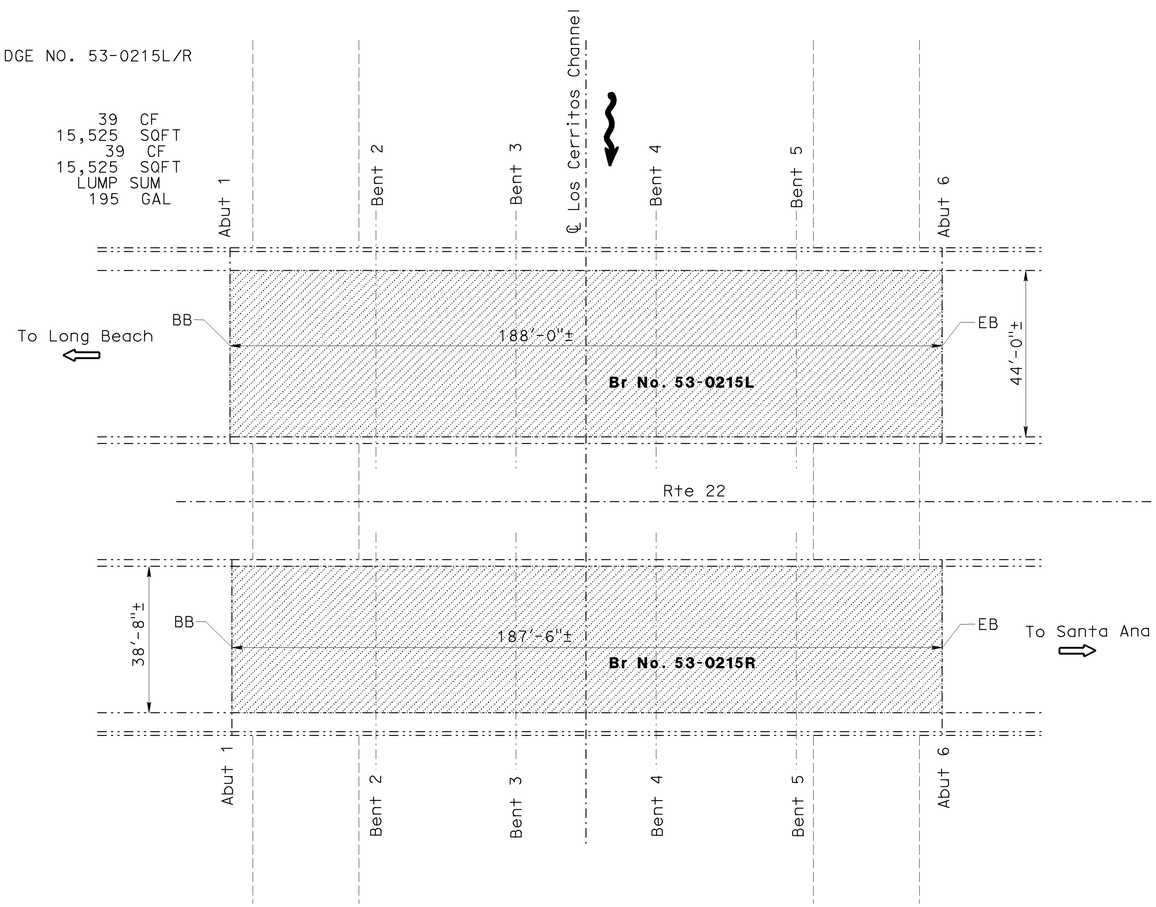


## LOS CERRITOS CHANNEL

Br No. 53-0215L/R, Rte 22, PM 1.09
1" = 20'

TONY D. BRAKE
DESIGN ENGINEER

| | BY | CHECKED | LOAD FACTOR DESIGN | LIVE LOADING: HS20-44 AND ALTERNATIVE AND PERMIT DESIGN LOAD | |
|---|---|---|---|---|---|
| DESIGN | Vinh Dang | Ramesh Patel | | | |
| DETAILS | Tom Dang | Vinh Dang | LAYOUT | Vinh Dang | Hong Tien Tran |
| QUANTITIES | Vinh Dang | Ramesh Patel | SPECIFICATIONS | Dave Klein | Dave Klein |

STATE OF CALIFORNIA
DEPARTMENT OF TRANSPORTATION

DIVISION OF MAINTENANCE
STRUCTURE MAINTENANCE DESIGN

BRIDGE NO. Various
POST MILE Varies

ROUTE 19, 22, 47, 91, 110, 605, 710 BRIDGES
GENERAL PLAN NO. 1

STRUCTURES MAINTENANCE GENERAL PLAN SHEET (ENGLISH) (REV. 09-01-10)

ORIGINAL SCALE IN INCHES FOR REDUCED PLANS 0 1 2 3

UNIT: 07602
PROJECT NUMBER & PHASE: 0700001896
CONTRACT NO.: 4Y7501

DISREGARD PRINTS BEARING EARLIER REVISION DATES

REVISION DATES 3/1/11

SHEET 1 OF 18

FILE => 07-4y7501-a-gp01.dgn

USERNAME => s129239 DATE PLOTTED => 02-APR-2012 TIME PLOTTED => 06:48

| DIST | COUNTY | ROUTE | POST MILES TOTAL PROJECT | SHEET No. | TOTAL SHEETS |
|---|---|---|---|---|---|
| 07 | LA | 19,22,47,91 110, etc. | Var | 38 | 54 |

REGISTERED CIVIL ENGINEER 01/09/12 DATE

5-7-12
PLANS APPROVAL DATE

REGISTERED PROFESSIONAL ENGINEER VINH DUC L. DANG No. C65096 Exp. 09/30/13 CIVIL STATE OF CALIFORNIA

*The State of California or its officers or agents shall not be responsible for the accuracy or completeness of electronic copies of this plan sheet.*

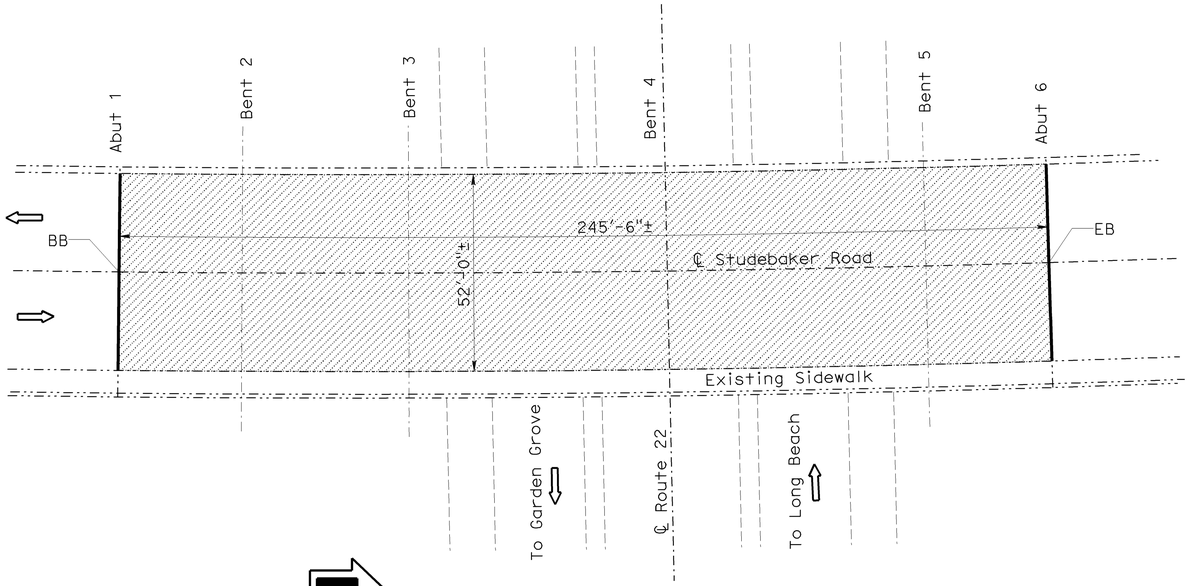


## LEGEND:

Indicates existing.

Indicates direction of traffic.

Indicates limits of clean expansion joint and placement of new joint seal. Prior to placement of new joint, remove unsound concrete and patch with rapid setting concrete.

Indicates limits of prepare concrete bridge deck surface and treat existing bridge deck with high molecular weight methacrylate. Prior to bridge deck treatment, remove unsound concrete and patch with rapid setting concrete.

## NOTE:

1. Indicates location of existing steel plate assembly.

## STUDEBAKER ROAD OC

Br No. 53-1427, Rte 22, PM 1.14
1" = 20'

STUDEBAKER ROAD OVERCROSSING — BRIDGE NO. 53-1427

QUANTITIES

| | | |
|---|---|---|
| REMOVE UNSOUND CONCRETE | 34 | CF |
| PREPARE CONCRETE BRIDGE DECK SURFACE | 12,770 | SQFT |
| CLEAN EXPANSION JOINT | 104 | LF |
| RAPID SETTING CONCRETE PATCH | 34 | CF |
| JOINT SEAL (MR 1/2") | 104 | LF |
| TREAT BRIDGE DECK | 12,770 | SQFT |
| FURNISH BRIDGE DECK TREATMENT MATERIAL | 160 | GAL |

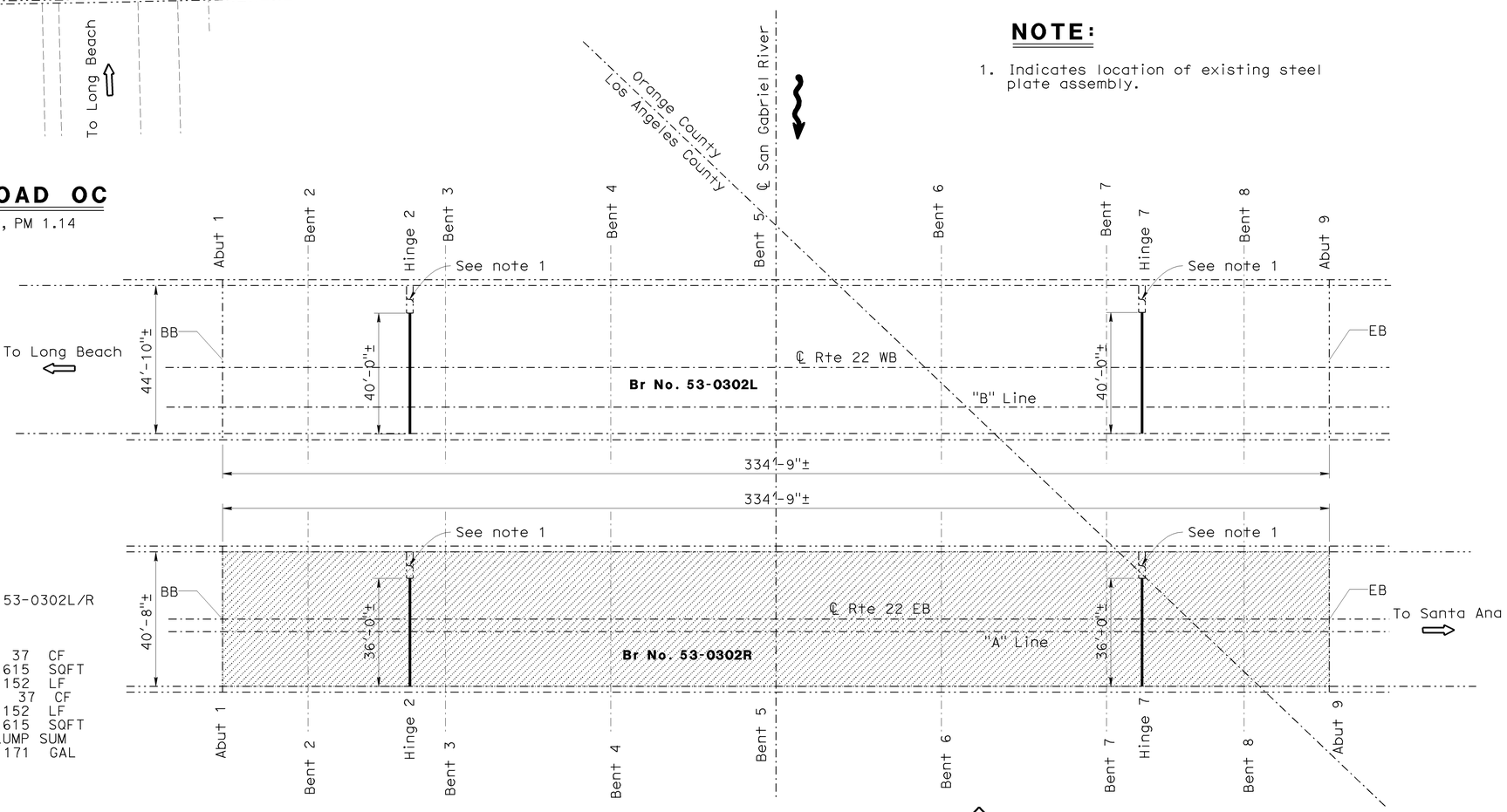


SAN GABRIEL RIVER — BRIDGE NO. 53-0302L/R

QUANTITIES

| | | |
|---|---|---|
| REMOVE UNSOUND CONCRETE | 37 | CF |
| PREPARE CONCRETE BRIDGE DECK SURFACE | 13,615 | SQFT |
| CLEAN EXPANSION JOINT | 152 | LF |
| RAPID SETTING CONCRETE PATCH | 37 | CF |
| JOINT SEAL (MR 1/2") | 152 | LF |
| TREAT BRIDGE DECK | 13,615 | SQFT |
| PUBLIC SAFETY PLAN | LUMP | SUM |
| FURNISH BRIDGE DECK TREATMENT MATERIAL | 171 | GAL |

NOTE:
THE CONTRACTOR SHALL VERIFY ALL CONTROLLING FIELD DIMENSIONS BEFORE ORDERING OR FABRICATING ANY MATERIAL. EXISTING UTILITY FACILITIES HAVE NOT BEEN PLOTTED ON THESE PLANS.

## SAN GABRIEL RIVER

Br No. 53-0302L/R, Rte 22, PM 1.42
1" = 20'

TONY D. BRAKE
DESIGN ENGINEER

| | BY | CHECKED |
|---|---|---|
| DESIGN | Vinh Dang | Ramesh Patel |
| DETAILS | Tom Dang | Vinh Dang |
| QUANTITIES | Vinh Dang | Ramesh Patel |

LOAD FACTOR DESIGN — LIVE LOADING: HS20-44 AND ALTERNATIVE AND PERMIT DESIGN LOAD
LAYOUT — BY Vinh Dang — CHECKED Hong Tien Tran
SPECIFICATIONS — BY Dave Klein — PLANS AND SPECS COMPARED Dave Klein

STATE OF CALIFORNIA
DEPARTMENT OF TRANSPORTATION

DIVISION OF MAINTENANCE
STRUCTURE MAINTENANCE DESIGN

BRIDGE NO.: Various
POST MILE: Varies

ROUTE 19, 22, 47, 91, 110, 605, 710 BRIDGES
GENERAL PLAN NO. 2

STRUCTURES MAINTENANCE GENERAL PLAN SHEET (ENGLISH) (REV. 09-01-10)

ORIGINAL SCALE IN INCHES FOR REDUCED PLANS 0 1 2 3

UNIT: 07602
PROJECT NUMBER & PHASE: 0700001896
CONTRACT NO.: 4Y7501

DISREGARD PRINTS BEARING EARLIER REVISION DATES 3/1/11

REVISION DATES | SHEET 2 OF 18

FILE => 07-4y7501-a-gp02.dgn

USERNAME => s129239 DATE PLOTTED => 02-APR-2012 TIME PLOTTED => 06:48

| DIST | COUNTY | ROUTE | POST MILES TOTAL PROJECT | SHEET No. | TOTAL SHEETS |
|---|---|---|---|---|---|
| 07 | LA | 19,22,47,91 110, etc. | Var | 39 | 54 |

REGISTERED CIVIL ENGINEER 01/09/12 DATE

5-7-12
PLANS APPROVAL DATE

REGISTERED PROFESSIONAL ENGINEER
VINH DUC L. DANG
No. C65096
Exp. 09/30/13
CIVIL
STATE OF CALIFORNIA

*The State of California or its officers or agents shall not be responsible for the accuracy or completeness of electronic copies of this plan sheet.*

## LEGEND:

Indicates existing.

Indicates direction of traffic.

Indicates limits of clean expansion joint and placement of new joint seal. Prior to placement of new joint, remove unsound concrete and patch with rapid setting concrete.

Indicates limits of prepare concrete bridge deck surface and treat existing bridge deck with high molecular weight methacrylate. Prior to bridge deck treatment, remove unsound concrete and patch with rapid setting concrete.

HARBOR BOULEVARD OFF-RAMP BRIDGE NO. 53-0807

QUANTITIES

| | | |
|---|---|---|
| REMOVE UNSOUND CONCRETE | 25 | CF |
| PREPARE CONCRETE BRIDGE DECK SURFACE | 9,440 | SQFT |
| CLEAN EXPANSION JOINT | 164 | LF |
| RAPID SETTING CONCRETE PATCH | 25 | CF |
| JOINT SEAL (MR 1/2") | 164 | LF |
| TREAT BRIDGE DECK | 9,440 | SQFT |
| FURNISH BRIDGE DECK TREATMENT MATERIAL | 118 | GAL |

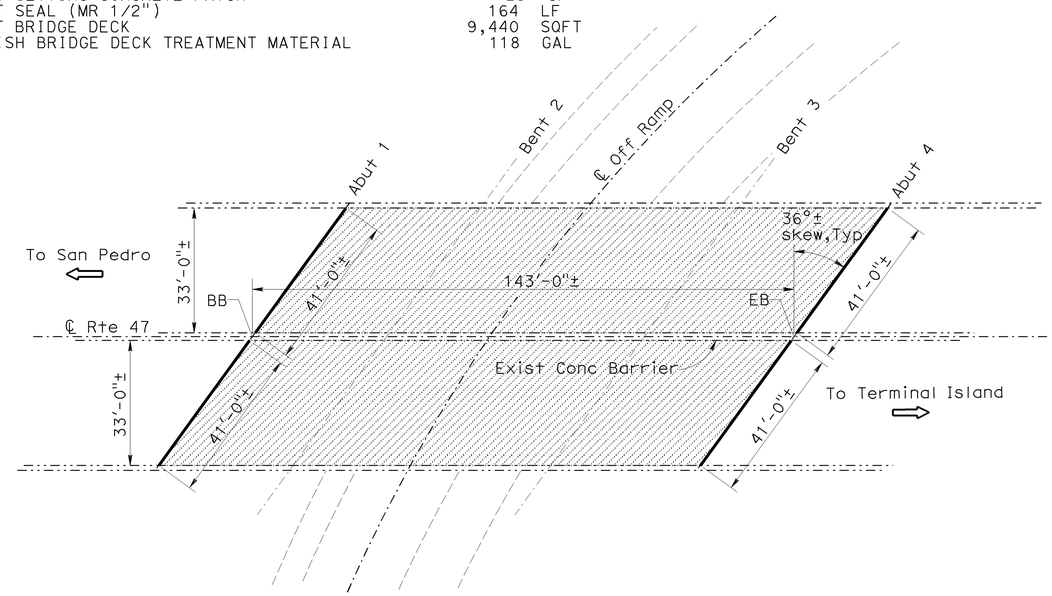


## HARBOR BLVD OFF-RAMP UC

Br No. 53-0807, Rte 47, PM 0.73
1" = 20'

DOMINGUEZ CHANNEL BRIDGE NO. 53-2760Y

QUANTITIES

| | | |
|---|---|---|
| REMOVE UNSOUND CONCRETE | 8 | CF |
| PREPARE CONCRETE BRIDGE DECK SURFACE | 2,975 | SQFT |
| RAPID SETTING CONCRETE PATCH | 8 | CF |
| TREAT BRIDGE DECK | 2,975 | SQFT |
| PUBLIC SAFETY PLAN | LUMP SUM | |
| FURNISH BRIDGE DECK TREATMENT MATERIAL | 38 | GAL |

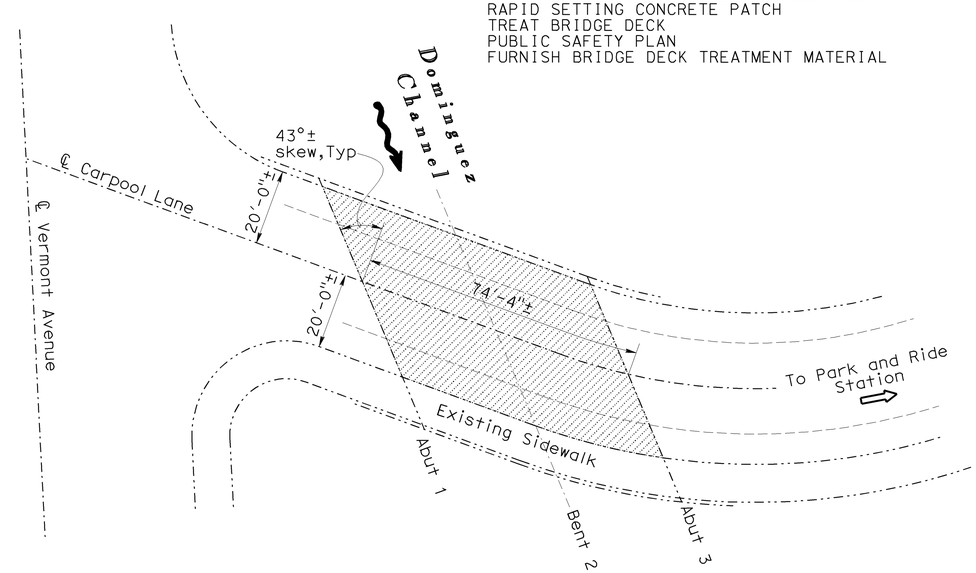


## DOMINGUEZ CHANNEL

Br No. 53-2760Y, Rte 91, PM 6.03
1" = 20'

NOTE:
THE CONTRACTOR SHALL VERIFY ALL CONTROLLING FIELD DIMENSIONS BEFORE ORDERING OR FABRICATING ANY MATERIAL. EXISTING UTILITY FACILITIES HAVE NOT BEEN PLOTTED ON THESE PLANS.

TONY D. BRAKE
DESIGN ENGINEER

| | BY | CHECKED | | | |
|---|---|---|---|---|---|
| DESIGN | Vinh Dang | Ramesh Patel | LOAD FACTOR DESIGN | LIVE LOADING: HS20-44 AND ALTERNATIVE AND PERMIT DESIGN LOAD | |
| DETAILS | Tom Dang | Vinh Dang | LAYOUT | Vinh Dang | Hong Tien Tran |
| QUANTITIES | Vinh Dang | Ramesh Patel | SPECIFICATIONS | Dave Klein | PLANS AND SPECS COMPARED Dave Klein |

STATE OF CALIFORNIA
DEPARTMENT OF TRANSPORTATION

DIVISION OF MAINTENANCE
STRUCTURE MAINTENANCE DESIGN

BRIDGE NO. Various
POST MILE Varies

ROUTE 19, 22, 47, 91, 110, 605, 710 BRIDGES
GENERAL PLAN NO. 3

STRUCTURES MAINTENANCE GENERAL PLAN SHEET (ENGLISH) (REV. 09-01-10)

ORIGINAL SCALE IN INCHES FOR REDUCED PLANS 0 1 2 3

UNIT: 07602
PROJECT NUMBER & PHASE: 0700001896
CONTRACT NO.: 4Y7501

DISREGARD PRINTS BEARING EARLIER REVISION DATES

REVISION DATES 3/1/11

SHEET 3 OF 18

FILE => 07-4y7501-a-gp03.dgn

USERNAME => s1292339 DATE PLOTTED => 02-APR-2012 TIME PLOTTED => 06:48

| DIST | COUNTY | ROUTE | POST MILES TOTAL PROJECT | SHEET No. | TOTAL SHEETS |
|---|---|---|---|---|---|
| 07 | LA | 19,22,47,91 110, etc. | Var | 40 | 54 |

REGISTERED CIVIL ENGINEER 01/09/12 DATE

5-7-12
PLANS APPROVAL DATE

REGISTERED PROFESSIONAL ENGINEER VINH DUC L. DANG No. C65096 Exp. 09/30/13 CIVIL STATE OF CALIFORNIA

*The State of California or its officers or agents shall not be responsible for the accuracy or completeness of electronic copies of this plan sheet.*

W91-N110 CONNECTOR OVERCROSSING BRIDGE NO. 53-2666F

QUANTITIES

| | | |
|---|---|---|
| REMOVE UNSOUND CONCRETE | 7 | CF |
| PREPARE CONCRETE BRIDGE DECK SURFACE | 2,545 | SQFT |
| RAPID SETTING CONCRETE PATCH | 7 | CF |
| TREAT BRIDGE DECK | 2,545 | SQFT |
| PUBLIC SAFETY PLAN | LUMP | SUM |
| FURNISH BRIDGE DECK TREATMENT MATERIAL | 32 | GAL |

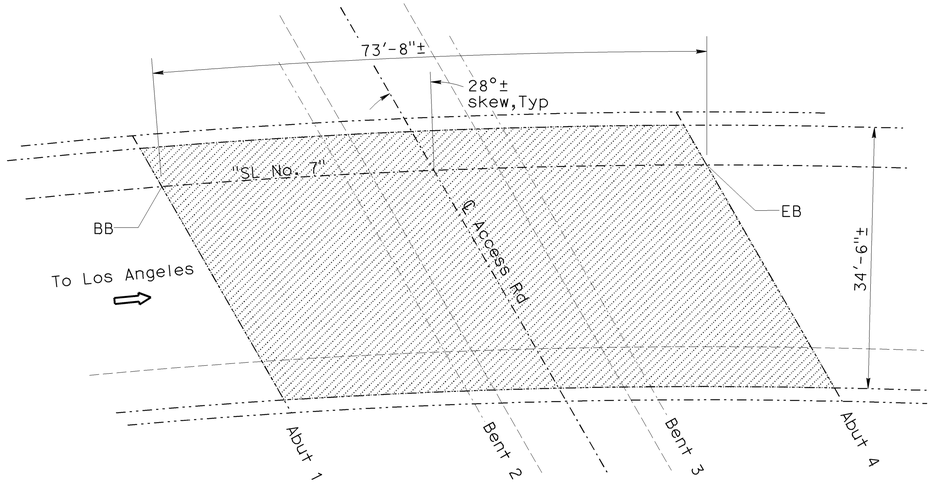


## W91-N110 CONNECTOR OC

Br No. 53-2666F, Rte 91, PM 6.39
1" = 10'

## LEGEND:

Indicates existing.

Indicates direction of traffic.

Indicates limits of prepare concrete bridge deck surface and treat existing bridge deck with high molecular weight methacrylate. Prior to bridge deck treatment, remove unsound concrete and patch with rapid setting concrete.

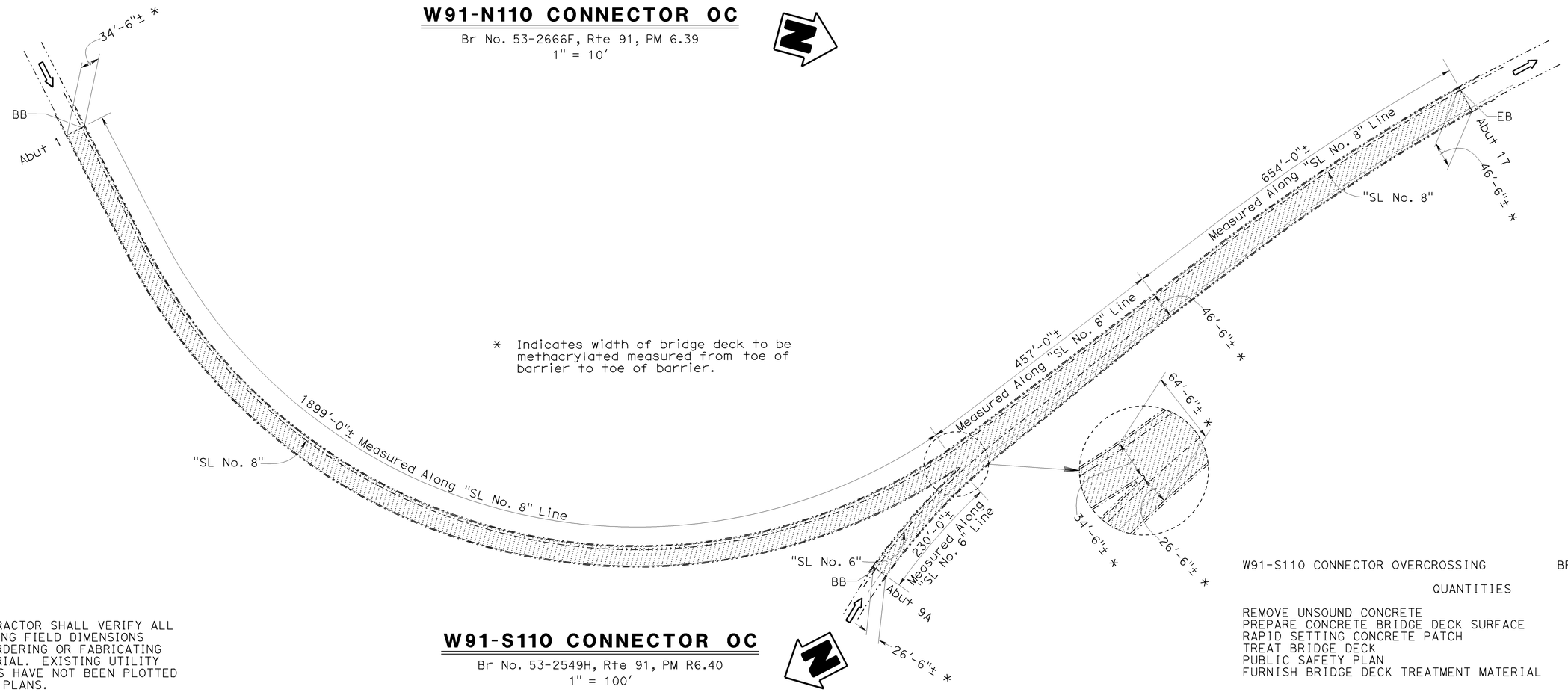


* Indicates width of bridge deck to be methacrylated measured from toe of barrier to toe of barrier.

## W91-S110 CONNECTOR OC

Br No. 53-2549H, Rte 91, PM R6.40
1" = 100'

NOTE:
THE CONTRACTOR SHALL VERIFY ALL CONTROLLING FIELD DIMENSIONS BEFORE ORDERING OR FABRICATING ANY MATERIAL. EXISTING UTILITY FACILITIES HAVE NOT BEEN PLOTTED ON THESE PLANS.

W91-S110 CONNECTOR OVERCROSSING BRIDGE NO. 53-2549H

QUANTITIES

| | | |
|---|---|---|
| REMOVE UNSOUND CONCRETE | 319 | CF |
| PREPARE CONCRETE BRIDGE DECK SURFACE | 127,385 | SQFT |
| RAPID SETTING CONCRETE PATCH | 319 | CF |
| TREAT BRIDGE DECK | 127,385 | SQFT |
| PUBLIC SAFETY PLAN | LUMP | SUM |
| FURNISH BRIDGE DECK TREATMENT MATERIAL | 1,593 | GAL |

TONY D. BRAKE
DESIGN ENGINEER

| | BY | CHECKED | | | |
|---|---|---|---|---|---|
| DESIGN | Vinh Dang | Ramesh Patel | LOAD FACTOR DESIGN | LIVE LOADING: HS20-44 AND ALTERNATIVE AND PERMIT DESIGN LOAD | |
| DETAILS | Tom Dang | Vinh Dang | LAYOUT | Vinh Dang | Hong Tien Tran |
| QUANTITIES | Vinh Dang | Ramesh Patel | SPECIFICATIONS | Dave Klein | Dave Klein |

STATE OF CALIFORNIA
DEPARTMENT OF TRANSPORTATION

DIVISION OF MAINTENANCE
STRUCTURE MAINTENANCE DESIGN

BRIDGE NO. Various
POST MILE Varies

ROUTE 19, 22, 47, 91, 110, 605, 710 BRIDGES
GENERAL PLAN NO. 4

STRUCTURES MAINTENANCE GENERAL PLAN SHEET (ENGLISH) (REV. 09-01-10)

ORIGINAL SCALE IN INCHES FOR REDUCED PLANS 0 1 2 3

UNIT: 07602
PROJECT NUMBER & PHASE: 0700001896
CONTRACT NO.: 4Y7501

DISREGARD PRINTS BEARING EARLIER REVISION DATES 3/1/11

REVISION DATES | SHEET 4 | OF 18

FILE => 07-4y7501-g-gp04.dgn

USERNAME => s129239 DATE PLOTTED => 02-APR-2012 TIME PLOTTED => 08:48

| DIST | COUNTY | ROUTE | POST MILES TOTAL PROJECT | SHEET No. | TOTAL SHEETS |
|---|---|---|---|---|---|
| 07 | LA | 19,22,47,91 110, etc. | Var | 41 | 54 |

REGISTERED CIVIL ENGINEER 01/09/12 DATE

5-7-12
PLANS APPROVAL DATE

REGISTERED PROFESSIONAL ENGINEER VINH DUC L. DANG No. C65096 Exp. 09/30/13 CIVIL STATE OF CALIFORNIA

*The State of California or its officers or agents shall not be responsible for the accuracy or completeness of electronic copies of this plan sheet.*

## LEGEND:

Indicates existing.

Indicates direction of traffic.

Indicates limits of prepare concrete bridge deck surface and treat existing bridge deck with high molecular weight methacrylate. Prior to bridge deck treatment, remove unsound concrete and patch with rapid setting concrete.

Indicates limits of remove existing approach and place new Structure Approach Type R(30D). For details see "STRUCTURE APPROACH TYPE R(30D)" sheet.

Indicates limits of clean expansion joint and placement of new joint seal. Prior to placement of new joint, remove unsound concrete and patch with rapid setting concrete.

Indicates limits of placement of new joint seal. Prior to placement of new joint seal, remove unsound concrete and patch with rapid setting concrete.

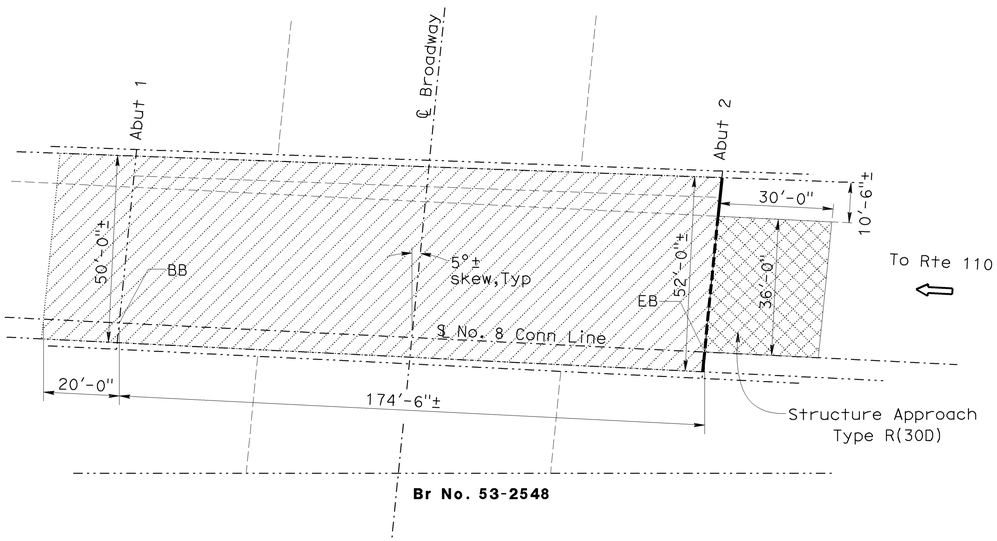


## W91-N110 CONNECTOR (BROADWAY)

Br No. 53-2663F, Rte 91, PM 6.73
1" = 20'

W91-N110 CONNECTOR (BROADWAY) BRIDGE NO. 53-2663F

QUANTITIES

| | | |
|---|---|---|
| REMOVE UNSOUND CONCRETE | 26 | CF |
| PREPARE CONCRETE BRIDGE DECK SURFACE | 9,900 | SQFT |
| AGGREGATE BASE (APPROACH SLAB) | 4 | CY |
| STRUCTURAL CONCRETE, APPROACH SLAB (TYPE R) | 40 | CY |
| PAVING NOTCH EXTENSION | 27 | CF |
| CLEAN EXPANSION JOINT | 16 | LF |
| RAPID SETTING CONCRETE PATCH | 26 | CF |
| JOINT SEAL (MR 1/2") | 52 | LF |
| TREAT BRIDGE DECK | 9,900 | SQFT |
| PUBLIC SAFETY PLAN | LUMP | SUM |
| FURNISH BRIDGE DECK TREATMENT MATERIAL | 124 | GAL |

NOTE:
THE CONTRACTOR SHALL VERIFY ALL CONTROLLING FIELD DIMENSIONS BEFORE ORDERING OR FABRICATING ANY MATERIAL. EXISTING UTILITY FACILITIES HAVE NOT BEEN PLOTTED ON THESE PLANS.

MAIN STREET UNDERCROSSING BRIDGE NO. 53-2547

QUANTITIES

| | | |
|---|---|---|
| REMOVE UNSOUND CONCRETE | 1 | CF |
| CLEAN EXPANSION JOINT | 207 | LF |
| RAPID SETTING CONCRETE PATCH | 1 | CF |
| JOINT SEAL (MR 1/2") | 207 | LF |

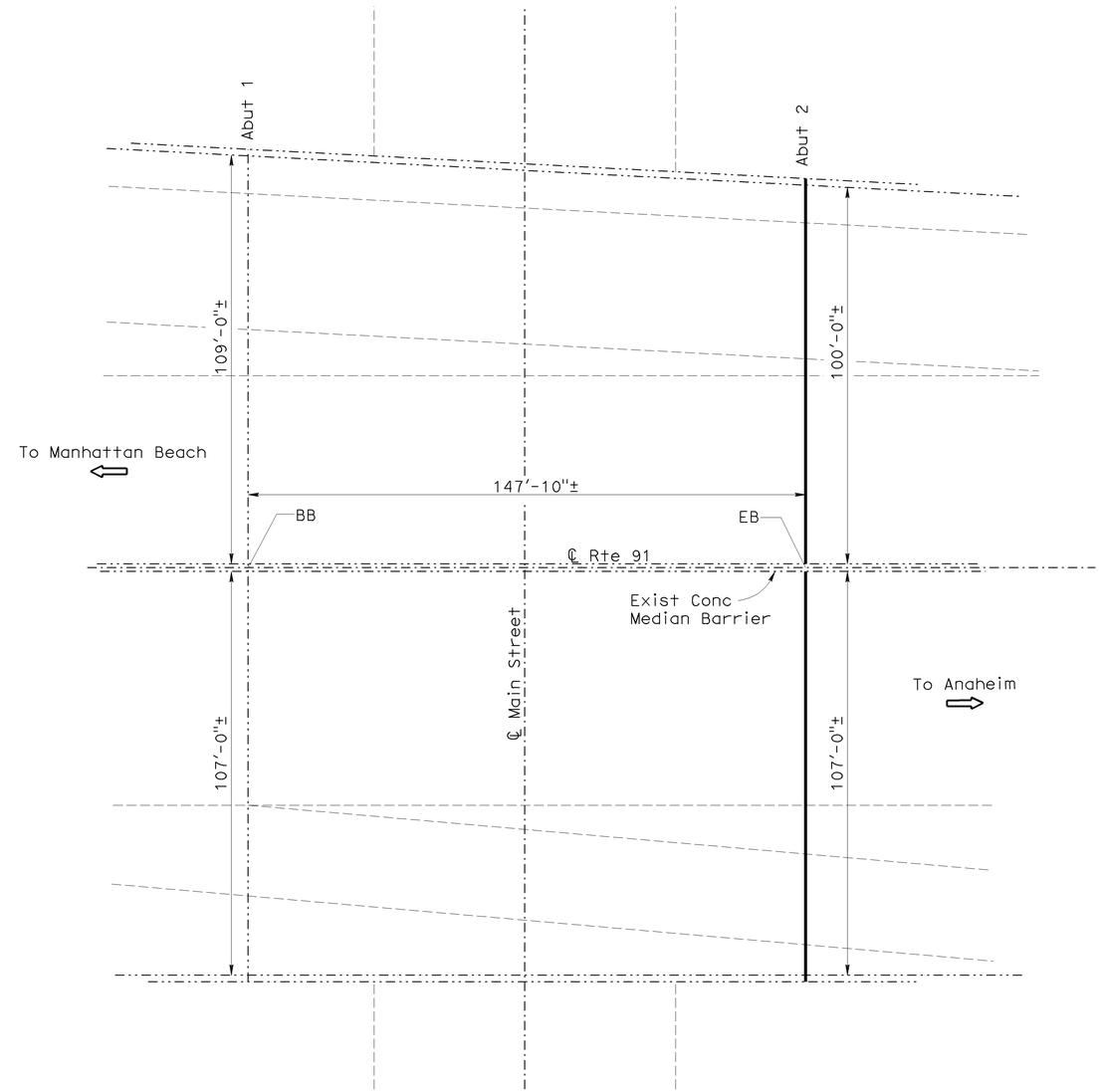


## MAIN STREET UC

Br No. 53-2547, Rte 91, PM 6.90
1" = 20'

TONY D. BRAKE
DESIGN ENGINEER

| | BY | CHECKED | | | |
|---|---|---|---|---|---|
| DESIGN | Vinh Dang | Ramesh Patel | LOAD FACTOR DESIGN | LIVE LOADING: HS20-44 AND ALTERNATIVE AND PERMIT DESIGN LOAD | |
| DETAILS | Tom Dang | Vinh Dang | LAYOUT | Vinh Dang | Hong Tien Tran |
| QUANTITIES | Vinh Dang | Ramesh Patel | SPECIFICATIONS | Dave Klein | Dave Klein |

STATE OF CALIFORNIA
DEPARTMENT OF TRANSPORTATION

DIVISION OF MAINTENANCE
STRUCTURE MAINTENANCE DESIGN

BRIDGE NO. Various
POST MILE Varies

ROUTE 19, 22, 47, 91, 110, 605, 710 BRIDGES
GENERAL PLAN NO. 5

STRUCTURES MAINTENANCE GENERAL PLAN SHEET (ENGLISH) (REV. 09-01-10)

ORIGINAL SCALE IN INCHES FOR REDUCED PLANS 0 1 2 3

UNIT: 07602
PROJECT NUMBER & PHASE: 0700001896
CONTRACT NO.: 4Y7501

DISREGARD PRINTS BEARING EARLIER REVISION DATES
REVISION DATES 3/1/11

SHEET 5 OF 18

FILE => 07-4y7501-a-gp05.dgn

USERNAME => s129239 DATE PLOTTED => 02-APR-2012 TIME PLOTTED => 06:48

| DIST | COUNTY | ROUTE | POST MILES TOTAL PROJECT | SHEET No. | TOTAL SHEETS |
|---|---|---|---|---|---|
| 07 | LA | 19,22,47,91 110, etc. | Var | 42 | 54 |

REGISTERED CIVIL ENGINEER 01/09/12 DATE

5-7-12
PLANS APPROVAL DATE

REGISTERED PROFESSIONAL ENGINEER VINH DUC L. DANG No. C65096 Exp. 09/30/13 CIVIL STATE OF CALIFORNIA

*The State of California or its officers or agents shall not be responsible for the accuracy or completeness of electronic copies of this plan sheet.*

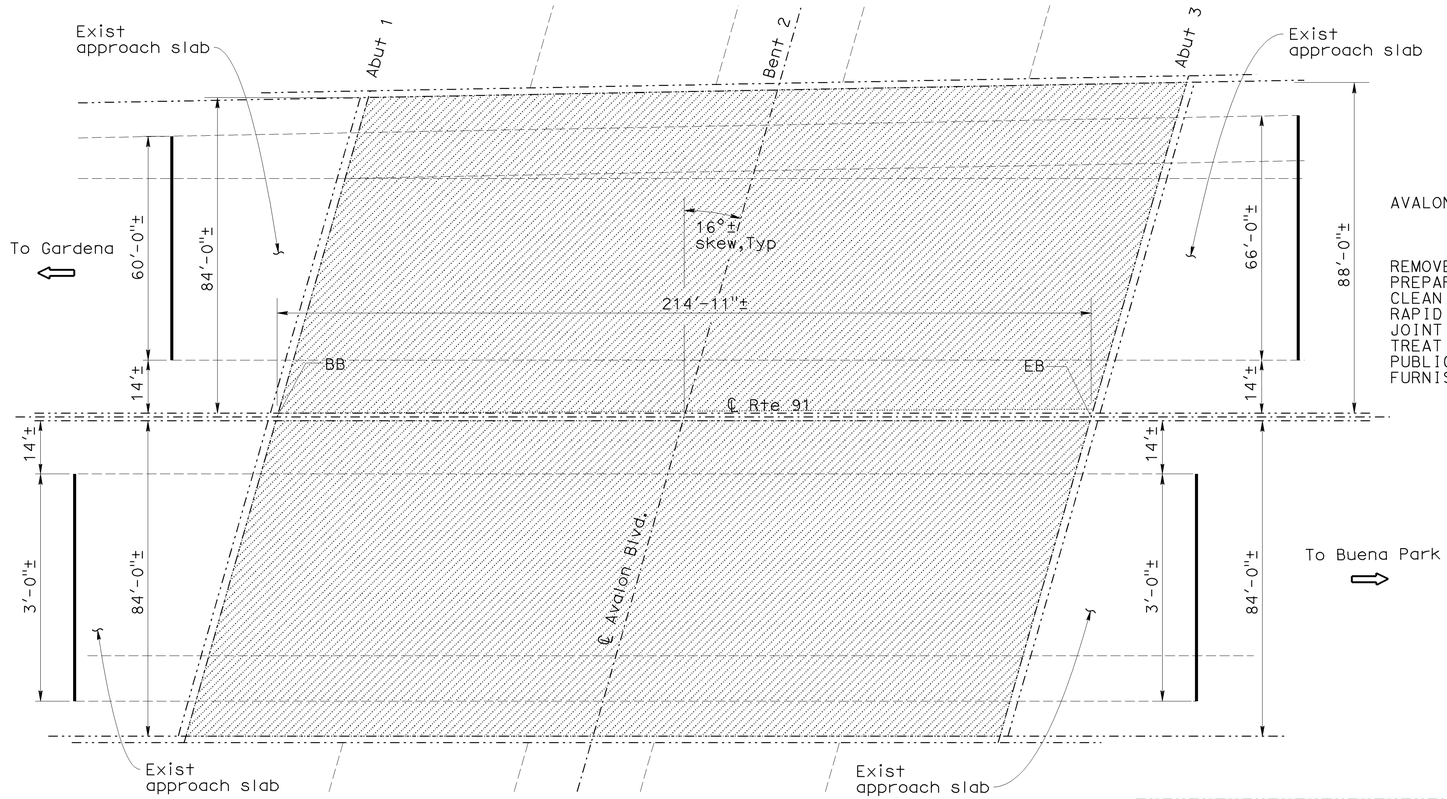


## AVALON BLVD UC

Br No. 53-2458, Rte 91, PM R7.44
1" = 20'

AVALON BOULEVARD UNDERCROSSING BRIDGE NO. 53-2458

QUANTITIES

| | | |
|---|---|---|
| REMOVE UNSOUND CONCRETE | 94 | CF |
| PREPARE CONCRETE BRIDGE DECK SURFACE | 36,540 | SQFT |
| CLEAN EXPANSION JOINT | 246 | LF |
| RAPID SETTING CONCRETE PATCH | 94 | CF |
| JOINT SEAL (MR 1/2") | 246 | LF |
| TREAT BRIDGE DECK | 36,540 | SQFT |
| PUBLIC SAFETY PLAN | LUMP | SUM |
| FURNISH BRIDGE DECK TREATMENT MATERIAL | 457 | GAL |

CENTRAL AVENUE OVERCROSSING BRIDGE NO. 53-2459

QUANTITIES

| | | |
|---|---|---|
| REMOVE UNSOUND CONCRETE | 54 | CF |
| PREPARE CONCRETE BRIDGE DECK SURFACE | 21,250 | SQFT |
| RAPID SETTING CONCRETE PATCH | 54 | CF |
| TREAT BRIDGE DECK | 21,250 | SQFT |
| PUBLIC SAFETY PLAN | LUMP | SUM |
| FURNISH BRIDGE DECK TREATMENT MATERIAL | 266 | GAL |

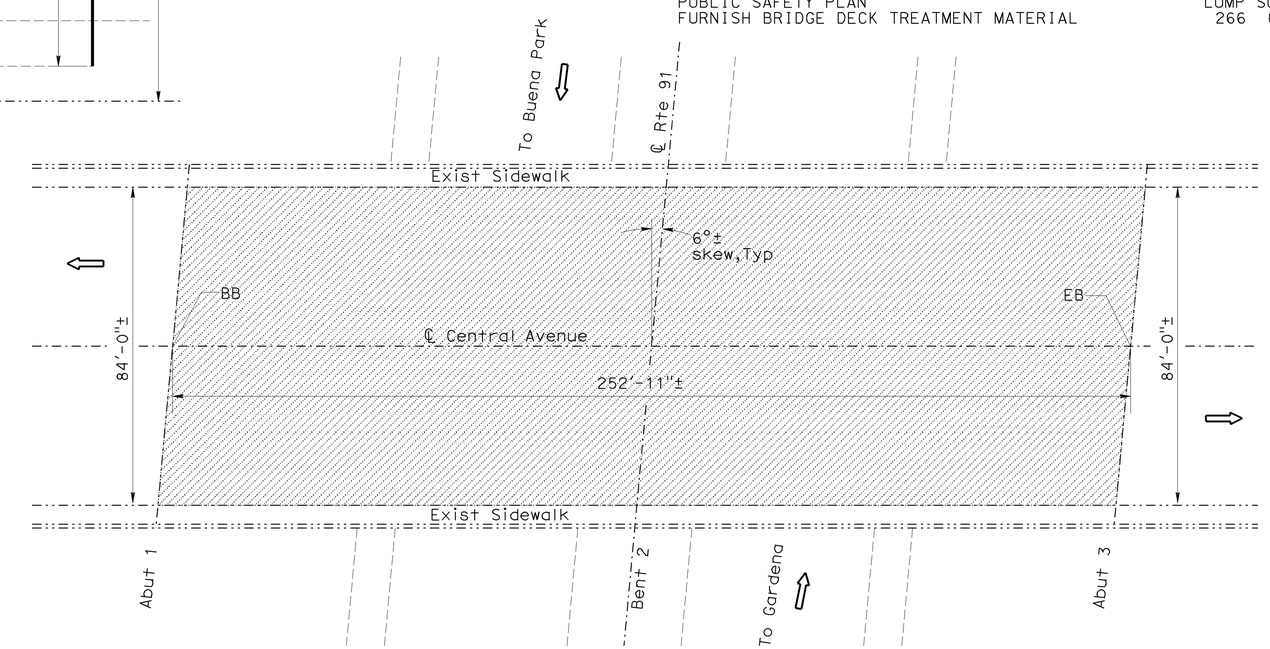


## CENTRAL AVENUE OC

Br No. 53-2459, Rte 91, PM R8.43
1" = 20'

## LEGEND:

Indicates existing.

Indicates direction of traffic.

Indicates limits of prepare concrete bridge deck surface and treat existing bridge deck with high molecular weight methacrylate. Prior to bridge deck treatment, remove unsound concrete and patch with rapid setting concrete.

Indicates limits of clean expansion joint and placement of new joint seal. Prior to placement of new joint, remove unsound concrete and patch with rapid setting concrete.

NOTE:
THE CONTRACTOR SHALL VERIFY ALL CONTROLLING FIELD DIMENSIONS BEFORE ORDERING OR FABRICATING ANY MATERIAL. EXISTING UTILITY FACILITIES HAVE NOT BEEN PLOTTED ON THESE PLANS.

TONY D. BRAKE
DESIGN ENGINEER

| | BY | CHECKED | | | |
|---|---|---|---|---|---|
| DESIGN | Vinh Dang | Ramesh Patel | LOAD FACTOR DESIGN | LIVE LOADING: HS20-44 AND ALTERNATIVE AND PERMIT DESIGN LOAD | |
| DETAILS | Tom Dang | Vinh Dang | LAYOUT | Vinh Dang | Hong Tien Tran |
| QUANTITIES | Vinh Dang | Ramesh Patel | SPECIFICATIONS | Dave Klein | PLANS AND SPECS COMPARED Dave Klein |

STATE OF CALIFORNIA
DEPARTMENT OF TRANSPORTATION

DIVISION OF MAINTENANCE
STRUCTURE MAINTENANCE DESIGN

BRIDGE NO. Various
POST MILE Varies

ROUTE 19, 22, 47, 91, 110, 605, 710 BRIDGES
GENERAL PLAN NO. 6

STRUCTURES MAINTENANCE GENERAL PLAN SHEET (ENGLISH) (REV. 09-01-10)

ORIGINAL SCALE IN INCHES FOR REDUCED PLANS 0 1 2 3

UNIT: 07602
PROJECT NUMBER & PHASE: 0700001896
CONTRACT NO.: 4Y7501

DISREGARD PRINTS BEARING EARLIER REVISION DATES

REVISION DATES 3/1/11

SHEET 6 OF 18

FILE => 07-4y7501-a-gp06.dgn

USERNAME => s129239 DATE PLOTTED => 02-APR-2012 TIME PLOTTED => 06:48

| DIST | COUNTY | ROUTE | POST MILES TOTAL PROJECT | SHEET No. | TOTAL SHEETS |
|---|---|---|---|---|---|
| 07 | LA | 19,22,47,91 110, etc. | Var | 43 | 54 |

REGISTERED CIVIL ENGINEER 01/09/12 DATE

5-7-12
PLANS APPROVAL DATE

REGISTERED PROFESSIONAL ENGINEER VINH DUC L. DANG No. C65096 Exp. 09/30/13 CIVIL STATE OF CALIFORNIA

*The State of California or its officers or agents shall not be responsible for the accuracy or completeness of electronic copies of this plan sheet.*

## LEGEND:

Indicates existing.

Indicates direction of traffic.

Indicates limits of prepare concrete bridge deck surface and treat existing bridge deck with high molecular weight methacrylate. Prior to bridge deck treatment, remove unsound concrete and patch with rapid setting concrete.

WILMINGTON AVENUE OVERCROSSING BRIDGE NO. 53-1865

QUANTITIES

| | | |
|---|---|---|
| REMOVE UNSOUND CONCRETE | 55 | CF |
| PREPARE CONCRETE BRIDGE DECK SURFACE | 21,920 | SQFT |
| RAPID SETTING CONCRETE PATCH | 55 | CF |
| TREAT BRIDGE DECK | 21,920 | SQFT |
| FURNISH BRIDGE DECK TREATMENT MATERIAL | 274 | GAL |

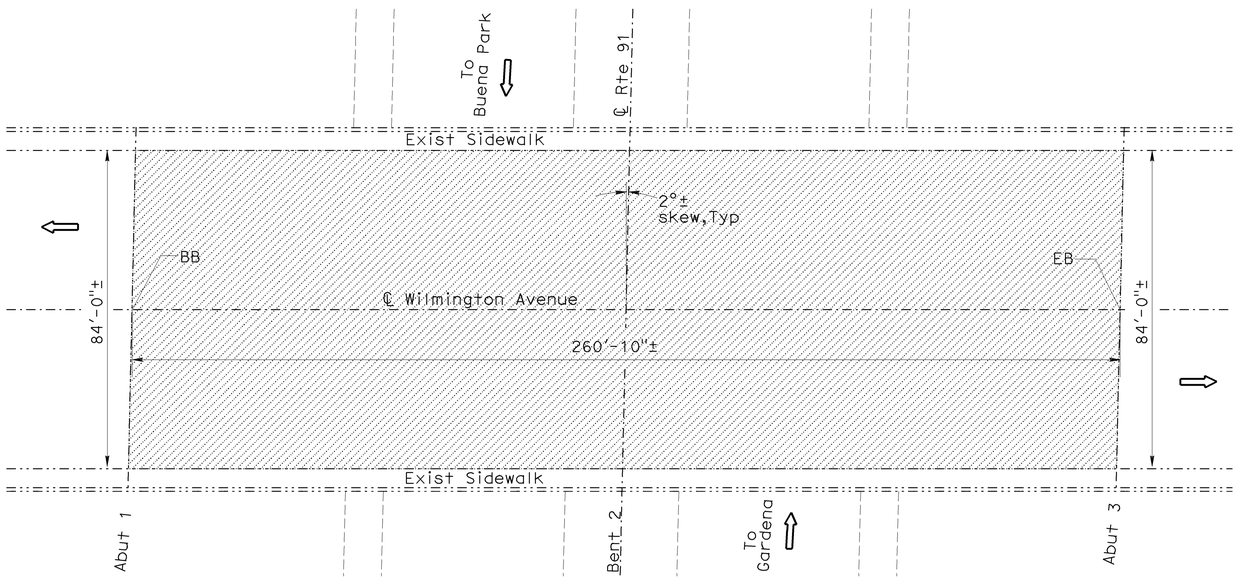


**WILMINGTON AVENUE OC**

Br No. 53-1865, Rte 91, PM R9.15
1" = 20'

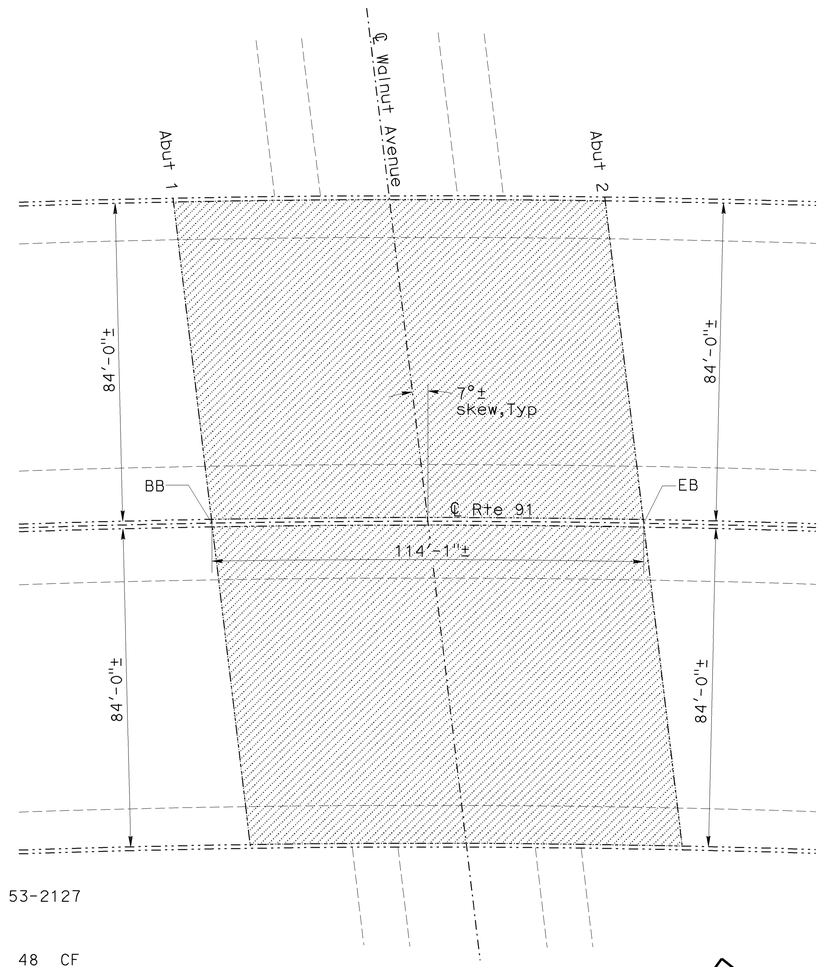


**WALNUT AVENUE UC**

Br No. 53-2127, Rte 91, PM R12.84
1" = 20'

WALNUT AVENUE UNDERCROSSING BRIDGE NO. 53-2127

QUANTITIES

| | | |
|---|---|---|
| REMOVE UNSOUND CONCRETE | 48 | CF |
| PREPARE CONCRETE BRIDGE DECK SURFACE | 19,170 | SQFT |
| RAPID SETTING CONCRETE PATCH | 48 | CF |
| TREAT BRIDGE DECK | 19,170 | SQFT |
| PUBLIC SAFETY PLAN | LUMP | SUM |
| FURNISH BRIDGE DECK TREATMENT MATERIAL | 240 | GAL |

NOTE:
THE CONTRACTOR SHALL VERIFY ALL CONTROLLING FIELD DIMENSIONS BEFORE ORDERING OR FABRICATING ANY MATERIAL. EXISTING UTILITY FACILITIES HAVE NOT BEEN PLOTTED ON THESE PLANS.

TONY D. BRAKE
DESIGN ENGINEER

| | BY | CHECKED | | | |
|---|---|---|---|---|---|
| DESIGN | Vinh Dang | Ramesh Patel | LOAD FACTOR DESIGN | LIVE LOADING: HS20-44 AND ALTERNATIVE AND PERMIT DESIGN LOAD | |
| DETAILS | Tom Dang | Vinh Dang | LAYOUT | Vinh Dang | Hong Tien Tran |
| QUANTITIES | Vinh Dang | Ramesh Patel | SPECIFICATIONS | Dave Klein | PLANS AND SPECS COMPARED Dave Klein |

STATE OF CALIFORNIA
DEPARTMENT OF TRANSPORTATION

DIVISION OF MAINTENANCE
STRUCTURE MAINTENANCE DESIGN

BRIDGE NO. Various
POST MILE Varies

ROUTE 19, 22, 47, 91, 110, 605, 710 BRIDGES
GENERAL PLAN NO. 7

STRUCTURES MAINTENANCE GENERAL PLAN SHEET (ENGLISH) (REV. 09-01-10)

ORIGINAL SCALE IN INCHES FOR REDUCED PLANS 0 1 2 3

UNIT: 07602
PROJECT NUMBER & PHASE: 0700001896 CONTRACT NO.: 4Y7501

DISREGARD PRINTS BEARING EARLIER REVISION DATES → REVISION DATES 3/1/11

SHEET 7 OF 18

FILE => 07-4y7501-a-gp07.dgn

USERNAME => s129239 DATE PLOTTED => 02-APR-2012 TIME PLOTTED => 06:48

| DIST | COUNTY | ROUTE | POST MILES TOTAL PROJECT | SHEET No. | TOTAL SHEETS |
|---|---|---|---|---|---|
| 07 | LA | 19,22,47,91 110, etc. | Var | 44 | 54 |

REGISTERED CIVIL ENGINEER 01/09/12 DATE

5-7-12
PLANS APPROVAL DATE

REGISTERED PROFESSIONAL ENGINEER VINH DUC L. DANG No. C65096 Exp. 09/30/13 CIVIL STATE OF CALIFORNIA

*The State of California or its officers or agents shall not be responsible for the accuracy or completeness of electronic copies of this plan sheet.*

## LEGEND:

Indicates existing.

Indicates direction of traffic.

Indicates limits of prepare concrete bridge deck surface and treat existing bridge deck with high molecular weight methacrylate. Prior to bridge deck treatment, remove unsound concrete and patch with rapid setting concrete.

Indicates limits of clean expansion joint and placement of new joint seal. Prior to placement of new joint, remove unsound concrete and patch with rapid setting concrete.

ARDMORE AVENUE UNDERCROSSING BRIDGE NO. 53-1757

QUANTITIES

| | | |
|---|---|---|
| REMOVE UNSOUND CONCRETE | 42 | CF |
| PREPARE CONCRETE BRIDGE DECK SURFACE | 16,705 | SQFT |
| RAPID SETTING CONCRETE PATCH | 42 | CF |
| TREAT BRIDGE DECK | 16,705 | SQFT |
| PUBLIC SAFETY PLAN | LUMP | SUM |
| FURNISH BRIDGE DECK TREATMENT MATERIAL | 209 | GAL |

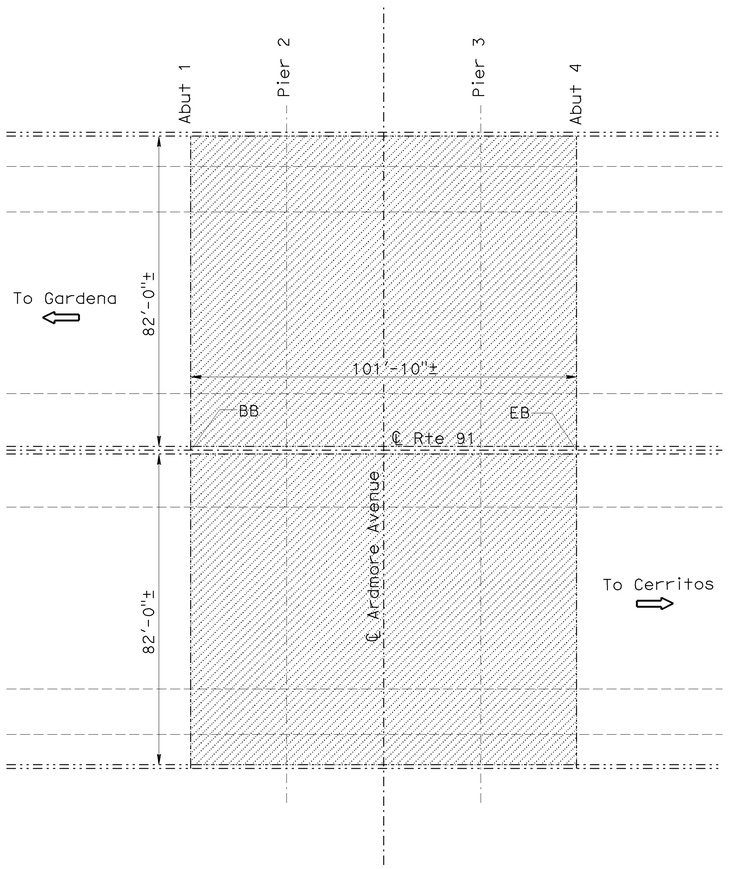


**ARDMORE AVENUE UC**

Br No. 53-1757, Rte 91, PM R15.39
1" = 20'

NOTE:
THE CONTRACTOR SHALL VERIFY ALL CONTROLLING FIELD DIMENSIONS BEFORE ORDERING OR FABRICATING ANY MATERIAL. EXISTING UTILITY FACILITIES HAVE NOT BEEN PLOTTED ON THESE PLANS.

BIXBY AVENUE UNDERCROSSING BRIDGE NO. 53-1719

QUANTITIES

| | | |
|---|---|---|
| REMOVE UNSOUND CONCRETE | 49 | CF |
| PREPARE CONCRETE BRIDGE DECK SURFACE | 18,705 | SQFT |
| CLEAN EXPANSION JOINT | 336 | LF |
| RAPID SETTING CONCRETE PATCH | 49 | CF |
| JOINT SEAL (MR 1/2") | 336 | LF |
| TREAT BRIDGE DECK | 18,705 | SQFT |
| PUBLIC SAFETY PLAN | LUMP | SUM |
| FURNISH BRIDGE DECK TREATMENT MATERIAL | 234 | GAL |

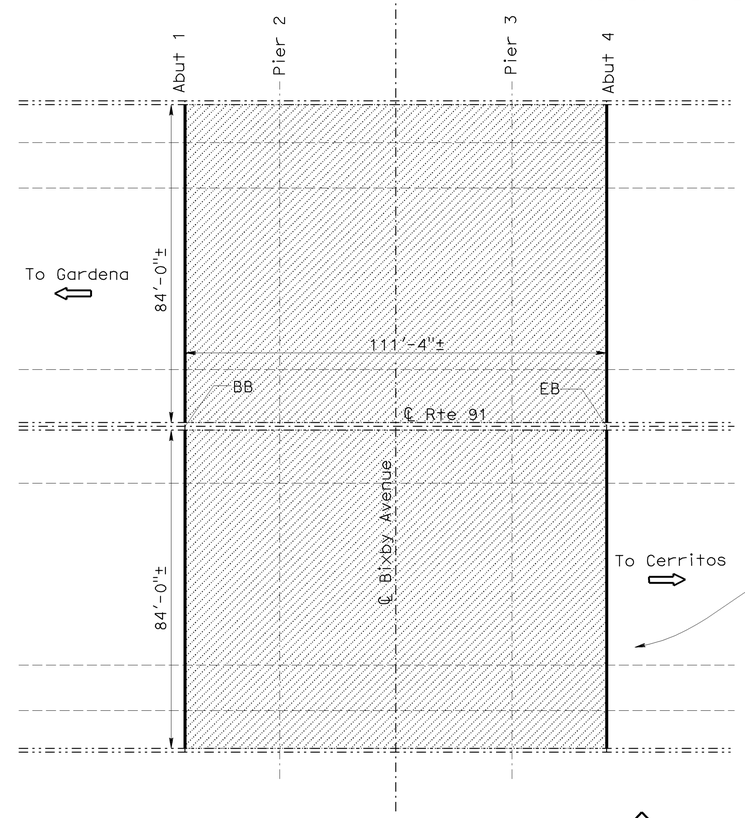


**BIXBY AVENUE UC**

Br No. 53-1719, Rte 91, PM R15.87
1" = 20'

TONY D. BRAKE
DESIGN ENGINEER

| | BY | CHECKED |
|---|---|---|
| DESIGN | Vinh Dang | Ramesh Patel |
| DETAILS | Tom Dang | Vinh Dang |
| QUANTITIES | Vinh Dang | Ramesh Patel |

LOAD FACTOR DESIGN — LIVE LOADING: HS20-44 AND ALTERNATIVE AND PERMIT DESIGN LOAD
LAYOUT — BY Vinh Dang — CHECKED Hong Tien Tran
SPECIFICATIONS — BY Dave Klein — PLANS AND SPECS COMPARED Dave Klein

STATE OF CALIFORNIA
DEPARTMENT OF TRANSPORTATION

DIVISION OF MAINTENANCE
STRUCTURE MAINTENANCE DESIGN

BRIDGE NO. Various
POST MILE Varies

ROUTE 19, 22, 47, 91, 110, 605, 710 BRIDGES
GENERAL PLAN NO. 8

STRUCTURES MAINTENANCE GENERAL PLAN SHEET (ENGLISH) (REV. 09-01-10)

ORIGINAL SCALE IN INCHES FOR REDUCED PLANS 0 1 2 3

UNIT: 07602
PROJECT NUMBER & PHASE: 0700001896
CONTRACT NO.: 4Y7501

DISREGARD PRINTS BEARING EARLIER REVISION DATES

REVISION DATES 3/1/11

SHEET 8 OF 18

FILE => 07-4y7501-a-gp08.dgn

USERNAME => s129239 DATE PLOTTED => 02-APR-2012 TIME PLOTTED => 06:48

| DIST | COUNTY | ROUTE | POST MILES TOTAL PROJECT | SHEET No. | TOTAL SHEETS |
|---|---|---|---|---|---|
| 07 | LA | 19,22,47,91 110, etc. | Var | 45 | 54 |

REGISTERED CIVIL ENGINEER 01/09/12 DATE

5-7-12
PLANS APPROVAL DATE

REGISTERED PROFESSIONAL ENGINEER VINH DUC L. DANG No. C65096 Exp. 09/30/13 CIVIL STATE OF CALIFORNIA

*The State of California or its officers or agents shall not be responsible for the accuracy or completeness of electronic copies of this plan sheet.*

## LEGEND:

- - - - - - Indicates existing.

⇨ Indicates direction of traffic.

(1) Indicates repair spalled surface area and place steel column casing at Column 3. See "MISCELLANEOUS DETAILS NO. 3" sheet.

BLOOMFIELD AVENUE OVERCROSSING BRIDGE NO. 53-1433

QUANTITIES

| | | |
|---|---|---|
| STRUCTURE EXCAVATION (BRIDGE) | 10 | CY |
| STRUCTURE BACKFILL (BRIDGE) | 10 | CY |
| REPAIR SPALLED SURFACE AREA | 10 | SQFT |
| ASPHALT MEMBRANE WATERPROOFING | 20 | SQFT |
| COLUMN CASING | 420 | LB |

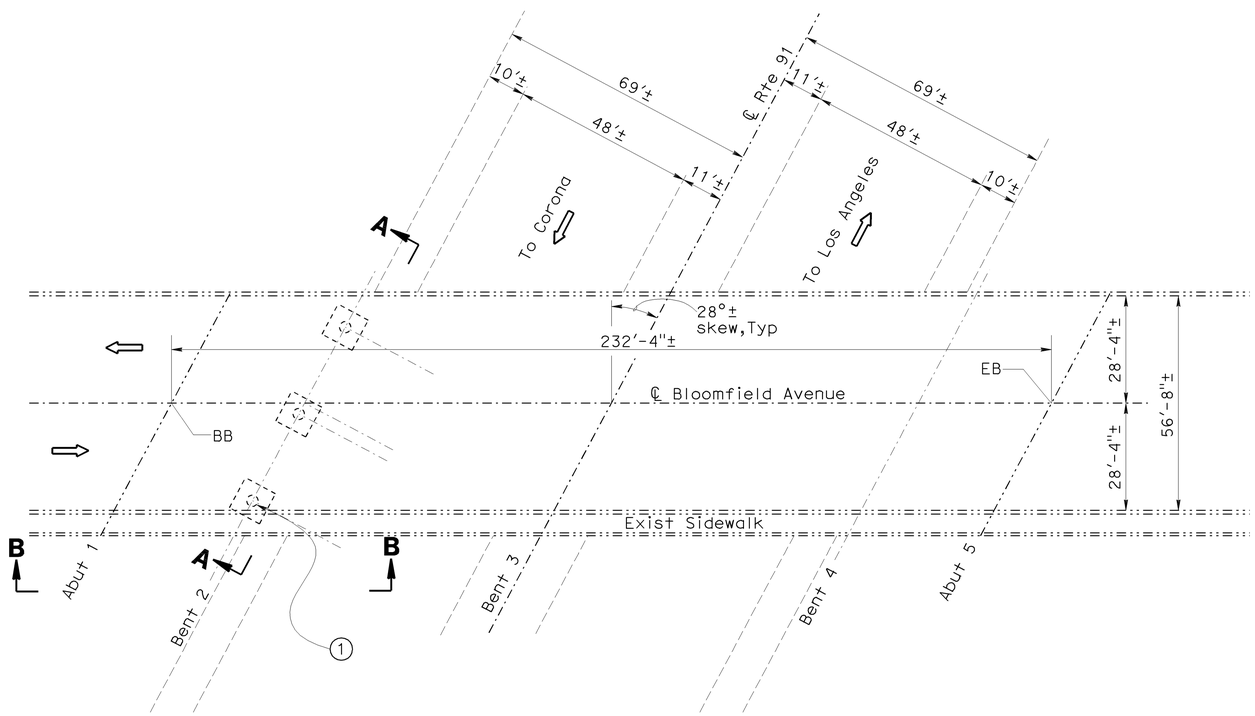


## BLOOMFIELD AVENUE OC

Br No. 53-1433, Rte 91, PM R19.17
1" = 20'

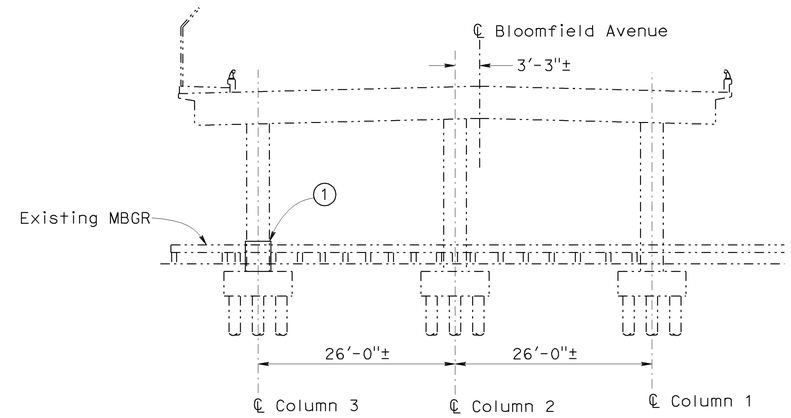


## VIEW A-A

1" = 10'

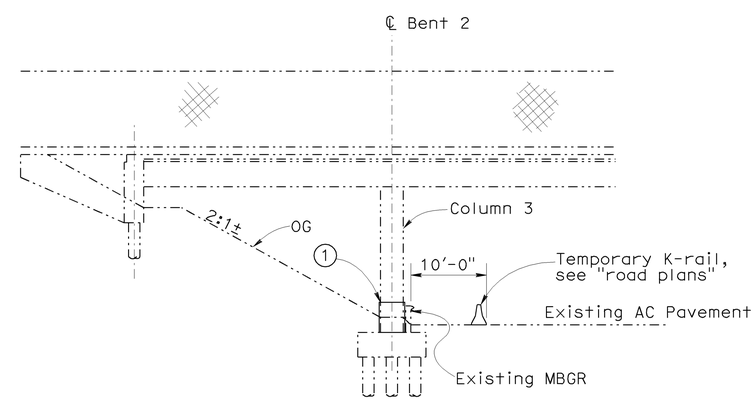


## VIEW B-B

1" = 10'

NOTE:
THE CONTRACTOR SHALL VERIFY ALL CONTROLLING FIELD DIMENSIONS BEFORE ORDERING OR FABRICATING ANY MATERIAL. EXISTING UTILITY FACILITIES HAVE NOT BEEN PLOTTED ON THESE PLANS.

TONY D. BRAKE
DESIGN ENGINEER

| | BY | CHECKED | | | |
|---|---|---|---|---|---|
| DESIGN | Vinh Dang | Ramesh Patel | LOAD FACTOR DESIGN | LIVE LOADING: HS20-44 AND ALTERNATIVE AND PERMIT DESIGN LOAD | |
| DETAILS | Tom Dang | Vinh Dang | LAYOUT | Vinh Dang | Hong Tien Tran |
| QUANTITIES | Vinh Dang | Ramesh Patel | SPECIFICATIONS | Dave Klein | PLANS AND SPECS COMPARED Dave Klein |

STATE OF CALIFORNIA
DEPARTMENT OF TRANSPORTATION

DIVISION OF MAINTENANCE
STRUCTURE MAINTENANCE DESIGN

BRIDGE NO. Various
POST MILE Varies

ROUTE 19, 22, 47, 91, 110, 605, 710 BRIDGES
GENERAL PLAN NO. 9

STRUCTURES MAINTENANCE GENERAL PLAN SHEET (ENGLISH) (REV. 09-01-10)

ORIGINAL SCALE IN INCHES FOR REDUCED PLANS 0 1 2 3

UNIT: 07602
PROJECT NUMBER & PHASE: 0700001896
CONTRACT NO.: 4Y7501

DISREGARD PRINTS BEARING EARLIER REVISION DATES 3/1/11

REVISION DATES | SHEET 9 | OF 18

FILE => 07-4y7501-a-gp09.dgn

USERNAME => s129239 DATE PLOTTED => 02-APR-2012 TIME PLOTTED => 06:48

| DIST | COUNTY | ROUTE | POST MILES TOTAL PROJECT | SHEET No. | TOTAL SHEETS |
|---|---|---|---|---|---|
| 07 | LA | 19,22,47,91 110, etc. | Var | 46 | 54 |

REGISTERED CIVIL ENGINEER 01/09/12 DATE

5-7-12
PLANS APPROVAL DATE

REGISTERED PROFESSIONAL ENGINEER VINH DUC L. DANG No. C65096 Exp. 09/30/13 CIVIL STATE OF CALIFORNIA

*The State of California or its officers or agents shall not be responsible for the accuracy or completeness of electronic copies of this plan sheet.*

UNION OIL OVERHEAD BRIDGE NO. 53-0977

QUANTITIES

| | | |
|---|---|---|
| REMOVE UNSOUND CONCRETE | 3 | CF |
| CLEAN EXPANSION JOINT | 451 | LF |
| RAPID SETTING CONCRETE PATCH | 3 | CF |
| JOINT SEAL (MR 1/2") | 451 | LF |

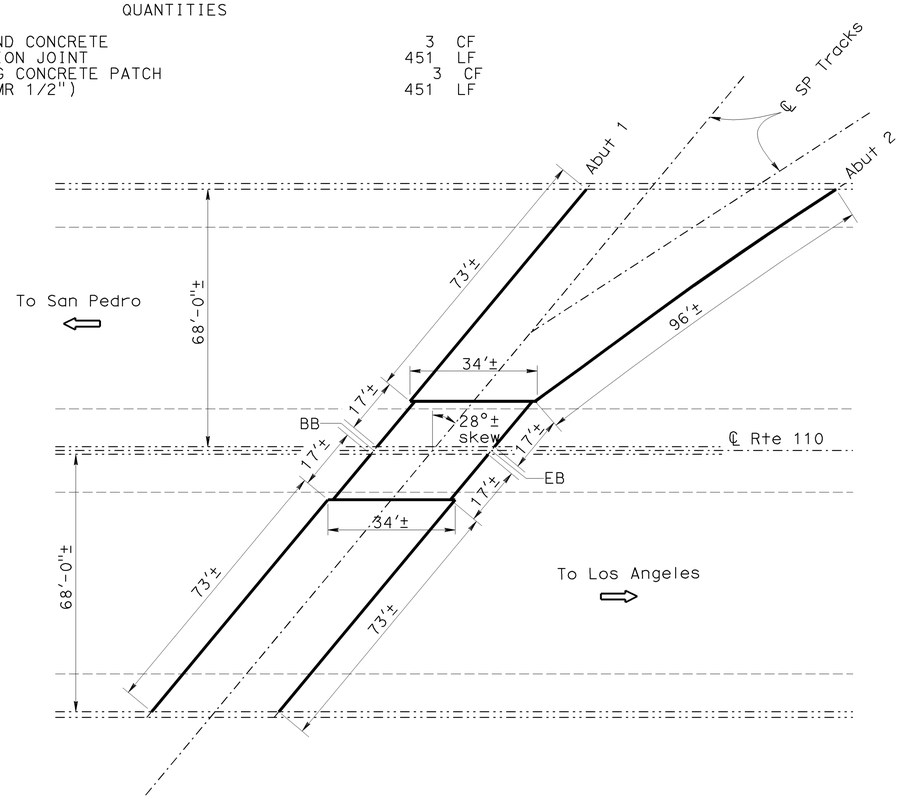


## UNION OIL OH

Br No. 53-0977, Rte 110, PM 2.50
1" = 20'

## LEGEND:

Indicates existing.

Indicates direction of traffic.

Indicates limits of prepare concrete bridge deck surface and treat existing bridge deck with high molecular weight methacrylate. Prior to bridge deck treatment, remove unsound concrete and patch with rapid setting concrete.

Indicates limits of clean expansion joint and placement of new joint seal. Prior to placement of new joint, remove unsound concrete and patch with rapid setting concrete.

HARBOR SCENIC DRIVE BRIDGE NO. 53-2934

QUANTITIES

| | | |
|---|---|---|
| REMOVE UNSOUND CONCRETE | 85 | CF |
| PREPARE CONCRETE BRIDGE DECK SURFACE | 33,760 | SQFT |
| RAPID SETTING CONCRETE PATCH | 85 | CF |
| TREAT BRIDGE DECK | 33,760 | SQFT |
| FURNISH BRIDGE DECK TREATMENT MATERIAL | 422 | GAL |

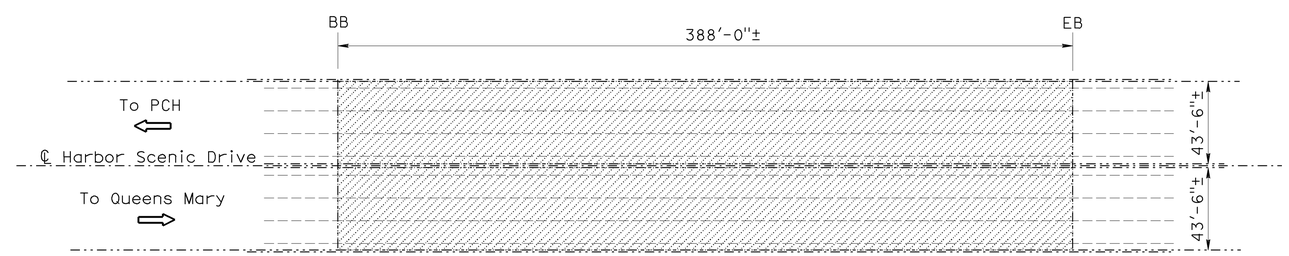


## HARBOR SCENIC DRIVE OH

Br No. 53-2934, Rte 710, PM M5.95
1" = 40'

NOTE:
THE CONTRACTOR SHALL VERIFY ALL CONTROLLING FIELD DIMENSIONS BEFORE ORDERING OR FABRICATING ANY MATERIAL. EXISTING UTILITY FACILITIES HAVE NOT BEEN PLOTTED ON THESE PLANS.

TONY D. BRAKE
DESIGN ENGINEER

| | BY | CHECKED | | | |
|---|---|---|---|---|---|
| DESIGN | Vinh Dang | Ramesh Patel | LOAD FACTOR DESIGN | LIVE LOADING: HS20-44 AND ALTERNATIVE AND PERMIT DESIGN LOAD | |
| DETAILS | Tom Dang | Vinh Dang | LAYOUT | Vinh Dang | Hong Tien Tran |
| QUANTITIES | Vinh Dang | Ramesh Patel | SPECIFICATIONS | Dave Klein | Dave Klein |

STATE OF CALIFORNIA
DEPARTMENT OF TRANSPORTATION

DIVISION OF MAINTENANCE
STRUCTURE MAINTENANCE DESIGN

BRIDGE NO. Various
POST MILE Varies

ROUTE 19, 22, 47, 91, 110, 605, 710 BRIDGES
GENERAL PLAN NO. 10

STRUCTURES MAINTENANCE GENERAL PLAN SHEET (ENGLISH) (REV. 09-01-10)

ORIGINAL SCALE IN INCHES FOR REDUCED PLANS 0 1 2 3

UNIT: 07602
PROJECT NUMBER & PHASE: 0700001896
CONTRACT NO.: 4Y7501

DISREGARD PRINTS BEARING EARLIER REVISION DATES 3/1/11

SHEET 10 OF 18

FILE => 07-4y7501-a-gp10.dgn

USERNAME => s1293239 DATE PLOTTED => 02-APR-2012 TIME PLOTTED => 06:48

| DIST | COUNTY | ROUTE | POST MILES TOTAL PROJECT | SHEET No. | TOTAL SHEETS |
|---|---|---|---|---|---|
| 07 | LA | 19,22,47,91 110, etc. | Var | 47 | 54 |

REGISTERED CIVIL ENGINEER 01/09/12 DATE

5-7-12
PLANS APPROVAL DATE

REGISTERED PROFESSIONAL ENGINEER VINH DUC L. DANG No. C65096 Exp. 09/30/13 CIVIL STATE OF CALIFORNIA

*The State of California or its officers or agents shall not be responsible for the accuracy or completeness of electronic copies of this plan sheet.*

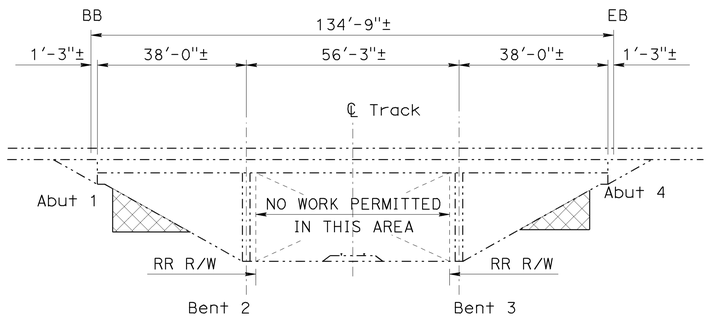


## ELEVATION

## LEGEND:

Indicates existing.

Indicates direction of traffic.

Indicates limits of slurry cement backfill at existing abutment slopes. Limits are simplified for quantity purpose. Existing hole varies in profile.

## NOTE:

1. Existing 2' wide concrete gutter to remain in place and undamaged.

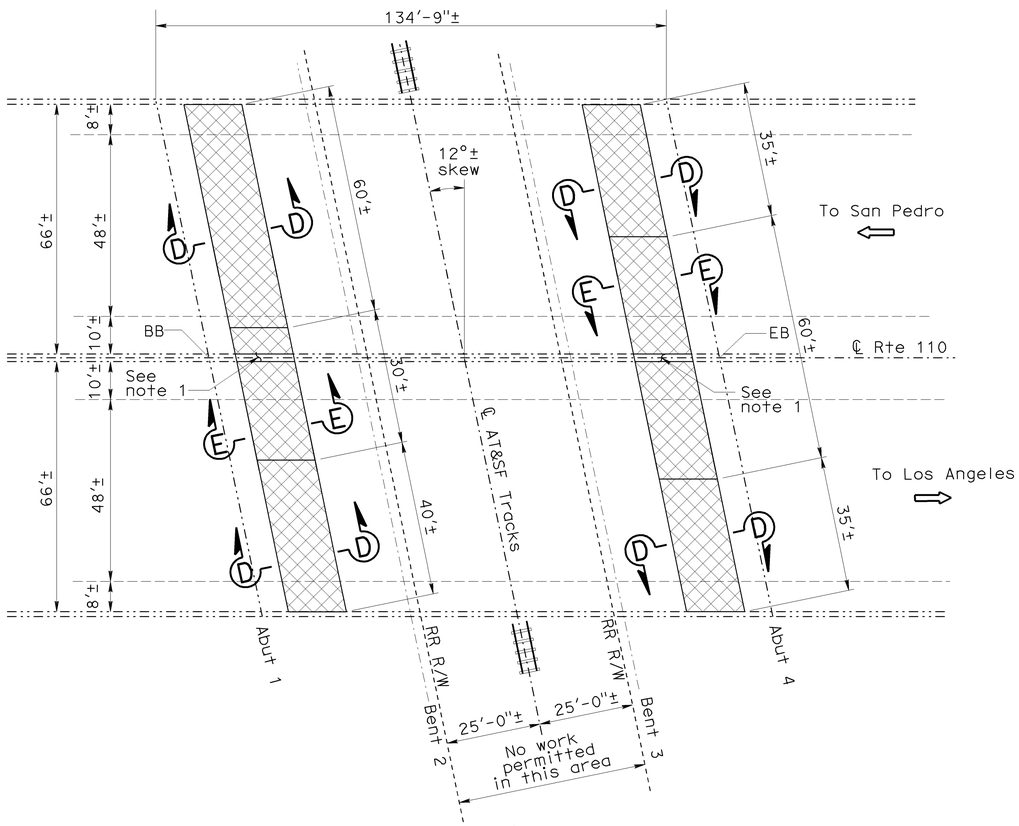


## PLAN

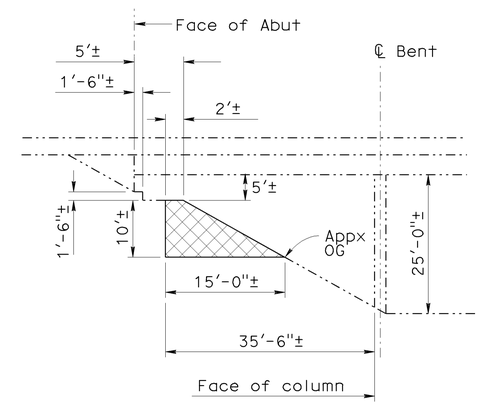


## SECTION E-E

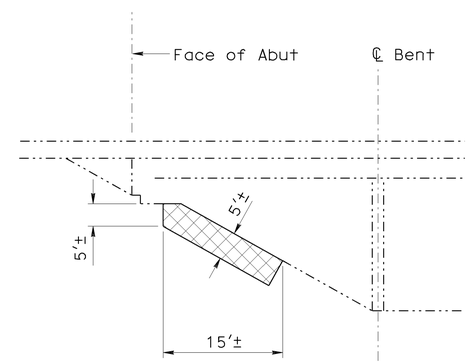


## SECTION D-D

NOTE:
THE CONTRACTOR SHALL VERIFY ALL CONTROLLING FIELD DIMENSIONS BEFORE ORDERING OR FABRICATING ANY MATERIAL. EXISTING UTILITY FACILITIES HAVE NOT BEEN PLOTTED ON THESE PLANS.

## WEST WATSON OH

Br No. 53-0967, Rte 110, PM 5.11
1" = 20'

WEST WATSON OVERHEAD — BRIDGE NO. 53-0967

QUANTITIES

| | |
|---|---|
| STRUCTURE BACKFILL (SLURRY CEMENT) | 756 CY |

TONY D. BRAKE
DESIGN ENGINEER

| | BY | CHECKED |
|---|---|---|
| DESIGN | Vinh Dang | Ramesh Patel |
| DETAILS | Tom Dang | Vinh Dang |
| QUANTITIES | Vinh Dang | Ramesh Patel |

| | | | |
|---|---|---|---|
| LOAD FACTOR DESIGN | LIVE LOADING: HS20-44 AND ALTERNATIVE AND PERMIT DESIGN LOAD | | |
| LAYOUT | BY Vinh Dang | CHECKED Hong Tien Tran | |
| SPECIFICATIONS | BY Dave Klein | PLANS AND SPECS COMPARED Dave Klein | |

STATE OF CALIFORNIA
DEPARTMENT OF TRANSPORTATION

DIVISION OF MAINTENANCE
STRUCTURE MAINTENANCE DESIGN

BRIDGE NO. 53-0967
POST MILE 5.11

ROUTE 19, 22, 47, 91, 110, 605, 710 BRIDGES
GENERAL PLAN NO. 11

STRUCTURES MAINTENANCE GENERAL PLAN SHEET (ENGLISH) (REV. 09-01-10)

ORIGINAL SCALE IN INCHES FOR REDUCED PLANS 0 1 2 3

UNIT: 07602
PROJECT NUMBER & PHASE: 0700001896
CONTRACT NO.: 4Y7501

DISREGARD PRINTS BEARING EARLIER REVISION DATES

REVISION DATES 3/1/11

SHEET 11 OF 18

FILE => 07-4y7501-a-gp11.dgn

USERNAME => s129239 DATE PLOTTED => 02-APR-2012 TIME PLOTTED => 06:48

| DIST | COUNTY | ROUTE | POST MILES TOTAL PROJECT | SHEET No. | TOTAL SHEETS |
|---|---|---|---|---|---|
| 07 | LA | 19,22,47,91 110, etc. | Var | 48 | 54 |

REGISTERED CIVIL ENGINEER 01/09/12 DATE

5-7-12
PLANS APPROVAL DATE

REGISTERED PROFESSIONAL ENGINEER VINH DUC L. DANG No. C65096 Exp. 09/30/13 CIVIL STATE OF CALIFORNIA

*The State of California or its officers or agents shall not be responsible for the accuracy or completeness of electronic copies of this plan sheet.*

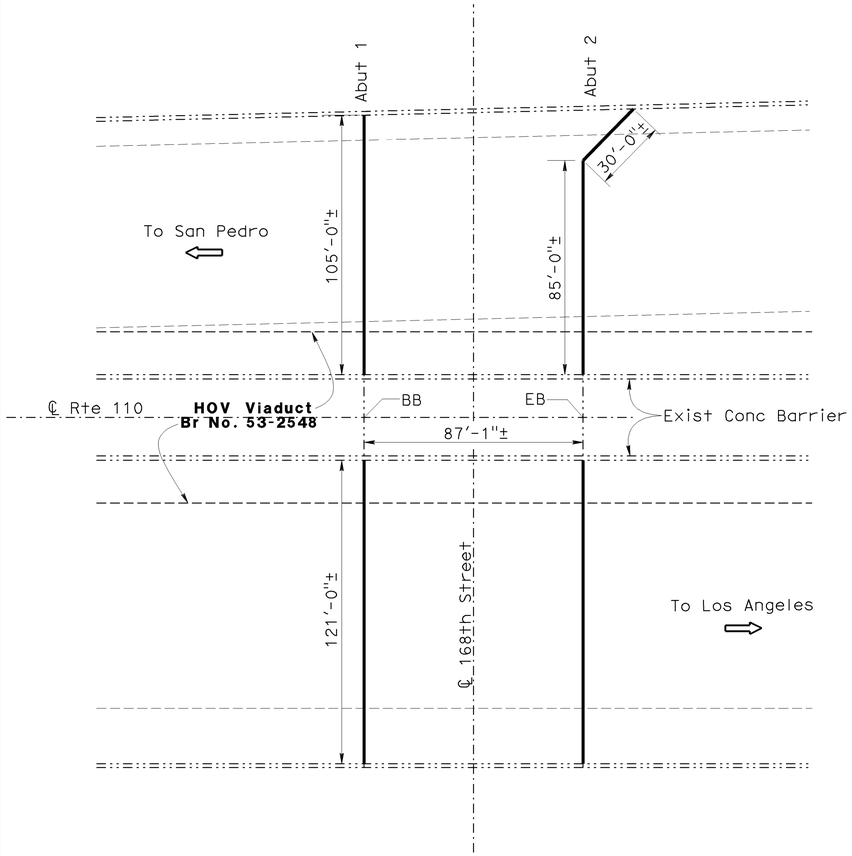


## 168TH STREET UC

Br No. 53-0957, Rte 110, PM 10.32
1" = 30'

168TH STREET UNDERCROSSING BRIDGE NO. 53-0957

QUANTITIES

| | | |
|---|---|---|
| REMOVE UNSOUND CONCRETE | 2 | CF |
| CLEAN EXPANSION JOINT | 462 | LF |
| RAPID SETTING CONCRETE PATCH | 2 | CF |
| JOINT SEAL (MR 1/2") | 462 | LF |

NOTE:
THE CONTRACTOR SHALL VERIFY ALL CONTROLLING FIELD DIMENSIONS BEFORE ORDERING OR FABRICATING ANY MATERIAL. EXISTING UTILITY FACILITIES HAVE NOT BEEN PLOTTED ON THESE PLANS.

## LEGEND:

Indicates existing.

Indicates direction of traffic.

Indicates limits of prepare concrete bridge deck surface and treat existing bridge deck with high molecular weight methacrylate. Prior to bridge deck treatment, remove unsound concrete and patch with rapid setting concrete.

Indicates limits of clean expansion joint and placement of new joint seal. Prior to placement of new joint, remove unsound concrete and patch with rapid setting concrete.

Indicates location of repair spalled surface area at left barrier railing, see REPAIR SPALLED SURFACE AREA TABLE.

CARSON STREET UNDERCROSSING BRIDGE NO. 53-1171

QUANTITIES

| | | |
|---|---|---|
| REMOVE UNSOUND CONCRETE | 82 | CF |
| PREPARE CONCRETE BRIDGE DECK SURFACE | 32,485 | SQFT |
| RAPID SETTING CONCRETE PATCH | 82 | CF |
| REPAIR SPALLED SURFACE AREA | 10 | SQFT |
| TREAT BRIDGE DECK | 32,485 | SQFT |
| PUBLIC SAFETY PLAN | LUMP | SUM |
| FURNISH BRIDGE DECK TREATMENT MATERIAL | 407 | GAL |

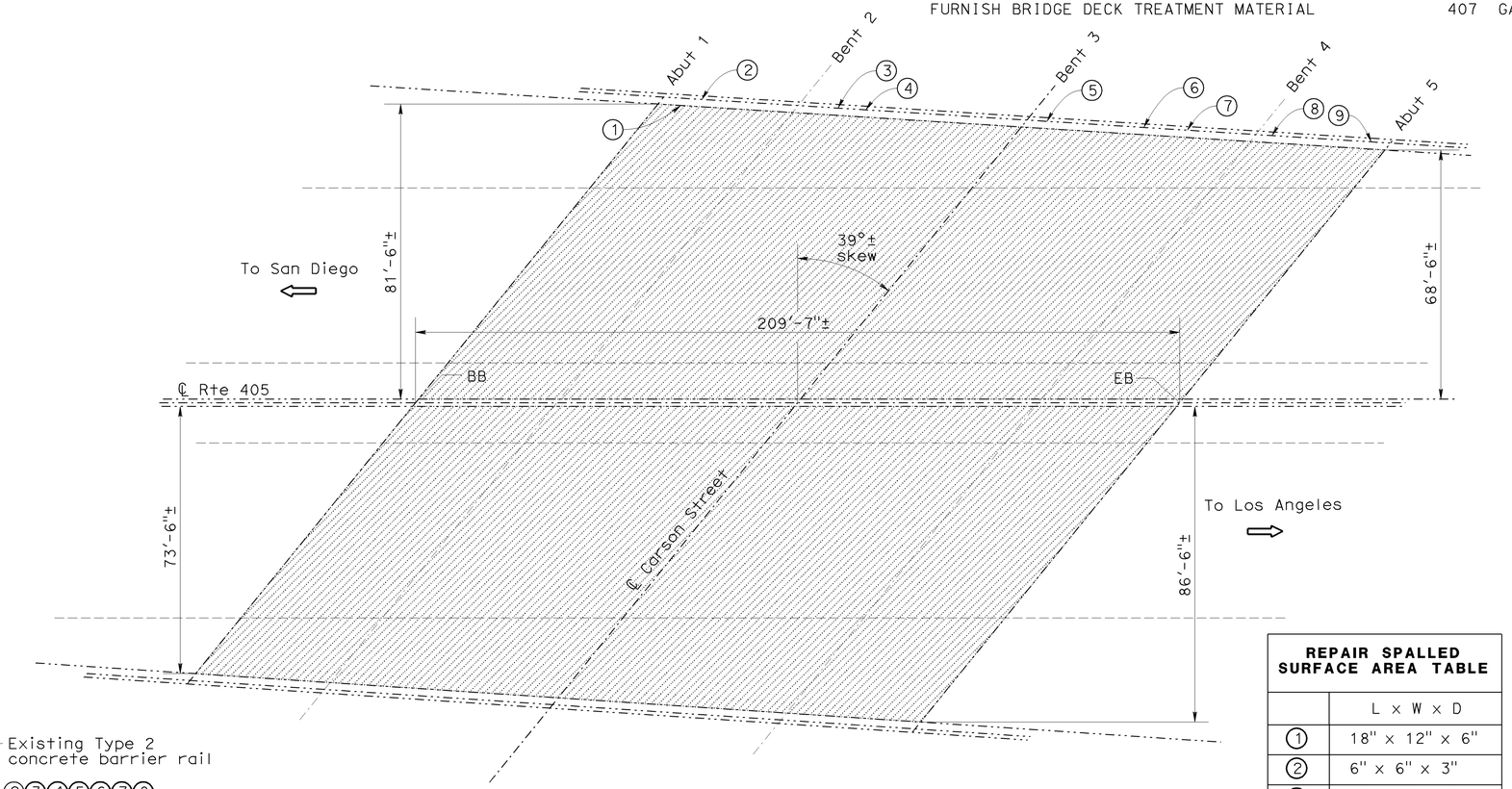


## CARSON STREET UC

Br No. 53-1171, Rte 405, PM 10.54
1" = 20'

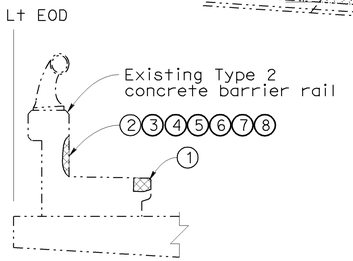


## REPAIR SPALLED SURFACE AREA

Br No. 53-1171
NO SCALE

**REPAIR SPALLED SURFACE AREA TABLE**

| | L × W × D |
|---|---|
| 1 | 18" × 12" × 6" |
| 2 | 6" × 6" × 3" |
| 3 | 6" × 6" × 2" |
| 4 | 6" × 6" × 2" |
| 5 | 6" × 6" × 2" |
| 6 | 4" × 4" × 2" |
| 7 | 12" × 3" × 2" |
| 8 | 6" × 6" × 2" |
| 9 | 4" × 4" × 2" |

TONY D. BRAKE
DESIGN ENGINEER

| | BY | CHECKED | | | |
|---|---|---|---|---|---|
| DESIGN | Vinh Dang | Ramesh Patel | LOAD FACTOR DESIGN | LIVE LOADING: HS20-44 AND ALTERNATIVE AND PERMIT DESIGN LOAD | |
| DETAILS | Tom Dang | Vinh Dang | LAYOUT | Vinh Dang | Hong Tien Tran |
| QUANTITIES | Vinh Dang | Ramesh Patel | SPECIFICATIONS | Dave Klein | PLANS AND SPECS COMPARED Dave Klein |

STATE OF CALIFORNIA
DEPARTMENT OF TRANSPORTATION

DIVISION OF MAINTENANCE
STRUCTURE MAINTENANCE DESIGN

BRIDGE NO. Various
POST MILE Varies

ROUTE 19, 22, 47, 91, 110, 605, 710 BRIDGES
GENERAL PLAN NO. 12

STRUCTURES MAINTENANCE GENERAL PLAN SHEET (ENGLISH) (REV. 09-01-10)

ORIGINAL SCALE IN INCHES FOR REDUCED PLANS 0 1 2 3

UNIT: 07602
PROJECT NUMBER & PHASE: 0700001896
CONTRACT NO.: 4Y7501

DISREGARD PRINTS BEARING EARLIER REVISION DATES

REVISION DATES 3/1/11

SHEET 12 OF 18

FILE => 07-4y7501-a-gp12.dgn

USERNAME => s129239 DATE PLOTTED => 02-APR-2012 TIME PLOTTED => 06:48

| DIST | COUNTY | ROUTE | POST MILES TOTAL PROJECT | SHEET No. | TOTAL SHEETS |
|---|---|---|---|---|---|
| 07 | LA | 19,22,47,91 110, etc. | Var | 49 | 54 |

REGISTERED CIVIL ENGINEER 01/09/12 DATE

5-7-12
PLANS APPROVAL DATE

REGISTERED PROFESSIONAL ENGINEER VINH DUC L. DANG No. C65096 Exp. 09/30/13 CIVIL STATE OF CALIFORNIA

*The State of California or its officers or agents shall not be responsible for the accuracy or completeness of electronic copies of this plan sheet.*

S405-N110/110 SEPARATION BRIDGE NO. 53-1045F

QUANTITIES

| | | |
|---|---|---|
| REMOVE UNSOUND CONCRETE | 17 | CF |
| PREPARE CONCRETE BRIDGE DECK SURFACE | 6,555 | SQFT |
| RAPID SETTING CONCRETE PATCH | 17 | CF |
| TREAT BRIDGE DECK | 6,555 | SQFT |
| FURNISH BRIDGE DECK TREATMENT MATERIAL | 82 | GAL |

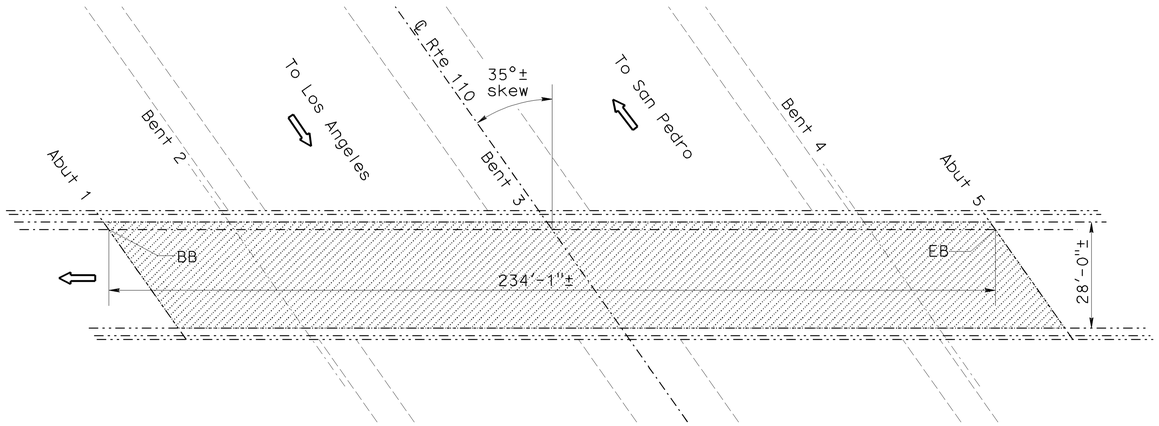


## S405-N110/110 SEPARATION

Br No. 53-1045F, Rte 405, PM 12.94
1" = 20'

## LEGEND:

Indicates existing.

Indicates direction of traffic.

Indicates limits of prepare concrete bridge deck surface and treat existing bridge deck with high molecular weight methacrylate. Prior to bridge deck treatment, remove unsound concrete and patch with rapid setting concrete.

Indicates limits of clean expansion joint and placement of new joint seal. Prior to placement of new joint, remove unsound concrete and patch with rapid setting concrete.

Indicates location of remove existing polyester concrete, prepare concrete bridge deck surface and replace with new polyester concrete, see SECTION A-A.

FIRESTONE BOULEVARD UNDERCROSSING BRIDGE NO. 53-1653

QUANTITIES

| | | |
|---|---|---|
| REMOVE UNSOUND CONCRETE | 2 | CF |
| BRIDGE REMOVAL (PORTION) | LUMP | SUM |
| CLEAN EXPANSION JOINT | 307 | LF |
| RAPID SETTING CONCRETE PATCH | 2 | CF |
| FURNISH POLYESTER CONCRETE OVERLAY | 11 | CF |
| PLACE POLYESTER CONCRETE OVERLAY | 60 | SQFT |
| JOINT SEAL (MR 1/2") | 307 | LF |

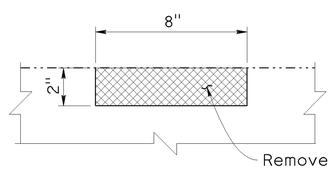


Remove existing polyester concrete and replace with new polyester concrete

## SECTION A-A

NO SCALE

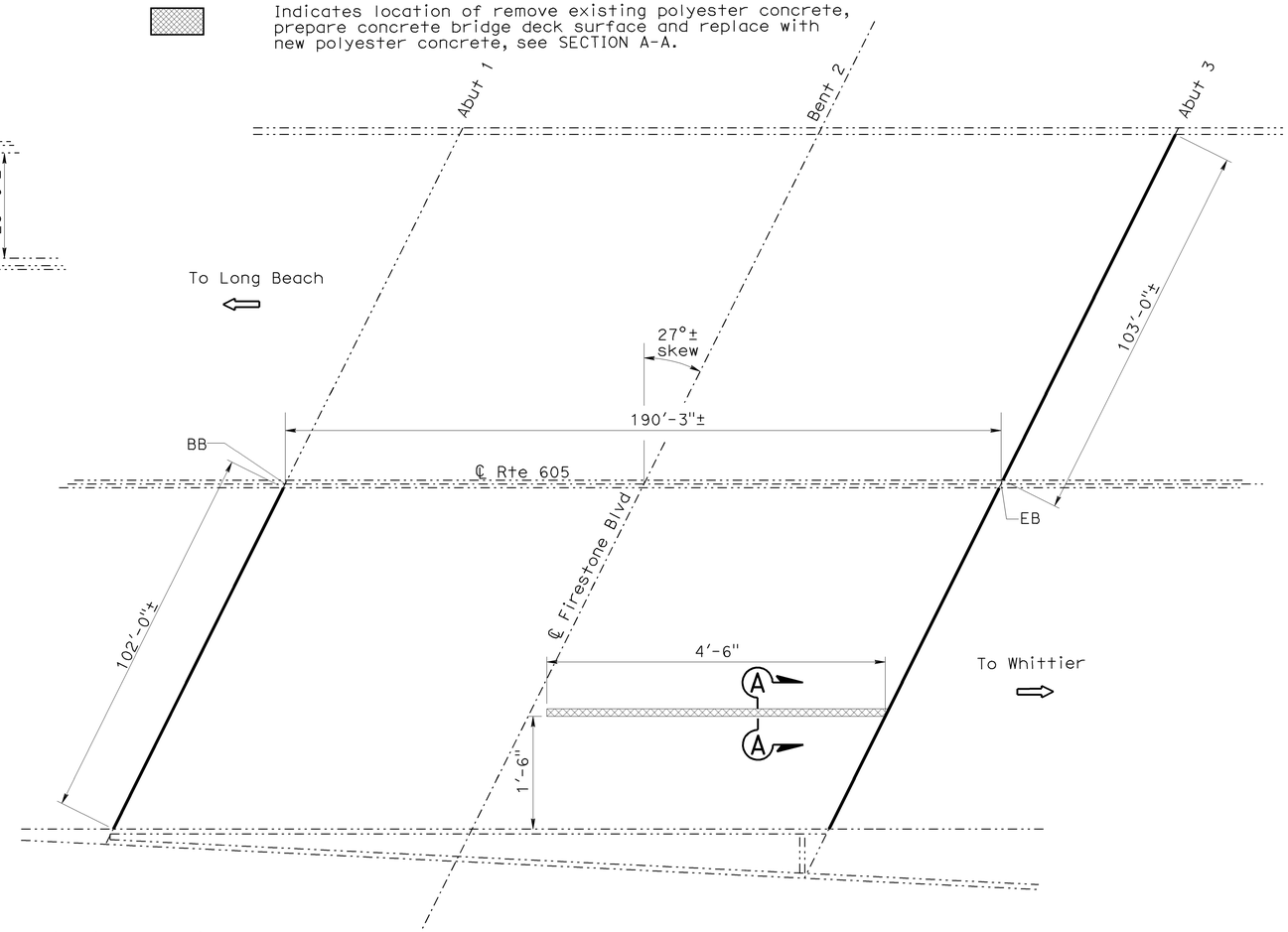


## FIRESTONE BLVD UC

Br No. 53-1653, Rte 605, PM R8.38
1" = 20'

NOTE:
THE CONTRACTOR SHALL VERIFY ALL CONTROLLING FIELD DIMENSIONS BEFORE ORDERING OR FABRICATING ANY MATERIAL. EXISTING UTILITY FACILITIES HAVE NOT BEEN PLOTTED ON THESE PLANS.

TONY D. BRAKE
DESIGN ENGINEER

| | BY | CHECKED | | | |
|---|---|---|---|---|---|
| DESIGN | Vinh Dang | Ramesh Patel | LOAD FACTOR DESIGN | LIVE LOADING: HS20-44 AND ALTERNATIVE AND PERMIT DESIGN LOAD | |
| DETAILS | Tom Dang | Vinh Dang | LAYOUT | Vinh Dang | Hong Tien Tran |
| QUANTITIES | Vinh Dang | Ramesh Patel | SPECIFICATIONS | Dave Klein | PLANS AND SPECS COMPARED Dave Klein |

STATE OF CALIFORNIA
DEPARTMENT OF TRANSPORTATION

DIVISION OF MAINTENANCE
STRUCTURE MAINTENANCE DESIGN

BRIDGE NO. Various
POST MILE Varies

ROUTE 19, 22, 47, 91, 110, 605, 710 BRIDGES
GENERAL PLAN NO. 13

STRUCTURES MAINTENANCE GENERAL PLAN SHEET (ENGLISH) (REV. 09-01-10)

ORIGINAL SCALE IN INCHES FOR REDUCED PLANS 0 1 2 3

UNIT: 07602
PROJECT NUMBER & PHASE: 0700001896
CONTRACT NO.: 4Y7501

DISREGARD PRINTS BEARING EARLIER REVISION DATES

REVISION DATES 3/4/11 3/5/11

SHEET 13 OF 18

FILE => 07-4y7501-a-gp13.dgn

USERNAME => s129239 DATE PLOTTED => 02-APR-2012 TIME PLOTTED => 06:48

| DIST | COUNTY | ROUTE | POST MILES TOTAL PROJECT | SHEET No. | TOTAL SHEETS |
|---|---|---|---|---|---|
| 07 | LA | 19,22,47,91 110, etc. | Var | 50 | 54 |

REGISTERED CIVIL ENGINEER 01/09/12 DATE

5-7-12
PLANS APPROVAL DATE

REGISTERED PROFESSIONAL ENGINEER VINH DUC L. DANG No. C65096 Exp. 09/30/13 CIVIL STATE OF CALIFORNIA

*The State of California or its officers or agents shall not be responsible for the accuracy or completeness of electronic copies of this plan sheet.*

## LEGEND:

Indicates existing.

Indicates direction of traffic.

Indicates limits of slurry cement backfill at existing abutment slopes. Limits are simplified of quantity purpose.

Indicates location of repair spalled surface area at edge of soffit over Southbound 710 lane no. 2 and no. 3. See SECTION D-D.

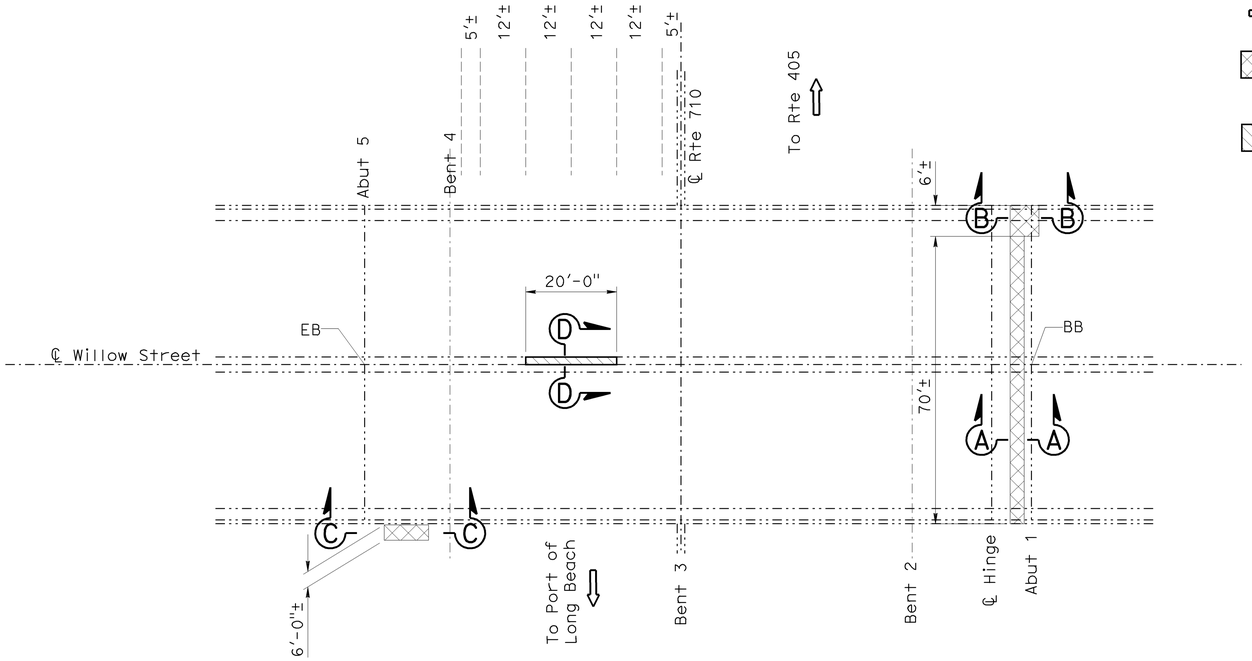


## WILLOW STREET OC

Br No. 53-0726, Rte 710, PM 7.89
1" = 20'

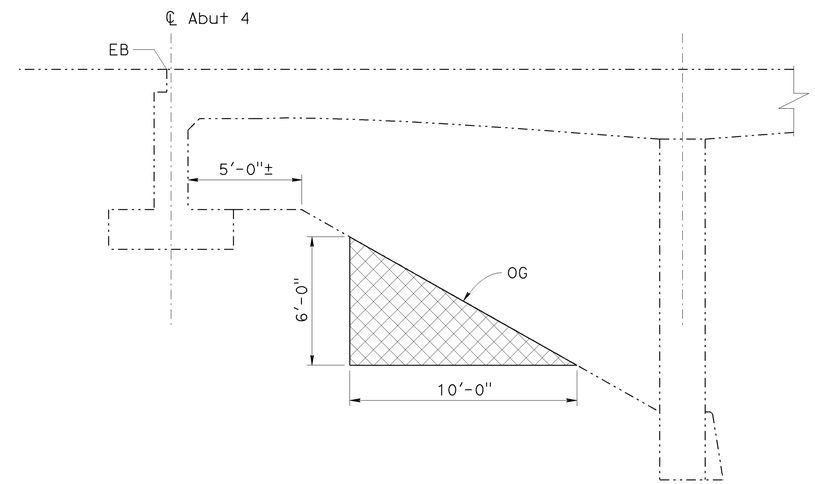


## SECTION C-C

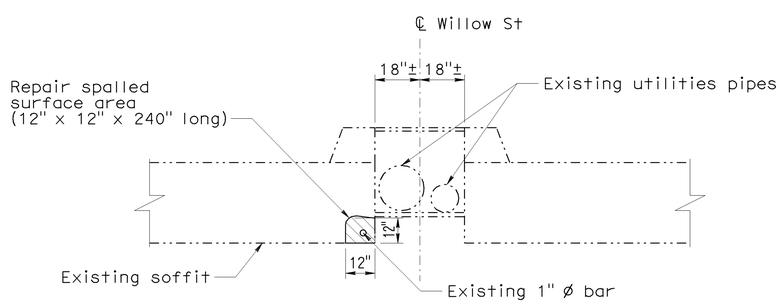


## SECTION D-D

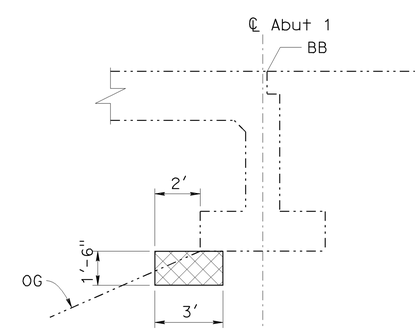


## SECTION A-A

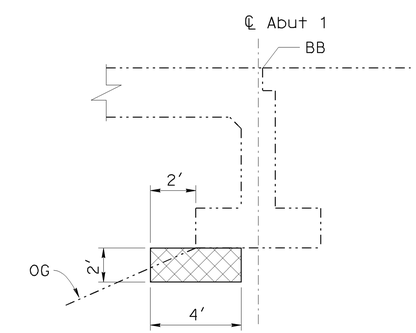


## SECTION B-B

NOTE:
THE CONTRACTOR SHALL VERIFY ALL CONTROLLING FIELD DIMENSIONS BEFORE ORDERING OR FABRICATING ANY MATERIAL. EXISTING UTILITY FACILITIES HAVE NOT BEEN PLOTTED ON THESE PLANS.

WILLOW STREET OVERCROSSING BRIDGE NO. 53-0726

QUANTITIES

| | | |
|---|---|---|
| STRUCTURE BACKFILL (SLURRY CEMENT) | 20 | CY |
| REPAIR SPALLED SURFACE AREA | 20 | SQFT |

TONY D. BRAKE
DESIGN ENGINEER

| | BY | CHECKED |
|---|---|---|
| DESIGN | Vinh Dang | Ramesh Patel |
| DETAILS | Tom Dang | Vinh Dang |
| QUANTITIES | Vinh Dang | Ramesh Patel |

LOAD FACTOR DESIGN — LIVE LOADING: HS20-44 AND ALTERNATIVE AND PERMIT DESIGN LOAD
LAYOUT — BY Vinh Dang — CHECKED Hong Tien Tran
SPECIFICATIONS — BY Dave Klein — PLANS AND SPECS COMPARED Dave Klein

STATE OF CALIFORNIA
DEPARTMENT OF TRANSPORTATION

DIVISION OF MAINTENANCE
STRUCTURE MAINTENANCE DESIGN

BRIDGE NO. Various
POST MILE Varies

ROUTE 19, 22, 47, 91, 110, 605, 710 BRIDGES
GENERAL PLAN NO. 14

STRUCTURES MAINTENANCE GENERAL PLAN SHEET (ENGLISH) (REV. 09-01-10)

ORIGINAL SCALE IN INCHES FOR REDUCED PLANS 0 1 2 3

UNIT: 07602
PROJECT NUMBER & PHASE: 0700001896
CONTRACT NO.: 4Y7501

DISREGARD PRINTS BEARING EARLIER REVISION DATES
REVISION DATES 3/1/11

SHEET 14 OF 18

FILE => 07-4y7501-a-gp14.dgn

USERNAME => s1293239 DATE PLOTTED => 02-APR-2012 TIME PLOTTED => 06:48

| DIST | COUNTY | ROUTE | POST MILES TOTAL PROJECT | SHEET No. | TOTAL SHEETS |
|---|---|---|---|---|---|
| 07 | LA | 19,22,47,91 110, etc. | Var | 51 | 54 |

REGISTERED CIVIL ENGINEER 01/09/12 DATE

5-7-12
PLANS APPROVAL DATE

REGISTERED PROFESSIONAL ENGINEER VINH DUC L. DANG No. C65096 Exp. 09/30/13 CIVIL STATE OF CALIFORNIA

*The State of California or its officers or agents shall not be responsible for the accuracy or completeness of electronic copies of this plan sheet.*

# JOINT SEAL TABLE

| BRIDGE NAME | BRIDGE NUMBER | LOCATION | MINIMUM "MR" (INCHES) | APPROX LENGTH (FT) | EXISTING WATERSTOP | APPROX DEPTH TO CLEAN EXP JOINT (INCHES) | REMOVE UNSOUND CONCRETE (CU FT) | RAPID SETTING CONCRETE (PATCH) (CU FT) |
|---|---|---|---|---|---|---|---|---|
| Studebaker Road OC | 53-1427 | Abut 1 | 1/2 | 52 | No | 6 | 2 | 2 |
| | | Abut 6 | 1/2 | 52 | No | 6 | | |
| San Gabriel River | 53-0302L | Hinge 2 | 1/2 | 40 | No | 6 | 2 | 2 |
| | | Hinge 7 | 1/2 | 40 | No | 6 | | |
| | 53-0302R | Hinge 2 | 1/2 | 36 | No | 6 | 2 | 2 |
| | | Hinge 7 | 1/2 | 36 | No | 6 | | |
| Harbor Blvd Off-Ramp UC | 53-0807 | Abut 1 | 1/2 | 82 | No | 6 | 2 | 2 |
| | | Abut 4 | 1/2 | 82 | No | 6 | | |
| W91-N110 Connector (Broadway) | 53-2663F | Abut 2 | 1/2 | 52 | No | 6 | 2 | 2 |
| Main Street UC | 53-2547 | Abut 2 | 1/2 | 207 | No | 6 | 2 | 2 |
| Avalon Blvd UC | 53-2458 | Approach Joint slab (Abut 1) | 1/2 | 120 | No | 6 | 2 | 2 |
| | | Approach Joint slab (Abut 3) | 1/2 | 126 | No | 6 | | |
| Bixby Avenue UC | 53-1719 | Abut 1 | 1/2 | 168 | No | 6 | 2 | 2 |
| | | Abut 4 | 1/2 | 168 | No | 6 | | |
| Union Oil OH | 53-0977 | Abut 1 | 1/2 | 180 | No | 6 | 4 | 4 |
| | | Longitudinal WB | 1/2 | 34 | No | 6 | | |
| | | Longitudinal EB | 1/2 | 34 | No | 6 | | |
| | | Abut 2 | 1/2 | 203 | No | 6 | | |
| 168th Street UC | 53-0957 | Abut 1 | 1/2 | 226 | No | 6 | 2 | 2 |
| | | Abut 2 | 1/2 | 236 | No | 6 | | |
| Firestone Blvd UC | 53-1653 | Abut 1 | 1/2 | 102 | No | 6 | 2 | 2 |
| | | Abut 3 | 1/2 | 205 | No | 6 | | |

BW= Backwall, PN=Paving Notch, EB=Eastbound, WB=Westbound

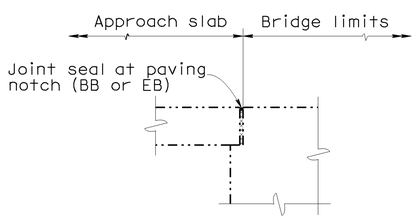


DIAPHRAGM ABUTMENT

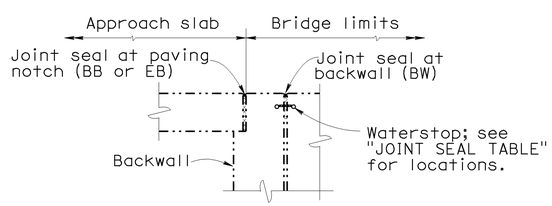


ABUTMENT WITH BACKWALL AND PAVING NOTCH

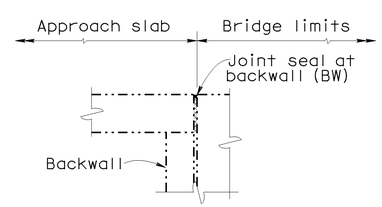


ABUTMENT WITH BACKWALL

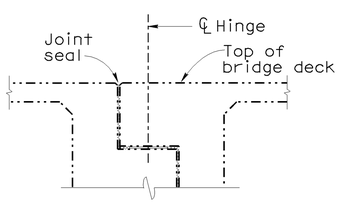


HINGE

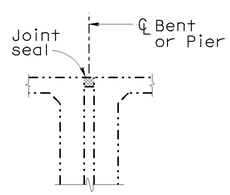


BENT OR PIER

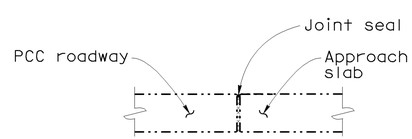


APPROACH JOINT SLAB

## JOINT SEAL LOCATION

NO SCALE

## NOTES:

The following notes apply to JOINT SEAL TYPE A:

Install Joint Seal (MR = 1/2") or Silicone Joint Seal 3" up into curb or barrier rail on the low side of the deck where deck joint aligns with curb or barrier rail joint.

For details not shown see RSP B6-21 sheet.

The following notes apply to JOINT SEAL TYPE B:

1) Seal must satisfy both minimum Movement Rating (MR) and minimum W1 requirements.

2) Minimum W1 is the calculated maximum width of the joint based on field measurements. After the joints have been cleaned, minimum W1 is to be recalculated by the Engineer.

3) W1 shall be the smaller of the values determined as follows:
   A) 0.85 times the manufacturer's designed minimum uncompressed width of the seal.
   B) The width of the seal on the third successive test cycle of the pressure deflection test, when compressed to an average pressure of 3.0 PSI.

4) Bend Type B joint seal 6 inches up into curb or rail on the low side of the deck where deck joint matches curb or rail joint.

For details not shown see RSP B6-21 sheet.

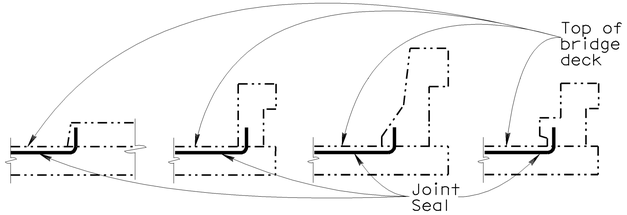


BARRIER RAIL

## JOINT SEAL AT LOW SIDE OF DECK

Note: Details shown for illustration purposes only.

For use only where deck joint matches the sidewalk, curb or barrier rail joint.

NOTE:
THE CONTRACTOR SHALL VERIFY ALL CONTROLLING FIELD DIMENSIONS BEFORE ORDERING OR FABRICATING ANY MATERIAL. EXISTING UTILITY FACILITIES HAVE NOT BEEN PLOTTED ON THESE PLANS.

| | BY | CHECKED |
|---|---|---|
| DESIGN | Vinh Dang | Ramesh Patel |
| DETAILS | Tom Dang | Vinh Dang |
| QUANTITIES | Vinh Dang | Ramesh Patel |

STATE OF CALIFORNIA
DEPARTMENT OF TRANSPORTATION

DIVISION OF MAINTENANCE
STRUCTURE MAINTENANCE DESIGN

BRIDGE NO. Various
POST MILE Varies

ROUTE 19, 22, 47, 91, 110, 605, 710 BRIDGES

MISCELLANEOUS DETAILS NO. 1

STRUCTURES MAINTENANCE DETAIL SHEET (ENGLISH) (REV. 09-01-10)

ORIGINAL SCALE IN INCHES FOR REDUCED PLANS 0 1 2 -

UNIT: 07602
PROJECT NUMBER & PHASE: 0700001896
CONTRACT NO.: 4Y7501

DISREGARD PRINTS BEARING EARLIER REVISION DATES

REVISION DATES 3-01-11 10-18-11 3-05-11

SHEET 15 OF 18

FILE => 07-4y7501-b-miscdtl01.dgn

USERNAME => s129239 DATE PLOTTED => 02-APR-2012 TIME PLOTTED => 06:48

| DIST | COUNTY | ROUTE | POST MILES TOTAL PROJECT | SHEET No. | TOTAL SHEETS |
|---|---|---|---|---|---|
| 07 | LA | 19,22,47,91 110, etc. | Var | 52 | 54 |

REGISTERED CIVIL ENGINEER 01/09/12 DATE

5-7-12
PLANS APPROVAL DATE

REGISTERED PROFESSIONAL ENGINEER VINH DUC L. DANG No. C65096 Exp. 09/30/13 CIVIL STATE OF CALIFORNIA

*The State of California or its officers or agents shall not be responsible for the accuracy or completeness of electronic copies of this plan sheet.*

# DECK REPAIR TABLE
## REMOVE UNSOUND CONCRETE AND RAPID SETTING CONCRETE (PATCH)

| BRIDGE NAME | BRIDGE NUMBER | APPROXIMATE AREA DAMAGED (%) | APPROXIMATE DEPTH (INCHES) |
|---|---|---|---|
| S19-E91 CONNECTOR OC | 53-1760F | 1 | 3 |
| LOS CERRITOS CHANNEL | 53-0215L/R | 1 | 3 |
| STUDEBAKER ROAD OC | 53-1427 | 1 | 3 |
| SAN GABRIEL RIVER | 53-0302R | 1 | 3 |
| HARBOR BLVD OFF-RAMP UC | 53-0807 | 1 | 3 |
| DOMINGUEZ CHANNEL | 53-2760Y | 1 | 3 |
| W91-N110 CONNECTOR OC | 53-2666F | 1 | 3 |
| W91-S110 CONNECTOR OC | 53-2549H | 1 | 3 |
| W91-N110 CONNECTOR (BROADWAY) | 53-2663F | 1 | 3 |
| AVALON BLVD UC | 53-2458 | 1 | 3 |
| CENTRAL AVENUE OC | 53-2459 | 1 | 3 |
| WILMINGTON AVENUE OC | 53-1865 | 1 | 3 |
| WALNUT AVENUE UC | 53-2127 | 1 | 3 |
| ARDMORE AVENUE UC | 53-1757 | 1 | 3 |
| BIXBY AVENUE UC | 53-1719 | 1 | 3 |
| CARSON STREET UC | 53-1171 | 1 | 3 |
| S405-N110/110 SEPARATION | 53-1045F | 1 | 3 |
| HARBOR SCENIC DRIVE OH | 53-2934 | 1 | 3 |

DECK REPAIR NOTES:

1. Existing reinforcement shall be protected in place during unsound concrete removal and patching operations.
2. It is responsibility of the Contractor to repair any reinforcement that is accidently cut by saw cutting operations.
3. When existing transverse reinforcement is exposed in the deck surface, saw cutting may be waived with the approval of the Engineer.
4. The saw cut depth shall not exceed ¾ inch or the concrete cover over the top steel reinforcing bars, whichever is less.
5. Remove unsound Portland Cement concrete and unsound concrete patches to expose sound, hard concrete substrate. Replace original deck surface with rapid setting concrete patch.

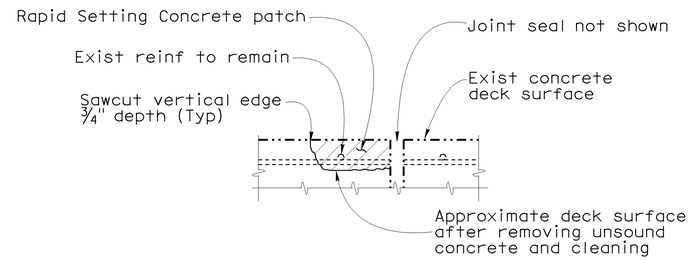


## JOINT SPALL REPAIR DETAIL

Location will be determined by the Engineer. Reinforcement may be encountered during deck concrete removal and is to remain undamaged.

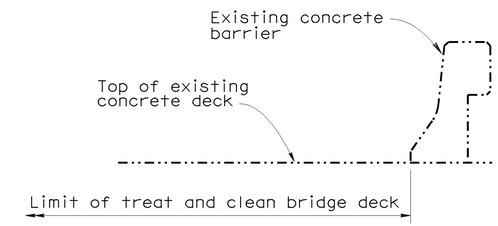


EOD BARRIER

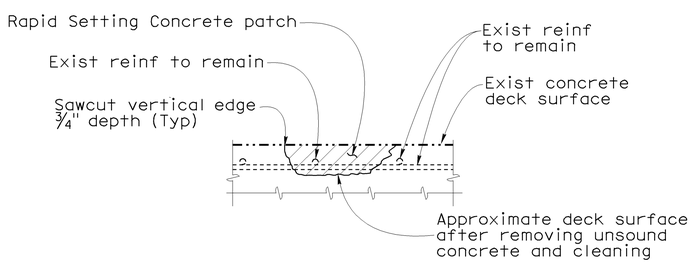


## DEck DAMAGE REPAIR DETAIL

Location will be determined by the Engineer. Reinforcement may be encountered during deck concrete removal and is to remain undamaged.

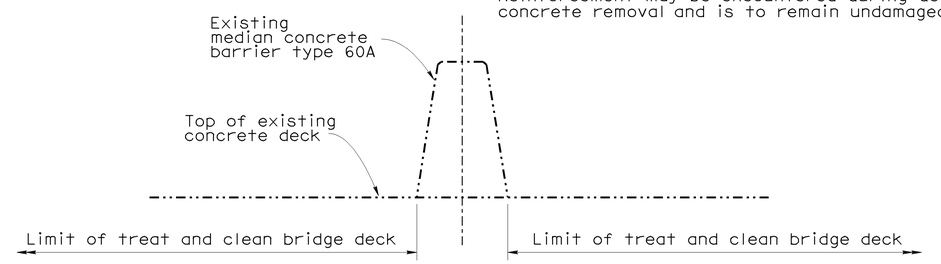


MEDIAN BARRIER

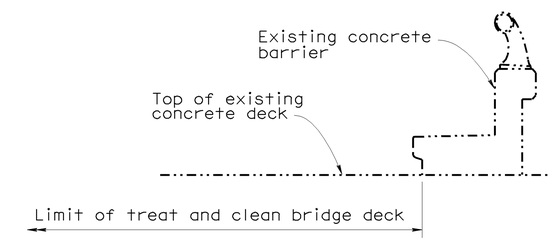


SIDEWALK BARRIER TYPE 2

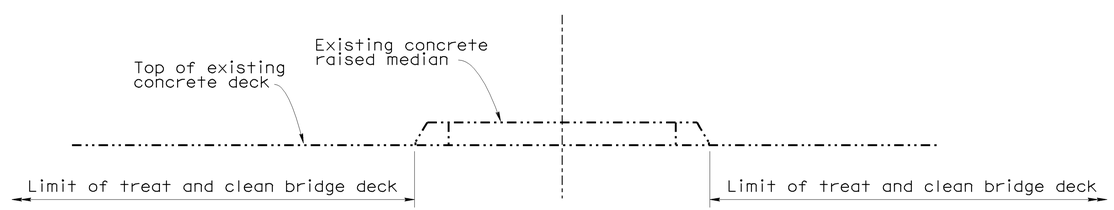


RAISED MEDIAN

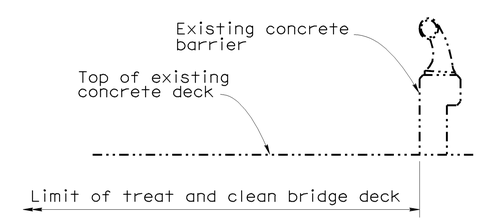


SIDEWALK BARRIER TYPE 1

NOTE:
THE CONTRACTOR SHALL VERIFY ALL CONTROLLING FIELD DIMENSIONS BEFORE ORDERING OR FABRICATING ANY MATERIAL. EXISTING UTILITY FACILITIES HAVE NOT BEEN PLOTTED ON THESE PLANS.

## TYPICAL LIMITS OF DECK WORK

NO SCALE

| | BY | CHECKED |
|---|---|---|
| DESIGN | Vinh Dang | Ramesh Patel |
| DETAILS | Tom Dang | Vinh Dang |
| QUANTITIES | Vinh Dang | Ramesh Patel |

STATE OF CALIFORNIA
DEPARTMENT OF TRANSPORTATION

DIVISION OF MAINTENANCE
STRUCTURE MAINTENANCE DESIGN

BRIDGE NO.: Various
POST MILE: Varies

ROUTE 19, 22, 47, 91, 110, 605, 710 BRIDGES
MISCELLANEOUS DETAILS NO. 2

STRUCTURES MAINTENANCE DETAIL SHEET (ENGLISH) (REV. 09-01-10)

ORIGINAL SCALE IN INCHES FOR REDUCED PLANS 0 1 2 -

UNIT: 07602
PROJECT NUMBER & PHASE: 0700001896
CONTRACT NO.: 4Y7501

DISREGARD PRINTS BEARING EARLIER REVISION DATES

REVISION DATES: 3/1/11

SHEET 16 OF 18

FILE => 07-4y7501-b-miscdtl02.dgn

USERNAME => s129259 DATE PLOTTED => 02-APR-2012 TIME PLOTTED => 06:48

| DIST | COUNTY | ROUTE | POST MILES TOTAL PROJECT | SHEET No. | TOTAL SHEETS |
|---|---|---|---|---|---|
| 07 | LA | 19,22,47,91 110, etc. | Var | 53 | 54 |

REGISTERED CIVIL ENGINEER — DATE 01/09/12

5-7-12
PLANS APPROVAL DATE

REGISTERED PROFESSIONAL ENGINEER — VINH DUC L. DANG — No. C65096 — Exp. 09/30/13 — CIVIL — STATE OF CALIFORNIA

*The State of California or its officers or agents shall not be responsible for the accuracy or completeness of electronic copies of this plan sheet.*

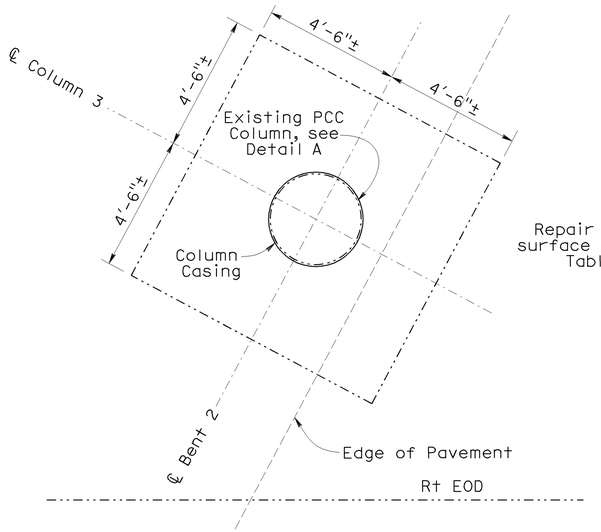


## PART PLAN (COLUMN 3)

NO SCALE

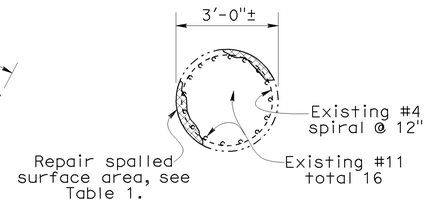


## DETAIL A

NO SCALE

| TABLE 1 | | |
|---|---|---|
| REPAIR SPALLED SURFACE AREA | | |
| LOCATION | APPROX. DEPTH (IN) | APPROX. AREA (SQ FT) |
| Column 3 base. Location varies. | 3 | 10 |

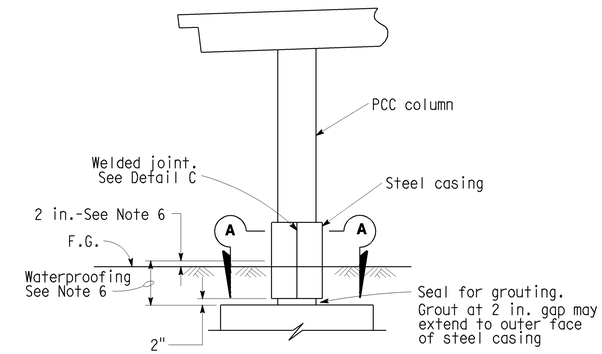


## COLUMN CASING

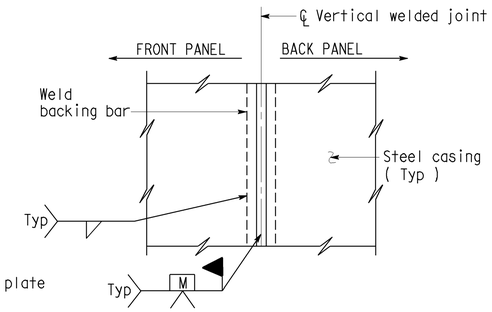


## ( WELDED JOINT )

## DETAIL C

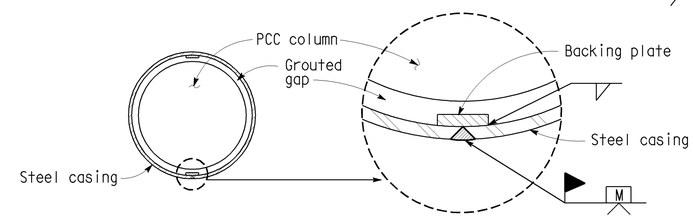


## SECTION A-A

Minimum inside diameter of steel casing = 1½" greater than nominal column diameter

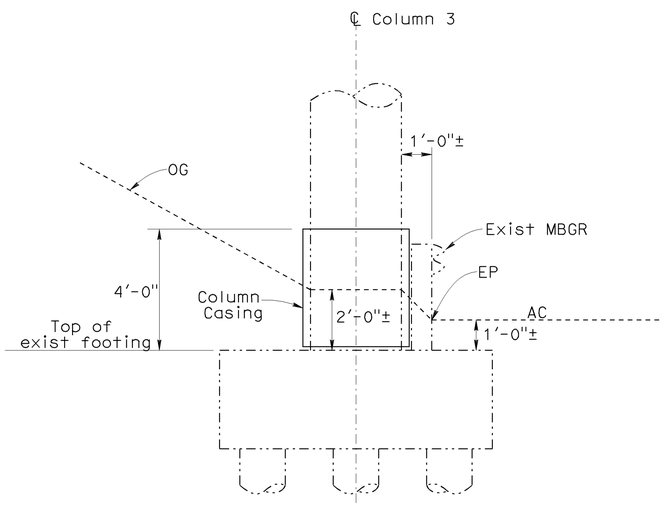


## COLUMN 3 REPAIR

NO SCALE

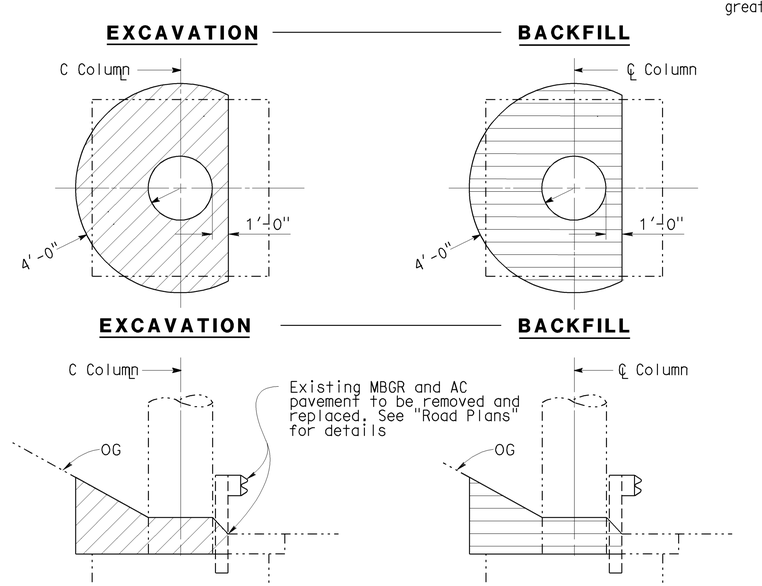


## LIMITS OF EXCAVATION AND BACKFILL

NO SCALE

**NOTES:**

1) For varying thickness steel casing inside surface to remain flush. Minimum clearance from PCC column to casing shall be maintained.
2) Appropriate injection nozzles to be provided on casing, but removed and ground flush following completion of grouting operation.
3) All voids between steel casing and PCC column to be filled with grout.
4) Location and number of vertical and horizontal welds to be determined by the Contractor, and subject to the approval of the Engineer. The location of casing welds are for illustration. No skip welds allowed.
5) Circular steel casing to be ¼" thick minimum for casings with a 4'-4" diameter or less; all other steel casings to be ⅜" thick unless noted differently on contract plans. Backing plates to be the same thickness as casing up to maximum ½" thick.
6) Waterproof limits for steel casings.

**LEGEND**

- Indicates existing structure
- Indicates new construction
- Indicates structure excavation
- Indicates structure backfill

NOTE:
THE CONTRACTOR SHALL VERIFY ALL CONTROLLING FIELD DIMENSIONS BEFORE ORDERING OR FABRICATING ANY MATERIAL. EXISTING UTILITY FACILITIES HAVE NOT BEEN PLOTTED ON THESE PLANS.

| | BY | CHECKED |
|---|---|---|
| DESIGN | Vinh Dang | Ramesh Patel |
| DETAILS | Tom Dang | Vinh Dang |
| QUANTITIES | Vinh Dang | Ramesh Patel |

STATE OF CALIFORNIA
DEPARTMENT OF TRANSPORTATION

DIVISION OF MAINTENANCE
STRUCTURE MAINTENANCE DESIGN

BRIDGE NO. Various
POST MILE Varies

ROUTE 19, 22, 47, 91, 110, 605, 710 BRIDGES

MISCELLANEOUS DETAILS NO. 3

STRUCTURES MAINTENANCE DETAIL SHEET (ENGLISH) (REV. 09-01-10)

ORIGINAL SCALE IN INCHES FOR REDUCED PLANS 0 1 2 -

UNIT: 07602
PROJECT NUMBER & PHASE: 0700001896
CONTRACT NO.: 4Y7501

DISREGARD PRINTS BEARING EARLIER REVISION DATES

REVISION DATES 3/1/11

SHEET 17 OF 18

FILE => 07-4y7501-b-miscdt03.dgn

USERNAME => s129239 DGN FILE => 02-MAR-2012 TIME PLOTTED => 08:48

| DIST | COUNTY | ROUTE | POST MILES TOTAL PROJECT | SHEET No | TOTAL SHEETS |
|---|---|---|---|---|---|
| 07 | LA | 19,22,47,91 110, etc. | Var | 54 | 54 |

REGISTERED CIVIL ENGINEER 01/09/12 DATE

5-7-12
PLANS APPROVAL DATE

REGISTERED PROFESSIONAL ENGINEER VINH DUC L. DANG No. C65096 Exp. 09/30/13 CIVIL STATE OF CALIFORNIA

*The State of California or its officers or agents shall not be responsible for the accuracy or completeness of electronic copies of this plan sheet.*

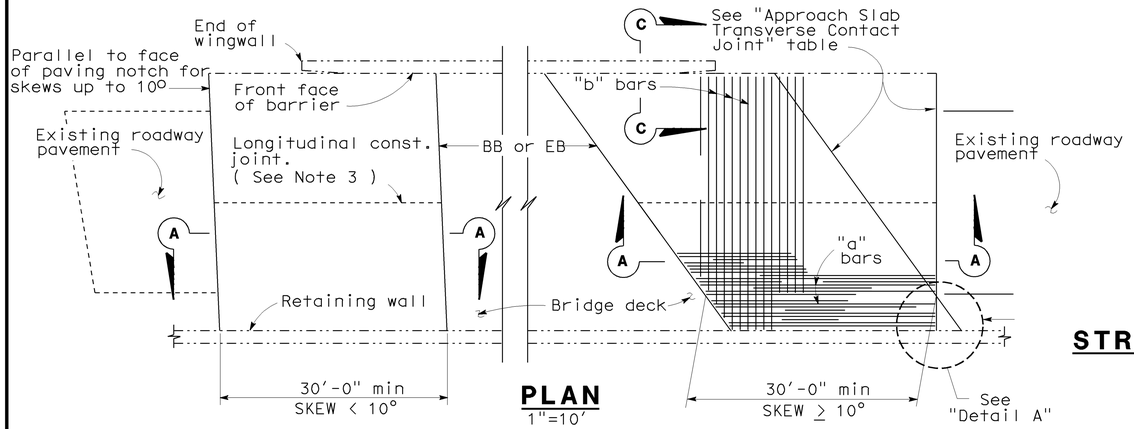


## PLAN
1"=10'

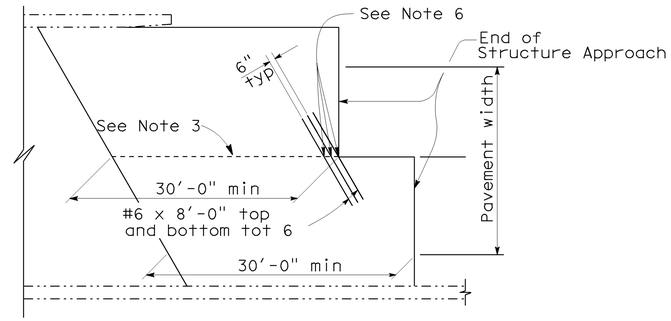


## STRUCTURE APPROACH - END STAGGER DETAIL
No Scale

| APPROACH SLAB TRANSVERSE CONTACT JOINT | | |
|---|---|---|
| APPROACH SKEW | WITH AC ROADWAY PAVEMENT | WITH PCC ROADWAY PAVEMENT |
| < 10° | Parallel to face of paving notch | Parallel to face of paving notch |
| 10° - 45° | Parallel to face of P N use (Detail A) | Stagger lines 24' to 36' apart |
| > 45° | Parallel to face of P N use (Detail A) | Stagger at each lane line |

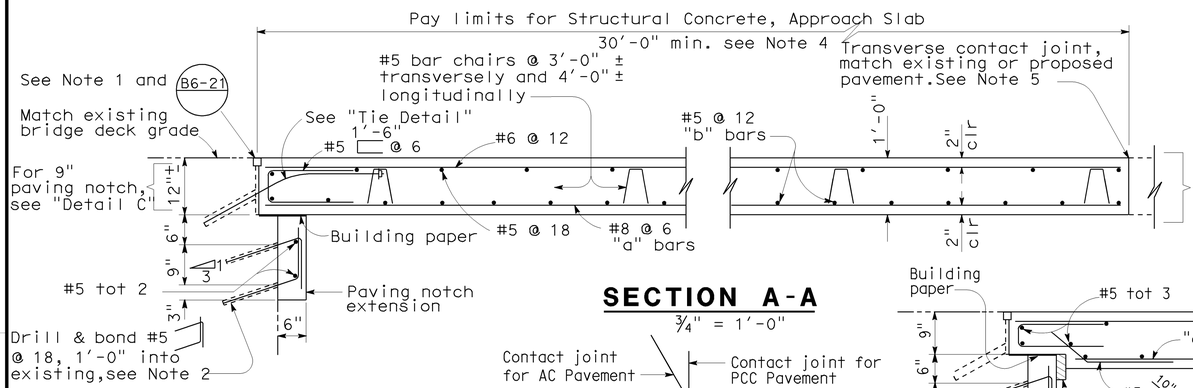


## SECTION A-A
¾" = 1'-0"

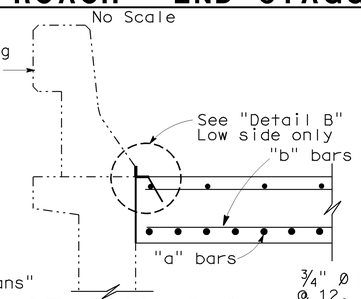


## SECTION C-C
¾" = 1'-0"




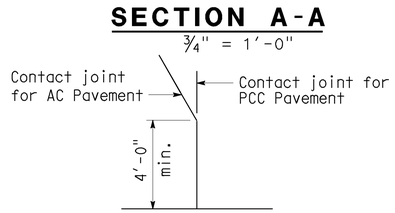


## DETAIL A
No Scale

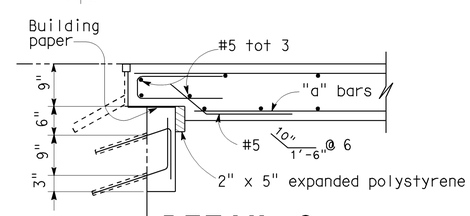


## DETAIL C
¾" = 1'-0"

NOTE: For details not shown, see "Section A-A".

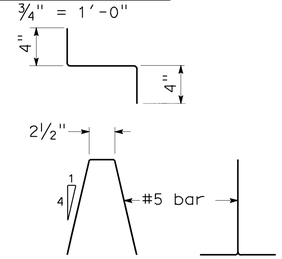


## BAR CHAIR DETAIL
1½" = 1'-0"

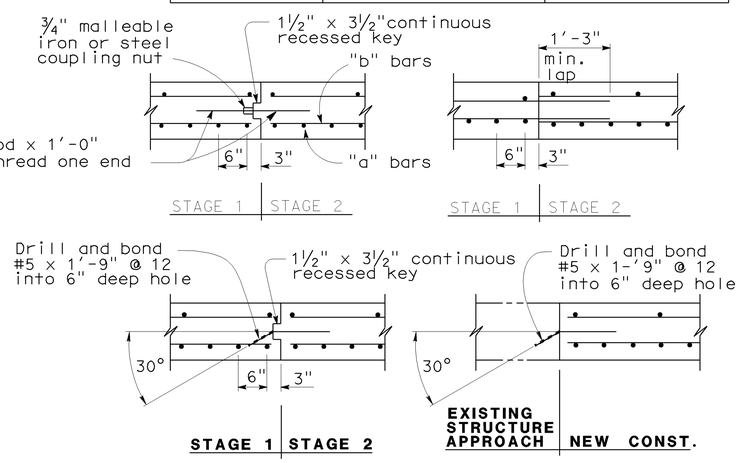


## LONGITUDINAL CONSTRUCTION JOINT ALTERNATIVES
¾" = 1'-0"

**NOTES:**

1. For details not shown or noted, see Structure Plans. Adjust bar reinforcement to clear a sawcut for sealed joint, when required.
2. Space to avoid existing prestress anchorages and main reinforcement.
3. Longitudinal construction joints, when permitted by the Engineer, shall be located on lane lines.
4. Transverse contact joint shall be a minimum of 5'-0" from an existing or constructed weakened plane joint.
5. For transverse contact joint with new PCC paving. refer to Standard Plan P10.
6. Couplers are required for stage construction.
7. End angle or plate at beginning of barrier transition, end of wingwall or end of structure approach as applicable.

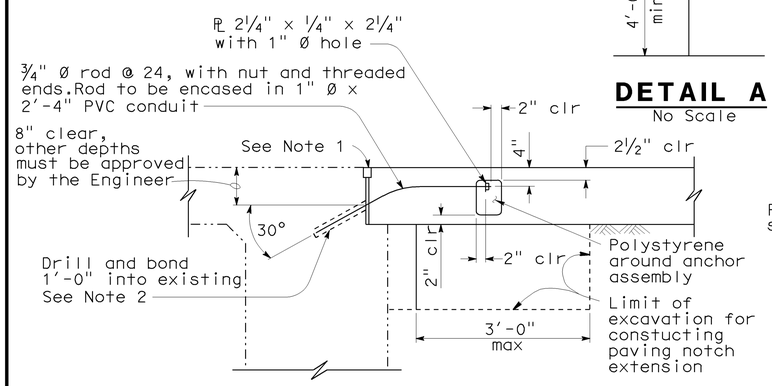


## TIE DETAIL
¾" = 1'-0"

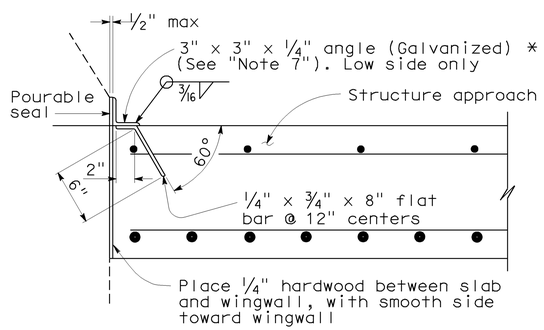


*(TO BE USED WITH TYPE 25 OR TYPE 27 CONCRETE BARRIER)

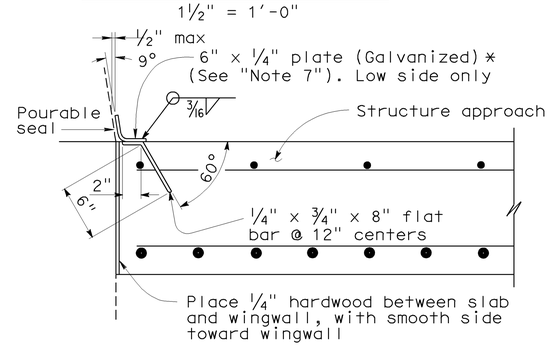


*(TO BE USED WITH TYPE 732 OR TYPE 736 CONCRETE BARRIER)

## DETAIL B
1½" = 1'-0"

NOTE:
THE CONTRACTOR SHALL VERIFY ALL CONTROLLING FIELD DIMENSIONS BEFORE ORDERING OR FABRICATING ANY MATERIAL. EXISTING UTILITY FACILITIES HAVE NOT BEEN PLOTTED ON THESE PLANS.

STANDARD DRAWING

| RELEASE DATE 3/14/05 | DESIGN | BY M.TRAFFALIS | CHECKED E.THORKILDSEN | RELEASED BY |
|---|---|---|---|---|
| | DETAILS | BY R.YEE | CHECKED E.THORKILDSEN | |
| FILE NO. xs3-140e | SUBMITTED | BY M.HA | DRAWING DATE 8/92 | OFFICE CHIEF |

STATE OF CALIFORNIA
DEPARTMENT OF TRANSPORTATION

DIVISION OF ENGINEERING SERVICES

BRIDGE NO. Various
MILE POST Varies

ROUTE 19, 22, 47, 91, 110, 605, 710 BRIDGES

STRUCTURE APPROACH TYPE R(30D)

DS OSD 2147A (ENGLISH) (REV. X/XX/XX)

ORIGINAL SCALE IN INCHES FOR REDUCED PLANS 0 1 2 3

UNIT: 07602
PROJECT NUMBER & PHASE: 0700001896
CONTRACT NO.: 4Y7501

REVISION DATES (PRELIMINARY STAGE ONLY) 2-1-11

SHEET 18 OF 18

USERNAME => s129239

DATE PLOTTED => 02-APR-2012 TIME PLOTTED => 06:48

07-4y7501-c-struct