ACBRSTP-X037(156)E

Dist	COUNTY	ROUTES	POST MILES TOTAL PROJECT	SHEET No.	TOTAL SHEETS
07	LA	1, 90, 405	Var	1	40

INDEX OF PLANS

SHEET No.	DESCRIPTION
1	TITLE AND LOCATION MAP
2	LOCATIONS OF CONSTRUCTION
3	CONSTRUCTION AREA SIGNS
4-11	TRAFFIC HANDLING DETAILS
12-13	PAVEMENT DELINEATION QUANTITIES
14-18	NEW AND REVISED STANDARD PLANS

STRUCTURE PLANS

19-40 ROUTE 1, 90, 405 BRIDGES

THE STANDARD PLANS LIST APPLICABLE TO THIS CONTRACT IS INCLUDED IN THE NOTICE TO BIDDERS AND SPECIAL PROVISIONS BOOK.

NOTE:

THE TABLE OF LOCATIONS OF CONSTRUCTION IS SHOWN IN THE LOCATIONS OF CONSTRUCTION SHEET.

STATE OF CALIFORNIA

DEPARTMENT OF TRANSPORTATION

PROJECT PLANS FOR CONSTRUCTION ON STATE HIGHWAY IN LOS ANGELES COUNTY AT VARIOUS LOCATIONS

TO BE SUPPLEMENTED BY STANDARD PLANS DATED MAY 2006

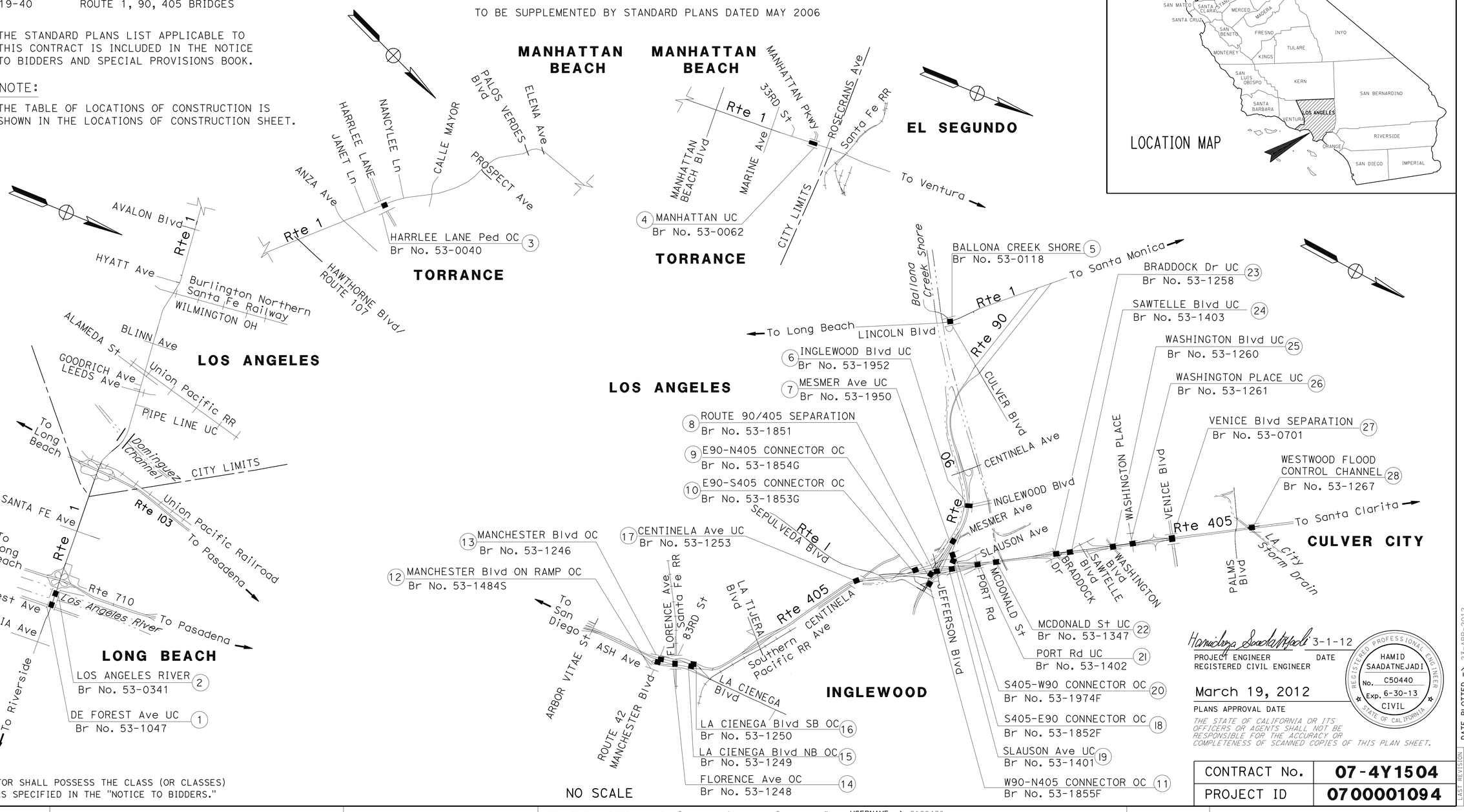

THE CONTRACTOR SHALL POSSESS THE CLASS (OR CLASSES) OF LICENSE AS SPECIFIED IN THE "NOTICE TO BIDDERS."

Hamidreza Saadatnejadi 3-1-12
PROJECT ENGINEER DATE
REGISTERED CIVIL ENGINEER

March 19, 2012
PLANS APPROVAL DATE

THE STATE OF CALIFORNIA OR ITS OFFICERS OR AGENTS SHALL NOT BE RESPONSIBLE FOR THE ACCURACY OR COMPLETENESS OF SCANNED COPIES OF THIS PLAN SHEET.

REGISTERED PROFESSIONAL ENGINEER — HAMID SAADATNEJADI — No. C50440 — Exp. 6-30-13 — CIVIL — STATE OF CALIFORNIA

CONTRACT No.	07-4Y1504
PROJECT ID	0700001094

PROJECT MANAGER: DAREK CHMIELEWSKI
DESIGN ENGINEER: HAMID SAADATNEJADI

LAST REVISION: DATE PLOTTED => 23-APR-2012 TIME PLOTTED => 13:11 03-19-12

BORDER LAST REVISED 7/2/2010 | CALTRANS WEB SITE IS: HTTP//WWW.DOT.CA.GOV/ | RELATIVE BORDER SCALE IS IN INCHES 0 1 2 3 | USERNAME => S122436 DGN FILE => 0700001094ab001.dgn | UNIT 1959 | PROJECT NUMBER & PHASE 07000010941

Dist	COUNTY	ROUTE	POST MILES TOTAL PROJECT	SHEET No.	TOTAL SHEETS
07	LA	1,90,405	Var	2	40

Hamidreza Saadatnejadi 3-1-12
REGISTERED CIVIL ENGINEER DATE

3-19-12
PLANS APPROVAL DATE

REGISTERED PROFESSIONAL ENGINEER
HAMID SAADATNEJADI
No. C50440
Exp. 6-30-13
CIVIL
STATE OF CALIFORNIA

THE STATE OF CALIFORNIA OR ITS OFFICERS OR AGENTS SHALL NOT BE RESPONSIBLE FOR THE ACCURACY OR COMPLETENESS OF SCANNED COPIES OF THIS PLAN SHEET.

LOCATIONS OF CONSTRUCTION

Loc	ROUTE	PM	NAME OF BRIDGE	BRIDGE No.
1	1	7.08	DE FOREST Ave UC	53-1047
2	1	7.11	LOS ANGELES RIVER	53-0341
3	1	16.81	HARRLEE LANE Ped OC	53-0040
4	1	23.79	MANHATTAN St UC	53-0062
5	1	30.36	BALLONA CREEK SHORE	53-0118
6	90	2.01	INGLEWOOD Blvd UC	53-1952
7	90	2.33	MESMER Ave UC	53-1950
8	90	2.54	ROUTE 90 / 405 SEPARATION	53-1851
9	90	2.55	E90-N405 CONNECTOR OC	53-1854G
10	90	2.58	E90-S405 CONNECTOR OC	53-1853G
11	90	2.73	W90-N405 CONNECTOR OC	53-1855F
12	405	23.32	MANCHESTER Blvd ON RAMP OC	53-1484S
13	405	23.36	MANCHESTER Blvd OC	53-1246
14	405	23.50	FLORENCE Ave OC	53-1248
15	405	23.64	LA CIENEGA Blvd NB OC	53-1249
16	405	23.71	LA CIENEGA Blvd SB OC	53-1250
17	405	25.27	CENTINELA Ave UC	53-1253
18	405	25.91	S405-E90 CONNECTOR OC	53-1852F
19	405	26.08	SLAUSON Ave UC	53-1401
20	405	26.10	S405-W90 CONNECTOR OC	53-1974F
21	405	26.29	PORT ROAD UC	53-1402
22	405	26.45	MCDONALD St UC	53-1347
23	405	26.96	BRADDOCK Dr UC	53-1258
24	405	27.08	SAWTELLE Blvd UC	53-1403
25	405	27.45	WASHINGTON Blvd UC	53-1260
26	405	27.61	WASHINGTON PLACE UC	53-1261
27	405	27.95	VENICE Blvd SEPARATION	53-0701
28	405	28.61	WESTWOOD FLOOD CONTROL CHANNEL	53-1267

REVISED BY | DATE REVISED
HUGO GUZMAN | HAMID SAADATNEJADI
CALCULATED-DESIGNED BY | CHECKED BY
FUNCTIONAL SUPERVISOR: HAMID SAADATNEJADI
STATE OF CALIFORNIA - DEPARTMENT OF TRANSPORTATION
Caltrans® MAINTENANCE ENGINEERING

LAST REVISION | DATE PLOTTED => 19-APR-2012
03-19-12 | TIME PLOTTED => 14:19

BORDER LAST REVISED 7/2/2010
USERNAME => s122436
DGN FILE => 0700001094ba001.dgn
RELATIVE BORDER SCALE IS IN INCHES 0 1 2 3
UNIT 1959
PROJECT NUMBER & PHASE 07000010941

Dist	COUNTY	ROUTE	POST MILES TOTAL PROJECT	SHEET No.	TOTAL SHEETS
07	LA	1,90,405	Var	3	40

Hamidreza Saadatnejadi 3-1-12
REGISTERED CIVIL ENGINEER DATE

3-19-12
PLANS APPROVAL DATE

REGISTERED PROFESSIONAL ENGINEER — HAMID SAADATNEJADI — No. C50440 — Exp. 6-30-13 — CIVIL — STATE OF CALIFORNIA

THE STATE OF CALIFORNIA OR ITS OFFICERS OR AGENTS SHALL NOT BE RESPONSIBLE FOR THE ACCURACY OR COMPLETENESS OF SCANNED COPIES OF THIS PLAN SHEET.

NOTES:

1. LOCATIONS OF CONSTRUCTION AREA SIGNS SHOWN ARE APPROXIMATE. EXACT LOCATIONS WILL BE DETERMINED BY THE ENGINEER.
2. "TRAFFIC FINES DOUBLED IN CONSTRUCTION ZONES" SIGNS SHALL BE PLACED APPROXIMATELY 500 FEET IN ADVANCE OF "ROAD CONSTRUCTION AHEAD" SIGNS OR AS DETERMINED BY THE ENGINEER.
3. EXISTING UTILITY FACILITIES HAVE NOT BEEN PLOTTED ON THESE PLANS.

CONSTRUCTION AREA SIGNS (STATIONARY MOUNTED)

SIGN NUMBER	SIGN CODE	PANEL SIZE	SIGN MESSAGE	NUMBER OF POSTS AND SIZE	NUMBER OF SIGNS
(1)	W20-1	48" X 48"	ROAD WORK AHEAD	1-6" x 6"	27
(2)	G20-2	48" X 24"	END ROAD WORK	1-4" x 6"	3
(3)	C40 (CA)	72" X 36"	TRAFFIC FINES DOUBLED IN CONSTRUCTION ZONES	1-6" x 6"	4
(4)	G20-1	48" X 24"	ROAD WORK NEXT XX MILES	1-4" x 6"	12

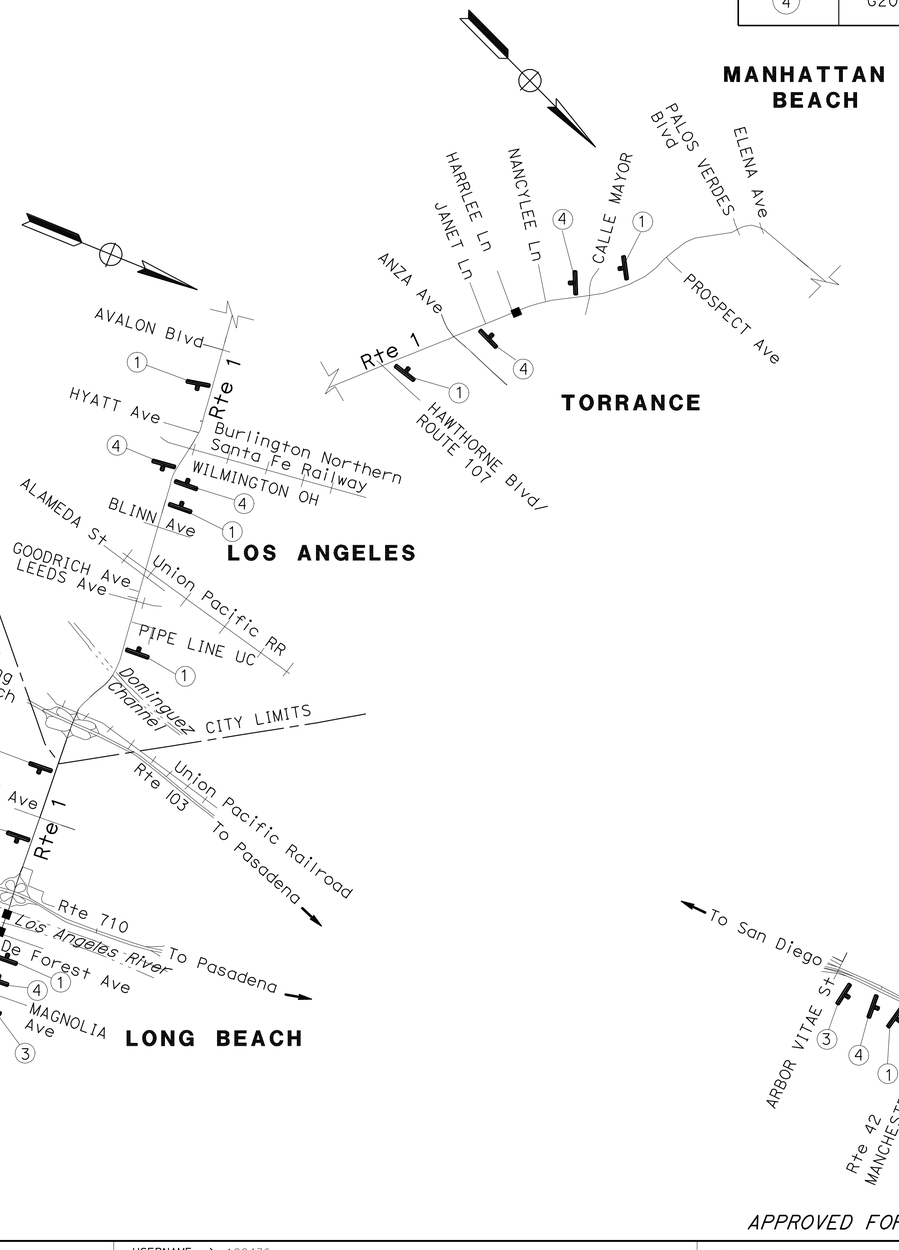

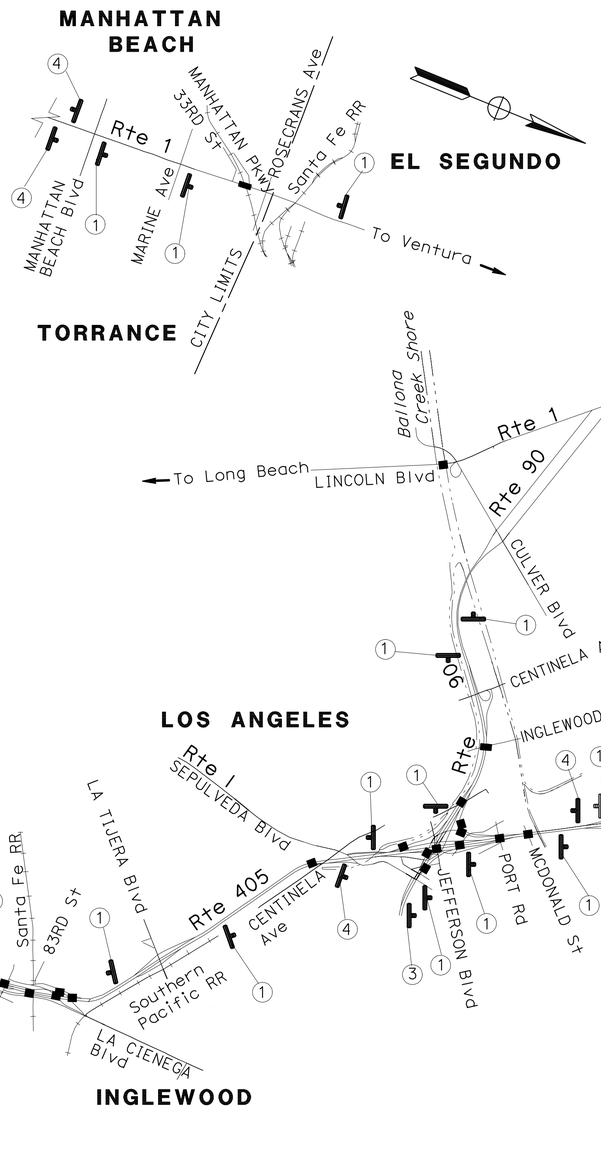

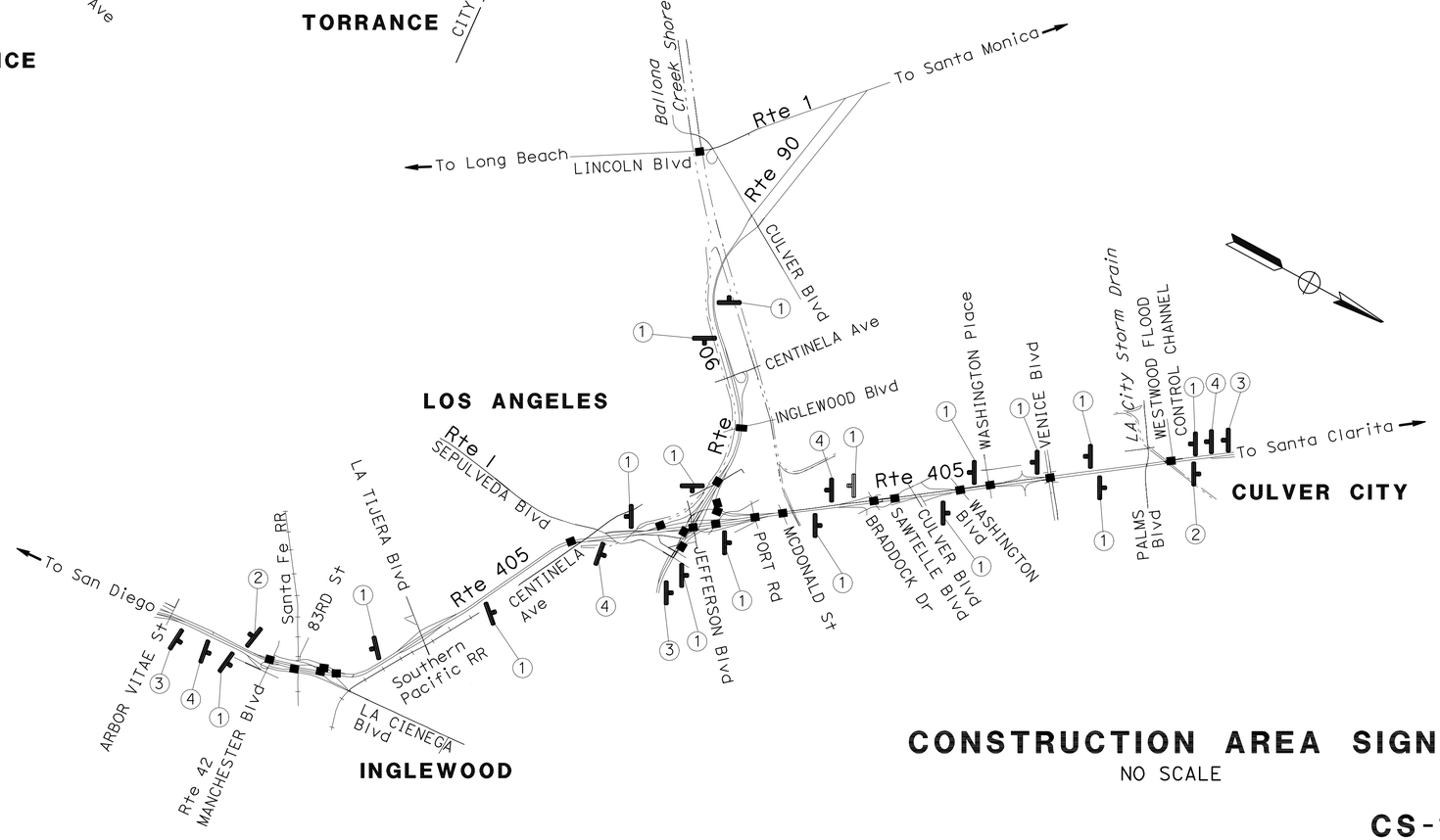

CONSTRUCTION AREA SIGNS

NO SCALE

CS-1

APPROVED FOR CONSTRUCTION AREA SIGN WORK ONLY

STATE OF CALIFORNIA - DEPARTMENT OF TRANSPORTATION
Caltrans MAINTENANCE ENGINEERING
FUNCTIONAL SUPERVISOR: HAMID SAADATNEJADI
CALCULATED-DESIGNED BY
CHECKED BY
REVISED BY
DATE REVISED
HUGO GUZMAN
HAMID SAADATNEJADI

LAST REVISION: DATE PLOTTED => 19-APR-2012; TIME PLOTTED => 14:19; 03-19-12

BORDER LAST REVISED 7/2/2010 | USERNAME => s122436 | DGN FILE => 07000010941da001.dgn | RELATIVE BORDER SCALE IS IN INCHES 0 1 2 3 | UNIT 1959 | PROJECT NUMBER & PHASE 07000010941

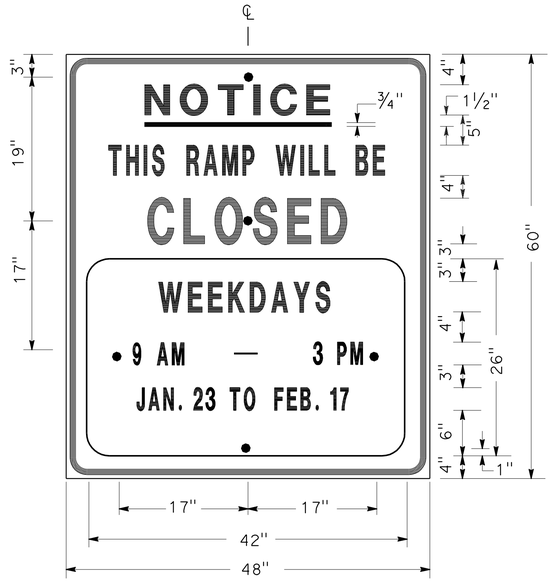

SIGN SP-1

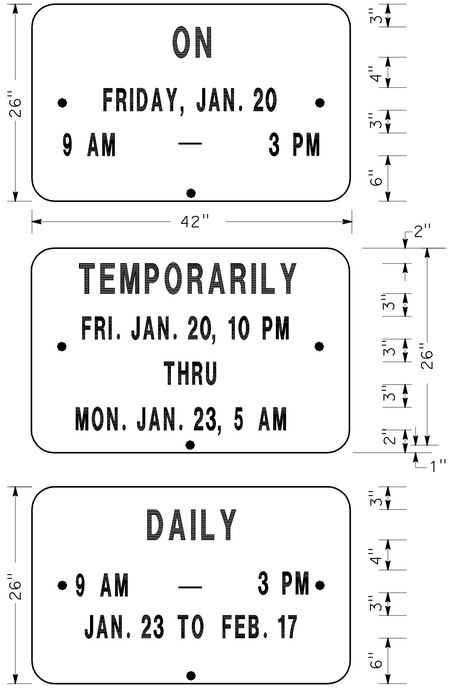

ALTERNATE OVERLAY PANELS (TYPICAL)

SPECIAL ADVANCE NOTICE PUBLICITY SIGN

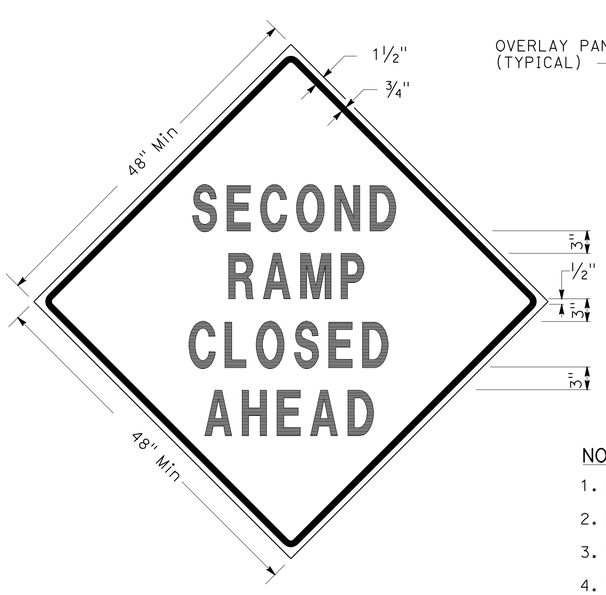

SIGN SP-3

SIGN SP-5

NOTES: (SIGNS SP-3 & SP-5)

1. LETTERS - 6" SERIES D.
2. LETTERS AND BORDERS - BLACK ON RETROREFLECTORIZED ORANGE BACKGROUND.
3. BASE MATERIAL SHALL BE ALUMINUM (MINIMUM 0.06").
4. SIGNS SHALL BE MOUNTED WITH BOTTOMS OF SIGNS A MINIMUM OF 6′ ABOVE GROUND.

SPECIAL SIGN FOR EXIT RAMP CLOSURES

NOTES: (SIGN SP-1)

1. SIGNS SHALL HAVE ORANGE RETROREFLECTORIZED BACKGROUND WITH BLACK BORDER AND LETTERS.
2. BOLT HOLES SHALL BE ⅜" DIAMETER.
3. BASE MATERIAL SHALL BE ALUMINUM (MINIMUM 0.06").
4. SIGNS SHALL BE MOUNTED WITH BOTTOMS OF SIGNS A MINIMUM OF 6′ ABOVE GROUND.

SIZE	BORDER WIDTH	MARGIN WIDTH	LETTER SIZE					CORNER RADIUS
			LINE 1	LINE 2*	LINE 3	LINE 4	LINE 5,6 & 7*	
48"x60"	1¼"	¾"	4E	4D	6E	4D		3"
42"x26"	OVERLAY						3D	1½"
* CONDENSED SPACING IF NECESSARY								

SIGN SP-4

NOTES: (SIGN SP-4)

1. LETTERS - 6" SERIES C.
2. LETTERS AND BORDERS - BLACK ON RETROREFLECTORIZED WHITE BACKGROUND.
3. BASE MATERIAL SHALL BE ALUMINUM (MINIMUM 0.06").
4. SIGNS SHALL BE PLACED AT RAMP ENTRANCES IN ADDITION TO SIGNS POSTED IN ACCORDANCE WITH STANDARD PLAN T14.

SPECIAL SIGN FOR ENTRANCE RAMP CLOSURES

Dist	COUNTY	ROUTE	POST MILES TOTAL PROJECT	SHEET No.	TOTAL SHEETS
07	LA	1, 90, 405	Var	4	40

Duke M Huynh — REGISTERED CIVIL ENGINEER — 5-26-11 DATE

3-19-12 PLANS APPROVAL DATE

REGISTERED PROFESSIONAL ENGINEER — DUKE HUYNH — No. 65591 — Exp. 9-30-13 — CIVIL — STATE OF CALIFORNIA

THE STATE OF CALIFORNIA OR ITS OFFICERS OR AGENTS SHALL NOT BE RESPONSIBLE FOR THE ACCURACY OR COMPLETENESS OF SCANNED COPIES OF THIS PLAN SHEET.

TRAFFIC HANDLING DETAILS
TRAFFIC CONTROL SYSTEM FOR RAMP CLOSURES, DETOUR SIGNS AND MISCELLANEOUS DETAILS

SHEET 1 OF 2

NO SCALE

THD-1

REVISED BY	DATE REVISED
JC	7/10

CALCULATED-DESIGNED BY: ALBERT K YU
CHECKED BY: JOCELYN C CHIANG
FUNCTIONAL SUPERVISOR: DENIS S KATAYAMA
STATE OF CALIFORNIA - DEPARTMENT OF TRANSPORTATION
DTM
Caltrans®

LAST REVISION 03-19-12 | DATE PLOTTED => 19-APR-2012 | TIME PLOTTED => 14:19

BORDER LAST REVISED 7/2/2010 | USERNAME => s122436 | DGN FILE => 0700001094md001.dgn | RELATIVE BORDER SCALE IS IN INCHES 0 1 2 3 | UNIT 1882 | PROJECT NUMBER & PHASE 07000010941

Dist	COUNTY	ROUTE	POST MILES TOTAL PROJECT	SHEET No.	TOTAL SHEETS
07	LA	1, 90, 405	Var	5	40

Duke M Huynh 5-26-11
REGISTERED CIVIL ENGINEER DATE

3-19-12
PLANS APPROVAL DATE

REGISTERED PROFESSIONAL ENGINEER
DUKE HUYNH
No. 65591
Exp. 9-30-13
CIVIL
STATE OF CALIFORNIA

THE STATE OF CALIFORNIA OR ITS OFFICERS OR AGENTS SHALL NOT BE RESPONSIBLE FOR THE ACCURACY OR COMPLETENESS OF SCANNED COPIES OF THIS PLAN SHEET.

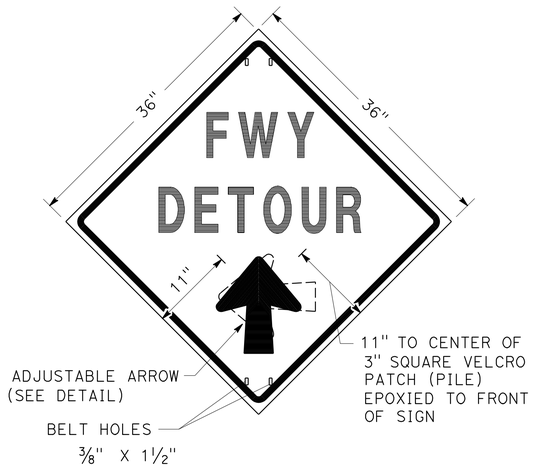

SIGN SP-2

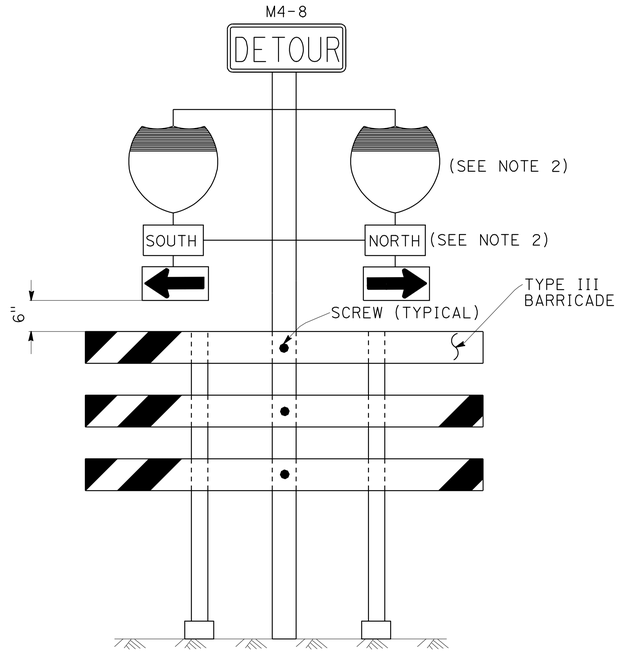

SIGN SP-6 (SEE NOTE 1)

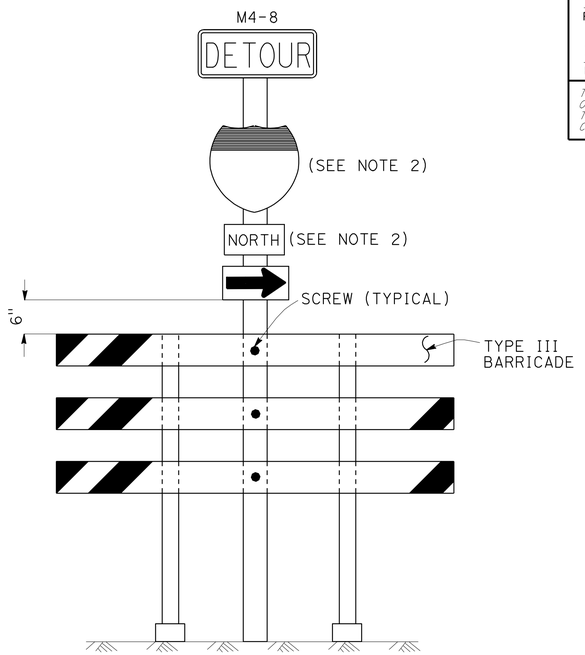

SIGN SP-7 (SEE NOTE 1)

NOTES: (SIGN SP-2)

1. LETTERS -6" SERIES E.
2. LETTERS, BORDER AND ARROW - BLACK ON RETROREFLECTORIZED ORANGE BACKGROUND.
3. BASE MATERIAL FOR SIGNS AND ARROWS SHALL BE ALUMINUM (MINIMUM 0.06").
4. BELTS (LUGGAGE STRAPS) SHALL BE 1" WIDE BY 48" LONG, MADE OF COTTON OR POLYPROPYLENE WEB MATERIAL.
5. SIGNS SHALL BE MOUNTED WITH BOTTOMS OF SIGNS A MINIMUM OF 6' ABOVE GROUND EXCEPT AS OTHERWISE SHOWN ON OTHER TRAFFIC HANDLING DETAILS PLANS.

ABBREVIATION

(CA) CALIFORNIA CODE

NOTES: (SIGNS SP-6 & SP-7)

1. IN LIEU OF PLACING SIGNS ON TYPE III BARRICADES, SIGNS, INCLUDING POSTS, MAY BE PLACED INTO THE GROUND OR FASTENED ONTO ELECTROLIERS.
2. USE APPROPRIATE ROUTE SHIELD [G26-2(CA), G27-2(CA), G28-2(CA)] AND CARDINAL DIRECTION [NORTH (M3-1), SOUTH (M3-3), EAST (M3-2), WEST (M3-4)]

SPECIAL PORTABLE FREEWAY DETOUR SIGNS

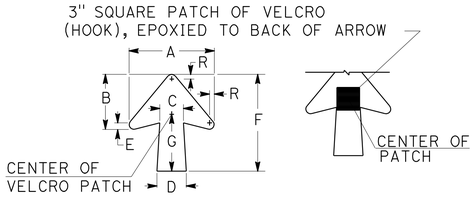

DIMENSIONS							
A	B	C	D	E	F	G	R
11 1/4"	7 1/4"	3 1/8"	4"	7/8"	13"	7 1/2"	5/8"

SPECIAL PORTABLE FREEWAY DETOUR SIGN

ADJUSTABLE ARROW DETAIL

TRAFFIC HANDLING DETAILS

TRAFFIC CONTROL SYSTEM FOR RAMP CLOSURES, DETOUR SIGNS AND MISCELLANEOUS DETAILS

SHEET 2 OF 2

NO SCALE

THD-2

CALCULATED-DESIGNED BY	JC	7/10	
CHECKED BY	ALBERT K YU	JOCELYN C CHIANG	
FUNCTIONAL SUPERVISOR	DENIS S KATAYAMA		
STATE OF CALIFORNIA - DEPARTMENT OF TRANSPORTATION	DTM		

LAST REVISION DATE PLOTTED => 19-APR-2012
03-19-12 TIME PLOTTED => 14:19

BORDER LAST REVISED 7/2/2010 | USERNAME => s122436 | DGN FILE => 0700001094md002.dgn | RELATIVE BORDER SCALE IS IN INCHES 0 1 2 3 | UNIT 1882 | PROJECT NUMBER & PHASE 07000010941

Dist	COUNTY	ROUTE	POST MILES TOTAL PROJECT	SHEET No.	TOTAL SHEETS
07	LA	1, 90, 405	Var	6	40

Duke M Huynh 5-26-11
REGISTERED CIVIL ENGINEER DATE

3-19-12
PLANS APPROVAL DATE

REGISTERED PROFESSIONAL ENGINEER DUKE HUYNH No. 65591 Exp. 9-30-13 CIVIL STATE OF CALIFORNIA

THE STATE OF CALIFORNIA OR ITS OFFICERS OR AGENTS SHALL NOT BE RESPONSIBLE FOR THE ACCURACY OR COMPLETENESS OF SCANNED COPIES OF THIS PLAN SHEET.

LEGEND

- CONE
- TRAFFIC PLASTIC DRUM
- FLASHING ARROW SIGN
- PORTABLE SIGN
- DIRECTION OF TRAVEL
- PORTABLE CHANGEABLE MESSAGE SIGN (PCMS)

ABBREVIATIONS

(CA) CALIFORNIA CODE

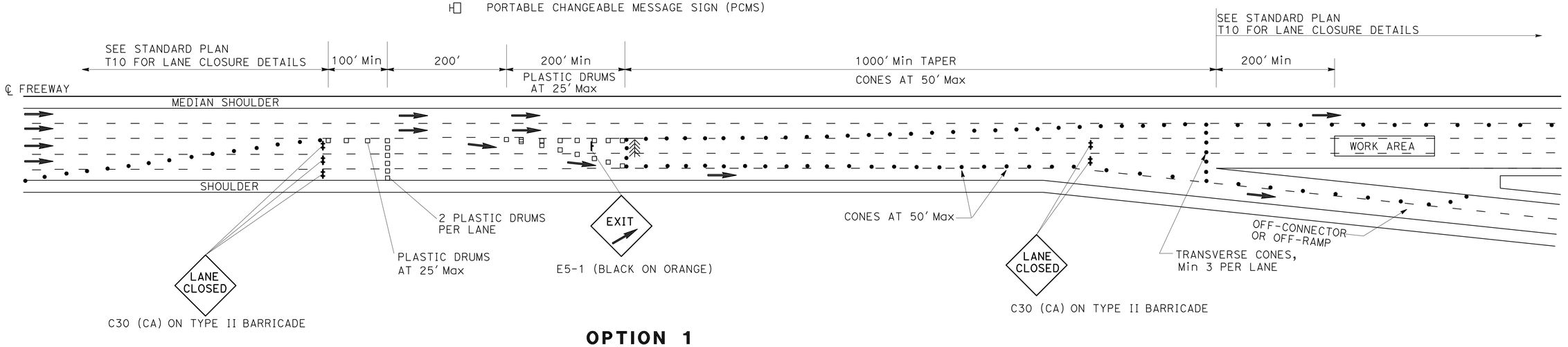

OPTION 1

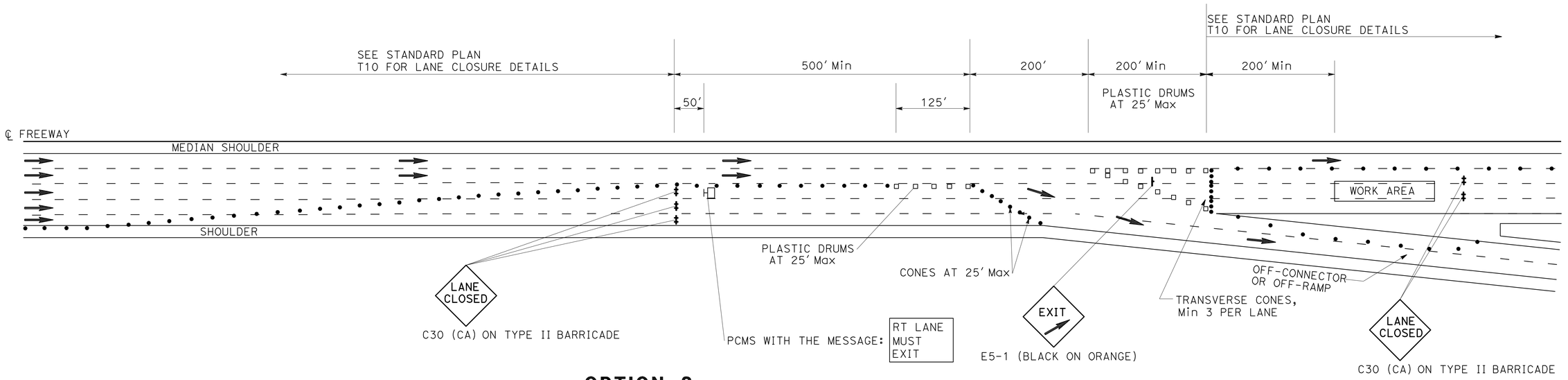

OPTION 2

TRAFFIC HANDLING DETAILS

TRAFFIC CONTROL SYSTEM FOR SLIP-RAMP AT OFF-CONNECTOR OR OFF-RAMP

NO SCALE

THD-3

STATE OF CALIFORNIA - DEPARTMENT OF TRANSPORTATION
Caltrans DTM

FUNCTIONAL SUPERVISOR: DENIS S KATAYAMA
CALCULATED-DESIGNED BY: ALBERT K YU
CHECKED BY: JOCELYN C CHIANG
REVISED BY: JC
DATE REVISED: 7/10

LAST REVISION 03-19-12
DATE PLOTTED => 19-APR-2012
TIME PLOTTED => 14:19

Dist	COUNTY	ROUTE	POST MILES TOTAL PROJECT	SHEET No.	TOTAL SHEETS
07	LA	1, 90, 405	Var	7	40

Duke M Huynh 5-26-11
REGISTERED CIVIL ENGINEER DATE

3-19-12
PLANS APPROVAL DATE

REGISTERED PROFESSIONAL ENGINEER
DUKE HUYNH
No. 65591
Exp. 9-30-13
CIVIL
STATE OF CALIFORNIA

THE STATE OF CALIFORNIA OR ITS OFFICERS OR AGENTS SHALL NOT BE RESPONSIBLE FOR THE ACCURACY OR COMPLETENESS OF SCANNED COPIES OF THIS PLAN SHEET.

NOTES:

1. LANE CLOSURES SHALL NOT BE PLACED ON CREST VERTICAL CURVES OR ON HORIZONTAL CURVES.
2. PCMS SHALL BE ACTIVATED PRIOR TO TRAFFIC CONTROL ACTIVITIES ON THE HOV LANE.
3. A MINIMUM SIGHT DISTANCE OF 1500′ SHALL BE PROVIDED IN ADVANCE OF PCMS.
4. VEHICLE-MOUNTED SIGN PANELS SHALL BE TYPE III OR IV RETROREFLECTORIZED SHEETING, BLACK ON WHITE OR BLACK ON ORANGE WITH 8" MINIMUM SERIES D LETTERS PER CALTRANS SIGN SPECIFICATIONS.
5. PLACE PCMS ON THE MEDIAN SHOULDER WHERE SUFFICIENT ROOM (SUCH AS CHP ENFORCEMENT AREAS) EXISTS.

LEGEND

V1, V2	SHADOW VEHICLE
V3	WORK/APPLICATION VEHICLE
	PORTABLE CHANGEABLE MESSAGE SIGN (PCMS)
	DIRECTION OF TRAVEL
	HOV LANE

ABBREVIATIONS

FAS	FLASHING ARROW SIGN
IAV	IMPACT ATTENUATOR VEHICLE
CMS	CHANGEABLE MESSAGE SIGN
(CA)	CALIFORNIA CODE
PCMS	PORTABLE CHANGEABLE MESSAGE SIGN
HOV	HIGH OCCUPANCY VEHICLE

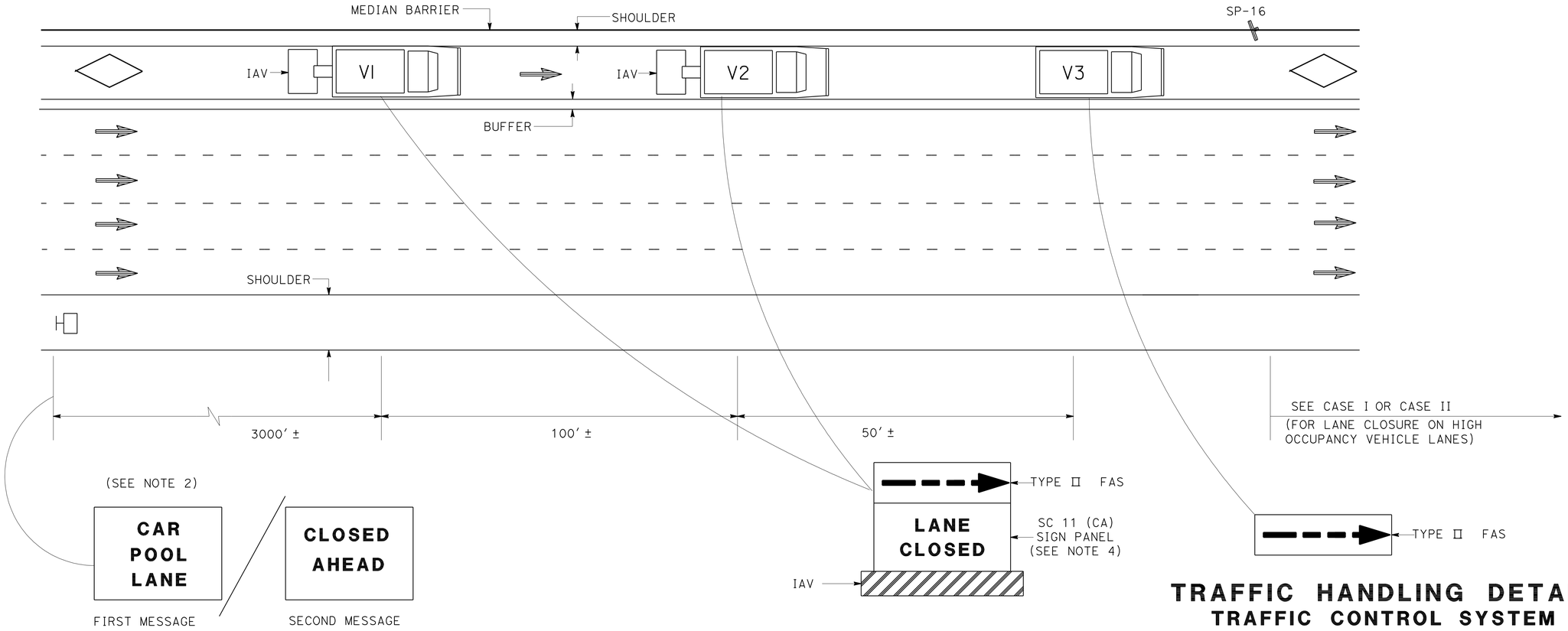

PCMS/TRUCK MOUNTED CMS
(SEE NOTE 5)

TRAFFIC HANDLING DETAILS
TRAFFIC CONTROL SYSTEM FOR HIGH OCCUPANCY VEHICLE LANES WITH MEDIAN SHOULDERS LESS THAN 8 FEET

NO SCALE

THD-4

STATE OF CALIFORNIA - DEPARTMENT OF TRANSPORTATION
DTM
Caltrans
FUNCTIONAL SUPERVISOR: DENIS S KATAYAMA
CALCULATED-DESIGNED BY: ALBERT K YU
CHECKED BY: JOCELYN C CHIANG
REVISED BY: JC
DATE REVISED: 7/10

LAST REVISION | DATE PLOTTED => 19-APR-2012
03-19-12 | TIME PLOTTED => 14:19

BORDER LAST REVISED 7/2/2010 | USERNAME => s122436 | DGN FILE => 0700001094md004.dgn | RELATIVE BORDER SCALE IS IN INCHES 0 1 2 3 | UNIT 1882 | PROJECT NUMBER & PHASE 07000010941

Dist	COUNTY	ROUTE	POST MILES TOTAL PROJECT	SHEET No.	TOTAL SHEETS
07	LA	1, 90, 405	Var	8	40

Duke M Huynh 5-26-11
REGISTERED CIVIL ENGINEER DATE

3-19-12
PLANS APPROVAL DATE

REGISTERED PROFESSIONAL ENGINEER
DUKE HUYNH
No. 65591
Exp. 9-30-13
CIVIL
STATE OF CALIFORNIA

THE STATE OF CALIFORNIA OR ITS OFFICERS OR AGENTS SHALL NOT BE RESPONSIBLE FOR THE ACCURACY OR COMPLETENESS OF SCANNED COPIES OF THIS PLAN SHEET.

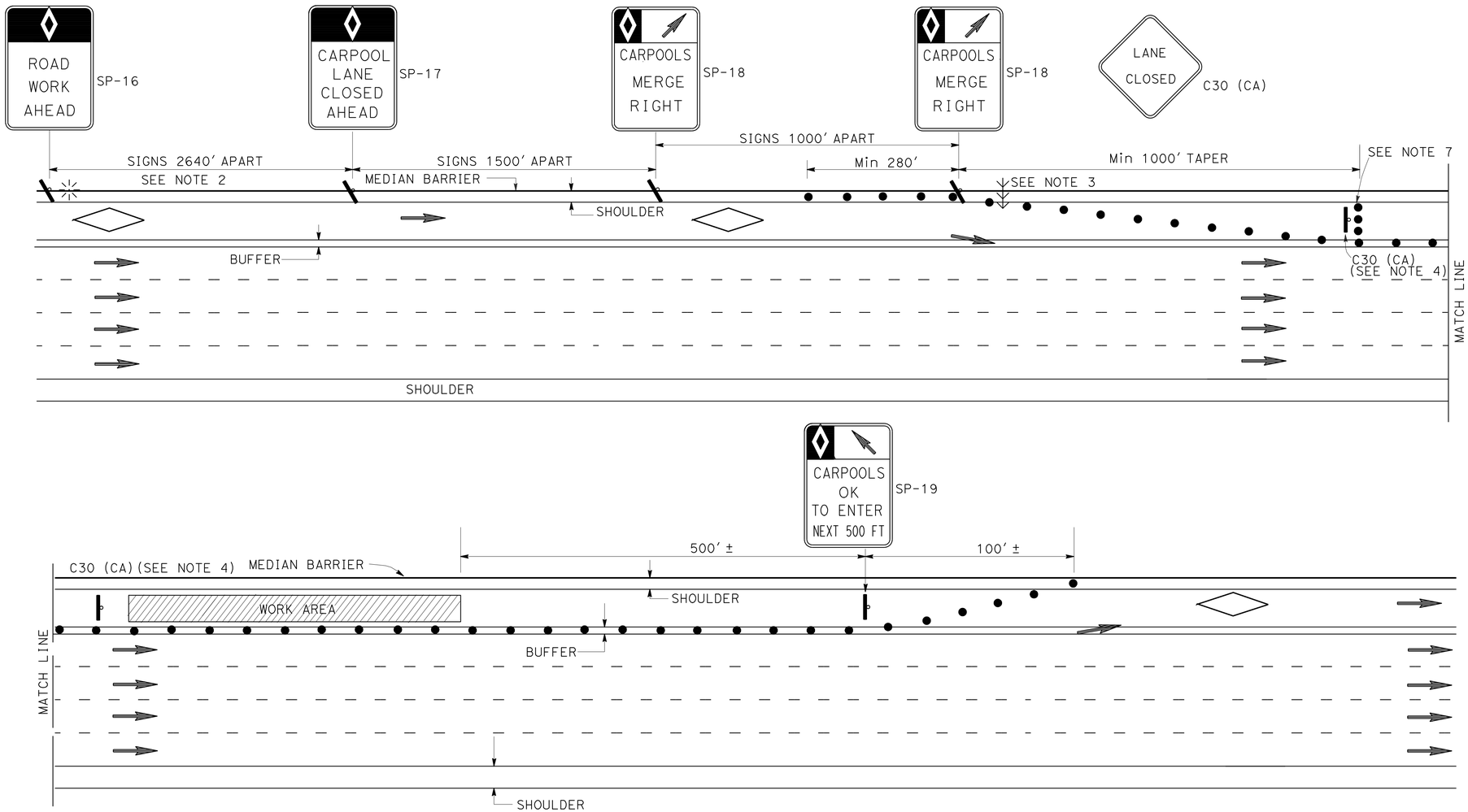

ABBREVIATIONS

(CA) CALIFORNIA CODE

HOV HIGH OCCUPANCY VEHICLE

NOTES: FOR CASE I AND CASE II

1. AT LEAST ONE PERSON SHALL BE ASSIGNED TO FULL TIME MAINTENANCE OF TRAFFIC CONTROL DEVICES ON NIGHT LANE CLOSURES OR DAY-TIME CLOSURES EXCEEDING 1 MILE LENGTH, INCLUDING TAPERS.
2. ADVANCE WARNING SIGN INSTALLATIONS SHALL BE EQUIPPED WITH FLAGS FOR DAYTIME CLOSURES. TYPE B HIGH INTENSITY FLASHING WARNING LIGHTS SHALL BE USED ON SP-16 SIGNS DURING NIGHT LANE CLOSURES. FLAGS AND WARNING LIGHTS SHALL BE ATTACHED TO SIGNS AS APPROVED BY THE ENGINEER.
3. THE FLASHING ARROW SIGN SHALL BE TYPE I.
4. PLACE C30 (CA) SIGNS EVERY 2000' THROUGHOUT THE LENGTH OF LANE CLOSURE.
5. A MINIMUM 1500' OF SIGHT DISTANCE SHALL BE PROVIDED WHERE POSSIBLE FOR VEHICLES APPROACHING THE FLASHING ARROW SIGN. LANE CLOSURES SHALL NOT BE PLACED ON CREST VERTICAL CURVES OR ON HORIZONTAL CURVES.
6. PORTABLE DELINEATORS PLACED AT ONE-HALF THE SPACING INDICATED FOR TRAFFIC CONES MAY BE USED INSTEAD OF CONES FOR DAYTIME CLOSURES.
7. A MINIMUM OF 3 CONES SHALL BE PLACED TRANSVERSELY ACROSS CLOSED LANES WHERE TAPERS END AND EVERY 2000'. TWO TYPE II BARRICADES MAY BE USED INSTEAD OF 3 CONES. THE ALIGNMENT OF CONES OR BARRICADES MAY BE SHIFTED FROM THE TRANSVERSE ALIGNMENT TO PROVIDE ACCESS TO WORK.
8. IF AN INGRESS/EGRESS AREA IS WITHIN 5250' UPSTREAM OR DOWNSTREAM OF THE WORK AREA, LANE CLOSURES SHALL BE EXTENDED TO THAT AREA AS SHOWN IN CASE II.
9. SIGNS SP-16, 17, 18, AND 19 MAY BE OVERLAID ON EXISTING CARPOOL SIGNS IN MEDIANS AS APPROVED BY THE ENGINEER.
10. SIGNS SP-16, 17, 18, AND C30 (CA) SHALL BE BLACK ON ORANGE BACKGROUND. SIGN SP-19 SHALL BE BLACK ON WHITE BACKGROUND. DIAMONDS ON SIGNS SHALL BE WHITE.
11. FOR CLOSURE OF LANE(S) ADJACENT TO HOV LANES, SEE CASE II.
12. THE MAXIMUM SPACING BETWEEN CONES SHALL BE APPROXIMATELY 50' IN TAPERS AND 100' ON TANGENTS.

LEGEND

- CONE
- FLASHING BEACON
- HOV LANE
- FLASHING ARROW SIGN
- PORTABLE SIGN
- DIRECTION OF TRAVEL

SIGN PANEL

SIZE (MIN)

SP-16 36" X 54"
SP-17 36" X 54"
SP-18 36" X 48"
SP-19 36" X 60"
C30 (CA) 30" X 30"
G20-2 48" X 24"

TRAFFIC HANDLING DETAILS
TRAFFIC CONTROL SYSTEM FOR HIGH OCCUPANCY VEHICLE LANES AT NON-INGRESS/EGRESS AREAS
CASE I
NO SCALE

THD-5

CALCULATED-DESIGNED BY	CHECKED BY	REVISED BY	DATE REVISED
ALBERT K YU	JOCELYN C CHIANG	JC	7/10

FUNCTIONAL SUPERVISOR: DENIS S KATAYAMA

STATE OF CALIFORNIA - DEPARTMENT OF TRANSPORTATION
DTM
Caltrans

LAST REVISION: DATE PLOTTED => 19-APR-2012
03-19-12 TIME PLOTTED => 14:19

Dist	COUNTY	ROUTE	POST MILES TOTAL PROJECT	SHEET No.	TOTAL SHEETS
07	LA	1, 90, 405	Var	9	40

Duke M Huynh 5-26-11
REGISTERED CIVIL ENGINEER DATE

3-19-12
PLANS APPROVAL DATE

THE STATE OF CALIFORNIA OR ITS OFFICERS OR AGENTS SHALL NOT BE RESPONSIBLE FOR THE ACCURACY OR COMPLETENESS OF SCANNED COPIES OF THIS PLAN SHEET.

REGISTERED PROFESSIONAL ENGINEER
DUKE HUYNH
No. 65591
Exp. 9-30-13
CIVIL
STATE OF CALIFORNIA

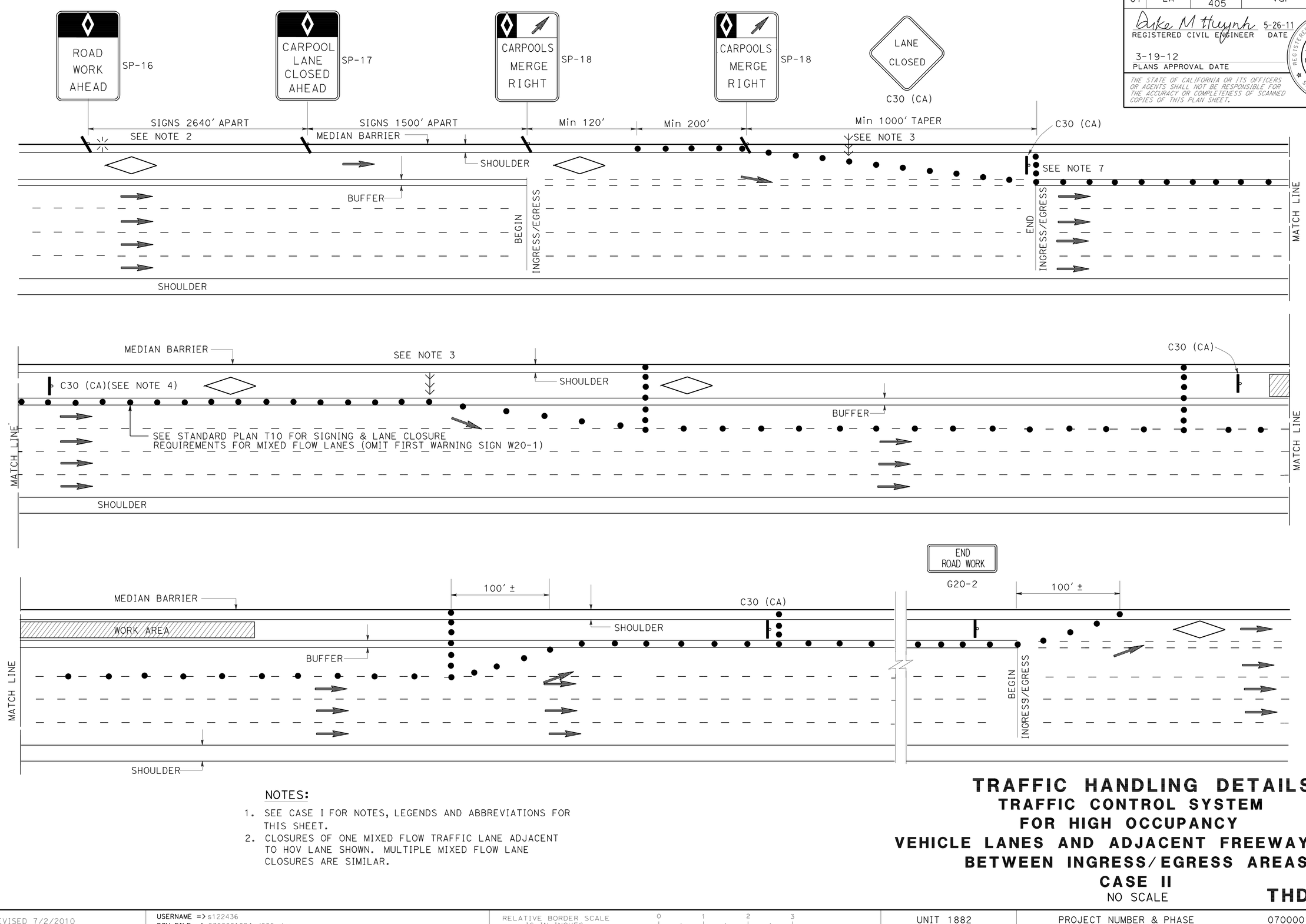

NOTES:

1. SEE CASE I FOR NOTES, LEGENDS AND ABBREVIATIONS FOR THIS SHEET.
2. CLOSURES OF ONE MIXED FLOW TRAFFIC LANE ADJACENT TO HOV LANE SHOWN. MULTIPLE MIXED FLOW LANE CLOSURES ARE SIMILAR.

TRAFFIC HANDLING DETAILS
TRAFFIC CONTROL SYSTEM FOR HIGH OCCUPANCY VEHICLE LANES AND ADJACENT FREEWAY LANES BETWEEN INGRESS/EGRESS AREAS
CASE II

NO SCALE

THD-6

CALCULATED-DESIGNED BY	JC	REVISED BY	
CHECKED BY	7/10	DATE REVISED	
FUNCTIONAL SUPERVISOR	ALBERT K YU		
	JOCELYN C CHIANG		
	DENIS S KATAYAMA		

STATE OF CALIFORNIA - DEPARTMENT OF TRANSPORTATION
DTM
Caltrans

LAST REVISION DATE PLOTTED => 19-APR-2012
03-19-12 TIME PLOTTED => 14:20

Dist	COUNTY	ROUTE	POST MILES TOTAL PROJECT	SHEET No.	TOTAL SHEETS
07	LA	1, 90, 405	Var	10	40

Duke M Huynh 5-26-11
REGISTERED CIVIL ENGINEER DATE

3-19-12
PLANS APPROVAL DATE

REGISTERED PROFESSIONAL ENGINEER
DUKE HUYNH
No. 65591
Exp. 9-30-13
CIVIL
STATE OF CALIFORNIA

THE STATE OF CALIFORNIA OR ITS OFFICERS OR AGENTS SHALL NOT BE RESPONSIBLE FOR THE ACCURACY OR COMPLETENESS OF SCANNED COPIES OF THIS PLAN SHEET.

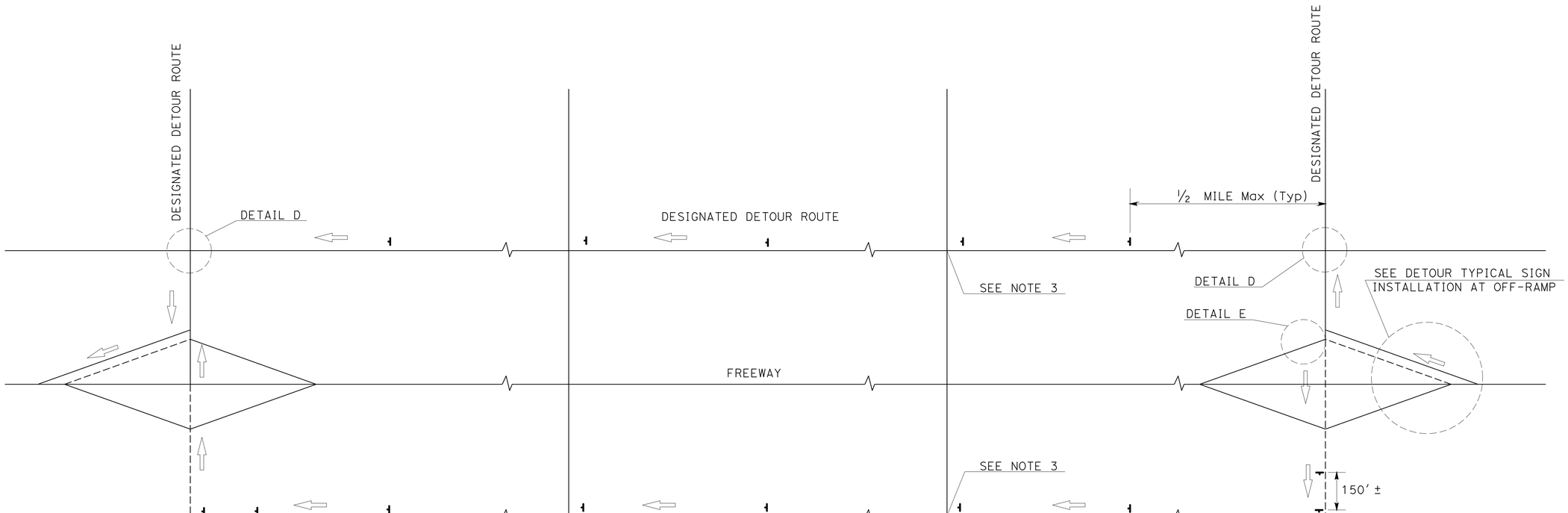

TYPICAL DETOUR SIGN INSTALLATION ALONG DESIGNATED DETOUR ROUTE

LEGEND

⇦	TEMPORARY SIGN (SP-2)
AND/OR	DESIGNATED DETOUR ROUTE
⇨	DIRECTION OF TRAVEL

NOTES:

1. SP-2 SIGNS SHALL NOT BE INSTALLED ON BARRICADES EXCEPT AS OTHERWISE SHOWN.
2. SIGN LOCATIONS ARE APPROXIMATE. EXACT LOCATIONS WILL BE DETERMINED BY THE ENGINEER.
3. SP-2 SIGNS SHALL BE POSTED AT SIGNALIZED INTERSECTIONS ALONG THE DESIGNATED DETOUR ROUTE OR ½ MILE MAXIMUM APART.

TRAFFIC HANDLING DETAILS
TRAFFIC CONTROL SYSTEM FOR DETOUR SIGN INSTALLATION ALONG DESIGNATED DETOUR ROUTE
SHEET 1 OF 2
NO SCALE

THD-7

STATE OF CALIFORNIA - DEPARTMENT OF TRANSPORTATION
Caltrans® DTM

FUNCTIONAL SUPERVISOR: DENIS S KATAYAMA

CALCULATED-DESIGNED BY: ALBERT K YU
CHECKED BY: JOCELYN C CHIANG

REVISED BY: JC
DATE REVISED: 7/10

LAST REVISION DATE PLOTTED => 19-APR-2012
03-19-12 TIME PLOTTED => 14:20

Dist	COUNTY	ROUTE	POST MILES TOTAL PROJECT	SHEET No.	TOTAL SHEETS
07	LA	1, 90, 405	Var	11	40

Duke M Huynh 5-26-11
REGISTERED CIVIL ENGINEER DATE

3-19-12
PLANS APPROVAL DATE

REGISTERED PROFESSIONAL ENGINEER DUKE HUYNH No. 65591 Exp. 9-30-13 CIVIL STATE OF CALIFORNIA

THE STATE OF CALIFORNIA OR ITS OFFICERS OR AGENTS SHALL NOT BE RESPONSIBLE FOR THE ACCURACY OR COMPLETENESS OF SCANNED COPIES OF THIS PLAN SHEET.

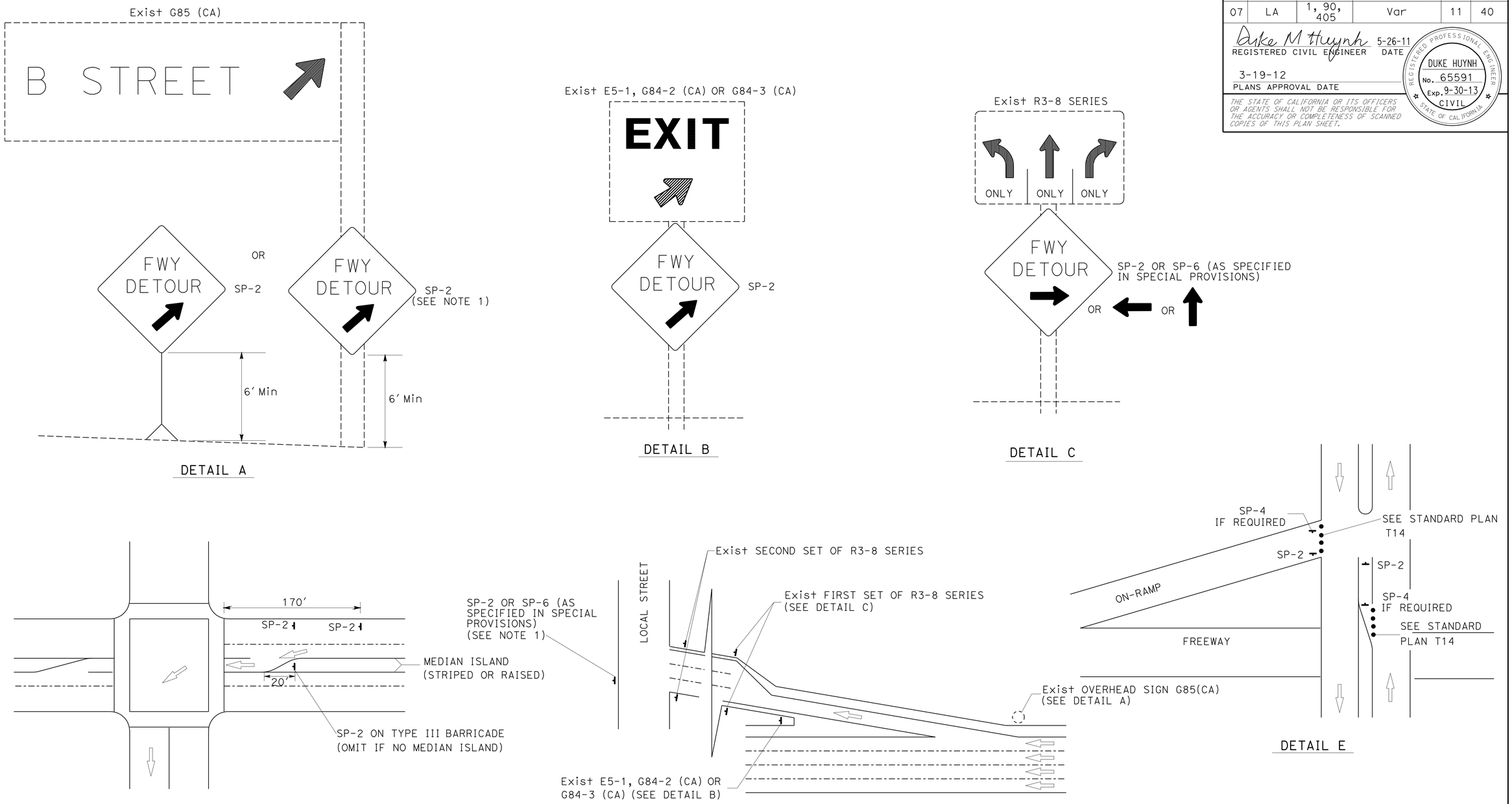

TYPICAL DETOUR SIGN INSTALLATION AT OFF-RAMP

NOTES:

1. TEMPORARY SIGNS MAY BE STRAPPED ON EXISTING ELECTROLIER, SIGNAL POSTS, OR SIGN POSTS.
2. OMIT DETAIL A AND DETAIL B FOR FULL FREEWAY CLOSURES.
3. SEE TRAFFIC HANDLING DETAILS PLAN-TRAFFIC CONTROL SYSTEM FOR RAMP CLOSURES, DETOUR SIGNS AND MISCELLANEOUS DETAILS SHEET 2 OF 2 FOR SP-6.

ABBREVIATIONS

(CA) CALIFORNIA CODE

LEGENDS

- TRAFFIC CONE
- TEMPORARY SIGN
- DIRECTION OF TRAVEL
- EXISTING OVERHEAD SIGN

TRAFFIC HANDLING DETAILS
TRAFFIC CONTROL SYSTEM FOR DETOUR SIGN INSTALLATION ALONG DESIGNATED DETOUR ROUTE
SHEET 2 OF 2

NO SCALE

THD-8

STATE OF CALIFORNIA - DEPARTMENT OF TRANSPORTATION
Caltrans DTM

FUNCTIONAL SUPERVISOR: DENIS S KATAYAMA
CALCULATED-DESIGNED BY: ALBERT K YU
CHECKED BY: JOCELYN C CHIANG
REVISED BY: JC
DATE REVISED: 8/10

LAST REVISION 03-19-12
DATE PLOTTED => 19-APR-2012
TIME PLOTTED => 14:20

Dist	COUNTY	ROUTE	POST MILES TOTAL PROJECT	SHEET No.	TOTAL SHEETS
07	LA	1,90,405	Var	12	40

Hamidreza Saadatnejadi 3-1-12
REGISTERED CIVIL ENGINEER DATE

3-19-12
PLANS APPROVAL DATE

REGISTERED PROFESSIONAL ENGINEER — HAMID SAADATNEJADI — No. C50440 — Exp. 6-30-13 — CIVIL — STATE OF CALIFORNIA

THE STATE OF CALIFORNIA OR ITS OFFICERS OR AGENTS SHALL NOT BE RESPONSIBLE FOR THE ACCURACY OR COMPLETENESS OF SCANNED COPIES OF THIS PLAN SHEET.

PAVEMENT DELINEATION QUANTITIES

LOCATION				THERMOPLASTIC TRAFFIC STRIPE							
				Det 22	Det 25	Det 27	Det 27B	Det 9	Det 12/13 (Mod)		
				4" SOLID YELLOW	4" SOLID YELLOW	4" SOLID YELLOW	4" SOLID WHITE	4" WHITE (BROKEN 17-7)	4" WHITE (BROKEN 36-12)	REMOVE THERMOPLASTIC TRAFFIC STRIPE (WHITE)	REMOVE YELLOW THERMOPLASTIC TRAFFIC STRIPE (HAZARDOUS WASTE)
ROUTE	PM	Br No.	BRIDGE NAME	LF							
1	7.11	53-0341	LOS ANGELES RIVER	1,564			1,564	469		2,033	1,564
1	30.36	53-0118	BALLONA CREEK SHORE	896		896		269		269	1,792
90	2.01	53-1952	INGLEWOOD Blvd UC		396		396		495	891	396
90	2.33	53-1950	MESMER Ave UC		480		480		720	1,200	480
90	2.54	53-1851	ROUTE 90/405 SEPARATION		6,128		6,128		8,426	14,554	6,128
90	2.55	53-1854G	E90-N405 CONNECTOR OC		1,282		1,282		321	1,603	1,282
90	2.58	53-1853G	E90-S405 CONNECTOR OC		298		298		149	447	298
90	2.73	53-1855F	W90-N405 CONNECTOR OC		656		656		164	820	656
405	23.32	53-1484S	MANCHESTER Blvd ON-RAMP OC		43		43		11	54	43
405	23.36	53-1246	MANCHESTER Blvd OC		160		160	48		208	160
405	23.50	53-1248	FLORENCE Ave OC		538		538	161		699	538
405	23.64	53-1249	LA CIENEGA Blvd NB OC		530		530	159		689	530
405	23.71	53-1250	LA CIENEGA Blvd SB OC		395		395	119		514	395
405	26.08	53-1401	SLAUSON Ave UC		834		834		139	973	834
405	26.29	53-1402	PORT ROAD UC		378		378		189	567	378
405	26.96	53-1258	BRADDOCK DRIVE UC		402		402		101	503	402
405	27.08	53-1403	SAWTELLE Blvd UC		290		290		218	508	290
405	27.45	53-1260	WASHINGTON Blvd UC		236		236		177	413	236
405	27.95	53-0701	VENICE Blvd SEPARATION		330		330		248	578	330
405	28.61	53-1267	WESTWOOD FLOOD CONTROL CHANNEL		162		162		122	284	162
SUBTOTAL				2,460	13,538	896	15,102	1,225	11,480	27,807	16,894
TOTAL				31,996				1,225	11,480	27,807	16,894

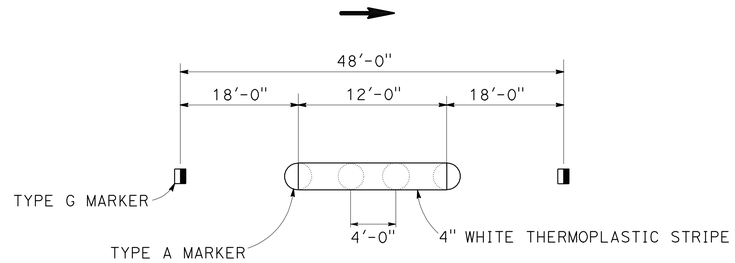

DETAIL 12/13 (MODIFIED)

PAVEMENT DELINEATION QUANTITIES

PDQ-1

REVISED BY | DATE REVISED
HUGO GUZMAN | HAMID SAADATNEJADI
CALCULATED-DESIGNED BY | CHECKED BY
FUNCTIONAL SUPERVISOR: HAMID SAADATNEJADI
STATE OF CALIFORNIA - DEPARTMENT OF TRANSPORTATION
Caltrans® MAINTENANCE ENGINEERING

LAST REVISION | DATE PLOTTED => 19-APR-2012
03-19-12 | TIME PLOTTED => 14:20

BORDER LAST REVISED 7/2/2010
USERNAME => s122436
DGN FILE => 0700001094pa001.dgn
RELATIVE BORDER SCALE IS IN INCHES 0 1 2 3
UNIT 1959
PROJECT NUMBER & PHASE 07000010941

Dist	COUNTY	ROUTE	POST MILES TOTAL PROJECT	SHEET No.	TOTAL SHEETS
07	LA	1,90,405	Var	13	40

Hamidreza Saadatnejadi 3-1-12
REGISTERED CIVIL ENGINEER DATE

3-19-12
PLANS APPROVAL DATE

REGISTERED PROFESSIONAL ENGINEER — HAMID SAADATNEJADI — No. C50440 — Exp. 6-30-13 — CIVIL — STATE OF CALIFORNIA

THE STATE OF CALIFORNIA OR ITS OFFICERS OR AGENTS SHALL NOT BE RESPONSIBLE FOR THE ACCURACY OR COMPLETENESS OF SCANNED COPIES OF THIS PLAN SHEET.

PAVEMENT DELINEATION QUANTITIES

LOCATION				PAVEMENT MARKER						
				Det 22	Det 25	Det 27	Det 9	Det 12/13 (Mod)		
				TWO-WAY YELLOW RETROREFLECTIVE (TYPE D)	ONE-WAY YELLOW RETROREFLECTIVE (TYPE H)	ONE-WAY YELLOW RETROREFLECTIVE (TYPE H)	ONE-WAY CLEAR RETROREFLECTIVE (TYPE G)	ONE-WAY CLEAR RETROREFLECTIVE (TYPE G)	NON-RETROREFLECTIVE (TYPE A)	REMOVE PAVEMENT MARKER
ROUTE	PM	Br No.	BRIDGE NAME	EA						
1	7.11	53-0341	LOS ANGELES RIVER	196			20			216
1	30.36	53-0118	BALLONA CREEK SHORE	112		112	4			228
90	2.01	53-1952	INGLEWOOD Blvd UC		17			21	41	79
90	2.33	53-1950	MESMER Ave UC		20			30	60	110
90	2.54	53-1851	ROUTE 90/405 SEPARATION		255			351	702	1,308
90	2.55	53-1854G	E90-N405 CONNECTOR OC		53			13	27	93
90	2.58	53-1853G	E90-S405 CONNECTOR OC		12			6	12	30
90	2.73	53-1855F	W90-N405 CONNECTOR OC		27			7	14	48
405	23.32	53-1484S	MANCHESTER Blvd ON-RAMP OC		2			2	4	8
405	23.36	53-1246	MANCHESTER Blvd OC		7		2			9
405	23.50	53-1248	FLORENCE Ave OC		22		7			29
405	23.64	53-1249	LA CIENEGA Blvd NB OC		22		7			29
405	23.71	53-1250	LA CIENEGA Blvd SB OC		16		5			21
405	26.08	53-1401	SLAUSON Ave UC		35			6	12	53
405	26.29	53-1402	PORT ROAD UC		16			8	16	40
405	26.96	53-1258	BRADDOCK DRIVE UC		17			4	8	29
405	27.08	53-1403	SAWTELLE Blvd UC		12			9	18	39
405	27.45	53-1260	WASHINGTON Blvd UC		10			7	15	32
405	27.95	53-0701	VENICE Blvd SEPARATION		14			10	21	45
405	28.61	53-1267	WESTWOOD FLOOD CONTROL CHANNEL		7			5	10	22
SUBTOTAL				308	564	112	45	479	960	2,468
TOTAL				1,508					960	2,468

PAVEMENT DELINEATION QUANTITIES

PDQ-2

LAST REVISION 03-19-12 | DATE PLOTTED => 19-APR-2012 | TIME PLOTTED => 14:20

REVISED BY | DATE REVISED
HUGO GUZMAN | HAMID SAADATNEJADI
CALCULATED-DESIGNED BY | CHECKED BY
FUNCTIONAL SUPERVISOR: HAMID SAADATNEJADI
STATE OF CALIFORNIA - DEPARTMENT OF TRANSPORTATION
Caltrans MAINTENANCE ENGINEERING

BORDER LAST REVISED 7/2/2010 | USERNAME => s122436 | DGN FILE => 0700001094pa002.dgn | RELATIVE BORDER SCALE IS IN INCHES 0 1 2 3 | UNIT 1959 | PROJECT NUMBER & PHASE 07000010941

Dist	COUNTY	ROUTE	POST MILES TOTAL PROJECT	SHEET No.	TOTAL SHEETS
07	LA	1, 90, 405	Var	14	40

Randell D. Hiatt
REGISTERED CIVIL ENGINEER

May 20, 2011
PLANS APPROVAL DATE

REGISTERED PROFESSIONAL ENGINEER
Randell D. Hiatt
No. C50200
Exp. 6-30-11
CIVIL
STATE OF CALIFORNIA

The State of California or its officers or agents shall not be responsible for the accuracy or completeness of electronic copies of this plan sheet.

To accompany plans dated 3-19-12

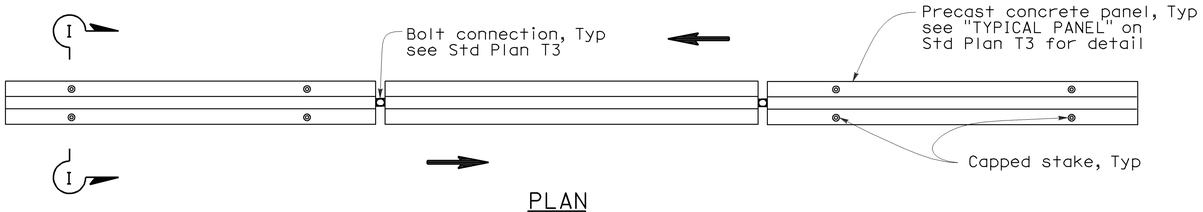

PLAN

RAILING STAKING CONFIGURATION FOR TWO-WAY TRAFFIC

See Note 1

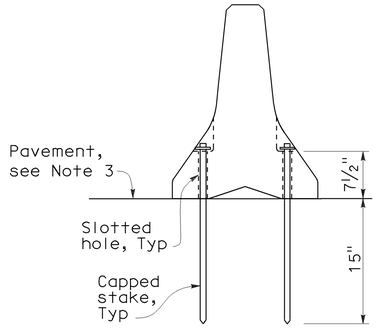

SECTION I-I

NOTES:

1. Where Type K Temporary Railing is placed as a temporary or long term barrier in two-way traffic on highways with less than 24" from the edge of traveled way, use four capped stakes per every other panel with end panels staked.
2. Where Type K Temporary Railing is placed 3" to 24" from the edge of an excavation on highways, use two capped stakes per panel along the traffic side.
3. Staked Type K Temporary Railing must be supported by at least 4" thick concrete, hot mix asphalt or existing asphalt concrete pavement.
4. The minimum yield strength for the washer must be 60,000 psi.
5. Direction of adjacent traffic indicated by ⟹.

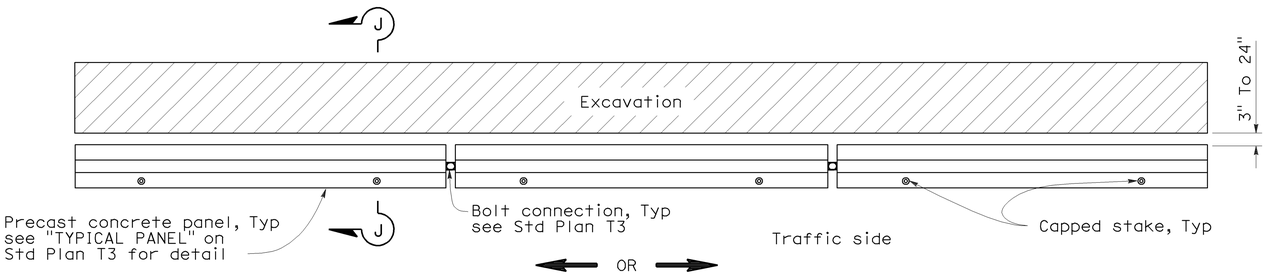

PLAN

RAILING STAKING CONFIGURATION ADJACENT TO AN EXCAVATION

See Note 2

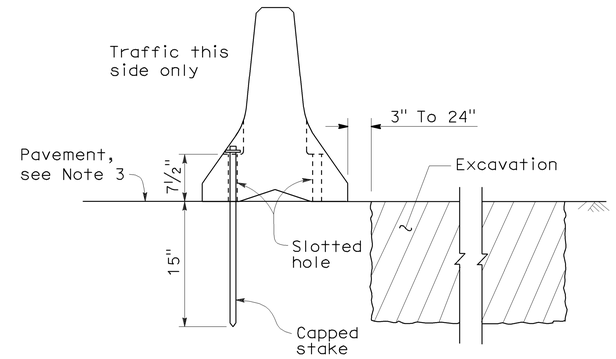

SECTION J-J

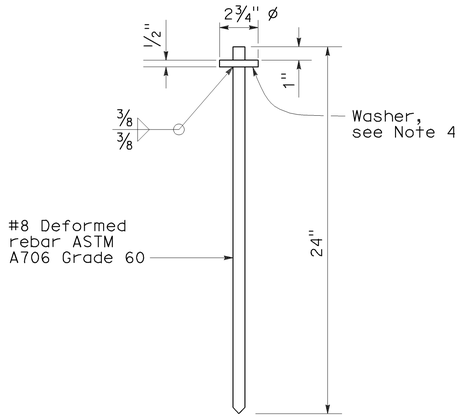

CAPPED STAKE DETAIL

STATE OF CALIFORNIA
DEPARTMENT OF TRANSPORTATION

TEMPORARY RAILING (TYPE K)

NO SCALE

NSP T3A DATED MAY 20, 2011 SUPPLEMENTS
THE STANDARD PLANS BOOK DATED MAY 2006.

NEW STANDARD PLAN NSP T3A

2006 NEW STANDARD PLAN NSP T3A

8-31-10

DIST	COUNTY	ROUTE	POST MILES TOTAL PROJECT	SHEET NO.	TOTAL SHEETS
07	LA	1, 90, 405	Var	15	40

REGISTERED CIVIL ENGINEER

Efthymios Delis
No. C51434
Exp. 6-30-08
CIVIL
REGISTERED PROFESSIONAL ENGINEER
STATE OF CALIFORNIA

October 5, 2007
PLANS APPROVAL DATE

The State of California or its officers or agents shall not be responsible for the accuracy or completeness of electronic copies of this plan sheet.

To accompany plans dated 3-19-12

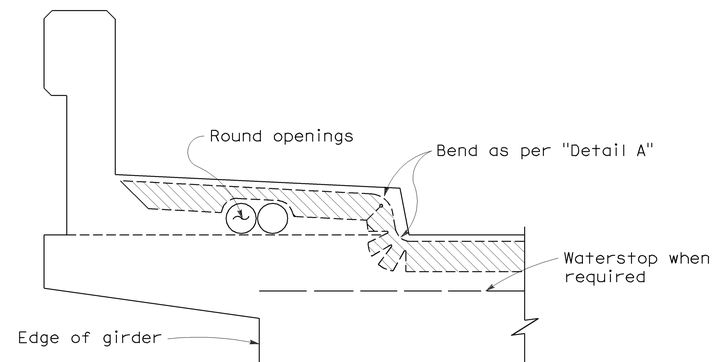

NOTE:

Type "B" seal shown. Type "A" seals to comform to the general path of seal shown, cuts for bending not required. Bend Type "A" seals 3" up into curb or barrier rail on only the low end of the seal.

CONCRETE BARRIER AND SIDEWALK

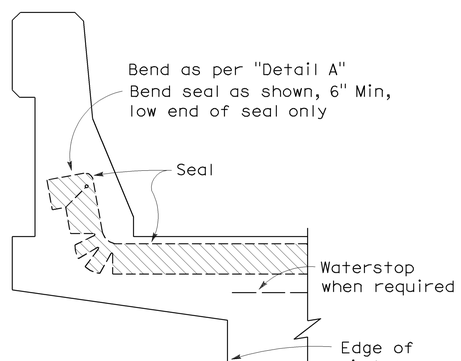

CONCRETE BARRIER

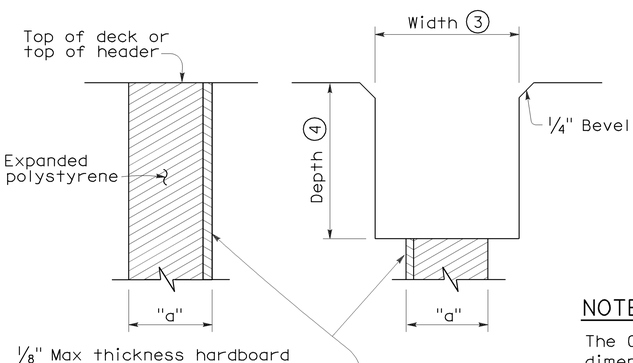

FORMING DETAIL SAWCUT DETAIL

NOTE:

The Contractor shall verify all controlling field dimensions before ordering or fabricatiing any material.

JOINT SEALS DETAILS

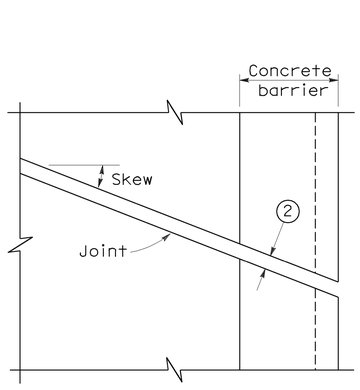

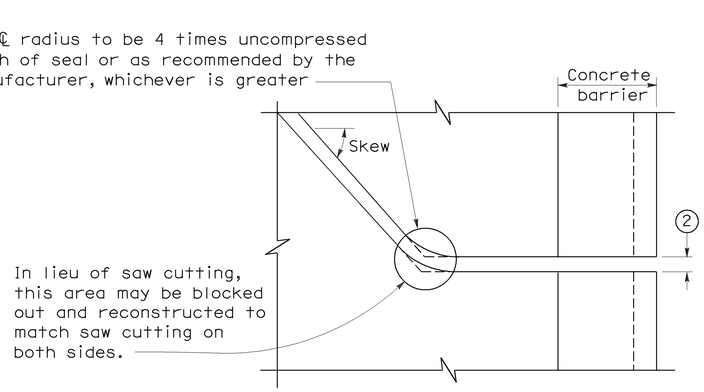

PLAN OF JOINT (SKEW ≤ 20°)

PLAN OF JOINT (SKEW > 20°)

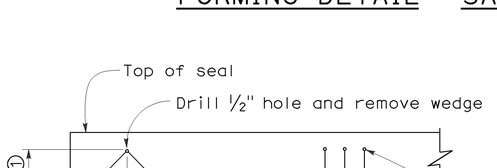

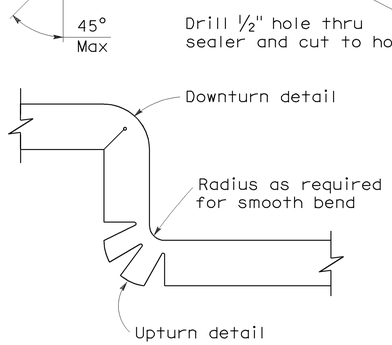

DETAIL A

NOTES:

1. Make smooth cuts from the bottom of seal to 1½" clear of top leaving at least one complete cell between the top of the cut and top of the seal. When necessary cut back of seal to clear conduit and round openings.
2. Opening in barrier to match width of sawn deck joint.
3. Sawcut groove widths shall be as ordered by the Engineer.
4. Depth of sawcut: Type A - Depth to be 2" minimum.
   Type B - Depth to be equal to or greater than the depth of seal measured along the contact surface, when compressed to minimum width position (W_2) plus dimensions shown.
5. MR (movement rating) as shown on other plan sheets.
6. Other depths must be approved by the Engineer.

DIMENSIONS "a" OF JOINT REQUIRED

Movement Rating (MR) (5)	Bridge Type	"a" Dimension, Deck Concrete Placed		
		Winter	Fall-Spring	Summer
2"	All except CIP/PS	1½"	1¼"	¾"
	CIP/PS	1¼"	1"	½"
1½"	All except CIP/PS	1¼"	1"	½"
	CIP/PS	1"	¾"	½"
1"	All except CIP/PS	1"	¾"	½"
	CIP/PS	¾"	½"	½"
½"	All except CIP/PS	¾"	¾"	½"
	CIP/PS	½"	½"	½"

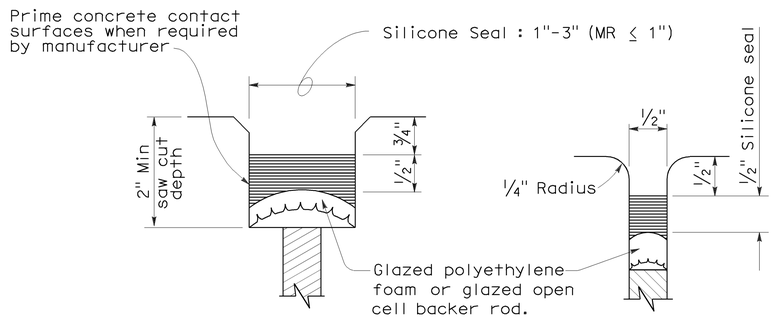

TYPE A SEAL

Movement rating : Silicone = 1" Max

TYPE AL SEAL

Longitudinal joints only

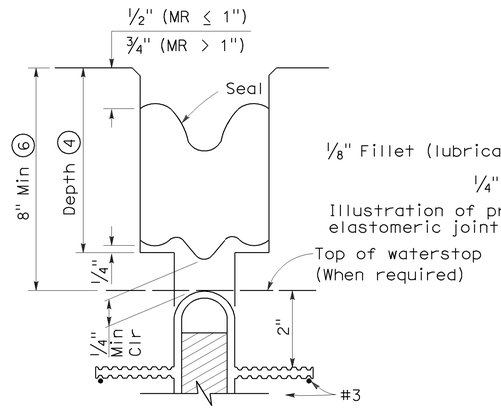

TYPE B JOINT SEAL
IN MINIMUM WIDTH POSITION (W_2)

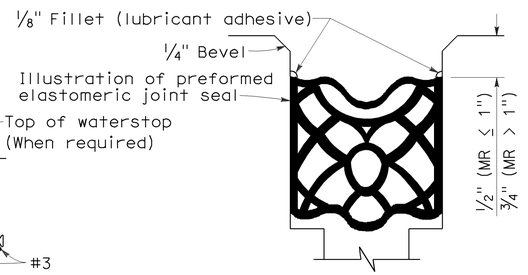

TYPE B SEAL

Movement Rating ≤ 2"

STATE OF CALIFORNIA
DEPARTMENT OF TRANSPORTATION

JOINT SEALS (MAXIMUM MOVEMENT RATING = 2")

NO SCALE

RSP B6-21 DATED OCTOBER 5, 2007 SUPERSEDES STANDARD PLAN B6-21 DATED MAY 1, 2006 - PAGE 258 OF THE STANDARD PLANS BOOK DATED MAY 2006.

REVISED STANDARD PLAN RSP B6-21

2006 REVISED STANDARD PLAN RSP B6-21

5-8-07

DIST	COUNTY	ROUTE	POST MILES TOTAL PROJECT	SHEET NO.	TOTAL SHEETS
07	LA	1, 90, 405	Var	16	40

Randell D. Hiatt
REGISTERED CIVIL ENGINEER

June 6, 2008
PLANS APPROVAL DATE

REGISTERED PROFESSIONAL ENGINEER — Randell D. Hiatt — No. C50200 — Exp. 6-30-09 — CIVIL — STATE OF CALIFORNIA

The State of California or its officers or agents shall not be responsible for the accuracy or completeness of electronic copies of this plan sheet.

To accompany plans dated 3-19-12

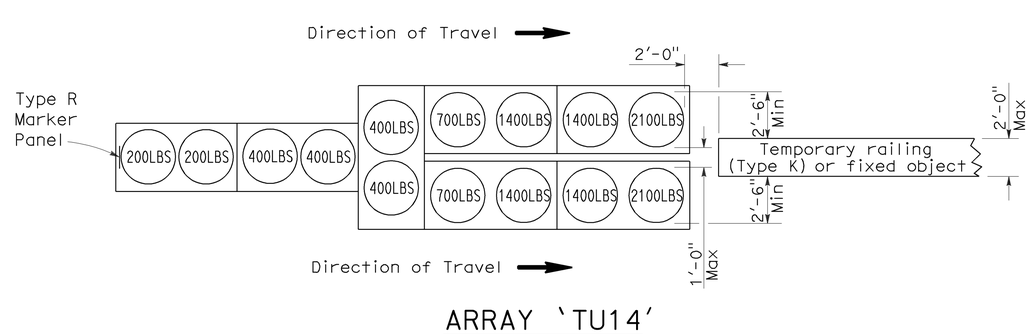

ARRAY 'TU14'

Approach speed 45 mph or more

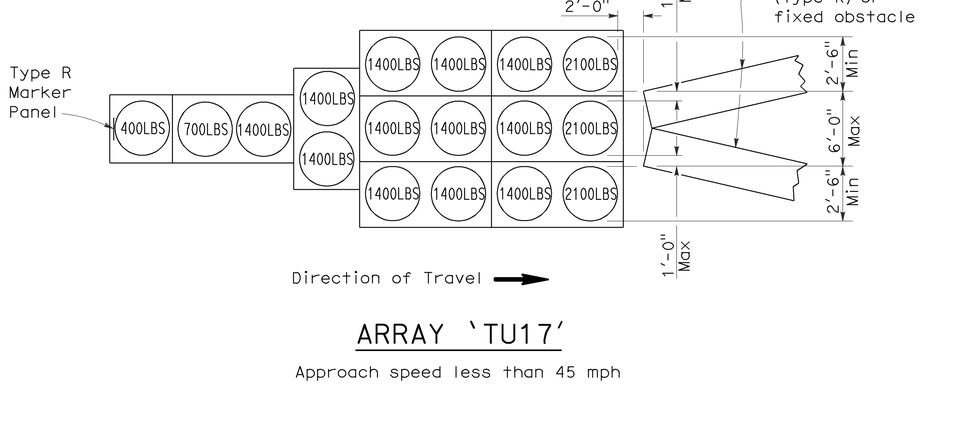

ARRAY 'TU17'

Approach speed less than 45 mph

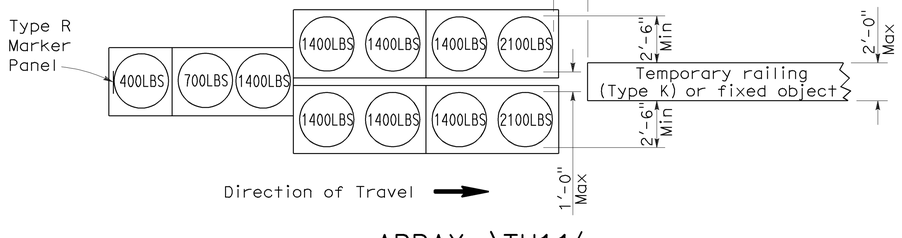

ARRAY 'TU11'

Approach speed less than 45 mph

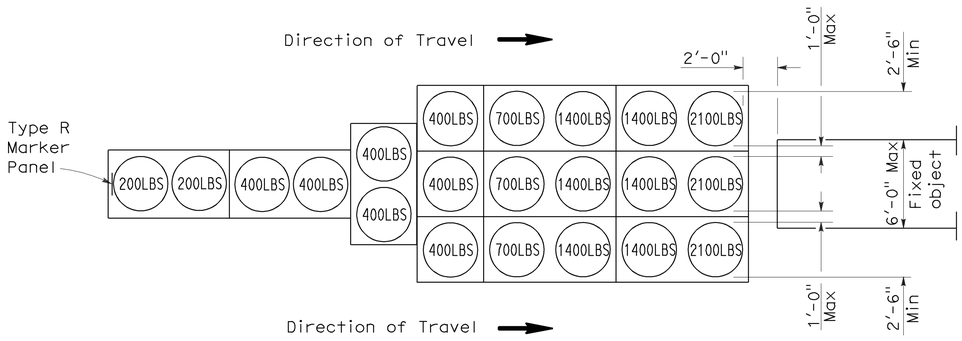

ARRAY 'TU21'

Approach speed 45 mph or more

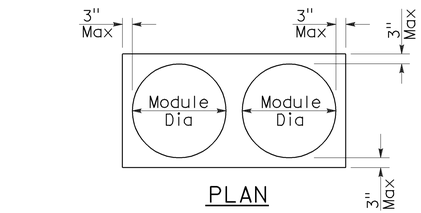

PLAN

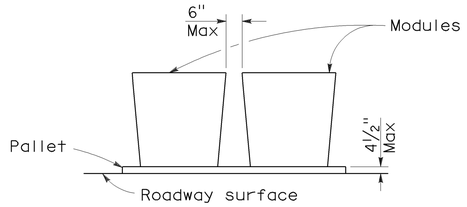

ELEVATION

CRASH CUSHION PALLET DETAIL

See Note 7

NOTES:

1. (XXX) Indicates sand filled module location and weight of sand in pounds for each module. Module spacing is based on the greater diameter of the module.
2. All sand weights are nominal.
3. Temporary crash cushion arrays shall not encroach on the traveled way.
4. Place the top of Type R marker panel 1" below the module lid.
5. Refer to Standard Plan A73B for marker details.
6. Approach speeds indicated conform to NCHRP 350 Report criteria.
7. Use of pallets is optional.

STATE OF CALIFORNIA
DEPARTMENT OF TRANSPORTATION

TEMPORARY CRASH CUSHION, SAND FILLED (UNIDIRECTIONAL)

NO SCALE

RSP T1A DATED JUNE 6, 2008 SUPERSEDES STANDARD PLAN T1A
DATED MAY 1, 2006 - PAGE 211 OF THE STANDARD PLANS BOOK DATED MAY 2006.

REVISED STANDARD PLAN RSP T1A

2006 REVISED STANDARD PLAN RSP T1A

5-15-08

DIST	COUNTY	ROUTE	POST MILES TOTAL PROJECT	SHEET NO.	TOTAL SHEETS
07	LA	1, 90, 405	Var	17	40

Randell D. Hiatt
REGISTERED CIVIL ENGINEER

June 6, 2008
PLANS APPROVAL DATE

The State of California or its officers or agents shall not be responsible for the accuracy or completeness of electronic copies of this plan sheet.

REGISTERED PROFESSIONAL ENGINEER
Randell D. Hiatt
No. C50200
Exp. 6-30-09
CIVIL
STATE OF CALIFORNIA

To accompany plans dated 3-19-12

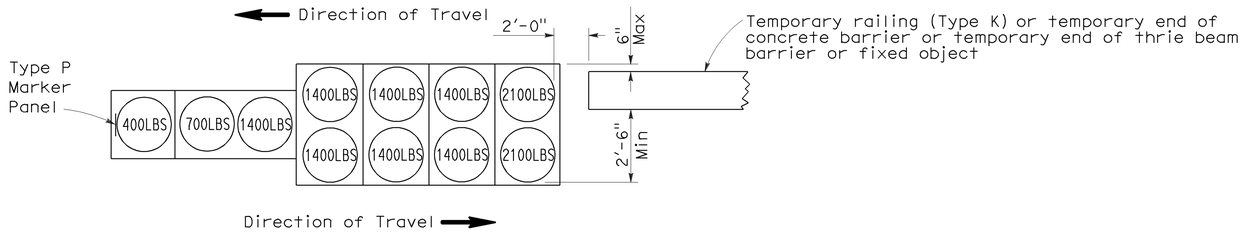

ARRAY 'TB11'

Approach speed less than 45 mph

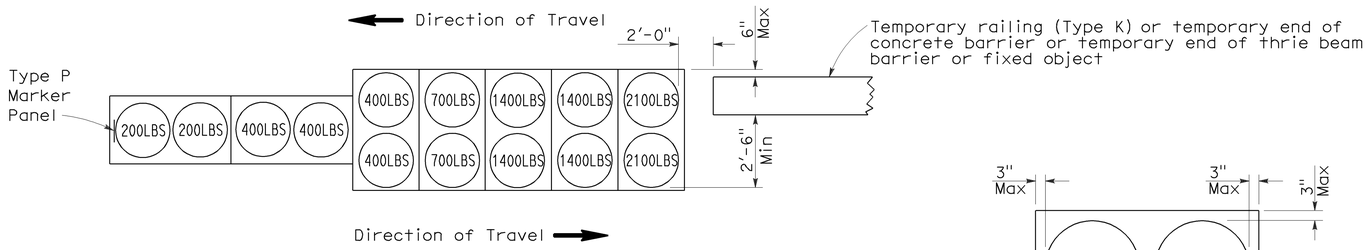

ARRAY 'TB14'

Approach speed 45 mph or more

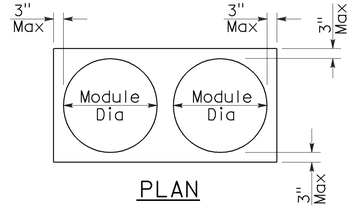

PLAN

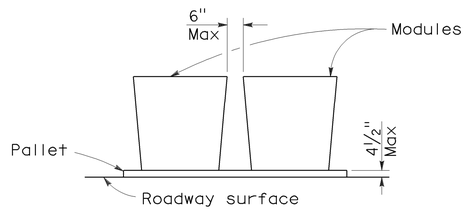

ELEVATION

CRASH CUSHION PALLET DETAIL

See Note 7

NOTES:

1. (XXX) Indicates sand filled module location and weight of sand in pounds for each module. Module spacing is based on the greater diameter of the module.
2. All sand weights are nominal.
3. Temporary crash cushion arrays shall not encroach on the traveled way.
4. Place the Type P marker panel so that the bottom of the panel rests upon the pallet.
5. Refer to Standard Plan A73B for marker details.
6. Approach speeds indicated conform to NCHRP 350 Report criteria.
7. Use of pallets is optional.

STATE OF CALIFORNIA
DEPARTMENT OF TRANSPORTATION

TEMPORARY CRASH CUSHION, SAND FILLED (BIDIRECTIONAL)

NO SCALE

RSP T1B DATED JUNE 6, 2008 SUPERSEDES STANDARD PLAN T1B
DATED MAY 1, 2006 - PAGE 212 OF THE STANDARD PLANS BOOK DATED MAY 2006.

REVISED STANDARD PLAN RSP T1B

2006 REVISED STANDARD PLAN RSP T1B

5-15-08

DIST	COUNTY	ROUTE	POST MILES TOTAL PROJECT	SHEET NO.	TOTAL SHEETS
07	LA	1, 90, 405	Var	18	40

Randell D. Hiatt
REGISTERED CIVIL ENGINEER

June 6, 2008
PLANS APPROVAL DATE

REGISTERED PROFESSIONAL ENGINEER
Randell D. Hiatt
No. C50200
Exp. 6-30-09
CIVIL
STATE OF CALIFORNIA

The State of California or its officers or agents shall not be responsible for the accuracy or completeness of electronic copies of this plan sheet.

To accompany plans dated 3-19-12

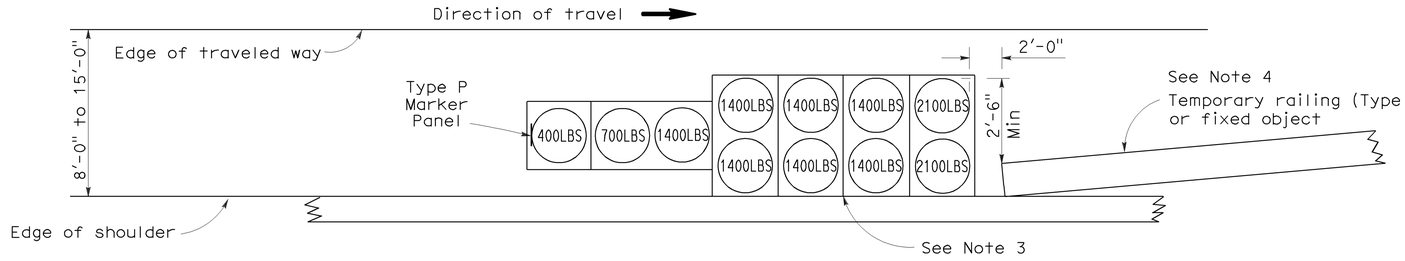

ARRAY 'TS11'

Approach speed less than 45 mph
See Note 9

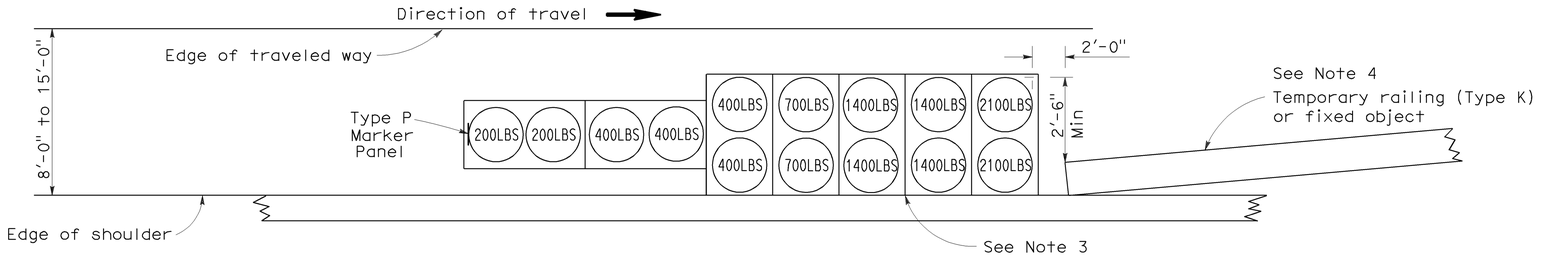

ARRAY 'TS14'

Approach speed 45 mph or more
See Note 9

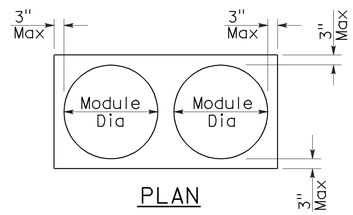

PLAN

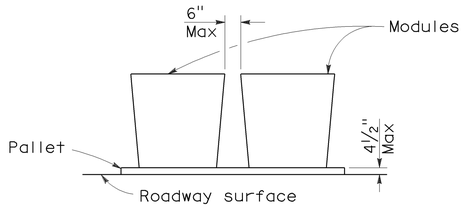

ELEVATION

CRASH CUSHION PALLET DETAIL

See Note 11

NOTES:

1. (XXX) Indicates sand filled module location and weight of sand in pounds for each module. Module spacing is based on the greater diameter of the module.
2. All sand weights are nominal.
3. The temporary crash cushion arrays shown on this plan shall be used only in locations where there will be traffic on one side of the temporary crash cushion array.
4. If the fixed object or approach end of the temporary railing is less than 15'-0" from the edge of traveled way, a temporary crash cushion is required in a construction or work zone.
5. Temporary crash cushion arrays shall not encroach on the traveled way.
6. Arrays for median shoulders shall conform to details shown on this plan for outside shoulders.
7. Place the Type P marker panel so that the bottom of the panel rests upon the pallet and faces traffic.
8. Refer to Standard Plan A73B for marker details.
9. For shoulder widths less than 8'-0", appropriate approved crash cushion protection, other than sand filled modules, shall be provided at fixed objects and at approach ends of temporary railing. The specific type of crash cushion shall be as shown on the project plans or as specified in the Special Provisions, or if not shown on the project plans or specified in the Special Provisions, shall be as approved by the Engineer.
10. Approach speeds indicated conform to NCHRP 350 Report criteria.
11. Use of pallets is optional.

STATE OF CALIFORNIA
DEPARTMENT OF TRANSPORTATION

TEMPORARY CRASH CUSHION, SAND FILLED (SHOULDER INSTALLATIONS)

NO SCALE

RSP T2 DATED JUNE 6, 2008 SUPERSEDES STANDARD PLAN T2
DATED MAY 1, 2006 - PAGE 213 OF THE STANDARD PLANS BOOK DATED MAY 2006.

REVISED STANDARD PLAN RSP T2

2006 REVISED STANDARD PLAN RSP T2

5-15-08

DIST	COUNTY	ROUTE	POST MILES TOTAL PROJECT	SHEET No.	TOTAL SHEETS
07	LA	1,90,405	Var	19	40

Vinh Duc Dang 11/30/11
REGISTERED CIVIL ENGINEER DATE

3-19-12
PLANS APPROVAL DATE

REGISTERED PROFESSIONAL ENGINEER — VINH DUC L. DANG — No. C65096 — Exp. 09/30/13 — CIVIL — STATE OF CALIFORNIA

The State of California or its officers or agents shall not be responsible for the accuracy or completeness of electronic copies of this plan sheet.

INDEX TO PLANS

SHEET NO.	TITLE
1	GENERAL PLAN NO. 1
2	GENERAL PLAN NO. 2
3	GENERAL PLAN NO. 3
4	GENERAL PLAN NO. 4
5	GENERAL PLAN NO. 5
6	GENERAL PLAN NO. 6
7	GENERAL PLAN NO. 7
8	GENERAL PLAN NO. 8
9	GENERAL PLAN NO. 9
10	GENERAL PLAN NO. 10
11	GENERAL PLAN NO. 11
12	GENERAL PLAN NO. 12
13	GENERAL PLAN NO. 13
14	GENERAL PLAN NO. 14
15	GENERAL PLAN NO. 15
16	GENERAL PLAN NO. 16
17	GENERAL PLAN NO. 17
18	MISCELLANEOUS DETAILS NO. 1
19	MISCELLANEOUS DETAILS NO. 2
20	MISCELLANEOUS DETAILS NO. 3
21	STRUCTURE APPROACH TYPE R, DETAILS NO. 1
22	STRUCTURE APPROACH TYPE R, DETAILS NO. 2

LEGEND:

Indicates existing.

Indicates direction of traffic.

Indicates limits of prepare concrete bridge deck surface and treat existing bridge deck with high molecular weight methacrylate. Prior to bridge deck treatment, remove unsound concrete and patch with rapid setting concrete.

Indicates limits of remove existing approach and place new Structure Approach Type R. For details see "STRUCTURE APPROACH TYPE R, DETAILS NO. 1" sheet.

Indicates limits of existing joint seal removal, clean expansion joint and placement of new joint seal. Prior to placement of new joint, remove unsound concrete and patch with rapid setting concrete.

Indicates limits of existing joint seal removal, and placement of new joint seal.

STANDARD PLANS DATED MAY 2006

SHEET NO.	TITLE
A10A	ACRONYMS AND ABBREVIATIONS (SHEET 1 OF 2)
A10B	ACRONYMS AND ABBREVIATIONS (SHEET 2 OF 2)
A10C	SYMBOLS (SHEET 1 OF 2)
A10D	SYMBOLS (SHEET 2 OF 2)
RSP B6-21	JOINT SEALS (MAXIMUM MOVEMENT RATING = 2")

STANDARD PLAN SHEET NO.

DETAIL NO.

DE FOREST AVENUE UC — BRIDGE NO. 53-1047

QUANTITIES

REMOVE UNSOUND CONCRETE	23	CF
PREPARE CONCRETE BRIDGE DECK SURFACE	7,775	SQFT
CLEAN EXPANSION JOINT	136	LF
RAPID SETTING CONCRETE (PATCH)	23	CF
JOINT SEAL (MR 1/2")	205	LF
TREAT BRIDGE DECK	7,775	SQFT
FURNISH BRIDGE DECK TREATMENT MATERIAL	98	GAL
PUBLIC SAFETY PLAN	LUMP SUM	

LOS ANGELES RIVER — BRIDGE NO. 53-0341

QUANTITIES

REMOVE UNSOUND CONCRETE	116	CF
PREPARE CONCRETE BRIDGE DECK SURFACE	45,420	SQFT
AGGREGATE BASE (APPROACH SLAB)	11	CY
STRUCTURAL CONCRETE, APPROACH SLAB (TYPE R)	101	CY
PAVING NOTCH EXTENSION	108	CF
CLEAN EXPANSION JOINT	230	LF
RAPID SETTING CONCRETE (PATCH)	116	CF
JOINT SEAL (MR 1/2")	66	LF
JOINT SEAL (MR 1 1/2")	230	LF
TREAT BRIDGE DECK	45,420	SQFT
FURNISH BRIDGE DECK TREATMENT MATERIAL	568	GAL

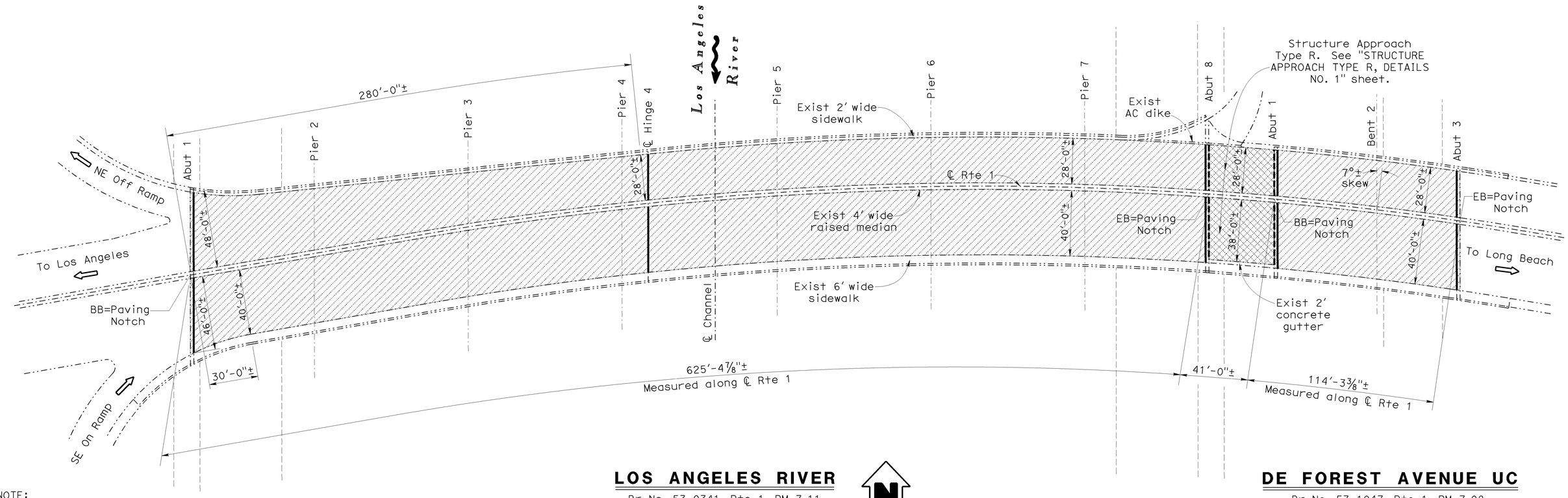

LOS ANGELES RIVER

Br No. 53-0341, Rte 1, PM 7.11
1" = 30'

DE FOREST AVENUE UC

Br No. 53-1047, Rte 1, PM 7.08
1" = 30'

NOTE:
THE CONTRACTOR SHALL VERIFY ALL CONTROLLING FIELD DIMENSIONS BEFORE ORDERING OR FABRICATING ANY MATERIAL. EXISTING UTILITY FACILITIES HAVE NOT BEEN PLOTTED ON THESE PLANS.

TONY D. BRAKE
DESIGN ENGINEER

	BY	CHECKED	LOAD FACTOR DESIGN	LIVE LOADING: HS20-44 AND ALTERNATIVE AND PERMIT DESIGN LOAD	
DESIGN	Vinh Dang	Ramesh Patel			
DETAILS	Tom Dang	Ramesh Patel	LAYOUT	Tom Dang	Vinh Dang
QUANTITIES	Vinh Dang	Ramesh Patel	SPECIFICATIONS	Rebecca Franti	PLANS AND SPECS COMPARED Rebecca Franti

STATE OF CALIFORNIA
DEPARTMENT OF TRANSPORTATION

DIVISION OF MAINTENANCE
STRUCTURE MAINTENANCE DESIGN

BRIDGE NO. Various
POST MILE Various

ROUTE 1, 90, 405 BRIDGES
GENERAL PLAN NO. 1

STRUCTURES MAINTENANCE GENERAL PLAN SHEET (ENGLISH) (REV. 09-01-10)

ORIGINAL SCALE IN INCHES FOR REDUCED PLANS 0 1 2 3

UNIT: 3489
PROJECT NUMBER & PHASE: 07000010941 CONTRACT NO.: 4Y1501

DISREGARD PRINTS BEARING EARLIER REVISION DATES

REVISION DATES				SHEET	OF
5/27/11	6/28/11	8/15/11		01	22

FILE => 07-4y1501-a-gp01.dgn

USERNAME = s129239 DATE PLOTTED => 01-DEC-2011 TIME PLOTTED => 08:05

DIST	COUNTY	ROUTE	POST MILES TOTAL PROJECT	SHEET No.	TOTAL SHEETS
07	LA	1,90,405	Var	20	40

REGISTERED CIVIL ENGINEER — 11/30/11 DATE

3-19-12
PLANS APPROVAL DATE

REGISTERED PROFESSIONAL ENGINEER — VINH DUC L. DANG — No. C65096 — Exp. 09/30/13 — CIVIL — STATE OF CALIFORNIA

The State of California or its officers or agents shall not be responsible for the accuracy or completeness of electronic copies of this plan sheet.

LEGEND:

Indicates existing.

Indicates direction of traffic.

A — Indicates location of repair spalled surface area. See TABLE 1.

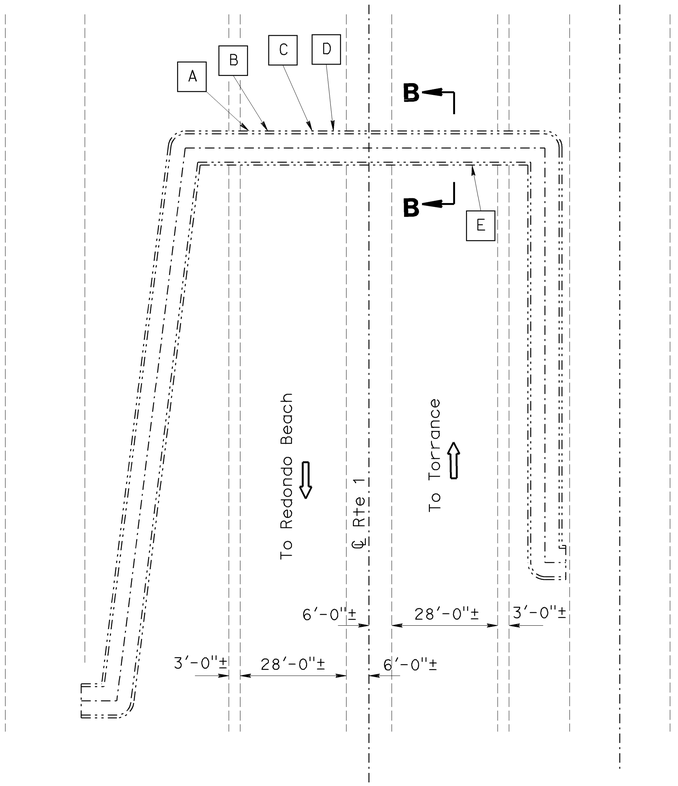

HARRLEE LANE POC

Br No. 53-0040, Rte 1, PM 16.81
1" = 20′

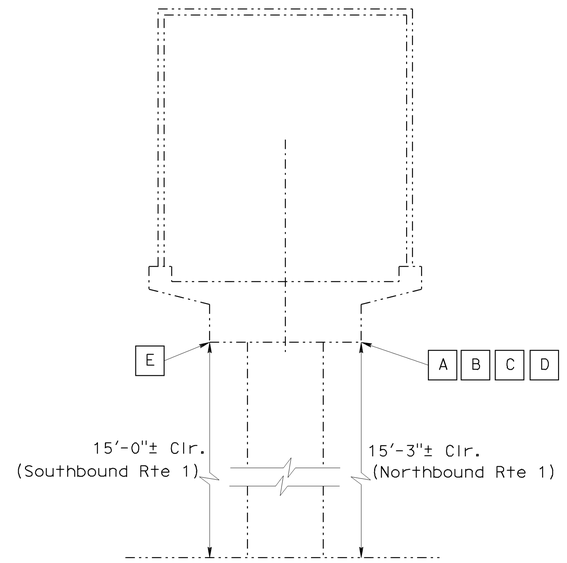

VIEW B-B

NO SCALE

TABLE 1
REPAIR SPALLED SURFACE AREA

	LOCATION	APPROX. SIZE (L X W X D)
A	Soffit edge spall over NB lane No. 2	12" X 6" X 3"
B	Soffit edge spall over NB lane No. 2	12" X 6" X 3"
C	Soffit edge spall over NB lane No. 1	12" X 6" X 3"
D	Soffit edge spall over NB lane No. 1	12" X 6" X 3"
E	Soffit edge spall over SB lane No. 2	60" X 8" X 3"

HARRLEE LANE POC — BRIDGE NO. 53-0040

QUANTITIES

REPAIR SPALLED SURFACE AREA — 6 SQFT

NOTE:
THE CONTRACTOR SHALL VERIFY ALL CONTROLLING FIELD DIMENSIONS BEFORE ORDERING OR FABRICATING ANY MATERIAL. EXISTING UTILITY FACILITIES HAVE NOT BEEN PLOTTED ON THESE PLANS.

TONY D. BRAKE
DESIGN ENGINEER

	BY	CHECKED
DESIGN	Vinh Dang	Ramesh Patel
DETAILS	Tom Dang	Ramesh Patel
QUANTITIES	Vinh Dang	Ramesh Patel

LOAD FACTOR DESIGN — LIVE LOADING: HS20-44 AND ALTERNATIVE AND PERMIT DESIGN LOAD

	BY	CHECKED
LAYOUT	Tom Dang	Vinh Dang
SPECIFICATIONS	Rebecca Franti	PLANS AND SPECS COMPARED: Rebecca Franti

STATE OF CALIFORNIA
DEPARTMENT OF TRANSPORTATION

DIVISION OF MAINTENANCE
STRUCTURE MAINTENANCE DESIGN

BRIDGE NO. Various
POST MILE Various

ROUTE 1, 90, 405 BRIDGES
GENERAL PLAN NO. 2

STRUCTURES MAINTENANCE GENERAL PLAN SHEET (ENGLISH) (REV. 09-01-10)

ORIGINAL SCALE IN INCHES FOR REDUCED PLANS 0 1 2 3

UNIT: 3489
PROJECT NUMBER & PHASE: 07000010941
CONTRACT NO.: 4Y1501

DISREGARD PRINTS BEARING EARLIER REVISION DATES →

REVISION DATES				SHEET	
5/23/11	6/28/11	8/15/11		02	22

FILE => 07-4y1501-a-gp02.dgn

USERNAME => s1292339 DATE PLOTTED => 01-DEC-2011 TIME PLOTTED => 08:05

DIST	COUNTY	ROUTE	POST MILES TOTAL PROJECT	SHEET No.	TOTAL SHEETS
07	LA	1,90,405	Var	21	40

REGISTERED CIVIL ENGINEER — 11/30/11 DATE

3-19-12
PLANS APPROVAL DATE

REGISTERED PROFESSIONAL ENGINEER — VINH DUC L. DANG — No. C65096 — Exp. 09/30/13 — CIVIL — STATE OF CALIFORNIA

The State of California or its officers or agents shall not be responsible for the accuracy or completeness of electronic copies of this plan sheet.

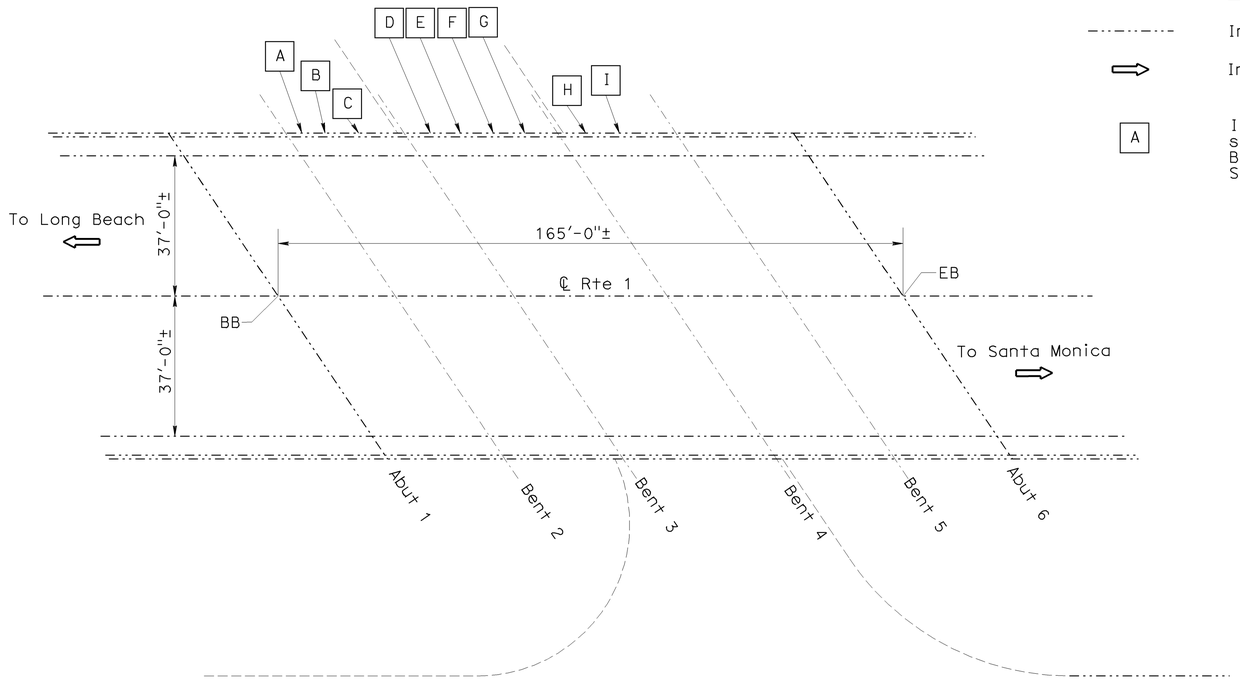

LEGEND:

Indicates existing.

Indicates direction of traffic.

A — Indicates location of repair spalled surface area at west overhang and Bent 4 columns. See "TYPICAL SECTION" and TABLE 1.

MANHATTAN UC

Br No. 53-0062, Rte 1, PM 23.79
1" = 20'

TABLE 1
REPAIR SPALLED SURFACE AREA

LOCATION		APPROX. SIZE (L X W X D)
A	Span 1, corbel/edge of deck spall	18" X 10" X 4"
B	Span 1, corbel/edge of deck spall	18" X 10" X 8"
C	Span 1, corbel/edge of deck spall	18" X 10" X 8"
D	Span 2, under sidewalk with exposed rebars	48" X 12" X 3"
E	Span 2, under sidewalk with exposed rebars	48" X 12" X 3"
F	Span 2, under sidewalk with exposed rebars	48" X 12" X 3"
G	Span 2, under sidewalk with exposed rebars	48" X 12" X 3"
H	Span 3, top girder spall	24" X 18" X 4"
I	Span 3, bottom girder spall	24" X 18" X 4"
J	Column corner spall	18" X 12" X 3"
K	Column corner spall	18" X 12" X 3"
L	Column surface spall	18" X 12" X 3"

MANHATTAN UC — BRIDGE NO. 53-0062

QUANTITIES

REPAIR SPALLED SURFACE AREA	31	SQFT

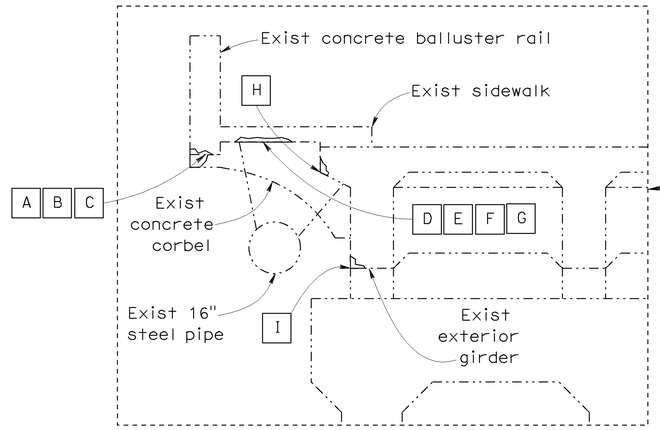

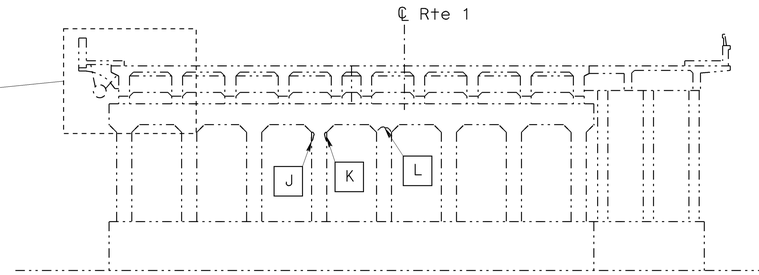

TYPICAL SECTION

Bent 4 shown, looking north
NO SCALE

NOTE:
THE CONTRACTOR SHALL VERIFY ALL CONTROLLING FIELD DIMENSIONS BEFORE ORDERING OR FABRICATING ANY MATERIAL. EXISTING UTILITY FACILITIES HAVE NOT BEEN PLOTTED ON THESE PLANS.

TONY D. BRAKE DESIGN ENGINEER	DESIGN	BY Vinh Dang	CHECKED Ramesh Patel	LOAD FACTOR DESIGN	LIVE LOADING: HS20-44 AND ALTERNATIVE AND PERMIT DESIGN LOAD		STATE OF CALIFORNIA DEPARTMENT OF TRANSPORTATION	DIVISION OF MAINTENANCE STRUCTURE MAINTENANCE DESIGN	BRIDGE NO. Various POST MILE Various
	DETAILS	BY Tom Dang	CHECKED Ramesh Patel	LAYOUT	BY Tom Dang	CHECKED Vinh Dang			
	QUANTITIES	BY Vinh Dang	CHECKED Ramesh Patel	SPECIFICATIONS	BY Rebecca Franti	PLANS AND SPECS COMPARED Rebecca Franti			

ROUTE 1, 90, 405 BRIDGES
GENERAL PLAN NO. 3

STRUCTURES MAINTENANCE GENERAL PLAN SHEET (ENGLISH) (REV. 09-01-10)

ORIGINAL SCALE IN INCHES FOR REDUCED PLANS 0 1 2 3

UNIT: 3489
PROJECT NUMBER & PHASE: 07000010941
CONTRACT NO.: 4Y1501

DISREGARD PRINTS BEARING EARLIER REVISION DATES

REVISION DATES				SHEET	OF
5/24/11	6/28/11	8/15/11		03	22

FILE => 07-4y1501-a-gp03.dgn

USERNAME => s1239239 DATE PLOTTED => 01-DEC-2011 TIME PLOTTED => 08:05

DIST	COUNTY	ROUTE	POST MILES TOTAL PROJECT	SHEET No.	TOTAL SHEETS
07	LA	1,90,405	Var	22	40

REGISTERED CIVIL ENGINEER — 11/30/11 DATE

3-19-12
PLANS APPROVAL DATE

REGISTERED PROFESSIONAL ENGINEER — VINH DUC L. DANG No. C65096 Exp. 09/30/13 CIVIL — STATE OF CALIFORNIA

The State of California or its officers or agents shall not be responsible for the accuracy or completeness of electronic copies of this plan sheet.

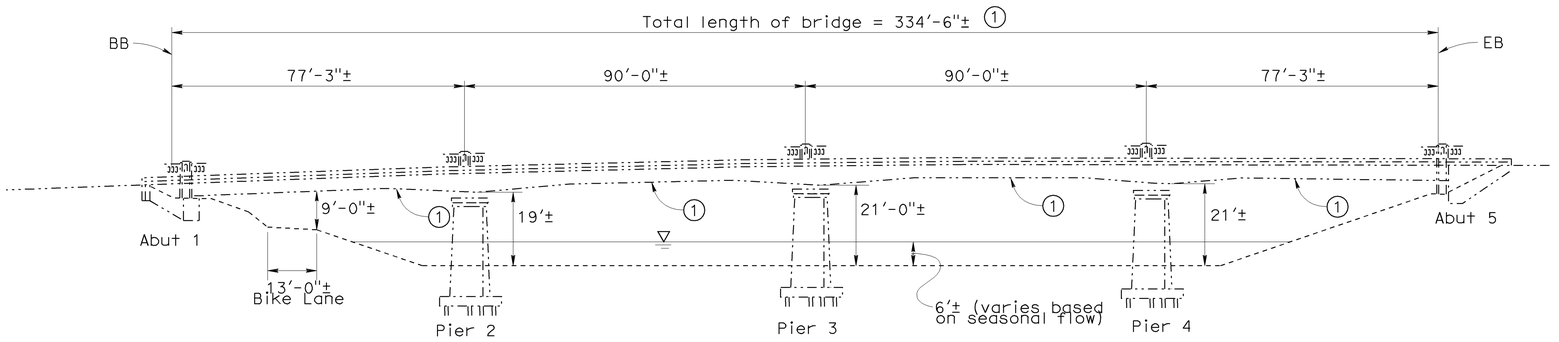

ELEVATION

1" = 20'

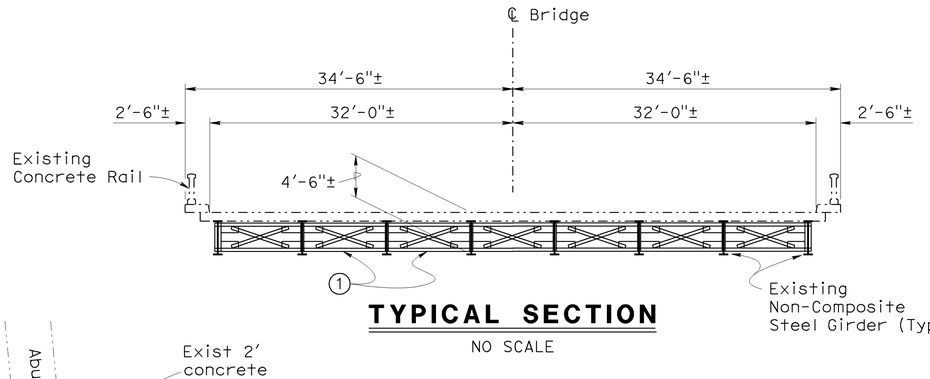

TYPICAL SECTION

NO SCALE

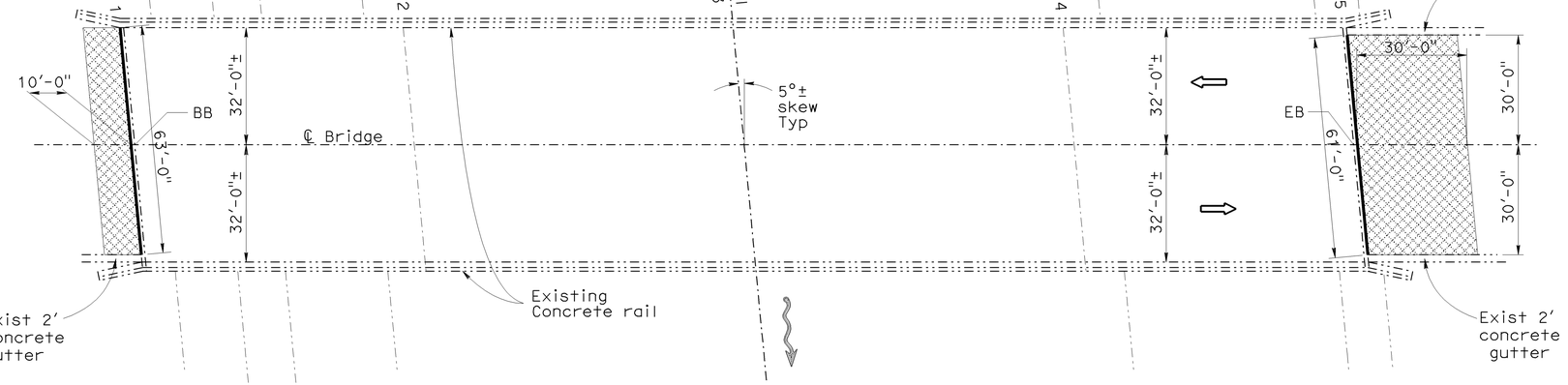

PLAN

1" = 20'

BALLONA CREEK — BRIDGE NO. 53-0118

QUANTITIES

REMOVE UNSOUND CONCRETE	2	CF
AGGREGATE BASE (APPROACH SLAB)	9	CY
STRUCTURAL CONCRETE, APPROACH SLAB (TYPE R)	85	CY
RAPID SETTING CONCRETE (PATCH)	2	CF
JOINT SEAL (MR 1/2")	124	LF
CLEAN STRUCTURAL STEEL (EXISTING BRIDGE)	LUMP	SUM
PAINT STRUCTURAL STEEL (EXISTING BRIDGE)	LUMP	SUM
SPOT BLAST CLEAN AND PAINT UNDERCOAT	2,500	SQFT
WORK AREA MONITORING	LUMP	SUM

BALLONA CREEK

Br No. 53-0118, Rte 1, PM 30.36
1" = 20'

LEGEND:

- Indicates existing.
- Indicates direction of traffic.
- (1) Clean and spot blast cleaning of existing paint system on steel members (including steel rocker bearings) and apply undercoats and finish coats of the specified paint system to the entire bridge.
- Indicates limits of remove existing approach and place new Structure Approach Type R. For details see "STRUCTURE APPROACH TYPE R, DETAILS NO.2" sheet.
- Indicates limits of existing joint seal removal and placement of new joint seal. Prior to placement of new joint, remove unsound concrete and patch with rapid setting concrete.

NOTE:
THE CONTRACTOR SHALL VERIFY ALL CONTROLLING FIELD DIMENSIONS BEFORE ORDERING OR FABRICATING ANY MATERIAL. EXISTING UTILITY FACILITIES HAVE NOT BEEN PLOTTED ON THESE PLANS.

DESIGN	BY Vinh Dang	CHECKED Ramesh Patel	LOAD FACTOR DESIGN	LIVE LOADING: HS20-44 AND ALTERNATIVE AND PERMIT DESIGN LOAD		
DETAILS	BY Tom Dang	CHECKED Ramesh Patel	LAYOUT	BY Tom Dang	CHECKED Vinh Dang	
QUANTITIES	BY Vinh Dang	CHECKED Ramesh Patel	SPECIFICATIONS	BY Rebecca Franti	PLANS AND SPECS COMPARED Rebecca Franti	

TONY D. BRAKE
DESIGN ENGINEER

STATE OF CALIFORNIA
DEPARTMENT OF TRANSPORTATION

DIVISION OF MAINTENANCE
STRUCTURE MAINTENANCE DESIGN

BRIDGE NO. Various
POST MILE Various

ROUTE 1, 90, 405 BRIDGES
GENERAL PLAN NO. 4

STRUCTURES MAINTENANCE GENERAL PLAN SHEET (ENGLISH) (REV. 09-01-10)

ORIGINAL SCALE IN INCHES FOR REDUCED PLANS 0 1 2 3

UNIT: 3489
PROJECT NUMBER & PHASE: 07000010941
CONTRACT NO.: 4Y1501

DISREGARD PRINTS BEARING EARLIER REVISION DATES →

REVISION DATES			SHEET	OF
8/26/11	8/15/11	8/19/11	04	22

FILE => 07-4y1501-a-gp04.dgn

USERNAME => s1292239 DATE PLOTTED => 26-MAR-2012 TIME PLOTTED => 08:59

DIST	COUNTY	ROUTE	POST MILES TOTAL PROJECT	SHEET No.	TOTAL SHEETS
07	LA	1,90,405	Var	23	40

REGISTERED CIVIL ENGINEER — 11/30/11 DATE

3-19-12
PLANS APPROVAL DATE

REGISTERED PROFESSIONAL ENGINEER — VINH DUC L. DANG No. C65096 Exp. 09/30/13 CIVIL — STATE OF CALIFORNIA

The State of California or its officers or agents shall not be responsible for the accuracy or completeness of electronic copies of this plan sheet.

LEGEND:

Indicates existing.

Indicates direction of traffic.

Indicates limits of prepare concrete bridge deck surface and treat existing bridge deck with high molecular weight methacrylate. Prior to bridge deck treatment, remove unsound concrete and patch with rapid setting concrete.

Indicates limits of existing joint seal removal, clean expansion joint and placement of new joint seal. Prior to placement of new joint, remove unsound concrete and patch with rapid setting concrete.

Indicates location of clean existing deck drain. See As-Built plan on "MISCELLANEOUS DETAILS NO. 3" sheet.

MESMER AVENUE UC — BRIDGE NO. 53-1950

QUANTITIES		
REMOVE UNSOUND CONCRETE	117	CF
PREPARE CONCRETE BRIDGE DECK SURFACE	45,875	SQFT
CLEAN BRIDGE DECK DRAIN	45	LF
CLEAN EXPANSION JOINT	774	LF
RAPID SETTING CONCRETE (PATCH)	117	CF
JOINT SEAL (MR 1/2")	774	LF
TREAT BRIDGE DECK	45,875	SQFT
FURNISH BRIDGE DECK TREATMENT MATERIAL	574	GAL
PUBLIC SAFETY PLAN	LUMP	SUM

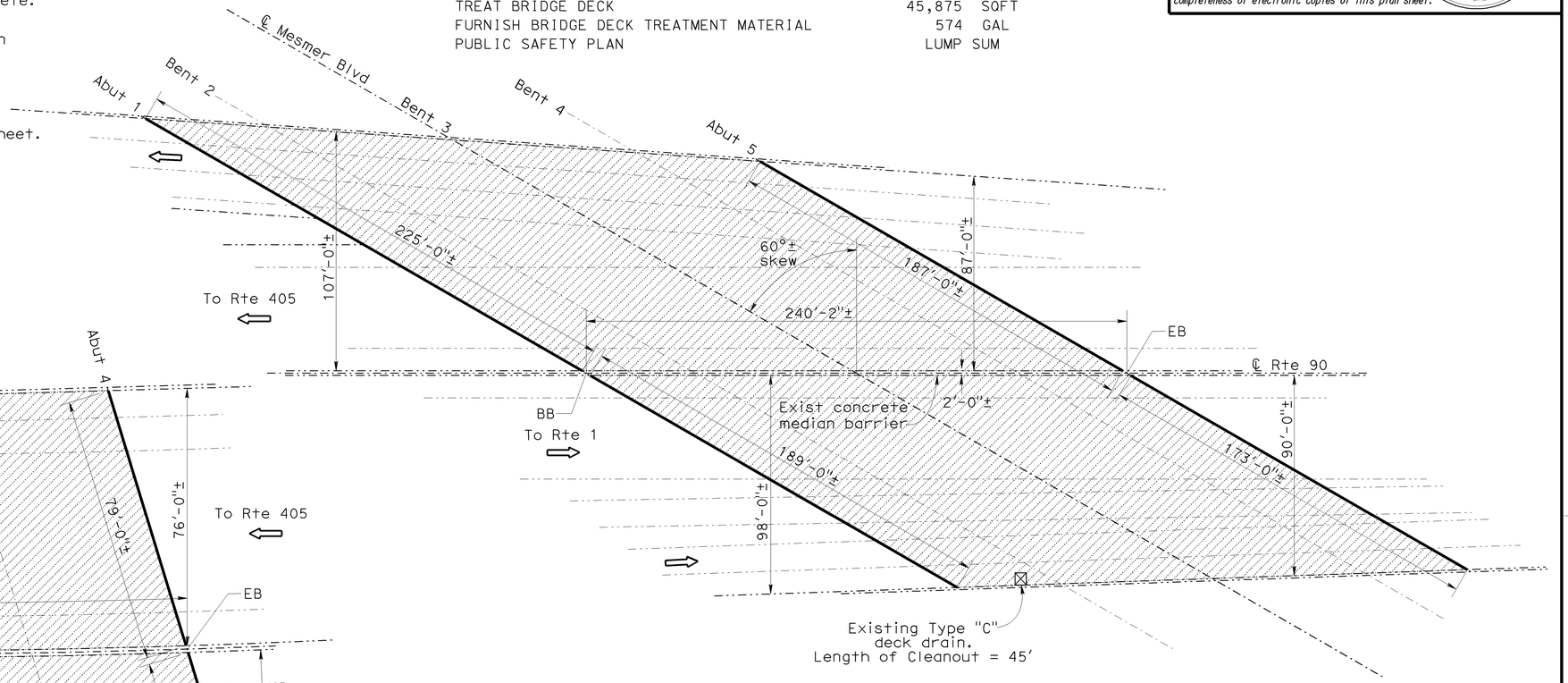

MESMER AVENUE UC

Br No. 53-1950, Rte 90, PM 2.33
1" = 30'

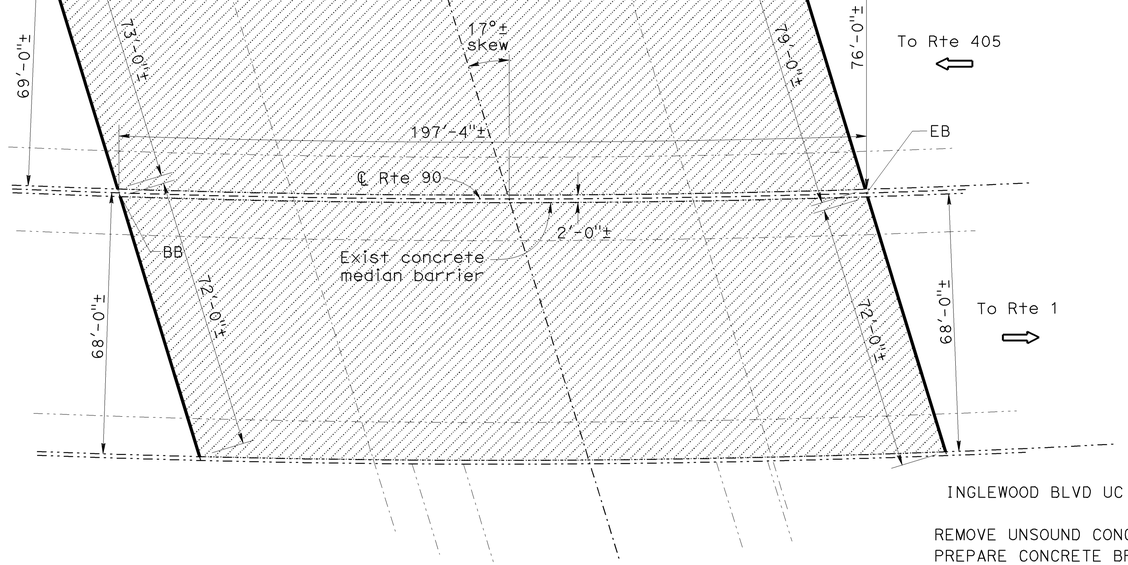

INGLEWOOD BLVD UC

Br No. 53-1952, Rte 90, PM 2.01
1" = 20'

NOTE:
THE CONTRACTOR SHALL VERIFY ALL CONTROLLING FIELD DIMENSIONS BEFORE ORDERING OR FABRICATING ANY MATERIAL. EXISTING UTILITY FACILITIES HAVE NOT BEEN PLOTTED ON THESE PLANS.

INGLEWOOD BLVD UC — BRIDGE NO. 53-1952

QUANTITIES		
REMOVE UNSOUND CONCRETE	72	CF
PREPARE CONCRETE BRIDGE DECK SURFACE	27,725	SQFT
CLEAN EXPANSION JOINT	296	LF
RAPID SETTING CONCRETE (PATCH)	72	CF
JOINT SEAL (MR 1 1/2")	296	LF
TREAT BRIDGE DECK	27,725	SQFT
FURNISH BRIDGE DECK TREATMENT MATERIAL	347	GAL
PUBLIC SAFETY PLAN	LUMP	SUM

TONY D. BRAKE
DESIGN ENGINEER

	BY	CHECKED			
DESIGN	Vinh Dang	Ramesh Patel	LOAD FACTOR DESIGN	LIVE LOADING: HS20-44 AND ALTERNATIVE AND PERMIT DESIGN LOAD	
DETAILS	Tom Dang	Ramesh Patel	LAYOUT	Tom Dang	Vinh Dang
QUANTITIES	Vinh Dang	Ramesh Patel	SPECIFICATIONS	Rebecca Franti	PLANS AND SPECS COMPARED: Rebecca Franti

STRUCTURES MAINTENANCE GENERAL PLAN SHEET (ENGLISH) (REV. 09-01-10)

ORIGINAL SCALE IN INCHES FOR REDUCED PLANS 0 1 2 3

STATE OF CALIFORNIA
DEPARTMENT OF TRANSPORTATION

DIVISION OF MAINTENANCE
STRUCTURE MAINTENANCE DESIGN

UNIT: 3489
PROJECT NUMBER & PHASE: 07000010941
CONTRACT NO.: 4Y1501
FILE => 07-4y1501-a-gp05.dgn

BRIDGE NO.: Various
POST MILE: Various

ROUTE 1, 90, 405 BRIDGES
GENERAL PLAN NO. 5

DISREGARD PRINTS BEARING EARLIER REVISION DATES →

REVISION DATES				SHEET	OF
5/23/11	6/28/11	8/15/11		05	22

USERNAME => s129239 DATE PLOTTED => 01-DEC-2011 TIME PLOTTED => 08:05

DIST	COUNTY	ROUTE	POST MILES TOTAL PROJECT	SHEET No.	TOTAL SHEETS
07	LA	1,90,405	Var	24	40

REGISTERED CIVIL ENGINEER — 11/30/11 DATE

3-19-12
PLANS APPROVAL DATE

REGISTERED PROFESSIONAL ENGINEER — VINH DUC L. DANG — No. C65096 — Exp. 09/30/13 — CIVIL — STATE OF CALIFORNIA

The State of California or its officers or agents shall not be responsible for the accuracy or completeness of electronic copies of this plan sheet.

LEGEND:

Indicates existing.

Indicates direction of traffic.

Indicates limits of prepare concrete bridge deck surface and treat existing bridge deck with high molecular weight methacrylate. Prior to bridge deck treatment, remove unsound concrete and patch with rapid setting concrete.

Indicates limits of existing joint seal removal, clean expansion joint and placement of new joint seal. Prior to placement of new joint, remove unsound concrete and patch with rapid setting concrete.

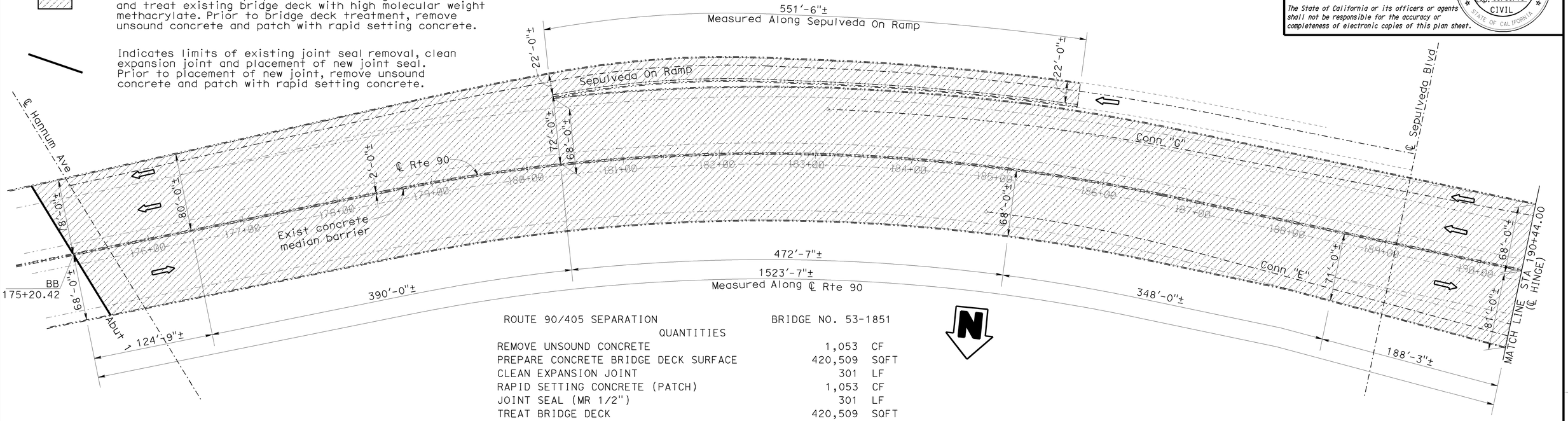

ROUTE 90/405 SEPARATION	BRIDGE NO. 53-1851	
QUANTITIES		
REMOVE UNSOUND CONCRETE	1,053	CF
PREPARE CONCRETE BRIDGE DECK SURFACE	420,509	SQFT
CLEAN EXPANSION JOINT	301	LF
RAPID SETTING CONCRETE (PATCH)	1,053	CF
JOINT SEAL (MR 1/2")	301	LF
TREAT BRIDGE DECK	420,509	SQFT
FURNISH BRIDGE DECK TREATMENT MATERIAL	5,229	GAL
PUBLIC SAFETY PLAN	LUMP SUM	

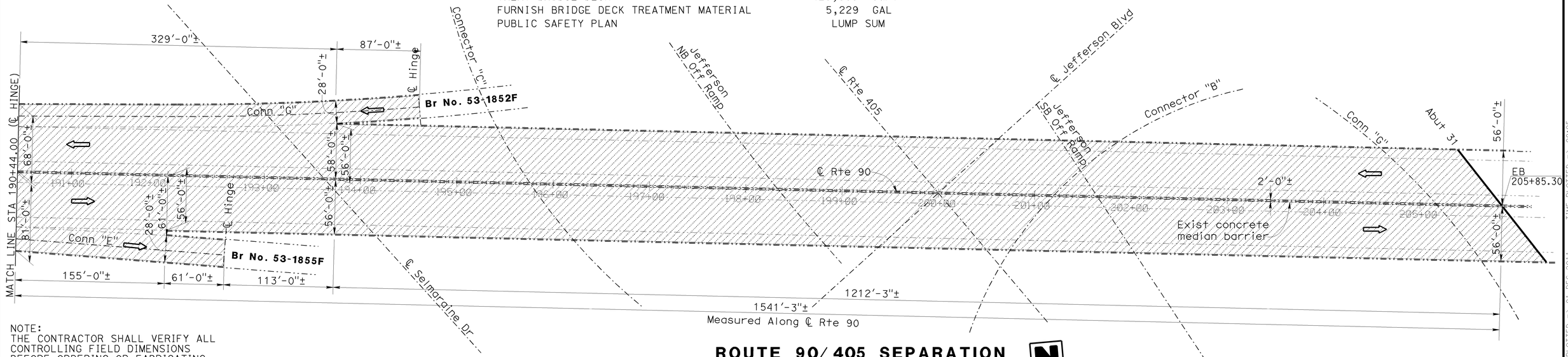

NOTE:
THE CONTRACTOR SHALL VERIFY ALL CONTROLLING FIELD DIMENSIONS BEFORE ORDERING OR FABRICATING ANY MATERIAL. EXISTING UTILITY FACILITIES HAVE NOT BEEN PLOTTED ON THESE PLANS.

ROUTE 90/405 SEPARATION

Br No. 53-1851, Rte 90, PM 2.54
1" = 50'

TONY D. BRAKE
DESIGN ENGINEER

	BY	CHECKED
DESIGN	Vinh Dang	Ramesh Patel
DETAILS	Tom Dang	Ramesh Patel
QUANTITIES	Vinh Dang	Ramesh Patel

LOAD FACTOR DESIGN — LIVE LOADING: HS20-44 AND ALTERNATIVE AND PERMIT DESIGN LOAD

	BY	CHECKED
LAYOUT	Tom Dang	Vinh Dang
SPECIFICATIONS	Rebecca Franti	PLANS AND SPECS COMPARED Rebecca Franti

STATE OF CALIFORNIA
DEPARTMENT OF TRANSPORTATION

DIVISION OF MAINTENANCE
STRUCTURE MAINTENANCE DESIGN

BRIDGE NO. Various
POST MILE Various

ROUTE 1, 90, 405 BRIDGES
GENERAL PLAN NO. 6

STRUCTURES MAINTENANCE GENERAL PLAN SHEET (ENGLISH) (REV. 09-01-10)

ORIGINAL SCALE IN INCHES FOR REDUCED PLANS 0 1 2 3

UNIT: 3489
PROJECT NUMBER & PHASE: 07000010941
CONTRACT NO.: 4Y1501

DISREGARD PRINTS BEARING EARLIER REVISION DATES →

REVISION DATES				SHEET	OF
5/24/11	6/28/11	8/15/11		06	22

FILE => 07-4y1501-a-gp06.dgn

USERNAME => s129239 DATE PLOTTED => 01-DEC-2011 TIME PLOTTED => 08:05

DIST	COUNTY	ROUTE	POST MILES TOTAL PROJECT	SHEET No.	TOTAL SHEETS
07	LA	1,90,405	Var	25	40

REGISTERED CIVIL ENGINEER — 11/30/11 DATE

VINH DUC L. DANG No. C65096 Exp. 09/30/13 CIVIL — REGISTERED PROFESSIONAL ENGINEER — STATE OF CALIFORNIA

3-19-12
PLANS APPROVAL DATE

The State of California or its officers or agents shall not be responsible for the accuracy or completeness of electronic copies of this plan sheet.

LEGEND:

Indicates existing.

Indicates direction of traffic.

Indicates limits of prepare concrete bridge deck surface and treat existing bridge deck with high molecular weight methacrylate. Prior to bridge deck treatment, remove unsound concrete and patch with rapid setting concrete.

E90-N405 CONNECTOR OC — BRIDGE NO. 53-1854G

QUANTITIES		
REMOVE UNSOUND CONCRETE	90	CF
PREPARE CONCRETE BRIDGE DECK SURFACE	35,910	SQFT
RAPID SETTING CONCRETE (PATCH)	90	CF
TREAT BRIDGE DECK	35,910	SQFT
FURNISH BRIDGE DECK TREATMENT MATERIAL	449	GAL
PUBLIC SAFETY PLAN	LUMP	SUM

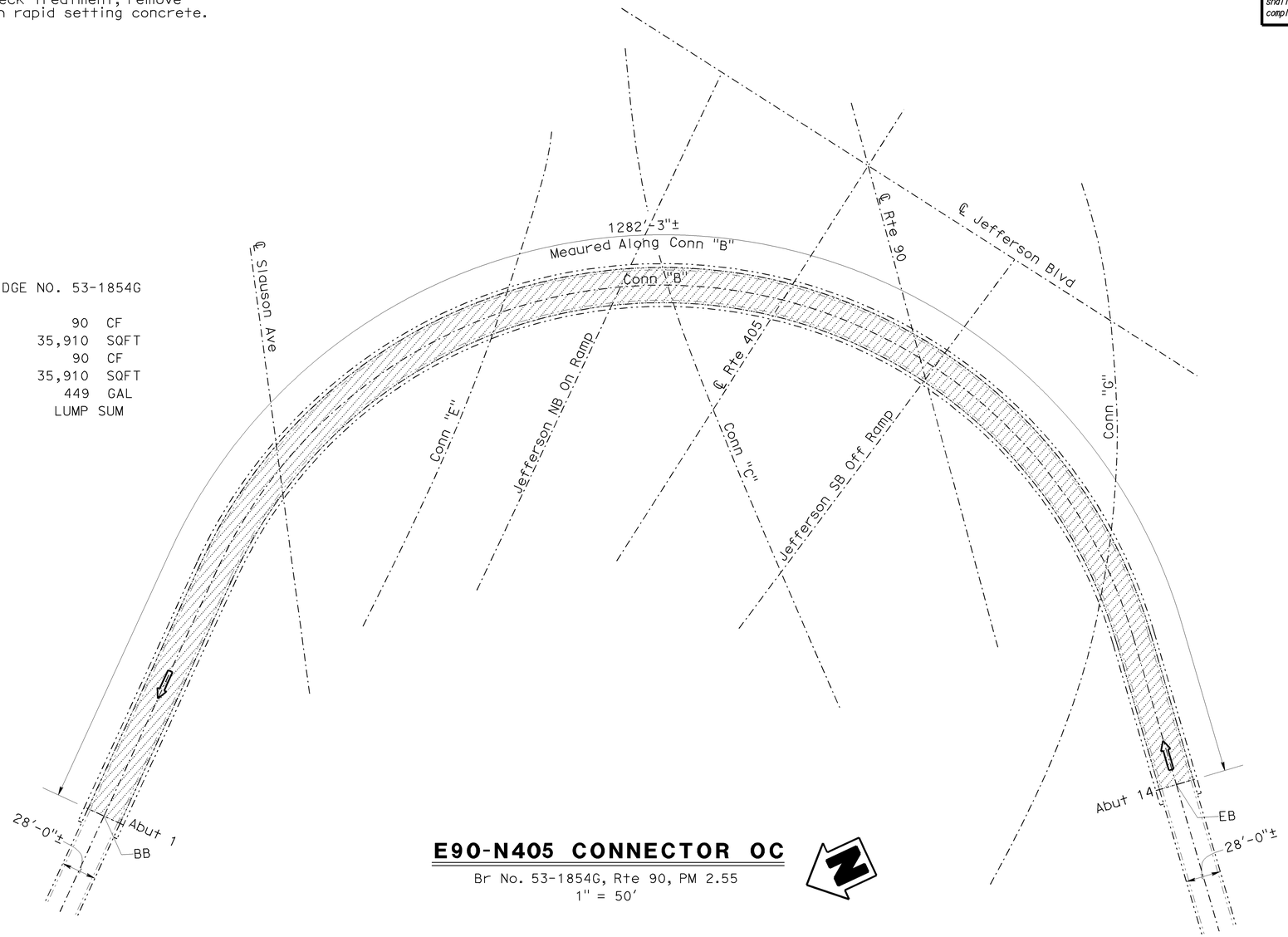

E90-N405 CONNECTOR OC

Br No. 53-1854G, Rte 90, PM 2.55
1" = 50'

NOTE:
THE CONTRACTOR SHALL VERIFY ALL CONTROLLING FIELD DIMENSIONS BEFORE ORDERING OR FABRICATING ANY MATERIAL. EXISTING UTILITY FACILITIES HAVE NOT BEEN PLOTTED ON THESE PLANS.

TONY D. BRAKE DESIGN ENGINEER	DESIGN	BY Vinh Dang	CHECKED Ramesh Patel	LOAD FACTOR DESIGN	LIVE LOADING: HS20-44 AND ALTERNATIVE AND PERMIT DESIGN LOAD		
	DETAILS	BY Tom Dang	CHECKED Ramesh Patel	LAYOUT	BY Tom Dang	CHECKED Vinh Dang	
	QUANTITIES	BY Vinh Dang	CHECKED Ramesh Patel	SPECIFICATIONS	BY Rebecca Franti	PLANS AND SPECS COMPARED Rebecca Franti	

STATE OF CALIFORNIA
DEPARTMENT OF TRANSPORTATION

DIVISION OF MAINTENANCE
STRUCTURE MAINTENANCE DESIGN

BRIDGE NO. Various
POST MILE Various

ROUTE 1, 90, 405 BRIDGES
GENERAL PLAN NO. 7

STRUCTURES MAINTENANCE GENERAL PLAN SHEET (ENGLISH) (REV. 09-01-10)

ORIGINAL SCALE IN INCHES FOR REDUCED PLANS 0 1 2 3

UNIT: 3489
PROJECT NUMBER & PHASE: 07000010941
CONTRACT NO.: 4Y1501

DISREGARD PRINTS BEARING EARLIER REVISION DATES

REVISION DATES				SHEET	OF
5/23/11	6/28/11	8/15/11		07	22

FILE => 07-4y1501-a-gp07.dgn

USERNAME => s129239 DATE PLOTTED => 01-DEC-2011 TIME PLOTTED => 08:05

DIST	COUNTY	ROUTE	POST MILES TOTAL PROJECT	SHEET No.	TOTAL SHEETS
07	LA	1,90,405	Var	26	40

REGISTERED CIVIL ENGINEER — 11/30/11 DATE

3-19-12
PLANS APPROVAL DATE

REGISTERED PROFESSIONAL ENGINEER — VINH DUC L. DANG — No. C65096 — Exp. 09/30/13 — CIVIL — STATE OF CALIFORNIA

The State of California or its officers or agents shall not be responsible for the accuracy or completeness of electronic copies of this plan sheet.

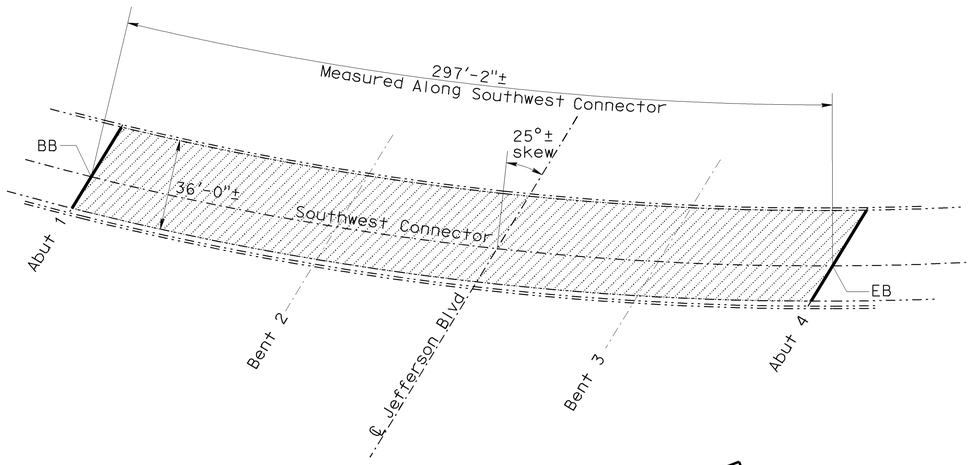

E90-S405 CONNECTOR OC

Br No. 53-1853G, Rte 90, PM 2.58
1" = 30'

E90-S405 CONNECTOR OC — BRIDGE NO. 53-1853G

QUANTITIES

REMOVE UNSOUND CONCRETE	29	CF
PREPARE CONCRETE BRIDGE DECK SURFACE	10,700	SQFT
CLEAN EXPANSION JOINT	81	LF
RAPID SETTING CONCRETE (PATCH)	29	CF
JOINT SEAL (MR 1 1/2")	81	LF
TREAT BRIDGE DECK	10,700	SQFT
FURNISH BRIDGE DECK TREATMENT MATERIAL	134	GAL

LEGEND:

- Indicates existing.
- Indicates direction of traffic.
- Indicates limits of prepare concrete bridge deck surface and treat existing bridge deck with high molecular weight methacrylate. Prior to bridge deck treatment, remove unsound concrete and patch with rapid setting concrete.
- Indicates limits of existing joint seal removal, clean expansion joint and placement of new joint seal. Prior to placement of new joint, remove unsound concrete and patch with rapid setting concrete.

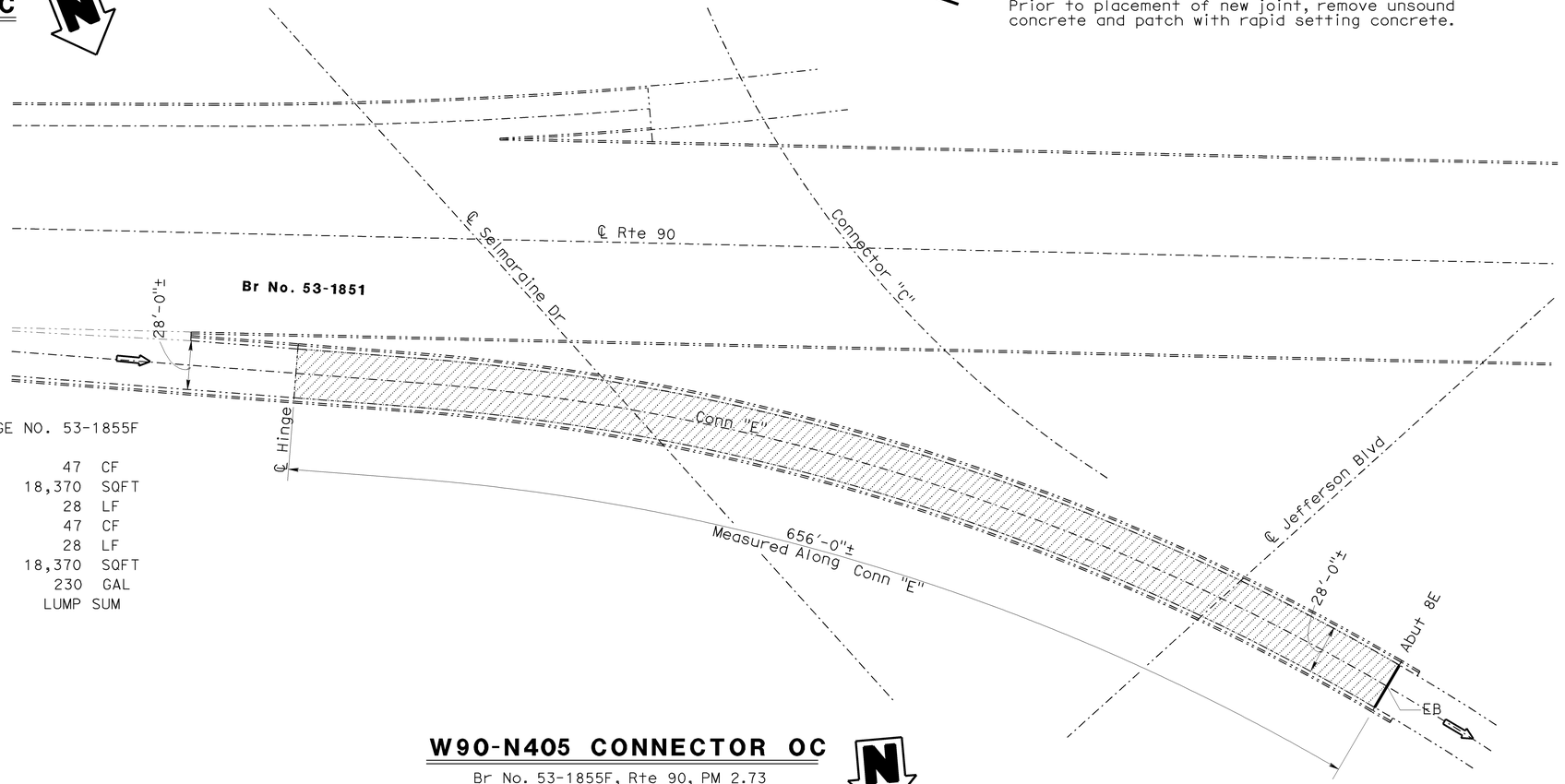

W90-N405 CONNECTOR OC

Br No. 53-1855F, Rte 90, PM 2.73
1" = 40'

W90-N405 CONNECTOR OC — BRIDGE NO. 53-1855F

QUANTITIES

REMOVE UNSOUND CONCRETE	47	CF
PREPARE CONCRETE BRIDGE DECK SURFACE	18,370	SQFT
CLEAN EXPANSION JOINT	28	LF
RAPID SETTING CONCRETE (PATCH)	47	CF
JOINT SEAL (MR 1/2")	28	LF
TREAT BRIDGE DECK	18,370	SQFT
FURNISH BRIDGE DECK TREATMENT MATERIAL	230	GAL
PUBLIC SAFETY PLAN	LUMP SUM	

NOTE:
THE CONTRACTOR SHALL VERIFY ALL CONTROLLING FIELD DIMENSIONS BEFORE ORDERING OR FABRICATING ANY MATERIAL. EXISTING UTILITY FACILITIES HAVE NOT BEEN PLOTTED ON THESE PLANS.

TONY D. BRAKE
DESIGN ENGINEER

DESIGN	BY Vinh Dang	CHECKED Ramesh Patel	LOAD FACTOR DESIGN	LIVE LOADING: HS20-44 AND ALTERNATIVE AND PERMIT DESIGN LOAD	
DETAILS	BY Tom Dang	CHECKED Ramesh Patel	LAYOUT	BY Tom Dang	CHECKED Vinh Dang
QUANTITIES	BY Vinh Dang	CHECKED Ramesh Patel	SPECIFICATIONS	BY Rebecca Franti	PLANS AND SPECS COMPARED Rebecca Franti

STATE OF CALIFORNIA
DEPARTMENT OF TRANSPORTATION

DIVISION OF MAINTENANCE
STRUCTURE MAINTENANCE DESIGN

BRIDGE NO. Various
POST MILE Various

ROUTE 1, 90, 405 BRIDGES
GENERAL PLAN NO. 8

STRUCTURES MAINTENANCE GENERAL PLAN SHEET (ENGLISH) (REV. 09-01-10)

ORIGINAL SCALE IN INCHES FOR REDUCED PLANS 0 1 2 3

UNIT: 3489
PROJECT NUMBER & PHASE: 07000010941
CONTRACT NO.: 4Y1501

DISREGARD PRINTS BEARING EARLIER REVISION DATES →

REVISION DATES				SHEET	OF
5/24/11	6/28/11	8/15/11		08	22

FILE => 07-4y1501-a-gp08.dgn

USERNAME = s129239 DATE PLOTTED => 01-DEC-2011 TIME PLOTTED => 08:06

DIST	COUNTY	ROUTE	POST MILES TOTAL PROJECT	SHEET No.	TOTAL SHEETS
07	LA	1,90,405	Var	27	40

REGISTERED CIVIL ENGINEER — 11/30/11 DATE

3-19-12
PLANS APPROVAL DATE

REGISTERED PROFESSIONAL ENGINEER — VINH DUC L. DANG — No. C65096 — Exp. 09/30/13 — CIVIL — STATE OF CALIFORNIA

The State of California or its officers or agents shall not be responsible for the accuracy or completeness of electronic copies of this plan sheet.

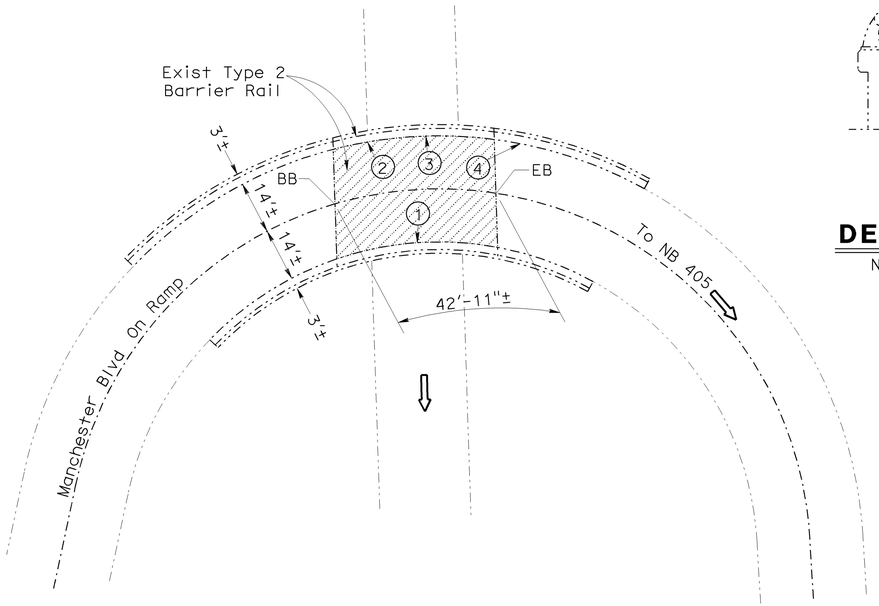

MANCHESTER BLVD ON-RAMP OC

Br No. 53-1484S, Rte 405, PM 23.32
1" = 20'

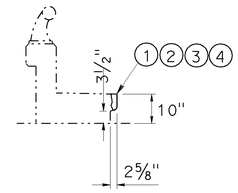

DETAIL A
NO SCALE

LEGEND:

Indicates existing.

Indicates direction of traffic.

Indicates limits of prepare concrete bridge deck surface and treat existing bridge deck with high molecular weight methacrylate. Prior to bridge deck treatment, remove unsound concrete and patch with rapid setting concrete.

(1) Indicates location of repair spalled surface area at curb of concrete barrier Type 2. See Detail "A" and TABLE 1.

TABLE 1		
REPAIR SPALLED SURFACE AREA		
LOCATION		APPROX. SIZE (L X W X D)
1	Curb spall at north concrete barrier	20' X 6" X 3"
2	Curb spall at south concrete barrier	12" X 6" X 3"
3	Curb spall at south concrete barrier	12" X 6" X 3"
4	Curb spall at south concrete barrier	12" X 6" X 3"

MANCHESTER BLVD ON-RAMP OC — BRIDGE NO. 53-1484S

QUANTITIES		
REMOVE UNSOUND CONCRETE	4	CF
PREPARE CONCRETE BRIDGE DECK SURFACE	1,205	SQFT
RAPID SETTING CONCRETE (PATCH)	4	CF
REPAIR SPALLED SURFACE AREA	12	SQFT
TREAT BRIDGE DECK	1,205	SQFT
FURNISH BRIDGE DECK TREATMENT MATERIAL	16	GAL

NOTE:
THE CONTRACTOR SHALL VERIFY ALL CONTROLLING FIELD DIMENSIONS BEFORE ORDERING OR FABRICATING ANY MATERIAL. EXISTING UTILITY FACILITIES HAVE NOT BEEN PLOTTED ON THESE PLANS.

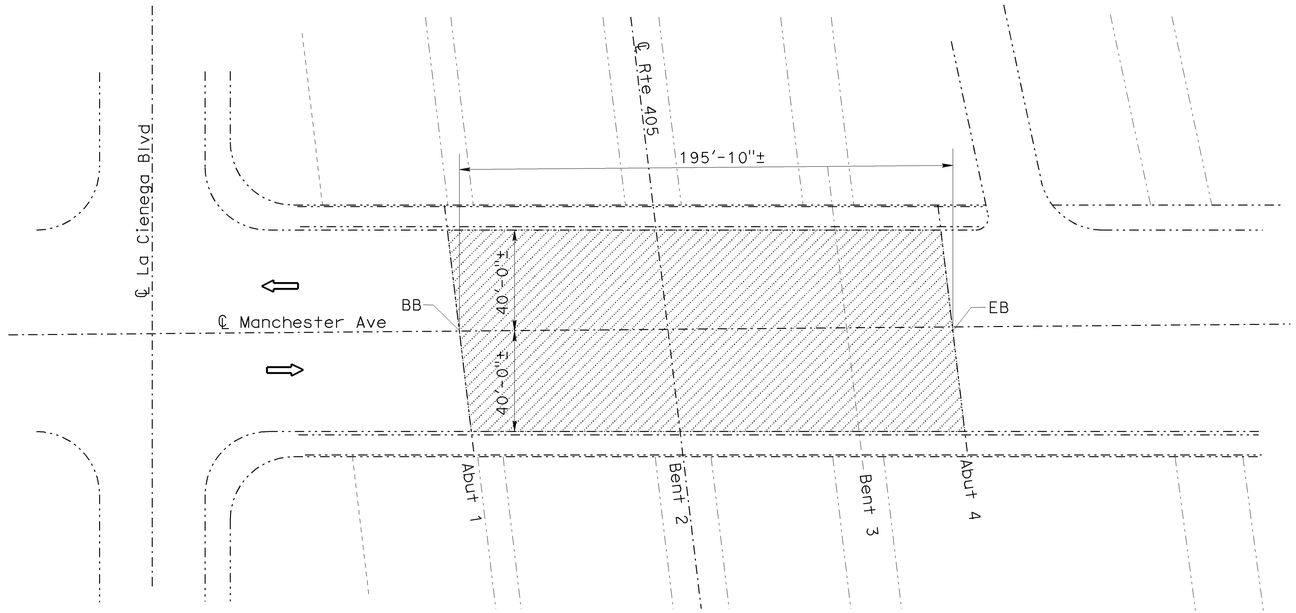

MANCHESTER BLVD OC

Br No. 53-1246, Rte 405, PM 23.36
1" = 30'

MANCHESTER BLVD OC — BRIDGE NO. 53-1246

QUANTITIES		
REMOVE UNSOUND CONCRETE	40	CF
PREPARE CONCRETE BRIDGE DECK SURFACE	15,670	SQFT
RAPID SETTING CONCRETE (PATCH)	40	CF
TREAT BRIDGE DECK	15,670	SQFT
FURNISH BRIDGE DECK TREATMENT MATERIAL	196	GAL

TONY D. BRAKE
DESIGN ENGINEER

	BY	CHECKED
DESIGN	Vinh Dang	Ramesh Patel
DETAILS	Tom Dang	Ramesh Patel
QUANTITIES	Vinh Dang	Ramesh Patel

LOAD FACTOR DESIGN — LIVE LOADING: HS20-44 AND ALTERNATIVE AND PERMIT DESIGN LOAD

	BY	CHECKED
LAYOUT	Tom Dang	Vinh Dang
SPECIFICATIONS	Rebecca Franti	PLANS AND SPECS COMPARED: Rebecca Franti

STATE OF CALIFORNIA
DEPARTMENT OF TRANSPORTATION

DIVISION OF MAINTENANCE
STRUCTURE MAINTENANCE DESIGN

BRIDGE NO.	
Various	
POST MILE	
Various	

ROUTE 1, 90, 405 BRIDGES
GENERAL PLAN NO. 9

STRUCTURES MAINTENANCE GENERAL PLAN SHEET (ENGLISH) (REV. 09-01-10)

ORIGINAL SCALE IN INCHES FOR REDUCED PLANS 0 1 2 3

UNIT: 3489
PROJECT NUMBER & PHASE: 07000010941
CONTRACT NO.: 4Y1501

DISREGARD PRINTS BEARING EARLIER REVISION DATES →

REVISION DATES				SHEET	OF
5/24/11	5/26/11	8/15/11		09	22

FILE => 07-4y1501-a-gp09.dgn

USERNAME = s1129239 DATE PLOTTED => 01-DEC-2011 TIME PLOTTED => 08:06

DIST	COUNTY	ROUTE	POST MILES TOTAL PROJECT	SHEET No.	TOTAL SHEETS
07	LA	1,90,405	Var	28	40

REGISTERED CIVIL ENGINEER — 11/30/11 DATE

3-19-12
PLANS APPROVAL DATE

REGISTERED PROFESSIONAL ENGINEER — VINH DUC L. DANG — No. C65096 — Exp. 09/30/13 — CIVIL — STATE OF CALIFORNIA

The State of California or its officers or agents shall not be responsible for the accuracy or completeness of electronic copies of this plan sheet.

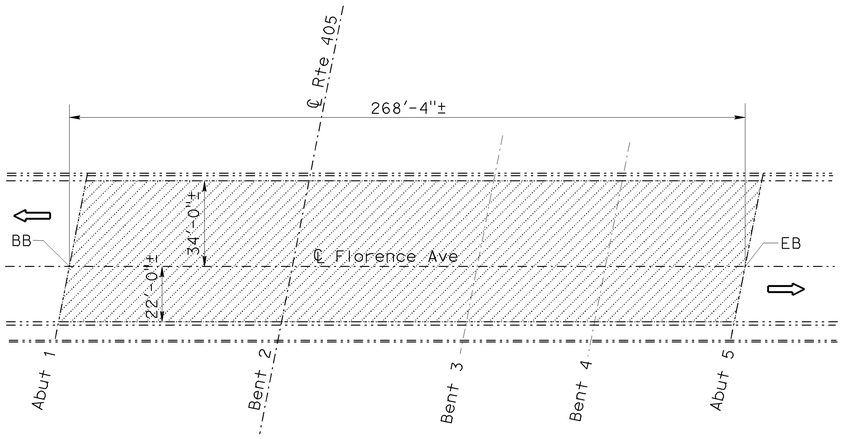

FLORENCE AVENUE OC

Br No. 53-1248, Rte 405, PM 23.50
1" = 30′

FLORENCE AVENUE OC — BRIDGE NO. 53-1248

QUANTITIES		
REMOVE UNSOUND CONCRETE	38	CF
PREPARE CONCRETE BRIDGE DECK SURFACE	15,030	SQFT
RAPID SETTING CONCRETE (PATCH)	38	CF
TREAT BRIDGE DECK	15,030	SQFT
FURNISH BRIDGE DECK TREATMENT MATERIAL	188	GAL
PUBLIC SAFETY PLAN	LUMP	SUM

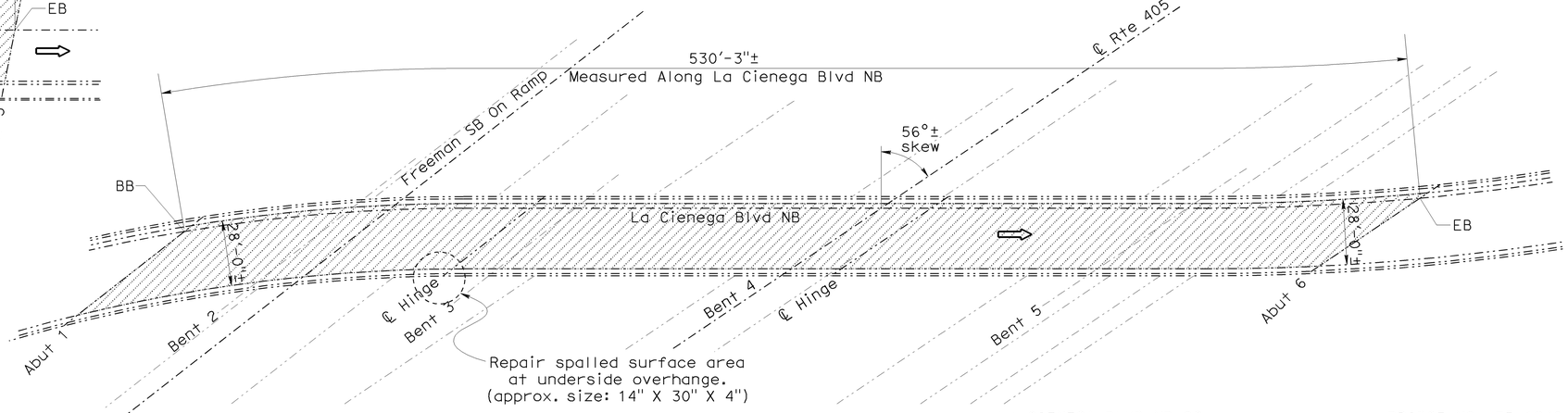

LA CIENEGA BLVD NB OC

Br No. 53-1249, Rte 405, PM 23.64
1" = 30′

LA CIENEGA BLVD NB OC — BRIDGE NO. 53-1249

QUANTITIES		
REMOVE UNSOUND CONCRETE	38	CF
PREPARE CONCRETE BRIDGE DECK SURFACE	14,850	SQFT
RAPID SETTING CONCRETE (PATCH)	38	CF
REPAIR SPALLED SURFACE AREA	3	SQFT
TREAT BRIDGE DECK	14,850	SQFT
FURNISH BRIDGE DECK TREATMENT MATERIAL	186	GAL

LEGEND:

Indicates existing.

Indicates direction of traffic.

Indicates limits of prepare concrete bridge deck surface and treat existing bridge deck with high molecular weight methacrylate. Prior to bridge deck treatment, remove unsound concrete and patch with rapid setting concrete.

Indicates limits of remove existing approach and place new Structure Approach Type R. For details see "STRUCTURE APPROACH TYPE R, DETAILS NO.1" sheet.

Indicates limits of existing joint seal removal, clean expansion joint and placement of new joint seal. Prior to placement of new joint, remove unsound concrete and patch with rapid setting concrete.

Indicates limits of existing joint seal removal, and placement of new joint seal.

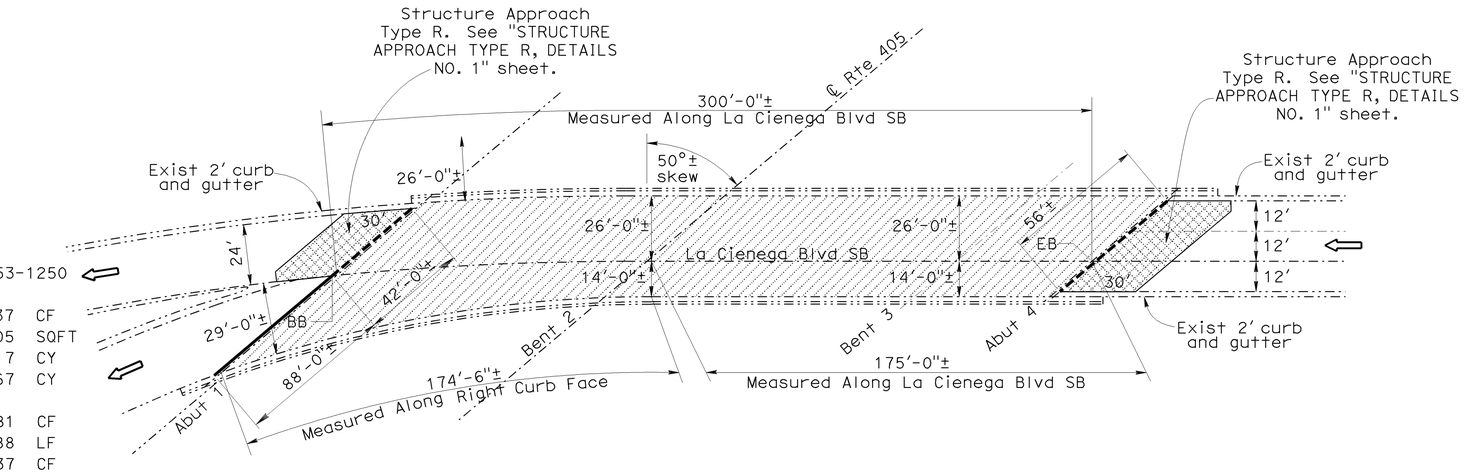

LA CIENEGA BLVD SB OC

Br No. 53-1250, Rte 405, PM 23.71
1" = 30′

LA CIENEGA BLVD SB OC — BRIDGE NO. 53-1250

QUANTITIES		
REMOVE UNSOUND CONCRETE	37	CF
PREPARE CONCRETE BRIDGE DECK SURFACE	14,005	SQFT
AGGREGATE BASE (APPROACH SLAB)	7	CY
STRUCTURAL CONCRETE, APPROACH SLAB (TYPE R)	67	CY
PAVING NOTCH EXTENSION	81	CF
CLEAN EXPANSION JOINT	88	LF
RAPID SETTING CONCRETE (PATCH)	37	CF
JOINT SEAL (MR 1/2")	186	LF
TREAT BRIDGE DECK	14,005	SQFT
FURNISH BRIDGE DECK TREATMENT MATERIAL	176	GAL

NOTE:
THE CONTRACTOR SHALL VERIFY ALL CONTROLLING FIELD DIMENSIONS BEFORE ORDERING OR FABRICATING ANY MATERIAL. EXISTING UTILITY FACILITIES HAVE NOT BEEN PLOTTED ON THESE PLANS.

TONY D. BRAKE
DESIGN ENGINEER

	BY	CHECKED
DESIGN	Vinh Dang	Ramesh Patel
DETAILS	Tom Dang	Ramesh Patel
QUANTITIES	Vinh Dang	Ramesh Patel

LOAD FACTOR DESIGN — LIVE LOADING: HS20-44 AND ALTERNATIVE AND PERMIT DESIGN LOAD

	BY	CHECKED
LAYOUT	Tom Dang	Vinh Dang
SPECIFICATIONS	Rebecca Franti	PLANS AND SPECS COMPARED: Rebecca Franti

STATE OF CALIFORNIA
DEPARTMENT OF TRANSPORTATION

DIVISION OF MAINTENANCE
STRUCTURE MAINTENANCE DESIGN

BRIDGE NO. Various
POST MILE Various

ROUTE 1, 90, 405 BRIDGES
GENERAL PLAN NO. 10

STRUCTURES MAINTENANCE GENERAL PLAN SHEET (ENGLISH) (REV. 09-01-10)

ORIGINAL SCALE IN INCHES FOR REDUCED PLANS: 0 1 2 3

UNIT: 3489
PROJECT NUMBER & PHASE: 07000010941
CONTRACT NO.: 4Y1501

DISREGARD PRINTS BEARING EARLIER REVISION DATES →

REVISION DATES				SHEET	OF
5/23/11	6/28/11	8/15/11		10	22

FILE => 07-4y1501-a-gp10.dgn

USERNAME => s1292239 DATE PLOTTED => 01-DEC-2011 TIME PLOTTED => 08:06

DIST	COUNTY	ROUTE	POST MILES TOTAL PROJECT	SHEET No.	TOTAL SHEETS
07	LA	1,90,405	Var	29	40

REGISTERED CIVIL ENGINEER — 11/30/11 DATE

3-19-12
PLANS APPROVAL DATE

REGISTERED PROFESSIONAL ENGINEER — VINH DUC L. DANG No. C65096 Exp. 09/30/13 CIVIL — STATE OF CALIFORNIA

The State of California or its officers or agents shall not be responsible for the accuracy or completeness of electronic copies of this plan sheet.

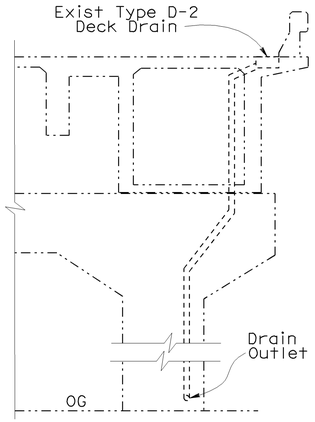

TYPICAL EXISTING DECK DRAIN LAYOUT

NO SCALE

TABLE 1		
REPAIR SPALLED SURFACE AREA		
LOCATION		APPROX. SIZE (L X W X D)
A	Bent 2, bent cap	24" X 18" X 4"
B	Bent 3, soffit over bent cap	18" X 12" X 8"
C	Rail spall, outside face near bent 4	24" X 24" X 2"

TABLE 2		
REMOVE UNSOUND CONCRETE (RAPID SETTING CONCRETE, PATCH)		
LOCATION		APPROX. SIZE (L X W X D)
1	Deck spall, SB lane no. 4	42" X 8" X 3"
2	Deck spall, SB lane no. 5	24" X 24" X 3"

LEGEND:

- Indicates existing.
- Indicates direction of traffic.
- Indicates limits of existing joint seal removal, clean expansion joint and placement of new joint seal. Prior to placement of new joint, remove unsound concrete and patch with rapid setting concrete.
- ⊠ Indicates location of clean existing deck drain.

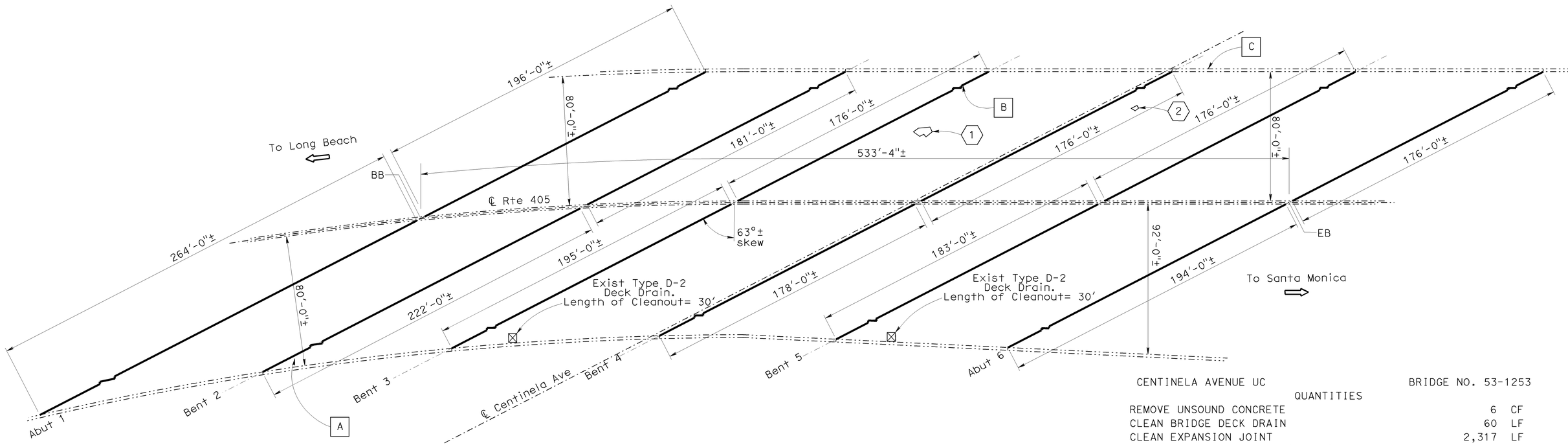

NOTE:
THE CONTRACTOR SHALL VERIFY ALL CONTROLLING FIELD DIMENSIONS BEFORE ORDERING OR FABRICATING ANY MATERIAL. EXISTING UTILITY FACILITIES HAVE NOT BEEN PLOTTED ON THESE PLANS.

CENTINELA AVENUE UC

Br No. 53-1253, Rte 405, PM 25.27
1" = 30'

CENTINELA AVENUE UC	BRIDGE NO. 53-1253	
QUANTITIES		
REMOVE UNSOUND CONCRETE	6	CF
CLEAN BRIDGE DECK DRAIN	60	LF
CLEAN EXPANSION JOINT	2,317	LF
RAPID SETTING CONCRETE (PATCH)	6	CF
REPAIR SPALLED SURFACE AREA	9	SQFT
JOINT SEAL (MR 1/2")	2,317	LF

TONY D. BRAKE
DESIGN ENGINEER

DESIGN	BY Vinh Dang	CHECKED Ramesh Patel	LOAD FACTOR DESIGN	LIVE LOADING: HS20-44 AND ALTERNATIVE AND PERMIT DESIGN LOAD		
DETAILS	BY Tom Dang	CHECKED Ramesh Patel	LAYOUT	BY Tom Dang	CHECKED Vinh Dang	
QUANTITIES	BY Vinh Dang	CHECKED Ramesh Patel	SPECIFICATIONS	BY Rebecca Franti	PLANS AND SPECS COMPARED Rebecca Franti	

STATE OF CALIFORNIA
DEPARTMENT OF TRANSPORTATION

DIVISION OF MAINTENANCE
STRUCTURE MAINTENANCE DESIGN

BRIDGE NO. Various
POST MILE Various

ROUTE 1, 90, 405 BRIDGES
GENERAL PLAN NO. 11

STRUCTURES MAINTENANCE GENERAL PLAN SHEET (ENGLISH) (REV. 09-01-10)

ORIGINAL SCALE IN INCHES FOR REDUCED PLANS 0 1 2 3

UNIT: 3489
PROJECT NUMBER & PHASE: 07000010941
CONTRACT NO.: 4Y1501

DISREGARD PRINTS BEARING EARLIER REVISION DATES →

REVISION DATES				SHEET	OF
5/23/11	6/28/11	8/15/11		11	22

FILE => 07-4y1501-a-gp11.dgn

USERNAME => s1292339 DATE PLOTTED => 01-DEC-2011 TIME PLOTTED => 08:06

DIST	COUNTY	ROUTE	POST MILES TOTAL PROJECT	SHEET No.	TOTAL SHEETS
07	LA	1,90,405	Var	30	40

REGISTERED CIVIL ENGINEER — 11/30/11 DATE

3-19-12
PLANS APPROVAL DATE

REGISTERED PROFESSIONAL ENGINEER — VINH DUC L. DANG — No. C65096 — Exp. 09/30/13 — CIVIL — STATE OF CALIFORNIA

The State of California or its officers or agents shall not be responsible for the accuracy or completeness of electronic copies of this plan sheet.

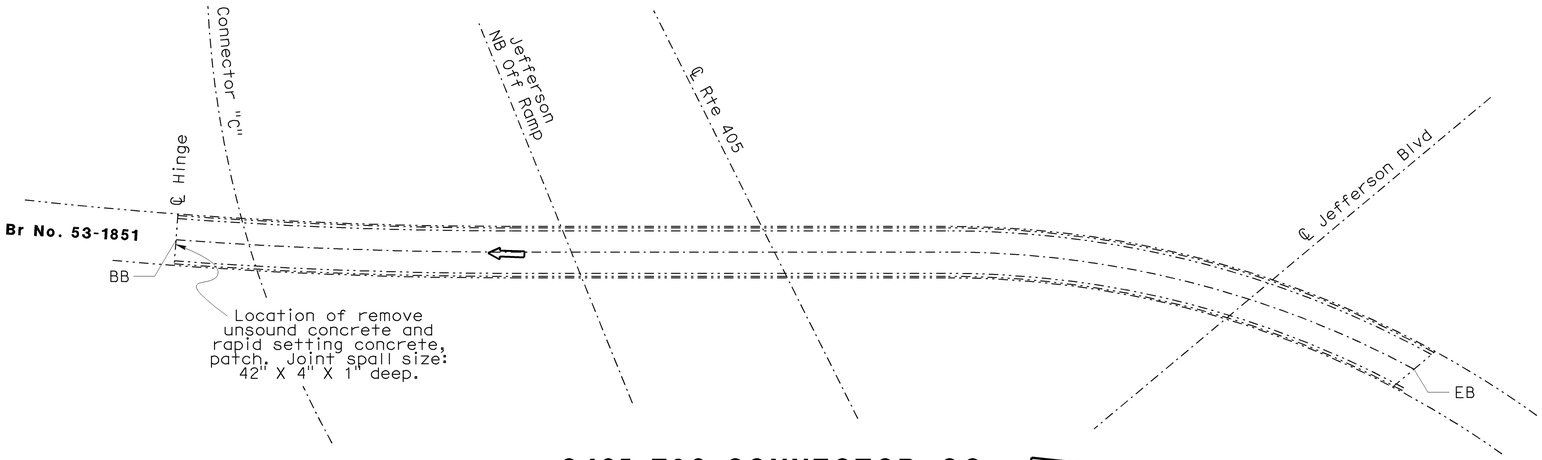

LEGEND:

Indicates existing.

Indicates direction of traffic.

Indicates limits of prepare concrete bridge deck surface and treat existing bridge deck with high molecular weight methacrylate. Prior to bridge deck treatment, remove unsound concrete and patch with rapid setting concrete.

Indicates limits of existing joint seal removal, clean expansion joint and placement of new joint seal. Prior to placement of new joint, remove unsound concrete and patch with rapid setting concrete.

S405-E90 CONNECTOR OC

Br No. 53-1852F, Rte 405, PM 25.91
NO SCALE

S405-E90 CONNECTOR OC — BRIDGE NO. 53-1852F

QUANTITIES		
REMOVE UNSOUND CONCRETE	1	CF
RAPID SETTING CONCRETE (PATCH)	1	CF

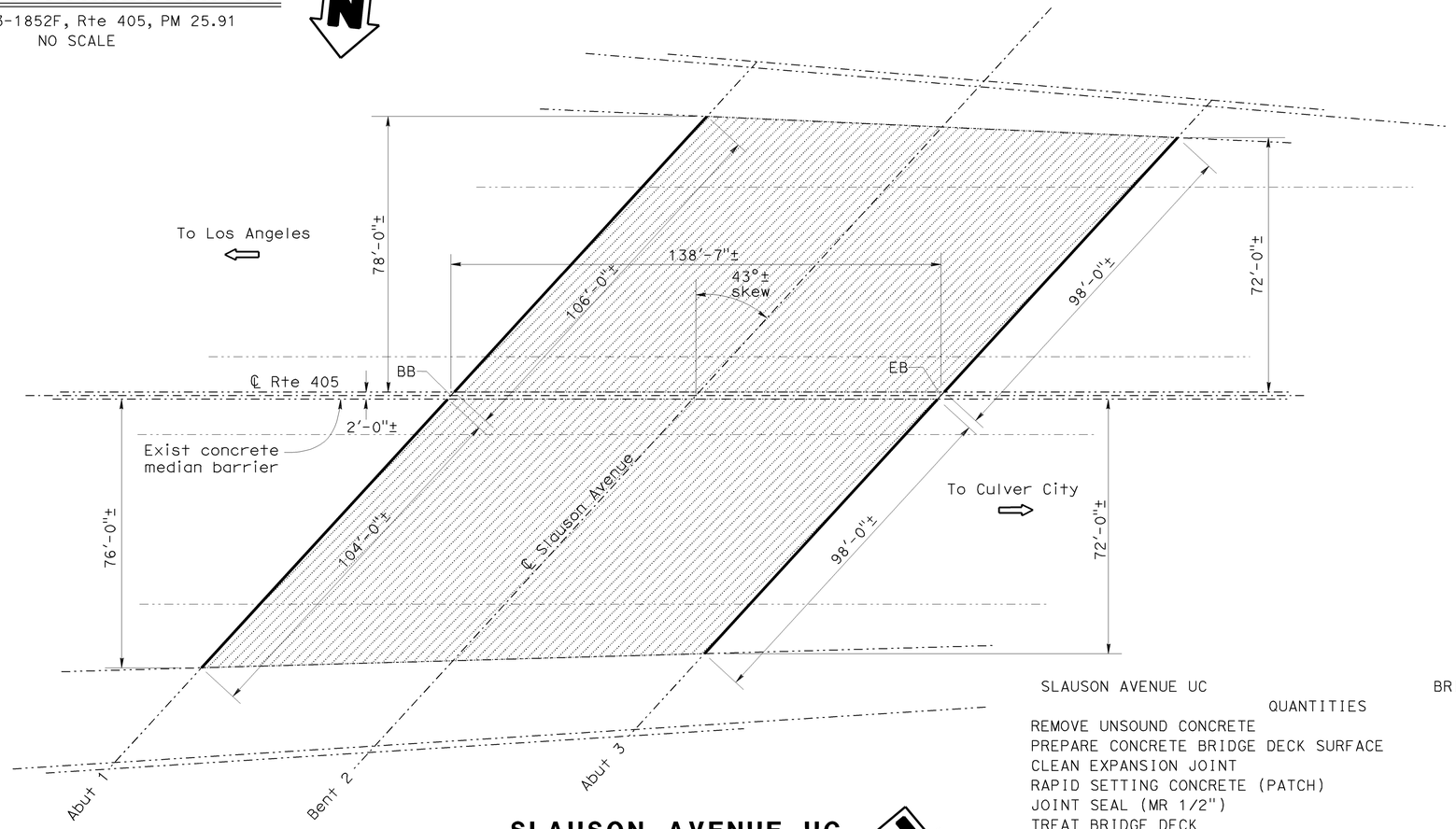

SLAUSON AVENUE UC

Br No. 53-1401, Rte 405, PM 26.08
1" = 20'

SLAUSON AVENUE UC — BRIDGE NO. 53-1401

QUANTITIES		
REMOVE UNSOUND CONCRETE	55	CF
PREPARE CONCRETE BRIDGE DECK SURFACE	20,650	SQFT
CLEAN EXPANSION JOINT	406	LF
RAPID SETTING CONCRETE (PATCH)	55	CF
JOINT SEAL (MR 1/2")	406	LF
TREAT BRIDGE DECK	20,650	SQFT
FURNISH BRIDGE DECK TREATMENT MATERIAL	259	GAL
PUBLIC SAFETY PLAN	LUMP SUM	

NOTE:
THE CONTRACTOR SHALL VERIFY ALL CONTROLLING FIELD DIMENSIONS BEFORE ORDERING OR FABRICATING ANY MATERIAL. EXISTING UTILITY FACILITIES HAVE NOT BEEN PLOTTED ON THESE PLANS.

TONY D. BRAKE
DESIGN ENGINEER

	BY	CHECKED
DESIGN	Vinh Dang	Ramesh Patel
DETAILS	Tom Dang	Ramesh Patel
QUANTITIES	Vinh Dang	Ramesh Patel

LOAD FACTOR DESIGN — LIVE LOADING: HS20-44 AND ALTERNATIVE AND PERMIT DESIGN LOAD

	BY	CHECKED
LAYOUT	Tom Dang	Vinh Dang
SPECIFICATIONS	Rebecca Franti	PLANS AND SPECS COMPARED Rebecca Franti

STATE OF CALIFORNIA
DEPARTMENT OF TRANSPORTATION

DIVISION OF MAINTENANCE
STRUCTURE MAINTENANCE DESIGN

BRIDGE NO. Various
POST MILE Various

ROUTE 1, 90, 405 BRIDGES
GENERAL PLAN NO. 12

STRUCTURES MAINTENANCE GENERAL PLAN SHEET (ENGLISH) (REV. 09-01-10)

ORIGINAL SCALE IN INCHES FOR REDUCED PLANS 0 1 2 3

UNIT: 3489
PROJECT NUMBER & PHASE: 07000010941
CONTRACT NO.: 4Y1501

DISREGARD PRINTS BEARING EARLIER REVISION DATES →

REVISION DATES				SHEET	OF
5/24/11	6/28/11	8/15/11		12	22

FILE => 07-4y1501-a-gp12.dgn

USERNAME => s1292339 DATE PLOTTED => 01-DEC-2011 TIME PLOTTED => 08:06

DIST	COUNTY	ROUTE	POST MILES TOTAL PROJECT	SHEET No.	TOTAL SHEETS
07	LA	1,90,405	Var	31	40

REGISTERED CIVIL ENGINEER — 11/30/11 DATE

3-19-12
PLANS APPROVAL DATE

REGISTERED PROFESSIONAL ENGINEER — VINH DUC L. DANG — No. C65096 — Exp. 09/30/13 — CIVIL — STATE OF CALIFORNIA

The State of California or its officers or agents shall not be responsible for the accuracy or completeness of electronic copies of this plan sheet.

LEGEND:

Indicates existing.

Indicates direction of traffic.

Indicates limits of prepare concrete bridge deck surface and treat existing bridge deck with high molecular weight methacrylate. Prior to bridge deck treatment, remove unsound concrete and patch with rapid setting concrete.

Indicates limits of existing joint seal removal, clean expansion joint and placement of new joint seal. Prior to placement of new joint, remove unsound concrete and patch with rapid setting concrete.

S405-W90 CONNECTOR OC — BRIDGE NO. 53-1947F

QUANTITIES		
REMOVE UNSOUND CONCRETE	2	CF
CLEAN EXPANSION JOINT	115	LF
RAPID SETTING CONCRETE (PATCH)	2	CF
JOINT SEAL (MR 1/2")	115	LF

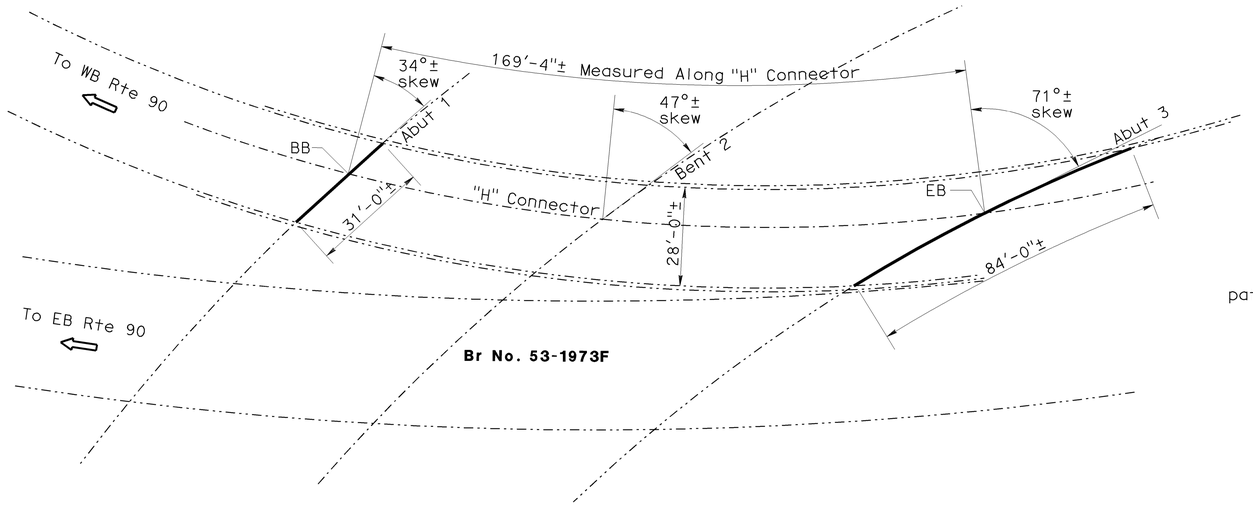

S405-W90 CONNECTOR OC

Br No. 53-1974F, Rte 405, PM 26.10
1" = 20'

PORT ROAD UC — BRIDGE NO. 53-1402

QUANTITIES		
REMOVE UNSOUND CONCRETE	37	CF
PREPARE CONCRETE BRIDGE DECK SURFACE	13,710	SQFT
CLEAN EXPANSION JOINT	442	LF
RAPID SETTING CONCRETE (PATCH)	37	CF
JOINT SEAL (MR 1/2")	442	LF
TREAT BRIDGE DECK	13,710	SQFT
FURNISH BRIDGE DECK TREATMENT MATERIAL	172	GAL
PUBLIC SAFETY PLAN	LUMP	SUM

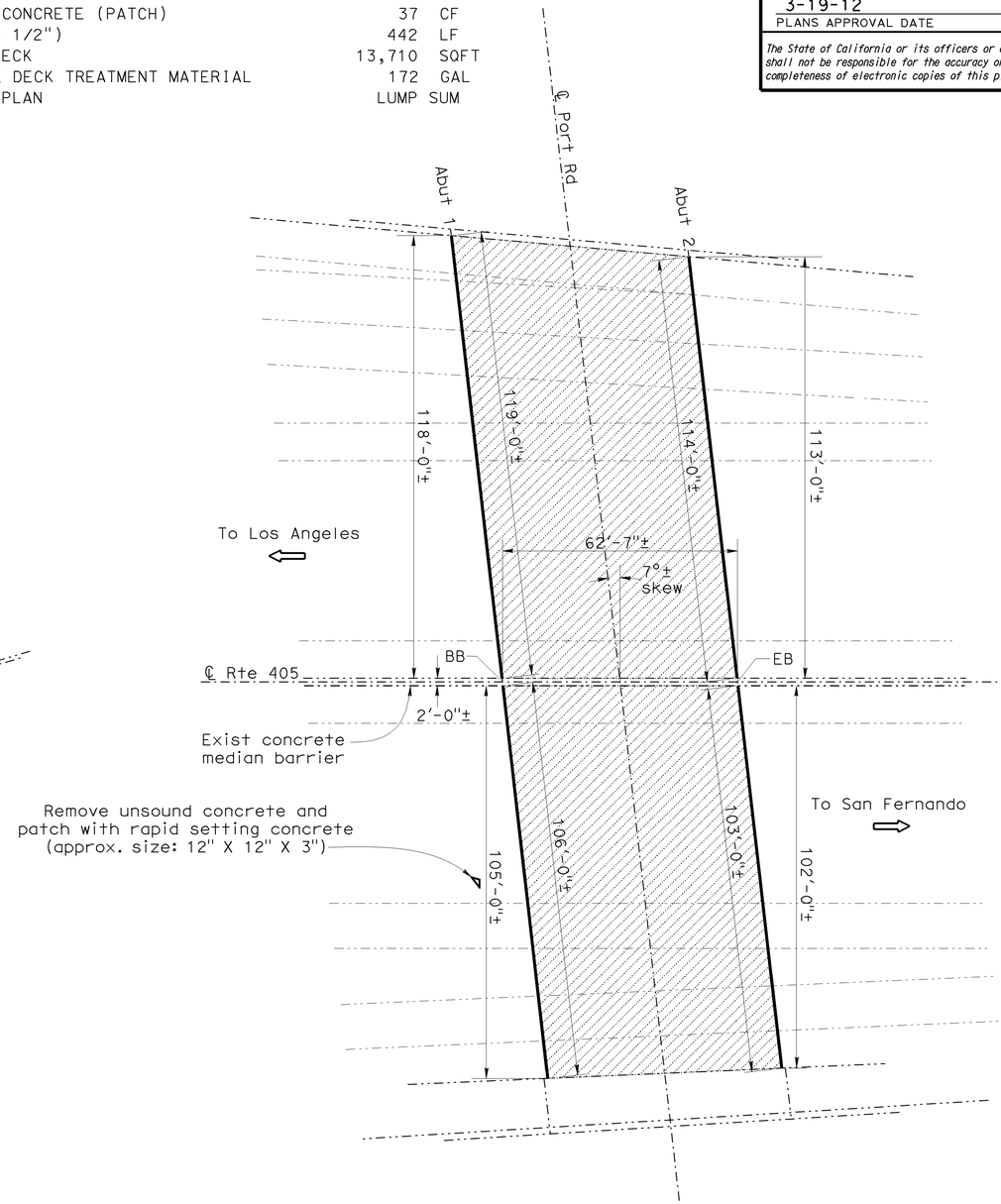

PORT ROAD UC

Br No. 53-1402, Rte 405, PM 26.29
1" = 20'

NOTE:
THE CONTRACTOR SHALL VERIFY ALL CONTROLLING FIELD DIMENSIONS BEFORE ORDERING OR FABRICATING ANY MATERIAL. EXISTING UTILITY FACILITIES HAVE NOT BEEN PLOTTED ON THESE PLANS.

TONY D. BRAKE
DESIGN ENGINEER

	BY	CHECKED	LOAD FACTOR DESIGN	LIVE LOADING: HS20-44 AND ALTERNATIVE AND PERMIT DESIGN LOAD	
DESIGN	Vinh Dang	Ramesh Patel			
DETAILS	Tom Dang	Ramesh Patel	LAYOUT	Tom Dang	Vinh Dang
QUANTITIES	Vinh Dang	Ramesh Patel	SPECIFICATIONS	Rebecca Franti	PLANS AND SPECS COMPARED Rebecca Franti

STATE OF CALIFORNIA
DEPARTMENT OF TRANSPORTATION

DIVISION OF MAINTENANCE
STRUCTURE MAINTENANCE DESIGN

BRIDGE NO. Various
POST MILE Various

ROUTE 1, 90, 405 BRIDGES
GENERAL PLAN NO. 13

STRUCTURES MAINTENANCE GENERAL PLAN SHEET (ENGLISH) (REV. 09-01-10)

ORIGINAL SCALE IN INCHES FOR REDUCED PLANS 0 1 2 3

UNIT: 3489
PROJECT NUMBER & PHASE: 07000010941 CONTRACT NO.: 4Y1501

DISREGARD PRINTS BEARING EARLIER REVISION DATES →

REVISION DATES				SHEET	OF
5/23/11	6/28/11	8/15/11		13	22

FILE => 07-4y1501-a-gp13.dgn

USERNAME => s1292339 DATE PLOTTED => 01-DEC-2011 TIME PLOTTED => 08:06

DIST	COUNTY	ROUTE	POST MILES TOTAL PROJECT	SHEET No.	TOTAL SHEETS
07	LA	1,90,405	Var	32	40

REGISTERED CIVIL ENGINEER — 11/30/11 DATE

3-19-12
PLANS APPROVAL DATE

REGISTERED PROFESSIONAL ENGINEER — VINH DUC L. DANG — No. C65096 — Exp. 09/30/13 — CIVIL — STATE OF CALIFORNIA

The State of California or its officers or agents shall not be responsible for the accuracy or completeness of electronic copies of this plan sheet.

LEGEND:

Indicates existing.

Indicates direction of traffic.

Indicates limits of prepare concrete bridge deck surface and treat existing bridge deck with high molecular weight methacrylate. Prior to bridge deck treatment, remove unsound concrete and patch with rapid setting concrete.

Indicates limits of existing joint seal removal, clean expansion joint and placement of new joint seal. Prior to placement of new joint, remove unsound concrete and patch with rapid setting concrete.

Indicates limits of deck repair, see Table for Br No. 53-1347

MCDONALD STREET UC — BRIDGE NO. 53-1347

QUANTITIES

REMOVE UNSOUND CONCRETE	33	CF
CLEAN EXPANSION JOINT	287	LF
RAPID SETTING CONCRETE (PATCH)	33	CF
JOINT SEAL (MR 1 1/2")	287	LF

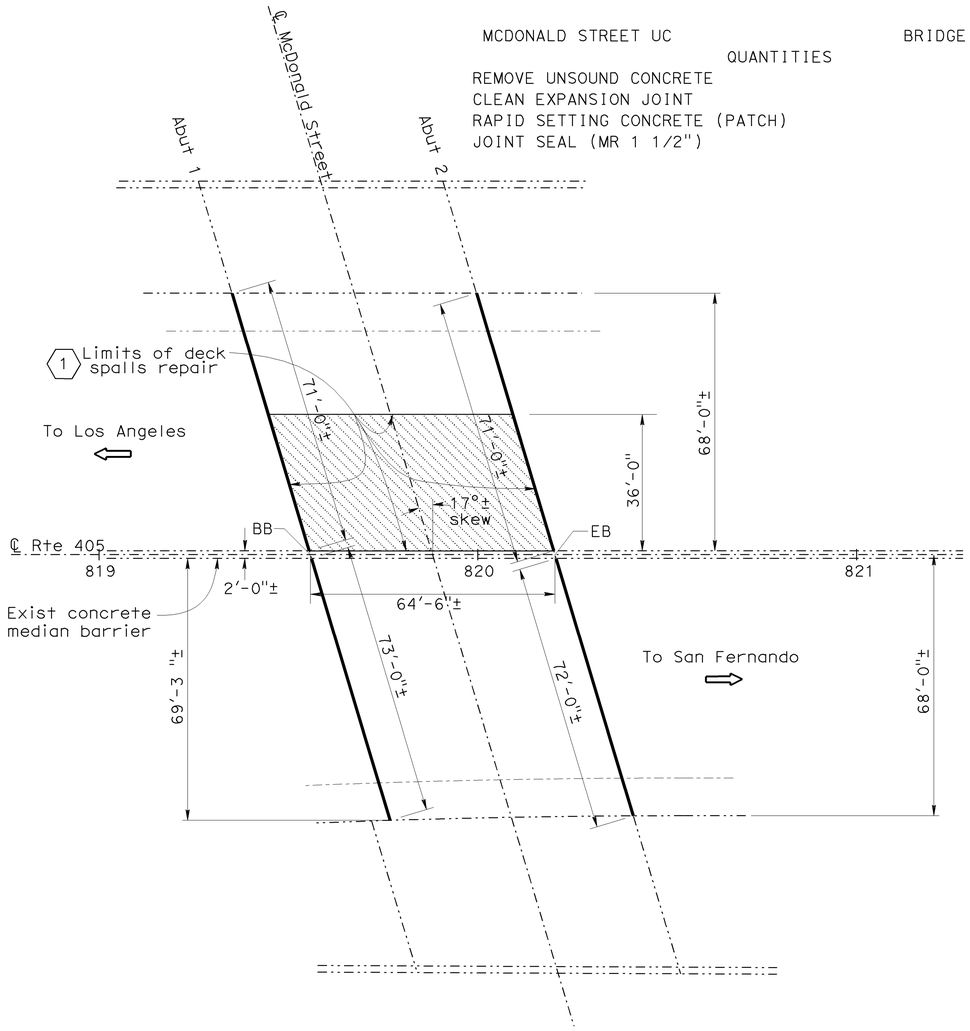

MCDONALD STREET UC

Br No. 53-1347, Rte 405, PM 26.45
1" = 20'

BRADDOCK DRIVE UC — BRIDGE NO. 53-1258

QUANTITIES

REMOVE UNSOUND CONCRETE	25	CF
PREPARE CONCRETE BRIDGE DECK SURFACE	9,105	SQFT
CLEAN EXPANSION JOINT	296	LF
RAPID SETTING CONCRETE (PATCH)	25	CF
JOINT SEAL (MR 1/2")	296	LF
TREAT BRIDGE DECK	9,105	SQFT
FURNISH BRIDGE DECK TREATMENT MATERIAL	114	GAL
PUBLIC SAFETY PLAN	LUMP	SUM

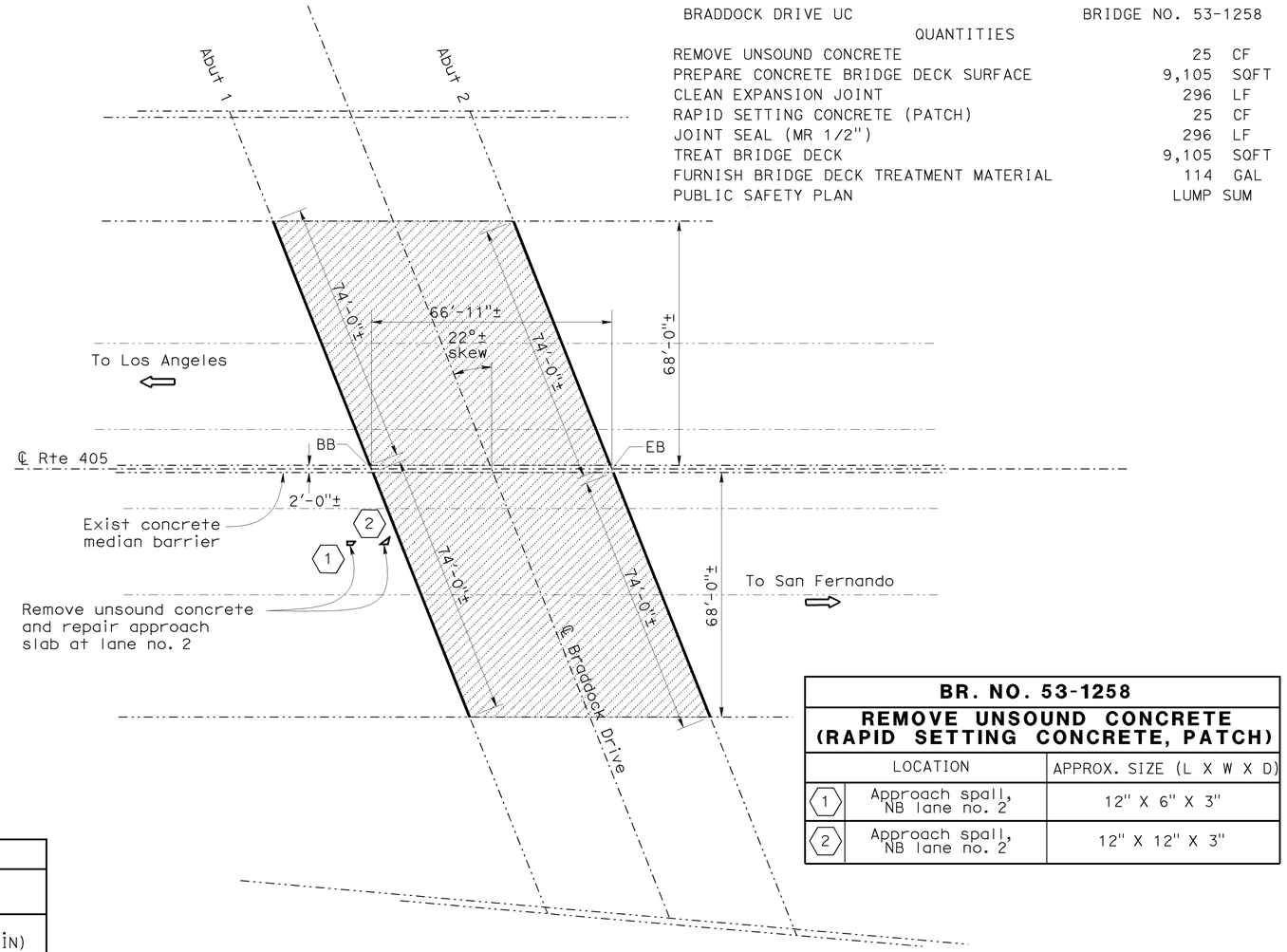

BRADDOCK DRIVE UC

Br No. 53-1258, Rte 405, PM 26.96
1" = 20'

BR. NO. 53-1347
REMOVE UNSOUND CONCRETE (RAPID SETTING CONCRETE, PATCH)

	LOCATION	TOTAL AREA (SQ FT)	APPROX. AREA DAMAGED (%)	APPROX. DEPTH (IN)
1	Various deck spalls with exposed rebars. SB HOV lane, lane no. 1, and lane no. 2.	2322	5	3

BR. NO. 53-1258
REMOVE UNSOUND CONCRETE (RAPID SETTING CONCRETE, PATCH)

	LOCATION	APPROX. SIZE (L X W X D)
1	Approach spall, NB lane no. 2	12" X 6" X 3"
2	Approach spall, NB lane no. 2	12" X 12" X 3"

NOTE:
THE CONTRACTOR SHALL VERIFY ALL CONTROLLING FIELD DIMENSIONS BEFORE ORDERING OR FABRICATING ANY MATERIAL. EXISTING UTILITY FACILITIES HAVE NOT BEEN PLOTTED ON THESE PLANS.

TONY D. BRAKE
DESIGN ENGINEER

	BY	CHECKED	LOAD FACTOR DESIGN	LIVE LOADING: HS20-44 AND ALTERNATIVE AND PERMIT DESIGN LOAD	
DESIGN	Vinh Dang	Ramesh Patel			
DETAILS	Tom Dang	Ramesh Patel	LAYOUT	Tom Dang	Vinh Dang
QUANTITIES	Vinh Dang	Ramesh Patel	SPECIFICATIONS	Rebecca Franti	PLANS AND SPECS COMPARED Rebecca Franti

STATE OF CALIFORNIA
DEPARTMENT OF TRANSPORTATION

DIVISION OF MAINTENANCE
STRUCTURE MAINTENANCE DESIGN

BRIDGE NO. Various
POST MILE Various

ROUTE 1, 90, 405 BRIDGES
GENERAL PLAN NO. 14

STRUCTURES MAINTENANCE GENERAL PLAN SHEET (ENGLISH) (REV. 09-01-10)

ORIGINAL SCALE IN INCHES FOR REDUCED PLANS 0 1 2 3

UNIT: 3489
PROJECT NUMBER & PHASE: 07000010941
CONTRACT NO.: 4Y1501

DISREGARD PRINTS BEARING EARLIER REVISION DATES

REVISION DATES				SHEET	OF
5/24/11	6/28/11	8/15/11		14	22

FILE => 07-4y1501-a-gp14.dgn

USERNAME = s129239 DATE PLOTTED => 01-DEC-2011 TIME PLOTTED => 08:06

DIST	COUNTY	ROUTE	POST MILES TOTAL PROJECT	SHEET No.	TOTAL SHEETS
07	LA	1,90,405	Var	33	40

REGISTERED CIVIL ENGINEER — 11/30/11 DATE

3-19-12
PLANS APPROVAL DATE

REGISTERED PROFESSIONAL ENGINEER — VINH DUC L. DANG — No. C65096 — Exp. 09/30/13 — CIVIL — STATE OF CALIFORNIA

The State of California or its officers or agents shall not be responsible for the accuracy or completeness of electronic copies of this plan sheet.

SAWTELLE BLVD UC — BRIDGE NO. 53-1403

QUANTITIES

REMOVE UNSOUND CONCRETE	50	CF
PREPARE CONCRETE BRIDGE DECK SURFACE	19,630	SQFT
RAPID SETTING CONCRETE (PATCH)	50	CF
TREAT BRIDGE DECK	19,630	SQFT
FURNISH BRIDGE DECK TREATMENT MATERIAL	246	GAL
PUBLIC SAFETY PLAN	LUMP	SUM

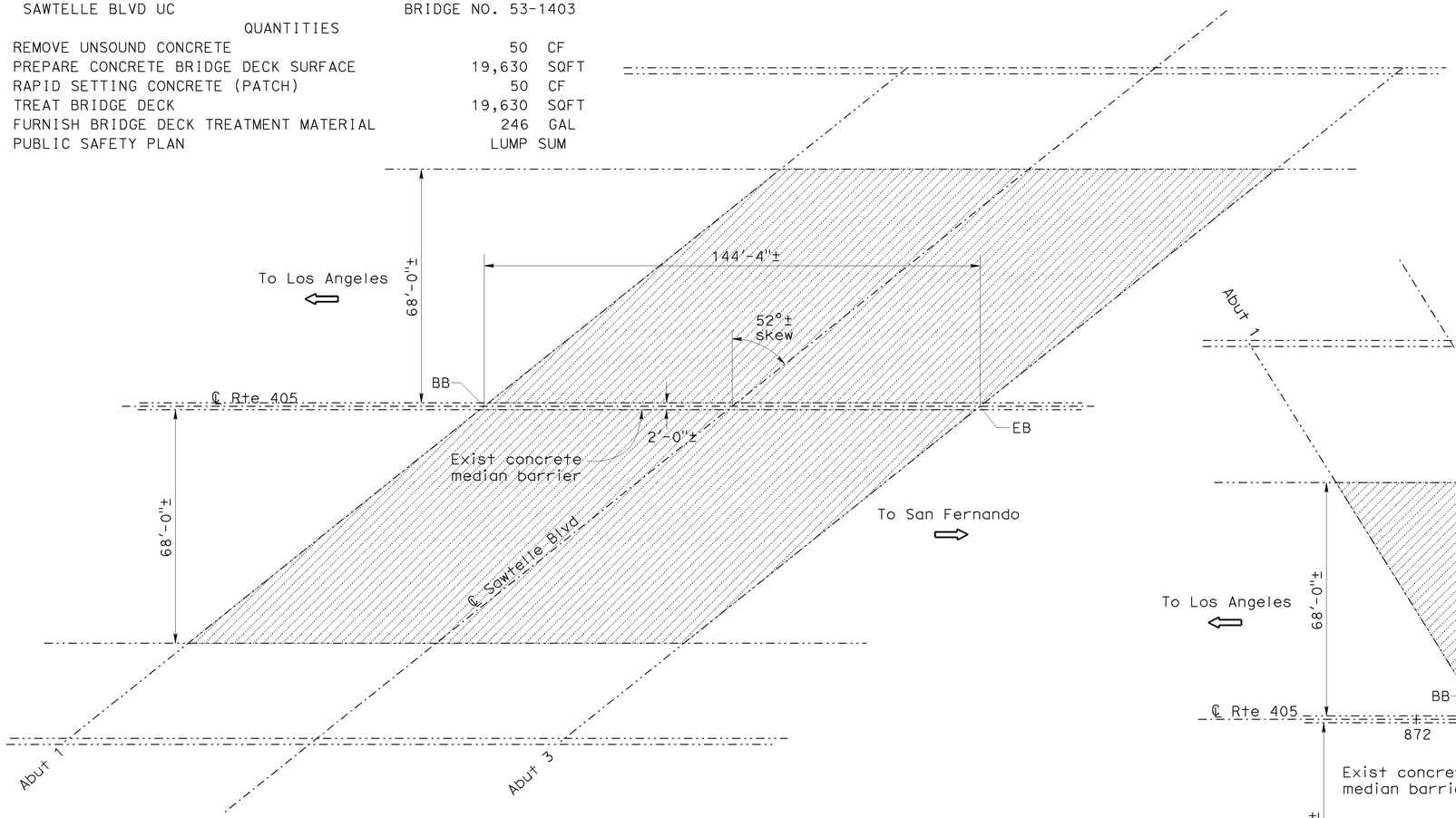

SAWTELLE BLVD UC

Br No. 53-1403, Rte 405, PM 27.08
1" = 20'

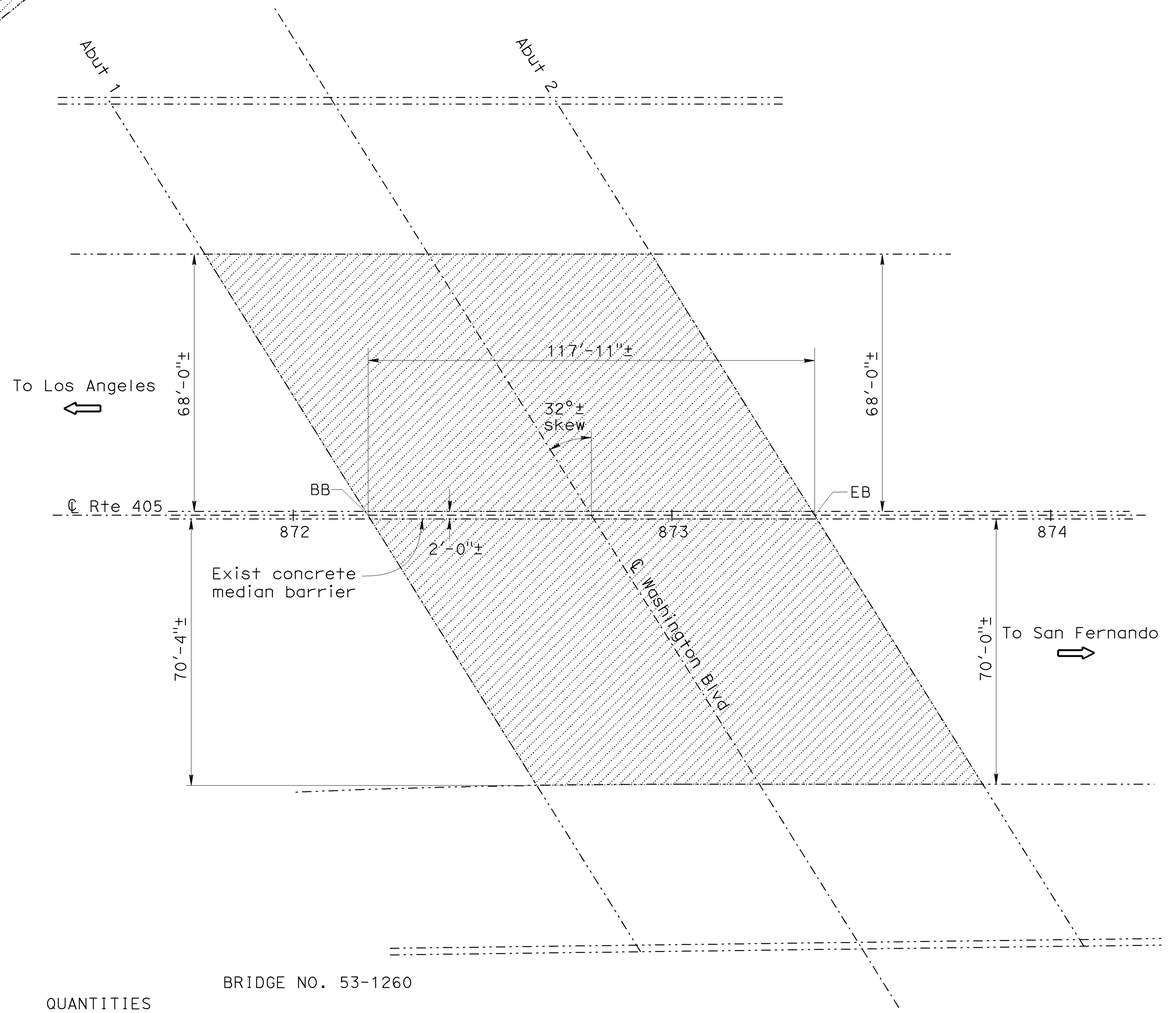

WASHINGTON BLVD UC — BRIDGE NO. 53-1260

QUANTITIES

REMOVE UNSOUND CONCRETE	41	CF
PREPARE CONCRETE BRIDGE DECK SURFACE	16,295	SQFT
RAPID SETTING CONCRETE (PATCH)	41	CF
TREAT BRIDGE DECK	16,295	SQFT
FURNISH BRIDGE DECK TREATMENT MATERIAL	204	GAL
PUBLIC SAFETY PLAN	LUMP	SUM

WASHINGTON BLVD UC

Br No. 53-1260, Rte 405, PM 27.45
1" = 20'

LEGEND:

Indicates existing.

Indicates direction of traffic.

Indicates limits of prepare concrete bridge deck surface and treat existing bridge deck with high molecular weight methacrylate. Prior to bridge deck treatment, remove unsound concrete and patch with rapid setting concrete.

NOTE:
THE CONTRACTOR SHALL VERIFY ALL CONTROLLING FIELD DIMENSIONS BEFORE ORDERING OR FABRICATING ANY MATERIAL. EXISTING UTILITY FACILITIES HAVE NOT BEEN PLOTTED ON THESE PLANS.

TONY D. BRAKE
DESIGN ENGINEER

	BY	CHECKED
DESIGN	Vinh Dang	Ramesh Patel
DETAILS	Tom Dang	Ramesh Patel
QUANTITIES	Vinh Dang	Ramesh Patel

LOAD FACTOR DESIGN — LIVE LOADING: HS20-44 AND ALTERNATIVE AND PERMIT DESIGN LOAD

	BY	CHECKED
LAYOUT	Tom Dang	Vinh Dang
SPECIFICATIONS	Rebecca Franti	PLANS AND SPECS COMPARED: Rebecca Franti

STATE OF CALIFORNIA
DEPARTMENT OF TRANSPORTATION

DIVISION OF MAINTENANCE
STRUCTURE MAINTENANCE DESIGN

BRIDGE NO.: Various
POST MILE: Various

ROUTE 1, 90, 405 BRIDGES
GENERAL PLAN NO. 15

STRUCTURES MAINTENANCE GENERAL PLAN SHEET (ENGLISH) (REV. 09-01-10)

ORIGINAL SCALE IN INCHES FOR REDUCED PLANS: 0 1 2 3

UNIT: 3489
PROJECT NUMBER & PHASE: 07000010941
CONTRACT NO.: 4Y1501

DISREGARD PRINTS BEARING EARLIER REVISION DATES

REVISION DATES				SHEET	OF
5/24/11	6/28/11	8/15/11		15	22

FILE => 07-4y1501-a-gp15.dgn

USERNAME = s1129339 DATE PLOTTED => 01-DEC-2011 TIME PLOTTED => 08:06

DIST	COUNTY	ROUTE	POST MILES TOTAL PROJECT	SHEET No.	TOTAL SHEETS
07	LA	1,90,405	Var	34	40

REGISTERED CIVIL ENGINEER — 11/30/11 DATE

3-19-12
PLANS APPROVAL DATE

REGISTERED PROFESSIONAL ENGINEER — VINH DUC L. DANG — No. C65096 — Exp. 09/30/13 — CIVIL — STATE OF CALIFORNIA

The State of California or its officers or agents shall not be responsible for the accuracy or completeness of electronic copies of this plan sheet.

WASHINGTON PLACE UC — BRIDGE NO. 53-1261

QUANTITIES		
REMOVE UNSOUND CONCRETE	6	CF
CLEAN EXPANSION JOINT	273	LF
RAPID SETTING CONCRETE (PATCH)	6	CF
JOINT SEAL (MR 1/2")	273	LF

LEGEND:

Indicates existing.

Indicates direction of traffic.

Indicates limits of prepare concrete bridge deck surface and treat existing bridge deck with high molecular weight methacrylate. Prior to bridge deck treatment, remove unsound concrete and patch with rapid setting concrete.

Indicates limits of existing joint seal removal, clean expansion joint and placement of new joint seal. Prior to placement of new joint, remove unsound concrete and patch with rapid setting concrete.

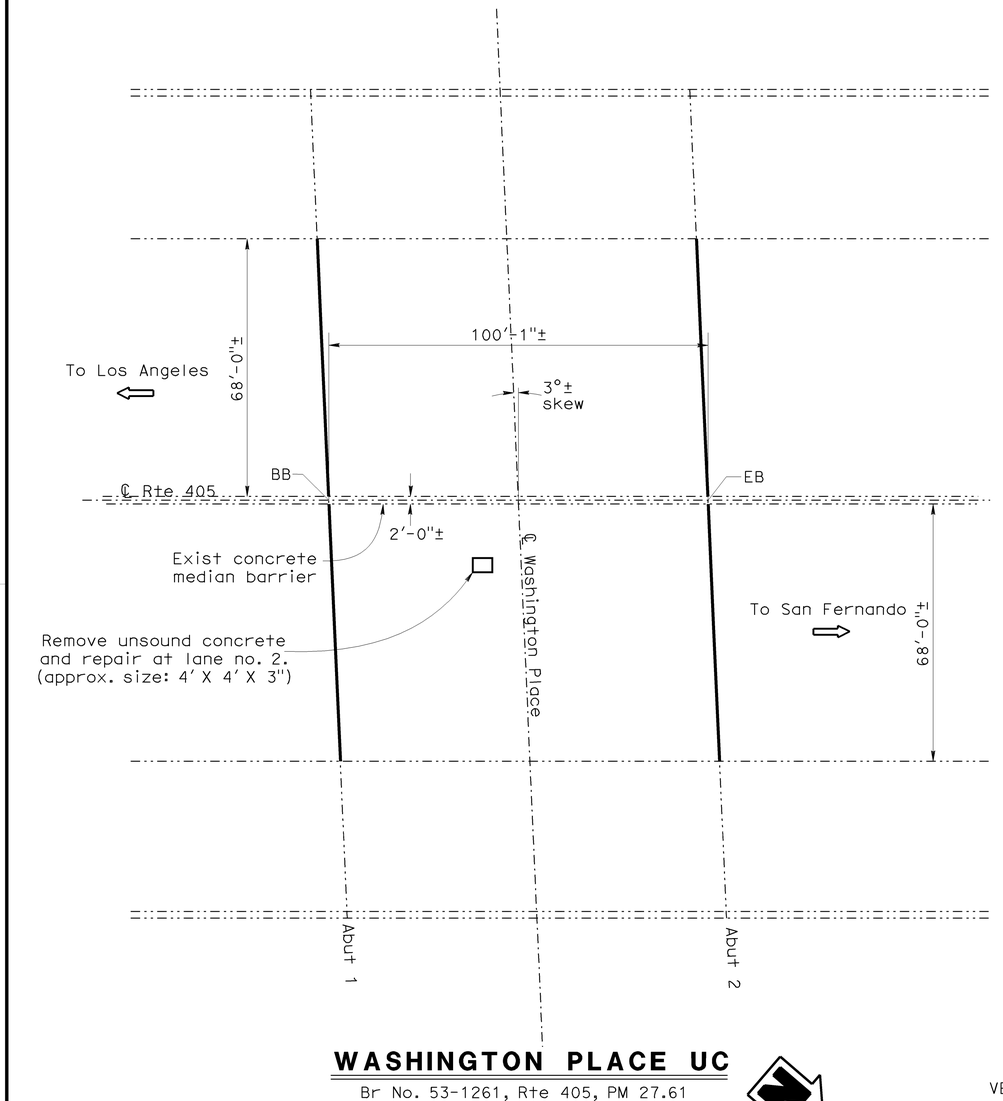

WASHINGTON PLACE UC

Br No. 53-1261, Rte 405, PM 27.61
1" = 20'

NOTE:
THE CONTRACTOR SHALL VERIFY ALL CONTROLLING FIELD DIMENSIONS BEFORE ORDERING OR FABRICATING ANY MATERIAL. EXISTING UTILITY FACILITIES HAVE NOT BEEN PLOTTED ON THESE PLANS.

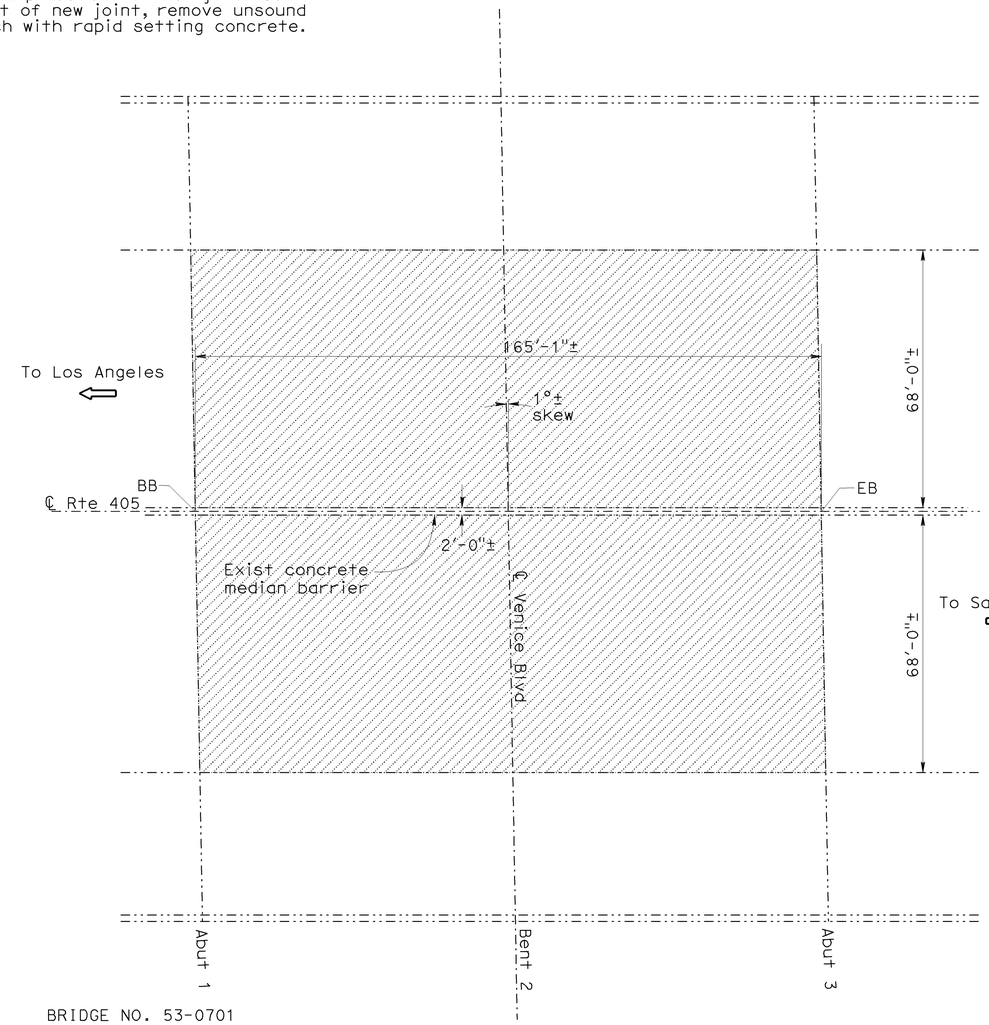

VENICE BLVD SEPARATION — BRIDGE NO. 53-0701

QUANTITIES		
REMOVE UNSOUND CONCRETE	57	CF
PREPARE CONCRETE BRIDGE DECK SURFACE	22,455	SQFT
RAPID SETTING CONCRETE (PATCH)	57	CF
TREAT BRIDGE DECK	22,455	SQFT
FURNISH BRIDGE DECK TREATMENT MATERIAL	281	GAL
PUBLIC SAFETY PLAN	LUMP	SUM

VENICE BLVD SEPARATION

Br No. 53-0701, Rte 405, PM 27.95
1" = 20'

DESIGN	BY Vinh Dang	CHECKED Ramesh Patel	LOAD FACTOR DESIGN	LIVE LOADING: HS20-44 AND ALTERNATIVE AND PERMIT DESIGN LOAD	
DETAILS	BY Tom Dang	CHECKED Ramesh Patel	LAYOUT	BY Tom Dang	CHECKED Vinh Dang
QUANTITIES	BY Vinh Dang	CHECKED Ramesh Patel	SPECIFICATIONS	BY Rebecca Franti	PLANS AND SPECS COMPARED Rebecca Franti

TONY D. BRAKE
DESIGN ENGINEER

STATE OF CALIFORNIA
DEPARTMENT OF TRANSPORTATION

DIVISION OF MAINTENANCE
STRUCTURE MAINTENANCE DESIGN

BRIDGE NO.	Various
POST MILE	Various

ROUTE 1, 90, 405 BRIDGES
GENERAL PLAN NO. 16

STRUCTURES MAINTENANCE GENERAL PLAN SHEET (ENGLISH) (REV. 09-01-10)

ORIGINAL SCALE IN INCHES FOR REDUCED PLANS 0 1 2 3

UNIT: 3489
PROJECT NUMBER & PHASE: 07000010941
CONTRACT NO.: 4Y1501

DISREGARD PRINTS BEARING EARLIER REVISION DATES →

REVISION DATES				SHEET	OF
5/23/11	6/28/11	8/15/11		16	22

FILE => 07-4y1501-a-gp16.dgn

USERNAME => s1292239 DATE PLOTTED => 01-DEC-2011 TIME PLOTTED => 08:06

DIST	COUNTY	ROUTE	POST MILES TOTAL PROJECT	SHEET No.	TOTAL SHEETS
07	LA	1,90,405	Var	35	40

11/30/11
REGISTERED CIVIL ENGINEER — DATE

3-19-12
PLANS APPROVAL DATE

REGISTERED PROFESSIONAL ENGINEER
VINH DUC L. DANG
No. C65096
Exp. 09/30/13
CIVIL
STATE OF CALIFORNIA

The State of California or its officers or agents shall not be responsible for the accuracy or completeness of electronic copies of this plan sheet.

LEGEND:

Indicates existing.

Indicates direction of traffic.

Indicates limits of prepare concrete bridge deck surface and treat existing bridge deck with high molecular weight methacrylate. Prior to bridge deck treatment, remove unsound concrete and patch with rapid setting concrete.

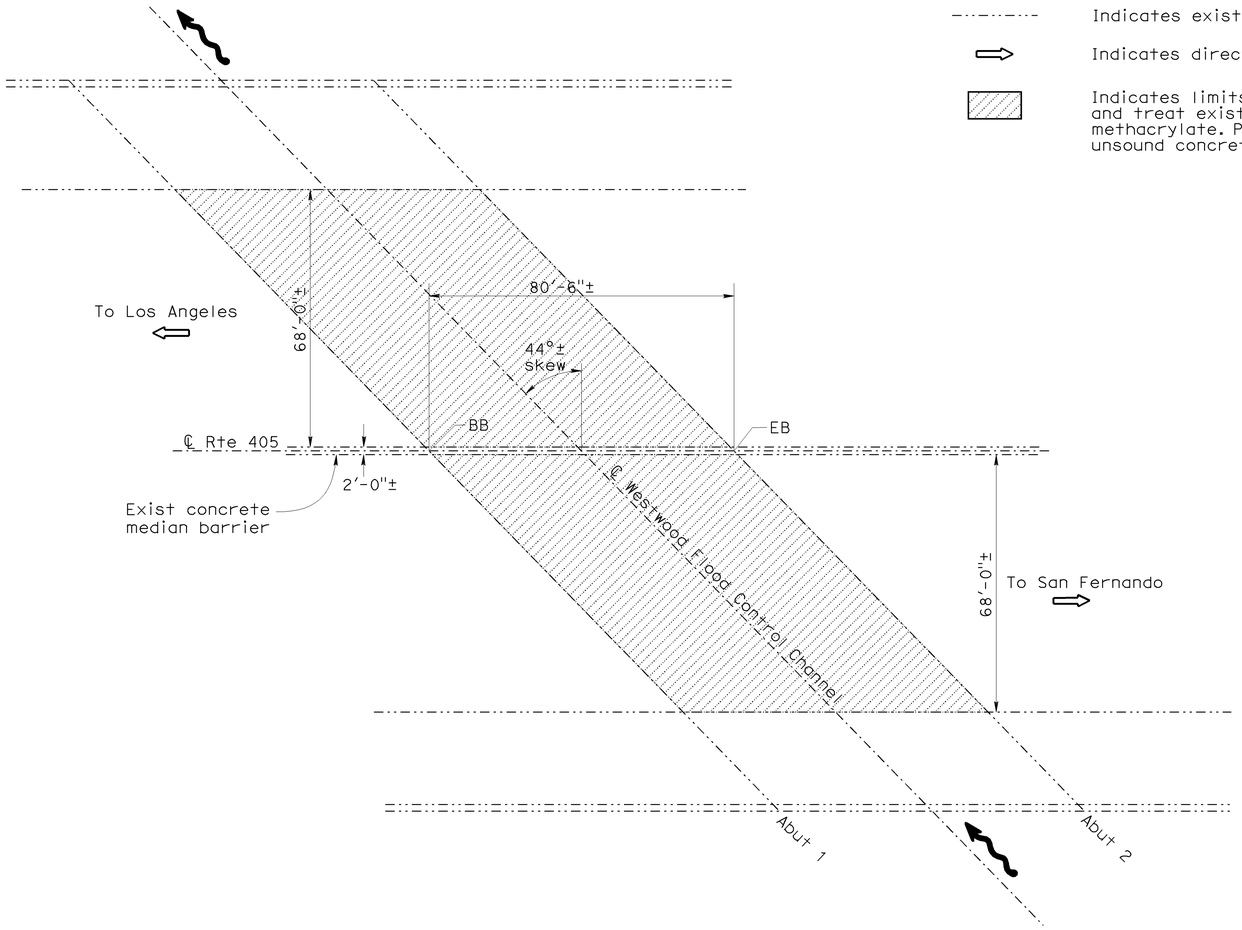

WESTWOOD FLOOD CONTROL CHANNEL

Br No. 53-1267, Rte 405, PM 28.61
1" = 20'

WESTWOOD FLOOD CONTROL CHANNEL QUANTITIES	BRIDGE NO. 53-1267	
REMOVE UNSOUND CONCRETE	28	CF
PREPARE CONCRETE BRIDGE DECK SURFACE	10,950	SQFT
RAPID SETTING CONCRETE (PATCH)	28	CF
TREAT BRIDGE DECK	10,950	SQFT
FURNISH BRIDGE DECK TREATMENT MATERIAL	137	GAL
PUBLIC SAFETY PLAN	LUMP	SUM

NOTE:
THE CONTRACTOR SHALL VERIFY ALL CONTROLLING FIELD DIMENSIONS BEFORE ORDERING OR FABRICATING ANY MATERIAL. EXISTING UTILITY FACILITIES HAVE NOT BEEN PLOTTED ON THESE PLANS.

TONY D. BRAKE
DESIGN ENGINEER

DESIGN	BY Vinh Dang	CHECKED Ramesh Patel	LOAD FACTOR DESIGN	LIVE LOADING: HS20-44 AND ALTERNATIVE AND PERMIT DESIGN LOAD		
DETAILS	BY Tom Dang	CHECKED Ramesh Patel	LAYOUT	BY Tom Dang	CHECKED Vinh Dang	
QUANTITIES	BY Vinh Dang	CHECKED Ramesh Patel	SPECIFICATIONS	BY Rebecca Franti	PLANS AND SPECS COMPARED Rebecca Franti	

STATE OF CALIFORNIA
DEPARTMENT OF TRANSPORTATION

DIVISION OF MAINTENANCE
STRUCTURE MAINTENANCE DESIGN

BRIDGE NO. Various
POST MILE Various

ROUTE 1, 90, 405 BRIDGES
GENERAL PLAN NO. 17

STRUCTURES MAINTENANCE GENERAL PLAN SHEET (ENGLISH) (REV. 09-01-10)

ORIGINAL SCALE IN INCHES FOR REDUCED PLANS 0 1 2 3

UNIT: 3489
PROJECT NUMBER & PHASE: 07000010941
CONTRACT NO.: 4Y1501

DISREGARD PRINTS BEARING EARLIER REVISION DATES →

REVISION DATES				SHEET	OF
5/24/11	6/28/11	8/15/11		17	22

FILE => 07-4y1501-a-gp17.dgn

USERNAME = s1139239 DATE PLOTTED => 01-DEC-2011 TIME PLOTTED => 08:06

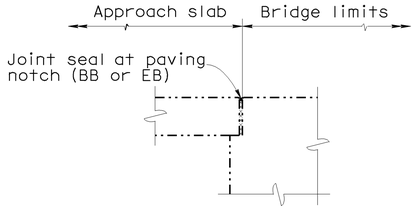

DIAPHRAGM ABUTMENT

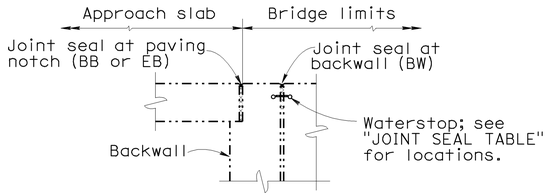

ABUTMENT WITH BACKWALL AND PAVING NOTCH

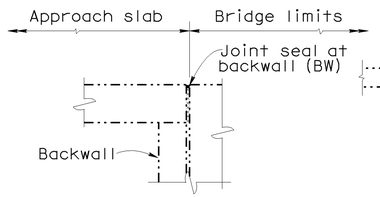

ABUTMENT WITH BACKWALL

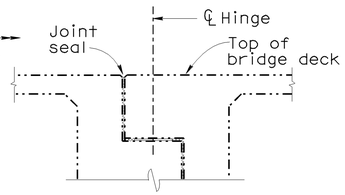

HINGE

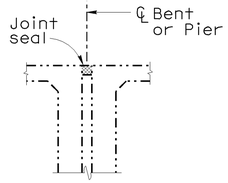

BENT OR PIER

JOINT SEAL LOCATION

NO SCALE

JOINT SEAL TABLE

BRIDGE NAME	BRIDGE NUMBER	LOCATION	MINIMUM "MR" (INCHES)	APPROX LENGTH (FT)	EXISTING WATERSTOP	APPROX DEPTH TO CLEAN EXP JOINT (INCHES)	REMOVE UNSOUND CONCRETE (CU FT)	RAPID SETTING CONCRETE PATCH (CU FT)
Los Angeles River	53-0341	Abut 1	1½	94	No	12	2	2
		Hinge 4	1½	68	No	12		
		Abut 8, BW	1½	68	No	12		
		Abut 8, PN *	½	66	No	——		
De Forest Avenue UC	53-1047	Abut 1, PN *	½	66	No	——	2	2
		Abut 1, BW	½	68	No	6		
		Abut 3, BW	½	68	No	6		
Ballona Creek	53-0118	Abut 1, PN *	½	63	No	——	2	2
		Abut 5, PN *	½	61	No	——		
Inglewood Blvd UC	53-1952	Abut 1	1½	145	No	12	2	2
		Abut 4	1½	151	No	12		
Mesmer Avenue UC	53-1950	Abut 1	½	414	No	6	2	2
		Abut 5	½	360	No	6		
Route 90/405 Separation	53-1851	Abut 1	½	155	No	6	2	2
		Abut 31	½	146	No	6		
E90-S405 Connector OC	53-1853G	Abut 1	1½	38	No	12	2	2
		Abut 4	1½	43	No	12		
W90-N405 Connector OC	53-1855F	Abut 8E	½	28	No	6	1	1
La Cienega Blvd SB OC	53-1250	Abut 1	½	130	No	6	2	2
		Abut 4 *	½	56	No	——		
Centinella Avenue UC	53-1253	Abut 1	½	460	No	6	4	4
		Bent 2	½	403	No	6		
		Bent 3	½	371	No	6		
		Bent 4	½	354	No	6		
		Bent 5	½	359	No	6		
		Abut 6	½	370	No	6		
Slauson Avenue UC	53-1401	Abut 1	½	210	No	6	2	2
		Abut 3	½	196	No	6		
S405-W90 Connector OC	53-1974F	Abut 1	½	31	No	6	2	2
		Abut 3	½	84	No	6		
Port Road UC	53-1402	Abut 1	½	225	No	6	2	2
		Abut 2	½	217	No	6		
McDonald Street UC	53-1347	Abut 1	1½	144	No	12	2	2
		Abut 2	1½	143	No	12		
Braddock Drive UC	53-1258	Abut 1	½	148	No	6	2	2
		Abut 2	½	148	No	6		
Washington Place UC	53-1261	Abut 1	½	136	No	6	2	2
		Abut 2	½	136	No	6		

* Indicates new approach slabs placement. Joint cleaning not required.

NOTES:

The following notes apply to JOINT SEAL TYPE A:

Install Joint Seal (MR = ½") or Silicone Joint Seal 3" up into curb or barrier rail on the low side of the deck where deck joint aligns with curb or barrier rail joint.

For details not shown see RSP B6-21 sheet.

The following notes apply to JOINT SEAL TYPE B:

1) Seal must satisfy both minimum Movement Rating (MR) and minimum W1 requirements.

2) Minimum W1 is the calculated maximum width of the joint based on field measurements. After the joints have been cleaned, minimum W1 is to be recalculated by the Engineer.

3) W1 shall be the smaller of the values determined as follows:
   A) 0.85 times the manufacturer's designed minimum uncompressed width of the seal.
   B) The width of the seal on the third successive test cycle of the pressure deflection test, when compressed to an average pressure of 3.0 PSI.

4) Bend Type B joint seal 6 inches up into curb or rail on the low side of the deck where deck joint matches curb or rail joint.

For details not shown see RSP B6-21 sheet.

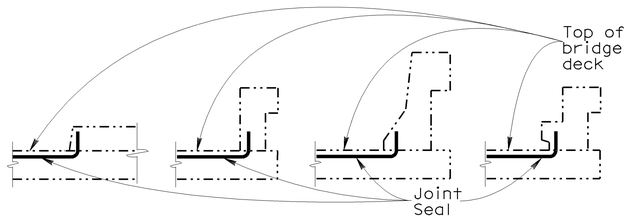

BARRIER RAIL

JOINT SEAL AT LOW SIDE OF DECK

Note: Details shown for illustration purposes only.

For use only where deck joint matches the sidewalk, curb or barrier rail joint.

DIST	COUNTY	ROUTE	POST MILES TOTAL PROJECT	SHEET No.	TOTAL SHEETS
07	LA	1,90,405	Var	36	40

REGISTERED CIVIL ENGINEER — 11/30/11 DATE

3-19-12
PLANS APPROVAL DATE

REGISTERED PROFESSIONAL ENGINEER — VINH DUC L. DANG — No. C65096 — Exp. 09/30/13 — CIVIL — STATE OF CALIFORNIA

The State of California or its officers or agents shall not be responsible for the accuracy or completeness of electronic copies of this plan sheet.

NOTE:
THE CONTRACTOR SHALL VERIFY ALL CONTROLLING FIELD DIMENSIONS BEFORE ORDERING OR FABRICATING ANY MATERIAL. EXISTING UTILITY FACILITIES HAVE NOT BEEN PLOTTED ON THESE PLANS.

	BY	CHECKED
DESIGN	Vinh Dang	Ramesh Patel
DETAILS	Tom Dang	Ramesh Patel
QUANTITIES	Vinh Dang	Ramesh Patel

STATE OF CALIFORNIA
DEPARTMENT OF TRANSPORTATION

DIVISION OF MAINTENANCE
STRUCTURE MAINTENANCE DESIGN

BRIDGE NO.	POST MILE
Various	Varies

ROUTE 1, 90, 405 BRIDGES
MISCELLANEOUS DETAILS NO. 1

STRUCTURES MAINTENANCE DETAIL SHEET (ENGLISH) (REV. 09-01-10)

ORIGINAL SCALE IN INCHES FOR REDUCED PLANS 0 1 2 -

UNIT: 3489
PROJECT NUMBER & PHASE: 07000010941
CONTRACT NO.: 4Y1501

DISREGARD PRINTS BEARING EARLIER REVISION DATES →

REVISION DATES				SHEET	OF
5/24/11	6/28/11	8/15/11		18	22

FILE => 07-4y1501-b-miscdt101.dgn

USERNAME => s129239 DATE PLOTTED => 01-DEC-2011 TIME PLOTTED => 08:48

DIST	COUNTY	ROUTE	POST MILES TOTAL PROJECT	SHEET No.	TOTAL SHEETS
07	LA	1,90,405	Var	37	40

REGISTERED CIVIL ENGINEER — 11/30/11 DATE

3-19-12
PLANS APPROVAL DATE

REGISTERED PROFESSIONAL ENGINEER — VINH DUC L. DANG — No. C65096 — Exp. 09/30/13 — CIVIL — STATE OF CALIFORNIA

The State of California or its officers or agents shall not be responsible for the accuracy or completeness of electronic copies of this plan sheet.

DECK REPAIR TABLE
REMOVE UNSOUND CONCRETE AND RAPID SETTING CONCRETE (PATCH)

BRIDGE NAME	BRIDGE NUMBER	APPROXIMATE AREA DAMAGED (%)	APPROXIMATE DEPTH (INCHES)
Los Angeles River	53-0341	1	3
De Forest Avenue UC	53-1047	1	3
Inglewood Blvd UC	53-1952	1	3
Mesmer Avenue UC	53-1950	1	3
Route 90/405 Separation	53-1851	1	3
E90-N405 Connector OC	53-1854G	1	3
E90-S405 Connector OC	53-1853G	1	3
W90-N405 Connector OC	53-1855F	1	3
Manchester Blvd On-Ramp OC	53-1484S	1	3
Manchester Blvd OC	53-1246	1	3
Florence Avenue OC	53-1248	1	3
La Cienega Blvd NB OC	53-1249	1	3
La Cienega Blvd SB OC	53-1250	1	3
Slauson Avenue UC	53-1401	1	3
Port Road UC	53-1402	1	3
Braddock Drive UC	53-1258	1	3
Sawtelle Blvd UC	53-1403	1	3
Washington Blvd UC	53-1260	1	3
Venice Blvd Separation	53-0701	1	3
Westwood Flood Control Channel	53-1267	1	3

DECK REPAIR NOTES:

1. Existing reinforcement shall be protected in place during unsound concrete removal and patching operations.
2. It is responsibility of the Contractor to repair any reinforcement that is accidently cut by saw cutting operations.
3. When existing transverse reinforcement is exposed in the deck surface, saw cutting may be waived with the approval of the Engineer.
4. The saw cut depth shall not exceed ¾ inch or the concrete cover over the top steel reinforcing bars, whichever is less.
5. Remove unsound Portland Cement concrete and unsound concrete patches to expose sound, hard concrete substrate. Replace original deck surface with rapid setting concrete patch.

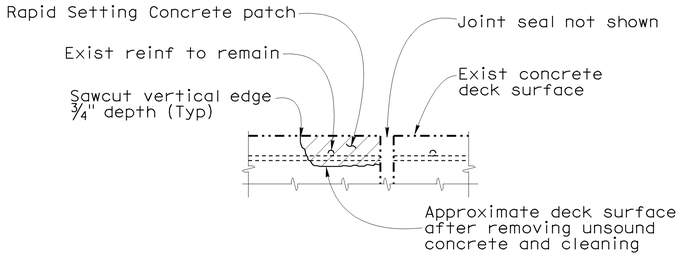

JOINT REPAIR DETAIL

Location will be determined by the Engineer. Reinforcement may be encountered during deck concrete removal and is to remain undamaged.

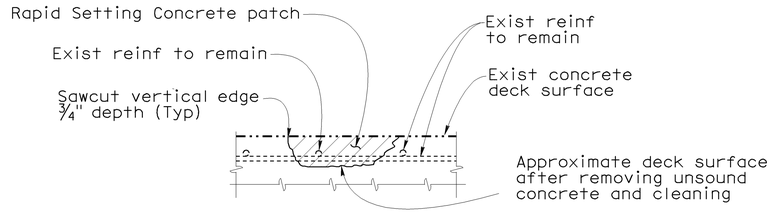

DECK DAMAGE REPAIR DETAIL

Location will be determined by the Engineer. Reinforcement may be encountered during deck concrete removal and is to remain undamaged.

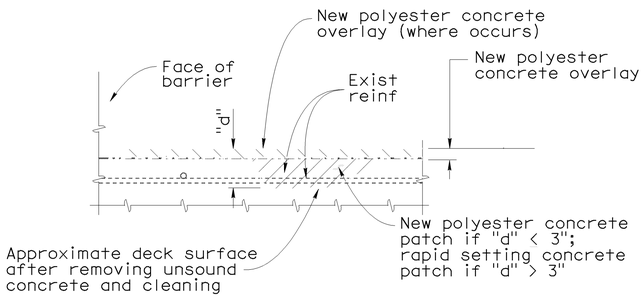

DECK OVERLAY DETAIL

Locations to be determined by the Engineer. Reinforcement may be encountered during deck concrete removal and is to remain undamaged.

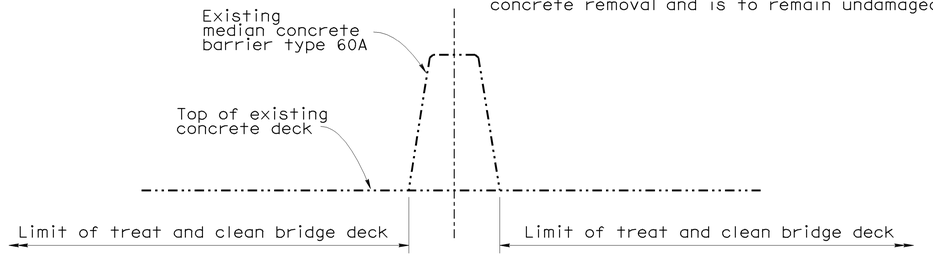

MEDIAN BARRIER

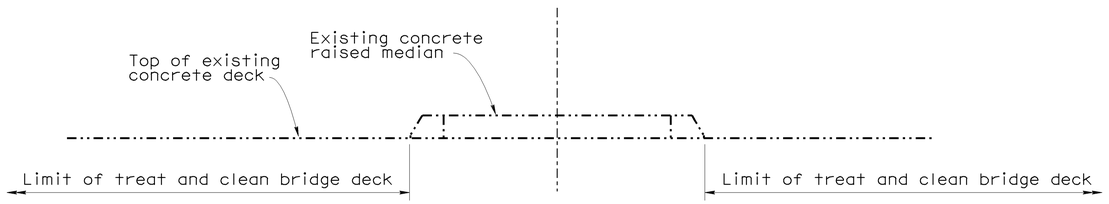

RAISED MEDIAN

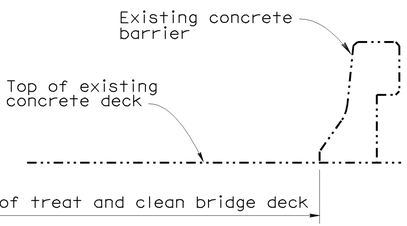

EOD BARRIER

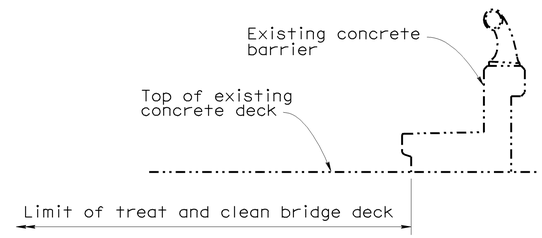

SIDEWALK BARRIER TYPE 2

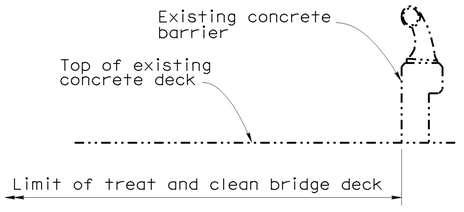

SIDEWALK BARRIER TYPE 1

TYPICAL LIMITS OF DECK WORK

NO SCALE

NOTE:
THE CONTRACTOR SHALL VERIFY ALL CONTROLLING FIELD DIMENSIONS BEFORE ORDERING OR FABRICATING ANY MATERIAL. EXISTING UTILITY FACILITIES HAVE NOT BEEN PLOTTED ON THESE PLANS.

DESIGN	BY Vinh Dang	CHECKED Ramesh Patel	
DETAILS	BY Tom Dang	CHECKED Ramesh Patel	
QUANTITIES	BY Vinh Dang	CHECKED Ramesh Patel	

STATE OF CALIFORNIA
DEPARTMENT OF TRANSPORTATION

DIVISION OF MAINTENANCE
STRUCTURE MAINTENANCE DESIGN

BRIDGE NO. Various
POST MILE Varies

ROUTE 1, 90, 405 BRIDGES
MISCELLANEOUS DETAILS NO. 2

STRUCTURES MAINTENANCE DETAIL SHEET (ENGLISH) (REV. 09-01-10)

ORIGINAL SCALE IN INCHES FOR REDUCED PLANS 0 1 2 -

UNIT: 3489
PROJECT NUMBER & PHASE: 07000010941
CONTRACT NO.: 4Y1501

DISREGARD PRINTS BEARING EARLIER REVISION DATES →

REVISION DATES				SHEET	OF
5/24/11	6/28/11	8/15/11		19	22

FILE => 07-4y1501-b-miscdtl02.dgn

USERNAME => s129239 DATE PLOTTED => 01-DEC-2011 TIME PLOTTED => 08:48

DIST	COUNTY	ROUTE	POST MILES TOTAL PROJECT	SHEET No.	TOTAL SHEETS
07	LA	1,90,405	Var	38	40

REGISTERED CIVIL ENGINEER — 11/30/11 DATE

VINH DUC L. DANG No. C65096 Exp. 09/30/13 CIVIL — REGISTERED PROFESSIONAL ENGINEER — STATE OF CALIFORNIA

3-19-12
PLANS APPROVAL DATE

The State of California or its officers or agents shall not be responsible for the accuracy or completeness of electronic copies of this plan sheet.

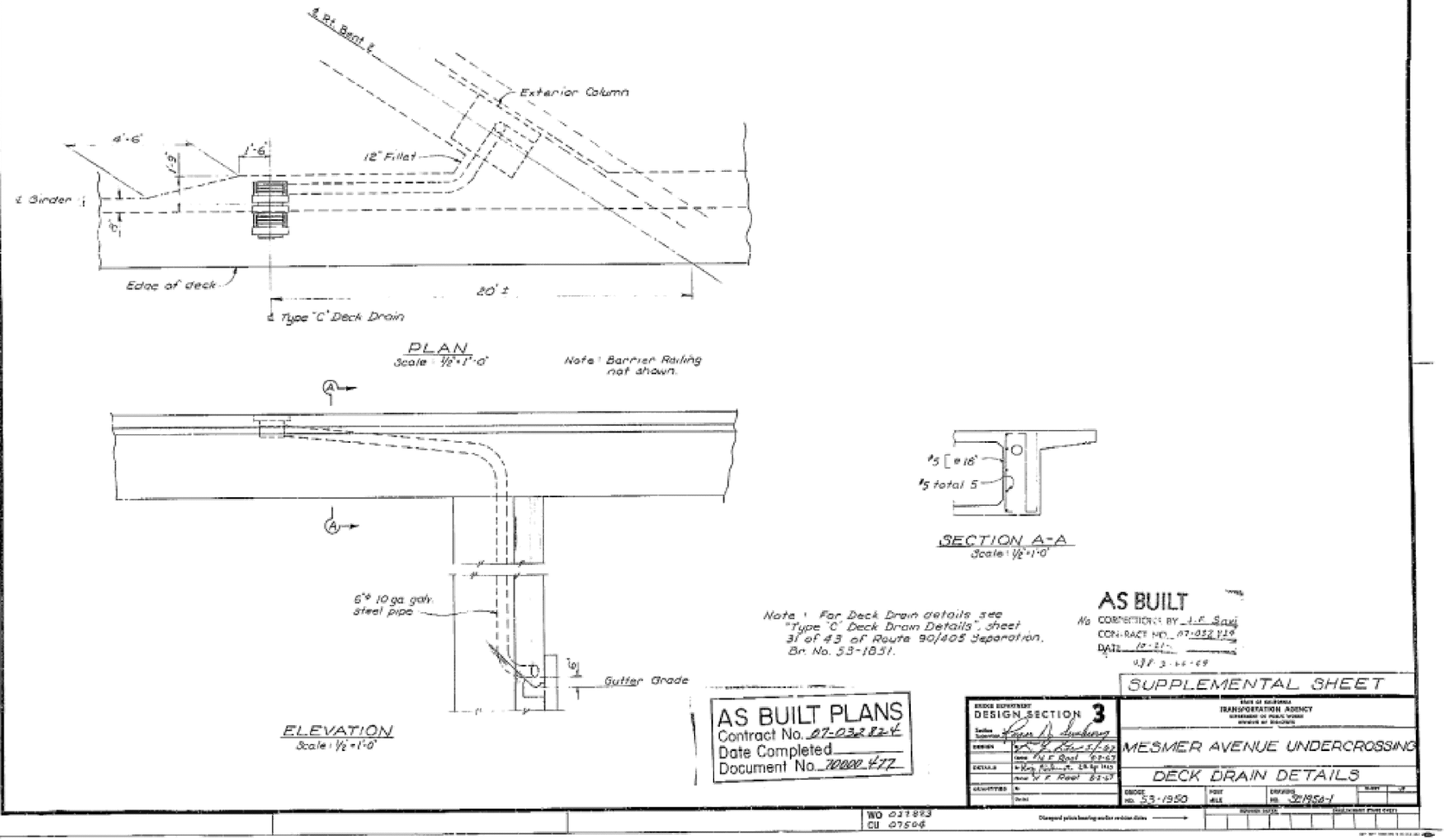

TYPICAL EXISTING DECK DRAIN LAYOUT

Br No. 53-1950

NOTE:
THE CONTRACTOR SHALL VERIFY ALL CONTROLLING FIELD DIMENSIONS BEFORE ORDERING OR FABRICATING ANY MATERIAL. EXISTING UTILITY FACILITIES HAVE NOT BEEN PLOTTED ON THESE PLANS.

	BY	CHECKED
DESIGN	Vinh Dang	Ramesh Patel
DETAILS	Tom Dang	Ramesh Patel
QUANTITIES	Vinh Dang	Ramesh Patel

STATE OF CALIFORNIA
DEPARTMENT OF TRANSPORTATION

DIVISION OF MAINTENANCE
STRUCTURE MAINTENANCE DESIGN

BRIDGE NO. Various
POST MILE Varies

ROUTE 1, 90, 405 BRIDGES
MISCELLANEOUS DETAILS NO. 3

STRUCTURES MAINTENANCE DETAIL SHEET (ENGLISH) (REV. 09-01-10)

ORIGINAL SCALE IN INCHES FOR REDUCED PLANS 0 1 2 -

UNIT: 3489
PROJECT NUMBER & PHASE: 07000010941 CONTRACT NO.: 4Y1501

DISREGARD PRINTS BEARING EARLIER REVISION DATES →

REVISION DATES				SHEET	OF
5/24/11	6/28/11	8/15/11		20	22

FILE => 07-4y1501-b-miscdt103.dgn

USERNAME => s129239 DATE PLOTTED => 01-DEC-2011 TIME PLOTTED => 08:48

DIST	COUNTY	ROUTE	POST MILES TOTAL PROJECT	SHEET No.	TOTAL SHEETS
07	LA	1,90,405	Var	39	40

REGISTERED CIVIL ENGINEER — 11/30/11 DATE

3-19-12
PLANS APPROVAL DATE

REGISTERED PROFESSIONAL ENGINEER — VINH DUC L. DANG No. C65096 Exp. 09/30/13 CIVIL — STATE OF CALIFORNIA

The State of California or its officers or agents shall not be responsible for the accuracy or completeness of electronic copies of this plan sheet.

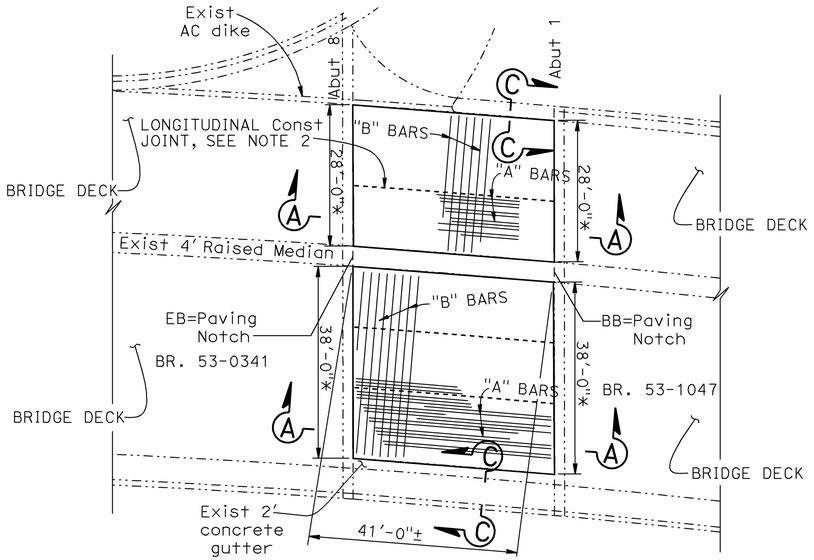

PLAN (BR. NO. 53-0341 and 53-1047)

NO SCALE

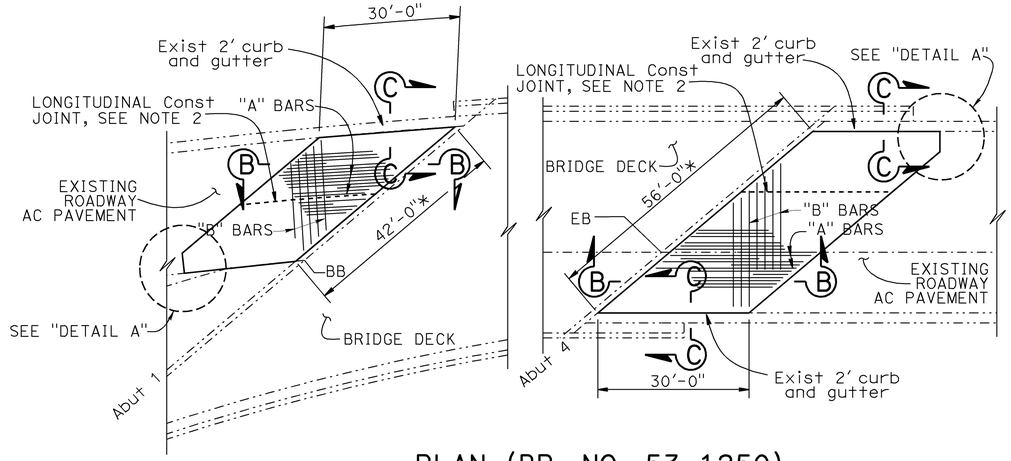

PLAN (BR. NO. 53-1250)

NO SCALE

* Indicates limits of paving notch extension

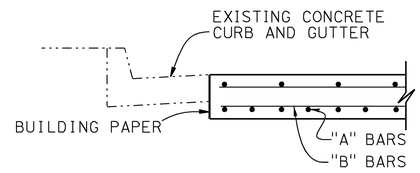

SECTION C-C

¾" = 1'-0"

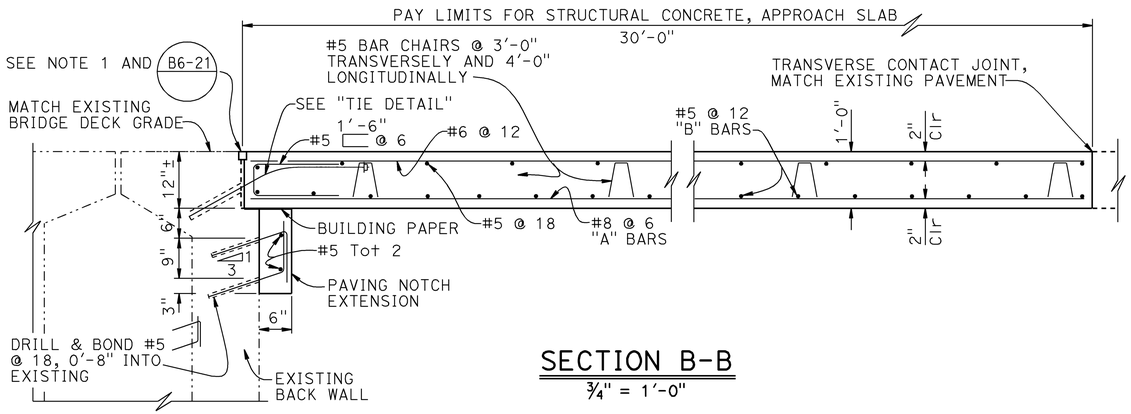

SECTION B-B

¾" = 1'-0"

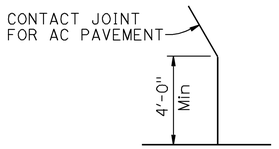

DETAIL A

No Scale

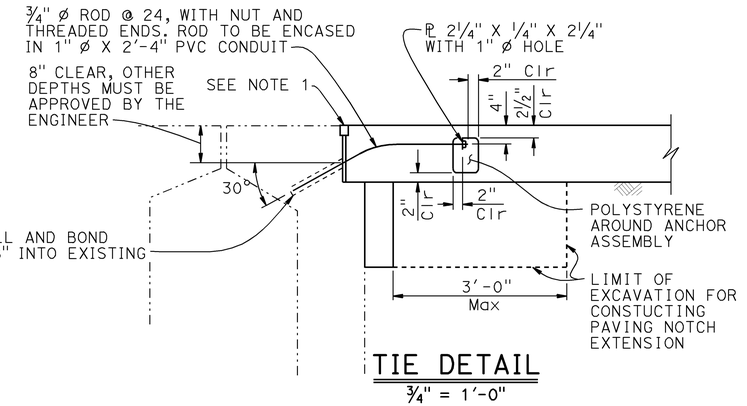

TIE DETAIL

¾" = 1'-0"

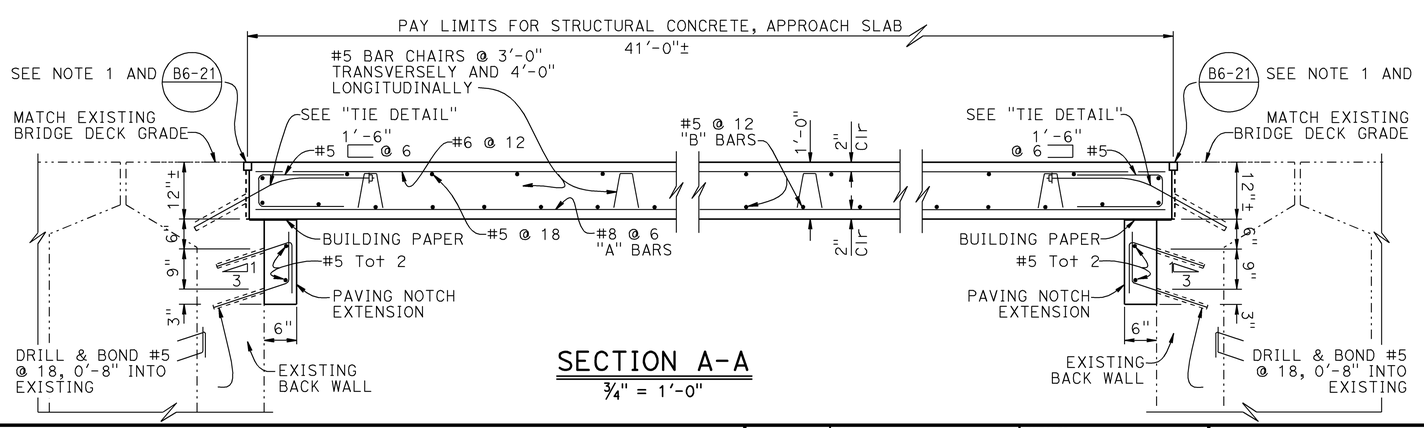

SECTION A-A

¾" = 1'-0"

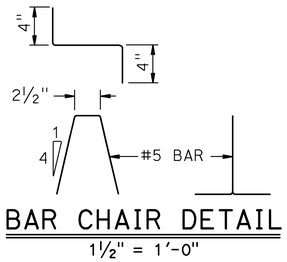

BAR CHAIR DETAIL

1½" = 1'-0"

NOTES:

1. For details not shown or noted, see Structure Plans. Adjust bar reinforcement to clear a sawcut for sealed joint, when required
2. Longitudinal construction joints, when permitted by the Engineer, shall be located on lane lines
3. For longitudinal joint construction alternatives, see "STRUCTURE APPROACH TYPE R, DETAILS NO. 2" sheet.
4. Couplers are required for stage construction

NOTE:
THE CONTRACTOR SHALL VERIFY ALL CONTROLLING FIELD DIMENSIONS BEFORE ORDERING OR FABRICATING ANY MATERIAL. EXISTING UTILITY FACILITIES HAVE NOT BEEN PLOTTED ON THESE PLANS.

	BY	CHECKED
DESIGN	Vinh Dang	Ramesh Patel
DETAILS	Tom Dang	Ramesh Patel
QUANTITIES	Vinh Dang	Ramesh Patel

STATE OF CALIFORNIA
DEPARTMENT OF TRANSPORTATION

DIVISION OF MAINTENANCE
STRUCTURE MAINTENANCE DESIGN

BRIDGE NO. Various
POST MILE Varies

ROUTE 1, 90, 405 BRIDGES

STRUCTURE APPROACH TYPE R, DETAILS NO. 1

STRUCTURES MAINTENANCE DETAIL SHEET (ENGLISH) (REV. 09-01-10)

ORIGINAL SCALE IN INCHES FOR REDUCED PLANS 0 1 2 -

UNIT: 3489
PROJECT NUMBER & PHASE: 07000010941 CONTRACT NO.: 4Y1501

DISREGARD PRINTS BEARING EARLIER REVISION DATES →

REVISION DATES				SHEET	OF
5/23/11	6/28/11	8/15/11		21	22

FILE => 07-4y1501-c-strapptyper01.dgn

USERNAME => s129239 DATE PLOTTED => 01-DEC-2011 TIME PLOTTED => 08:48

DIST	COUNTY	ROUTE	POST MILES TOTAL PROJECT	SHEET No.	TOTAL SHEETS
07	LA	1,90,405	Var	40	40

REGISTERED CIVIL ENGINEER — 11/30/11 DATE

3-19-12
PLANS APPROVAL DATE

REGISTERED PROFESSIONAL ENGINEER — VINH DUC L. DANG — No. C65096 — Exp. 09/30/13 — CIVIL — STATE OF CALIFORNIA

The State of California or its officers or agents shall not be responsible for the accuracy or completeness of electronic copies of this plan sheet.

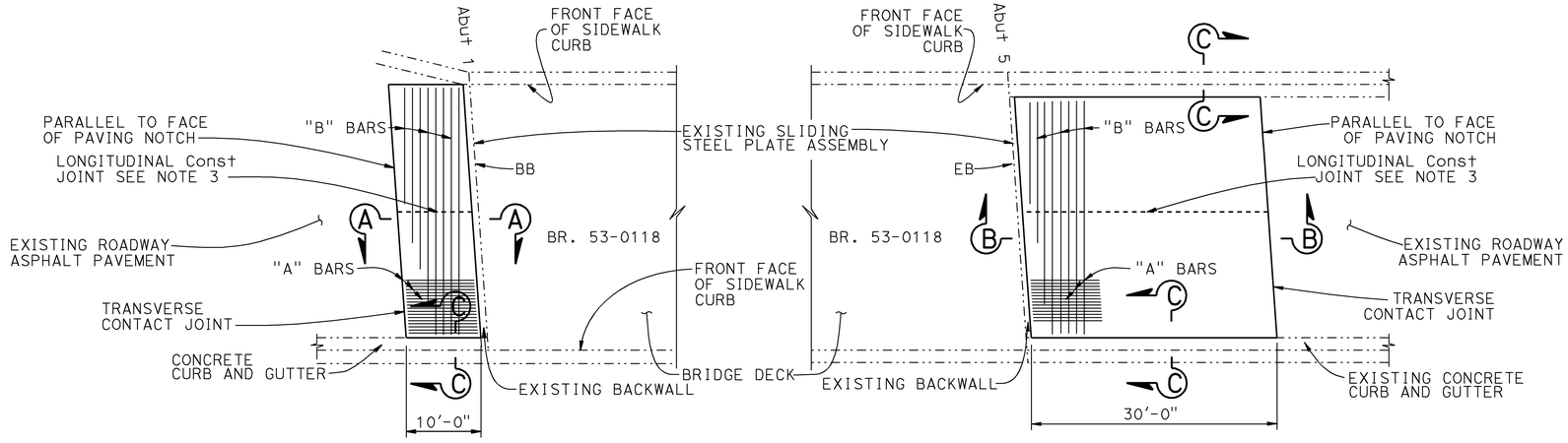

PLAN
NO SCALE

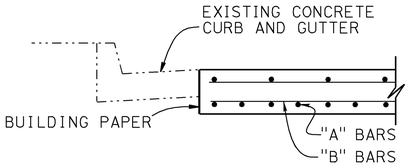

SECTION C-C
3/4" = 1'-0"

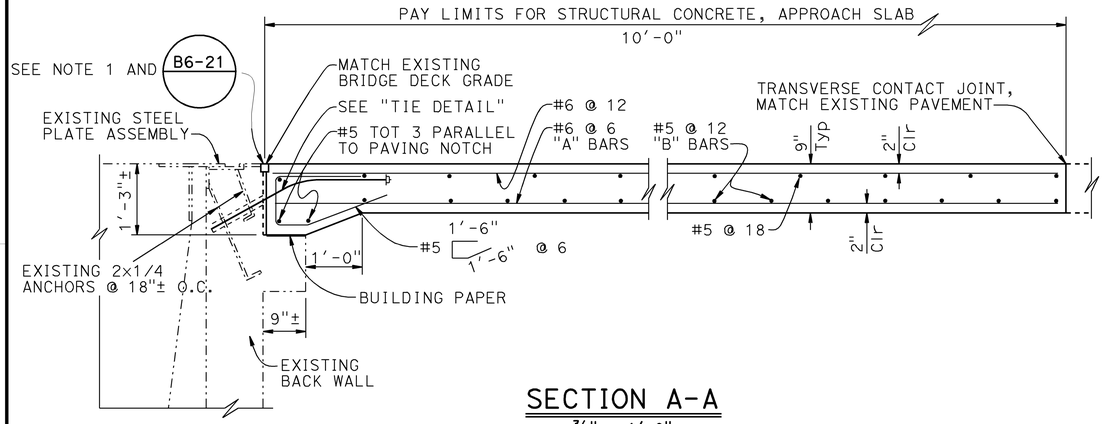

SECTION A-A
3/4" = 1'-0"

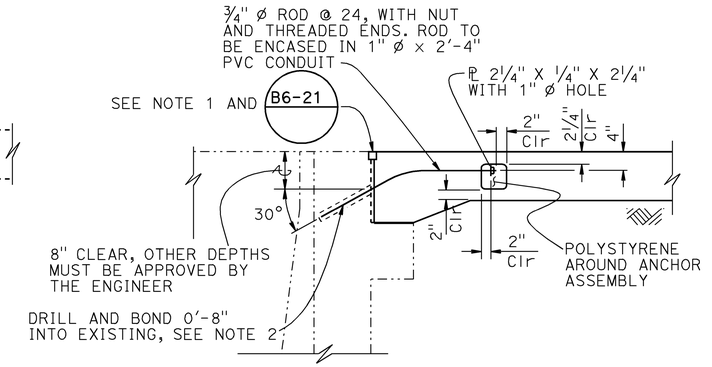

TIE DETAIL
3/4" = 1'-0"
(ABUTMENT 1 SHOWN, ABUTMENT 5 SIMILAR)

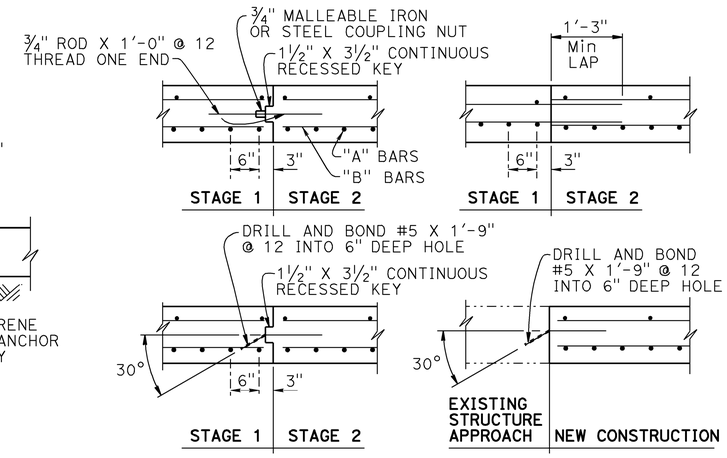

LONGITUDINAL CONSTRUCTION JOINT ALTERNATIVES
3/4" = 1'-0"

NOTES:
1. For details not shown or noted, see Structure Plans. Adjust bar reinforcement to clear a sawcut for sealed joint, when required
2. Space to avoid existing anchorages and reinforcement
3. Longitudinal construction joints, when permitted by the Engineer, shall be located on lane lines
4. Couplers are required for stage construction

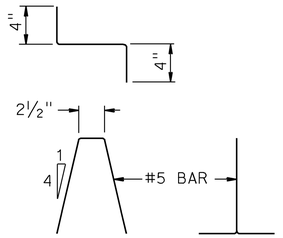

BAR CHAIR DETAIL
1 1/2" = 1'-0"

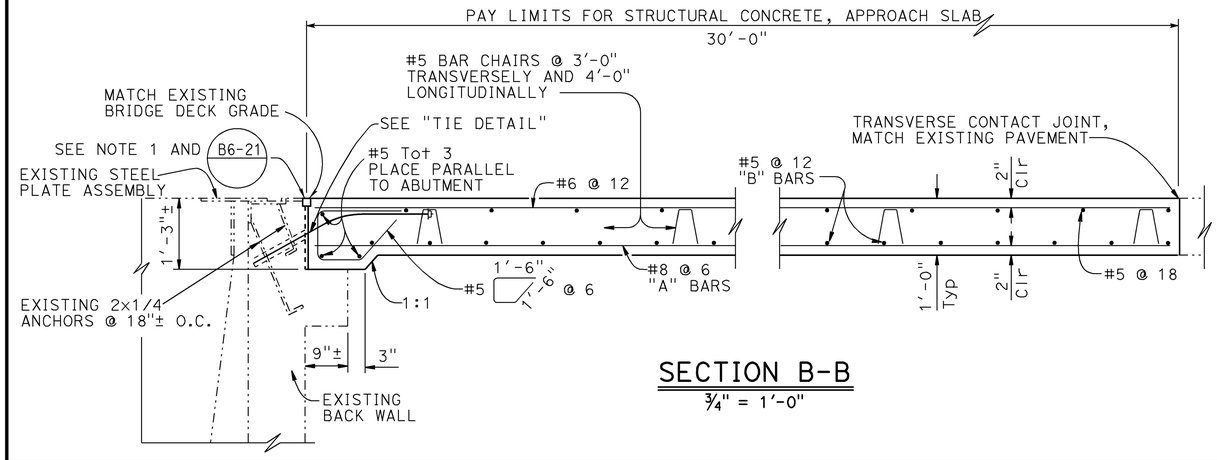

SECTION B-B
3/4" = 1'-0"

NOTE:
THE CONTRACTOR SHALL VERIFY ALL CONTROLLING FIELD DIMENSIONS BEFORE ORDERING OR FABRICATING ANY MATERIAL. EXISTING UTILITY FACILITIES HAVE NOT BEEN PLOTTED ON THESE PLANS.

	BY	CHECKED
DESIGN	Vinh Dang	Ramesh Patel
DETAILS	Tom Dang	Ramesh Patel
QUANTITIES	Vinh Dang	Ramesh Patel

STATE OF CALIFORNIA
DEPARTMENT OF TRANSPORTATION

DIVISION OF MAINTENANCE
STRUCTURE MAINTENANCE DESIGN

BRIDGE NO. Various
POST MILE Varies

ROUTE 1, 90, 405 BRIDGES
STRUCTURE APPROACH TYPE R, DETAILS NO. 2

STRUCTURES MAINTENANCE DETAIL SHEET (ENGLISH) (REV. 09-01-10)

ORIGINAL SCALE IN INCHES FOR REDUCED PLANS 0 1 2 -

UNIT: 3489
PROJECT NUMBER & PHASE: 07000010941
CONTRACT NO.: 4Y1501

DISREGARD PRINTS BEARING EARLIER REVISION DATES →

REVISION DATES				SHEET	OF
5/23/11	6/28/11	8/15/11		22	22

FILE => 07-4y1501-c-strapptyper02.dgn

USERNAME => s129239 DATE PLOTTED => 01-DEC-2011 TIME PLOTTED => 08:48