Dist	COUNTY	ROUTE	POST MILES TOTAL PROJECT	SHEET No.	TOTAL SHEETS
07	LA	91	R6.4/R17.6	1	37

STATE OF CALIFORNIA
DEPARTMENT OF TRANSPORTATION

PROJECT PLANS FOR CONSTRUCTION ON
STATE HIGHWAY

IN LOS ANGELES COUNTY
AT VARIOUS LOCATIONS
FROM E91-N110 CONNECTOR OVERCROSSING
TO GRIDLEY ROAD OVERCROSSING

TO BE SUPPLEMENTED BY STANDARD PLANS DATED MAY 2006

INDEX OF PLANS

SHEET No.	DESCRIPTION
1	TITLE AND LOCATION MAP
2	LOCATIONS OF CONSTRUCTION
3	CONSTRUCTION AREA SIGNS
4-12	TRAFFIC HANDLING DETAILS
13-14	PAVEMENT DELINEATION DETAILS
15	PAVEMENT DELINEATION QUANTITIES
16-21	REVISED STANDARD PLANS

STRUCTURE PLANS

22-37	ROUTE 91 BRIDGES

THE STANDARD PLANS LIST APPLICABLE TO THIS CONTRACT IS INCLUDED IN THE NOTICE TO BIDDERS AND SPECIAL PROVISIONS BOOK.

NOTE:

THE TABLE OF LOCATIONS OF CONSTRUCTION IS SHOWN ON THE LOCATIONS OF CONSTRUCTION SHEET.

LOCATION MAP

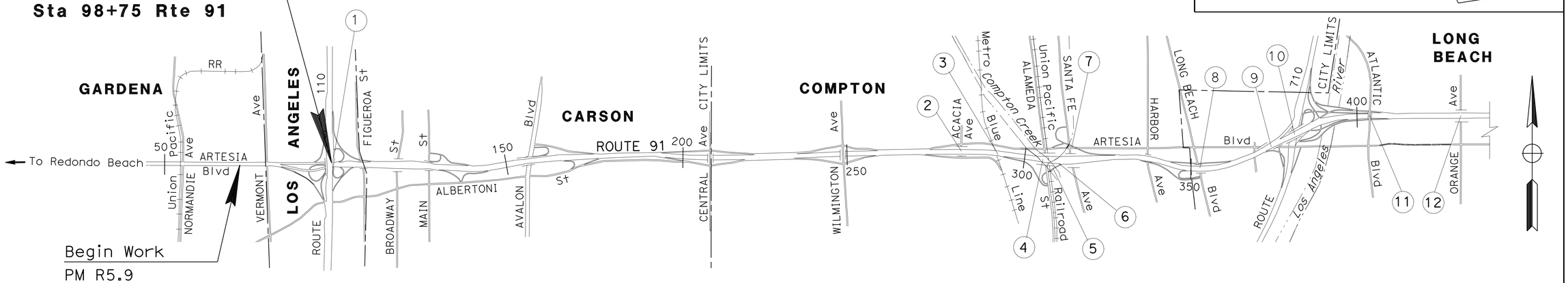

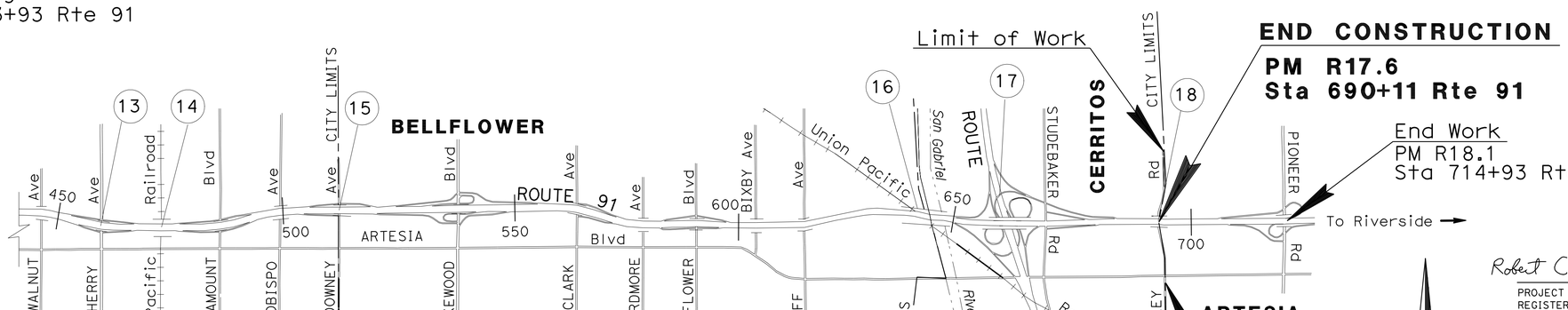

Robert Carl Doria 11-22-10
PROJECT ENGINEER DATE
REGISTERED CIVIL ENGINEER

December 13, 2010
PLANS APPROVAL DATE

REGISTERED PROFESSIONAL ENGINEER
R.C. DORIA
No. 50821
Exp. 9-30-11
CIVIL
STATE OF CALIFORNIA

THE STATE OF CALIFORNIA OR ITS OFFICERS OR AGENTS SHALL NOT BE RESPONSIBLE FOR THE ACCURACY OR COMPLETENESS OF SCANNED COPIES OF THIS PLAN SHEET.

THE CONTRACTOR SHALL POSSESS THE CLASS (OR CLASSES) OF LICENSE AS SPECIFIED IN THE "NOTICE TO BIDDERS."

NO SCALE

CONTRACT No.	07-4Y1404
PROJECT ID	0700020207

PROJECT MANAGER: CHRISTIAN SAM
DESIGN ENGINEER: HAMID SAADATNEJADI

LAST REVISION 12-13-10
DATE PLOTTED => 16-DEC-2010
TIME PLOTTED => 11:47

Dist	COUNTY	ROUTE	POST MILES TOTAL PROJECT	SHEET No.	TOTAL SHEETS
07	LA	91	R6.4/R17.6	2	37

Robert Carl Doria 11-22-10
REGISTERED CIVIL ENGINEER DATE

12-13-10
PLANS APPROVAL DATE

REGISTERED PROFESSIONAL ENGINEER
R.C. DORIA
No. 50821
Exp. 9-30-11
CIVIL
STATE OF CALIFORNIA

THE STATE OF CALIFORNIA OR ITS OFFICERS OR AGENTS SHALL NOT BE RESPONSIBLE FOR THE ACCURACY OR COMPLETENESS OF SCANNED COPIES OF THIS PLAN SHEET.

LOCATIONS OF CONSTRUCTION

Loc	PM	NAME OF BRIDGE	BRIDGE No.
1	R6.4	E91-N110 Conn OC	53-2665G
2	R9.8	ACACIA Ave UC	53-2371
3	R10.0	COLLEGE OH	53-2234
4	R10.2	COMPTON CREEK Br OH	53-2235
5	R10.3	COMPTON CREEK Br OH (ON-RAMP)	53-2236S
6	R10.3	COMPTON CREEK Br OH (OFF-RAMP)	53-2237S
7	R10.4	ARTESIA-SANTA FE UC (OFF RAMP)	53-2238K
8	R11.1	LONG BEACH Blvd UC	53-2373
9	R11.4	BUTLER-ARTESIA UC	53-2169
10	R11.6	ROUTE 91/710 Sep	53-2240
11	R12.1	ATLANTIC Ave UC	53-2124
12	R12.6	ORANGE Ave UC	53-2122
13	R13.1	CHERRY Ave UC	53-2123
14	R13.4	NORTH LONG BEACH OH	53-2101
15	R14.1	DOWNEY Ave UC	53-1761
16	R16.5	EAST BELLFLOWER OH	53-1257
17	R16.9	W91-S605 Conn OC	53-1705F
18	R17.6	GRIDLEY ROAD OC	53-1324

LOCATIONS OF CONSTRUCTION

LC-1

REVISED BY | DATE REVISED
ROBERT CARL DORIA | HAMID SAADATNEJADI
CALCULATED-DESIGNED BY | CHECKED BY
FUNCTIONAL SUPERVISOR
HAMID SAADATNEJADI
STATE OF CALIFORNIA - DEPARTMENT OF TRANSPORTATION
Caltrans MAINTENANCE ENGINEERING

LAST REVISION 12-13-10 | DATE PLOTTED => 16-DEC-2010 | TIME PLOTTED => 11:47

Dist	COUNTY	ROUTE	POST MILES TOTAL PROJECT	SHEET No.	TOTAL SHEETS
07	LA	91	R6.4/R17.6	3	37

Robert Carl Doria 11-22-10
REGISTERED CIVIL ENGINEER DATE

12-13-10
PLANS APPROVAL DATE

REGISTERED PROFESSIONAL ENGINEER R.C. DORIA No. 50821 Exp. 9-30-11 CIVIL STATE OF CALIFORNIA

THE STATE OF CALIFORNIA OR ITS OFFICERS OR AGENTS SHALL NOT BE RESPONSIBLE FOR THE ACCURACY OR COMPLETENESS OF SCANNED COPIES OF THIS PLAN SHEET.

NOTES:

1. "TRAFFIC FINE DOUBLED IN CONSTRUCTION ZONES" SIGNS SHALL BE PLACED 500 FEET IN ADVANCE OF "ROAD WORK AHEAD" SIGNS OR AS DETERMINED BY THE ENGINEER.
2. LOCATIONS OF CONSTRUCTION AREA SIGNS AS SHOWN ARE APPROXIMATE. EXACT LOCATIONS WILL BE DETERMINED BY THE ENGINEER.
3. EXISTING UTILITY FACILITIES HAVE NOT BEEN PLOTTED ON THESE PLANS.
4. SEE TITLE SHEET FOR "LOCATIONS OF CONSTRUCTION" INDEX.

STATIONARY MOUNTED CONSTRUCTION AREA SIGNS

SIGN NUMBER	SIGN CODE	PANEL SIZE	SIGN MESSAGE	NUMBER OF POSTS AND SIZE	NUMBER OF SIGNS
A	W20-1	48" x 48"	ROAD WORK AHEAD	1 - 6" x 6"	6
B	G20-2	48" x 24"	END ROAD WORK	1 - 4" x 6"	8
C	C40 (CA)	144" x 60"	TRAFFIC FINES DOUBLED IN CONSTRUCTION ZONES	2 - 6" x 6"	3

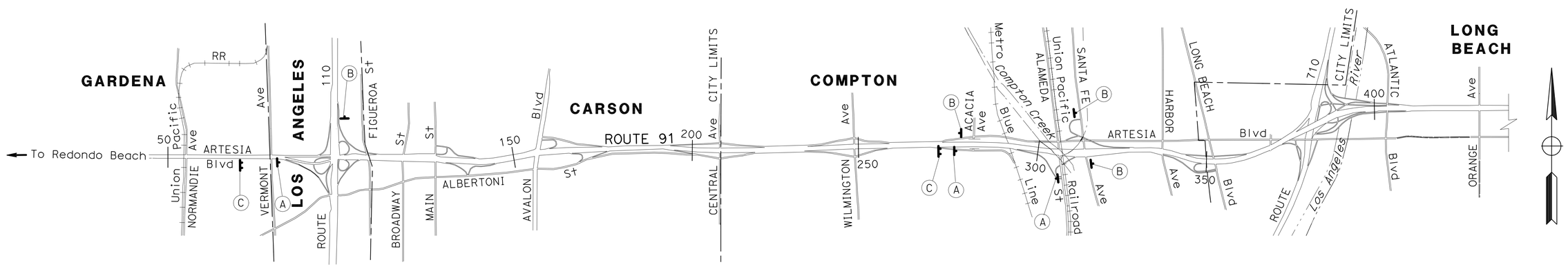

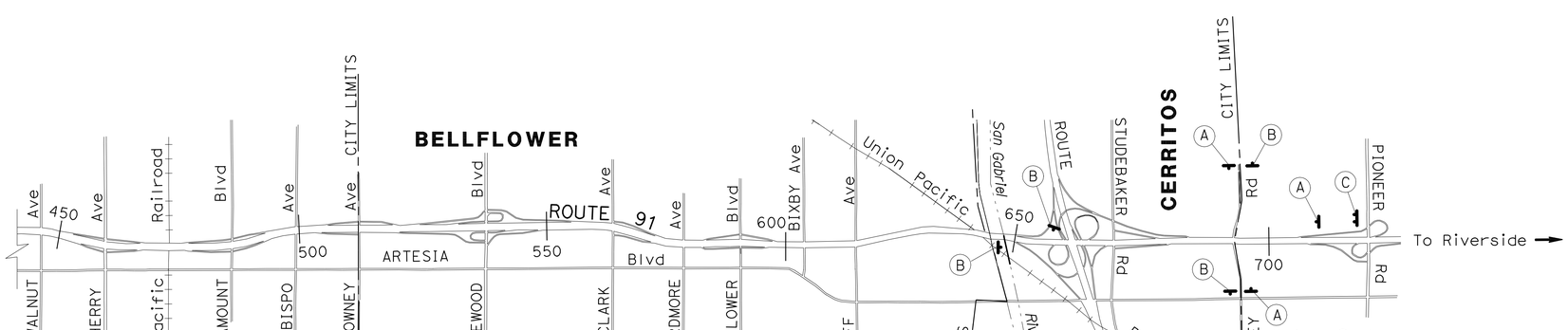

CONSTRUCTION AREA SIGNS

NO SCALE

THIS PLAN ACCURATE FOR CONSTRUCTION AREA SIGN WORK ONLY.

CS-1

STATE OF CALIFORNIA - DEPARTMENT OF TRANSPORTATION
Caltrans MAINTENANCE ENGINEERING

FUNCTIONAL SUPERVISOR: HAMID SAADATNEJADI
CALCULATED-DESIGNED BY: ROBERT CARL DORIA
CHECKED BY: HAMID SAADATNEJADI
REVISED BY
DATE REVISED

LAST REVISION DATE PLOTTED => 16-DEC-2010
12-13-10 TIME PLOTTED => 11:47

Dist	COUNTY	ROUTE	POST MILES TOTAL PROJECT	SHEET No.	TOTAL SHEETS
07	LA	91	R6.4/R17.6	4	37

Denis Katayama 06-17-10
REGISTERED CIVIL ENGINEER DATE

12-13-10
PLANS APPROVAL DATE

REGISTERED PROFESSIONAL ENGINEER D. S. KATAYAMA No. C50648 Exp. 9-30-11 CIVIL STATE OF CALIFORNIA

THE STATE OF CALIFORNIA OR ITS OFFICERS OR AGENTS SHALL NOT BE RESPONSIBLE FOR THE ACCURACY OR COMPLETENESS OF SCANNED COPIES OF THIS PLAN SHEET.

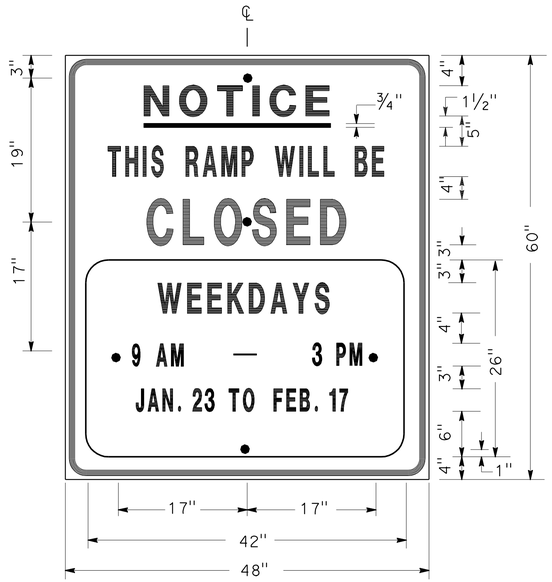

SIGN SP-1

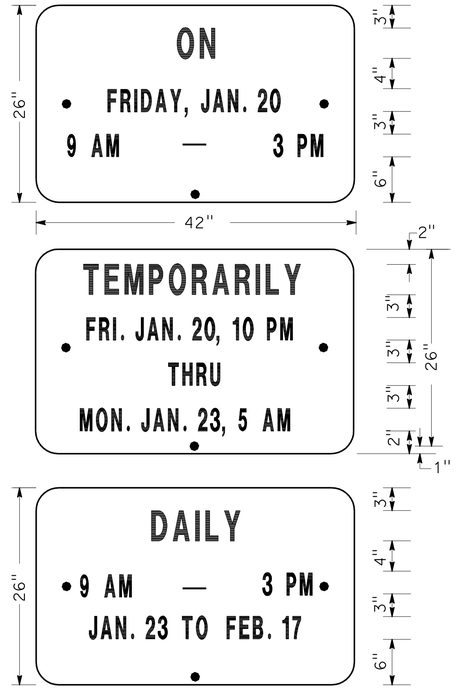

ALTERNATE OVERLAY PANELS (TYPICAL)

SPECIAL ADVANCE NOTICE PUBLICITY SIGN

NOTES: (SIGN SP-1)

1. SIGNS SHALL HAVE ORANGE RETROREFLECTORIZED BACKGROUND WITH BLACK BORDER AND LETTERS.
2. BOLT HOLES SHALL BE 3/8" DIAMETER.
3. BASE MATERIAL SHALL BE ALUMINUM (MINIMUM 0.06").
4. SIGNS SHALL BE MOUNTED WITH BOTTOMS OF SIGNS A MINIMUM OF 6' ABOVE GROUND.

SIZE	BORDER WIDTH	MARGIN WIDTH	LETTER SIZE					CORNER RADIUS
			LINE 1	LINE 2*	LINE 3	LINE 4	LINE 5,6 & 7*	
48"x60"	1 1/4"	3/4"	4E	4D	6E	4D		3"
42"x26"	OVERLAY						3D	1 1/2"
* CONDENSED SPACING IF NECESSARY								

SIGN SP-4

NOTES: (SIGN SP-4)

1. LETTERS - 6" SERIES C.
2. LETTERS AND BORDERS - BLACK ON RETROREFLECTORIZED WHITE BACKGROUND.
3. BASE MATERIAL SHALL BE ALUMINUM (MINIMUM 0.06").
4. SIGNS SHALL BE PLACED AT RAMP ENTRANCES IN ADDITION TO SIGNS POSTED IN ACCORDANCE WITH STANDARD PLAN T14.

SPECIAL SIGN FOR ENTRANCE RAMP CLOSURES

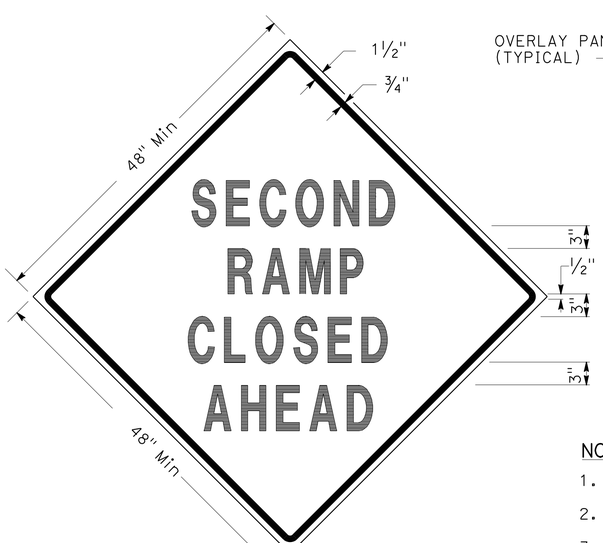

SIGN SP-3

SIGN SP-5

NOTES: (SIGNS SP-3 & SP-5)

1. LETTERS - 6" SERIES D.
2. LETTERS AND BORDERS - BLACK ON RETROREFLECTORIZED ORANGE BACKGROUND.
3. BASE MATERIAL SHALL BE ALUMINUM (MINIMUM 0.06").
4. SIGNS SHALL BE MOUNTED WITH BOTTOMS OF SIGNS A MINIMUM OF 6' ABOVE GROUND.

SPECIAL SIGN FOR EXIT RAMP CLOSURES

TRAFFIC HANDLING DETAILS
TRAFFIC CONTROL SYSTEM FOR RAMP CLOSURES, DETOUR SIGNS AND MISCELLANEOUS DETAILS
SHEET 1 OF 2
NO SCALE

THD-1

STATE OF CALIFORNIA - DEPARTMENT OF TRANSPORTATION
Caltrans DTM

FUNCTIONAL SUPERVISOR	REVISED BY	CALCULATED-DESIGNED BY	CHECKED BY
JOHN YANG	DATE REVISED	JOCELYN C CHIANG	ALBERT K YU
	7/10	JC	

LAST REVISION 12-13-10 | DATE PLOTTED => 16-DEC-2010 | TIME PLOTTED => 11:47

Dist	COUNTY	ROUTE	POST MILES TOTAL PROJECT	SHEET No.	TOTAL SHEETS
07	LA	91	R6.4/R17.6	5	37

Denis Katayama 06-17-10
REGISTERED CIVIL ENGINEER DATE

12-13-10
PLANS APPROVAL DATE

REGISTERED PROFESSIONAL ENGINEER D. S. KATAYAMA No. C50648 Exp. 9-30-11 CIVIL STATE OF CALIFORNIA

THE STATE OF CALIFORNIA OR ITS OFFICERS OR AGENTS SHALL NOT BE RESPONSIBLE FOR THE ACCURACY OR COMPLETENESS OF SCANNED COPIES OF THIS PLAN SHEET.

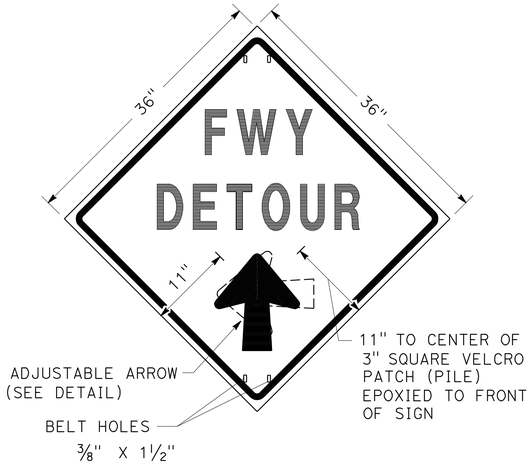

SIGN SP-2

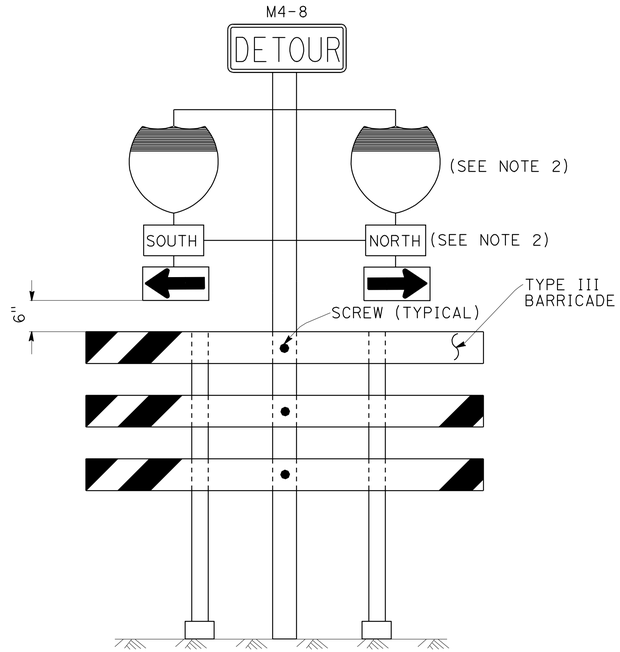

SIGN SP-6 (SEE NOTE 1)

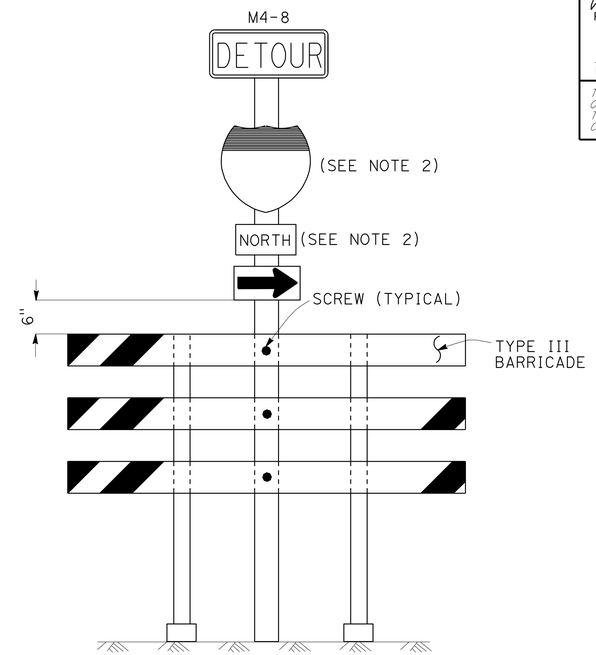

SIGN SP-7 (SEE NOTE 1)

NOTES: (SIGN SP-2)

1. LETTERS -6" SERIES E.
2. LETTERS, BORDER AND ARROW - BLACK ON RETROREFLECTORIZED ORANGE BACKGROUND.
3. BASE MATERIAL FOR SIGNS AND ARROWS SHALL BE ALUMINUM (MINIMUM 0.06").
4. BELTS (LUGGAGE STRAPS) SHALL BE 1" WIDE BY 48" LONG, MADE OF COTTON OR POLYPROPYLENE WEB MATERIAL.
5. SIGNS SHALL BE MOUNTED WITH BOTTOMS OF SIGNS A MINIMUM OF 6' ABOVE GROUND EXCEPT AS OTHERWISE SHOWN ON OTHER TRAFFIC HANDLING DETAILS PLANS.

ABBREVIATION

(CA) CALIFORNIA CODE

NOTES: (SIGNS SP-6 & SP-7)

1. IN LIEU OF PLACING SIGNS ON TYPE III BARRICADES, SIGNS, INCLUDING POSTS, MAY BE PLACED INTO THE GROUND OR FASTENED ONTO ELECTROLIERS.
2. USE APPROPRIATE ROUTE SHIELD [G26-2(CA), G27-2(CA), G28-2(CA)] AND CARDINAL DIRECTION [NORTH (M3-1), SOUTH (M3-3), EAST (M3-2), WEST (M3-4)]

SPECIAL PORTABLE FREEWAY DETOUR SIGNS

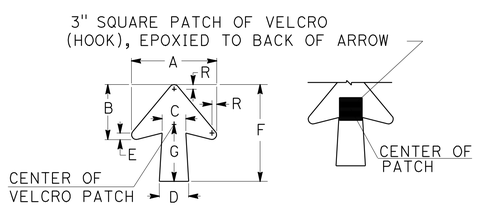

DIMENSIONS							
A	B	C	D	E	F	G	R
11 1/4"	7 1/4"	3 1/8"	4"	7/8"	13"	7 1/2"	5/8"

SPECIAL PORTABLE FREEWAY DETOUR SIGN

ADJUSTABLE ARROW DETAIL

TRAFFIC HANDLING DETAILS

TRAFFIC CONTROL SYSTEM FOR RAMP CLOSURES, DETOUR SIGNS AND MISCELLANEOUS DETAILS

SHEET 2 OF 2

NO SCALE

THD-2

STATE OF CALIFORNIA - DEPARTMENT OF TRANSPORTATION
Caltrans
DTM

FUNCTIONAL SUPERVISOR: JOHN YANG
CALCULATED-DESIGNED BY: ALBERT K YU
CHECKED BY: JOCELYN C CHIANG
REVISED BY: JC
DATE REVISED: 7/10

LAST REVISION DATE PLOTTED => 16-DEC-2010
TIME PLOTTED => 11:48

Dist	COUNTY	ROUTE	POST MILES TOTAL PROJECT	SHEET No.	TOTAL SHEETS
07	LA	91	R6.4/R17.6	6	37

Denis Katayama 06-17-10
REGISTERED CIVIL ENGINEER DATE

12-13-10
PLANS APPROVAL DATE

REGISTERED PROFESSIONAL ENGINEER D. S. KATAYAMA No. C50648 Exp. 9-30-11 CIVIL STATE OF CALIFORNIA

THE STATE OF CALIFORNIA OR ITS OFFICERS OR AGENTS SHALL NOT BE RESPONSIBLE FOR THE ACCURACY OR COMPLETENESS OF SCANNED COPIES OF THIS PLAN SHEET.

LEGEND

- CONE
- TRAFFIC PLASTIC DRUM
- FLASHING ARROW SIGN
- PORTABLE SIGN
- DIRECTION OF TRAVEL
- PORTABLE CHANGEABLE MESSAGE SIGN (PCMS)

ABBREVIATIONS

(CA) CALIFORNIA CODE

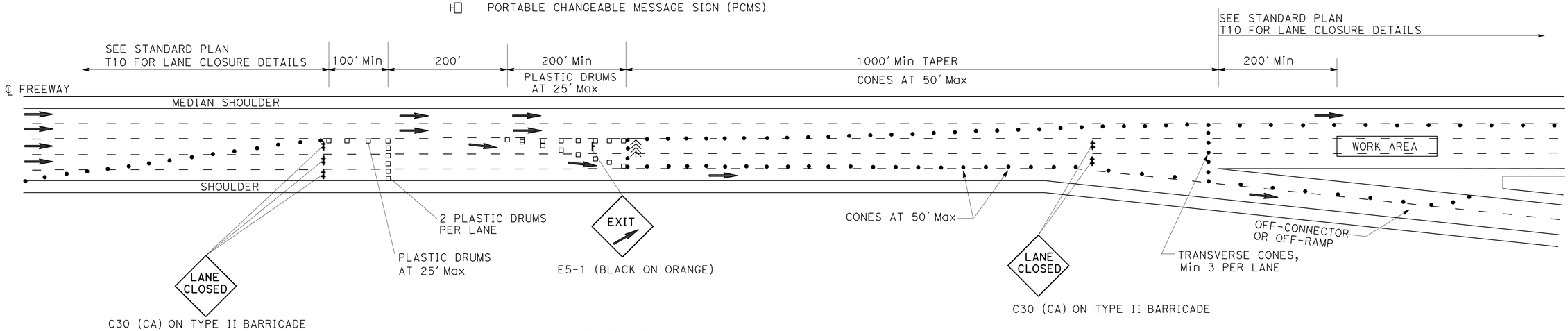

OPTION 1

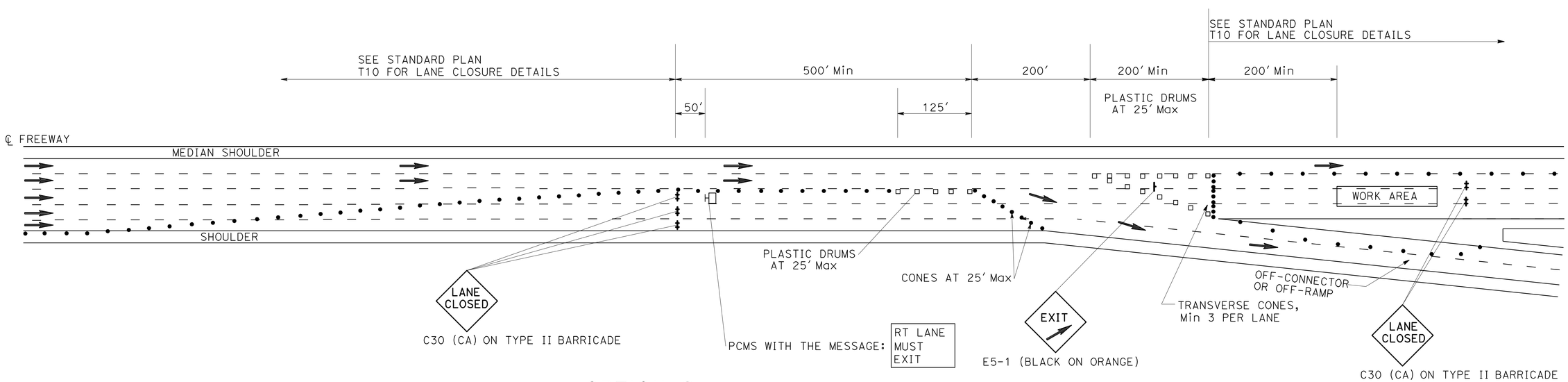

OPTION 2

TRAFFIC HANDLING DETAILS

TRAFFIC CONTROL SYSTEM FOR SLIP-RAMP AT OFF-CONNECTOR OR OFF-RAMP

NO SCALE

THD-3

REVISED BY	DATE REVISED
JC	7/10

ALBERT K YU — JOCELYN C CHIANG — CALCULATED-DESIGNED BY — CHECKED BY

FUNCTIONAL SUPERVISOR: JOHN YANG

STATE OF CALIFORNIA - DEPARTMENT OF TRANSPORTATION — DTM — Caltrans

LAST REVISION 12-13-10 — DATE PLOTTED => 16-DEC-2010 — TIME PLOTTED => 11:48

Dist	COUNTY	ROUTE	POST MILES TOTAL PROJECT	SHEET No.	TOTAL SHEETS
07	LA	91	R6.4/R17.6	7	37

Denis Katayama 06-17-10
REGISTERED CIVIL ENGINEER DATE

12-13-10
PLANS APPROVAL DATE

REGISTERED PROFESSIONAL ENGINEER D. S. KATAYAMA No. C50648 Exp. 9-30-11 CIVIL STATE OF CALIFORNIA

THE STATE OF CALIFORNIA OR ITS OFFICERS OR AGENTS SHALL NOT BE RESPONSIBLE FOR THE ACCURACY OR COMPLETENESS OF SCANNED COPIES OF THIS PLAN SHEET.

NOTES:

1. LANE CLOSURES SHALL NOT BE PLACED ON CREST VERTICAL CURVES OR ON HORIZONTAL CURVES.
2. PCMS SHALL BE ACTIVATED PRIOR TO TRAFFIC CONTROL ACTIVITIES ON THE HOV LANE.
3. A MINIMUM SIGHT DISTANCE OF 1500′ SHALL BE PROVIDED IN ADVANCE OF PCMS.
4. VEHICLE-MOUNTED SIGN PANELS SHALL BE TYPE III OR IV RETROREFLECTORIZED SHEETING, BLACK ON WHITE OR BLACK ON ORANGE WITH 8" MINIMUM SERIES D LETTERS PER CALTRANS SIGN SPECIFICATIONS.
5. PLACE PCMS ON THE MEDIAN SHOULDER WHERE SUFFICIENT ROOM (SUCH AS CHP ENFORCEMENT AREAS) EXISTS.

LEGEND

V1, V2	SHADOW VEHICLE
V3	WORK/APPLICATION VEHICLE
	PORTABLE CHANGEABLE MESSAGE SIGN (PCMS)
	DIRECTION OF TRAVEL
	HOV LANE

ABBREVIATIONS

FAS	FLASHING ARROW SIGN
IAV	IMPACT ATTENUATOR VEHICLE
CMS	CHANGEABLE MESSAGE SIGN
(CA)	CALIFORNIA CODE
PCMS	PORTABLE CHANGEABLE MESSAGE SIGN
HOV	HIGH OCCUPANCY VEHICLE

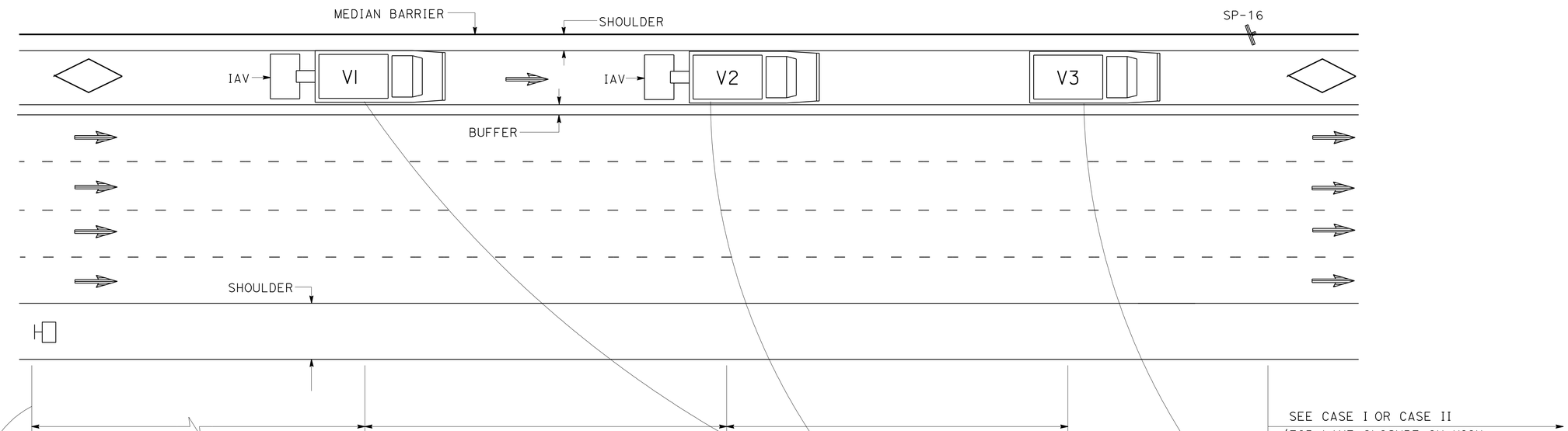

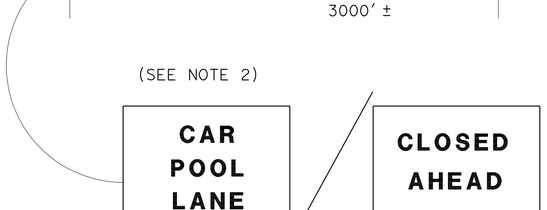

PCMS/TRUCK MOUNTED CMS
(SEE NOTE 5)

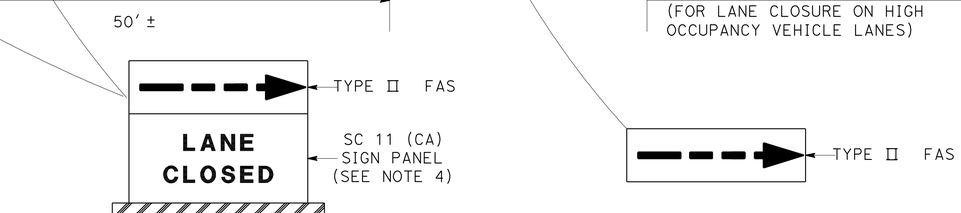

TRAFFIC HANDLING DETAILS
TRAFFIC CONTROL SYSTEM FOR HIGH OCCUPANCY VEHICLE LANES WITH MEDIAN SHOULDERS LESS THAN 8 FEET

NO SCALE

THD-4

STATE OF CALIFORNIA - DEPARTMENT OF TRANSPORTATION
Caltrans DTM

CALCULATED-DESIGNED BY	ALBERT K YU	REVISED BY	JC
CHECKED BY	JOCELYN C CHIANG	DATE REVISED	7/10
FUNCTIONAL SUPERVISOR	JOHN YANG		

LAST REVISION 12-13-10 | DATE PLOTTED => 16-DEC-2010 | TIME PLOTTED => 11:48

Dist	COUNTY	ROUTE	POST MILES TOTAL PROJECT	SHEET No.	TOTAL SHEETS
07	LA	91	R6.4/R17.6	8	37

Denis Katayama 06-17-10
REGISTERED CIVIL ENGINEER DATE

12-13-10
PLANS APPROVAL DATE

REGISTERED PROFESSIONAL ENGINEER D. S. KATAYAMA No. C50648 Exp. 9-30-11 CIVIL STATE OF CALIFORNIA

THE STATE OF CALIFORNIA OR ITS OFFICERS OR AGENTS SHALL NOT BE RESPONSIBLE FOR THE ACCURACY OR COMPLETENESS OF SCANNED COPIES OF THIS PLAN SHEET.

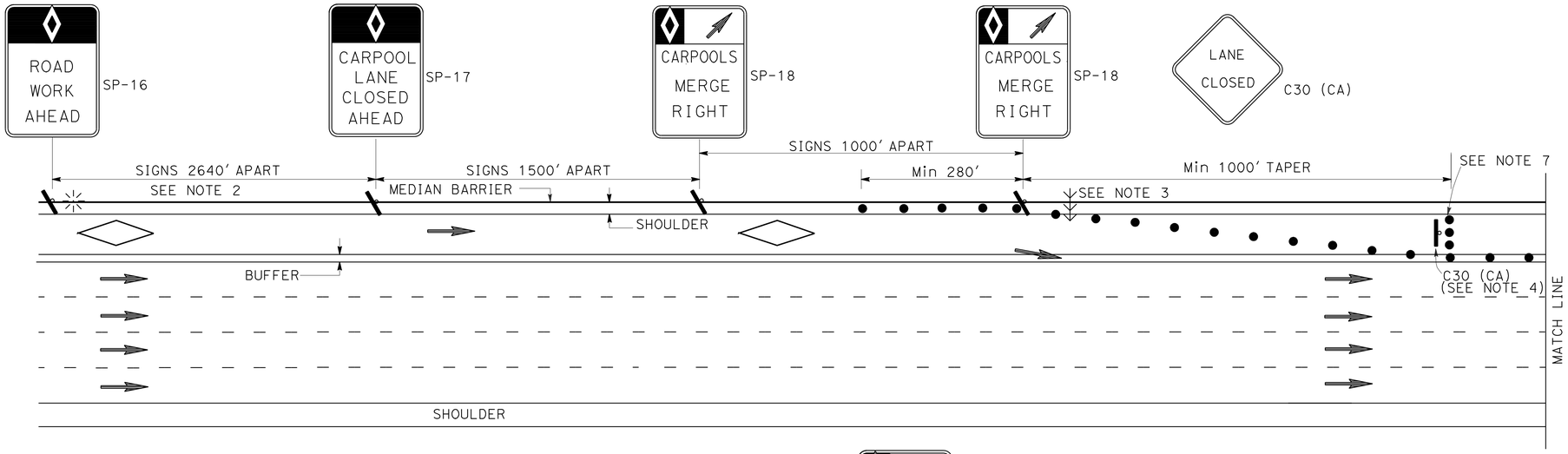

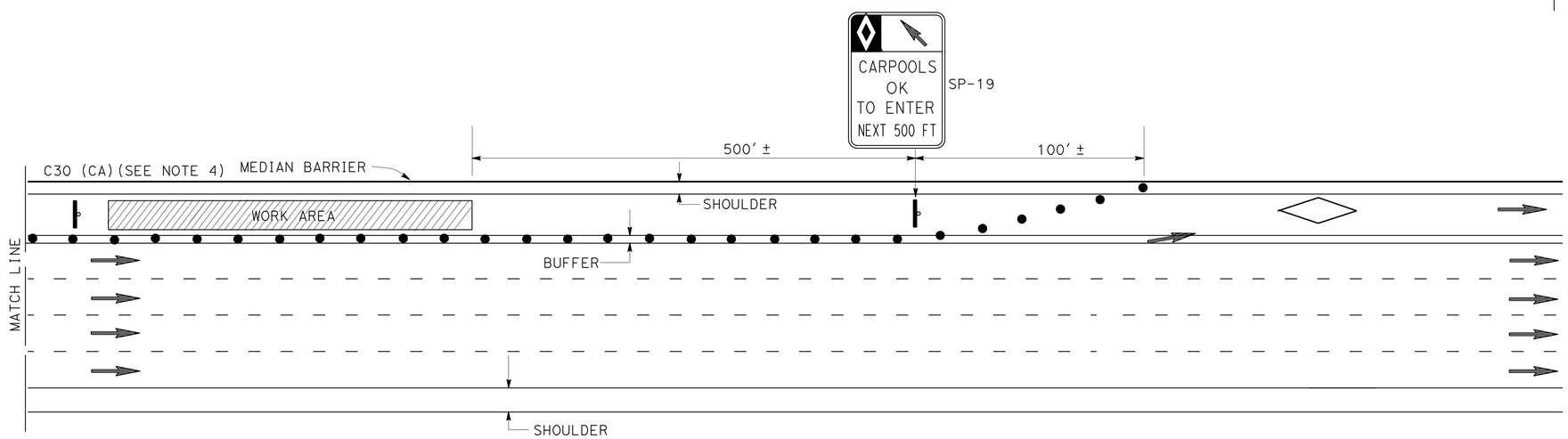

ABBREVIATIONS

(CA) CALIFORNIA CODE

HOV HIGH OCCUPANCY VEHICLE

NOTES: FOR CASE I AND CASE II

1. AT LEAST ONE PERSON SHALL BE ASSIGNED TO FULL TIME MAINTENANCE OF TRAFFIC CONTROL DEVICES ON NIGHT LANE CLOSURES OR DAY-TIME CLOSURES EXCEEDING 1 MILE LENGTH, INCLUDING TAPERS.
2. ADVANCE WARNING SIGN INSTALLATIONS SHALL BE EQUIPPED WITH FLAGS FOR DAYTIME CLOSURES. TYPE B HIGH INTENSITY FLASHING WARNING LIGHTS SHALL BE USED ON SP-16 SIGNS DURING NIGHT LANE CLOSURES. FLAGS AND WARNING LIGHTS SHALL BE ATTACHED TO SIGNS AS APPROVED BY THE ENGINEER.
3. THE FLASHING ARROW SIGN SHALL BE TYPE I.
4. PLACE C30 (CA) SIGNS EVERY 2000′ THROUGHOUT THE LENGTH OF LANE CLOSURE.
5. A MINIMUM 1500′ OF SIGHT DISTANCE SHALL BE PROVIDED WHERE POSSIBLE FOR VEHICLES APPROACHING THE FLASHING ARROW SIGN. LANE CLOSURES ON HORIZONTAL CURVES.
6. PORTABLE DELINEATORS PLACED AT ONE-HALF THE SPACING INDICATED FOR TRAFFIC CONES MAY BE USED INSTEAD OF CONES FOR DAYTIME CLOSURES.
7. A MINIMUM OF 3 CONES SHALL BE PLACED TRANSVERSELY ACROSS CLOSED LANES WHERE TAPERS END AND EVERY 2000′. TWO TYPE II BARRICADES MAY BE USED INSTEAD OF 3 CONES. THE ALIGNMENT OF CONES OR BARRICADES MAY BE SHIFTED FROM THE TRANSVERSE ALIGNMENT TO PROVIDE ACCESS TO WORK.
8. IF AN INGRESS/EGRESS AREA IS WITHIN 5250′ UPSTREAM OR DOWNSTREAM OF THE WORK AREA, LANE CLOSURES SHALL BE EXTENDED TO THAT AREA AS SHOWN IN CASE II.
9. SIGNS SP-16, 17, 18, AND 19 MAY BE OVERLAID ON EXISTING CARPOOL SIGNS IN MEDIANS AS APPROVED BY THE ENGINEER.
10. SIGNS SP-16, 17, 18, AND C30 (CA) SHALL BE BLACK ON ORANGE BACKGROUND. SIGN SP-19 SHALL BE BLACK ON WHITE BACKGROUND. DIAMONDS ON SIGNS SHALL BE WHITE.
11. FOR CLOSURE OF LANE(S) ADJACENT TO HOV LANES, SEE CASE II.
12. THE MAXIMUM SPACING BETWEEN CONES SHALL BE APPROXIMATELY 50′ IN TAPERS AND 100′ ON TANGENTS.

LEGEND

- CONE
- FLASHING BEACON
- HOV LANE
- FLASHING ARROW SIGN
- PORTABLE SIGN
- DIRECTION OF TRAVEL

SIGN PANEL

SIZE (MIN)

SP-16 36" X 54"
SP-17 36" X 54"
SP-18 36" X 48"
SP-19 36" X 60"
C30 (CA) 30" X 30"
G20-2 48" X 24"

TRAFFIC HANDLING DETAILS
TRAFFIC CONTROL SYSTEM FOR HIGH OCCUPANCY VEHICLE LANES AT NON-INGRESS/EGRESS AREAS
CASE I
NO SCALE

THD-5

STATE OF CALIFORNIA - DEPARTMENT OF TRANSPORTATION
Caltrans DTM

FUNCTIONAL SUPERVISOR: JOHN YANG
CALCULATED-DESIGNED BY: ALBERT K YU
CHECKED BY: JOCELYN C CHIANG
REVISED BY: JC
DATE REVISED: 7/10

LAST REVISION 12-13-10 | DATE PLOTTED => 16-DEC-2010 | TIME PLOTTED => 11:25

Dist	COUNTY	ROUTE	POST MILES TOTAL PROJECT	SHEET No.	TOTAL SHEETS
07	LA	91	R6.4/R17.6	9	37

Denis Katayama 06-17-10
REGISTERED CIVIL ENGINEER DATE

12-13-10
PLANS APPROVAL DATE

REGISTERED PROFESSIONAL ENGINEER D. S. KATAYAMA No. C50648 Exp. 9-30-11 CIVIL STATE OF CALIFORNIA

THE STATE OF CALIFORNIA OR ITS OFFICERS OR AGENTS SHALL NOT BE RESPONSIBLE FOR THE ACCURACY OR COMPLETENESS OF SCANNED COPIES OF THIS PLAN SHEET.

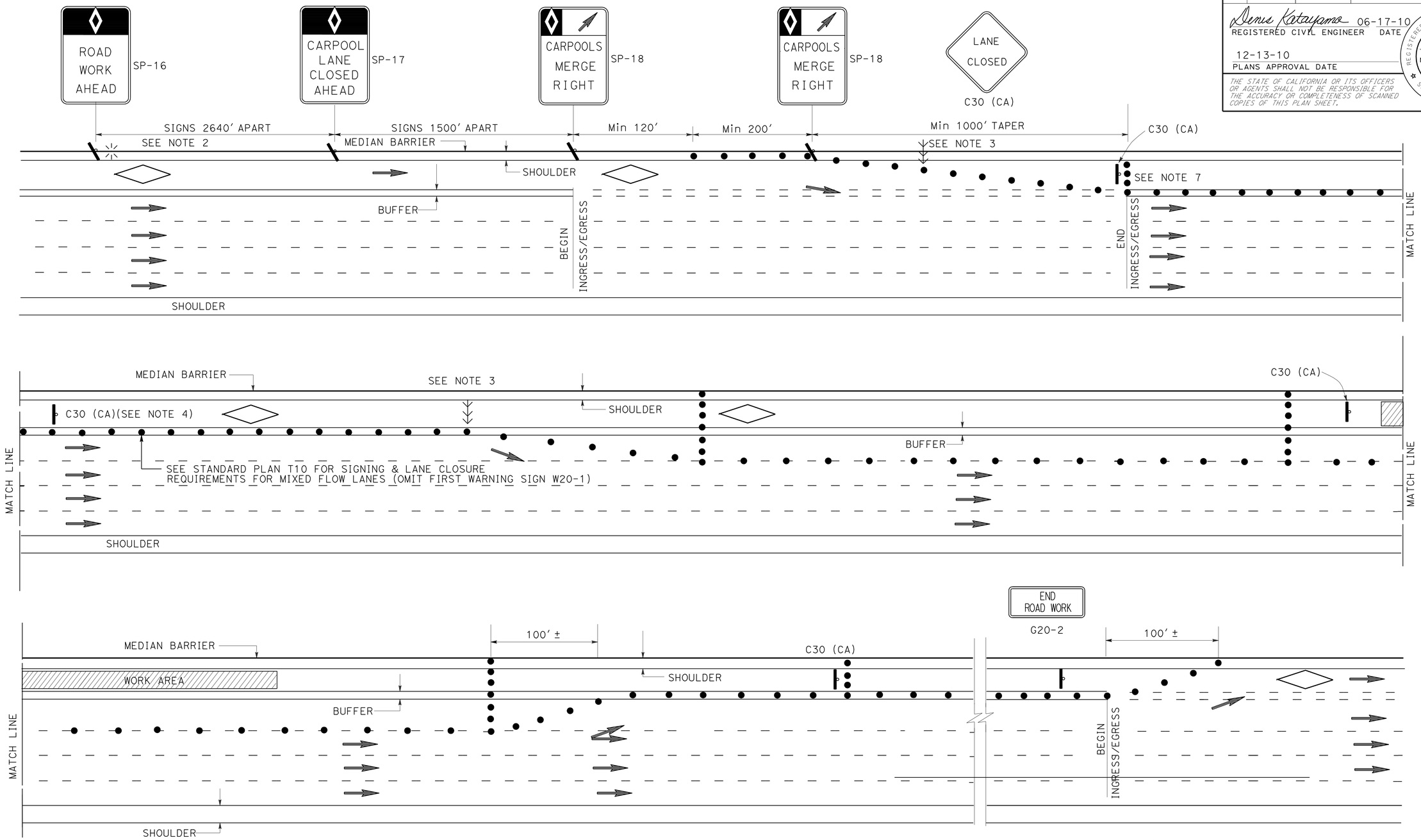

NOTES:

1. SEE CASE I FOR NOTES, LEGENDS AND ABBREVIATIONS FOR THIS SHEET.
2. CLOSURES OF ONE MIXED FLOW TRAFFIC LANE ADJACENT TO HOV LANE SHOWN. MULTIPLE MIXED FLOW LANE CLOSURES ARE SIMILAR.

TRAFFIC HANDLING DETAILS
TRAFFIC CONTROL SYSTEM FOR HIGH OCCUPANCY VEHICLE LANES AND ADJACENT FREEWAY LANES BETWEEN INGRESS/EGRESS AREAS
CASE II

NO SCALE

THD-6

JC	7/10
REVISED BY	DATE REVISED
ALBERT K YU	JOCELYN C CHIANG
CALCULATED-DESIGNED BY	CHECKED BY
FUNCTIONAL SUPERVISOR	JOHN YANG

STATE OF CALIFORNIA - DEPARTMENT OF TRANSPORTATION
Caltrans DTM

LAST REVISION 12-13-10 | DATE PLOTTED => 16-DEC-2010 | TIME PLOTTED => 11:25

Dist	COUNTY	ROUTE	POST MILES TOTAL PROJECT	SHEET No.	TOTAL SHEETS
07	LA	91	R6.4/R17.6	10	37

Denis Katayama 06-17-10
REGISTERED CIVIL ENGINEER DATE

12-13-10
PLANS APPROVAL DATE

REGISTERED PROFESSIONAL ENGINEER D. S. KATAYAMA No. C50648 Exp. 9-30-11 CIVIL STATE OF CALIFORNIA

THE STATE OF CALIFORNIA OR ITS OFFICERS OR AGENTS SHALL NOT BE RESPONSIBLE FOR THE ACCURACY OR COMPLETENESS OF SCANNED COPIES OF THIS PLAN SHEET.

NOTES:

1. WORDING DISPLAYED ON PCMS WILL BE APPROVED BY THE ENGINEER.
2. EXACT LOCATIONS OF PCMS WILL BE DETERMINED BY THE ENGINEER.
3. CHANGE PCMS MESSAGE AT THE BEGINNING OF CURE PERIOD TO REFLECT NUMBER OF CLOSED LANES.

ABBREVIATIONS

PCMS PORTABLE CHANGEABLE MESSAGE SIGN

(CA) CALIFORNIA CODE

LEGEND

- CONE
- PORTABLE SIGN
- DIRECTION OF TRAVEL
- PORTABLE CHANGEABLE MESSAGE SIGN (PCMS)
- (CA) CALIFORNIA CODE

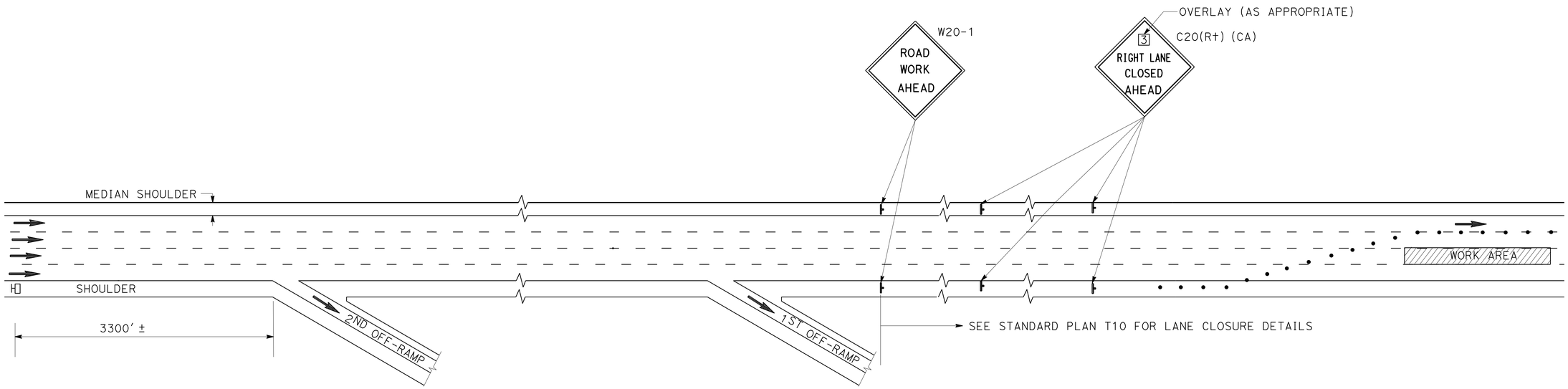

FIRST FLASH MESSAGE	X (NO OF LANES)RIGHT/LEFT	1ST LINE (TYPICAL)
	LANES	2ND LINE (TYPICAL)
	CLOSED	3RD LINE (TYPICAL)
SECOND FLASH MESSAGE	A ST	LIMIT OF CLOSURE (TYPICAL)
	TO	
	B DR	LIMIT OF CLOSURE (TYPICAL)

WORDING FOR PORTABLE CHANGEABLE MESSAGE SIGN

TRAFFIC HANDLING DETAILS
TRAFFIC CONTROL SYSTEM FOR CONCRETE PAVEMENT AND APPROACH SLAB REPLACEMENT
NO SCALE

THD-7

REVISED BY	DATE REVISED
JC	7/10

ALBERT K YU
JOCELYN C CHIANG
CALCULATED-DESIGNED BY
CHECKED BY
FUNCTIONAL SUPERVISOR
JOHN YANG

STATE OF CALIFORNIA - DEPARTMENT OF TRANSPORTATION
Caltrans®
DTM

LAST REVISION 12-13-10
DATE PLOTTED => 16-DEC-2010
TIME PLOTTED => 11:25

Dist	COUNTY	ROUTE	POST MILES TOTAL PROJECT	SHEET No.	TOTAL SHEETS
07	LA	91	R6.4/R17.6	11	37

Denis Katayama 06-17-10
REGISTERED CIVIL ENGINEER DATE

12-13-10
PLANS APPROVAL DATE

REGISTERED PROFESSIONAL ENGINEER D. S. KATAYAMA No. C50648 Exp. 9-30-11 CIVIL STATE OF CALIFORNIA

THE STATE OF CALIFORNIA OR ITS OFFICERS OR AGENTS SHALL NOT BE RESPONSIBLE FOR THE ACCURACY OR COMPLETENESS OF SCANNED COPIES OF THIS PLAN SHEET.

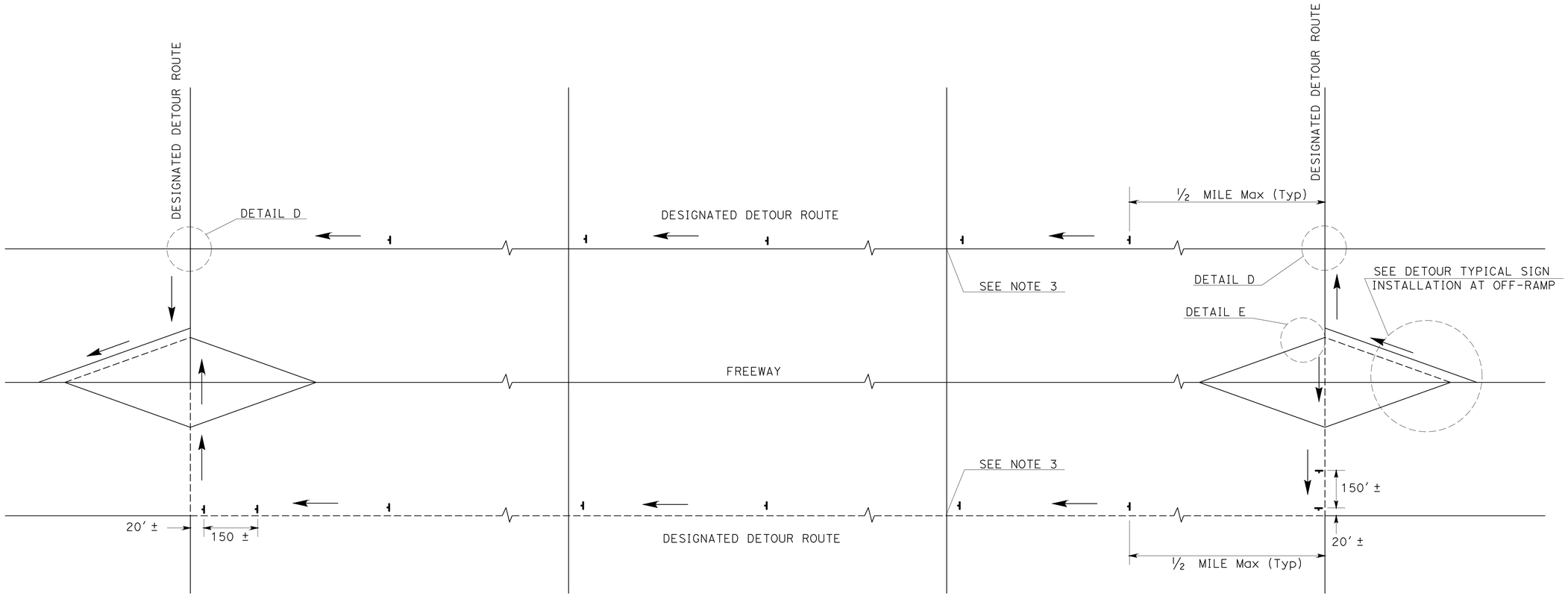

TYPICAL DETOUR SIGN INSTALLATION ALONG DESIGNATED DETOUR ROUTE

LEGEND

- SIGN SP-2
- AND/OR DESIGNATED DETOUR ROUTE
- DIRECTION OF TRAVEL

NOTES:

1. SP-2 SIGNS SHALL NOT BE INSTALLED ON BARRICADES EXCEPT AS OTHERWISE SHOWN.
2. SIGN LOCATIONS ARE APPROXIMATE. EXACT LOCATIONS WILL BE DETERMINED BY THE ENGINEER.
3. SP-2 SIGNS SHALL BE POSTED AT SIGNALIZED INTERSECTIONS ALONG THE DESIGNATED DETOUR ROUTE OR ½ MILE MAXIMUM APART.

TRAFFIC HANDLING DETAILS
TRAFFIC CONTROL SYSTEM FOR DETOUR SIGN INSTALLATION ALONG DESIGNATED DETOUR ROUTE
SHEET 1 OF 2
NO SCALE

THD-8

STATE OF CALIFORNIA - DEPARTMENT OF TRANSPORTATION
Caltrans
DTM

FUNCTIONAL SUPERVISOR: JOHN YANG
CALCULATED-DESIGNED BY: ALBERT K YU
CHECKED BY: JOCELYN C CHIANG
REVISED BY: JC
DATE REVISED: 7/10

LAST REVISION 12-13-10 | DATE PLOTTED => 16-DEC-2010 | TIME PLOTTED => 11:25

Dist	COUNTY	ROUTE	POST MILES TOTAL PROJECT	SHEET No.	TOTAL SHEETS
07	LA	91	R6.4/R17.6	12	37

Denis Katayama 06-16-10
REGISTERED CIVIL ENGINEER DATE

12-13-10
PLANS APPROVAL DATE

REGISTERED PROFESSIONAL ENGINEER D. S. KATAYAMA No. C50648 Exp. 9-30-11 CIVIL STATE OF CALIFORNIA

THE STATE OF CALIFORNIA OR ITS OFFICERS OR AGENTS SHALL NOT BE RESPONSIBLE FOR THE ACCURACY OR COMPLETENESS OF SCANNED COPIES OF THIS PLAN SHEET.

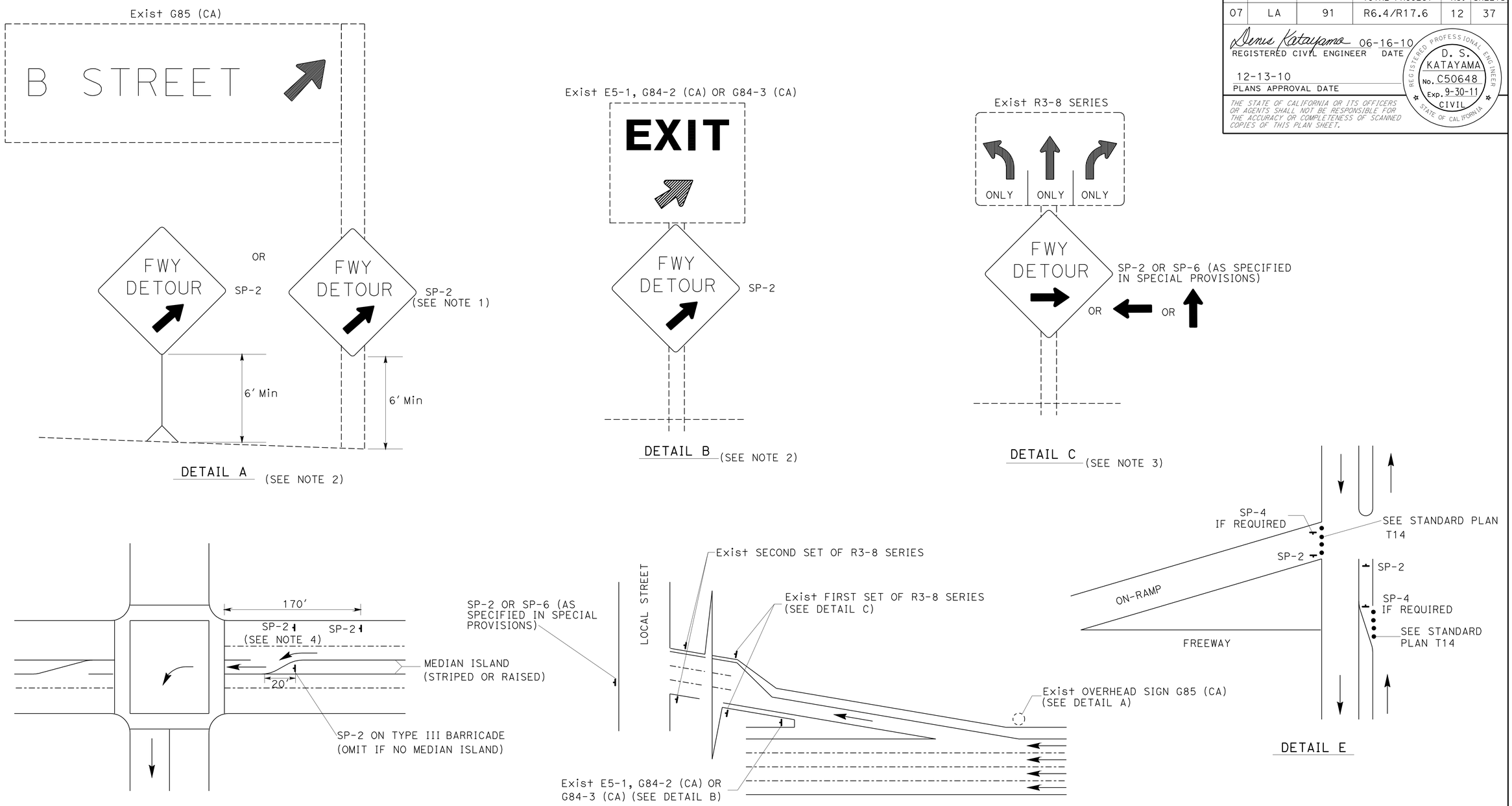

TYPICAL DETOUR SIGN INSTALLATION AT OFF-RAMP

NOTES:

1. SP-2 MAY BE STRAPPED ON EXISTING ELECTROLIER SIGNAL POSTS OR SIGN POSTS.
2. OMIT DETAIL A AND DETAIL B FOR FULL FREEWAY CLOSURES.
3. SEE TRAFFIC HANDLING DETAILS PLAN-TRAFFIC CONTROL SYSTEM FOR RAMP CLOSURES, DETOUR SIGNS AND MISCELLANEOUS DETAILS SHEET 2 OF 2 FOR SP-6.
4. OMIT IF MEDIAN ISLAND EXIST.

ABBREVIATIONS

(CA) CALIFORNIA CODE

LEGENDS

- CONE
- PORTABLE SIGN
- DIRECTION OF TRAVEL
- EXISTING OVERHEAD SIGN

TRAFFIC HANDLING DETAILS
TRAFFIC CONTROL SYSTEM FOR DETOUR SIGN INSTALLATION ALONG DESIGNATED DETOUR ROUTE
SHEET 2 OF 2

NO SCALE

THD-9

STATE OF CALIFORNIA - DEPARTMENT OF TRANSPORTATION
Caltrans DTM

FUNCTIONAL SUPERVISOR: JOHN YANG
CALCULATED-DESIGNED BY: ALBERT K YU
CHECKED BY: JOCELYN C CHIANG
REVISED BY: JC
DATE REVISED: 8/10

LAST REVISION: 12-13-10
DATE PLOTTED => 16-DEC-2010
TIME PLOTTED => 11:26

Dist	COUNTY	ROUTE	POST MILES TOTAL PROJECT	SHEET No.	TOTAL SHEETS
07	LA	91	R6.4/R17.6	13	37

Robert Carl Doria 11-22-10
REGISTERED CIVIL ENGINEER DATE

12-13-10
PLANS APPROVAL DATE

REGISTERED PROFESSIONAL ENGINEER R.C. DORIA No. 50821 Exp. 9-30-11 CIVIL STATE OF CALIFORNIA

THE STATE OF CALIFORNIA OR ITS OFFICERS OR AGENTS SHALL NOT BE RESPONSIBLE FOR THE ACCURACY OR COMPLETENESS OF SCANNED COPIES OF THIS PLAN SHEET.

NOTES:

1. SEE PAVEMENT DELINEATION QUANTITIES FOR LOCATION AND TYPES OF TRAFFIC STRIPES AND PAVEMENT MARKINGS.
2. FOR ACCURATE RIGHT OF WAY AND ACCESS DATA, CONTACT RIGHT OF WAY ENGINEERING AT THE DISTRICT OFFICE.
3. EXISTING UTILITY FACILITIES HAVE NOT BEEN PLOTTED ON THESE PLANS.
4. FOR DETAIL 22, A 3" BLACK LINE SHALL BE PLACED BETWEEN THE 4" YELLOW LINES.

LEGEND:

✳ SEE SHEET PDD-2 FOR HOV LANE STRIPING DETAILS

← DIRECTION OF TRAVEL

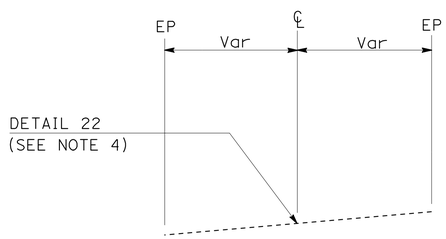

TWO-LANE STREET

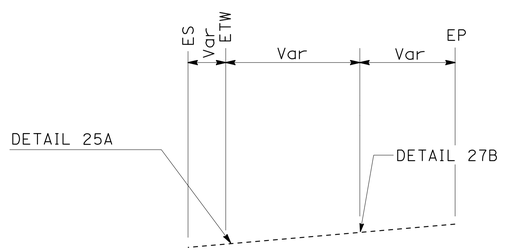

ONE-LANE CONNECTOR

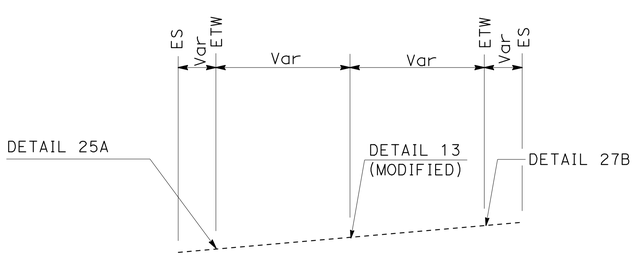

TWO-LANE CONNECTOR OR RAMP

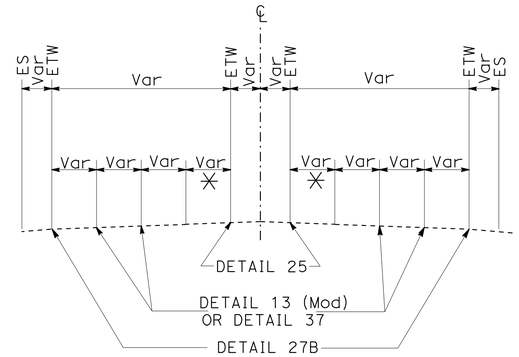

FOUR-LANE FREEWAY SEGMENT

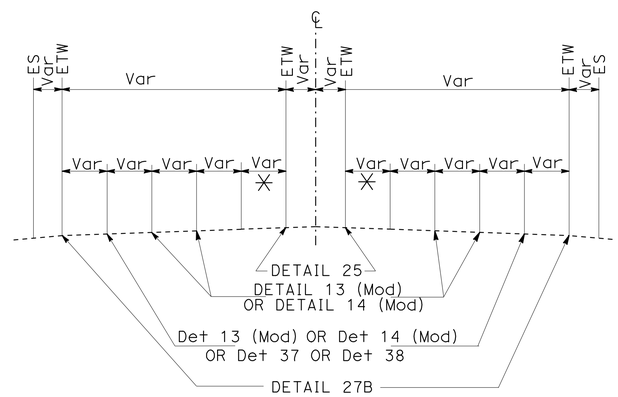

FIVE-LANE FREEWAY SEGMENT

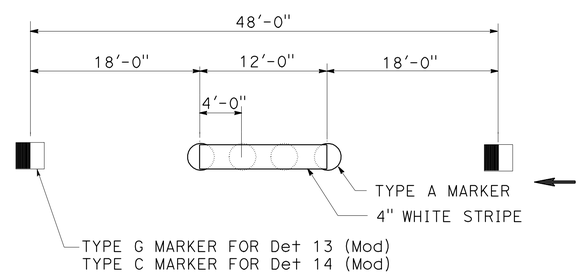

NOTES:

1. REMOVE PAVEMENT MARKERS.
2. PLACE MARKERS AS SHOWN IN THIS DETAIL.
3. PLACE 4" WIDE THERMOPLASTIC TRAFFIC STRIPE ON TOP OF TYPE A NON-REFLECTIVE MARKERS.

Det 13 (Mod)/ Det 14 (Mod)

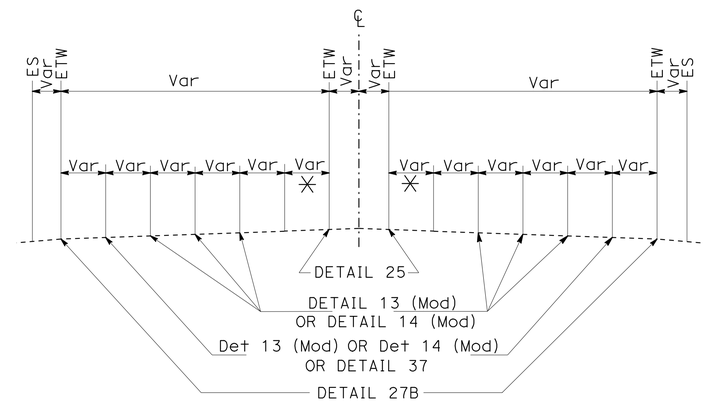

SIX-LANE FREEWAY SEGMENT

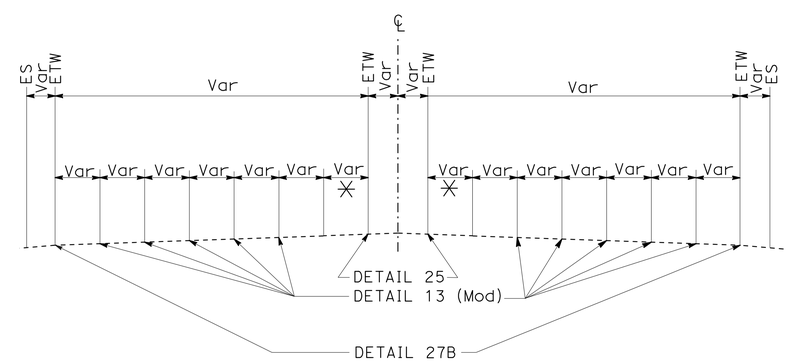

SEVEN-LANE FREEWAY SEGMENT

PAVEMENT DELINEATION DETAILS

NO SCALE

PDD-1

STATE OF CALIFORNIA - DEPARTMENT OF TRANSPORTATION
Caltrans MAINTENANCE ENGINEERING

FUNCTIONAL SUPERVISOR: HAMID SAADATNEJADI
CALCULATED-DESIGNED BY: ROBERT CARL DORIA
CHECKED BY: HAMID SAADATNEJADI
REVISED BY
DATE REVISED

LAST REVISION 12-13-10 | DATE PLOTTED => 16-DEC-2010 | TIME PLOTTED => 11:26

Dist	COUNTY	ROUTE	POST MILES TOTAL PROJECT	SHEET No.	TOTAL SHEETS
07	LA	91	R6.4/R17.6	14	37

Robert Carl Doria 11-22-10
REGISTERED CIVIL ENGINEER DATE

12-13-10
PLANS APPROVAL DATE

REGISTERED PROFESSIONAL ENGINEER R.C. DORIA No. 50821 Exp. 9-30-11 CIVIL STATE OF CALIFORNIA

THE STATE OF CALIFORNIA OR ITS OFFICERS OR AGENTS SHALL NOT BE RESPONSIBLE FOR THE ACCURACY OR COMPLETENESS OF SCANNED COPIES OF THIS PLAN SHEET.

NOTES:

1. PLACE AN ADDITIONAL 4" YELLOW STRIPE ON MIXED FLOW LANE SIDE TO MATCH EXISTING AT WB Loc 2, ACACIA Ave UC.

LEGEND:

- TYPE H ONE-WAY YELLOW RETROREFLECTIVE MARKER
- 4" WHITE STRIPE (THERMOPLASTIC)
- 8" WHITE STRIPE (THERMOPLASTIC)
- 4" YELLOW STRIPE (THERMOPLASTIC)
- 2-TYPE G ONE-WAY CLEAR RETROREFLECTIVE MARKERS
- DIRECTION OF TRAVEL

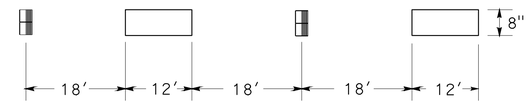

INGRESS/EGRESS STRIPING DETAIL M-10

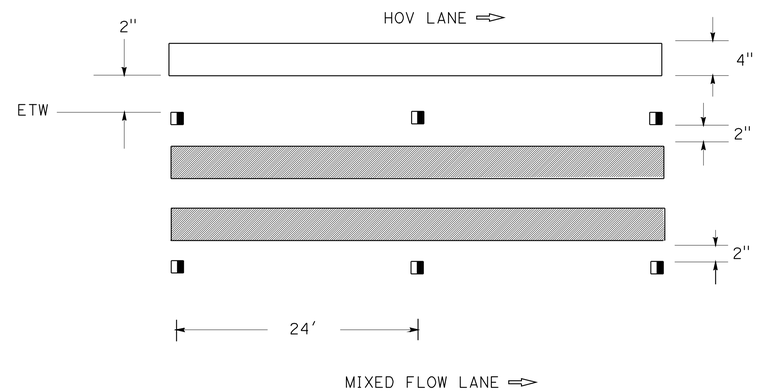

BUFFER STRIPING DETAIL M-9A

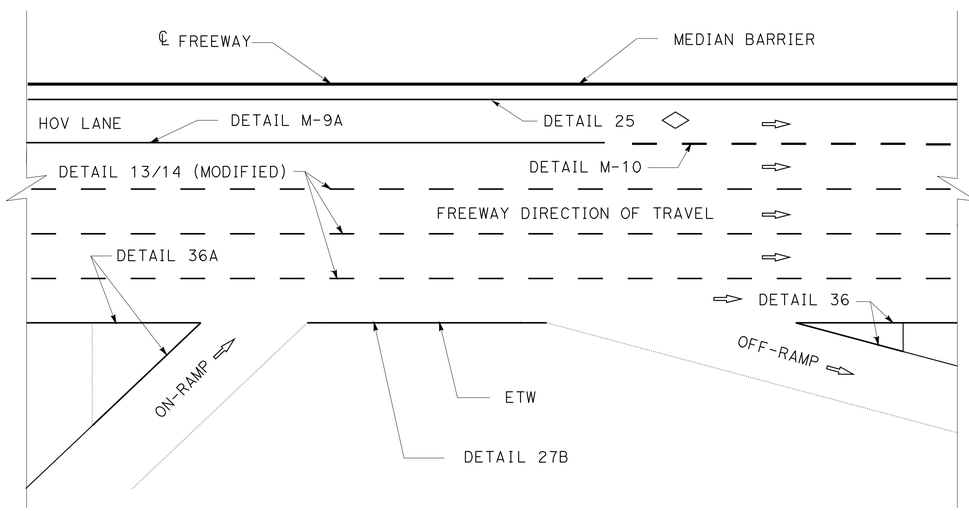

RAMPS

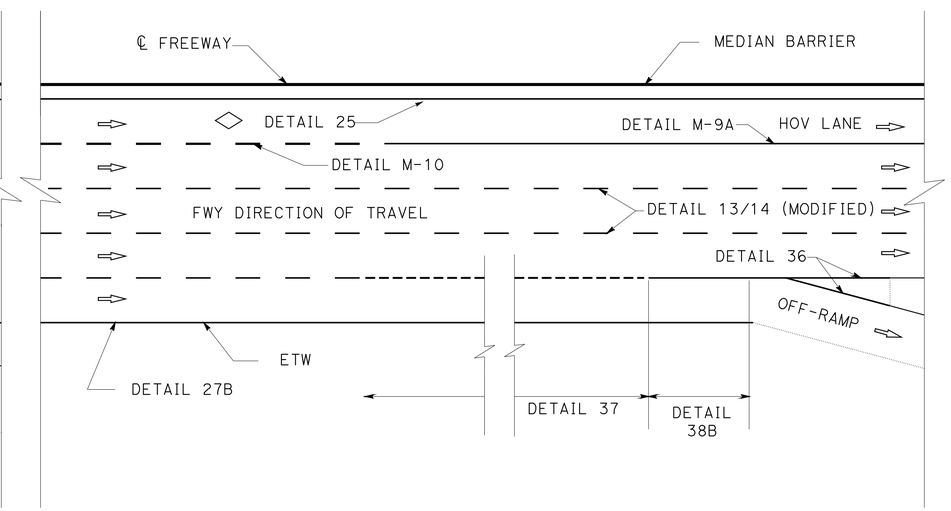

MAINLINE LANE DROP TO A ONE LANE EXIT

PAVEMENT DELINEATION DETAILS

NO SCALE

PDD-2

THIS PLAN ACCURATE FOR PAVEMENT DELINEATION WORK ONLY.

STATE OF CALIFORNIA - DEPARTMENT OF TRANSPORTATION
Caltrans MAINTENANCE ENGINEERING

FUNCTIONAL SUPERVISOR: HAMID SAADATNEJADI
CALCULATED-DESIGNED BY: ROBERT CARL DORIA
CHECKED BY: HAMID SAADATNEJADI
REVISED BY / DATE REVISED

LAST REVISION 12-13-10
DATE PLOTTED => 16-DEC-2010
TIME PLOTTED => 11:26

Dist	COUNTY	ROUTE	POST MILES TOTAL PROJECT	SHEET No.	TOTAL SHEETS
07	LA	91	R6.4/R17.6	15	37

Robert Carl Doria 11-22-10
REGISTERED CIVIL ENGINEER DATE

12-13-10
PLANS APPROVAL DATE

REGISTERED PROFESSIONAL ENGINEER R.C. DORIA No. 50821 Exp. 9-30-11 CIVIL STATE OF CALIFORNIA

THE STATE OF CALIFORNIA OR ITS OFFICERS OR AGENTS SHALL NOT BE RESPONSIBLE FOR THE ACCURACY OR COMPLETENESS OF SCANNED COPIES OF THIS PLAN SHEET.

NOTES:

1. EXTEND PAVEMENT DELINEATION 50 LF BEYOND BRIDGE ENDS.
2. FOR DETAIL 22, A 3" BLACK LINE SHALL BE PLACED BETWEEN THE 4" YELLOW LINES.

PAVEMENT DELINEATION QUANTITIES

	THERMOPLASTIC TRAFFIC STRIPE														THERMOPLASTIC PAVEMENT MARKINGS					PAVEMENT MARKERS					REMOVE YELLOW THERMOPLASTIC TRAFFIC STRIPE (HAZARDOUS WASTE)	REMOVE THERMOPLASTIC TRAFFIC STRIPE	REMOVE THERMOPLASTIC PAVEMENT MARKING	REMOVE PAVEMENT MARKER
	8"						4"													RETROREFLECTIVE				NON-REFLECTIVE				
	Det 36	Det 36A	Det 38	Det 38B	Det 37	Det M-10	Det M-9A		Det 22	Det 25	Det 25A	Det 27B	Det 13 (Mod)	Det 14 (Mod)														
	WHITE	WHITE	WHITE	WHITE	WHITE (BROKEN 12-3)	WHITE (BROKEN 36-12)	YELLOW	WHITE	YELLOW	YELLOW	YELLOW	WHITE	WHITE (BROKEN 36-12)		WORDS	◊	TYPE V ARROW	12" DIAGONALS	12" CHEVRONS	TYPE C	TYPE D	TYPE G	TYPE H	TYPE A	YELLOW	WHITE	WHITE	
Loc No.	LF						LF						LF		SQFT					EA				EA	LF	LF	SQFT	EA
1											1,104	1,104	1,104									28	50	100	1,204	1,505		178
2					248		1,240	496		496		496	1,488					45		9		32	54	124	1,736	1,464	45	219
3			295				1,404	563		564		476	701	862						18		30	62	136	1,404	2,027		246
4	474	167				1,377	2,762	1,381		2,818		3,014	8,421		62			45				242	180	704	5,580	8,473	107	1126
5											801	786	693					30				16	36	60	801	960	30	112
6											529	542	171		63		66	84				5	24	16	529	585	129	45
7	380										699	738	482				33	130	54			27	30	40	699	1,619	217	97
8					292		584	292		584		584	2,336		62	22		36		10		50	39	200	1,168	1,577	120	299
9	768				384		1,536	768		768		768	3,072						240	13		97	86	260	2,304	3,994	240	456
10							1,880	940		940		940	2,820			22						66	62	264	2,820	2,585	22	392
11	208				140		1,036	518		518		518	1,932					40		5		59	60	196	1,554	1,991	40	320
12					220	220	440	220		440		440	1,540		40	11		42		8		45	30	132	880	1,188	93	215
13						283	566	283		566		566	1,981									49	36	168	1,132	1,416		253
14					238	952	476			476		476		1,666				45		50			50	168	1,428	1,465	45	268
15							1,016	508		508		508	1,778					54				42	56	168	1,524	1,461	54	266
16				114	196	306	612	306		612		623	2,472		102	11				7		77	40	208	1,224	2,007	113	332
17											294	298											13		294	298		13
18									684												30				684	342		30
SUBTOTAL	1,830	167	295	114	1,718	3,138	13,552	6,275	684	9,290	3,427	12,877	30,991	2528	329	66	99	551	294	120	30	865	908	2,944	26,965	34,957	1,255	4,867
TOTAL	2,406				1,718	3,138	46,105						33,519		1,339					1,923				2,944	26,965	34,957	1,255	4,867

STATE OF CALIFORNIA - DEPARTMENT OF TRANSPORTATION
Caltrans MAINTENANCE ENGINEERING

FUNCTIONAL SUPERVISOR: HAMID SAADATNEJADI
CALCULATED-DESIGNED BY: ROBERT CARL DORIA
CHECKED BY: HAMID SAADATNEJADI
REVISED BY
DATE REVISED

PAVEMENT DELINEATION QUANTITIES

PDQ-1

LAST REVISION 12-13-10
DATE PLOTTED => 16-DEC-2010
TIME PLOTTED => 11:26

DIST	COUNTY	ROUTE	POST MILES TOTAL PROJECT	SHEET NO.	TOTAL SHEETS
07	LA	91	R6.4/R17.6	16	37

REGISTERED CIVIL ENGINEER

June 6, 2008
PLANS APPROVAL DATE

REGISTERED PROFESSIONAL ENGINEER
Donald E. Howe
No. C46402
Exp. 3-31-09
CIVIL
STATE OF CALIFORNIA

The State of California or its officers or agents shall not be responsible for the accuracy or completeness of electronic copies of this plan sheet.

To accompany plans dated 12-13-10

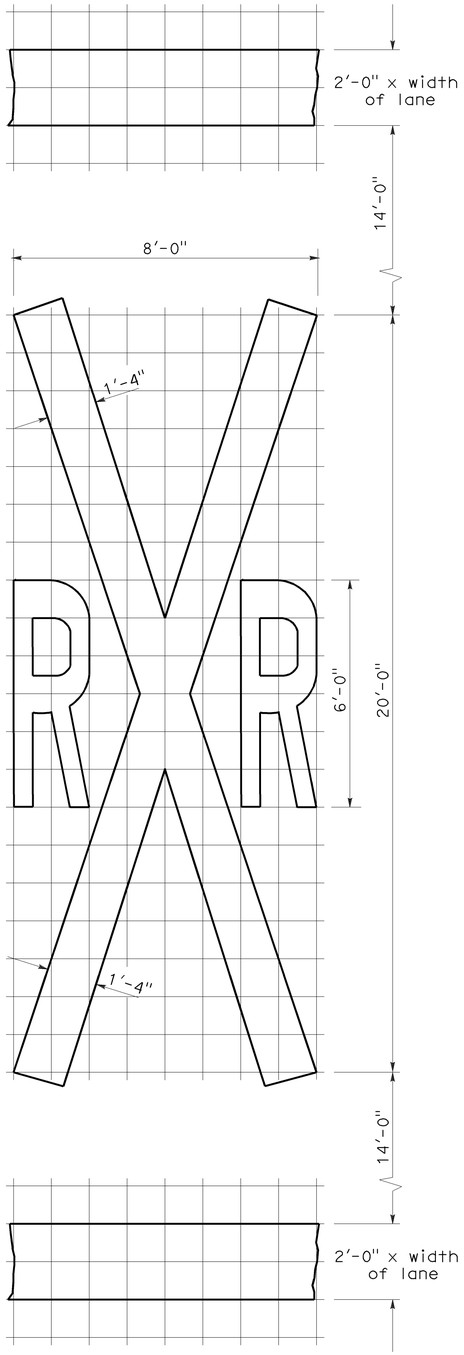

RAILROAD CROSSING SYMBOL

✳70 sq ft DOES NOT INCLUDE THE 2'-0" x VARIABLE WIDTH TRANSVERSE LINES.

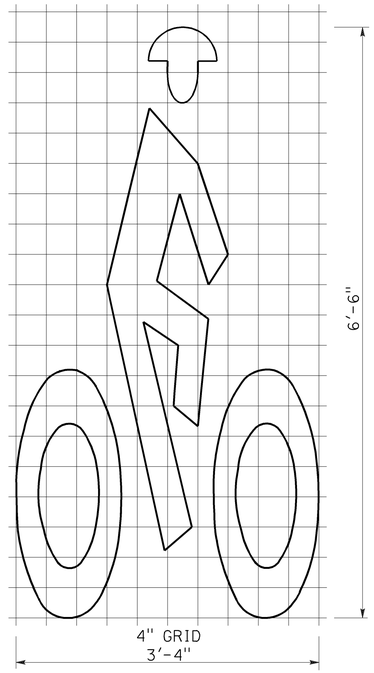

A=7 sq ft

BIKE LANE SYMBOL

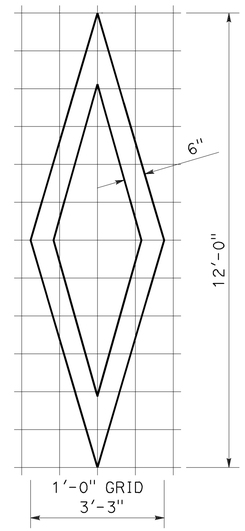

A=11 sq ft

DIAMOND SYMBOL

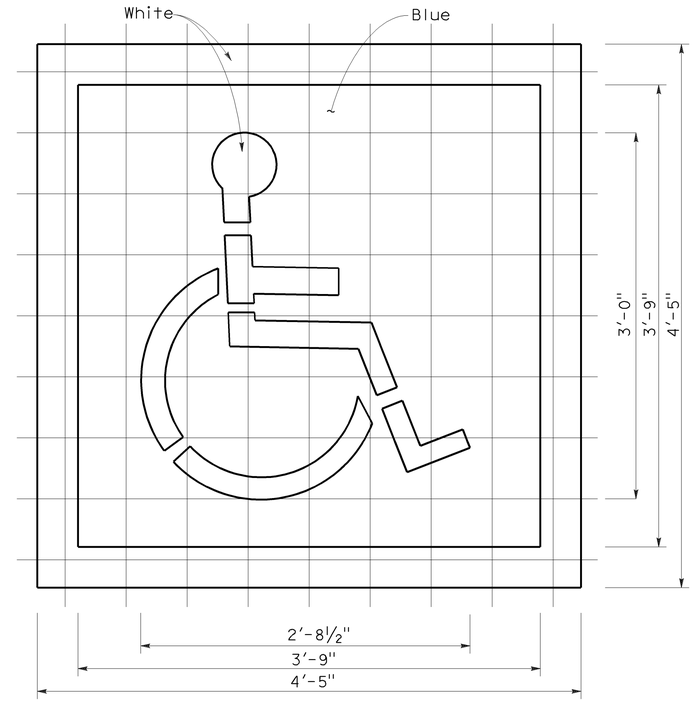

A (White) =9 sq ft
A (Blue) =14 sq ft

INTERNATIONAL SYMBOL OF ACCESSIBILITY MARKING

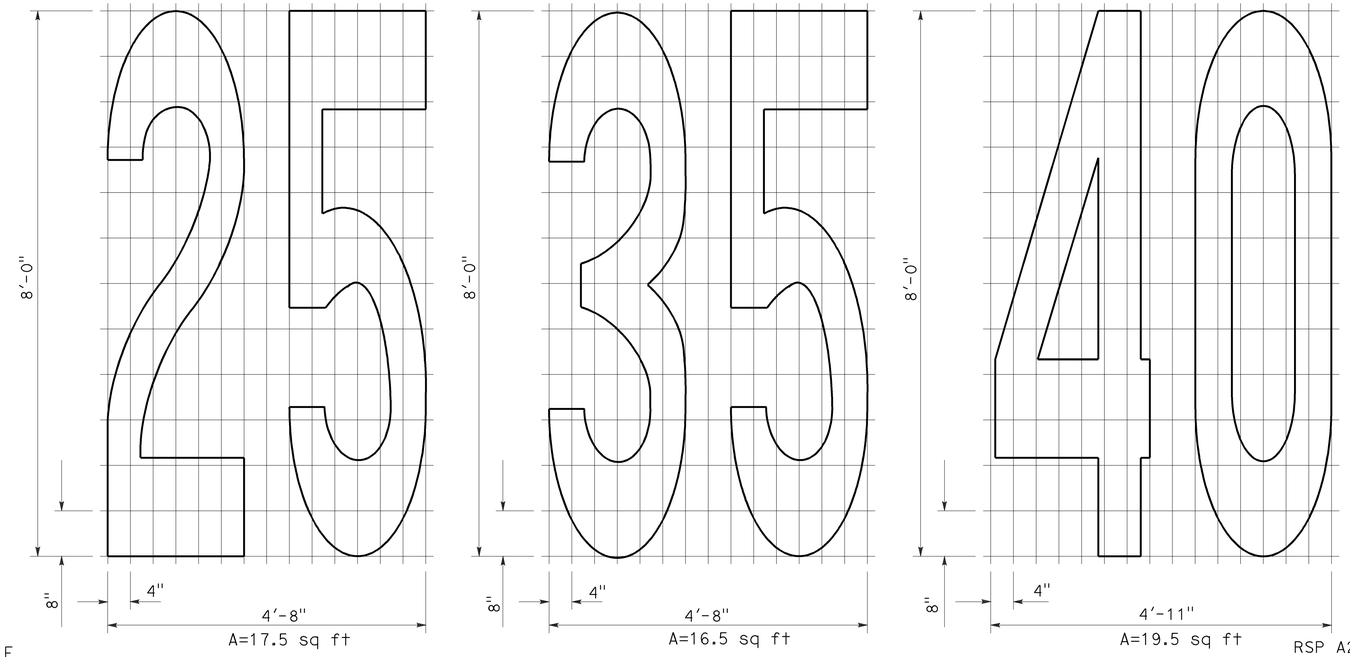

A=17.5 sq ft
A=16.5 sq ft
A=19.5 sq ft

NUMERALS

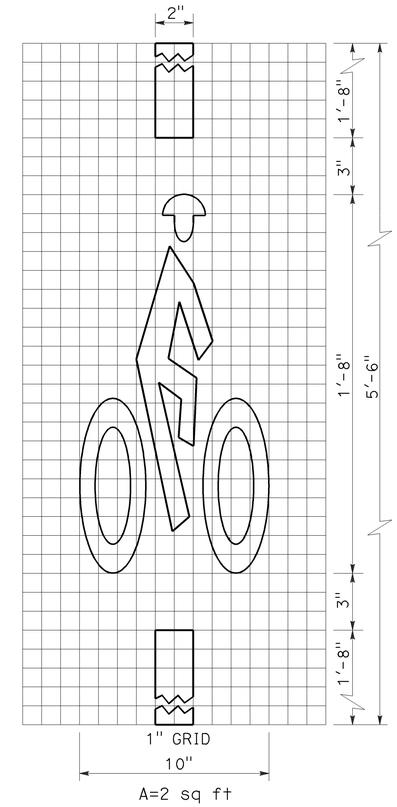

A=2 sq ft

BICYCLE LOOP DETECTOR SYMBOL

NOTE:

1. Minor variations in dimensions may be accepted by the Engineer.

STATE OF CALIFORNIA
DEPARTMENT OF TRANSPORTATION

PAVEMENT MARKINGS SYMBOLS AND NUMERALS

NO SCALE

RSP A24C DATED JUNE 6, 2008 SUPERSEDES STANDARD PLAN A24C DATED MAY 1, 2006 - PAGE 11 OF THE STANDARD PLANS BOOK DATED MAY 2006.

REVISED STANDARD PLAN RSP A24C

2006 REVISED STANDARD PLAN RSP A24C

5-27-08

DIST	COUNTY	ROUTE	POST MILES TOTAL PROJECT	SHEET NO.	TOTAL SHEETS
07	LA	91	R6.4/R17.6	17	37

Randell D. Hiatt
REGISTERED CIVIL ENGINEER

June 6, 2008
PLANS APPROVAL DATE

REGISTERED PROFESSIONAL ENGINEER
Randell D. Hiatt
No. C50200
Exp. 6-30-09
CIVIL
STATE OF CALIFORNIA

The State of California or its officers or agents shall not be responsible for the accuracy or completeness of electronic copies of this plan sheet.

To accompany plans dated 12-13-10

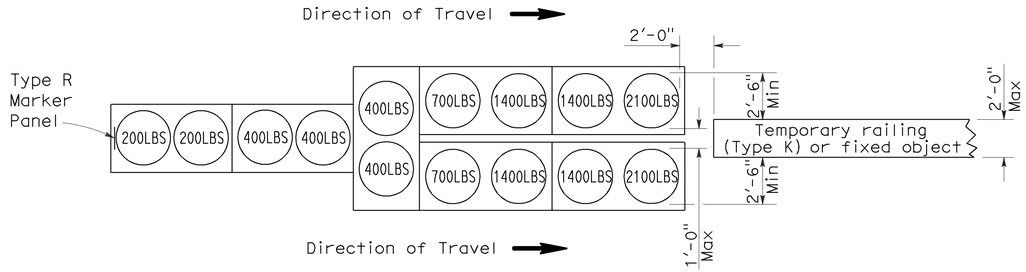

ARRAY 'TU14'

Approach speed 45 mph or more

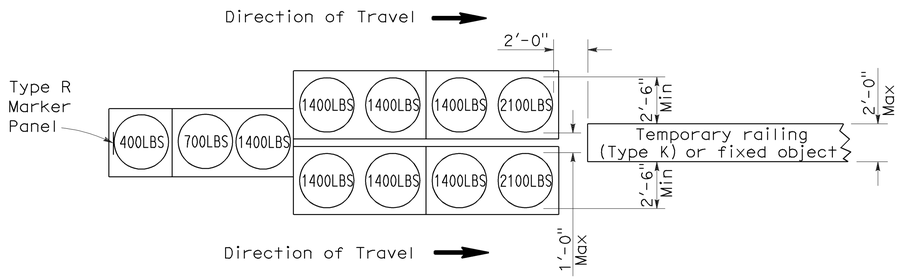

ARRAY 'TU11'

Approach speed less than 45 mph

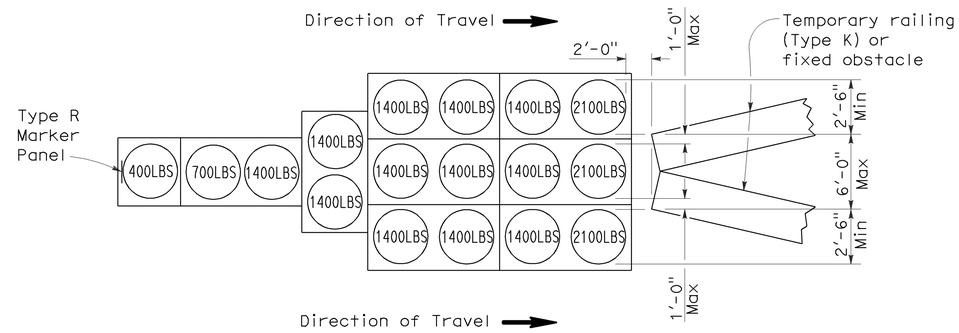

ARRAY 'TU17'

Approach speed less than 45 mph

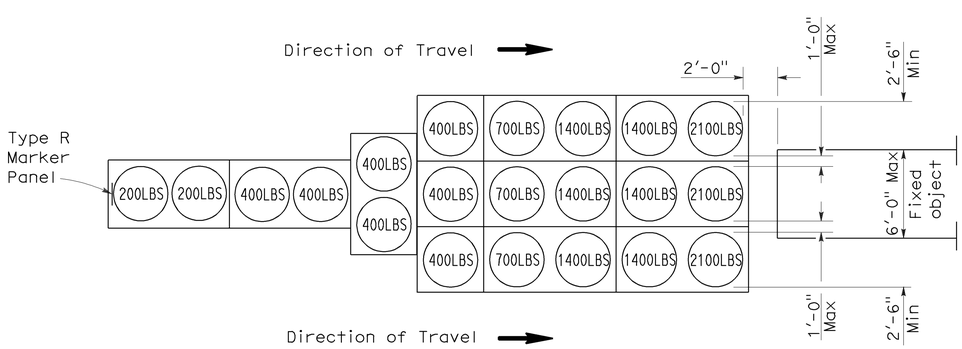

ARRAY 'TU21'

Approach speed 45 mph or more

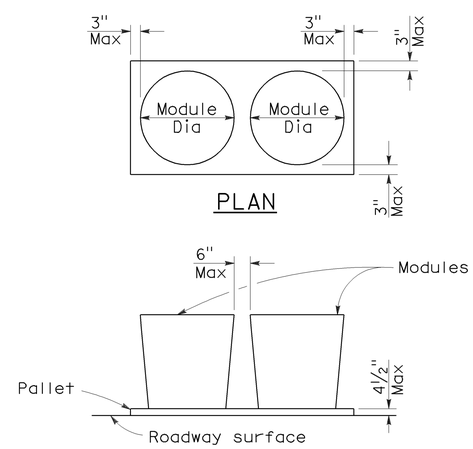

CRASH CUSHION PALLET DETAIL

See Note 7

NOTES:

1. (XXX) Indicates sand filled module location and weight of sand in pounds for each module. Module spacing is based on the greater diameter of the module.
2. All sand weights are nominal.
3. Temporary crash cushion arrays shall not encroach on the traveled way.
4. Place the top of Type R marker panel 1" below the module lid.
5. Refer to Standard Plan A73B for marker details.
6. Approach speeds indicated conform to NCHRP 350 Report criteria.
7. Use of pallets is optional.

STATE OF CALIFORNIA
DEPARTMENT OF TRANSPORTATION

TEMPORARY CRASH CUSHION, SAND FILLED (UNIDIRECTIONAL)

NO SCALE

RSP T1A DATED JUNE 6, 2008 SUPERSEDES STANDARD PLAN T1A
DATED MAY 1, 2006 - PAGE 211 OF THE STANDARD PLANS BOOK DATED MAY 2006.

REVISED STANDARD PLAN RSP T1A

2006 REVISED STANDARD PLAN RSP T1A

DIST	COUNTY	ROUTE	POST MILES TOTAL PROJECT	SHEET NO.	TOTAL SHEETS
07	LA	91	R6.4/R17.6	18	37

Randell D. Hiatt
REGISTERED CIVIL ENGINEER

June 6, 2008
PLANS APPROVAL DATE

REGISTERED PROFESSIONAL ENGINEER
Randell D. Hiatt
No. C50200
Exp. 6-30-09
CIVIL
STATE OF CALIFORNIA

The State of California or its officers or agents shall not be responsible for the accuracy or completeness of electronic copies of this plan sheet.

To accompany plans dated 12-13-10

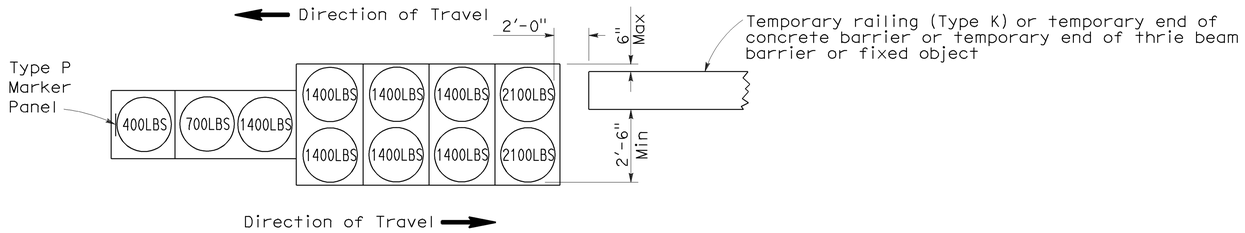

ARRAY 'TB11'

Approach speed less than 45 mph

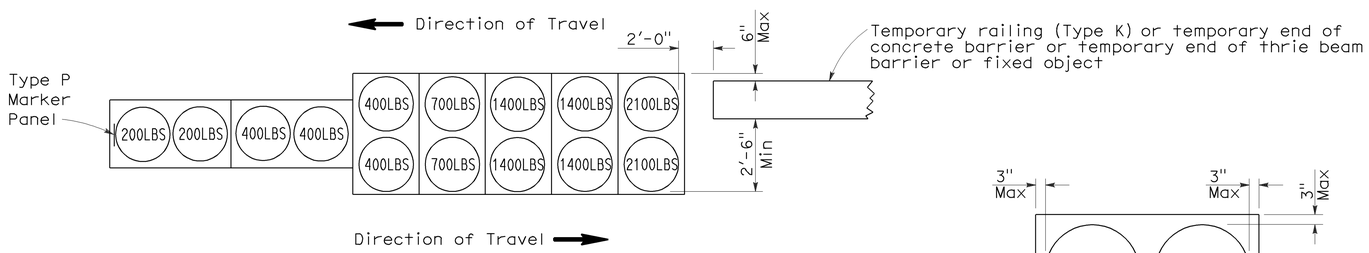

ARRAY 'TB14'

Approach speed 45 mph or more

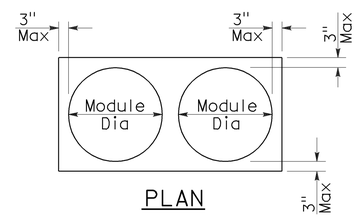

PLAN

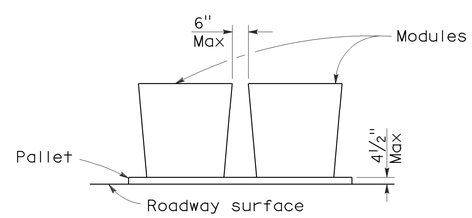

ELEVATION

CRASH CUSHION PALLET DETAIL

See Note 7

NOTES:

1. (XXX) Indicates sand filled module location and weight of sand in pounds for each module. Module spacing is based on the greater diameter of the module.
2. All sand weights are nominal.
3. Temporary crash cushion arrays shall not encroach on the traveled way.
4. Place the Type P marker panel so that the bottom of the panel rests upon the pallet.
5. Refer to Standard Plan A73B for marker details.
6. Approach speeds indicated conform to NCHRP 350 Report criteria.
7. Use of pallets is optional.

STATE OF CALIFORNIA
DEPARTMENT OF TRANSPORTATION

TEMPORARY CRASH CUSHION, SAND FILLED (BIDIRECTIONAL)

NO SCALE

RSP T1B DATED JUNE 6, 2008 SUPERSEDES STANDARD PLAN T1B
DATED MAY 1, 2006 - PAGE 212 OF THE STANDARD PLANS BOOK DATED MAY 2006.

REVISED STANDARD PLAN RSP T1B

2006 REVISED STANDARD PLAN RSP T1B

5-15-08

DIST	COUNTY	ROUTE	POST MILES TOTAL PROJECT	SHEET NO.	TOTAL SHEETS
07	LA	91	R6.4/R17.6	19	37

Randell D. Hiatt
REGISTERED CIVIL ENGINEER

June 6, 2008
PLANS APPROVAL DATE

REGISTERED PROFESSIONAL ENGINEER
Randell D. Hiatt
No. C50200
Exp. 6-30-09
CIVIL
STATE OF CALIFORNIA

The State of California or its officers or agents shall not be responsible for the accuracy or completeness of electronic copies of this plan sheet.

To accompany plans dated 12-13-10

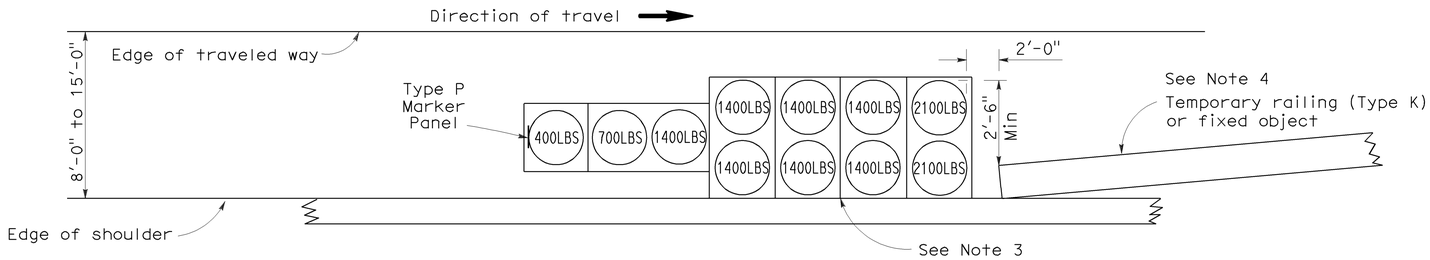

ARRAY 'TS11'

Approach speed less than 45 mph
See Note 9

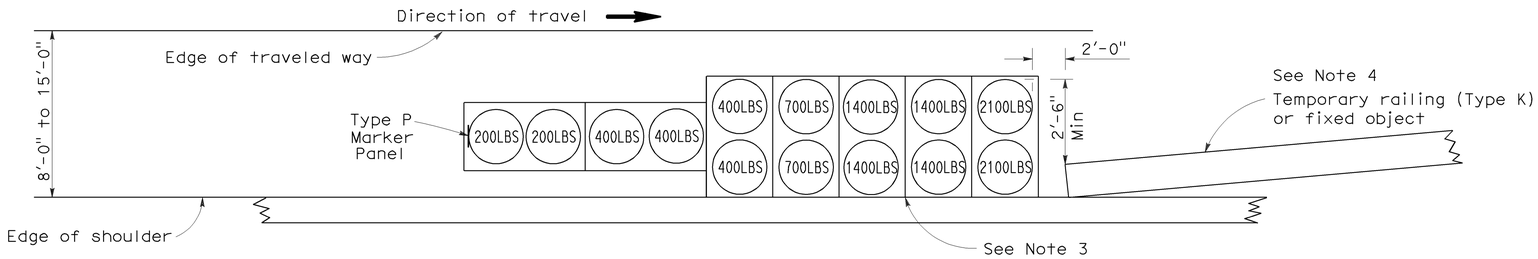

ARRAY 'TS14'

Approach speed 45 mph or more
See Note 9

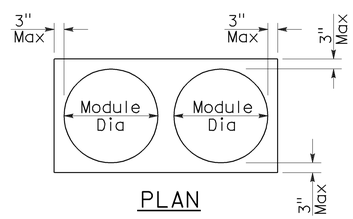

PLAN

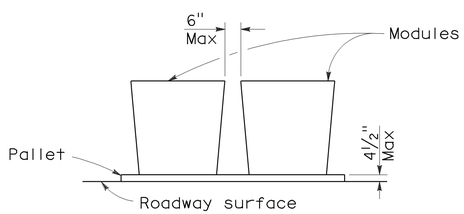

ELEVATION

CRASH CUSHION PALLET DETAIL

See Note 11

NOTES:

1. (XXX) Indicates sand filled module location and weight of sand in pounds for each module. Module spacing is based on the greater diameter of the module.
2. All sand weights are nominal.
3. The temporary crash cushion arrays shown on this plan shall be used only in locations where there will be traffic on one side of the temporary crash cushion array.
4. If the fixed object or approach end of the temporary railing is less than 15'-0" from the edge of traveled way, a temporary crash cushion is required in a construction or work zone.
5. Temporary crash cushion arrays shall not encroach on the traveled way.
6. Arrays for median shoulders shall conform to details shown on this plan for outside shoulders.
7. Place the Type P marker panel so that the bottom of the panel rests upon the pallet and faces traffic.
8. Refer to Standard Plan A73B for marker details.
9. For shoulder widths less than 8'-0", appropriate approved crash cushion protection, other than sand filled modules, shall be provided at fixed objects and at approach ends of temporary railing. The specific type of crash cushion shall be as shown on the project plans or as specified in the Special Provisions, or if not shown on the project plans or specified in the Special Provisions, shall be as approved by the Engineer.
10. Approach speeds indicated conform to NCHRP 350 Report criteria.
11. Use of pallets is optional.

STATE OF CALIFORNIA
DEPARTMENT OF TRANSPORTATION

TEMPORARY CRASH CUSHION, SAND FILLED (SHOULDER INSTALLATIONS)

NO SCALE

RSP T2 DATED JUNE 6, 2008 SUPERSEDES STANDARD PLAN T2
DATED MAY 1, 2006 - PAGE 213 OF THE STANDARD PLANS BOOK DATED MAY 2006.

REVISED STANDARD PLAN RSP T2

2006 REVISED STANDARD PLAN RSP T2

5-15-08

DIST	COUNTY	ROUTE	POST MILES TOTAL PROJECT	SHEET NO.	TOTAL SHEETS
07	LA	91	R6.4/R17.6	20	37

Greg W. Edwards
REGISTERED CIVIL ENGINEER

November 17, 2006
PLANS APPROVAL DATE

REGISTERED PROFESSIONAL ENGINEER
Greg W. Edwards
No. C36386
Exp. 6-30-08
CIVIL
STATE OF CALIFORNIA

The State of California or its officers or agents shall not be responsible for the accuracy or completeness of electronic copies of this plan sheet.

To accompany plans dated 12-13-10

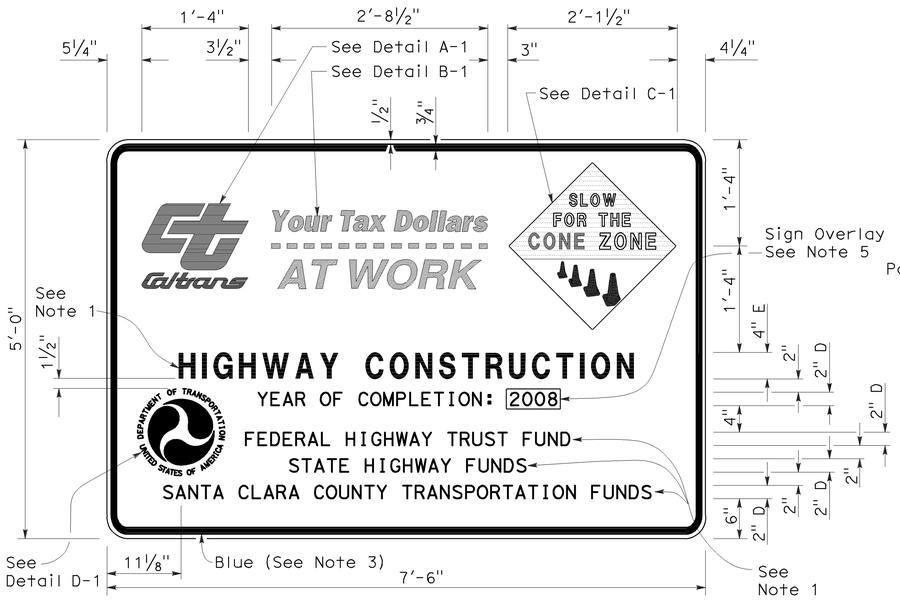

TYPE 1

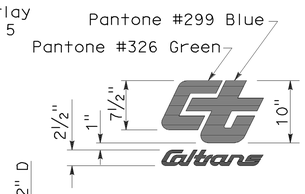

DETAIL A-1

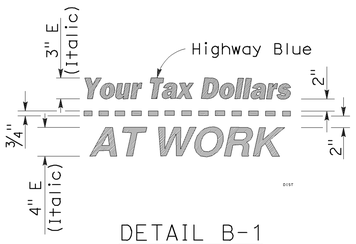

DETAIL B-1
(See Note 3)

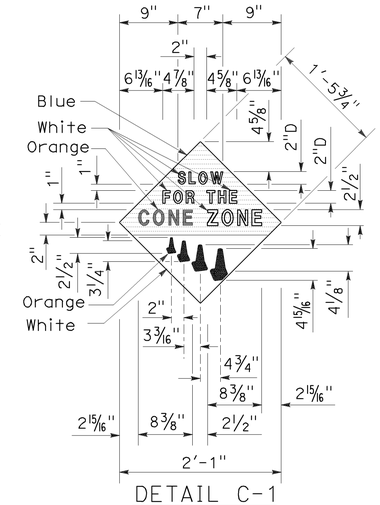

DETAIL C-1
(See Note 4)

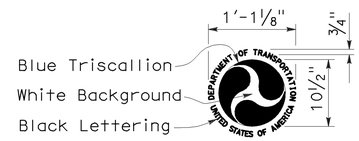

DETAIL D-1
(See Note 6)

NOTES:

1. The sign messages shown for type of project and fund types are examples only. See the Special Provisions for the applicable type of project and fund type messages to be used.
2. Except as otherwise shown, the legend of sign shall be black on a white background (non-reflective).
3. The border of the signs and details "B-1" and "B-2" shall be blue (non-reflective).
4. The diamond in details "C-1" and "C-2" shall be blue for the background of message, " SLOW FOR THE CONE ZONE", and white background for the orange cones. The color and type of font for the "SLOW FOR THE CONE ZONE" message shall be: "SLOW" white D; "FOR THE" white D; "CONE" orange Arial font; "ZONE" white Arial font.
5. Year of completion of project construction shown on the overlay is an example only. See the Special Provisions.
6. Use when the Project involves Federal Highway Trust Fund.

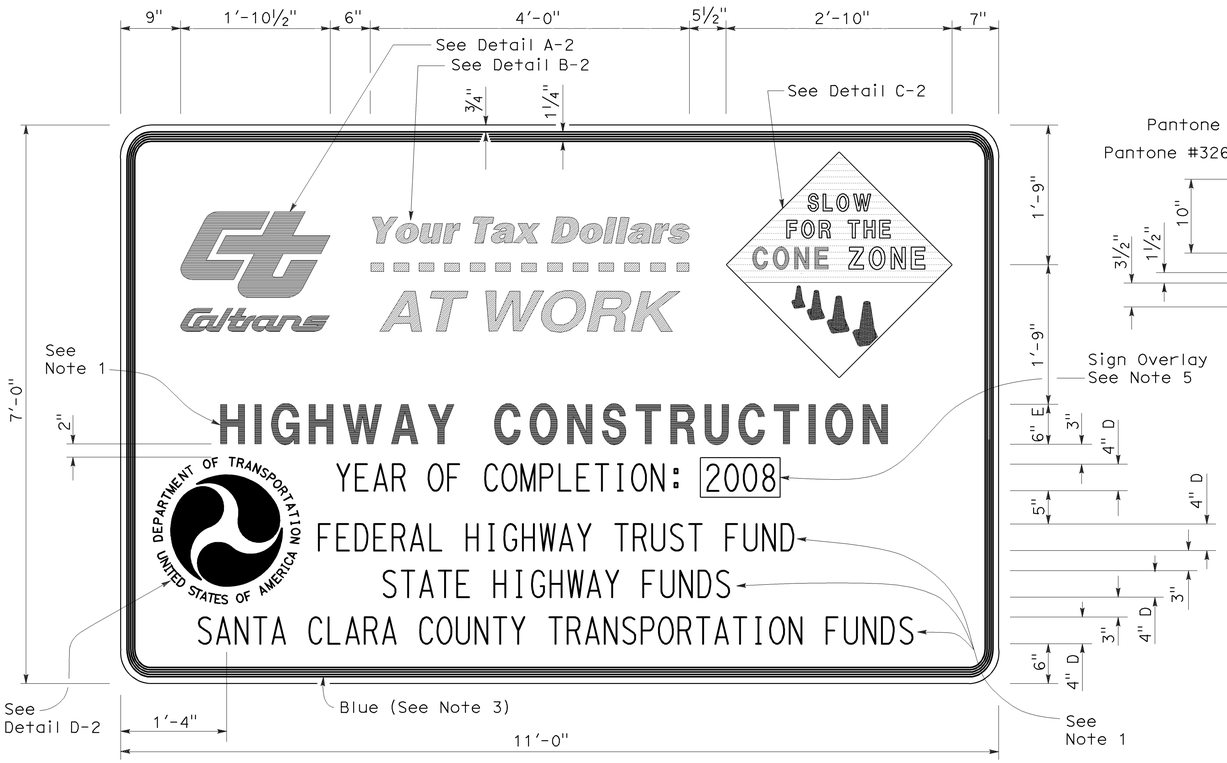

TYPE 2

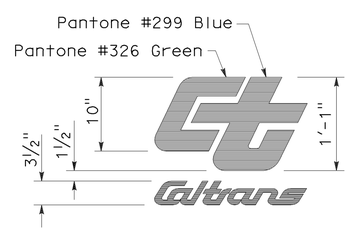

DETAIL A-2

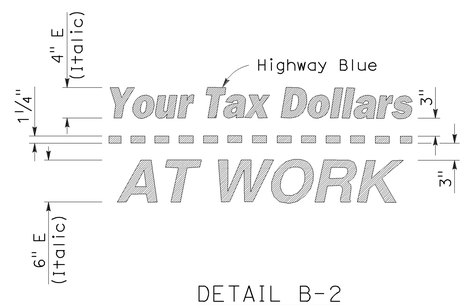

DETAIL B-2
(See Note 3)

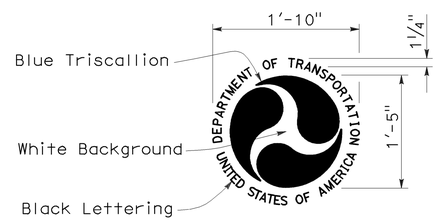

DETAIL D-2
(See Note 6)

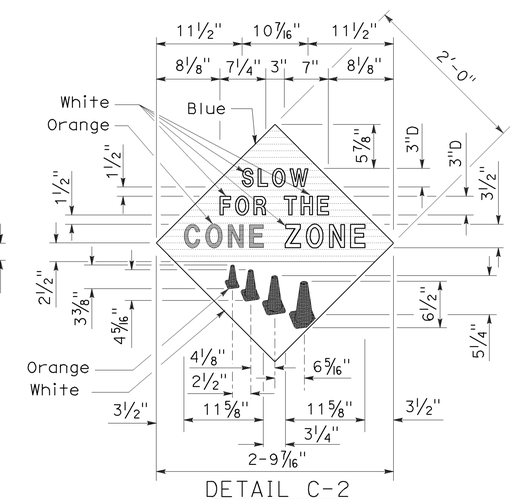

DETAIL C-2
(See Note 4)

STATE OF CALIFORNIA
DEPARTMENT OF TRANSPORTATION

CONSTRUCTION PROJECT FUNDING IDENTIFICATION SIGNS

NO SCALE

RSP T7 DATED NOVEMBER 17, 2006 SUPERSEDES STANDARD PLAN T7
DATED MAY 1, 2006 - PAGE 217 OF THE STANDARD PLANS BOOK DATED MAY 2006.

REVISED STANDARD PLAN RSP T7

2006 REVISED STANDARD PLAN RSP T7

9-7-06

DIST	COUNTY	ROUTE	POST MILES TOTAL PROJECT	SHEET NO.	TOTAL SHEETS
07	LA	91	R6.4/R17.6	21	37

REGISTERED CIVIL ENGINEER

October 5, 2007
PLANS APPROVAL DATE

REGISTERED PROFESSIONAL ENGINEER Efthymios Delis No. C51434 Exp. 6-30-08 CIVIL STATE OF CALIFORNIA

The State of California or its officers or agents shall not be responsible for the accuracy or completeness of electronic copies of this plan sheet.

To accompany plans dated 12-13-10

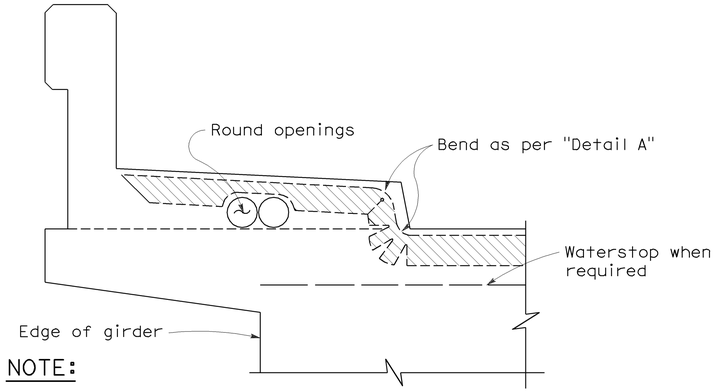

NOTE:

Type "B" seal shown. Type "A" seals to comform to the general path of seal shown, cuts for bending not required. Bend Type "A" seals 3" up into curb or barrier rail on only the low end of the seal.

CONCRETE BARRIER AND SIDEWALK

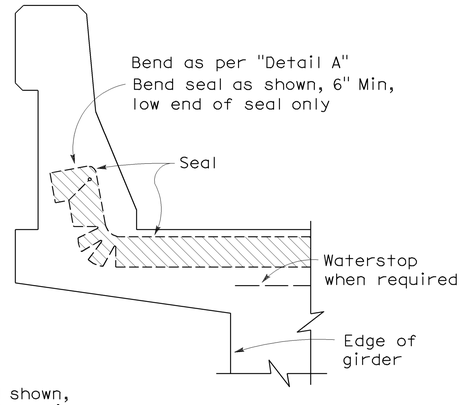

CONCRETE BARRIER

JOINT SEALS DETAILS

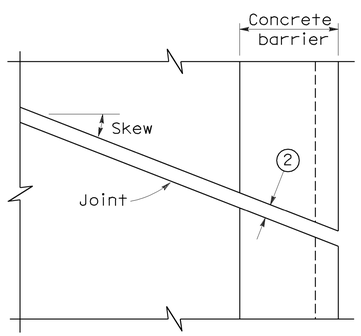

PLAN OF JOINT (SKEW ≤ 20°)

Min ℄ radius to be 4 times uncompressed width of seal or as recommended by the manufacturer, whichever is greater

In lieu of saw cutting, this area may be blocked out and reconstructed to match saw cutting on both sides.

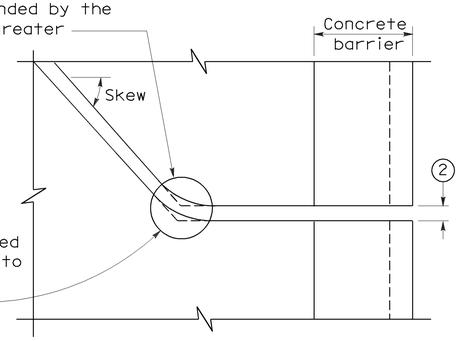

PLAN OF JOINT (SKEW > 20°)

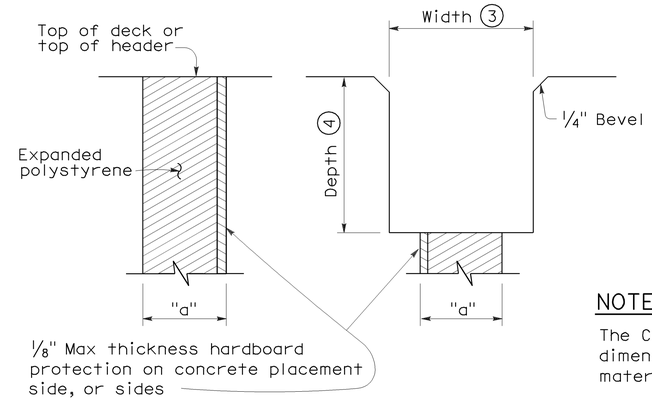

FORMING DETAIL SAWCUT DETAIL

NOTE:

The Contractor shall verify all controlling field dimensions before ordering or fabricatiing any material.

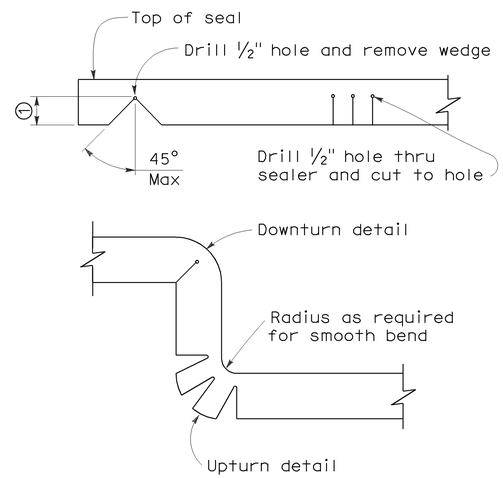

DETAIL A

NOTES:

1. Make smooth cuts from the bottom of seal to 1½" clear of top leaving at least one complete cell between the top of the cut and top of the seal. When necessary cut back of seal to clear conduit and round openings.
2. Opening in barrier to match width of sawn deck joint.
3. Sawcut groove widths shall be as ordered by the Engineer.
4. Depth of sawcut: Type A - Depth to be 2" minimum.
   Type B - Depth to be equal to or greater than the depth of seal measured along the contact surface, when compressed to minimum width position (W_2) plus dimensions shown.
5. MR (movement rating) as shown on other plan sheets.
6. Other depths must be approved by the Engineer.

DIMENSIONS "a" OF JOINT REQUIRED

Movement Rating (MR) 5	Bridge Type	"a" Dimension Deck Concrete Placed		
		Winter	Fall-Spring	Summer
2"	All except CIP/PS	1½"	1¼"	¾"
	CIP/PS	1¼"	1"	½"
1½"	All except CIP/PS	1¼"	1"	½"
	CIP/PS	1"	¾"	½"
1"	All except CIP/PS	1"	¾"	½"
	CIP/PS	¾"	½"	½"
½"	All except CIP/PS	¾"	¾"	½"
	CIP/PS	½"	½"	½"

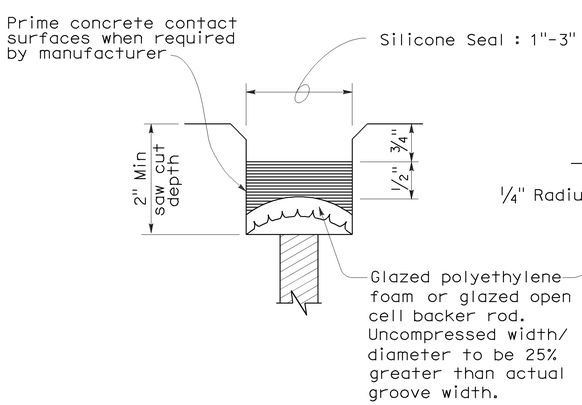

TYPE A SEAL

Movement rating : Silicone = 1" Max

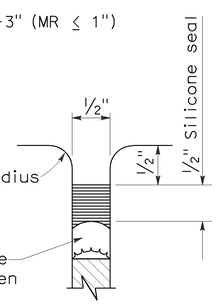

TYPE AL SEAL

Longitudinal joints only

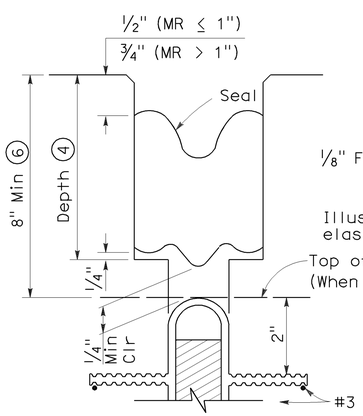

TYPE B JOINT SEAL
IN MINIMUM WIDTH POSITION (W_2)

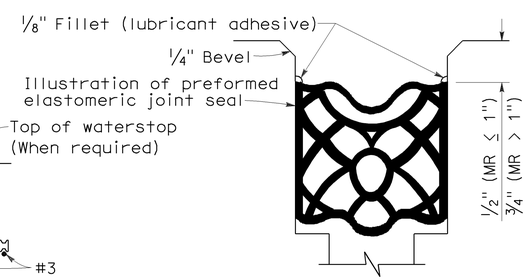

TYPE B SEAL

Movement Rating ≤ 2"

STATE OF CALIFORNIA
DEPARTMENT OF TRANSPORTATION

JOINT SEALS (MAXIMUM MOVEMENT RATING = 2")

NO SCALE

RSP B6-21 DATED OCTOBER 5, 2007 SUPERSEDES STANDARD PLAN B6-21 DATED MAY 1, 2006 - PAGE 258 OF THE STANDARD PLANS BOOK DATED MAY 2006.

REVISED STANDARD PLAN RSP B6-21

2006 REVISED STANDARD PLAN RSP B6-21

5-8-07

DIST	COUNTY	ROUTE	POST MILES TOTAL PROJECT	SHEET No	TOTAL SHEETS
07	LA	91	R6.4/R17.6	22	37

REGISTERED CIVIL ENGINEER 10/06/10 DATE

12-13-10
PLANS APPROVAL DATE

REGISTERED PROFESSIONAL ENGINEER MAZIN S. IBRAHIM No. C69896 Exp. 09/30/12 CIVIL STATE OF CALIFORNIA

The State of California or its officers or agents shall not be responsible for the accuracy or completeness of electronic copies of this plan sheet.

INDEX TO PLANS

SHEET NO.	TITLE
1	GENERAL PLAN NO. 1
2	GENERAL PLAN NO. 2
3	GENERAL PLAN NO. 3
4	GENERAL PLAN NO. 4
5	GENERAL PLAN NO. 5
6	GENERAL PLAN NO. 6
7	GENERAL PLAN NO. 7
8	GENERAL PLAN NO. 8
9	GENERAL PLAN NO. 9
10	GENERAL PLAN NO. 10
11	STEEL COLUMN CASINGS DETAILS
12	MISCELLANEOUS DETAILS NO. 1
13	MISCELLANEOUS DETAILS NO. 2
14	MISCELLANEOUS DETAILS NO. 3
15	JOINT SEAL ASSEMBLY (MAXIMUM MOVEMENT RATING = 4")
16	STRUCTURE APPROACH TYPE R(30D)

STANDARD PLANS DATED MAY 2006

SHEET NO.	TITLE
A10A	ACRONYMS AND ABBREVIATIONS (SHEET 1 OF 2)
A10B	ACRONYMS AND ABBREVIATIONS (SHEET 2 OF 2)
A10C	SYMBOLS (SHEET 1 OF 2)
A10D	SYMBOLS (SHEET 2 OF 2)
RSP B6-21	JOINT SEALS (MAXIMUM MOVEMENT RATING = 2")

STANDARD PLAN SHEET NO.

DETAIL NO.

LEGEND:

Indicates existing.

Indicates direction of traffic.

Indicates location of removal and placement of new joint seal assembly.

Indicates limits of clean and treat existing bridge deck. Prior to bridge deck treatment, remove unsound concrete and patch with rapid setting concrete.

E91-N110 CONNECTOR OC BRIDGE NO. 53-2665G

QUANTITIES

REMOVE UNSOUND CONCRETE	96	CF
CLEAN BRIDGE DECK	38,088	SQFT
BRIDGE REMOVAL (PORTION)	LUMP	SUM
STRUCTURAL CONCRETE, BRIDGE	8	CY
RAPID SETTING CONCRETE (PATCH)	96	CF
JOINT SEAL ASSEMBLY (MR 3 1/2")	76	LF
BAR REINFORCING STEEL (BRIDGE)	1,200	LB
TREAT BRIDGE DECK	38,088	SQFT
FURNISH BRIDGE DECK TREATMENT MATERIAL	508	GAL

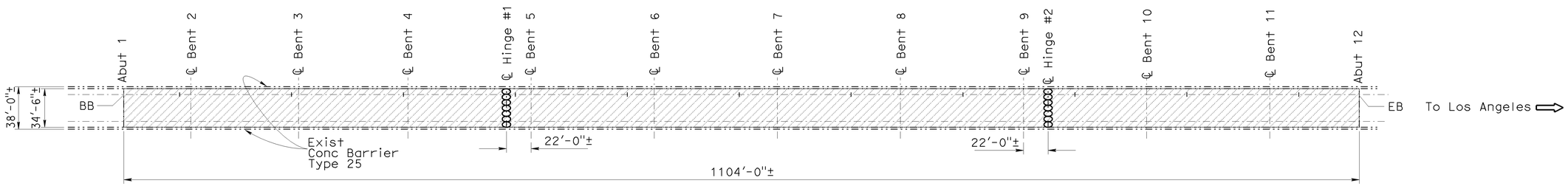

E91-N110 CONNECTOR OC

Br No. 53-2665G, Rte 91, PM R6.37
1" = 50'

NOTE:
THE CONTRACTOR SHALL VERIFY ALL CONTROLLING FIELD DIMENSIONS BEFORE ORDERING OR FABRICATING ANY MATERIAL.

TONY D. BRAKE
DESIGN ENGINEER

	BY	CHECKED
DESIGN	Mazin Ibrahim	Ramesh Patel
DETAILS	Tom Dang	Mazin Ibrahim
QUANTITIES	Mazin Ibrahim	Ramesh Patel

LOAD FACTOR DESIGN	LIVE LOADING: HS20-44 AND ALTERNATIVE AND PERMIT DESIGN LOAD		
LAYOUT	BY Tom Dang	CHECKED Mazin Ibrahim	
SPECIFICATIONS	BY Dave Klein	PLANS AND SPECS COMPARED Dave Klein	

STATE OF CALIFORNIA
DEPARTMENT OF TRANSPORTATION

DIVISION OF MAINTENANCE
STRUCTURE MAINTENANCE DESIGN

BRIDGE NO. Various
POST MILE Varies

ROUTE 91 BRIDGES
GENERAL PLAN NO. 1

STRUCTURES MAINTENANCE GENERAL PLAN SHEET (ENGLISH) (REV. 10/25/05)

ORIGINAL SCALE IN INCHES FOR REDUCED PLANS 0 1 2 3

CU 07
EA 4Y1401

DISREGARD PRINTS BEARING EARLIER REVISION DATES

REVISION DATES: 7-19-10 9-28-10 9-22-10 10-06-10

SHEET 01 OF 16

FILE => 07-4y1401-a-gp01.dgn

USERNAME => s129239 DATE PLOTTED => 13-OCT-2010 TIME PLOTTED => 13:12

DIST	COUNTY	ROUTE	POST MILES TOTAL PROJECT	SHEET No	TOTAL SHEETS
07	LA	91	R6.4/R17.6	23	37

REGISTERED CIVIL ENGINEER 10/06/10 DATE

12-13-10
PLANS APPROVAL DATE

REGISTERED PROFESSIONAL ENGINEER MAZIN S. IBRAHIM No. C69896 Exp. 09/30/12 CIVIL STATE OF CALIFORNIA

The State of California or its officers or agents shall not be responsible for the accuracy or completeness of electronic copies of this plan sheet.

LEGEND:

Indicates existing.

Indicates direction of traffic.

Indicates limits of clean and treat existing bridge deck. Prior to bridge deck treatment, remove unsound concrete and patch with rapid setting concrete.

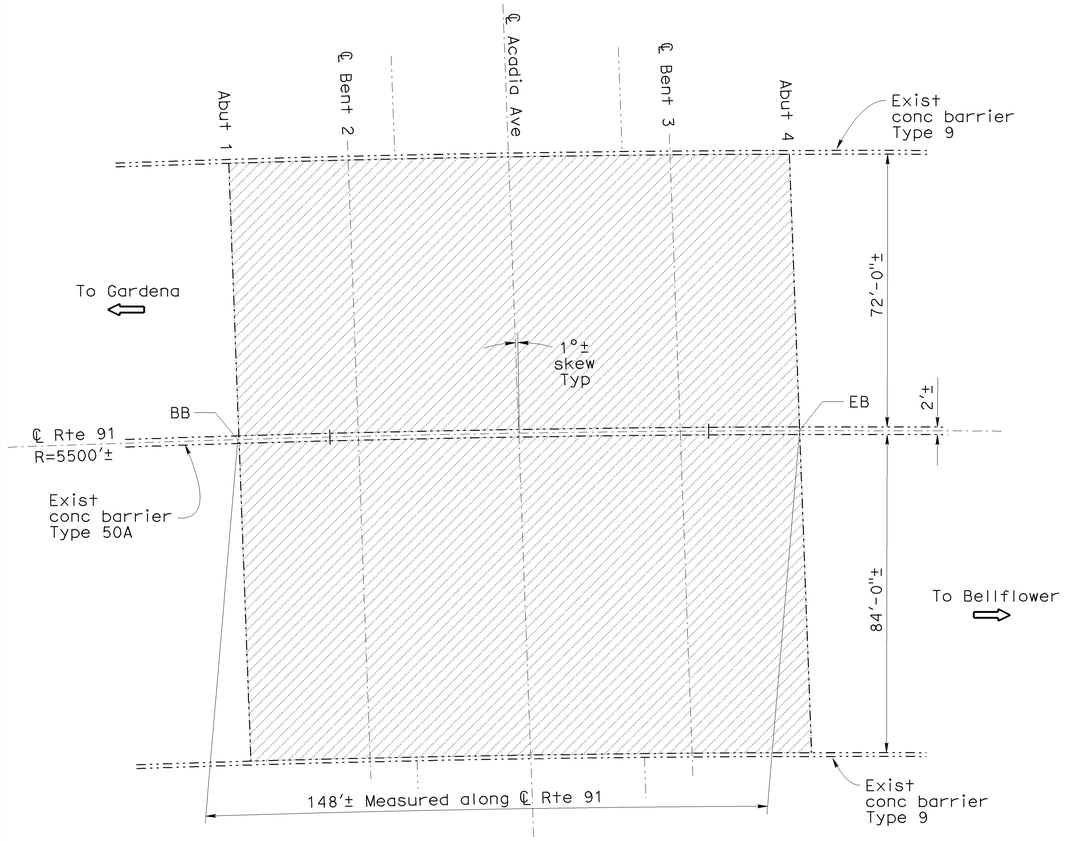

ACACIA AVENUE UC

Br No. 53-2371, Rte 91, PM R9.80
1" = 20'

ACACIA AVENUE UC — BRIDGE NO. 53-2371

QUANTITIES

REMOVE UNSOUND CONCRETE	58	CF
CLEAN BRIDGE DECK	23,088	SQFT
RAPID SETTING CONCRETE (PATCH)	58	CF
TREAT BRIDGE DECK	23,088	SQFT
FURNISH BRIDGE DECK TREATMENT MATERIAL	308	GAL

COLLEGE OH — BRIDGE NO. 53-2234

QUANTITIES

REMOVE UNSOUND CONCRETE	71	CF
CLEAN BRIDGE DECK	28,236	SQFT
RAPID SETTING CONCRETE (PATCH)	71	CF
TREAT BRIDGE DECK	28,236	SQFT
FURNISH BRIDGE DECK TREATMENT MATERIAL	377	GAL
PUBLIC SAFETY PLAN	LUMP	SUM

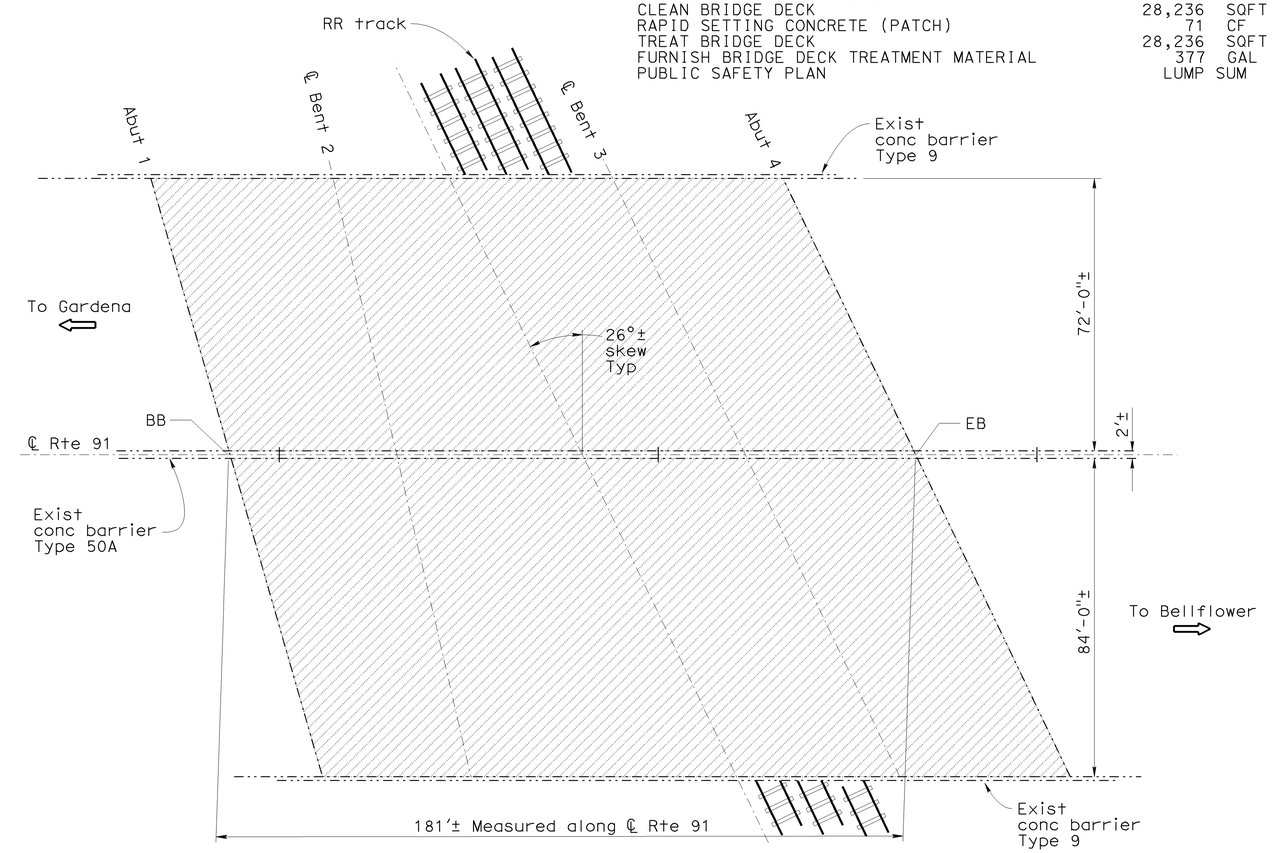

COLLEGE OH

Br No. 53-2234, Rte 91, PM R9.97
1" = 20'

NOTE:
THE CONTRACTOR SHALL VERIFY ALL CONTROLLING FIELD DIMENSIONS BEFORE ORDERING OR FABRICATING ANY MATERIAL.

TONY D. BRAKE
DESIGN ENGINEER

	BY	CHECKED
DESIGN	Mazin Ibrahim	Ramesh Patel
DETAILS	Tom Dang	Ramesh Patel
QUANTITIES	Mazin Ibrahim	Ramesh Patel

LOAD FACTOR DESIGN — LIVE LOADING: HS20-44 AND ALTERNATIVE AND PERMIT DESIGN LOAD

	BY	CHECKED
LAYOUT	Tom Dang	Mazin Ibrahim
SPECIFICATIONS	Dave Klein	PLANS AND SPECS COMPARED Dave Klein

STATE OF CALIFORNIA
DEPARTMENT OF TRANSPORTATION

DIVISION OF MAINTENANCE
STRUCTURE MAINTENANCE DESIGN

BRIDGE NO. Various
POST MILE Varies

ROUTE 91 BRIDGES
GENERAL PLAN NO. 2

STRUCTURES MAINTENANCE GENERAL PLAN SHEET (ENGLISH) (REV. 10/25/05)

ORIGINAL SCALE IN INCHES FOR REDUCED PLANS 0 1 2 3

CU 07
EA 4Y1401

DISREGARD PRINTS BEARING EARLIER REVISION DATES

REVISION DATES: 7-15-10 9-28-10 10-06-10

SHEET 02 OF 16

FILE => 07-4y1401-a-gp02.dgn

USERNAME => s129239 DATE PLOTTED => 13-OCT-2010 TIME PLOTTED => 13:12

DIST	COUNTY	ROUTE	POST MILES TOTAL PROJECT	SHEET No	TOTAL SHEETS
07	LA	91	R6.4/R17.6	24	37

REGISTERED CIVIL ENGINEER 10/06/10 DATE

12-13-10
PLANS APPROVAL DATE

The State of California or its officers or agents shall not be responsible for the accuracy or completeness of electronic copies of this plan sheet.

REGISTERED PROFESSIONAL ENGINEER MAZIN S. IBRAHIM No. C69896 Exp. 09/30/12 CIVIL STATE OF CALIFORNIA

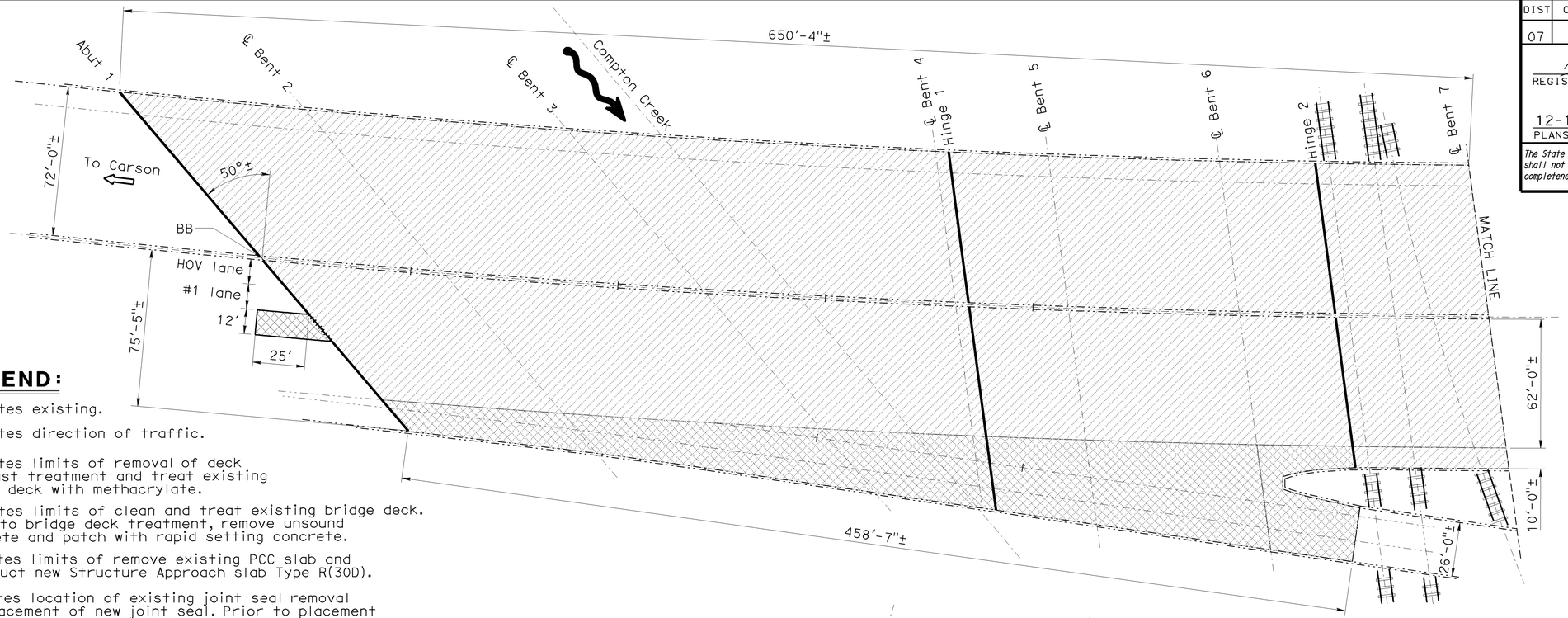

LEGEND:

- Indicates existing.
- Indicates direction of traffic.
- Indicates limits of removal of deck contrast treatment and treat existing bridge deck with methacrylate.
- Indicates limits of clean and treat existing bridge deck. Prior to bridge deck treatment, remove unsound concrete and patch with rapid setting concrete.
- Indicates limits of remove existing PCC slab and construct new Structure Approach slab Type R(30D).
- Indicates location of existing joint seal removal and placement of new joint seal. Prior to placement of new joint seal repair joint spalls.
- Indicates limits of place new joint seal.

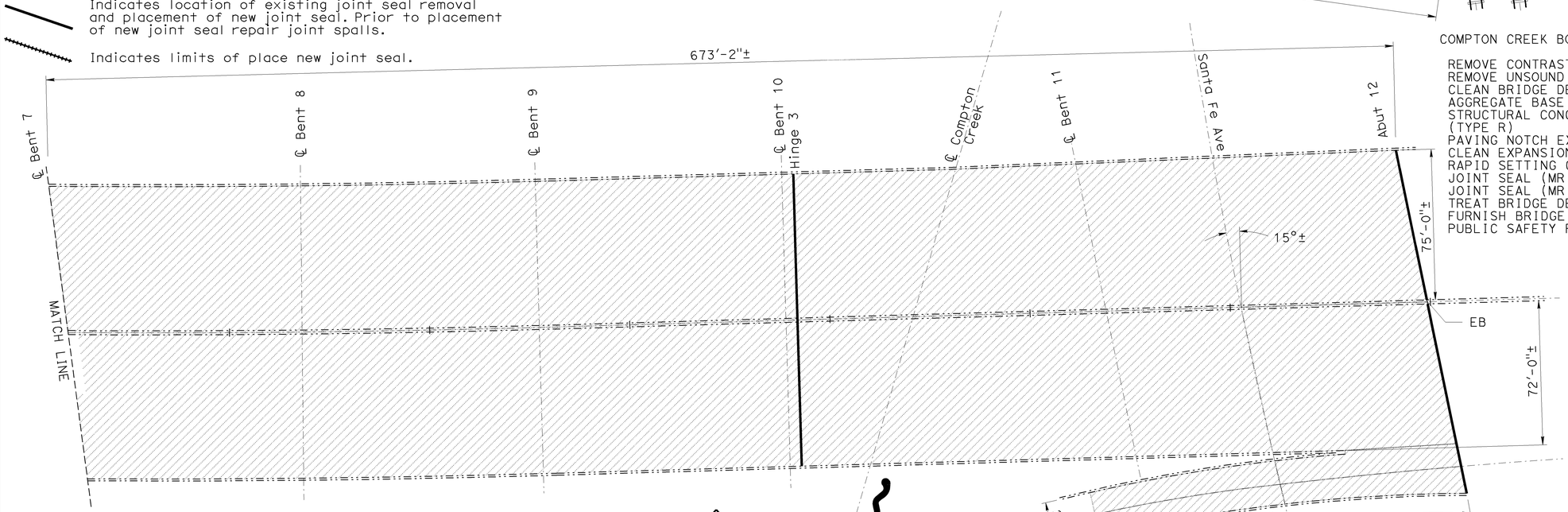

NOTE:
THE CONTRACTOR SHALL VERIFY ALL CONTROLLING FIELD DIMENSIONS BEFORE ORDERING OR FABRICATING ANY MATERIAL.

COMPTON CREEK BOH

Br No. 53-2235, Rte 91, PM R10.19
1" = 30'

COMPTON CREEK BOH — BRIDGE NO. 53-2235

QUANTITIES

REMOVE CONTRAST TREATMENT	12,382	SQFT
REMOVE UNSOUND CONCRETE	506	CF
CLEAN BRIDGE DECK	202,283	SQFT
AGGREGATE BASE (APPROACH SLAB)	1.5	CY
STRUCTURAL CONCRETE, APPROACH SLAB (TYPE R)	11	CY
PAVING NOTCH EXTENSION	14	CF
CLEAN EXPANSION JOINT	905	LF
RAPID SETTING CONCRETE (PATCH)	506	CF
JOINT SEAL (MR 1")	383	LF
JOINT SEAL (MR 1 1/2")	522	LF
TREAT BRIDGE DECK	202,283	SQFT
FURNISH BRIDGE DECK TREATMENT MATERIAL	2,697	GAL
PUBLIC SAFETY PLAN	LUMP SUM	

TONY D. BRAKE
DESIGN ENGINEER

	BY	CHECKED			
DESIGN	Mazin Ibrahim	Ramesh Patel	LOAD FACTOR DESIGN	LIVE LOADING: HS20-44 AND ALTERNATIVE AND PERMIT DESIGN LOAD	
DETAILS	Tom Dang	Ramesh Patel	LAYOUT	Tom Dang	Mazin Ibrahim
QUANTITIES	Mazin Ibrahim	Ramesh Patel	SPECIFICATIONS	Dave Klein	Dave Klein

STATE OF CALIFORNIA
DEPARTMENT OF TRANSPORTATION

DIVISION OF MAINTENANCE
STRUCTURE MAINTENANCE DESIGN

CU 07
EA 4Y1401

BRIDGE NO. Various
POST MILE Varies

ROUTE 91 BRIDGES
GENERAL PLAN NO. 3

STRUCTURES MAINTENANCE GENERAL PLAN SHEET (ENGLISH) (REV. 10/25/05)

ORIGINAL SCALE IN INCHES FOR REDUCED PLANS 0 1 2 3

DISREGARD PRINTS BEARING EARLIER REVISION DATES

REVISION DATES: 3-11-10 8-09-10 9-28-10 10-06-10

SHEET 03 OF 16

FILE => 07-4y1401-a-gp03.dgn

USERNAME = s129239 DATE PLOTTED => 13-OCT-2010 TIME PLOTTED => 13:12

DIST	COUNTY	ROUTE	POST MILES TOTAL PROJECT	SHEET No	TOTAL SHEETS
07	LA	91	R6.4/R17.6	25	37

REGISTERED CIVIL ENGINEER 10/06/10 DATE

12-13-10
PLANS APPROVAL DATE

REGISTERED PROFESSIONAL ENGINEER MAZIN S. IBRAHIM No. C69896 Exp. 09/30/12 CIVIL STATE OF CALIFORNIA

The State of California or its officers or agents shall not be responsible for the accuracy or completeness of electronic copies of this plan sheet.

LEGEND:

Indicates existing.

Indicates direction of traffic.

Indicates location of existing joint seal removal and placement of new joint seal. Prior to placement of new joint seal repair joint spalls.

Indicates limits of clean and treat existing bridge deck. Prior to bridge deck treatment, remove unsound concrete and patch with rapid setting concrete.

COMPTON CREEK BOH OFF-RAMP — BRIDGE NO. 53-2237S

QUANTITIES

REMOVE UNSOUND CONCRETE	38	CF
CLEAN BRIDGE DECK	15,240	SQFT
CLEAN EXPANSION JOINT	95	LF
RAPID SETTING CONCRETE (PATCH)	38	CF
JOINT SEAL (MR 1 1/2")	59	LF
JOINT SEAL (MR 2")	35	LF
TREAT BRIDGE DECK	15,240	SQFT
FURNISH BRIDGE DECK TREATMENT MATERIAL	204	GAL
PUBLIC SAFETY PLAN	LUMP	SUM

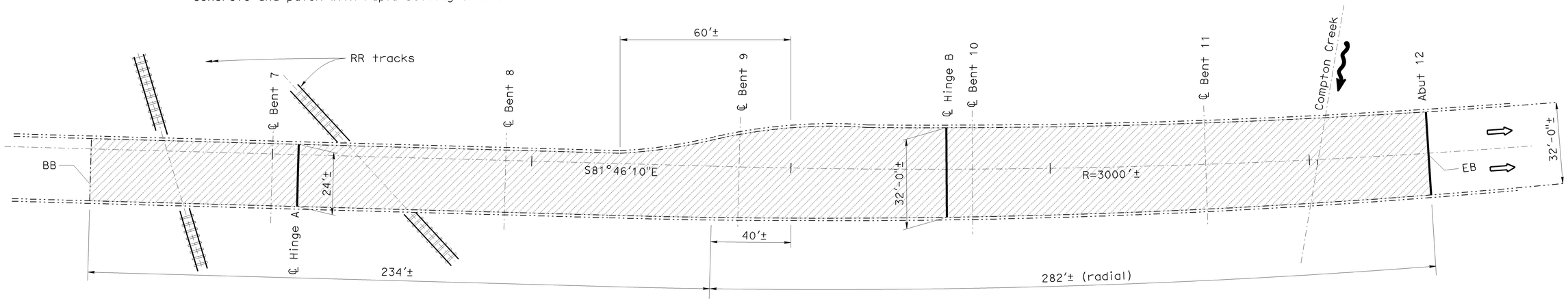

COMPTON CREEK BOH (OFF-RAMP)

Br No. 53-2237S, Rte 91, PM R10.28
NO SCALE

COMPTON CREEK BOH ON-RAMP — BRIDGE NO. 53-2236S

QUANTITIES

REMOVE UNSOUND CONCRETE	59	CF
CLEAN BRIDGE DECK	23,541	SQFT
CLEAN EXPANSION JOINT	113	LF
RAPID SETTING CONCRETE (PATCH)	59	CF
JOINT SEAL (MR 1 1/2")	113	LF
TREAT BRIDGE DECK	23,541	SQFT
FURNISH BRIDGE DECK TREATMENT MATERIAL	314	GAL
PUBLIC SAFETY PLAN	LUMP	SUM

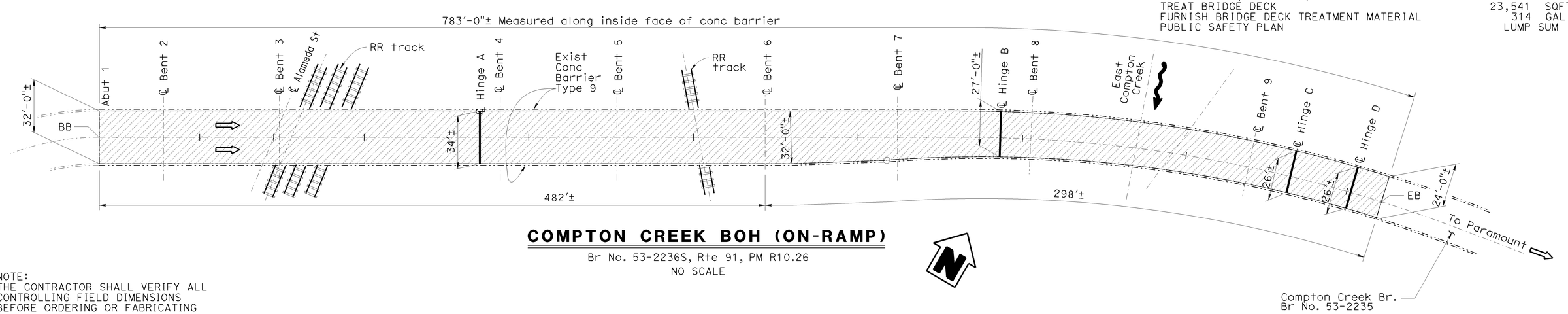

COMPTON CREEK BOH (ON-RAMP)

Br No. 53-2236S, Rte 91, PM R10.26
NO SCALE

NOTE:
THE CONTRACTOR SHALL VERIFY ALL CONTROLLING FIELD DIMENSIONS BEFORE ORDERING OR FABRICATING ANY MATERIAL.

TONY D. BRAKE
DESIGN ENGINEER

	BY	CHECKED			
DESIGN	Mazin Ibrahim	Ramesh Patel	LOAD FACTOR DESIGN	LIVE LOADING: HS20-44 AND ALTERNATIVE AND PERMIT DESIGN LOAD	
DETAILS	Tom Dang	Ramesh Patel	LAYOUT	Tom Dang	Mazin Ibrahim
QUANTITIES	Mazin Ibrahim	Ramesh Patel	SPECIFICATIONS	Dave Klein	PLANS AND SPECS COMPARED Dave Klein

STATE OF CALIFORNIA
DEPARTMENT OF TRANSPORTATION

DIVISION OF MAINTENANCE
STRUCTURE MAINTENANCE DESIGN

CU 07
EA 4Y1401

BRIDGE NO. Various
POST MILE Varies

ROUTE 91 BRIDGES
GENERAL PLAN NO. 4

STRUCTURES MAINTENANCE GENERAL PLAN SHEET (ENGLISH) (REV. 10/25/05)

ORIGINAL SCALE IN INCHES FOR REDUCED PLANS 0 1 2 3

DISREGARD PRINTS BEARING EARLIER REVISION DATES

REVISION DATES: 3-11-10 8-09-10 9-29-10 10-06-10

SHEET 04 OF 16

FILE => 07-4y1401-a-gp04.dgn

USERNAME => s129239 DATE PLOTTED => 13-OCT-2010 TIME PLOTTED => 13:12

DIST	COUNTY	ROUTE	POST MILES TOTAL PROJECT	SHEET No	TOTAL SHEETS
07	LA	91	R6.4/R17.6	26	37

REGISTERED CIVIL ENGINEER 10/06/10 DATE

12-13-10
PLANS APPROVAL DATE

REGISTERED PROFESSIONAL ENGINEER MAZIN S. IBRAHIM No. C69896 Exp. 09/30/12 CIVIL STATE OF CALIFORNIA

The State of California or its officers or agents shall not be responsible for the accuracy or completeness of electronic copies of this plan sheet.

LEGEND:

Indicates existing.

Indicates direction of traffic.

Indicates location of existing joint seal removal and placement of new joint seal. Prior to placement of new joint seal repair joint spalls.

Indicates limits of clean and treat existing bridge deck. Prior to bridge deck treatment, remove unsound concrete and patch with rapid setting concrete.

ARTESIA SANTA FE UC OFF-RAMP BRIDGE NO. 53-2238K

QUANTITIES

REMOVE UNSOUND CONCRETE	68	CF
CLEAN BRIDGE DECK	27,048	SQFT
CLEAN EXPANSION JOINT	38	LF
RAPID SETTING CONCRETE (PATCH)	68	CF
JOINT SEAL (MR 2")	38	LF
TREAT BRIDGE DECK	27,048	SQFT
FURNISH BRIDGE DECK TREATMENT MATERIAL	361	GAL
PUBLIC SAFETY PLAN	LUMP SUM	

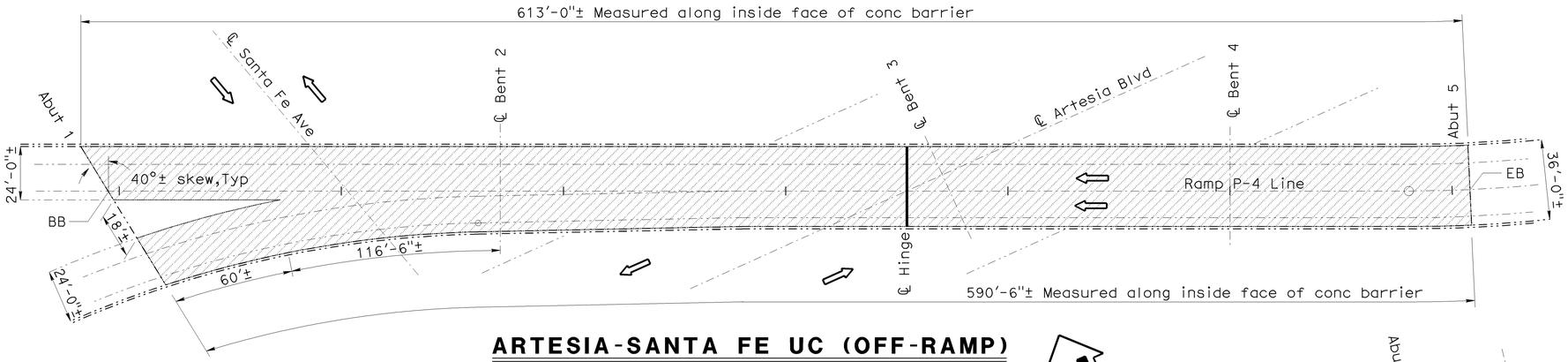

ARTESIA-SANTA FE UC (OFF-RAMP)

Br No. 53-2238K, Rte 91, PM R10.39
NO SCALE

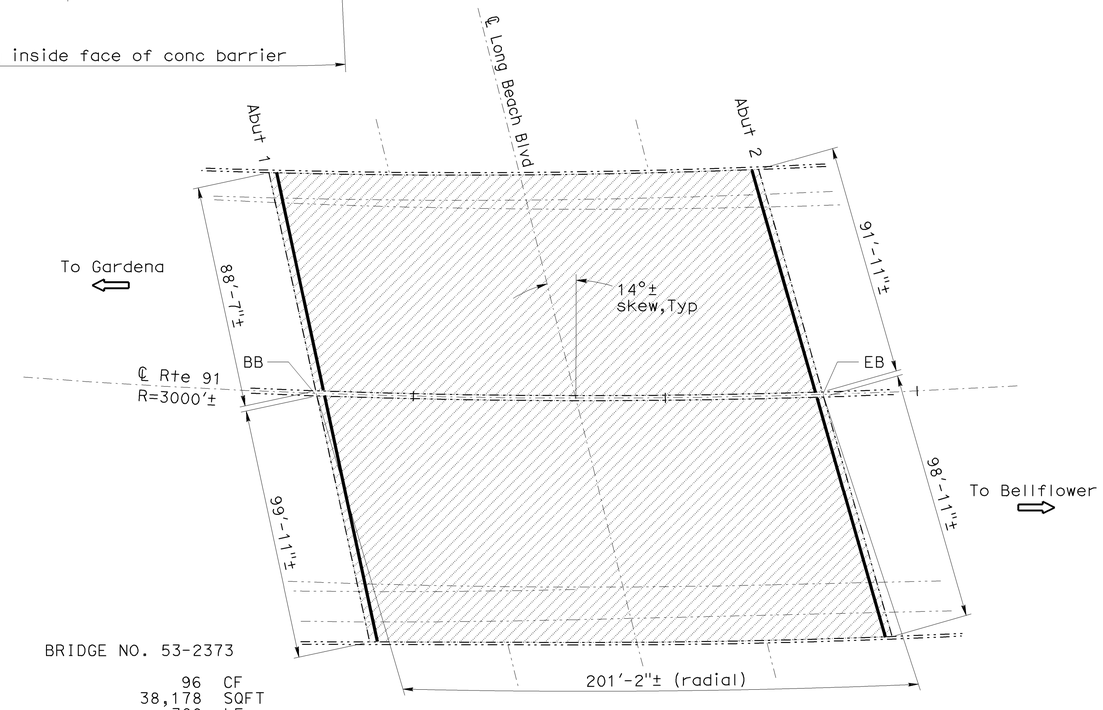

LONG BEACH BLVD UC BRIDGE NO. 53-2373

QUANTITIES

REMOVE UNSOUND CONCRETE	96	CF
CLEAN BRIDGE DECK	38,178	SQFT
CLEAN EXPANSION JOINT	380	LF
RAPID SETTING CONCRETE (PATCH)	96	CF
JOINT SEAL (MR 1 1/2")	380	LF
TREAT BRIDGE DECK	38,178	SQFT
FURNISH BRIDGE DECK TREATMENT MATERIAL	509	GAL

LONG BEACH BLVD UC

Br No. 53-2373, Rte 91, PM R11.10
1" = 30'

NOTE:
THE CONTRACTOR SHALL VERIFY ALL CONTROLLING FIELD DIMENSIONS BEFORE ORDERING OR FABRICATING ANY MATERIAL.

TONY D. BRAKE
DESIGN ENGINEER

	BY	CHECKED
DESIGN	Mazin Ibrahim	Ramesh Patel
DETAILS	Tom Dang	Ramesh Patel
QUANTITIES	Mazin Ibrahim	Ramesh Patel

LOAD FACTOR DESIGN — LIVE LOADING: HS20-44 AND ALTERNATIVE AND PERMIT DESIGN LOAD

	BY	CHECKED
LAYOUT	Tom Dang	Mazin Ibrahim
SPECIFICATIONS	Dave Klein	PLANS AND SPECS COMPARED Dave Klein

STATE OF CALIFORNIA
DEPARTMENT OF TRANSPORTATION

DIVISION OF MAINTENANCE
STRUCTURE MAINTENANCE DESIGN

BRIDGE NO. Various
POST MILE Varies

ROUTE 91 BRIDGES
GENERAL PLAN NO 5

STRUCTURES MAINTENANCE GENERAL PLAN SHEET (ENGLISH) (REV. 10/25/05)

ORIGINAL SCALE IN INCHES FOR REDUCED PLANS 0 1 2 3

CU 07
EA 4Y1401

DISREGARD PRINTS BEARING EARLIER REVISION DATES

REVISION DATES: 3-11-10 9-29-10 10-06-10

SHEET 05 OF 16

FILE => 07-4y1401-a-gp05.dgn

USERNAME => s129239 DATE PLOTTED => 13-OCT-2010 TIME PLOTTED => 13:12

DIST	COUNTY	ROUTE	POST MILES TOTAL PROJECT	SHEET No	TOTAL SHEETS
07	LA	91	R6.4/R17.6	27	37

REGISTERED CIVIL ENGINEER 10/06/10 DATE

12-13-10
PLANS APPROVAL DATE

REGISTERED PROFESSIONAL ENGINEER MAZIN S. IBRAHIM No. C69896 Exp. 09/30/12 CIVIL STATE OF CALIFORNIA

The State of California or its officers or agents shall not be responsible for the accuracy or completeness of electronic copies of this plan sheet.

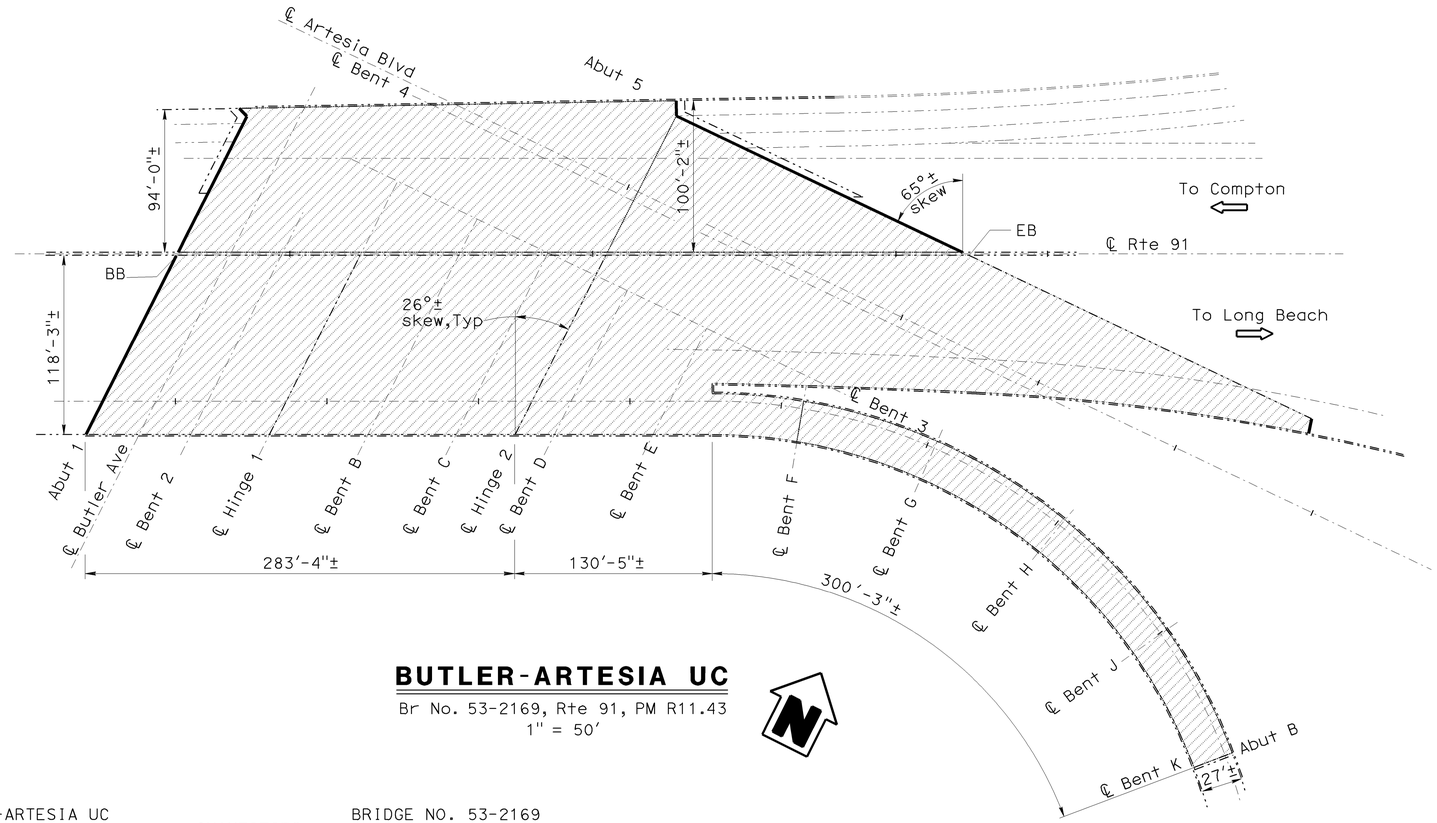

BUTLER-ARTESIA UC

Br No. 53-2169, Rte 91, PM R11.43
1" = 50'

LEGEND:

Indicates existing.

Indicates direction of traffic.

Indicates location of existing joint seal removal and placement of new joint seal. Prior to placement of new joint seal repair joint spalls.

Indicates limits of clean and treat existing bridge deck. Prior to bridge deck treatment, remove unsound concrete and patch with rapid setting concrete.

BUTLER-ARTESIA UC BRIDGE NO. 53-2169

QUANTITIES

REMOVE UNSOUND CONCRETE	231	CF
CLEAN BRIDGE DECK	92,173	SQFT
CLEAN EXPANSION JOINT	470	LF
RAPID SETTING CONCRETE (PATCH)	231	CF
JOINT SEAL (MR 1½")	470	LF
TREAT BRIDGE DECK	92,173	SQFT
FURNISH BRIDGE DECK TREATMENT MATERIAL	1,229	GAL
PUBLIC SAFETY PLAN	LUMP SUM	

NOTE:
THE CONTRACTOR SHALL VERIFY ALL CONTROLLING FIELD DIMENSIONS BEFORE ORDERING OR FABRICATING ANY MATERIAL.

TONY D. BRAKE
DESIGN ENGINEER

	BY	CHECKED			
DESIGN	Mazin Ibrahim	Ramesh Patel	LOAD FACTOR DESIGN	LIVE LOADING: HS20-44 AND ALTERNATIVE AND PERMIT DESIGN LOAD	
DETAILS	Tom Dang	Ramesh Patel	LAYOUT	Tom Dang	Mazin Ibrahim
QUANTITIES	Mazin Ibrahim	Ramesh Patel	SPECIFICATIONS	Dave Klein	PLANS AND SPECS COMPARED Dave Klein

STATE OF CALIFORNIA
DEPARTMENT OF TRANSPORTATION

DIVISION OF MAINTENANCE
STRUCTURE MAINTENANCE DESIGN

CU 07
EA 4Y1401

BRIDGE NO. Various
POST MILE Varies

ROUTE 91 BRIDGES
GENERAL PLAN NO. 6

STRUCTURES MAINTENANCE GENERAL PLAN SHEET (ENGLISH) (REV. 10/25/05)

ORIGINAL SCALE IN INCHES FOR REDUCED PLANS 0 1 2 3

DISREGARD PRINTS BEARING EARLIER REVISION DATES

REVISION DATES: 3-11-10 7-28-10 8-09-10 9-28-10 9-24-10 10-06-10

SHEET 06 OF 16

FILE => 07-4y1401-a-gp06.dgn

USERNAME => s129239 DATE PLOTTED => 13-OCT-2010 TIME PLOTTED => 13:12

DIST	COUNTY	ROUTE	POST MILES TOTAL PROJECT	SHEET No	TOTAL SHEETS
07	LA	91	R6.4/R17.6	28	37

REGISTERED CIVIL ENGINEER 10/06/10 DATE

12-13-10
PLANS APPROVAL DATE

The State of California or its officers or agents shall not be responsible for the accuracy or completeness of electronic copies of this plan sheet.

REGISTERED PROFESSIONAL ENGINEER TONY D. BRAKE No. C69880 Exp. 09/30/12 CIVIL STATE OF CALIFORNIA

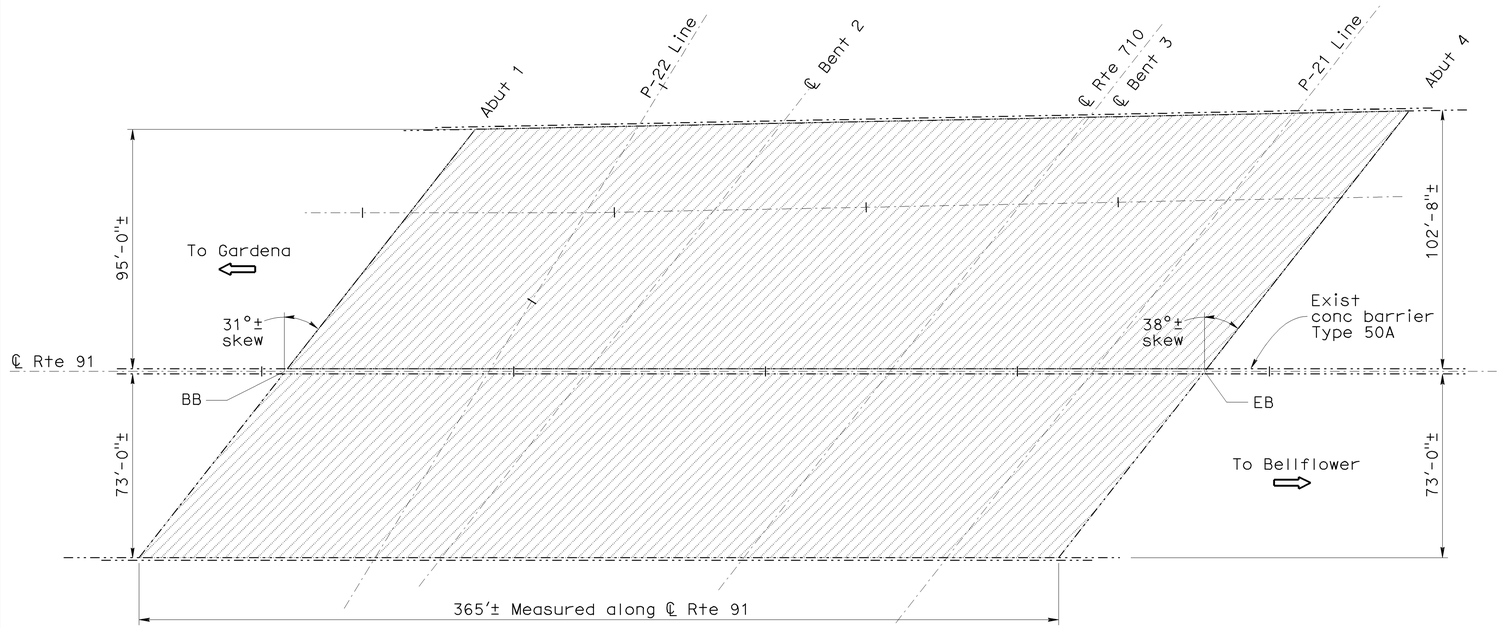

ROUTE 91/710 SEPARATION

Br No. 53-2240, Rte 91, PM R11.64
NO SCALE

LEGEND:

Indicates existing.

Indicates direction of traffic.

Indicates location of existing joint seal removal and placement of new joint seal. Prior to placement of new joint seal repair joint spalls.

Indicates limits of clean and treat existing bridge deck. Prior to bridge deck treatment, remove unsound concrete and patch with rapid setting concrete.

ROUTE 91/710 SEPARATION — BRIDGE NO. 53-2240

QUANTITIES		
REMOVE UNSOUND CONCRETE	157	CF
CLEAN BRIDGE DECK	62,720	SQFT
RAPID SETTING CONCRETE (PATCH)	157	CF
TREAT BRIDGE DECK	62,720	SQFT
FURNISH BRIDGE DECK TREATMENT MATERIAL	837	GAL

ORANGE AVENUE UC — BRIDGE NO. 53-2122

QUANTITIES		
REMOVE UNSOUND CONCRETE	51	CF
CLEAN BRIDGE DECK	20,160	SQFT
CLEAN EXPANSION JOINT	84	LF
RAPID SETTING CONCRETE (PATCH)	51	CF
JOINT SEAL (MR 2")	84	LF
TREAT BRIDGE DECK	20,160	SQFT
FURNISH BRIDGE DECK TREATMENT MATERIAL	269	GAL
PUBLIC SAFETY PLAN	LUMP SUM	

ATLANTIC AVENUE — BRIDGE NO. 53-2124

QUANTITIES		
REMOVE UNSOUND CONCRETE	73	CF
CLEAN BRIDGE DECK	28,835	SQFT
RAPID SETTING CONCRETE (PATCH)	73	CF
TREAT BRIDGE DECK	28,835	SQFT
FURNISH BRIDGE DECK TREATMENT MATERIAL	385	GAL
PUBLIC SAFETY PLAN	LUMP SUM	

NOTE:
THE CONTRACTOR SHALL VERIFY ALL CONTROLLING FIELD DIMENSIONS BEFORE ORDERING OR FABRICATING ANY MATERIAL.

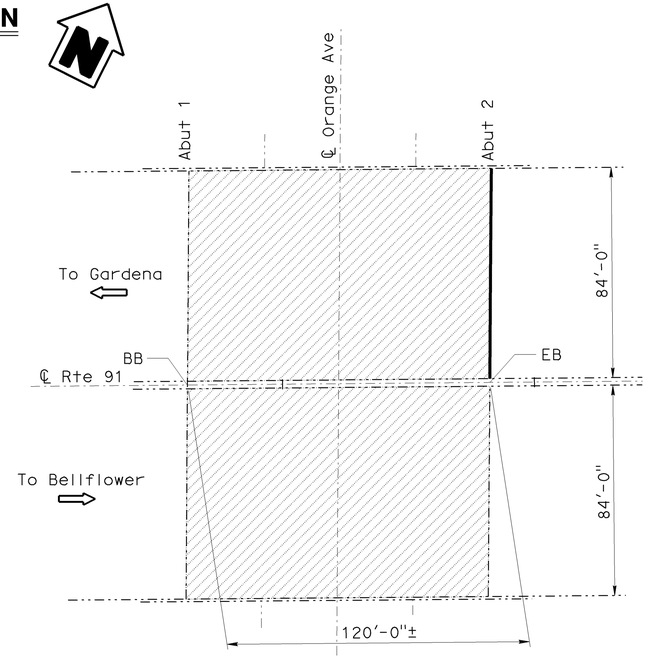

ORANGE AVENUE UC

Br No. 53-2122, Rte 91, PM R12.59
1" = 30'

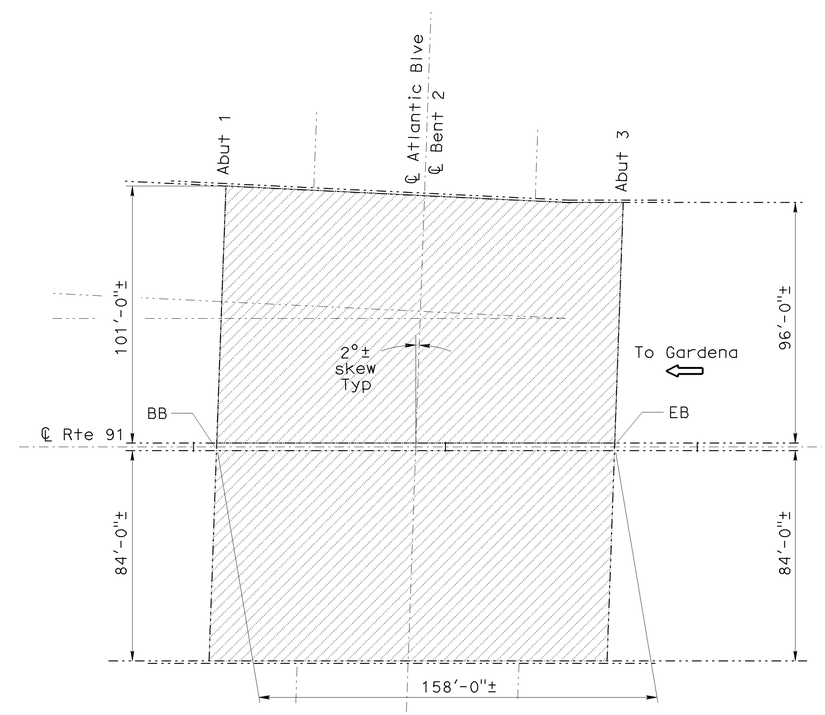

ATLANTIC AVENUE UC

Br No. 53-2124, Rte 91, PM R12.09
1" = 30'

TONY D. BRAKE DESIGN ENGINEER	DESIGN	BY Mazin Ibrahim	CHECKED Ramesh Patel	LOAD FACTOR DESIGN	LIVE LOADING: HS20-44 AND ALTERNATIVE AND PERMIT DESIGN LOAD
	DETAILS	BY Tom Dang	CHECKED Mazin Ibrahim	LAYOUT	BY Tom Dang / CHECKED Mazin Ibrahim
	QUANTITIES	BY Mazin Ibrahim	CHECKED Ramesh Patel	SPECIFICATIONS	BY Dave Klein / PLANS AND SPECS COMPARED Dave Klein

STATE OF CALIFORNIA
DEPARTMENT OF TRANSPORTATION

DIVISION OF MAINTENANCE
STRUCTURE MAINTENANCE DESIGN

BRIDGE NO. Various
POST MILE Varies

ROUTE 91 BRIDGES
GENERAL PLAN NO. 7

STRUCTURES MAINTENANCE GENERAL PLAN SHEET (ENGLISH) (REV. 10/25/05)

ORIGINAL SCALE IN INCHES FOR REDUCED PLANS 0 1 2 3

CU 07
EA 4Y1401

DISREGARD PRINTS BEARING EARLIER REVISION DATES

REVISION DATES: 7-19-10 9-28-10 10-06-10

SHEET 07 OF 16

FILE => 07-4y1401-a-gp07.dgn

USERNAME => s129239 DATE PLOTTED => 13-OCT-2010 TIME PLOTTED => 13:12

DIST	COUNTY	ROUTE	POST MILES TOTAL PROJECT	SHEET No	TOTAL SHEETS
07	LA	91	R6.4/R17.6	29	37

REGISTERED CIVIL ENGINEER 10/06/10 DATE

12-13-10
PLANS APPROVAL DATE

The State of California or its officers or agents shall not be responsible for the accuracy or completeness of electronic copies of this plan sheet.

REGISTERED PROFESSIONAL ENGINEER MAZIN S. IBRAHIM No. C69896 Exp. 09/30/12 CIVIL STATE OF CALIFORNIA

LEGEND:

Indicates existing.

Indicates direction of traffic.

Indicates limits of clean and treat existing bridge deck. Prior to bridge deck treatment, remove unsound concrete and patch with rapid setting concrete.

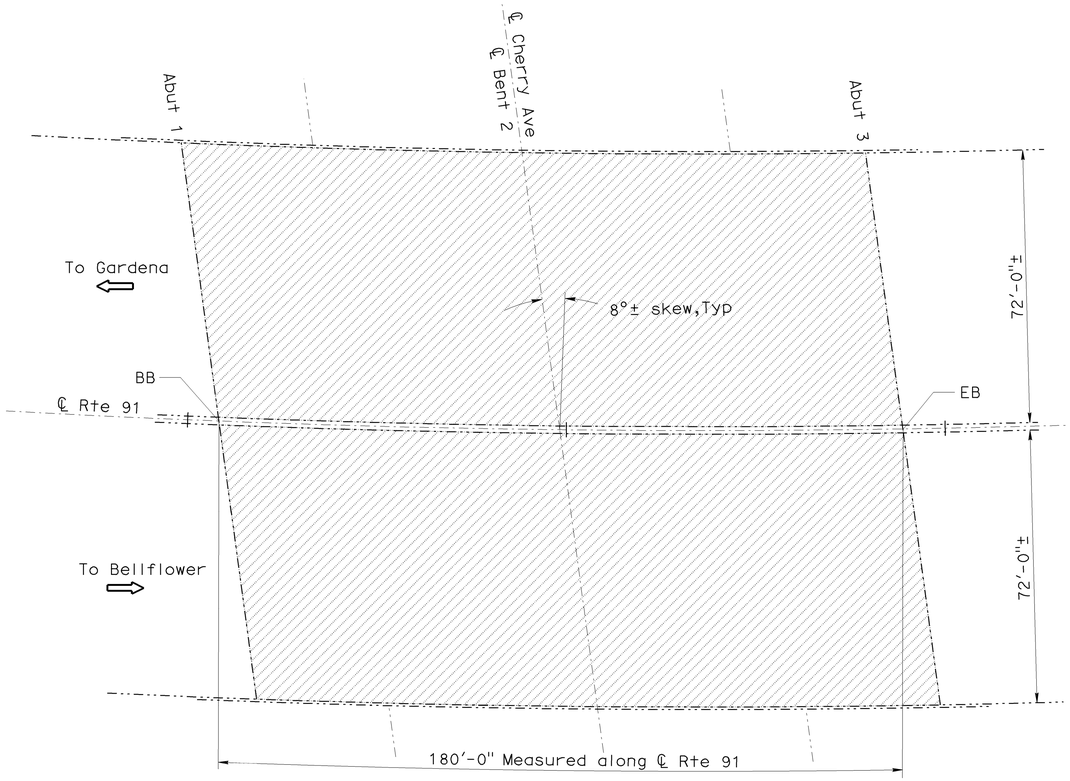

CHERRY AVENUE UC

Br No. 53-2123, Rte 91, PM R13.09
1" = 20'

CHERRY AVENUE UC — BRIDGE NO. 53-2123

QUANTITIES		
REMOVE UNSOUND CONCRETE	65	CF
CLEAN BRIDGE DECK	25,920	SQFT
RAPID SETTING CONCRETE (PATCH)	65	CF
TREAT BRIDGE DECK	25,920	SQFT
FURNISH BRIDGE DECK TREATMENT MATERIAL	346	GAL
PUBLIC SAFETY PLAN	LUMP SUM	

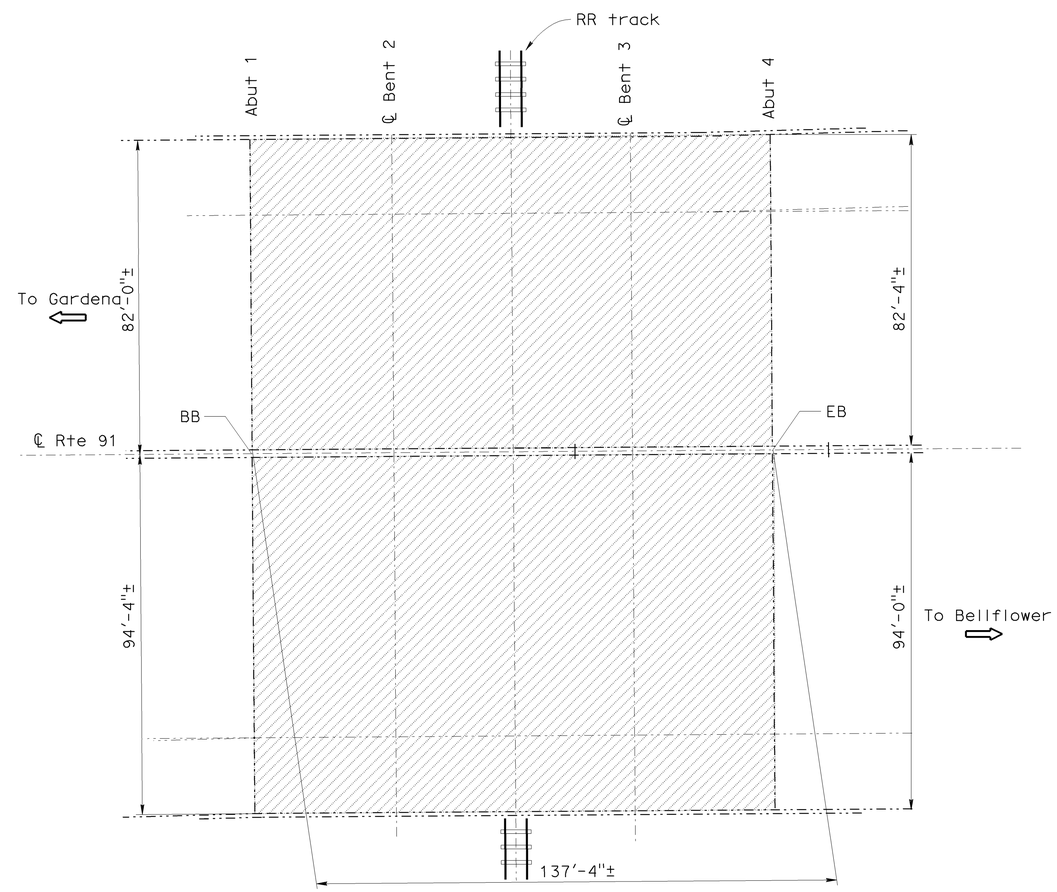

NORTH LONG BEACH OH

Br No. 53-2101, Rte 91, PM R13.35
NO SCALE

NORTH LONG BEACH OH — BRIDGE NO. 53-2101

QUANTITIES		
REMOVE UNSOUND CONCRETE	59	CF
CLEAN BRIDGE DECK	23,313	SQFT
RAPID SETTING CONCRETE (PATCH)	59	CF
TREAT BRIDGE DECK	23,313	SQFT
FURNISH BRIDGE DECK TREATMENT MATERIAL	311	GAL
PUBLIC SAFETY PLAN	LUMP SUM	

NOTE:
THE CONTRACTOR SHALL VERIFY ALL CONTROLLING FIELD DIMENSIONS BEFORE ORDERING OR FABRICATING ANY MATERIAL.

TONY D. BRAKE
DESIGN ENGINEER

	BY	CHECKED
DESIGN	Mazin Ibrahim	Ramesh Patel
DETAILS	Tom Dang	Mazin Ibrahim
QUANTITIES	Mazin Ibrahim	Ramesh Patel

		BY	CHECKED
LOAD FACTOR DESIGN	LIVE LOADING: HS20-44 AND ALTERNATIVE AND PERMIT DESIGN LOAD		
LAYOUT		Tom Dang	Mazin Ibrahim
SPECIFICATIONS		Dave Klein	PLANS AND SPECS COMPARED Dave Klein

STATE OF CALIFORNIA
DEPARTMENT OF TRANSPORTATION

DIVISION OF MAINTENANCE
STRUCTURE MAINTENANCE DESIGN

BRIDGE NO. Various
POST MILE Varies

ROUTE 91 BRIDGES
GENERAL PLAN NO. 8

STRUCTURES MAINTENANCE GENERAL PLAN SHEET (ENGLISH) (REV. 10/25/05)

ORIGINAL SCALE IN INCHES FOR REDUCED PLANS 0 1 2 3

CU 07
EA 4Y1401

DISREGARD PRINTS BEARING EARLIER REVISION DATES

REVISION DATES: 7-15-10 | 8-09-10 | 9-20-10 | 10-06-10

SHEET 08 OF 16

FILE => 07-4y1401-a-gp08.dgn

USERNAME => s129239 DATE PLOTTED => 13-OCT-2010 TIME PLOTTED => 13:12

DIST	COUNTY	ROUTE	POST MILES TOTAL PROJECT	SHEET No	TOTAL SHEETS
07	LA	91	R6.4/R17.6	30	37

REGISTERED CIVIL ENGINEER 10/19/10 DATE

12-13-10
PLANS APPROVAL DATE

REGISTERED PROFESSIONAL ENGINEER MAZIN S. IBRAHIM No. C69896 Exp. 09/30/12 CIVIL STATE OF CALIFORNIA

The State of California or its officers or agents shall not be responsible for the accuracy or completeness of electronic copies of this plan sheet.

LEGEND:

Indicates existing.

Indicates direction of traffic.

Indicates limits of clean and treat existing bridge deck. Prior to bridge deck treatment, remove unsound concrete and patch with rapid setting concrete.

DOWNEY AVENUE UC — BRIDGE NO. 53-1761

QUANTITIES

REMOVE UNSOUND CONCRETE	64	CF
CLEAN BRIDGE DECK	25,256	SQFT
RAPID SETTING CONCRETE (PATCH)	64	CF
TREAT BRIDGE DECK	25,256	SQFT
FURNISH BRIDGE DECK TREATMENT MATERIAL	337	GAL

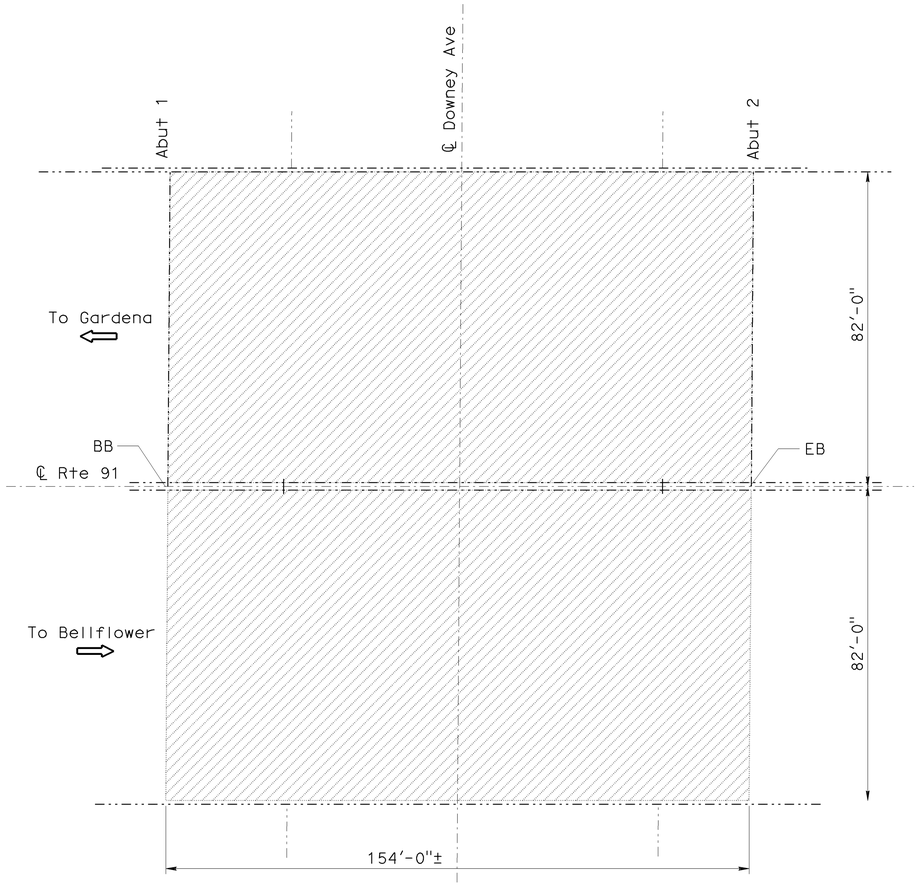

DOWNEY AVENUE UC

Br No. 53-1761, Rte 91, PM R14.1
1" = 20'

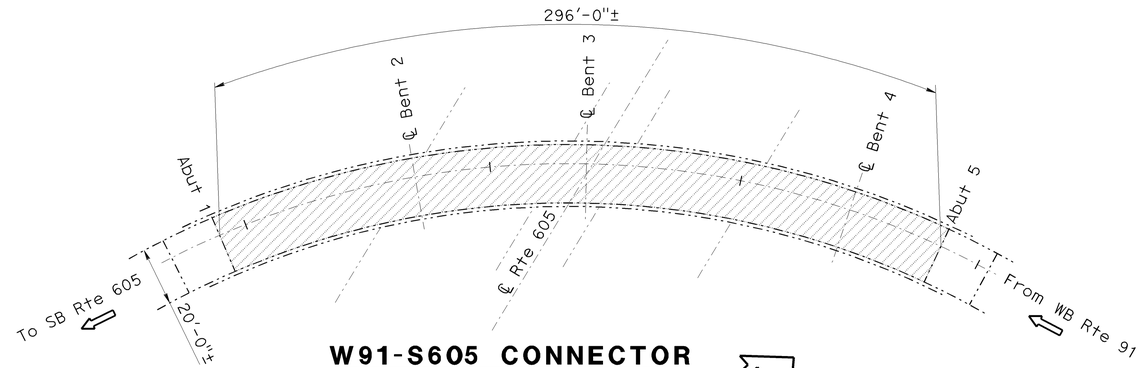

W91-S605 CONNECTOR

Br No. 53-1705F, Rte 91, PM R16.93
NO SCALE

W91-S605 CONNECTOR — BRIDGE NO. 53-1705F

QUANTITIES

REMOVE UNSOUND CONCRETE	17	CF
CLEAN BRIDGE DECK	6,512	SQFT
RAPID SETTING CONCRETE (PATCH)	17	CF
TREAT BRIDGE DECK	6,512	SQFT
FURNISH BRIDGE DECK TREATMENT MATERIAL	87	GAL

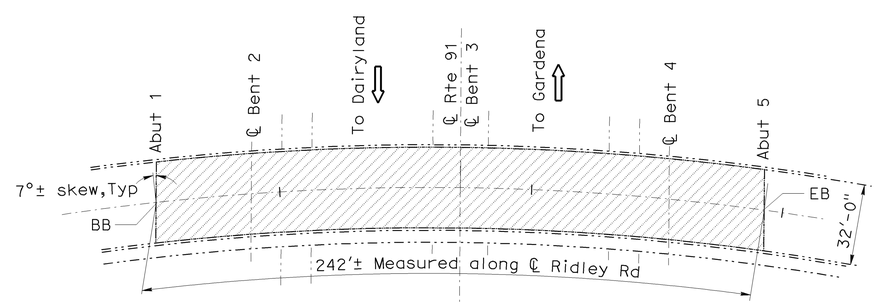

GRIDLEY ROAD OC

Br No. 53-1324, Rte 91, PM R17.57
1" = 30'

GRIDLEY ROAD OC — BRIDGE NO. 53-1324

QUANTITIES

REMOVE UNSOUND CONCRETE	20	CF
CLEAN BRIDGE DECK	7,744	SQFT
RAPID SETTING CONCRETE (PATCH)	20	CF
TREAT BRIDGE DECK	7,744	SQFT
FURNISH BRIDGE DECK TREATMENT MATERIAL	104	GAL
PUBLIC SAFETY PLAN	LUMP SUM	

NOTE:
THE CONTRACTOR SHALL VERIFY ALL CONTROLLING FIELD DIMENSIONS BEFORE ORDERING OR FABRICATING ANY MATERIAL.

TONY D. BRAKE
DESIGN ENGINEER

	BY	CHECKED
DESIGN	Mazin Ibrahim	Ramesh Patel
DETAILS	Tom Dang	Mazin Ibrahim
QUANTITIES	Mazin Ibrahim	Ramesh Patel

LOAD FACTOR DESIGN	LIVE LOADING: HS20-44 AND ALTERNATIVE AND PERMIT DESIGN LOAD		
LAYOUT	BY Tom Dang	CHECKED Mazin Ibrahim	
SPECIFICATIONS	BY Dave Klein	PLANS AND SPECS COMPARED Dave Klein	

STATE OF CALIFORNIA
DEPARTMENT OF TRANSPORTATION

DIVISION OF MAINTENANCE
STRUCTURE MAINTENANCE DESIGN

BRIDGE NO. Various
POST MILE Varies

ROUTE 91 BRIDGES
GENERAL PLAN NO. 9

STRUCTURES MAINTENANCE GENERAL PLAN SHEET (ENGLISH) (REV. 10/25/05)

ORIGINAL SCALE IN INCHES FOR REDUCED PLANS 0 1 2 3

CU 07
EA 4Y1401

DISREGARD PRINTS BEARING EARLIER REVISION DATES

REVISION DATES: 7-19-10 | 9-28-10 | 10-06-10 | 10-19-10

SHEET 09 OF 16

FILE => 07-4y1401-a-gp09.dgn

USERNAME => s129239 DATE PLOTTED => 19-OCT-2010 TIME PLOTTED => 08:37

DIST	COUNTY	ROUTE	POST MILES TOTAL PROJECT	SHEET No	TOTAL SHEETS
07	LA	91	R6.4/R17.6	31	37

REGISTERED CIVIL ENGINEER 10/19/10 DATE

12-13-10
PLANS APPROVAL DATE

REGISTERED PROFESSIONAL ENGINEER MAZIN S. IBRAHIM No. C69896 Exp. 09/30/12 CIVIL STATE OF CALIFORNIA

The State of California or its officers or agents shall not be responsible for the accuracy or completeness of electronic copies of this plan sheet.

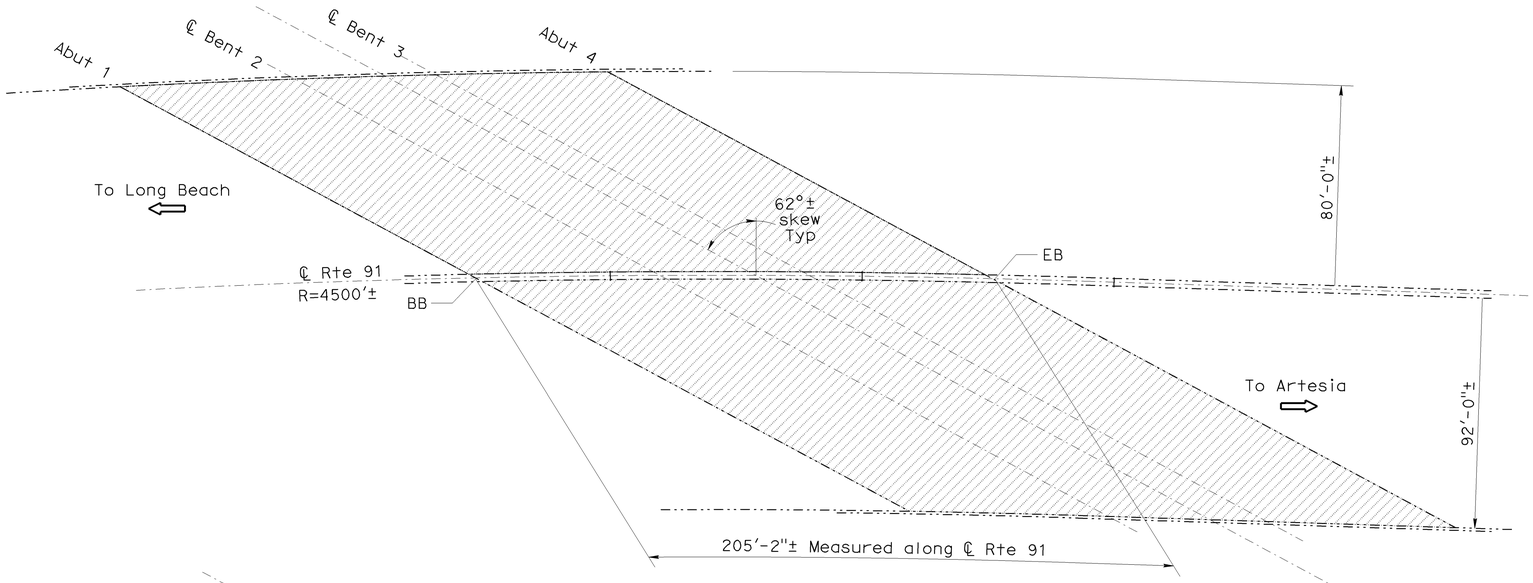

DECK TREATMENT

LEGEND:

-·-·-·-	Indicates existing.
⇨	Indicates direction of traffic.
▨	Indicates limits of clean and treat existing bridge deck. Prior to bridge deck treatment, remove unsound concrete and patch with rapid setting concrete.
BxCx	Indicates location of repair column spalls & place steel casing.
(BxCx)	Indicates columns with steel casing without spall repairs.
▨	Indicates limits of repair spalled surface area.

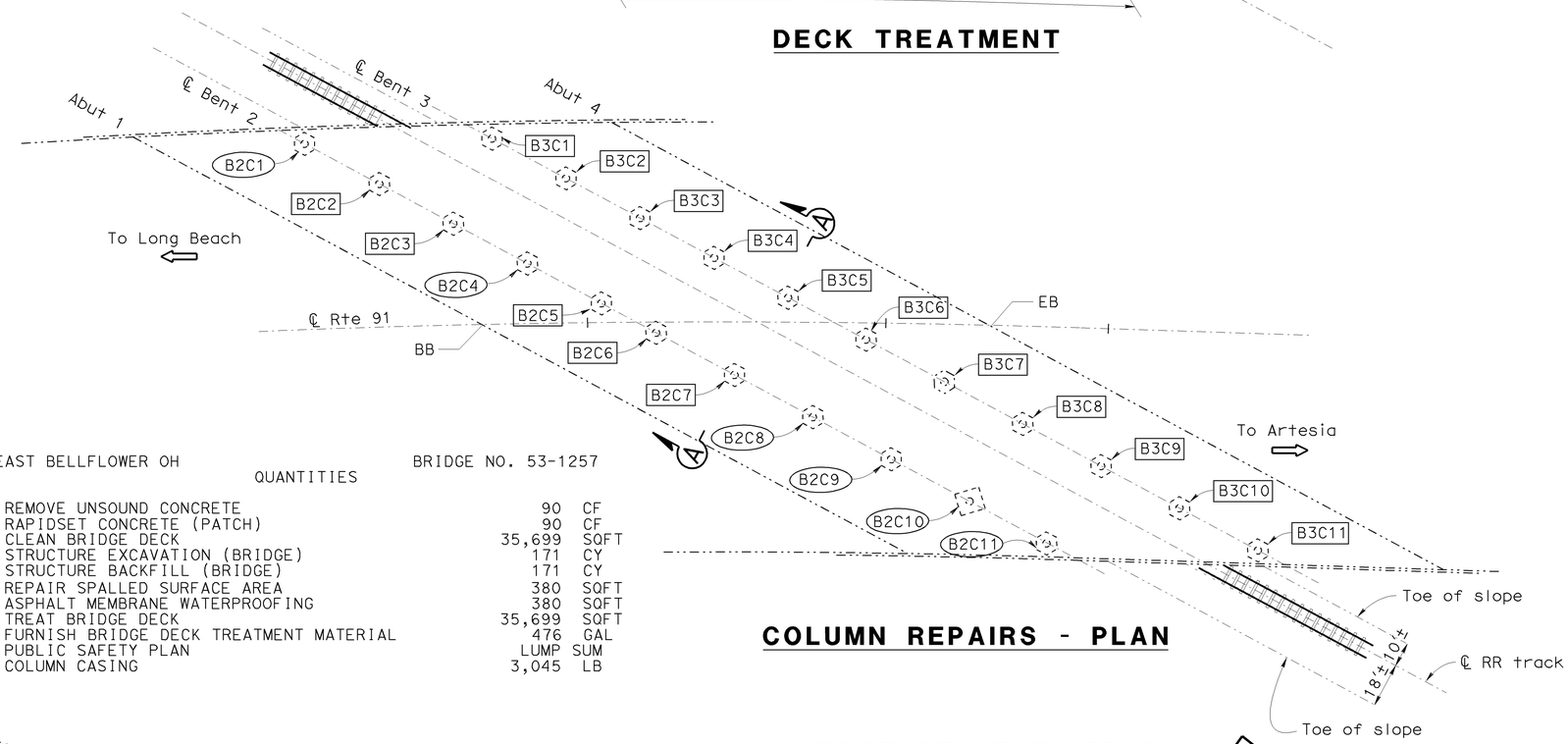

COLUMN REPAIRS - PLAN

EAST BELLFLOWER OH BRIDGE NO. 53-1257

QUANTITIES

REMOVE UNSOUND CONCRETE	90	CF
RAPIDSET CONCRETE (PATCH)	90	CF
CLEAN BRIDGE DECK	35,699	SQFT
STRUCTURE EXCAVATION (BRIDGE)	171	CY
STRUCTURE BACKFILL (BRIDGE)	171	CY
REPAIR SPALLED SURFACE AREA	380	SQFT
ASPHALT MEMBRANE WATERPROOFING	380	SQFT
TREAT BRIDGE DECK	35,699	SQFT
FURNISH BRIDGE DECK TREATMENT MATERIAL	476	GAL
PUBLIC SAFETY PLAN	LUMP	SUM
COLUMN CASING	3,045	LB

NOTE:
THE CONTRACTOR SHALL VERIFY ALL CONTROLLING FIELD DIMENSIONS BEFORE ORDERING OR FABRICATING ANY MATERIAL.

EAST BELLFLOWER OH

Br No. 53-1257, Rte 91, PM R16.54
NO SCALE

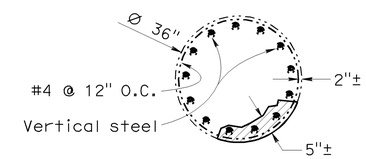

VIEW B-B

NO SCALE

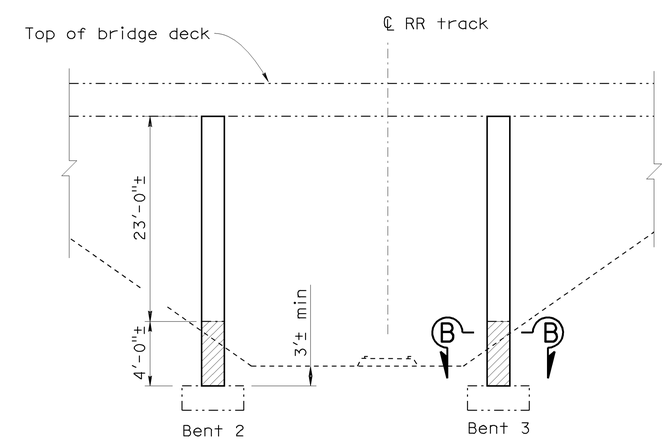

SECTION A-A

NO SCALE

TONY D. BRAKE DESIGN ENGINEER	DESIGN	BY Mazin Ibrahim	CHECKED Ramesh Patel	LOAD FACTOR DESIGN	LIVE LOADING: HS20-44 AND ALTERNATIVE AND PERMIT DESIGN LOAD	
	DETAILS	BY Tom Dang	CHECKED Mazin Ibrahim	LAYOUT	BY Tom Dang	CHECKED Mazin Ibrahim
	QUANTITIES	BY Mazin Ibrahim	CHECKED Ramesh Patel	SPECIFICATIONS	BY Dave Klein	PLANS AND SPECS COMPARED Dave Klein

STATE OF CALIFORNIA
DEPARTMENT OF TRANSPORTATION

DIVISION OF MAINTENANCE
STRUCTURE MAINTENANCE DESIGN

BRIDGE NO. 53-1257
POST MILE R16.54

ROUTE 91 BRIDGES
GENERAL PLAN NO. 10

STRUCTURES MAINTENANCE GENERAL PLAN SHEET (ENGLISH) (REV. 10/25/05)

ORIGINAL SCALE IN INCHES FOR REDUCED PLANS 0 1 2 3

CU 07
EA 4Y1401

DISREGARD PRINTS BEARING EARLIER REVISION DATES

REVISION DATES: 3-11-10 6-14-10 8-09-10 9-28-10 9-24-10 10-06-10 10-19-10

SHEET 10 OF 16

FILE => 07-4y1401-a-gp10.dgn

USERNAME => s129239 DATE PLOTTED => 19-OCT-2010 TIME PLOTTED => 08:37

DIST	COUNTY	ROUTE	POST MILES TOTAL PROJECT	SHEET No	TOTAL SHEETS
07	LA	91	R6.4/R17.6	32	37

REGISTERED CIVIL ENGINEER 10/06/10 DATE

12-13-10
PLANS APPROVAL DATE

REGISTERED PROFESSIONAL ENGINEER MAZIN S. IBRAHIM No. C69896 Exp. 09/30/12 CIVIL STATE OF CALIFORNIA

The State of California or its officers or agents shall not be responsible for the accuracy or completeness of electronic copies of this plan sheet.

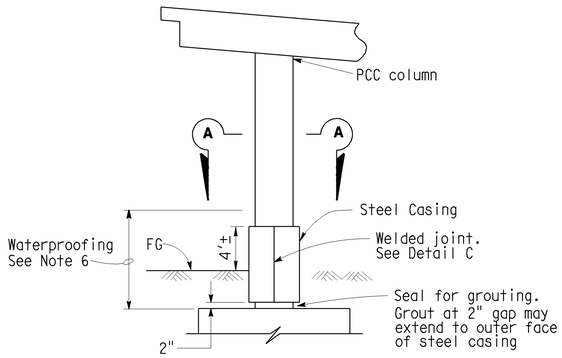

TYPICAL COLUMN

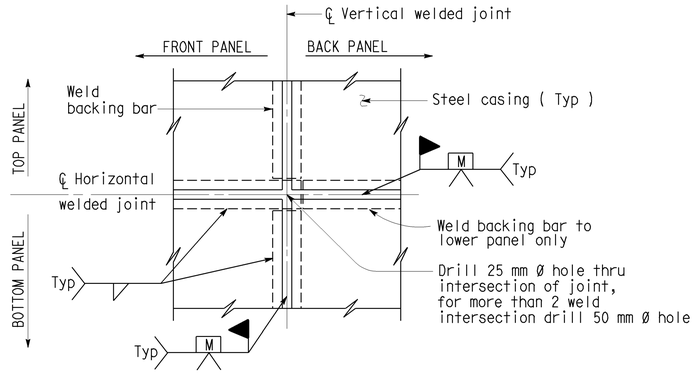

(TWO WELDED INTERSECTION JOINT)

DETAIL C

LEGEND:

Indicates existing.

Indicates limits of structure excavation.

Indicates limits of structure backfill.

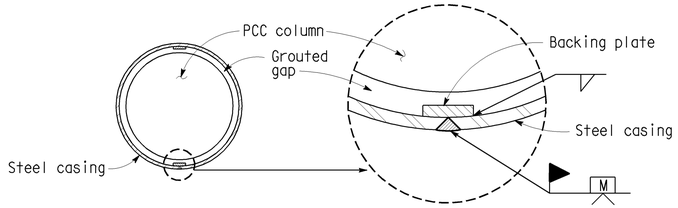

SECTION A-A
ROUND COLUMN

NOTES:

1) For varying thickness steel casing inside surface to remain flush. Minimum clearance from PCC column to casing shall be maintained.
2) Appropriate injection nozzles to be provided on casing, but removed and ground flush following completion of grouting operation.
3) All voids between steel casing and PCC column (Class F) to be filled with grout.
4) Location and number of vertical and horizontal welds to be determined by the Contractor, and subject to the approval of the Engineer. The location of casing welds are for illustration. No skip welds allowed.
5) Circular steel casing to be ¼" thick minimum for casings with a 1321 mm diameter or less. Backing plates to be the same thickness as casing up to maximum ½" thick.
6) Waterproof steel casing to 10′ above finished grade.
7) Shortcrete minimum strength f'_c = 3800psi @ 28 days.
8) Fy = 60 ksi

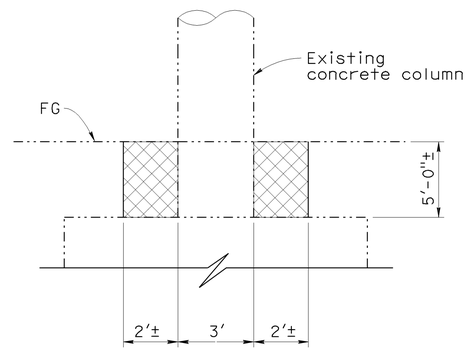

LIMITS OF STRUCTURE EXCAVATION

SEQUENCE OF REPAIR COLUMNS SPALLED SURFACE AREA

GROUP NO.	COLUMN LOCATION
1	B3C3, B3C7, B3C11, B2C2, B2C7
2	B3C2, B3C6, B3C10, B2C6
3	B3C1, B3C5, B3C9, B2C5
4	B3C4, B3C8, B2C3

NOTES:

Do not repair more than one group of columns at a time.

NOTE:
THE CONTRACTOR SHALL VERIFY ALL CONTROLLING FIELD DIMENSIONS BEFORE ORDERING OR FABRICATING ANY MATERIAL.

	BY	CHECKED
DESIGN	Mazin Ibrahim	Ramesh Patel
DETAILS	Tom Dang/others	Mazin Ibrahim
QUANTITIES	Mazin Ibrahim	Ramesh Patel

STATE OF CALIFORNIA
DEPARTMENT OF TRANSPORTATION

DIVISION OF MAINTENANCE
STRUCTURE MAINTENANCE DESIGN

BRIDGE NO. Various
POST MILE Varies

ROUTE 91 BRIDGES
STEEL COLUMN CASINGS DETAILS

STRUCTURES MAINTENANCE DETAIL SHEET (ENGLISH) (REV. 10/25/05)

ORIGINAL SCALE IN INCHES FOR REDUCED PLANS 0 1 2 3

CU 07
EA 4Y1401

DISREGARD PRINTS BEARING EARLIER REVISION DATES

REVISION DATES: 7-14-10 8-09-10 9-28-10 9-24-10 10-06-10

SHEET 11 OF 16

FILE => 07-4y1401-b-casingdtls.dgn

USERNAME => s129239 DATE PLOTTED => 13-OCT-2010 TIME PLOTTED => 13:12

DIST	COUNTY	ROUTE	POST MILES TOTAL PROJECT	SHEET No	TOTAL SHEETS
07	LA	91	R6.4/R17.6	33	37

REGISTERED CIVIL ENGINEER 10/19/10 DATE

12-13-10
PLANS APPROVAL DATE

REGISTERED PROFESSIONAL ENGINEER MAZIN S. IBRAHIM No. C69896 Exp. 09/30/12 CIVIL STATE OF CALIFORNIA

The State of California or its officers or agents shall not be responsible for the accuracy or completeness of electronic copies of this plan sheet.

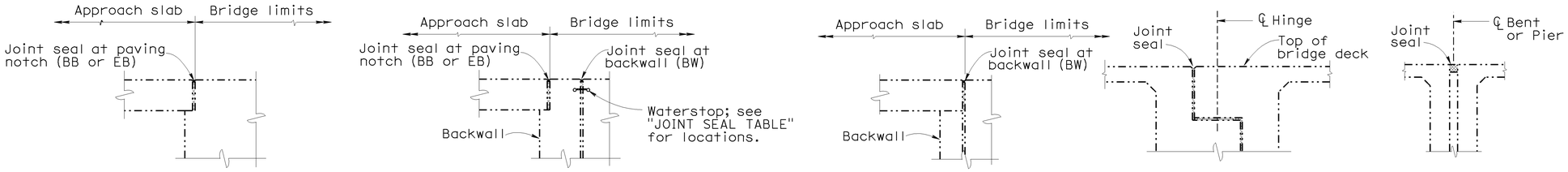

DIAPHRAGM ABUTMENT | ABUTMENT WITH BACKWALL AND PAVING NOTCH | ABUTMENT WITH BACKWALL | HINGE | BENT OR PIER

JOINT SEAL LOCATION

NO SCALE

JOINT SEAL TABLE

BRIDGE NAME	BRIDGE NUMBER	LOCATION	MINIMUM "MR" (INCHES)	APPROX LENGTH (FT)	EXISTING WATERSTOP	APPROX DEPTH TO CLEAN EXP JOINT (INCHES)	APPROX DEPTH OF JOINT SPALLS (INCHES)	APPROX WIDTH OF JOINT SPALLS (INCHES)	APPROX LENGTH OF JOINT SPALLS (FEET)
COMPTON CREEK BOH	53-2235	Abut 1	1	230	NO	6	3	6	5
		Hinge 1	1½	190	YES	6	3	6	5
		Hinge 2	1½	179	YES	6	3	6	5
		Hinge 3	1½	153	YES	6	3	6	5
		Abut 12	1	153	NO	6	3	6	5
COMPTON CREEK BOH OFF-RAMP	53-2237S	Hinge A	1½	24	YES	12	3	6	5
		Hinge B	1½	35	YES	12	3	6	5
		Abut 12	2	35	NO	6	3	6	5
COMPTON BOH ON-RAMP	53-2236S	Hinge A	1½	34	YES	12	3	6	5
		Hinge B	1½	27	YES	12	3	6	5
		Hinge C	1½	26	YES	12	3	6	5
		Hinge D	1½	26	YES	12	3	6	5
ARTESIA-SANTA FE UC OFF-RAMP	53-2238K	Hinge	2	38	NO	6	3	6	5
LONG BEACH BLVD UC	53-2373	Abut 1	1½	189	NO	6	3	6	5
		Abut 2	1½	191	NO	6	3	6	5
BUTLER-ARTESIA UC	53-2169	Abut 1, BW	1½	235	NO	6	3	6	5
		Abut 5, BW	1½	235	NO	6	3	6	5
ORANGE AVENUE UC	53-2235	Abut 2 Westbound	2	84	NO	6	3	6	5

NOTES:

The following notes apply to JOINT SEAL TYPE A:

Install Joint Seal (MR = ½") or Silicone Joint Seal 3" up into curb or barrier rail on the low side of the deck where deck joint aligns with curb or barrier rail joint.

For details not shown see RSP B6-21 sheet.

The following notes apply to JOINT SEAL TYPE B:

1) Seal must satisfy both minimum Movement Rating (MR) and minimum W1 requirements.

2) Minimum W1 is the calculated maximum width of the joint based on field measurements. After the joints have been cleaned, minimum W1 is to be recalculated by the Engineer.

3) W1 shall be the smaller of the values determined as follows:
   A) 0.85 times the manufacturer's designed minimum uncompressed width of the seal.
   B) The width of the seal on the third successive test cycle of the pressure deflection test, when compressed to an average pressure of 3.0 PSI.

4) Bend Type B joint seal 6 inches up into curb or rail on the low side of the deck where deck joint matches curb or rail joint.

For details not shown see RSP B6-21 sheet.

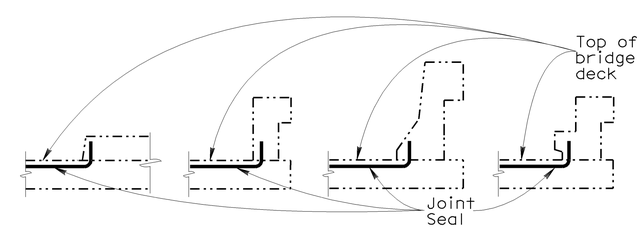

BARRIER RAIL

JOINT SEAL AT LOW SIDE OF DECK

Note: Details shown for illustration purposes only.

For use only where deck joint matches the sidewalk, curb or barrier rail joint.

NOTE:
THE CONTRACTOR SHALL VERIFY ALL CONTROLLING FIELD DIMENSIONS BEFORE ORDERING OR FABRICATING ANY MATERIAL.

	BY	CHECKED
DESIGN	Mazin Ibrahim	Ramesh Patel
DETAILS	Tom Dang	Ramesh Patel
QUANTITIES	Mazin Ibrahim	Ramesh Patel

STATE OF CALIFORNIA
DEPARTMENT OF TRANSPORTATION

DIVISION OF MAINTENANCE
STRUCTURE MAINTENANCE DESIGN

BRIDGE NO. Various
POST MILE Varies

ROUTE 91 BRIDGES
MISCELLANEOUS DETAILS NO. 1

STRUCTURES MAINTENANCE DETAIL SHEET (ENGLISH) (REV. 10/25/05)

ORIGINAL SCALE IN INCHES FOR REDUCED PLANS 0 1 2 3

CU 07
EA 4Y1401

DISREGARD PRINTS BEARING EARLIER REVISION DATES

REVISION DATES: 3-11-10 | 9-28-10 | 9-28-10 | 10-06-10 | 10-19-10

SHEET 12 OF 16

FILE => 07-4y1401-c-miscdtls01.dgn

USERNAME => s129239 DATE PLOTTED => 19-OCT-2010 TIME PLOTTED => 08:37

DIST	COUNTY	ROUTE	POST MILES TOTAL PROJECT	SHEET No	TOTAL SHEETS
07	LA	91	R6.4/R17.6	34	37

REGISTERED CIVIL ENGINEER 10/06/10 DATE

12-13-10
PLANS APPROVAL DATE

REGISTERED PROFESSIONAL ENGINEER MAZIN S. IBRAHIM No. C69896 Exp. 09/30/12 CIVIL STATE OF CALIFORNIA

The State of California or its officers or agents shall not be responsible for the accuracy or completeness of electronic copies of this plan sheet.

DECK REPAIR TABLE
REMOVE UNSOUND CONCRETE AND RAPID SETTING CONCRETE (PATCH)

BRIDGE NAME	BRIDGE NUMBER	APPROXIMATE AREA DAMAGED (%)	APPROXIMATE DEPTH (INCHES)
E91-N110 CONNECTOR OC	53-266G	1	3
ACACIA AVENUE UC	53-2371	1	3
COLLEGE OH	53-2234	1	3
COMPTON CREEK BOH	53-2235	1	3
COMPTON CREEK BOH OFF-RAMP	53-2237S	1	3
COMPTON CREEK BOH ON-RAMP	53-2236S	1	3
ARTESIA-SANTA FEE UC OFF-RAMP	53-2238K	1	3
LONG BEACH BLVD UC	53-2373	1	3
BUTLER-ARTESIA UC	53-2169	1	3
ROUTE 91/710 SEPARATION	53-2240	1	3
ORANGE AVENUE UC	53-2122	1	3
ATLANTIC AVENUE UC	53-2124	1	3
CHERRY AVENUE UC	53-2123	1	3
NORTH LONG BEACH OH	53-2101	1	3
DOWNEY AVENUE UC	53-1761	1	3
W91-S605 CONNECTOR	53-1705F	1	3
GRIDLEY ROAD OC	53-1324	1	3
EAST BELFLOWER OH	53-1257	1	3

DECK REPAIR NOTES:

1. Existing reinforcement shall be located and protected in place during unsound concrete removal and patching operations.
2. It is responsibility of the Contractor to repair any reinforcement that is accidently cut by saw cutting operations.
3. When existing transverse reinforcement is exposed in the deck surface, saw cutting may be waived with the approval of the Engineer.
4. The saw cut depth shall not exceed ¾ inch or the concrete cover over the top steel reinforcing bars, whichever is less.
5. Remove unsound Portland Cement concrete and unsound concrete patches to expose sound, hard concrete substrate. Replace original deck surface with rapid setting concrete patch.

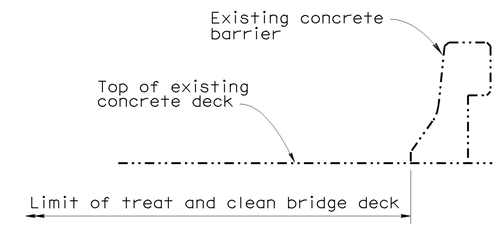

EOD BARRIER

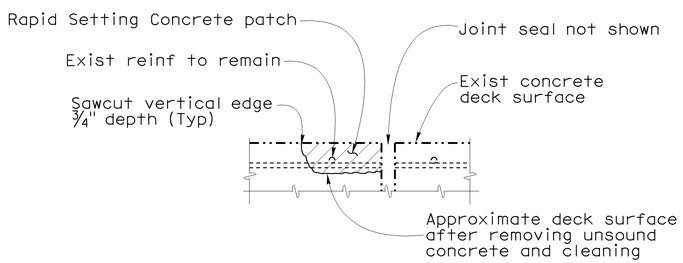

JOINT SPALL REPAIR DETAIL

Location will be determined by the Engineer. Reinforcement may be encountered during deck concrete removal and is to remain undamaged.

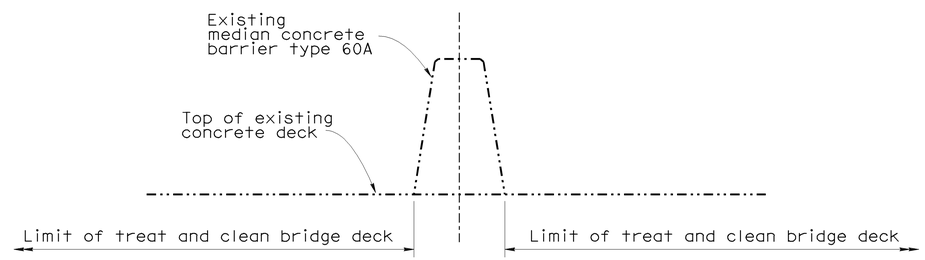

MEDIAN BARRIER

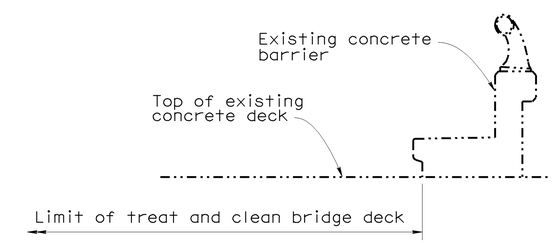

SIDEWALK BARRIER TYPE 2

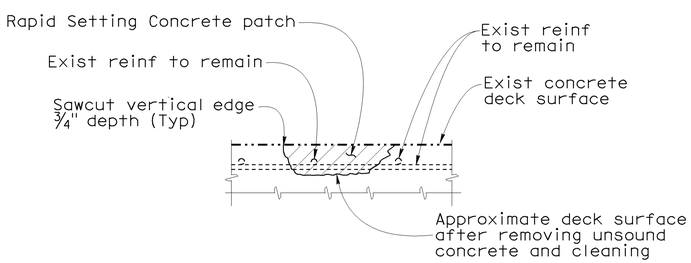

DECK DAMAGE REPAIR DETAIL

Location will be determined by the Engineer. Reinforcement may be encountered during deck concrete removal and is to remain undamaged.

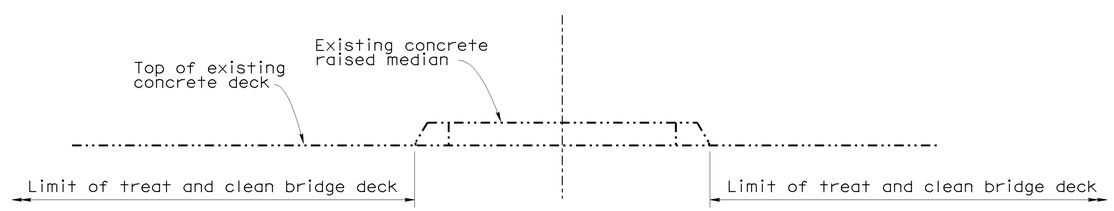

RAISED MEDIAN

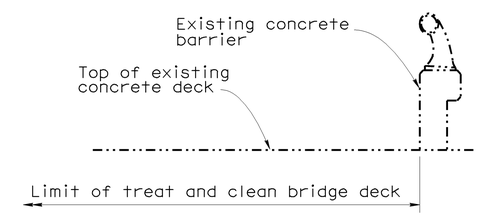

SIDEWALK BARRIER TYPE 1

TYPICAL LIMITS OF DECK WORK

NO SCALE

NOTE:
THE CONTRACTOR SHALL VERIFY ALL CONTROLLING FIELD DIMENSIONS BEFORE ORDERING OR FABRICATING ANY MATERIAL.

	BY	CHECKED
DESIGN	Mazin Ibrahim	Ramesh Patel
DETAILS	Tom Dang	Mazin Ibrahim
QUANTITIES	Mazin Ibrahim	Ramesh Patel

STATE OF CALIFORNIA
DEPARTMENT OF TRANSPORTATION

DIVISION OF MAINTENANCE
STRUCTURE MAINTENANCE DESIGN

CU 07
EA 4Y1401

BRIDGE NO. Various
POST MILE Varies

ROUTE 91 BRIDGES
MISCELLANEOUS DETAILS NO. 2

STRUCTURES MAINTENANCE DETAIL SHEET (ENGLISH) (REV. 10/25/05)

ORIGINAL SCALE IN INCHES FOR REDUCED PLANS 0 1 2 3

DISREGARD PRINTS BEARING EARLIER REVISION DATES 7-14-10 9-28-10 10-06-10

REVISION DATES

SHEET 13 OF 16

FILE => 07-4y1401-c-miscdtls02.dgn

USERNAME => s129239 DATE PLOTTED => 13-OCT-2010 TIME PLOTTED => 13:12

DIST	COUNTY	ROUTE	POST MILES TOTAL PROJECT	SHEET No	TOTAL SHEETS
07	LA	91	R6.4/R17.6	35	37

REGISTERED CIVIL ENGINEER 10/06/10 DATE

12-13-10
PLANS APPROVAL DATE

REGISTERED PROFESSIONAL ENGINEER MAZIN S. IBRAHIM No. C69896 Exp. 09/30/12 CIVIL STATE OF CALIFORNIA

The State of California or its officers or agents shall not be responsible for the accuracy or completeness of electronic copies of this plan sheet.

LEGEND:

Indicates existing.

Indicates new structure.

Indicates concrete removal limits. Preserve existing reinf.

Indicates new concrete.

TEMPORARY DECKING DESIGN LOADING:

1. Moment demand per foot = 3800 lbs-ft/ft
2. For steel plate systems:
   a. anchor bolt shear per foot = 2700 lbs/ft
   b. anchor bolt tension = 4225 lbs
   c. maximum anchor bolt spacing = 1.0 ft
3. Compressive strength of new concrete = 4000 psi

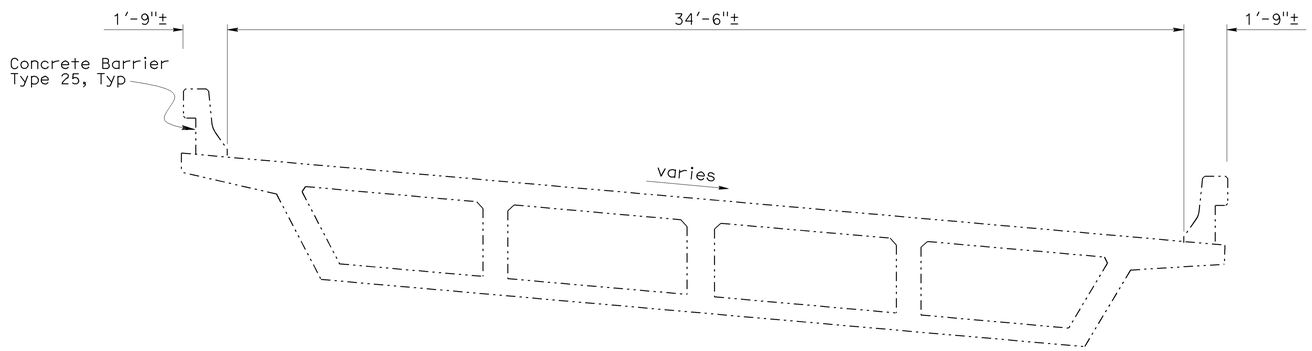

TYPICAL SECTION

Br No. 53-2665G
NO SCALE

JOINT SEAL ASSEMBLY DIMENSIONS				
BRIDGE NUMBER	JOINT SEAL LOCATION	"B1"	"B2"	"H"
53-2665G	Hinge 1	1'-4"	1'-4"	1'-0"
	Hinge 2	0'-8¾"	0'-8¾"	1'-0"

For "a" dimensions, see "JOINT SEAL ASSEMBLY" sheet.

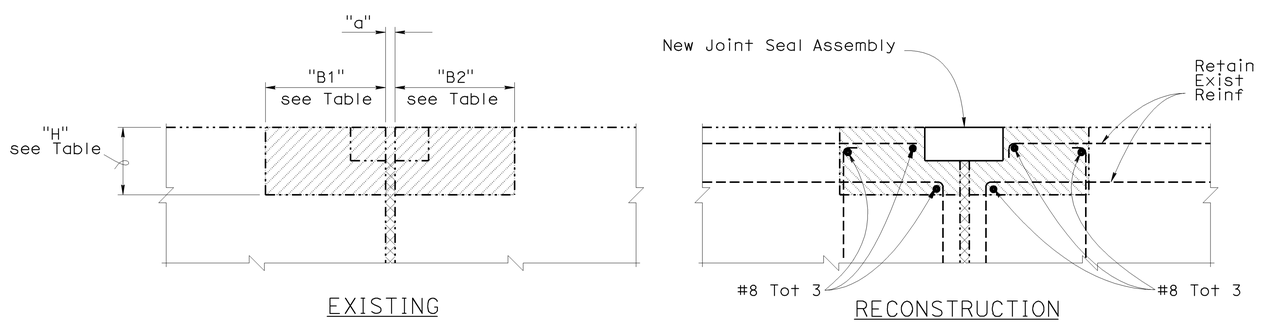

JOINT SEAL ASSEMBLY REPLACEMENT

NO SCALE

NOTE:
THE CONTRACTOR SHALL VERIFY ALL CONTROLLING FIELD DIMENSIONS BEFORE ORDERING OR FABRICATING ANY MATERIAL.

DESIGN	BY Mazin Ibrahim	CHECKED Ramesh Patel	
DETAILS	BY Tom Dang	CHECKED Ramesh Patel	
QUANTITIES	BY Mazin Ibrahim	CHECKED Ramesh Patel	

STATE OF CALIFORNIA
DEPARTMENT OF TRANSPORTATION

DIVISION OF MAINTENANCE
STRUCTURE MAINTENANCE DESIGN

BRIDGE NO. Various
POST MILE Varies

ROUTE 91 BRIDGES
MISCELLANEOUS DETAILS NO. 3

STRUCTURES MAINTENANCE DETAIL SHEET (ENGLISH) (REV. 10/25/05)

ORIGINAL SCALE IN INCHES FOR REDUCED PLANS 0 1 2 3

CU 07
EA 4Y1401

DISREGARD PRINTS BEARING EARLIER REVISION DATES

REVISION DATES: 7-15-10 8-09-10 9-20-10 10-06-10

SHEET 14 OF 16

FILE => 07-4y1401-c-miscdtls03.dgn

USERNAME => s129239 DATE PLOTTED => 13-OCT-2010 TIME PLOTTED => 13:12

DIST	COUNTY	ROUTE	POST MILES TOTAL PROJECT	SHEET No	TOTAL SHEETS
07	LA	91	R6.4/R17.6	36	37

REGISTERED CIVIL ENGINEER — DATE 10/06/10

12-13-10
PLANS APPROVAL DATE

REGISTERED PROFESSIONAL ENGINEER — MAZIN S. IBRAHIM — No. C69896 — Exp. 09/30/12 — CIVIL — STATE OF CALIFORNIA

The State of California or its officers or agents shall not be responsible for the accuracy or completeness of electronic copies of this plan sheet.

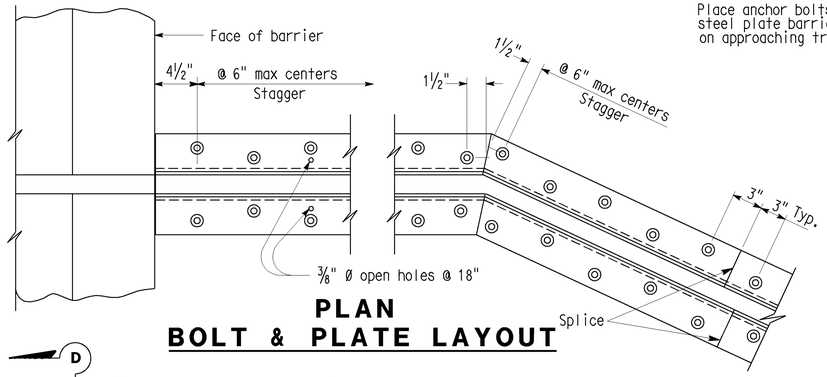

PLAN
BOLT & PLATE LAYOUT

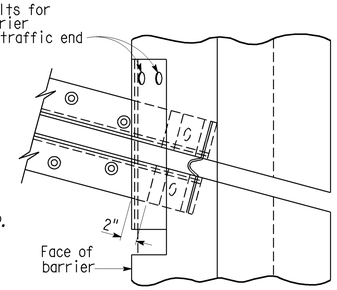

SKEW ≤ 20°

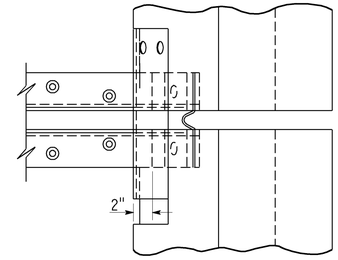

SKEW > 20°

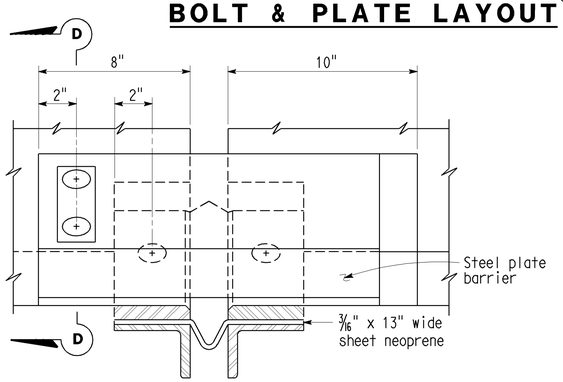

VIEW B-B

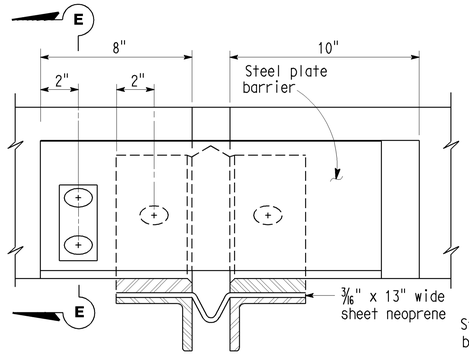

VIEW C-C

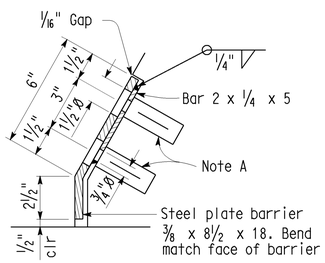

SECTION D-D

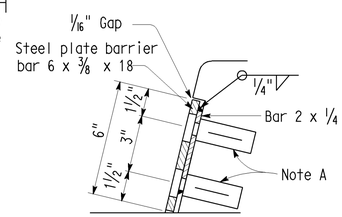

SECTION E-E

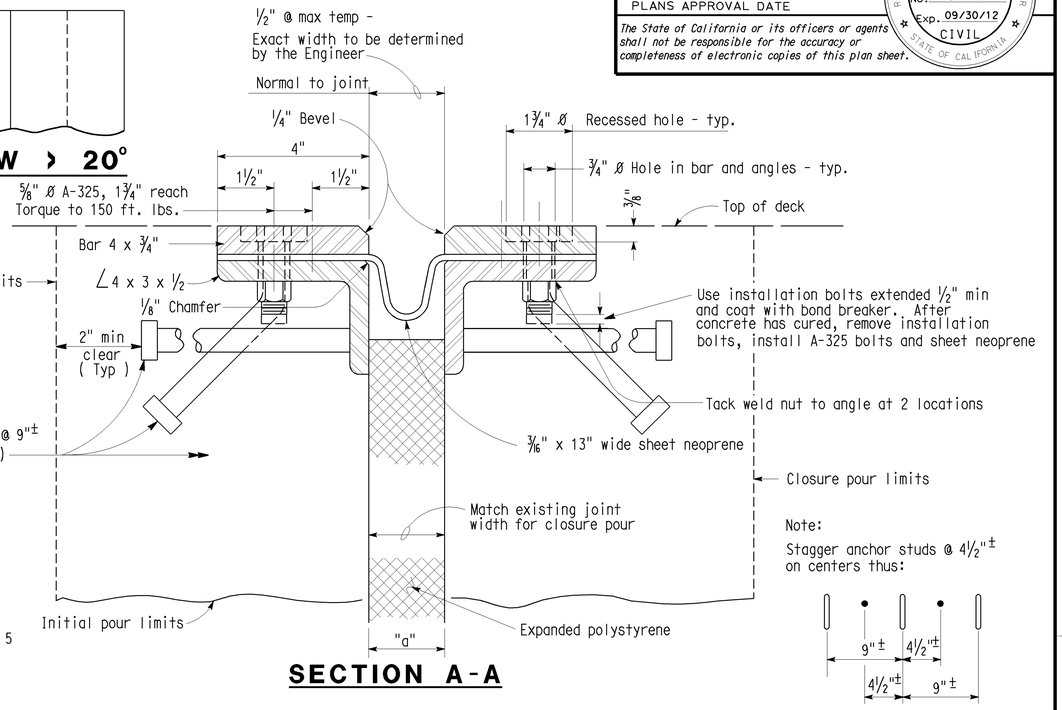

SECTION A-A

Note:
Stagger anchor studs @ 4½"± on centers thus:

JOINT SEAL TABLE							
Joint Information					"a" Dimensions		
Bridge Location	Bridge Number	Joint Seal Location	Movement Rating (MR)	Skew	Winter	Spring & Fall	Summer
E91-N110 CONNECTOR OC	53-2665G	Hinge 1	3.5	0°	2½"	2"	1½"
		Hinge 2	3.5	0°	2½"	2"	1½"

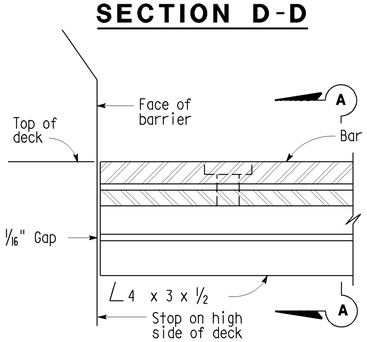

HIGH SIDE BARRIER DETAIL

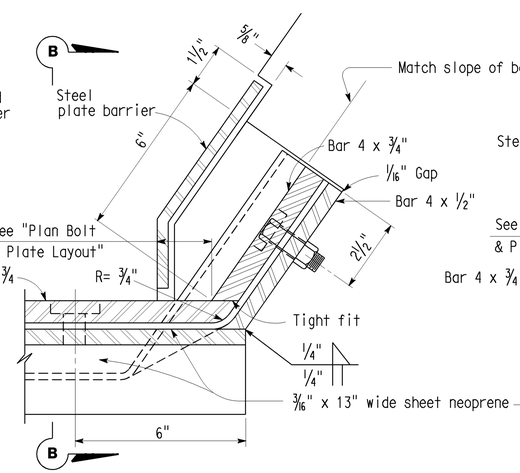

LOW SIDE BARRIER DETAIL
(See Note B)

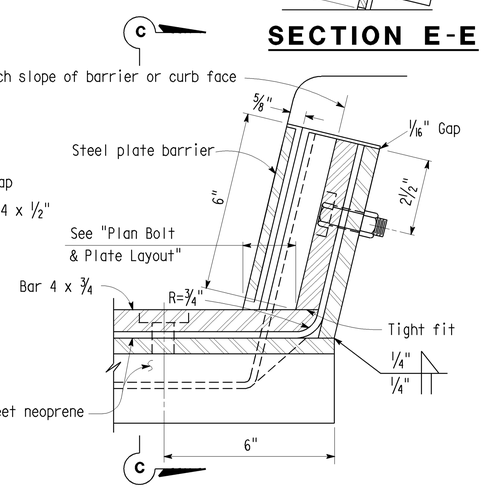

SIDEWALK DETAIL
(See Note B)

NOTES:

Full penetration butt welds may be substituted for fillet welds on all anchor studs.

Alternate types of anchor studs may be permitted subject to the approval by the Engineer.

Joint seal assembly to be used in conjunction with closure pour. (See other sheets for limits). Closure pour shall not be placed until final deck surface is within the tolerance specified.

Use joint at crown of roadway, at any change in transverse slope in deck and at changes in horizontal direction. Place other joints at or near lanes. All metal parts to be painted or galvanized after fabrication.

Sheet neoprene shall be fabricated in one continuous piece or joints shall be vulcanized. Neoprene shall be fabricated to bend around corners. 1" holes in neoprene sheets shall be drilled or punched so that the neoprene is not distorted at the time of installation.

NOTE A

Insert assembly or expansion anchorage for ⅝" x 1¾" A-325 bolt.

NOTE B

Use the Sidewalk Detail at all sidewalk joints. Use the Barrier Detail at both sides if the roadway is crowned or if the difference in elevation between the ends of the seal is 0.5' or less.

NOTE:
THE CONTRACTOR SHALL VERIFY ALL CONTROLLING FIELD DIMENSIONS BEFORE ORDERING OR FABRICATING ANY MATERIAL.

	BY	CHECKED
DESIGN	Mazin Ibrahim	Ramesh Patel
DETAILS	Tom Dang	Mazin Ibrahim
QUANTITIES	Mazin Ibrahim	Ramesh Patel

STATE OF CALIFORNIA
DEPARTMENT OF TRANSPORTATION

DIVISION OF MAINTENANCE
STRUCTURE MAINTENANCE DESIGN

BRIDGE NO. Various
POST MILE Varies

ROUTE 91 BRIDGES
JOINT SEAL ASSEMBLY (MAXIMUM MOVEMENT RATING = 4'')

STRUCTURES MAINTENANCE DETAIL SHEET (ENGLISH) (REV. 10/25/05)

ORIGINAL SCALE IN INCHES FOR REDUCED PLANS 0 1 2 3

CU 07
EA 4Y1401

DISREGARD PRINTS BEARING EARLIER REVISION DATES — REVISION DATES 9-08-10 9-29-10 10-06-10

SHEET 15 OF 16

FILE => 07-4y1401-d-jsa.dgn

USERNAME => s129239 DATE PLOTTED => 13-OCT-2010 TIME PLOTTED => 13:12

DIST	COUNTY	ROUTE	POST MILES TOTAL PROJECT	SHEET No	TOTAL SHEETS
07	LA	91	R6.4/R17.6	37	37

REGISTERED CIVIL ENGINEER 10/06/10 DATE

12-13-10
PLANS APPROVAL DATE

REGISTERED PROFESSIONAL ENGINEER MALIN S. IBRAHIM No. C69896 Exp. 09/30/12 CIVIL STATE OF CALIFORNIA

The State of California or its officers or agents shall not be responsible for the accuracy or completeness of electronic copies of this plan sheet.

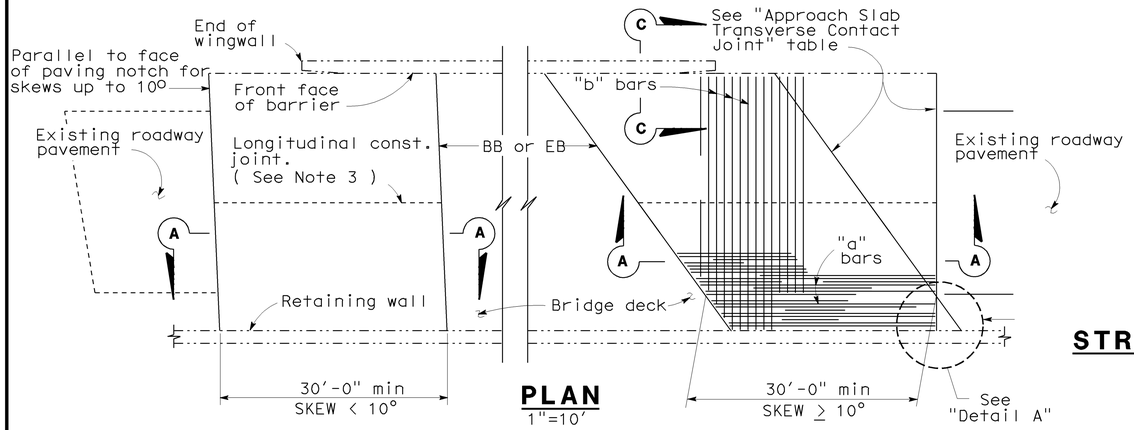

PLAN
1"=10'

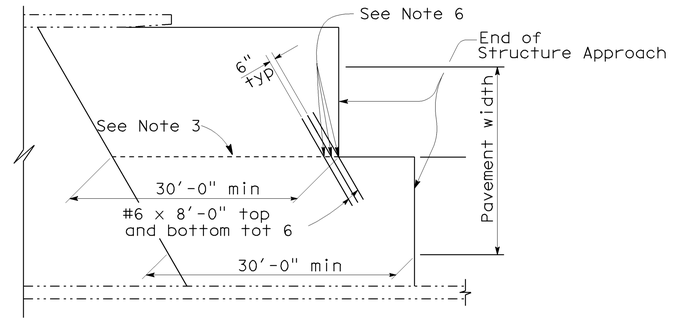

STRUCTURE APPROACH - END STAGGER DETAIL
No Scale

APPROACH SLAB TRANSVERSE CONTACT JOINT		
APPROACH SKEW	WITH AC ROADWAY PAVEMENT	WITH PCC ROADWAY PAVEMENT
< 10°	Parallel to face of paving notch	Parallel to face of paving notch
10° - 45°	Parallel to face of P N use (Detail A)	Stagger lines 24' to 36' apart
> 45°	Parallel to face of P N use (Detail A)	Stagger at each lane line

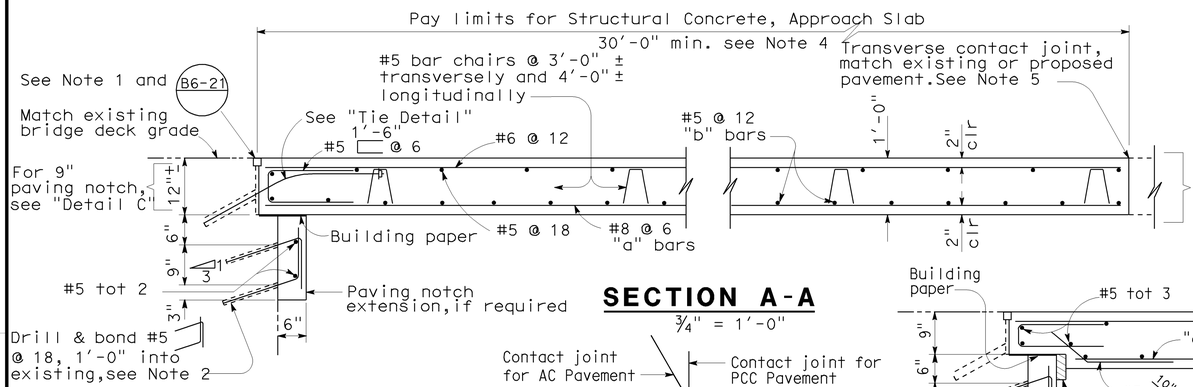

SECTION A-A
¾" = 1'-0"

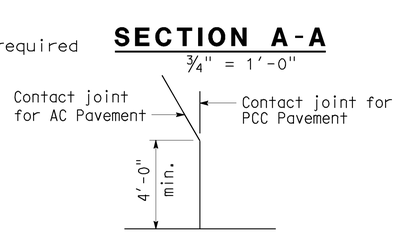

DETAIL A
No Scale

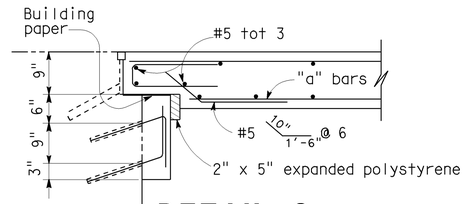

DETAIL C
¾" = 1'-0"

NOTE: For details not shown,see "Section A-A".

TIE DETAIL
¾" = 1'-0"

NOTE:
THE CONTRACTOR SHALL VERIFY ALL CONTROLLING FIELD DIMENSIONS BEFORE ORDERING OR FABRICATING ANY MATERIAL.

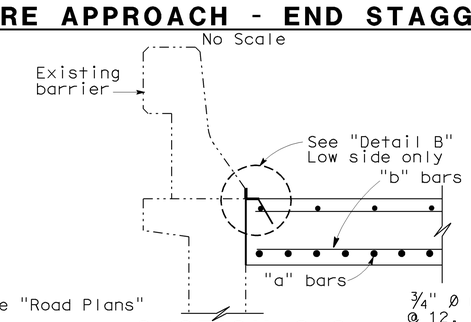

SECTION C-C
¾" = 1'-0"

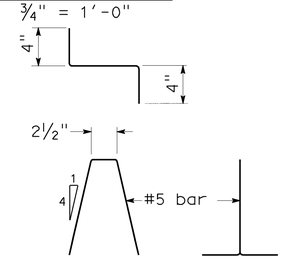

BAR CHAIR DETAIL
1½" = 1'-0"

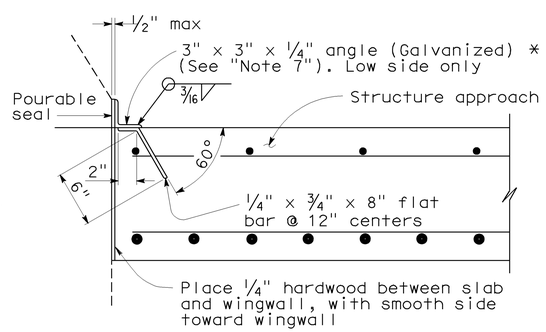

*(TO BE USED WITH TYPE 25 OR TYPE 27 CONCRETE BARRIER)

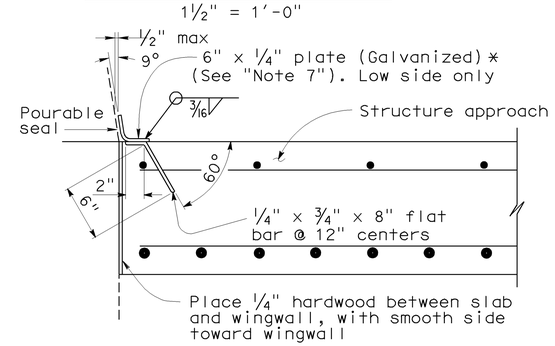

*(TO BE USED WITH TYPE 732 OR TYPE 736 CONCRETE BARRIER)

DETAIL B
1½" = 1'-0"

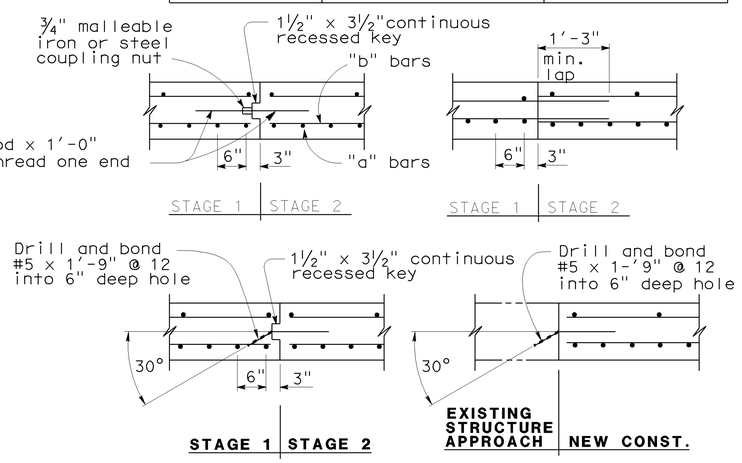

LONGITUDINAL CONSTRUCTION JOINT ALTERNATIVES
¾" = 1'-0"

NOTES:

1. For details not shown or noted,see Structure Plans. Adjust bar reinforcement to clear a sawcut for sealed joint,when required.
2. Space to avoid existing prestress anchorages and main reinforcement.
3. Longitudinal construction joints,when permitted by the Engineer,shall be located on lane lines.
4. Transverse contact joint shall be a minimum of 5'-0" from an existing or constructed weakened plane joint.
5. For transverse contact joint with new PCC paving. refer to Standard Plan P10.
6. Couplers are required for stage construction.
7. End angle or plate at beginning of barrier transition, end of wingwall or end of structure approach as applicable.

STANDARD DRAWING

RELEASE DATE 3/14/05	DESIGN	BY M.TRAFFALIS	CHECKED E.THORKILDSEN	RELEASED BY
	DETAILS	BY R.YEE	CHECKED E.THORKILDSEN	
FILE NO. xs3-140e	SUBMITTED	BY M.HA	DRAWING DATE 8/92	OFFICE CHIEF

STATE OF CALIFORNIA
DEPARTMENT OF TRANSPORTATION

DIVISION OF ENGINEERING SERVICES

BRIDGE NO. Various
MILE POST Varies

ROUTE 91 BRIDGES
STRUCTURE APPROACH TYPE R(30D)

DS OSD 2147A (ENGLISH) (REV. X/XX/XX)

ORIGINAL SCALE IN INCHES FOR REDUCED PLANS 0 1 2 3

CU 07
EA 4Y1401

DISREGARD PRINTS BEARING EARLIER REVISION DATES 9-28-10 10-06-10

REVISION DATES (PRELIMINARY STAGE ONLY)

SHEET 16 OF 16

USERNAME => s129239

DATE PLOTTED => 13-OCT-2010 TIME PLOTTED => 13:12

07-4y1401-e-strapp