Dist	COUNTY	ROUTE	POST MILES TOTAL PROJECT	SHEET No.	TOTAL SHEETS
07	LA	101	16.7	1	58

INDEX OF PLANS

SHEET No.	DESCRIPTION
1	TITLE SHEET
2	LAYOUT
3-5	CONSTRUCTION DETAILS
6	UTLITY PLAN
7	CONSTRUCTION AREA SIGNS
8-11	TRAFFIC HANDLING DETAILS
12	PAVEMENT DELINEATION PLAN
13	SIGN PLAN
14	SIGN QUANTITIES
15	SUMMARY OF QUANTITIES
16-32	ELECTRICAL PLANS
33-37	STRUCTURAL PLANS
38-58	REVISED STANDARD PLANS

STATE OF CALIFORNIA

DEPARTMENT OF TRANSPORTATION

PROJECT PLANS FOR CONSTRUCTION ON

STATE HIGHWAY

IN LOS ANGELES COUNTY IN LOS ANGELES AT SEPULVEDA BOULEVARD OFF RAMP

TO BE SUPPLEMENTED BY STANDARD PLANS DATED 2010

LOCATION MAP

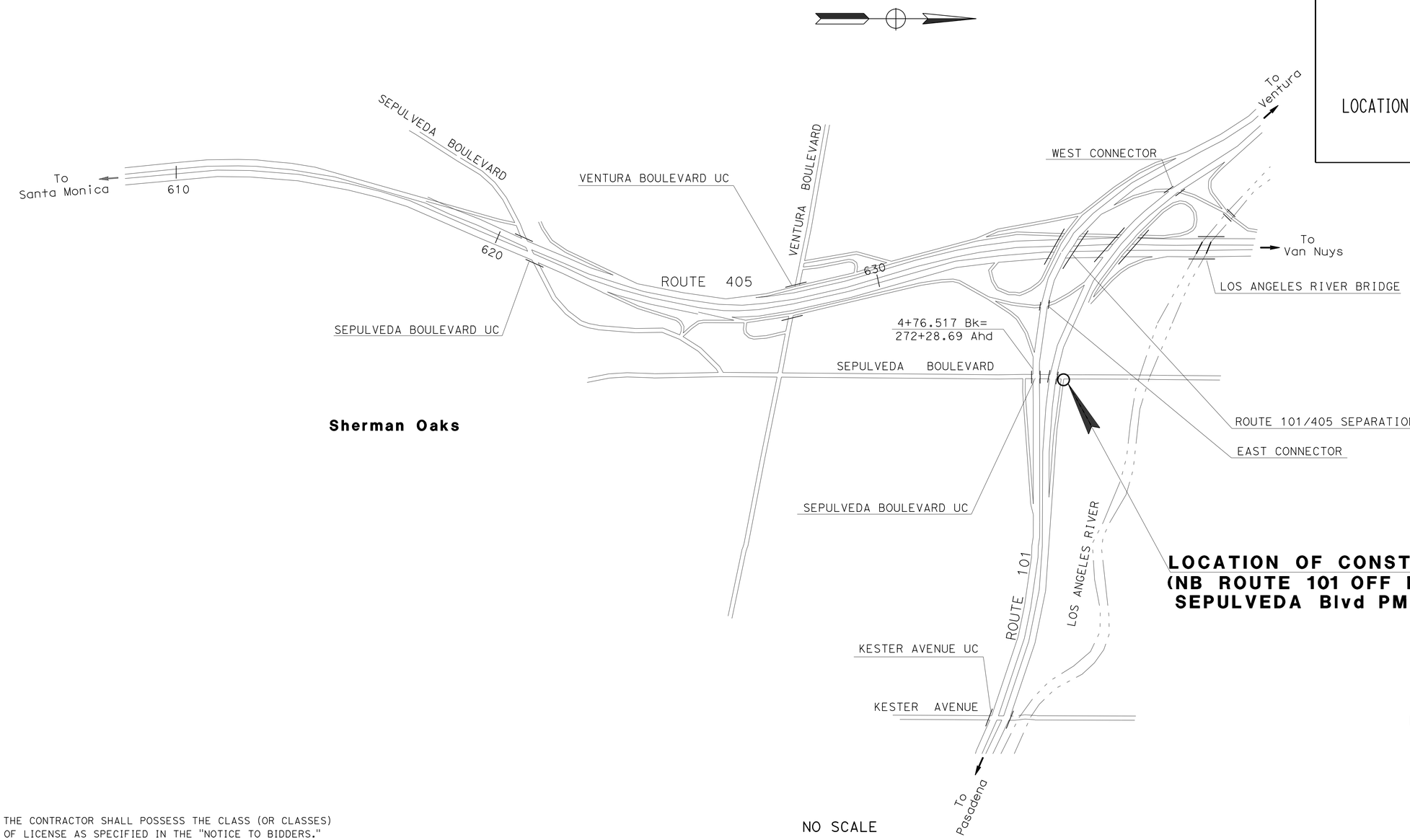

NO SCALE

THE CONTRACTOR SHALL POSSESS THE CLASS (OR CLASSES) OF LICENSE AS SPECIFIED IN THE "NOTICE TO BIDDERS."

Ohannes O Anserlian 12/8/14

PROJECT ENGINEER DATE
REGISTERED ELECTRICAL ENGINEER

REGISTERED PROFESSIONAL ENGINEER
OHANNES ANSERLIAN
No. E16682
Exp. 6/30/16
ELECTRICAL
STATE OF CALIFORNIA

December 15, 2014
PLANS APPROVAL DATE

THE STATE OF CALIFORNIA OR ITS OFFICERS OR AGENTS SHALL NOT BE RESPONSIBLE FOR THE ACCURACY OR COMPLETENESS OF SCANNED COPIES OF THIS PLAN SHEET.

CONTRACT No.	07-4T6104
PROJECT ID	0712000200

PROJECT MANAGER: ERIC WANG

DESIGN ENGINEER: OHANNES ANSERLIAN

LAST REVISION 00-00-00

DATE PLOTTED => 02-FEB-2015
TIME PLOTTED => 12:31

Dist	COUNTY	ROUTE	POST MILES TOTAL PROJECT	SHEET No.	TOTAL SHEETS
07	LA	101	16.7	2	58

REGISTERED CIVIL ENGINEER 1/14/12 DATE

12-15-14
PLANS APPROVAL DATE

REGISTERED PROFESSIONAL ENGINEER ESTHER M. KIM No. 48363 Exp. 6/30/16 CIVIL STATE OF CALIFORNIA

THE STATE OF CALIFORNIA OR ITS OFFICERS OR AGENTS SHALL NOT BE RESPONSIBLE FOR THE ACCURACY OR COMPLETENESS OF SCANNED COPIES OF THIS PLAN SHEET.

NOTES:

1. FOR ACCURATE RIGHT OF WAY AND ACCESS DATA, CONTACT RIGHT OF WAY ENGINEERING AT THE DISTRICT OFFICE.
2. FOR TRAFFIC SIGNALS, SEE ELECTRICAL PLANS.

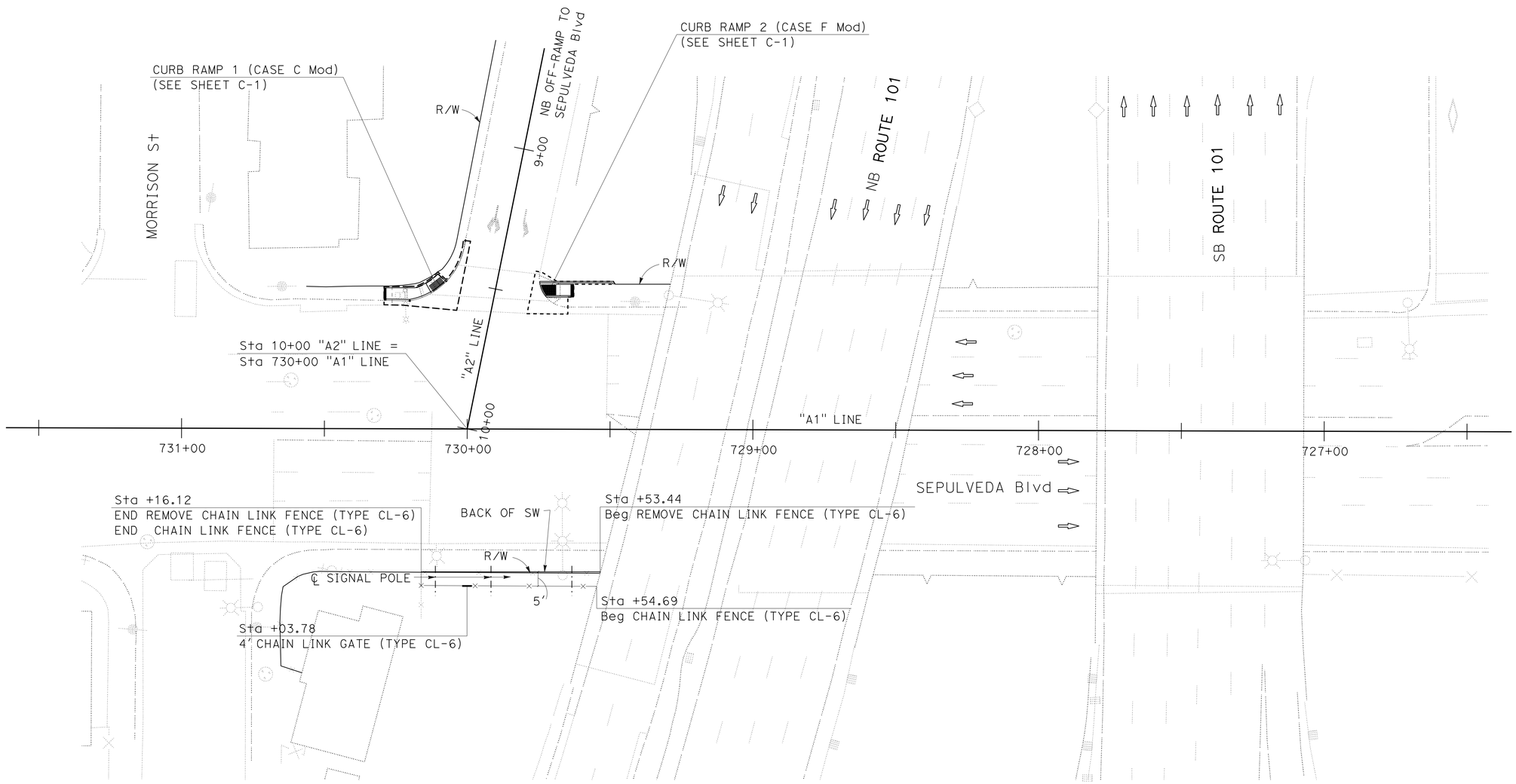

LAYOUT

SCALE: 1" = 20'

L-1

REVISED BY	DATE REVISED
RICHARD KHAW	ESTHER M. KIM

CALCULATED-DESIGNED BY	CHECKED BY

FUNCTIONAL SUPERVISOR: MOHAMMED CHOWDHURY

STATE OF CALIFORNIA - DEPARTMENT OF TRANSPORTATION
Caltrans® TRAFFIC DESIGN

S:\projects\4ft610\Winora\74ft610ea001.dgn

LAST REVISION 00-00-00 | DATE PLOTTED => 02-FEB-2015 | TIME PLOTTED => 12:31

Dist	COUNTY	ROUTE	POST MILES TOTAL PROJECT	SHEET No.	TOTAL SHEETS
07	LA	101	16.7	3	58

REGISTERED CIVIL ENGINEER 1/14/13 DATE

12-15-14
PLANS APPROVAL DATE

REGISTERED PROFESSIONAL ENGINEER ESTHER M. KIM No. 48363 Exp. 6/30/16 CIVIL STATE OF CALIFORNIA

THE STATE OF CALIFORNIA OR ITS OFFICERS OR AGENTS SHALL NOT BE RESPONSIBLE FOR THE ACCURACY OR COMPLETENESS OF SCANNED COPIES OF THIS PLAN SHEET.

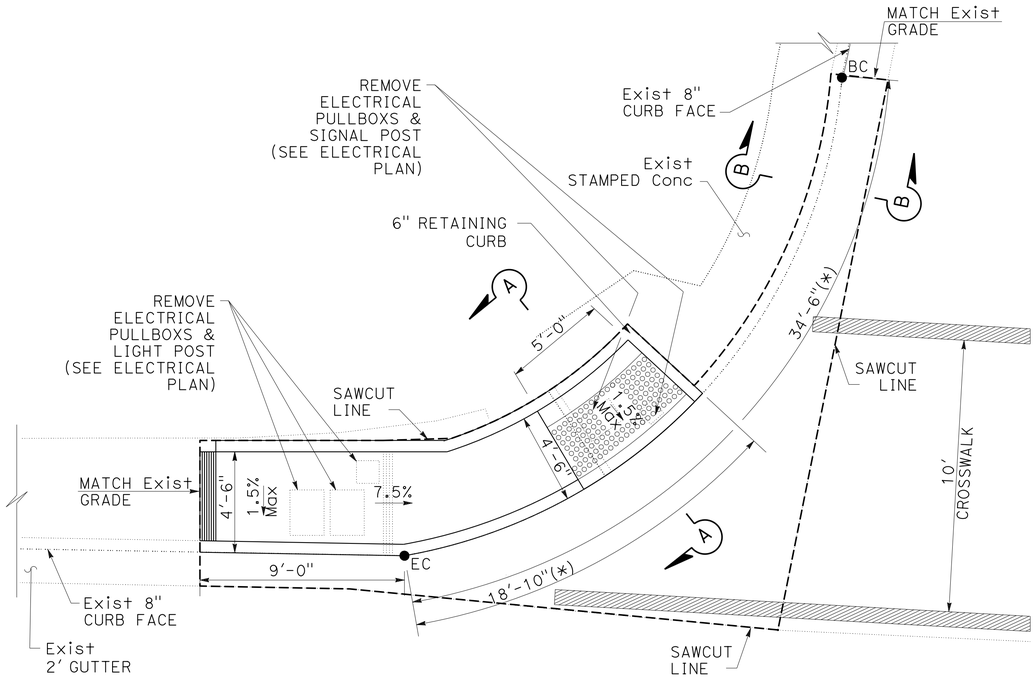

CURB RAMP 1

NOTES:

1. (*) MEASUREMENT ALONG THE FLOW LINE.

Exist STRUCTURAL SECTION

A
- 0.67' PCC
- 0.67' CLASS 2 AB

TYPICAL STRUCTURAL SECTION

1
- 0.85' JOINTED PLAIN CONCRETE PAVEMENT
- 0.40' LEAN CONCRETE BASE
- 0.60' CLASS 3 AB

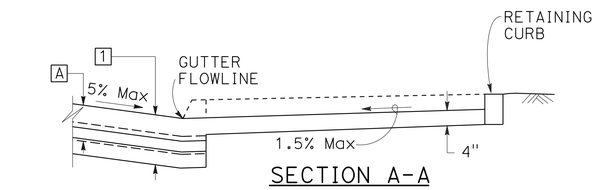

SECTION A-A

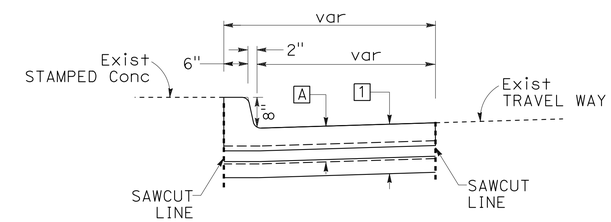

SECTION B-B

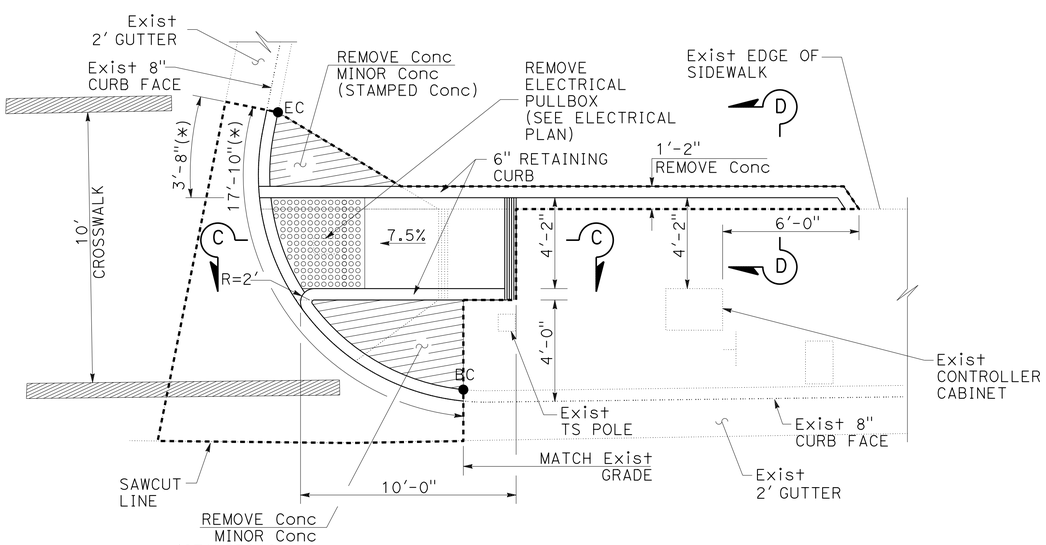

CURB RAMP 2

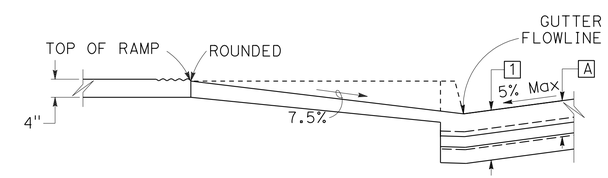

SECTION C-C

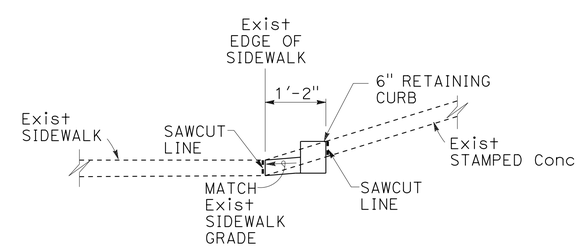

SECTION D-D

CONSTRUCTION DETAILS

NO SCALE

C-1

RICHARD KHAW | ESTHER M. KIM | MOHAMMED CHOWDHURY

STATE OF CALIFORNIA - DEPARTMENT OF TRANSPORTATION
Caltrans TRAFFIC DESIGN

REVISED BY | DATE REVISED | CALCULATED-DESIGNED BY | CHECKED BY | FUNCTIONAL SUPERVISOR

S:\projects\4+6101\MinorA\74+610ga001.dgn

LAST REVISION 00-00-00 | DATE PLOTTED => 02-FEB-2015 | TIME PLOTTED => 12:31

Dist	COUNTY	ROUTE	POST MILES TOTAL PROJECT	SHEET No.	TOTAL SHEETS
07	LA	101	16.7	4	58

REGISTERED CIVIL ENGINEER 1/14/13 DATE

12-15-14
PLANS APPROVAL DATE

REGISTERED PROFESSIONAL ENGINEER ESTHER M. KIM No. 48363 Exp. 6/30/16 CIVIL STATE OF CALIFORNIA

THE STATE OF CALIFORNIA OR ITS OFFICERS OR AGENTS SHALL NOT BE RESPONSIBLE FOR THE ACCURACY OR COMPLETENESS OF SCANNED COPIES OF THIS PLAN SHEET.

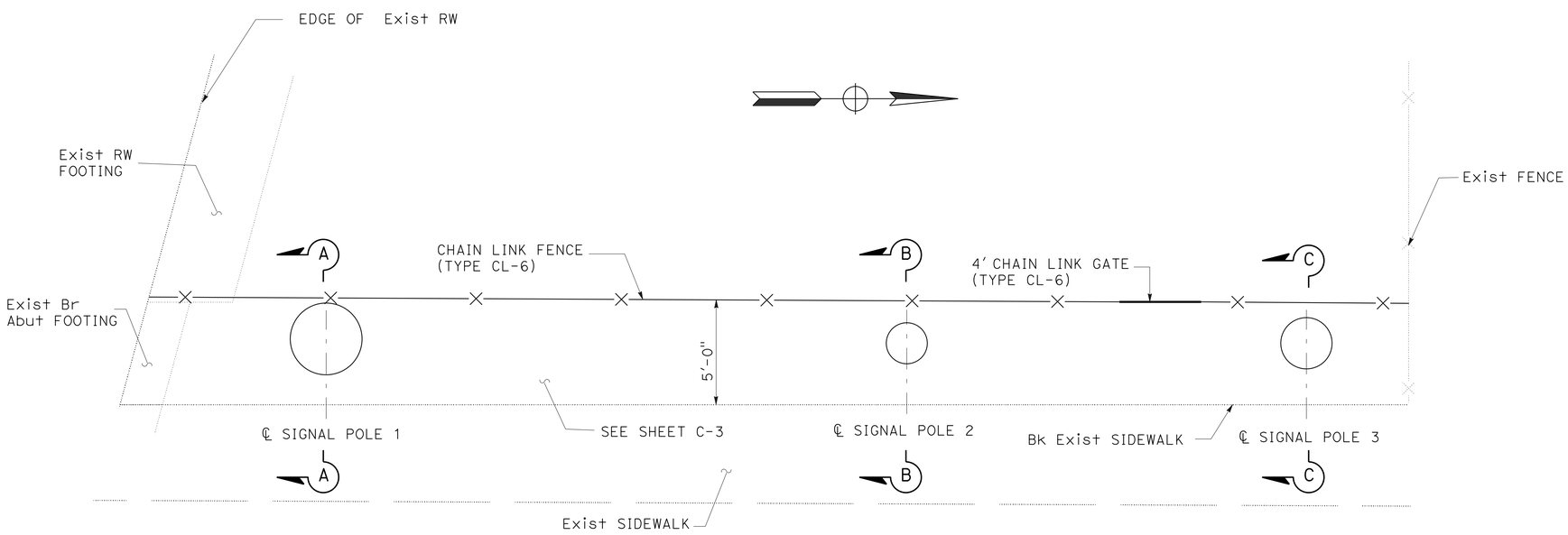

PLAN

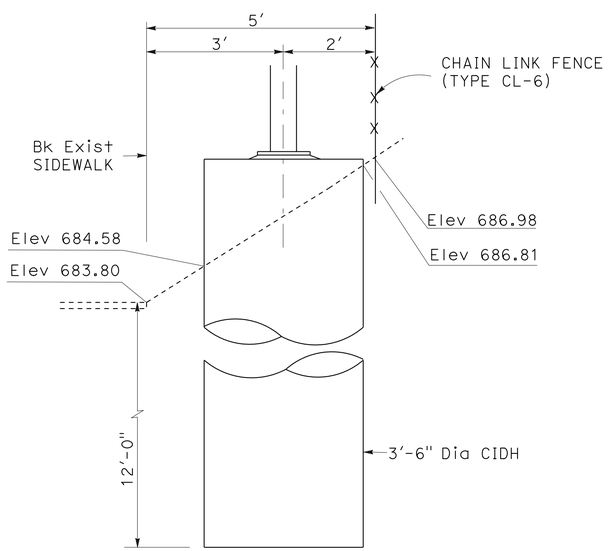

SECTION A-A

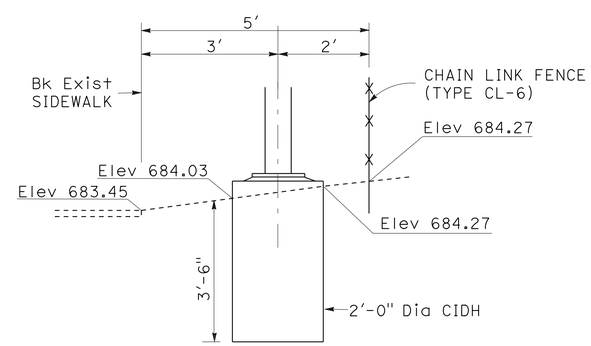

SECTION B-B

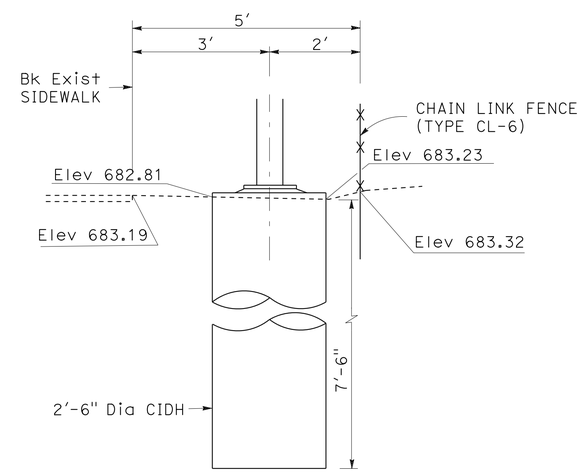

SECTION C-C

CONSTRUCTION DETAILS

NO SCALE

C-2

REVISED BY | DATE REVISED
RICHARD KHAW | ESTHER M. KIM
CALCULATED-DESIGNED BY | CHECKED BY
FUNCTIONAL SUPERVISOR: MOHAMMED CHOWDHURY

Caltrans® TRAFFIC DESIGN
STATE OF CALIFORNIA - DEPARTMENT OF TRANSPORTATION

S:\projects\4+6101\MinorA\74+610ga002.dgn

LAST REVISION 00-00-00 | DATE PLOTTED => 02-FEB-2015 | TIME PLOTTED => 12:31

Dist	COUNTY	ROUTE	POST MILES TOTAL PROJECT	SHEET No.	TOTAL SHEETS
07	LA	101	16.7	5	58

Keith Sellers
LICENSED LANDSCAPE ARCHITECT

12-15-14
PLANS APPROVAL DATE

LICENSED LANDSCAPE ARCHITECT
KEITH SELLERS
NO. 5288
Keith Sellers
Signature
04-30-15
Renewal Date
00-00-00
Date
STATE OF CALIFORNIA

THE STATE OF CALIFORNIA OR ITS OFFICERS OR AGENTS SHALL NOT BE RESPONSIBLE FOR THE ACCURACY OR COMPLETENESS OF SCANNED COPIES OF THIS PLAN SHEET.

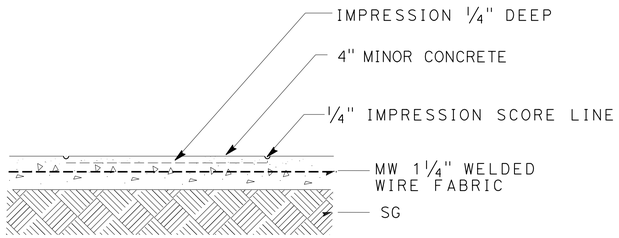

SECTION

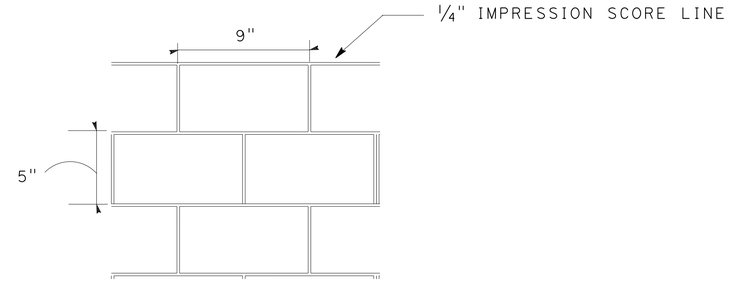

STAMPED CONCRETE IMPRESSION DETAIL

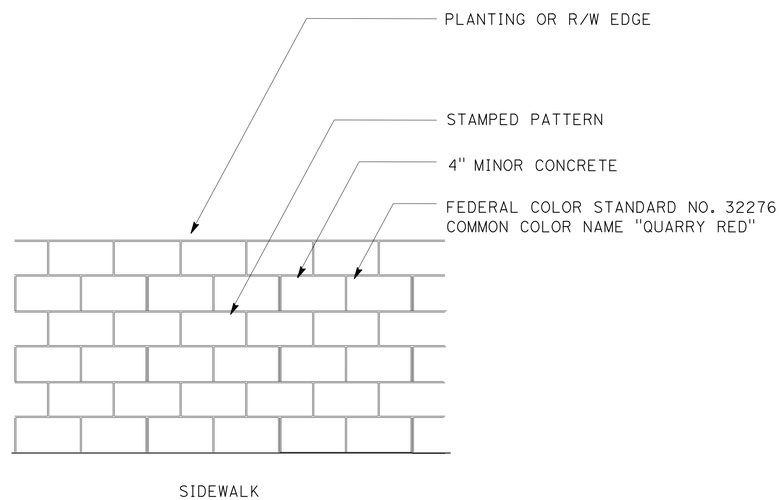

TYPICAL PAVEMENT LAYOUT

MINOR CONCRETE (STAMPED CONCRETE)

CONSTRUCTION DETAILS

NO SCALE

C-3

STATE OF CALIFORNIA - DEPARTMENT OF TRANSPORTATION
Caltrans® LANSCAPE ARCHITECTURE

SENIOR LANDSCAPE ARCHITECT: PATTY WATANABE
CALCULATED-DESIGNED BY: KEITH SELLERS
CHECKED BY: DAHLIA PERSOFF
REVISED BY
DATE REVISED

LAST REVISION 00-00-00
DATE PLOTTED => 02-FEB-2015
TIME PLOTTED => 12:31

Dist	COUNTY	ROUTE	POST MILES TOTAL PROJECT	SHEET No.	TOTAL SHEETS
07	LA	101	16.7	6	58

REGISTERED CIVIL ENGINEER 2/26/13 DATE

12-15-14
PLANS APPROVAL DATE

REGISTERED PROFESSIONAL ENGINEER HAYKAZ AGHAJANIAN No. C53866 Exp. 12-31-15 CIVIL STATE OF CALIFORNIA

THE STATE OF CALIFORNIA OR ITS OFFICERS OR AGENTS SHALL NOT BE RESPONSIBLE FOR THE ACCURACY OR COMPLETENESS OF SCANNED COPIES OF THIS PLAN SHEET.

NOTES:

1. FOR ACCURATE RIGHT OF WAY DATA CONTACT RIGHT OF WAY ENGINEERING AT THE DISTRICT OFFICE

2. UTILITY OWNERSHIP ON THIS PROJECT:
   - ELECTRIC - LOS ANGELES DEPARTMENT OF WATER AND POWER (LADWP)
   - GAS - SOUTHERN CALIFORNIA GAS COMPANY
   - WATER - LOS ANGELES DEPARTMENT OF WATER AND POWER (LADWP)
   - METROPOLITAN WATER DISTRICT(MWD)
   - SEWER - CITY OF LOS ANGELES
   - STORM DRAIN - CITY OF LOS ANGELES
   - CHEVRON
   - SHELL OIL PIPELINE COMPANY, LP
   - EXXONMOBIL PIPELINE COMPANY
   - TELEPHONE - AMERICAN TELEPHONE AND TELEGRAPH
   - VERIZON
   - MCI (VERIZON BUSINESS)

3. ABBERVIATIONS:
   - AT&T - AMERICAN TELEPHONE AND TELEGRAPH
   - LADWP(W) - LOS ANGELES DEPARTMENT OF WATER AND POWER
   - LADWP(P) - LOS ANGELES DEPARTMENT OF WATER AND POWER
   - SCG - SOUTHERN CALIFORNIA GAS COMPANY
   - C-CP - PLASTIC DUCT (NOT ENCASED)
   - MCD - MULTIPLE CONCRETE DUCT
   - MWD - METROPOLITAN WATER DISTRICT(MWD)
   - M - MEDIUM PRESSURE

POSITIVE LOCATION INFORMATION

	UTILITY	UTILITY OWNER	OG ELEVATION	COVER	NORTHING	EASTING	METHOD
1	8" WATER	LADWP(W)	683.61′	55"	1880911.36	6420596.39	POTHOLING
2	8" OIL	CHEVRON	683.42′	74½"	1880911.21	6420600.89	POTHOLING
3	4" Tel	AT&T	682.50′	46"	1880963.73	6420613.45	POTHOLING
4	8" OIL	CHEVRON	682.97′	67"	1880953.52	6420600.89	POTHOLING
5	8" WATER	LADWP(W)	683.03′	54"	1880966.00	6420596.12	POTHOLING
6	8" OIL	SHELL	682.62′	62"	1880963.63	6420617.24	POTHOLING
7	16" OIL	EXXONMOBIL	682.73′	57.4"	1880962.92	6420619.72	POTHOLING
8	96" WATER	MWD	682.86′	192"	1880964.37	6420627.51	POTHOLING
9	12" WATER	LADWP(W)	683.38′	58½"	1880903.11	6420693.95	POTHOLING
10	12" WATER	LADWP(W)	682.44′	61"	1880962.59	6420694.65	POTHOLING
11 11	2-4" Tel 2-5" POWER 4-4" POWER	VERIZON LADWP(P)	682.07′	28"	1880968.03	6420682.13	POTHOLING
12	2-4" Tel	MCI	682.36′	9¾"	1880968.85	6420676.95	POTHOLING
13	4" GAS	SCG	682.46′	37¼"	1880968.70	6420674.17	POTHOLING

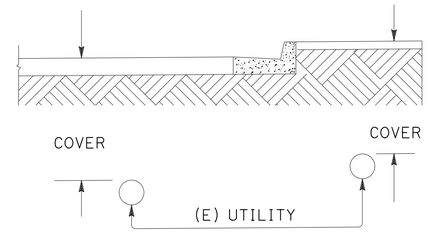

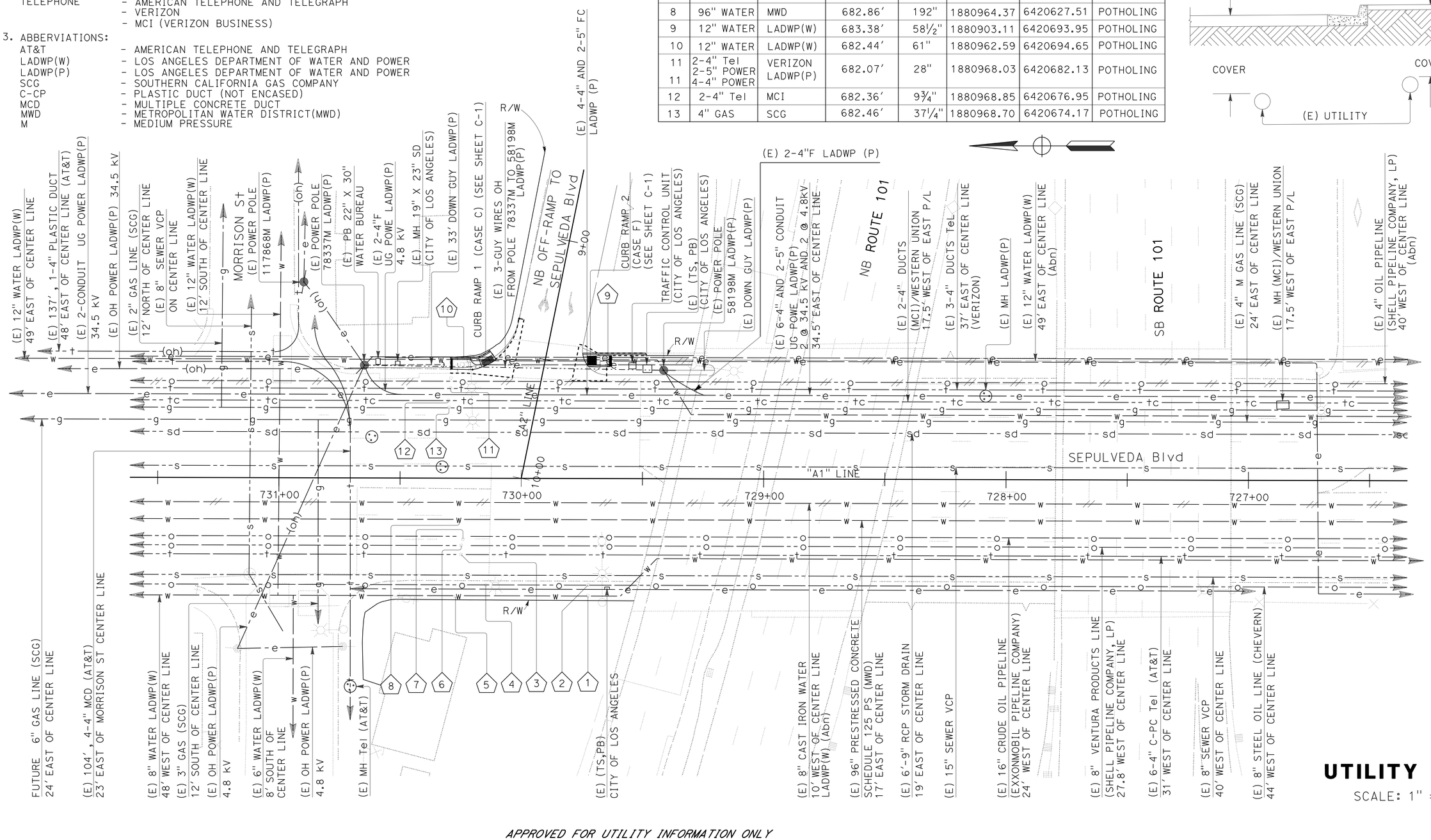

UTILITY PLAN

SCALE: 1" = 20′

APPROVED FOR UTILITY INFORMATION ONLY

U-1

STATE OF CALIFORNIA - DEPARTMENT OF TRANSPORTATION
Caltrans DESIGN A

FUNCTIONAL SUPERVISOR: CELINA AVILES
CALCULATED-DESIGNED BY: HAYKAZ AGHAJANIAN
CHECKED BY: HAYKAZ AGHAJANIAN
REVISED BY
DATE REVISED

LAST REVISION 00-00-00
DATE PLOTTED => 02-FEB-2015
TIME PLOTTED => 12:31

Dist	COUNTY	ROUTE	POST MILES TOTAL PROJECT	SHEET No.	TOTAL SHEETS
07	LA	101	16.7	7	58

REGISTERED CIVIL ENGINEER 1/14/12 DATE

12-15-14
PLANS APPROVAL DATE

REGISTERED PROFESSIONAL ENGINEER
ESTHER M. KIM
No. 48363
Exp. 6/30/16
CIVIL
STATE OF CALIFORNIA

THE STATE OF CALIFORNIA OR ITS OFFICERS OR AGENTS SHALL NOT BE RESPONSIBLE FOR THE ACCURACY OR COMPLETENESS OF SCANNED COPIES OF THIS PLAN SHEET.

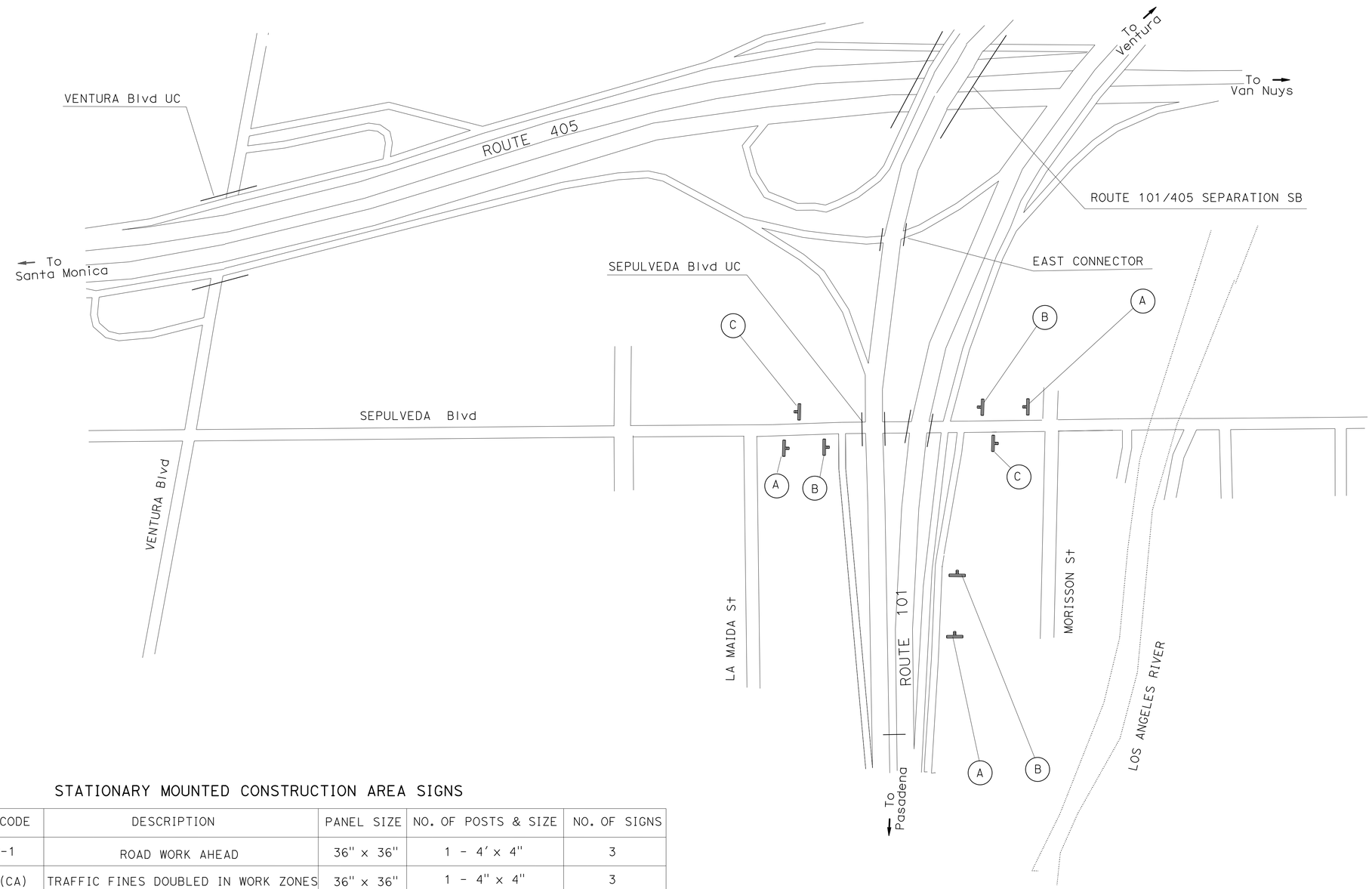

STATIONARY MOUNTED CONSTRUCTION AREA SIGNS

SIGN MARK	SIGN CODE	DESCRIPTION	PANEL SIZE	NO. OF POSTS & SIZE	NO. OF SIGNS
A	W20-1	ROAD WORK AHEAD	36" x 36"	1 - 4' x 4"	3
B	C40A(CA)	TRAFFIC FINES DOUBLED IN WORK ZONES	36" x 36"	1 - 4" x 4"	3
C	G20-2	END ROAD WORK	36" x 18"	1 - 4" x 4"	2

NOTES: 1. LOCATION OF CONSTRUCTION AREA SIGNS SHOWN ARE APPROXIMATE.
2. EXACT LOCATIONS WILL BE DETERMINED BY THE ENGINEER.

APPROVED FOR CONSTRUCTION AREA SIGN WORK ONLY

CONSTRUCTION AREA SIGNS

NO SCALE

CS-1

REVISED BY | DATE REVISED
MIKE ARYA | ESTHER M. KIM
CALCULATED-DESIGNED BY | CHECKED BY
FUNCTIONAL SUPERVISOR
MOHAMMED CHOWDHURY

STATE OF CALIFORNIA - DEPARTMENT OF TRANSPORTATION
Caltrans® TRAFFIC DESIGN

S:\projects\4t6101\Minor\74t6101a001.dgn

LAST REVISION 00-00-00 | DATE PLOTTED => 02-FEB-2015 | TIME PLOTTED => 12:31

BORDER LAST REVISED 7/2/2010 | USERNAME => s115484 | DGN FILE => 74t6101a001.dgn | RELATIVE BORDER SCALE IS IN INCHES 0 1 2 3 | UNIT 2124 | PROJECT NUMBER & PHASE 07120002001

Dist	COUNTY	ROUTE	POST MILES TOTAL PROJECT	SHEET No.	TOTAL SHEETS
07	LA	101	16.72	8	58

REGISTERED CIVIL ENGINEER 10-01-14 DATE

12-15-14
PLANS APPROVAL DATE

REGISTERED PROFESSIONAL ENGINEER ALBERT K. YU No. 43220 Exp. 3/31/16 CIVIL STATE OF CALIFORNIA

THE STATE OF CALIFORNIA OR ITS OFFICERS OR AGENTS SHALL NOT BE RESPONSIBLE FOR THE ACCURACY OR COMPLETENESS OF SCANNED COPIES OF THIS PLAN SHEET.

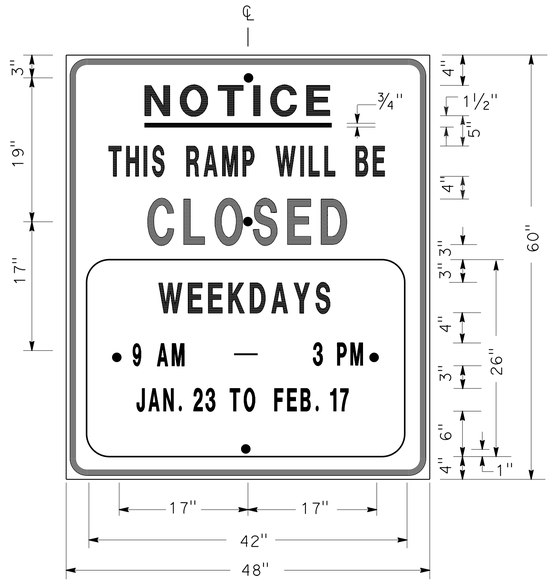

SIGN SP-1

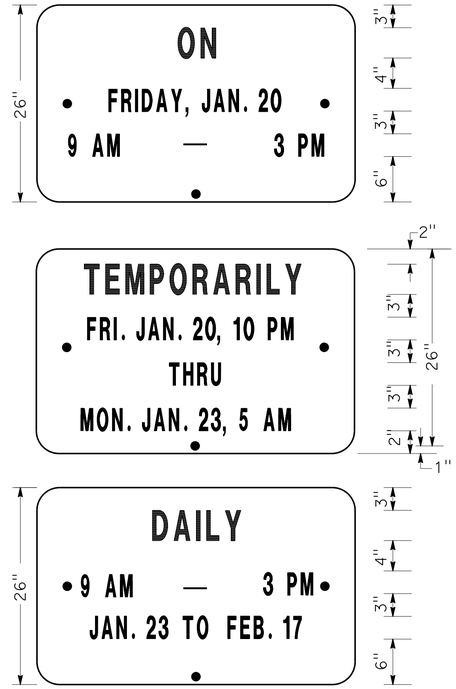

ALTERNATE OVERLAY PANELS (TYPICAL)

SPECIAL ADVANCE NOTICE PUBLICITY SIGN

NOTES: SIGN SP-1

1. LETTERS AND BORDER MUST BE BLACK ON REFLECTORIZED ORANGE BACKGROUND.
2. BOLT HOLES MUST BE 3/8" DIAMETER.
3. BASE MATERIAL MUST BE ALUMINUM (MINIMUM 0.06").
4. SIGNS MUST BE MOUNTED WITH BOTTOMS OF SIGNS A MINIMUM OF 7' ABOVE GROUND.

SIZE	BORDER WIDTH	MARGIN WIDTH	LETTER SIZE					CORNER RADIUS
			LINE 1	LINE 2*	LINE 3	LINE 4	LINE 5, 6, & 7*	
48"x60"	1 1/4"	3/4"	4E	4D	6E	4D		3"
42"x26"	OVERLAY						3D	1 1/2"
* CONDENSED SPACING IF NECESSARY								

SIGN SP-4

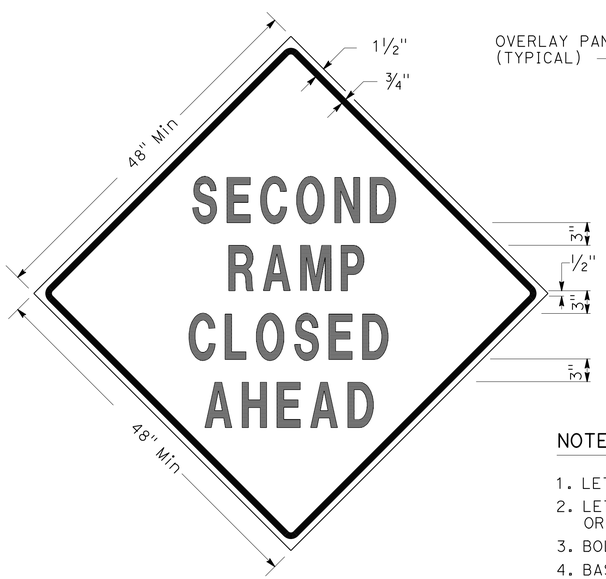

SIGN SP-3

SIGN SP-5

NOTES: SIGNS SP-3 & SP-5

1. LETTERS - 6" SERIES D.
2. LETTERS AND BORDER MUST BE BLACK ON REFLECTORIZED ORANGE BACKGROUND.
3. BOLT HOLES MUST BE 3/8" DIAMETER.
4. BASE MATERIAL MUST BE ALUMINUM (MINIMUM 0.06").
5. SIGNS MUST BE MOUNTED WITH BOTTOMS OF SIGNS A MINIMUM OF 7' ABOVE GROUND.
6. SIGN SP-5 MUST BE USED IF THE OFF-RAMP TO BE CLOSED FOLLOWS A FREEWAY OFF-CONNECTOR.

SPECIAL SIGNS FOR EXIT RAMP CLOSURES

NOTES: SIGN SP-4

1. LETTERS - 6" SERIES C.
2. LETTERS AND BORDER MUST BE BLACK ON REFLECTORIZED WHITE BACKGROUND.
3. BOLT HOLES MUST BE 3/8" DIAMETER.
4. BASE MATERIAL MUST BE ALUMINUM (MINIMUM 0.06").
5. SIGNS MUST BE PLACED AT RAMP ENTRANCES IN ADDITION TO SIGNS POSTED IN ACCORDANCE WITH REVISED STANDARD PLAN RSP T14.

SPECIAL SIGN FOR ENTRANCE RAMP CLOSURES

TRAFFIC HANDLING DETAILS
TRAFFIC CONTROL SYSTEM FOR RAMP CLOSURES, DETOUR SIGNS, AND MISCELLANEOUS DETAILS
SHEET 1 OF 2

NO SCALE

THD-1

STATE OF CALIFORNIA - DEPARTMENT OF TRANSPORTATION
Caltrans DTM

FUNCTIONAL SUPERVISOR: SAM ESQUENAZI
CALCULATED-DESIGNED BY: ALBERT K YU
CHECKED BY: JOCELYN C CHIANG
REVISED BY: JC
DATE REVISED: 2/14

LAST REVISION: 00-00-00
DATE PLOTTED => 02-FEB-2015
TIME PLOTTED => 12:31

Dist	COUNTY	ROUTE	POST MILES TOTAL PROJECT	SHEET No.	TOTAL SHEETS
07	LA	101	16.72	9	58

REGISTERED CIVIL ENGINEER 10-01-14 DATE

12-15-14
PLANS APPROVAL DATE

REGISTERED PROFESSIONAL ENGINEER ALBERT K. YU No. 43220 Exp. 3/31/16 CIVIL STATE OF CALIFORNIA

THE STATE OF CALIFORNIA OR ITS OFFICERS OR AGENTS SHALL NOT BE RESPONSIBLE FOR THE ACCURACY OR COMPLETENESS OF SCANNED COPIES OF THIS PLAN SHEET.

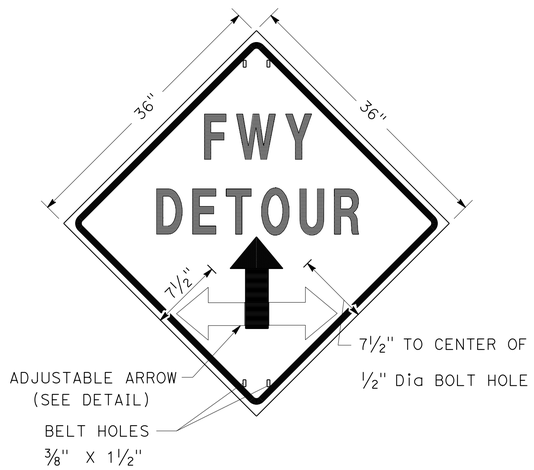

SIGN SP-2

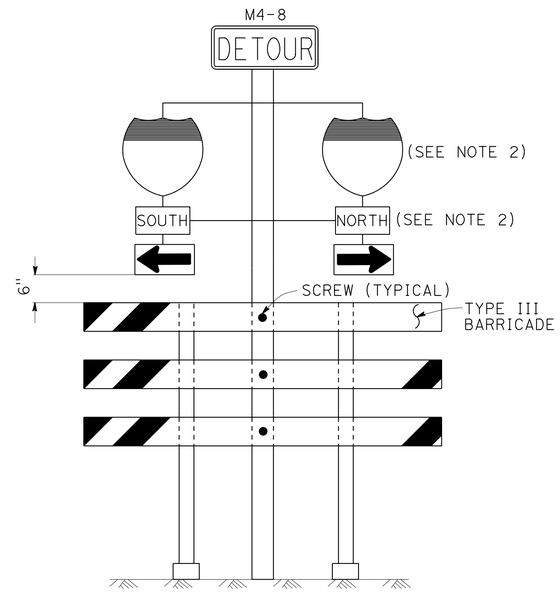

SIGN SP-6 (SEE NOTE 1)

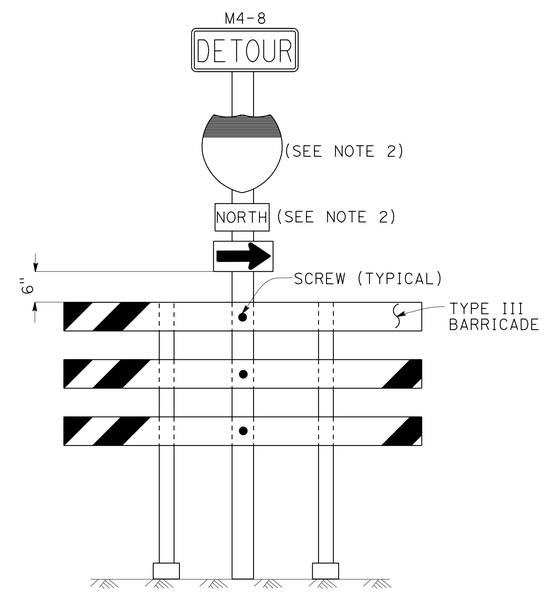

SIGN SP-7 (SEE NOTE 1)

NOTES: SIGN SP-2

1. LETTERS - 6" SERIES E.
2. LETTERS, BORDER AND ARROW - BLACK ON RETROREFLECTORIZED ORANGE BACKGROUND.
3. BASE MATERIAL FOR SIGNS AND ARROWS MUST BE ALUMINUM (MINIMUM 0.06").
4. BELTS (LUGGAGE STRAPS) MUST BE 1" WIDE BY 48" LONG, MADE OF COTTON OR POLYPROPYLENE WEB MATERIAL.
5. SIGNS MUST BE MOUNTED WITH BOTTOMS OF SIGNS A MINIMUM OF 7' ABOVE GROUND EXCEPT AS OTHERWISE SHOWN ON OTHER TRAFFIC HANDLING DETAILS PLANS.

NOTES: SIGNS SP-6 & SP-7

1. IN LIEU OF PLACING SIGNS ON TYPE III BARRICADES, SIGNS, INCLUDING POSTS, MAY BE PLACED INTO THE GROUND OR FASTENED ONTO ELECTROLIERS.
2. USE APPROPRIATE ROUTE MARKER [G26-2(CA), G27-2(CA), G28-2(CA)] AND CARDINAL DIRECTION [NORTH (M3-1), SOUTH (M3-3), EAST (M3-2), WEST (M3-4)].

SPECIAL PORTABLE FREEWAY DETOUR SIGNS

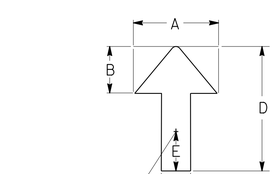

DIMENSIONS				
A	B	C	D	E
6"	3"	2"	8"	1"

ADJUSTABLE ARROW DETAIL

ABBREVIATION

(CA) CALIFORNIA CODE

TRAFFIC HANDLING DETAILS

TRAFFIC CONTROL SYSTEM FOR RAMP CLOSURES, DETOUR SIGNS, AND MISCELLANEOUS DETAILS

SHEET 2 OF 2

NO SCALE

THD-2

STATE OF CALIFORNIA - DEPARTMENT OF TRANSPORTATION
Caltrans® DTM

FUNCTIONAL SUPERVISOR: SAM ESQUENAZI
CALCULATED-DESIGNED BY: ALBERT K YU
CHECKED BY: JOCELYN C CHIANG
REVISED BY: JC
DATE REVISED: 2/14

LAST REVISION 00-00-00 | DATE PLOTTED => 02-FEB-2015 | TIME PLOTTED => 12:31

Dist	COUNTY	ROUTE	POST MILES TOTAL PROJECT	SHEET No.	TOTAL SHEETS
07	LA	101	16.72	10	58

REGISTERED CIVIL ENGINEER DATE 10-01-14

12-15-14
PLANS APPROVAL DATE

REGISTERED PROFESSIONAL ENGINEER ALBERT K. YU No. 43220 Exp. 3/31/16 CIVIL STATE OF CALIFORNIA

THE STATE OF CALIFORNIA OR ITS OFFICERS OR AGENTS SHALL NOT BE RESPONSIBLE FOR THE ACCURACY OR COMPLETENESS OF SCANNED COPIES OF THIS PLAN SHEET.

LEGEND

- SIGN SP-2
- AND/OR — DESIGNATED DETOUR ROUTE
- DETOUR DIRECTION
- CONTROLLED INTERSECTION

NOTES:

1. SP-2 SIGNS MAY BE STRAPPED ON EXISTING ELECTROLIER, SIGNAL POST OR SIGN POST.
2. SP-2 SIGNS MUST NOT BE INSTALLED ON BARRICADES EXCEPT AS OTHERWISE SHOWN.
3. SIGN LOCATIONS ARE APPROXIMATE. EXACT LOCATIONS WILL BE DETERMINED BY THE ENGINEER.
4. SP-2 SIGNS MUST BE POSTED AT EACH CONTROLLED INTERSECTION (EXCEPT AT COMMERCIAL PROPERTY, RESIDENTIAL COMPLEX OR T-INTERSECTION FROM ONE-WAY STREET) ALONG THE DESIGNATED DETOUR ROUTE.
5. UNLESS OTHERWISE SHOWN ON OTHER THD PLANS, WHEN CONTROLLED INTERSECTIONS ALONG THE DESIGNATED DETOUR ROUTE ARE CLOSELY SPACED, PLACE SP-2 SIGNS AT CONTROLLED INTERSECTIONS AT A DISTANCE NOT TO EXCEED 1/4 MILE FROM THE PRECEDING DETOUR SIGN.
6. EXCEPT AS OTHERWISE SHOWN ON OTHER PLANS OR SPECIFIED IN THE SPECIAL PROVISIONS, SP-2 SIGNS MUST BE PLACED AS SHOWN ON THIS PLAN.

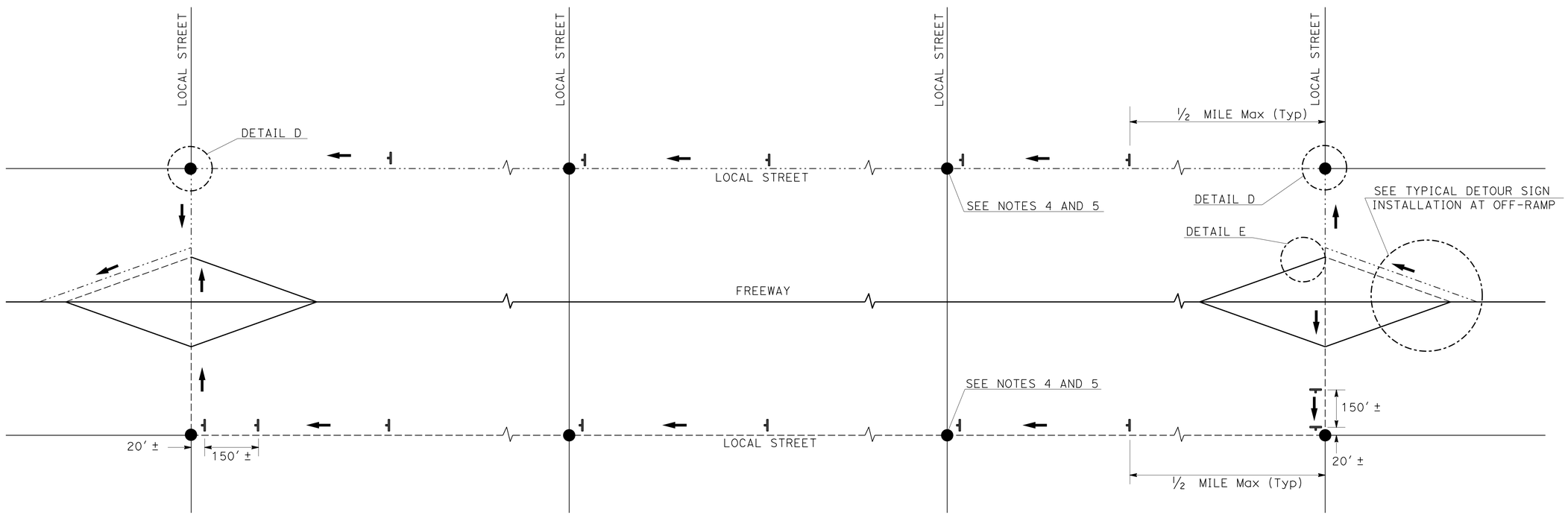

TYPICAL DETOUR SIGN INSTALLATION ALONG DESIGNATED DETOUR ROUTE

TRAFFIC HANDLING DETAILS

TRAFFIC CONTROL SYSTEM FOR DETOUR SIGN INSTALLATION ALONG DESIGNATED DETOUR ROUTE

SHEET 1 OF 2

NO SCALE

THD-3

STATE OF CALIFORNIA - DEPARTMENT OF TRANSPORTATION
Caltrans DTM

FUNCTIONAL SUPERVISOR: SAM ESQUENAZI
CALCULATED-DESIGNED BY: ALBERT K YU
CHECKED BY: JOCELYN C CHIANG
REVISED BY: JC
DATE REVISED: 2/14

LAST REVISION 00-00-00
DATE PLOTTED => 02-FEB-2015
TIME PLOTTED => 12:31

Dist	COUNTY	ROUTE	POST MILES TOTAL PROJECT	SHEET No.	TOTAL SHEETS
07	LA	101	16.72	11	58

REGISTERED CIVIL ENGINEER 10-01-14 DATE

12-15-14
PLANS APPROVAL DATE

REGISTERED PROFESSIONAL ENGINEER ALBERT K. YU No. 43220 Exp. 3/31/16 CIVIL STATE OF CALIFORNIA

THE STATE OF CALIFORNIA OR ITS OFFICERS OR AGENTS SHALL NOT BE RESPONSIBLE FOR THE ACCURACY OR COMPLETENESS OF SCANNED COPIES OF THIS PLAN SHEET.

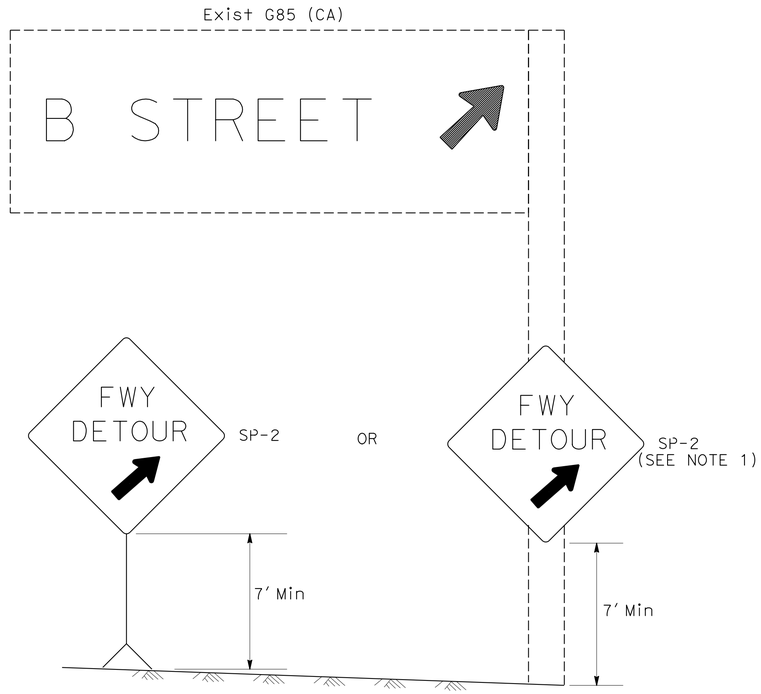

DETAIL A (SEE NOTE 3)

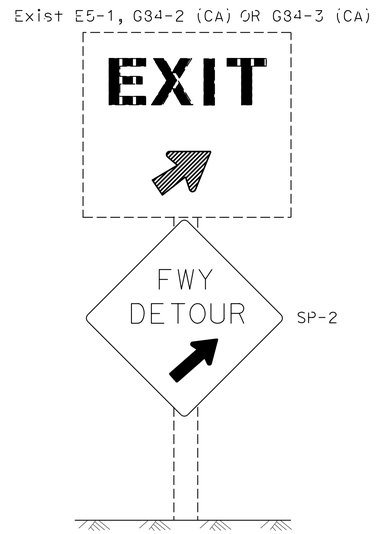

DETAIL B (SEE NOTE 3)

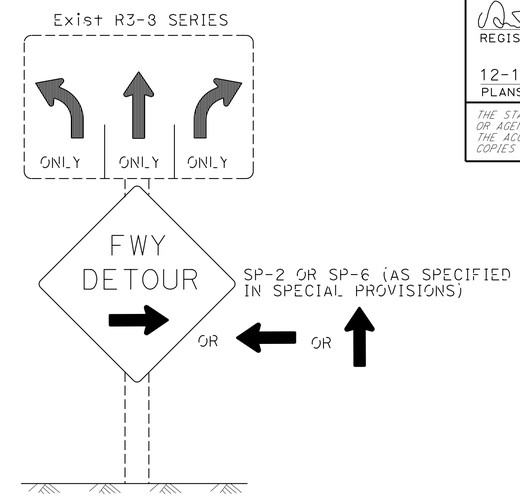

DETAIL C (SEE NOTES 4, 5, AND 6)

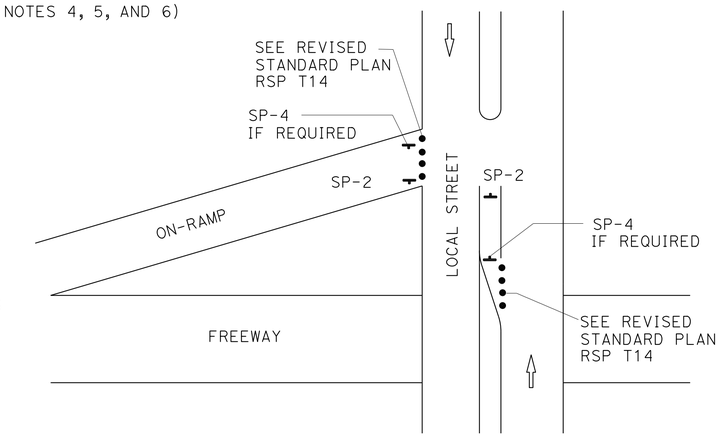

DETAIL E

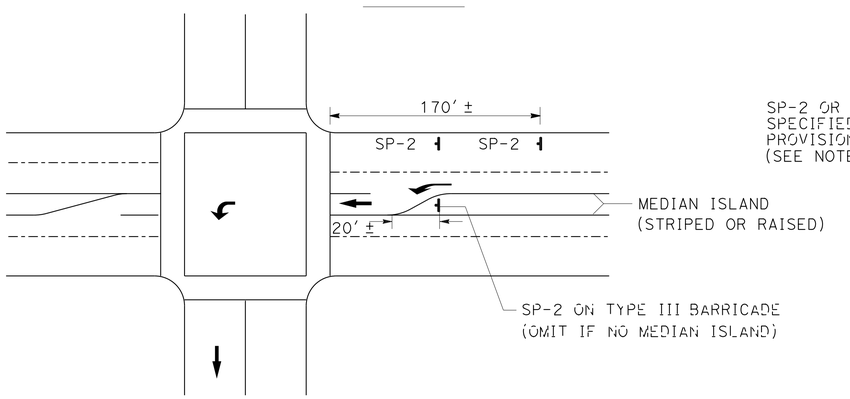

DETAIL D

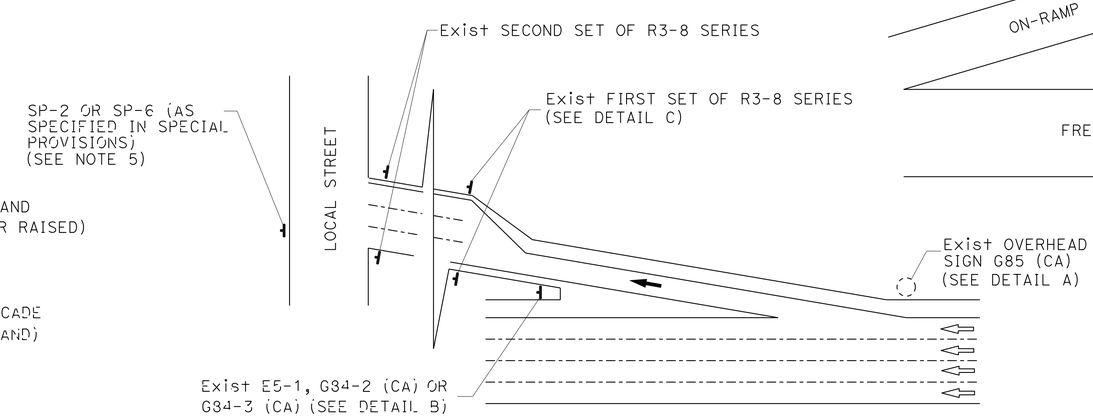

TYPICAL DETOUR SIGN INSTALLATION AT OFF-RAMP

LEGEND

- • TRAFFIC CONE
- TEMPORARY TRAFFIC CONTROL SIGN
- → DETOUR DIRECTION
- ◌ EXISTING OVERHEAD SIGN

NOTES: SIGN SP-2

1. SP-2 SIGNS MAY BE STRAPPED ON EXISTING ELECTROLIER, SIGNAL POST OR SIGN POST.
2. SP-2 SIGNS MUST NOT BE INSTALLED ON BARRICADES EXCEPT AS OTHERWISE SHOWN.
3. OMIT DETAILS A AND B FOR FULL FREEWAY CLOSURES.
4. SEE TRAFFIC HANDLING DETAILS-TRAFFIC CONTROL SYSTEM FOR RAMP CLOSURES, DETOUR SIGNS, AND MISCELLANEOUS DETAILS PLAN SHEET 2 OF 2 FOR SP-6 SIGN DETAILS.
5. IF R3-8 SERIES SIGNS ARE NOT PRESENT AT THE OFF-RAMP, SP-2 OR SP-6 SIGNS MUST BE FASTENED ONTO EXISTING ELECTROLIER, SIGNAL POST OR SIGN POST.
6. EXCEPT FOR DETAILS A & B, OMIT SP-2 SIGNS IF RAMP HAS MANDATORY SINGLE MOVE.

SIGN CODE LEGEND

XXYY-Y: FEDERAL SIGN CODE PER MANUAL ON UNIFORM TRAFFIC CONTROL DEVICES (MUTCD)

XXYY-Y (CA): CALIFORNIA SIGN CODE PER CALIFORNIA MUTCD

TRAFFIC HANDLING DETAILS
TRAFFIC CONTROL SYSTEM FOR DETOUR SIGN INSTALLATION ALONG DESIGNATED DETOUR ROUTE SHEET 2 OF 2

NO SCALE

THD-4

STATE OF CALIFORNIA - DEPARTMENT OF TRANSPORTATION
Caltrans DTM

FUNCTIONAL SUPERVISOR: SAM ESQUENAZI
CALCULATED-DESIGNED BY: ALBERT K YU
CHECKED BY: JOCELYN C CHIANG
REVISED BY: JC
DATE REVISED: 2/14

LAST REVISION DATE PLOTTED => 02-FEB-2015
00-00-00 TIME PLOTTED => 12:31

Dist	COUNTY	ROUTE	POST MILES TOTAL PROJECT	SHEET No.	TOTAL SHEETS
07	LA	101	16.7	12	58

REGISTERED CIVIL ENGINEER 1/14/12 DATE

12-15-14
PLANS APPROVAL DATE

REGISTERED PROFESSIONAL ENGINEER ESTHER M. KIM No. 48363 Exp. 6/30/16 CIVIL STATE OF CALIFORNIA

THE STATE OF CALIFORNIA OR ITS OFFICERS OR AGENTS SHALL NOT BE RESPONSIBLE FOR THE ACCURACY OR COMPLETENESS OF SCANNED COPIES OF THIS PLAN SHEET.

LEGEND:

- (XX) STRIPING DETAIL No.
- ⇦ TRAFFIC DIRECTION
- CHANGE IN PAVEMENT DELINEATION DETAILS

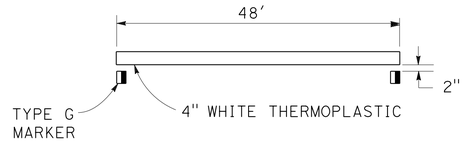

DETAIL 50

NOTES:

1. FOR ACCURATE RIGHT OF WAY AND ACCESS DATA, CONTACT RIGHT OF WAY ENGINEERING AT THE DISTRICT OFFICE.

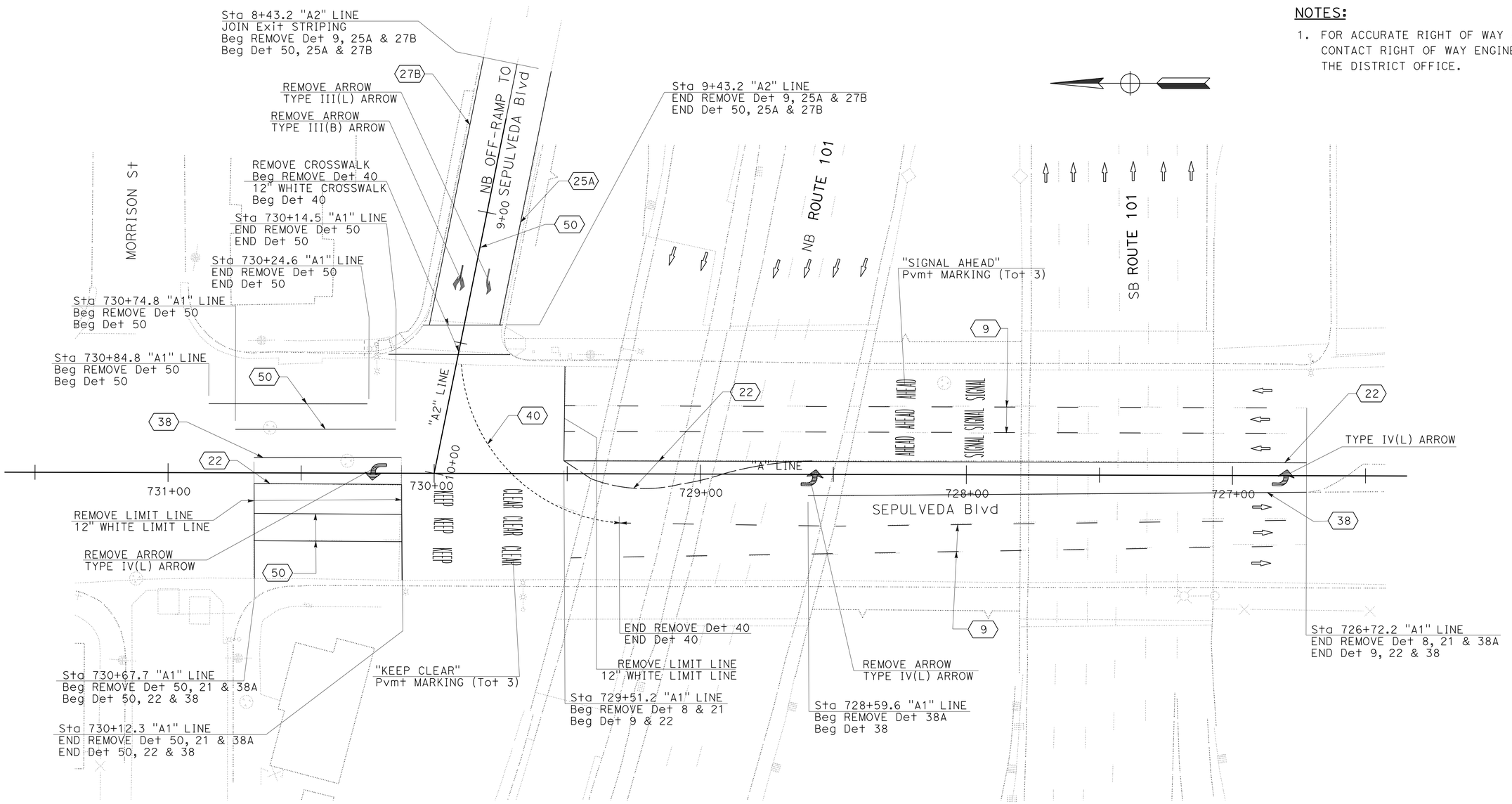

PAVEMENT DELINEATION PLAN

SCALE 1"=20'

PD-1

APPROVED FOR PAVEMENT DELINEATION WORK ONLY

REVISED BY	DATE REVISED

CALCULATED-DESIGNED BY: RICHARD KHAW
CHECKED BY: ESTHER M. KIM
FUNCTIONAL SUPERVISOR: MOHAMMED CHOWDHURY

STATE OF CALIFORNIA - DEPARTMENT OF TRANSPORTATION
Caltrans® TRAFFIC DESIGN

S:\projects\4t610\Minor A\74t610na001.dgn

LAST REVISION 00-00-00 | DATE PLOTTED => 02-FEB-2015 | TIME PLOTTED => 12:31

Dist	COUNTY	ROUTE	POST MILES TOTAL PROJECT	SHEET No.	TOTAL SHEETS
07	LA	101	16.7	13	58

REGISTERED CIVIL ENGINEER DATE 1/14/12

12-15-14
PLANS APPROVAL DATE

REGISTERED PROFESSIONAL ENGINEER ESTHER M. KIM No. 48363 Exp. 6/30/16 CIVIL STATE OF CALIFORNIA

THE STATE OF CALIFORNIA OR ITS OFFICERS OR AGENTS SHALL NOT BE RESPONSIBLE FOR THE ACCURACY OR COMPLETENESS OF SCANNED COPIES OF THIS PLAN SHEET.

LEGEND:

- (R) REMOVE ROADSIDE SIGN (STRAP & SADDLE BRACKET METHOD)
- (SS) STRAP & SADDLE BRACKET METHOD
- (2) ROADSIDE SIGN - TWO POST
- (RL) RELOCATE ROADSIDE SIGN - ONE POST

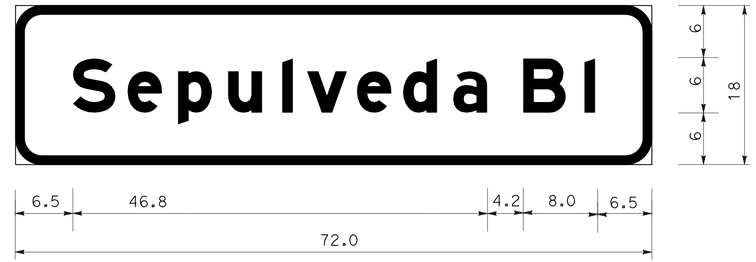

G7-1(CA)

DIMENSION IN INCHES
3.0" RADIUS; 1.0" BORDER; WHITE ON GREEN;
(Sepulveda Bl) E Mod;

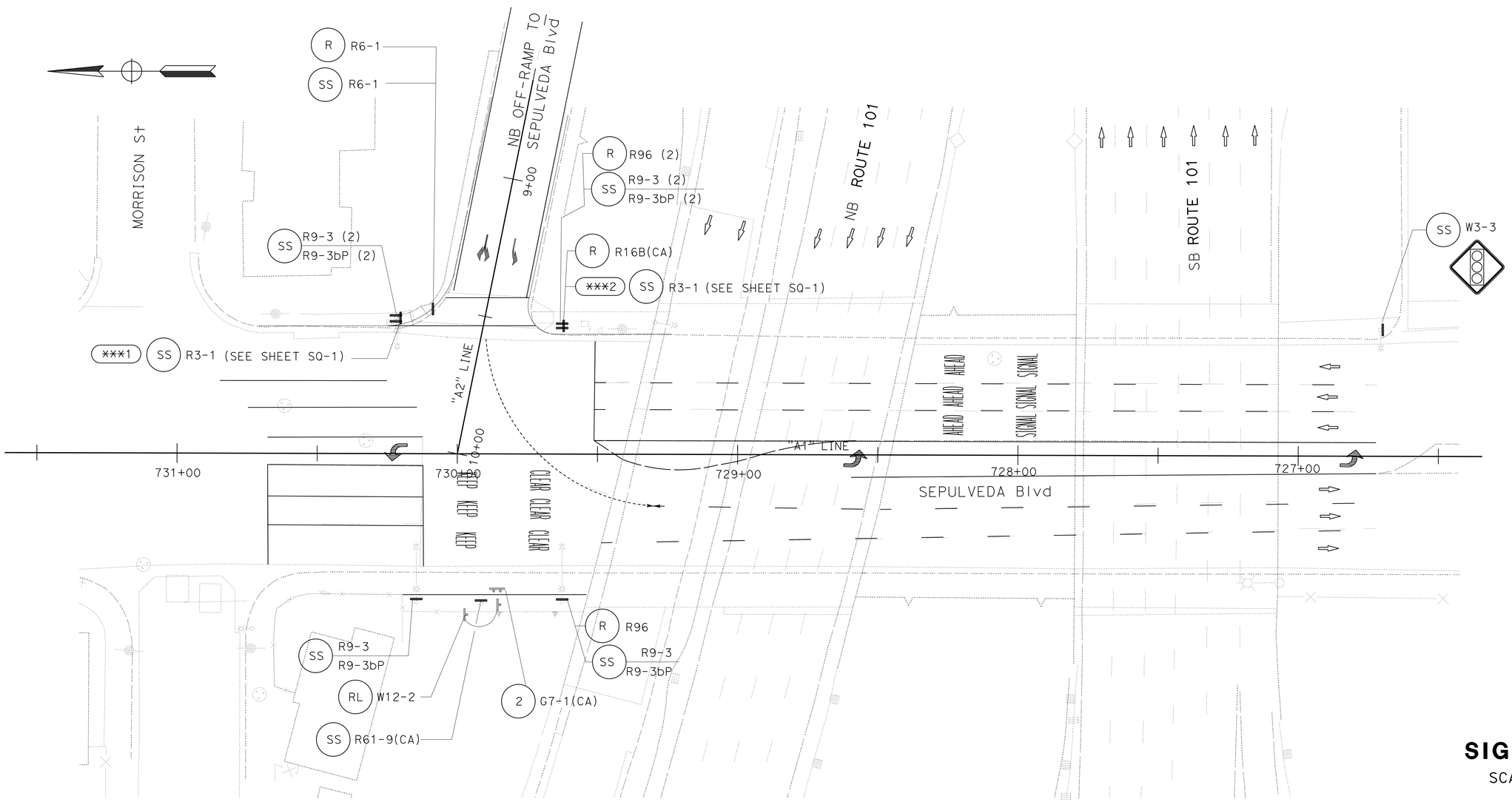

SIGN PLAN

SCALE 1"=20'

S-1

APPROVED FOR SIGN WORK ONLY

REVISED BY	DATE REVISED

CALCULATED-DESIGNED BY: RICHARD KHAW
CHECKED BY: ESTHER M. KIM
FUNCTIONAL SUPERVISOR: MOHAMMED CHOWDHURY

STATE OF CALIFORNIA - DEPARTMENT OF TRANSPORTATION
Caltrans® TRAFFIC DESIGN

S:\projects\4t6101\MinorA\74t610aa001.dgn

LAST REVISION 00-00-00 | DATE PLOTTED => 02-FEB-2015 | TIME PLOTTED => 12:31

Dist	COUNTY	ROUTE	POST MILES TOTAL PROJECT	SHEET No.	TOTAL SHEETS
07	LA	101	16.7	14	58

REGISTERED CIVIL ENGINEER 1/14/13 DATE

12-15-14
PLANS APPROVAL DATE

REGISTERED PROFESSIONAL ENGINEER ESTHER M. KIM No. 48363 Exp. 6/30/16 CIVIL STATE OF CALIFORNIA

THE STATE OF CALIFORNIA OR ITS OFFICERS OR AGENTS SHALL NOT BE RESPONSIBLE FOR THE ACCURACY OR COMPLETENESS OF SCANNED COPIES OF THIS PLAN SHEET.

ROADSIDE SIGN QUANTITIES

SHEET No.	SIGN CODE	PANEL SIZE (L x D) IN x IN	SINGLE FACED	CLEARANCE (C_{L+}) FT	SIGN FACING MATERIAL: BACKGROUND: SHEETING COLOR	SIGN FACING MATERIAL: BACKGROUND: RETRO-REFLECTIVE ASTM TYPE	SIGN FACING MATERIAL: LEGEND: SHEETING COLOR	SIGN FACING MATERIAL: GRAFFITI FILM: PREMIUM	ROADSIDE SIGN: REMOVE EA	ROADSIDE SIGN: RELOCATE ONE POST EA	ROADSIDE SIGN: FURNISH: SINGLE SHEET ALUMINUM SIGN(0.063" -UNFRAMED) SQFT	ROADSIDE SIGN: FURNISH: SINGLE SHEET ALUMINUM SIGN(0.063" -FRAMED) SQFT	ROADSIDE SIGN: INSTALL: STRAP & SADDLE BRACKET METHOD EA	ROADSIDE SIGN: TWO POST EA	(N) SIGNS ON MAST ARM EA	REMARK
S-1	W3-3	30 x 30	●	7	Y	XI	B	●			6.25		1			
	R9-3	18 x 18	●	4	W	XI	B/R	●			13.50		6			
	R9-3bP	18 x 12	●	3	W	XI	B	●			9.00		6			
	R6-1	54 x 18	●	1	B/W	XI	B	●			6.75		1			
	R61-9(CA)	36 x 30	●	1	W	XI	B	●			7.50		1			
	R96								4							
	R6-1								1							
	R16B(CA)								1							
	W12-2									1						
	R3-1	36 x 36	●	17	W	XI	B/R	●			9.00		1			***1
	R3-1	36 x 36	●	7	W	XI	B/R	●			9.00		1			***2
	G7-1(CA)	72 X 18	●	7	GREEN	XI	W	●				9.00		1		SEPULVEDA BI
E-1 (N)	R3-18	36 x 36	●		W	XI	B/R	●							2	
TOTAL									6	1	61.0	9.0	17	1	2	

LEGEND: Y YELLOW, B BLACK, R RED

● APPLICABLE TREATMENT

(N) NOT A SEPARATE PAY ITEM, FOR INFORMATION ONLY.

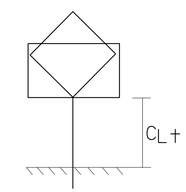

ROADSIDE SIGN CLEARANCE DETAIL

SIGN QUANTITIES

SQ-1

REVISED BY | DATE REVISED
RICHARD KHAW | ESTHER M. KIM
CALCULATED-DESIGNED BY | CHECKED BY
FUNCTIONAL SUPERVISOR: MOHAMMED CHOWDHURY

STATE OF CALIFORNIA - DEPARTMENT OF TRANSPORTATION
Caltrans® TRAFFIC DESIGN

S:\projects\4f6101\MinorA\74f610od001.dgn

LAST REVISION 00-00-00 | DATE PLOTTED => 02-FEB-2015 | TIME PLOTTED => 12:31

Dist	COUNTY	ROUTE	POST MILES TOTAL PROJECT	SHEET No.	TOTAL SHEETS
07	LA	101	16.7	15	58

REGISTERED CIVIL ENGINEER 1/14/13 DATE

12-15-14
PLANS APPROVAL DATE

REGISTERED PROFESSIONAL ENGINEER ESTHER M. KIM No. 48363 Exp. 6/30/16 CIVIL STATE OF CALIFORNIA

THE STATE OF CALIFORNIA OR ITS OFFICERS OR AGENTS SHALL NOT BE RESPONSIBLE FOR THE ACCURACY OR COMPLETENESS OF SCANNED COPIES OF THIS PLAN SHEET.

PAVEMENT DELINEATION QUANTITIES

SHEET No.	REMOVE: THERMOPLASTIC TRAFFIC STRIPE: Det 21 4" DOUBLE SOLID YELLOW (HAZARDOUS WASTE)	Det 25A 4" SOLID YELLOW (HAZARDOUS WASTE)	Det 40 4" (BROKEN 6-1) WHITE	Det 8 & 9 4" (BROKEN 17-7)(WHITE)	Det 27B & 50 4" SOLID WHITE	Det 38A 8" SOLID WHITE	REMOVE: PAVEMENT MARKING	REMOVE: PAVEMENT MARKER	THERMOPLASTIC TRAFFIC STRIPE: Det 22 4" DOUBLE SOLID YELLOW	Det 25A 4" SOLID YELLOW	Det 27B 4" SOLID WHITE	Det 50 4" SOLID WHITE	Det 38 8" SOLID WHITE	Det 40 4" (BROKEN 6-1) (WHITE)	Det 9 4" (BROKEN 17-7) (WHITE)	THERMOPLASTIC PAVEMENT MARKING: ARROW	SYMBOLS / WORDS	CROSSWALK / LIMIT LINE	PAVEMENT MARKER: RETRO-REFLECTIVE: TYPE D	TYPE G	TYPE H
	LF	LF	LF	LF	LF	LF	SQFT	EA	LF	LF	LF	LF	LF	LF	LF	SQFT	SQFT	SQFT	EA	EA	EA
PD-1	869	100	14	392	331	486	330	10	869	100	100	331	243	92	1116	160	342	184	30	46	4
TOTAL	869	100	14	392	331	486	330	10	869	100	100	331	243	92	1116	160	342	184	30	46	4
GRAND TOTAL	969		1223				330	10	1400				243	92	1116	686			80		

ROADWAY QUANTITIES

LOCATION/ SHEET No.	REMOVE CONCRETE	ROADWAY EXCAVATION	CLASS 3 AGGREGATE BASE	LEAN CONCRETE BASE	JOINTED PLAIN CONCRETE PAVEMENT	MINOR CONCRETE (STAMPED CONCRETE)	MINOR CONCRETE (CURB AND CURB RAMP)	CURB RAMP DETECTABLE WARNING SURFACE	CHAIN LINK FENCE (TYPE CL-6)	4' CHAIN LINK GATE (TYPE CL-6)	REMOVE CHAIN LINK FENCE	TEMPORARY DRAINAGE INLET PROTECTION
	CY	CY	CY	CY	CY	CY	CY	SQFT	LF	EA	LF	EA
CURB RAMP No. 1/ C-1	11.0	14.0	3.6	2.4	5.0		3.0	17.5				1
CURB RAMP No. 2/ C-1	7.0	8.0	2.0	1.3	3.0	0.6	2.0	14.5				1
L-1									62	1	62	
TOTAL	18.0	22.0	5.6	3.7	8.0	0.6	5.0	32.0	62	1	62	2

SUMMARY OF QUANTITIES

Q-1

REVISED BY | DATE REVISED

RICHARD KHAW | ESTHER M. KIM

CALCULATED-DESIGNED BY | CHECKED BY

FUNCTIONAL SUPERVISOR: MOHAMMED CHOWDHURY

STATE OF CALIFORNIA - DEPARTMENT OF TRANSPORTATION
Caltrans® TRAFFIC DESIGN

S:\projects\4t6101\MinorA\74t610pa001.dgn

LAST REVISION 00-00-00 | DATE PLOTTED => 02-FEB-2015 | TIME PLOTTED => 12:31

Dist	COUNTY	ROUTE	POST MILES TOTAL PROJECT	SHEET No.	TOTAL SHEETS
07	LA	101	16.7	16	58

REGISTERED ELECTRICAL ENGINEER 12/8/14 DATE

12-15-14
PLANS APPROVAL DATE

REGISTERED PROFESSIONAL ENGINEER OHANNES ANSERLIAN No. E16682 Exp. 6/30/16 ELECTRICAL STATE OF CALIFORNIA

THE STATE OF CALIFORNIA OR ITS OFFICERS OR AGENTS SHALL NOT BE RESPONSIBLE FOR THE ACCURACY OR COMPLETENESS OF SCANNED COPIES OF THIS PLAN SHEET.

NOTE:

FOR ACCURATE RIGHT OF WAY DATA, CONTACT RIGHT OF WAY ENGINEERING AT THE DISTRICT OFFICE.

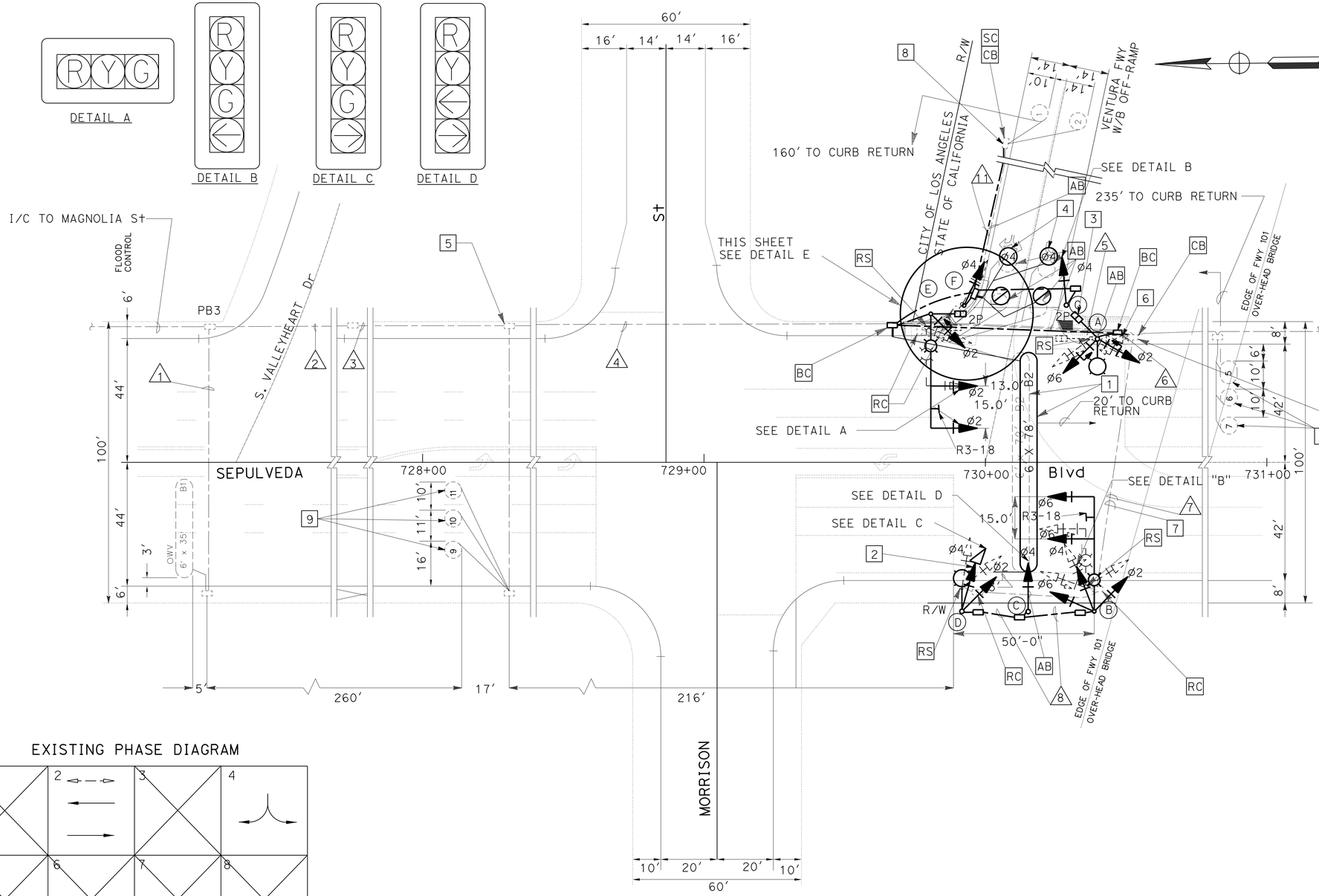

NEW PHASE DIAGRAM

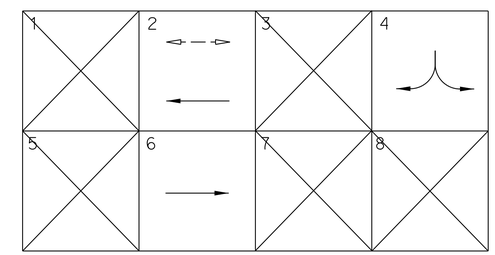

I/C to Ventura Fwy. E/B On Ramp. Service from U.G. PB at La Maida

Exist 40 AMP FUSE AND AN IN-LINE WATERPROOF FUSE HOLDER FOR THE SERVICE WIRE IN THE PULL BOX.

EXISTING PHASE DIAGRAM

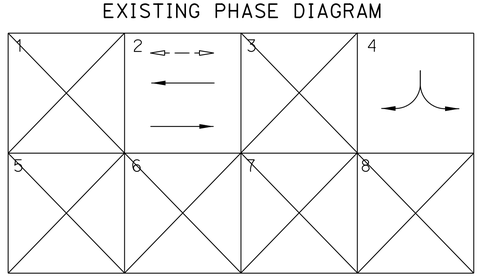

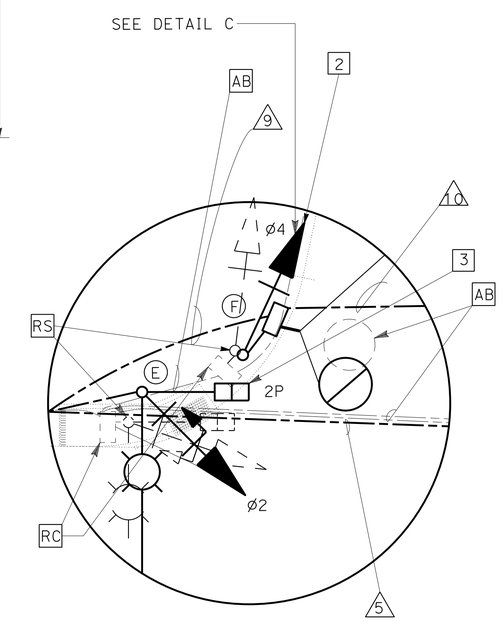

DETAIL E
NO SCALE

MODIFY SIGNAL AND LIGHTING

SCALE: 1"=20'

FOR PROJECT NOTES, GENERAL NOTES, CONDUCTOR AND CONDUIT SCHEDULE, POLE AND EQUIPMENT SCHEDULE SEE SHEET E-2.

APPROVED FOR ELECTRICAL WORK ONLY

E-1

STATE OF CALIFORNIA - DEPARTMENT OF TRANSPORTATION
Caltrans® TRAFFIC DESIGN

FUNCTIONAL SUPERVISOR: OSWALD ELIZONDO
CALCULATED-DESIGNED BY: OHANNES ANSERLIAN
CHECKED BY: OSWALD ELIZONDO
REVISED BY
DATE REVISED

LAST REVISION 00-00-00 | DATE PLOTTED => 02-FEB-2015 | TIME PLOTTED => 12:31

Dist	COUNTY	ROUTE	POST MILES TOTAL PROJECT	SHEET No.	TOTAL SHEETS
07	LA	101	16.7	17	58

REGISTERED ELECTRICAL ENGINEER 12/8/14 DATE

12-15-14
PLANS APPROVAL DATE

REGISTERED PROFESSIONAL ENGINEER OHANNES ANSERLIAN No. E16682 Exp. 6/30/16 ELECTRICAL STATE OF CALIFORNIA

THE STATE OF CALIFORNIA OR ITS OFFICERS OR AGENTS SHALL NOT BE RESPONSIBLE FOR THE ACCURACY OR COMPLETENESS OF SCANNED COPIES OF THIS PLAN SHEET.

NOTES: (FOR SHEET E-1)

1. ALL PULL BOXES SHALL BE TYPE PB2. SEE SHEET E-10 FOR DETAILS.
2. INDUCTIVE LOOPS DETECTORS TO BE CENTERED IN LANES (UNLESS OTHERIWSE NOTED) SEE SHEETS E-7 AND E-8 FOR DETAILS. INSTALL DETECTOR LEAD-IN CABLE AS SHOWN ON SHEETS E-6 AND E-7.
3. INSTALL BICYCLE LOOP DETECTORS AS SHOWN ON SHEET E-12 (CASE II).
4. ALL NEW VEHICLE SIGNAL SECTIONS AND BACK PLATES SHALL BE PLASTIC.
5. ALL PEDESTRIAN SIGNAL HEADS MUST BE COUNTDOWN TYPE.
6. MAINTAIN EXISTING SIGNAL AND LIGHTING SYSTEM IN OPERATION UNTIL NEW SIGNAL AND LIGHTING SYSTEM IS INSTALLED, OPERATIONAL AND AS DIRECTED BY THE ENGINEER.
7. Exist SEMI- ACTUATED OPERATION WITH TRANSIT PRIORITY (Exist ATSAC 2070 CONTROLLER IN Exist 332 CABINET)
   Ø2 -SEPULVEDA Blvd
   Ø4 -VENTURA FWY. WB OFF-RAMP.
   Exist VENTURA 2B ATSAC SYSTEM
   Exist ATSAC CABLE INTERCONNECT

LEGEND: (FOR SHEET E-1)

1 AB Exist TRANSIT PRIORITY LOOP. INSTALL NEW TRANSIT PRIORITY LOOP IN THE SAME LOCATION. SEE ELECTRICAL SHEET PLAN E-15 FOR ELECTRICAL DETAILS.

2 MOUNT THE NEW SIGNAL HEAD 15'-0" HIGH ON THE NEW 15TS SIGNAL POLE.

3 INSTALL ACCESSIBLE PEDESTRIAN SIGNAL AND SIGNAL HEADS WITH COUNTDOWN. SEE ELECTRICAL SHEET PLAN E-13 FOR ELECTRICAL DETAILS.

4 INSTALL PHASE LOOP DLC's PER ELECTRICAL SHEET PLAN E-9.

5 DISCONNECT Exist INTERCONNECT CABLE, AND DLC FROM THE Exist CONTROLLER CABINET, PULL THEM BACK THROUGH EXISTING CONDUIT AND COIL THEM IN THIS PULL BOX. CONNECT TO THE Exist CONTROLLER CABINET ONCE THE NEW CONDUITS ARE INSTALLED.

6 Exist 2070 CONTROLLER IN EXISTING 332 CABINET.

7 RC Exist CONDUCTORS. INSTALL NEW CABLES PER NEW CONDUCTOR SCHEDULE.

8 INSTALL SYSTEM LOOP DLC's PER ELECTRICAL SHEET PLAN E-8.

9 RE-NUMBER SYSTEM LOOPS AS SHOWN.

NEW POLE AND EQUIPMENT SCHEDULE

No.	STANDARD TYPE	STANDARD SMA	STANDARD LMA	Veh Sig Mtg MAST	Veh Sig Mtg POLE	Ped SIGNAL Mtg	Ped SIGNAL Ø	PPB ARROW	LED LUM (W)	SNS (REFLECTORIZED)
A	MODIFIED 15TS	—	6'-0"	—	SV-2-TA	SP-1-T	—	—	—	—
B	26-4-100	40'-0"	12'-0"	MAT MAS	SV-3-TA	—	—	—	195	—
C	1-A	—	—	—	SV-1-T	—	—	—	—	—
D	15TS	—	12'-0"	—	SV-2-TA	—	—	—	195	—
E	MODIFIED 29-5-100	40'-0"	12'-0"	2 MAS	SV-1-T	SP-1-T	—	—	149	—
F	MODIFIED TYPE 16	—	—	—	SV-1-T	—	2	→	—	—
G	1-A	—	—	—	SV-1-T	—	2	←	—	—

NEW CONDUIT AND CONDUCTOR SCHEDULE

CONDUCTOR	CONDUCTOR RUN		1	2	3	4	5	6	7	8	9	10	11
28 CSC							1	2	2	2	1	1	
#6	SIGNAL SERVICE							2(E)					
#8	GROUNDING CONDUCTOR						1	1	1	1	1		
DLC	Ø4 2-PAIR						1				1		
	SYSTEM LOOPS	2-PAIR					1	3			1		1
	SYSTEM LOOPS	3-PAIR				1(E)	1(E)	1(E)					
	BUS	1-PAIR	1(E)	1(E)	1(E)	1(E)	1(E),1	1(E),1					
CONDUIT SIZE			2"(E)	1½"(E)	1½"(E)	1½"(E)	3"	2-3"(E)	*	3"	3"	3"	3"

(E) Exist
* Exist CONDUIT

ABBREVIATIONS: (FOR SHEET E-1)

ATSAC-AUTOMATED TRAFFIC SURVEILLANCE AND CONTROL
APS-ACCESSIBLE PEDESTRIAN SIGNAL
I/C-INTERCONNECT CABLE
BSL-BUREAU OF STREET LIGHTING
VENTURA 2B-NAME OF ATSAC SYSTEM PER LOS ANGELES DEPARTMENT OF TRANSPORTATION AS-BUILT PLAN

LEGEND: (FOR SHEET E-1)

⊘ CITY OF LOS ANGELES BICYCLE DETECTOR

MODIFY SIGNAL AND LIGHTING

E-2

APPROVED FOR ELECTRICAL WORK ONLY

STATE OF CALIFORNIA - DEPARTMENT OF TRANSPORTATION
Caltrans TRAFFIC DESIGN
FUNCTIONAL SUPERVISOR: OSWALD ELIZONDO
CALCULATED-DESIGNED BY: OHANNES ANSERLIAN
CHECKED BY: OSWALD ELIZONDO
REVISED BY / DATE REVISED

LAST REVISION 00-00-00 | DATE PLOTTED => 02-FEB-2015 | TIME PLOTTED => 12:31

Dist	COUNTY	ROUTE	POST MILES TOTAL PROJECT	SHEET No.	TOTAL SHEETS
07	LA	101	16.7	18	58

REGISTERED ELECTRICAL ENGINEER 12/8/14 DATE

12-15-14
PLANS APPROVAL DATE

REGISTERED PROFESSIONAL ENGINEER VUONG HONG No. E16613 Exp. 6/30/2016 ELECTRICAL STATE OF CALIFORNIA

THE STATE OF CALIFORNIA OR ITS OFFICERS OR AGENTS SHALL NOT BE RESPONSIBLE FOR THE ACCURACY OR COMPLETENESS OF SCANNED COPIES OF THIS PLAN SHEET.

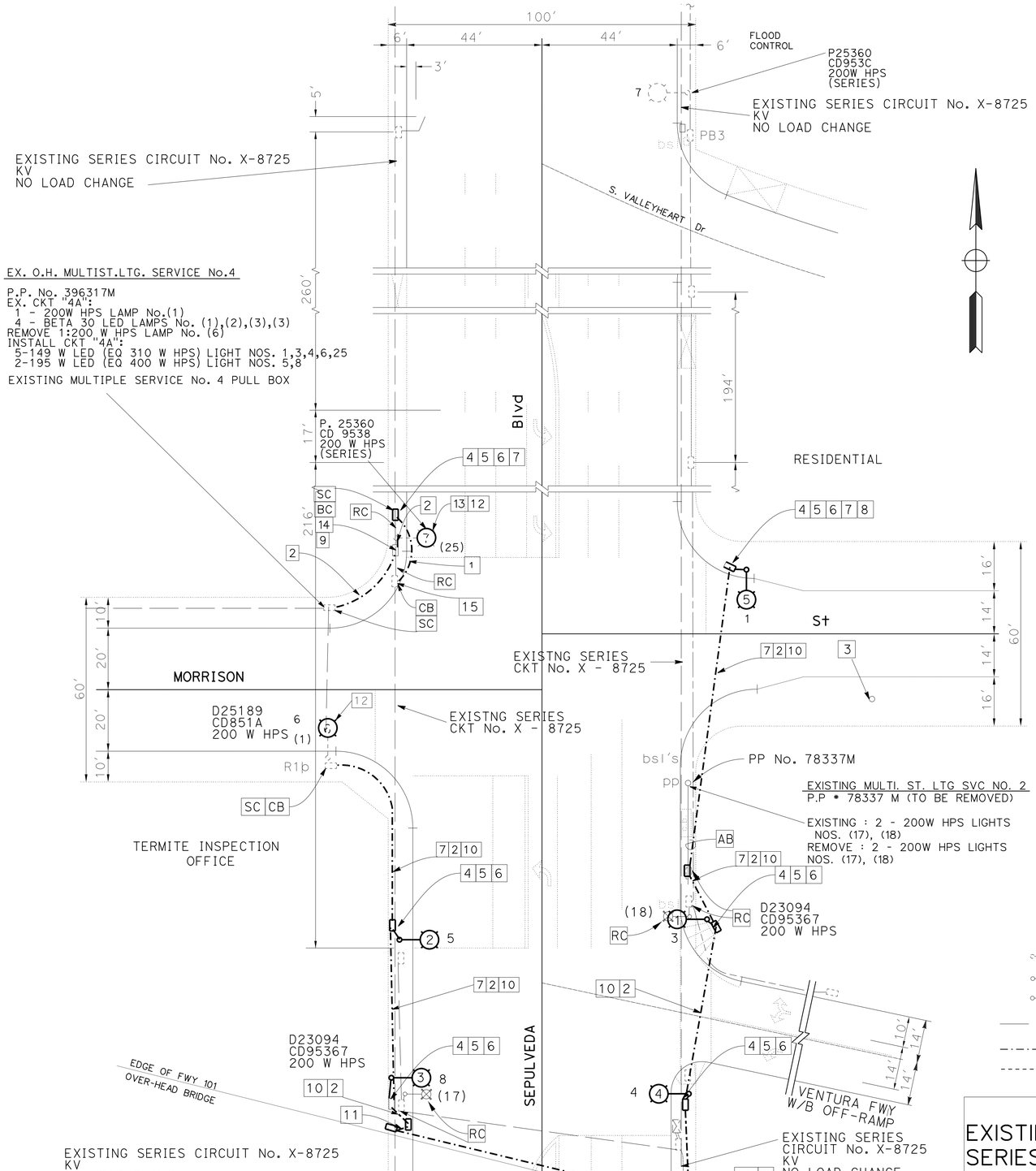

NOTE: (THIS SHEET ONLY)

1. FOR COMPLETE RIGHT OF WAY DATA, SEE RIGHT OF WAY RECORD MAPS AT DISTRICT OFFICE.
2. SEE E-4 FOR WIRING DIAGRAM.

LEGEND: (E-3 ONLY)

1. INSTALL 1½"C, 2#8 AWG (5KV) SERIES CONDUCTORS.
2. INSTALL 2"C, 3#8 AWG CONDUCTORS.
3. EXISTING P.P. No. 117868 M
4. INSTALL TYPE III PULL BOX. INSTALL PULL BOX NO CLOSER THAN 5' AND NO FURTHER THAN 15' FROM THE SERVICE OR LIGHTING POLE.
5. ALL ELECTROLIERS SPECIFIED HEREON SHALL INCLUDE A TYPE 2 "COMPOSITE/POLYMER" MATERIAL PULL BOX W/ BOLT DOWN LID.
6. INSTALL ONE APPROVED FUSE HOLDER WITH 30 A FUSE BETWEEN EACH SERVICE WIRE (NOT NEUTRAL WIRE) OR SERVICE WIRE CONNECTING DEVICE AND STREET LIGHTING CIRCUIT WIRE.
7. TAPE ENDS OF SPARE WIRE.
8. INSTALL ADDITIONAL 2" CONDUIT BEND FOR FUTURE STREET LIGHTING WIRING.
9. REMOVE BALLAST FROM EXISTING SERIES PULL BOX.
10. NEW MULTIPLE WIRES MUST HAVE 6" SEPARATION WITH EXISTING SERIES WIRES AND WITH SEPARATE CONDUITES SYSTEMS & PULL BOXES
11. INSTALL 1½"C, 3#8 AWG CONDUCTORS BY STRAPPING TO THE SIDE OF THE BRIDGE. SEE DETAILS SHEETS SES-3 AND SES-4.
12. REMOVE EXISTING LUMINAIRE AND REPLACE WITH 149 W EQUIVALENT LED LIGHT W/ ROAM.
13. RC EXISTING LUMINAIRE, CONDUCTORS BETWEEN POLE AND PULL BOX.
14. INTERCEPT EXISTING CONDUIT AND INSTALL PULL BOX.
15. RC BALLAST FROM EXISTING SERIES PULL BOX. SPLICE (5KV) SERIES WIRES.

MATERIAL LIST: (E-3 ONLY)

SYMBOL	ITEM	Qty	DESCRIPTION
1	ELECTROLIER	1	CALTRANS MODIFIED 29-5-100(N), 12' LUM ARM WITH TYPE 2 PB
2	ELECTROLIER	1	CALTRANS TYPE 15TS(N), 12' LUM ARM WITH TYPE 2 PB
3	ELECTROLIER	1	CALTRANS MODIFIED 26-4-100(N), 12' LUM ARM WITH TYPE TYPE 2 PB
4	ELECTROLIER	1	CALTRANS MODIFIED TYPE 15TS(N), 6' LUM ARM WITH TYPE 2 PB
2 3	LUMINAIRE	2	195 W LED (EQ 400 W HPS) W/ ROAM
* SET LUMINAIRE TO ILLUMINATING SOCIETY'S MEDIUM TYPE III LIGHTING DISTRIBUTION PATTERN			
SL-6815 LA CITY BUREAU OF STREET LIGHTING			
5	ELECTROLIER	1	CD953C W/ 6' L.A. WITH TYPE II PULLBOX
1 4 5 6 7	LUMINAIRE	5	149 W LED (EQ 310 W HPS) W/ ROAM

CITY LEGEND:

- EXISTING ELECTROLIER TO REMAIN
- EXISTING ELECTROLIER, LUMINAIRE AND BALLAST TO BE REMOVED.
- NEW ELECTROLIER
- EXISTING CONDUIT
- NEW 1½" CONDUIT
- NEW 1" CONDUIT

WARNING

EXISTING UNDERGROUND HIGH VOLTAGE, SERIES CIRCUIT IN PROXIMITY TO ELECTROLIER. EXERCISE CAUTION WHEN INSTALLING NEW EQUIPMENT

APPROVED FOR ELECTRICAL WORK ONLY

MODIFY SIGNAL AND LIGHTING

SCALE: 1"=20'

E-3

STATE OF CALIFORNIA - DEPARTMENT OF TRANSPORTATION
Caltrans® TRAFFIC DESIGN

FUNCTIONAL SUPERVISOR: OSWALD ELIZONDO
CALCULATED-DESIGNED BY: VUONG HONG
CHECKED BY: OSWALD ELIZONDO
REVISED BY
DATE REVISED

LAST REVISION 00-00-00 | DATE PLOTTED => 02-FEB-2015 | TIME PLOTTED => 12:31

Dist	COUNTY	ROUTE	POST MILES TOTAL PROJECT	SHEET No.	TOTAL SHEETS
07	LA	101	16.7	19	58

REGISTERED ELECTRICAL ENGINEER 12/8/14 DATE

12/15/14
PLANS APPROVAL DATE

REGISTERED PROFESSIONAL ENGINEER VUONG HONG No. E16613 Exp. 6/30/2016 ELECTRICAL STATE OF CALIFORNIA

THE STATE OF CALIFORNIA OR ITS OFFICERS OR AGENTS SHALL NOT BE RESPONSIBLE FOR THE ACCURACY OR COMPLETENESS OF SCANNED COPIES OF THIS PLAN SHEET.

WIRING DIAGRAM LEGEND (E-4)

- INSTALL NEW 149 W LED (EQ 310 W HPS).
- INSTALL NEW 195 W LED (EQ 400 W HPS).
- EXISTING LAMP AND BALLAST TO REMAIN.
- INSTALL No. 8 CONDUCTOR, UNLESS OTHERWISE SHOWN.
- EXISTING CONDUCTOR TO REMAIN.
- EXISTING SPLICED CONDUCTOR
- SPLICE CONDUCTOR
- TAPE END OF SPARE WIRE
- EXISTING TAPE END OF SPARE WIRE

WARNING
EXISTING UNDERGROUND HIGH VOLTAGE, SERIES CIRCUIT IN PROXIMITY TO ELECTROLIER. EXERCISE CAUTION WHEN INSTALLING NEW EQUIPMENT.

WARNING
BEFORE STARTING WORK ON EXISTING SERIES LIGHTING CIRCUITS, THE CONTRACTOR MUST OBTAIN DAILY SAFETY CIRCUIT CLEAREANCE FROM LABSL. DISCONNECT CIRCUITS AND PLACE "MEN AT WORK" SIGNS NEAR OPEN SWITCHES BEFORE DOING ANY WORK ON CIRCUITS.

EXISTING O.H. MULTI ST LTG. SVC No. 4

P.P. No. 396317M
EX. CKT "4A": 1-200W HPS LAMP No. (1)
4-BETA 30 LED LAMP No. (1), (2), (3), (4)
REMOVE 1-200 W HPS LAMP No. (1)
INSTALL CKT "4A"
5-149W LED (EQ 310W HPS) LIGHT NOS. 1,3,4,6,25
2-195W LED (EQ 400 W HPS) LIGHT NOS. 5,8

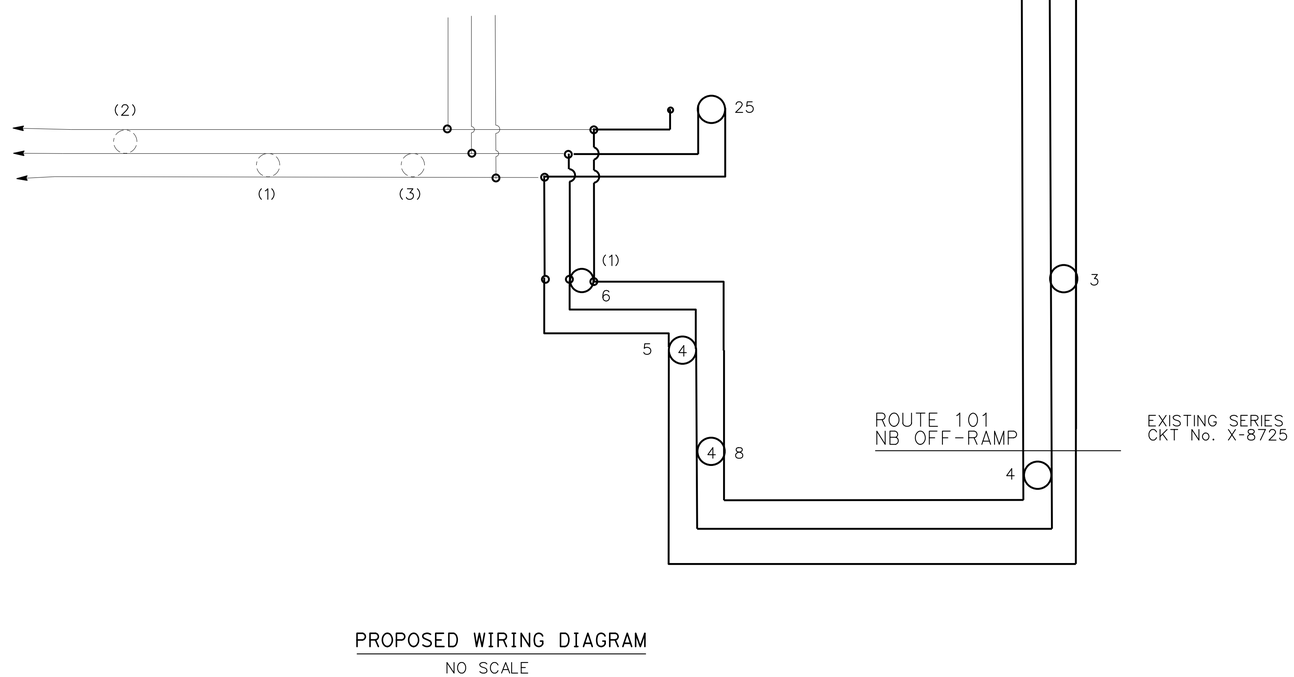

PROPOSED WIRING DIAGRAM
NO SCALE

SEE SHEET E-3 FOR LIGHTING PLAN.

MODIFY SIGNAL AND LIGHTING

NO SCALE

E-4

STATE OF CALIFORNIA - DEPARTMENT OF TRANSPORTATION
Caltrans® TRAFFIC DESIGN

CONSULTANT FUNCTIONAL SUPERVISOR: OSWALD ELIZONDO
CALCULATED-DESIGNED BY: VUONG HONG
CHECKED BY: OSWALD ELIZONDO
REVISED BY
DATE REVISED

LAST REVISION 00-00-00 | DATE PLOTTED => 02-FEB-2015 | TIME PLOTTED => 12:31

Dist	COUNTY	ROUTE	POST MILES TOTAL PROJECT	SHEET No.	TOTAL SHEETS
07	LA	101	16.7	20	58

REGISTERED ELECTRICAL ENGINEER DATE 12/8/14

PLANS APPROVAL DATE 12-15-14

REGISTERED PROFESSIONAL ENGINEER VUONG HONG No. E16613 Exp. 6/30/2016 ELECTRICAL STATE OF CALIFORNIA

THE STATE OF CALIFORNIA OR ITS OFFICERS OR AGENTS SHALL NOT BE RESPONSIBLE FOR THE ACCURACY OR COMPLETENESS OF SCANNED COPIES OF THIS PLAN SHEET.

NOTICE TO CONTRACTORS (GENERAL NOTES FOR CITY STREET LIGHTING SYSTEM FOR E-3 ONLY)

1. ALL WORK SHALL CONFORM TO THE LATEST BOARD OF PUBLIC WORKS OF THE CITY OF LOS ANGELES ADOPTED EDITING AND SUPPLEMENTS TO THE "GREEN BOOK STANDARD SPECIFICATIONS FOR PUBLIC WORKS CONSTRUCTION" AS MODIFIED BY THE CORRESPONDING ISSUE OF THE BROWN BOOK, THE LATEST EDITION OF THE BUREAU OF STREET LIGHTING "SPECIAL SPECIFICATIONS" AND THE SPECIAL PROVISIONS. THE BROWN BOOK CAN BE OBTAINED FROM THE BUREAU OF ENGINEERING WEBSITE (http://eng.lacity.org/techdocs/stdplans/S-600/BB2006.pdf).

2. ALL EXISTING ELECTROLIERS SPECIFIED TO BE REMOVED OR MODIFIED ON THIS PLAN SHALL BE MAINTAINED IN SERVICE UNTIL THE NEW ELECTROLIER LIGHTING SYSTEM IS PLACED IN SERVICE, UNLESS OTHERWISE SPECIFIED HEREON. ALL OTHER ELECTROLIERS ON CIRCUITS AFFECTED BY THIS PLAN SHALL BE MAINTAINED IN SERVICE. THE CONTRACTOR SHALL PROVIDE ALTERNATE LIGHTING IN LIEU OF MAINTAINING EXISTING ELECTROLIER LIGHTS IN SERVICE PROVIDED THAT SUCH ARRANGEMENTS ARE APPROVED BY THE ENGINEER.

3. THE CONTRACTOR SHALL PROTECT AND MAINTAIN ALL STREET LIGHTING FACILITIES EXISTING IN THE WORK AREA. SHOULD ANY DAMAGE TO EXISTING STREET LIGHTING FACILITIES OCCUR, THE CONTRACTOR SHALL IMMEDIATELY NOTIFY THE ENGINEER AND THE BUREAU OF STREET LIGHTING FIELD OPERATIONS DIVISION BY TELEPHONING (213) 913-4740; AFTER 4:30 P.M. (3:30 P.M. ON FRIDAY), CONTACT ELECTRIC TROUBLE BOARD OF DEPARTMENT OF WATER AND POWER; FOR 818 AREA CODE (SAN FERNANDO VALLEY), (800) 821-5279; FOR 213 AREA CODE (800) 821-5728. THE CONTRACTOR SHALL ARRANGE FOR IMMEDIATE REPAIR AND RESTORATION TO SERVICE OF THE DAMAGED LIGHTING FACILITIES AT NO COST TO THE CITY. A LICENSED ELECTRICAL CONTRACTOR IS REQUIRED TO MAKE ALL REPAIRS.

4. ANYTIME CONSTRUCTION CALLS FOR GRADING, DEMOLITION, DRILLING OR BONDING WORK IN PROXIMITY TO STREET LIGHTING CIRCUITS, A SAFETY CLEARANCE SHALL BE OBTAINED. CONTACT THE ENGINEER AND THE DEPARTMENT OF WATER AND POWER AT (213) 367-9966 BY 12 NOON TO MAKE ARRANGEMENTS FOR NEXT DAY CIRCUIT CLEARANCE. IN THE EVENT OF DAMAGES TO THE STREET LIGHTING SYSTEMS, THE CONTRACTOR IS RESPONSIBLE FOR REPAIRS TO ALL DAMAGED STREET LIGHTING SYSTEMS IMMEDIATELY FOR CONTINUOUS OPERATION.

5. THE CONTRACTOR SHALL INSTALL ALL REQUIRED PHOTOELECTRIC CONTROLS. THE CONTROLS SHALL BE OBTAINED FROM THE DEPARTMENT OF WATER AND POWER (DWP), STREET LIGHTING MAINTENANCE HEADQUARTERS, 611 NORTH HOOVER St., AT NO COST TO THE CONTRACTOR. A MINIMUM OF 15 DAYS ADVANCED NOTICE IS REQUIRED TO BE GIVEN TO THE DWP STREET LIGHTING SUPERINTENDENT AT (213) 367-9966. THE CONTRACTOR SHALL BE RESPONSIBLE FOR KEEPING ALL PHOTOELECTRIC CONTROLS ISSUED BY DWP IN OPERATING CONDITION UNTIL THE SATISFACTORY COMPLETION OF THE BURN TEST. THE INSTALLED CONTROLS SHALL BE ORIENTED IN A NORTHERLY DIRECTION.

6. STREET LIGHTING CONDUIT SHALL BE INSTALLED BY JACKING OR DRILLING METHODS. INSTALLATION OF CONDUIT BY OPEN TRENCHING IS NOT PERMITTED UNLESS APPROVED BY THE ENGINEER AND CONCURRED BY THE DIRECTOR, BUREAU OF STREET LIGHTING.

7. THE CONTRACTOR SHALL REQUEST A BURN TEST BY NOTIFYING THE BUREAU OF CONTRACT ADMINISTRATION PROJECT INSPECTOR A MINIMUM OF 7 CALENDAR DAYS IN ADVANCE OF THE DATE ON WHICH A BURN TEST IS DESIRED.

8. NOTWITHSTANDING SECTION 107 OF THE SPECIAL SPECIFICATIONS FOR THE CONSTRUCTION OF STREET LIGHTING SYSTEMS, MAGNETIC REGULATING BALLASTS ARE REQUIRED IN ALL COBRA-HEAD LUMINARIES. BEFORE COMMENCING ANY EXCAVATION, DRILLING AND BONDING WORK, THE CONTRACTOR SHALL OBTAIN AN UNDERGROUND SERVICE ALERT INQUIRY IDENTIFICATION NUMBER BY CALLING 1-800-422-4133. TWO WORKING DAYS SHALL BE ALLOWED AFTER THE IDENTIFICATION NUMBER IS OBTAINED AND BEFORE THE EXCAVATION OR DRILLING AND BONDING WORK IS STARTED SO THAT UTILITY OWNERS CAN BE NOTIFIED. THE IDENTIFICATION NUMBER SHALL BE REPORTED TO THE ENGINEER AND THE BUREAU OF CONTRACT ADMINISTRATION. WHEN CALLING FOR INSPECTION: METRO, (213) 580-5080 AND VALLEY, (818) 756-8335. THE IDENTIFICATION NUMBERS WILL NOT BE GIVEN MORE THAN TEN DAYS PRIOR TO STARTING EXCAVATION WORK.

10. ELECTROLIERS, SPECIFIED TO BE LOCATED INSIDE OF THE CURB RETURN, SHALL BE INSTALLED WITH THE CENTER OF THE ELECTROLIER 30" BEHIND THE CURB FACE, MEASURED RADIALLY AND WITH THE LUMINAIRE ARM ORIENTED OVER THE STREET AND PERPENDICULAR TO THE STREET CENTERLINE.

11. ELECTROLIERS SHALL BE ERECTED SO THAT THE BASE HAND HOLE IS PERPENDICULAR TO THE CURB AND LOCATED ON THE SIDE OF THE ELECTROLIER AWAY FROM ONCOMING TRAFFIC.

12. ELECTRICAL LIGHTING EQUIPMENT APPROVAL LIST (M-40 FORM) SHALL BE SUBMITTED TO THE ENGINEER AND TO THE BUREAU OF STREET LIGHTING FOR APPROVAL. ALLOW 20 WORKING DAYS FOR REVIEW. CONTACT STREET LIGHTING ENGINEER FOR DETAILS. THE M-40 FORM CAN BE OBTAINED FROM THE BUREAU OF STREET LIGHTING WEBSITE (http://www.lacity.org/BSL) AND SELECT THE "FOR BUSINESS" HYPERLINK OR VISIT THEIR OFFICE AT 1149 SOUTH BROADWAY, SUITE 200, LOS ANGELES, CA, 90015.

SL-6815 W.O.L1399062

CITY OF LOS ANGELES
ED EBRAHIMIAN, DIRECTOR BUREAU OF STREET LIGHTING

ST. LTG. DIVISION MANAGER R.E. NO. DATE

SENIOR ST. LTG. ENGINEER R.E. NO. DATE

APPROVED _____ 2013

BY _____
DIRECTOR BUREAU OF STREET LIGHTING

STREET LIGHTING MULTIPLE CIRCUIT NOTES (FOR E-3 ONLY)

1. WARNING: SAFETY CLEARANCE SHALL BE OBTAINED DAILY FROM THE AFFECTED UTILITY COMPANY BEFORE DOING ANY WORK IN CLOSE PROXIMITY TO ANY OVERHEAD ELECTRIC LINE.

2. MULTIPLE CIRCUIT WIRE SHALL BE No. 8 AWG STRANDED COPPER CONDUCTOR, TYPE THWN OR THHN INSULATION, UL APPROVED FOR 600 VOLT OPERATIONS UNLESS OTHERWISE SPECIFIED HEREON.

3. THREE WIRES (COLOR CODE: 1-RED, 1-BLACK, 1-WHITE) SHALL BE INSTALLED IN ALL MULTIPLE CIRCUIT CONDUIT UNLESS OTHERWISE SPECIFIED HEREON.

4. EVEN NUMBERED ELECTROLIERS SHALL BE CONNECTED TO RED AND WHITE WIRES AND ODD NUMBERED ELECTROLIERS SHALL BE CONNECTED TO BLACK AND WHITE WIRES.

5. ELECTROLIERS SHALL BE WIRED PER TYPICAL MULTIPLE CIRCUIT ELECTROLIER WIRING DETAIL, BUREAU STREET LIGHTING STANDARD DRAWING No. L-301-1, SEE SHEET E-16 UNLESS OTHERWISE SPECIFIED.

6. MULTIPLE CIRCUITS IN CONDUITS CONTAINING MORE THAN THREE CONDUCTORS SHALL BE APPROPRIATELY IDENTIFIED BY LABELING CONDUCTORS "A", "B", ETC WITH APPROVED SELF-LAMINATING LETTER TAPE WRAPPED AT LEAST TWICE AROUND THE CONDUCTOR IN EACH BOX. (SPECIAL SELF-LAMINATING WIRE MARKERS OR EQUIVALENT).

STREET LIGHTING SERIES CIRCUIT NOTES (FOR E-3 ONLY)

1. WARNING: SAFETY CLEARANCE SHALL BE OBTAINED DAILY FROM THE SERVING COMPANY, AND "MEN AT WORK" SIGNS SHALL BE POSTED AT THE SERVICE POINT BEFORE ANY WORK IS DONE OR ANY CONNECTIONS MADE ON AN EXISTING CIRCUIT.

2. SERIES CIRCUIT WIRE SHALL BE No. 6 AWG SOLID COPPER CONDUCTOR, INSULATED WITH 0.11" APPROVED POLYETHYLENE COMPOUND RATED FOR 5,000 V OPERATION.

3. TWO OR MORE TURNS OF SELF-ADHESIVE COLORED TAPE WITH A MINIMUM WIDTH OF ½" SHALL BE APPLIED TO EACH CABLE IN ALL SERIES CIRCUITS WHERE WORK IS BEING DONE AND WHERE TWO OR MORE CIRCUITS EXIST IN A COMMON PULL BOX OR POST BASE. THE TAPE SHALL BE APPLIED ON THE CABLE BETWEEN THE SPLICES AND THE CONDUIT, USING ONE COLOR FOR EACH CIRCUIT. THE COLORS WHITE, GREEN AND ORANGE SHALL NOT BE USED.

4. THE CONTRACTOR SHALL GIVE THE ENGINEER AND THE BUREAU OF STREET LIGHTING YARD (PHONE: (323) 913-4743) NOT LESS THAN TWO NORMAL DAYS NOTICE BEFORE ANY WORK IS DONE ON AN EXISTING SERIES CIRCUIT.

5. FOR ADDITIONAL INFORMATION, PLEASE SEE SPECIAL PROVISION FOR THIS PROJECT.

MODIFY SIGNAL AND LIGHTING
CITY NOTES

E-5

STATE OF CALIFORNIA - DEPARTMENT OF TRANSPORTATION
Caltrans® TRAFFIC DESIGN
CONSULTANT FUNCTIONAL SUPERVISOR: OSWALD ELIZONDO
CALCULATED-DESIGNED BY: VUONG HONG
CHECKED BY: OSWALD ELIZONDO
REVISED BY
DATE REVISED

LAST REVISION 00-00-00
DATE PLOTTED => 02-FEB-2015
TIME PLOTTED => 12:31

Dist	COUNTY	ROUTE	POST MILES TOTAL PROJECT	SHEET No.	TOTAL SHEETS
07	LA	101	16.7	21	58

REGISTERED ELECTRICAL ENGINEER 12/8/14 DATE

12-15-14
PLANS APPROVAL DATE

REGISTERED PROFESSIONAL ENGINEER OHANNES ANSERLIAN No. E16682 Exp. 6/30/16 ELECTRICAL STATE OF CALIFORNIA

THE STATE OF CALIFORNIA OR ITS OFFICERS OR AGENTS SHALL NOT BE RESPONSIBLE FOR THE ACCURACY OR COMPLETENESS OF SCANNED COPIES OF THIS PLAN SHEET.

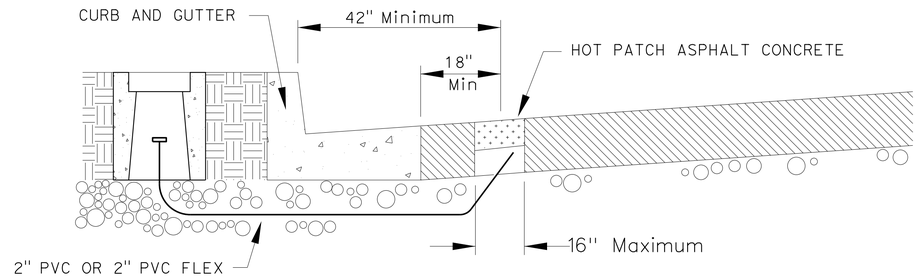

SECTION D-D
NOT TO SCALE

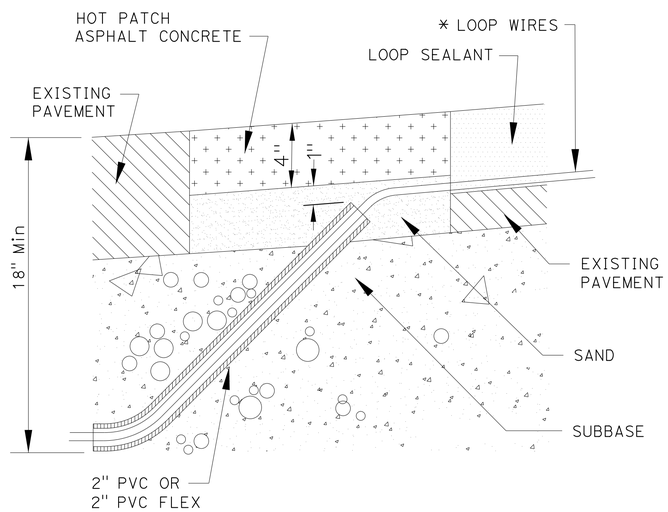

CONDUIT DETAIL
NOT TO SCALE

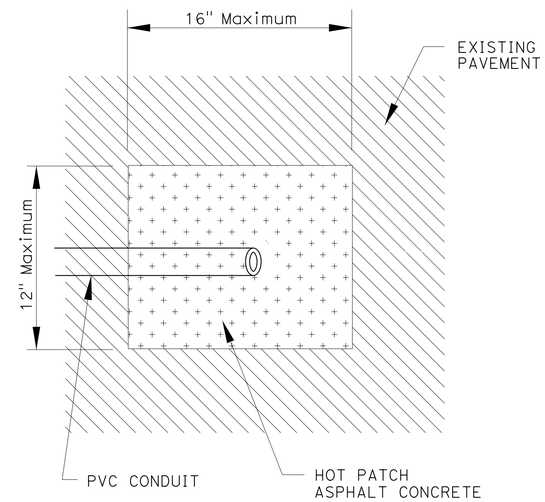

STUB-OUT DETAIL
(TOP VIEW)
NOT TO SCALE

NOTES: (THIS SHEET ONLY)

PERFORM LOOP INSTALLATION IN THE FOLLOWING ORDER:

1. OPEN THE PAVEMENT AT LEAST 42" FROM CURB FACE AND AT LEAST 18" FROM EDGE OF GUTTER USING A STAR DRILL OR A JACK HAMMER (ASPHALT CONCRETE ONLY). OPEN NO MORE THAN A 12" X16" AREA . IN CASES WHERE THERE IS A CONCRETE BUS PAD ADJACENT TO THE GUTTER, INSTALL THE STUBOUT BEYOND THE EDGE OF THE BUS PAD.
2. INSTALL 2" PVC (SCHEDULE 80) OR PVC FLEX (SCHEDULE 40) FROM THE PULL BOX PIT WITH A 45° ELBOW AT THE STUB-OUT AS SHOWN. DEPTH OF THE CONDUIT SHALL BE AT LEAST 18" BELOW THE STREET GRADE.
3. PATCH STREET USING HOT PATCH ASPHALT CONCRETE AND SAND AS SHOWN.
4. INSTALL DUCT SEAL WHERE WIRES ENTER 2" PVC OR 2" PVC FLEX.
5. FILL SAWCUT SLOT WITH HOT-MELT RUBBERIZED ASPHALT SEALANT.

* NO MORE THAN 8 LOOPS OR 16 WIRES PER STUB-OUT.

MODIFY SIGNAL AND LIGHTING
NO SCALE

E-6

STATE OF CALIFORNIA - DEPARTMENT OF TRANSPORTATION
Caltrans® TRAFFIC DESIGN
FUNCTIONAL SUPERVISOR: OSWALD ELIZONDO
CALCULATED-DESIGNED BY: OHANNES ANSERLIAN
CHECKED BY: OSWALD ELIZONDO
REVISED BY
DATE REVISED

LAST REVISION 00-00-00
DATE PLOTTED => 02-FEB-2015
TIME PLOTTED => 12:31

Dist	COUNTY	ROUTE	POST MILES TOTAL PROJECT	SHEET No.	TOTAL SHEETS
07	LA	101	16.7	22	58

REGISTERED ELECTRICAL ENGINEER 12/8/14 DATE

12-15-14
PLANS APPROVAL DATE

REGISTERED PROFESSIONAL ENGINEER
OHANNES ANSERLIAN
No. E16682
Exp. 6/30/16
ELECTRICAL
STATE OF CALIFORNIA

THE STATE OF CALIFORNIA OR ITS OFFICERS OR AGENTS SHALL NOT BE RESPONSIBLE FOR THE ACCURACY OR COMPLETENESS OF SCANNED COPIES OF THIS PLAN SHEET.

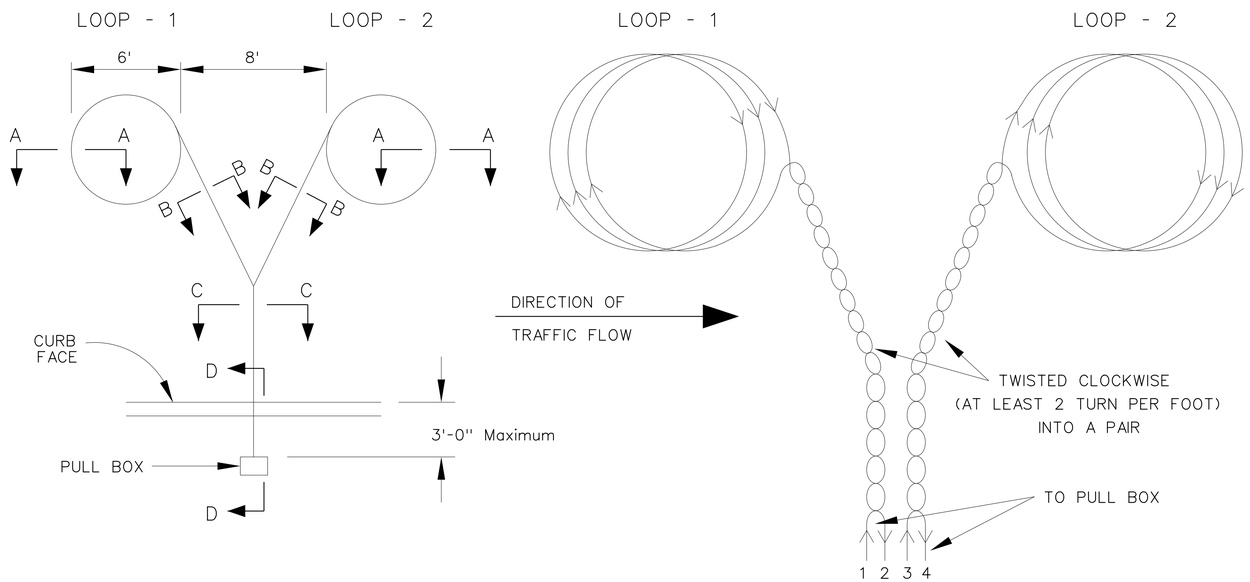

WINDING DETAILS
NOT TO SCALE

NOTES: (THIS SHEET ONLY)

1. INSTALL 3 CLOCKWISE TURNS OF LOOP WIRE FOR EACH DETECTOR, UNLESS OTHERWISE SHOWN ON SIGNAL PLAN.
2. ANY NON-ROUND SHAPED LOOPS MUST CONFORM TO ALL OTHER SPECIFICATIONS SHOWN ON THIS SHEET.

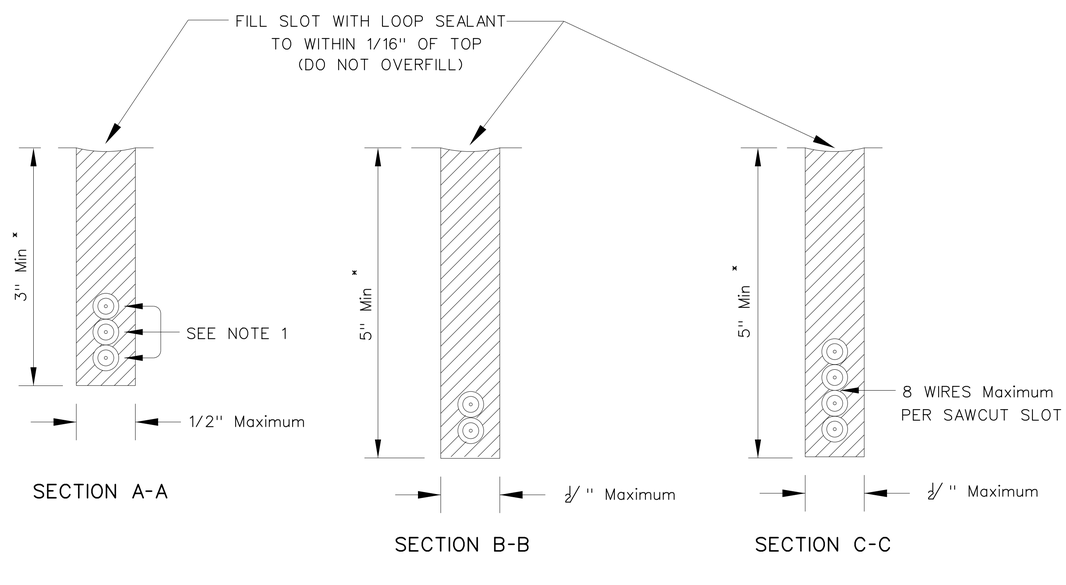

* DEPTH OF SLOT NOT TO EXCEED DEPTH OF PAVEMENT, FOR PCC (CONCRETE) SURFACES, THE MINIMUM COVER ABOVE LOOP WIRE SHALL BE 2.5" MINIMUM.

MODIFY SIGNAL AND LIGHTING

NO SCALE

E-7

STATE OF CALIFORNIA - DEPARTMENT OF TRANSPORTATION
Caltrans® TRAFFIC DESIGN

FUNCTIONAL SUPERVISOR: OSWALD ELIZONDO
CALCULATED-DESIGNED BY: OHANNES ANSERLIAN
CHECKED BY: OSWALD ELIZONDO
REVISED BY
DATE REVISED

LAST REVISION 00-00-00
DATE PLOTTED => 02-FEB-2015
TIME PLOTTED => 12:31

Dist	COUNTY	ROUTE	POST MILES TOTAL PROJECT	SHEET No.	TOTAL SHEETS
07	LA	101	16.7	23	58

REGISTERED ELECTRICAL ENGINEER 12/8/14 DATE

12-15-14
PLANS APPROVAL DATE

REGISTERED PROFESSIONAL ENGINEER
OHANNES ANSERLIAN
No. E16682
Exp. 6/30/16
ELECTRICAL
STATE OF CALIFORNIA

THE STATE OF CALIFORNIA OR ITS OFFICERS OR AGENTS SHALL NOT BE RESPONSIBLE FOR THE ACCURACY OR COMPLETENESS OF SCANNED COPIES OF THIS PLAN SHEET.

NOTES: (THIS SHEET ONLY)

1. THIS SHEET DESCRIBES A TWO, THREE OR FOUR PAIR LOOP DETECTOR LEAD-IN CABLE, INDIVIDUALLY SHIELDED AND JACKETED AND SUITABLE FOR INSTALLATION IN A PAVEMENT SAWCUT, CONDUIT, OR DIRECT BURIAL.
2. THE DETECTOR LEAD-IN CABLE CAN BE WIRED IN EITHER A SINGLE, DOUBLE, TRIPLE OR QUADRUPLE CHANNEL CONFIGURATION.
3. ELECTRICAL CONNECTIONS SHALL BE CAREFULLY SOLDERED AND WATERPROOFED.
4. LOOP NUMBERS SHOWN ARE TYPICAL.
5. SYSTEM LOOPS USE A SINGLE PAIR FOR EACH LOOP.

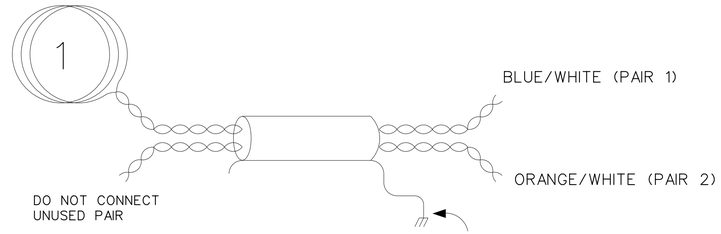

ONE-LOOP HOOKUP
2 PAIR CABLE

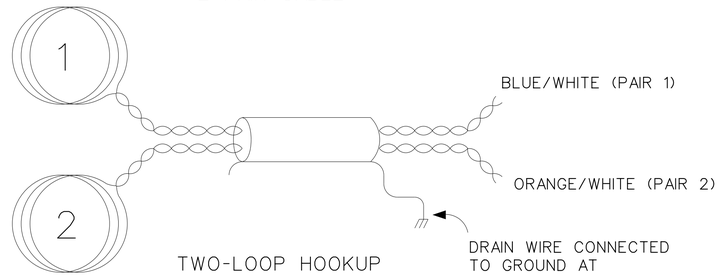

TWO-LOOP HOOKUP
2 PAIR CABLE

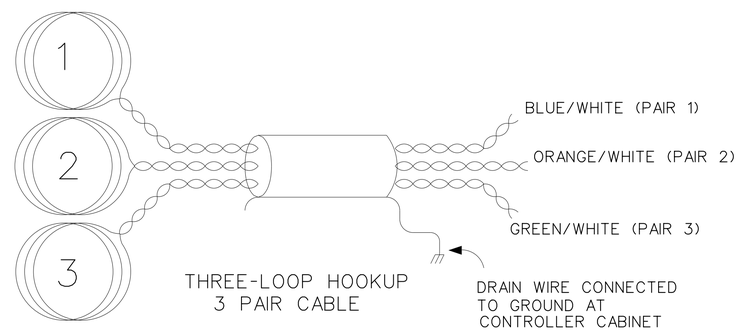

THREE-LOOP HOOKUP
3 PAIR CABLE

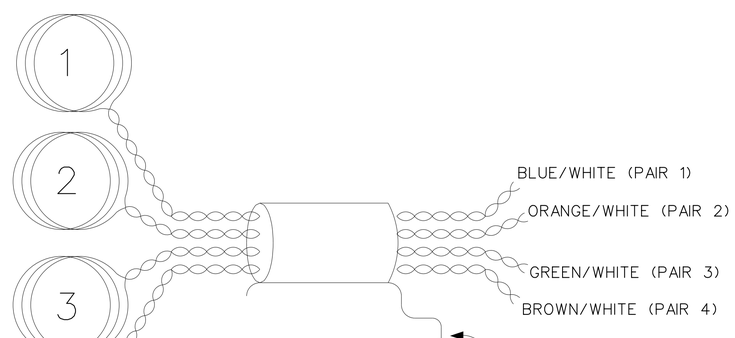

FOUR-LOOP HOOKUP
4 PAIR CABLE

MODIFY SIGNAL AND LIGHTING

NO SCALE

E-8

STATE OF CALIFORNIA - DEPARTMENT OF TRANSPORTATION
Caltrans® TRAFFIC DESIGN

FUNCTIONAL SUPERVISOR: OSWALD ELIZONDO
CALCULATED-DESIGNED BY: OHANNES ANSERLIAN
CHECKED BY: OSWALD ELIZONDO
REVISED BY
DATE REVISED

LAST REVISION 00-00-00 | DATE PLOTTED => 02-FEB-2015 | TIME PLOTTED => 12:31

Dist	COUNTY	ROUTE	POST MILES TOTAL PROJECT	SHEET No.	TOTAL SHEETS
07	LA	101	16.7	24	58

Ohannes O Anserlian 12/8/14
REGISTERED ELECTRICAL ENGINEER DATE

12-15-14
PLANS APPROVAL DATE

REGISTERED PROFESSIONAL ENGINEER
OHANNES ANSERLIAN
No. E16682
Exp. 6/30/16
ELECTRICAL
STATE OF CALIFORNIA

THE STATE OF CALIFORNIA OR ITS OFFICERS OR AGENTS SHALL NOT BE RESPONSIBLE FOR THE ACCURACY OR COMPLETENESS OF SCANNED COPIES OF THIS PLAN SHEET.

NOTES: (THIS SHEET ONLY)

1. CONNECT TWO TO FOUR LOOPS IN SERIES TO EACH PAIR, DO NOT USE PARALLEL CONNECTIONS.
2. DO NOT CONNECT ANY UNUSED CABLE PAIRS.
3. TYPICAL INSTALLATION SHOWN. TWO OR THREE PAIR CABLE MAY BE USED WHEN SHOWN ON SIGNAL PLAN.

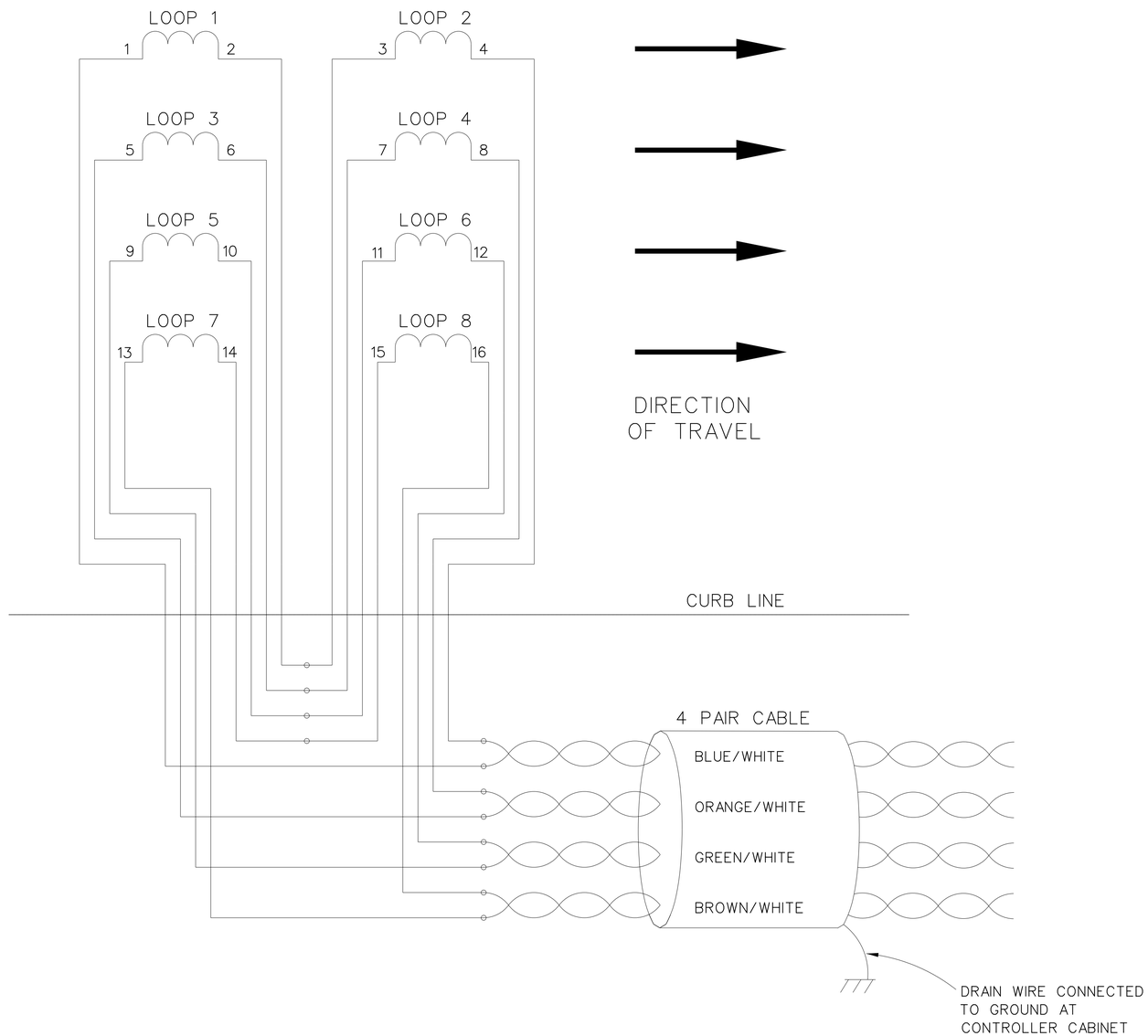

ACTUATION / PHASE LOOPS

MODIFY SIGNAL AND LIGHTING

NO SCALE

E-9

STATE OF CALIFORNIA - DEPARTMENT OF TRANSPORTATION
Caltrans® TRAFFIC DESIGN

FUNCTIONAL SUPERVISOR: OSWALD ELIZONDO
CALCULATED-DESIGNED BY: OHANNES ANSERLIAN
CHECKED BY: OSWALD ELIZONDO
REVISED BY
DATE REVISED

LAST REVISION 00-00-00
DATE PLOTTED => 02-FEB-2015
TIME PLOTTED => 12:31

Dist	COUNTY	ROUTE	POST MILES TOTAL PROJECT	SHEET No.	TOTAL SHEETS
07	LA	101	16.7	25	58

REGISTERED ELECTRICAL ENGINEER 12/8/14 DATE

12-15-14
PLANS APPROVAL DATE

REGISTERED PROFESSIONAL ENGINEER
OHANNES ANSERLIAN
No. E16682
Exp. 6/30/16
ELECTRICAL
STATE OF CALIFORNIA

THE STATE OF CALIFORNIA OR ITS OFFICERS OR AGENTS SHALL NOT BE RESPONSIBLE FOR THE ACCURACY OR COMPLETENESS OF SCANNED COPIES OF THIS PLAN SHEET.

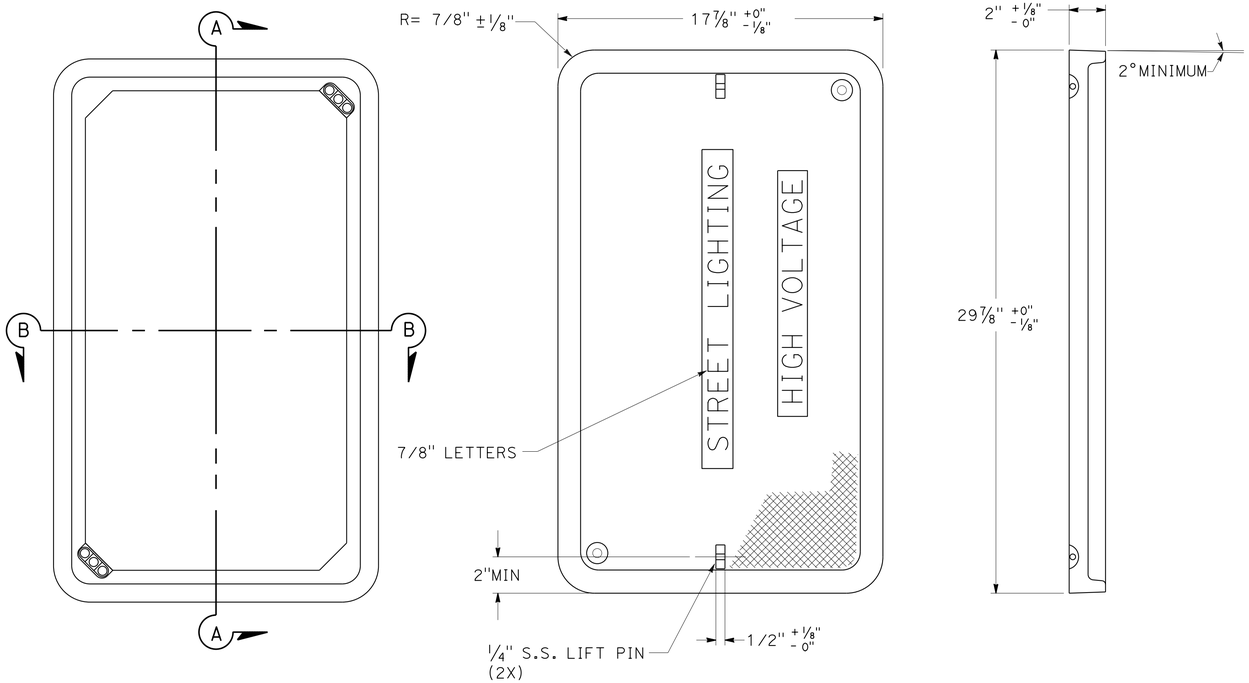

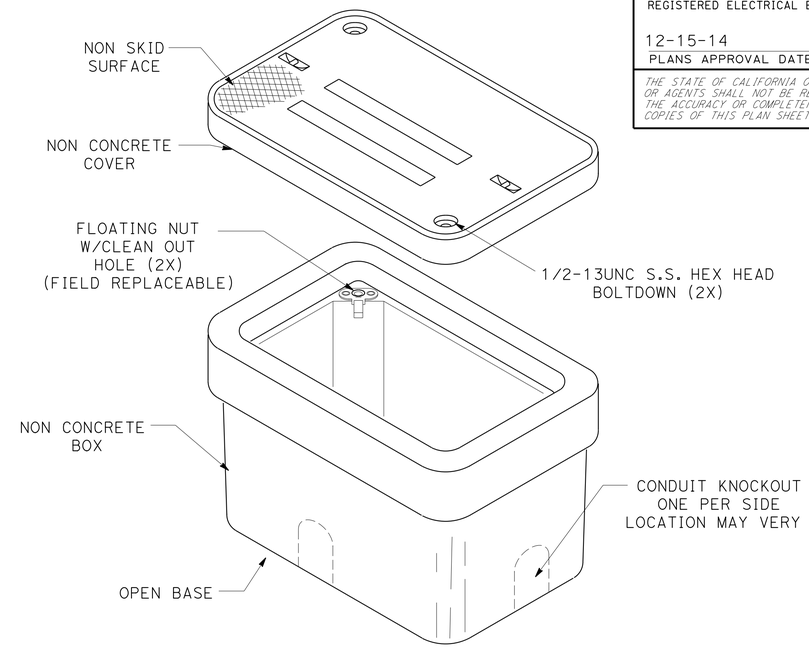

1. WHERE BSL TYPE 3 PULL BOX IS SPECIFIED IN THE PLANS, IT SHALL CONSIST OF A PULL BOX AND LID, AND SHALL MEET THE REQUIREMENTS OF THIS PLAN.
2. LETTERS SHOWN ON LID SHALL NOT BE DIFFERENT FROM OR OF A SIZE LESS THAN THAT INDICATED HEREON.

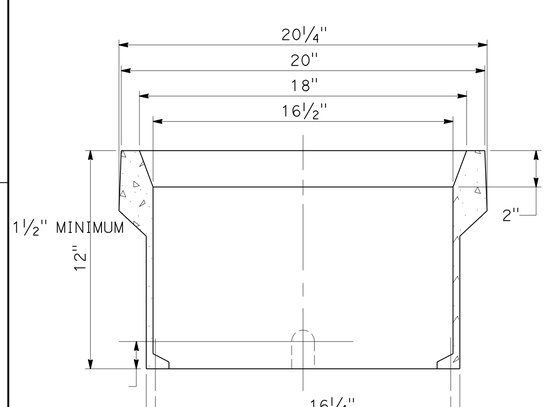

SECTION B-B

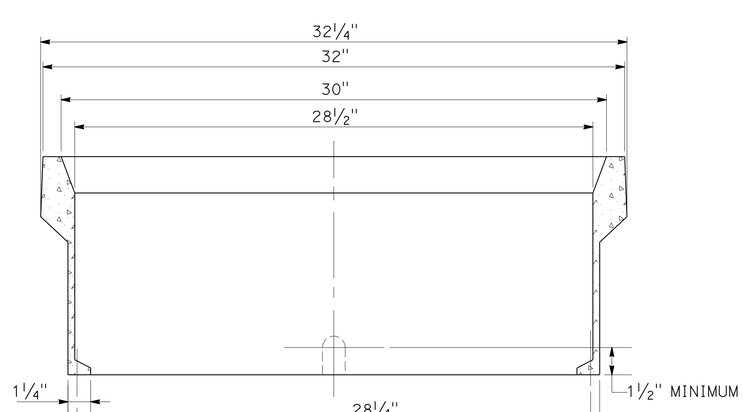

SECTION A-A

MODIFY SIGNAL AND LIGHTING

NO SCALE

E-10

STATE OF CALIFORNIA - DEPARTMENT OF TRANSPORTATION
Caltrans® **TRAFFIC DESIGN**

FUNCTIONAL SUPERVISOR: OSWALD ELIZONDO
CALCULATED-DESIGNED BY: OHANNES ANSERLIAN
CHECKED BY: OSWALD ELIZONDO
REVISED BY
DATE REVISED

LAST REVISION 00-00-00
DATE PLOTTED => 02-FEB-2015
TIME PLOTTED => 12:31

Dist	COUNTY	ROUTE	POST MILES TOTAL PROJECT	SHEET No.	TOTAL SHEETS
07	LA	101	16.7	26	58

REGISTERED ELECTRICAL ENGINEER 12/8/14 DATE

12-15-14
PLANS APPROVAL DATE

REGISTERED PROFESSIONAL ENGINEER
OHANNES ANSERLIAN
No. E16682
Exp. 6/30/16
ELECTRICAL
STATE OF CALIFORNIA

THE STATE OF CALIFORNIA OR ITS OFFICERS OR AGENTS SHALL NOT BE RESPONSIBLE FOR THE ACCURACY OR COMPLETENESS OF SCANNED COPIES OF THIS PLAN SHEET.

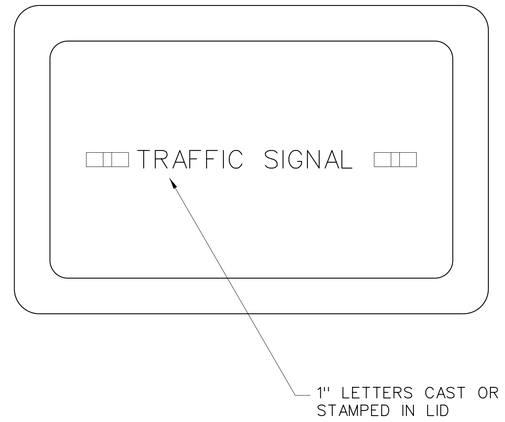

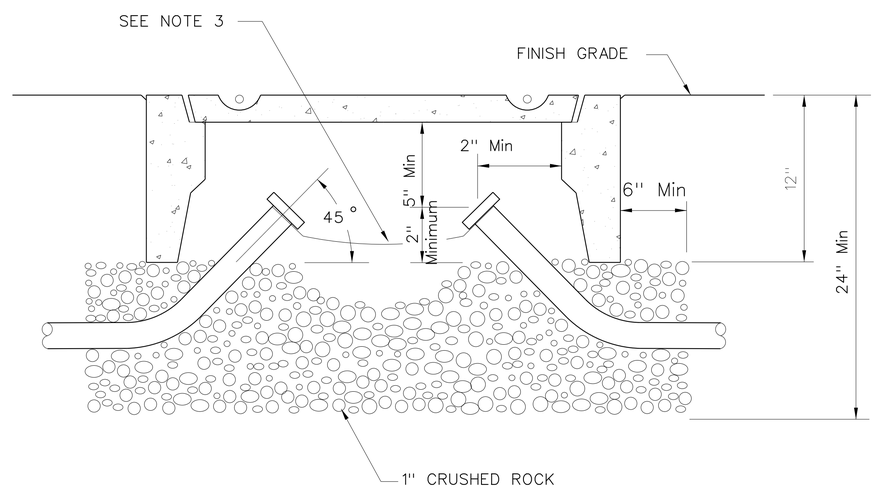

NOTES: (THIS SHEET ONLY)

1. PULL BOX DETAILS NOT SHOWN ON THIS PLAN SHALL CONFORM TO SHEET E-10.
2. OUTSIDE DIMENSION: TYPE PB2 - 15" X 25", TYPE PB3 - 22" X 34"
3. GALVANIZED CONDUITS MUST BE BONDED WITH COPPER GROUND STRAP AROUND THE NECK OF EACH CONDUIT. PVC CONDUITS MUST HAVE THEIR GROUND WIRES SPLICED TOGETHER.

MODIFY SIGNAL AND LIGHTING

NO SCALE

E-11

STATE OF CALIFORNIA - DEPARTMENT OF TRANSPORTATION
Caltrans® **TRAFFIC DESIGN**

FUNCTIONAL SUPERVISOR: OSWALD ELIZONDO
CALCULATED-DESIGNED BY: OHANNES ANSERLIAN
CHECKED BY: OSWALD ELIZONDO
REVISED BY
DATE REVISED

LAST REVISION 00-00-00
DATE PLOTTED => 02-FEB-2015
TIME PLOTTED => 12:31

Dist	COUNTY	ROUTE	POST MILES TOTAL PROJECT	SHEET No.	TOTAL SHEETS
07	LA	101	16.7	27	58

REGISTERED ELECTRICAL ENGINEER 12/8/14 DATE

12-15-14
PLANS APPROVAL DATE

REGISTERED PROFESSIONAL ENGINEER
OHANNES ANSERLIAN
No. E16682
Exp. 6/30/16
ELECTRICAL
STATE OF CALIFORNIA

THE STATE OF CALIFORNIA OR ITS OFFICERS OR AGENTS SHALL NOT BE RESPONSIBLE FOR THE ACCURACY OR COMPLETENESS OF SCANNED COPIES OF THIS PLAN SHEET.

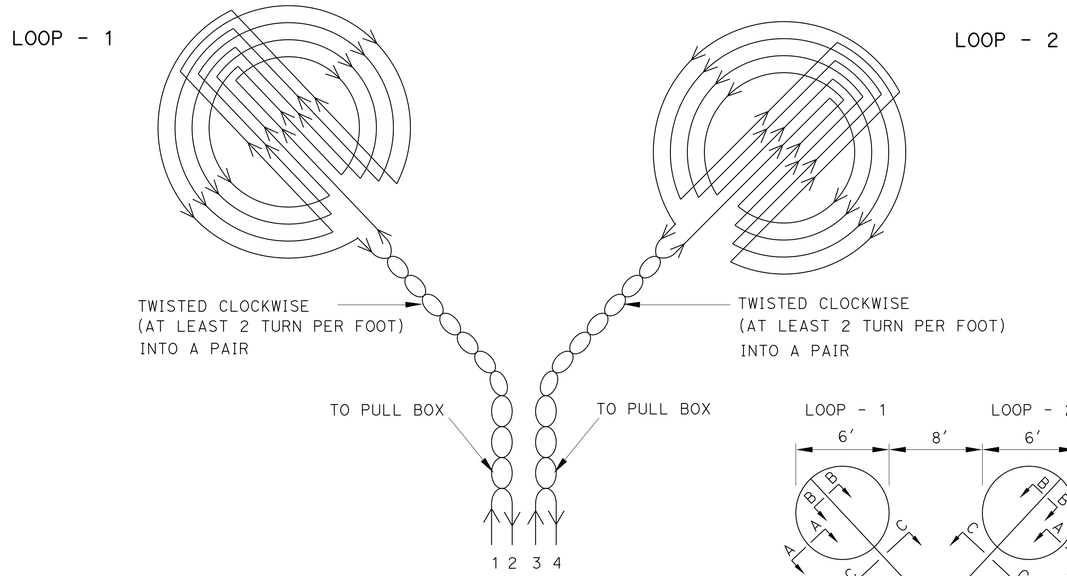

WINDING DETAIL
NOT TO SCALE

DIRECTION OF TRAFFIC FLOW

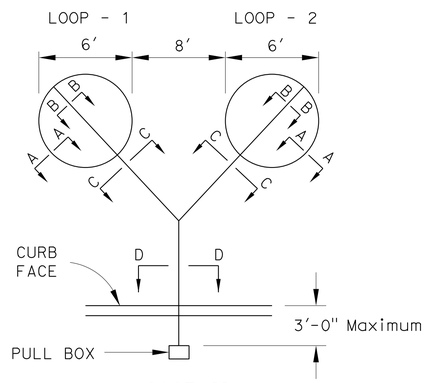

CASE II
(BICYCLE & VEHICLE)

NOTES: (THIS SHEET ONLY)

1. INSTALL FOUR (4) COMPLETE ALTERNATING TURNS OF LOOP CONDUCTORS, UNLESS OTHERWISE SPECIFIED.
2. FOR STUB-OUT AND CONDUIT DETAILS REFER TO SHEET E-11.
3. USE CASE II LOOPS WHEN VEHICULAR LOOPS ARE INTENDED TO DETECT BICYCLES.
4. SAME WINDING PATTERN TO BE USED IN BOTH LOOPS WITH (1) PAIR FROM EACH LOOP LEADING TO THE PULL BOX.

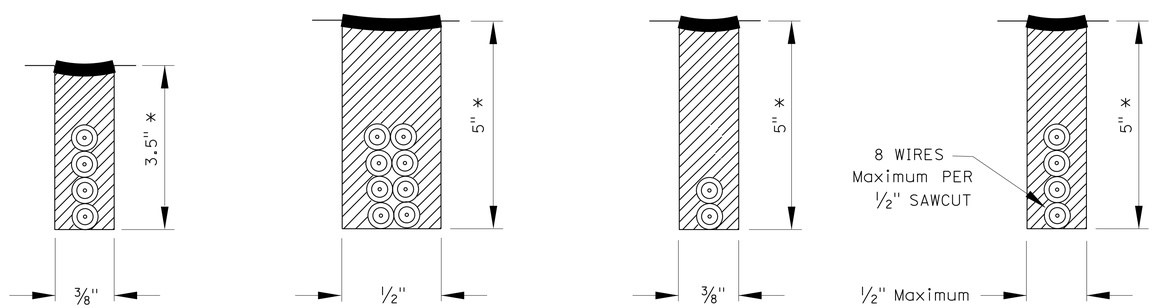

SECTION A-A SECTION B-B SECTION C-C SECTION D-D

* DEPTH OF SLOT NOT TO EXCEED DEPTH OF PAVEMENT

MODIFY SIGNAL AND LIGHTING

NO SCALE

E-12

STATE OF CALIFORNIA - DEPARTMENT OF TRANSPORTATION
Caltrans® **TRAFFIC DESIGN**

FUNCTIONAL SUPERVISOR: OSWALD ELIZONDO
CALCULATED-DESIGNED BY: OHANNES ANSERLIAN
CHECKED BY: OSWALD ELIZONDO
REVISED BY
DATE REVISED

LAST REVISION 00-00-00
DATE PLOTTED => 02-FEB-2015
TIME PLOTTED => 12:31

Dist	COUNTY	ROUTE	POST MILES TOTAL PROJECT	SHEET No.	TOTAL SHEETS
07	LA	101	16.7	28	58

REGISTERED ELECTRICAL ENGINEER 12/8/14 DATE

12-15-14
PLANS APPROVAL DATE

REGISTERED PROFESSIONAL ENGINEER
OHANNES ANSERLIAN
No. E16682
Exp. 6/30/16
ELECTRICAL
STATE OF CALIFORNIA

THE STATE OF CALIFORNIA OR ITS OFFICERS OR AGENTS SHALL NOT BE RESPONSIBLE FOR THE ACCURACY OR COMPLETENESS OF SCANNED COPIES OF THIS PLAN SHEET.

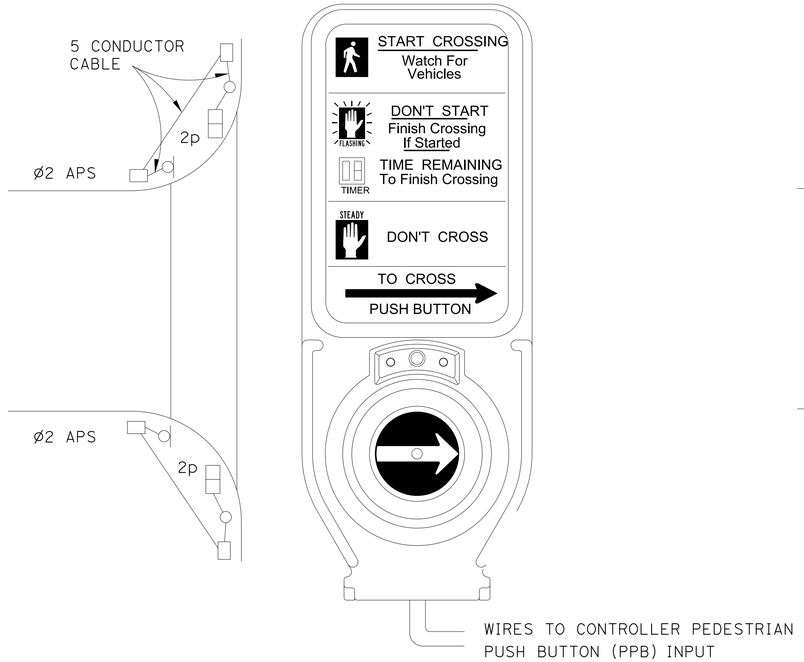

PED-ACTUATED PEDESTRIAN CROSSING
(PUSH BUTTON ACTIVATES ACCESSIBLE PEDESTRIAN SIGNALS AND THE WALK INTERVAL.)

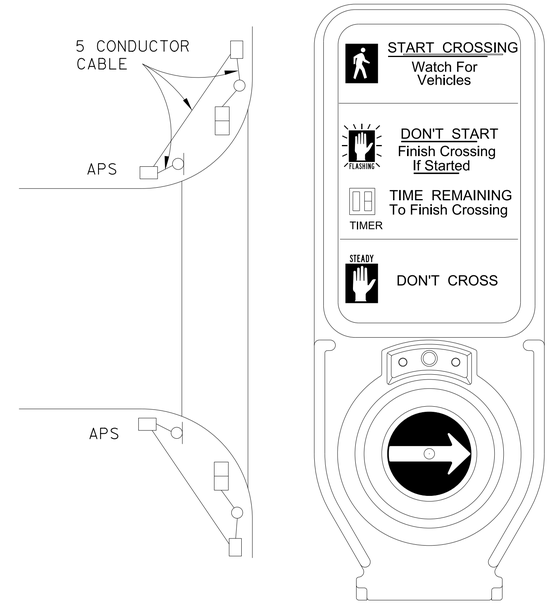

PRE-TIMED AND REST-IN-WALK PEDESTRIAN CROSSING
(PUSH BUTTON ACTIVATES ACCESSIBLE PEDESTRIAN SIGNALS ONLY. WALK INTERVAL IS ON RECALL.)

NOTES: (THIS SHEET ONLY)

1. APS SHALL BE USED FOR SITUATIONS WHERE NEW PEDESTRIAN PUSH BUTTONS ARE BEING INSTALLED OR WHERE THEY ARE BEING REPLACED, DUE TO MAINTENANCE.
2. COUNTDOWN PEDESTRIAN HEADS SHALL BE INSTALLED AT ALL ACCESSIBLE PEDESTRIAN SIGNAL LOCATIONS.
3. A SEPARATE 5 CONDUCTOR CABLE SHALL BE USED TO ISOLATE FROM ANY OTHER WIRES.

MODIFY SIGNAL AND LIGHTING

NO SCALE

E-13

REVISED BY	DATE REVISED

CALCULATED-DESIGNED BY	OHANNES ANSERLIAN
CHECKED BY	OSWALD ELIZONDO
FUNCTIONAL SUPERVISOR	OSWALD ELIZONDO

STATE OF CALIFORNIA - DEPARTMENT OF TRANSPORTATION
Caltrans TRAFFIC DESIGN

LAST REVISION 00-00-00 | DATE PLOTTED => 02-FEB-2015 | TIME PLOTTED => 12:31

Dist	COUNTY	ROUTE	POST MILES TOTAL PROJECT	SHEET No.	TOTAL SHEETS
07	LA	101	16.7	29	58

Johannes O Anserlian 12/8/14
REGISTERED ELECTRICAL ENGINEER DATE

12-15-14
PLANS APPROVAL DATE

REGISTERED PROFESSIONAL ENGINEER
JOHANNES ANSERLIAN
No. E16682
Exp. 6/30/16
ELECTRICAL
STATE OF CALIFORNIA

THE STATE OF CALIFORNIA OR ITS OFFICERS OR AGENTS SHALL NOT BE RESPONSIBLE FOR THE ACCURACY OR COMPLETENESS OF SCANNED COPIES OF THIS PLAN SHEET.

LENGTH OF LOOP	NUMBER OF TURNS
< 40′	2
≥ 40′	1

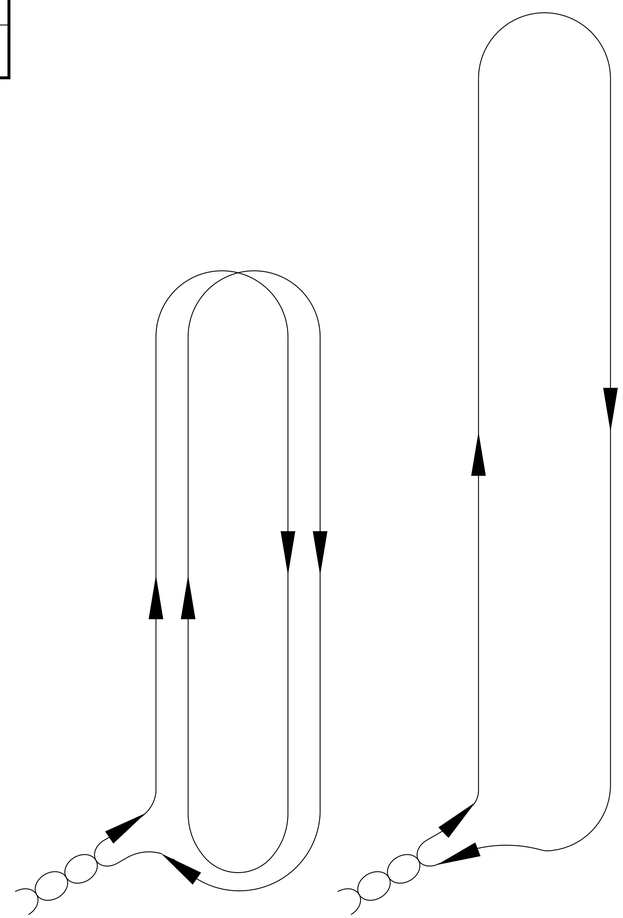

2 TURNS

1 TURN

TRANSIT PRIORITY LOOP WINDING DETAILS

SYMBOL

SAW SLOT DETAIL

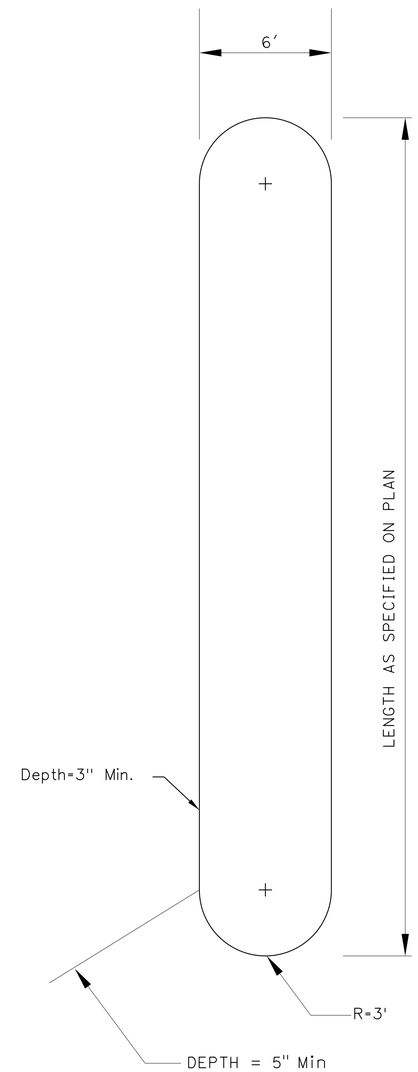

MODIFY SIGNAL AND LIGHTING

NO SCALE

E-14

STATE OF CALIFORNIA - DEPARTMENT OF TRANSPORTATION
Caltrans® **TRAFFIC DESIGN**

FUNCTIONAL SUPERVISOR: OSWALD ELIZONDO
CALCULATED-DESIGNED BY: OHANNES ANSERLIAN
CHECKED BY: OSWALD ELIZONDO
REVISED BY
DATE REVISED

LAST REVISION 00-00-00 | DATE PLOTTED => 02-FEB-2015 | TIME PLOTTED => 12:31

Dist	COUNTY	ROUTE	POST MILES TOTAL PROJECT	SHEET No.	TOTAL SHEETS
07	LA	101	16.7	30	58

Ohannes O Anserlian 12/8/14
REGISTERED ELECTRICAL ENGINEER DATE

12-15-14
PLANS APPROVAL DATE

REGISTERED PROFESSIONAL ENGINEER
OHANNES ANSERLIAN
No. E16682
Exp. 6/30/16
ELECTRICAL
STATE OF CALIFORNIA

THE STATE OF CALIFORNIA OR ITS OFFICERS OR AGENTS SHALL NOT BE RESPONSIBLE FOR THE ACCURACY OR COMPLETENESS OF SCANNED COPIES OF THIS PLAN SHEET.

BASED ON THE DISTANCE BETWEEN THE DOUBLE YELLOW CENTER LINE (DYCL) AND THE CURB FACE, 6'-0" DIAMETER CIRCULAR INDUCTIVE LOOP DETECTORS SHOULD BE INSTALLED AS SPECIFIED IN THE TABLES BELOW FOR SINGLE LANE APPROACHES.

CASE A: SINGLE PAIR

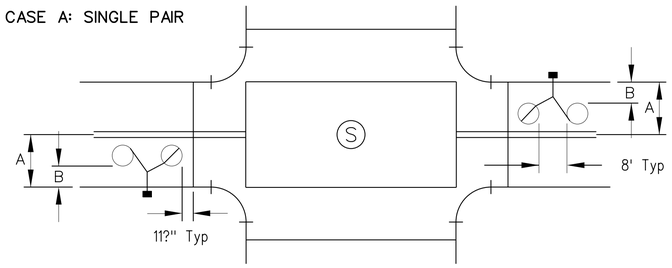

Distance Between DYCL and Curb Face (A)	No. of Pairs of Loops	Distance Between Loop and Curb Face (B)
9'-8"	1	3"
11'	1	3"
12'	1	3"
13'	1	4"
14'	1	5"

Distance Between DYCL and Curb Face (A)	No. of Pairs of Loops	Distance Between Loop and Curb Face (B)
15'	1	6'
16'	1	6'
17'	1	6'-8"
18'	1	7'-8"
19'	1	7'-8"

CASE B: DUAL PAIR

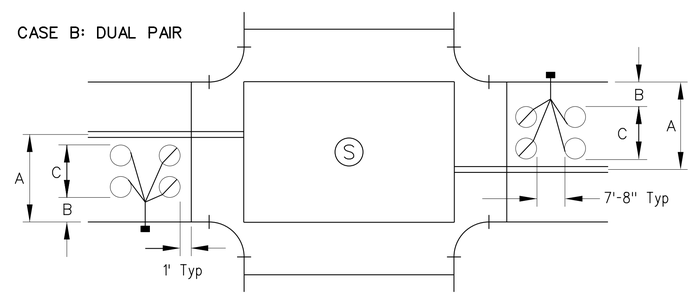

Distance Between DYCL and Curb Face (A)	No. of Pairs of Loops	Distance Between Loop and Curb Face (B)	Distance Between Loops (C)
20'	2	3'	15'
21'	2	3'	15'
22'	2	3'	16'
23'	2	3'	16'
24'	2	4'	16'
25'	2	5'	16'

SINGLE LANE APPROACHES

MODIFY SIGNAL AND LIGHTING

NO SCALE

E-15

STATE OF CALIFORNIA - DEPARTMENT OF TRANSPORTATION
Caltrans® **TRAFFIC DESIGN**

FUNCTIONAL SUPERVISOR: OSWALD ELIZONDO

CALCULATED-DESIGNED BY: OHANNES ANSERLIAN
CHECKED BY: OSWALD ELIZONDO

REVISED BY
DATE REVISED

LAST REVISION 00-00-00 | DATE PLOTTED => 02-FEB-2015 | TIME PLOTTED => 12:31

Dist	COUNTY	ROUTE	POST MILES TOTAL PROJECT	SHEET No.	TOTAL SHEETS
07	LA	101	16.7	31	58

REGISTERED ELECTRICAL ENGINEER 12/8/14 DATE

12-15-14
PLANS APPROVAL DATE

REGISTERED PROFESSIONAL ENGINEER
OHANNES ANSERLIAN
No. E16682
Exp. 6/30/16
ELECTRICAL
STATE OF CALIFORNIA

THE STATE OF CALIFORNIA OR ITS OFFICERS OR AGENTS SHALL NOT BE RESPONSIBLE FOR THE ACCURACY OR COMPLETENESS OF SCANNED COPIES OF THIS PLAN SHEET.

NOTES:

1. ALL LOOPS ARE 6' Dia WITH 7'-8" SEPARATION.
2. THE LOOP DETECTORS ADJACENT TO THE LIMIT LINE SHALL BE BICYCLE DETECTORS.

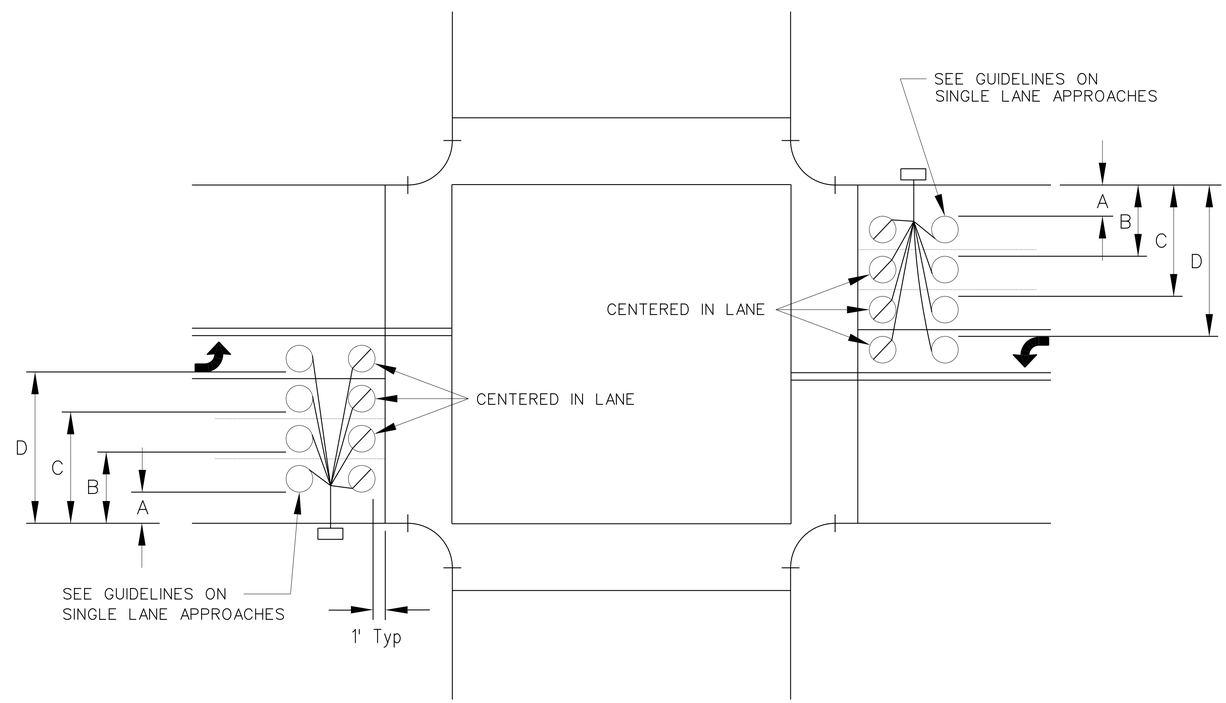

MULTI LANE APPROACHES

MODIFY SIGNAL AND LIGHTING

NO SCALE

E-16

STATE OF CALIFORNIA - DEPARTMENT OF TRANSPORTATION
Caltrans® **TRAFFIC DESIGN**

FUNCTIONAL SUPERVISOR: OSWALD ELIZONDO

CALCULATED-DESIGNED BY: OHANNES ANSERLIAN
CHECKED BY: OSWALD ELIZONDO

REVISED BY
DATE REVISED

LAST REVISION 00-00-00
DATE PLOTTED => 02-FEB-2015
TIME PLOTTED => 12:31

Dist	COUNTY	ROUTE	POST MILES TOTAL PROJECT	SHEET No.	TOTAL SHEETS
07	LA	101	16.7	32	58

REGISTERED ELECTRICAL ENGINEER 12/8/14 DATE

12-15-14
PLANS APPROVAL DATE

REGISTERED PROFESSIONAL ENGINEER
OHANNES ANSERLIAN
No. E16682
Exp. 6/30/16
ELECTRICAL
STATE OF CALIFORNIA

THE STATE OF CALIFORNIA OR ITS OFFICERS OR AGENTS SHALL NOT BE RESPONSIBLE FOR THE ACCURACY OR COMPLETENESS OF SCANNED COPIES OF THIS PLAN SHEET.

MODIFY SIGNAL AND LIGHTING

SHEET No.	(N) 15TS (MOD)	(N) 16 (MOD)	(N) 3" C	(N) LED LUMINAIRE 195 W	(N) LED LAMP 149 W	(N) 2" C	(N) 1#8 WIRE	(N) 1#8 (G) WIRE	(N) PB TYPE 2	(N) 26-4-100	(N) 1-A	(N) SV-3-TA	(N) SV-2-TA	(N) SV-1-T	(N) SP-1-T	(N) PPB	(N) BUS LOOP	(N) TYPE E LOOPS	(N) TYPE D LOOPS	(N) 28CSC	(N) 1½" C
	EA	EA	LF	EA	EA	LF	LF	LF	EA	EA	EA	EA	EA	EA	EA	EA	EA	EA	EA	LF	LF
E-1	1	1	300					800	7	1	2	1	2	4	2	1	1	4	2	540	100
E-3				2	5	500	1400	700	12												20

SHEET No.	(N) 15TS	(N) CD953C W/ 6' L.A. WITH TYPE II PULL BOX
	EA	EA
E-1	1	
E-3		1

ELECTRICAL QUANTITIES

E-17

OHANNES ANSERLIAN — REVISED BY
OSWALD ELIZONDO — DATE REVISED
CALCULATED-DESIGNED BY
CHECKED BY
FUNCTIONAL SUPERVISOR
OSWALD ELIZONDO

STATE OF CALIFORNIA - DEPARTMENT OF TRANSPORTATION
Caltrans® TRAFFIC DESIGN

LAST REVISION 00-00-00
DATE PLOTTED => 02-FEB-2015
TIME PLOTTED => 12:31

DIST	COUNTY	ROUTE	POST MILES TOTAL PROJECT	SHEET No	TOTAL SHEETS
07	LA	101	16.7	33	58

REGISTERED CIVIL ENGINEER 3-26-13 DATE

12-15-14
PLANS APPROVAL DATE

The State of California or its officers or agents shall not be responsible for the accuracy or completeness of electronic copies of this plan sheet.

REGISTERED PROFESSIONAL ENGINEER JEFFREY B. WOODY No. C41260 Exp. 3/31/15 CIVIL STATE OF CALIFORNIA

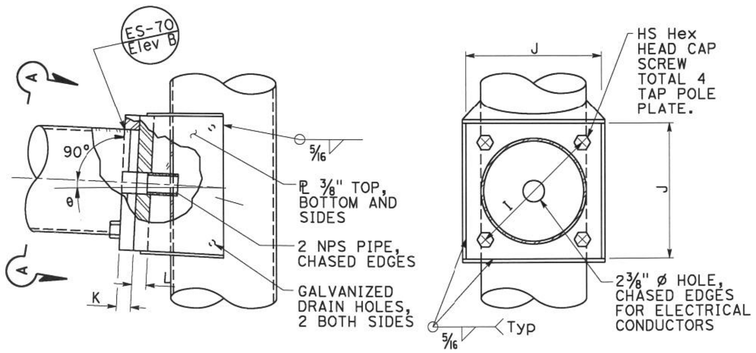

ELEVATION C VIEW A-A

SIGNAL MAST ARM CONNECTION
DETAIL A

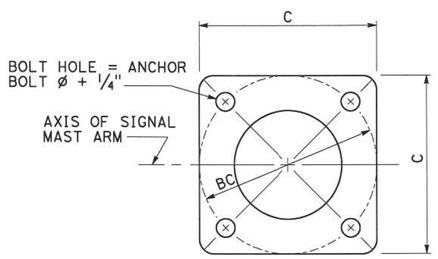

BASE PLATE
DETAIL B

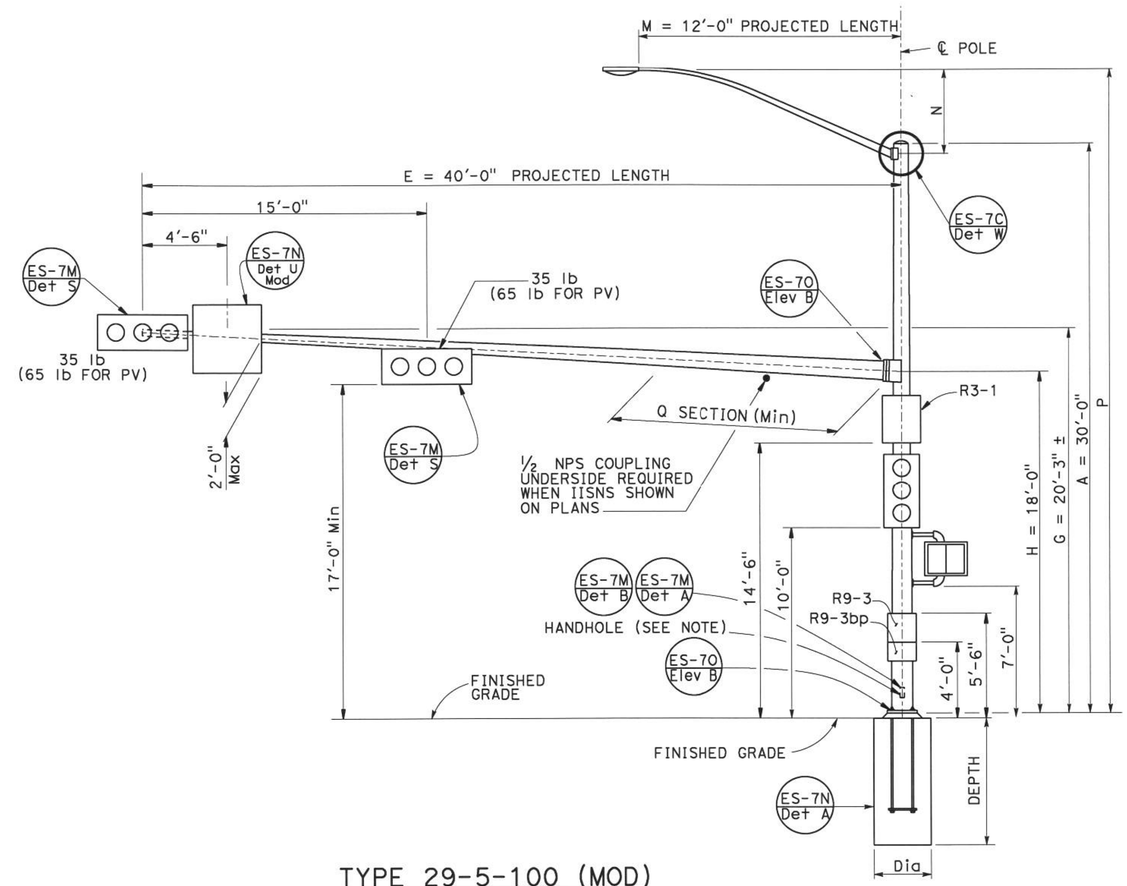

TYPE 29-5-100 (MOD)
ELEVATION

NOTE:
Handhole shall be located on the downstream side of traffic.

LUMINAIRE MAST ARM DATA					
M PROJECTED LENGTH	N RISE	Min OD AT POLE	THICKNESS	P MOUNTING HEIGHT	
				30'-0" POLE	35'-0" POLE
6'-0"	2'-0"±	3 1/4"	0.1196"	31'-6"±	36'-6"±
8'-0"	2'-6"±	3 1/2"		32'-0"±	37'-0"±
10'-0"	3'-3"±	3 7/8"		32'-9"±	37'-9"±
12'-0"	4'-3"±			33'-9"±	38'-9"±
15'-0"	4'-9"±	4 1/4"		34'-3"±	39'-3"±

SIGNAL MAST ARM DATA													
E PROJECTED LENGTH	F Min SPACING	G MOUNTING HEIGHT	H	Min OD AT POLE	THICKNESS	I BOLT CIRCLE	HS CAP SCREWS	J PLATE SIZE	K MAST ARM ℄ THICKNESS	L POLE ℄ THICKNESS	θ	Q SECTION	
												LENGTH	THICKNESS
40'-0"	9'-0	20'-3"±	18'-0"	11 7/16"	0.2391"	16"	1 1/2"-6NC-3 1/4"	1'-4"	1 3/4"	1 3/4"	3°	12'-0"	0.3125"

POLE TYPE	LOAD CASE	WIND VELOCITY (mph)	POLE DATA				BASE PLATE DATA				CIDH PILE FOUNDATION		
			A HEIGHT	Min OD BASE	Min OD TOP	THICKNESS	C	BC = BOLT CIRCLE	THICKNESS	ANCHOR BOLT SIZE	Dia	DEPTH	REINFORCED
29-5-100	Modified	100	30'-0"	14 3/4"	10 5/8"	0.3125"	23"	21"	3"	2 1/2" ø x 42"	3'-6"	12'-0"	YES

NOTE:
THE CONTRACTOR SHALL VERIFY ALL CONTROLLING FIELD DIMENSIONS BEFORE ORDERING OR FABRICATING ANY MATERIAL.

NO SCALE

BRANCH CHIEF JEFF WOODY	DESIGN	BY J. WOODY	CHECKED J. DATILES
	DETAILS	BY T. NGUYEN / J. GUO	CHECKED J. DATILES
	QUANTITIES	BY	CHECKED

STATE OF CALIFORNIA
DEPARTMENT OF TRANSPORTATION

DIVISION OF ENGINEERING SERVICES
DESIGN AND TECHNICAL SERVICES
SPECIAL DESIGNS BRANCH A

BRIDGE NO. N/A
POST MILE 16.7

TRAFFIC SIGNAL
TYPE 29-5-100 MODIFIED

SES-1

(ENGLISH) SPECIAL DESIGNS BRANCH BORDER SHEET (REV. 7-1-09)

ORIGINAL SCALE IN INCHES FOR REDUCED PLANS 0 1 2 3

UNIT: 3619
PROJECT NUMBER & PHASE: 0712000200-1
CONTRACT NO.: 07-4T6100

DISREGARD PRINTS BEARING EARLIER REVISION DATES

REVISION DATES 10/15/12 10/05/13 4/16/13 9/15/14 SHEET OF

FILE => /2013sd/07-4T6101/$REQUEST

INSERNAME => s179055 DATE PLOTTED => 15-SEP-2014 TIME PLOTTED => 13:04

DIST	COUNTY	ROUTE	POST MILES TOTAL PROJECT	SHEET No	TOTAL SHEETS
07	LA	101	16.7	34	58

REGISTERED CIVIL ENGINEER 9/15/14 DATE

12-15-14
PLANS APPROVAL DATE

REGISTERED PROFESSIONAL ENGINEER JUAN J. JAUREGUI, JR. No. C63939 Exp. 9/30/16 CIVIL STATE OF CALIFORNIA

The State of California or its officers or agents shall not be responsible for the accuracy or completeness of electronic copies of this plan sheet.

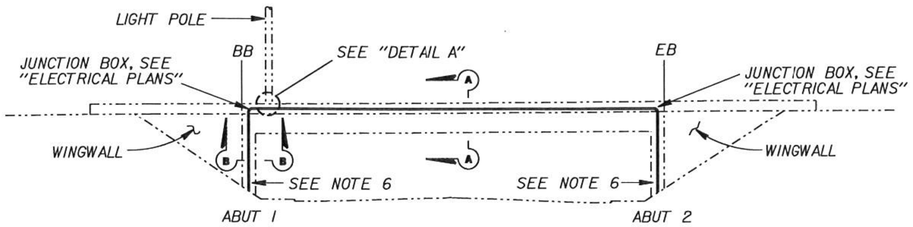

ELEVATION
SEPULVEDA BLVD. UNDERCROSSING
BRIDGE No. 53-1102R

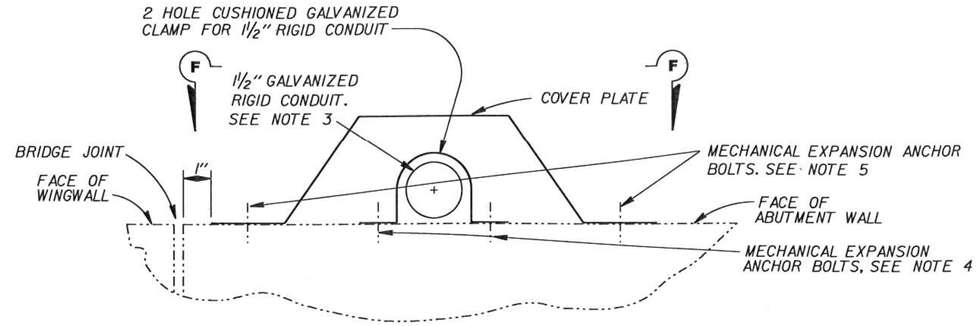

SECTION B-B
VERTICAL CONDUIT RUN ALONG ABUTMENT

NOTES:

1. All steel must be galvanized after fabrication.
2. Run surface - mounted conduit straight and true, horizontal or vertical on bridge surface.
3. Support conduit at a maximum of 5-foot intervals.
4. Threaded mechanical expansion anchor studs must be galvanized and be the largest diameter that will pass through the mounting hole in conduit clamp. See "DETAIL D" on sheet SES-3.
5. Use ⅜" Ø mechanical expansion anchor bolts for cover plates. See "DETAIL D" on sheet SES-3.
6. Cover plate to be placed 1" above ground surface.
7. See Sheet SES-3 for "SECTION D-D", "SECTION E-E", and "SECTION F-F".

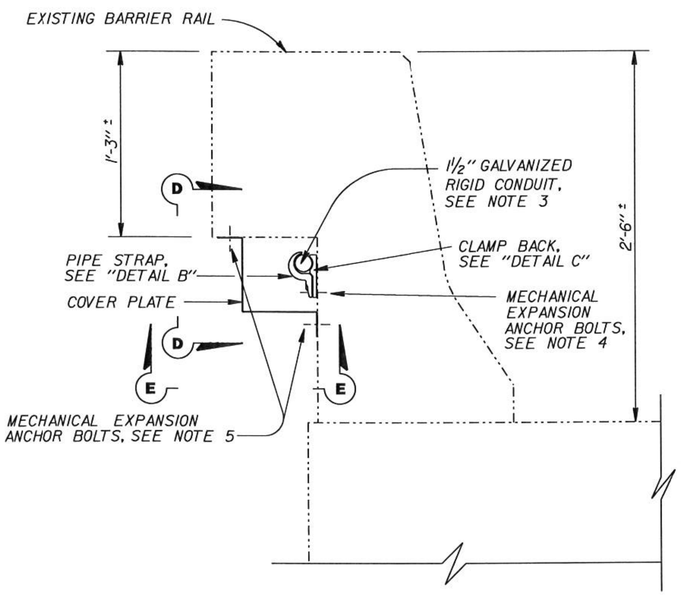

SECTION A-A
HORIZONTAL CONDUIT RUN ALONG BARRIER

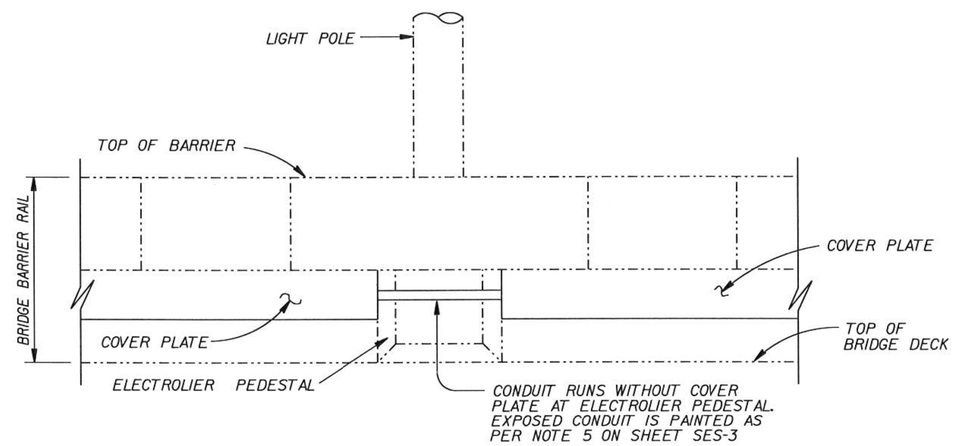

DETAIL A
ELECTROLIER PEDESTAL ELEVATION

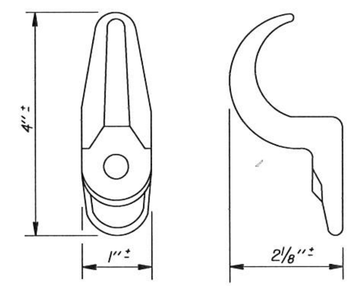

DETAIL B
GALVANIZED MALLEABLE IRON PIPE STRAP

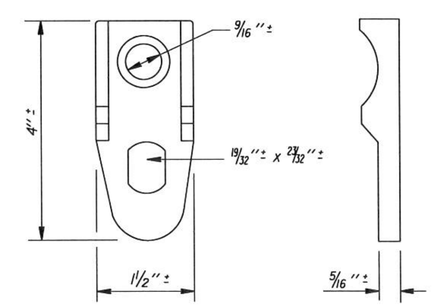

DETAIL C
GALVANIZED MALLEABLE IRON CLAMP BACK

NOTE:
THE CONTRACTOR SHALL VERIFY ALL CONTROLLING FIELD DIMENSIONS BEFORE ORDERING OR FABRICATING ANY MATERIAL.

STANDARD PLAN SHEET No.
DETAIL No.

NO SCALE

BRANCH CHIEF JEFF WOODY	DESIGN BY JUAN JAUREGUI	CHECKED K. C. LIU	STATE OF CALIFORNIA DEPARTMENT OF TRANSPORTATION
	DETAILS BY R. YEE	CHECKED JUAN JAUREGUI	DIVISION OF ENGINEERING SERVICES DESIGN AND TECHNICAL SERVICES SPECIAL DESIGNS BRANCH A
	QUANTITIES BY	CHECKED	

BRIDGE NO. 53-1102R
POST MILE R30.4

SEPULVEDA BOULEVARD UNDERCROSSING
ELECTRICAL CONDUIT MOUNTING
MISCELLANEOUS DETAILS No. 1

SES-2

(ENGLISH) SPECIAL DESIGNS BRANCH BORDER SHEET (REV. 7-1-09)

ORIGINAL SCALE IN INCHES FOR REDUCED PLANS 0 1 2 3

UNIT: 3619
PROJECT NUMBER & PHASE: 0712000200
CONTRACT NO.: 07-4T6103

DISREGARD PRINTS BEARING EARLIER REVISION DATES
REVISION DATES 11/08/13 12/09/13 12/16/13 9/15/14

SHEET OF

FILE => /2013sd/07-4T6103/SES-2

USERNAME => s115241 DATE PLOTTED => 15-SEP-2014 TIME PLOTTED => 12:52

DIST	COUNTY	ROUTE	POST MILES TOTAL PROJECT	SHEET No	TOTAL SHEETS
07	LA	101	16.7	35	58

REGISTERED CIVIL ENGINEER 9/15/14 DATE

12-15-14
PLANS APPROVAL DATE

REGISTERED PROFESSIONAL ENGINEER JUAN J. JAUREGUI JR. No. C63939 Exp. 9/30/16 CIVIL STATE OF CALIFORNIA

The State of California or its officers or agents shall not be responsible for the accuracy or completeness of electronic copies of this plan sheet.

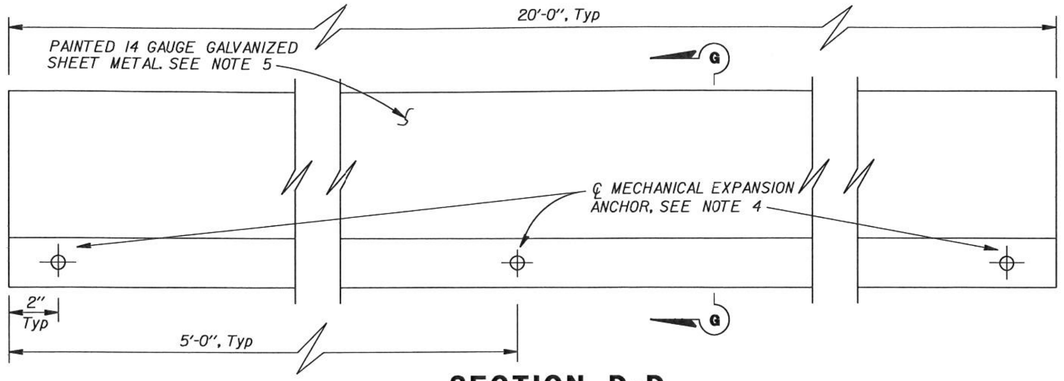

SECTION D-D
HORIZONTAL CONDUIT COVER PLATE

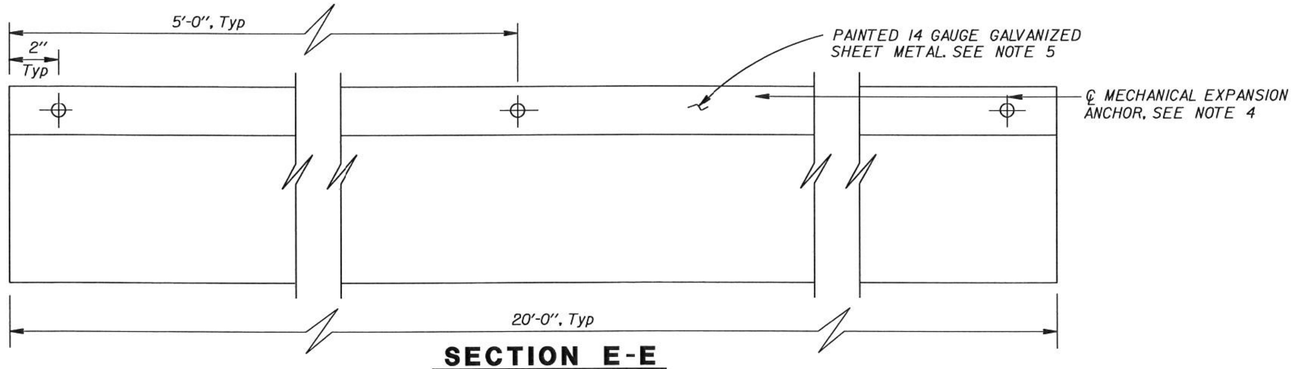

SECTION E-E
HORIZONTAL CONDUIT COVER PLATE

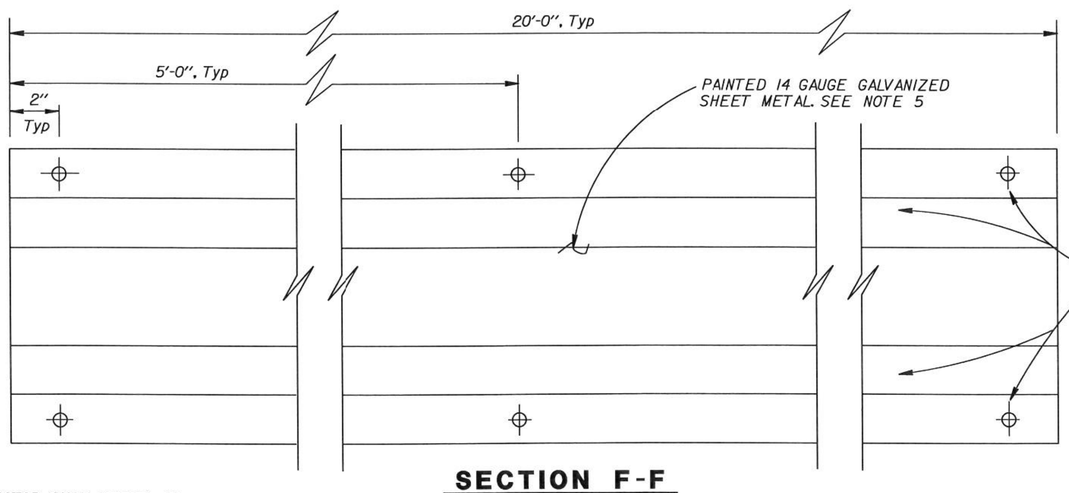

SECTION F-F
VERTICAL CONDUIT COVER PLATE

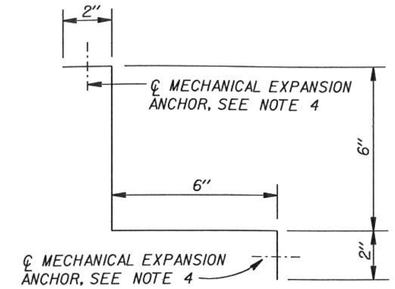

SECTION G-G

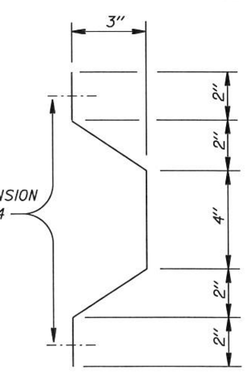

NOTES:

1. All steel must be galvanized after fabrication.
2. Layout of the cover plates to be approved by the Engineer.
3. Ends of the cover plate panels must be placed flush against adjacent cover plate panels.
4. Use 3/8" Ø mechanical expansion anchor for cover plates. See "DETAIL D".
5. See Section 59-3 of the 2010 Standard Specifications for painting over galvanized surfaces. The cover plates must be painted with 2 coats.
   1st finish coat must match color No. 36628 of FED-STD-595.
   2nd finish coat must match color No. 26408 of FED-STD-595.

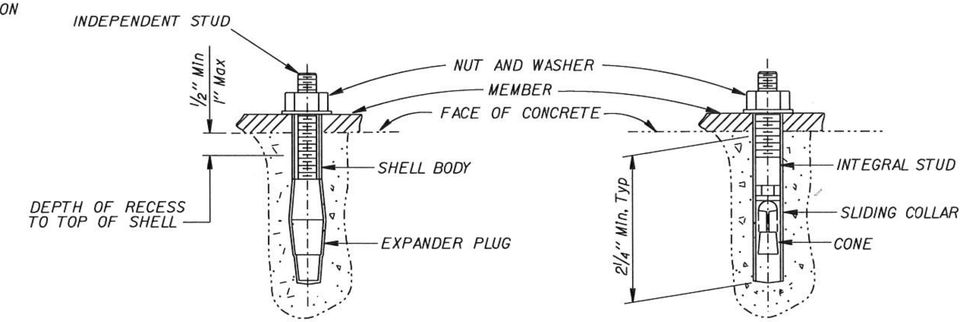

TYPICAL SHELL TYPE
TYPICAL STUD TYPE
MECHANICAL EXPANSION ANCHOR BOLTS
DETAIL D

NOTE:
THE CONTRACTOR SHALL VERIFY ALL CONTROLLING FIELD DIMENSIONS BEFORE ORDERING OR FABRICATING ANY MATERIAL.

STANDARD PLAN SHEET No.
DETAIL No.

NO SCALE

BRANCH CHIEF JEFF WOODY	DESIGN BY JUAN JAUREGUI	CHECKED K. C. LIU	STATE OF CALIFORNIA DEPARTMENT OF TRANSPORTATION
	DETAILS BY R. YEE	CHECKED JUAN JAUREGUI	DIVISION OF ENGINEERING SERVICES DESIGN AND TECHNICAL SERVICES SPECIAL DESIGNS BRANCH A
	QUANTITIES BY	CHECKED	

BRIDGE NO. 53-1102R
POST MILE R30.4

SEPULVEDA BOULEVARD UNDERCROSSING
ELECTRICAL CONDUIT MOUNTING
MISCELLANEOUS DETAILS No. 2

SES-3

(ENGLISH) SPECIAL DESIGNS BRANCH BORDER SHEET (REV. 7-1-09)

ORIGINAL SCALE IN INCHES FOR REDUCED PLANS 0 1 2 3

UNIT: 3619
PROJECT NUMBER & PHASE: 0712000200
CONTRACT NO.: 07-4T6103

DISREGARD PRINTS BEARING EARLIER REVISION DATES

REVISION DATES 11/26/13 12/9/13 12/26/13 9/15/14

SHEET OF

FILE => /2013sd/07-4T6103/SES-3

USERNAME => s115241 DATE PLOTTED => 15-SEP-2014 TIME PLOTTED => 13:01

DIST	COUNTY	ROUTE	POST MILES TOTAL PROJECT	SHEET No	TOTAL SHEETS
07	LA	101	16.7	36	58

REGISTERED CIVIL ENGINEER 3-26-13 DATE

12-15-14
PLANS APPROVAL DATE

REGISTERED PROFESSIONAL ENGINEER JEFFREY B. WOODY No. C41260 Exp. 3/31/15 CIVIL STATE OF CALIFORNIA

The State of California or its officers or agents shall not be responsible for the accuracy or completeness of electronic copies of this plan sheet.

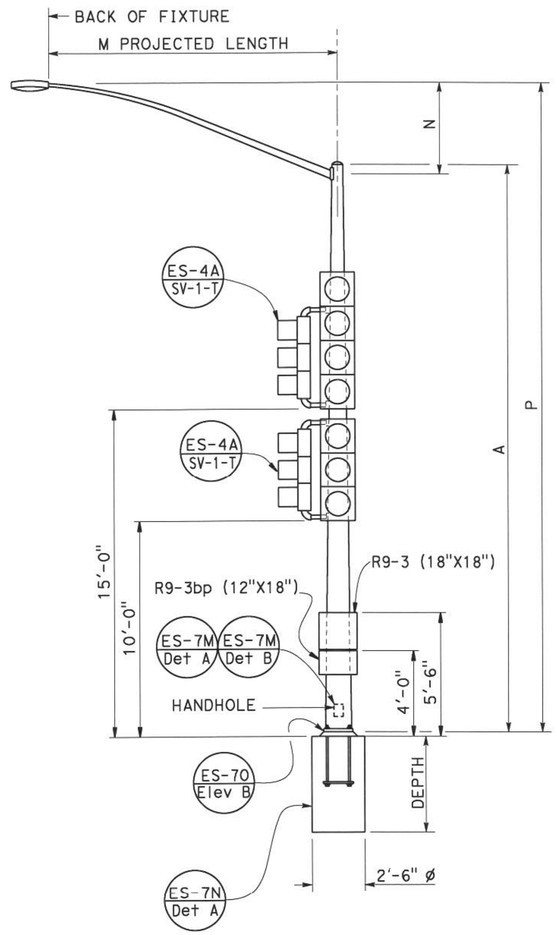

TYPE 15TS AND 21TS (MOD)

ELEVATION A

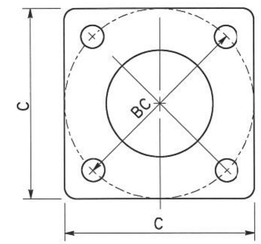

BASE PLATE

TYPE 15TS AND 21TS (MOD)

DETAIL A

POLE TYPE	POLE DATA				BASE PLATE DATA				CIDH
	A HEIGHT	Min OD BASE	Min OD TOP	WALL THICKNESS	C	BC = BOLT CIRCLE	THICKNESS	ANCHOR BOLT SIZE	DEPTH
15TS MOD	30'-0"	8"	3 11/16"	0.2391"	1'-1 1/2"	1'-0"	2"	1 1/2" ø x 42"	10'-0"
21TS MOD	35'-0"	9 3/8"	3 9/16"		1'-3"	1'-2"			11'-0"

LUMINAIRE MAST ARM DATA					
M PROJECTED LENGTH	N RISE	Min OD AT POLE	NOMINAL THICKNESS	P TYPE 15	P TYPE 21
6'-0"	2'-0"±	3 1/4"	0.1196"	31'-6"±	36'-6"±
8'-0"	2'-6"±	3 1/2"		32'-0"±	37'-0"±
10'-0"	3'-3"±	3 7/8"		32'-9"±	37'-9"±
12'-0"	4'-3"±			33'-9"±	38'-9"±
15'-0"	4'-9"±	4 1/4"		34'-3"±	39'-3"±

NOTE:
THE CONTRACTOR SHALL VERIFY ALL CONTROLLING FIELD DIMENSIONS BEFORE ORDERING OR FABRICATING ANY MATERIAL.

NO SCALE

BRANCH CHIEF JEFF WOODY

	BY	CHECKED
DESIGN	J. WOODY	J. DATILES
DETAILS	T. NGUYEN	J. DATILES
QUANTITIES		

STATE OF CALIFORNIA
DEPARTMENT OF TRANSPORTATION

DIVISION OF ENGINEERING SERVICES
DESIGN AND TECHNICAL SERVICES
SPECIAL DESIGNS BRANCH A

BRIDGE NO. N/A
POST MILE 16.7

SIGNAL AND LIGHTING
TYPE 15TS MOD AND 21TS MODIFIED

SES-4

(ENGLISH) SPECIAL DESIGNS BRANCH BORDER SHEET (REV. 7-1-09)

ORIGINAL SCALE IN INCHES FOR REDUCED PLANS 0 1 2 3

UNIT: 3619
PROJECT NUMBER & PHASE: 0712000200-1
CONTRACT NO.: 07-4T6100

DISREGARD PRINTS BEARING EARLIER REVISION DATES

REVISION DATES 10/18/12 9/15/14 1/16/13 2/13/13

SHEET OF

FILE => /2013sd/07-4T6100/$REQUEST

USERNAME => s129055 DATE PLOTTED => 15-SEP-2014 TIME PLOTTED => 13:09

DIST	COUNTY	ROUTE	POST MILES TOTAL PROJECT	SHEET No	TOTAL SHEETS
07	LA	101	16.7	37	58

REGISTERED CIVIL ENGINEER 3-26-13 DATE

12-15-14
PLANS APPROVAL DATE

REGISTERED PROFESSIONAL ENGINEER JEFFREY B. WOODY No. C41260 Exp. 3/31/15 CIVIL STATE OF CALIFORNIA

The State of California or its officers or agents shall not be responsible for the accuracy or completeness of electronic copies of this plan sheet.

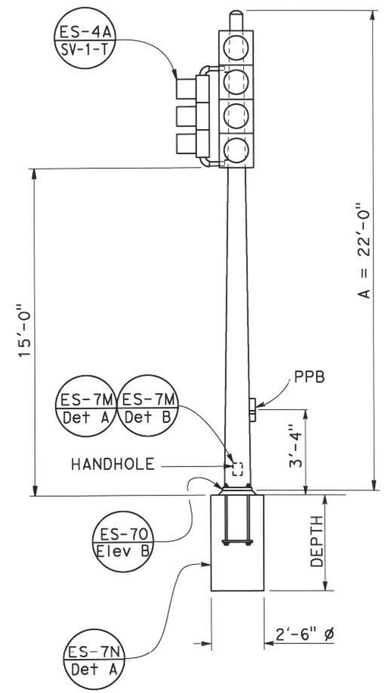

TYPE 16 (MOD)
ELEVATION A

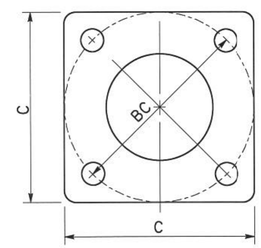

BASE PLATE
TYPE 16 (MOD)
DETAIL A

POLE TYPE	POLE DATA				BASE PLATE DATA				CIDH
	A HEIGHT	Min OD BASE	Min OD TOP	WALL THICKNESS	C	BC = BOLT CIRCLE	THICKNESS	ANCHOR BOLT SIZE	DEPTH
16 MOD	22'-0"	8"	3 11/16"	0.1793"	1'-1 1/2"	1'-0"	2"	1 1/2" ø x 42"	7'-6"

NOTE:
THE CONTRACTOR SHALL VERIFY ALL CONTROLLING FIELD DIMENSIONS BEFORE ORDERING OR FABRICATING ANY MATERIAL.

NO SCALE

BRANCH CHIEF JEFF WOODY

	BY	CHECKED
DESIGN	J. WOODY	J. DATILES
DETAILS	T. NGUYEN	J. DATILES
QUANTITIES		

STATE OF CALIFORNIA
DEPARTMENT OF TRANSPORTATION

DIVISION OF ENGINEERING SERVICES
DESIGN AND TECHNICAL SERVICES
SPECIAL DESIGNS BRANCH A

BRIDGE NO. N/A
POST MILE 16.7

TRAFFIC SIGNAL POLE
TYPE 16 MODIFIED

SES-5

(ENGLISH) SPECIAL DESIGNS BRANCH BORDER SHEET (REV. 7-1-09)

ORIGINAL SCALE IN INCHES FOR REDUCED PLANS 0 1 2 3

UNIT: 3619
PROJECT NUMBER & PHASE: 0712000200-1
CONTRACT NO.: 07-4T6100

DISREGARD PRINTS BEARING EARLIER REVISION DATES
REVISION DATES 10/18/12 9/15/14 1/16/13 2/13/13
SHEET OF

FILE => /2013sd/07-4T6100/$REQUEST

DGN NAME => s129055 DATE PLOTTED => 15-SEP-2014 TIME PLOTTED => 13:06

M

Maint	MAINTENANCE
Max	MAXIMUM
MB	METAL BEAM
MBB	METAL BEAM BARRIER
MBGR	METAL BEAM GUARD RAILING
Med	MEDIAN
MGS	MIDWEST GUARDRAIL SYSTEM
MH	MANHOLE
Min	MINIMUM
Misc	MISCELLANEOUS
Misc I & S	MISCELLANEOUS IRON AND STEEL
Mkr	MARKER
Mod	MODIFIED,
	MODIFY
Mon	MONUMENT
MP	METAL PLATE
MPGR	METAL PLATE GUARD RAILING
MR	MOVEMENT RATING
MSE	MECHANICALLY STABILIZED EMBANKMENT
Mt	MOUNTAIN, MOUNT
Mtl	MATERIAL
MVP	MAINTENANCE VEHICLE PULLOUT

N

N	NORTH
NB	NORTHBOUND
No.	NUMBER (MUST HAVE PERIOD)
Nos.	NUMBERS (MUST HAVE PERIOD)
NPS	NOMINAL PIPE SIZE
NS	NEAR SIDE
NSP	NEW STANDARD PLAN
NTS	NOT TO SCALE

O

Oblr	OBLITERATE
OC	OVERCROSSING
OD	OUTSIDE DIAMETER
OF	OUTSIDE FACE
OG	ORIGINAL GROUND
OGAC	OPEN GRADED ASPHALT CONCRETE
OGFC	OPEN GRADED FRICTION COURSE
OH	OVERHEAD
OHWM	ORDINARY HIGH WATER MARK
O-O	OUT TO OUT
Opp	OPPOSITE
OSD	OVERSIDE DRAIN

P

P	PAGE
PAP	PERFORATED ALUMINUM PIPE
PB	PULL BOX
PC	POINT OF CURVATURE,
	PRECAST
PCC	POINT OF COMPOUND CURVE,
	PORTLAND CEMENT CONCRETE
PCMS	PORTABLE CHANGEABLE MESSAGE SIGN
PCP	PERFORATED CONCRETE PIPE,
	PRESTRESSED CONCRETE PIPE
PCVC	POINT OF COMPOUND VERTICAL CURVE
PEC	PERMIT TO ENTER AND CONSTRUCT
Ped	PEDESTRIAN
Ped OC	PEDESTRIAN OVERCROSSING
Ped UC	PEDESTRIAN UNDERCROSSING
Perm Mtl	PERMEABLE MATERIAL

P continued

PG	PROFILE GRADE
PI	POINT OF INTERSECTION
PJP	PARTIAL JOINT PENETRATION
Pkwy	PARKWAY
ℙ,PL	PLATE
P/L	PROPERTY LINE
PM	POST MILE,
	TIME FROM NOON TO MIDNIGHT
PN	PAVING NOTCH
POC	POINT OF HORIZONTAL CURVE
POT	POINT OF TANGENT
POVC	POINT OF VERTICAL CURVE
PP	PIPE PILE,
	PLASTIC PIPE,
	POWER POLE
PPL	PREFORMED PERMEABLE LINER
PPP	PERFORATED PLASTIC PIPE
PRC	POINT OF REVERSE CURVE
PRF	PAVEMENT REINFORCING FABRIC
PRVC	POINT OF REVERSE VERTICAL CURVE
PS&E	PLANS, SPECIFICATIONS AND ESTIMATES
PS, P/S	PRESTRESSED
PSP	PERFORATED STEEL PIPE
PT	POINT OF TANGENCY
PVC	POLYVINYL CHLORIDE
Pvmt	PAVEMENT

Q

Qty	QUANTITY

R

R	RADIUS
R & D	REMOVE AND DISPOSE
R & S	REMOVE AND SALVAGE
R/C	RATE OF CHANGE
RCA	REINFORCED CONCRETE ARCH
RCB	REINFORCED CONCRETE BOX
RCP	REINFORCED CONCRETE PIPE
RCPA	REINFORCED CONCRETE PIPE ARCH
Rd	ROAD
Reinf	REINFORCED,
	REINFORCEMENT,
	REINFORCING
Rel	RELOCATE
Repl	REPLACEMENT
Ret	RETAINING
Rev	REVISED, REVISION
Rdwy	ROADWAY
RHMA	RUBBERIZED HOT MIX ASPHALT
Riv	RIVER
RM	ROAD-MIXED
RP	RADIUS POINT,
	REFERENCE POINT
RR	RAILROAD
RSP	ROCK SLOPE PROTECTION,
	REVISED STANDARD PLAN
Rt	RIGHT
Rte	ROUTE
RW	REDWOOD,
	RETAINING WALL
R/W	RIGHT OF WAY
Rwy	RAILWAY

S

S	SOUTH,
	SUPPLEMENT
SAE	STRUCTURE APPROACH EMBANKMENT
Salv	SALVAGE
SAPP	STRUCTURAL ALUMINUM PLATE PIPE
SB	SOUTHBOUND
SC	SAND CUSHION
SCSP	SLOTTED CORRUGATED STEEL PIPE
SD	STORM DRAIN
Sec	SECOND,
	SECTION
Sep	SEPARATION
SG	SUBGRADE
Shld	SHOULDER
Sht	SHEET
Sim	SIMILAR
℄	STATION LINE
SM	SELECTED MATERIAL
Spec	SPECIAL,
	SPECIFICATIONS
SPP	SLOTTED PLASTIC PIPE
SS	SLOPE STAKE
SSBM	STRAP AND SADDLE BRACKET METHOD
SSD	STRUCTURAL SECTION DRAIN
SSPA	STRUCTURAL STEEL PLATE ARCH
SSPP	STRUCTURAL STEEL PLATE PIPE
SSPPA	STRUCTURAL STEEL PLATE PIPE ARCH
SSRP	STEEL SPIRAL RIB PIPE
St	STREET
Sta	STATION
STBB	SINGLE THRIE BEAM BARRIER
Std	STANDARD
Str	STRUCTURE
Surf	SURFACING
SW	SIDEWALK,
	SOUND WALL
Swr	SEWER
Sym	SYMMETRICAL
S4S	SURFACE 4 SIDES

T

T	SEMI-TANGENT
Tan	TANGENT
TBB	THRIE BEAM BARRIER
Tbr	TIMBER
TC	TOP OF CURB
TCB	TRAFFIC CONTROL BOX
TCE	TEMPORARY CONSTRUCTION EASEMENT
Tel	TELEPHONE
Temp	TEMPORARY
TG	TOP OF GRADE
Tot	TOTAL
TP	TELEPHONE POLE
TPB	TREATED PERMEABLE BASE
TPM	TREATED PERMEABLE MATERIAL
Trans	TRANSITION

T continued

TS	TRANSVERSE,
	TRAFFIC SIGNAL,
	TUBULAR STEEL
Typ	TYPICAL

U

UC	UNDERCROSSING
UD	UNDERDRAIN
UG	UNDERGROUND
UON	UNLESS OTHERWISE NOTED
UP	UNDERPASS

V

V	VALVE,
	DESIGN SPEED
Var	VARIABLE,
	VARIES
VC	VERTICAL CURVE
VCP	VITRIFIED CLAY PIPE
Vert	VERTICAL
Via	VIADUCT
Vol	VOLUME

W

W	WEST,
	WIDTH
WB	WESTBOUND
WH	WEEP HOLE
WM	WIRE MESH
WS	WATER SURFACE
WSP	WELDED STEEL PIPE
Wt	WEIGHT
WV	WATER VALVE
WW	WINGWALL
WWLOL	WINGWALL LAYOUT LINE

X

X Sec	CROSS SECTION
Xing	CROSSING

Y

Yr	YEAR
Yrs	YEARS

Dist	COUNTY	ROUTE	POST MILES TOTAL PROJECT	SHEET No.	TOTAL SHEETS
07	LA	101	16.7	38	58

Grace M. Tsushima
REGISTERED CIVIL ENGINEER

July 19, 2013
PLANS APPROVAL DATE

REGISTERED PROFESSIONAL ENGINEER
Grace M. Tsushima
No. C49814
Exp. 9-30-14
CIVIL
STATE OF CALIFORNIA

THE STATE OF CALIFORNIA OR ITS OFFICERS OR AGENTS SHALL NOT BE RESPONSIBLE FOR THE ACCURACY OR COMPLETENESS OF SCANNED COPIES OF THIS PLAN SHEET.

TO ACCOMPANY PLANS DATED 12-15-14

UNIT OF MEASUREMENT SYMBOLS:

Some of the symbols used in the project plan quantity tables and in the Bid Item List are:

TABLE A

SYMBOL USED	DEFINITIONS
ACRE	ACRE
CF	CUBIC FOOT
CY	CUBIC YARD
EA	EACH
GAL	GALLON
LB	POUND
LF	LINEAR FOOT
SQFT	SQUARE FOOT
SQYD	SQUARE YARD
STA	100 FEET
TAB	TABLET
TON	2,000 POUNDS

Some of the symbols used in the plans other than in the project plan quantity tables are:

TABLE B

SYMBOL USED	DEFINITIONS
ksi	KIPS PER SQUARE INCH
ksf	KIPS PER SQUARE FOOT
psi	POUNDS PER SQUARE INCH
psf	POUNDS PER SQUARE FOOT
lb/ft^3, pcf	POUNDS PER CUBIC FOOT
tsf	TONS PER SQUARE FOOT
mph, MPH *	MILES PER HOUR
ø	NOMINAL DIAMETER
oz	OUNCE
lb	POUND
kip	1,000 POUNDS
cal	CALORIE
ft	FOOT OR FEET
gal	GALLON

* For use on a sign panel only

STATE OF CALIFORNIA
DEPARTMENT OF TRANSPORTATION

ABBREVIATIONS (SHEET 2 OF 2)

NO SCALE

RSP A10B DATED JULY 19, 2013 SUPERSEDES STANDARD PLAN A10B DATED MAY 20, 2011 - PAGE 2 OF THE STANDARD PLANS BOOK DATED 2010.

REVISED STANDARD PLAN RSP A10B

2010 REVISED STANDARD PLAN RSP A10B

6-7-13

Dist	COUNTY	ROUTE	POST MILES TOTAL PROJECT	SHEET No.	TOTAL SHEETS
07	LA	101	16.7	39	58

REGISTERED CIVIL ENGINEER

April 20, 2012
PLANS APPROVAL DATE

REGISTERED PROFESSIONAL ENGINEER
Roberta L. McLaughlin
No. C40375
Exp. 3-31-13
CIVIL
STATE OF CALIFORNIA

THE STATE OF CALIFORNIA OR ITS OFFICERS OR AGENTS SHALL NOT BE RESPONSIBLE FOR THE ACCURACY OR COMPLETENESS OF SCANNED COPIES OF THIS PLAN SHEET.

TO ACCOMPANY PLANS DATED 12-15-14

2010 REVISED STANDARD PLAN RSP A24A

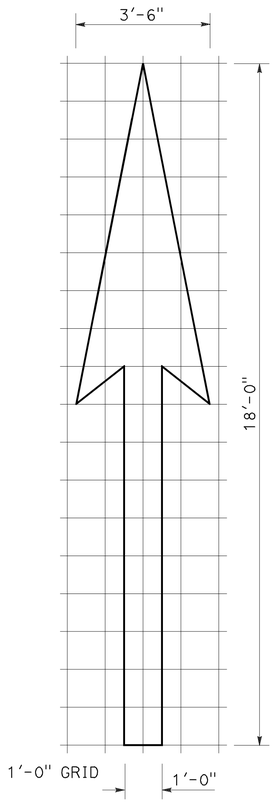

A=25 ft^2

TYPE I 18'-0" ARROW

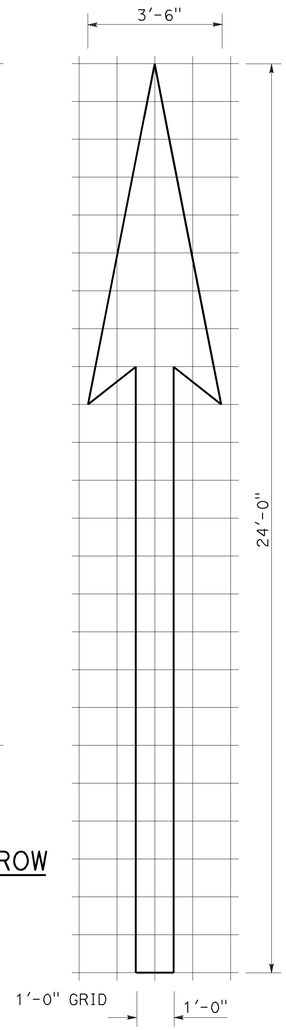

A=31 ft^2

TYPE I 24'-0" ARROW

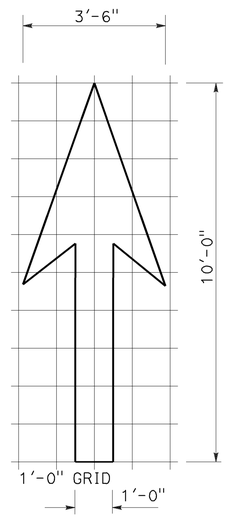

A=14 ft^2

TYPE I 10'-0" ARROW

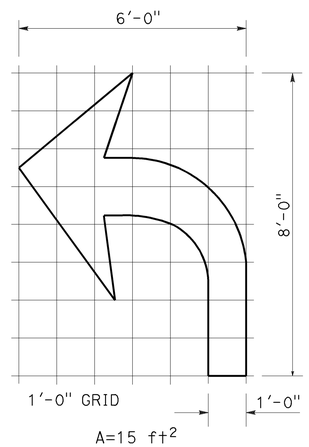

A=15 ft^2

TYPE IV (L) ARROW

(For Type IV (R) arrow, use mirror image)

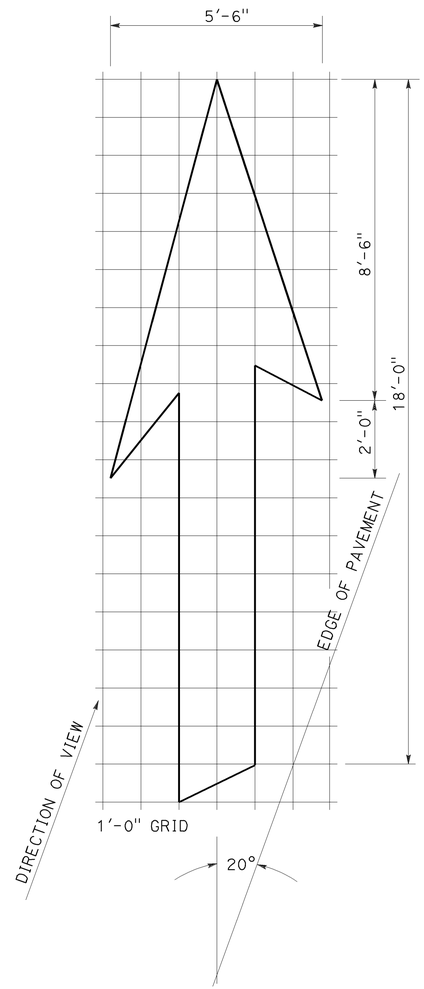

A=42 ft^2

TYPE VI ARROW

Right lane drop arrow
(For left lane, use mirror image)

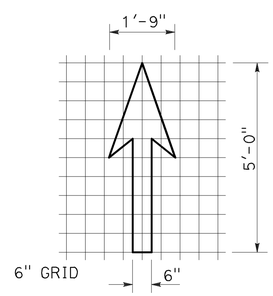

A=3.5 ft^2

BIKE LANE ARROW

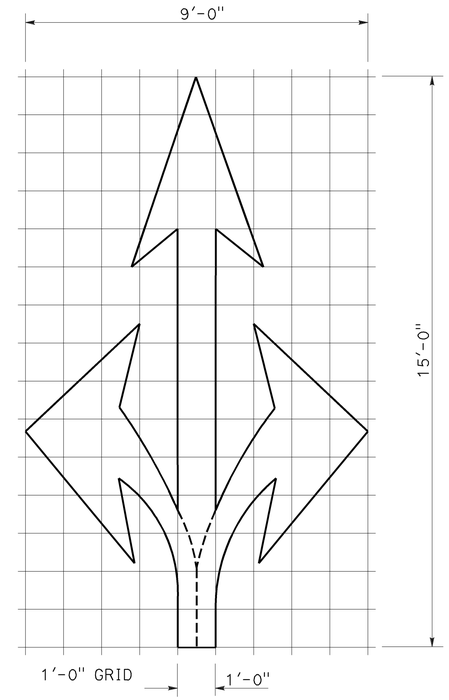

A=36 ft^2

TYPE VIII ARROW

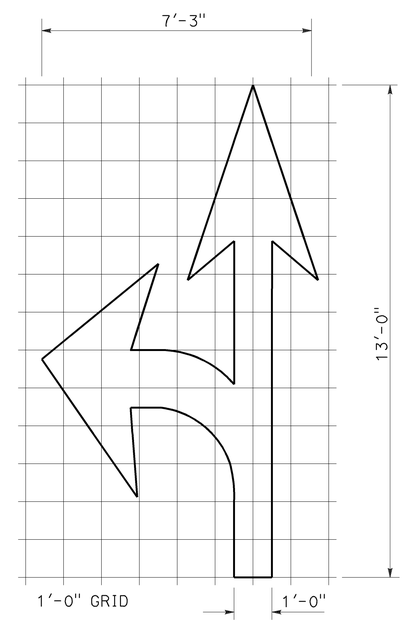

A=27 ft^2

TYPE VII (L) ARROW

(For Type VII (R) arrow, use mirror image)

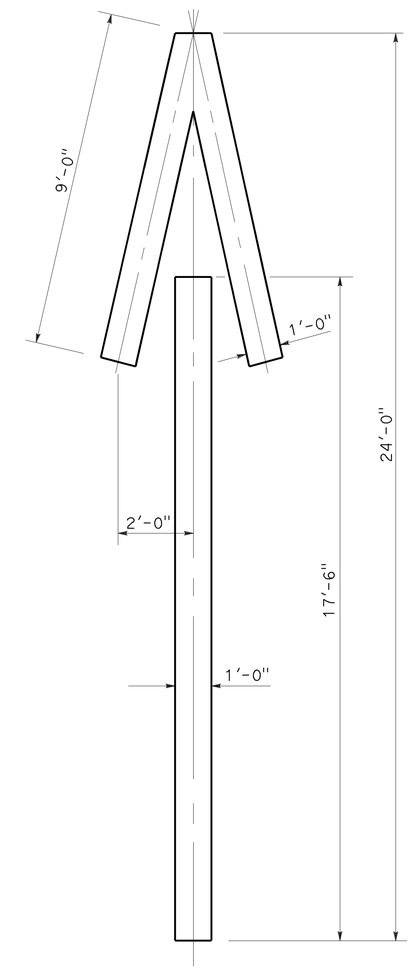

A=33 ft^2

TYPE V ARROW

NOTE:
Minor variations in dimensions may be accepted by the Engineer.

STATE OF CALIFORNIA
DEPARTMENT OF TRANSPORTATION

PAVEMENT MARKINGS ARROWS

NO SCALE

RSP A24A DATED APRIL 20, 2012 SUPERSEDES STANDARD PLAN A24A DATED MAY 20, 2011 - PAGE 13 OF THE STANDARD PLANS BOOK DATED 2010.

REVISED STANDARD PLAN RSP A24A

3-14-12

Dist	COUNTY	ROUTE	POST MILES TOTAL PROJECT	SHEET No.	TOTAL SHEETS
07	LA	101	16.7	40	58

REGISTERED CIVIL ENGINEER

July 20, 2012
PLANS APPROVAL DATE

REGISTERED PROFESSIONAL ENGINEER
Roberta L. McLaughlin
No. C40375
Exp. 3-31-13
CIVIL
STATE OF CALIFORNIA

THE STATE OF CALIFORNIA OR ITS OFFICERS OR AGENTS SHALL NOT BE RESPONSIBLE FOR THE ACCURACY OR COMPLETENESS OF SCANNED COPIES OF THIS PLAN SHEET.

TO ACCOMPANY PLANS DATED 12-15-14

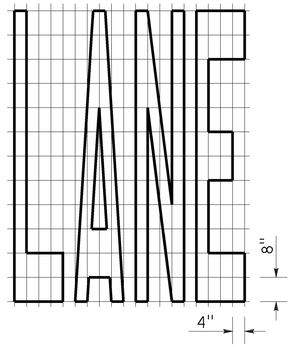

A=24 ft^2

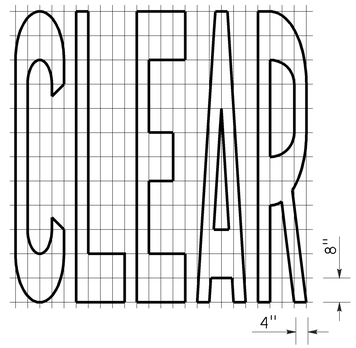

A=27 ft^2

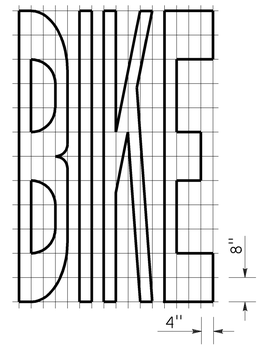

A=21 ft^2

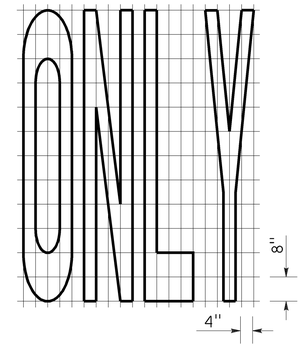

A=22 ft^2

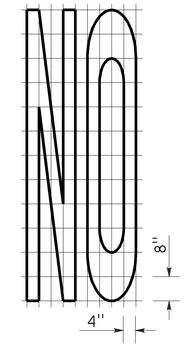

A=14 ft^2

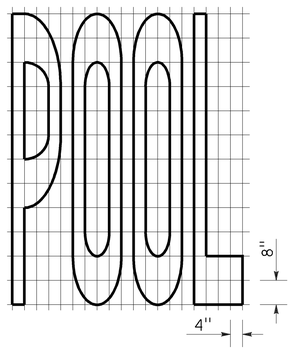

A=23 ft^2

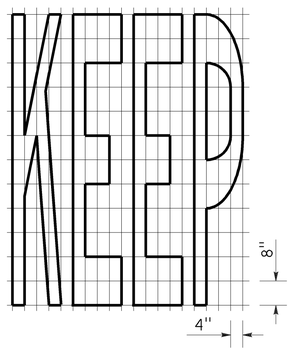

A=24 ft^2

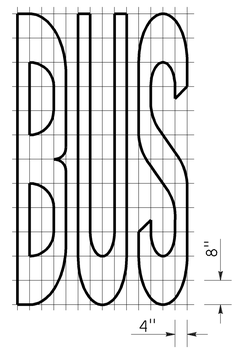

A=20 ft^2

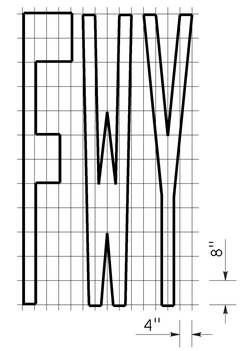

A=16 ft^2

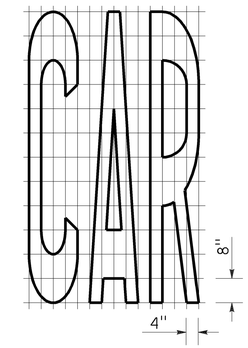

A=17 ft^2

WORD MARKINGS			
ITEM	ft^2	ITEM	ft^2
LANE	24	NO	14
POOL	23	BIKE	21
CAR	17	BUS	20
CLEAR	27	ONLY	22
KEEP	24	FWY	16

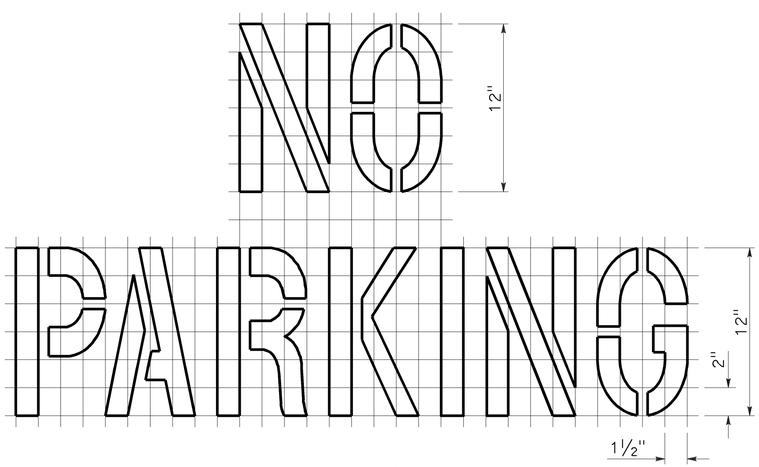

A=2 ft^2
See Notes 6 and 7

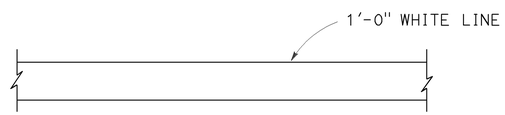

LIMIT LINE (STOP LINE)

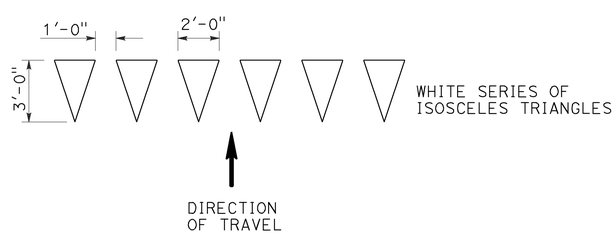

YIELD LINE

NOTES:

1. If a message consists of more than one word, it should read "UP", i.e., the first word should be nearest the driver.
2. The space between words should be at least four times the height of the characters for low speed roads, but not more than ten times the height of the characters. The space may be reduced appropriately where there is limited space because of local conditions.
3. Minor variations in dimensions may be accepted by the Engineer.
4. Portions of a letter, number or symbol may be separated by connecting segments not to exceed 2" in width.
5. The words "NO PARKING" pavement marking is to be used for parking facilities. For typical locations of markings, see Standard Plans A90A and A90B.
6. The words "NO PARKING", shall be painted in white letters no less than 1'-0" high on a contrasting background and located so that it is visible to traffic enforcement officials.

STATE OF CALIFORNIA
DEPARTMENT OF TRANSPORTATION

PAVEMENT MARKINGS WORDS, LIMIT AND YIELD LINES

NO SCALE

RSP A24E DATED JULY 20, 2012 SUPERSEDES STANDARD PLAN A24E
DATED MAY 20, 2011 - PAGE 17 OF THE STANDARD PLANS BOOK DATED 2010.

REVISED STANDARD PLAN RSP A24E

2010 REVISED STANDARD PLAN RSP A24E

6-12-12

Dist	COUNTY	ROUTE	POST MILES TOTAL PROJECT	SHEET No.	TOTAL SHEETS
07	LA	101	16.7	41	58

REGISTERED CIVIL ENGINEER

July 20, 2012
PLANS APPROVAL DATE

REGISTERED PROFESSIONAL ENGINEER
Roberta L. McLaughlin
No. C40375
Exp. 3-31-13
CIVIL
STATE OF CALIFORNIA

THE STATE OF CALIFORNIA OR ITS OFFICERS OR AGENTS SHALL NOT BE RESPONSIBLE FOR THE ACCURACY OR COMPLETENESS OF SCANNED COPIES OF THIS PLAN SHEET.

TO ACCOMPANY PLANS DATED 12-15-14

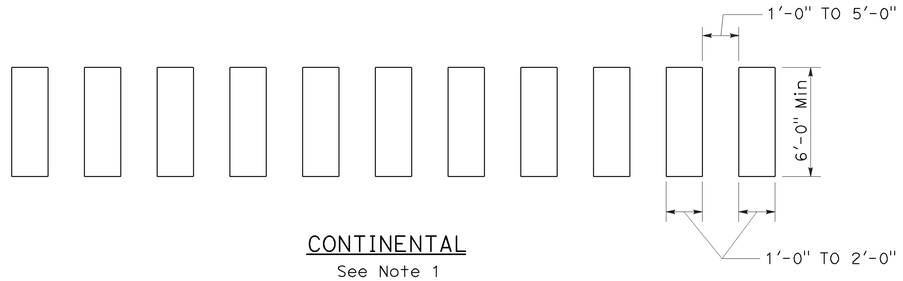

CONTINENTAL
See Note 1

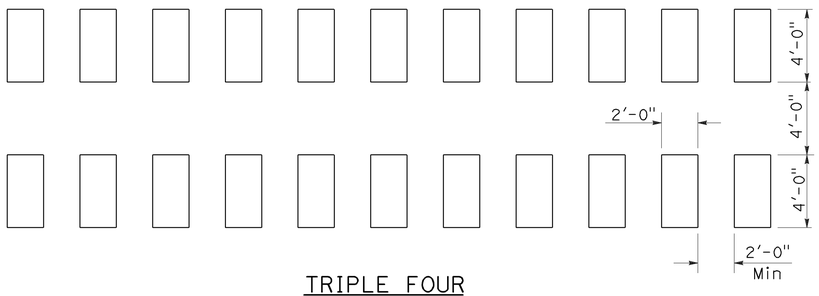

TRIPLE FOUR
See Note 1

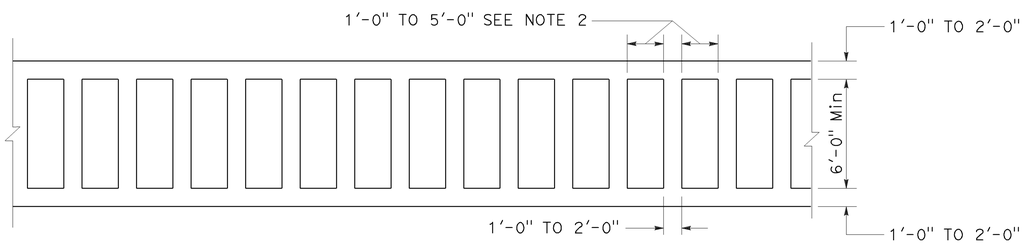

LADDER

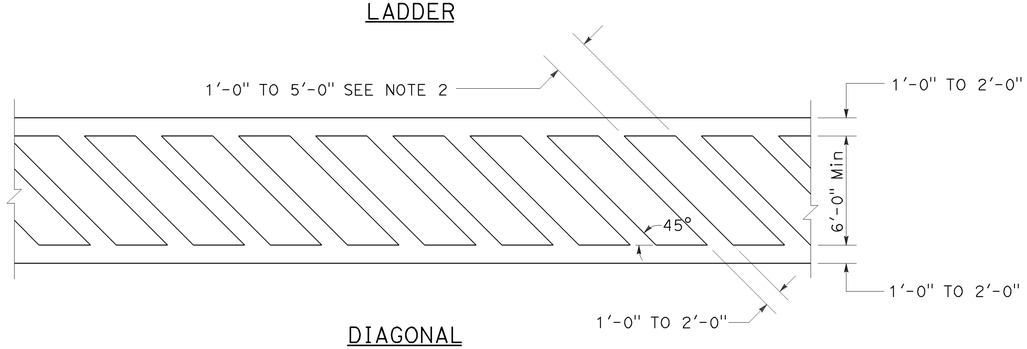

DIAGONAL

HIGHER VISIBILITY CROSSWALKS

NOTES:

1. Spaces between markings should be placed in wheel tracks of each lane.
2. Spacings not to exceed 2.5 times width of longitudinal line.
3. All crosswalk markings must be white except for those near schools must be yellow.

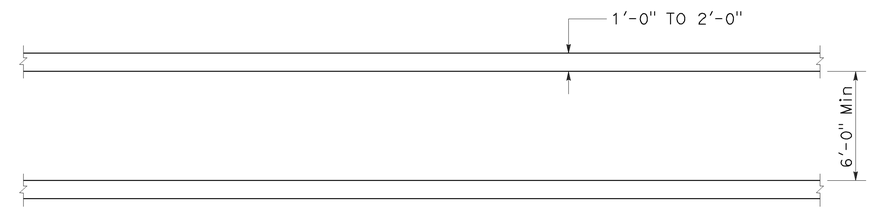

BASIC

STATE OF CALIFORNIA
DEPARTMENT OF TRANSPORTATION

PAVEMENT MARKINGS CROSSWALKS

NO SCALE

RSP A24F DATED JULY 20, 2012 SUPPLEMENTS THE STANDARD PLANS BOOK DATED 2010.

REVISED STANDARD PLAN RSP A24F

2010 REVISED STANDARD PLAN RSP A24F

6-28-12

Dist	COUNTY	ROUTE	POST MILES TOTAL PROJECT	SHEET No.	TOTAL SHEETS
07	LA	101	16.7	42	58

REGISTERED CIVIL ENGINEER

July 18, 2014
PLANS APPROVAL DATE

REGISTERED PROFESSIONAL ENGINEER Glenn DeCou No. C34547 Exp. 9-30-15 CIVIL STATE OF CALIFORNIA

THE STATE OF CALIFORNIA OR ITS OFFICERS OR AGENTS SHALL NOT BE RESPONSIBLE FOR THE ACCURACY OR COMPLETENESS OF SCANNED COPIES OF THIS PLAN SHEET.

TO ACCOMPANY PLANS DATED 12-15-14

2010 REVISED STANDARD PLAN RSP A85

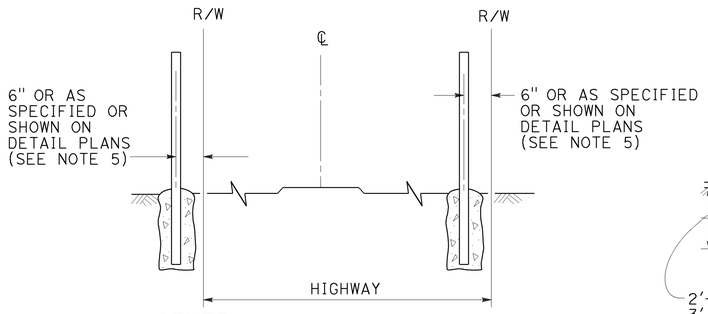

FENCE LOCATION

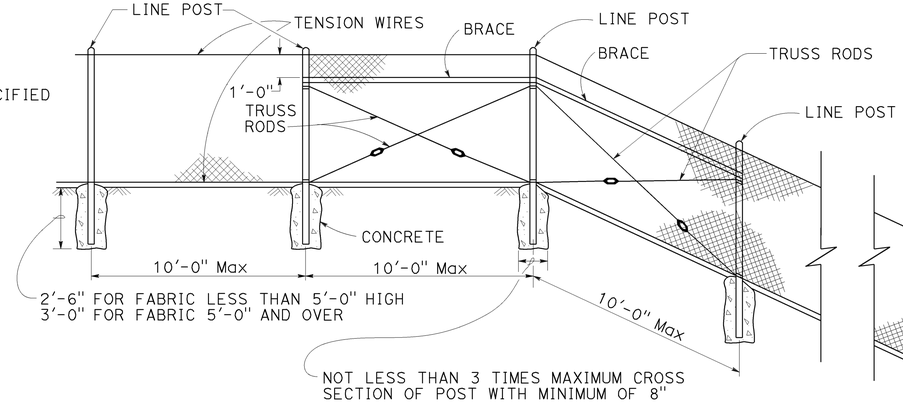

CHAIN LINK FENCE ON SHARP BREAK IN GRADE

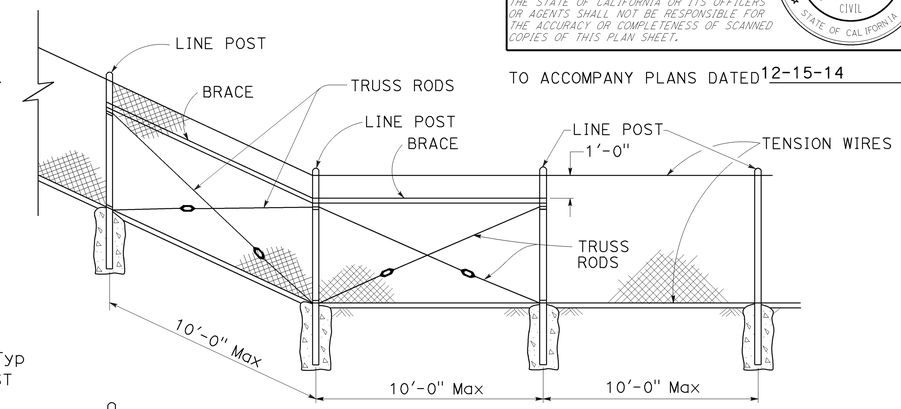

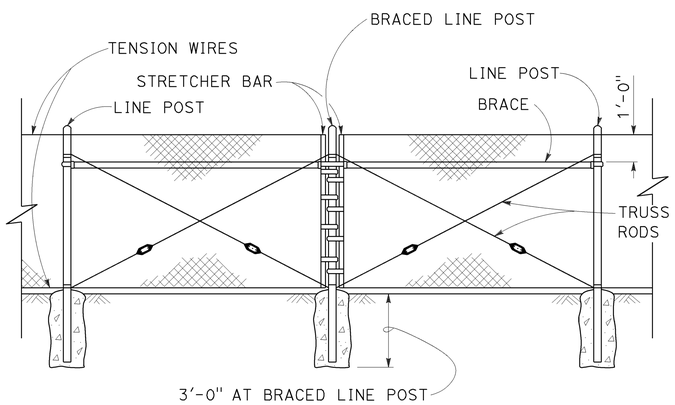

BRACED LINE POST INSTALLATION

Braced line post at intervals not exceeding 1000'

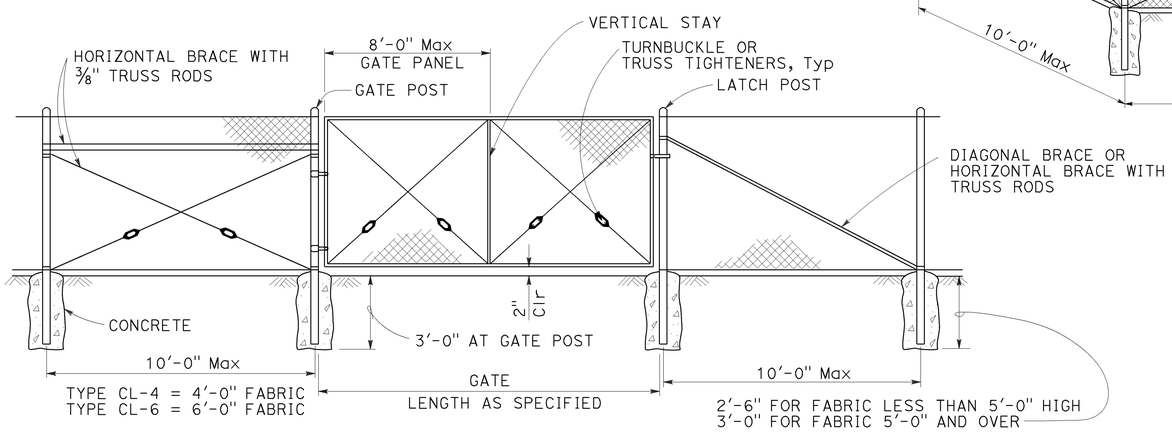

CHAIN LINK GATE INSTALLATION

GATE POST			
FENCE HEIGHT	GATE WIDTHS	ROUND OD PIPE	WEIGHT (lb/ft)
6'-0" AND LESS	UP THRU 6'-0"	2.875"	5.80
	OVER 6'-0" THRU 12'-0"	4.500"	10.80
	OVER 12'-0" THRU 18'-0"	5.563"	14.63
	OVER 18'-0" TO 24'-0" Max	6.625"	18.99
OVER 6'-0" TO 8'-0" Max	UP THRU 6'-0"	3.500"	7.58
	OVER 6'-0" THRU 12'-0"	5.563"	14.63
	OVER 12'-0" THRU 18'-0"	6.625"	18.99
	OVER 18'-0" TO 24'-0" Max	8.625"	28.58

Above post dimensions and weights are minimums. Larger sizes may be used upon approval.

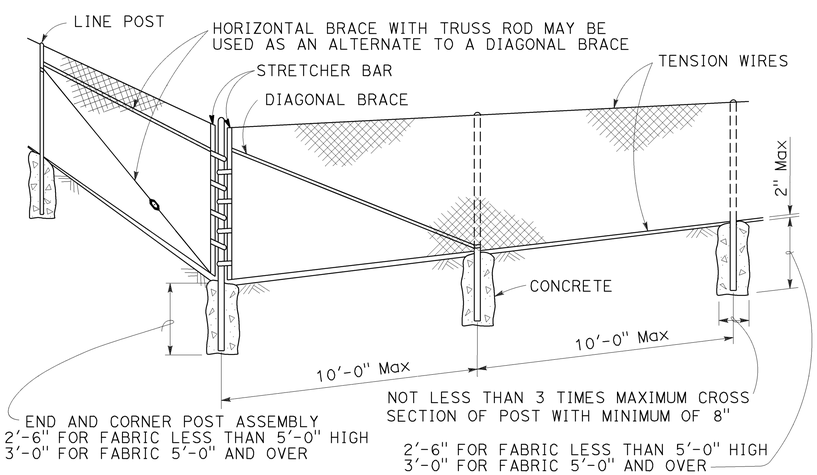

CORNER POST

NOTES:

1. The table below shows minimum sized posts and braces complying with the specifications. Larger or heavier post and brace sizes may be used upon approval.
2. Sections shown in the tables must also comply with the strength requirements and other provisions of the Specifications.
3. Other sections which comply with the strength requirements and other provisions of the Specifications may be used upon approval.
4. Options exercised shall be uniform on any one project.
5. Offset to be 2'-0" at monument locations, measured at right angles to R/W lines. Taper to achieve offset to be at least 20'-0" long.
6. See Revised Standard Plan RSP A85B for Brace, Stretcher Bar, and Truss Tightener Details.

TYPICAL MEMBER DIMENSIONS (See Notes)										
FENCE HEIGHT	LINE POSTS				END, LATCH AND CORNER POSTS		BRACES			
	ROUND OD PIPE	WEIGHT (lb/ft)	ROLL FORMED SECTION	ROLL FORMED WEIGHT (lb/ft)	ROUND OD PIPE	WEIGHT (lb/ft)	ROUND OD PIPE	WEIGHT (lb/ft)	ROLL FORMED SECTION	ROLL FORMED WEIGHT (lb/ft)
6'-0" AND LESS	1.900"	2.72	1.875" x 1.625"	1.85	2.375"	3.65	1.66"	2.27	1.625" x 1.25"	1.35
OVER 6'-0" TO 8'-0" Max	2.375"	3.65	2.25" x 1.70"	2.78	2.875"	5.80	1.66"	2.27	1.625" x 1.25"	1.35

STATE OF CALIFORNIA
DEPARTMENT OF TRANSPORTATION

CHAIN LINK FENCE

NO SCALE

RSP A85 DATED JULY 18, 2014 SUPERSEDES STANDARD PLAN A85
DATED MAY 20, 2011 - PAGE 112 OF THE STANDARD PLANS BOOK DATED 2010.

REVISED STANDARD PLAN RSP A85

7-1-14

Dist	COUNTY	ROUTE	POST MILES TOTAL PROJECT	SHEET No.	TOTAL SHEETS
07	LA	101	16.7	43	58

REGISTERED CIVIL ENGINEER

October 19, 2012
PLANS APPROVAL DATE

REGISTERED PROFESSIONAL ENGINEER Glenn DeCou No. C34547 Exp. 9-30-13 CIVIL STATE OF CALIFORNIA

THE STATE OF CALIFORNIA OR ITS OFFICERS OR AGENTS SHALL NOT BE RESPONSIBLE FOR THE ACCURACY OR COMPLETENESS OF SCANNED COPIES OF THIS PLAN SHEET.

TO ACCOMPANY PLANS DATED 12-15-14

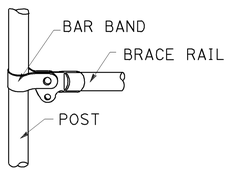

BRACE RAIL

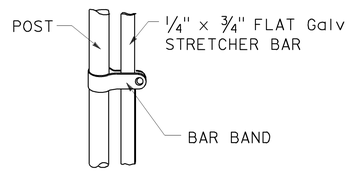

STRETCHER BAR

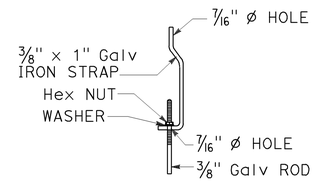

TRUSS TIGHTENER

NOTES:

1. All material for abutment connection to be galvanized.
2. The chain link fabric shall be replaced by barbed wire strands at 12" maximum centers between the double posts.
3. When the width of the culvert makes it necessary to anchor a post to the top of the culvert, a cast iron shoe or other device approved by the Engineer shall be used.
4. Fencing over stream and around headwall may also use Barbed Wire or Wire Mesh fencing with either wood post or steel post installation.
5. See Standard Plan A85 for Chain Link fence dimensions. See Standard Plan A86 for Barbed Wire and Wire Mesh fence dimensions and for wood post and steel post installation.

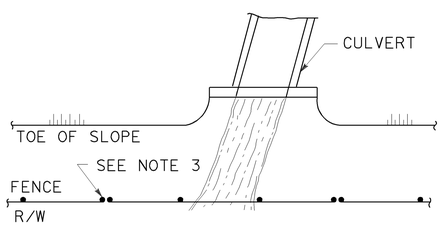

PLAN

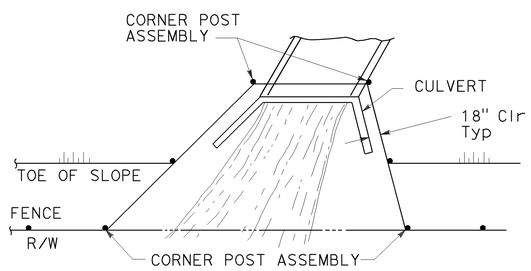

PLAN

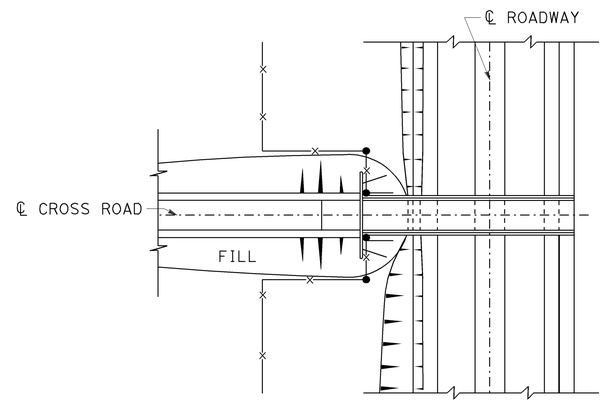

PLAN OF ROADWAY - OVERCROSSING

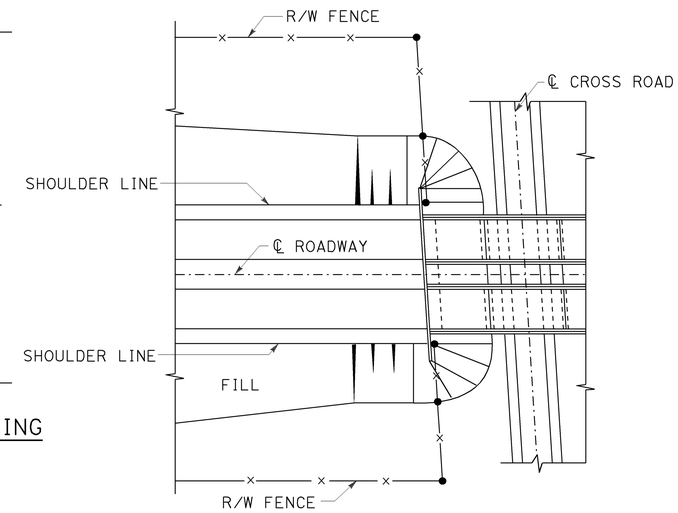

PLAN OF ROADWAY - UNDERCROSSING

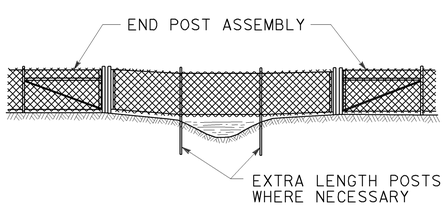

ELEVATION

INSTALLATION OVER STREAM

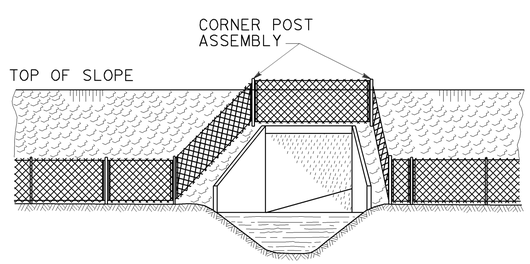

ELEVATION

INSTALLATION AROUND HEADWALL

See Note 4

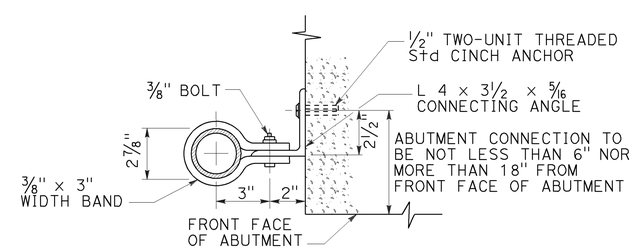

ABUTMENT CONNECTION

TYPICAL INSTALLATION AT BRIDGES

STATE OF CALIFORNIA
DEPARTMENT OF TRANSPORTATION

CHAIN LINK FENCE DETAILS

NO SCALE

RSP A85B DATED OCTOBER 19, 2012 SUPERSEDES STANDARD PLAN A85B DATED MAY 20, 2011 - PAGE 114 OF THE STANDARD PLANS BOOK DATED 2010.

REVISED STANDARD PLAN RSP A85B

2010 REVISED STANDARD PLAN RSP A85B

7-19-12

Dist	COUNTY	ROUTE	POST MILES TOTAL PROJECT	SHEET No.	TOTAL SHEETS
07	LA	101	16.7	44	58

REGISTERED CIVIL ENGINEER

July 19, 2013
PLANS APPROVAL DATE

REGISTERED PROFESSIONAL ENGINEER Michael Janzen No. 44788 Exp. 03-31-14 CIVIL STATE OF CALIFORNIA

THE STATE OF CALIFORNIA OR ITS OFFICERS OR AGENTS SHALL NOT BE RESPONSIBLE FOR THE ACCURACY OR COMPLETENESS OF SCANNED COPIES OF THIS PLAN SHEET.

TO ACCOMPANY PLANS DATED 12-15-14

2010 REVISED STANDARD PLAN RSP A87A

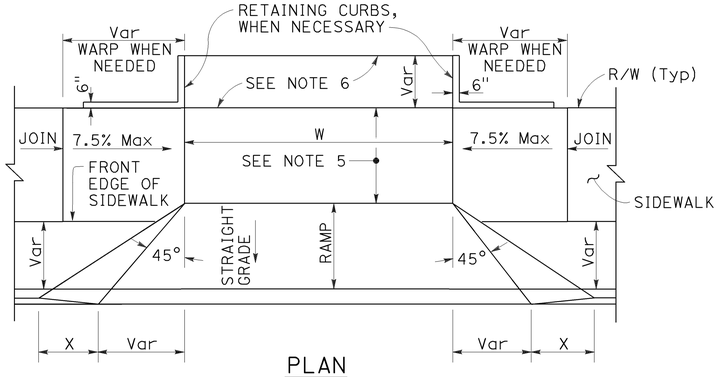

PLAN

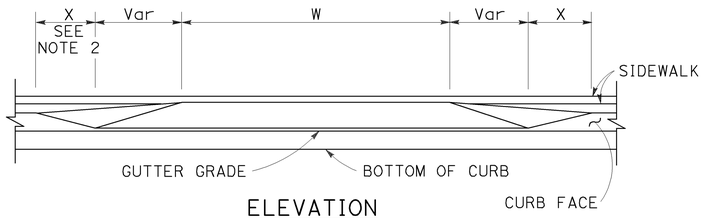

ELEVATION

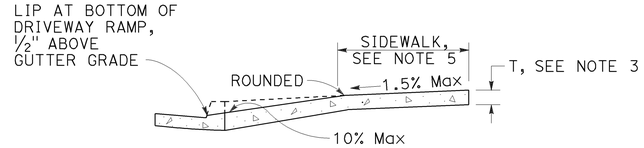

CASE A

Typical driveway, sidewalk not depressed

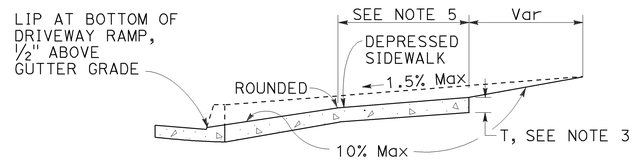

CASE B

Driveway with depressed sidewalk

SECTIONS

DRIVEWAYS

TABLE A

CURB TYPE	DIMENSIONS			
	"H1"	"H2"	"W1"	"W2"
A1-6	1'-2"	6"	7½"	1½"
A1-8	1'-4"	8"	8"	2"
A2-6	1'-0"	6"	2'-7½"	1½"
A2-8	1'-2"	8"	2'-8"	2"
A3-6	6"	5"	7¼"	1¼"
A3-8	8"	7"	7¾"	1¾"
B1-4	1'-0"	4"	7½"	2½"
B1-6	1'-2"	6"	9"	4"
B2-4	10"	4"	2'-7½"	2½"
B2-6	1'-0"	6"	2'-9"	4"
B3-4	4"	3"	7"	2"
B3-6	6"	5"	8½"	3½"
D-4	10"	4"	1'-6"	1'-1"
D-6	1'-0"	6"	2'-2"	1'-9"

CURB QUANTITIES

TYPE	CUBIC YARDS PER LINEAR FOOT
A1-6	0.02585
A1-8	0.03084
A2-6	0.05903
A2-8	0.06379
A3-6	0.01036
A3-8	0.01435
B1-4	0.02185
B1-6	0.02930
B2-4	0.05515
B2-6	0.06171
B3-4	0.00641
B3-6	0.01074
B4	0.05709
D-4	0.04083
D-6	0.06804
E	0.06661

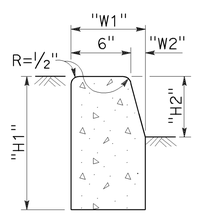

TYPE A1 CURBS

See Table A

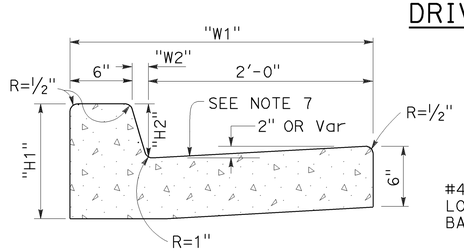

TYPE A2 CURBS

See Table A

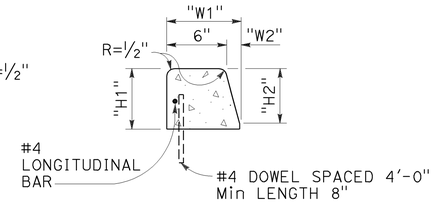

TYPE A3 CURBS

Superimposed on existing pavement
See Table A

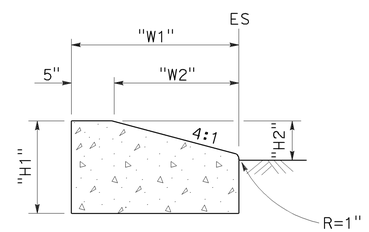

TYPE D CURBS

See Table A

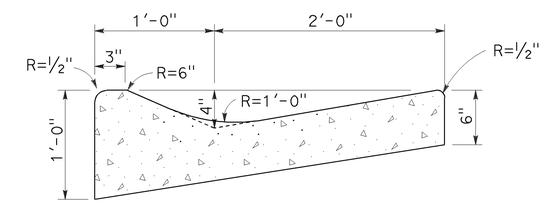

TYPE E CURB

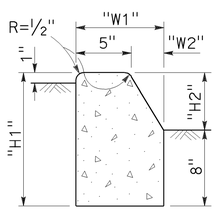

TYPE B1 CURBS

See Table A

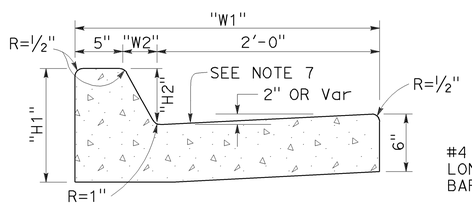

TYPE B2 CURBS

See Table A

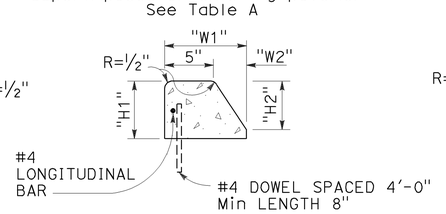

TYPE B3 CURBS

Superimposed on existing pavement
See Table A

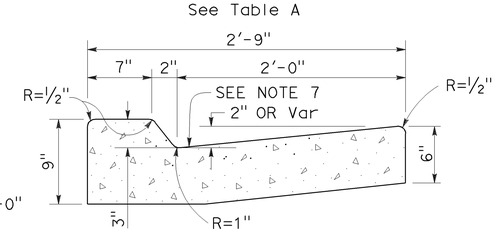

TYPE B4 CURBS

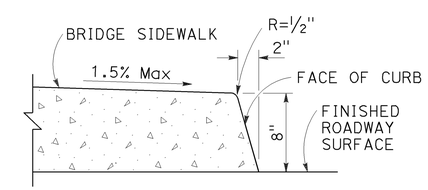

TYPE H CURB

On Bridges

CURBS

NOTES:

1. Case A driveway section typically applies.
2. X=3'-0" except for curb heights over 10" where 4:1 slopes shall be used on curb slope.
3. Sidewalk and ramp thickness "T" at driveway shall be 4" for residental and 6" for commercial.
4. Difference in slope of the driveway ramp and the slope of a line between the gutter and a point on the roadway 5'-0" from gutter line shall not exceed 15%. Reduce driveway ramp slope, not gutter slope, where required.
5. Minimum width of clear passageway for sidewalk shall be 4'-2".
6. Retaining curbs and acquisition of construction easement may be necessary for narrow sidewalks or curb heights in excess of 6".
7. Across the pedestrian route at curb ramp locations, the gutter pan slope shall not exceed 1" of depth for each 2'-0" of width.

STATE OF CALIFORNIA
DEPARTMENT OF TRANSPORTATION

CURBS AND DRIVEWAYS

NO SCALE

RSP A87A DATED JULY 19, 2013 SUPERSEDES STANDARD PLAN A87A
DATED MAY 20, 2011 - PAGE 119 OF THE STANDARD PLANS BOOK DATED 2010.

REVISED STANDARD PLAN RSP A87A

Dist	COUNTY	ROUTE	POST MILES TOTAL PROJECT	SHEET No.	TOTAL SHEETS
07	LA	101	16.7	45	58

REGISTERED CIVIL ENGINEER

March 21, 2014
PLANS APPROVAL DATE

REGISTERED PROFESSIONAL ENGINEER Hector David Cordova No. C41957 Exp. 3-31-14 CIVIL STATE OF CALIFORNIA

THE STATE OF CALIFORNIA OR ITS OFFICERS OR AGENTS SHALL NOT BE RESPONSIBLE FOR THE ACCURACY OR COMPLETENESS OF SCANNED COPIES OF THIS PLAN SHEET.

TO ACCOMPANY PLANS DATED 12-15-14

2010 REVISED STANDARD PLAN RSP A88A

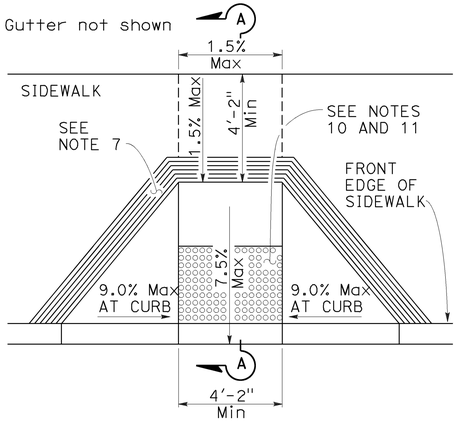

CASE A

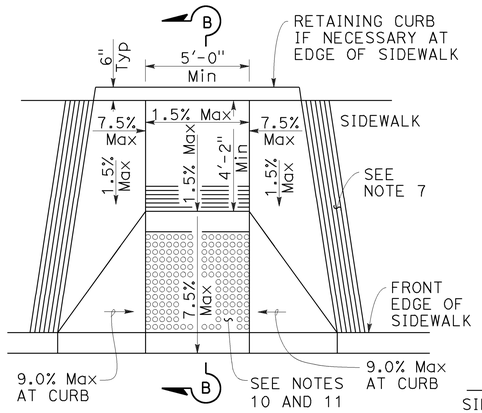

CASE B

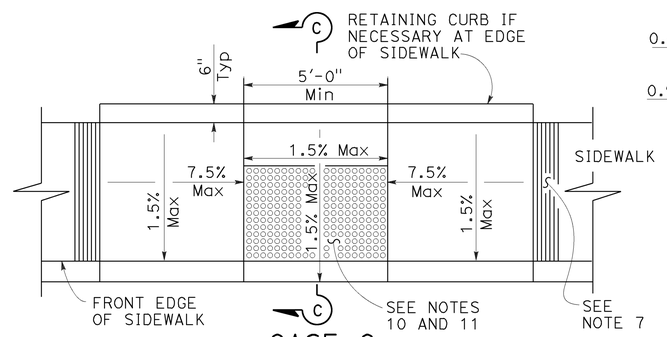

CASE C

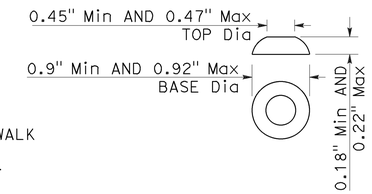

RAISED TRUNCATED DOME

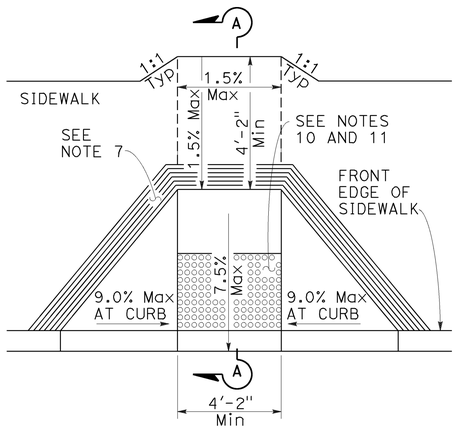

CASE D

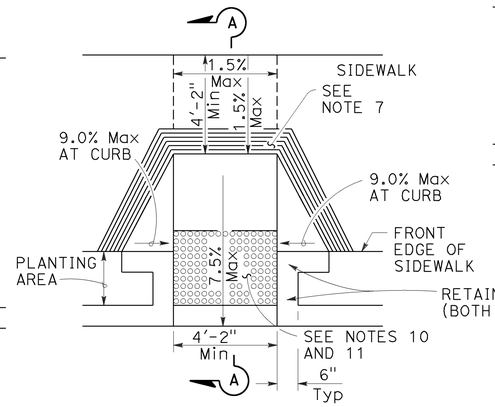

CASE E

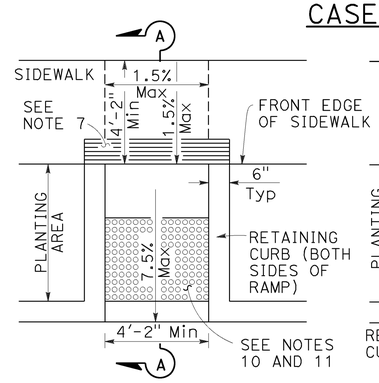

CASE F

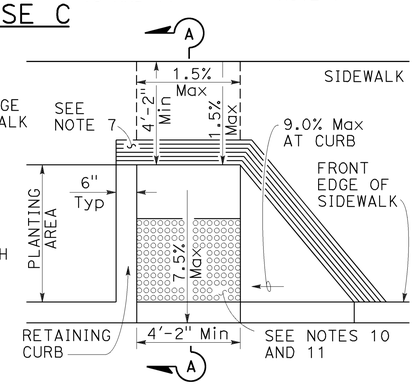

CASE G
See Note 4

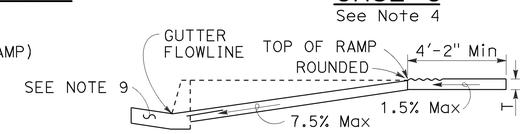

SECTION A-A

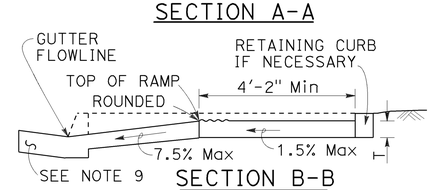

SECTION B-B
Depress entire sidewalk as required

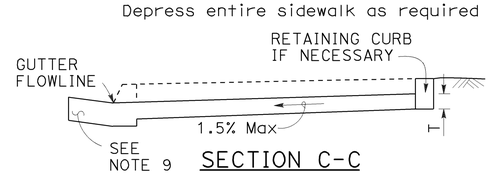

SECTION C-C

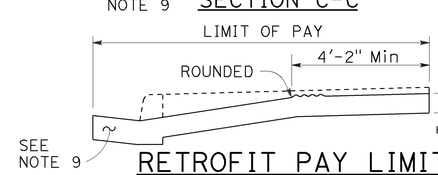

RETROFIT PAY LIMITS
Existing curb and sidewalk

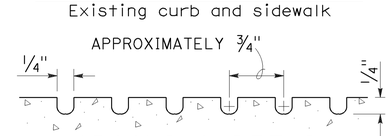

GROOVING DETAIL

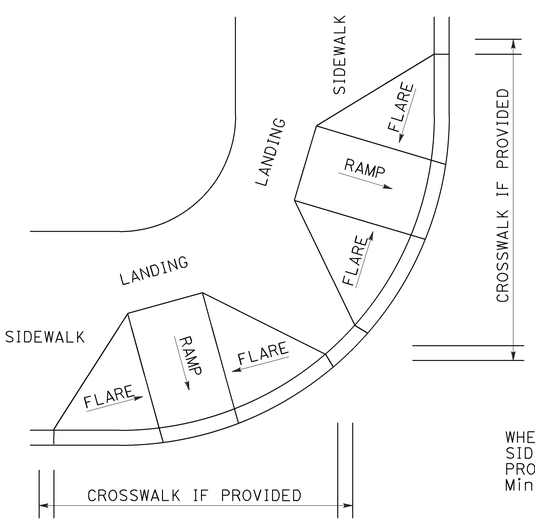

DETAIL A

TYPICAL TWO-RAMP CORNER INSTALLATION
See Note 1

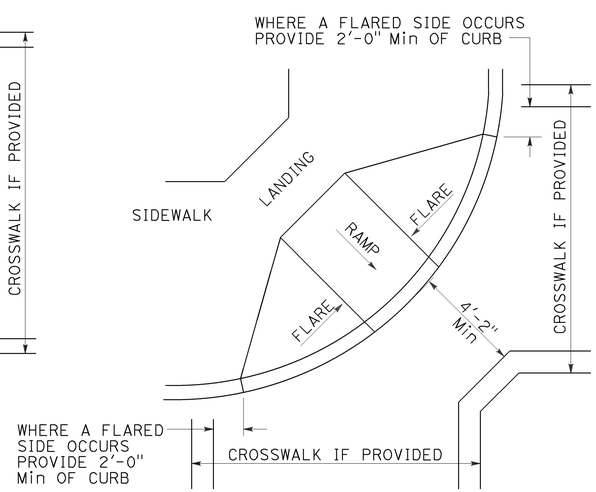

DETAIL B

TYPICAL ONE-RAMP CORNER INSTALLATION
See Notes 1 and 3

NOTES:

1. As site conditions dictate, Case A through Case G curb ramps may be used for corner installations similar to those shown in Detail A and Detail B. The case of curb ramps used in Detail A do not have to be the same. Case A through Case G curb ramps also may be used at mid block locations, as site conditions dictate.
2. If distance from curb to back of sidewalk is too short to accommodate ramp and 4'-2" platform (landing) as shown in Case A, the sidewalk may be depressed longitudinally as in Case B, or C or may be widened as in Case D.
3. When ramp is located in center of curb return, crosswalk configuration must be similar to that shown for Detail B.
4. As site conditions dictate, the retaining curb side and the flared side of the Case G ramp shall be constructed in reversed position.
5. If located on a curve, the sides of the ramp need not be parallel, but the minimum width of the ramp shall be 4'-2".
6. Side slope of ramp flares vary uniformly from a maximum of 9.0% at curb to conform with longitudinal sidewalk slope adjacent to top of the ramp, except in Case C and Case F.
7. The curb ramp shall be outlined, as shown, with a 1'-0" wide border with 1/4" grooves approximately 3/4" on center. See grooving detail.
8. Transitions from ramps and landing to walks, gutters or streets shall be flush (no lip) and free of abrupt changes.
9. Counter slopes of adjoining gutters and road surfaces immediately adjacent to and within 24 inches of the curb ramp shall not be steeper than 1:20 (5.0%). Gutter pan slope shall not exceed 1" of depth for each 2'-0" of width.
10. Curb ramps shall have a detectable warning surface that extends the full width and 3'-0" depth of the ramp. A 4'-0" wide detectable warning surface may be used on a 4'-2" wide curb ramp. Detectable Warning Surfaces shall conform to the requirements in the Standard Specifications.
11. The edge of the detectable warning surface nearest the street shall be between 6" and 8" from the gutter flowline.
12. Sidewalk and ramp thickness, "T", shall be 3 1/2" minimum.
13. Utility pull boxes, manholes, vaults and all other utility facilities within the boundaries of the curb ramp will be relocated or adjusted to grade by the owner prior to, or in conjunction with, curb ramp construction.
14. Detectable warning surface may have to be cut to allow removal of utility covers while maintaining full detectable warning width and depth.

RAISED TRUNCATED DOME PATTERN (IN-LINE)

DETECTABLE WARNING SURFACE
See Note 10

STATE OF CALIFORNIA
DEPARTMENT OF TRANSPORTATION

CURB RAMP DETAILS

NO SCALE

RSP A88A DATED MARCH 21, 2014 SUPERSEDES RSP A88A DATED JULY 19, 2013 AND STANDARD PLAN A88A DATED MAY 20, 2011 - PAGE 121 OF THE STANDARD PLANS BOOK DATED 2010.

REVISED STANDARD PLAN RSP A88A

2-25-14

Dist	COUNTY	ROUTE	POST MILES TOTAL PROJECT	SHEET No.	TOTAL SHEETS
07	LA	101	16.7	46	58

William K. Farnbach
REGISTERED CIVIL ENGINEER

July 19, 2013
PLANS APPROVAL DATE

REGISTERED PROFESSIONAL ENGINEER
William K. Farnbach
No. C49042
Exp. 9-30-14
CIVIL
STATE OF CALIFORNIA

THE STATE OF CALIFORNIA OR ITS OFFICERS OR AGENTS SHALL NOT BE RESPONSIBLE FOR THE ACCURACY OR COMPLETENESS OF SCANNED COPIES OF THIS PLAN SHEET.

TO ACCOMPANY PLANS DATED 12-15-14

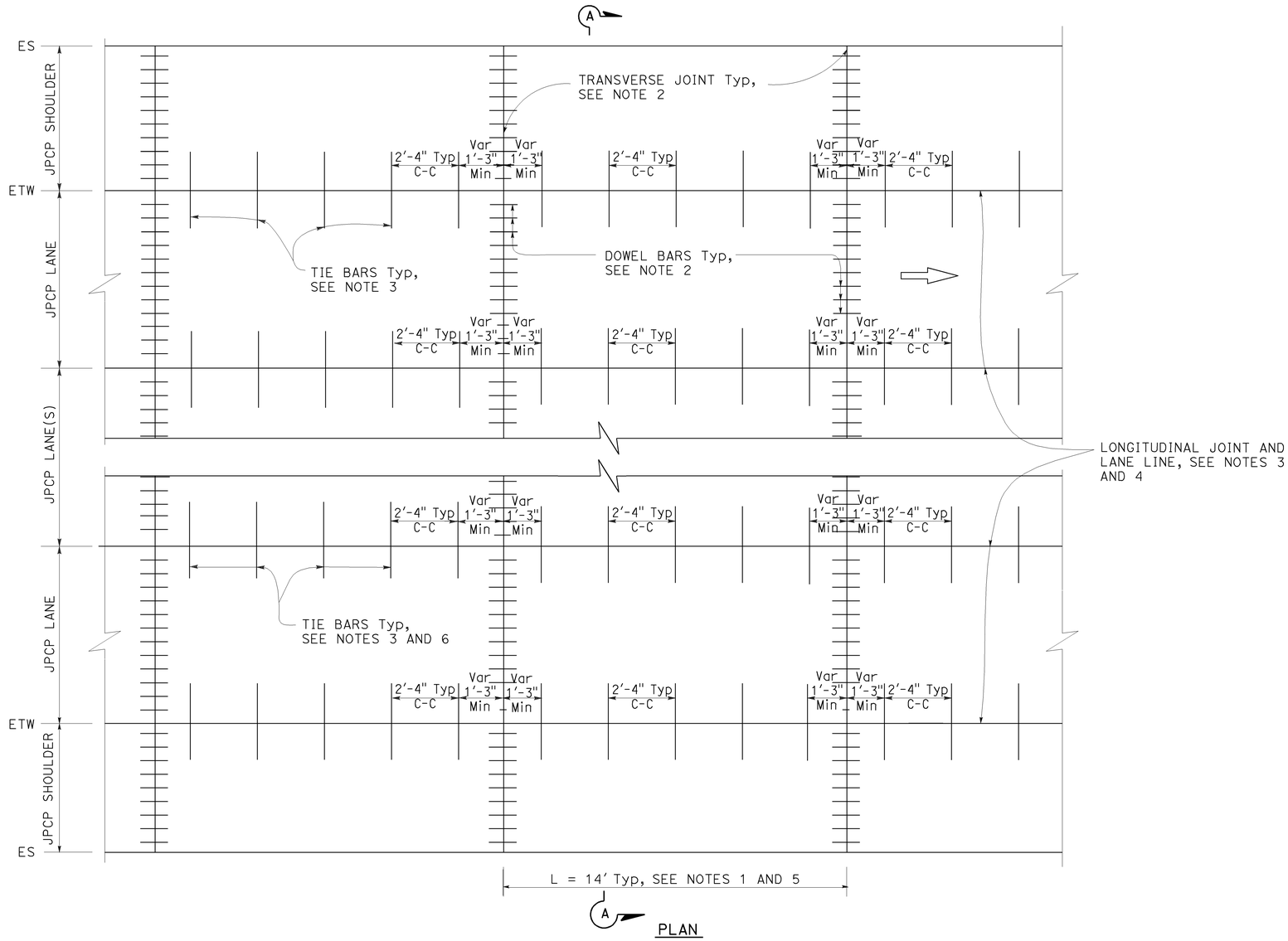

PLAN

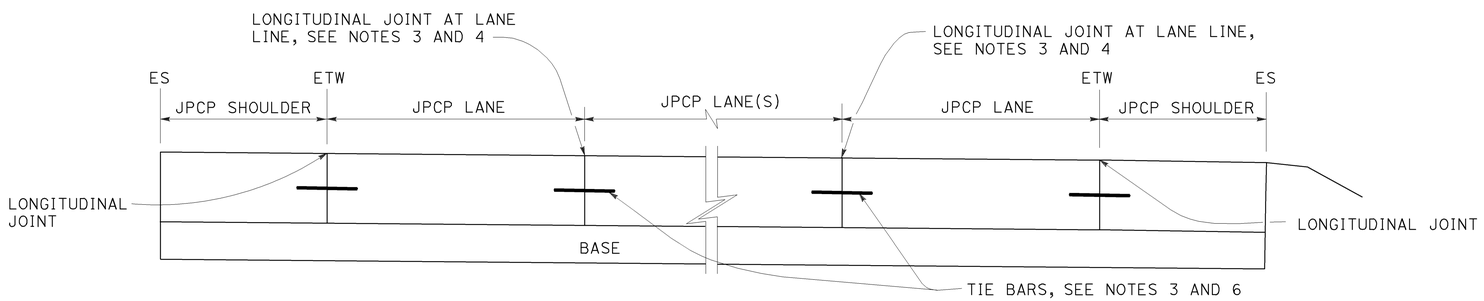

SECTION A-A

NOTES:

1. Transverse joint spacing may be adjusted to no less than 10' and no more than 14' to conform to bridges, change in pavement type, and hardened concrete pavement.
2. For transverse joint and dowel bar details not shown, see Revised Standard Plan RSP P10.
3. For longitudinal joint and tie bar details not shown, see Revised Standard Plan RSP P15.
4. For additional longitudinal joint layout details, see Revised Standard Plan RSP P18.
5. For joint layout at intersections, see Project Plans.
6. For dowel bars at longitudinal joint. see Revised Standard Plan RSP P18.

STATE OF CALIFORNIA
DEPARTMENT OF TRANSPORTATION

JOINTED PLAIN CONCRETE PAVEMENT NEW CONSTRUCTION

NO SCALE

RSP P1 DATED JULY 19, 2013 SUPERSEDES STANDARD PLAN P1
DATED MAY 20, 2011 - PAGE 125 OF THE STANDARD PLANS BOOK DATED 2010.

REVISED STANDARD PLAN RSP P1

2010 REVISED STANDARD PLAN RSP P1

5-31-13

Dist	COUNTY	ROUTE	POST MILES TOTAL PROJECT	SHEET No.	TOTAL SHEETS
07	LA	101	16.7	47	58

Theresa Gabriel
REGISTERED ELECTRICAL ENGINEER

July 19, 2013
PLANS APPROVAL DATE

REGISTERED PROFESSIONAL ENGINEER Theresa Aziz Gabriel No. E15129 Exp. 6-30-14 ELECTRICAL STATE OF CALIFORNIA

THE STATE OF CALIFORNIA OR ITS OFFICERS OR AGENTS SHALL NOT BE RESPONSIBLE FOR THE ACCURACY OR COMPLETENESS OF SCANNED COPIES OF THIS PLAN SHEET.

TO ACCOMPANY PLANS DATED 12-15-14

LEGEND:

AB	ABANDON. IF APPLIED TO CONDUIT, REMOVE CONDUCTORS
BC	INSTALL PULL BOX IN EXISTING CONDUIT RUN
BP	PEDESTRIAN BARRICADE, TYPE AS INDICATED ON PLAN
CB	INSTALL CONDUIT INTO EXISTING PULL BOX
CC	CONNECT NEW AND EXISTING CONDUIT. REMOVE EXISTING CONDUCTORS AND INSTALL CONDUCTORS AS INDICATED
CF	CONDUIT TO REMAIN FOR FUTURE USE. REMOVE CONDUCTORS. INSTALL PULL TAPE
DH	DETECTOR HANDHOLE
FA	FOUNDATION TO BE ABANDONED
IS	INSTALL SIGN ON SIGNAL MAST ARM
NS	NO SLIP BASE ON STANDARD
PEC	PHOTOELECTRIC CONTROL
PEU	PHOTOELECTRIC UNIT
RC	EQUIPMENT OR MATERIAL TO BE REMOVED AND BECOME THE PROPERTY OF THE CONTRACTOR
RE	REMOVE ELECTROLIER, FUSES AND BALLAST. TAPE ENDS OF CONDUCTORS
RL	RELOCATE EQUIPMENT
RR	REMOVE AND REUSE EQUIPMENT
RS	REMOVE AND SALVAGE EQUIPMENT
SC	SPLICE NEW TO EXISTING CONDUCTORS
SD	SERVICE DISCONNECT
TSP	TELEPHONE SERVICE POINT

ABBREVIATIONS

APS	ACCESSIBLE PEDESTRIAN SIGNAL
BBS	BATTERY BACKUP SYSTEM
BC	BOLT CIRCLE
BPB	BICYCLE PUSH BUTTON
C	CONDUIT
CB	CIRCUIT BREAKER
CCTV	CLOSED CIRCUIT TELEVISION
Ckt	CIRCUIT
CMS	CHANGEABLE MESSAGE SIGN
Ctid	CALTRANS IDENTIFICATION
Comm	COMMUNICATION
DLC	LOOP DETECTOR LEAD-IN CABLE
EMS	EXTINGUISHABLE MESSAGE SIGN
EVUC	EMERGENCY VEHICLE UNIT CABLE
EVUD	EMERGENCY VEHICLE UNIT DETECTOR
FB	FLASHING BEACON
FBCA	FLASHING BEACON CONTROL ASSEMBLY
FBS	FLASHING BEACON WITH SLIP BASE
FO	FIBER OPTIC
G	EQUIPMENT GROUNDING CONDUCTOR
GB	GROUND BUS
GFCI	GROUND FAULT CIRCUIT INTERRUPTER
HAR	HIGHWAY ADVISORY RADIO
Hex	HEXAGONAL
HPS	HIGH PRESSURE SODIUM
IISNS	INTERNALLY ILLUMINATED STREET NAME SIGN
ISL	INDUCTION SIGN LIGHTING
LED	LIGHT EMITTING DIODE
LMA	LUMINAIRE MAST ARM
LPS	LOW PRESSURE SODIUM
Ltg	LIGHTING
Lum	LUMINAIRE
M	METERED
MAT	MAST ARM MOUNTING TOP ATTACHMENT
MAS	MAST ARM MOUNTING SIDE ATTACHMENT
M/M	MULTIPLE TO MULTIPLE TRANSFORMER
Mtg	MOUNTING
MV	MERCURY VAPOR LIGHTING FIXTURE
MVDS	MICROWAVE VEHICLE DETECTION SYSTEM
N	NEUTRAL (GROUNDED CONDUCTOR)
NB	NEUTRAL BUS
NC	NORMALLY CLOSE
NO	NORMALLY OPEN
P	CIRCUIT BREAKER'S POLE
PB	PULL BOX
PBA	PUSH BUTTON ASSEMBLY
PEC	PHOTOELECTRIC CONTROL
Ped	PEDESTRIAN
PEU	PHOTOELECTRIC UNIT
PT	CONDUIT WITH PULL TAPE
RE	RELOCATED EQUIPMENT
RM	RAMP METERING
RWIS	ROADSIDE WEATHER INFORMATION SYSTEM
SB	SLIP BASE
SIC	SIGNAL INTERCONNECT CABLE
Sig	SIGNAL
SMA	SIGNAL MAST ARM
SNS	STREET NAME SIGN
SP	SERVICE POINT
TDC	TELEPHONE DEMARCATION CABINET
TMS	TRAFFIC MONITORING STATION
TOS	TRAFFIC OPERATIONS SYSTEM
Veh	VEHICLE
VIVDS	VIDEO IMAGE VEHICLE DETECTION SYSTEM
WIM	WEIGH-IN-MOTION
Xfmr	TRANSFORMER

SOFFIT AND WALL MOUNTED LUMINAIRES

PENDANT, 70 W HPS UNLESS OTHERWISE SPECIFIED

FLUSH, 70 W HPS UNLESS OTHERWISE SPECIFIED

WALL SURFACE, 70 W HPS UNLESS OTHERWISE SPECIFIED

EXISTING SOFFIT OR WALL LUMINAIRE TO REMAIN UNMODIFIED

EXISTING SOFFIT OR WALL LUMINAIRE TO BE MODIFIED AS SPECIFIED

NOTE:

Arrow indicates "street side" of luminaire.

COMMONLY USED SYMBOLS FOR UNITED STATES CUSTOMARY UNITS OF MEASUREMENT:

SYMBOL USED	DEFINITIONS
Ω	OHMS
min	MINUTE
s	SECOND
bps	BITS PER SECOND
Bps	BYTES PER SECOND
A	AMPERE
V	VOLT
V(dc)	VOLT (DIRECT CURRENT)
V(ac)	VOLT (ALTERNATING CURRENT)
FC	FOOT - CANDLE
W	WATTS
VA	VOLT-AMPERE
M	MEGA
k	KILO
m	MILLI
μ	MICRO
P	PICO
Hz	HERTZ

MISCELLANEOUS ELECTROLIERS

NEW	EXISTING	
		LUMINAIRE ON WOOD POLE
		NON-STANDARD ELECTROLIER (SEE PROJECT NOTES OR PROJECT PLANS)
		CITY ELECTROLIER
		ELECTROLIER FOUNDATION (FUTURE INSTALLATION)

NOTES:

1. HPS luminaires shall be 310 W HPS when installed on Type 21, 21D, 30, 31 and 32 Standards, unless otherwise specified. HPS luminaires shall be 200 W when installed on other type standards or poles, unless otherwise specified.
2. LED luminaires shall be 235 W when installed on Type 21, 21D, 30, 31 and 32 Standards, unless otherwise specified. LED luminaires shall be 165 W when installed on other type standards or poles, unless otherwise specified.
3. Luminaires shall be the cutoff type, ANSI Type III medium cutoff lighting distribution, unless otherwise specified.

STANDARD ELECTROLIER

NEW	EXISTING	STANDARD TYPE
		15
		15D
		15 STRUCTURE
		15D STRUCTURE
		21
		21D
		21 STRUCTURE
		21D STRUCTURE
		30
		31
		32

STATE OF CALIFORNIA
DEPARTMENT OF TRANSPORTATION

ELECTRICAL SYSTEMS (LEGEND AND ABBREVIATIONS)

NO SCALE

RSP ES-1A DATED JULY 19, 2013 SUPERSEDES STANDARD PLAN ES-1A DATED MAY 20, 2011 - PAGE 425 OF THE STANDARD PLANS BOOK DATED 2010.

REVISED STANDARD PLAN RSP ES-1A

2010 REVISED STANDARD PLAN RSP ES-1A

Dist	COUNTY	ROUTE	POST MILES TOTAL PROJECT	SHEET No.	TOTAL SHEETS
07	LA	101	16.7	48	58

Theresa Gabriel
REGISTERED ELECTRICAL ENGINEER

July 19, 2013
PLANS APPROVAL DATE

REGISTERED PROFESSIONAL ENGINEER
Theresa Aziz Gabriel
No. E15129
Exp. 6-30-14
ELECTRICAL
STATE OF CALIFORNIA

THE STATE OF CALIFORNIA OR ITS OFFICERS OR AGENTS SHALL NOT BE RESPONSIBLE FOR THE ACCURACY OR COMPLETENESS OF SCANNED COPIES OF THIS PLAN SHEET.

TO ACCOMPANY PLANS DATED 12-15-14

CONDUIT

NEW	EXISTING	
		LIGHTING CONDUIT, UNLESS OTHERWISE INDICATED OR NOTED
		TRAFFIC SIGNAL CONDUIT
C	c	COMMUNICATION CONDUIT
T	t	TELEPHONE CONDUIT
F	f	FIRE ALARM CONDUIT
FO	fo	FIBER OPTIC CONDUIT
		CONDUIT TERMINATION
R	r	CONDUIT RISER ATTACHED TO THE STRUCTURE OR SERVICE POLE

SERVICE EQUIPMENT

NEW	EXISTING	
OH	oh	OVERHEAD LINES
U	U	WOOD POLE, "U" INDICATES UTILITY OWNED
		POLE GUY WITH ANCHOR
		UTILITY TRANSFORMER - GROUND MOUNTED
III	III	SERVICE EQUIPMENT ENCLOSURE TYPE. DOOR INDICATES FRONT OF ENCLOSURE
T	t	TELEPHONE DEMARCATION CABINET

POLE-MOUNTED SERVICE DESIGNATION

TYPE H SERVICE, 28'-10" — TYPE OF INSTALLATION AND POLE HEIGHT ABOVE GRADE

FLASHING BEACON

NEW	EXISTING	
R	R	FLASHING BEACON (ONE VEHICLE SIGNAL HEAD WITH BACKPLATE AND VISOR) "R" INDICATES RED INDICATION, "Y" INDICATES YELLOW INDICATION
Y Y	Y Y	FLASHING BEACON WITH TYPE 15-FBS STANDARD AND A SIGN.
R R	R R	FLASHING BEACON WITH TYPES 9, 9A OR 9B SIGN UNLESS OTHERWISE SPECIFIED OR INDICATED

SIGNAL EQUIPMENT

NEW	EXISTING	
C	C	PEDESTRIAN SIGNAL HEAD "C" INDICATES COUNTDOWN PEDESTRIAN HEAD
		PUSH BUTTON ASSEMBLY POST
		PEDESTRIAN BARRICADE
		VEHICLE SIGNAL HEAD (WITH BACKPLATE AND 3-SECTIONS: RED, YELLOW AND GREEN)
		VEHICLE SIGNAL HEAD WITH ANGLE VISOR
PV	PV	MODIFICATIONS OF BASIC SYMBOL: "L" INDICATES ALL NON-ARROW SECTIONS LOUVERED "LG" INDICATES LOUVERED GREEN SECTION ONLY "PV" INDICATES ALL 12" SECTIONS PROGRAMMED VISIBILITY "8" INDICATES ALL 8" SECTIONS (ONLY WHEN SPECIFIED)
		VEHICLE SIGNAL HEAD CONSISTING OF RED, YELLOW AND GREEN LEFT ARROW SECTIONS
		VEHICLE SIGNAL HEAD CONSISTING OF RED AND YELLOW SECTIONS WITH AN UP GREEN ARROW SECTION
		VEHICLE SIGNAL HEAD (5 SECTION) CONSISTING OF RED, YELLOW AND GREEN SECTIONS WITH YELLOW AND GREEN RIGHT ARROW SECTIONS
		TYPE 15TS STANDARD WITH VEHICLE SIGNAL HEAD AND LUMINAIRE
		TYPE 21TS STANDARD WITH VEHICLE SIGNAL HEAD AND LUMINAIRE
		STANDARD WITH LUMINAIRE AND SIGNAL MAST ARMS AND ATTACHED VEHICLE SIGNAL HEADS
		TYPE 1 STANDARD WITH ATTACHED VEHICLE SIGNAL HEADS
		STANDARD WITH A SIGNAL MAST ARM, ATTACHED VEHICLE SIGNAL HEADS AND INTERNALLY ILLUMINATED STREET NAME SIGN
		CONTROLLER ASSEMBLY. DOOR INDICATES FRONT OF CABINET

SIGNAL EQUIPMENT Cont

NEW	EXISTING	
		GUARD POST
		TYPE 1 STANDARD WITH RAMP METERING SIGN
		OPTICAL DETECTOR FOR THE EMERGENCY VEHICLE DETECTION SYSTEM

NOTES:

1. All signal sections shall be 12" unless shown otherwise.
2. Signal heads shall be provided with backplates unless shown otherwise.

ILLUMINATED OVERHEAD SIGN

NEW	EXISTING	
		SINGLE POST, SINGLE ILLUMINATED SIGN, BALANCED BUTTERFLY
		SINGLE POST, DOUBLE ILLUMINATED SIGN, BALANCED BUTTERFLY
		SINGLE POST, SINGLE ILLUMINATED SIGN, FULL CANTILEVER
		DOUBLE POST, SINGLE ILLUMINATED SIGN
		SINGLE ILLUMINATED SIGN MOUNTED ON STRUCTURE
		DOUBLE POST, SINGLE ILLUMINATED SIGN WITH ELECTROLIER

STATE OF CALIFORNIA
DEPARTMENT OF TRANSPORTATION

ELECTRICAL SYSTEMS (LEGEND AND ABBREVIATIONS)

NO SCALE

RSP ES-1B DATED JULY 19, 2013 SUPERSEDES STANDARD PLAN ES-1B DATED MAY 20, 2011 - PAGE 426 OF THE STANDARD PLANS BOOK DATED 2010.

REVISED STANDARD PLAN RSP ES-1B

2010 REVISED STANDARD PLAN RSP ES-1B

7-15-13

Dist	COUNTY	ROUTE	POST MILES TOTAL PROJECT	SHEET No.	TOTAL SHEETS
07	LA	101	16.7	49	58

Theresa Gabriel
REGISTERED ELECTRICAL ENGINEER

July 19, 2013
PLANS APPROVAL DATE

REGISTERED PROFESSIONAL ENGINEER
Theresa Aziz Gabriel
No. E15129
Exp. 6-30-14
ELECTRICAL
STATE OF CALIFORNIA

THE STATE OF CALIFORNIA OR ITS OFFICERS OR AGENTS SHALL NOT BE RESPONSIBLE FOR THE ACCURACY OR COMPLETENESS OF SCANNED COPIES OF THIS PLAN SHEET.

TO ACCOMPANY PLANS DATED 12-15-14

EQUIPMENT IDENTIFICATION

ILLUMINATED SIGN IDENTIFICATION NUMBER:

SIGN No. 12345
10 ISL SCI 1.0

- SIGN NUMBER - PLACE ON POST OR STRUCTURE
- TRANSFORMER RATING (kVA)
- LIGHTING CONTROL TYPE
- NUMBER AND TYPE OF FIXTURES

DO NOT PLACE ON STANDARD OR STRUCTURE

ELECTROLIER OR EQUIPMENT IDENTIFICATION NUMBER:

12345 - 15'-0"

- MAST ARM LENGTH, IF SHOWN. DO NOT PLACE ON STANDARD OR STRUCTURE
- EQUIPMENT NUMBER - PLACE ON STANDARD OR STRUCTURE. EXISTING EQUIPMENT NUMBERS ARE SHOWN IN PARENTHESIS

CONDUIT AND CONDUCTOR IDENTIFICATION:

1½"C, 2#10, 15#14, 2 DLC, 12P#18

- PAIR
- NUMBER AND SIZE OF CONDUCTORS AND CABLES
- SIZE OF CONDUIT IN INCHES

ø1, ø2, ø2P, etc.	TRAFFIC PHASE IDENTIFICATION FOR SIGNAL FACES, DETECTORS AND PHASE DIAGRAMS
1 2 3	LEGEND NUMBERS
A B C	EQUIPMENT, SIGNAL POLES, INSTALLATION OR ITEMS
1 2 3	CONDUIT RUN NUMBERS

SIGNAL AND LIGHTING STANDARD (TYPICAL DESIGNATION):

19A - 3 - 100

- WIND VELOCITY = 100 mph
- CASE 3 ARM LOADING
- STANDARD TYPE
- STANDARD PLAN SHEET NUMBER
- DETAIL, NUMBER, SECTION, TYPE OR ELEVATION

MISCELLANEOUS EQUIPMENT

NEW	EXISTING	
CMS	cms	CHANGEABLE MESSAGE SIGN
		CLOSED CIRCUIT TELEVISION CAMERA
		HIGHWAY ADVISORY RADIO POLE AND ANTENNA
EMS	ems	EXTINGUISHABLE MESSAGE SIGN
M V	m v	DETECTION DEVICE M = MICROWAVE SENSOR V = VIDEO IMAGE SENSOR

WIRING DIAGRAM LEGEND

----	EXTERNAL CONDUCTOR
	CONDUCTOR OR BUS
	TIE POINT
	CONTACTOR COIL
	CONTACTOR, NO CONTACT
	TERMINAL BLOCKS
	CONTACTOR, NC CONTACT
	ENCLOSURE BOND
	GROUNDING ELECTRODE
	CIRCUIT BREAKER
	RECEPTACLE

PULL BOXES

NEW	EXISTING	
		PULL BOX, No. 5 UNLESS OTHERWISE INDICATED OR NOTED
3	9A(21)	PULL BOX, ADDITIONAL DESIGNATIONS OR DESCRIPTIONS

3 No. 3½ PULL BOX
5 No. 5 PULL BOX
6 No. 6 PULL BOX
7 No. 7 (CEILING PULL BOX)
8 No. 8 (PENDANT SOFFIT PULL BOX)
9 No. 9 PULL BOX
9A No. 9A PULL BOX

(C) COMMUNICATIONS PULL BOX
(E) PULL BOX WITH EXTENSION
(S) SPRINKLER CONTROL PULL BOX
(21) ANCHOR BOLTS AND CONDUIT FOR FUTURE INSTALLATION OF TYPE 21 STANDARD
(T) TRAFFIC PULL BOX

VEHICLE DETECTORS

5 J 9 U

- VEHICLE DETECTOR DESIGNATION
- U = UPPER
  L = LOWER
- SLOT NUMBER IN INPUT FILE
- INPUT FILE (I OR J)
- PHASE

NEW	EXISTING	
		TYPE A DETECTOR LOOP. OUTLINE OF SAWCUT SHOWN
		TYPE B DETECTOR LOOP. OUTLINE OF SAWCUT SHOWN
		TYPE C DETECTOR LOOP. OUTLINE OF SAWCUT SHOWN
		TYPE D DETECTOR LOOP. OUTLINE OF SAWCUT SHOWN
		TYPE E DETECTOR LOOP. OUTLINE OF SAWCUT SHOWN
		TYPE Q DETECTOR LOOP. OUTLINE OF SAWCUT SHOWN
		MAGNETIC DETECTOR
DH	dh	DETECTOR HANDHOLE
		MICROWAVE OR VIDEO DETECTION ZONE

STATE OF CALIFORNIA
DEPARTMENT OF TRANSPORTATION

ELECTRICAL SYSTEMS (LEGEND AND ABBREVIATIONS)

NO SCALE

RSP ES-1C DATED JULY 19, 2013 SUPERSEDES STANDARD PLAN ES-1C DATED MAY 20, 2011 - PAGE 427 OF THE STANDARD PLANS BOOK DATED 2010.

REVISED STANDARD PLAN RSP ES-1C

2010 REVISED STANDARD PLAN RSP ES-1C

Dist	COUNTY	ROUTE	POST MILES TOTAL PROJECT	SHEET No.	TOTAL SHEETS
07	LA	101	16.7	50	58

Theresa Gabriel
REGISTERED ELECTRICAL ENGINEER

July 19, 2013
PLANS APPROVAL DATE

REGISTERED PROFESSIONAL ENGINEER
Theresa Aziz Gabriel
No. E15129
Exp. 6-30-14
ELECTRICAL
STATE OF CALIFORNIA

THE STATE OF CALIFORNIA OR ITS OFFICERS OR AGENTS SHALL NOT BE RESPONSIBLE FOR THE ACCURACY OR COMPLETENESS OF SCANNED COPIES OF THIS PLAN SHEET.

TO ACCOMPANY PLANS DATED 12-15-14

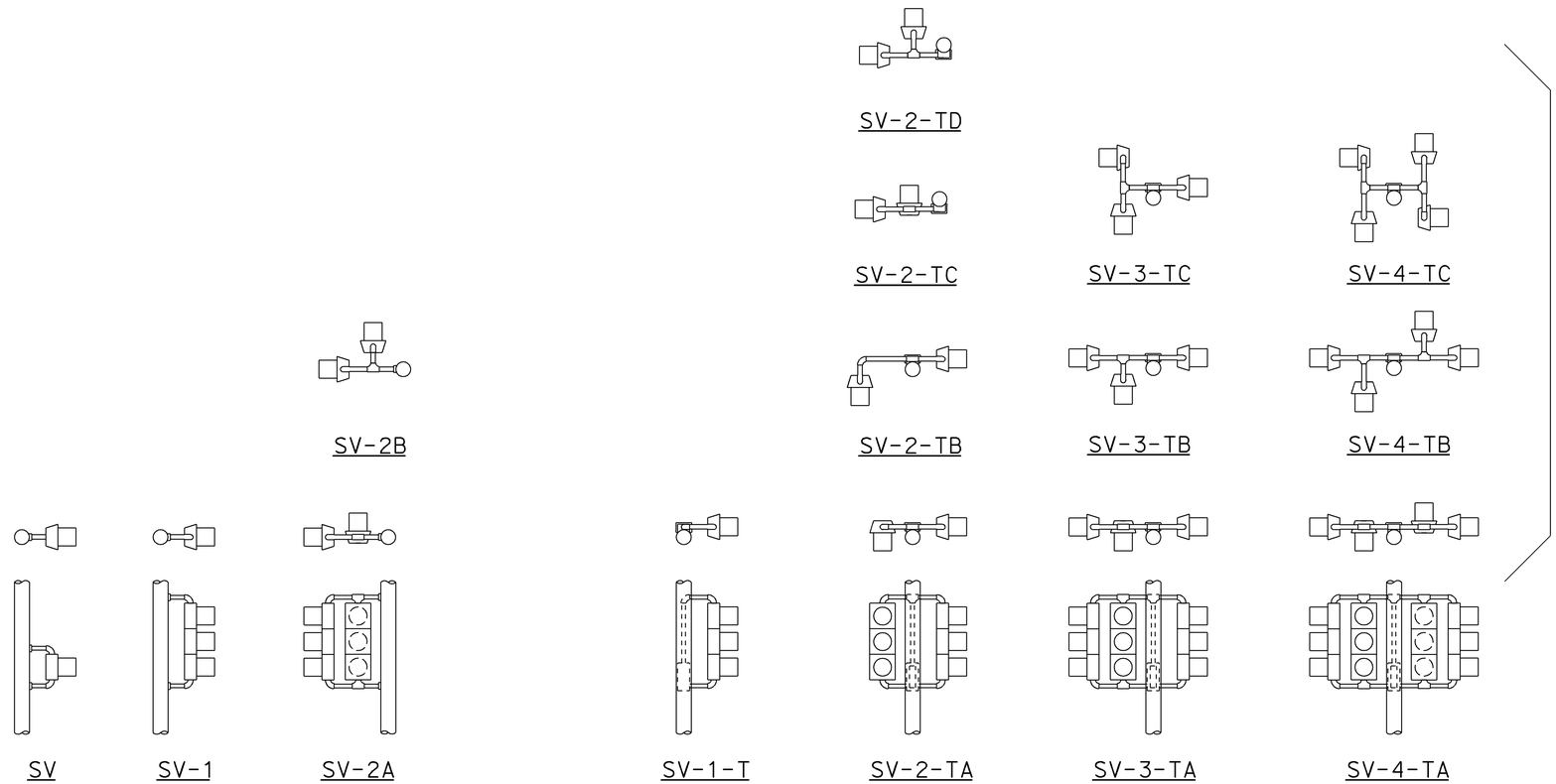

SIDE MOUNTINGS

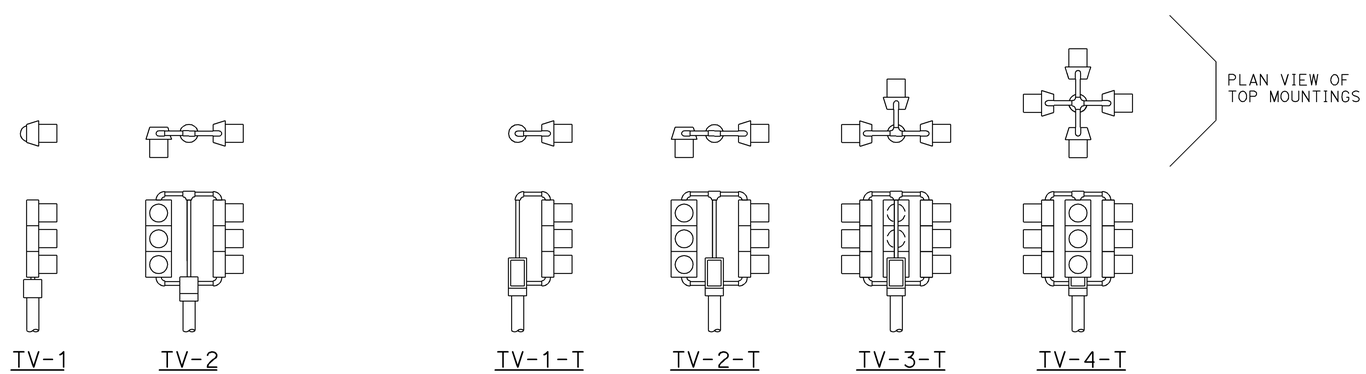

TOP MOUNTINGS

ABBREVIATIONS:

SV	SIDE MOUNTED VEHICLE SIGNALS
T	TERMINAL COMPARTMENT
TV	TOP MOUNTED VEHICLE SIGNALS
1, 2, 3, 4	NUMBER OF SIGNAL FACES (3 - SECTION, UNLESS OTHERWISE INDICATED)
A, B, C, D	CONFIGURATION OF SIGNALS

NOTES:

1. Mountings shall be oriented to provide maximum horizontal clearance to adjacent roadway.
2. Bracket arms shall be long enough to permit proper alignment of signals and backplate installation.
3. See Standard Plans ES-4D and ES-4E for attachment fitting details.

STATE OF CALIFORNIA
DEPARTMENT OF TRANSPORTATION

ELECTRICAL SYSTEMS (VEHICULAR SIGNAL HEADS AND MOUNTINGS)

NO SCALE

RSP ES-4A DATED JULY 19, 2013 SUPERSEDES STANDARD PLAN ES-4A DATED MAY 20, 2011 - PAGE 443 OF THE STANDARD PLANS BOOK DATED 2010.

REVISED STANDARD PLAN RSP ES-4A

2010 REVISED STANDARD PLAN RSP ES-4A

7-9-13

Dist	COUNTY	ROUTE	POST MILES TOTAL PROJECT	SHEET No.	TOTAL SHEETS
07	LA	101	16.7	50	58

Theresa Gabriel
REGISTERED ELECTRICAL ENGINEER

October 17, 2014
PLANS APPROVAL DATE

REGISTERED PROFESSIONAL ENGINEER
Theresa Aziz Gabriel
No. E15129
Exp. 6-30-16
ELECTRICAL
STATE OF CALIFORNIA

THE STATE OF CALIFORNIA OR ITS OFFICERS OR AGENTS SHALL NOT BE RESPONSIBLE FOR THE ACCURACY OR COMPLETENESS OF SCANNED COPIES OF THIS PLAN SHEET.

TO ACCOMPANY PLANS DATED 12-15-14

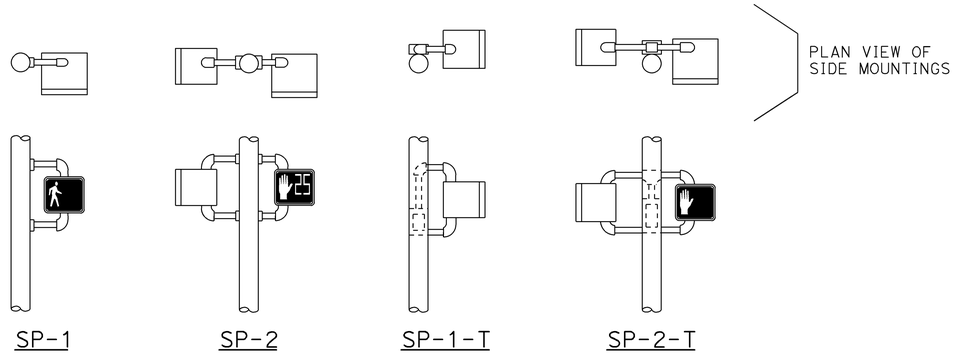

SIDE MOUNTINGS

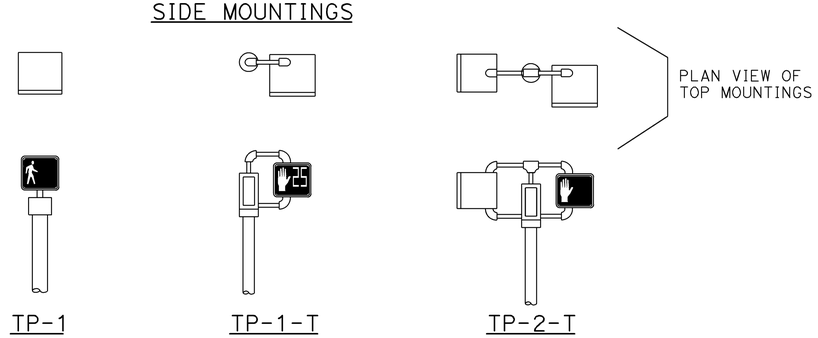

TOP MOUNTINGS

PEDESTRIAN SIGNALS AND MOUNTINGS

DETAIL A

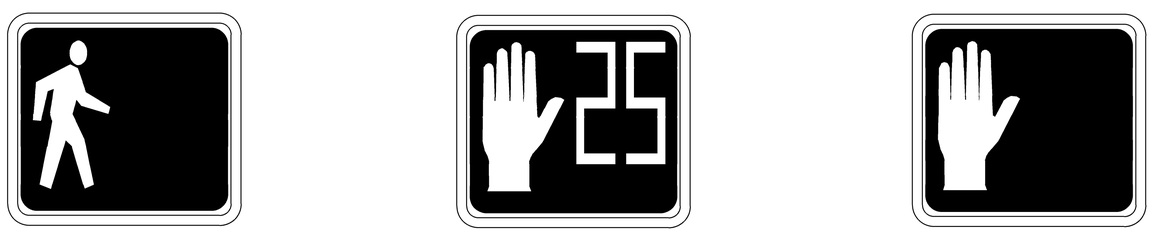

PERSON WALKING INTERVAL FLASHING UPRAISED HAND INTERVAL STEADY UPRAISED HAND INTERVAL

PEDESTRIAN SIGNAL MODULE WITH COUNTDOWN

DETAIL B

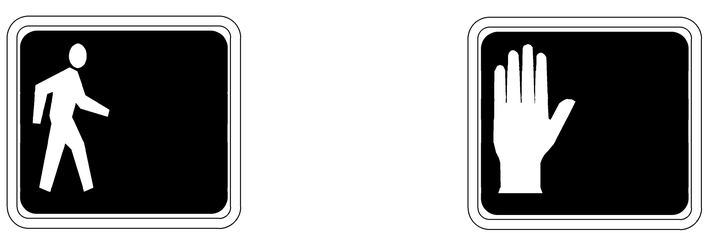

PERSON WALKING INTERVAL STEADY UPRAISED HAND INTERVAL

PEDESTRIAN SIGNAL MODULE WITHOUT COUNTDOWN

DETAIL C

NOTES:

1. Mounting shall be oriented to provide maximum horizontal clearance to adjacent roadway.
2. Bracket arms shall be long enough to permit proper alignment of signals.
3. See Standard Plan ES-4D for attachment fittings details.

ABBREVIATIONS:

1, 2	NUMBER OF SIGNAL FACES
SP	SIDE MOUNTED PEDESTRIAN SIGNAL
T	TERMINAL COMPARTMENT
TP	TOP MOUNTED PEDESTRIAN SIGNAL

STATE OF CALIFORNIA
DEPARTMENT OF TRANSPORTATION

ELECTRICAL SYSTEMS (PEDESTRIAN SIGNAL)

NO SCALE

RSP ES-4B DATED OCTOBER 17, 2014 SUPERSEDES RSP ES-4B DATED JULY 19, 2013 AND STANDARD PLAN ES-4B DATED MAY 20, 2011 - PAGE 444 OF THE STANDARD PLANS BOOK DATED 2010.

REVISED STANDARD PLAN RSP ES-4B

2010 REVISED STANDARD PLAN RSP ES-4B

9-23-14

Dist	COUNTY	ROUTE	POST MILES TOTAL PROJECT	SHEET No.	TOTAL SHEETS
07	LA	101	16.7	52	58

Theresa Gabriel
REGISTERED ELECTRICAL ENGINEER

July 19, 2013
PLANS APPROVAL DATE

REGISTERED PROFESSIONAL ENGINEER
Theresa Aziz Gabriel
No. E15129
Exp. 6-30-14
ELECTRICAL
STATE OF CALIFORNIA

THE STATE OF CALIFORNIA OR ITS OFFICERS OR AGENTS SHALL NOT BE RESPONSIBLE FOR THE ACCURACY OR COMPLETENESS OF SCANNED COPIES OF THIS PLAN SHEET.

TO ACCOMPANY PLANS DATED 12-15-14

VISORS

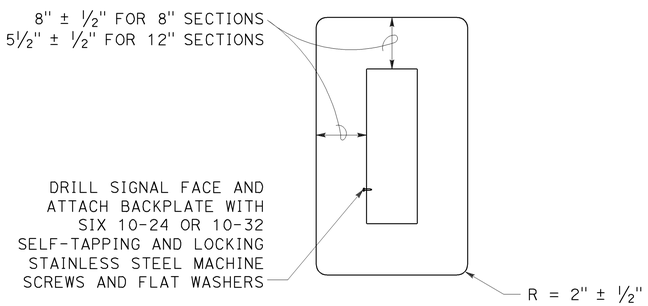

8" AND 12" SECTIONS

BACKPLATE

1/16" minimum thickness
3001-14 aluminum or plastic
when specified

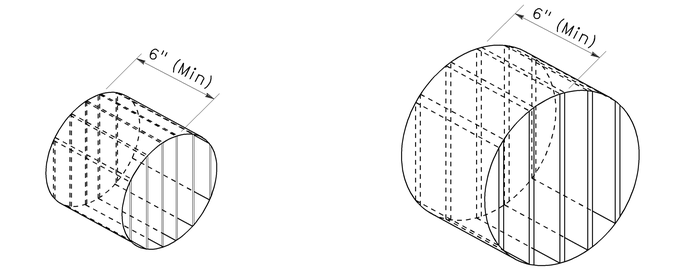

ISOMETRIC VIEW

ISOMETRIC VIEW

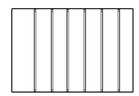

SECTION A-A

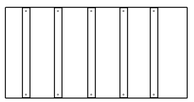

SECTION B-B

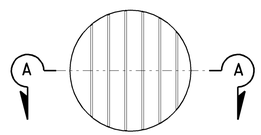

8" DIAMETER
FRONT VIEW

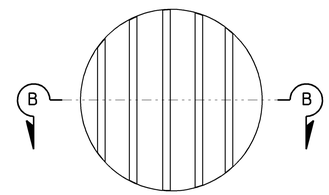

12" DIAMETER
FRONT VIEW

DIRECTIONAL LOUVER

Directional louvers shall be oriented as directed by the Engineer and secured in place with one plated brass machine screw and nut.

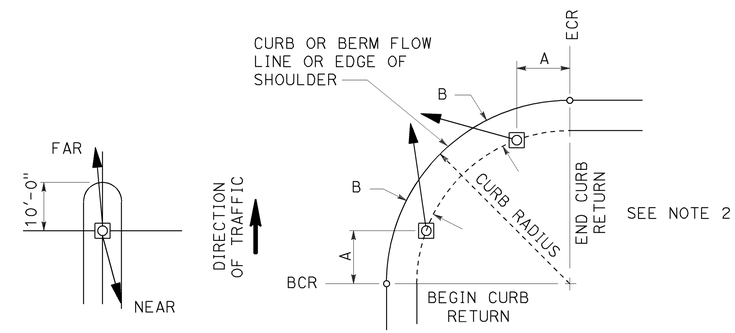

NOTES:

1. Typical signal pole placement unless dimensioned on plans.
2. For A and B dimensions, see Pole Schedule, or as directed by the Engineer.

SIGNAL STANDARD PLACEMENT DIMENSIONS AND EQUIPMENT LOCATIONS

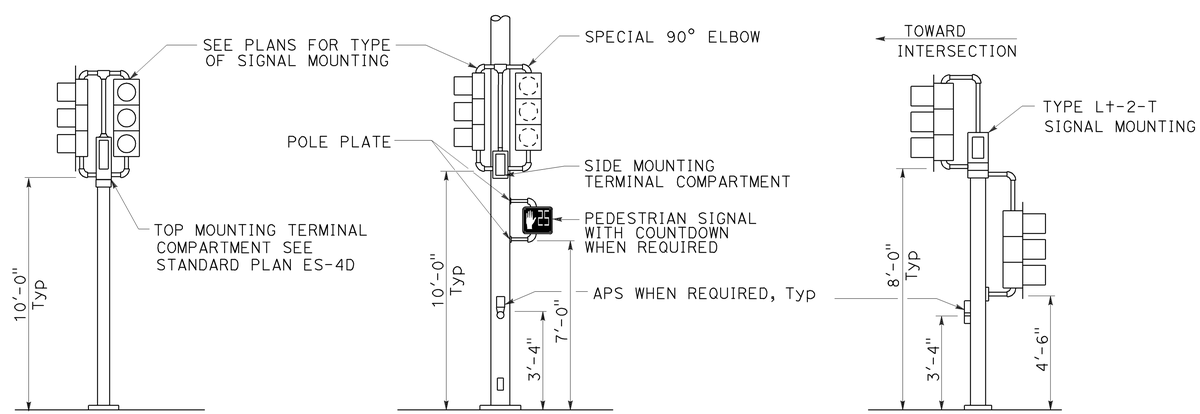

TOP MOUNTED SIGNALS (TV)

Type 1-A, 1-B, 1-C and 1-D standard as indicated on the plans

SIDE MOUNTED SIGNALS (SV AND SP)

Normally used on standards with luminaire or signal mast arm

LEFT TURN LANE SIGNAL

Type 1-A, 1-B, 1-C and 1-D standard as indicated on plans

TYPICAL SIGNAL INSTALLATIONS

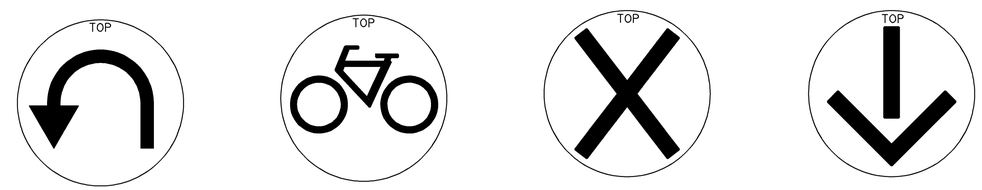

U-TURN

BICYCLE

LANE CONTROL

LANE CONTROL

SIGNAL FACES

STATE OF CALIFORNIA
DEPARTMENT OF TRANSPORTATION

ELECTRICAL SYSTEMS (VEHICULAR SIGNAL HEADS AND MOUNTINGS)

NO SCALE

RSP ES-4C DATED JULY 19, 2013 SUPERSEDES STANDARD PLAN ES-04C DATED MAY 20, 2011 - PAGE 445 OF THE STANDARD PLANS BOOK DATED 2010.

REVISED STANDARD PLAN RSP ES-4C

2010 REVISED STANDARD PLAN RSP ES-4C

7-10-13

Dist	COUNTY	ROUTE	POST MILES TOTAL PROJECT	SHEET No.	TOTAL SHEETS
07	LA	101	16.7	53	58

Theresa Gabriel
REGISTERED ELECTRICAL ENGINEER

July 19, 2013
PLANS APPROVAL DATE

REGISTERED PROFESSIONAL ENGINEER
Theresa Aziz Gabriel
No. E15129
Exp. 6-30-14
ELECTRICAL
STATE OF CALIFORNIA

THE STATE OF CALIFORNIA OR ITS OFFICERS OR AGENTS SHALL NOT BE RESPONSIBLE FOR THE ACCURACY OR COMPLETENESS OF SCANNED COPIES OF THIS PLAN SHEET.

TO ACCOMPANY PLANS DATED 12-15-14

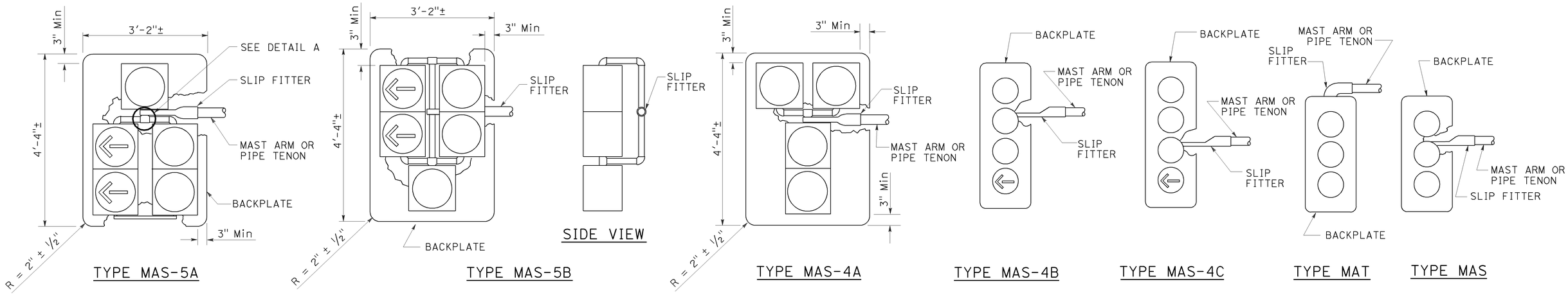

MAST ARM MOUNTINGS

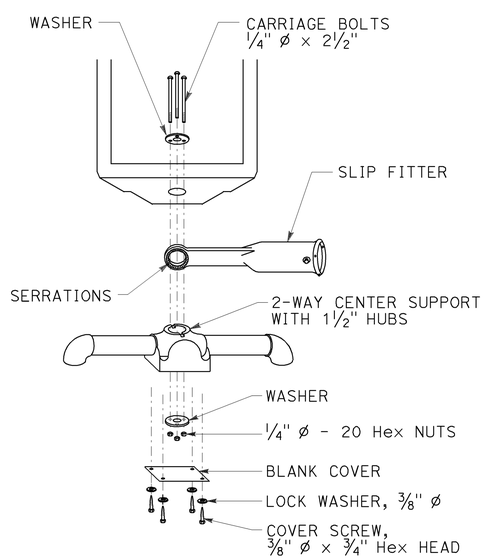

DETAIL A

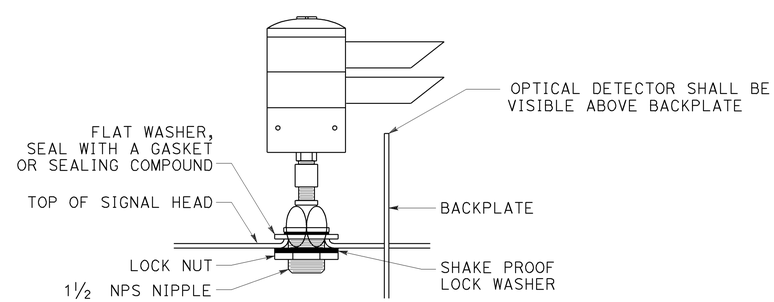

OPTICAL DETECTOR MOUNTING FOR EMERGENCY VEHICLE DETECTION SYSTEM

DETAIL B

STATE OF CALIFORNIA
DEPARTMENT OF TRANSPORTATION

ELECTRICAL SYSTEMS (VEHICULAR SIGNAL HEADS AND OPTICAL DETECTOR MOUNTING)

NO SCALE

RSP ES-4E DATED JULY 19, 2013 SUPERSEDES STANDARD PLAN ES-4E DATED MAY 20, 2011 - 447 OF THE STANDARD PLANS BOOK DATED 2010.

REVISED STANDARD PLAN RSP ES-4E

2010 REVISED STANDARD PLAN RSP ES-4E

7-9-13

Dist	COUNTY	ROUTE	POST MILES TOTAL PROJECT	SHEET No.	TOTAL SHEETS
07	LA	101	16.7	54	58

Theresa Gabriel
REGISTERED ELECTRICAL ENGINEER

July 19, 2013
PLANS APPROVAL DATE

REGISTERED PROFESSIONAL ENGINEER
Theresa Aziz Gabriel
No. E15129
Exp. 6-30-14
ELECTRICAL
STATE OF CALIFORNIA

THE STATE OF CALIFORNIA OR ITS OFFICERS OR AGENTS SHALL NOT BE RESPONSIBLE FOR THE ACCURACY OR COMPLETENESS OF SCANNED COPIES OF THIS PLAN SHEET.

TO ACCOMPANY PLANS DATED 12-15-14

2010 REVISED STANDARD PLAN RSP ES-5C

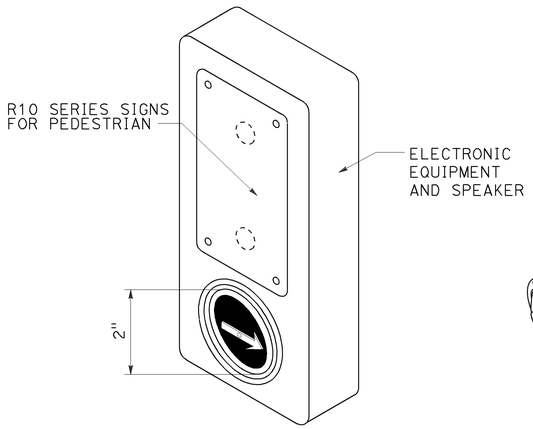

ACCESSIBLE PEDESTRIAN SIGNAL

DETAIL A
(See note 1 to 4)

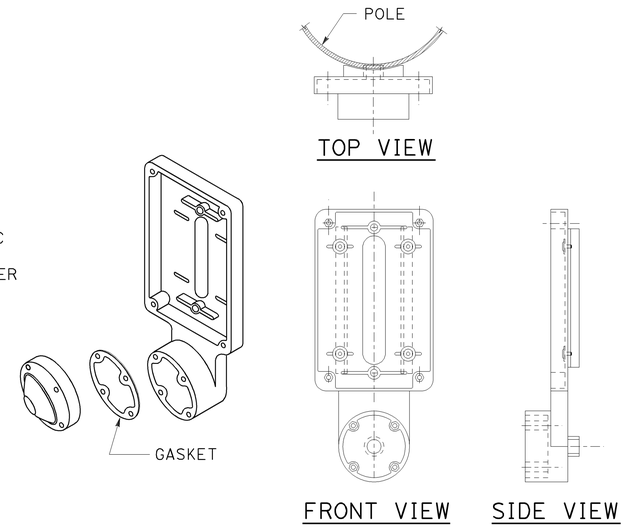

TYPE B PUSH BUTTON ASSEMBLY

DETAIL B
(See note 1 to 4)

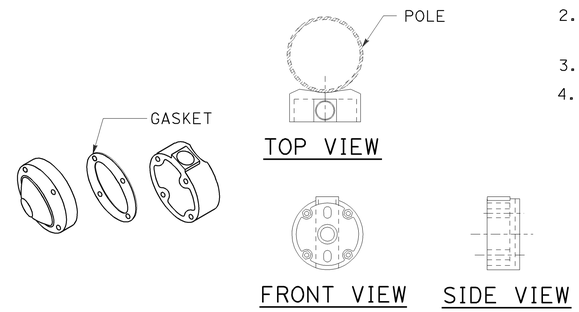

TYPE C PUSH BUTTON ASSEMBLY

DETAIL C
(See note 1 to 4)

NOTES:

1. Back casting shape to fit curvature of pole.
2. Provide cover fitting for top of post, when PBA is mounted on push button assembly post.
3. Install push button on crosswalk side of standard.
4. Use R10 series regulatory signs and plaques for pedestrian and bicycle facilities.

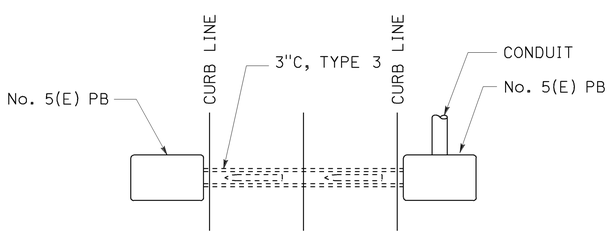

PLAN

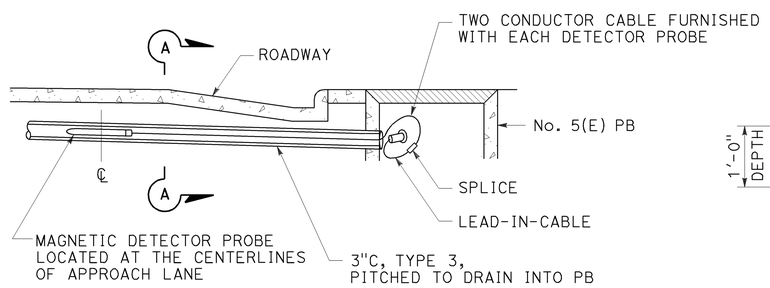

ELEVATION

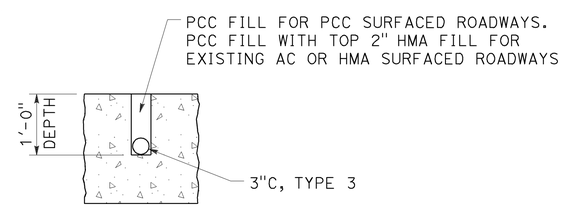

SECTION A-A

MAGNETIC VEHICLE DETECTOR

INSTALLATION DETAILS

DETAIL D

STATE OF CALIFORNIA
DEPARTMENT OF TRANSPORTATION

ELECTRICAL SYSTEMS (ACCESSIBLE PEDESTRIAN SIGNAL, PUSH BUTTON ASSEMBLIES AND MAGNETIC VEHICLE DETECTOR)

NO SCALE

RSP ES-5C DATED JULY 19, 2013 SUPERSEDES STANDARD PLAN ES-5C
DATED MAY 20, 2011 - PAGE 450 OF THE STANDARD PLANS BOOK DATED 2010.

REVISED STANDARD PLAN RSP ES-5C

Dist	COUNTY	ROUTE	POST MILES TOTAL PROJECT	SHEET No.	TOTAL SHEETS
07	LA	101	16.7	55	58

REGISTERED CIVIL ENGINEER

July 19, 2013
PLANS APPROVAL DATE

REGISTERED PROFESSIONAL ENGINEER Stanley P. Johnson No. C57793 Exp. 3-31-14 CIVIL STATE OF CALIFORNIA

THE STATE OF CALIFORNIA OR ITS OFFICERS OR AGENTS SHALL NOT BE RESPONSIBLE FOR THE ACCURACY OR COMPLETENESS OF SCANNED COPIES OF THIS PLAN SHEET.

NOTE:

TO ACCOMPANY PLANS DATED 12-15-14

1. Handhole shall be located on the downstream side of traffic.

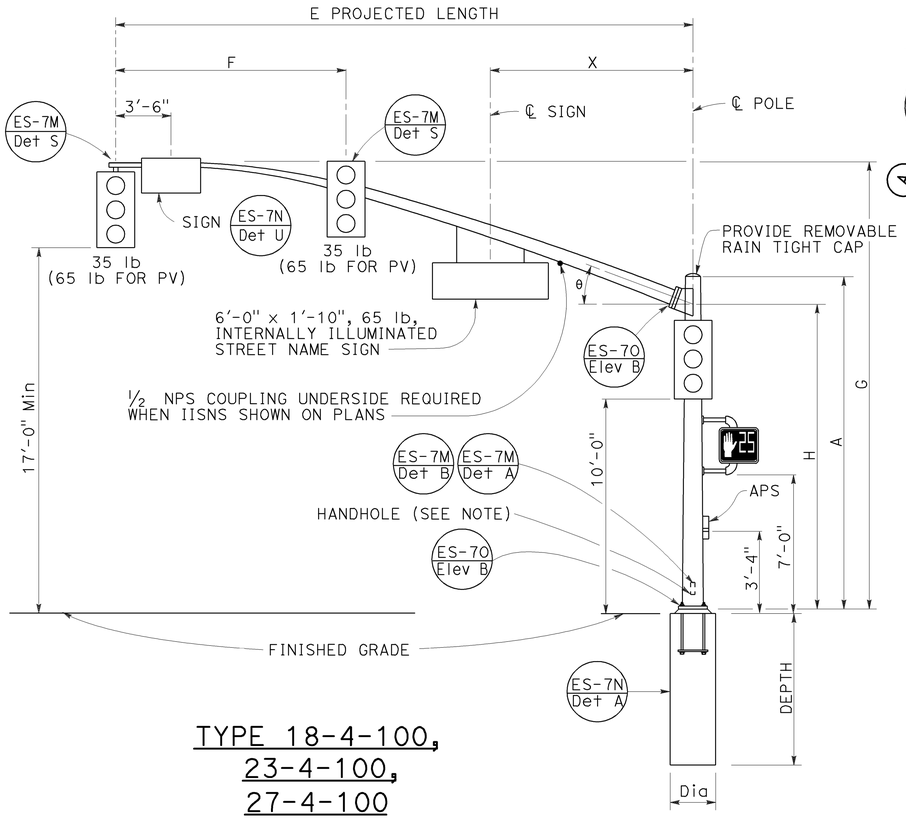

TYPE 18-4-100,
23-4-100,
27-4-100
ELEVATION A

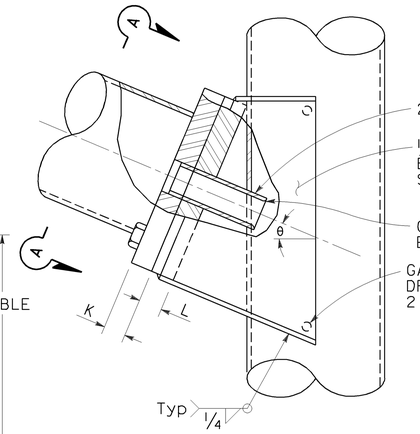

ELEVATION C

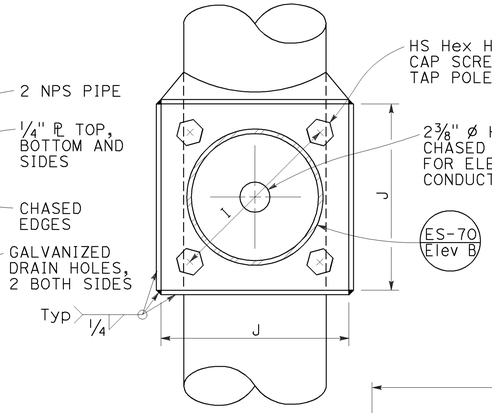

VIEW A-A

SIGNAL MAST ARM CONNECTION
DETAIL A

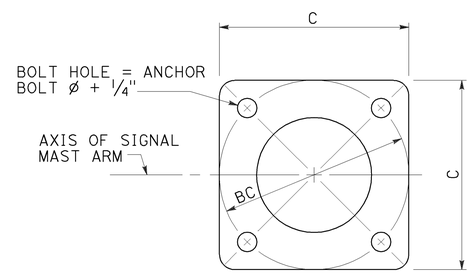

BASE PLATE
DETAIL B

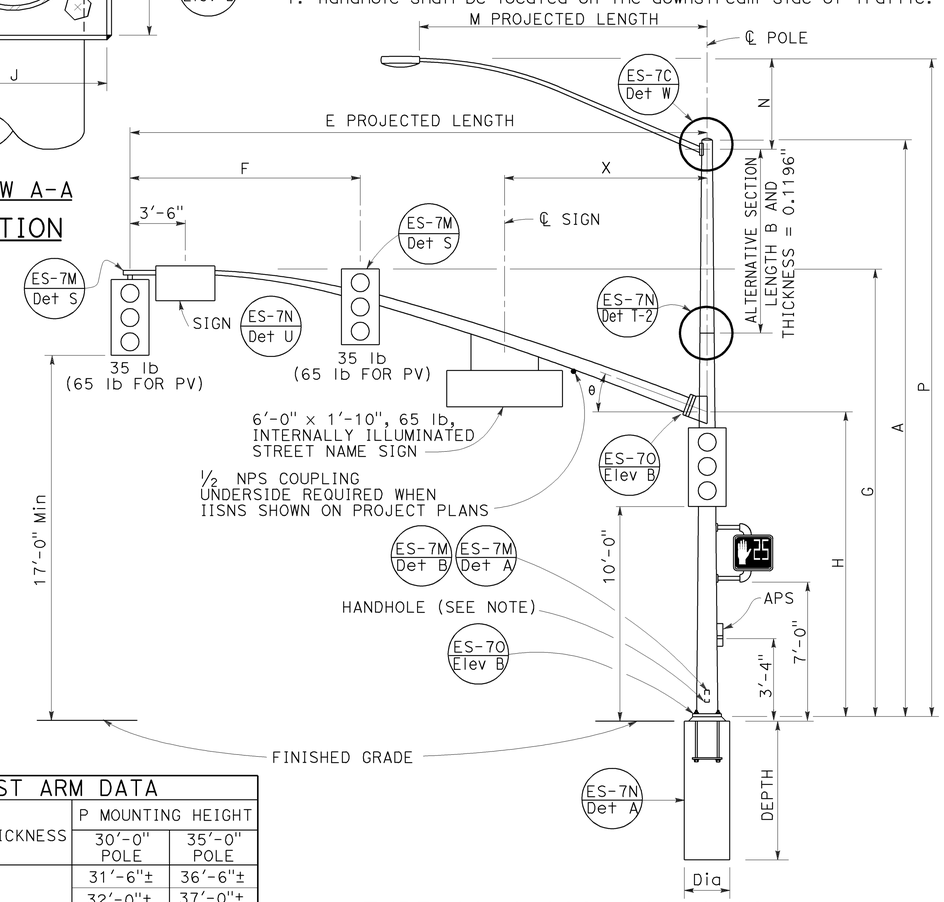

TYPE 19-4-100, 19A-4-100,
24-4-100, 24A-4-100,
26-4-100, 26A-4-100
ELEVATION B

SIGNAL MAST ARM DATA												
E PROJECTED LENGTH	F Min SPACING	G MOUNTING HEIGHT	H	Min OD AT POLE	THICKNESS	I BOLT CIRCLE	HS CAP SCREWS	J PLATE SIZE	K MAST ARM ℄ THICKNESS	L POLE ℄ THICKNESS	θ	X Max
25'-0"	10'-0"	22'-8"±	16'-0"	7⅜"	0.2391"	12"	1¼"-7NC-3"	1'-0"	1¼"	1½"	23°	10'-6"
30'-0"	12'-0"	23'-0"±		8"								
35'-0"	14'-0"			8 11/16"		13½"		1'-1½"	1½"	1¾"	21°	
40'-0"	15'-0"			9⅜"							15°	13'-0"
45'-0"		23'-8"±		10¼"								

LUMINAIRE MAST ARM DATA					
M PROJECTED LENGTH	N RISE	Min OD AT POLE	THICKNESS	P MOUNTING HEIGHT	
				30'-0" POLE	35'-0" POLE
6'-0"	2'-0"±	3¼"	0.1196"	31'-6"±	36'-6"±
8'-0"	2'-6"±	3½"		32'-0"±	37'-0"±
10'-0"	3'-3"±	3⅞"		32'-9"±	37'-9"±
12'-0"	4'-3"±			33'-9"±	38'-9"±
15'-0"	4'-9"±	4¼"		34'-3"±	39'-3"±

POLE TYPE	LOAD CASE	WIND VELOCITY (mph)	POLE DATA							BASE PLATE DATA				LUMINAIRE MAST ARM	SIGNAL MAST ARM	CIDH PILE FOUNDATION		
			A HEIGHT	Min OD BASE	Min OD TOP	THICKNESS	ALTERNATIVE SECTION B LENGTH	ALTERNATIVE SECTION BOTTOM	ALTERNATIVE SECTION TOP	C	BC = BOLT CIRCLE	THICKNESS	ANCHOR BOLT SIZE			Dia	DEPTH	REINFORCED
18-4-100	4	100	17'-0"	12⅛"	9 9/16"	0.3125"	NONE			1'-7"	1'-5½"	3"	2" Ø x 42"	NONE	25'-0", 30'-0"	3'-0"	11'-0"	YES
19-4-100			30'-0"		7 11/16"		10'-0"	9⅛"	7 11/16"					6'-15' 12'-0"				
19A-4-100			35'-0"		6 15/16"		15'-0'		6 15/16"					6'-15' 15'-0"				
23-4-100			17'-0"		9 9/16"		NONE							NONE	35'-0"			
24-4-100			30'-0"		7 11/16"		10'-0"	9⅛"	7 11/16"					6'-15' 12'-0"				
24A-4-100			35'-0"		6 15/16"		15'-0"		6 15/16"					6'-15' 15'-0"				
26-4-100			30'-0"	14"	8 3/16"		10'-0"	9⅝"	8 3/16"	23"	21"		2½" Ø x 42"	6'-15' 12'-0"	40'-0", 45'-0"	3'-6"	12'-0"	
26A-4-100			35'-0"		7 7/16"		15'-0"		7 7/16"					6'-15' 15'-0"				
27-4-100			17'-0"		10 1/16"		NONE							NONE				

INDICATES MAST ARM LENGTH TO BE USED UNLESS OTHERWISE NOTED ON PLANS.

STATE OF CALIFORNIA
DEPARTMENT OF TRANSPORTATION

ELECTRICAL SYSTEMS (SIGNAL AND LIGHTING STANDARD, CASE 4 SIGNAL MAST ARM LOADING, WIND VELOCITY=100 MPH AND SIGNAL MAST ARM LENGTHS 25' TO 45')

NO SCALE

RSP ES-7F DATED JULY 19, 2013 SUPERSEDES STANDARD PLAN ES-7F
DATED MAY 20, 2011 - PAGE 467 OF THE STANDARD PLANS BOOK DATED 2010.

REVISED STANDARD PLAN RSP ES-7F

2010 REVISED STANDARD PLAN RSP ES-7F

6-18-13

Dist	COUNTY	ROUTE	POST MILES TOTAL PROJECT	SHEET No.	TOTAL SHEETS
07	LA	101	16.7	56	58

Theresa Gabriel
REGISTERED ELECTRICAL ENGINEER

July 19, 2013
PLANS APPROVAL DATE

REGISTERED PROFESSIONAL ENGINEER
Theresa Aziz Gabriel
No. E15129
Exp. 6-30-14
ELECTRICAL
STATE OF CALIFORNIA

THE STATE OF CALIFORNIA OR ITS OFFICERS OR AGENTS SHALL NOT BE RESPONSIBLE FOR THE ACCURACY OR COMPLETENESS OF SCANNED COPIES OF THIS PLAN SHEET.

TO ACCOMPANY PLANS DATED 12-15-14

2010 REVISED STANDARD PLAN RSP ES-10A

ISOFOOTCANDLE CURVE - MINIMUM

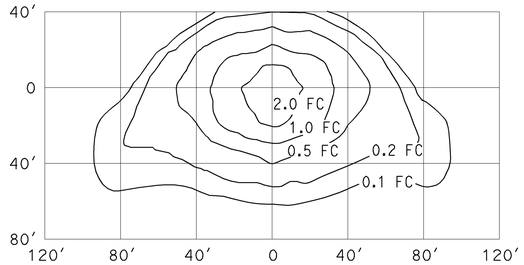

TYPE III MEDIUM CUTOFF

Cutoff Luminaire
34′ Mounting Height
Lamp operated at 22,000 lm
200-W high pressure sodium lamp
ANSI Designation S66

ISOFOOTCANDLE CURVE - MINIMUM

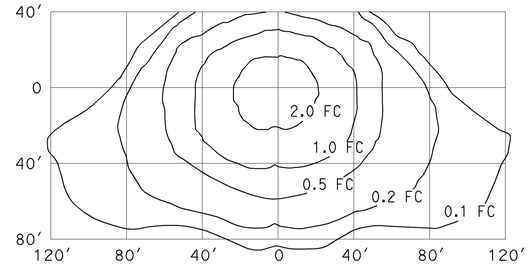

TYPE III MEDIUM CUTOFF

Cutoff Luminaire
40′ Mounting Height
Lamp operated at 37,000 lm
310-W high pressure sodium lamp
ANSI Designation S67

ISOFOOTCANDLE CURVE - MINIMUM

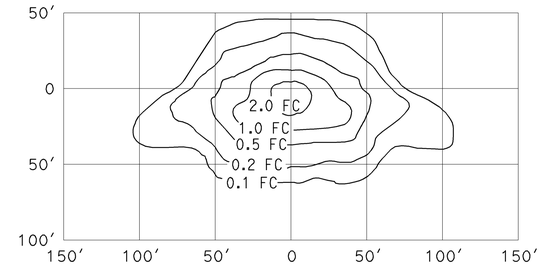

TYPE III MEDIUM CUTOFF

Cutoff Luminaire
30′ Mounting Height
Lamp operated at 16,000 lm
150-W high pressure sodium lamp
ANSI Designation S55

ISOFOOTCANDLE CURVE - MINIMUM

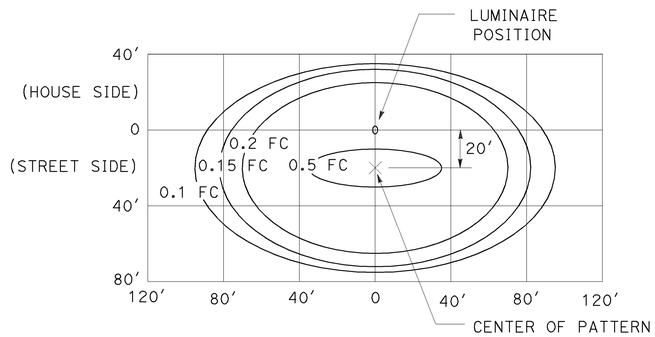

LED LUMINAIRE ROADWAY 1

165-W at 34′ Mounting Height

ISOFOOTCANDLE CURVE - MINIMUM

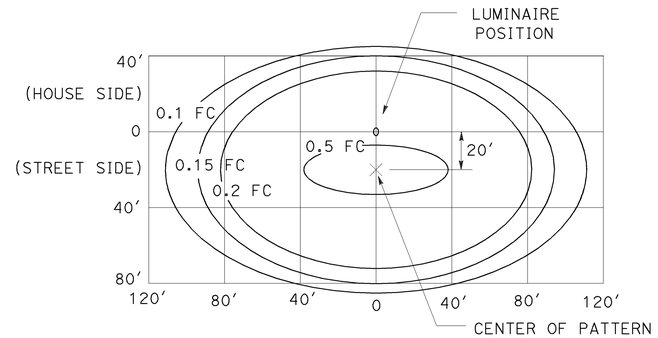

LED LUMINAIRE ROADWAY 2

235-W at 40′ Mounting Height

ISOFOOTCANDLE CURVE - MINIMUM

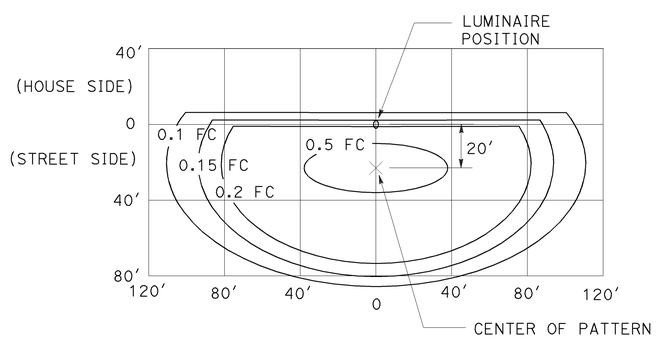

LED LUMINAIRE ROADWAY 3

235-W at 40′ Mounting Height
with back side control

ISOFOOTCANDLE CURVE - MINIMUM

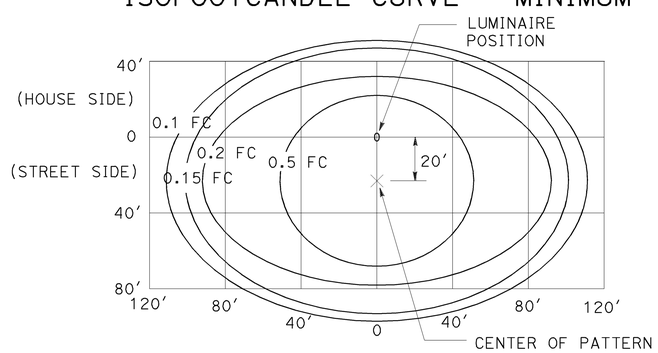

LED LUMINAIRE ROADWAY 4

300-W at 40′ Mounting Height

ISOFOOTCANDLE CURVE - MINIMUM

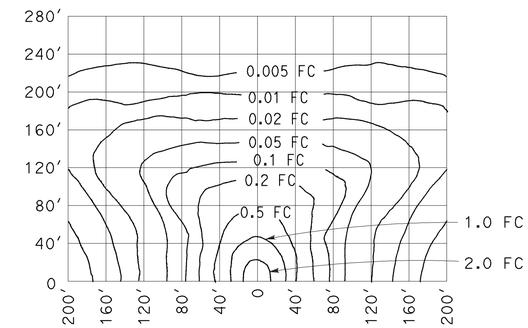

LOW PRESSURE SODIUM LUMINAIRE

40′ Mounting Height
Lamp operated at 33,000 lm
180-W low pressure sodium lamp

STATE OF CALIFORNIA
DEPARTMENT OF TRANSPORTATION

ELECTRICAL SYSTEMS (ISOFOOTCANDLE DIAGRAMS)

NO SCALE

RSP ES-10A DATED JULY 19, 2013 SUPERSEDES RSP ES-10A DATED JULY 20, 2012 THAT SUPPLEMENTS THE STANDARD PLANS BOOK DATED 2010.

REVISED STANDARD PLAN RSP ES-10A

Dist	COUNTY	ROUTE	POST MILES TOTAL PROJECT	SHEET No.	TOTAL SHEETS
07	LA	101	16.7	57	58

REGISTERED ELECTRICAL ENGINEER

July 20, 2012
PLANS APPROVAL DATE

REGISTERED PROFESSIONAL ENGINEER
Jeffery G. McRae
No. E14512
Exp. 6-30-14
ELECTRICAL
STATE OF CALIFORNIA

THE STATE OF CALIFORNIA OR ITS OFFICERS OR AGENTS SHALL NOT BE RESPONSIBLE FOR THE ACCURACY OR COMPLETENESS OF SCANNED COPIES OF THIS PLAN SHEET.

TO ACCOMPANY PLANS DATED 12-15-14

ISOFOOTCANDLE CURVE - MINIMUM

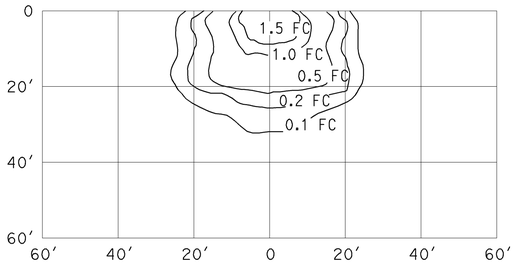

WALL LUMINAIRE
15′ Mounting Height
Lamp operated at 5,800 lm
70-W high pressure sodium lamp
ANSI Designation S62

ISOFOOTCANDLE CURVE - MINIMUM

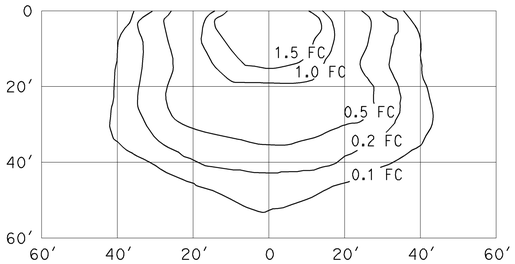

WALL LUMINAIRE
15′ Mounting Height
Lamp operated at 9,500 lm
100-W high pressure sodium lamp
ANSI Designation S54

ISOFOOTCANDLE CURVE - MINIMUM

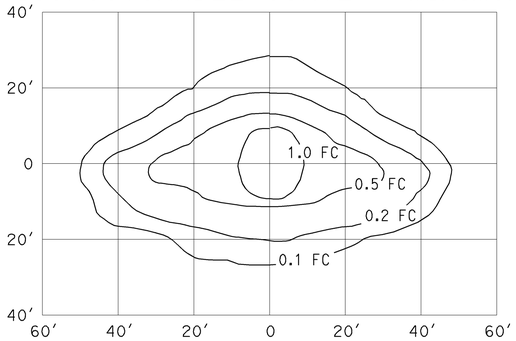

PENDANT SOFFIT LUMINAIRE
TYPE III SHORT
17′ Mounting Height
Lamp operated at 5,800 lm
70-W high pressure sodium lamp
ANSI Designation S62

ISOFOOTCANDLE CURVE - MINIMUM

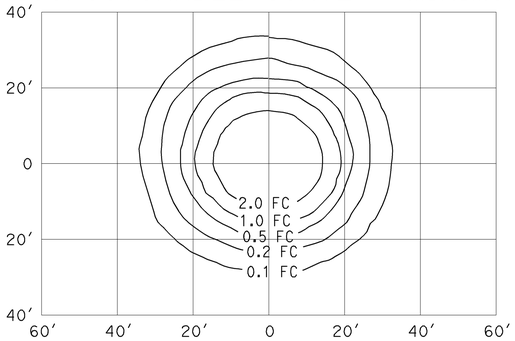

PENDANT SOFFIT LUMINAIRE
17′ Mounting Height
Lamp operated at 5,800 lm
70-W high pressure sodium lamp
ANSI Designation S62

ISOFOOTCANDLE CURVE - MINIMUM

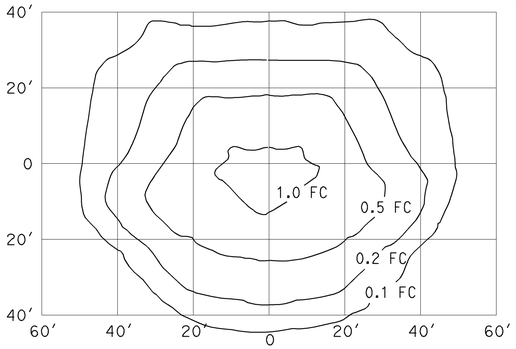

FLUSH SOFFIT LUMINAIRE
17′ Mounting Height
Lamp operated at 5,800 lm
70-W high pressure sodium lamp
ANSI Designation S62

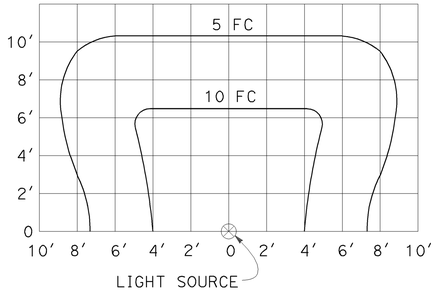

SIGN LIGHTING FIXTURE
ISOFOOTCANDLE DIAGRAM

NOTES:

1. Curves represent the minimum footcandle (FC) of initial illumination on a 10′-0" x 20′-0" panel.
2. The FC shown are with the fixture attached to the light fixture mounting channel which places the center of the source 4′-8" in front of panel and 1′-0" below the bottom edge.
3. Applicable lamp: 85-W fluorescent phosphor coated induction lamp.

STATE OF CALIFORNIA
DEPARTMENT OF TRANSPORTATION

ELECTRICAL SYSTEMS (ISOFOOTCANDLE DIAGRAMS)

NO SCALE

RSP ES-10B DATED JULY 20, 2012 SUPPLEMENTS THE STANDARD PLANS BOOK DATED 2010.

REVISED STANDARD PLAN RSP ES-10B

2010 REVISED STANDARD PLAN RSP ES-10B

Dist	COUNTY	ROUTE	POST MILES TOTAL PROJECT	SHEET No.	TOTAL SHEETS
07	LA	101	16.7	58	58

REGISTERED CIVIL ENGINEER

July 19, 2013
PLANS APPROVAL DATE

REGISTERED PROFESSIONAL ENGINEER
Stanley P. Johnson
No. C57793
Exp. 3-31-14
CIVIL
STATE OF CALIFORNIA

THE STATE OF CALIFORNIA OR ITS OFFICERS OR AGENTS SHALL NOT BE RESPONSIBLE FOR THE ACCURACY OR COMPLETENESS OF SCANNED COPIES OF THIS PLAN SHEET.

TO ACCOMPANY PLANS DATED 12-15-14

STANDARD TYPE	SETBACK (DIMENSION A)
32	30'-0" (Min)
31	20'-0" (Min)
15, 15D, 15-SB, 21, 21D, 30	ARM LENGTH (Min)

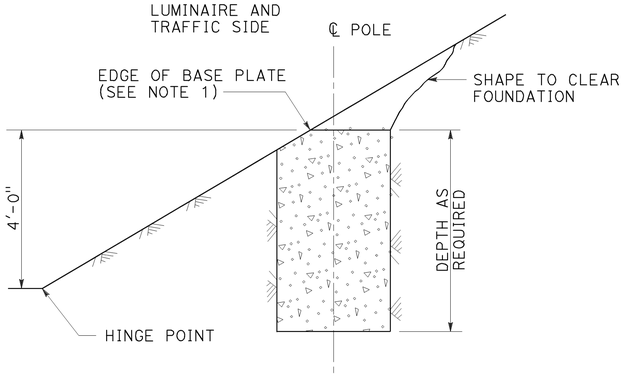

CUT SLOPES
STEEPER THAN 4:1,
LESS THAN 2:1
DETAIL A-1
See Note 2 and 3

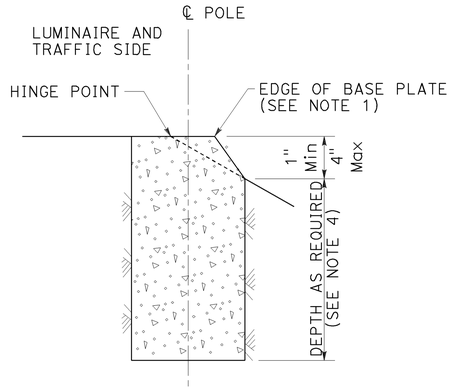

FILL SLOPES
STEEPER THAN 4:1,
LESS THAN 2:1
DETAIL A-2
See Note 2 and 3

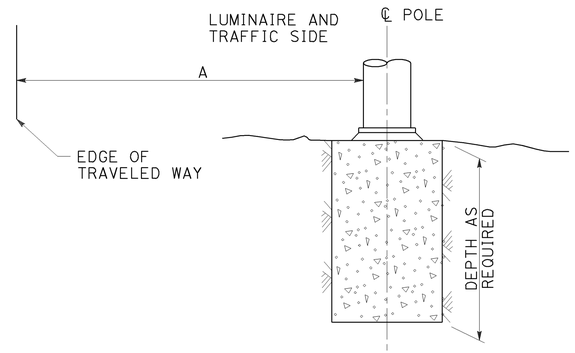

FLAT SECTIONS, CUT OR FILL SLOPES
4:1 OR FLATTER
DETAIL A-3
See Note 2

FOUNDATIONS ADJACENT TO ALL ROADWAYS EXCEPT
IN SIDEWALK, MEDIAN AND ISLAND AREAS
DETAIL A

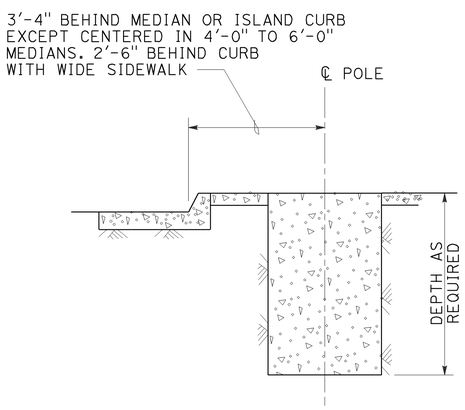

MEDIAN, ISLAND
OR WIDE SIDEWALK
DETAIL B-1
7' Wide and wider

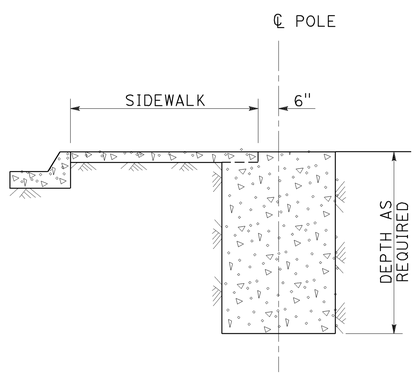

NARROW SIDEWALK
DETAIL B-2
Less than 7' wide

FOUNDATIONS IN SIDEWALK, MEDIAN AND ISLAND AREAS
DETAIL B

NOTES:

1. Where a portion of the foundation is above grade, the top edges shall have a 1" chamfer.
2. Slopes shall be horizontal to vertical ratio (Horizontal : Vertical).
3. Horizontal setbacks on cut and fill slopes steeper than 4:1 shall not exceed the distance shown for flat sections.
4. CIDH embedment depth shall be increased beyond standard depths by the diameter of the CIDH.

STATE OF CALIFORNIA
DEPARTMENT OF TRANSPORTATION

ELECTRICAL SYSTEMS (FOUNDATION INSTALLATIONS)

NO SCALE

RSP ES-11 DATED JULY 19, 2013 SUPERSEDES STANDARD PLAN ES-11
DATED MAY 20, 2011 - PAGE 488 OF THE STANDARD PLANS BOOK DATED 2010.

REVISED STANDARD PLAN RSP ES-11

2010 REVISED STANDARD PLAN RSP ES-11

7-9-13