Dist	COUNTY	ROUTE	POST MILES TOTAL PROJECT	SHEET No.	TOTAL SHEETS
07	LA	1	20.7	1	22

INDEX OF PLANS

SHEET No.	DESCRIPTION
1	TITLE AND LOCATION MAP
2-5	CONSTRUCTION DETAILS
6-7	UTILITY PLANS
8	TRAFFIC HANDLING PLANS
9	CONSTRUCTION AREA SIGNS
10	PAVEMENT DELINEATION PLANS
11	SUMMARY OF QUANTITIES
12-17	ELECTRICAL PLANS
18	TRAFFIC CONTROL SYSTEM
19-22	REVISED AND NEW STANDARD PLANS

THE STANDARD PLANS LIST APPLICABLE TO THIS CONTRACT IS INCLUDED IN THE NOTICE TO BIDDERS AND SPECIAL PROVISIONS BOOK.

STATE OF CALIFORNIA

DEPARTMENT OF TRANSPORTATION

PROJECT PLANS FOR CONSTRUCTION ON

STATE HIGHWAY

IN LOS ANGELES COUNTY
IN HERMOSA BEACH
AT 2ND STREET

TO BE SUPPLEMENTED BY STANDARD PLANS DATED 2010

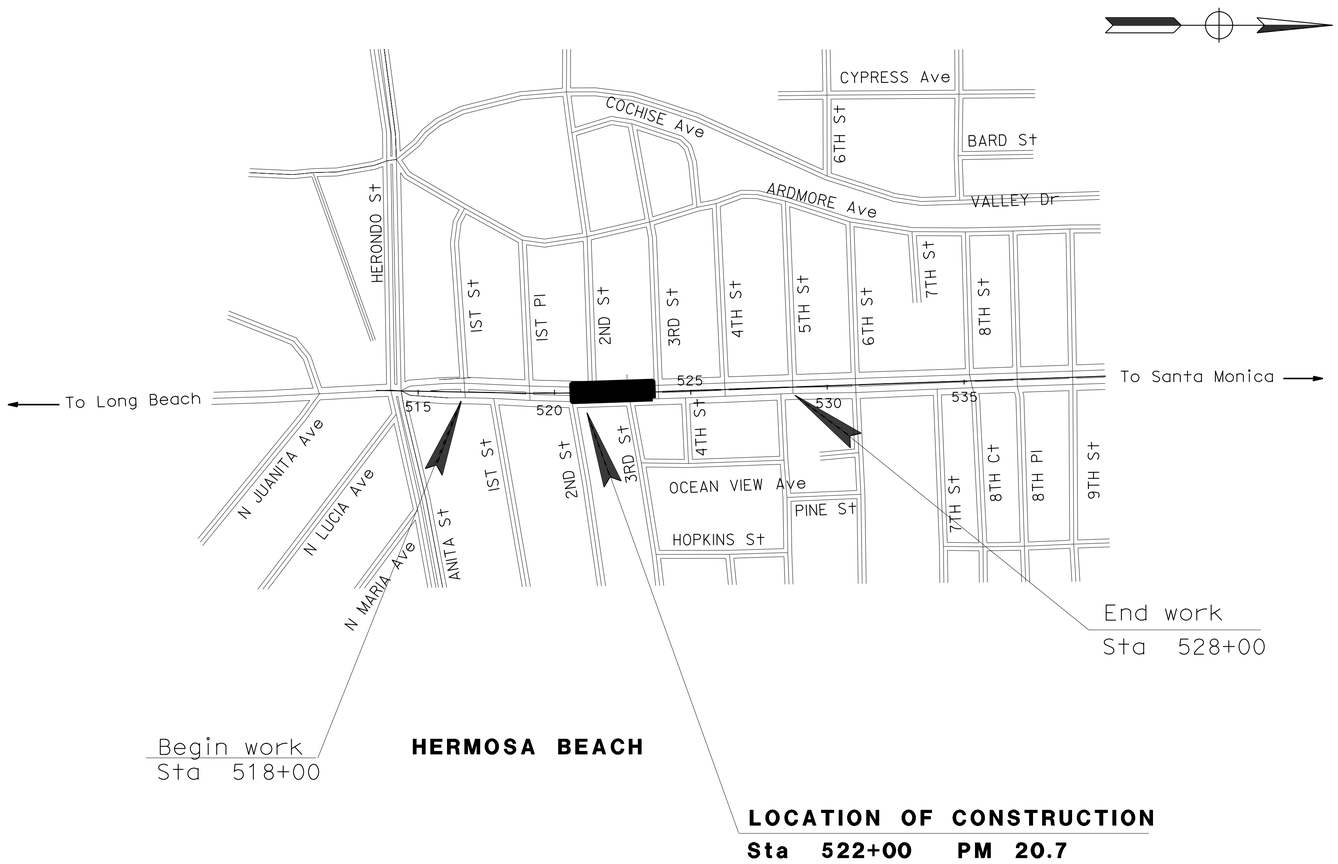

LOCATION MAP

PROJECT MANAGER
ERIC WANG

DESIGN ENGINEER
XOCHILT NARANJO

Kenny Nguyen 2/19/13
PROJECT ENGINEER DATE
REGISTERED ELECTRICAL ENGINEER

March 25, 2013
PLANS APPROVAL DATE

REGISTERED PROFESSIONAL ENGINEER
KENNY NGUYEN
No. E17759
Exp. 6/30/14
ELECTRICAL
STATE OF CALIFORNIA

THE STATE OF CALIFORNIA OR ITS OFFICERS OR AGENTS SHALL NOT BE RESPONSIBLE FOR THE ACCURACY OR COMPLETENESS OF SCANNED COPIES OF THIS PLAN SHEET.

THE CONTRACTOR SHALL POSSESS THE CLASS (OR CLASSES) OF LICENSE AS SPECIFIED IN THE "NOTICE TO BIDDERS."

NO SCALE

CONTRACT No.	07-4T5404
PROJECT ID	0712000133

LAST REVISION 00-00-00
DATE PLOTTED => 28-MAR-2013
TIME PLOTTED => 11:25

Dist	COUNTY	ROUTE	POST MILES TOTAL PROJECT	SHEET No.	TOTAL SHEETS
07	LA	1	20.7	2	22

REGISTERED CIVIL ENGINEER 2/19/13 DATE

3-25-13
PLANS APPROVAL DATE

REGISTERED PROFESSIONAL ENGINEER ANH D. NGUYEN No. 62370 Exp. 9/30/13 CIVIL STATE OF CALIFORNIA

THE STATE OF CALIFORNIA OR ITS OFFICERS OR AGENTS SHALL NOT BE RESPONSIBLE FOR THE ACCURACY OR COMPLETENESS OF SCANNED COPIES OF THIS PLAN SHEET.

NOTES:

1. FOR ACCURATE RIGHT OF WAY DATA, CONTACT RIGHT OF WAY ENGINEERING AT THE DISTRICT OFFICE.
2. MAINTAIN EXISTING FLOWLINE.

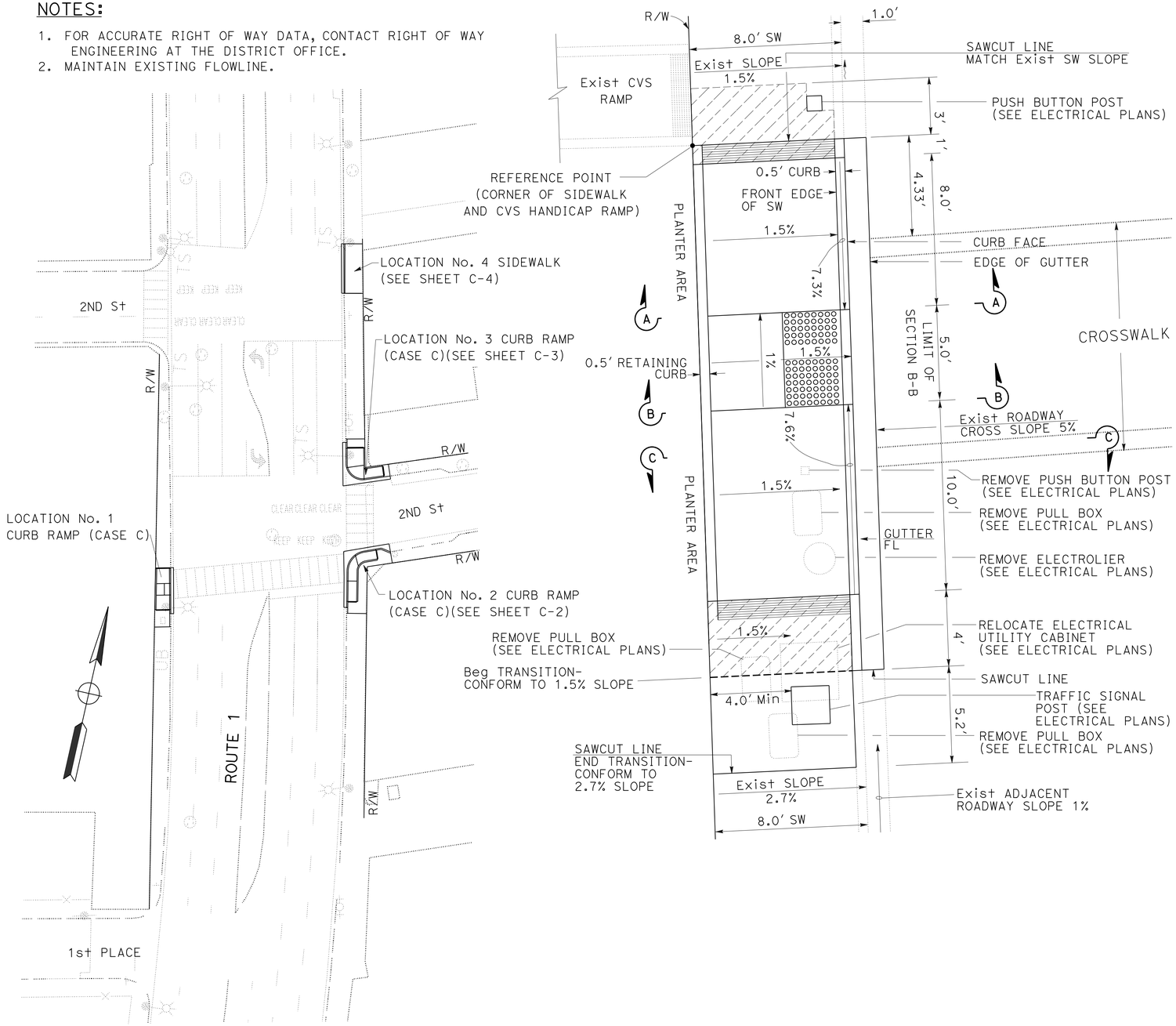

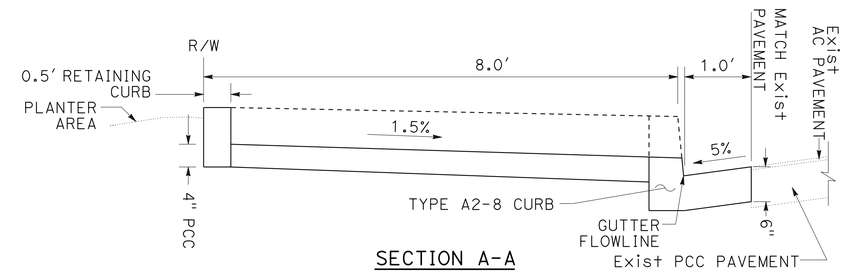

SECTION A-A

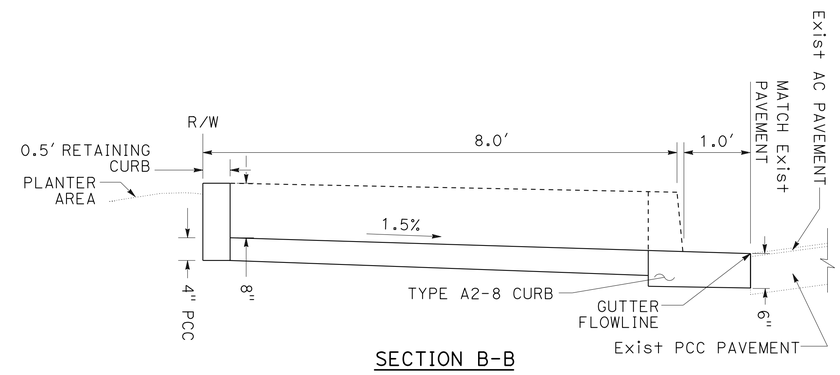

SECTION B-B

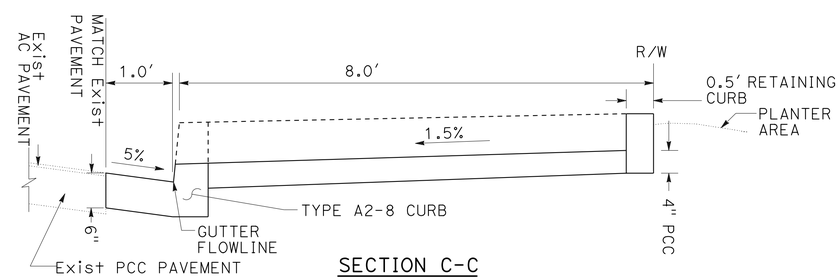

SECTION C-C

LEGEND:

- DETECTABLE WARNING SURFACE (FOR ADDITIONAL DETAILS OF DETECTABLE WARNING SURFACE SEE STANDARD PLAN A88A).
- GROOVING
- LANDING

- (RM) REMOVE ROADSIDE SIGN (METAL POST)
- (SS) INSTALL SIGN (STRAP AND SADDLE BRACKET METHOD)
- (RLM) RELOCATE ROADSIDE SIGN (METAL POST)

LOCATION No. 1 CURB RAMP (CASE C)

ROUTE 1 AND 2ND St (EASTBOUND)
(SOUTHWEST CORNER)(PM 20.7)

CONSTRUCTION DETAILS

NO SCALE

C-1

REVISED BY	DATE REVISED
JAMES M. CANALITA	ANH D. NGUYEN
CALCULATED-DESIGNED BY	CHECKED BY
FUNCTIONAL SUPERVISOR	MOHAMMED CHOWDHURY

STATE OF CALIFORNIA - DEPARTMENT OF TRANSPORTATION
Caltrans® TRAFFIC DESIGN

S:\projects\4t540\Minor A\74t540ga001.dgn

LAST REVISION 00-00-00 | DATE PLOTTED => 28-MAR-2013 | TIME PLOTTED => 11:25

Dist	COUNTY	ROUTE	POST MILES TOTAL PROJECT	SHEET No.	TOTAL SHEETS
07	LA	1	20.7	3	22

REGISTERED CIVIL ENGINEER 2/19/13 DATE

3-25-13
PLANS APPROVAL DATE

REGISTERED PROFESSIONAL ENGINEER ANH D. NGUYEN No. 62370 Exp. 9/30/13 CIVIL STATE OF CALIFORNIA

THE STATE OF CALIFORNIA OR ITS OFFICERS OR AGENTS SHALL NOT BE RESPONSIBLE FOR THE ACCURACY OR COMPLETENESS OF SCANNED COPIES OF THIS PLAN SHEET.

NOTES:

1. FOR ACCURATE RIGHT OF WAY DATA, CONTACT RIGHT OF WAY ENGINEERING AT THE DISTRICT OFFICE.
2. DOWELS FOR CONTACT JOINT SHALL BE #4 BARS 18" LONG.
3. MAINTAIN EXISTING FLOWLINE.

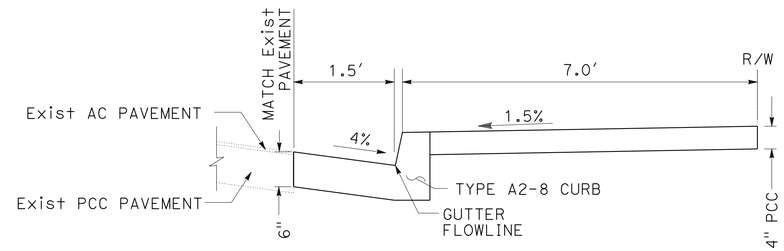

SECTION D-D

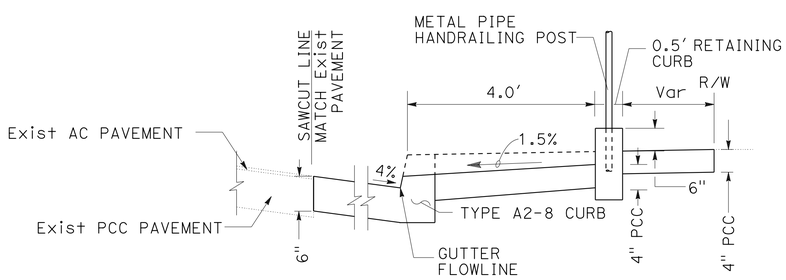

SECTION E-E

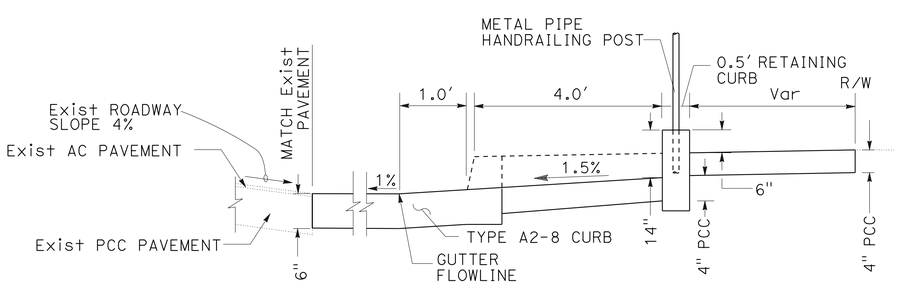

SECTION F-F

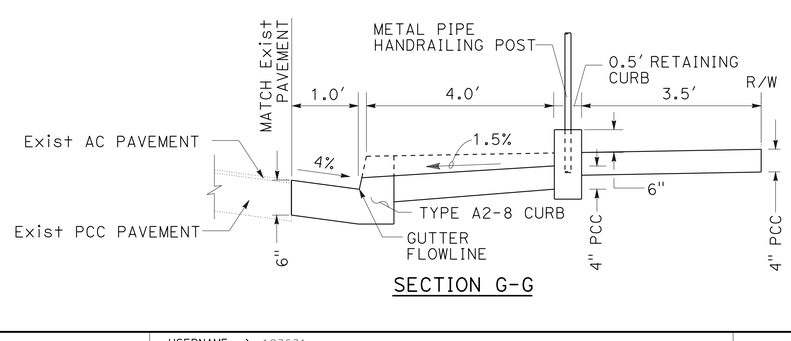

SECTION G-G

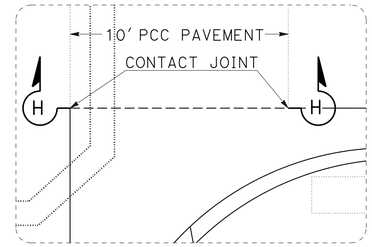

DETAIL A

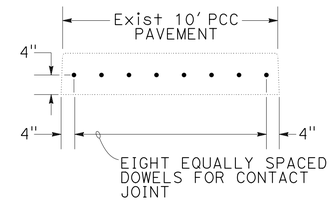

SECTION H-H

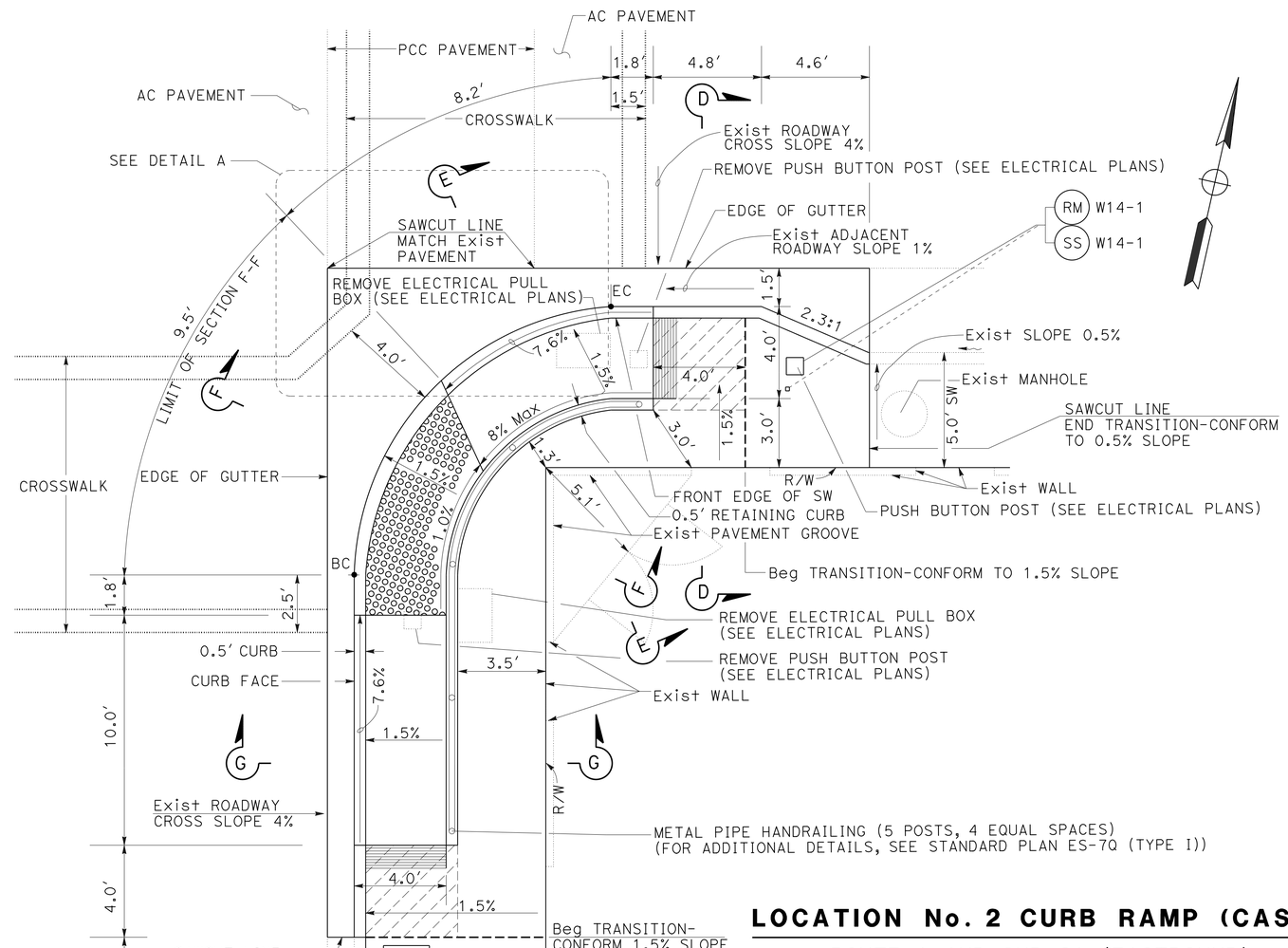

LOCATION No. 2 CURB RAMP (CASE C)

ROUTE 1 AND 2ND St (EASTBOUND)
(SOUTHEAST CORNER)(PM 20.7)

CONSTRUCTION DETAILS

NO SCALE

C-2

STATE OF CALIFORNIA - DEPARTMENT OF TRANSPORTATION
Caltrans® TRAFFIC DESIGN

FUNCTIONAL SUPERVISOR: MOHAMMED CHOWDHURY
CALCULATED-DESIGNED BY: ANH D. NGUYEN
CHECKED BY: JAMES M. CANALITA
REVISED BY
DATE REVISED

LAST REVISION 00-00-00 | DATE PLOTTED => 28-MAR-2013 | TIME PLOTTED => 15:00

Dist	COUNTY	ROUTE	POST MILES TOTAL PROJECT	SHEET No.	TOTAL SHEETS
07	LA	1	20.7	4	22

REGISTERED CIVIL ENGINEER 2/19/13 DATE

3-25-13
PLANS APPROVAL DATE

REGISTERED PROFESSIONAL ENGINEER ANH D. NGUYEN No. 62370 Exp. 9/30/13 CIVIL STATE OF CALIFORNIA

THE STATE OF CALIFORNIA OR ITS OFFICERS OR AGENTS SHALL NOT BE RESPONSIBLE FOR THE ACCURACY OR COMPLETENESS OF SCANNED COPIES OF THIS PLAN SHEET.

NOTES:

1. FOR ACCURATE RIGHT OF WAY DATA, CONTACT RIGHT OF WAY ENGINEERING AT THE DISTRICT OFFICE.
2. DOWELS FOR CONTACT JOINT SHALL BE #4 BARS 18" LONG.
3. MAINTAIN EXISTING FLOWLINE.

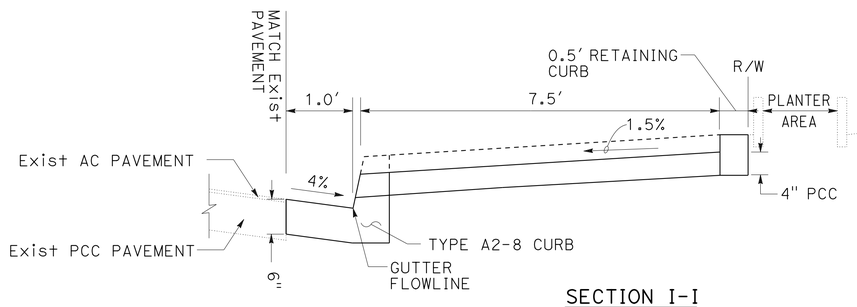

SECTION I-I

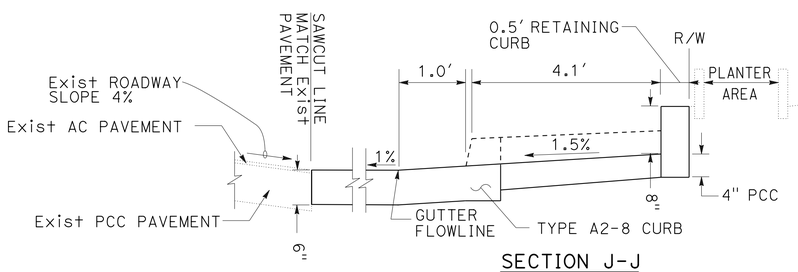

SECTION J-J

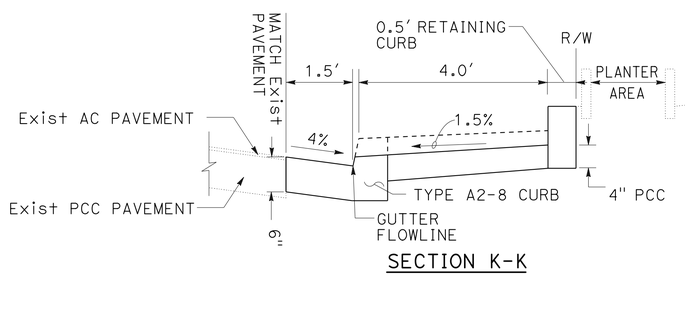

SECTION K-K

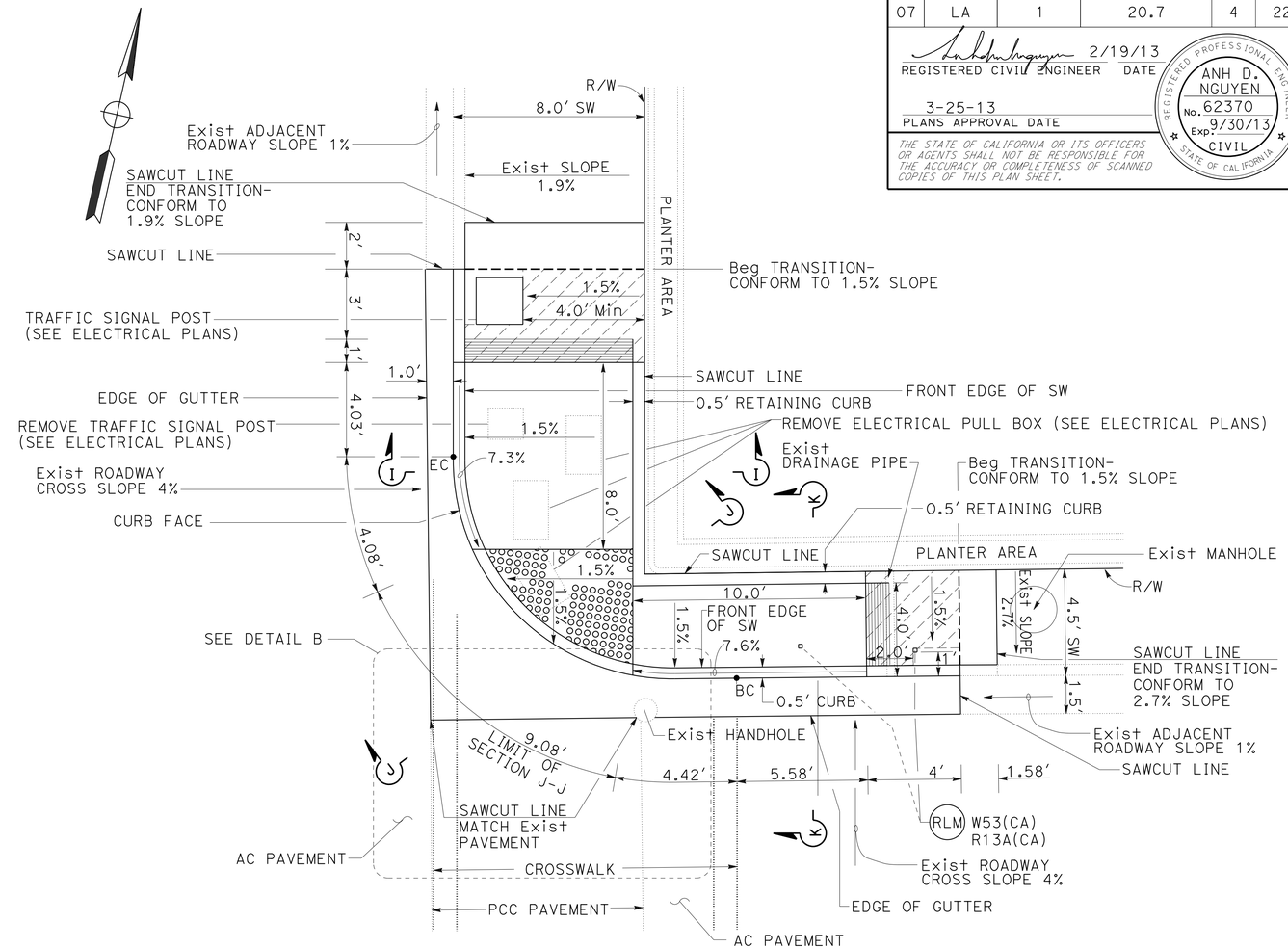

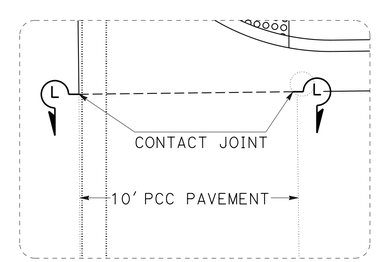

DETAIL B

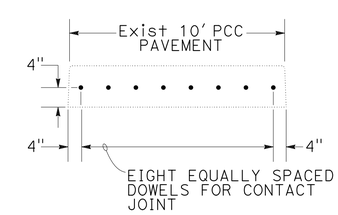

SECTION L-L

LOCATION No. 3 CURB RAMP (CASE C)

ROUTE 1 AND 2ND St (EASTBOUND)
(NORTHEAST CORNER)(PM 20.7)

CONSTRUCTION DETAILS

NO SCALE

C-3

REVISED BY | DATE REVISED
JAMES M. CANALITA | ANH D. NGUYEN
CALCULATED-DESIGNED BY | CHECKED BY
FUNCTIONAL SUPERVISOR
MOHAMMED CHOWDHURY

STATE OF CALIFORNIA - DEPARTMENT OF TRANSPORTATION
Caltrans TRAFFIC DESIGN

S:\projects\4t5401\Minor A\74t540ga003.dgn

LAST REVISION 00-00-00 | DATE PLOTTED => 28-MAR-2013 | TIME PLOTTED => 12:48

Dist	COUNTY	ROUTE	POST MILES TOTAL PROJECT	SHEET No.	TOTAL SHEETS
07	LA	1	20.7	5	22

REGISTERED CIVIL ENGINEER 2/19/13 DATE

3-25-13
PLANS APPROVAL DATE

REGISTERED PROFESSIONAL ENGINEER ANH D. NGUYEN No. 62370 Exp. 9/30/13 CIVIL STATE OF CALIFORNIA

THE STATE OF CALIFORNIA OR ITS OFFICERS OR AGENTS SHALL NOT BE RESPONSIBLE FOR THE ACCURACY OR COMPLETENESS OF SCANNED COPIES OF THIS PLAN SHEET.

NOTES:

1. FOR ACCURATE RIGHT OF WAY DATA, CONTACT RIGHT OF WAY ENGINEERING AT THE DISTRICT OFFICE.
2. MAINTAIN EXISTING FLOWLINE.

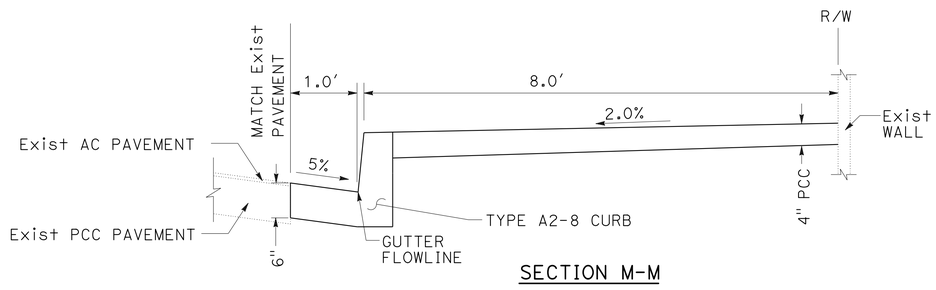

SECTION M-M

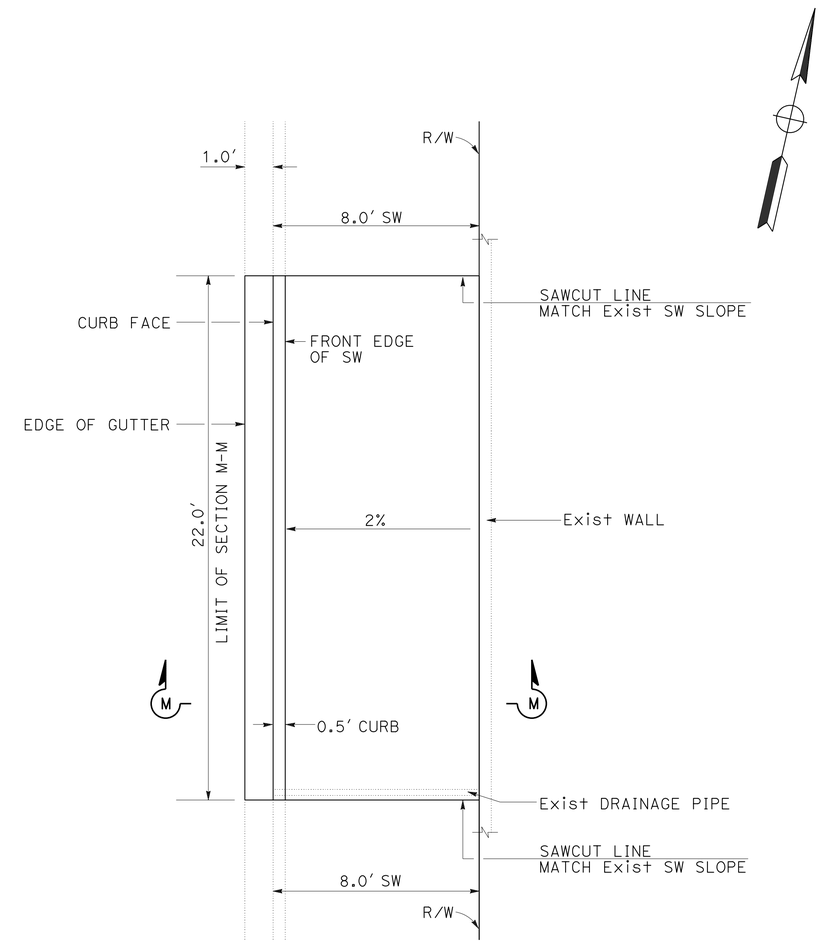

LOCATION No. 4 SIDEWALK

ROUTE 1 AND 2ND St (WESTBOUND)
(NORTHEAST CORNER)(PM 20.7)

CONSTRUCTION DETAILS

NO SCALE

C-4

REVISED BY | DATE REVISED
JAMES M. CANALITA | ANH D. NGUYEN
CALCULATED-DESIGNED BY | CHECKED BY
FUNCTIONAL SUPERVISOR
MOHAMMED CHOWDHURY

STATE OF CALIFORNIA - DEPARTMENT OF TRANSPORTATION
Caltrans TRAFFIC DESIGN

S:\projects\4t540\Minor A\74t540ga004.dgn

LAST REVISION 00-00-00 | DATE PLOTTED => 28-MAR-2013 | TIME PLOTTED => 12:48

Dist	COUNTY	ROUTE	POST MILES TOTAL PROJECT	SHEET No.	TOTAL SHEETS
07	LA	1	20.7	6	22

N. Celina Aviles 12/31/12
REGISTERED CIVIL ENGINEER DATE

3-25-13
PLANS APPROVAL DATE

REGISTERED PROFESSIONAL ENGINEER N. CELINA AVILES No. 57106 Exp. 12/31/13 CIVIL STATE OF CALIFORNIA

THE STATE OF CALIFORNIA OR ITS OFFICERS OR AGENTS SHALL NOT BE RESPONSIBLE FOR THE ACCURACY OR COMPLETENESS OF SCANNED COPIES OF THIS PLAN SHEET.

NOTES: (SHEETS U-1, U-2)

1. FOR COMPLETE RIGHT OF WAY DATA, CONTACT RIGHT OF WAY ENGINEERING AT THE DISTRICT OFFICE.
2. UTILITY OWNERSHIP ON THIS PROJECT:

   TELEPHONE - VERIZON OR AT&T
   WATER - CALIFORNIA WATER
   GAS - SOUTHERN CALIFORNIA GAS
   SEWER - HERMOSA BEACH SANITARY SEWER

3. COORDINATES FOR THIS PROJECT ARE BASED ON THE CALIFORNIA COORDINATE SYSTEM OF 1983. HPGN EPOCH ADJUSTMENT [CCS 83(1991.35)], ZONE 5, U.S. SURVEY FOOT.
4. ELEVATIONS FOR THIS PROJECT ARE BASED ON THE NORTH AMERICAN VERTICAL DATUM OF 1988 (NAVD).

ABBREVIATION

MTD	MUTIPLE TILE DUCT
ACD	ASBESTOS CEMENT DUCT
SHP	STEEL HIGH PRESSURE
SCG	SOUTHERN CALIFORNIA GAS
SCE	SOUTHERN CALIFORNIA EDISON
GIP	GALVANIZED IRON PIPE
IP	IRON PIPE
CAL W	CALIFORNIA WATER
Hm. B. San. Swr	HERMOSA BEACH SANITARY SEWER
PE	PLASTIC ENCASED
AT&T	AMERICAN TELEPHONE AND TELEGRAPH
SS	STANDARD SCREW
LA. Flood Cont.	LOS ANGELES FLOOD CONTROL
EW	EAST OF WEST
NS	NORTH OF SOUTH
WE	WEST OF EAST
SN	SOUTH OF NORTH

POSITIVE LOCATION INFORMATION

No.	NORTHING	EASTING	UTILITY	ELEVATION (FT)	DEPTH (FT)	METHOD
1	1770265.69	6443054.61	GAS	87.56	2.82	POTHOLING
2	1770289.04	6443117.84	ELECTRIC	87.54	3.06	POTHOLING
3	1770309.93	6443126.68	TELEPHONE	87.48	2.47	POTHOLING
4	1770310.63	6443126.37	STORMDRAIN	87.51	3.12	POTHOLING
5	1770312.03	6443125.21	ELECTRIC	87.55	1.67	POTHOLING
6	1770314.21	6443124.48	WATER	87.55	5.77	POTHOLING
7	1770328.59	6443105.25	WATER	87.73	2.51	POTHOLING
8	1770349.32	6443048.68	TELEPHONE	87.72	3.12	POTHOLING
9	1770328.19	6443128.04	TELEPHONE	87.82	1.64	POTHOLING
10	1770333.15	6443119.27	WATER	87.52	0.88	POTHOLING
11	1770349.82	6443157.54	TELEPHONE	88.45	10.74	POTHOLING
12	1770434.07	6443082.98	STORMDRAIN	87.72	3.69	POTHOLING
13	1770434.22	6443084.44	ELECTRIC	86.69	2.69	POTHOLING
14	1770460.44	6443084.96	TELEPHONE	87.14	7.30	POTHOLING
15	1770632.97	6442968.47	GAS	83.64	2.60	POTHOLING
16	1770631.87	6442966.92	WATER	83.43	4.01	POTHOLING
17	1770420.82	6443016.62	WATER	86.61	2.53	POTHOLING

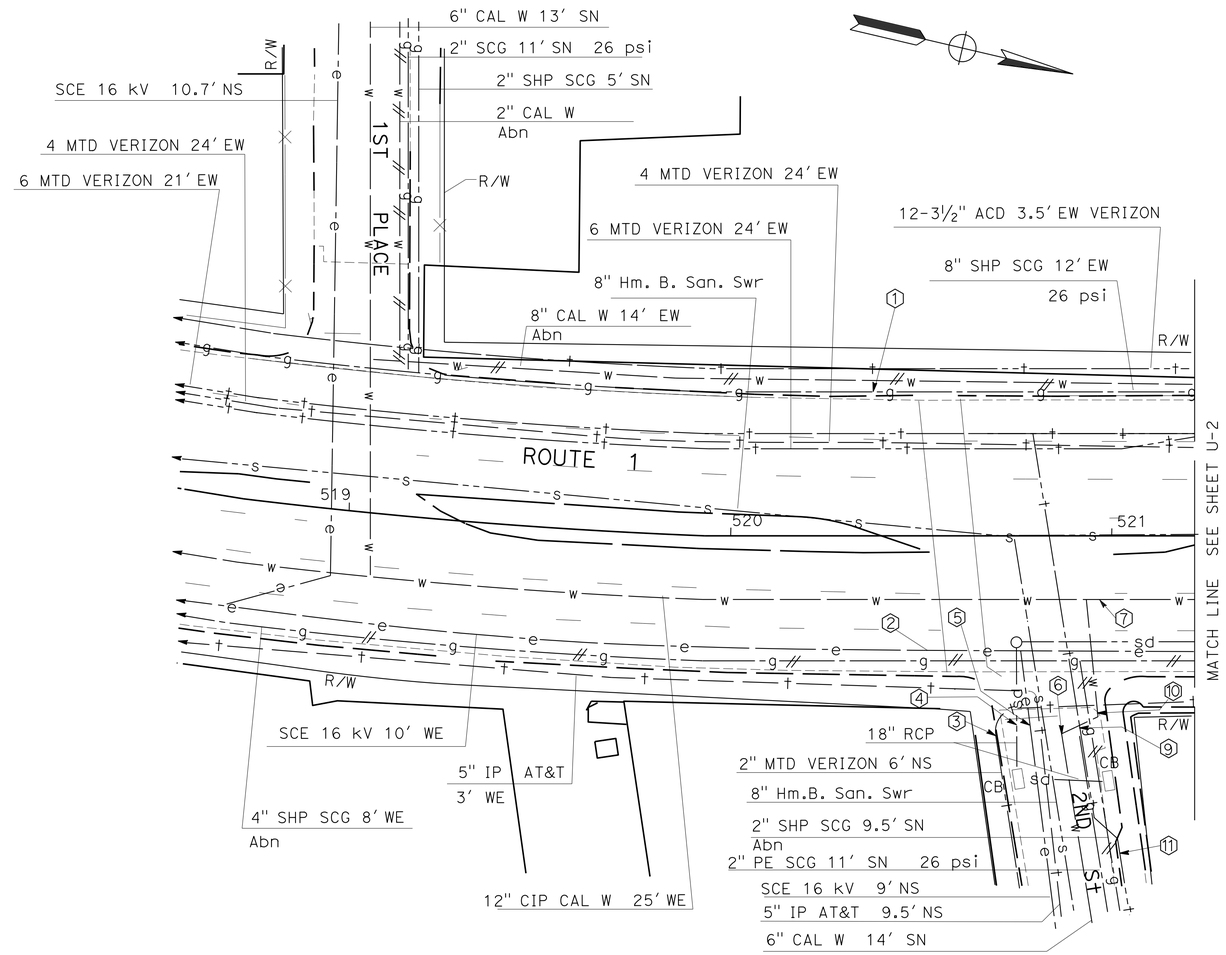

UTILITY PLAN

SCALE: 1" = 20'

APPROVED FOR UTILITY INFORMATION ONLY

U-1

STATE OF CALIFORNIA - DEPARTMENT OF TRANSPORTATION
Caltrans® TRAFFIC DESIGN
FUNCTIONAL SUPERVISOR: CELINA AVILES
CALCULATED-DESIGNED BY: KENNY NGUYEN
CHECKED BY: CELINA AVILES
REVISED BY / DATE REVISED

LAST REVISION 00-00-00 | DATE PLOTTED => 28-MAR-2013 | TIME PLOTTED => 12:48

BORDER LAST REVISED 7/2/2010 | USERNAME => s123631 | DGN FILE => 74+540ka001.dgn | RELATIVE BORDER SCALE IS IN INCHES 0 1 2 3 | UNIT 1879 | PROJECT NUMBER & PHASE 07120001331

Dist	COUNTY	ROUTE	POST MILES TOTAL PROJECT	SHEET No.	TOTAL SHEETS
07	LA	1	20.7	7	22

N. Celina Aviles 12/31/12
REGISTERED CIVIL ENGINEER DATE

3-25-13
PLANS APPROVAL DATE

REGISTERED PROFESSIONAL ENGINEER N.CELINA AVILES No. 57106 Exp. 12/31/13 CIVIL STATE OF CALIFORNIA

THE STATE OF CALIFORNIA OR ITS OFFICERS OR AGENTS SHALL NOT BE RESPONSIBLE FOR THE ACCURACY OR COMPLETENESS OF SCANNED COPIES OF THIS PLAN SHEET.

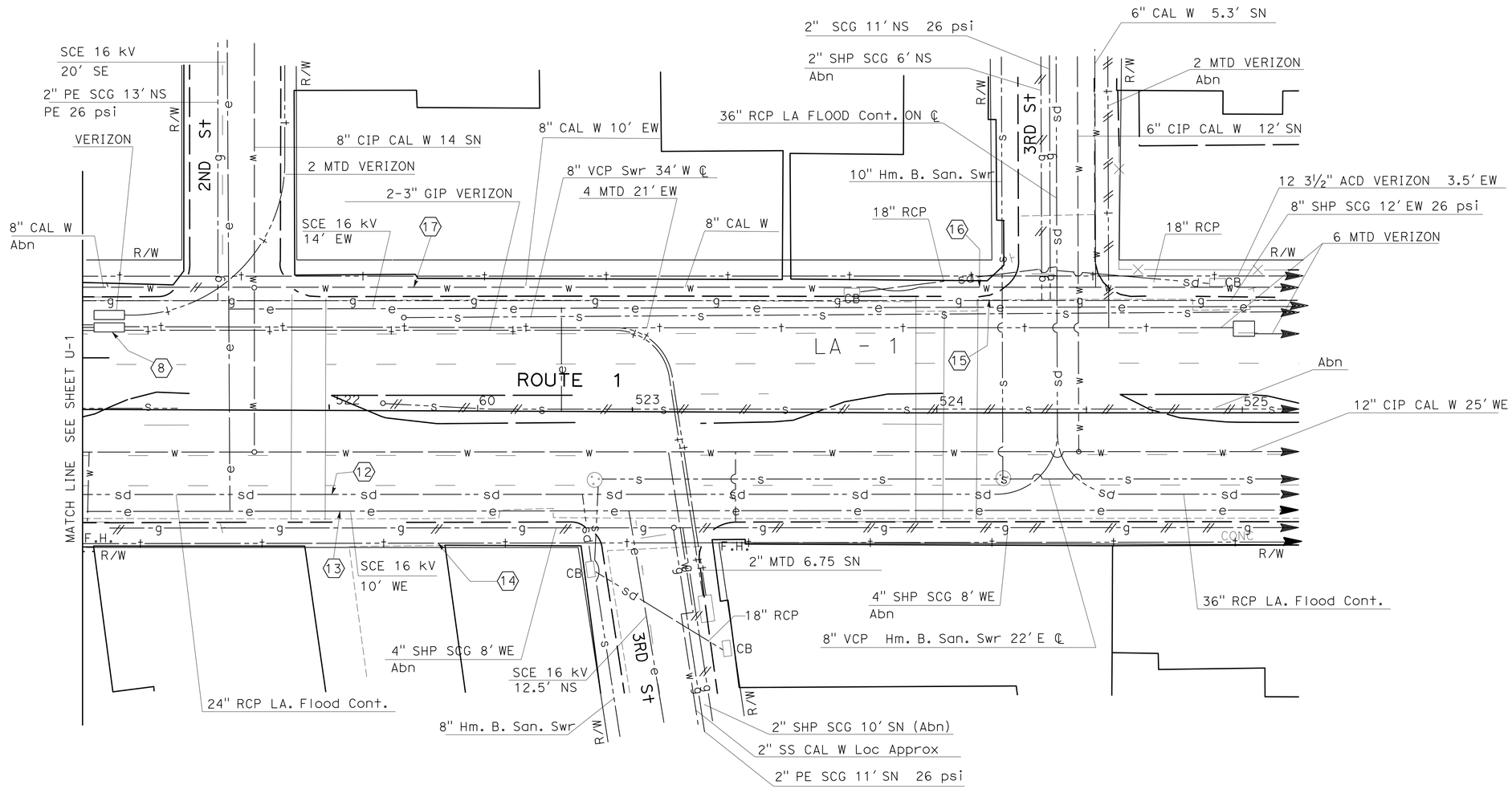

UTILITY PLAN

SCALE: 1" = 20'

U-2

APPROVED FOR UTILITY INFORMATION ONLY

STATE OF CALIFORNIA - DEPARTMENT OF TRANSPORTATION
Caltrans
TRAFFIC DESIGN

FUNCTIONAL SUPERVISOR: CELINA AVILES
CALCULATED-DESIGNED BY: KENNY NGUYEN
CHECKED BY: CELINA AVILES
REVISED BY
DATE REVISED

LAST REVISION 00-00-00
DATE PLOTTED => 28-MAR-2013
TIME PLOTTED => 12:48

Dist	COUNTY	ROUTE	POST MILES TOTAL PROJECT	SHEET No.	TOTAL SHEETS
07	LA	1	20.7	8	22

REGISTERED CIVIL ENGINEER 2/19/13 DATE

3-25-13
PLANS APPROVAL DATE

REGISTERED PROFESSIONAL ENGINEER ANH D. NGUYEN No. 62370 Exp. 9/30/13 CIVIL STATE OF CALIFORNIA

THE STATE OF CALIFORNIA OR ITS OFFICERS OR AGENTS SHALL NOT BE RESPONSIBLE FOR THE ACCURACY OR COMPLETENESS OF SCANNED COPIES OF THIS PLAN SHEET.

STATIONARY MOUNTED CONSTRUCTION AREA SIGNS

SIGN No.	SIGN CODE	DESCRIPTION	PANEL SIZE	No. OF POSTS AND SIZE	No. OF SIGNS
A	W20-1	ROAD WORK AHEAD	36" X 36"	1 - 4" X 4"	6
B	G20-2	END ROAD WORK	36" X 18"	1 - 4" X 4"	6
C	C40A(CA)	TRAFFIC FINES DOUBLED IN CONSTRUCTION ZONES	48" X 48"	1 - 4" X 6"	2

SIGN CODE LEGEND:

XXX-XX: FEDERAL SIGN CODE PER MANUAL OF UNIFORM TRAFFIC CONTROL DEVICES (MUTCD).
XXX-XX(CA): CALIFORNIA SIGN CODE PER CALIFORNIA (MUTCD).

NOTES:

1. LOCATIONS OF CONSTRUCTION AREA SIGNS SHOWN ARE APPROXIMATE.
2. EXACT LOCATIONS WILL BE DETERMINED BY THE ENGINEER.
3. FOR ADDITIONAL CONSTRUCTION AREA SIGNS, SEE TRAFFIC HANDLING PLANS.

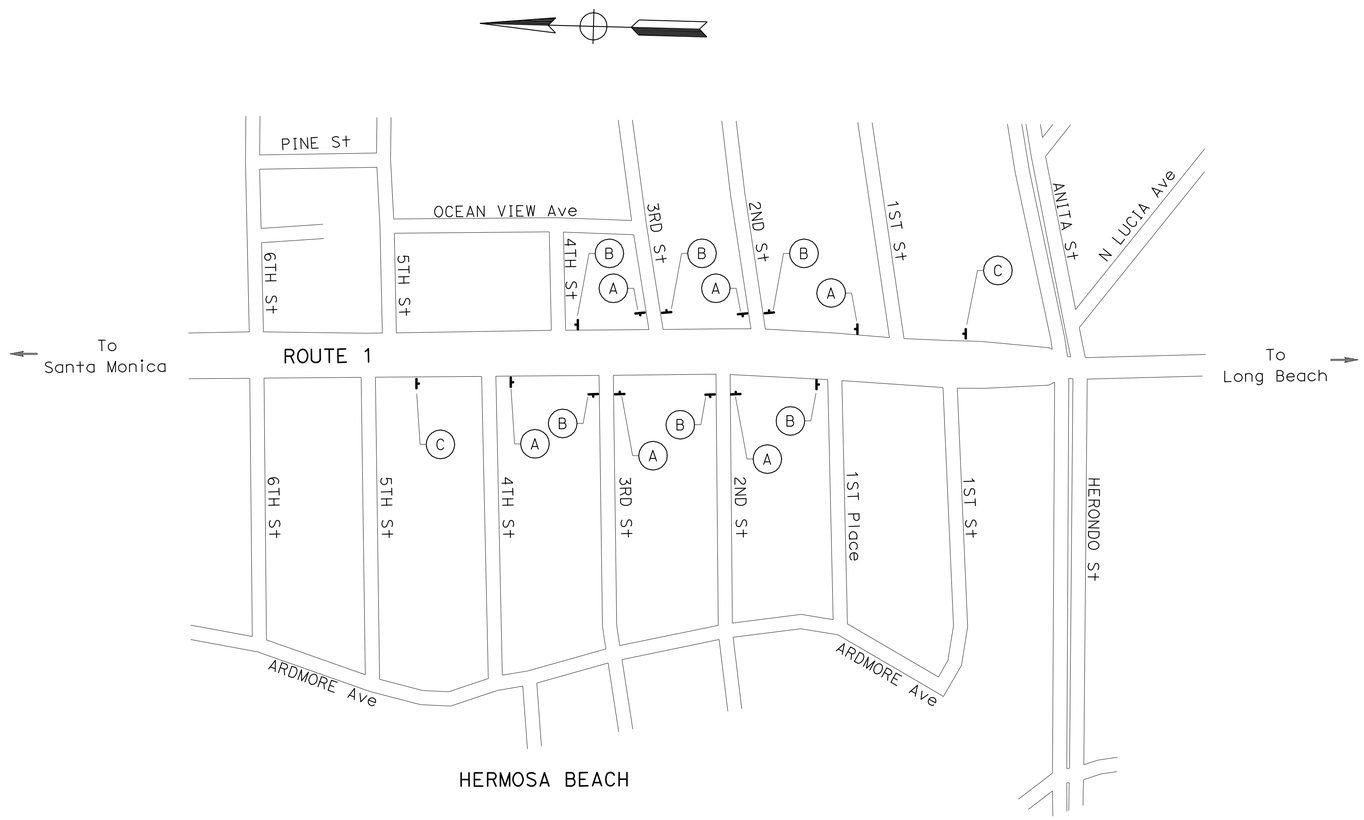

CONSTRUCTION AREA SIGNS

NO SCALE

CS-1

APPROVED FOR CONSTRUCTION AREA SIGN WORK ONLY

STATE OF CALIFORNIA - DEPARTMENT OF TRANSPORTATION
Caltrans® TRAFFIC DESIGN

FUNCTIONAL SUPERVISOR: MOHAMMED CHOWDHURY
CALCULATED-DESIGNED BY: JAMES M. CANALITA
CHECKED BY: ANH D. NGUYEN
REVISED BY
DATE REVISED

S:\projects\4t5401\Minor A\74t5401a001.dgn

LAST REVISION 00-00-00
DATE PLOTTED => 28-MAR-2013
TIME PLOTTED => 11:36

Dist	COUNTY	ROUTE	POST MILES TOTAL PROJECT	SHEET No.	TOTAL SHEETS
07	LA	1	20.7	9	22

REGISTERED CIVIL ENGINEER 2/19/13 DATE

3-25-13
PLANS APPROVAL DATE

REGISTERED PROFESSIONAL ENGINEER ANH D. NGUYEN No. 62370 Exp. 9/30/13 CIVIL STATE OF CALIFORNIA

THE STATE OF CALIFORNIA OR ITS OFFICERS OR AGENTS SHALL NOT BE RESPONSIBLE FOR THE ACCURACY OR COMPLETENESS OF SCANNED COPIES OF THIS PLAN SHEET.

STATIONARY MOUNTED CONSTRUCTION AREA SIGNS

SIGN No.	SIGN CODE	DESCRIPTION	PANEL SIZE	No. OF SIGNS	SPECIAL REQUIREMENT
1	R9-11(R+)	SIDEWALK CLOSED AHEAD ACROSS HERE	48" X 36"	2	MOUNT SIGN ON TYPE III BARRICADE
2	R9-11(L+)	SIDEWALK CLOSED AHEAD ACROSS HERE	48" X 36"	2	MOUNT SIGN ON TYPE III BARRICADE
3	C20(CA)(Mod)	SIDEWALK CLOSED AHEAD ACROSS HERE	36" X 36"	6	MOUNT SIGN ON TYPE III BARRICADE
4	W21-1	WORKER	36" X 36"	8	MOUNT SIGN ON TYPE III BARRICADE

NOTES:

1. LOCATIONS OF THE CONSTRUCTION SIGNS SHOWN ARE APPROXIMATE.
2. EXACT LOCATIONS WILL BE DETERMINED BY THE ENGINEER.
3. FOR ADDITIONAL CONSTRUCTION AREA SIGNS, SEE CONSTRUCTION AREA SIGNS PLAN.
4. PEDESTRIAN ACCESS MUST BE MAINTAINED AT ALL TIMES.

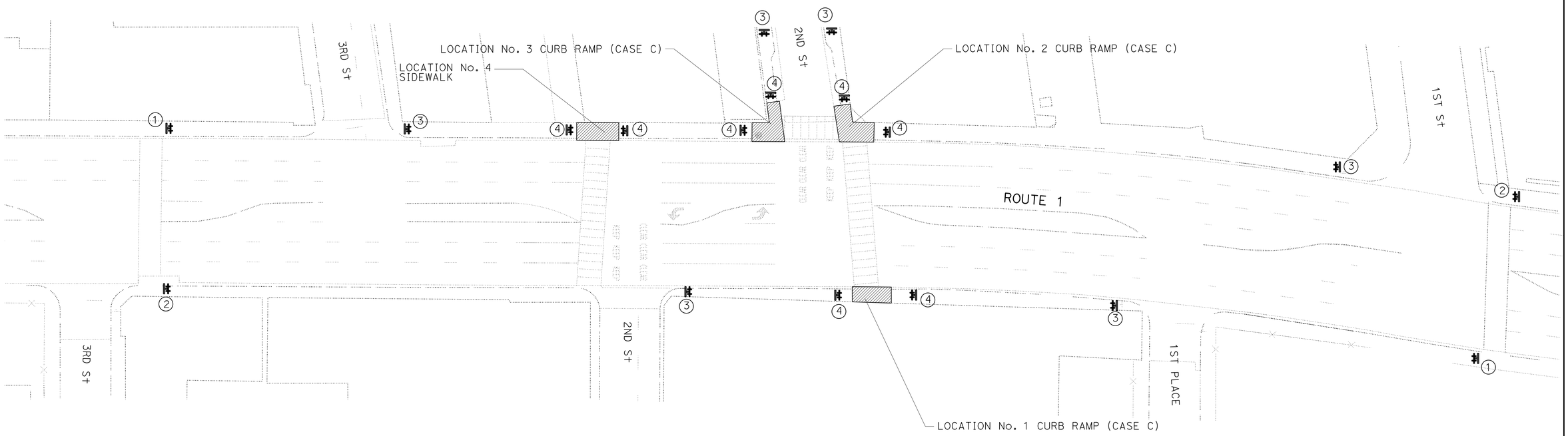

SIGN CODE LEGEND:

XXX-XX: FEDERAL SIGN CODE PER MANUAL OF UNIFORM TRAFFIC CONTROL DEVICES (MUTCD).
XXX-XX (CA): CALIFORNIA SIGN CODE PER CALIFORNIA MUTCD.

LEGEND:

WORK AREA
SIGN AND BARRICADE (TYPE III)

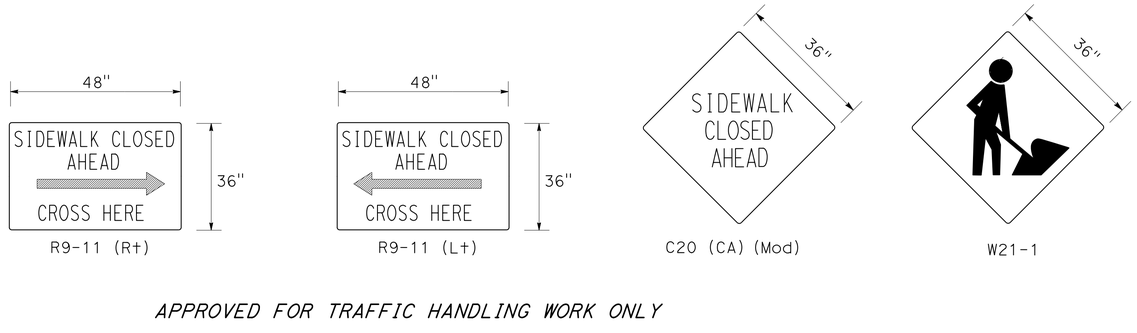

APPROVED FOR TRAFFIC HANDLING WORK ONLY

TRAFFIC HANDLING PLAN
(PEDESTRIAN HANDLING DETAILS)
NO SCALE

TH-1

REVISED BY | DATE REVISED
JAMES M. CANALITA | ANH D. NGUYEN
CALCULATED-DESIGNED BY | CHECKED BY
FUNCTIONAL SUPERVISOR: MOHAMMED CHOWDHURY

STATE OF CALIFORNIA - DEPARTMENT OF TRANSPORTATION
Caltrans TRAFFIC DESIGN

S:\projects\4t5401\Minor A\74t540md001.dgn

LAST REVISION 00-00-00 | DATE PLOTTED => 28-MAR-2013 | TIME PLOTTED => 13:46

Dist	COUNTY	ROUTE	POST MILES TOTAL PROJECT	SHEET No.	TOTAL SHEETS
07	LA	1	20.7	10	22

REGISTERED CIVIL ENGINEER 2/19/13 DATE

3-25-13
PLANS APPROVAL DATE

REGISTERED PROFESSIONAL ENGINEER ANH D. NGUYEN No. 62370 Exp. 9/30/13 CIVIL STATE OF CALIFORNIA

THE STATE OF CALIFORNIA OR ITS OFFICERS OR AGENTS SHALL NOT BE RESPONSIBLE FOR THE ACCURACY OR COMPLETENESS OF SCANNED COPIES OF THIS PLAN SHEET.

LEGEND:

(XX) STRIPING DETAIL No.

CHANGE IN PAVEMENT DELINEATION DETAILS

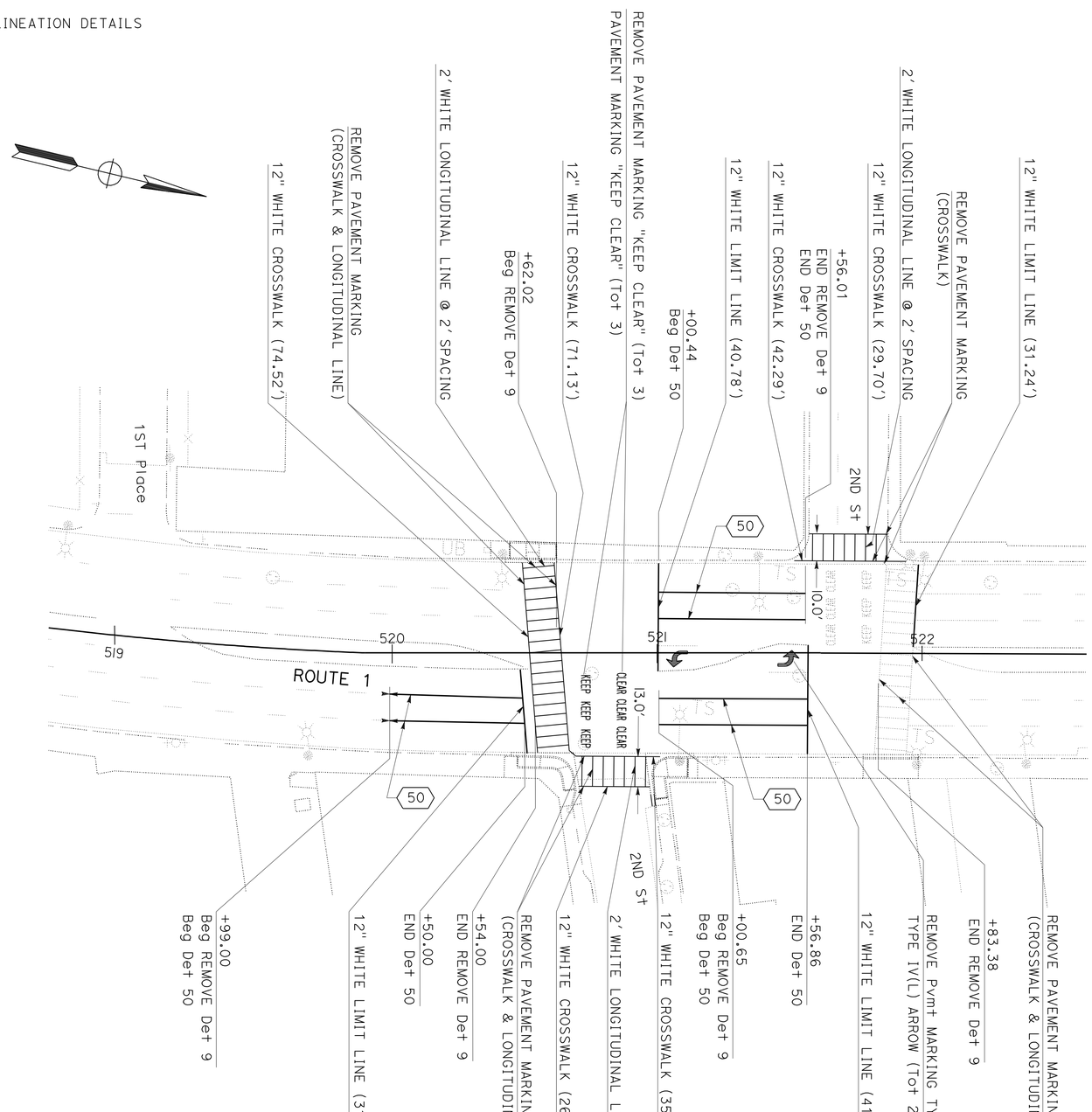

PAVEMENT DELINEATION DETAILS (Det 50)

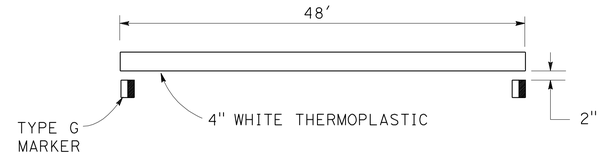

APPROVED FOR PAVEMENT DELINEATION WORK ONLY

PAVEMENT DELINEATION PLAN

NO SCALE

PD-1

REVISED BY	DATE REVISED

CALCULATED-DESIGNED BY	JAMES M. CANALITA
CHECKED BY	ANH D. NGUYEN
FUNCTIONAL SUPERVISOR	MOHAMMED CHOWDHURY

STATE OF CALIFORNIA - DEPARTMENT OF TRANSPORTATION

Caltrans® TRAFFIC DESIGN

S:\projects\4t5401\Minor A\74t540na001.dgn

LAST REVISION 00-00-00 | DATE PLOTTED => 28-MAR-2013 | TIME PLOTTED => 11:39

Dist	COUNTY	ROUTE	POST MILES TOTAL PROJECT	SHEET No.	TOTAL SHEETS
07	LA	1	20.7	11	22

REGISTERED CIVIL ENGINEER DATE 2/19/13

PLANS APPROVAL DATE 3-25-13

REGISTERED PROFESSIONAL ENGINEER ANH D. NGUYEN No. 62370 Exp. 9/30/13 CIVIL STATE OF CALIFORNIA

THE STATE OF CALIFORNIA OR ITS OFFICERS OR AGENTS SHALL NOT BE RESPONSIBLE FOR THE ACCURACY OR COMPLETENESS OF ELECTRONIC COPIES OF THIS PLAN SHEET.

ROADWAY QUANTITIES

SHEET No.	LOCATION No.	LOCATION	REMOVE CONCRETE	MINOR CONCRETE (CURB, SIDEWALK AND CURB RAMP)	DETECTABLE WARNING SURFACE	TEMPORARY DRAINAGE INLET PROTECTION	RELOCATE ROADSIDE SIGN (METAL POST)	REMOVE ROADSIDE SIGN (METAL POST)	INSTALL SIGN (STRAP AND SADDLE BRACKET METHOD)	HANDRAILING
			CY	CY	SQFT	EA	EA	EA	EA	LF
C-1	1	ROUTE 1 AND 2nd St (EASTBOUND)(SOUTHWEST CORNER)	4.2	4.2	15.0					
C-2	2	ROUTE 1 AND 2nd St (EASTBOUND)(SOUTHEAST CORNER)	7.6	7.9	27.0	1		1	1	25
C-3	3	ROUTE 1 AND 2nd St (EASTBOUND)(NORTHEAST CORNER)	5.8	5.9	21.0	1	1			
C-4	4	ROUTE 1 AND 2nd St (WESTBOUND)(NORTHEAST CORNER)	2.8	2.9						
TOTAL			20.4	20.9	63.0	2	1	1	1	25

PAVEMENT DELINEATION QUANTITIES

SHEET No.	LOCATION	REMOVE			THERMOPLASTIC TRAFFIC STRIPE	THERMOPLASTIC PAVEMENT MARKING					PAVEMENT MARKER (RETRO-REFLECTIVE)
		THERMOPLASTIC TRAFFIC STRIPE Det 9 4" (BROKEN 17-7) (WHITE)	THERMOPLASTIC PAVEMENT MARKING	PAVEMENT MARKER	Det 50 4" SOLID WHITE	12" WHITE CROSSWALK	2' WHITE LONGITUDINAL	WHITE "KEEP CLEAR"	12" WHITE LIMIT LINE	TYPE IV (L) ARROW	TYPE G
		LF	SQFT	EA	LF	SQFT	SQFT	SQFT	SQFT	SQFT	EA
PD-1	ROUTE 1 AND 2ND St	138.0	1464.0	10	326.0	280.0	642.0	153.0	145.0	30.0	18
TOTAL		138.0	1464.0	10	326.0	1250.0					18

SUMMARY OF QUANTITIES

Q-1

STATE OF CALIFORNIA - DEPARTMENT OF TRANSPORTATION

Caltrans® TRAFFIC DESIGN

FUNCTIONAL SUPERVISOR: MOHAMMED CHOWDHURY

CALCULATED-DESIGNED BY: JAMES M. CANALITA

CHECKED BY: ANH D. NGUYEN

REVISED BY

DATE REVISED

LAST REVISION 00-00-00

DATE PLOTTED => 28-MAR-2013

TIME PLOTTED => 15:00

Dist	COUNTY	ROUTE	POST MILES TOTAL PROJECT	SHEET No.	TOTAL SHEETS
07	LA	1	20.7	12	22

Kenny Nguyen 2/19/13
REGISTERED ELECTRICAL ENGINEER DATE

3-25-13
PLANS APPROVAL DATE

REGISTERED PROFESSIONAL ENGINEER KENNY NGUYEN No. E17759 Exp. 6/30/14 ELECTRICAL STATE OF CALIFORNIA

THE STATE OF CALIFORNIA OR ITS OFFICERS OR AGENTS SHALL NOT BE RESPONSIBLE FOR THE ACCURACY OR COMPLETENESS OF SCANNED COPIES OF THIS PLAN SHEET.

NOTE: (THIS SHEET ONLY)

1. FOR ACCURATE RIGHT OF WAY DATA, CONTACT RIGHT OF WAY ENGINEERING AT THE DISTRICT OFFICE.

ABBREVIATION: (FOR SHEETS E-1 TO E-3)

APS ACCESSIBLE PEDESTRIAN SIGNAL
FOSE FIBER OPTIC SPLICE ENCLOSURE
FDU FIBER DISTRIBUTION UNIT
OVL OVERLAY
SCE SOUTHER CALIFORNIA EDISON
SD SYSTEM DETECTOR
SMFO SINGLEMODE FIBER OPTIC
IRWL IN-ROADWAY WARNING LIGHTS
smfo EXISTING SINGLEMODE FIBER OPTIC

LEGEND: (THIS SHEET ONLY)

1 RC EXISTING SIGNAL AND LIGHTING STANDARD, PEDESTRIAN SIGNAL HEADS AND VEHICULAR SIGNAL HEADS. RS ACCESIBLE PEDESTRIAN SIGNAL (APS).

2 RC CITY MARBELITE ELECTROLIER, PEDESTRIAN SIGNAL HEADS AND VEHICULAR SIGNAL HEADS. RS ACCESIBLE PEDESTRIAN SIGNAL (APS).

3 RC EXISTING 120 V SIGNAL SERVICE EQUIPMENT ENCLOSURE
40 A, CB-SIGNALS
15 A, CB-INTERNALLY ILLUMINATED STREET SIGNS
CTID No. 0753001898
ADDRESS: 210 ½ PACIFIC COAST Blvd

4 RL EXISTING MODEL 2070 CONTROLLER ASSEMBLY AND BATTERY BACKUP SYSTEM. SEE SHEET E-2.

5 RC EXISTING SIGNAL STANDARD AND PEDESTRIAN SIGNAL HEADS. RS TWO ACCESIBLE PEDESTRIAN SIGNAL (APS).

6 RC EXISTING SIGNAL STANDARD AND VEHICULAR SIGNAL HEADS. RL EMERGENCY VEHICLE DETECTOR, SEE SHEET E-2.

EXISTING PHASE DIAGRAM

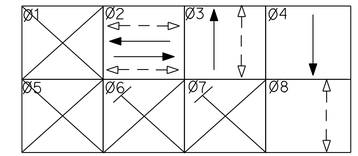

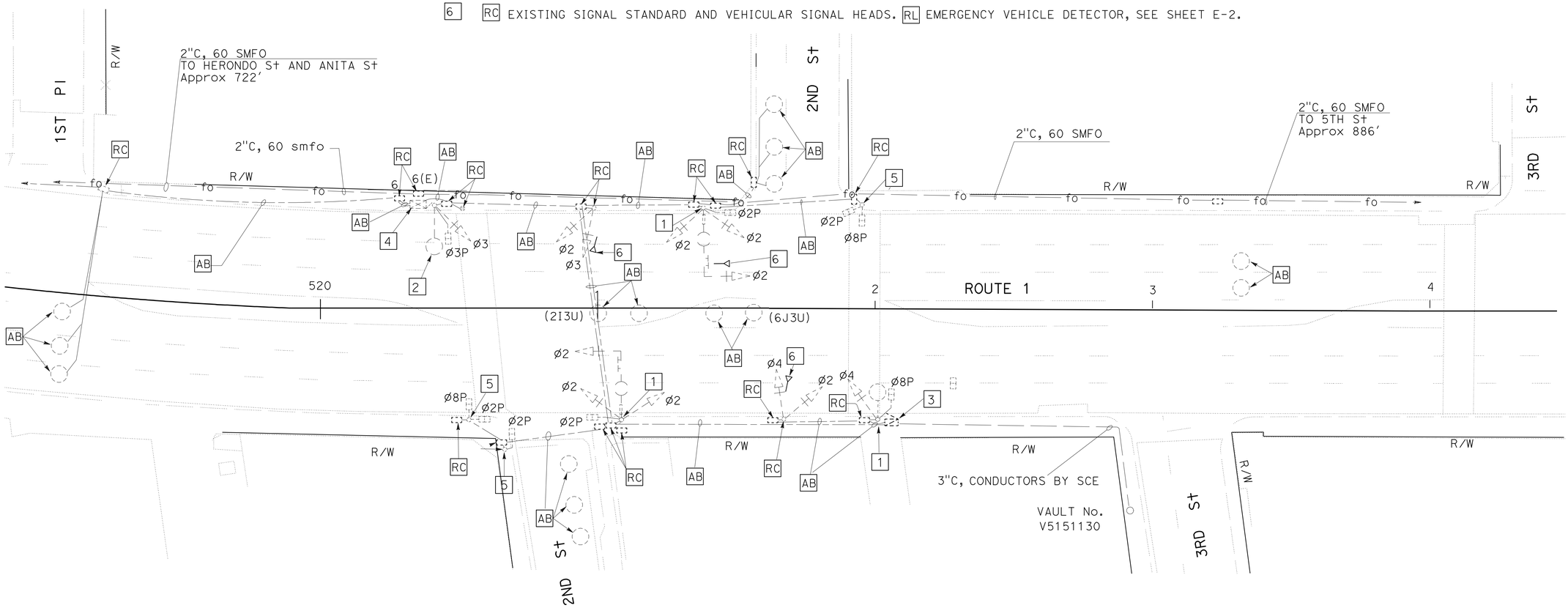

APPROVED FOR ELECTRICAL WORK ONLY

SIGNAL AND LIGHTING

SCALE: 1" = 20'

E-1

STATE OF CALIFORNIA - DEPARTMENT OF TRANSPORTATION
Caltrans TRAFFIC DESIGN

FUNCTIONAL SUPERVISOR: HASSAN MANNAA
CALCULATED-DESIGNED BY: XOCHILT NARANJO
CHECKED BY: KENNY NGUYEN
REVISED BY
DATE REVISED

LAST REVISION 00-00-00
DATE PLOTTED => 02-APR-2013
TIME PLOTTED => 09:32

Dist	COUNTY	ROUTE	POST MILES TOTAL PROJECT	SHEET No.	TOTAL SHEETS
07	LA	1	20.7	13	22

Kenny Nguyen 2/19/13
REGISTERED ELECTRICAL ENGINEER DATE

3-25-13
PLANS APPROVAL DATE

REGISTERED PROFESSIONAL ENGINEER KENNY NGUYEN No. E17759 Exp. 6/30/14 ELECTRICAL STATE OF CALIFORNIA

THE STATE OF CALIFORNIA OR ITS OFFICERS OR AGENTS SHALL NOT BE RESPONSIBLE FOR THE ACCURACY OR COMPLETENESS OF SCANNED COPIES OF THIS PLAN SHEET.

CONDUIT AND CONDUCTOR SCHEDULE

AWG OR CABLE	CONDUCTOR RUN	CONDUCTOR RUN NUMBER AND SIZES									
		1	2	3	4	5	6	7	8	9	10
DLC	Ø 1		1	1							
	Ø 2		6				3				
	Ø 3		1				1	1			
	Ø 4		1	1	1						
	Ø 5		1				1	1		1	
	Ø 6		6	6	6	6					
#10	LUMINAIRES			2	2		2	2		2	2
#6	SIGNAL SERVICE		2				2	2		2	2
#12	IISNS			2	2		2	2		2	2
#8	GROUND		2	1	1	1	1	1	1	1	1
12 SMFO			1								
28 CSC			4	2	2	2	2	2		2	2
APS 5CSC		1		1	1	1	1		1		
EVC			2	1	1		1	1		1	
CONDUIT SIZE		3"	2-3"	3"	3"	3"	3"	3"	3"	3"	3"

POLE AND EQUIPMENT SCHEDULE

STANDARD				VEH SIG MTG		APS		PED SIG	LED LUMINAIRE (W)	IISNS
Loc	TYPE	SMA	LMA	MAST ARM	POLE	Ø	ARROW	MTG		
A	26-4-100	40'	12'	1 MAT 1 MAS	SV-2-T	-	-	-	235	2ND St
B	1-A	-	-	TV-1-T	-	-	-	-	-	-
C	19-3-100	30'	12'	1 MAS	SV-1-T	2	←	SP-1-T	235	2ND St
D	1-A	-	-	-	-	2	←	TP-1-T	-	-
E	15TS	-	8'	-	SV-2-TA	3	→	SP-1-T	235	-
F	26-4-100	40'	12'	1 MAT 1 MAS	SV-2-T	-	-	-	235	2ND St
G	1-A	-	-	-	-	3	→	TP-1-T	-	-
H	1-A	-	-	-	TV-1-T	-	-	-	-	-
I	17-2-100	20'	12'	1 MAT	SV-1-T	6	←	SP-1-T	165	2ND St
J	1-A	-	-	-	TV-2-T	6	→	SP-1-T	-	-

NOTES:(THIS SHEET ONLY)

1. FOR ACCURATE RIGHT OF WAY DATA, CONTACT RIGHT OF WAY ENGINEERING AT THE DISTRICT OFFICE.
2. FOR TYPE D INDUCTIVE LOOP DETECTOR DETAILS, SEE SHEET E-6.
3. ALL PED SIGNALS MUST HAVE COUNTDOWN PED SIGNAL HEADS AND ACCESIBLE PED SIGNAL (APS) PPB ASSEMBLY.

LEGEND: (THIS SHEET ONLY)

1. INSTALL 120/240 V TYPE III-BF SERVICE EQUIPMENT ENCLOSURE:
   100 A, 240 V, 2P, CB (MAIN CB)
   50 A, 120 V, 1P, CB (SIGNAL)
   15 A, 120 V, 1P, CB (INTERNALLY ILLUMINATED STREET SIGNS)
   20 A, 120 V, 1P, CB (IRWL SERVICE)
   30 A, 240 V, 2P, CB (LIGHTING)

   CTID No. 0753001898
   ADDRESS: 210 ½ PACIFIC COAST Hwy
2. INSTALL RELOCATED MODEL 2070 CONTROLLER ASSEMBLY WITH MODEL 332 CABINET WITH EXTERNAL BATTERY BACKUP SYSTEM ON NEW FOUNDATION. TERMINATE 12 SMFO CABLE AT THE EXISTING FDU AND LEAVE 10 FEET OF SLACK.
3. INSTALL ACCESSIBLE PEDESTRIAN SIGNAL AS SHOWN ON SHEET E-5.
4. SEE DEATAIL A.
5. INSTALL NEW PULL BOX AT THE SAME LOCATION. RC EXISTING FIBER OPTIC SPLICE ENCLOSURE AND INSTALL NEW FOSE.

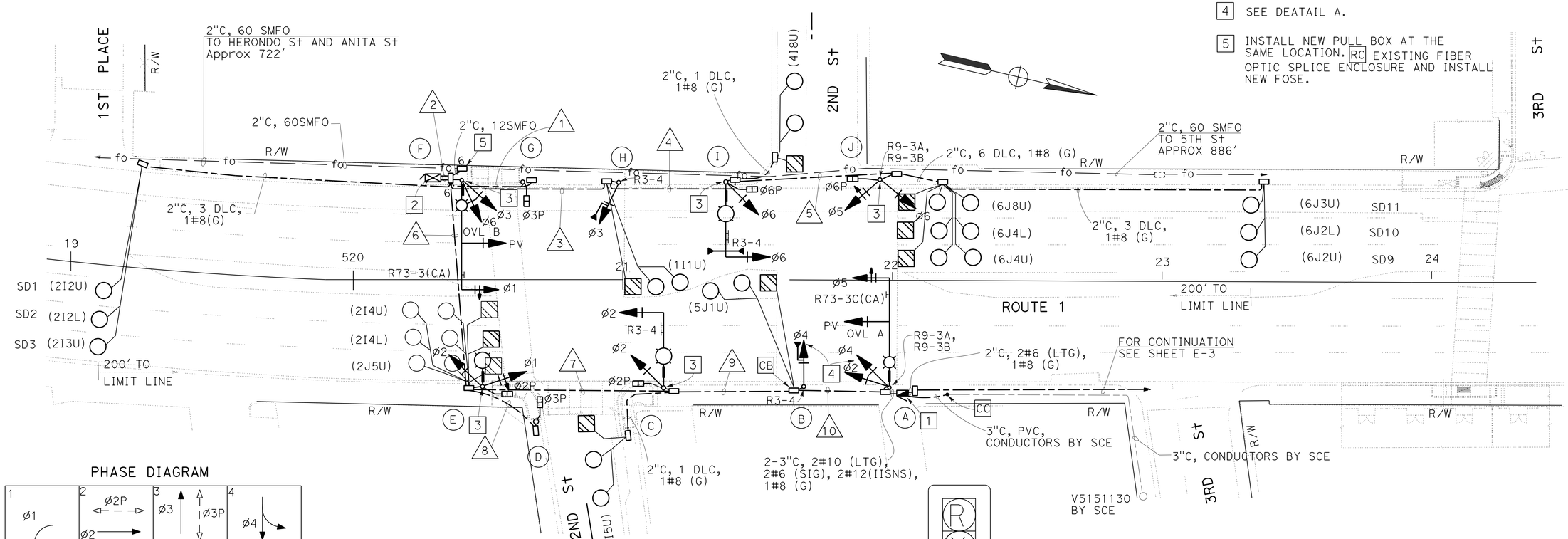

PHASE DIAGRAM

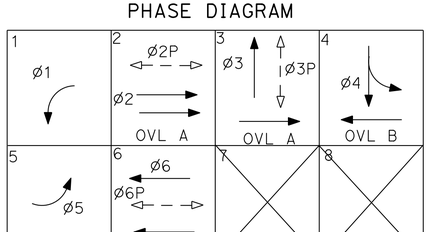

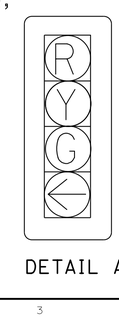

DETAIL A

APPROVED FOR ELECTRICAL WORK ONLY

SIGNAL AND LIGHTING

SCALE: 1" = 20'

E-2

STATE OF CALIFORNIA - DEPARTMENT OF TRANSPORTATION
Caltrans® TRAFFIC DESIGN

FUNCTIONAL SUPERVISOR: HASSAN MANNAA
CALCULATED-DESIGNED BY: XOCHILT NARANJO
CHECKED BY: KENNY NGUYEN
REVISED BY
DATE REVISED

LAST REVISION 00-00-00
DATE PLOTTED => 28-MAR-2013
TIME PLOTTED => 15:00

Dist	COUNTY	ROUTE	POST MILES TOTAL PROJECT	SHEET No.	TOTAL SHEETS
07	LA	1	20.7	14	22

Kenny Nguyen 2/19/13
REGISTERED ELECTRICAL ENGINEER DATE

3-25-13
PLANS APPROVAL DATE

REGISTERED PROFESSIONAL ENGINEER KENNY NGUYEN No. E17759 Exp. 6/30/14 ELECTRICAL STATE OF CALIFORNIA

THE STATE OF CALIFORNIA OR ITS OFFICERS OR AGENTS SHALL NOT BE RESPONSIBLE FOR THE ACCURACY OR COMPLETENESS OF SCANNED COPIES OF THIS PLAN SHEET.

CONDUCTOR AND CONDUIT SCHEDULE

CONDUCTOR TYPE	FUNCTION	1	2	3
28CSC	FLASHING BEACON	1	1	1
#14	IN-ROAD WARNING LIGHT	8	8	
2#6	LIGHTING	2	2	2
2#6	IN-ROAD WARNING SERVICE	1	1	1
CONDUIT SIZE		2-3"	3"	3"

POLE AND EQUIPMENT SCHEDULE

Loc	STANDARD			FLASHING BEACON MTG	PPB		LED
	TYPE	SMA	LMA	MAST ARM	Ø	ARROW	LUMINAIRE
A	19-4-100	25'	15'	1-MAS 1-MAT	4	→	235 W
B	19-4-100	25'	15'	1-MAS 1-MAT	4	←	235 W

PHASE DIAGRAM

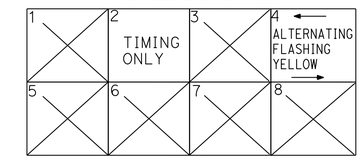

NOTE: (THIS SHEET ONLY)

1. FOR ACCURATE RIGHT OF WAY DATA, CONTACT RIGHT OF WAY ENGINEERING AT THE DISTRICT OFFICE.

LEGEND: (THIS SHEET ONLY)

IN-ROADWAY WARNING LIGHT

1. INSTALL DEPARTMENT-FURNISHED MODEL 2070 CONTROLLER ASSEMBLY WITH MODEL 332 CONTROLLER CABINET.
2. INSTALL 12" YELLOW FLASHING BEACON WITH PEDESTRIAN PUSH BUTTON (TYPE B) ON THE POLE. THE FLASHING BEACON IS ACTIVATED BY THE PEDESTRIAN PUSH BUTTON (TYPE B).
3. INSTALL IN-ROADWAY WARNING LIGHT (IRWL). IRWL MUST FLASH SYNCHRONOUSLY WITH THE FLASHING BEACON, THE TOTAL OF 60 FLASH PERIODS PER MINUTE.
4. INSTALL R62E (CA) FACE PLATE (5" X 7½") ABOVE THE PUSH BUTTON ASSEMBLY.

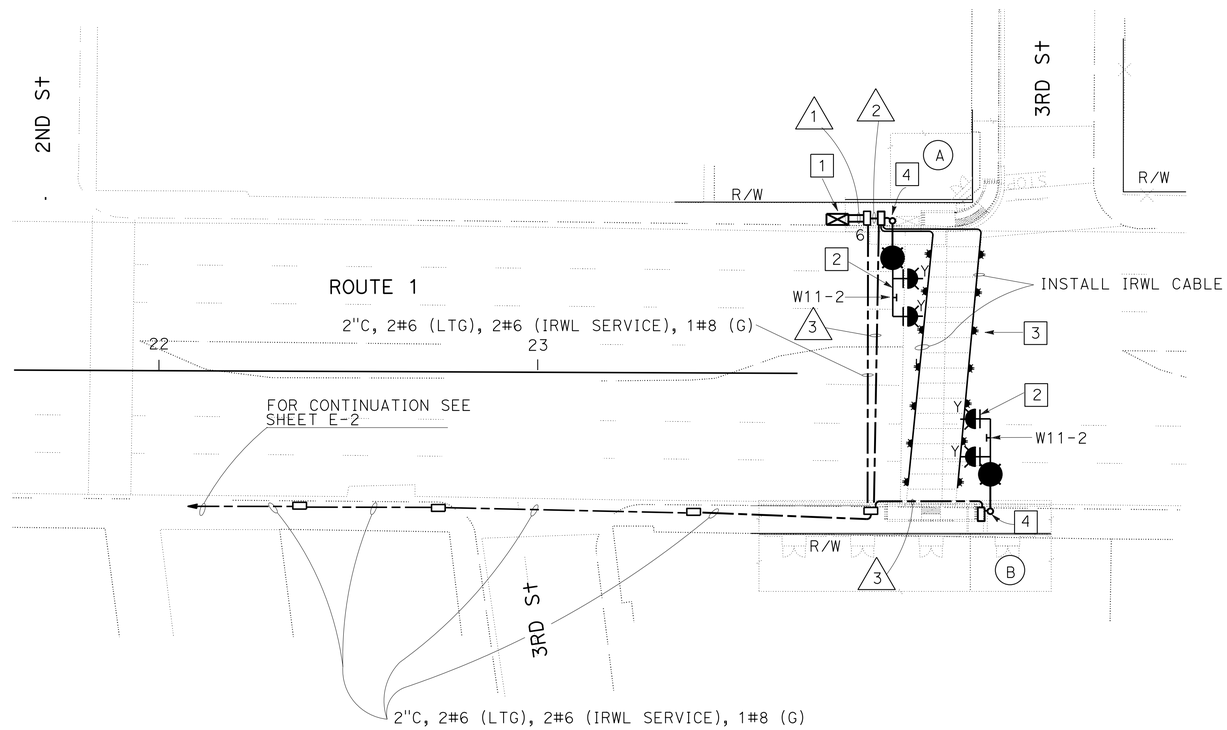

APPROVED FOR ELECTRICAL WORK ONLY

IN-ROADWAY WARNING LIGHTS

SCALE: 1" = 20'

E-3

STATE OF CALIFORNIA - DEPARTMENT OF TRANSPORTATION
Caltrans® TRAFFIC DESIGN

FUNCTIONAL SUPERVISOR: HASSAN MANNAA
CALCULATED-DESIGNED BY: XOCHILT NARANJO
CHECKED BY: KENNY NGUYEN
REVISED BY / DATE REVISED

LAST REVISION 00-00-00 | DATE PLOTTED => 28-MAR-2013 | TIME PLOTTED => 15:13

Dist	COUNTY	ROUTE	POST MILES TOTAL PROJECT	SHEET No.	TOTAL SHEETS
07	LA	1	20.7	15	22

Kenny Nguyen 2/19/13
REGISTERED ELECTRICAL ENGINEER DATE

3-25-13
PLANS APPROVAL DATE

REGISTERED PROFESSIONAL ENGINEER
KENNY NGUYEN
No. E17759
Exp. 6/30/14
ELECTRICAL
STATE OF CALIFORNIA

THE STATE OF CALIFORNIA OR ITS OFFICERS OR AGENTS SHALL NOT BE RESPONSIBLE FOR THE ACCURACY OR COMPLETENESS OF SCANNED COPIES OF THIS PLAN SHEET.

SIGNAL AND LIGHTING

SHEET No.	(N) RC ELECTROLIER STANDARD	(N) RL CONTROLLER	(N) RC CONDUCTOR #8	(N) RC PULL BOX No. 5	(N) RC PULL BOX No. 6	(N) RC SERVICE	(N) RC TYPE 1-A POLE	(N) RC TRAFFIC SIGNAL POLE 26-4-100	(N) RC TRAFFIC SIGNAL POLE 19-4-100	(N) RS PPB	(N) RL EMERGENCY VEHICLE DETECTOR
	EA	EA	LF	EA	EA	EA	EA	EA	EA	EA	EA
E-1	2	1	558	13	2	1	5	1	1	8	2

SIGNAL AND LIGHTING

SHEET No.	(N) STANDARD 15TS	(N) LOOP DETECTOR	(N) CONDUCTOR 2#12	(N) CONDUCTOR 2#10	(N) CONDUCTOR 2#8	(N) GROUND CONDUCTOR 1#8 (G)	(N) PULL BOX No 5	(N) PULL BOX No. 6	(N) NEW SERVICE	(N) SIZE 2" CONDUIT	(N) SIZE 3" CONDUIT	(N) TYPE 1-A STANDARD	(N) TYPE 26-4-100 STANDARD	(N) TYPE 19-2-100 STANDARD	(N) TYPE 17-2-100 STANDARD	(N) PV SIGNAL HEADS	(N) STUBOUTS	(N) RL BATTERY BACKUP SYSTEM	(N) AUXILIARY INPUT FILES	(N) FIBER OPTIC SPLICE CLOSURE	(N) 12 SMFO	(N) EMERGENCY VEHICLE DETECTOR
	EA	EA	LF	LF	LF	LF	EA	EA	EA	LF	LF	EA	EA	EA	EA	EA	EA	EA	EA	EA	LF	EA
E-2	1	36	652	702	558	767	15	2	1	390	445	5	2	1	1	2	8	1	1	1	30	2

IN-ROADWAY WARNING LIGHTING

SHEET No.	(N) TYPE 19-4-100	(N) FLASHING BEACON SYSTEM	(N) CONDUCTOR 2#6	(N) CONDUCTOR 2#14	(N) GROUND CONDUCTOR 1#8 (G)	(N) PULL BOX No. 5	(N) SIZE 3/4" CONDUIT	(N) SIZE 2" CONDUIT	(N) SIZE 3" CONDUIT	(N) IN-ROADWAY WARNING LIGHT	(N) W11-2 SIGNS	(N) INSTALL MODEL 2070E CONTROLLER ASSEMBLY
	EA	EA	LF	LF	LF	EA	LF	LF	LF	EA	EA	EA
E-3	2	2	385	75	385	6	80	275	110	14	2	1

(N) - NOT A SEPARATE PAY ITEM, FOR INFORMATION ONLY

ELECTRICAL QUANTITIES

E-4

REVISED BY | DATE REVISED
XOCHILT NARANJO | KENNY NGUYEN
CALCULATED-DESIGNED BY | CHECKED BY
FUNCTIONAL SUPERVISOR | HASSAN MANNAA

STATE OF CALIFORNIA - DEPARTMENT OF TRANSPORTATION
Caltrans TRAFFIC DESIGN

LAST REVISION 00-00-00 | DATE PLOTTED => 28-MAR-2013 | TIME PLOTTED => 15:01

Dist	COUNTY	ROUTE	POST MILES TOTAL PROJECT	SHEET No.	TOTAL SHEETS
07	LA	1	20.7	16	22

Kenny Nguyen 2/19/13
REGISTERED ELECTRICAL ENGINEER DATE

3-25-13
PLANS APPROVAL DATE

REGISTERED PROFESSIONAL ENGINEER
KENNY NGUYEN
No. E17759
Exp. 6/30/14
ELECTRICAL
STATE OF CALIFORNIA

THE STATE OF CALIFORNIA OR ITS OFFICERS OR AGENTS SHALL NOT BE RESPONSIBLE FOR THE ACCURACY OR COMPLETENESS OF SCANNED COPIES OF THIS PLAN SHEET.

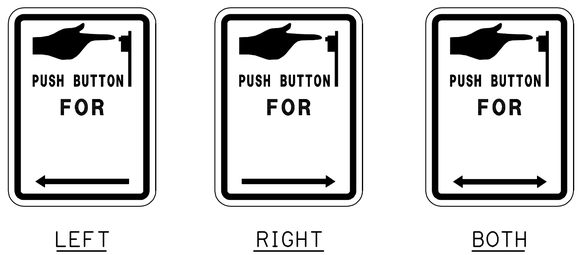

LEFT RIGHT BOTH

PEDESTRIAN PUSH BUTTON SIGNS (R10-3)

DETAIL A

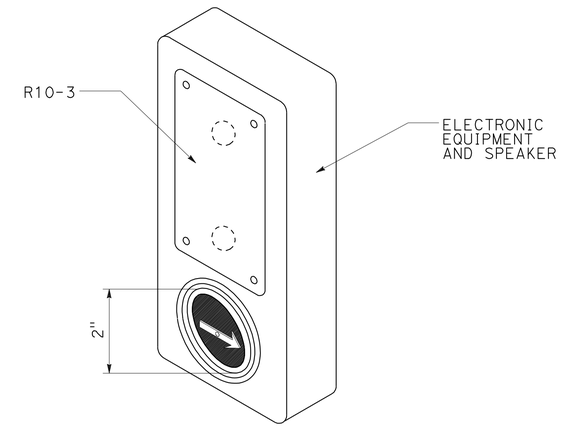

ACCESSIBLE PEDESTRIAN SIGNAL

DETAIL B

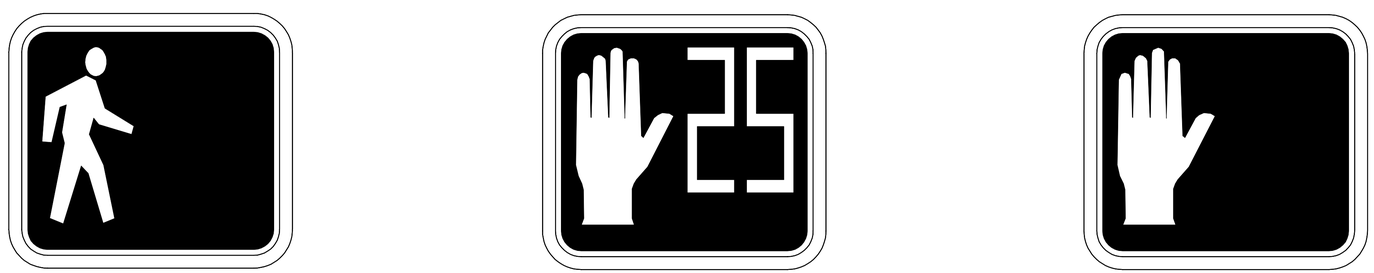

PERSON WALKING INTERVAL FLASHING UPRAISED HAND INTERVAL STEADY UPRAISED HAND INTERVAL

PEDESTRIAN SIGNAL FACE

DETAIL C

ELECTRICAL DETAILS

NO SCALE

E-5

STATE OF CALIFORNIA - DEPARTMENT OF TRANSPORTATION
Caltrans® TRAFFIC DESIGN

FUNCTIONAL SUPERVISOR: HASSAN MANNAA
CALCULATED-DESIGNED BY: XOCHILT NARANJO
CHECKED BY: KENNY NGUYEN
REVISED BY
DATE REVISED

LAST REVISION 00-00-00
DATE PLOTTED => 28-MAR-2013
TIME PLOTTED => 11:39

Dist	COUNTY	ROUTE	POST MILES TOTAL PROJECT	SHEET No.	TOTAL SHEETS
07	LA	1	20.7	17	22

Kenny Nguyen 2/19/13
REGISTERED ELECTRICAL ENGINEER DATE

3-25-13
PLANS APPROVAL DATE

REGISTERED PROFESSIONAL ENGINEER KENNY NGUYEN No. E17759 Exp. 6/30/14 ELECTRICAL STATE OF CALIFORNIA

THE STATE OF CALIFORNIA OR ITS OFFICERS OR AGENTS SHALL NOT BE RESPONSIBLE FOR THE ACCURACY OR COMPLETENESS OF SCANNED COPIES OF THIS PLAN SHEET.

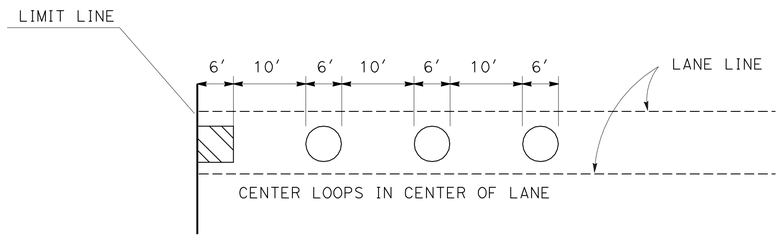

TYPICAL LOOP DETAIL

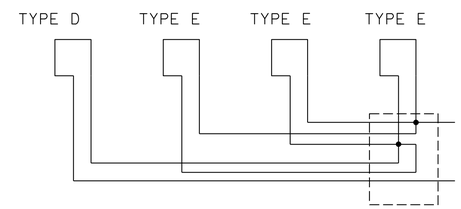

LOOP CONNECTION

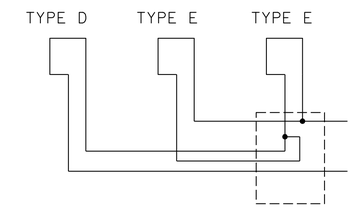

LOOP CONNECTION

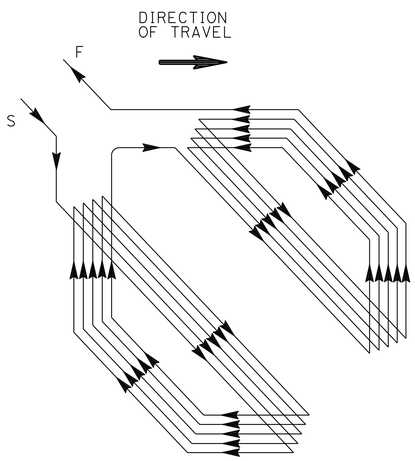

WINDING DETAIL

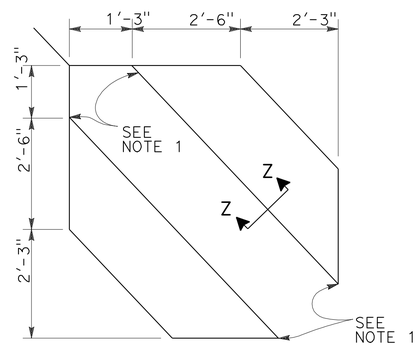

SAWCUT DETAIL

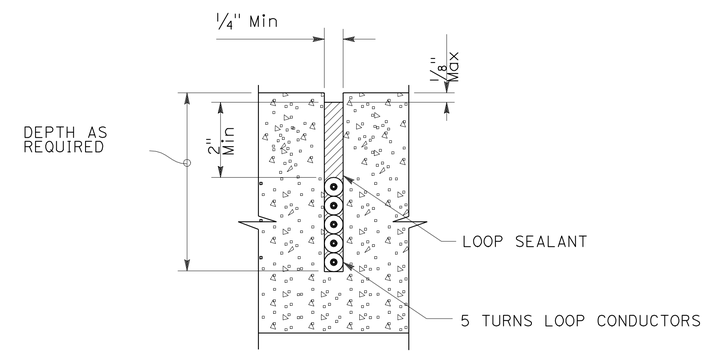

SECTION Z-Z (FOR TYPE D LOOP DETECTOR)

TYPE D LOOP DETECTOR CONFIGURATION

SLOT DETAILS - TYPE 2 LOOP CONDUCTOR

NOTES:

1. ROUND CORNERS OF ACUTE ANGLE SAWCUTS TO PREVENT DAMAGE TO CONDUCTORS.
2. USE SECTION Z-Z INSTEAD OF A-A IN ES-5A FOR TYPE D LOOP DETECTOR.
3. INSTALL 5 TURNS FOR ALL TYPE D LOOPS.

ELECTRICAL DETAILS

NO SCALE

E-6

REVISED BY | DATE REVISED
XOCHILT NARANJO | KENNY NGUYEN
CALCULATED-DESIGNED BY | CHECKED BY
FUNCTIONAL SUPERVISOR | HASSAN MANNAA
STATE OF CALIFORNIA - DEPARTMENT OF TRANSPORTATION
Caltrans TRAFFIC DESIGN

LAST REVISION 00-00-00 | DATE PLOTTED => 28-MAR-2013 | TIME PLOTTED => 11:39

Dist	COUNTY	ROUTE	POST MILES TOTAL PROJECT	SHEET No.	TOTAL SHEETS
07	LA	1	20.7	18	22

REGISTERED CIVIL ENGINEER 12-7-12 DATE

3-25-13
PLANS APPROVAL DATE

REGISTERED PROFESSIONAL ENGINEER Gurinderpal Bhullar No. C48815 Exp. 9-30-14 CIVIL STATE OF CALIFORNIA

THE STATE OF CALIFORNIA OR ITS OFFICERS OR AGENTS SHALL NOT BE RESPONSIBLE FOR THE ACCURACY OR COMPLETENESS OF SCANNED COPIES OF THIS PLAN SHEET.

NOTES:

Unless otherwise specified in the special provisions, all temporary warning signs shall have black legend on orange background.

California code are designated by (CA). Otherwise, Federal (MUTCD) codes are shown.

TYPICAL LANE CLOSURE WITH REVERSIBLE CONTROL

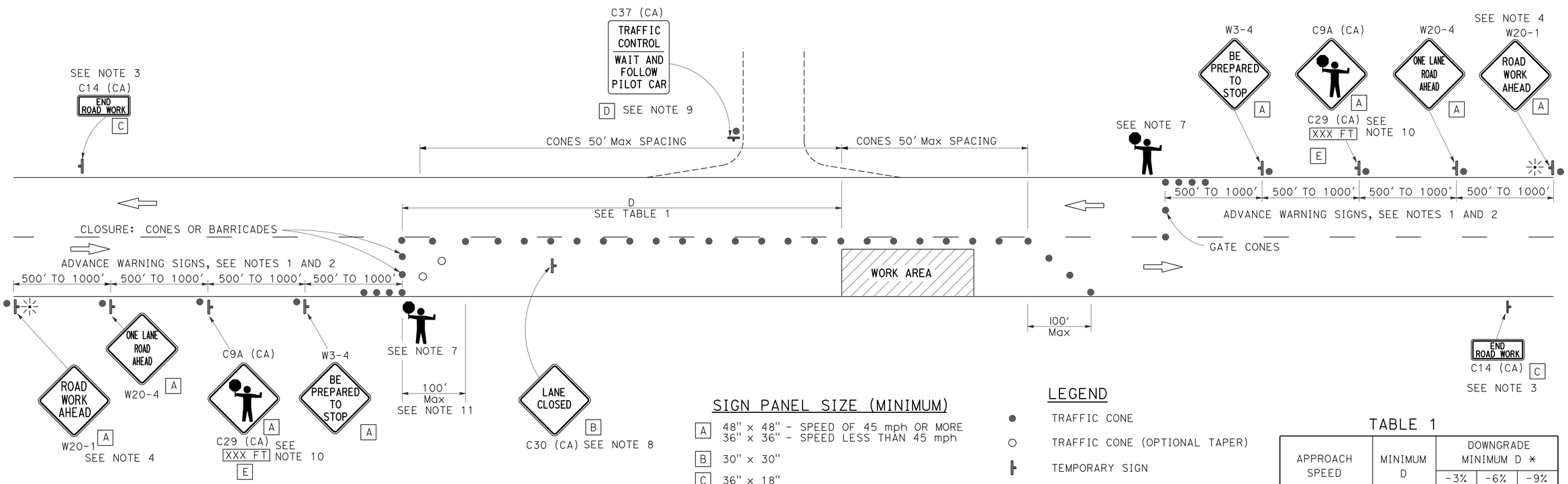

SIGN PANEL SIZE (MINIMUM)

- A — 48" x 48" - SPEED OF 45 mph OR MORE; 36" x 36" - SPEED LESS THAN 45 mph
- B — 30" x 30"
- C — 36" x 18"
- D — 36" x 42"
- E — 36" x 9"

LEGEND

- TRAFFIC CONE
- TRAFFIC CONE (OPTIONAL TAPER)
- TEMPORARY SIGN
- PORTABLE FLASHING BEACON
- FLAGGER

TABLE 1

APPROACH SPEED	MINIMUM D	DOWNGRADE MINIMUM D *		
		-3%	-6%	-9%
mph	ft	ft	ft	ft
25 AND BELOW	155	158	165	173
30	200	205	215	227
35	250	257	271	287
40	305	315	333	354
45	360	378	400	427
50	425	446	474	507
55	495	520	553	593
60	570	598	638	686
65	645	682	728	785

* USE ON SUSTAINED DOWNGRADE STEEPER THAN -3 PERCENT AND LONGER THAN 1 MILE.

NOTES:

1. Where approach speeds are low, advance warning signs may be placed at 300' spacing, and closer in urban areas.
2. Each advance warning sign in each direction of travel shall be equipped with at least two flags for daytime closure. Each flag shall be at least 16" x 16" in size and shall be orange or fluorescent red-orange in color. Flashing beacons shall be placed at the locations indicated for lane closure during hours of darkness.
3. A C14 (CA) "END ROAD WORK" sign, as appropriate, shall be placed at the end of the lane control unless the end of work area is obvious, or ends within a larger project's limits.
4. If the W20-1 sign would follow within 2000' of a stationary W20-1 or C11 (CA) "ROAD WORK NEXT _____MILES", use a W20-4 sign for the first advance warning sign.
5. All cones used for lane closures during the hours of darkness shall be fitted with retroreflective bands (or sleeves) as specified in the specifications.
6. Portable delineators, placed at one-half the spacing indicated for traffic cones, may be used instead of cones for daytime closures only.
7. Additional advance flaggers may be required. Flagger should stand in a conspicuous place, be visible to approaching traffic as well as approaching vehicles after the first vehicle has stopped. During the hours of darkness, the flagging-station and flagger shall be illuminated and clearly visible to approaching traffic. The illumination footprint of the lighting on the ground shall be at least 20' in diameter. Place a minimum of four cones at 50' intervals in advance of flagger station as shown.
8. Place C30 (CA) "LANE CLOSED" sign at 500' to 1000' intervals throughout extended work areas. They are optional if the work area is visible from the flagger station.
9. When a pilot car is used, place a C37 (CA) "TRAFFIC CONTROL-WAIT AND FOLLOW PILOT CAR" sign at all intersections within traffic control area. Signs shall be clean and visible at all times.
10. An optional C29 (CA) sign may be placed below the C9A (CA) sign.
11. Traffic cones or barricades may be placed on the optional taper as shown, barricades shall be Type I, II, or III.

STATE OF CALIFORNIA
DEPARTMENT OF TRANSPORTATION

TRAFFIC CONTROL SYSTEM FOR LANE CLOSURE ON TWO LANE CONVENTIONAL HIGHWAYS

NO SCALE

TCS-1

STATE OF CALIFORNIA - DEPARTMENT OF TRANSPORTATION
Caltrans

FUNCTIONAL SUPERVISOR | CALCULATED-DESIGNED BY | CHECKED BY | REVISED BY | DATE REVISED

LAST REVISION 00-00-00 | DATE PLOTTED => 28-MAR-2013 | TIME PLOTTED => 12:21

Dist	COUNTY	ROUTE	POST MILES TOTAL PROJECT	SHEET No.	TOTAL SHEETS
07	LA	1	20.7	19	22

REGISTERED CIVIL ENGINEER

April 20, 2012
PLANS APPROVAL DATE

REGISTERED PROFESSIONAL ENGINEER
Roberta L. McLaughlin
No. C40375
Exp. 3-31-13
CIVIL
STATE OF CALIFORNIA

THE STATE OF CALIFORNIA OR ITS OFFICERS OR AGENTS SHALL NOT BE RESPONSIBLE FOR THE ACCURACY OR COMPLETENESS OF SCANNED COPIES OF THIS PLAN SHEET.

TO ACCOMPANY PLANS DATED 3-25-13

2010 REVISED STANDARD PLAN RSP A24A

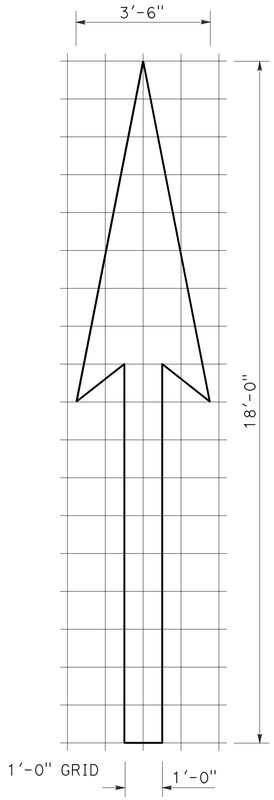

A=25 ft^2

TYPE I 18'-0" ARROW

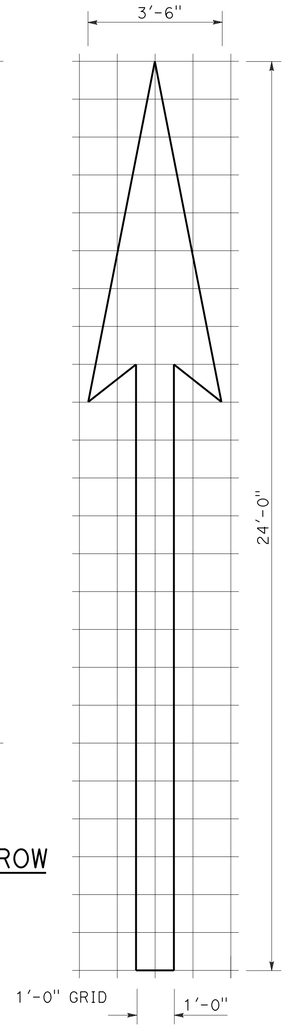

A=31 ft^2

TYPE I 24'-0" ARROW

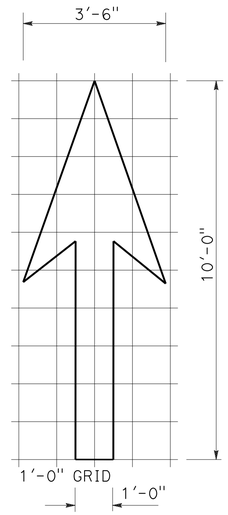

A=14 ft^2

TYPE I 10'-0" ARROW

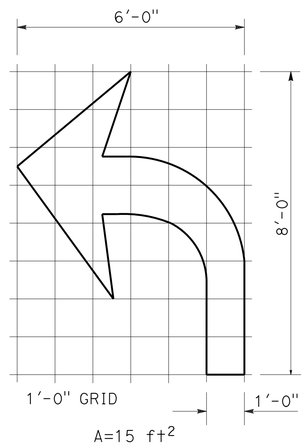

A=15 ft^2

TYPE IV (L) ARROW

(For Type IV (R) arrow, use mirror image)

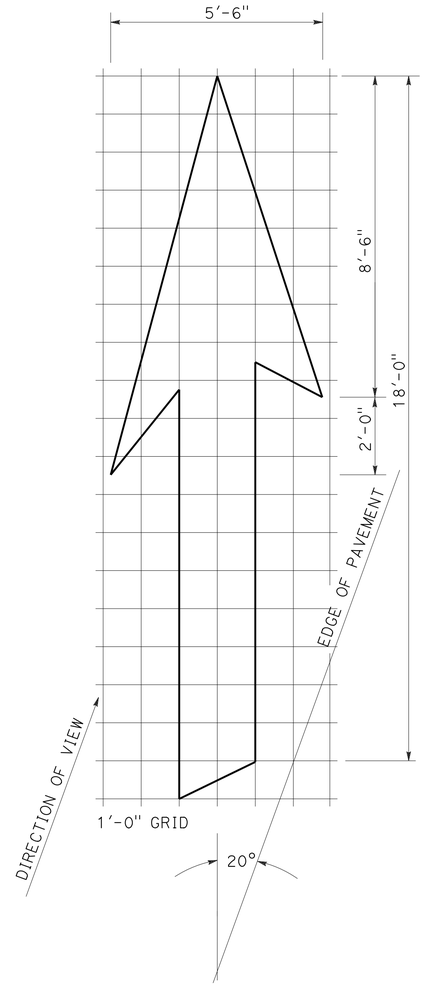

A=42 ft^2

TYPE VI ARROW

Right lane drop arrow
(For left lane, use mirror image)

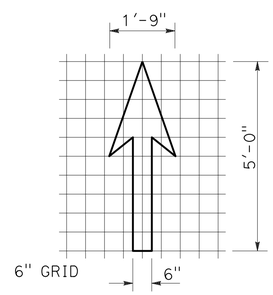

A=3.5 ft^2

BIKE LANE ARROW

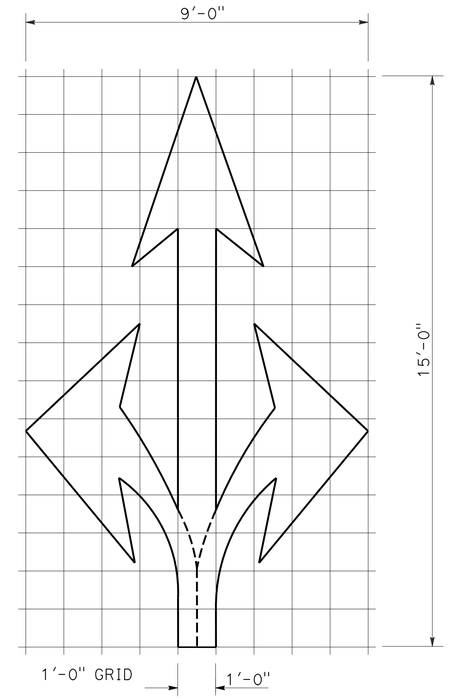

A=36 ft^2

TYPE VIII ARROW

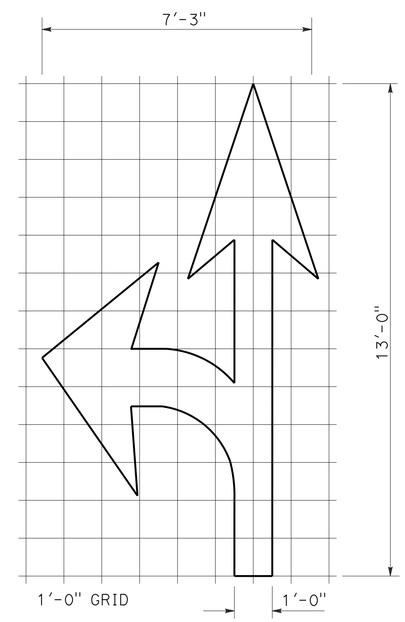

A=27 ft^2

TYPE VII (L) ARROW

(For Type VII (R) arrow, use mirror image)

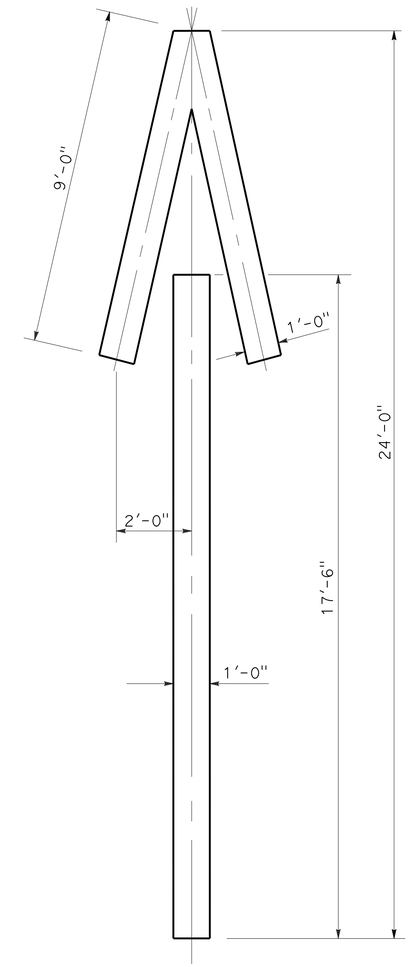

A=33 ft^2

TYPE V ARROW

NOTE:
Minor variations in dimensions may be accepted by the Engineer.

STATE OF CALIFORNIA
DEPARTMENT OF TRANSPORTATION

PAVEMENT MARKINGS ARROWS

NO SCALE

RSP A24A DATED APRIL 20, 2012 SUPERSEDES STANDARD PLAN A24A DATED MAY 20, 2011 - PAGE 13 OF THE STANDARD PLANS BOOK DATED 2010.

REVISED STANDARD PLAN RSP A24A

3-14-12

Dist	COUNTY	ROUTE	POST MILES TOTAL PROJECT	SHEET No.	TOTAL SHEETS
07	LA	1	20.7	20	22

REGISTERED CIVIL ENGINEER

July 20, 2012
PLANS APPROVAL DATE

REGISTERED PROFESSIONAL ENGINEER
Roberta L. McLaughlin
No. C40375
Exp. 3-31-13
CIVIL
STATE OF CALIFORNIA

THE STATE OF CALIFORNIA OR ITS OFFICERS OR AGENTS SHALL NOT BE RESPONSIBLE FOR THE ACCURACY OR COMPLETENESS OF SCANNED COPIES OF THIS PLAN SHEET.

TO ACCOMPANY PLANS DATED 3-25-13

2010 REVISED STANDARD PLAN RSP A24E

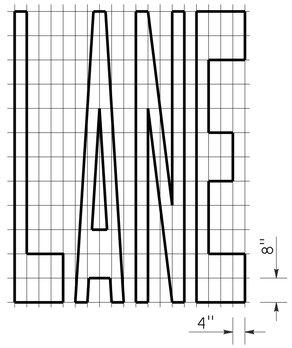

A=24 ft²

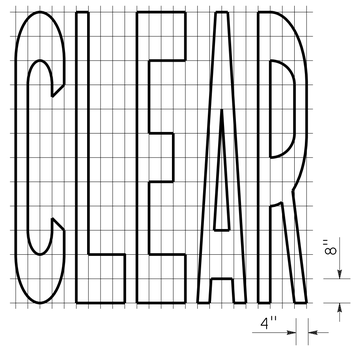

A=27 ft²

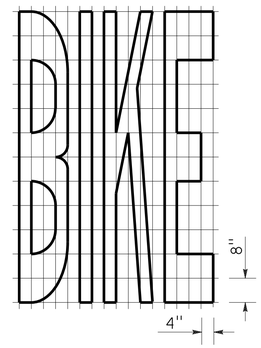

A=21 ft²

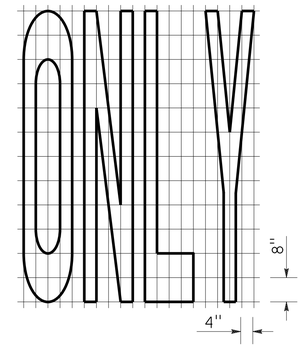

A=22 ft²

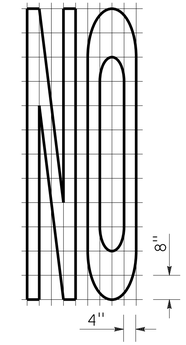

A=14 ft²

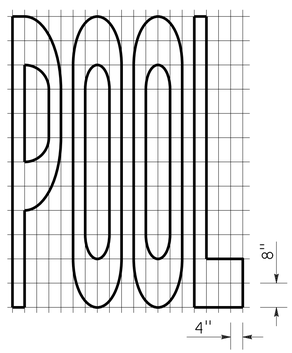

A=23 ft²

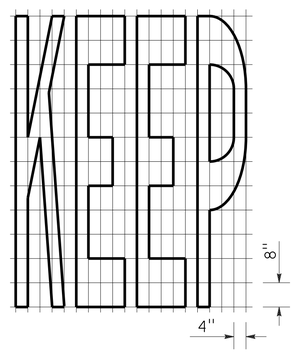

A=24 ft²

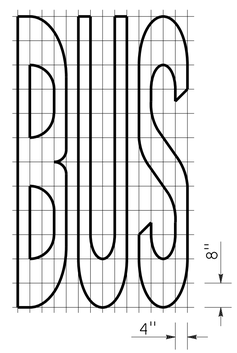

A=20 ft²

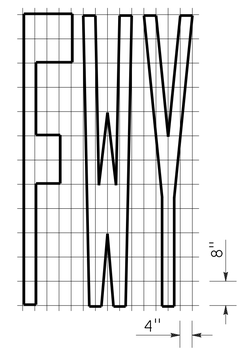

A=16 ft²

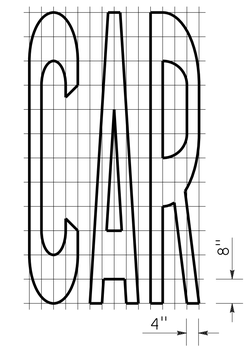

A=17 ft²

WORD MARKINGS			
ITEM	ft²	ITEM	ft²
LANE	24	NO	14
POOL	23	BIKE	21
CAR	17	BUS	20
CLEAR	27	ONLY	22
KEEP	24	FWY	16

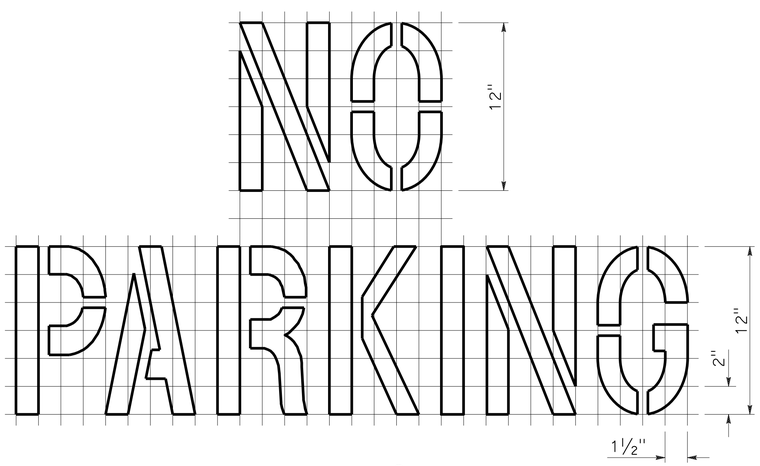

A=2 ft²

See Notes 6 and 7

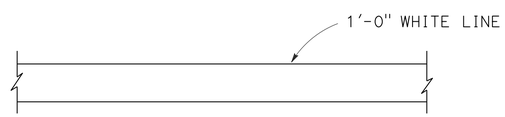

LIMIT LINE (STOP LINE)

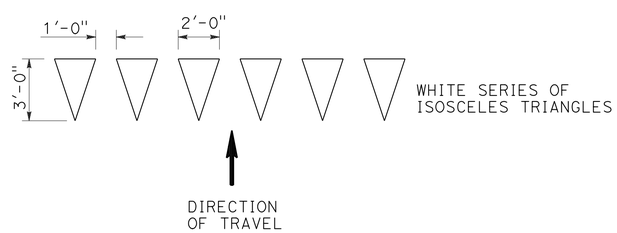

YIELD LINE

NOTES:

1. If a message consists of more than one word, it should read "UP", i.e., the first word should be nearest the driver.
2. The space between words should be at least four times the height of the characters for low speed roads, but not more than ten times the height of the characters. The space may be reduced appropriately where there is limited space because of local conditions.
3. Minor variations in dimensions may be accepted by the Engineer.
4. Portions of a letter, number or symbol may be separated by connecting segments not to exceed 2" in width.
5. The words "NO PARKING" pavement marking is to be used for parking facilities. For typical locations of markings, see Standard Plans A90A and A90B.
6. The words "NO PARKING", shall be painted in white letters no less than 1'-0" high on a contrasting background and located so that it is visible to traffic enforcement officials.

STATE OF CALIFORNIA
DEPARTMENT OF TRANSPORTATION

PAVEMENT MARKINGS WORDS, LIMIT AND YIELD LINES

NO SCALE

RSP A24E DATED JULY 20, 2012 SUPERSEDES STANDARD PLAN A24E
DATED MAY 20, 2011 - PAGE 17 OF THE STANDARD PLANS BOOK DATED 2010.

REVISED STANDARD PLAN RSP A24E

DIST	COUNTY	ROUTE	POST MILES TOTAL PROJECT	SHEET NO.	TOTAL SHEETS
07	LA	1	20.7	21	22

Jeffrey G. McRae
REGISTERED ELECTRICAL ENGINEER

January 20, 2012
PLANS APPROVAL DATE

REGISTERED PROFESSIONAL ENGINEER
Jeffery G. McRae
No. E14512
Exp. 6-30-12
ELECTRICAL
STATE OF CALIFORNIA

THE STATE OF CALIFORNIA OR ITS OFFICERS OR AGENTS SHALL NOT BE RESPONSIBLE FOR THE ACCURACY OR COMPLETENESS OF SCANNED COPIES OF THIS PLAN SHEET.

TO ACCOMPANY PLANS DATED 3-25-13

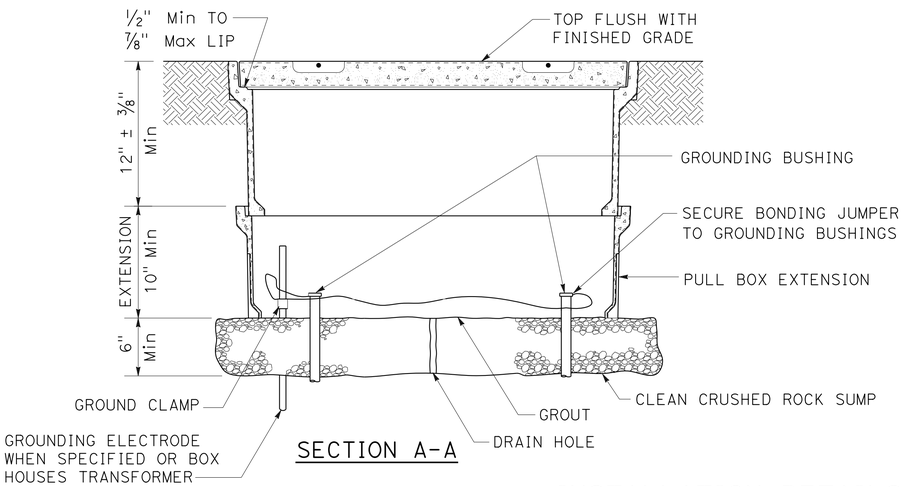

SECTION A-A

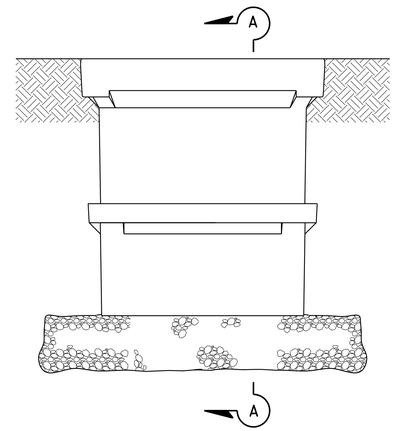

SIDE VIEW

INSTALLATION DETAILS

DETAIL A

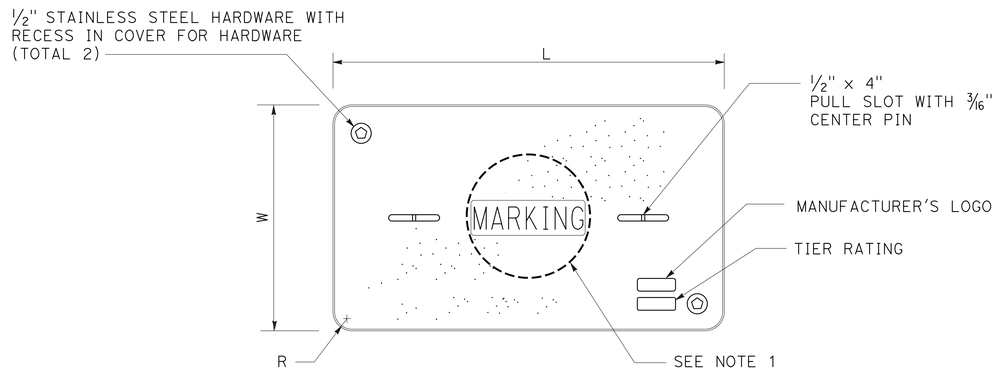

COVER TOP VIEW

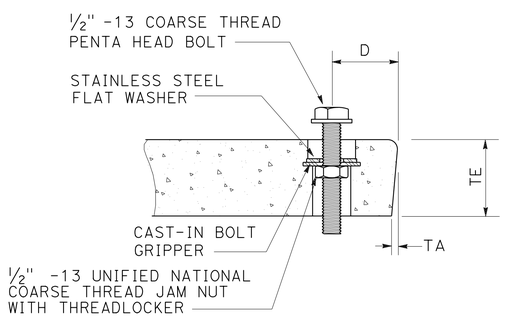

TYPICAL COVER CAPTIVE BOLT

OR SIMILAR

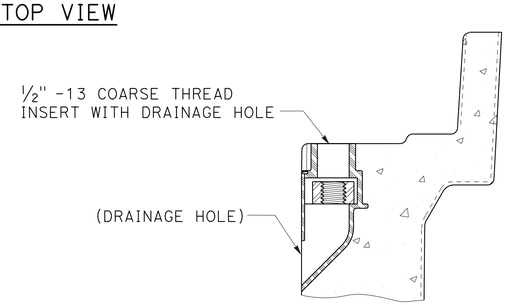

TYPICAL THREADED INSERT

OR SIMILAR

DIMENSION TABLE										
PULL BOX	PULL BOX			COVER						
	MINIMUM DEPTH BOX	MINIMUM DEPTH EXTENSION	MAXIMUM WEIGHT	L	W	R	TE	TA	D	MAXIMUM WEIGHT
No. 3 1/2	12"	N/A	40 lb	1' - 3 3/8"	10 1/8"	1 3/8"	2"	1/8"	1 3/4"	30 lb
No. 5	12"	10"	55 lb	1' - 11 1/4"	1' - 1 3/4"	1 3/8"	2"	1/8"	1 3/4"	60 lb
No. 6	12"	10"	70 lb	2' - 6 1/2"	1' - 5 1/2"	1 3/8"	2"	1/8"	2"	85 lb

NOTES ON PULL BOXES:

1. Pull box covers must be marked as follows: "SERVICE" Service circuits between service point and service disconnect; "SPRINKLER-CONTROL" sprinkler control circuits, 50 V or less; "CALTRANS" on all pull boxes, except pull boxes marked "SPRINKLER-CONTROL"; and "TELEPHONE" Telephone service;

   A) No. 3 1/2 pull box.
      1) "SIGNAL" - Traffic signal circuits with or without street or sign lighting circuits.
      2) "ST LIGHTING" - Street or sign lighting circuits where voltage is under 600 V.

   B) No. 5, 6, 9 or 9A pull box.
      1) "TRAFFIC SIGNAL" - Traffic signal circuits with or without street or sign lighting circuits.
      2) "STREET LIGHTING" - Street or sign lighting circuits where voltage is under 600 V.
      3) "STREET LIGHTING-HIGH VOLTAGE" - Street or sign lighting circuits where voltage is above 600 V.
      4) "IRRIGATION" - Circuits to irrigation controller 120 V or more.
      5) "RAMP METER" - Ramp meter circuits.
      6) "COUNT STATION" - Count or speed monitor circuits.
      7) "COMMUNICATIONS" - Communication circuits.
      8) "TOS COMMUNICATIONS" - TOS communication line.
      9) "TOS POWER" - TOS power.
      10) "TDC POWER" - Telephone demarcation cabinet power.
      11) "CCTV" - Closed circuit television circuits.
      12) "TMS" - Traffic monitoring station circuits.
      13) "CMS" - Changeable message sign circuits.
      14) "HAR" - Highway advisory radio circuits.

2. The nominal dimensions of the opening in which the cover sets must be the same as the cover dimensions (L and W) plus 1/8" or greater.

3. Covers and boxes must be interchangeable with California Standard. When interchanged with a standard, the top surfaces must be flush within 1/8". Top outside radius of covers and pull boxes must have a 1/8" radius.

4. Pull box extension may be another pull box as long as the bottom edge of the pull box can fit into the cover opening.

STATE OF CALIFORNIA
DEPARTMENT OF TRANSPORTATION

ELECTRICAL SYSTEMS (PULL BOX)

NO SCALE

RSP ES-8A DATED JANUARY 20, 2012 SUPPLEMENTS THE STANDARD PLANS BOOK DATED 2010.

REVISED STANDARD PLAN RSP ES-8A

2010 REVISED STANDARD PLAN RSP ES-8A

01-09-12

Dist	COUNTY	ROUTE	POST MILES TOTAL PROJECT	SHEET No.	TOTAL SHEETS
07	LA	1	20.7	22	22

REGISTERED ELECTRICAL ENGINEER

July 20, 2012
PLANS APPROVAL DATE

REGISTERED PROFESSIONAL ENGINEER
Jeffery G. McRae
No. E14512
Exp. 6-30-14
ELECTRICAL
STATE OF CALIFORNIA

THE STATE OF CALIFORNIA OR ITS OFFICERS OR AGENTS SHALL NOT BE RESPONSIBLE FOR THE ACCURACY OR COMPLETENESS OF SCANNED COPIES OF THIS PLAN SHEET.

TO ACCOMPANY PLANS DATED 3-25-13

ISOFOOTCANDLE CURVE - MINIMUM

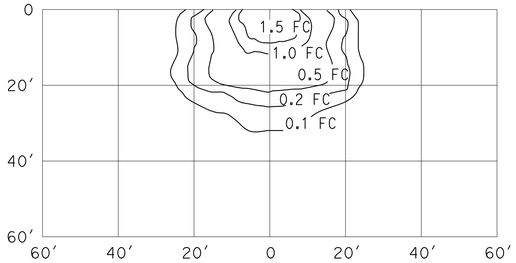

WALL LUMINAIRE
15′ Mounting Height
Lamp operated at 5,800 lm
70-W high pressure sodium lamp
ANSI Designation S62

ISOFOOTCANDLE CURVE - MINIMUM

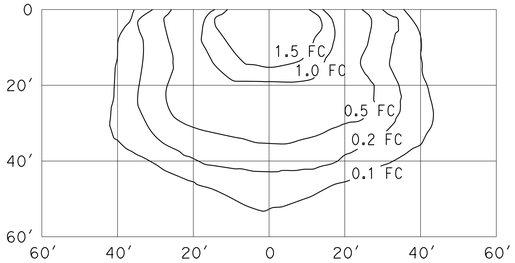

WALL LUMINAIRE
15′ Mounting Height
Lamp operated at 9,500 lm
100-W high pressure sodium lamp
ANSI Designation S54

ISOFOOTCANDLE CURVE - MINIMUM

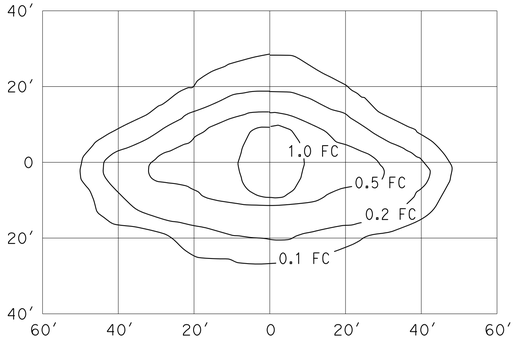

PENDANT SOFFIT LUMINAIRE
TYPE III SHORT
17′ Mounting Height
Lamp operated at 5,800 lm
70-W high pressure sodium lamp
ANSI Designation S62

ISOFOOTCANDLE CURVE - MINIMUM

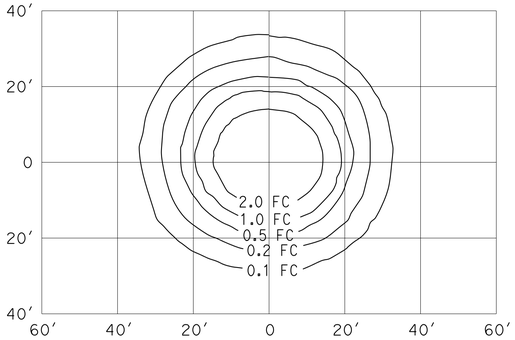

PENDANT SOFFIT LUMINAIRE
17′ Mounting Height
Lamp operated at 5,800 lm
70-W high pressure sodium lamp
ANSI Designation S62

ISOFOOTCANDLE CURVE - MINIMUM

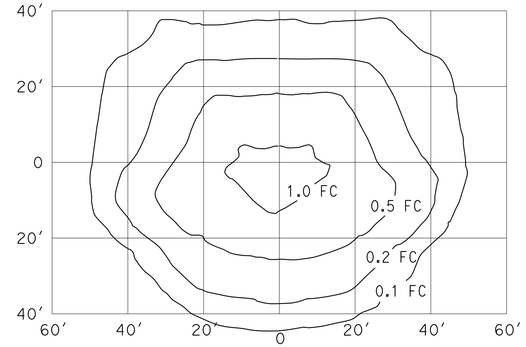

FLUSH SOFFIT LUMINAIRE
17′ Mounting Height
Lamp operated at 5,800 lm
70-W high pressure sodium lamp
ANSI Designation S62

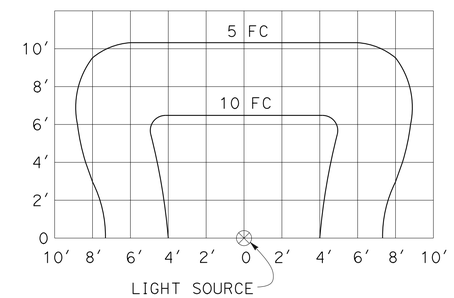

SIGN LIGHTING FIXTURE
ISOFOOTCANDLE DIAGRAM

NOTES:

1. Curves represent the minimum footcandle (FC) of initial illumination on a 10′-0" x 20′-0" panel.
2. The FC shown are with the fixture attached to the light fixture mounting channel which places the center of the source 4′-8" in front of panel and 1′-0" below the bottom edge.
3. Applicable lamp: 85-W fluorescent phosphor coated induction lamp.

STATE OF CALIFORNIA
DEPARTMENT OF TRANSPORTATION

ELECTRICAL SYSTEMS (ISOFOOTCANDLE DIAGRAMS)

NO SCALE

RSP ES-10B DATED JULY 20, 2012 SUPPLEMENTS THE STANDARD PLANS BOOK DATED 2010.

REVISED STANDARD PLAN RSP ES-10B

2010 REVISED STANDARD PLAN RSP ES-10B