ACNH-Q101(201)E

Dist	COUNTY	ROUTE	POST MILES TOTAL PROJECT	SHEET No.	TOTAL SHEETS
07	LA	101	6.3/8.3	1	53

INDEX OF PLANS

Sheet No.	Description
1	Title and Location Map
2	Construction Details
3	Plant List
4-12	Planting Plans
13-21	Irrigation Plans
22	Sprinkler Schedule
23-25	Irrigation Quantities
26	Construction Area Signs
27-30	Traffic Handling Details
31-35	Electrical Service
36-53	Revised and New Standard Plans

THE STANDARD PLANS LIST APPLICABLE TO THIS CONTRACT IS INCLUDED IN THE NOTICE TO BIDDERS AND SPECIAL PROVISIONS BOOK.

STATE OF CALIFORNIA

DEPARTMENT OF TRANSPORTATION

PROJECT PLANS FOR CONSTRUCTION ON

STATE HIGHWAY

IN LOS ANGELES COUNTY IN LOS ANGELES FROM SUNSET BOULEVARD OVERCROSSING TO 0.3 MILE NORTH OF PILGRIMAGE OVERCROSSING

TO BE SUPPLEMENTED BY STANDARD PLANS DATED MAY 2006

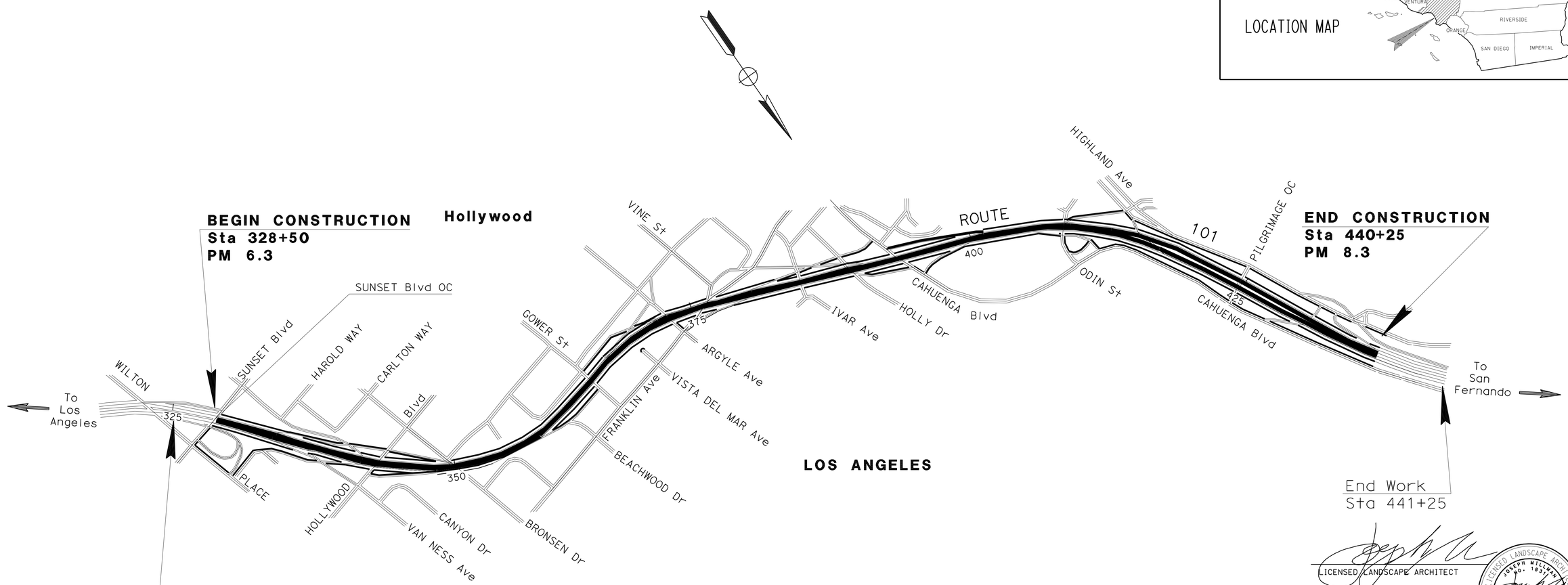

LICENSED LANDSCAPE ARCHITECT

February 22, 2011

PLANS APPROVAL DATE

THE STATE OF CALIFORNIA OR ITS OFFICERS OR AGENTS SHALL NOT BE RESPONSIBLE FOR THE ACCURACY OR COMPLETENESS OF SCANNED COPIES OF THIS PLAN SHEET.

LICENSED LANDSCAPE ARCHITECT JOSEPH MILLMAN No. 1831 Signature 31 JULY 2012 Renewal Date 11 FEBRUARY 2011 Date STATE OF CALIFORNIA

CONTRACT No.	07-4T2304
PROJECT ID	0700020017

THE CONTRACTOR SHALL POSSESS THE CLASS (OR CLASSES) OF LICENSE AS SPECIFIED IN THE "NOTICE TO BIDDERS."

PROJECT MANAGER ERIC WANG

SENIOR LANDSCAPE ARCHITECT PATTY WATANABE

LAST REVISION 02-11-11

DATE PLOTTED => 02-MAR-2011

TIME PLOTTED => 09:38

Dist	COUNTY	ROUTE	POST MILES TOTAL PROJECT	SHEET No.	TOTAL SHEETS
07	LA	101	6.3/8.3	2	53

LICENSED LANDSCAPE ARCHITECT

2-22-11
PLANS APPROVAL DATE

LICENSED LANDSCAPE ARCHITECT
JOSEPH MILLMAN
No. 1831
Signature
31 JULY 2012
Renewal Date
11 FEBRUARY 2011
Date
STATE OF CALIFORNIA

THE STATE OF CALIFORNIA OR ITS OFFICERS OR AGENTS SHALL NOT BE RESPONSIBLE FOR THE ACCURACY OR COMPLETENESS OF SCANNED COPIES OF THIS PLAN SHEET.

NOTE: FOR ACCURATE RIGHT OF WAY DATA, CONTACT RIGHT OF WAY ENGINEERING AT THE DISTRICT OFFICE.

EXISTING UTILITY FACILITIES HAVE NOT BEEN SHOWN ON THIS PLAN.

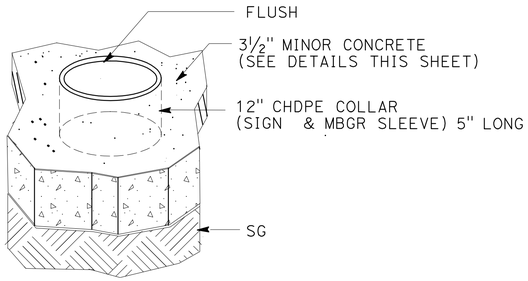

COLLAR DETAIL

NOTE:
PLACE 12" Dia CHDPE COLLAR (5" LENGTH) AS FORM (CLEAR) AROUND POST

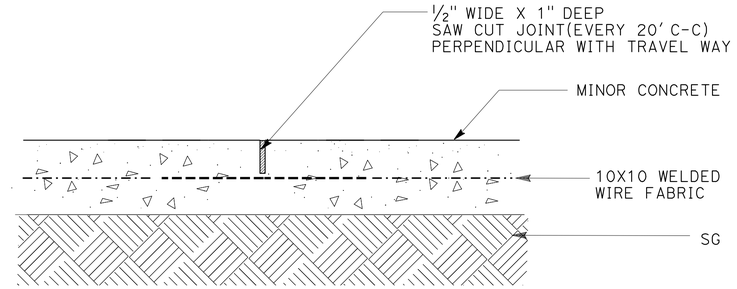

EXPANSION JOINT DETAIL

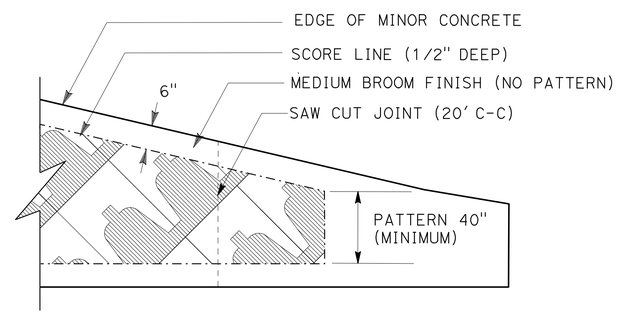

MINIMUM PATTERN DETAIL

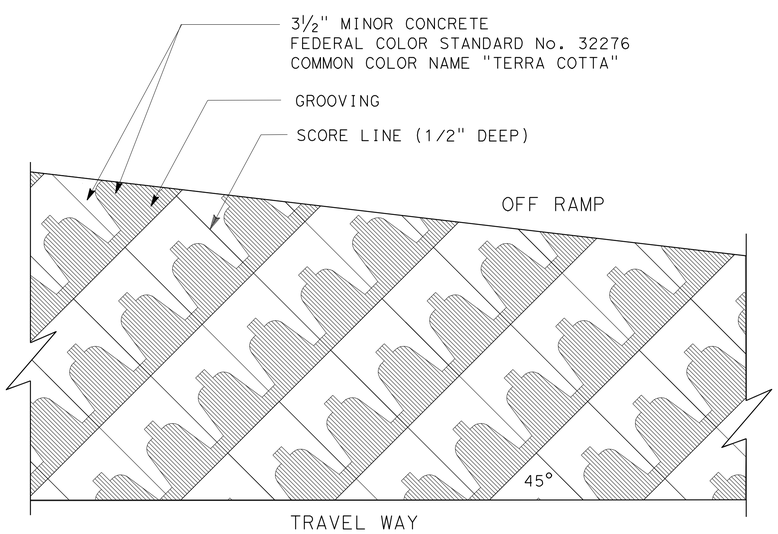

TYPICAL PAVEMENT LAYOUT

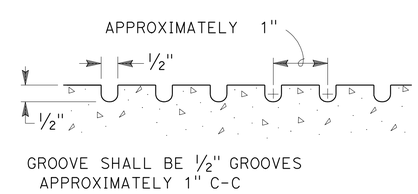

GROOVING DETAIL

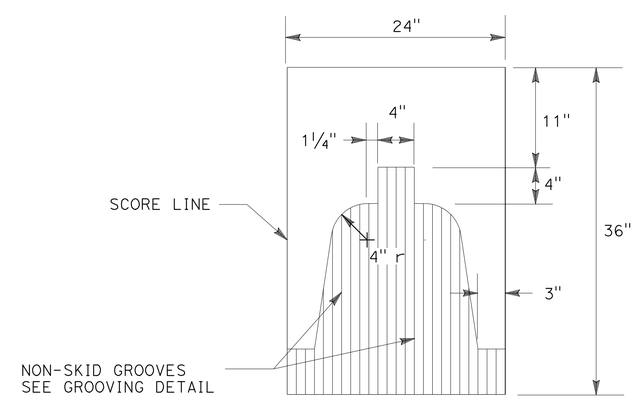

STAMPED CONCRETE DETAIL

CONSTRUCTION DETAILS

NO SCALE

C-1

STATE OF CALIFORNIA - DEPARTMENT OF TRANSPORTATION
Caltrans
LANDSCAPE ARCHITECTURE

SENIOR LANDSCAPE ARCHITECT: PATTY WATANABE

CALCULATED-DESIGNED BY: JOSEPH MILLMAN
CHECKED BY: JENNIFER KURTH

REVISED BY
DATE REVISED

LAST REVISION 02-11-11
DATE PLOTTED => 02-MAR-2011
TIME PLOTTED => 09:38

Dist	COUNTY	ROUTE	POST MILES TOTAL PROJECT	SHEET No.	TOTAL SHEETS
07	LA	101	6.3/8.3	3	53

LICENSED LANDSCAPE ARCHITECT

2-22-11
PLANS APPROVAL DATE

LICENSED LANDSCAPE ARCHITECT JOSEPH MILLMAN No. 1831 Signature 31 JULY 2012 Renewal Date 11 FEBRUARY 2011 Date STATE OF CALIFORNIA

THE STATE OF CALIFORNIA OR ITS OFFICERS OR AGENTS SHALL NOT BE RESPONSIBLE FOR THE ACCURACY OR COMPLETENESS OF SCANNED COPIES OF THIS PLAN SHEET.

ABBREVIATIONS

AMEND — amendment
B & B — balled and burlapped
Dia — diameter
EA — each
LB — pound
Oz — ounce
Ft — foot/feet
SQFT — square feet
SQYD — square yard
CF — cubic feet
CY — cubic yard
LADWP — Los Angeles Department of Water and Power
Max — maximum
Min — minimum
NCN — no common name
No. — number
Pkt — packet
PLT ESTB — plant establishment
Pvmt — pavement
R/W — right of WAY
SF — state furnished
TRVD — traveled

APPLICABLE WHEN CIRCLED:

1 - Quantities shown are "per plant" unless shown as SQFT or SQYD application rates.
2 - Sufficient to receive root ball.
3 - Does not apply to mulch areas.
4 - As shown on plans.
5 - Unless otherwise shown on plans.
6 - See detail.
7 - See Special Provisions.

NOTE:

Underlined portions of botanical name indicate abbreviations used on Planting Plans.

PLANT LIST AND PLANTING SPECIFICATIONS

PLANT GROUP	PLANT No.	SYMBOL	BOTANICAL NAME	COMMON NAME	SIZE	QUANTITY (EACH)	HOLE SIZE (INCHES) Dia	HOLE SIZE (INCHES) DEPTH	BASIN TYPE	IRON SULFATE 1	SOIL AMEND 1	COMMERCIAL FERTILIZER 1 PLANTING	COMMERCIAL FERTILIZER 1 PLT ESTB	BASIN MULCH	STAKING	PLANTING LIMITS MINIMUM DISTANCE (Ft) FROM TRVD WAY	Pvmt	FENCE	WALL	PAVED DITCH	EARTH DITCH	ON CENTER (Ft)	REMARKS
A	1		ACACIA REDOLENS 'LOW BOY'	PROSTRATE ACACIA	No. 1	938	2	3	II	---	---	1 Pkt	4 Oz	1 CF	6	---	20	20	20	20	23	15	SHRUB
	2		ROSMARINUS OFFICINALIS 'PROSTRATUS'	PROSTRATE ROSEMARY	No. 1	1,322	2	3	II	---	---	1 Pkt	4 Oz	1 CF	6	---	5	7	8	8	8	3.5	SHRUB
	3		PLUMBAGO AURICULATA	CAPE PLUMBAGO	No. 1	1,647	2	3	II	---	---	1 Pkt	4 Oz	1 CF	6	---	15	15	15	15	17	10	SHRUB
	4		PARTHENOCISSUS TRICUSPIDATA	BOSTON IVY	No. 1	56	2	2	III	---	---	1 Pkt	4 Oz	1 CF	6	---	---	---	---	13	15	9	VINE
B	5		AGAVE ATTENUATA	SOFT LEAVED AGAVE	No. 5	44	18	2	II	---	---	3 Pkt	8 Oz	3 CF	---	---	5	7	7	7	8	6	SHRUB
F	6		HEDERA CANARIENSIS	ALGERIAN IVY	FLATS	30,018	2	2	---	---	---	2 LB/ 1000 SQFT	2 LB/ 1000 SQFT	---	---	---	5	7	7	7	8	1.5	3 GROUNDCOVER

LEGEND:

M — XX CY — MULCH (4" DEEP)

RP — XX SQFT — (ROADSIDE CLEARING) REMOVE PLANTS (VINES ON WALLS REMAIN)

RC — XX SQFT — (ROADSIDE CLEARING) REMOVE PLANTS LESS THAN 4" IN DIAMETER

MC — XX SQFT — MINOR CONCRETE (TEXTURED PAVING) SEE CONSTRUCTION DETAILS

Exist TREE

Exist PALM

Exist PLANTS

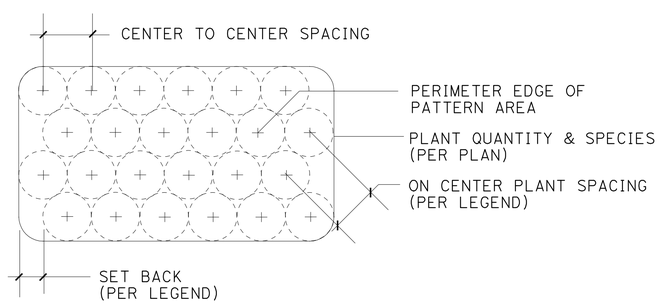

NOTE: PLACE PLANTS ON TRIANGULAR SPACING

PLANT PLACEMENT (SHOWN AS PATTERN)

STATE OF CALIFORNIA - DEPARTMENT OF TRANSPORTATION
Caltrans® LANDSCAPE ARCHITECTURE

SENIOR LANDSCAPE ARCHITECT: PATTY WATANABE

CALCULATED-DESIGNED BY: JOSEPH MILLMAN
CHECKED BY: JENNIFER KURTH

REVISED BY / DATE REVISED

PLANT LIST
PL-1

LAST REVISION 02-11-11
DATE PLOTTED => 02-MAR-2011
TIME PLOTTED => 09:39

Dist	COUNTY	ROUTE	POST MILES TOTAL PROJECT	SHEET No.	TOTAL SHEETS
07	LA	101	6.3/8.3	4	53

LICENSED LANDSCAPE ARCHITECT

2-22-11
PLANS APPROVAL DATE

LICENSED LANDSCAPE ARCHITECT
JOSEPH MILLMAN
NO. 1831
Signature
31 JULY 2012
Renewal Date
11 FEBRUARY 2011
Date
STATE OF CALIFORNIA

THE STATE OF CALIFORNIA OR ITS OFFICERS OR AGENTS SHALL NOT BE RESPONSIBLE FOR THE ACCURACY OR COMPLETENESS OF SCANNED COPIES OF THIS PLAN SHEET.

NOTE: FOR ACCURATE RIGHT OF WAY DATA, CONTACT RIGHT OF WAY ENGINEERING AT THE DISTRICT OFFICE.

EXISTING UTILITY FACILITIES HAVE NOT BEEN SHOWN ON THIS PLAN.

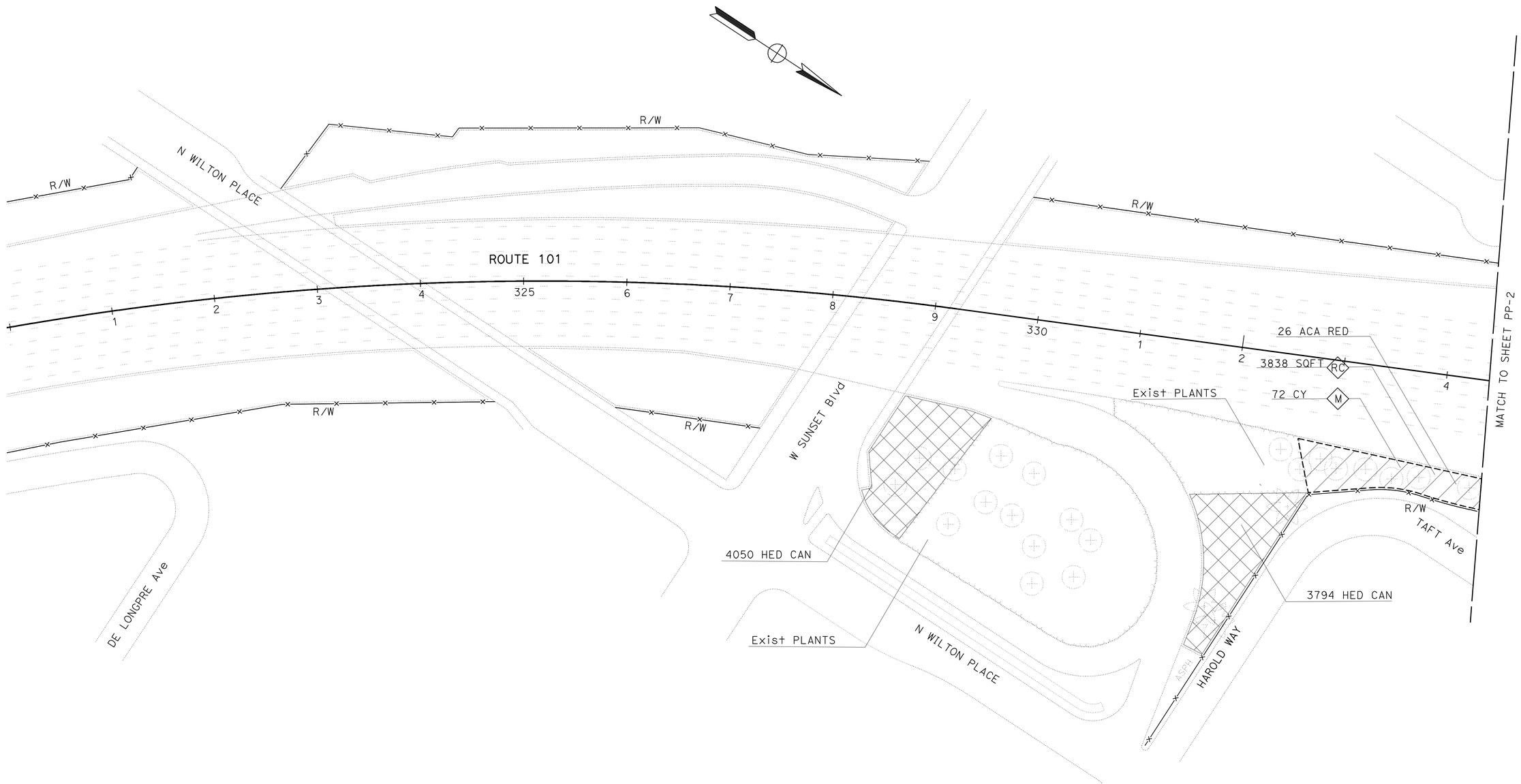

PLANTING PLAN

SCALE 1"=50'

PP-1

THIS PLAN ACCURATE FOR LANDSCAPE WORK ONLY.

STATE OF CALIFORNIA - DEPARTMENT OF TRANSPORTATION
Caltrans®
LANDSCAPE ARCHITECTURE

SENIOR LANDSCAPE ARCHITECT: PATTY WATANABE

CALCULATED-DESIGNED BY: JOSEPH MILLMAN
CHECKED BY: JENNIFER KURTH

REVISED BY
DATE REVISED

LAST REVISION 02-11-11
DATE PLOTTED => 02-MAR-2011
TIME PLOTTED => 09:39

Dist	COUNTY	ROUTE	POST MILES TOTAL PROJECT	SHEET No.	TOTAL SHEETS
07	LA	101	6.3/8.3	5	53

LICENSED LANDSCAPE ARCHITECT

2-22-11
PLANS APPROVAL DATE

LICENSED LANDSCAPE ARCHITECT
JOSEPH MILLMAN
No. 1831
31 JULY 2012
Renewal Date
11 FEBRUARY 2011
Date
STATE OF CALIFORNIA

THE STATE OF CALIFORNIA OR ITS OFFICERS OR AGENTS SHALL NOT BE RESPONSIBLE FOR THE ACCURACY OR COMPLETENESS OF SCANNED COPIES OF THIS PLAN SHEET.

NOTE: FOR ACCURATE RIGHT OF WAY DATA, CONTACT RIGHT OF WAY ENGINEERING AT THE DISTRICT OFFICE.

EXISTING UTILITY FACILITIES HAVE NOT BEEN SHOWN ON THIS PLAN.

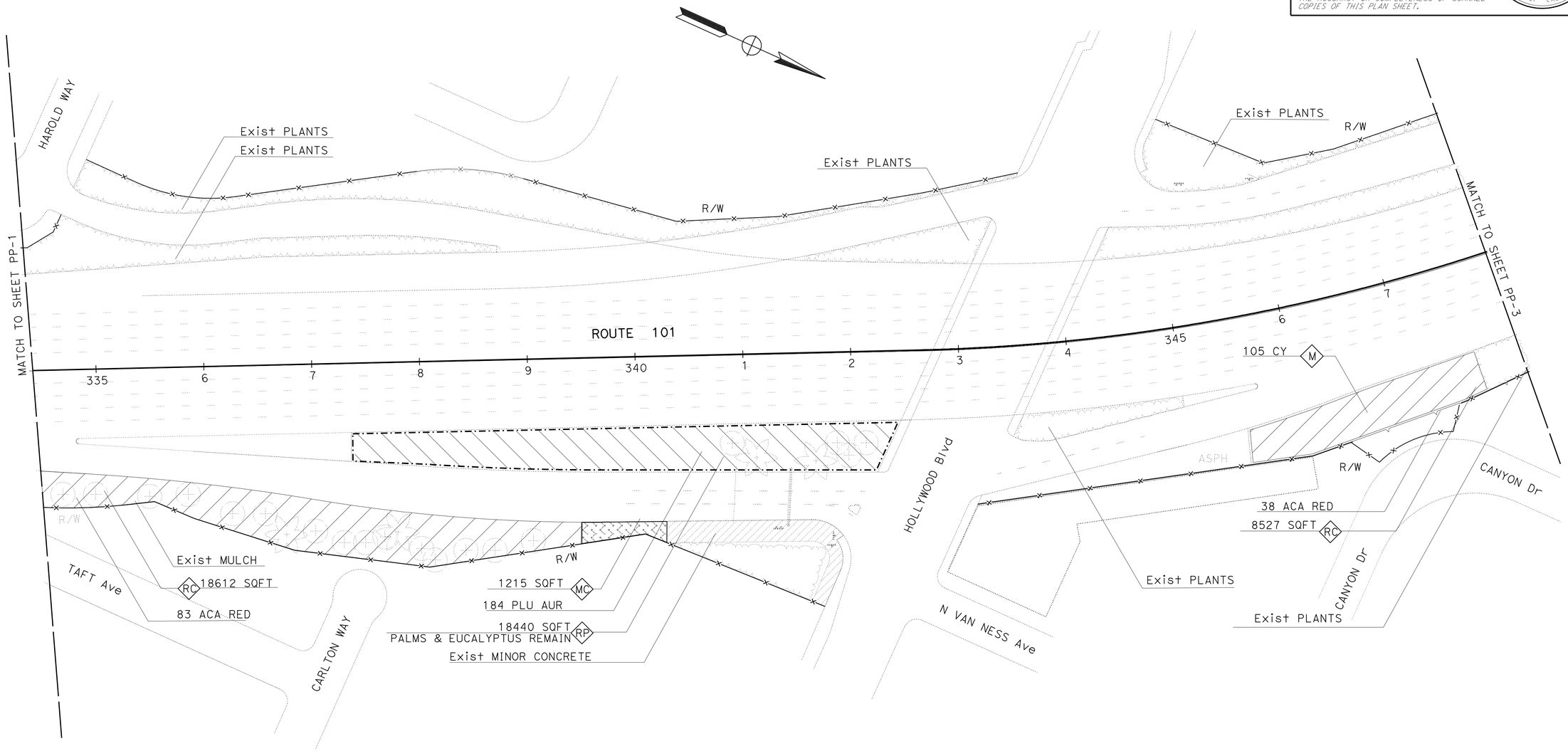

THIS PLAN ACCURATE FOR LANDSCAPE WORK ONLY.

PLANTING PLAN PP-2

SCALE 1"=50'

STATE OF CALIFORNIA - DEPARTMENT OF TRANSPORTATION
Caltrans®
LANDSCAPE ARCHITECTURE

SENIOR LANDSCAPE ARCHITECT: PATTY WATANABE

CALCULATED-DESIGNED BY: JOSEPH MILLMAN
CHECKED BY: JENNIFER KURTH

REVISED BY
DATE REVISED

LAST REVISION 02-11-11
DATE PLOTTED => 02-MAR-2011
TIME PLOTTED => 09:39

Dist	COUNTY	ROUTE	POST MILES TOTAL PROJECT	SHEET No.	TOTAL SHEETS
07	LA	101	6.3/8.3	6	53

LICENSED LANDSCAPE ARCHITECT

2-22-11
PLANS APPROVAL DATE

LICENSED LANDSCAPE ARCHITECT
JOSEPH MILLMAN
No. 1831
Signature
31 JULY 2012
Renewal Date
11 FEBRUARY 2011
Date
STATE OF CALIFORNIA

THE STATE OF CALIFORNIA OR ITS OFFICERS OR AGENTS SHALL NOT BE RESPONSIBLE FOR THE ACCURACY OR COMPLETENESS OF SCANNED COPIES OF THIS PLAN SHEET.

NOTE: FOR ACCURATE RIGHT OF WAY DATA, CONTACT RIGHT OF WAY ENGINEERING AT THE DISTRICT OFFICE.

EXISTING UTILITY FACILITIES HAVE NOT BEEN SHOWN ON THIS PLAN.

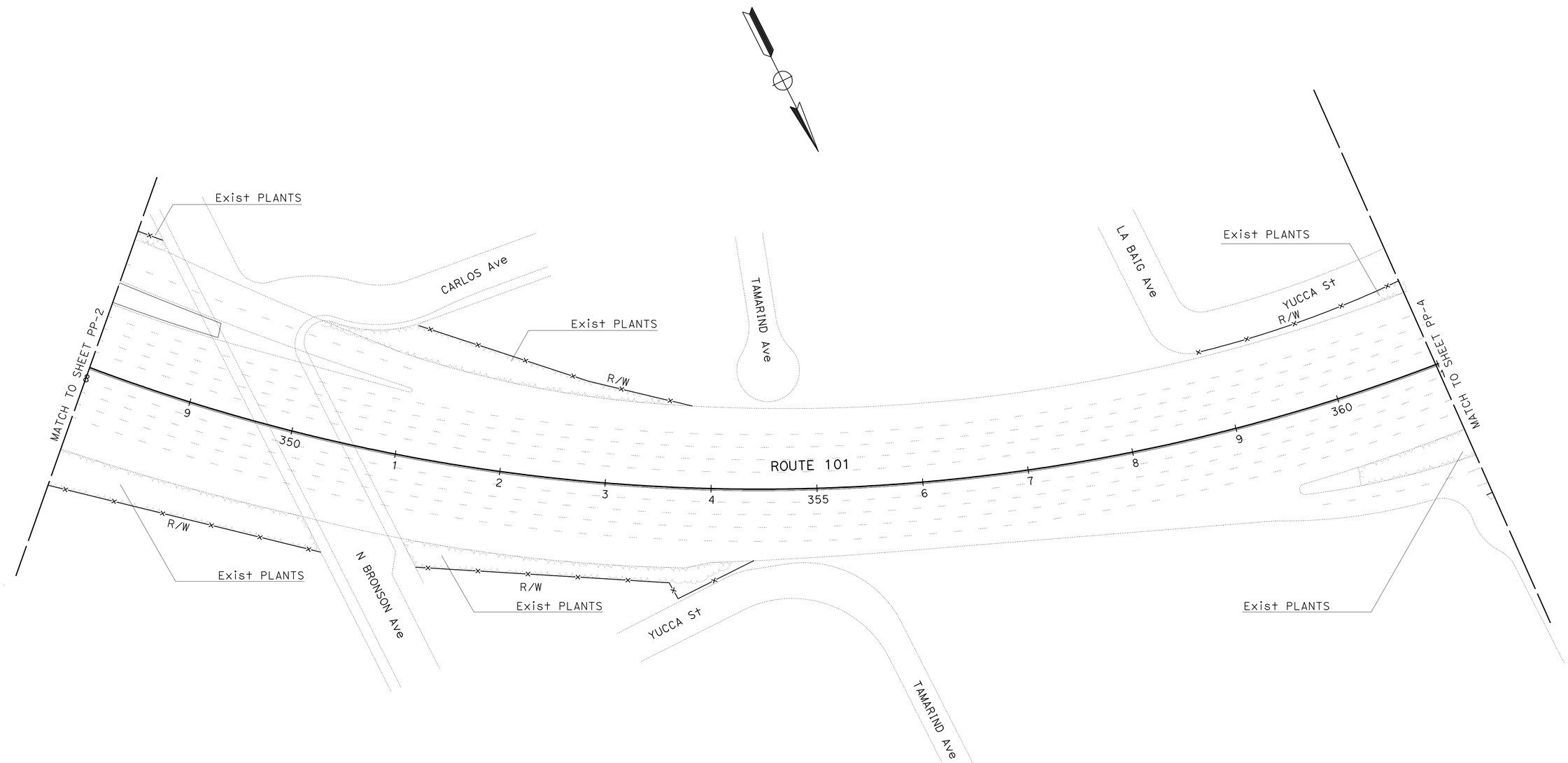

THIS PLAN ACCURATE FOR LANDSCAPE WORK ONLY.

PLANTING PLAN PP-3

SCALE 1"=50'

STATE OF CALIFORNIA - DEPARTMENT OF TRANSPORTATION
LANDSCAPE ARCHITECTURE

SENIOR LANDSCAPE ARCHITECT: PATTY WATANABE

CALCULATED-DESIGNED BY: JOSEPH MILLMAN
CHECKED BY: JENNIFER KURTH

REVISED BY
DATE REVISED

LAST REVISION 02-11-11
DATE PLOTTED => 02-MAR-2011
TIME PLOTTED => 09:39

Dist	COUNTY	ROUTE	POST MILES TOTAL PROJECT	SHEET No.	TOTAL SHEETS
07	LA	101	6.3/8.3	7	53

LICENSED LANDSCAPE ARCHITECT

2-22-11

PLANS APPROVAL DATE

LICENSED LANDSCAPE ARCHITECT JOSEPH MILLMAN NO. 1831 Signature 31 JULY 2012 Renewal Date 11 FEBRUARY 2011 Date STATE OF CALIFORNIA

THE STATE OF CALIFORNIA OR ITS OFFICERS OR AGENTS SHALL NOT BE RESPONSIBLE FOR THE ACCURACY OR COMPLETENESS OF SCANNED COPIES OF THIS PLAN SHEET.

NOTE: FOR ACCURATE RIGHT OF WAY DATA, CONTACT RIGHT OF WAY ENGINEERING AT THE DISTRICT OFFICE.

EXISTING UTILITY FACILITIES HAVE NOT BEEN SHOWN ON THIS PLAN.

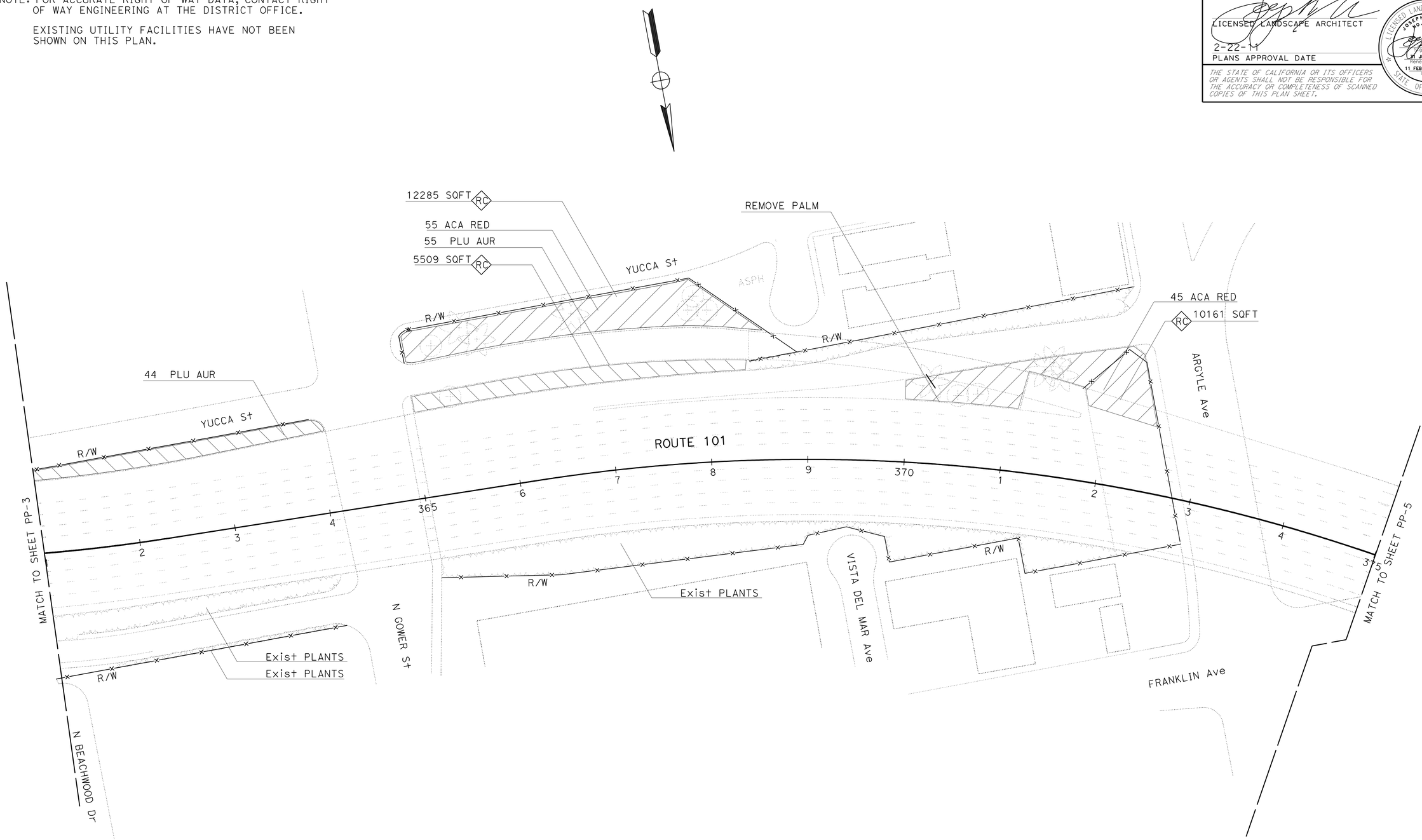

THIS PLAN ACCURATE FOR LANDSCAPE WORK ONLY.

PLANTING PLAN

SCALE 1"=50'

PP-4

STATE OF CALIFORNIA - DEPARTMENT OF TRANSPORTATION

Caltrans®

LANDSCAPE ARCHITECTURE

SENIOR LANDSCAPE ARCHITECT: PATTY WATANABE

CALCULATED-DESIGNED BY: JOSEPH MILLMAN

CHECKED BY: JENNIFER KURTH

REVISED BY

DATE REVISED

LAST REVISION 02-11-11

DATE PLOTTED => 02-MAR-2011

TIME PLOTTED => 09:39

Dist	COUNTY	ROUTE	POST MILES TOTAL PROJECT	SHEET No.	TOTAL SHEETS
07	LA	101	6.3/8.3	8	53

LICENSED LANDSCAPE ARCHITECT

2-22-11
PLANS APPROVAL DATE

LICENSED LANDSCAPE ARCHITECT
JOSEPH MILLMAN
No. 1831
Expiration Date
31 JULY 2012
Renewal Date
11 FEBRUARY 2011
Date
STATE OF CALIFORNIA

THE STATE OF CALIFORNIA OR ITS OFFICERS OR AGENTS SHALL NOT BE RESPONSIBLE FOR THE ACCURACY OR COMPLETENESS OF SCANNED COPIES OF THIS PLAN SHEET.

NOTE: FOR ACCURATE RIGHT OF WAY DATA, CONTACT RIGHT OF WAY ENGINEERING AT THE DISTRICT OFFICE.

EXISTING UTILITY FACILITIES HAVE NOT BEEN SHOWN ON THIS PLAN.

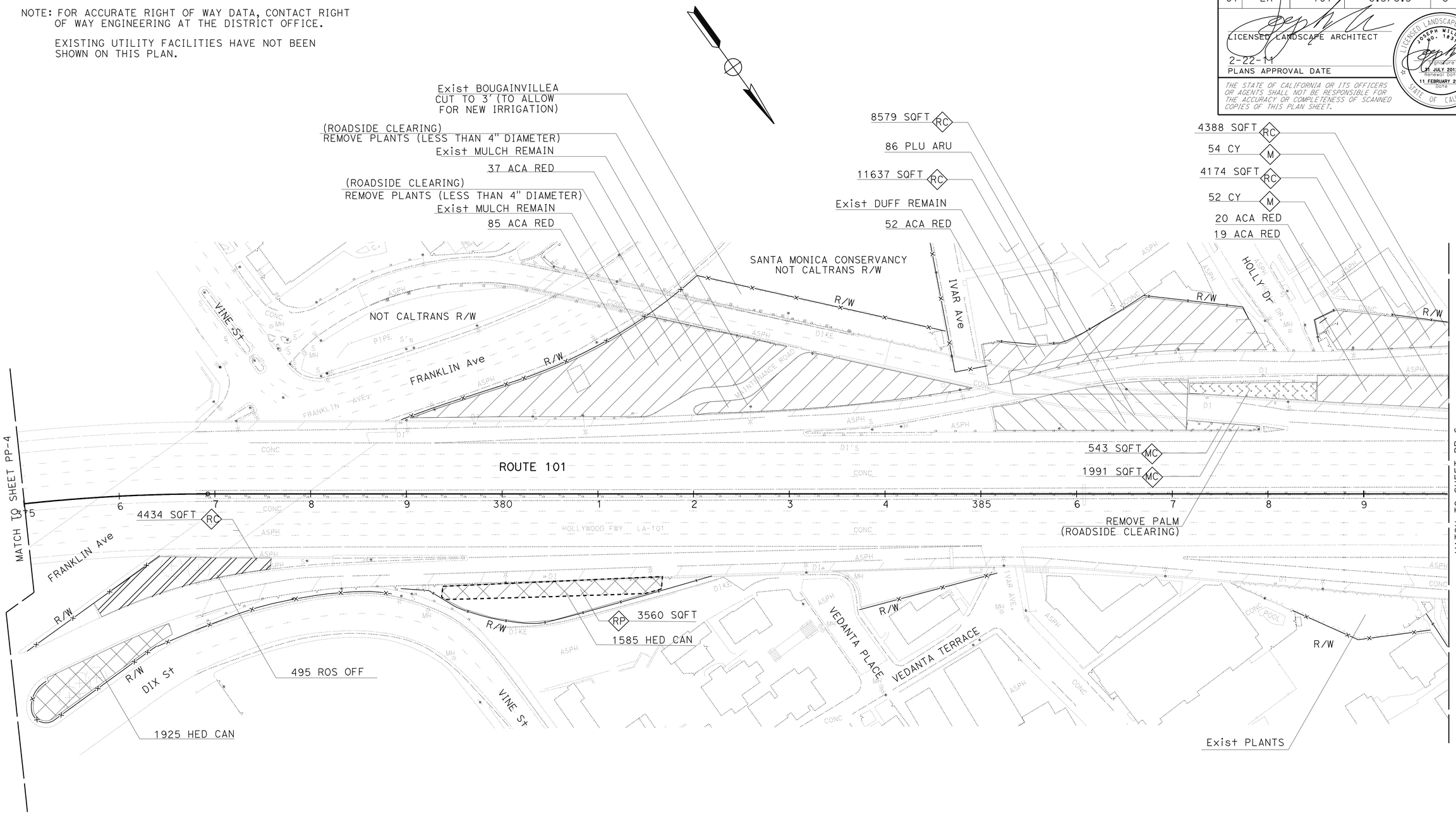

THIS PLAN ACCURATE FOR LANDSCAPE WORK ONLY.

PLANTING PLAN PP-5

SCALE 1"=50'

STATE OF CALIFORNIA - DEPARTMENT OF TRANSPORTATION
Caltrans
LANDSCAPE ARCHITECTURE

SENIOR LANDSCAPE ARCHITECT: PATTY WATANABE

CALCULATED-DESIGNED BY: JOSEPH MILLMAN
CHECKED BY: JENNIFER KURTH

REVISED BY | DATE REVISED

LAST REVISION 02-11-11
DATE PLOTTED => 02-MAR-2011
TIME PLOTTED => 09:39

Dist	COUNTY	ROUTE	POST MILES TOTAL PROJECT	SHEET No.	TOTAL SHEETS
07	LA	101	6.3/8.3	9	53

LICENSED LANDSCAPE ARCHITECT

2-22-11

PLANS APPROVAL DATE

LICENSED LANDSCAPE ARCHITECT
JOSEPH MILLMAN
No. 1831
Signature
31 JULY 2012
Renewal Date
11 FEBRUARY 2011
Date
STATE OF CALIFORNIA

THE STATE OF CALIFORNIA OR ITS OFFICERS OR AGENTS SHALL NOT BE RESPONSIBLE FOR THE ACCURACY OR COMPLETENESS OF SCANNED COPIES OF THIS PLAN SHEET.

NOTE: FOR ACCURATE RIGHT OF WAY DATA, CONTACT RIGHT OF WAY ENGINEERING AT THE DISTRICT OFFICE.

EXISTING UTILITY FACILITIES HAVE NOT BEEN SHOWN ON THIS PLAN.

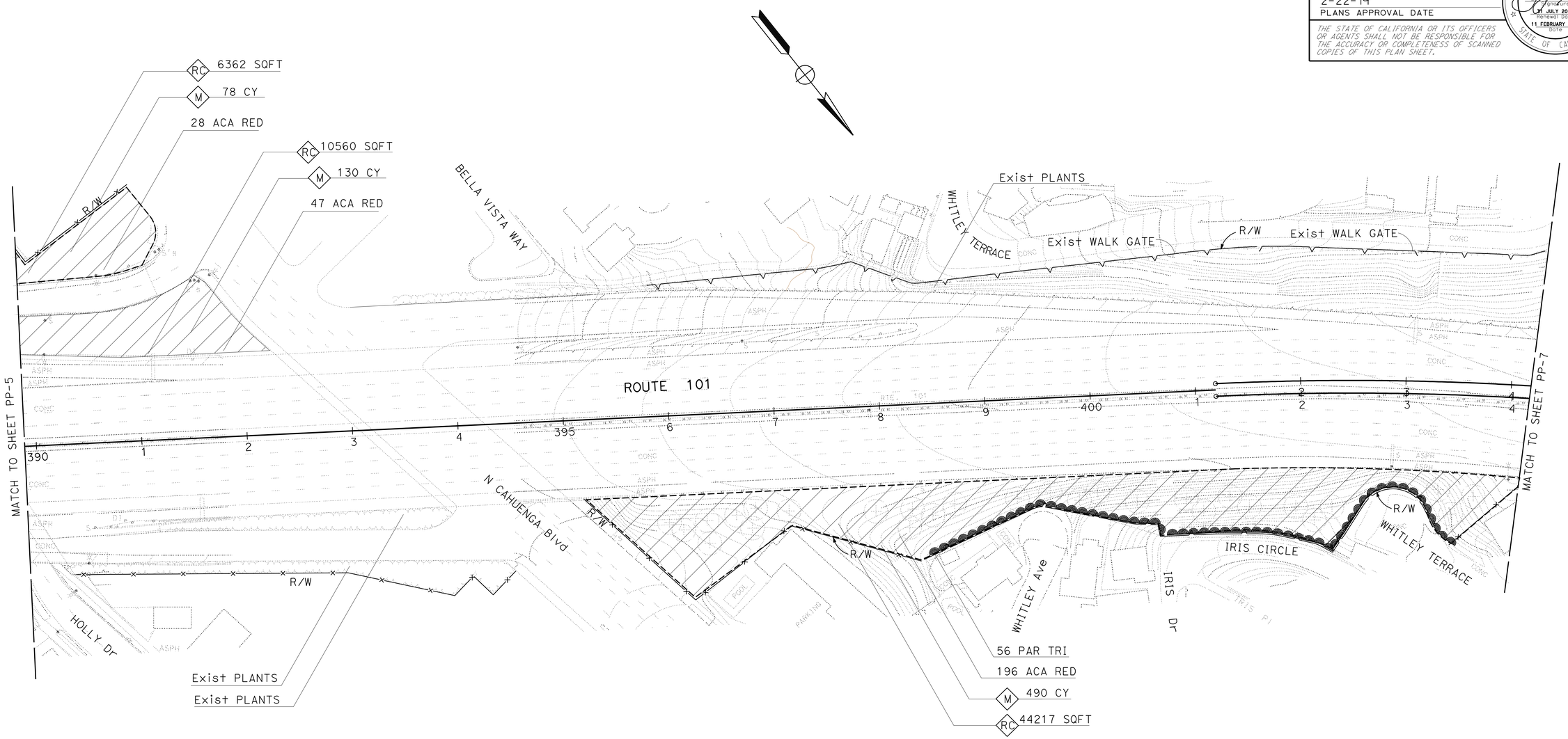

THIS PLAN ACCURATE FOR LANDSCAPE WORK ONLY.

PLANTING PLAN PP-6

SCALE 1"=50'

STATE OF CALIFORNIA - DEPARTMENT OF TRANSPORTATION
Caltrans® LANDSCAPE ARCHITECTURE

SENIOR LANDSCAPE ARCHITECT: PATTY WATANABE

CALCULATED-DESIGNED BY: JOSEPH MILLMAN
CHECKED BY: JENNIFER KURTH

REVISED BY | DATE REVISED

LAST REVISION 02-11-11 | DATE PLOTTED => 02-MAR-2011 | TIME PLOTTED => 09:39

Dist	COUNTY	ROUTE	POST MILES TOTAL PROJECT	SHEET No.	TOTAL SHEETS
07	LA	101	6.3/8.3	10	53

LICENSED LANDSCAPE ARCHITECT

2-22-11
PLANS APPROVAL DATE

THE STATE OF CALIFORNIA OR ITS OFFICERS OR AGENTS SHALL NOT BE RESPONSIBLE FOR THE ACCURACY OR COMPLETENESS OF SCANNED COPIES OF THIS PLAN SHEET.

LICENSED LANDSCAPE ARCHITECT
JOSEPH MILLMAN
No. 1831
Signature
31 JULY 2012
Renewal Date
11 FEBRUARY 2011
Date
STATE OF CALIFORNIA

NOTE: FOR ACCURATE RIGHT OF WAY DATA, CONTACT RIGHT OF WAY ENGINEERING AT THE DISTRICT OFFICE.

EXISTING UTILITY FACILITIES HAVE NOT BEEN SHOWN ON THIS PLAN.

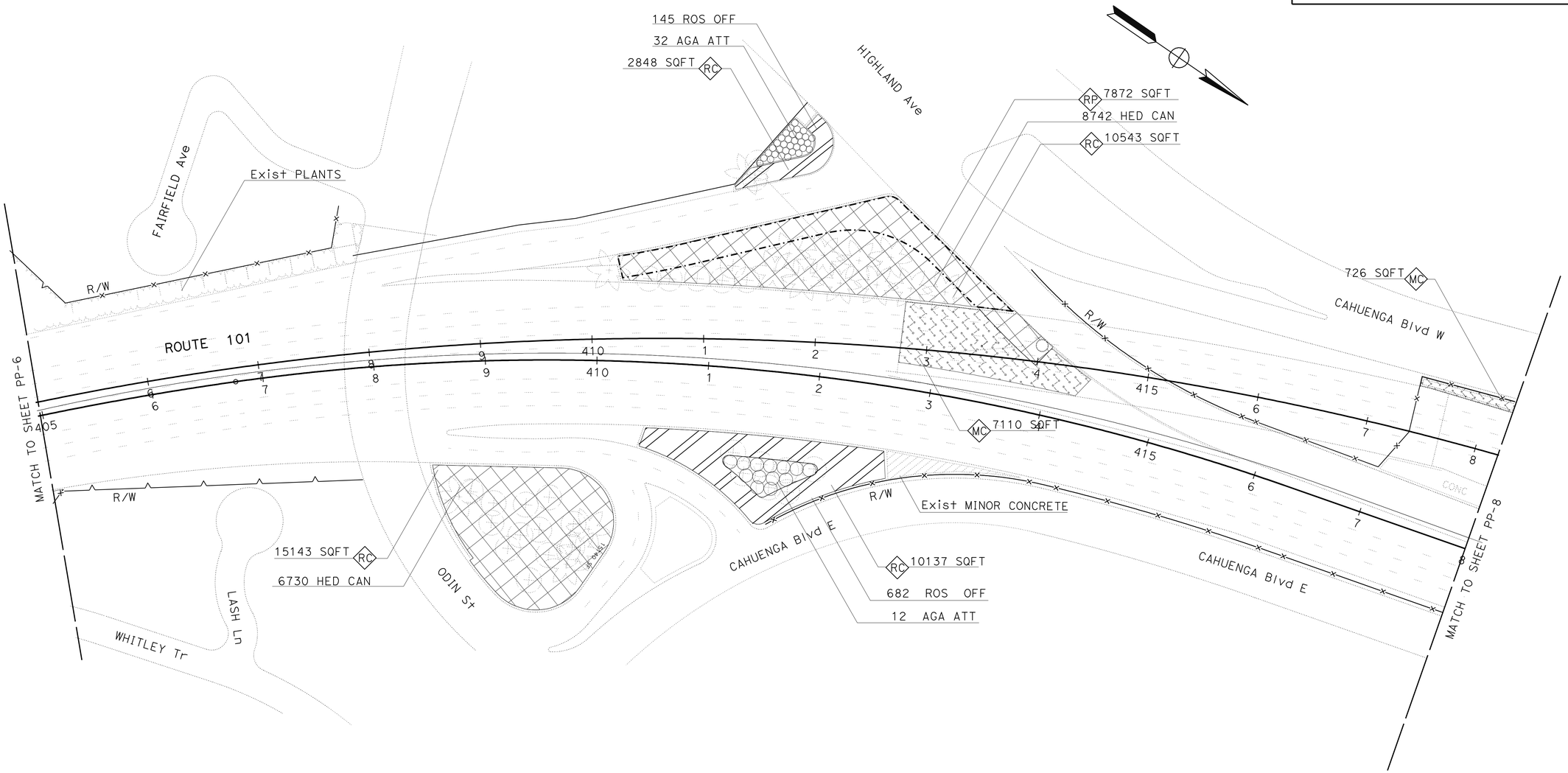

THIS PLAN ACCURATE FOR LANDSCAPE WORK ONLY.

PLANTING PLAN PP-7

SCALE 1"=50'

STATE OF CALIFORNIA - DEPARTMENT OF TRANSPORTATION
Caltrans
LANDSCAPE ARCHITECTURE

SENIOR LANDSCAPE ARCHITECT: PATTY WATANABE
CALCULATED-DESIGNED BY: JOSEPH MILLMAN
CHECKED BY: JENNIFER KURTH
REVISED BY
DATE REVISED

LAST REVISION 02-11-11
DATE PLOTTED => 02-MAR-2011
TIME PLOTTED => 09:39

Dist	COUNTY	ROUTE	POST MILES TOTAL PROJECT	SHEET No.	TOTAL SHEETS
07	LA	101	6.3/8.3	11	53

LICENSED LANDSCAPE ARCHITECT

2-22-11
PLANS APPROVAL DATE

LICENSED LANDSCAPE ARCHITECT
JOSEPH MILLMAN
No. 1831
Signature
31 JULY 2012
Renewal Date
11 FEBRUARY 2011
Date
STATE OF CALIFORNIA

THE STATE OF CALIFORNIA OR ITS OFFICERS OR AGENTS SHALL NOT BE RESPONSIBLE FOR THE ACCURACY OR COMPLETENESS OF SCANNED COPIES OF THIS PLAN SHEET.

NOTE: FOR ACCURATE RIGHT OF WAY DATA, CONTACT RIGHT OF WAY ENGINEERING AT THE DISTRICT OFFICE.

EXISTING UTILITY FACILITIES HAVE NOT BEEN SHOWN ON THIS PLAN.

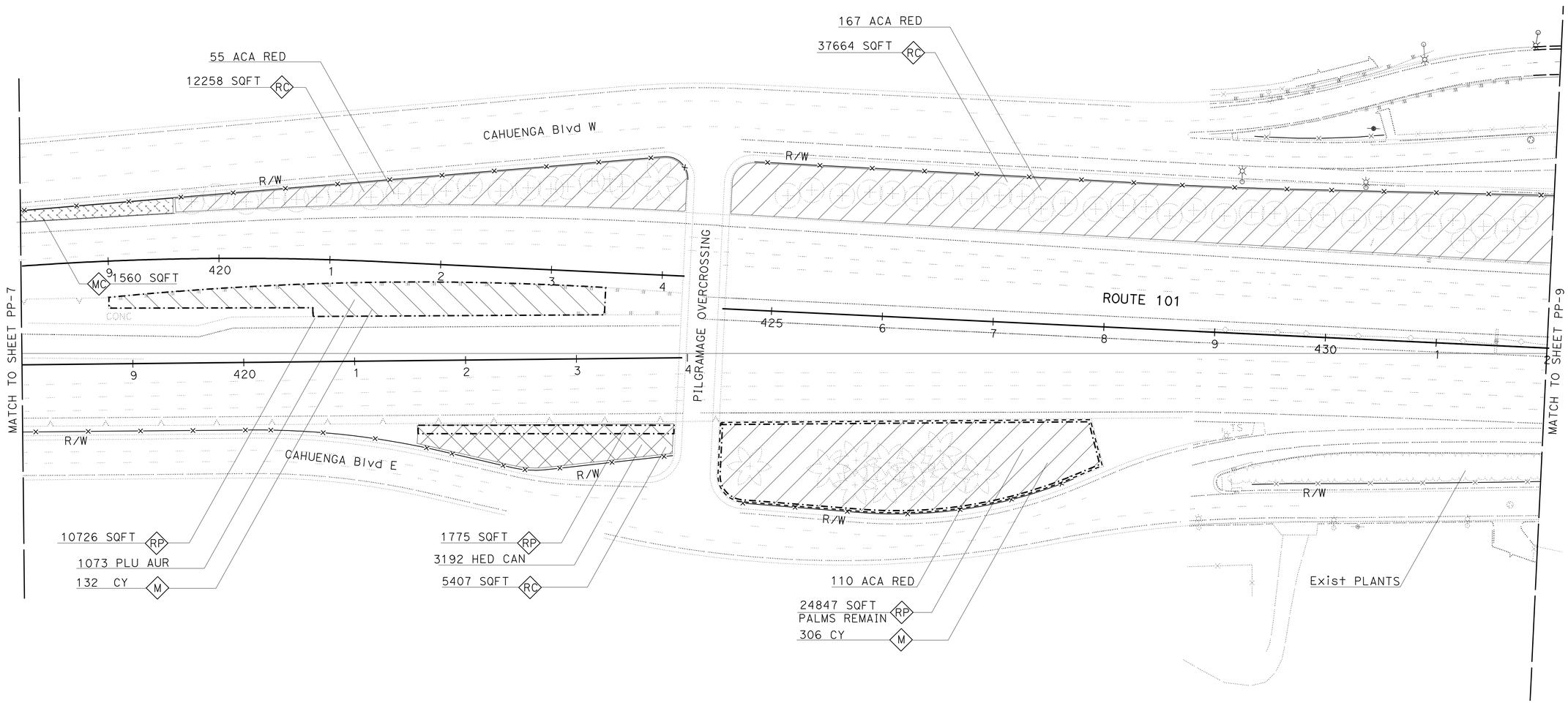

THIS PLAN ACCURATE FOR LANDSCAPE WORK ONLY.

PLANTING PLAN
SCALE 1"=50'

PP-8

STATE OF CALIFORNIA - DEPARTMENT OF TRANSPORTATION
Caltrans
LANDSCAPE ARCHITECTURE

SENIOR LANDSCAPE ARCHITECT: PATTY WATANABE
CALCULATED-DESIGNED BY: JOSEPH MILLMAN
CHECKED BY: JENNIFER KURTH
REVISED BY
DATE REVISED

LAST REVISION 02-11-11
DATE PLOTTED => 02-MAR-2011
TIME PLOTTED => 09:39

Dist	COUNTY	ROUTE	POST MILES TOTAL PROJECT	SHEET No.	TOTAL SHEETS
07	LA	101	6.3/8.3	12	53

LICENSED LANDSCAPE ARCHITECT

2-22-11
PLANS APPROVAL DATE

LICENSED LANDSCAPE ARCHITECT
JOSEPH MILLMAN
No. 1831
Signature
31 JULY 2012
Renewal Date
11 FEBRUARY 2011
Date
STATE OF CALIFORNIA

THE STATE OF CALIFORNIA OR ITS OFFICERS OR AGENTS SHALL NOT BE RESPONSIBLE FOR THE ACCURACY OR COMPLETENESS OF SCANNED COPIES OF THIS PLAN SHEET.

NOTE: FOR ACCURATE RIGHT OF WAY DATA, CONTACT RIGHT OF WAY ENGINEERING AT THE DISTRICT OFFICE.

EXISTING UTILITY FACILITIES HAVE NOT BEEN SHOWN ON THIS PLAN.

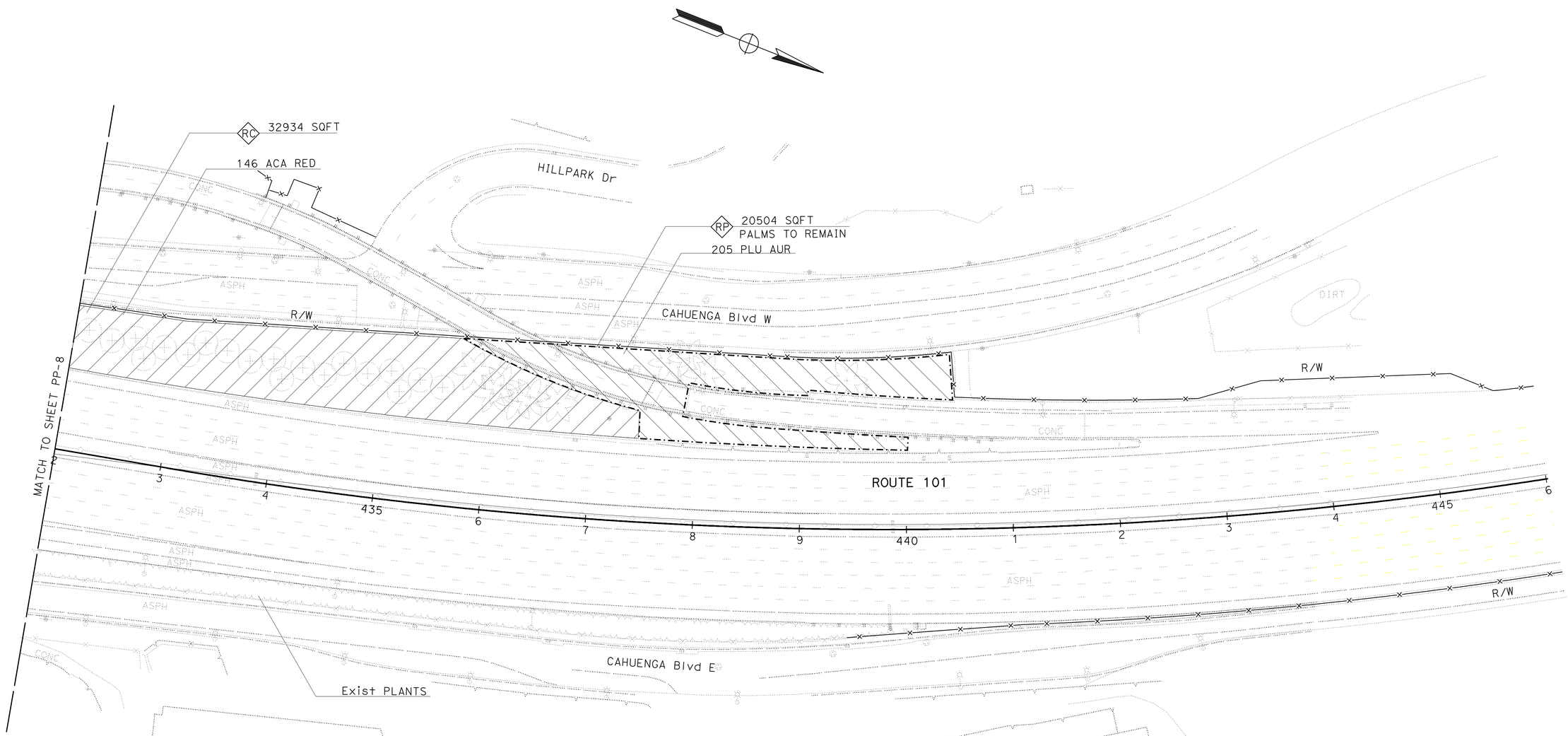

THIS PLAN ACCURATE FOR LANDSCAPE WORK ONLY.

PLANTING PLAN PP-9

SCALE 1"=50'

STATE OF CALIFORNIA - DEPARTMENT OF TRANSPORTATION
Caltrans®
LANDSCAPE ARCHITECTURE

SENIOR LANDSCAPE ARCHITECT: PATTY WATANABE

CALCULATED-DESIGNED BY: JOSEPH MILLMAN
CHECKED BY: JENNIFER KURTH

REVISED BY
DATE REVISED

LAST REVISION 02-11-11
DATE PLOTTED => 02-MAR-2011
TIME PLOTTED => 09:39

Dist	COUNTY	ROUTE	POST MILES TOTAL PROJECT	SHEET No.	TOTAL SHEETS
07	LA	101	6.3/8.3	13	53

LICENSED LANDSCAPE ARCHITECT

2-22-11
PLANS APPROVAL DATE

LICENSED LANDSCAPE ARCHITECT
JOSEPH MILLMAN
No. 1831
Signature
31 JULY 2012
Renewal Date
11 FEBRUARY 2011
Date
STATE OF CALIFORNIA

THE STATE OF CALIFORNIA OR ITS OFFICERS OR AGENTS SHALL NOT BE RESPONSIBLE FOR THE ACCURACY OR COMPLETENESS OF SCANNED COPIES OF THIS PLAN SHEET.

NOTE: FOR ACCURATE RIGHT OF WAY DATA, CONTACT RIGHT OF WAY ENGINEERING AT THE DISTRICT OFFICE.

EXISTING UTILITY FACILITIES HAVE NOT BEEN SHOWN ON THIS PLAN.

REMOVE EXISTING IRRIGATION FACILITIES		
DESCRIPTION	UNIT	QUANTITY
RCV	EA	12
IRRIGATION HEAD	EA	46

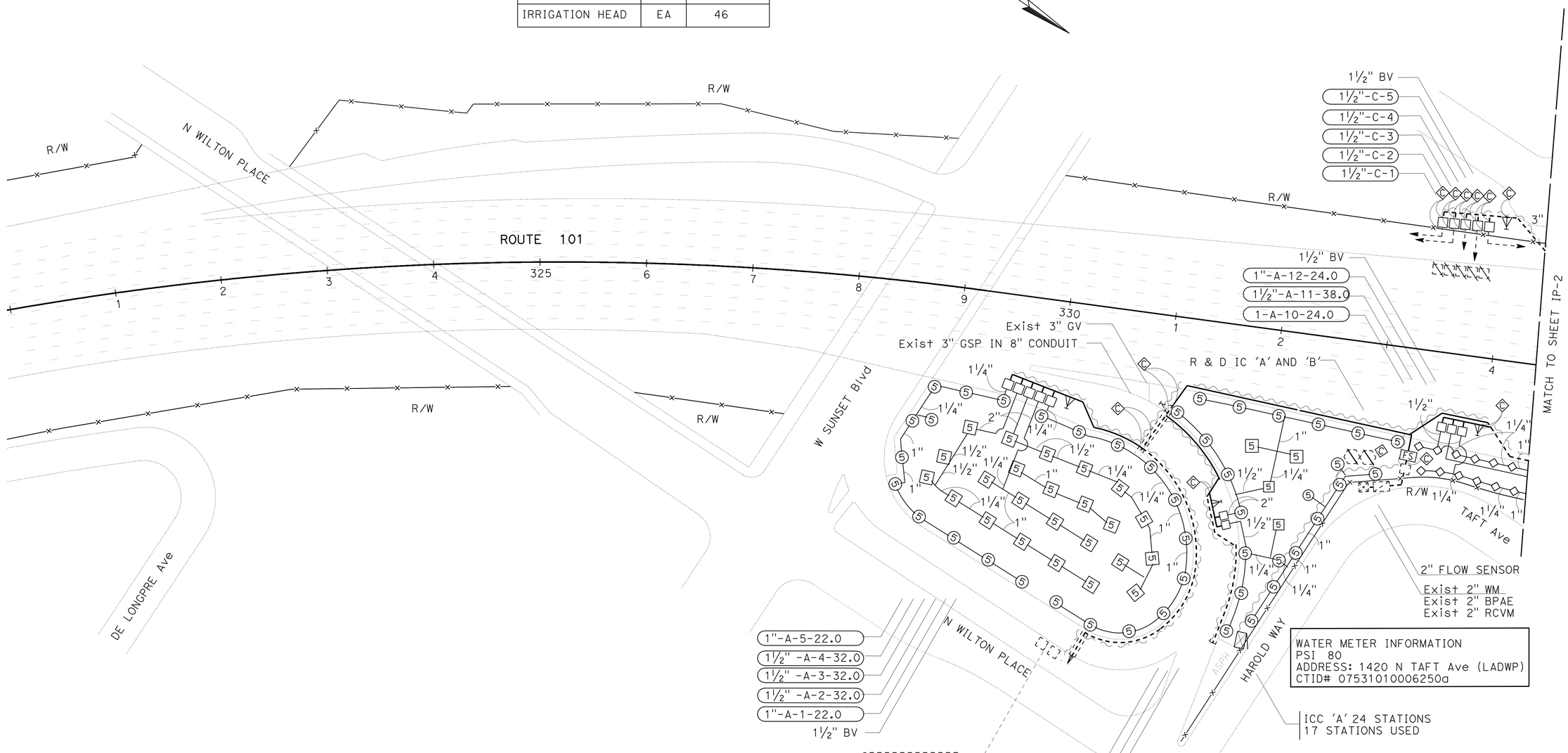

WATER METER INFORMATION
PSI 80
ADDRESS: 1420 N TAFT Ave (LADWP)
CTID# 07531010006250a

THIS PLAN ACCURATE FOR IRRIGATION WORK ONLY.

IRRIGATION PLAN

SCALE 1"=50'

IP-1

STATE OF CALIFORNIA - DEPARTMENT OF TRANSPORTATION
Caltrans
LANDSCAPE ARCHITECTURE

SENIOR LANDSCAPE ARCHITECT: PATTY WATANABE
CALCULATED-DESIGNED BY: JOSEPH MILLMAN
CHECKED BY: JENNIFER KURTH
REVISED BY
DATE REVISED

LAST REVISION 02-11-11
DATE PLOTTED => 02-MAR-2011
TIME PLOTTED => 09:39

Dist	COUNTY	ROUTE	POST MILES TOTAL PROJECT	SHEET No.	TOTAL SHEETS
07	LA	101	6.3/8.3	14	53

LICENSED LANDSCAPE ARCHITECT

2-22-11
PLANS APPROVAL DATE

LICENSED LANDSCAPE ARCHITECT
JOSEPH MILLMAN
No. 1831
Signature
31 JULY 2012
Renewal Date
11 FEBRUARY 2011
Date
STATE OF CALIFORNIA

THE STATE OF CALIFORNIA OR ITS OFFICERS OR AGENTS SHALL NOT BE RESPONSIBLE FOR THE ACCURACY OR COMPLETENESS OF SCANNED COPIES OF THIS PLAN SHEET.

NOTE: FOR ACCURATE RIGHT OF WAY DATA, CONTACT RIGHT OF WAY ENGINEERING AT THE DISTRICT OFFICE.

EXISTING UTILITY FACILITIES HAVE NOT BEEN SHOWN ON THIS PLAN.

REMOVE EXISTING IRRIGATION FACILITIES

DESCRIPTION	UNIT	QUANTITY
RCV	EA	15
IRRIGATION HEAD	EA	113

WATER METER INFORMATION
AVERAGE 80 PSI
ADDRESS: 1600 N VAN NESS Ave(LADWP)
CTID# 0796101691

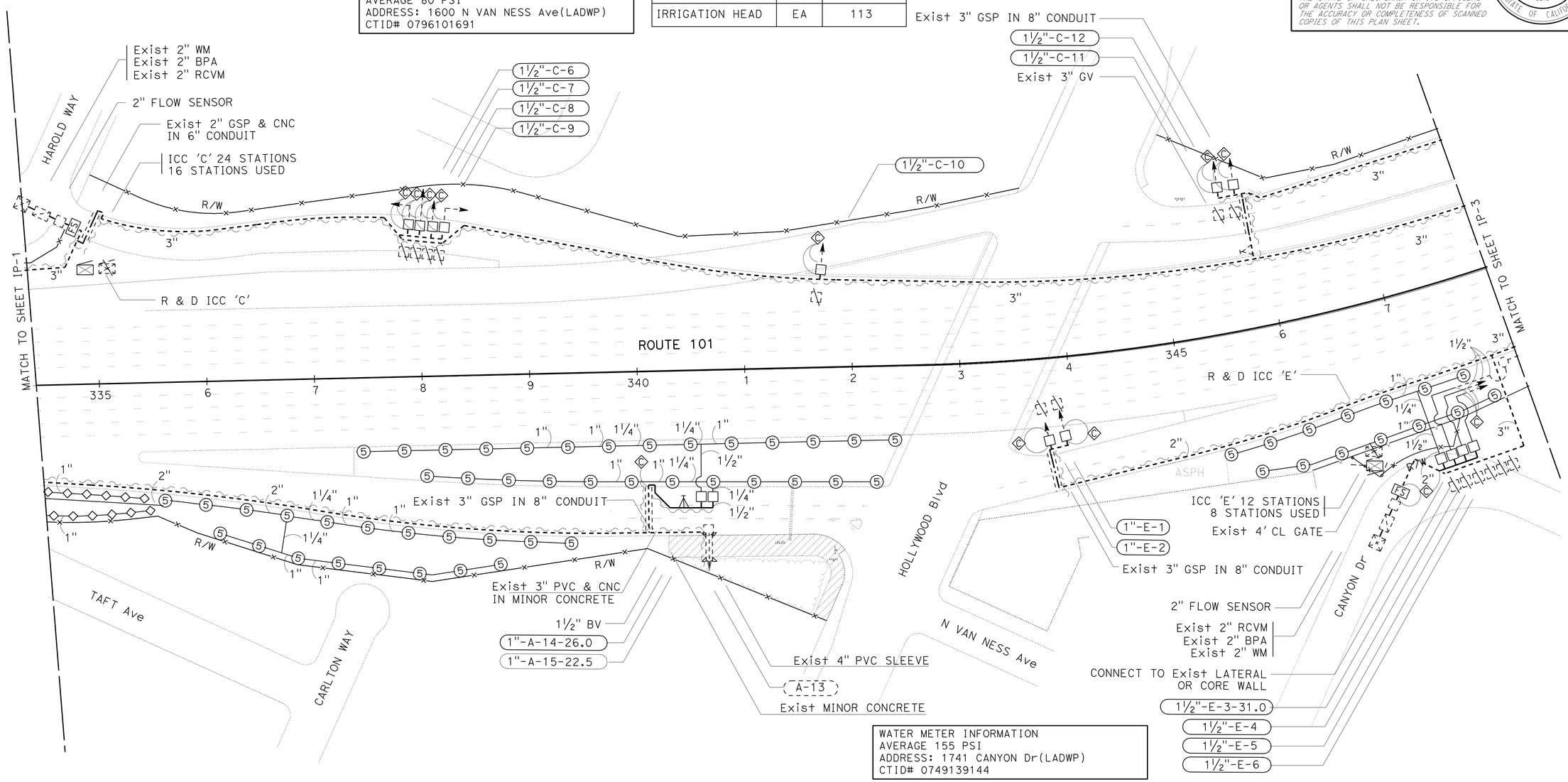

WATER METER INFORMATION
AVERAGE 155 PSI
ADDRESS: 1741 CANYON Dr(LADWP)
CTID# 0749139144

THIS PLAN ACCURATE FOR IRRIGATION WORK ONLY.

IRRIGATION PLAN

SCALE 1"=50'

IP - 2

STATE OF CALIFORNIA - DEPARTMENT OF TRANSPORTATION
Caltrans®
LANDSCAPE ARCHITECTURE

SENIOR LANDSCAPE ARCHITECT: PATTY WATANABE
CALCULATED-DESIGNED BY: JOSEPH MILLMAN
CHECKED BY: JENNIFER KURTH
REVISED BY
DATE REVISED

LAST REVISION 02-11-11
DATE PLOTTED => 02-MAR-2011
TIME PLOTTED => 09:39

Dist	COUNTY	ROUTE	POST MILES TOTAL PROJECT	SHEET No.	TOTAL SHEETS
07	LA	101	6.3/8.3	15	53

LICENSED LANDSCAPE ARCHITECT

2-22-11
PLANS APPROVAL DATE

LICENSED LANDSCAPE ARCHITECT
JOSEPH MILLMAN
No. 1831
Signature
31 JULY 2012
Renewal Date
11 FEBRUARY 2011
Date
STATE OF CALIFORNIA

THE STATE OF CALIFORNIA OR ITS OFFICERS OR AGENTS SHALL NOT BE RESPONSIBLE FOR THE ACCURACY OR COMPLETENESS OF SCANNED COPIES OF THIS PLAN SHEET.

NOTE: FOR ACCURATE RIGHT OF WAY DATA, CONTACT RIGHT OF WAY ENGINEERING AT THE DISTRICT OFFICE.

EXISTING UTILITY FACILITIES HAVE NOT BEEN SHOWN ON THIS PLAN.

REMOVE EXISTING IRRIGATION FACILITIES		
DESCRIPTION	UNIT	QUANTITY
RCV	EA	6
IRRIGATION HEAD	EA	0

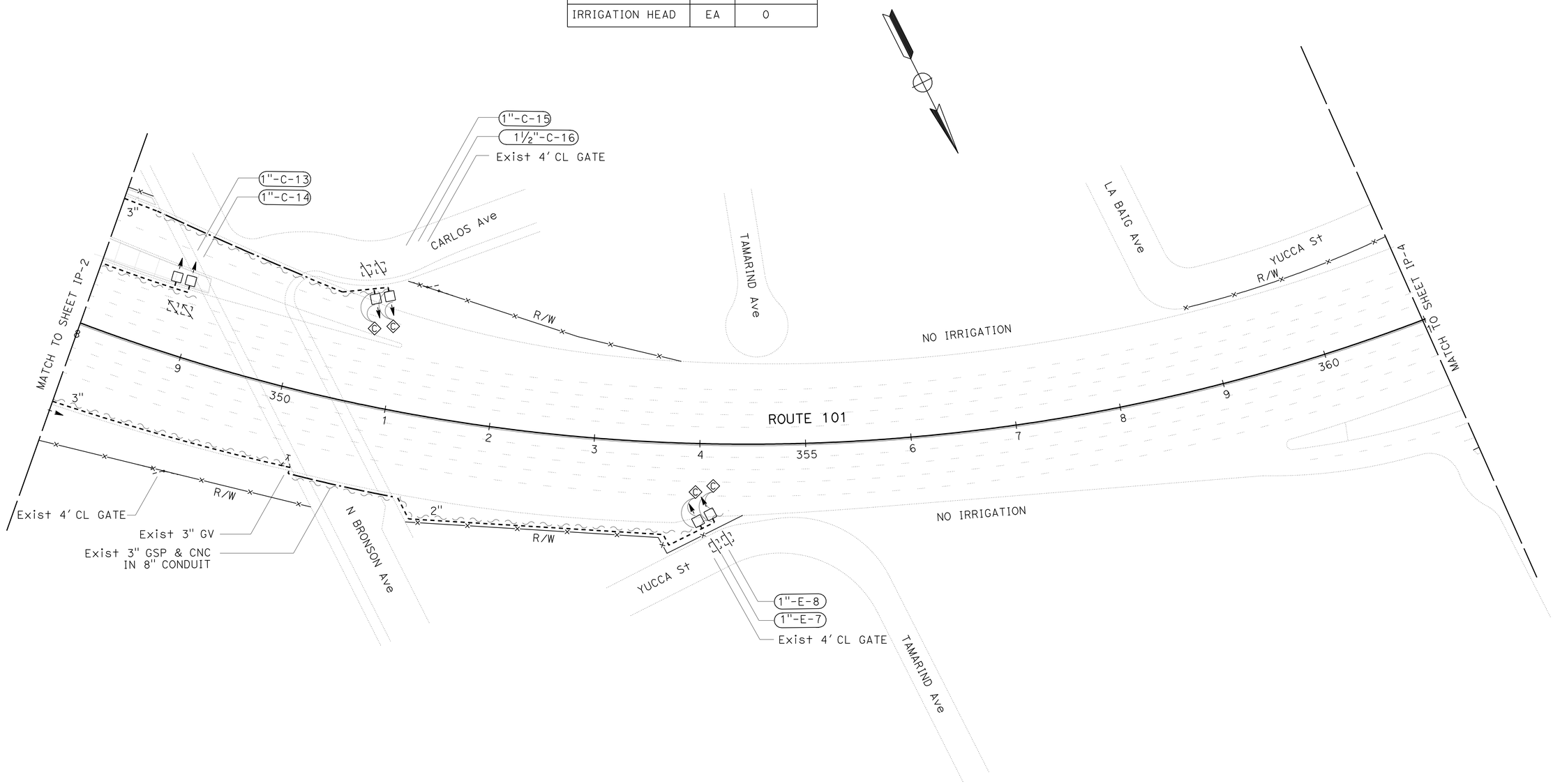

THIS PLAN ACCURATE FOR IRRIGATION WORK ONLY.

IRRIGATION PLAN IP-3

SCALE 1"=50'

STATE OF CALIFORNIA - DEPARTMENT OF TRANSPORTATION
Caltrans
LANDSCAPE ARCHITECTURE

SENIOR LANDSCAPE ARCHITECT: PATTY WATANABE
CALCULATED-DESIGNED BY: JOSEPH MILLMAN
CHECKED BY: JENNIFER KURTH
REVISED BY
DATE REVISED

LAST REVISION 02-11-11
DATE PLOTTED => 02-MAR-2011
TIME PLOTTED => 09:39

Dist	COUNTY	ROUTE	POST MILES TOTAL PROJECT	SHEET No.	TOTAL SHEETS
07	LA	101	6.3/8.3	16	53

LICENSED LANDSCAPE ARCHITECT

2-22-11
PLANS APPROVAL DATE

LICENSED LANDSCAPE ARCHITECT
JOSEPH MILLMAN
No. 1831
Signature
31 JULY 2012
Renewal Date
11 FEBRUARY 2011
Date
STATE OF CALIFORNIA

THE STATE OF CALIFORNIA OR ITS OFFICERS OR AGENTS SHALL NOT BE RESPONSIBLE FOR THE ACCURACY OR COMPLETENESS OF SCANNED COPIES OF THIS PLAN SHEET.

NOTE: FOR ACCURATE RIGHT OF WAY DATA, CONTACT RIGHT OF WAY ENGINEERING AT THE DISTRICT OFFICE.

EXISTING UTILITY FACILITIES HAVE NOT BEEN SHOWN ON THIS PLAN.

WATER METER INFORMATION
AVERAGE 57 PSI
ADDRESS: 1804 VISTA DEL MAR St (LADWP)
CTID# 07531010006930

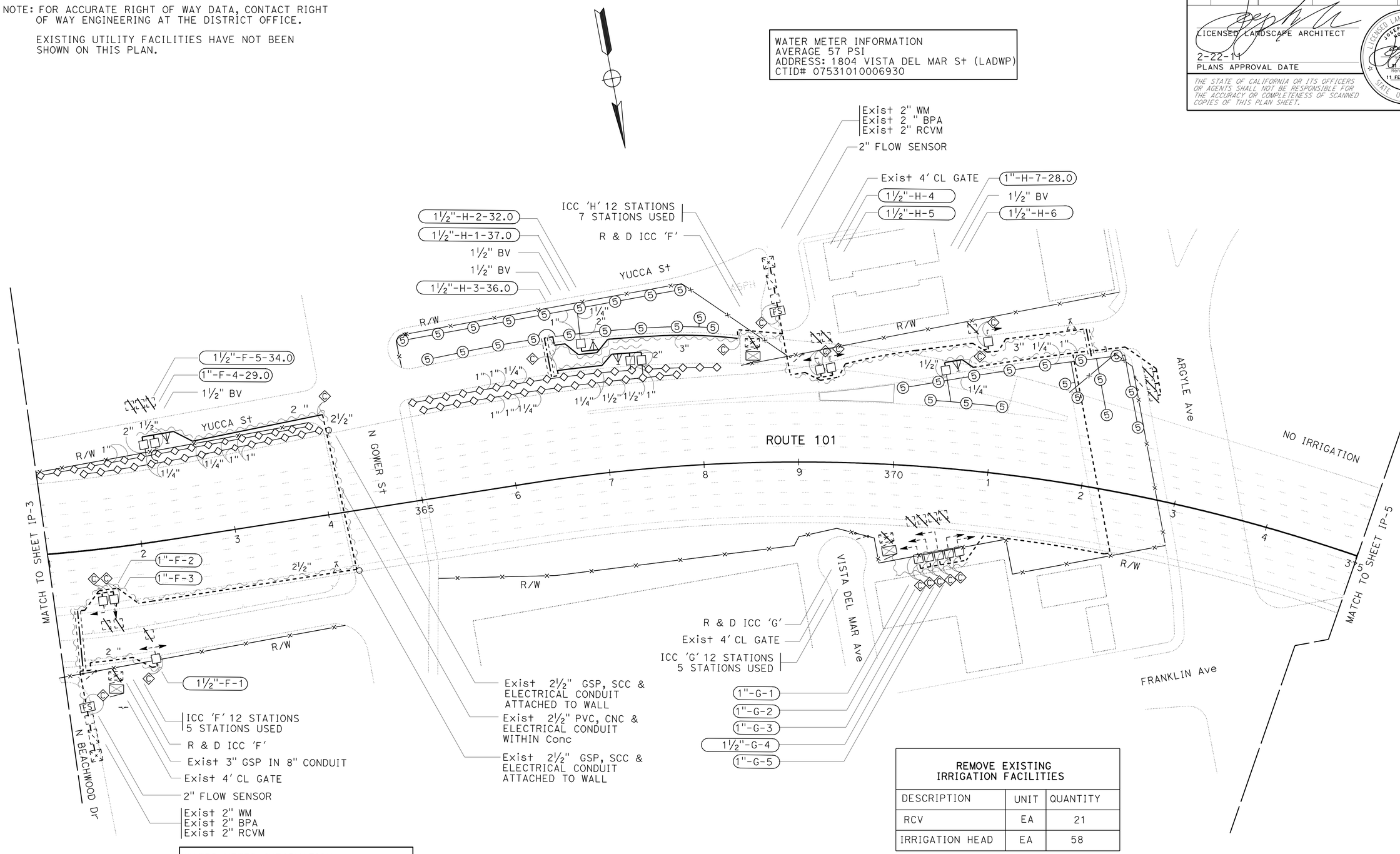

WATER METER INFORMATION
AVERAGE 61 PSI
ADDRESS: 1856 N BEACHWOOD Dr(LADWP)
CTID# 07531010006900

REMOVE EXISTING IRRIGATION FACILITIES		
DESCRIPTION	UNIT	QUANTITY
RCV	EA	21
IRRIGATION HEAD	EA	58

THIS PLAN ACCURATE FOR IRRIGATION WORK ONLY.

IRRIGATION PLAN IP-4

SCALE 1"=50'

STATE OF CALIFORNIA - DEPARTMENT OF TRANSPORTATION
Caltrans®
LANDSCAPE ARCHITECTURE

SENIOR LANDSCAPE ARCHITECT: PATTY WATANABE
CALCULATED-DESIGNED BY: JOSEPH MILLMAN
CHECKED BY: JENNIFER KURTH
REVISED BY
DATE REVISED

LAST REVISION 02-11-11
DATE PLOTTED => 02-MAR-2011
TIME PLOTTED => 09:39

Dist	COUNTY	ROUTE	POST MILES TOTAL PROJECT	SHEET No.	TOTAL SHEETS
07	LA	101	6.3/8.3	17	53

LICENSED LANDSCAPE ARCHITECT

2-22-11
PLANS APPROVAL DATE

LICENSED LANDSCAPE ARCHITECT JOSEPH MILLMAN No. 1831 Signature 31 JULY 2012 Renewal Date 11 FEBRUARY 2011 Date STATE OF CALIFORNIA

THE STATE OF CALIFORNIA OR ITS OFFICERS OR AGENTS SHALL NOT BE RESPONSIBLE FOR THE ACCURACY OR COMPLETENESS OF SCANNED COPIES OF THIS PLAN SHEET.

NOTE: FOR ACCURATE RIGHT OF WAY DATA, CONTACT RIGHT OF WAY ENGINEERING AT THE DISTRICT OFFICE.

EXISTING UTILITY FACILITIES HAVE NOT BEEN SHOWN ON THIS PLAN.

REMOVE EXISTING IRRIGATION FACILITIES		
DESCRIPTION	UNIT	QUANTITY
RCV	EA	7
IRRIGATION HEAD	EA	72

WATER METER INFORMATION
AVERAGE 84 PSI
ADDRESS: 1946 IVAR Ave (LADWP)

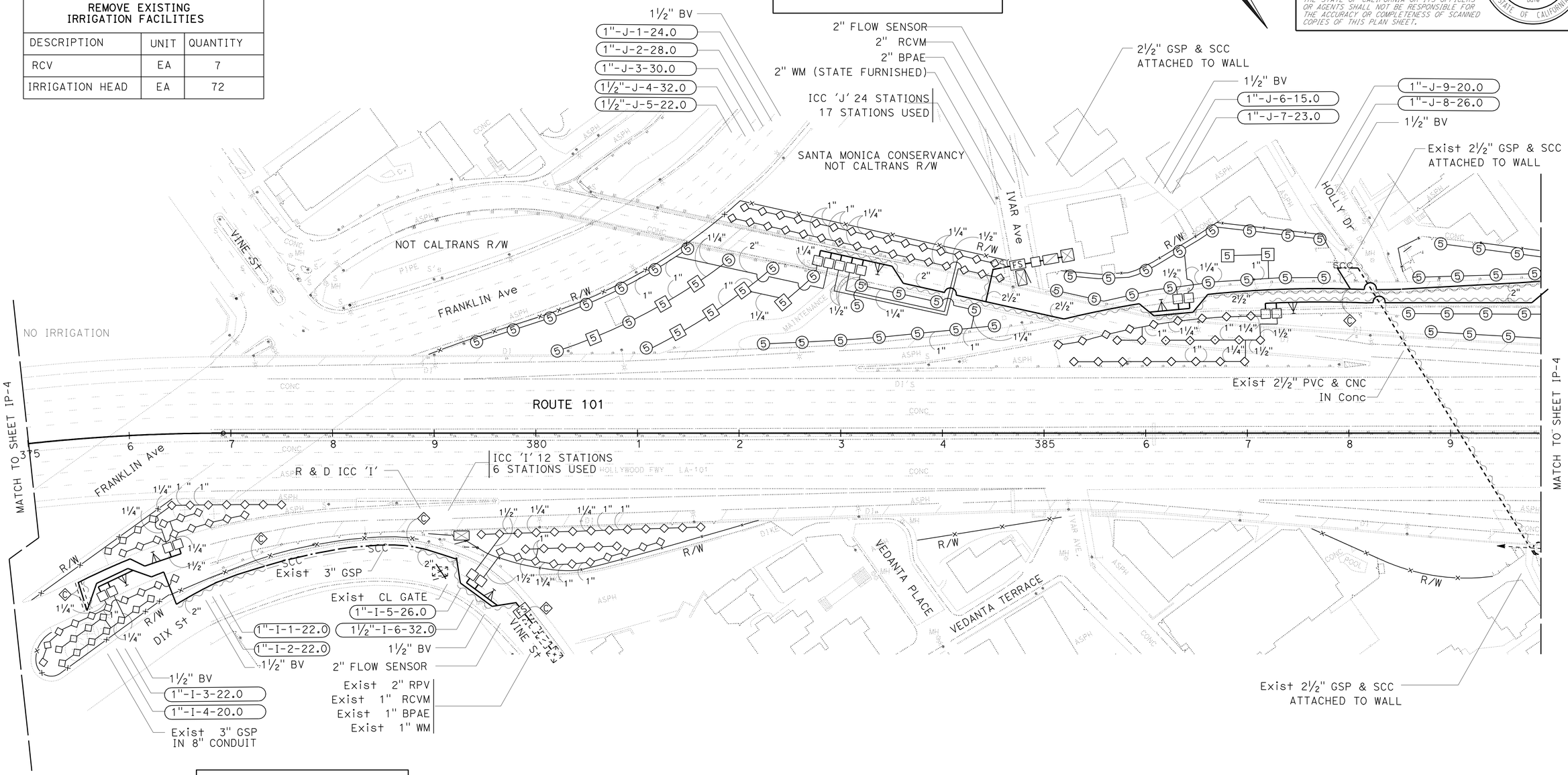

WATER METER INFORMATION
AVERAGE 106 PSI
ADDRESS: 1923 VINE St (LADWP)
CTID# 07531010007310a

THIS PLAN ACCURATE FOR IRRIGATION WORK ONLY.

IRRIGATION PLAN

SCALE 1"=50'

IP-5

STATE OF CALIFORNIA - DEPARTMENT OF TRANSPORTATION
Caltrans
LANDSCAPE ARCHITECTURE

SENIOR LANDSCAPE ARCHITECT: PATTY WATANABE
CALCULATED-DESIGNED BY: JOSEPH MILLMAN
CHECKED BY: JENNIFER KURTH
REVISED BY
DATE REVISED

LAST REVISION 02-11-11
DATE PLOTTED => 02-MAR-2011
TIME PLOTTED => 09:39

Dist	COUNTY	ROUTE	POST MILES TOTAL PROJECT	SHEET No.	TOTAL SHEETS
07	LA	101	6.3/8.3	18	53

LICENSED LANDSCAPE ARCHITECT

2-22-11
PLANS APPROVAL DATE

LICENSED LANDSCAPE ARCHITECT
JOSEPH MILLMAN
No. 1831
Signature
31 JULY 2012
Renewal Date
11 FEBRUARY 2011
Date
STATE OF CALIFORNIA

THE STATE OF CALIFORNIA OR ITS OFFICERS OR AGENTS SHALL NOT BE RESPONSIBLE FOR THE ACCURACY OR COMPLETENESS OF SCANNED COPIES OF THIS PLAN SHEET.

NOTE: FOR ACCURATE RIGHT OF WAY DATA, CONTACT RIGHT OF WAY ENGINEERING AT THE DISTRICT OFFICE.

EXISTING UTILITY FACILITIES HAVE NOT BEEN SHOWN ON THIS PLAN.

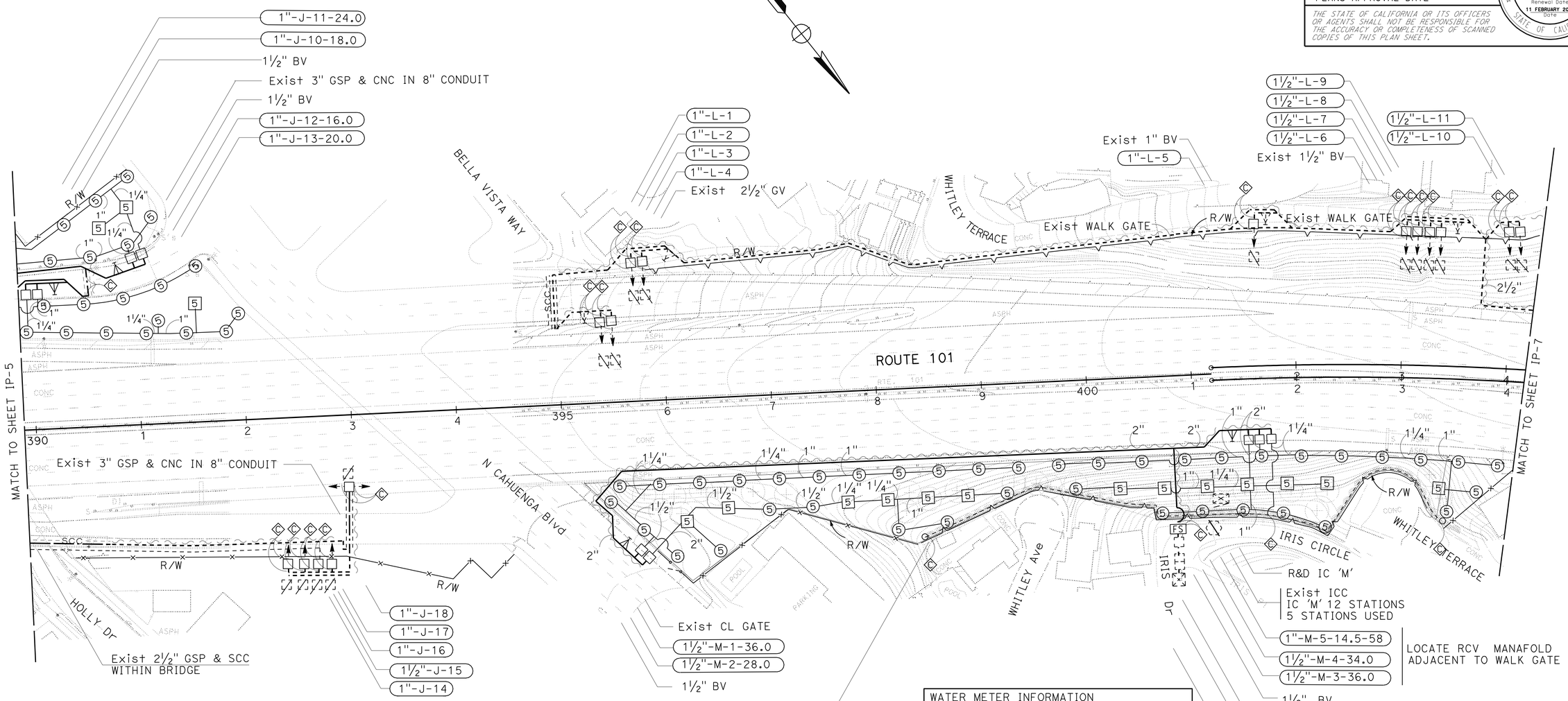

WATER METER INFORMATION
AVERAGE 84 PSI
ADDRESS: 6808 IRIS CIRCLE(LADWP)
CTID# 07531100025090b

REMOVE EXISTING IRRIGATION FACILITIES		
DESCRIPTION	UNIT	QUANTITY
RCV	EA	21
IRRIGATION HEAD	EA	76

THIS PLAN ACCURATE FOR IRRIGATION WORK ONLY.

IRRIGATION PLAN IP-6

SCALE 1"=50'

STATE OF CALIFORNIA - DEPARTMENT OF TRANSPORTATION
Caltrans
LANDSCAPE ARCHITECTURE

SENIOR LANDSCAPE ARCHITECT: PATTY WATANABE
CALCULATED-DESIGNED BY: JOSEPH MILLMAN
CHECKED BY: JENNIFER KURTH
REVISED BY
DATE REVISED

LAST REVISION 02-11-11
DATE PLOTTED => 02-MAR-2011
TIME PLOTTED => 09:40

Dist	COUNTY	ROUTE	POST MILES TOTAL PROJECT	SHEET No.	TOTAL SHEETS
07	LA	101	6.3/8.3	19	53

LICENSED LANDSCAPE ARCHITECT

2-22-11
PLANS APPROVAL DATE

LICENSED LANDSCAPE ARCHITECT
JOSEPH MILLMAN
No. 1831
Signature
31 JULY 2012
Renewal Date
11 FEBRUARY 2011
Date
STATE OF CALIFORNIA

THE STATE OF CALIFORNIA OR ITS OFFICERS OR AGENTS SHALL NOT BE RESPONSIBLE FOR THE ACCURACY OR COMPLETENESS OF SCANNED COPIES OF THIS PLAN SHEET.

NOTE: FOR ACCURATE RIGHT OF WAY DATA, CONTACT RIGHT OF WAY ENGINEERING AT THE DISTRICT OFFICE.

EXISTING UTILITY FACILITIES HAVE NOT BEEN SHOWN ON THIS PLAN.

WATER METER INFORMATION
AVERAGE 112 PSI
ADDRESS: 6640 ODIN St(LADWP)
CTID# 07531010007740

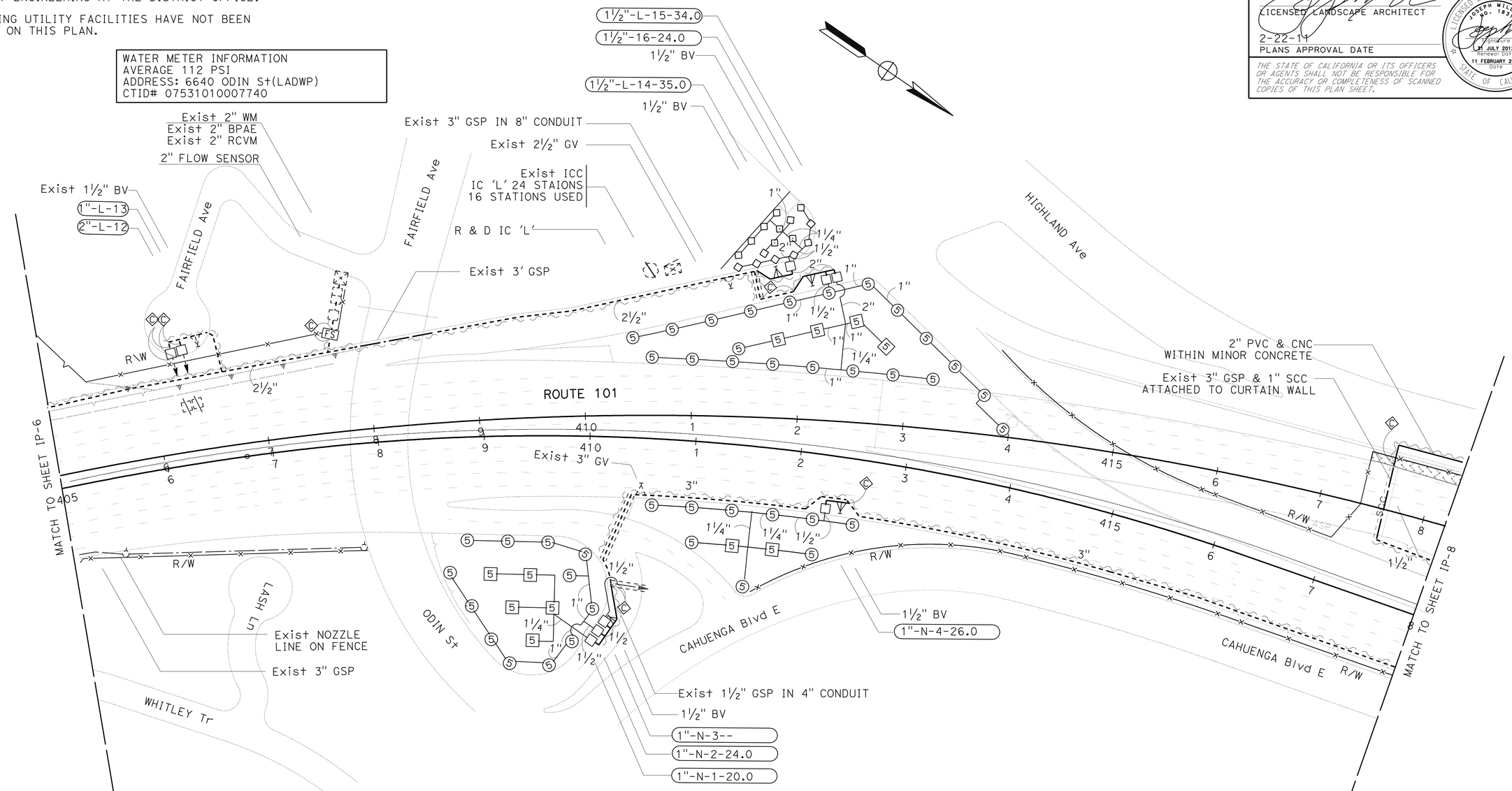

REMOVE EXISTING IRRIGATION FACILITIES		
DESCRIPTION	UNIT	QUANTITY
RCV	EA	10
IRRIGATION HEAD	EA	48

THIS PLAN ACCURATE FOR IRRIGATION WORK ONLY.

IRRIGATION PLAN

SCALE 1"=50'

IP-7

STATE OF CALIFORNIA - DEPARTMENT OF TRANSPORTATION
Caltrans
LANDSCAPE ARCHITECTURE

SENIOR LANDSCAPE ARCHITECT: PATTY WATANABE
CALCULATED-DESIGNED BY: JOSEPH MILLMAN
CHECKED BY: JENNIFER KURTH
REVISED BY
DATE REVISED

LAST REVISION 02-11-11
DATE PLOTTED => 02-MAR-2011
TIME PLOTTED => 09:40

Dist	COUNTY	ROUTE	POST MILES TOTAL PROJECT	SHEET No.	TOTAL SHEETS
07	LA	101	6.3/8.3	20	53

LICENSED LANDSCAPE ARCHITECT

2-22-11
PLANS APPROVAL DATE

LICENSED LANDSCAPE ARCHITECT JOSEPH MILLMAN No. 1831 Signature 31 JULY 2012 Renewal Date 11 FEBRUARY 2011 Date STATE OF CALIFORNIA

THE STATE OF CALIFORNIA OR ITS OFFICERS OR AGENTS SHALL NOT BE RESPONSIBLE FOR THE ACCURACY OR COMPLETENESS OF SCANNED COPIES OF THIS PLAN SHEET.

NOTE: FOR ACCURATE RIGHT OF WAY DATA, CONTACT RIGHT OF WAY ENGINEERING AT THE DISTRICT OFFICE.

EXISTING UTILITY FACILITIES HAVE NOT BEEN SHOWN ON THIS PLAN.

REMOVE EXISTING IRRIGATION FACILITIES

DESCRIPTION	UNIT	QUANTITY
RCV	EA	13
IRRIGATION HEAD	EA	102

WATER METER INFORMATION
AVERAGE 242 PSI
ADDRESS: 2766 CAHUENGA Blvd E(LADWP)
CTID# 0796109050

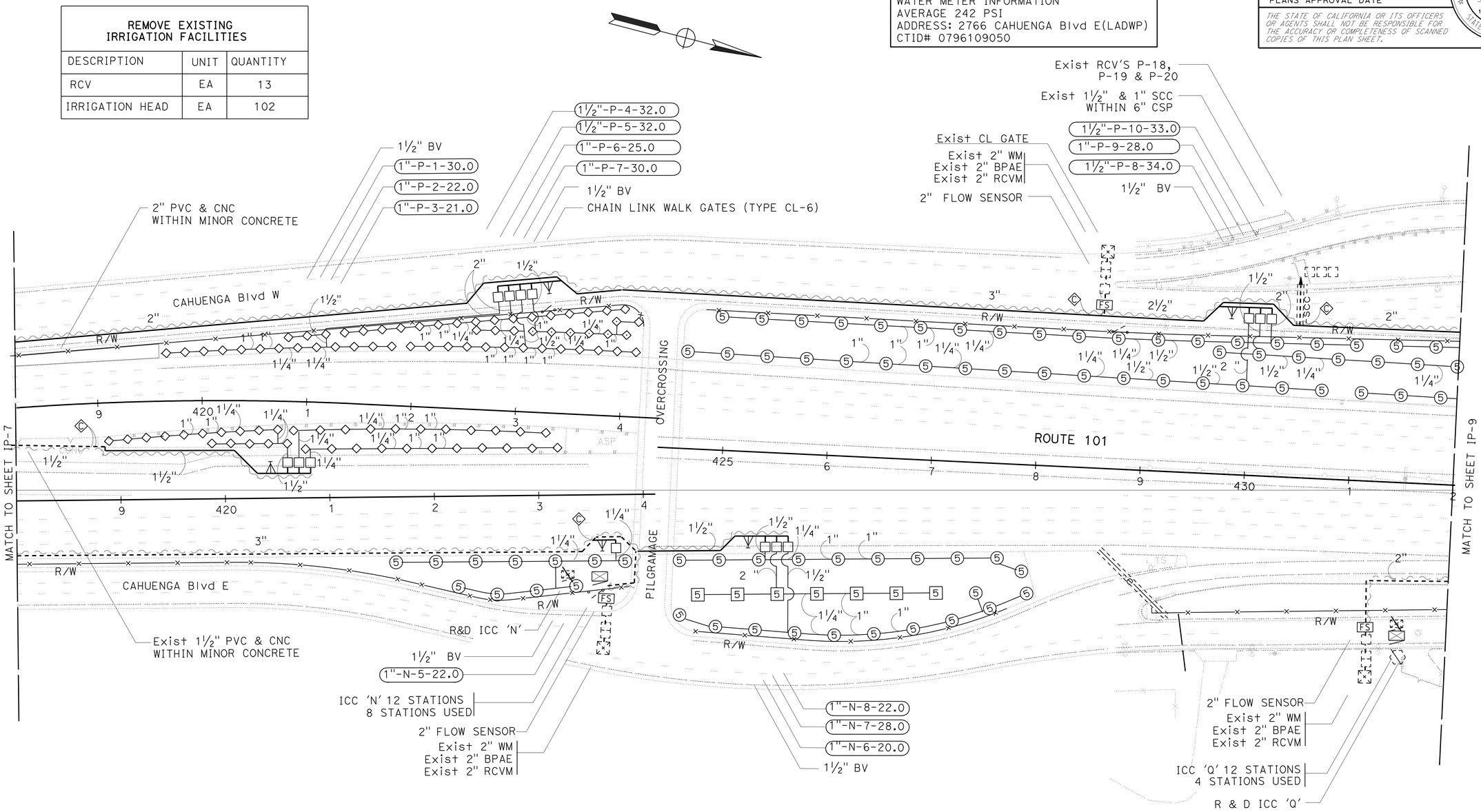

WATER METER INFORMATION
AVERAGE 75 PSI
ADDRESS: 2615 CAHUENGA Blvd E(LADWP)
CTID# 0731697621

WATER METER INFORMATION
AVERAGE 75 PSI
ADDRESS: 2766 CAHUENGA Blvd E(LADWP)
CTID# 0731697621

THIS PLAN ACCURATE FOR IRRIGATION WORK ONLY.

IRRIGATION PLAN IP-8

SCALE 1"=50'

STATE OF CALIFORNIA - DEPARTMENT OF TRANSPORTATION
Caltrans® LANDSCAPE ARCHITECTURE

SENIOR LANDSCAPE ARCHITECT: PATTY WATANABE
CALCULATED-DESIGNED BY: JOSEPH MILLMAN
CHECKED BY: JENNIFER KURTH
REVISED BY / DATE REVISED

LAST REVISION 02-11-11
DATE PLOTTED => 02-MAR-2011
TIME PLOTTED => 09:40

Dist	COUNTY	ROUTE	POST MILES TOTAL PROJECT	SHEET No.	TOTAL SHEETS
07	LA	101	6.3/8.3	21	53

LICENSED LANDSCAPE ARCHITECT

2-22-11
PLANS APPROVAL DATE

LICENSED LANDSCAPE ARCHITECT
JOSEPH MILLMAN
No. 1831
31 JULY 2012
Renewal Date
11 FEBRUARY 2011
Date
STATE OF CALIFORNIA

THE STATE OF CALIFORNIA OR ITS OFFICERS OR AGENTS SHALL NOT BE RESPONSIBLE FOR THE ACCURACY OR COMPLETENESS OF SCANNED COPIES OF THIS PLAN SHEET.

NOTE: FOR ACCURATE RIGHT OF WAY DATA, CONTACT RIGHT OF WAY ENGINEERING AT THE DISTRICT OFFICE.

EXISTING UTILITY FACILITIES HAVE NOT BEEN SHOWN ON THIS PLAN.

REMOVE EXISTING IRRIGATION FACILITIES		
DESCRIPTION	UNIT	QUANTITY
RCV	EA	6
IRRIGATION HEAD	EA	24

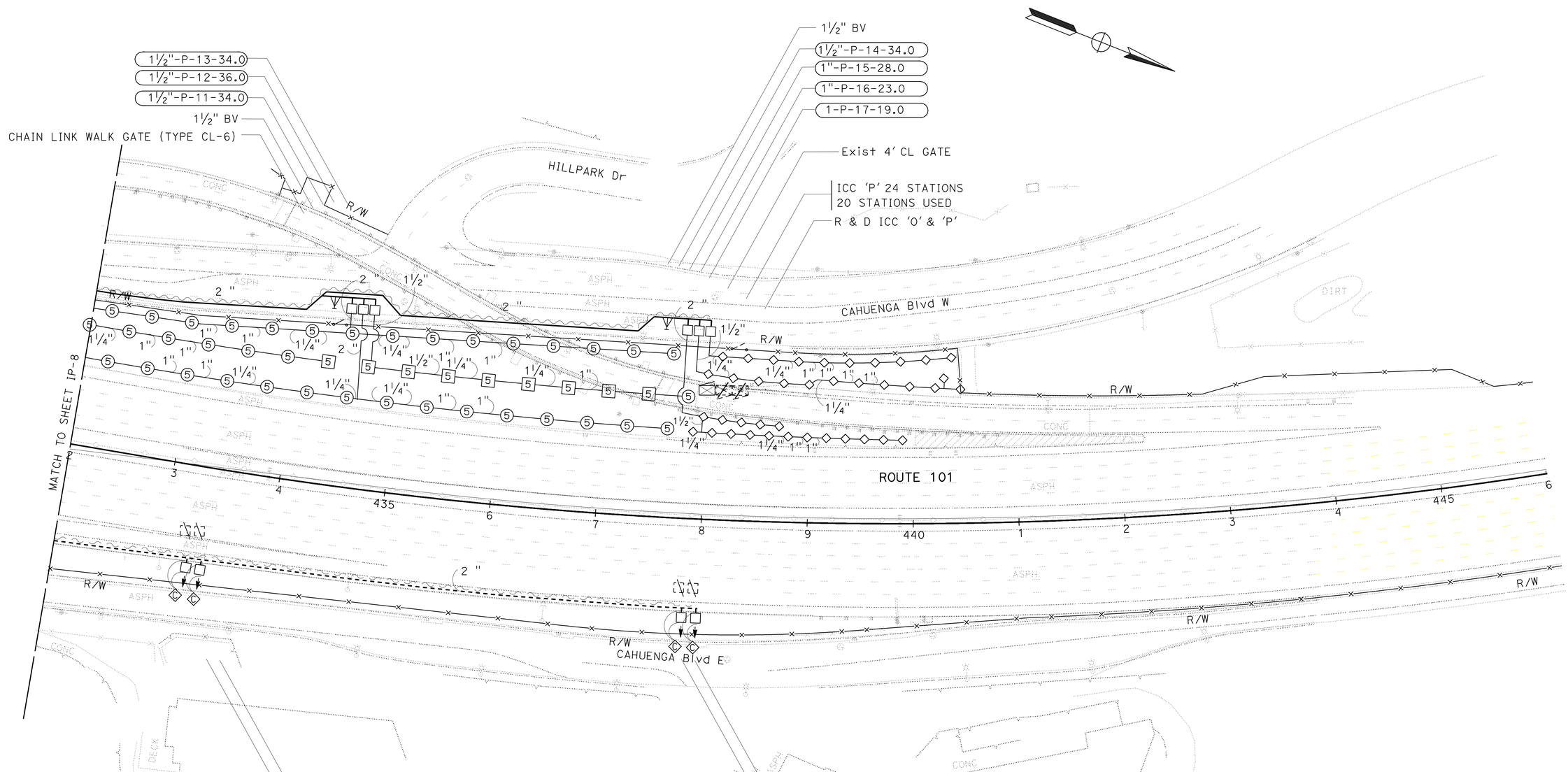

THIS PLAN ACCURATE FOR IRRIGATION WORK ONLY.

IRRIGATION PLAN

SCALE 1"=50'

IP-9

STATE OF CALIFORNIA - DEPARTMENT OF TRANSPORTATION
Caltrans®
LANDSCAPE ARCHITECTURE

SENIOR LANDSCAPE ARCHITECT: PATTY WATANABE

CALCULATED-DESIGNED BY: JOSEPH MILLMAN
CHECKED BY: JENNIFER KURTH

REVISED BY
DATE REVISED

LAST REVISION 02-11-11
DATE PLOTTED => 02-MAR-2011
TIME PLOTTED => 09:40

Dist	COUNTY	ROUTE	POST MILES TOTAL PROJECT	SHEET No.	TOTAL SHEETS
07	LA	101	6.3/8.3	22	53

LICENSED LANDSCAPE ARCHITECT

2-22-11
PLANS APPROVAL DATE

LICENSED LANDSCAPE ARCHITECT JOSEPH MILLMAN No. 1831 Signature 31 JULY 2012 Renewal Date 11 FEBRUARY 2011 Date STATE OF CALIFORNIA

THE STATE OF CALIFORNIA OR ITS OFFICERS OR AGENTS SHALL NOT BE RESPONSIBLE FOR THE ACCURACY OR COMPLETENESS OF SCANNED COPIES OF THIS PLAN SHEET.

SPRINKLER SCHEDULE

SYMBOL	TYPE	DESCRIPTION	SPRAY PATTERN	OPERATING PRESSURE (PSI)	PRESSURE COMPENSATING	PLUS/MINUS 5% ② DISCHARGE: GALLONS PER MINUTE (GPM)	GALLONS PER HOUR (GPH)	RADIUS (LF)	WIDTH x LENGTH (Ft)	MATERIAL	INLET CONNECTION (NPT INCH)	POSITIVE-LOCKING ADJ ARC STOP	BACKSPLASH PREVENTER	DIFFUSER PIN	DISTANCE CONTROL FLAP	ADJ DISCHARGE	RISER: TYPE	MATERIAL: PLASTIC	GALVANIZED	SIZE (IPS INCHES)	HEIGHT (INCHES)	FLOW SHUTOFF DEVICE	⑤ SWING JOINT (TYPE)	RISER SUPPORT	SPRINKLER PROTECTOR (TYPE)	REMARKS
⑤	A-5	GEAR DRIVE	Q\H	30-115	---	2.0	---	38	---	PL	¾	---	---	---	---	---	IV	---	X	¾	18	X	I	X	---	
[5]	A-5	GEAR DRIVE	F	30-115	---	4.0	---	38	---	PL	¾	---	---	---	---	---	IV	---	X	¾	18	X	I	X	---	
◇	B-5	ROTARY STREAM	Q	30-115	---	1.0	---	18-24	---	PL	½	---	---	---	---	---	II	X	---	½	12	---	III	---	---	
◇	B-5	ROTARY STREAM	H	30-115	---	2.0	---	18-24	---	PL	½	---	---	---	---	---	II	X	---	½	12	---	III	---	---	
◇	B-5	ROTARY STREAM	F	30-115	---	4.0	---	18-24	---	PL	½	---	---	---	---	---	II	X	---	½	12	---	III	---	---	
○	C-2	FLOOD BUBBLER	---	30-115	X	0.25	---	5	---	PL	½	---	---	---	---	---	V	X	---	½	12	---	---	---	---	③ ④

X IN BOX DENOTES REQUIREMENT

APPLICABLE WHEN CIRCLED BELOW:

1 - See Special Provisions.
② - If a pressure compensating device is specified, the discharge and radii shown reflect its use.
③ -Pressure Compensating full circle bubbler.
④ - Tree plantings use 0.5 Gal/min sprinkler
⑤ - Swing Joints required adjacent to shoulders, curbs, sidewalks, and dikes.
6 - Unless otherwise shown on plans.

ABBREVIATIONS

F	full circle	Ft	feet/foot
P	part circle	GPM	gallons per minute
F/P	full/part circle	GPH	gallons per hour
Q	quarter circle	Adj	adjustable
T	third circle	PL	plastic
H	half circle	B/B	brass/bronze
TT	two third circle	B/PL	brass/plastic
TQ	three quarter circle	B/B/PL	brass/bronze/plastic
CST	center strip	NPT	national pipe thread
SST	side strip	IPS	iron pipe size
EST	end strip	PSI	pounds per square inch

NOTE:

1. Irrigation lines shall be ¾" nominal unless otherwise noted or sized by chart.
2. CNC shall typically follow supply line (main) continuously .
3. Connect CNC from controller to valves.
4. Locate RCV manifolds adjacent to CL gate and access gate where possible.
5. Add two extra cnc to last RCV's on mainline.

PIPE SIZING (SCH 40) FOR C-2 SYSTEMS (0.25 GAL/MIN)	
NUMBER OF SPRINKLERS	SIZE OF PIPE
1 --- 32	¾"
33 --- 48	1"
49 --- 88	1¼"
89 --- 120	1½"

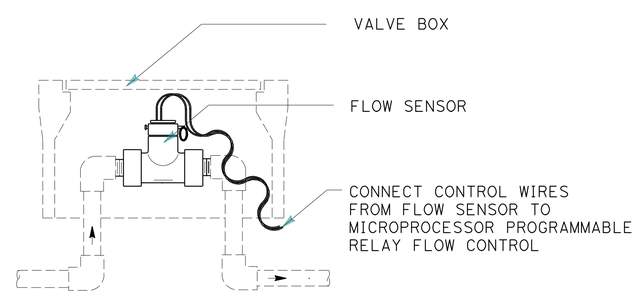

ELEVATION
FLOW SENSOR
NO SCALE

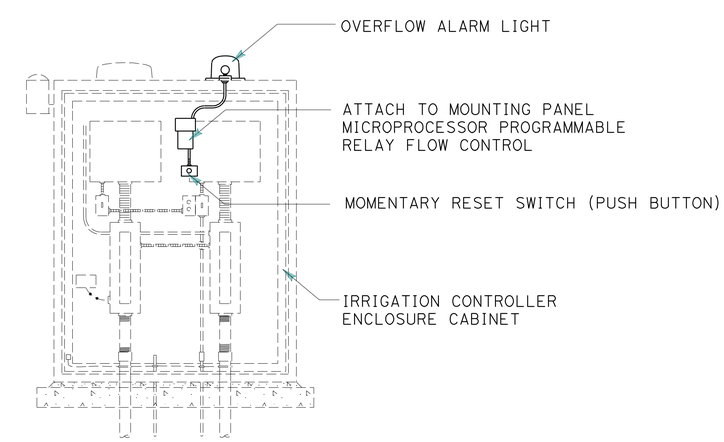

SPRINKLER SCHEDULE

NO SCALE

LD-1

REVISED BY | DATE REVISED
JOSEPH MILLMAN | JENNIFER KURTH
CALCULATED-DESIGNED BY | CHECKED BY
SENIOR LANDSCAPE ARCHITECT | PATTY WATANABE
STATE OF CALIFORNIA - DEPARTMENT OF TRANSPORTATION
LANDSCAPE ARCHITECTURE

LAST REVISION 02-11-11 | DATE PLOTTED => 02-MAR-2011 | TIME PLOTTED => 09:40

Dist	COUNTY	ROUTE	POST MILES TOTAL PROJECT	SHEET No.	TOTAL SHEETS
07	LA	101	6.3/8.3	23	53

LICENSED LANDSCAPE ARCHITECT

2-22-11
PLANS APPROVAL DATE

LICENSED LANDSCAPE ARCHITECT
JOSEPH MILLMAN
No. 1831
Signature
31 JULY 2012
Renewal Date
11 FEBRUARY 2011
Date
STATE OF CALIFORNIA

THE STATE OF CALIFORNIA OR ITS OFFICERS OR AGENTS SHALL NOT BE RESPONSIBLE FOR THE ACCURACY OR COMPLETENESS OF SCANNED COPIES OF THIS PLAN SHEET.

ABBREVIATIONS

EA — each
DIP — ductile iron pipe
GSP — galvanized steel pipe
Ft — foot/feet
PR — pressure rated

SUBTOTALS PER VALVE ON LATERAL SUPPLY SIDE OF CONTROL VALVE

DESCRIPTION			UNIT	VALVE OR ASSEMBLY NUMBER																																							SUBTOTALS	UNIT	DESCRIPTION		
				A-1	A-2	A-3	A-4	A-5	A-6	A-7	A-8	A-9	A-10	A-11	A-12	A-13	A-14	A-15	E-1	E-1	E-2	E-3	E-4	E-5	E-6	E-7	E-8	F-1	F-2	F-3	F-4	F-5	H-1	H-2	H-3	H-4	H-5	H-6	H-7	I-1	I-2	I-3					
PLASTIC PIPE SUPPLY LINE	SCH 40	¾"	LF	202	202	202	202	202	---	---	202	202	202	202	202	---	202	202	---	---	---	202	---	---	---	---	---	---	---	---	227	227	227	227	227	---	---	---	---	219	219	219	4418	LF	¾"	SCH 40	PLASTIC PIPE SUPPLY LINE
		1"	LF	47	47	47	47	47	---	---	47	47	47	47	47	---	47	47	---	---	---	47	---	---	---	---	---	---	---	---	43	43	43	43	43	---	---	---	---	41	41	41	949	LF	1"		
		1¼"	LF	67	67	67	67	67	---	---	67	67	67	67	67	---	67	67	---	---	---	67	---	---	---	---	---	---	---	---	106	106	106	107	107	---	---	---	---	71	71	71	1616	LF	1¼"		
		1½"	LF	41	41	41	41	41	---	---	41	41	41	41	41	---	41	41	---	---	---	41	---	---	---	---	---	---	---	---	14	14	14	15	15	---	---	---	---	34	34	34	707	LF	1½"		
		2"	LF	25	26	26	25	25	---	---	25	25	25	25	26	---	26	25	---	---	---	25	---	---	---	---	---	---	---	---	---	---	---	---	---	---	---	---	---	---	---	---	329	LF	2"		
	PR 315																																														
GSP																																															
DIP																																															
SPRINKLER TYPE		A-5	EA	11	8	8	8	11	---	---	16	14	---	19	---	---	14	12	---	---	---	16	---	---	---	---	---	---	---	---	---	---	19	16	18	---	---	---	---	---	---	---	190	EA	A-5	SPRINKLER TYPE	
		B-5	EA	---	---	---	---	---	---	---	---	---	12	---	12	---	---	---	---	---	---	---	---	---	---	---	---	---	---	---	15	17	---	---	---	---	---	---	---	11	11	11	89	EA	B-5		
		C-2	EA	---	---	---	---	---	---	---	---	---	---	---	---	---	---	---	---	---	---	---	---	---	---	---	---	---	---	---	---	---	---	---	---	---	---	---	---	---	---	---	0	EA	C-2		

DESCRIPTION			UNIT	VALVE OR ASSEMBLY NUMBER																																		SUBTOTALS	UNIT	DESCRIPTION		
				I-4	I-5	I-6	J-1	J-2	J-3	J-4	J-5	J-6	J-7	J-8	J-9	J-10	J-11	J-12	J-13	J-14	J-15	J-16	J-17	J-18	L-1	L-2	L-3	L-4	L-5	L-6	L-7	L-8	L-9	L-10	L-11	L-12	L-13	L-14	L-15	L-16							
PLASTIC PIPE SUPPLY LINE	SCH 40	¾"	LF	193	193	193	193	193	193	193	193	193	193	193	193	193	193	193	193	---	---	---	---	---	---	---	---	---	---	---	---	---	---	---	---	---	---	224	224	224			3760	LF	¾"	SCH 40	PLASTIC PIPE SUPPLY LINE
		1"	LF	44	44	44	44	44	44	44	44	44	42	42	42	42	42	42	42	---	---	---	---	---	---	---	---	---	---	---	---	---	---	---	---	---	---	51	51	51			843	LF	1"		
		1¼"	LF	71	71	71	71	71	71	71	71	71	71	71	71	71	71	71	71	---	---	---	---	---	---	---	---	---	---	---	---	---	---	---	---	---	---	35	35	35			1241	LF	1¼"		
		1½"	LF	34	34	34	34	34	34	34	34	33	33	33	33	33	33	33	33	---	---	---	---	---	---	---	---	---	---	---	---	---	---	---	---	---	---	22	22	22			602	LF	1½"		
		2"	LF	---	---	---	---	---	---	76	---	---	---	---	---	---	---	---	---	---	---	---	---	---	---	---	---	---	---	---	---	---	---	---	---	---	---	---	76	---			152	LF	2"		
	PR 315																																														
GSP																																															
DIP																																															
SPRINKLER TYPE		A-5	EA	---	---	---	12	14	---	---	11	8	10	---	---	9	12	8	12	---	---	---	---	---	---	---	---	---	---	---	---	---	---	---	---	---	---	---	13	12			121	EA	A-5	SPRINKLER TYPE	
		B-5	EA	10	13	16	---	---	15	16	---	---	---	13	11	---	---	---	---	---	---	---	---	---	---	---	---	---	---	---	---	---	---	---	---	---	---	16	---	---			110	EA	B-5		
		C-2	EA	---	---	---	---	---	---	---	---	---	---	---	---	---	---	---	---	---	---	---	---	---	---	---	---	---	---	---	---	---	---	---	---	---	---	---	---	---			0	EA	C-2		

IRRIGATION QUANTITIES IQ-1

REVISED BY | DATE REVISED
JOSEPH MILLMAN | JENNIFER KURTH
CALCULATED-DESIGNED BY | CHECKED BY
SENIOR LANDSCAPE ARCHITECT
PATTY WATANABE
STATE OF CALIFORNIA - DEPARTMENT OF TRANSPORTATION
LANDSCAPE ARCHITECTURE

LAST REVISION 02-11-11
DATE PLOTTED => 02-MAR-2011
TIME PLOTTED => 09:40

Dist	COUNTY	ROUTE	POST MILES TOTAL PROJECT	SHEET No.	TOTAL SHEETS
07	LA	101	6.3/8.3	24	53

LICENSED LANDSCAPE ARCHITECT

2-22-11
PLANS APPROVAL DATE

LICENSED LANDSCAPE ARCHITECT
JOSEPH MILLMAN
No. 1831
Signature
31 JULY 2012
Renewal Date
11 FEBRUARY 2011
Date
STATE OF CALIFORNIA

THE STATE OF CALIFORNIA OR ITS OFFICERS OR AGENTS SHALL NOT BE RESPONSIBLE FOR THE ACCURACY OR COMPLETENESS OF SCANNED COPIES OF THIS PLAN SHEET.

ABBREVIATIONS

EA — each
DIP — ductile iron pipe
GSP — galvanized steel pipe
Ft — foot/feet
PR — pressure rated

SUBTOTALS PER VALVE ON LATERAL SUPPLY SIDE OF CONTROL VALVE

DESCRIPTION			UNIT	VALVE OR ASSEMBLY NUMBER																																						SUBTOTALS	UNIT	DESCRIPTION		
				M-1	M-2	M-3	M-4	M-5	N-1	N-2	N-3	N-4	N-5	N-6	N-7	N-8	N-9	P-1	P-2	P-3	P-4	P-5	P-6	P-7	P-8	P-9	P-10	P-11	P-12	P-13	P-14	P-15	P-16	P-17	Q-1	Q-2	Q-3	Q-4									
PLASTIC PIPE SUPPLY LINE	SCH 40	¾"	LF	199	199	199	199	199	193	193	---	193	156	156	156	156	156	156	156	156	156	156	156	156	156	156	156	156	164	156	156	156	156	156	---	---	---	---							5014	LF	¾"	SCH 40	PLASTIC PIPE SUPPLY LINE
		1"	LF	42	42	42	42	42	48	48	---	48	48	51	51	51	51	51	51	51	51	51	51	51	51	51	51	51	51	51	51	51	51	51	---	---	---	---							1473	LF	1"		
		1¼"	LF	59	59	59	59	59	31	32	---	31	67	67	67	67	67	67	67	67	67	67	67	67	67	67	67	67	67	67	67	67	67	67	---	---	---	---							1863	LF	1¼"		
		1½"	LF	33	33	33	33	33	23	23	---	23	---	38	38	38	---	---	---	---	18	18	---	18	76	76	76	38	38	38	---	---	---	---	---	---	---	---							744	LF	1½"		
		2"	LF	---	---	---	---	---	---	---	---	---	---	---	---	---	---	---	---	---	---	---	---	---	---	---	---	---	---	---	---	---	---	---	---	---	---	---							0	LF	2"		
	PR 315																																															
GSP																																																
DIP																																																
SPRINKLER TYPE		A-5	EA	14	12	12	15	---	5	12	---	11	11	10	7	11	11	---	---	---	---	---	---	---	17	14	17	17	18	17	17	14	---	---	---	---	---	---							262	EA	A-5	SPRINKLER TYPE	
		B-5	EA	---	---	---	---	---	---	---	---	---	---	---	---	---	---	15	11	11	16	16	13	8	---	---	---	---	---	---	---	---	12	10	---	---	---	---							112	EA	B-5		
		C-2	EA	---	---	---	---	58	---	---	---	---	---	---	---	---	---	---	---	---	---	---	---	---	---	---	---	---	---	---	---	---	---	---	---	---	---	---							58	EA	C-2		

IRRIGATION QUANTITIES IQ-2

STATE OF CALIFORNIA - DEPARTMENT OF TRANSPORTATION
Caltrans®
LANDSCAPE ARCHITECTURE

SENIOR LANDSCAPE ARCHITECT: PATTY WATANABE
CALCULATED-DESIGNED BY: JOSEPH MILLMAN
CHECKED BY: JENNIFER KURTH
REVISED BY
DATE REVISED

LAST REVISION 02-11-11
DATE PLOTTED => 02-MAR-2011
TIME PLOTTED => 09:40

Dist	COUNTY	ROUTE	POST MILES TOTAL PROJECT	SHEET No.	TOTAL SHEETS
07	LA	101	6.3/8.3	25	53

LICENSED LANDSCAPE ARCHITECT
2-22-11
PLANS APPROVAL DATE

LICENSED LANDSCAPE ARCHITECT — JOSEPH MILLMAN No. 1831 — Signature — 31 JULY 2012 Renewal Date — 11 FEBRUARY 2011 Date — STATE OF CALIFORNIA

THE STATE OF CALIFORNIA OR ITS OFFICERS OR AGENTS SHALL NOT BE RESPONSIBLE FOR THE ACCURACY OR COMPLETENESS OF SCANNED COPIES OF THIS PLAN SHEET.

SUBTOTALS PER PLAN SHEET ON MAIN SUPPLY SIDE OF CONTROL VALVE

DESCRIPTION			UNIT	SHEET NUMBER IP-1	IP-2	IP-3	IP-4	IP-5	IP-6	IP-7	IP-8	IP-9	SUBTOTALS
BPA			2"					1					1
BPA		ENCLOSURE						1					1
BOOSTER PUMP													
IRRIGATION CONTROLLER		STATION	12		1		3	1	1		2		8
IRRIGATION CONTROLLER		STATION	24	1	1			1		1		1	5
CONDUIT VALVES AND ASSEMBLIES	CEC	SINGLE		1	2		3	2			2	1	11
CONDUIT VALVES AND ASSEMBLIES	CEC	DOUBLE											
CONDUIT VALVES AND ASSEMBLIES	RCV		1"	5	4	5	8	12	14	5	11	3	67
CONDUIT VALVES AND ASSEMBLIES	RCV		1½"	10	11	1	9	3	11	2	4	8	59
CONDUIT VALVES AND ASSEMBLIES	RCV		2"					1		1			2
CONDUIT VALVES AND ASSEMBLIES	BV		1½"	4	1	3	4	6	5	4	5	2	34
CONDUIT VALVES AND ASSEMBLIES	FS		2"	1	2		2	2	1	1	3		12
PLASTIC PIPE SUPPLY LINE	SCH 40		2"	400	100		300	915	980	130	350	650	3825
PLASTIC PIPE SUPPLY LINE	SCH 40		2½"						440		150		590
PLASTIC PIPE SUPPLY LINE	SCH 40		3"				200				500		700
PLASTIC PIPE SUPPLY LINE	SCH 40		1½"					100			120		220
PLASTIC PIPE SUPPLY LINE	GSP		2½"					20					20

TOTAL QUANTITIES

TOTALS	UNIT	DESCRIPTION	
1		2"	BPA
1	EA	ENCLOSURE	BPA
		BOOSTER PUMP	
8	EA	12 STATION	IRRIGATION CONTROLLER
5	EA	24 STATION	IRRIGATION CONTROLLER
11		SINGLE	CONDUIT VALVES AND ASSEMBLIES — CEC
		DOUBLE	CONDUIT VALVES AND ASSEMBLIES — CEC
67	EA	1"	CONDUIT VALVES AND ASSEMBLIES — RCV
59	EA	1½"	CONDUIT VALVES AND ASSEMBLIES — RCV
2	EA	2"	CONDUIT VALVES AND ASSEMBLIES — RCV
34	EA	1½"	CONDUIT VALVES AND ASSEMBLIES — BV
12	EA	2"	CONDUIT VALVES AND ASSEMBLIES — FS
13192	LF	¾"	PLASTIC PIPE SUPPLY LINE — SCH 40
3265	LF	1"	PLASTIC PIPE SUPPLY LINE — SCH 40
4720	LF	1¼"	PLASTIC PIPE SUPPLY LINE — SCH 40
2273	LF	1½"	PLASTIC PIPE SUPPLY LINE — SCH 40
4306	LF	2"	PLASTIC PIPE SUPPLY LINE — SCH 40
590	LF	2½"	PLASTIC PIPE SUPPLY LINE — SCH 40
700	LF	3"	PLASTIC PIPE SUPPLY LINE — SCH 40
20	LF	2½"	PLASTIC PIPE SUPPLY LINE — GSP
573	EA	A-5	SPRINKLER TYPE
311	EA	B-5	SPRINKLER TYPE
58	EA	C-2	SPRINKLER TYPE

ABBREVIATIONS

BPA — backflow preventer assembly
BV — ball valve
CV — check valve
CEC — controller enclosure cabinet
CSP — corrugated steel pipe
DIP — ductile iron pipe
EA — each
FAU — filter assembly unit
FCV — flow control valve
FS — flow sensor
FV — flush valve
GSP — galvanized steel pipe
GV — gate valve
MCV — manual control valve
Ft — foot/feet
PR — pressure rated
PRV — pressure reducing valve
PRLV — pressure relief valve
QCV — quick coupling valve
RCV — remote control valve
RCVM — remote control valve (master)
VAU — valve assembly unit
WSP — welded steel pipe
WS — wye strainer

IRRIGATION QUANTITIES IQ-3

STATE OF CALIFORNIA - DEPARTMENT OF TRANSPORTATION
LANDSCAPE ARCHITECTURE
Caltrans
SENIOR LANDSCAPE ARCHITECT: PATTY WATANABE
CALCULATED-DESIGNED BY: JOSEPH MILLMAN
CHECKED BY: JENNIFER KURTH
REVISED BY
DATE REVISED

LAST REVISION 02-11-11
DATE PLOTTED => 02-MAR-2011
TIME PLOTTED => 09:40

Dist	COUNTY	ROUTE	POST MILES TOTAL PROJECT	SHEET No.	TOTAL SHEETS
07	LA	101	6.3/8.3	26	53

REGISTERED CIVIL ENGINEER 02/09/11 DATE

2-22-11
PLANS APPROVAL DATE

REGISTERED PROFESSIONAL ENGINEER ANH D. NGUYEN No. 62370 Exp. 9/30/11 CIVIL STATE OF CALIFORNIA

THE STATE OF CALIFORNIA OR ITS OFFICERS OR AGENTS SHALL NOT BE RESPONSIBLE FOR THE ACCURACY OR COMPLETENESS OF SCANNED COPIES OF THIS PLAN SHEET.

STATIONARY MOUNTED CONSTRUCTION AREA SIGNS

SIGN No.	SIGN CODE	DESCRIPTION	PANEL SIZE (Inch x Inch)	No. OF POSTS AND SIZE (Inch X Inch)	No. OF SIGNS
A	C24(CA)	SHOULDER WORK AHEAD	48 X 48	1 - 6 X 6	29
B	G20-2	END ROAD WORK	48 X 24	1 - 4 X 6	12
C	W20-1	ROAD WORK AHEAD	48 X 48	1 - 6 X 6	2

NOTE:

LOCATIONS OF CONSTRUCTION AREA SIGNS SHOWN ARE APPROXIMATE.
EXACT LOCATIONS WILL BE DETERMINED BY THE ENGINEER.

LEGEND:

XXYY-Y: SIGN CODE PER FEDERAL MANUAL ON UNIFORM TRAFFIC CONTROL DEVICES (MUTCD).
XXYY-Y(CA): SIGN CODE PER CALIFORNIA MANUAL ON UNIFORM TRAFFIC CONTROL DEVICES (CAMUTCD).

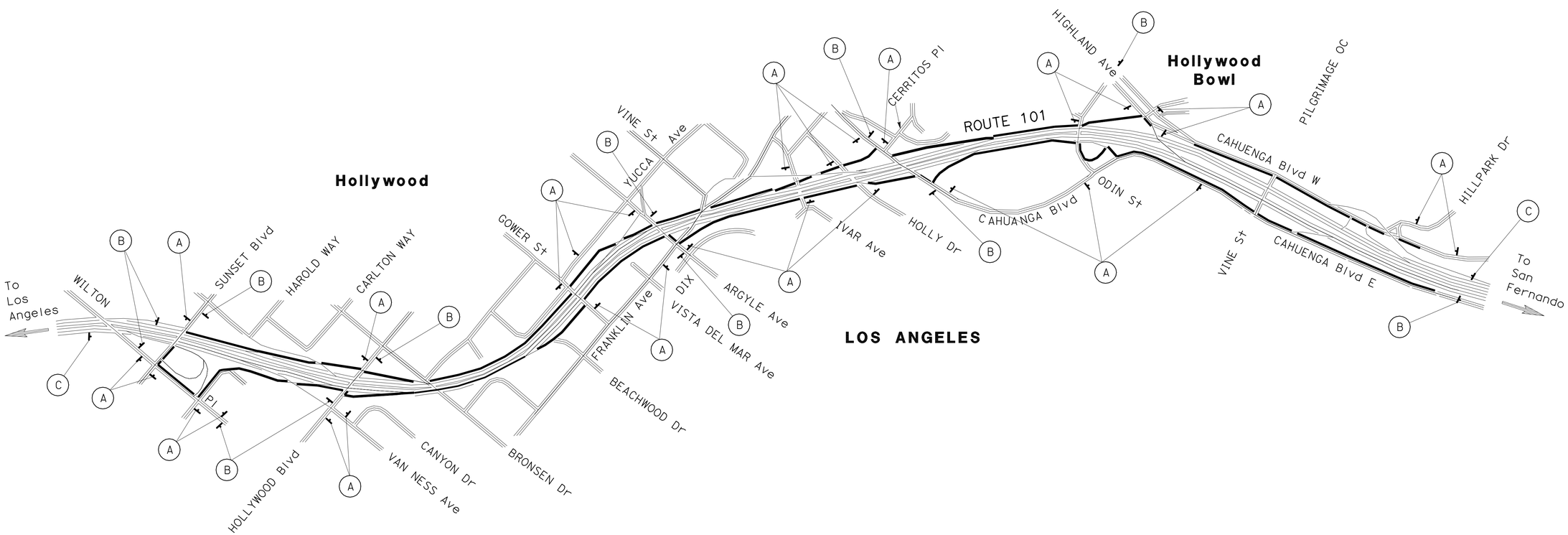

THIS PLAN IS ACCURATE FOR CONSTRUCTION AREA SIGN WORK ONLY

CONSTRUCTION AREA SIGNS

NO SCALE

CS-1

STATE OF CALIFORNIA - DEPARTMENT OF TRANSPORTATION
Caltrans TRAFFIC DESIGN

FUNCTIONAL SUPERVISOR: ANH D. NGUYEN
CALCULATED-DESIGNED BY: DANIEL DOAN
CHECKED BY: ANH D. NGUYEN
REVISED BY
DATE REVISED

LAST REVISION 02-11-11 | DATE PLOTTED => 02-MAR-2011 | TIME PLOTTED => 09:40

Dist	COUNTY	ROUTE	POST MILES TOTAL PROJECT	SHEET No.	TOTAL SHEETS
07	LA	101	6.3/8.3	27	53

REGISTERED CIVIL ENGINEER 9-13-10 DATE

2-22-11
PLANS APPROVAL DATE

REGISTERED PROFESSIONAL ENGINEER ALBERT K. YU No. 43220 Exp. 3/31/12 CIVIL STATE OF CALIFORNIA

THE STATE OF CALIFORNIA OR ITS OFFICERS OR AGENTS SHALL NOT BE RESPONSIBLE FOR THE ACCURACY OR COMPLETENESS OF SCANNED COPIES OF THIS PLAN SHEET.

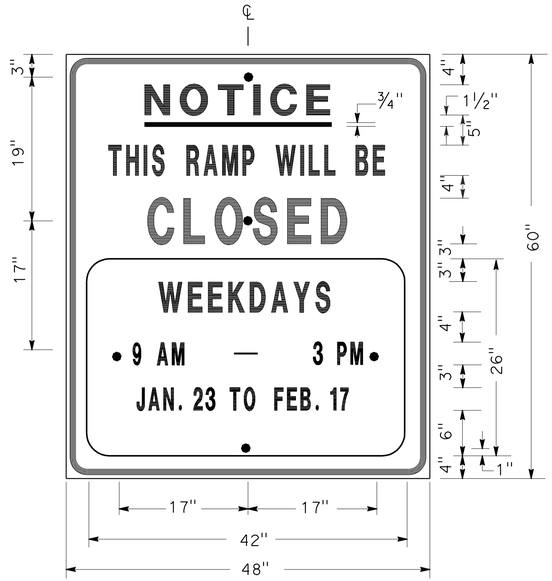

SIGN SP-1

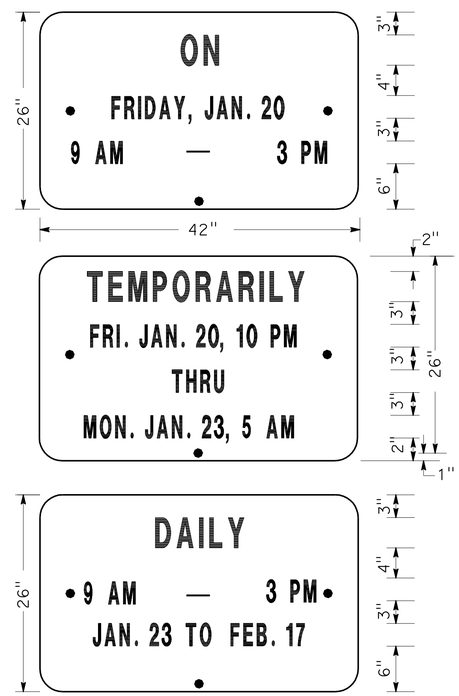

ALTERNATE OVERLAY PANELS (TYPICAL)

SPECIAL ADVANCE NOTICE PUBLICITY SIGN

NOTES: (SIGN SP-1)

1. SIGNS SHALL HAVE ORANGE RETROREFLECTORIZED BACKGROUND WITH BLACK BORDER AND LETTERS.
2. BOLT HOLES SHALL BE 3/8" DIAMETER.
3. BASE MATERIAL SHALL BE ALUMINUM (MINIMUM 0.06").
4. SIGNS SHALL BE MOUNTED WITH BOTTOMS OF SIGNS A MINIMUM OF 6' ABOVE GROUND.

SIZE	BORDER WIDTH	MARGIN WIDTH	LETTER SIZE					CORNER RADIUS
			LINE 1	LINE 2*	LINE 3	LINE 4	LINE 5,6 & 7*	
48"x60"	1 1/4"	3/4"	4E	4D	6E	4D		3"
42"x26"	OVERLAY						3D	1 1/2"
* CONDENSED SPACING IF NECESSARY								

SIGN SP-4

NOTES: (SIGN SP-4)

1. LETTERS - 6" SERIES C.
2. LETTERS AND BORDERS - BLACK ON RETROREFLECTORIZED WHITE BACKGROUND.
3. BASE MATERIAL SHALL BE ALUMINUM (MINIMUM 0.06").
4. SIGNS SHALL BE PLACED AT RAMP ENTRANCES IN ADDITION TO SIGNS POSTED IN ACCORDANCE WITH STANDARD PLAN T14.

SPECIAL SIGN FOR ENTRANCE RAMP CLOSURES

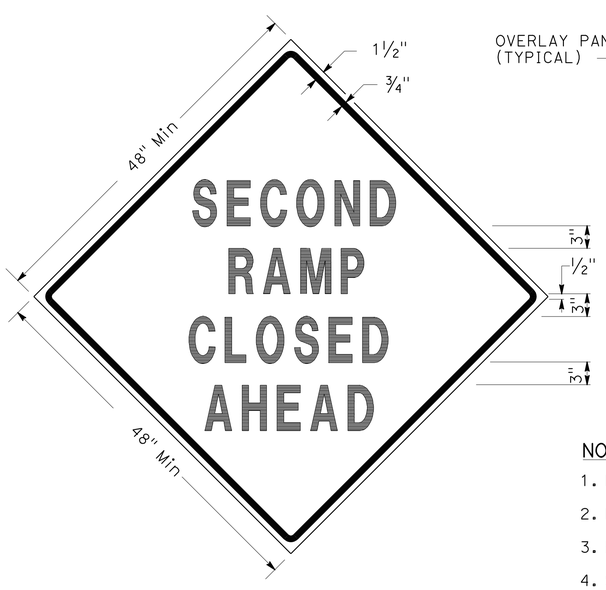

SIGN SP-3

SIGN SP-5

NOTES: (SIGNS SP-3 & SP-5)

1. LETTERS - 6" SERIES D.
2. LETTERS AND BORDERS - BLACK ON RETROREFLECTORIZED ORANGE BACKGROUND.
3. BASE MATERIAL SHALL BE ALUMINUM (MINIMUM 0.06").
4. SIGNS SHALL BE MOUNTED WITH BOTTOMS OF SIGNS A MINIMUM OF 6' ABOVE GROUND.

SPECIAL SIGN FOR EXIT RAMP CLOSURES

TRAFFIC HANDLING DETAILS
TRAFFIC CONTROL SYSTEM FOR RAMP CLOSURES, DETOUR SIGNS AND MISCELLANEOUS DETAILS
SHEET 1 OF 2

NO SCALE

THD-1

STATE OF CALIFORNIA - DEPARTMENT OF TRANSPORTATION
Caltrans® DTM

CALCULATED-DESIGNED BY	ALBERT K YU	FUNCTIONAL SUPERVISOR	JOHN YANG
CHECKED BY	JOCELYN C CHIANG	REVISED BY	JC
DATE REVISED	7/10		

LAST REVISION 02-11-11 | DATE PLOTTED => 02-MAR-2011 | TIME PLOTTED => 09:40

Dist	COUNTY	ROUTE	POST MILES TOTAL PROJECT	SHEET No.	TOTAL SHEETS
07	LA	101	6.3/8.3	28	53

REGISTERED CIVIL ENGINEER 9-13-10 DATE

2-22-11
PLANS APPROVAL DATE

REGISTERED PROFESSIONAL ENGINEER ALBERT K. YU No. 43220 Exp. 3/31/12 CIVIL STATE OF CALIFORNIA

THE STATE OF CALIFORNIA OR ITS OFFICERS OR AGENTS SHALL NOT BE RESPONSIBLE FOR THE ACCURACY OR COMPLETENESS OF SCANNED COPIES OF THIS PLAN SHEET.

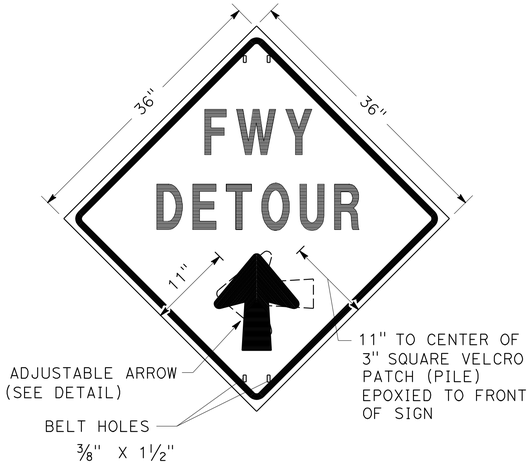

SIGN SP-2

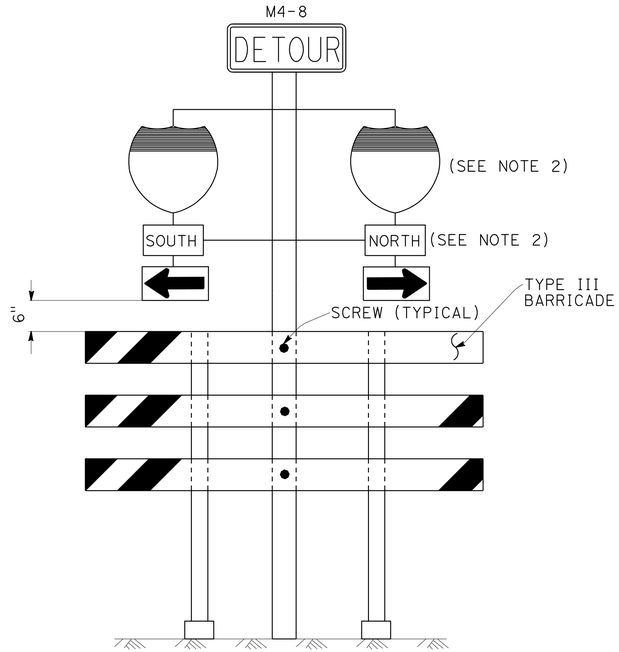

SIGN SP-6 (SEE NOTE 1)

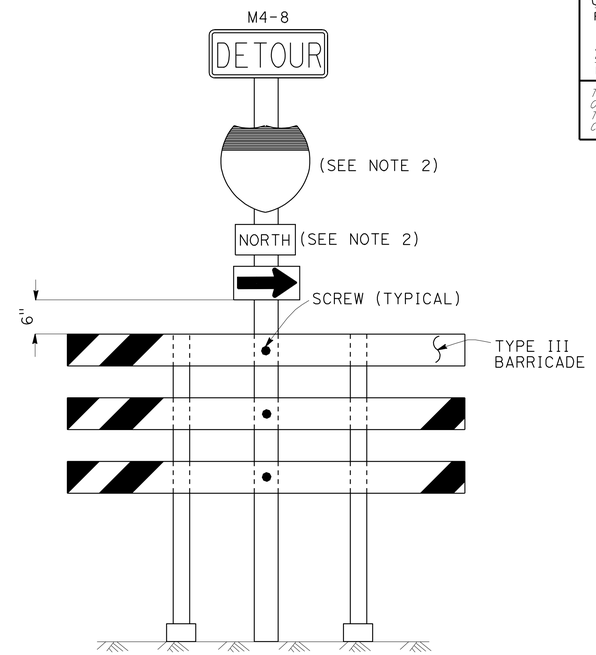

SIGN SP-7 (SEE NOTE 1)

NOTES: (SIGN SP-2)

1. LETTERS -6" SERIES E.
2. LETTERS, BORDER AND ARROW - BLACK ON RETROREFLECTORIZED ORANGE BACKGROUND.
3. BASE MATERIAL FOR SIGNS AND ARROWS SHALL BE ALUMINUM (MINIMUM 0.06").
4. BELTS (LUGGAGE STRAPS) SHALL BE 1" WIDE BY 48" LONG, MADE OF COTTON OR POLYPROPYLENE WEB MATERIAL.
5. SIGNS SHALL BE MOUNTED WITH BOTTOMS OF SIGNS A MINIMUM OF 6' ABOVE GROUND EXCEPT AS OTHERWISE SHOWN ON OTHER TRAFFIC HANDLING DETAILS PLANS.

ABBREVIATION

(CA) CALIFORNIA CODE

NOTES: (SIGNS SP-6 & SP-7)

1. IN LIEU OF PLACING SIGNS ON TYPE III BARRICADES, SIGNS, INCLUDING POSTS, MAY BE PLACED INTO THE GROUND OR FASTENED ONTO ELECTROLIERS.
2. USE APPROPRIATE ROUTE SHIELD [G26-2(CA), G27-2(CA), G28-2(CA)] AND CARDINAL DIRECTION [NORTH (M3-1), SOUTH (M3-3), EAST (M3-2), WEST (M3-4)]

SPECIAL PORTABLE FREEWAY DETOUR SIGNS

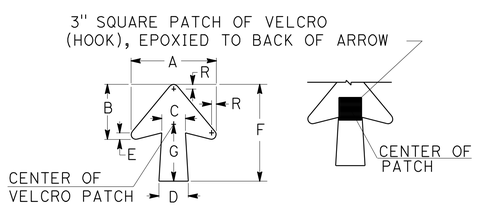

DIMENSIONS							
A	B	C	D	E	F	G	R
11 1/4"	7 1/4"	3 1/8"	4"	7/8"	13"	7 1/2"	5/8"

SPECIAL PORTABLE FREEWAY DETOUR SIGN

ADJUSTABLE ARROW DETAIL

TRAFFIC HANDLING DETAILS

TRAFFIC CONTROL SYSTEM FOR RAMP CLOSURES, DETOUR SIGNS AND MISCELLANEOUS DETAILS

SHEET 2 OF 2

NO SCALE

THD-2

STATE OF CALIFORNIA - DEPARTMENT OF TRANSPORTATION
Caltrans DTM

FUNCTIONAL SUPERVISOR: JOHN YANG
CALCULATED-DESIGNED BY: ALBERT K YU
CHECKED BY: JOCELYN C CHIANG
REVISED BY: JC
DATE REVISED: 7/10

LAST REVISION 02-11-11
DATE PLOTTED => 02-MAR-2011
TIME PLOTTED => 09:40

Dist	COUNTY	ROUTE	POST MILES TOTAL PROJECT	SHEET No.	TOTAL SHEETS
07	LA	101	6.3/8.3	29	53

REGISTERED CIVIL ENGINEER 9-13-10 DATE

2-22-11
PLANS APPROVAL DATE

REGISTERED PROFESSIONAL ENGINEER ALBERT K. YU No. 43220 Exp. 3/31/12 CIVIL STATE OF CALIFORNIA

THE STATE OF CALIFORNIA OR ITS OFFICERS OR AGENTS SHALL NOT BE RESPONSIBLE FOR THE ACCURACY OR COMPLETENESS OF SCANNED COPIES OF THIS PLAN SHEET.

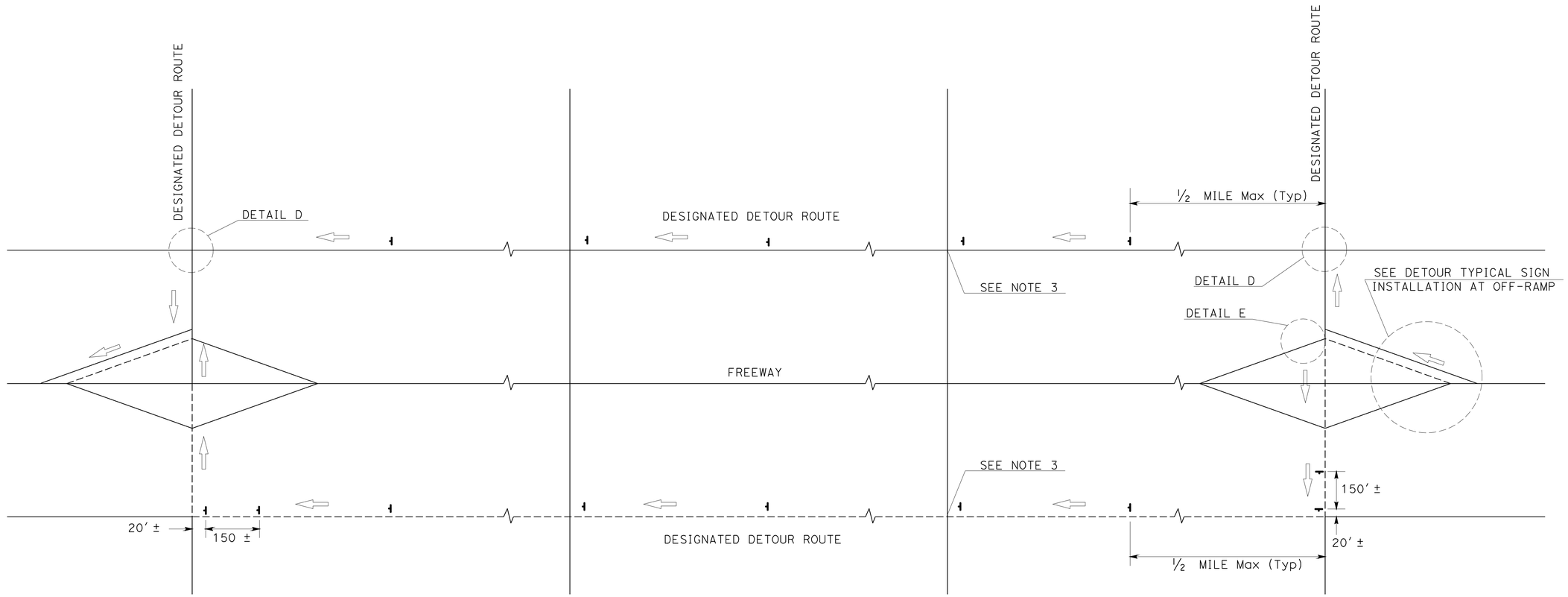

TYPICAL DETOUR SIGN INSTALLATION ALONG DESIGNATED DETOUR ROUTE

LEGEND

- TEMPORARY SIGN (SP-2)
- AND/OR DESIGNATED DETOUR ROUTE
- DIRECTION OF TRAVEL

NOTES:

1. SP-2 SIGNS SHALL NOT BE INSTALLED ON BARRICADES EXCEPT AS OTHERWISE SHOWN.
2. SIGN LOCATIONS ARE APPROXIMATE. EXACT LOCATIONS WILL BE DETERMINED BY THE ENGINEER.
3. SP-2 SIGNS SHALL BE POSTED AT SIGNALIZED INTERSECTIONS ALONG THE DESIGNATED DETOUR ROUTE OR ½ MILE MAXIMUM APART.

TRAFFIC HANDLING DETAILS

TRAFFIC CONTROL SYSTEM FOR DETOUR SIGN INSTALLATION ALONG DESIGNATED DETOUR ROUTE

SHEET 1 OF 2

NO SCALE

THD-3

STATE OF CALIFORNIA - DEPARTMENT OF TRANSPORTATION
Caltrans DTM

FUNCTIONAL SUPERVISOR: JOHN YANG
CALCULATED-DESIGNED BY: ALBERT K YU
CHECKED BY: JOCELYN C CHIANG
REVISED BY: JC
DATE REVISED: 7/10

LAST REVISION 02-11-11 | DATE PLOTTED => 02-MAR-2011 | TIME PLOTTED => 09:40

Dist	COUNTY	ROUTE	POST MILES TOTAL PROJECT	SHEET No.	TOTAL SHEETS
07	LA	101	6.3/8.3	30	53

REGISTERED CIVIL ENGINEER 9-13-10 DATE

2-22-11
PLANS APPROVAL DATE

REGISTERED PROFESSIONAL ENGINEER ALBERT K. YU No. 43220 Exp. 3/31/12 CIVIL STATE OF CALIFORNIA

THE STATE OF CALIFORNIA OR ITS OFFICERS OR AGENTS SHALL NOT BE RESPONSIBLE FOR THE ACCURACY OR COMPLETENESS OF SCANNED COPIES OF THIS PLAN SHEET.

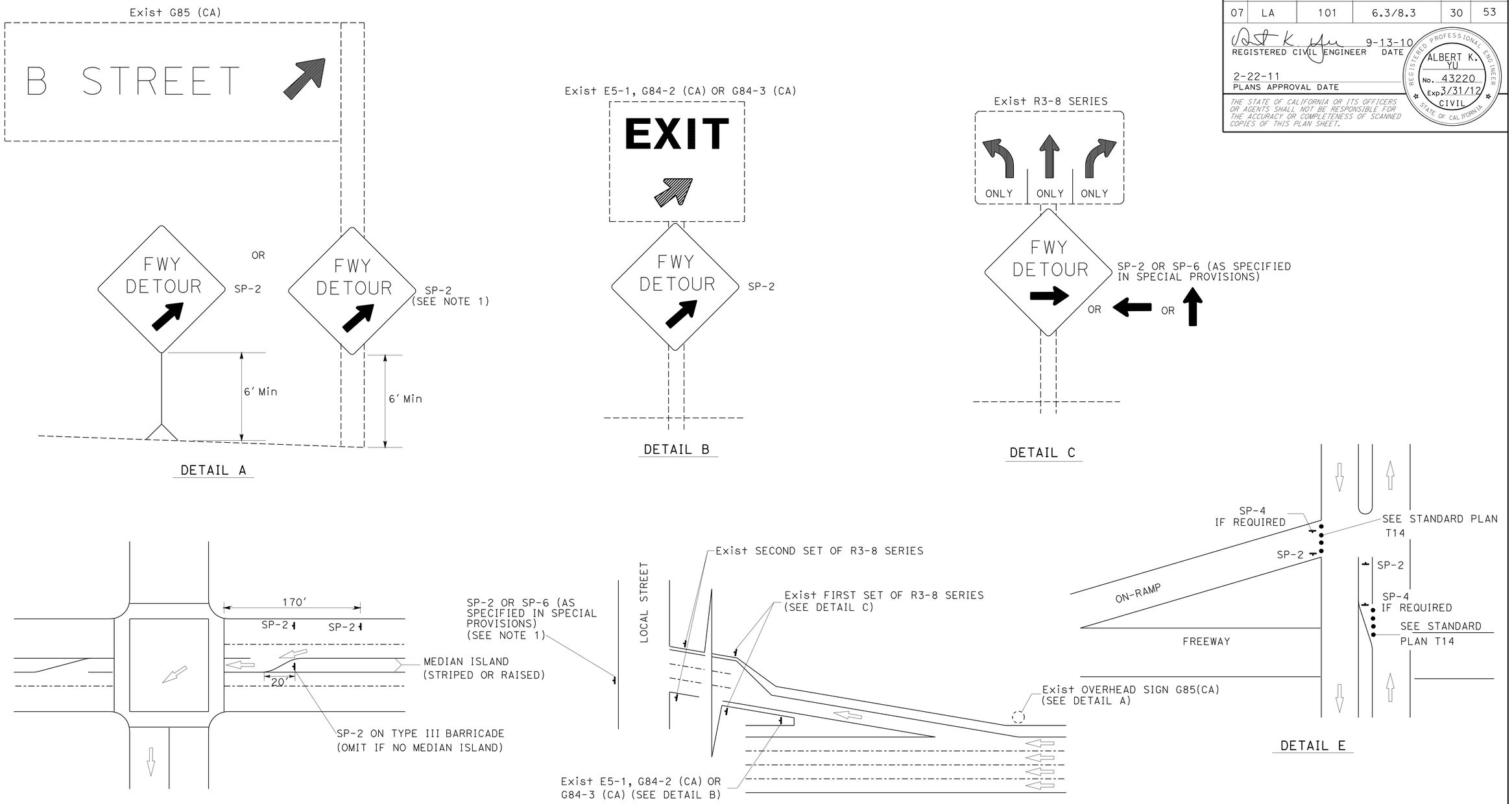

TYPICAL DETOUR SIGN INSTALLATION AT OFF-RAMP

NOTES:

1. TEMPORARY SIGNS MAY BE STRAPPED ON EXISTING ELECTROLIER, SIGNAL POSTS, OR SIGN POSTS.
2. OMIT DETAIL A AND DETAIL B FOR FULL FREEWAY CLOSURES.
3. SEE TRAFFIC HANDLING DETAILS PLAN-TRAFFIC CONTROL SYSTEM FOR RAMP CLOSURES, DETOUR SIGNS AND MISCELLANEOUS DETAILS SHEET 2 OF 2 FOR SP-6.

ABBREVIATIONS

(CA) CALIFORNIA CODE

LEGENDS

- TRAFFIC CONE
- TEMPORARY SIGN
- DIRECTION OF TRAVEL
- EXISTING OVERHEAD SIGN

TRAFFIC HANDLING DETAILS
TRAFFIC CONTROL SYSTEM FOR DETOUR SIGN INSTALLATION ALONG DESIGNATED DETOUR ROUTE
SHEET 2 OF 2

NO SCALE

THD-4

STATE OF CALIFORNIA - DEPARTMENT OF TRANSPORTATION
DTM
Caltrans®

FUNCTIONAL SUPERVISOR: JOHN YANG

CALCULATED-DESIGNED BY: ALBERT K YU
CHECKED BY: JOCELYN C CHIANG

REVISED BY: JC
DATE REVISED: 8/10

LAST REVISION: 02-11-11
DATE PLOTTED => 02-MAR-2011
TIME PLOTTED => 09:40

Dist	COUNTY	ROUTE	POST MILES TOTAL PROJECT	SHEET No.	TOTAL SHEETS
07	LA	101	6.3/8.3	31	53

Nooshin Ansari 1/25/11
REGISTERED ELECTRICAL ENGINEER DATE

2-22-11
PLANS APPROVAL DATE

REGISTERED PROFESSIONAL ENGINEER NOOSHIN ANSARI No. E17010 Exp. 09/30/11 ELECTRICAL STATE OF CALIFORNIA

THE STATE OF CALIFORNIA OR ITS OFFICERS OR AGENTS SHALL NOT BE RESPONSIBLE FOR THE ACCURACY OR COMPLETENESS OF SCANNED COPIES OF THIS PLAN SHEET.

NOTE:

FOR ACCURATE RIGHT OF WAY DATA, CONTACT RIGHT OF WAY ENGINEERING AT THE DISTRICT OFFICE.

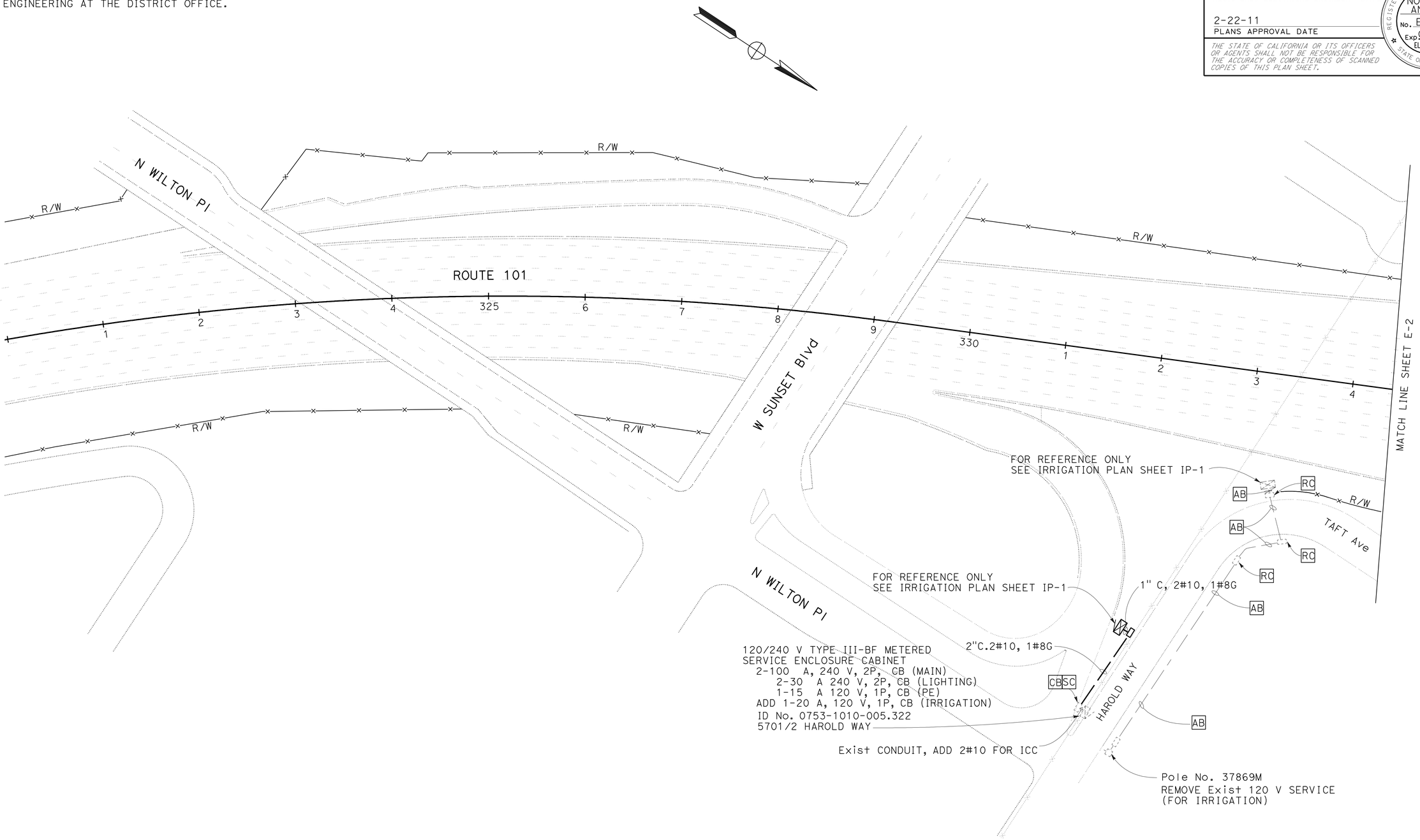

MODIFY ELECTRIC SERVICE
(IRRIGATION)

SCALE: 1"=50'

E-1

THIS PLAN IS ACCURATE FOR ELECTRICAL WORK ONLY

STATE OF CALIFORNIA - DEPARTMENT OF TRANSPORTATION
Caltrans® TRAFFIC DESIGN

FUNCTIONAL SUPERVISOR: OSWALD ELIZONDO
CALCULATED-DESIGNED BY: NOOSHIN ANSARI
CHECKED BY: OSWALD ELIZONDO
REVISED BY
DATE REVISED

LAST REVISION 00-00-00
DATE PLOTTED => 02-MAR-2011
TIME PLOTTED => 09:40

Dist	COUNTY	ROUTE	POST MILES TOTAL PROJECT	SHEET No.	TOTAL SHEETS
07	LA	101	6.3/8.3	32	53

Nooshin Ansari 1/24/11
REGISTERED ELECTRICAL ENGINEER DATE

2-22-11
PLANS APPROVAL DATE

REGISTERED PROFESSIONAL ENGINEER NOOSHIN ANSARI No. E17010 Exp. 09/30/11 ELECTRICAL STATE OF CALIFORNIA

THE STATE OF CALIFORNIA OR ITS OFFICERS OR AGENTS SHALL NOT BE RESPONSIBLE FOR THE ACCURACY OR COMPLETENESS OF SCANNED COPIES OF THIS PLAN SHEET.

NOTE:

FOR ACCURATE RIGHT OF WAY DATA, CONTACT RIGHT OF WAY ENGINEERING AT THE DISTRICT OFFICE.

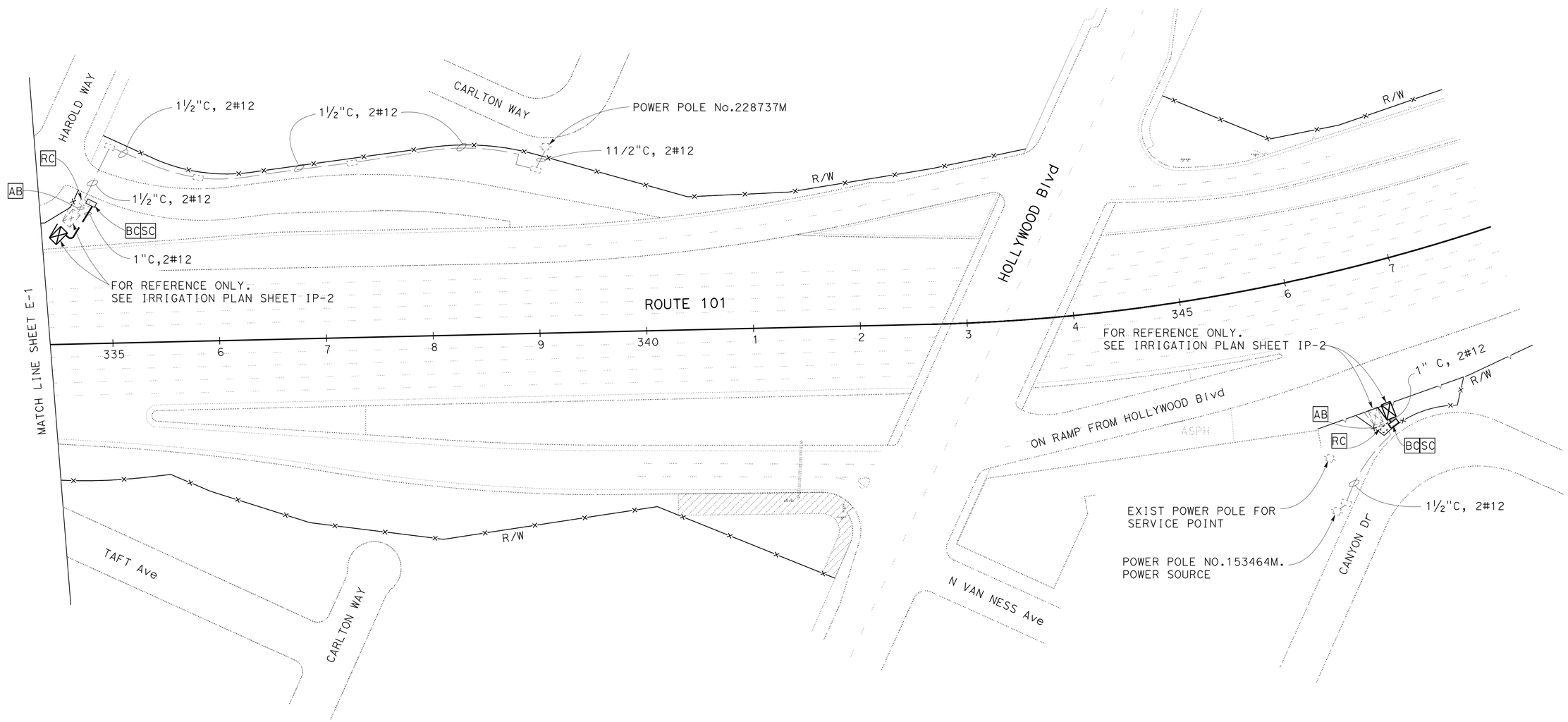

MODIFY ELECTRIC SERVICE
(IRRIGATION)

SCALE : 1" = 50'

E-2

THIS PLAN IS ACCURATE FOR ELECTRICAL WORK ONLY

STATE OF CALIFORNIA - DEPARTMENT OF TRANSPORTATION
Caltrans® TRAFFIC DESIGN

FUNCTIONAL SUPERVISOR: OSWALD ELIZONDO
CALCULATED-DESIGNED BY: NOOSHIN ANSARI
CHECKED BY: OSWALD ELIZONDO
REVISED BY
DATE REVISED

LAST REVISION 00-00-00
DATE PLOTTED => 02-MAR-2011
TIME PLOTTED => 09:40

Dist	COUNTY	ROUTE	POST MILES TOTAL PROJECT	SHEET No.	TOTAL SHEETS
07	LA	101	6.3/8.3	33	53

Nooshin Ansari 1/25/11
REGISTERED ELECTRICAL ENGINEER DATE

2-22-11
PLANS APPROVAL DATE

REGISTERED PROFESSIONAL ENGINEER
NOOSHIN ANSARI
No. E17010
Exp. 09/30/11
ELECTRICAL
STATE OF CALIFORNIA

THE STATE OF CALIFORNIA OR ITS OFFICERS OR AGENTS SHALL NOT BE RESPONSIBLE FOR THE ACCURACY OR COMPLETENESS OF SCANNED COPIES OF THIS PLAN SHEET.

NOTE:

FOR ACCURATE RIGHT OF WAY DATA, CONTACT RIGHT OF WAY ENGINEERING AT THE DISTRICT OFFICE.

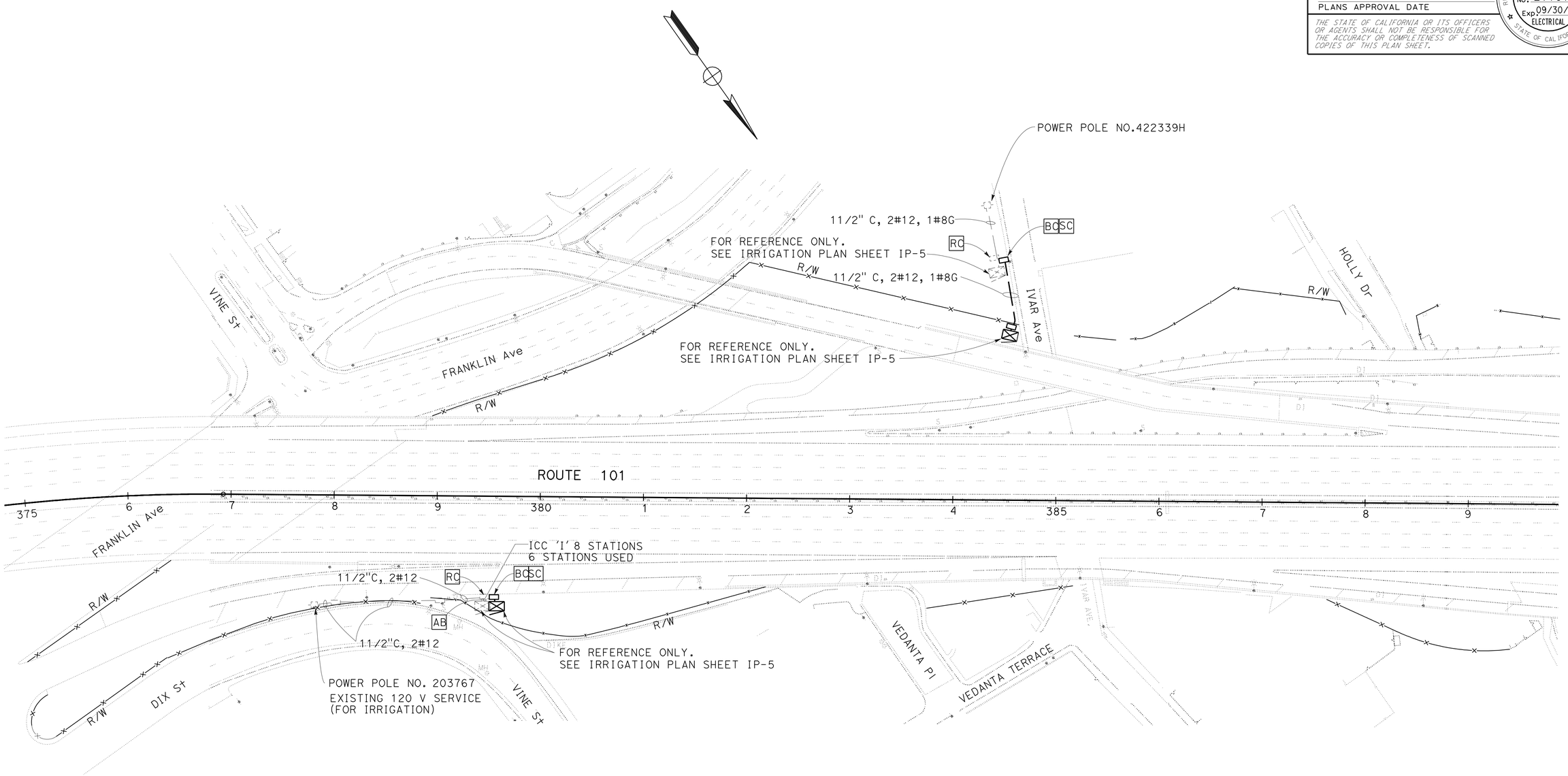

MODIFY ELECTRIC SERVICE
(IRRIGATION)

SCALE : 1" = 50'

E-3

THIS PLAN IS ACCURATE FOR ELECTRICAL WORK ONLY

STATE OF CALIFORNIA - DEPARTMENT OF TRANSPORTATION
Caltrans® TRAFFIC DESIGN

FUNCTIONAL SUPERVISOR: OSWALD ELIZONDO

CALCULATED-DESIGNED BY: NOOSHIN ANSARI
CHECKED BY: OSWALD ELIZONDO

REVISED BY
DATE REVISED

LAST REVISION 00-00-00
DATE PLOTTED => 02-MAR-2011
TIME PLOTTED => 09:40

Dist	COUNTY	ROUTE	POST MILES TOTAL PROJECT	SHEET No.	TOTAL SHEETS
07	LA	101	6.3/8.3	34	53

Nooshin Ansari 1/25/11
REGISTERED ELECTRICAL ENGINEER DATE

2-22-11
PLANS APPROVAL DATE

REGISTERED PROFESSIONAL ENGINEER NOOSHIN ANSARI No. E17010 Exp. 09/30/11 ELECTRICAL STATE OF CALIFORNIA

THE STATE OF CALIFORNIA OR ITS OFFICERS OR AGENTS SHALL NOT BE RESPONSIBLE FOR THE ACCURACY OR COMPLETENESS OF SCANNED COPIES OF THIS PLAN SHEET.

NOTE:

FOR ACCURATE RIGHT OF WAY DATA, CONTACT RIGHT OF WAY ENGINEERING AT THE DISTRICT OFFICE.

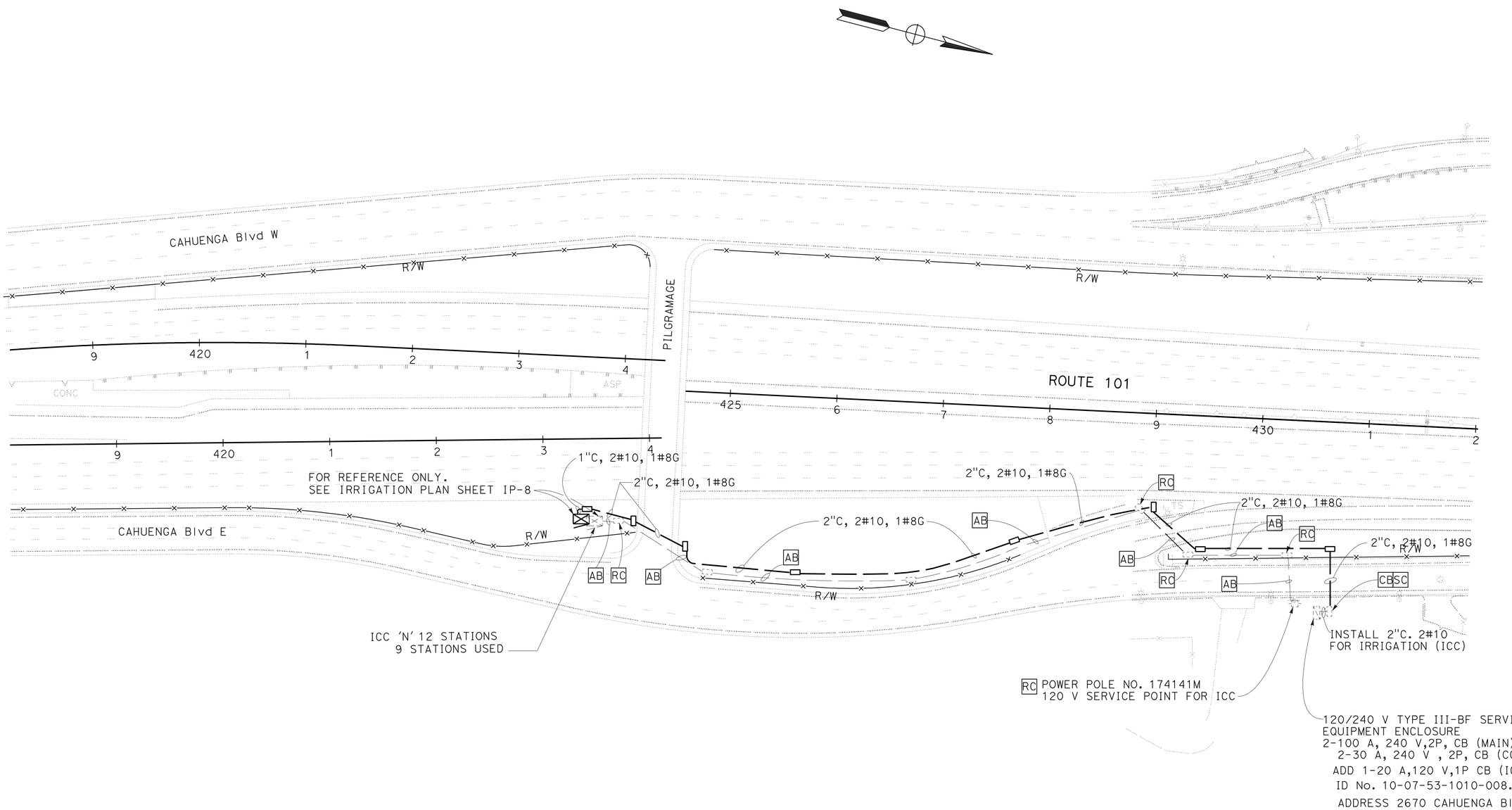

MODIFY ELECTRIC SERVICE
(IRRIGATION)

SCALE : 1" = 50'

E-4

THIS PLAN IS ACCURATE FOR ELECTRICAL WORK ONLY

STATE OF CALIFORNIA - DEPARTMENT OF TRANSPORTATION
Caltrans
TRAFFIC DESIGN

FUNCTIONAL SUPERVISOR: OSWALD ELIZONDO
CALCULATED-DESIGNED BY: NOOSHIN ANSARI
CHECKED BY: OSWALD ELIZONDO
REVISED BY
DATE REVISED

LAST REVISION 00-00-00
DATE PLOTTED => 02-MAR-2011
TIME PLOTTED => 09:41

Dist	COUNTY	ROUTE	POST MILES TOTAL PROJECT	SHEET No.	TOTAL SHEETS
07	LA	101	6.3/8.3	35	53

Nooshin Ansari 1/25/11
REGISTERED ELECTRICAL ENGINEER DATE

2-22-11
PLANS APPROVAL DATE

REGISTERED PROFESSIONAL ENGINEER NOOSHIN ANSARI No. E17010 Exp. 09/30/11 ELECTRICAL STATE OF CALIFORNIA

THE STATE OF CALIFORNIA OR ITS OFFICERS OR AGENTS SHALL NOT BE RESPONSIBLE FOR THE ACCURACY OR COMPLETENESS OF SCANNED COPIES OF THIS PLAN SHEET.

NOTE:

FOR ACCURATE RIGHT OF WAY DATA, CONTACT RIGHT OF WAY ENGINEERING AT THE DISTRICT OFFICE.

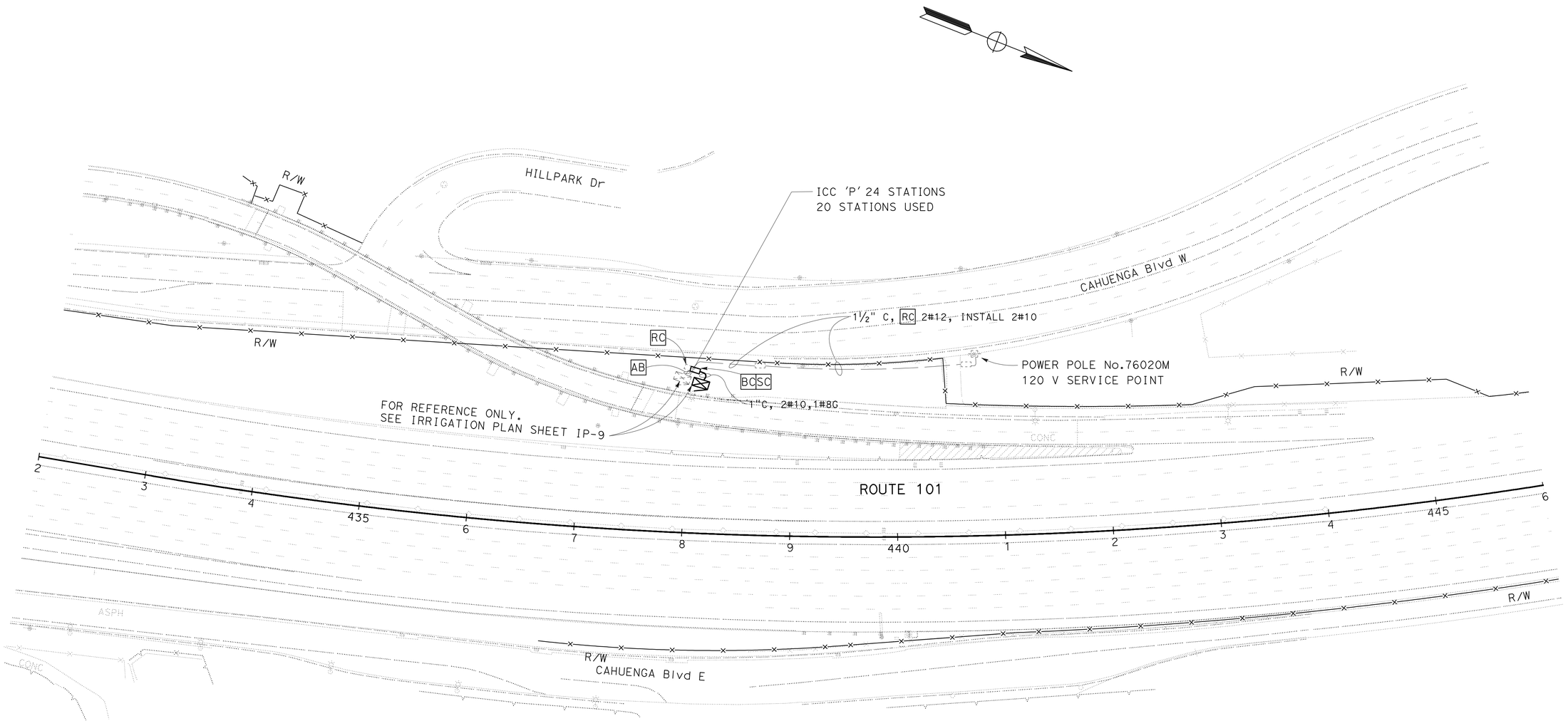

MODIFY ELECTRIC SERVICE
(IRRIGATION)

SCALE : 1" = 50'

E-5

THIS PLAN IS ACCURATE FOR ELECTRICAL WORK ONLY

STATE OF CALIFORNIA - DEPARTMENT OF TRANSPORTATION
Caltrans® TRAFFIC DESIGN

FUNCTIONAL SUPERVISOR: OSWALD ELIZONDO

CALCULATED-DESIGNED BY: NOOSHIN ANSARI
CHECKED BY: OSWALD ELIZONDO

REVISED BY
DATE REVISED

LAST REVISION 00-00-00
DATE PLOTTED => 02-MAR-2011
TIME PLOTTED => 09:41

DIST	COUNTY	ROUTE	POST MILES TOTAL PROJECT	SHEET NO.	TOTAL SHEETS
07	LA	101	6.3/8.3	36	53

REGISTERED CIVIL ENGINEER

June 5, 2009
PLANS APPROVAL DATE

REGISTERED PROFESSIONAL ENGINEER Glenn DeCou No. C34547 Exp. 9-30-09 CIVIL STATE OF CALIFORNIA

The State of California or its officers or agents shall not be responsible for the accuracy or completeness of electronic copies of this plan sheet.

To accompany plans dated 2-22-11

2006 REVISED STANDARD PLAN RSP A85

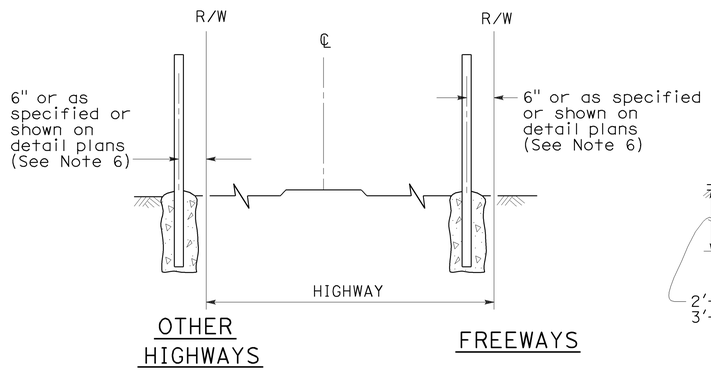

FENCE LOCATION

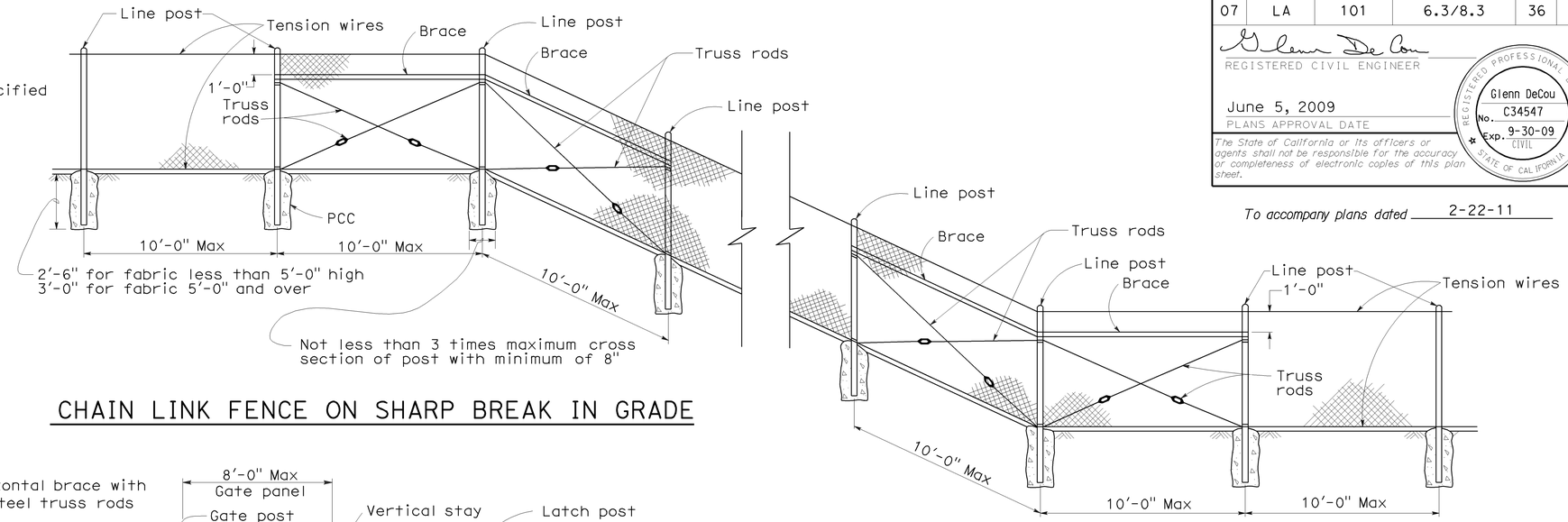

CHAIN LINK FENCE ON SHARP BREAK IN GRADE

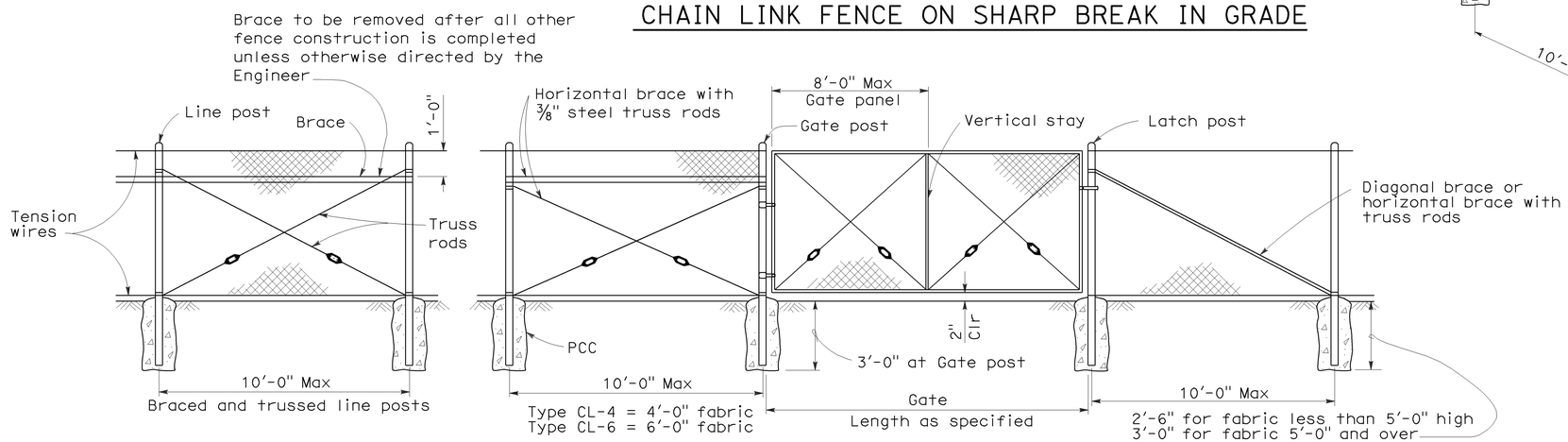

CHAIN LINK GATE INSTALLATION

GATE POST			
FENCE HEIGHT	GATE WIDTHS	NOMINAL ID	WEIGHT PER FOOT
6'-0" and Less	Up thru 6'-0"	2½"	4.95 LB
	Over 6'-0" thru 12'-0"	4"	10.79 LB
	Over 12'-0" thru 18'-0"	5"	14.62 LB
	Over 18'-0" to 24'-0" Max	6"	18.97 LB
Over 6'-0"	Up thru 6'-0"	3"	7.58 LB
	Over 6'-0" thru 12'-0"	5"	14.62 LB
	Over 12'-0" thru 18'-0"	6"	18.97 LB
	Over 18'-0" to 24'-0" Max	8"	28.55 LB

Above post dimensions and weights are minimums. Larger sizes may be used on approval of the Engineer.

NOTES:

1. The below table shows examples of post and brace sections which may comply with the Specifications.
2. Sections shown in the tables must also comply with the strength requirements and other provisions of the Specifications.
3. Other sections which comply with the strength requirements and other provisions of the Specifications may be used on approval of the Engineer.
4. Options exercised shall be uniform on any one project.
5. Dimensions shown are nominal.
6. Offset to be 2'-0" at monument locations, measured at right angles to R/W lines. Taper to achieve offset to be at least 20'-0" long.

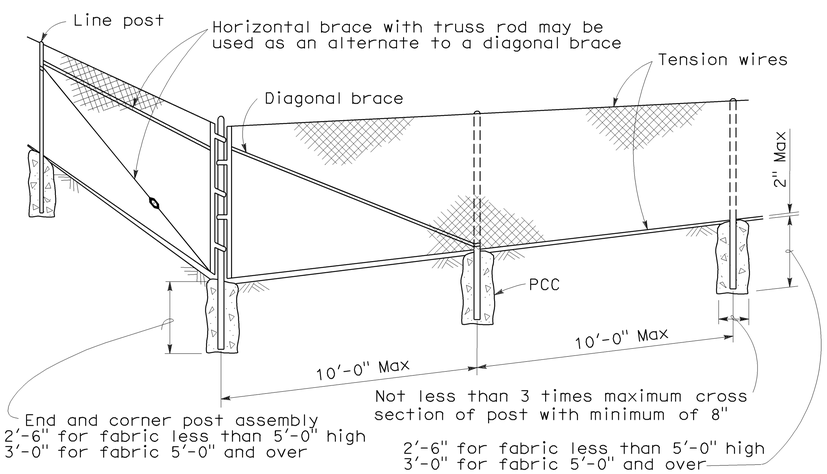

CORNER POST

TYPICAL MEMBER DIMENSIONS (See Notes)											
FENCE HEIGHT	LINE POSTS			END, LATCH & CORNER POSTS				BRACES			
	ROUND ID	H	ROLL FORMED	ROUND ID	ROLL FORMED			ROUND ID	H	ROLL FORMED	
6' & less	1½"	1⅞" × 1⅝"	1⅞" × 1⅝"	2"	3½" × 3½"	2" × 1¾"		1¼"	1½" × 1 5/16"	1⅝" × 1¼"	1¾" × 1¼"
Over 6'	2"	2¼" × 2"	2" × 1¾"	2½"	3½" × 3½"	2½" × 2½"		1¼"	1½" × 1 5/16"	1⅝" × 1¼"	1¾" × 1¼"

STATE OF CALIFORNIA
DEPARTMENT OF TRANSPORTATION

CHAIN LINK FENCE

NO SCALE

RSP A85 DATED JUNE 5, 2009 SUPERSEDES STANDARD PLAN A85
DATED MAY 1, 2006 - PAGE 111 OF THE STANDARD PLANS BOOK DATED MAY 2006.

REVISED STANDARD PLAN RSP A85

5-7-09

DIST	COUNTY	ROUTE	POST MILES TOTAL PROJECT	SHEET NO.	TOTAL SHEETS
07	LA	101	6.3/8.3	37	53

REGISTERED ELECTRICAL ENGINEER

October 5, 2007
PLANS APPROVAL DATE

REGISTERED PROFESSIONAL ENGINEER Jeffery G. McRae No. E14512 Exp. 6-30-08 ELECTRICAL STATE OF CALIFORNIA

The State of California or its officers or agents shall not be responsible for the accuracy or completeness of electronic copies of this plan sheet.

To accompany plans dated 2-22-11

ELECTROLIERS

STANDARD TYPES
15, 15D
15 STRUCTURE
21, 21D STRUCTURE
30
31
32
35
36-20A

High mast light pole

Double Arm lighting standard

Existing electrolier

Electrolier foundation (Future installation)

NOTES:

1. Luminaires shall be 310 W HPS when installed on Type 21, 21D, 30, 31, 32, 35 and 36-20A Standards, unless otherwise specified. Luminaires shall be 200 W HPS when installed on other type standards or poles, unless otherwise specified.
2. Luminaires shall be the cutoff type, ANSI Type III medium cutoff lighting distribution, unless otherwise specified.
3. Variations noted adjacent to symbol on project plans.

Electrolier (see project notes or project plans)

Luminaire on wood pole

STANDARD NOTES:

- AB — Abandon. If applied to conduit, remove conductors.
- BC — Install pull box in existing conduit run.
- BP — Pedestrian barricade, type as indicated on plan.
- CB — Install conduit into existing pull box.
- CC — Connect new and existing conduit. Remove existing conductors and install conductors as indicated.
- CF — Conduit to remain for future use. Remove conductors. Install pull wire or rope.
- DH — Detector handhole.
- FA — Foundation to be abandoned.
- IS — Install sign on signal mast arm.
- NS — No slip base on standard.
- PEC — Photoelectric control.
- PEU — Photoelectric unit.
- RC — Equipment or material to be removed and become the property of the Contractor.
- RE — Remove electrolier, fuses and ballast. Tape ends of conductors.
- RL — Relocate equipment.
- RR — Remove and reuse equipment.
- RS — Remove and salvage equipment.
- SC — Splice new to existing conductors.
- SD — Service disconnect.
- SF — Standard to remain for future use. Remove luminaire, pole conductors, fuses and ballast.
- TSP — Telephone service point.

ABBREVIATIONS AND EQUIPMENT DESIGNATIONS

PROPOSED	EXISTING	
BBS	bbs	Battery backup system
BC	bc	Bolt circle
C	C	Conduit
CCTV	cctv	Closed circuit television
CKT	ckt	Circuit
CMS	cms	Changeable message sign
DLC	dlc	Loop detector lead-in cable
EMS	ems	Extinguishable message sign
EVC	evc	Emergency vehicle cable
EVD	evd	Emergency vehicle detector
FB	fb	Flashing beacon
FBCA	fbca	Flashing beacon control assembly
FBS	fbs	Flashing beacon with slip base
FO	fo	Fiber optic
G	G	Ground (Equipment Grounding Conductor)
GFCI	GFCI	Ground fault circuit interrupt
HAR	har	Highway advisory radio
HEX	hex	Hexagonal
HPS	hps	High pressure sodium
IISNS	iisns	Internally illuminated street name sign
ISL	isl	Induction sign lighting
LED	led	Light emitting diode
LMA	lma	Luminaire mast arm
LPS	lps	Low pressure sodium
LTG	ltg	Lighting
LUM	lum	Luminaire
MAT	mat	Mast arm mounting vehicle signal faces, top attachment
MAS	mas	Mast arm mounting vehicle signal faces, side attachment
MAS-4A	mas-4A	Mast arm mounting vehicle signal faces, side attachment - 4 signal section
MAS-4B	mas-4B	
MAS-4C	mas-4C	
MAS-5A	mas-5A	Mast arm mounting vehicle signal faces, side attachment - 5 signal section
MAS-5B	mas-5B	
MC	mc	Mercury contactor
M/M	m/m	Multiple to multiple transformer
MT	mt	Conduit with pull wire or rope only
MTG	mtg	Mounting
	mv	Mercury vapor lighting fixture
N	N	Neutral (Grounded Conductor)
NC	NC	Normally closed
NO	NO	Normally open
PB	pb	Pull box
PEC	pec	Photoelectric control (Type I, II, III, IV or V as shown)
PED	ped	Pedestrian
PEU	peu	Photoelectric unit
PPB	ppb	Pedestrian push button
RL		Relocated equipment
RM	rm	Ramp metering
SB	sb	Slip base
SIC	sic	Signal interconnect cable
SIG	sig	Signal
SMA	sma	Signal mast arm
SNS	sns	Street name sign
SP	sp	Service point
TDC	tdc	Telephone demarcation cabinet
TMS	tms	Traffic monitoring station
TOS	tos	Traffic Operations System
VEH	veh	Vehicle
XFMR	xfmr	Transformer
COMM	comm	Communication
RWIS	rwis	Roadway weather information system

SOFFIT AND WALL MOUNTED LUMINAIRES

Pendant, 70 W HPS unless otherwise specified.

Flush, 70 W HPS unless otherwise specified.

Wall surface, 70 W HPS unless otherwise specified.

Existing soffit or wall luminaire to remain unmodified.

Existing soffit or wall luminaire to be modified as specified.

NOTE:

Arrow indicates "street side" of luminaire.

STATE OF CALIFORNIA
DEPARTMENT OF TRANSPORTATION

ELECTRICAL SYSTEMS (SYMBOLS AND ABBREVIATIONS)

NO SCALE

RSP ES-1A DATED OCTOBER 5, 2007 SUPERSEDES STANDARD PLAN ES-1A DATED MAY 1, 2006 - PAGE 400 OF THE STANDARD PLANS BOOK DATED MAY 2006.

REVISED STANDARD PLAN RSP ES-1A

2006 REVISED STANDARD PLAN RSP ES-1A

DIST	COUNTY	ROUTE	POST MILES TOTAL PROJECT	SHEET NO.	TOTAL SHEETS
07	LA	101	6.3/8.3	38	53

REGISTERED ELECTRICAL ENGINEER

October 5, 2007
PLANS APPROVAL DATE

REGISTERED PROFESSIONAL ENGINEER Jeffery G. McRae No. E14512 Exp. 6-30-08 ELECTRICAL STATE OF CALIFORNIA

The State of California or its officers or agents shall not be responsible for the accuracy or completeness of electronic copies of this plan sheet.

To accompany plans dated 2-22-11

CONDUIT

PROPOSED	EXISTING	
		Lighting Conduit, unless otherwise indicated or noted
		Traffic signal conduit
C	c	Communication conduit
T	t	Telephone conduit
F	f	Fire alarm conduit
FO	fo	Fiber optic conduit
		Conduit termination (RSP ES-9A C)
R	r	Conduit riser in/on structure or service pole

SERVICE EQUIPMENT

PROPOSED	EXISTING	
OH	oh	Overhead lines
U	U	Wood pole "U" indicates utility owned
		Pole guy with anchor
		Utility transformer - ground mounted
III		Service equipment enclosure type
		Service equipment enclosure door indicates front of enclosure
T	t	Telephone demarcation cabinet

POLE-MOUNTED SERVICE DESIGNATION

Type of installation

TYPE H SERVICE - 28'-10" ← Pole height above grade

ILLUMINATED OVERHEAD SIGN

PROPOSED	EXISTING	
		Overhead sign - Single post
		Overhead sign - Two post
		Overhead sign - Mounted on structure
		Overhead sign with electrolier

SIGNAL EQUIPMENT

PROPOSED	EXISTING	
		Pedestrian signal face
		Pedestrian push button post
		Pedestrian barricade
		Vehicle signal face (with backplate, 3-Section: red, yellow and green)
		Vehicle signal face with angle visors
PV	PV	Modifications of basic symbols: "L" indicates all non-arrow sections louvered; "LG" indicates louvered green section only; "PV" indicates 12" programmed visibility sections; "8" indicates all 8" sections (only when specified)
		Type 15TS and Vehicle signal face
		Vehicle signal face with red, yellow and green left arrow sections
		Vehicle signal face with red and yellow sections and up green arrow
		Vehicle signal face (5 Section) with red, yellow and green sections and yellow and green right arrows
		Type 1 Standard and attached vehicle signal faces
		Standard with signal mast arm only and attached vehicle signal faces and internally illuminated street name sign
		Type 33 Standard, Left-turn vehicle signal face and sign
		Standard with luminaire and signal mast arms and attached vehicle signal faces
		Cantilever flashing beacon Type 9 Frame, with a sign unless otherwise specified or indicated
		Type 15-FBS Standard with two vehicle signal face sections with lens, backplate and visor with a sign
R	Y	Flashing beacon. One vehicle signal face section with lens, backplate and visor. "R" indicates red indication, "Y" indicates yellow indication
		Controller assembly. Door indicates front of cabinet

SIGNAL EQUIPMENT Cont

PROPOSED	EXISTING	
		Guard post
		Type 1 Standard with "Meter On" sign
		Emergency Vehicle detector

NOTES:

1. All signal sections shall be 12" unless shown otherwise.
2. Signal heads shall be provided with backplates unless shown otherwise.
3. Signal indication shall be LED.

STATE OF CALIFORNIA
DEPARTMENT OF TRANSPORTATION

ELECTRICAL SYSTEMS (SYMBOLS AND ABBREVIATIONS)

NO SCALE

RSP ES-1B DATED OCTOBER 5, 2007 SUPERCEDES STANDARD PLAN ES-1B DATED MAY 1, 2006 - PAGE 401 OF THE STANDARD PLANS BOOK DATED MAY 2006.

REVISED STANDARD PLAN RSP ES-1B

2006 REVISED STANDARD PLAN RSP ES-1B

7-10-07

DIST	COUNTY	ROUTE	POST MILES TOTAL PROJECT	SHEET NO.	TOTAL SHEETS
07	LA	101	6.3/8.3	39	53

REGISTERED ELECTRICAL ENGINEER

October 5, 2007
PLANS APPROVAL DATE

REGISTERED PROFESSIONAL ENGINEER Jeffery G. McRae No. E14512 Exp. 6-30-08 ELECTRICAL STATE OF CALIFORNIA

The State of California or its officers or agents shall not be responsible for the accuracy or completeness of electronic copies of this plan sheet.

To accompany plans dated 2-22-11

EQUIPMENT IDENTIFICATION

ILLUMINATED SIGN IDENTIFICATION NUMBER:

Sign No. 12345 — Sign number - Place on post or structure

10 ISL SCI 1.0

- 1.0 — Transformer rating (kVA)
- SCI — Lighting control type
- ISL — Number and type of fixtures

Do NOT place on standard or structure

ELECTROLIER OR EQUIPMENT IDENTIFICATION NUMBER:

12345 - 15'-0"

- 15'-0" — Mast arm length, if shown. Do not place on standard or structure.
- 12345 — Equipment number - Place on standard or structure. Existing equipment numbers are shown in parenthesis

CONDUIT AND CONDUCTOR IDENTIFICATION:

1½"C, 2#10, 15#14, 2 DLC

- 2#10, 15#14, 2 DLC — Number and size of conductors and cables
- 1½"C — Size of conduit in inches

Ø1, Ø2, Ø2P, etc.	Traffic phase identification for signal faces, detectors and phase diagrams
1 2 3	Project note numbers
A B C	Equipment description, installation or item numbers
1 2 3	Conduit run numbers

SIGNAL AND LIGHTING STANDARD (TYPICAL DESIGNATION):

19A - 3 - 100

- 100 — Wind velocity = 100 mph
- 3 — Case 3 arm loading
- 19A — Standard type
- Standard Plan sheet number
- Detail number or letter

MISCELLANEOUS EQUIPMENT

PROPOSED	EXISTING	
CMS	cms	Changeable message sign
		Closed circuit television camera
		Highway advisory radio pole and antenna
EMS	ems	Extinguishable message sign
M V	m v	Detection device M = Microwave sensor V = Video image sensor

WIRING DIAGRAM LEGEND

P	Pole
CB	Circuit breaker
A	Ampere
V	Volt
M	Metered
UM	Unmetered
NB	Neutral bus
GB	Ground bus
G	Equipment grounding conductor
N	Grounded conductor (Neutral)

- External conductor
- Conductor or bus
- Tie point
- Contactor coil
- Contactor, Contact NO
- Terminal blocks
- Contactor, Contact NC
- Enclosure bond
- Grounding electrode
- Circuit breaker
- Receptacle

PULL BOXES

PROPOSED EXISTING

Pull box-No. 5 unless otherwise indicated or noted.

3 — 9A(21)

Pull box-Additional designations or descriptions

- 3 = No. 3½ pull box
- 5 = No. 5 pull box
- 6 = No. 6 pull box
- 7 = No. 7 (Ceiling pull box)
- 8 = No. 8 (Pendant soffit pull box)
- 9 = No. 9 pull box
- 9A = No. 9A pull box

- (C) = Communications pull box
- (E) = Pull box with extension
- (S) = Sprinkler control pull box
- (21) = Anchor bolts and conduit for future installation of Type 21 Standard
- (T) = Traffic pull box

VEHICLE DETECTORS

5 J 9 U

- U = Upper
- L = Lower
- Slot number in input file
- Input file (I or J)
- Phase

PROPOSED	EXISTING	
		Type A detector loop. Outline of sawcut shown.
		Type B detector loop. Outline of sawcut shown.
		Type C detector loop. Outline of sawcut shown.
		Type D detector loop. Outline of sawcut shown.
		Type E detector loop. Outline of sawcut shown.
		Type Q detector loop. Outline of sawcut shown.
		Magnetic detector
DH	dh	Detector handhole
		Microwave or video detection zone

STATE OF CALIFORNIA
DEPARTMENT OF TRANSPORTATION

ELECTRICAL SYSTEMS (SYMBOLS AND ABBREVIATIONS)

NO SCALE

RSP ES-1C DATED OCTOBER 5, 2007 SUPERCEDES STANDARD PLAN ES-1C DATED MAY 1, 2006 - PAGE 402 OF THE STANDARD PLANS BOOK DATED MAY 2006.

REVISED STANDARD PLAN RSP ES-1C

2006 REVISED STANDARD PLAN RSP ES-1C

DIST	COUNTY	ROUTE	POST MILES TOTAL PROJECT	SHEET NO.	TOTAL SHEETS
07	LA	101	6.3/8.3	40	53

LICENSED LANDSCAPE ARCHITECT

June 5, 2009
PLANS APPROVAL DATE

LICENSED LANDSCAPE ARCHITECT — Gregory A. Balzer 2576 — 10-31-09 Expiration Date — 2-28-11 Renewal Date — 5-14-09 Date — STATE OF CALIFORNIA

The State of California or its officers or agents shall not be responsible for the accuracy or completeness of electronic copies of this plan sheet.

To accompany plans dated 2-22-11

A

AB	aggregate base
ABS	acrylonitrile-butadiene-styrene
AC	asphalt concrete
Adj	adjacent/adjustable
AIC	auxiliary irrigation controller
Alt	alternative
AMEND	amendment
ARV	air release valve
AUTO	automatic
AUX	auxiliary
AVB	atmospheric vacuum breaker

B

B&B	balled and burlapped
B/B	brass/bronze
B/B/PL	brass/bronze/plastic
B/PL	brass/plastic
BFM	bonded fiber matrix
Bit Ctd	bituminous coated
BP	booster pump
BPA	backflow preventer assembly
BPAE	backflow preventer assembly in enclosure
BPE	backflow preventer enclosure
BV	ball valve

C

CAP	corrugated aluminum pipe
CARV	combination air release valve
CCA	cam coupler assembly
CEC	controller enclosure cabinet
CHDPE	corrugated high density polyethylene
CL	chain link
CNC	control and neutral conductors
Conc	concrete
Cond	conduit
CSP	corrugated steel pipe
CST	center strip
CV	check valve

D

Dia	diameter
DIP	ductile iron pipe
DN	diameter nominal

E

EA	each
Elect	electric/electrical
Elev	elevation
ENCL	enclosure
EP	edge of pavement
ES	edge of shoulder
EST	end strip
ESTB	establishment
ETW	edge of traveled way

F

F	full circle
F/P	full/part circle
FAU	filter assembly unit
FCV	flow control valve
FERT	fertilizer
FG	finished grade
FIPT	female iron pipe thread
FIS	fertilizer injector system
FL	flow line
FM	flow monitor
FS	flow sensor
Ft	foot/feet
FV	flush valve

G

GAL	Gallon(s)
Galv	galvanized
GARV	garden valve
GPH	gallons per hour
GPM	gallons per minute
GSP	galvanized steel pipe
GV	gate valve

H

H	half circle
HB	hose bib
HDPE	high density polyethylene
HP	horsepower/hinge point
HPL	high pressure line
Hwy	highway

I

IC	irrigation controller
ICC	irrigation controller(s) in controller enclosure cabinet
ID	inside diameter
In	inches
IFS	irrigation filtration system
IPS	iron pipe size
IPT	iron pipe thread
Irr	irrigation

L

L	length
LF	linear foot

M

Max	maximum
MBGR	metal beam guard railing
MCV	manual control valve
MIC	master irrigation controller
Min	minimum
MIPT	male iron pipe thread
Misc	miscellaneous
Mtl	material
MVP	maintenance vehicle pullout

N

NCN	no common name
NL	nozzle line
No.	number
NPT	national pipe thread

O

O/C	on center
OD	outside diameter
Oz	ounce

P

P	part circle
PB	pull box
PCC	portland cement concrete
PE	polyethylene
Pkt	packet
PL	plastic
PLT	plant/planting
PLT ESTB	plant establishment
PM	post mile
PR	pressure rated
PRLV	pressure relief valve
PSFM	polymer stabilized fiber matrix
PSI	pounds per square inch
PRV	pressure reducing valve
PVC	polyvinyl chloride
Pvmt	pavement

Q

Q	quarter circle
QCV	quick coupling valve

R

R	radius
RCP	reinforced concrete pipe
RCV	remote control valve
RCVM	remote control valve (master)
RCVMF	remote control valve (master) w/ flow meter
RCW	recycled/reclaimed water
RECP	rolled erosion control product
REQ	required
R/W	right of way

S

S	slip
SCC	sprinkler control conduit
SCH	schedule
SF	state-furnished
Shld	shoulder
SQFT	square foot/feet
SQYD	square yard(s)
SST	side strip
Sta	station
Std	standard
SW	sidewalk/sound wall

T

T	third circle/thread
TLS	truck loading standpipe
TQ	three quarter circle
TRM	turf reinforcement mat
TRVD	traveled
TT	two third circle
Typ	typical

U

UG	underground

V

VAU	valve assembly unit

W

W	width
W/	with
WM	water meter
WS	wye strainer
WSP	welded steel pipe
WWM	welded wire mesh

NOTE:

FOR ADDITIONAL ABBREVIATIONS, SEE STANDARD PLANS A10A AND A10B.

STATE OF CALIFORNIA
DEPARTMENT OF TRANSPORTATION

PLANTING AND IRRIGATION ABBREVIATIONS

NO SCALE

RSP H1 DATED JUNE 5, 2009 SUPERSEDES STANDARD PLAN H1
DATED MAY 1, 2006 - PAGE 201 OF THE STANDARD PLANS BOOK DATED MAY 2006.

REVISED STANDARD PLAN RSP H1

2006 REVISED STANDARD PLAN RSP H1

5-28-09

DIST	COUNTY	ROUTE	POST MILES TOTAL PROJECT	SHEET NO.	TOTAL SHEETS
07	LA	101	6.3/8.3	41	53

LICENSED LANDSCAPE ARCHITECT

June 5, 2009
PLANS APPROVAL DATE

The State of California or its officers or agents shall not be responsible for the accuracy or completeness of electronic copies of this plan sheet.

Gregory A. Balzer 2576 — 10-31-09 Expiration Date — 2-28-11 Renewal Date — 5-14-09 Date — LICENSED LANDSCAPE ARCHITECT — STATE OF CALIFORNIA

To accompany plans dated 2-22-11

EXISTING	PROPOSED	ITEM DESCRIPTION
		WATER METER (WM)
		BACKFLOW PREVENTER ASSEMBLY (BPA)
		BACKFLOW PREVENTER ASSEMBLY IN ENCLOSURE (BPAE)
		BACKFLOW PREVENTER ENCLOSURE (BPE)
		BOOSTER PUMP (BP)
		TRUCK LOADING STANDPIPE (TLS)
	FS	FLOW SENSOR (FS)
X	X	MASTER IRRIGATION CONTROLLER (MIC)
		AUXILIARY IRRIGATION CONTROLLER (AIC)
		IRRIGATION CONTROLLER (IC)/ IRRIGATION CONTROLLER (IC) (BATTERY) IRRIGATION CONTROLLER (IC) (SOLAR)
		IRRIGATION CONTROLLER(S) IN CONTROLLER ENCLOSURE CABINET (ICC)
		CONTROL AND NEUTRAL CONDUCTORS (CNC)
SCC	SCC	SPRINKLER CONTROL CONDUIT (SCC)
		IRRIGATION CROSSOVER
		EXTEND IRRIGATION CROSSOVER
		IRRIGATION SLEEVE
dip	DIP	DUCTILE IRON PIPE (SUPPLY LINE) (MAIN) (DIP)
		GALVANIZED STEEL PIPE (SUPPLY LINE) (MAIN) (GSP)
		GALVANIZED STEEL PIPE (SUPPLY LINE) (LATERAL) (GSP)
		PLASTIC PIPE (PR 200) (SUPPLY LINE) (MAIN)
		PLASTIC PIPE (PR 200) (SUPPLY LINE) (LATERAL)
		PLASTIC PIPE (IRRIGATION LINE)
		REMOTE CONTROL VALVE (RCV) REMOTE CONTROL VALVE (MASTER) (RCVM) REMOTE CONTROL VALVE (MASTER) W/FLOW METER (RCVMF)
		MANUAL CONTROL VALVE (MCV)
		VALVE ASSEMBLY UNIT (VAU)
		WYE STRAINER (WS)
		FILTER ASSEMBLY UNIT (FAU)
		GATE VALVE (GV)
		BALL VALVE (BV)

EXISTING	PROPOSED	ITEM DESCRIPTION
		QUICK COUPLING VALVE (QCV)
		CAM COUPLER ASSEMBLY (CCA)
		PRESSURE REDUCING VALVE (PRV)
		PRESSURE RELIEF VALVE (PRLV)
		FLOW CONTROL VALVE (FCV)
		COMBINATION AIR RELEASE VALVE (CARV)
		CHECK VALVE (CV)
		FLUSH VALVE (FV)
		NOZZLE LINE W/TURNING UNION
		IRRIGATION SYSTEM
		IRRIGATION SYSTEM TO BE REMOVED
		CHAIN LINK GATE
		QUICK COUPLING VALVE W/SPRINKLER PROTECTOR
3	3	SPRINKLER W/SPRINKLER PROTECTOR
	C	CONNECT TO EXISTING SYSTEM
		CAP
		CAP EXISTING

VALVE CODE

RCV SIZE
IRRIGATION CONTROLLER
CONTROLLER STATION
VALVE IN PARALLEL (IF APPLICABLE)
GPM
QUANTITY OF SPRINKLERS (WHEN SHOWN)

* 2½"-A-2b-40 -60

MCV SIZE
VALVE NUMBER
GPM
QUANTITY OF TYPE SPRINKLERS (WHEN SHOWN)

* 2"-3-30 -50

* VALVE CODES FOR EXISTING VALVES ARE SHOWN IN A DASHED ENCLOSURE.

STATE OF CALIFORNIA
DEPARTMENT OF TRANSPORTATION

PLANTING AND IRRIGATION SYMBOLS

NO SCALE

RSP H2 DATED JUNE 5, 2009 SUPERSEDES RSP H2 DATED MARCH 7, 2008 AND STANDARD PLAN H2 DATED MAY 1, 2006 - PAGE 202 OF THE STANDARD PLANS BOOK DATED MAY 2006.

REVISED STANDARD PLAN RSP H2

2006 REVISED STANDARD PLAN RSP H2

5-11-09

DIST	COUNTY	ROUTE	POST MILES TOTAL PROJECT	SHEET NO.	TOTAL SHEETS
07	LA	101	6.3/8.3	42	53

LICENSED LANDSCAPE ARCHITECT

June 5, 2009
PLANS APPROVAL DATE

LICENSED LANDSCAPE ARCHITECT
Gregory A. Balzer 2576
10-31-09 Expiration Date
2-28-11 Renewal Date
5-14-09 Date
STATE OF CALIFORNIA

The State of California or its officers or agents shall not be responsible for the accuracy or completeness of electronic copies of this plan sheet.

To accompany plans dated 2-22-11

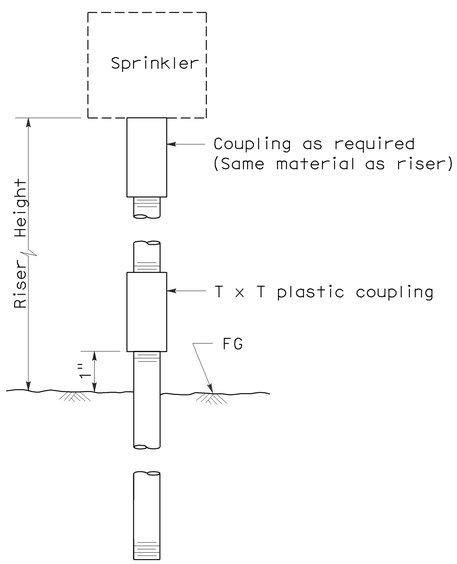

ELEVATION
RISER TYPE I

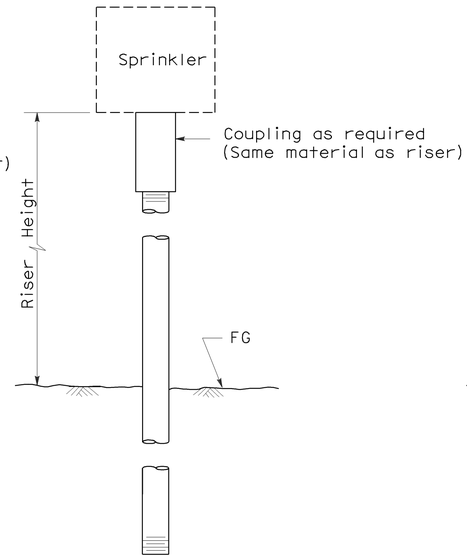

ELEVATION
RISER TYPE II

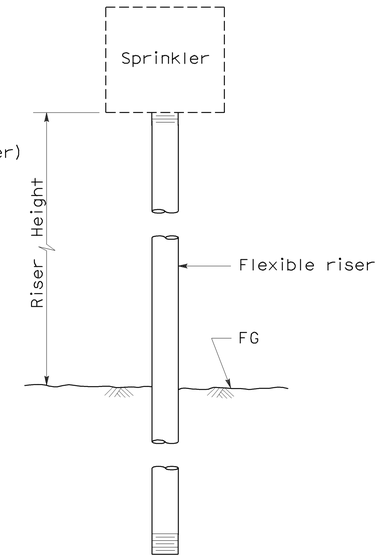

ELEVATION
RISER TYPE III

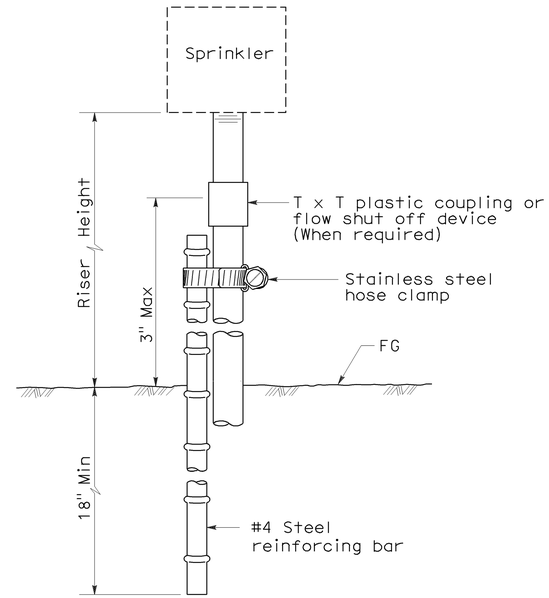

ELEVATION
RISER TYPE IV

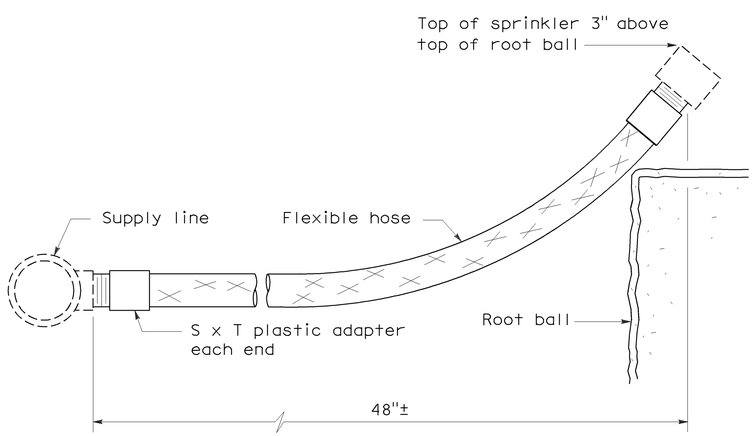

ELEVATION
RISER TYPE V

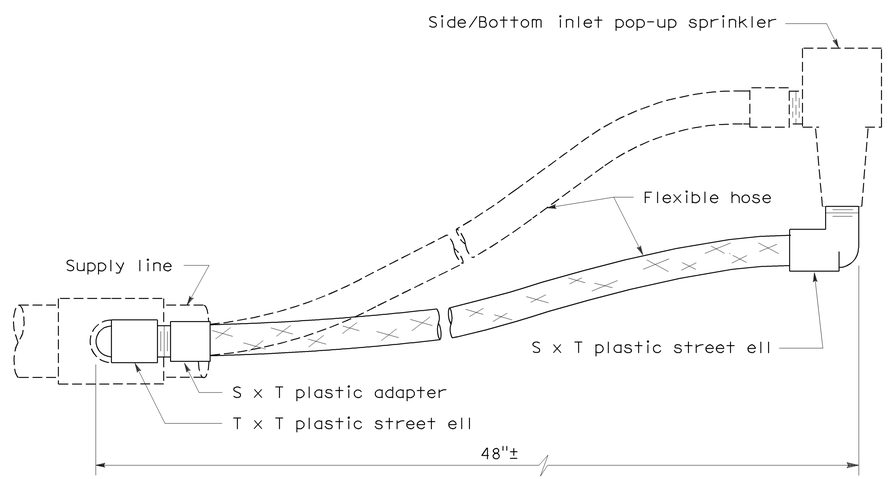

ELEVATION
RISER TYPE VI

STATE OF CALIFORNIA
DEPARTMENT OF TRANSPORTATION

PLANTING AND IRRIGATION DETAILS

NO SCALE

RSP H5 DATED JUNE 5, 2009 SUPERSEDES STANDARD PLAN H5
DATED MAY 1, 2006 - PAGE 205 OF THE STANDARD PLANS BOOK DATED MAY 2006.

REVISED STANDARD PLAN RSP H5

2006 REVISED STANDARD PLAN RSP H5

5-28-09

DIST	COUNTY	ROUTE	POST MILES TOTAL PROJECT	SHEET NO.	TOTAL SHEETS
07	LA	101	6.3/8.3	43	53

LICENSED LANDSCAPE ARCHITECT

June 5, 2009
PLANS APPROVAL DATE

The State of California or its officers or agents shall not be responsible for the accuracy or completeness of electronic copies of this plan sheet.

LICENSED LANDSCAPE ARCHITECT — Gregory A. Balzer — 2576 — 10-31-11 Renewal Date — 2-28-11 Renewal Date — 5-14-09 Date — STATE OF CALIFORNIA

To accompany plans dated 2-22-11

2006 REVISED STANDARD PLAN RSP H7

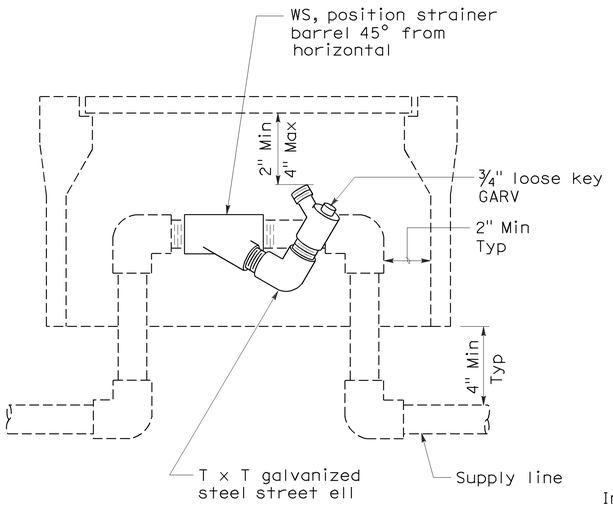

ELEVATION
WYE STRAINER

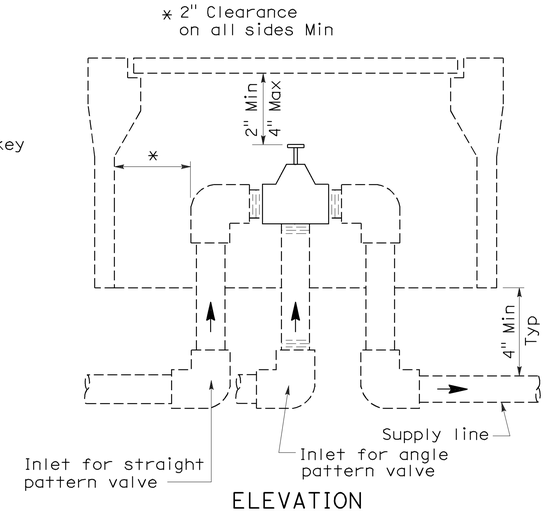

ELEVATION
VALVE

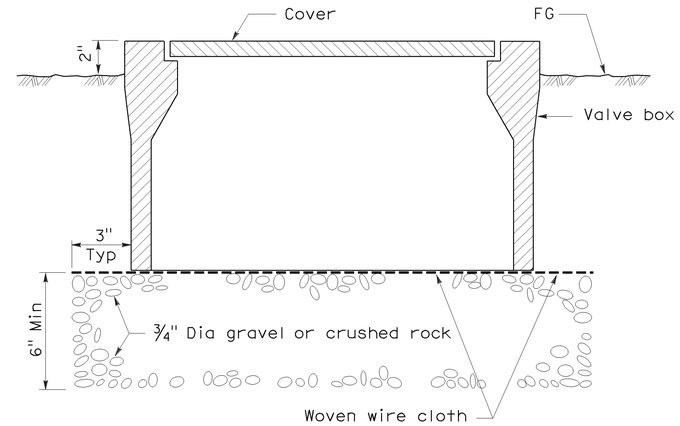

SECTION
VALVE BOX

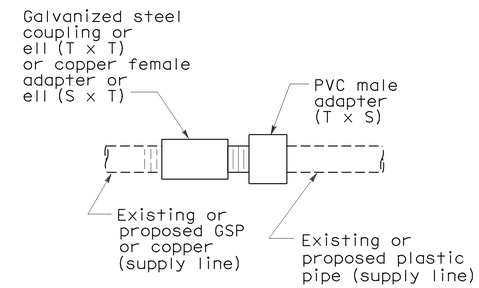

PLAN
GALVANIZED OR COPPER PIPE CONNECTION TO PLASTIC PIPE

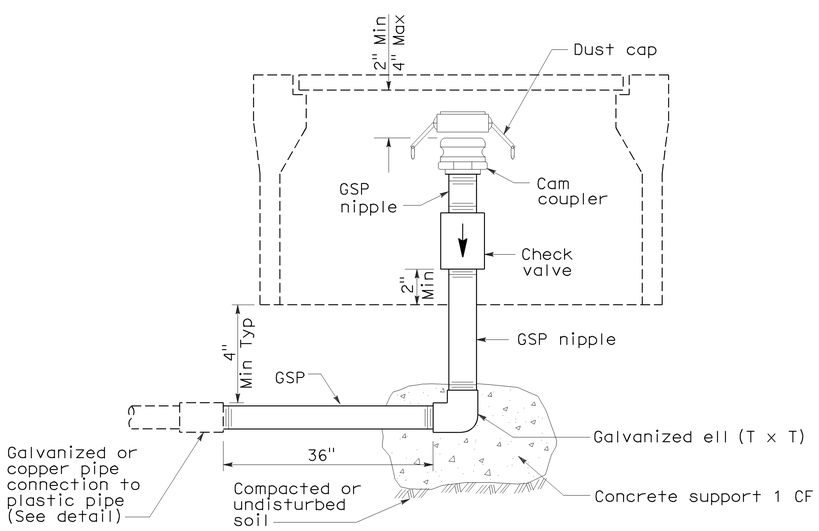

ELEVATION
CAM COUPLER ASSEMBLY

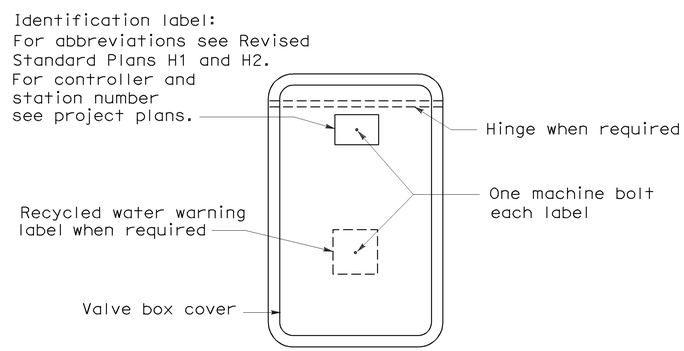

PLAN

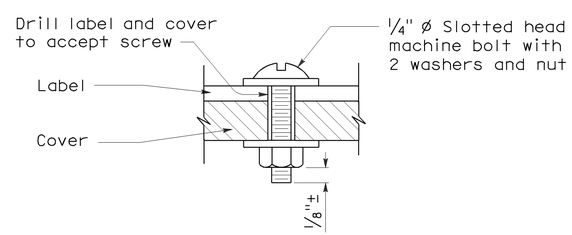

SECTION
VALVE BOX IDENTIFICATION

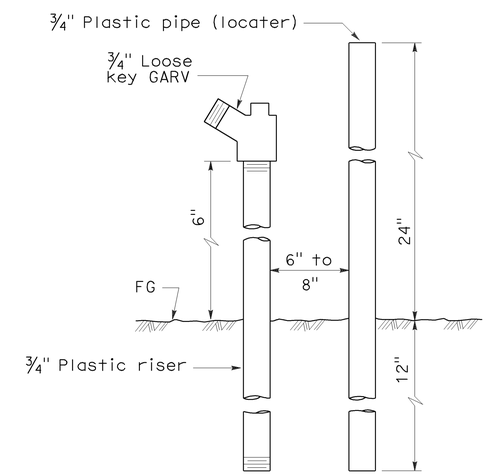

ELEVATION
FLUSH VALVE

STATE OF CALIFORNIA
DEPARTMENT OF TRANSPORTATION

PLANTING AND IRRIGATION DETAILS

NO SCALE

RSP H7 DATED JUNE 5, 2009 SUPERSEDES STANDARD PLAN H7
DATED MAY 1, 2006 - PAGE 207 OF THE STANDARD PLANS BOOK DATED MAY 2006.

REVISED STANDARD PLAN RSP H7

DIST	COUNTY	ROUTE	POST MILES TOTAL PROJECT	SHEET NO.	TOTAL SHEETS
07	LA	101	6.3/8.3	44	53

LICENSED LANDSCAPE ARCHITECT

June 5, 2009
PLANS APPROVAL DATE

The State of California or its officers or agents shall not be responsible for the accuracy or completeness of electronic copies of this plan sheet.

LICENSED LANDSCAPE ARCHITECT — Gregory A. Balzer — 2576 — 10-31-10 Renewal Date — 2-28-11 Renewal Date — 5-14-09 Date — STATE OF CALIFORNIA

To accompany plans dated 2-22-11

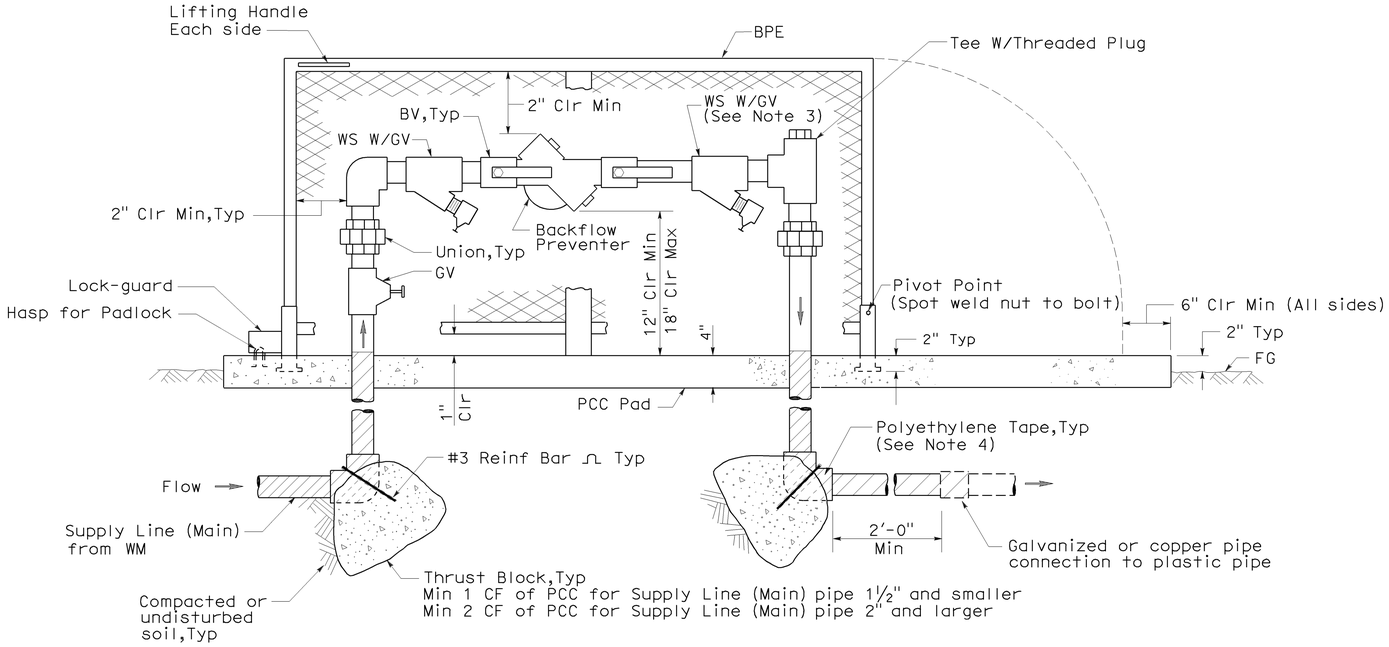

ELEVATION

BACKFLOW PREVENTER ASSEMBLY IN ENCLOSURE (ONE PIECE)

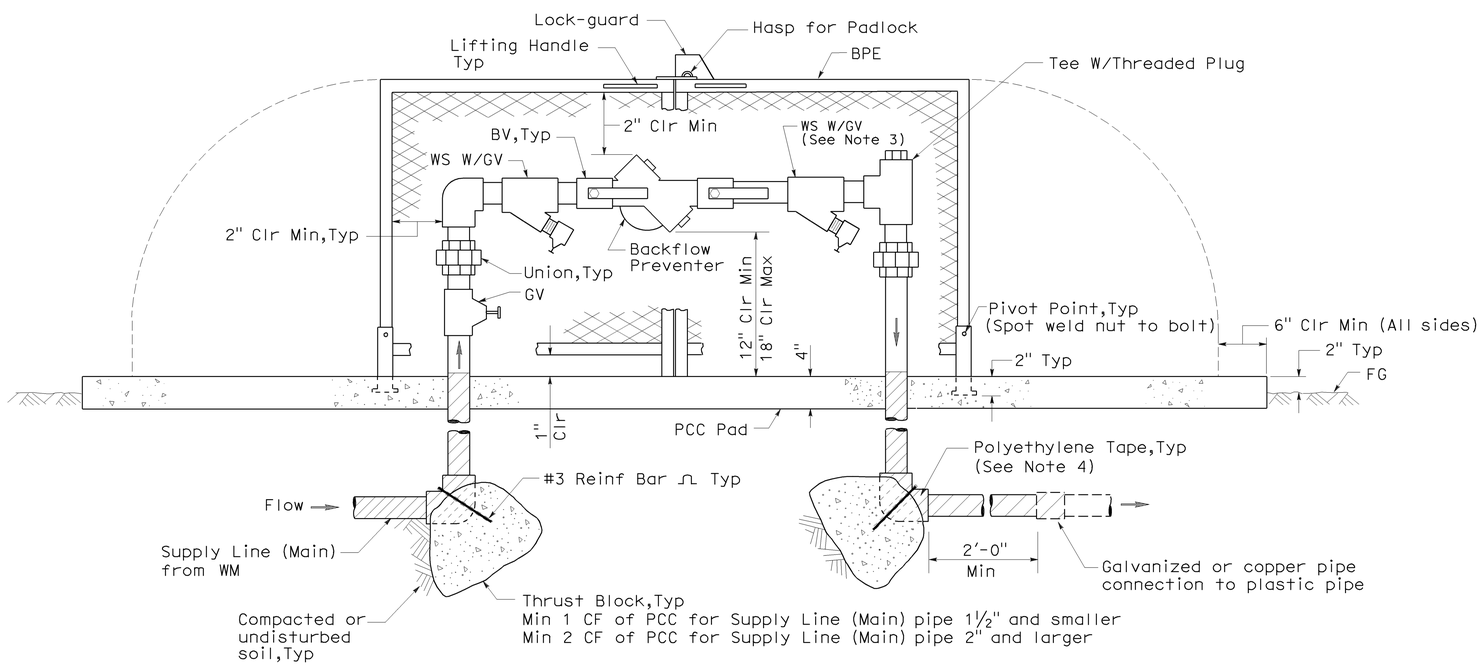

ELEVATION

BACKFLOW PREVENTER ASSEMBLY IN ENCLOSURE (TWO PIECE)

NOTES:

1. Wye strainer and fittings must be the same size as the backflow preventer shown on the plans.
2. Backflow preventer assembly manifold pipe must be the same pipe as the supply line (main) pipe to be installed from the water meter to the backflow preventer assembly.
3. Wye strainer location shown downstream of the backflow preventer is for District 11 projects only.
4. All metal in contact with soil and Portland Cement Concrete must be polyethylene wrapped using 2" wide plastic backed adhesive tape 20 mil thick with ½" overlap.

STATE OF CALIFORNIA
DEPARTMENT OF TRANSPORTATION

PLANTING AND IRRIGATION DETAILS

NO SCALE

RSP H8 DATED JUNE 5, 2009 SUPERSEDES STANDARD PLAN H8
DATED MAY 1, 2006 - PAGE 208 OF THE STANDARD PLANS BOOK DATED MAY 2006.

REVISED STANDARD PLAN RSP H8

2006 REVISED STANDARD PLAN RSP H8

5-28-09

DIST	COUNTY	ROUTE	POST MILES TOTAL PROJECT	SHEET NO.	TOTAL SHEETS
07	LA	101	6.3/8.3	45	53

Randell D. Hiatt
REGISTERED CIVIL ENGINEER

June 6, 2008
PLANS APPROVAL DATE

REGISTERED PROFESSIONAL ENGINEER
Randell D. Hiatt
No. C50200
Exp. 6-30-09
CIVIL
STATE OF CALIFORNIA

The State of California or its officers or agents shall not be responsible for the accuracy or completeness of electronic copies of this plan sheet.

To accompany plans dated 2-22-11

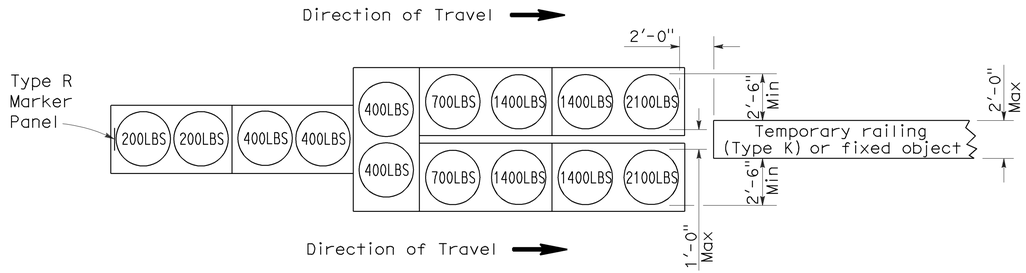

ARRAY 'TU14'

Approach speed 45 mph or more

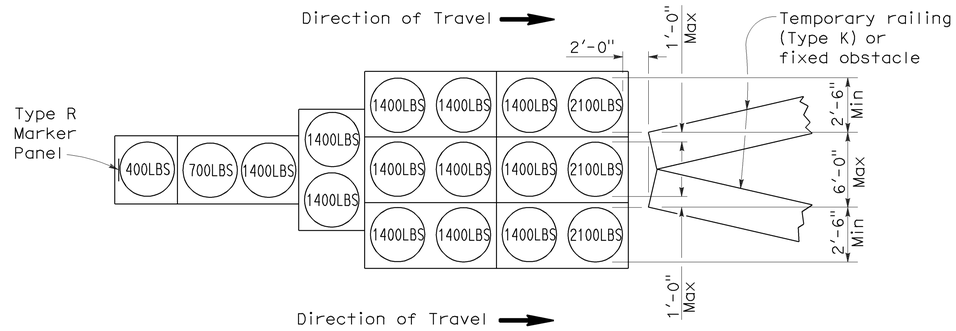

ARRAY 'TU17'

Approach speed less than 45 mph

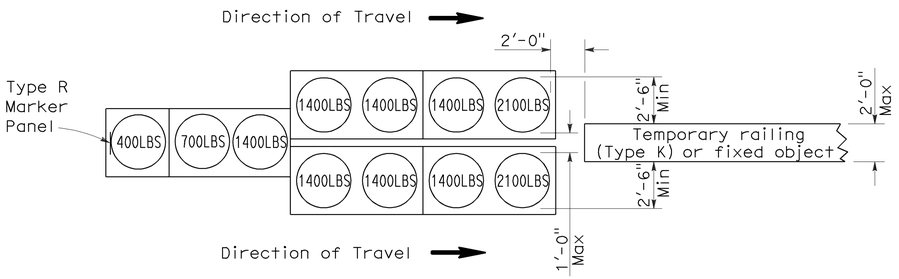

ARRAY 'TU11'

Approach speed less than 45 mph

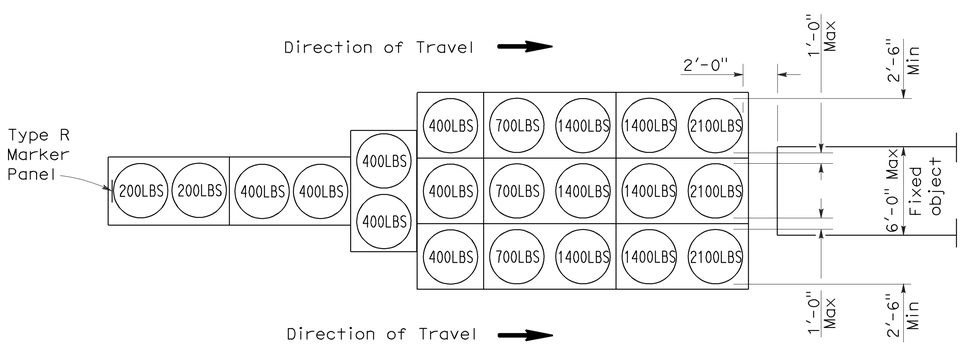

ARRAY 'TU21'

Approach speed 45 mph or more

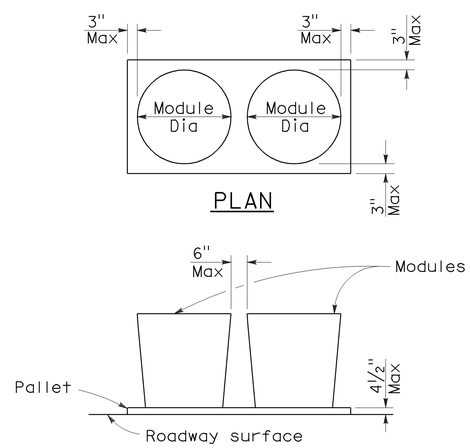

CRASH CUSHION PALLET DETAIL

See Note 7

NOTES:

1. (XXX) Indicates sand filled module location and weight of sand in pounds for each module. Module spacing is based on the greater diameter of the module.
2. All sand weights are nominal.
3. Temporary crash cushion arrays shall not encroach on the traveled way.
4. Place the top of Type R marker panel 1" below the module lid.
5. Refer to Standard Plan A73B for marker details.
6. Approach speeds indicated conform to NCHRP 350 Report criteria.
7. Use of pallets is optional.

STATE OF CALIFORNIA
DEPARTMENT OF TRANSPORTATION

TEMPORARY CRASH CUSHION, SAND FILLED (UNIDIRECTIONAL)

NO SCALE

RSP T1A DATED JUNE 6, 2008 SUPERSEDES STANDARD PLAN T1A
DATED MAY 1, 2006 - PAGE 211 OF THE STANDARD PLANS BOOK DATED MAY 2006.

REVISED STANDARD PLAN RSP T1A

2006 REVISED STANDARD PLAN RSP T1A

DIST	COUNTY	ROUTE	POST MILES TOTAL PROJECT	SHEET NO.	TOTAL SHEETS
07	LA	101	6.3/8.3	46	53

Randell D. Hiatt
REGISTERED CIVIL ENGINEER

June 6, 2008
PLANS APPROVAL DATE

REGISTERED PROFESSIONAL ENGINEER
Randell D. Hiatt
No. C50200
Exp. 6-30-09
CIVIL
STATE OF CALIFORNIA

The State of California or its officers or agents shall not be responsible for the accuracy or completeness of electronic copies of this plan sheet.

To accompany plans dated 2-22-11

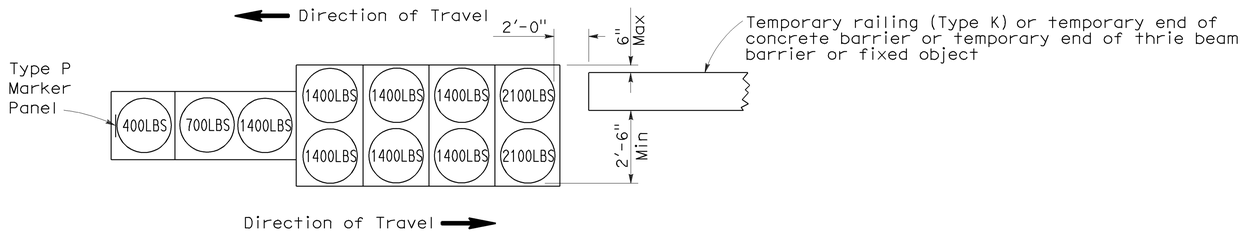

ARRAY 'TB11'

Approach speed less than 45 mph

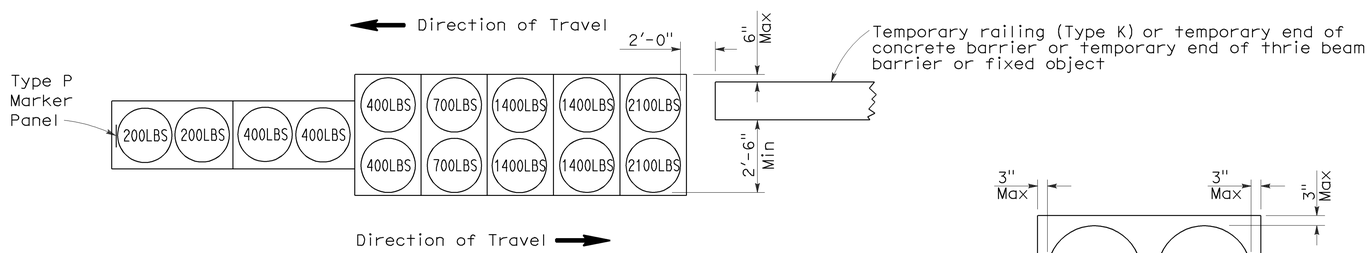

ARRAY 'TB14'

Approach speed 45 mph or more

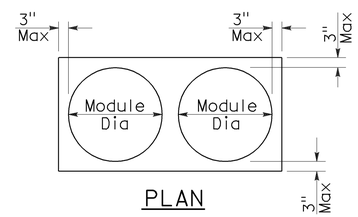

PLAN

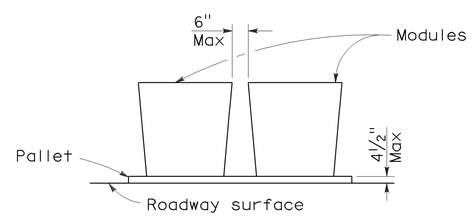

ELEVATION

CRASH CUSHION PALLET DETAIL

See Note 7

NOTES:

1. (XXX) Indicates sand filled module location and weight of sand in pounds for each module. Module spacing is based on the greater diameter of the module.
2. All sand weights are nominal.
3. Temporary crash cushion arrays shall not encroach on the traveled way.
4. Place the Type P marker panel so that the bottom of the panel rests upon the pallet.
5. Refer to Standard Plan A73B for marker details.
6. Approach speeds indicated conform to NCHRP 350 Report criteria.
7. Use of pallets is optional.

STATE OF CALIFORNIA
DEPARTMENT OF TRANSPORTATION

TEMPORARY CRASH CUSHION, SAND FILLED (BIDIRECTIONAL)

NO SCALE

RSP T1B DATED JUNE 6, 2008 SUPERSEDES STANDARD PLAN T1B
DATED MAY 1, 2006 - PAGE 212 OF THE STANDARD PLANS BOOK DATED MAY 2006.

REVISED STANDARD PLAN RSP T1B

2006 REVISED STANDARD PLAN RSP T1B

5-15-08

DIST	COUNTY	ROUTE	POST MILES TOTAL PROJECT	SHEET NO.	TOTAL SHEETS
07	LA	101	6.3/8.3	47	53

Randell D. Hiatt
REGISTERED CIVIL ENGINEER

June 6, 2008
PLANS APPROVAL DATE

REGISTERED PROFESSIONAL ENGINEER
Randell D. Hiatt
No. C50200
Exp. 6-30-09
CIVIL
STATE OF CALIFORNIA

The State of California or its officers or agents shall not be responsible for the accuracy or completeness of electronic copies of this plan sheet.

To accompany plans dated 2-22-11

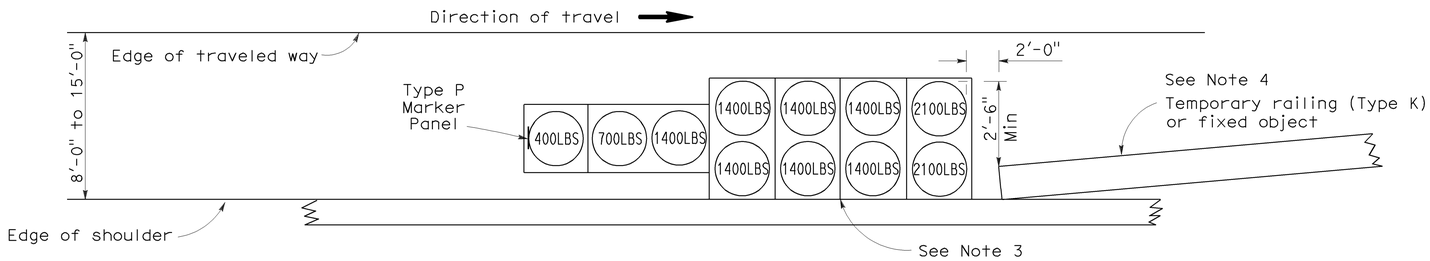

ARRAY 'TS11'

Approach speed less than 45 mph
See Note 9

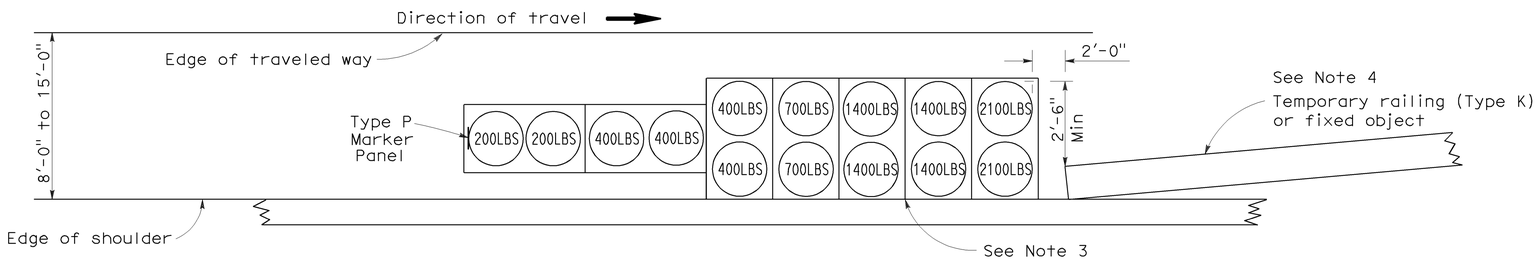

ARRAY 'TS14'

Approach speed 45 mph or more
See Note 9

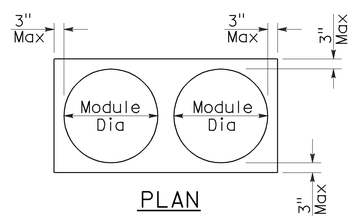

PLAN

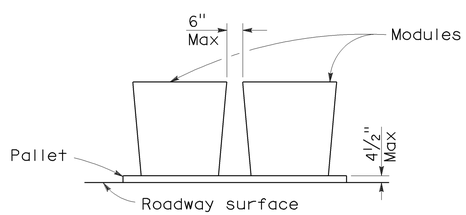

ELEVATION

CRASH CUSHION PALLET DETAIL

See Note 11

NOTES:

1. (XXX) Indicates sand filled module location and weight of sand in pounds for each module. Module spacing is based on the greater diameter of the module.
2. All sand weights are nominal.
3. The temporary crash cushion arrays shown on this plan shall be used only in locations where there will be traffic on one side of the temporary crash cushion array.
4. If the fixed object or approach end of the temporary railing is less than 15'-0" from the edge of traveled way, a temporary crash cushion is required in a construction or work zone.
5. Temporary crash cushion arrays shall not encroach on the traveled way.
6. Arrays for median shoulders shall conform to details shown on this plan for outside shoulders.
7. Place the Type P marker panel so that the bottom of the panel rests upon the pallet and faces traffic.
8. Refer to Standard Plan A73B for marker details.
9. For shoulder widths less than 8'-0", appropriate approved crash cushion protection, other than sand filled modules, shall be provided at fixed objects and at approach ends of temporary railing. The specific type of crash cushion shall be as shown on the project plans or as specified in the Special Provisions, or if not shown on the project plans or specified in the Special Provisions, shall be as approved by the Engineer.
10. Approach speeds indicated conform to NCHRP 350 Report criteria.
11. Use of pallets is optional.

STATE OF CALIFORNIA
DEPARTMENT OF TRANSPORTATION

TEMPORARY CRASH CUSHION, SAND FILLED (SHOULDER INSTALLATIONS)

NO SCALE

RSP T2 DATED JUNE 6, 2008 SUPERSEDES STANDARD PLAN T2
DATED MAY 1, 2006 - PAGE 213 OF THE STANDARD PLANS BOOK DATED MAY 2006.

REVISED STANDARD PLAN RSP T2

2006 REVISED STANDARD PLAN RSP T2

5-15-08

DIST	COUNTY	ROUTE	POST MILES TOTAL PROJECT	SHEET NO.	TOTAL SHEETS
07	LA	101	6.3/8.3	48	53

REGISTERED CIVIL ENGINEER

November 17, 2006
PLANS APPROVAL DATE

REGISTERED PROFESSIONAL ENGINEER — Greg W. Edwards — No. C36386 — Exp. 6-30-08 — CIVIL — STATE OF CALIFORNIA

The State of California or its officers or agents shall not be responsible for the accuracy or completeness of electronic copies of this plan sheet.

To accompany plans dated 2-22-11

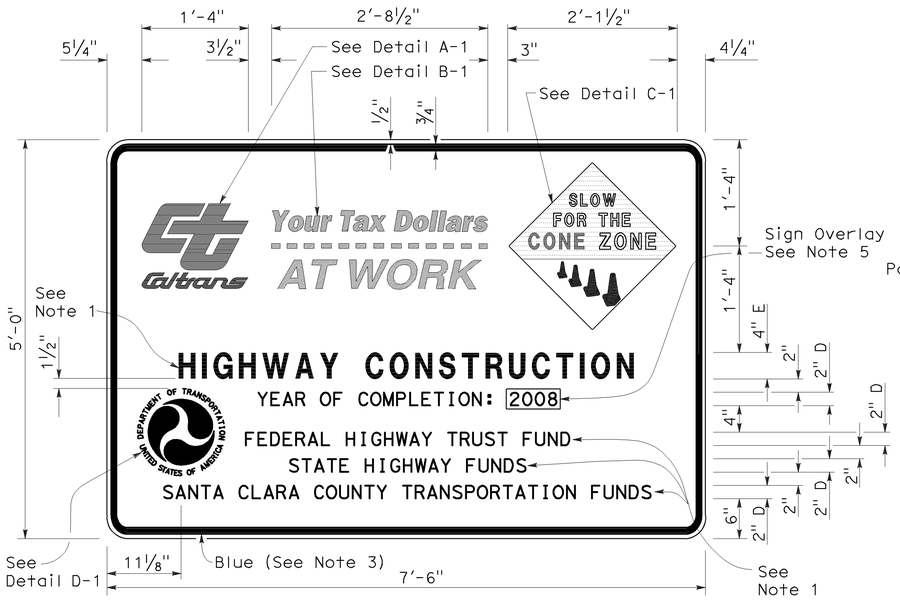

TYPE 1

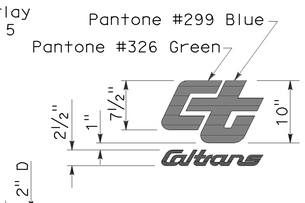

DETAIL A-1

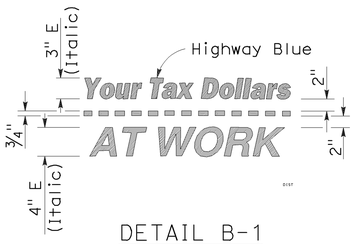

DETAIL B-1
(See Note 3)

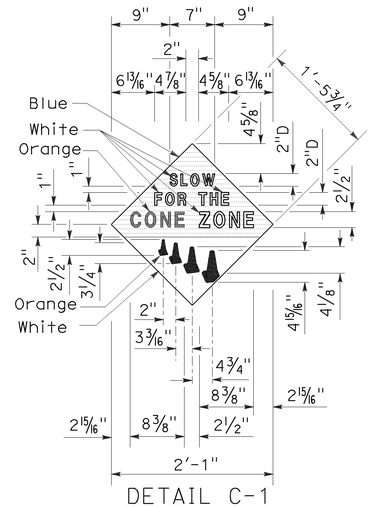

DETAIL C-1
(See Note 4)

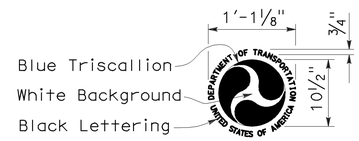

DETAIL D-1
(See Note 6)

NOTES:

1. The sign messages shown for type of project and fund types are examples only. See the Special Provisions for the applicable type of project and fund type messages to be used.
2. Except as otherwise shown, the legend of sign shall be black on a white background (non-reflective).
3. The border of the signs and details "B-1" and "B-2" shall be blue (non-reflective).
4. The diamond in details "C-1" and "C-2" shall be blue for the background of message, " SLOW FOR THE CONE ZONE", and white background for the orange cones. The color and type of font for the "SLOW FOR THE CONE ZONE" message shall be: "SLOW" white D; "FOR THE" white D; "CONE" orange Arial font; "ZONE" white Arial font.
5. Year of completion of project construction shown on the overlay is an example only. See the Special Provisions.
6. Use when the Project involves Federal Highway Trust Fund.

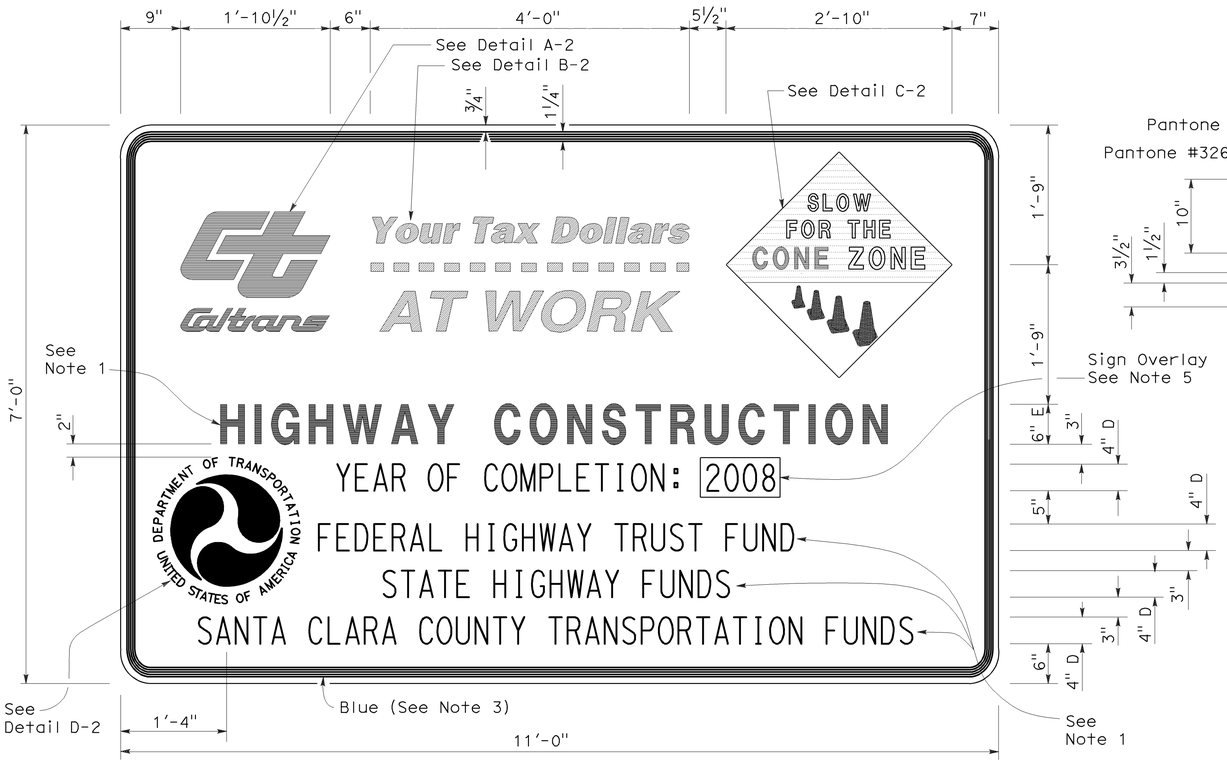

TYPE 2

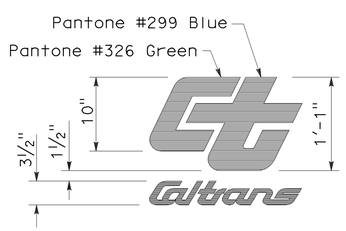

DETAIL A-2

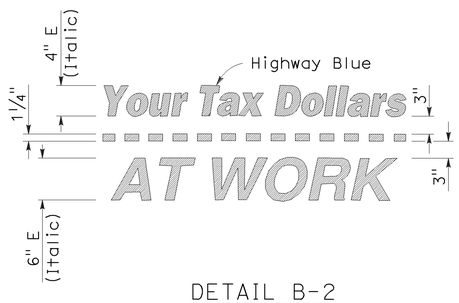

DETAIL B-2
(See Note 3)

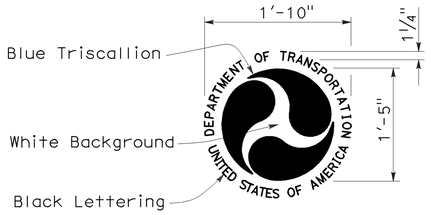

DETAIL D-2
(See Note 6)

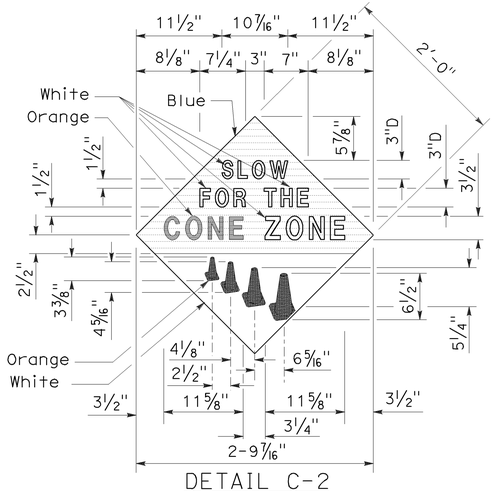

DETAIL C-2
(See Note 4)

STATE OF CALIFORNIA
DEPARTMENT OF TRANSPORTATION

CONSTRUCTION PROJECT FUNDING IDENTIFICATION SIGNS

NO SCALE

RSP T7 DATED NOVEMBER 17, 2006 SUPERSEDES STANDARD PLAN T7 DATED MAY 1, 2006 - PAGE 217 OF THE STANDARD PLANS BOOK DATED MAY 2006.

REVISED STANDARD PLAN RSP T7

2006 REVISED STANDARD PLAN RSP T7

9-7-06

DIST	COUNTY	ROUTE	POST MILES TOTAL PROJECT	SHEET NO.	TOTAL SHEETS
07	LA	101	6.3/8.3	49	53

LICENSED LANDSCAPE ARCHITECT

April 3, 2009
PLANS APPROVAL DATE

The State of California or its officers or agents shall not be responsible for the accuracy or completeness of electronic copies of this plan sheet.

LICENSED LANDSCAPE ARCHITECT — Robert B. Schott 3635 — 11-30-10 Renewal Date — 2-25-09 Date — STATE OF CALIFORNIA

To accompany plans dated 2-22-11

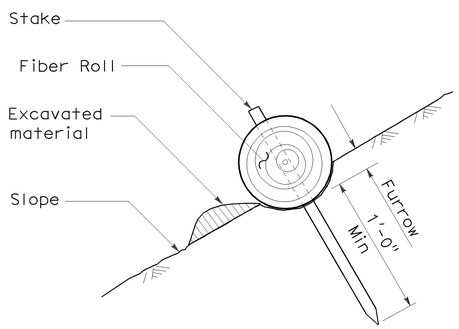

SECTION

TEMPORARY FIBER ROLL (TYPE 1)

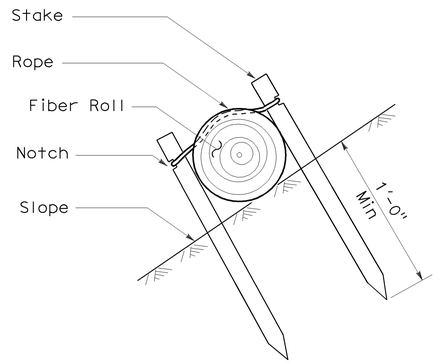

SECTION

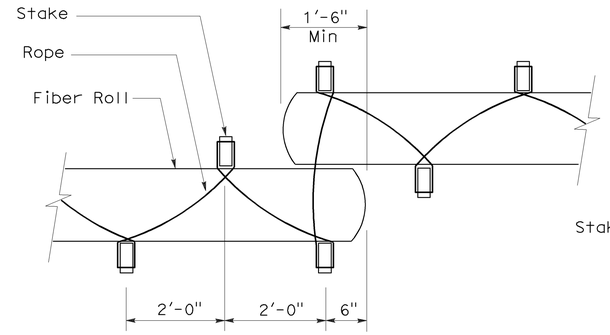

PLAN

TEMPORARY FIBER ROLL (TYPE 2)

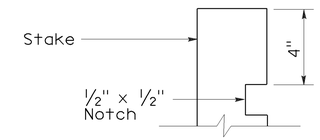

ELEVATION

STAKE NOTCH DETAIL

NOTES:

1. Temporary fiber roll spacing varies depending upon slope inclination.
2. Installations shown in the perspectives are for slope inclination of 10:1 and steeper.

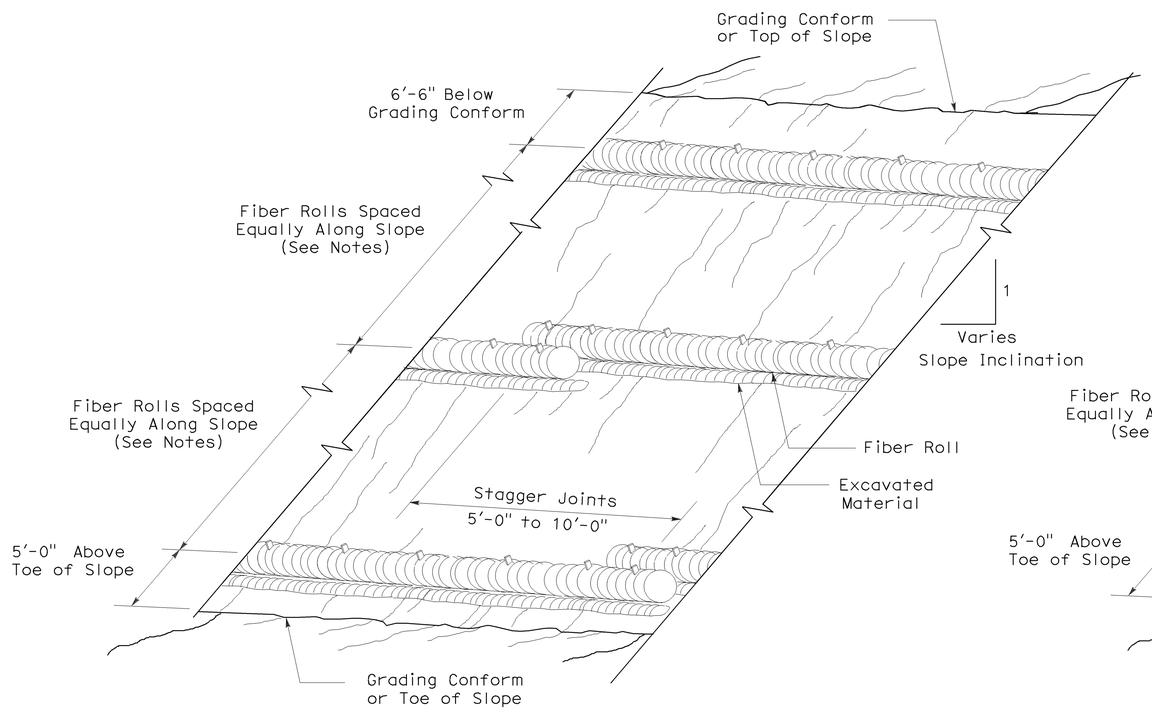

PERSPECTIVE

TEMPORARY FIBER ROLL (TYPE 1)

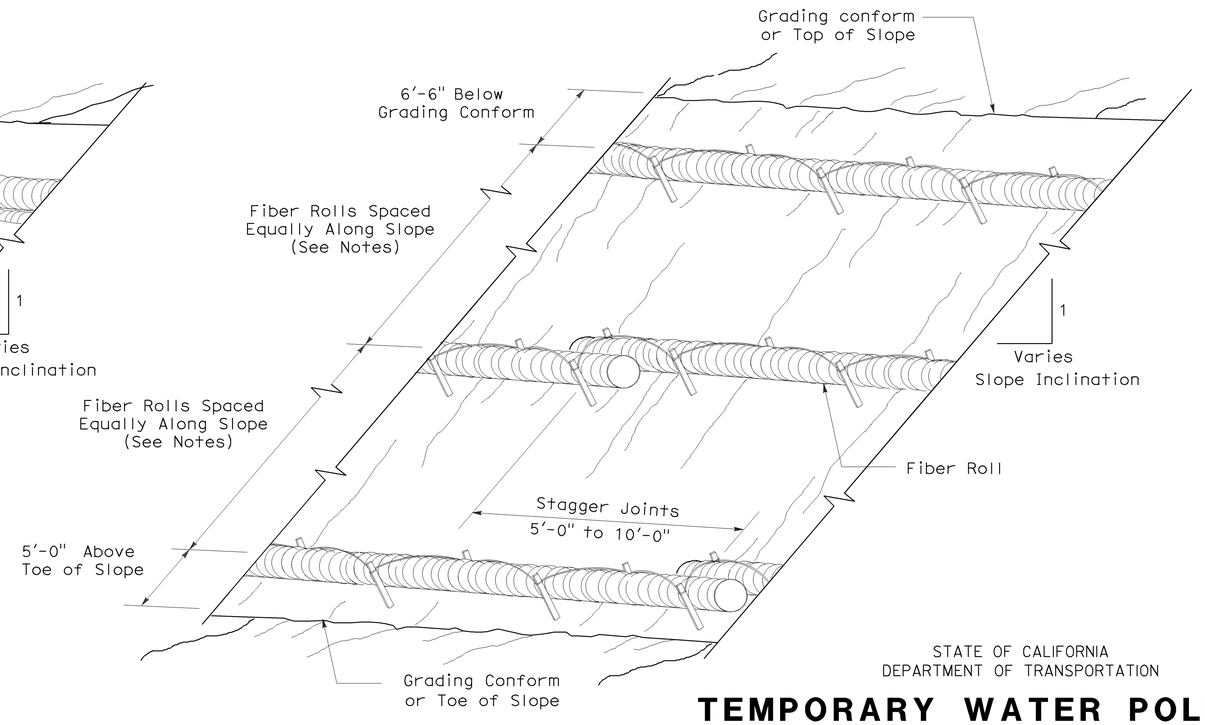

PERSPECTIVE

TEMPORARY FIBER ROLL (TYPE 2)

STATE OF CALIFORNIA
DEPARTMENT OF TRANSPORTATION

TEMPORARY WATER POLLUTION CONTROL DETAILS (TEMPORARY FIBER ROLL)

NO SCALE

RSP T56 DATED APRIL 3, 2009 SUPERSEDES STANDARD PLAN T56
DATED MAY 1, 2006 - PAGE 232 OF THE STANDARD PLANS BOOK DATED MAY 2006.

REVISED STANDARD PLAN RSP T56

2006 REVISED STANDARD PLAN RSP T56

2-23-09

DIST	COUNTY	ROUTE	POST MILES TOTAL PROJECT	SHEET NO.	TOTAL SHEETS
07	LA	101	6.3/8.3	50	53

LICENSED LANDSCAPE ARCHITECT

August 15, 2008
PLANS Approval DATE

The State of California or its officers or agents shall not be responsible for the accuracy or completeness of electronic copies of this plan sheet.

LICENSED LANDSCAPE ARCHITECT Robert B. Schott 3635 Signature 11-04-08 Renewal Date 08-11-08 Date STATE OF CALIFORNIA

To accompany plans dated 2-22-11

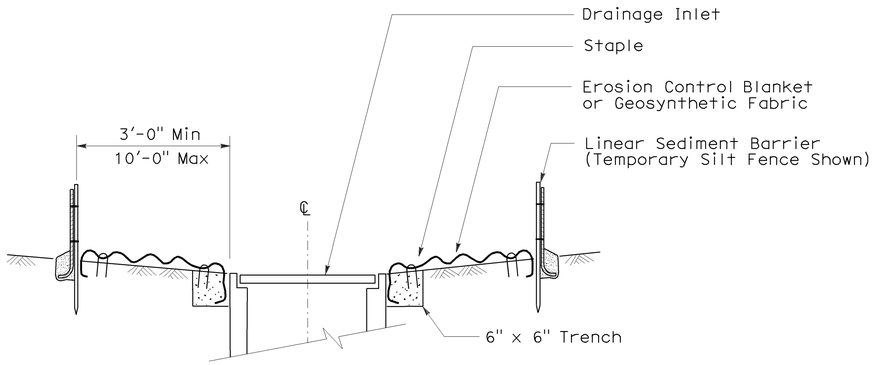

SECTION A-A

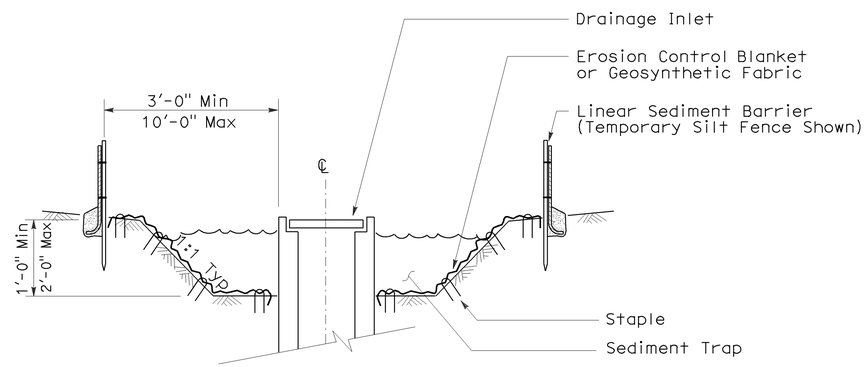

SECTION B-B

NOTES:

1. See Standard Plan T51 for Temporary Silt Fence.
2. Dimensions may vary to fit field conditions.

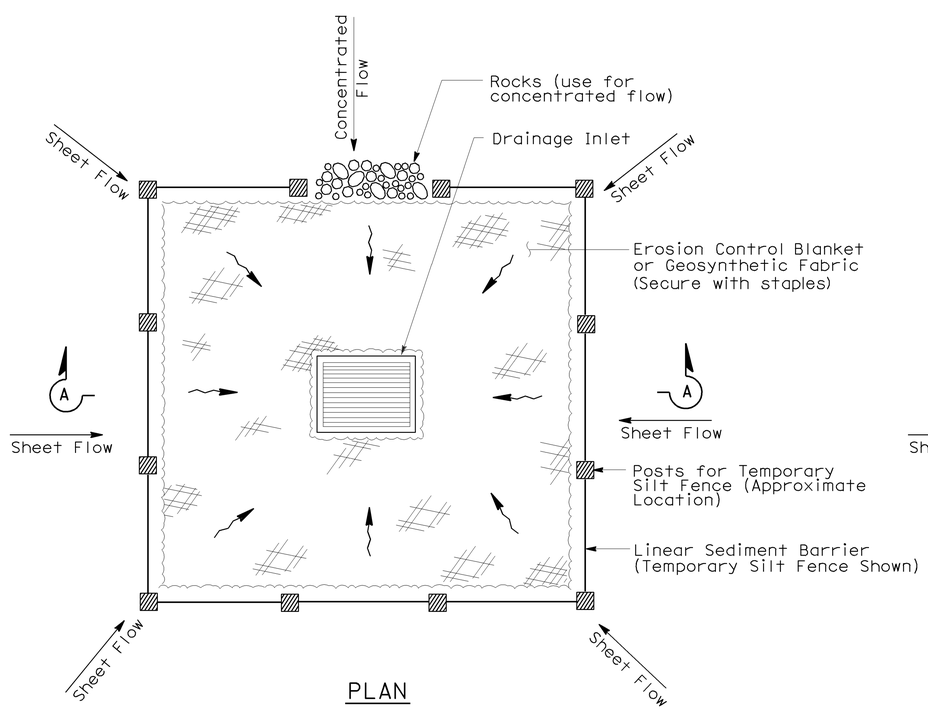

PLAN

TEMPORARY DRAINAGE INLET PROTECTION (TYPE 1)

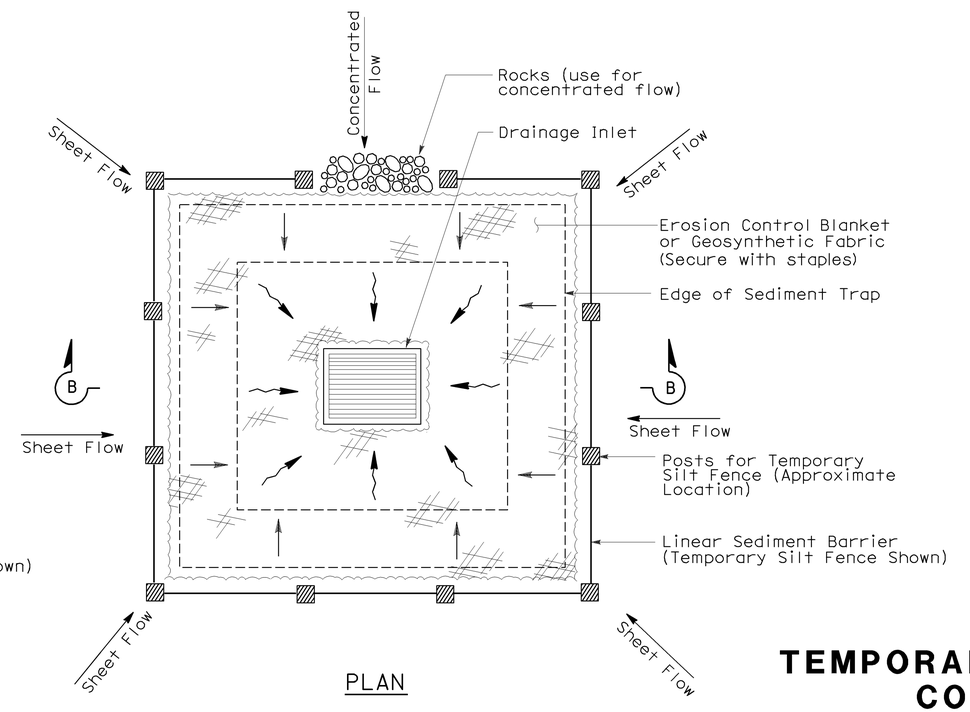

PLAN

TEMPORARY DRAINAGE INLET PROTECTION (TYPE 2) (EXCAVATED SEDIMENT TRAP)

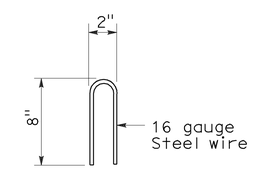

STAPLE DETAIL

STATE OF CALIFORNIA
DEPARTMENT OF TRANSPORTATION

TEMPORARY WATER POLLUTION CONTROL DETAILS (TEMPORARY DRAINAGE INLET PROTECTION)

NO SCALE

Nsp t61 dated august 15, 2008 supplements the standard plans book dated may 2006.

NEW STANDARD PLAN NSP T61

2006 NEW STANDARD PLAN NSP T61

7-11-08

DIST	COUNTY	ROUTE	POST MILES TOTAL PROJECT	SHEET NO.	TOTAL SHEETS
07	LA	101	6.3/8.3	51	53

LICENSED LANDSCAPE ARCHITECT

August 15, 2008
PLANS APPROVAL DATE

The State of California or its officers or agents shall not be responsible for the accuracy or completeness of electronic copies of this plan sheet.

LICENSED LANDSCAPE ARCHITECT — Robert B. Schott — Signature — 11-04-08 Renewal Date — 08-11-08 Date — STATE OF CALIFORNIA

To accompany plans dated 2-22-11

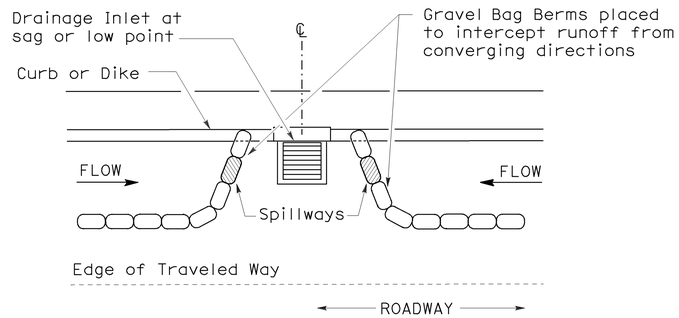

PLAN

CONFIGURATION FOR SAG POINT INLET (GRAVEL BAG BERM)

GRAVEL BAG BERM (TYPE 3A) SPACING TABLE

SLOPE OF ROADWAY (PERCENT)	1 to 3.9	4 to 5.9	6 to 7.9	8 to 10	10+
INTERVAL BETWEEN BERM	100′	75′	50′	25′	12′

For slope of less than 1%, install barriers only if erosion/sediment is prevalent

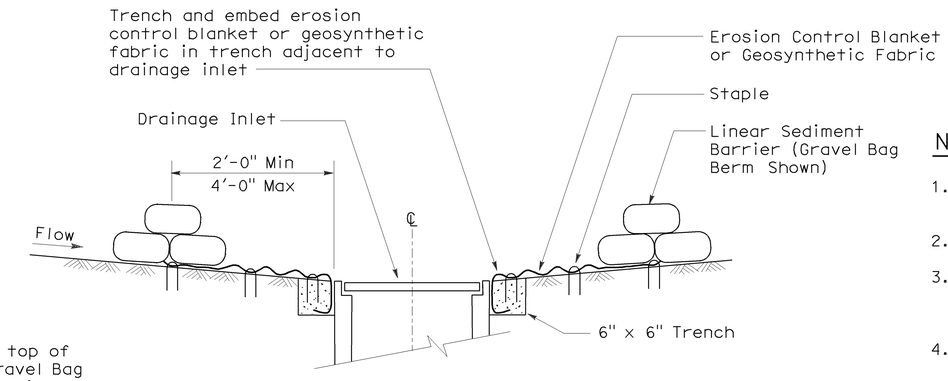

SECTION A-A

NOTES:

1. Place safety cones adjacent to drainage inlet protection.
2. Dimensions may vary to fit field conditions.
3. Install a minimum of 3 gravel bag berms upstream of each drainage inlet to be protected.
4. Position erosion control blanket or geosynthetic fabric at edge of concrete apron and secure in trench.
5. Erosion control blanket or geosynthetic fabric is not required if the area adjacent to the drainage inlet is vegetated or paved.

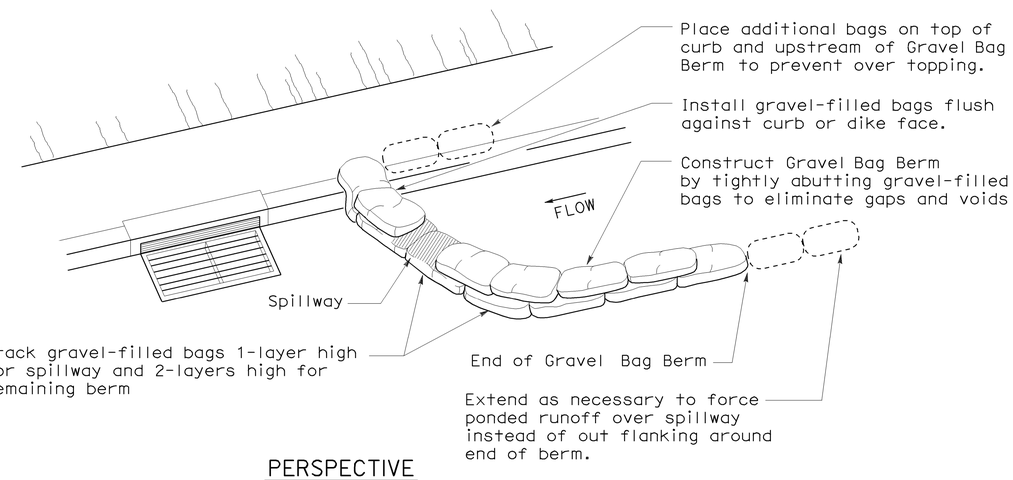

PERSPECTIVE

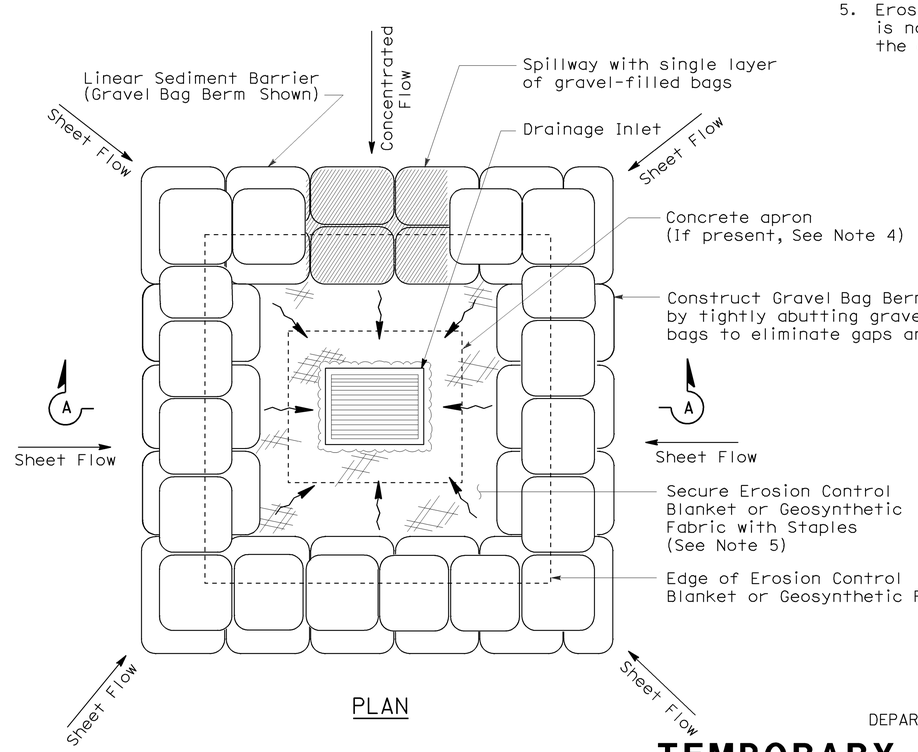

PLAN

TEMPORARY DRAINAGE INLET PROTECTION (TYPE 3B)

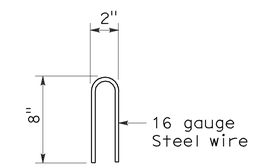

STAPLE DETAIL

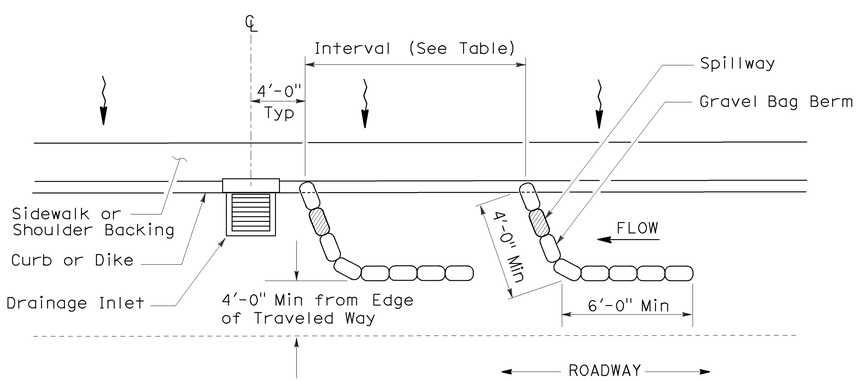

PLAN

TEMPORARY DRAINAGE INLET PROTECTION (TYPE 3A) (GRAVEL BAG BERM)

STATE OF CALIFORNIA
DEPARTMENT OF TRANSPORTATION

TEMPORARY WATER POLLUTION CONTROL DETAILS (TEMPORARY DRAINAGE INLET PROTECTION)

NO SCALE

NSP T62 DATED AUGUST 15, 2008 SUPPLEMENTS THE STANDARD PLANS BOOK DATED MAY 2006.

NEW STANDARD PLAN NSP T62

2006 NEW STANDARD PLAN NSP T62

7-11-08

DIST	COUNTY	ROUTE	POST MILES TOTAL PROJECT	SHEET NO.	TOTAL SHEETS
07	LA	101	6.3/8.3	52	53

LICENSED LANDSCAPE ARCHITECT

August 15, 2008
PLANS APPROVAL DATE

The State of California or its officers or agents shall not be responsible for the accuracy or completeness of electronic copies of this plan sheet.

LICENSED LANDSCAPE ARCHITECT — Robert B. Schott — Signature — 11-04-08 Renewal Date — 08-11-08 Date — STATE OF CALIFORNIA

To accompany plans dated 2-22-11

FLEXIBLE SEDIMENT BARRIER SPACING TABLE

SLOPE OF ROADWAY (PERCENT)	0 to 0.9	1 to 1.9	2 to 2.9	3 to 4	5+
INTERVAL BETWEEN BARRIERS	50′	35′	30′	25′	20′
ANGLE FROM FACE OF CURB	70°	70°	70°	45°	45°
SUGGESTED BARRIER LENGTH	6′	6′	6′	6′	6′

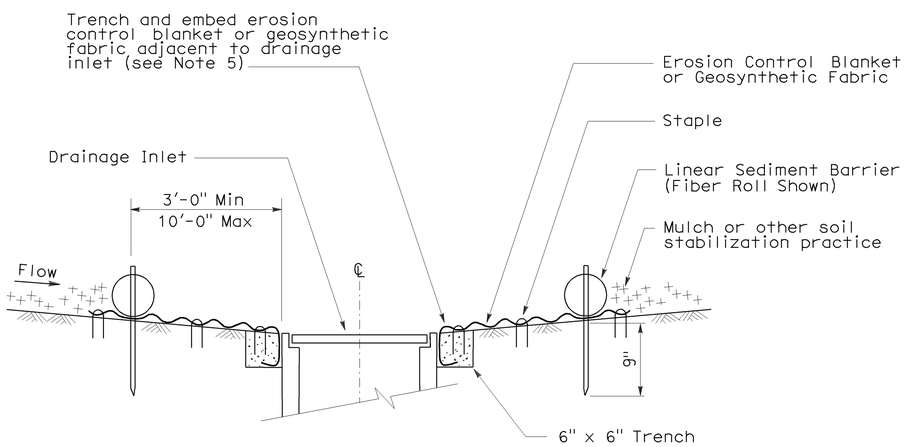

SECTION A-A

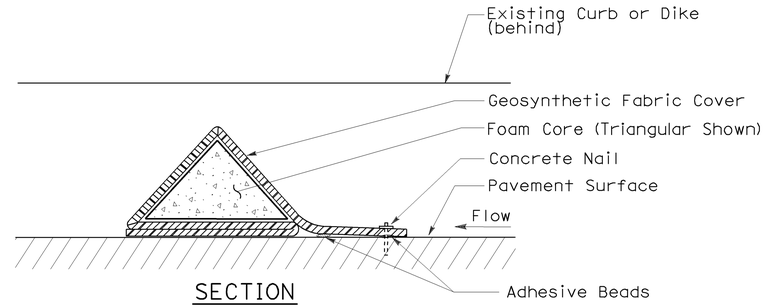

SECTION

FLEXIBLE SEDIMENT BARRIER DETAIL (FOAM BARRIER SHOWN)

NOTES:

1. See Standard Plan T51 for Temporary Silt Fence.
2. Dimensions may vary to fit field conditions.
3. Install a minimum of 3 flexible sediment barriers upstream of each drainage inlet to be protected.
4. Position erosion control blanket or geosynthetic fabric at edge of concrete apron and secure in trench.
5. Erosion control blanket or geosynthetic fabric is not required if the area adjacent to the drainage inlet is vegetated.

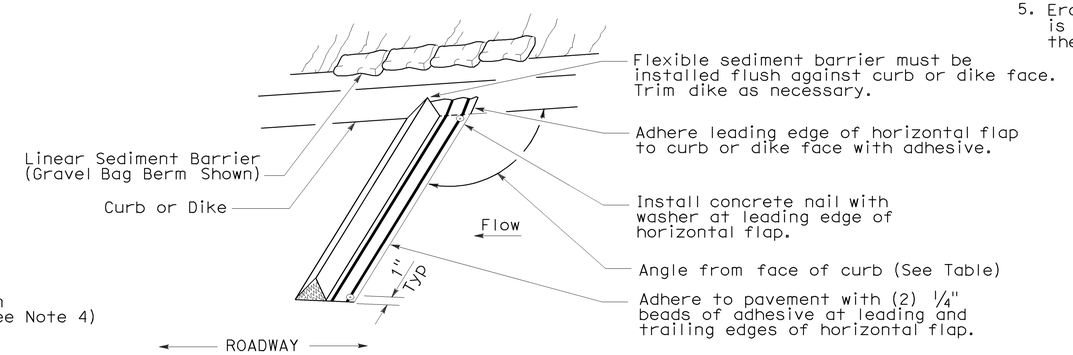

PERSPECTIVE

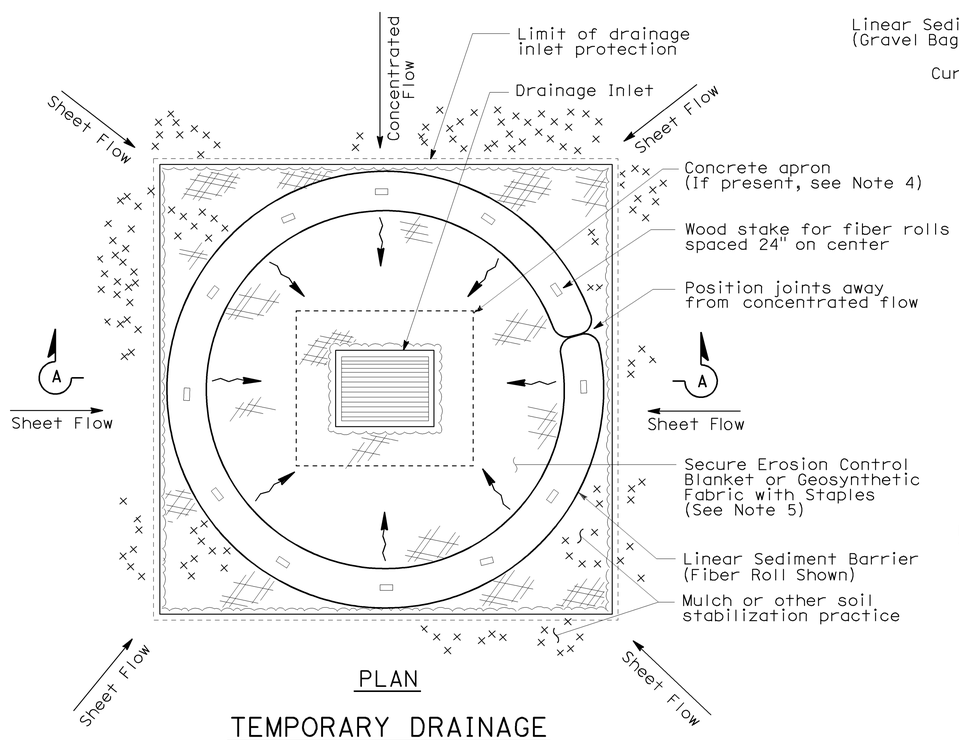

PLAN

TEMPORARY DRAINAGE INLET PROTECTION (TYPE 4A)

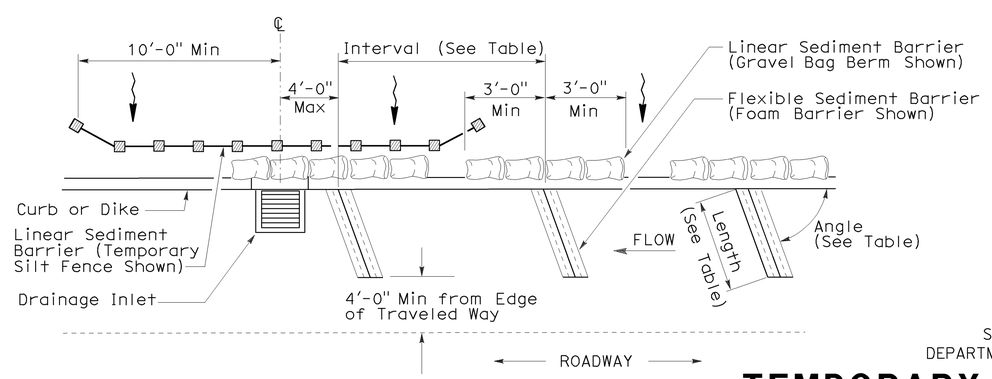

PLAN

TEMPORARY DRAINAGE INLET PROTECTION (TYPE 4B) FLEXIBLE SEDIMENT BARRIER

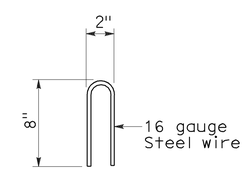

STAPLE DETAIL

STATE OF CALIFORNIA
DEPARTMENT OF TRANSPORTATION

TEMPORARY WATER POLLUTION CONTROL DETAILS (TEMPORARY DRAINAGE INLET PROTECTION)

NO SCALE

NSP T63 DATED AUGUST 15, 2008 SUPPLEMENTS THE STANDARD PLANS BOOK DATED MAY 2006.

NEW STANDARD PLAN NSP T63

2006 NEW STANDARD PLAN NSP T63

7-11-08

DIST	COUNTY	ROUTE	POST MILES TOTAL PROJECT	SHEET NO.	TOTAL SHEETS
07	LA	101	6.3/8.3	53	53

LICENSED LANDSCAPE ARCHITECT

August 15, 2008
PLANS APPROVAL DATE

The State of California or its officers or agents shall not be responsible for the accuracy or completeness of electronic copies of this plan sheet.

LICENSED LANDSCAPE ARCHITECT — Robert B. Schott — 3635 — Signature — 11-04-08 Renewal Date — 08-11-08 Date — STATE OF CALIFORNIA

To accompany plans dated 2-22-11

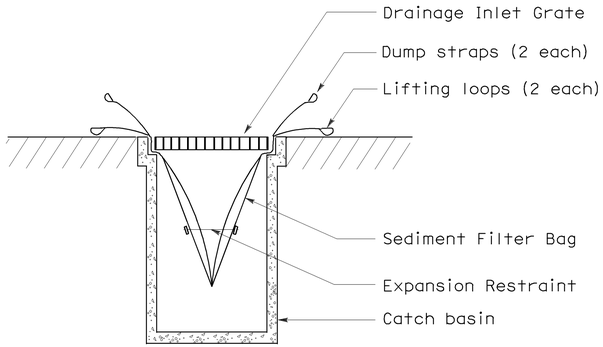

SECTION B-B

SEDIMENT FILTER BAG DETAIL

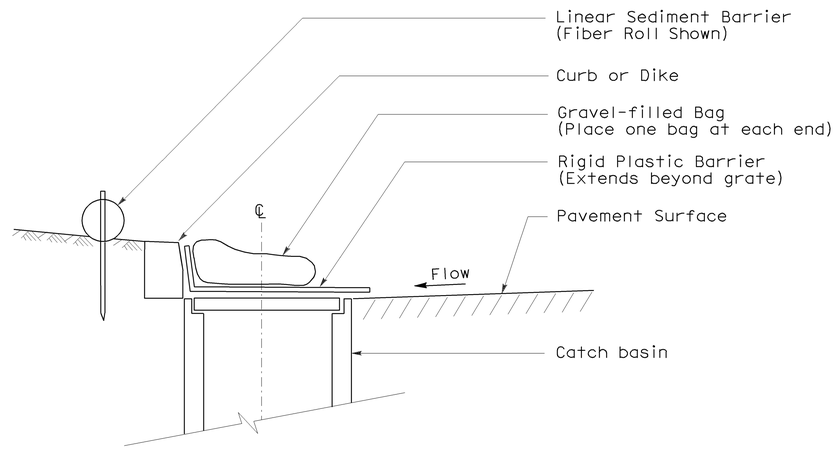

SECTION

TEMPORARY DRAINAGE INLET PROTECTION (TYPE 6A) (CATCH BASIN WITH GRATE)

NOTES:

1. See Standard Plan T51 for Temporary Silt Fence.
2. Dimensions may vary to fit field conditions.

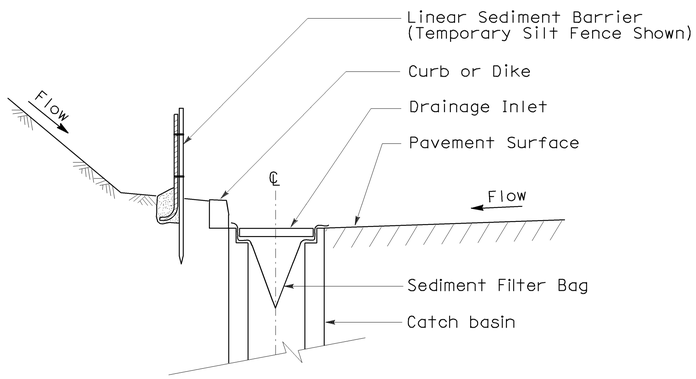

SECTION A-A

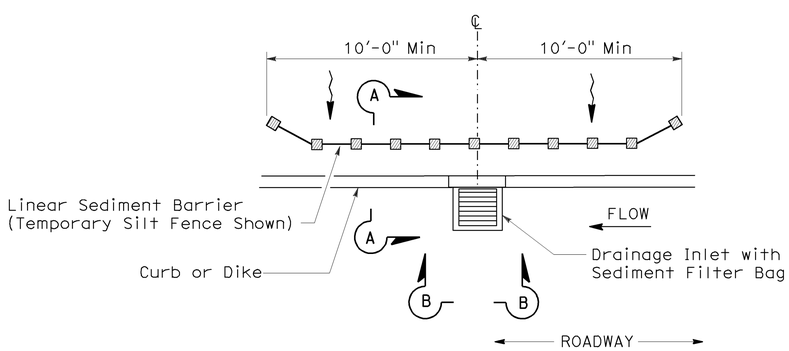

PLAN

TEMPORARY DRAINAGE INLET PROTECTION (TYPE 5) (SEDIMENT FILTER BAG)

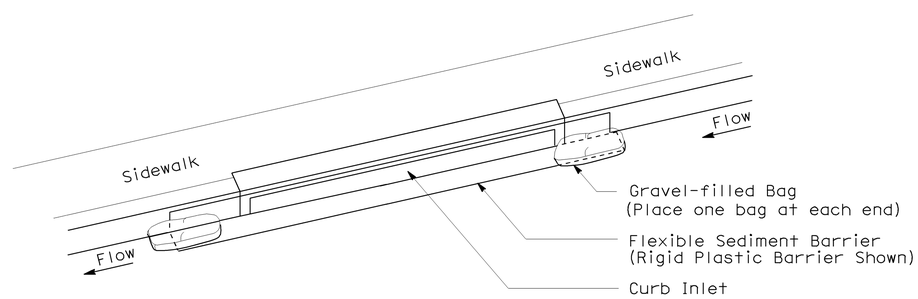

PERSPECTIVE

TEMPORARY DRAINAGE INLET PROTECTION (TYPE 6B) (CURB INLET WITHOUT GRATE)

STATE OF CALIFORNIA
DEPARTMENT OF TRANSPORTATION

TEMPORARY WATER POLLUTION CONTROL DETAILS (TEMPORARY DRAINAGE INLET PROTECTION)

NO SCALE

NSP T64 DATED AUGUST 15, 2008 SUPPLEMENTS THE STANDARD PLANS BOOK DATED MAY 2006.

NEW STANDARD PLAN NSP T64

2006 NEW STANDARD PLAN NSP T64

7-11-08