Dist	COUNTY	ROUTE	KILOMETER POST TOTAL PROJECT	SHEET No.	TOTAL SHEETS
07	LA	1	82.8/83.3	2	44

REGISTERED CIVIL ENGINEER 3-09-10 DATE

5-24-10
PLANS APPROVAL DATE

REGISTERED PROFESSIONAL ENGINEER MIKE K. NGUYEN No. 67756 Exp. 6-30-11 CIVIL STATE OF CALIFORNIA

THE STATE OF CALIFORNIA OR ITS OFFICERS OR AGENTS SHALL NOT BE RESPONSIBLE FOR THE ACCURACY OR COMPLETENESS OF ELECTRONIC COPIES OF THIS PLAN SHEET.

Caltrans Metric

NOTES:

1. SEE UTILITY PLANS FOR DETAILS NOT SHOWN.
2. DIMENSIONS OF THE STRUCTURAL SECTIONS ARE SUBJECT TO TOLERANCES SPECIFIED IN THE STANDARD SPECIFICATIONS.
3. SUPERELEVATION AS SHOWN OR AS DIRECTED BY THE ENGINEER.

EXISTING STRUCTURAL SECTIONS

(1) 100 mm AC Type B
230 Class 4 mm AS

(2) 100 mm AC
200 mm PCC
100 mm Cement SG Treatment
400 mm SM

(2) ~~PROPOSED~~ STRUCTURAL SECTIONS

[3] Cold Plane 60 mm AC Pvmt and Overlay with 60 mm RHMA (Type G)

[4] 60 mm Rubberized Hot Mix Asphalt (Type G)
105 mm Hot Mix Asphalt (Type B)
165 mm Lean Concrete Base
315 mm Class 3 Aggregate Base

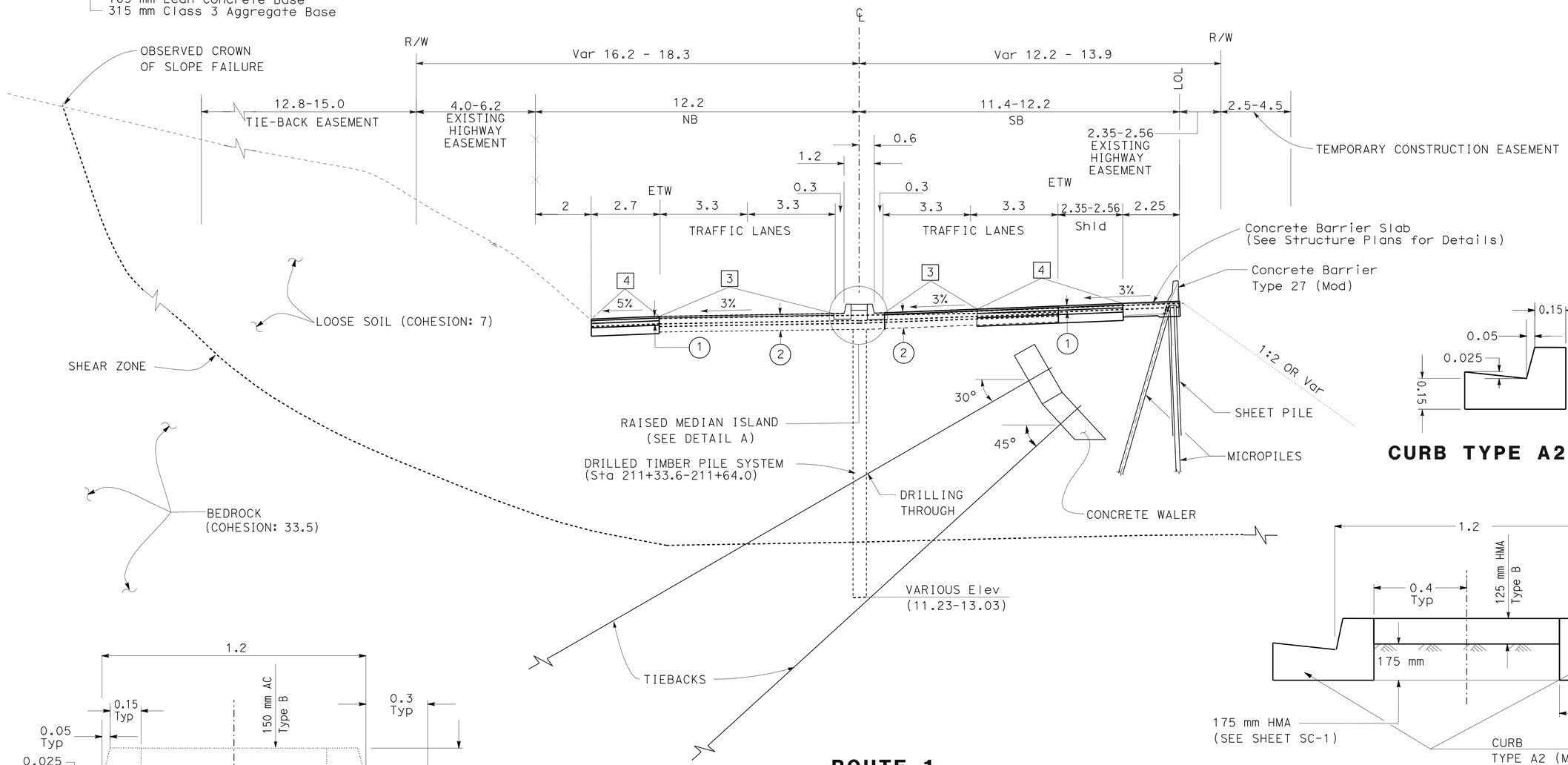

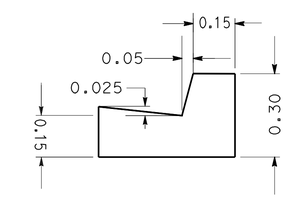

CURB TYPE A2 (Mod)

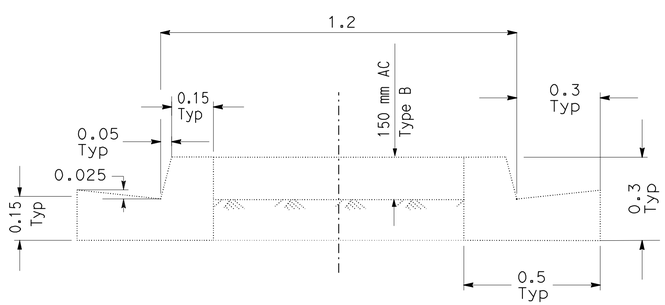

Exist RAISED MEDIAN

ROUTE 1
Sta 209+30.85 TO Sta 213+54.42

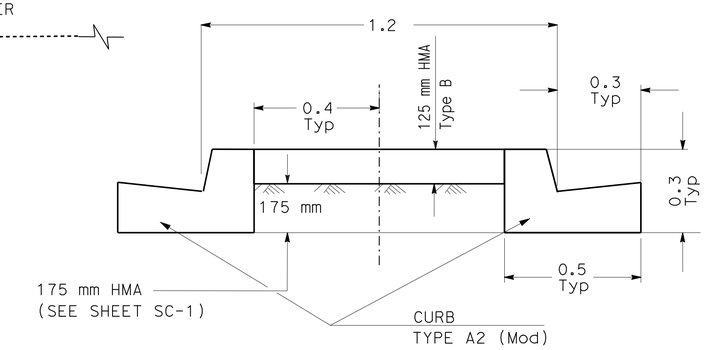

DETAIL A

ALL DIMENSIONS ARE IN METERS
UNLESS OTHERWISE SHOWN

TYPICAL CROSS SECTION
NO SCALE

X-1

(2) **REVISED PER ADDENDUM No. 2 DATED AUGUST 26, 2011**

REVISED BY | DATE REVISED
MIKE NGUYEN | PAUL H. HSU
CALCULATED-DESIGNED BY | CHECKED BY
FUNCTIONAL SUPERVISOR: MIKE NGUYEN
STATE OF CALIFORNIA - DEPARTMENT OF TRANSPORTATION
Caltrans DESIGN

LAST REVISION 03-09-10 | DATE PLOTTED => 24-AUG-2011 | TIME PLOTTED => 12:52

DIST	COUNTY	ROUTE	KILOMETER POST TOTAL PROJECT	SHEET No	TOTAL SHEETS
07	LA	1	82.8/83.3	28	44

REGISTERED CIVIL ENGINEER DATE

5-24-10
PLANS APPROVAL DATE

REGISTERED PROFESSIONAL ENGINEER K. K. Lin No. C60567 Exp. 12-31-08 CIVIL STATE OF CALIFORNIA

The State of California or its officers or agents shall not be responsible for the accuracy or completeness of electronic copies of this plan sheet.

2 **REVISED PER ADDENDUM No. 2 DATED AUGUST 26, 2011**

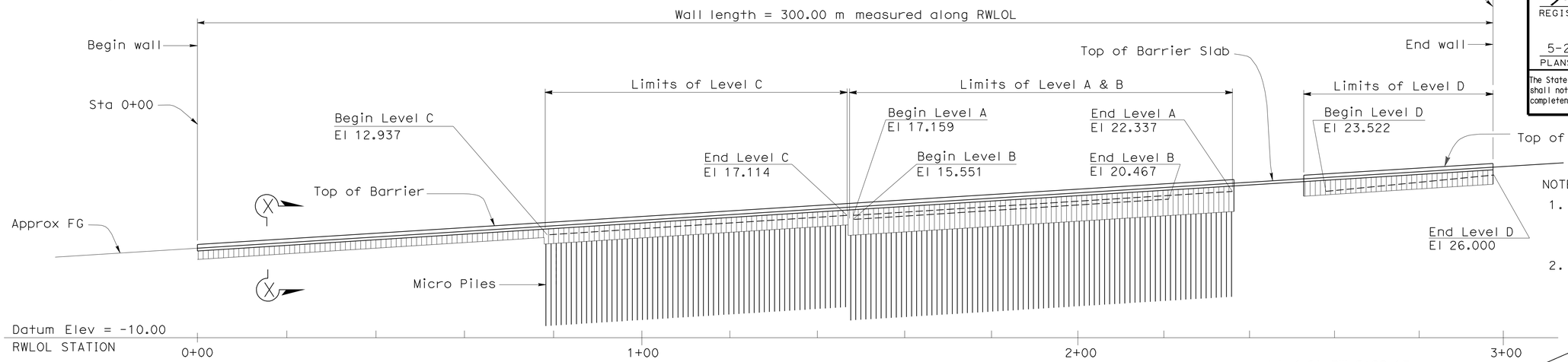

DEVELOPED ELEVATION
1:500

NOTES:

1. THE CONTRACTOR SHALL VERIFY ALL CONTROLLING FIELD DIMENSIONS BEFORE ORDERING OR FABRICATING ANY MATERIAL.
2. CONCRETE BARRIER TO BE TYPE 27 (MOD) (TYPICAL)

INDEX TO PLANS

SHEET No.	TITLE
1	GENERAL PLAN
2	ELEVATION 1 OF 5
3	ELEVATION 2 OF 5
4	ELEVATION 3 OF 5
5	ELEVATION 4 OF 5
6	ELEVATION 5 OF 5
7	TYPICAL SECTION NO. 1
8	TYPICAL SECTION NO. 2
9	TYPICAL SECTION NO. 3
10	TYPICAL SECTION NO. 4
11	CONCRETE WALER DETAILS NO. 1
12	CONCRETE WALER DETAILS NO. 2
13	TIEBACK TENDON DETAILS
14	RETAINING WALL DETAILS NO. 1
15	PAY LIMITS-STRUCTURE EXCAVATION & BACKFILL
16	BRIDGE STD XS DETAIL SHEET: XS16-010, BARRIER CONC TYPE 27

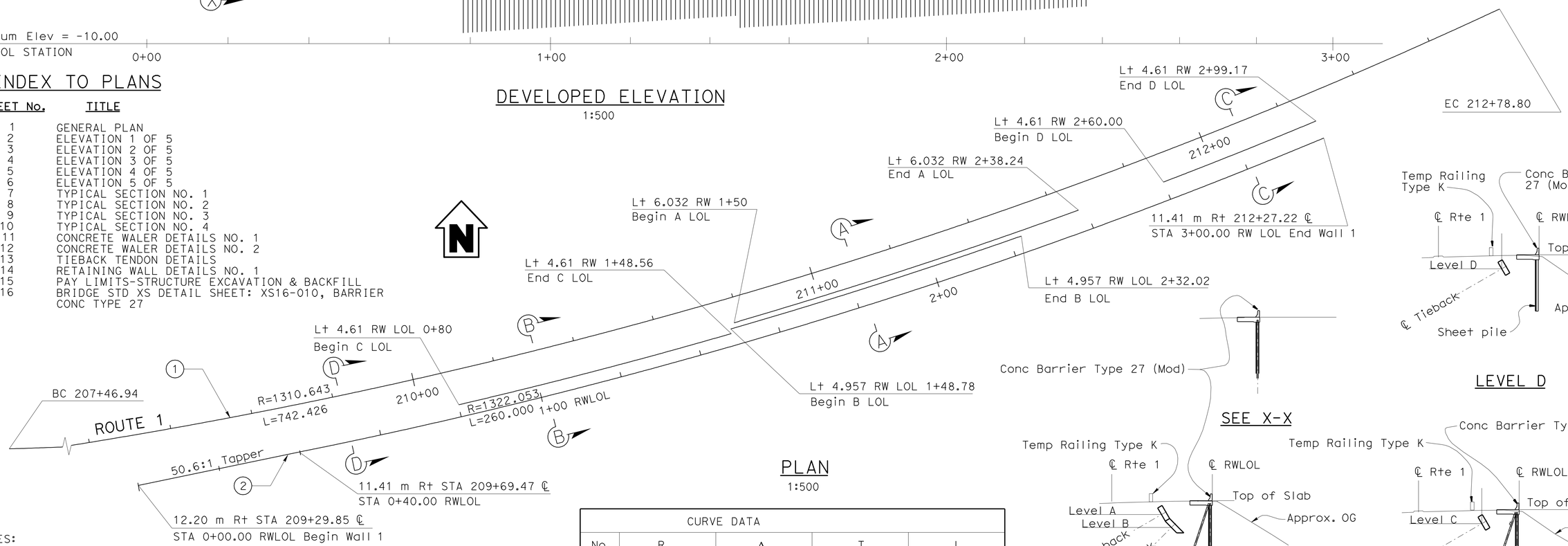

PLAN
1:500

CURVE DATA				
No.	R	Δ	T	L
1	1310.643 m	32°27'21"	381.468 m	742.426 m
2	1322.053 m	11°16'04"	130.418 m	259.994 m

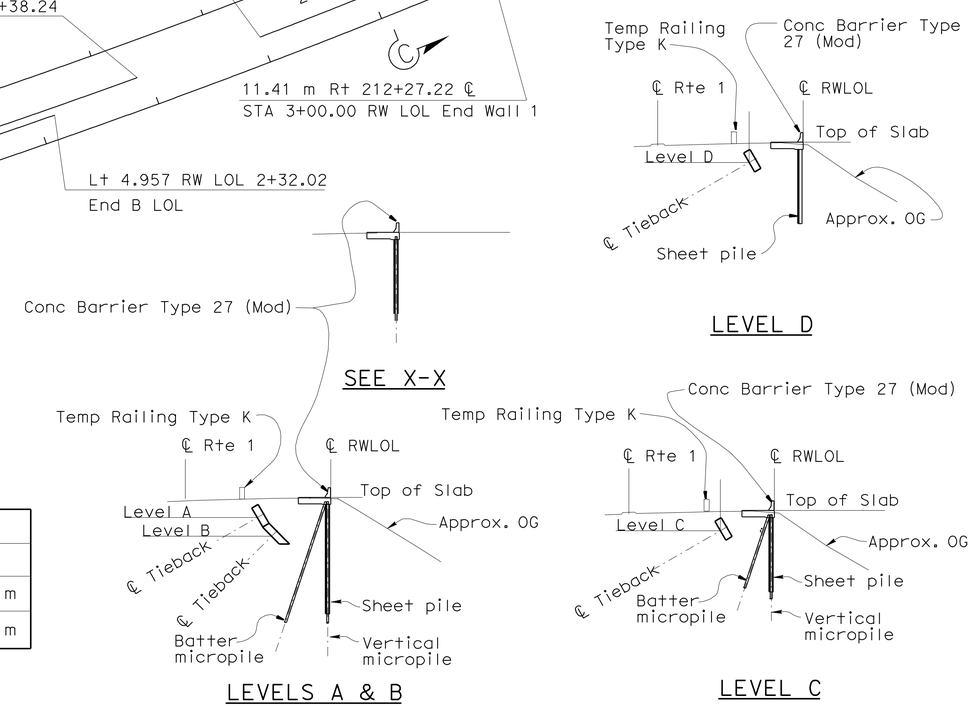

TYPICAL SECTIONS
1:250

NOTES:

1. For General notes, see "TYPICAL SECTION No. 4" sheet.
2. For SECTION A-A, see "TYPICAL SECTION No. 1" sheet. SECTION B-B, C-C, D-D, see respective sheets.
3. For Existing slope inclinometers, see "LOG OF TEST BORINGS".
4. Gas line to be relocated by others.
5. The Contractor shall take precautionary measures to protect any existing utilities located at the work site. It is The Contractor's responsibility to contact the owners of utilities prior to excavation for the verification of utility locations.

Caltrans Metric

JAMES SAGAR
DESIGN ENGINEER

	BY	CHECKED		
DESIGN	KOU-KWANG LIN	S BAROT	LOAD FACTOR DESIGN	LIVE LOADING: HS20-44 AND ALTERNATIVE AND PERMIT DESIGN LOAD
DETAILS	P C WELLS	KOU-KWANG LIN	LAYOUT	BY / CHECKED
QUANTITIES	S. BAROT	N. KANEPATHIPILLAI	SPECIFICATIONS	BY / PLANS AND SPECS COMPARED

ALL DIMENSIONS ARE IN METERS UNLESS OTHERWISE SHOWN

ORIGINAL SCALE IN MILLIMETERS FOR REDUCED PLANS 0 10 20 30 40 50 60 70 80 90 100

STATE OF CALIFORNIA
DEPARTMENT OF TRANSPORTATION

DIVISION OF ENGINEERING SERVICES
STRUCTURE DESIGN
SPECIAL DESIGNS BRANCH

CU 07
EA 4L2201

BRIDGE NO. 53-RW1
KILOMETER POST

ESCONDIDO BEACH LANDSLIDE
GENERAL PLAN

DISREGARD PRINTS BEARING EARLIER REVISION DATES

REVISION DATES

SHEET 1 OF

FILE => agp01a.add

STRUCTURES DESIGN GENERAL PLAN SHEET (METRIC) (REV.03-17-04)

USERNAME => trmnguye DATE PLOTTED => 24-AUG-2011 TIME PLOTTED => 11:32

DIST	COUNTY	ROUTE	KILOMETER POST TOTAL PROJECT	SHEET No	TOTAL SHEETS
07	LA	1	82.8/83.3	33	44

REGISTERED CIVIL ENGINEER DATE

5-24-10
PLANS APPROVAL DATE

REGISTERED PROFESSIONAL ENGINEER K. K. Lin No. C60567 Exp. 12-31-08 CIVIL STATE OF CALIFORNIA

The State of California or its officers or agents shall not be responsible for the accuracy or completeness of electronic copies of this plan sheet.

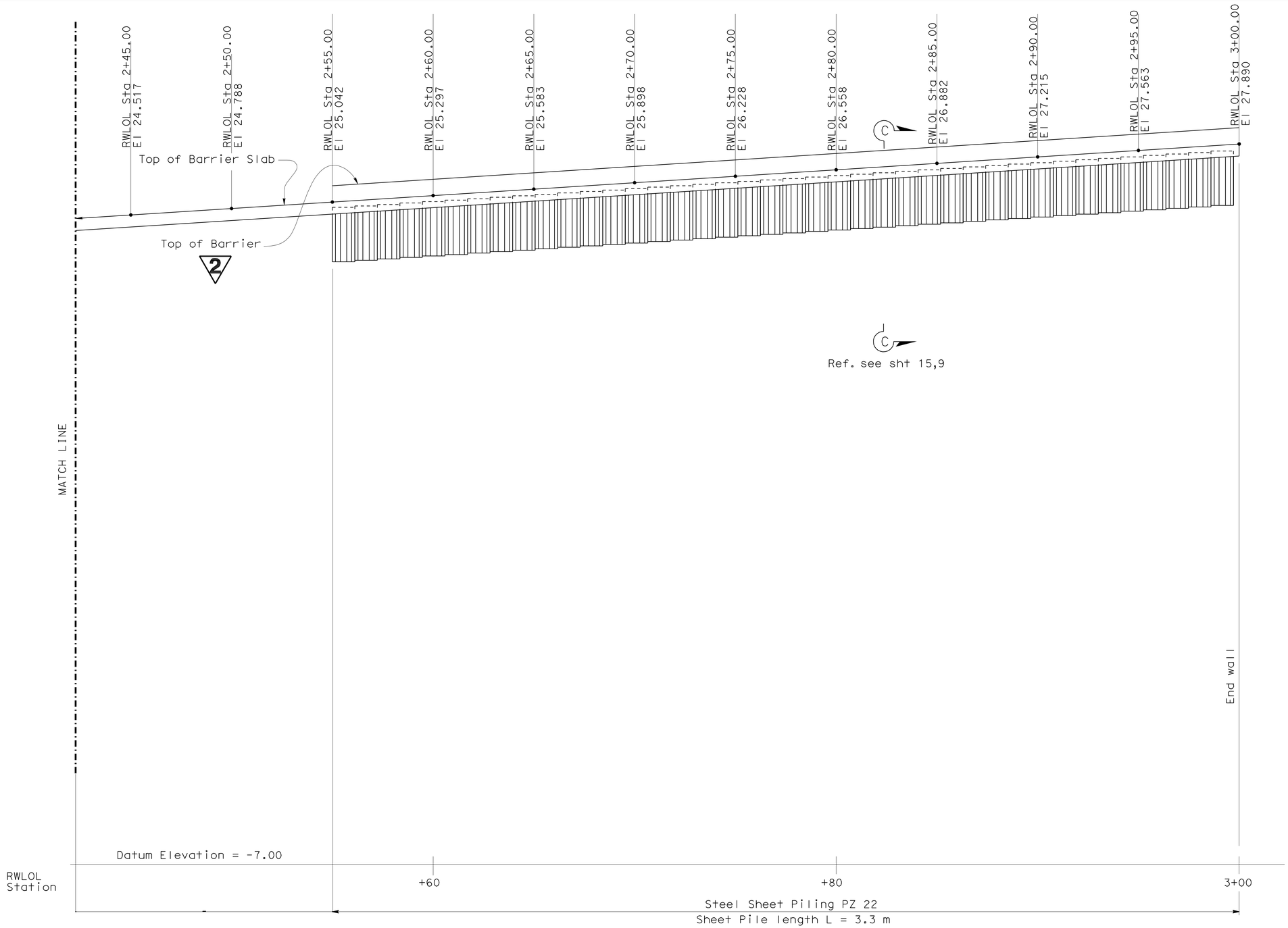

ELEVATION
(Front face shown)
1:100

NOTES:

1. THE CONTRACTOR SHALL VERIFY ALL CONTROLLING FIELD DIMENSIONS BEFORE ORDERING OR FABRICATING ANY MATERIAL.
2. For details see sheet 15,9.

2 **REVISED PER ADDENDUM No. 2 DATED AUGUST 26, 2011**

Caltrans Metric

	BY	CHECKED
DESIGN	KOU-KWANG LIN	S BAROT
DETAILS	P C WELLS	KOU-KWANG LIN
QUANTITIES	S BAROT	N. KANEPATHIPILLAI

STATE OF CALIFORNIA
DEPARTMENT OF TRANSPORTATION

DIVISION OF ENGINEERING SERVICES
STRUCTURE DESIGN
SPECIAL DESIGNS BRANCH

BRIDGE NO. 53-RW1
KILOMETER POST

ESCONDIDO LANDSLIDE RTE 1
RETAINING WALL ELEVATION 5 OF 5

ALL DIMENSIONS ARE IN METERS UNLESS OTHERWISE SHOWN

ORIGINAL SCALE IN MILLIMETERS FOR REDUCED PLANS 0 10 20 30 40 50 60 70 80 90 100

CU 07
EA 4L2201

DISREGARD PRINTS BEARING EARLIER REVISION DATES

REVISION DATES

SHEET 6 OF

FILE => drtwdet05a.add

STRUCTURES DESIGN DETAIL SHEET (METRIC) (REV.03-17-04)

USERNAME => s128843 DATE PLOTTED => 24-AUG-2011 TIME PLOTTED => 12:28

DIST	COUNTY	ROUTE	KILOMETER POST TOTAL PROJECT	SHEET No	TOTAL SHEETS
07	LA	1	82.8/83.3	37	44

REGISTERED CIVIL ENGINEER DATE

5-24-10
PLANS APPROVAL DATE

REGISTERED PROFESSIONAL ENGINEER K. K. Lin No. C60567 Exp. 12-31-08 CIVIL STATE OF CALIFORNIA

The State of California or its officers or agents shall not be responsible for the accuracy or completeness of electronic copies of this plan sheet.

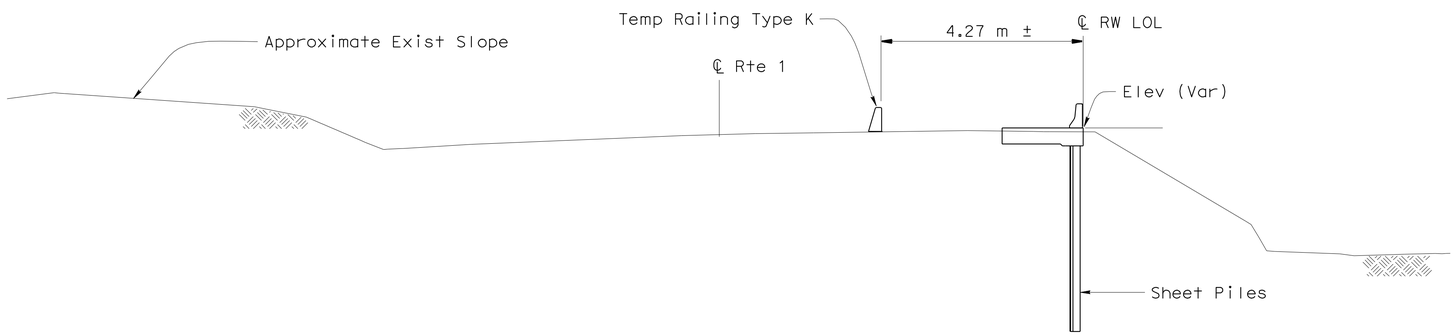

SECTION D-D
1:100

GENERAL NOTES

2 **DESIGN:** California Bridge Design Specifications April 2000 (LFD)
~~Cantilever Sheet piling Walls and Tieback Anchoring systems are designed in accordance with California Trenching and Shoring Manuals~~

SOIL PARAMETERS: $\phi = 29°$, $g = 19.0\ kN/m^3$ $C = 28.8\ kPa$
(For determination of slope stability)

STRUCTURAL STEEL: Steel Piles and Steel Pipe Piles- ASTM Designation: A572/A572M, Grade 50 (345 MPa)

REINFORCED CONCRETE:
f_y = 420 MPa (Yield strength of reinforcement)
f'_c = 28.0 MPa (Concrete compressive strength at 28 days)
n = 8

PRESTRESSING STEEL: Strand tendon - ASTM Designation: A416
T = Design force per stressing anchor, see "TIEBACK DATA" on "TYPICAL SECTION NO. 3" sheet 9.
fpu = Minimum tensile strength of prestressing steel, (kiloNewtons per square millimeter)
$A_{S(min)}$ = Minimum cross sectional area of prestressing steel in tieback tendon.(square millimeters)

2 $$A_{S(min)} = \frac{\cancel{1.3}\ 1.5\ T}{0.75\ fpu}$$

For details see "Retaining Wall details No. 1" sheet

2 **REVISED PER ADDENDUM No. 2 DATED AUGUST 26, 2011**

Caltrans Metric

	BY	CHECKED
DESIGN	KOU-KWANG LIN	S BAROT
DETAILS	P C WELLS	KOU-KWANG LIN
QUANTITIES	S BAROT	N. KANEPATHIPILLAI

STATE OF CALIFORNIA DEPARTMENT OF TRANSPORTATION

DIVISION OF ENGINEERING SERVICES STRUCTURE DESIGN
SPECIAL DESIGNS BRANCH

BRIDGE NO. 53-RW1
KILOMETER POST

ESCONDIDO BEACH LANDSLIDE
TYPICAL SECTION NO. 4

ALL DIMENSIONS ARE IN METERS UNLESS OTHERWISE SHOWN

ORIGINAL SCALE IN MILLIMETERS FOR REDUCED PLANS 0 10 20 30 40 50 60 70 80 90 100

CU 07
EA 4L2201

DISREGARD PRINTS BEARING EARLIER REVISION DATES 12-19-05

REVISION DATES | SHEET 10 | OF

FILE => ftyp04.add

STRUCTURES DESIGN DETAIL SHEET (METRIC) (REV.03-17-04)

USERNAME => s128843 DATE PLOTTED => 24-AUG-2011 TIME PLOTTED => 12:28

DIST	COUNTY	ROUTE	KILOMETER POST TOTAL PROJECT	SHEET No	TOTAL SHEETS
07	LA	1	82.8/83.3	41	44

REGISTERED CIVIL ENGINEER DATE

5-24-10
PLANS APPROVAL DATE

REGISTERED PROFESSIONAL ENGINEER K. K. Lin No. C60567 Exp. 12-31-08 CIVIL STATE OF CALIFORNIA

The State of California or its officers or agents shall not be responsible for the accuracy or completeness of electronic copies of this plan sheet.

NOTE:
Barrier rail not shown for clarity

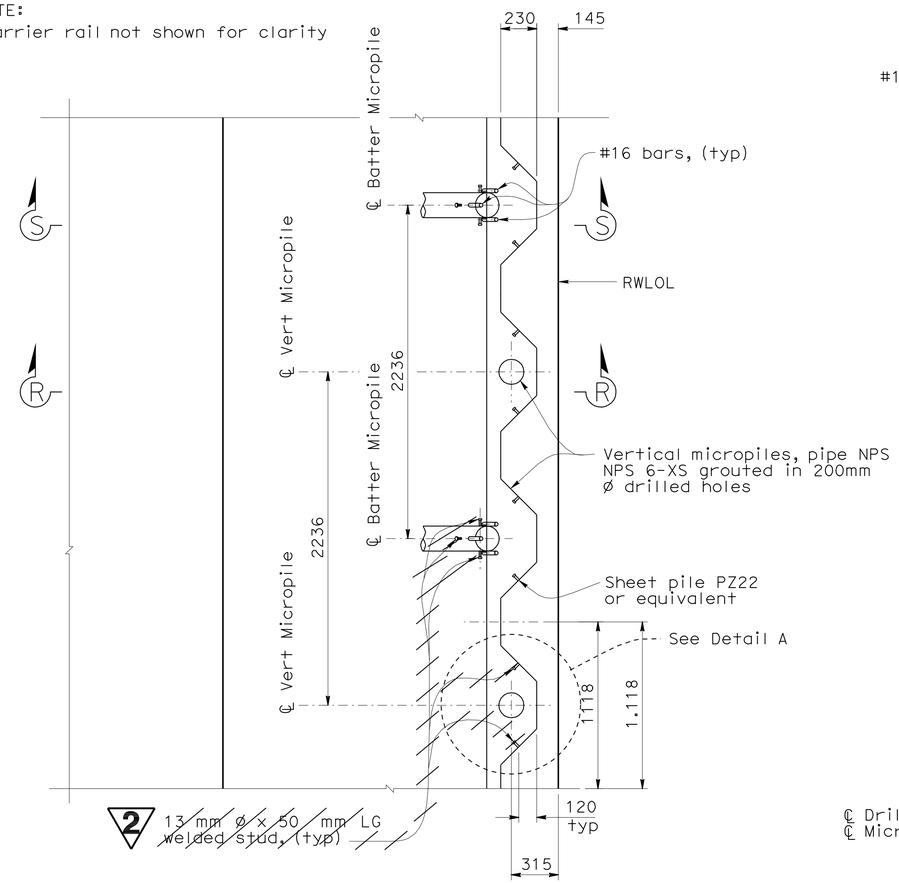

PLAN
1:20

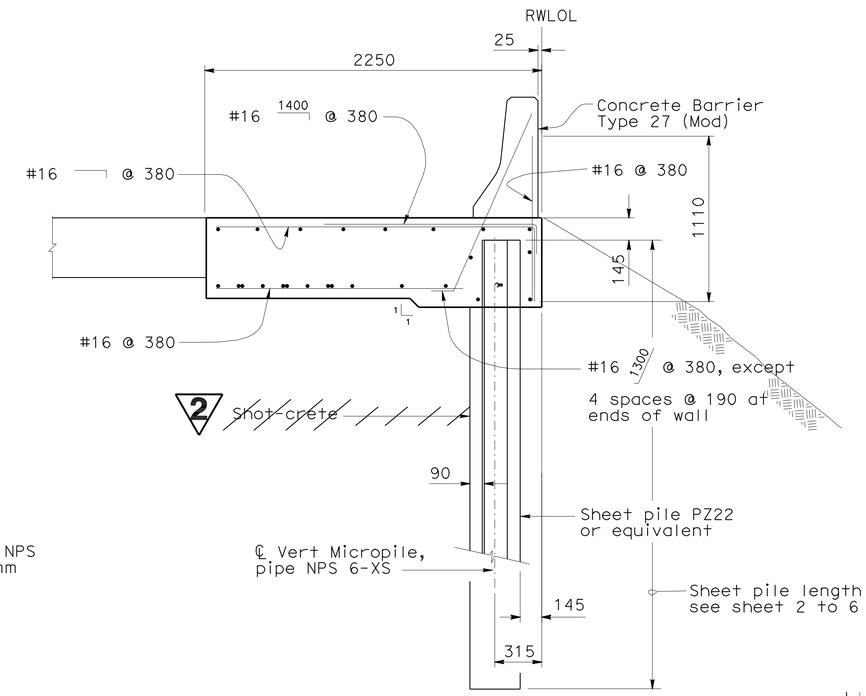

SECTION R-R
(for rebar not shown
see SECTION S-S)
1:20

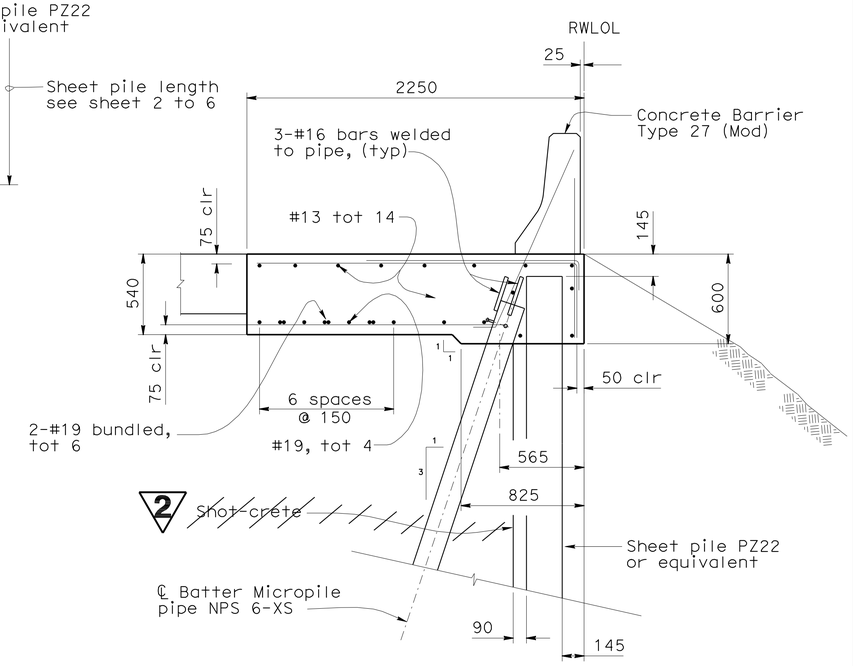

SECTION S-S
1:20

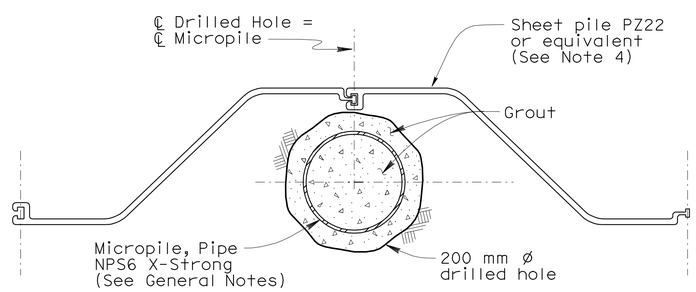

DETAIL A
1:5

NOTES:

1. For Concrete Barrier Type 27 reinforcements, see XS 16-010.
2. Clearance to reinforcing steel in Concrete Barrier Slab to be 25 mm.
3. No expansion joint in Barrier or Barrier Slab within limits of wall.
4. Minimum section modulus for sheet Pile = 973 cm/m^3.
5. Steel pipe pile (A 252, Gr 3)
   fy = 310 MPa, min yield
   fu = 455 MPa, min tensile

2 **REVISED PER ADDENDUM No. 2 DATED AUGUST 26, 2011**

Caltrans Metric

	BY	CHECKED
DESIGN	KOU-KWANG LIN	S BAROT
DETAILS	P C WELLS	KOU-KWANG LIN
QUANTITIES	S BAROT	N KANEPATHIPILLAI

STATE OF CALIFORNIA
DEPARTMENT OF TRANSPORTATION

DIVISION OF ENGINEERING SERVICES
STRUCTURE DESIGN
SPECIAL DESIGNS BRANCH

BRIDGE NO. 53-RW1
KILOMETER POST

ESCONDIDO BEACH LANDSLIDE
RETAINING WALL DETAILS NO. 1

ALL DIMENSIONS ARE IN MILLIMETERS UNLESS OTHERWISE SHOWN

ORIGINAL SCALE IN MILLIMETERS FOR REDUCED PLANS 0 10 20 30 40 50 60 70 80 90 100

CU 07
EA 4L2201

DISREGARD PRINTS BEARING EARLIER REVISION DATES

REVISION DATES

SHEET 14 OF

FILE => kers04.add

STRUCTURES DESIGN DETAIL SHEET (METRIC) (REV.03-17-04)

USERNAME => s128843 DATE PLOTTED => 24-AUG-2011 TIME PLOTTED => 12:28