STRUCTURE EXCAVATION (RETAINING WALL)

SECTION 1

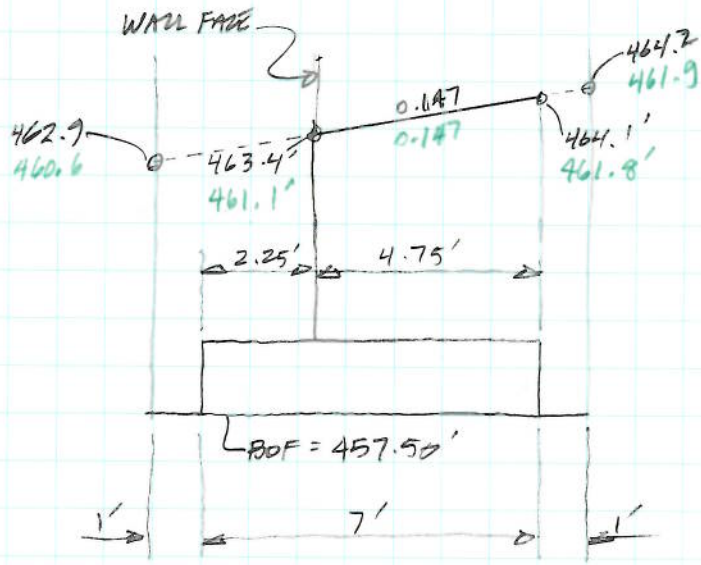

$A_{AREA} = (462.9' - 457.5')(7' + 2') + \frac{1}{2}(464.2' - 462.9')(7' + 2')$
$= 54.45\ FT^2$

$A_{END} = (460.6' - 457.5')(7' + 2') + \frac{1}{2}(461.9' - 460.6')(7' + 2')$
$= 33.75\ FT$

$A_{AVG} = (54.45\ FT^2 + 33.75\ FT^2)/2 = 44.10\ FT^2$

$V = 44.10\ FT^2 \times 24' = 1058.4\ FT^3$

SECTION 2

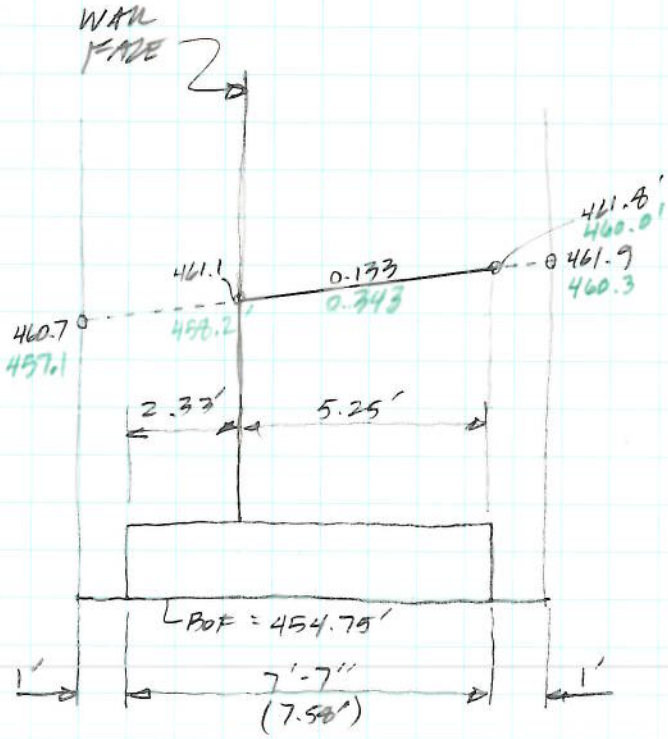

$$A_{AREA} = (460.7' - 454.75')(9.58') + \tfrac{1}{2}(461.8' - 460.7')(9.58')$$
$$= 62.27\ FT^2$$

$$A_{END} = (457.1' - 454.75')(9.58') + \tfrac{1}{2}(460.0' - 457.1')(9.58')$$
$$= 36.40\ FT^2$$

$$A_{AVG} = (62.27\ FT^2 + 36.40\ FT^2)/2 = 49.34\ FT^2$$

$$V = 49.34\ FT^2 \times 24' = 1184.16\ FT^3$$

SECTION 3

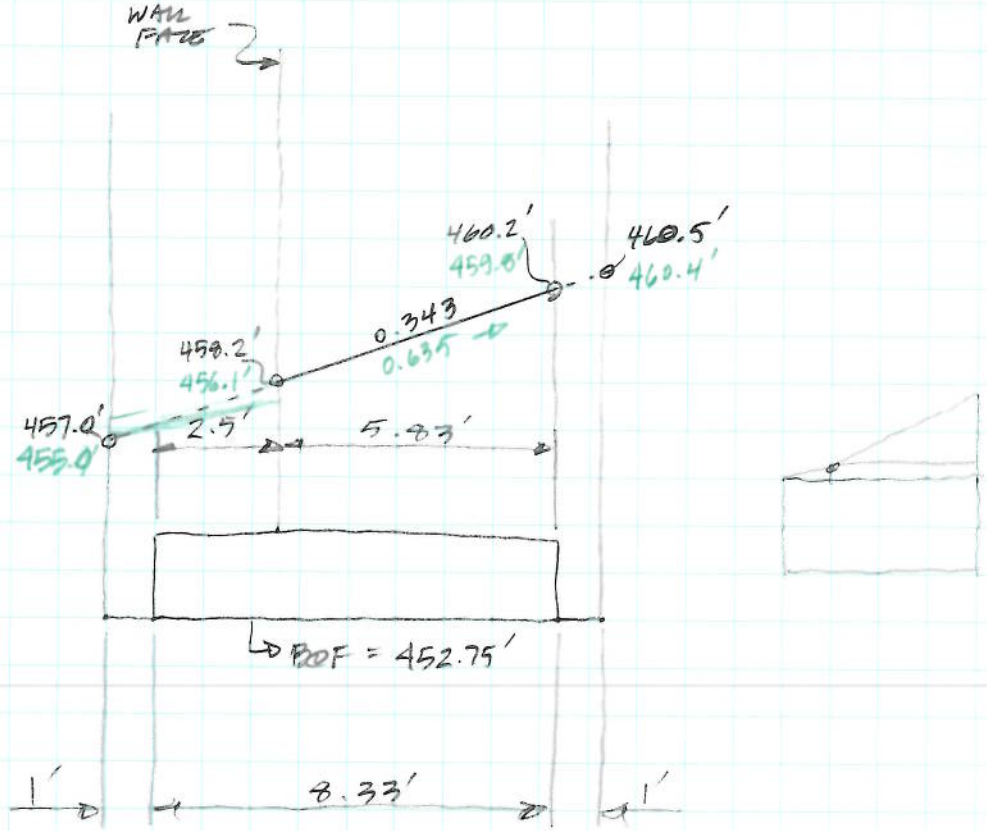

$$A_{BEG} = (457.0' - 452.75')(10.33') + \tfrac{1}{2}(460.5' - 457.0')(10.33')$$
$$= 61.98 \text{ FT}^2$$

$$A_{END} = (455' - 452.75')(10.33') + (456.1' - 455')(6.83')$$
$$+ \tfrac{1}{2}(460.4' - 456.1')(6.83') + \tfrac{1}{2}(456.1' - 455')(3.5')$$
$$= 47.37 \text{ FT}^2$$

$$A_{AVG} = 54.68 \text{ FT}^2$$

$$V = 54.68 \text{ FT}^2 \times 48 = 2624.64 \text{ FT}^3$$

SECTION 4

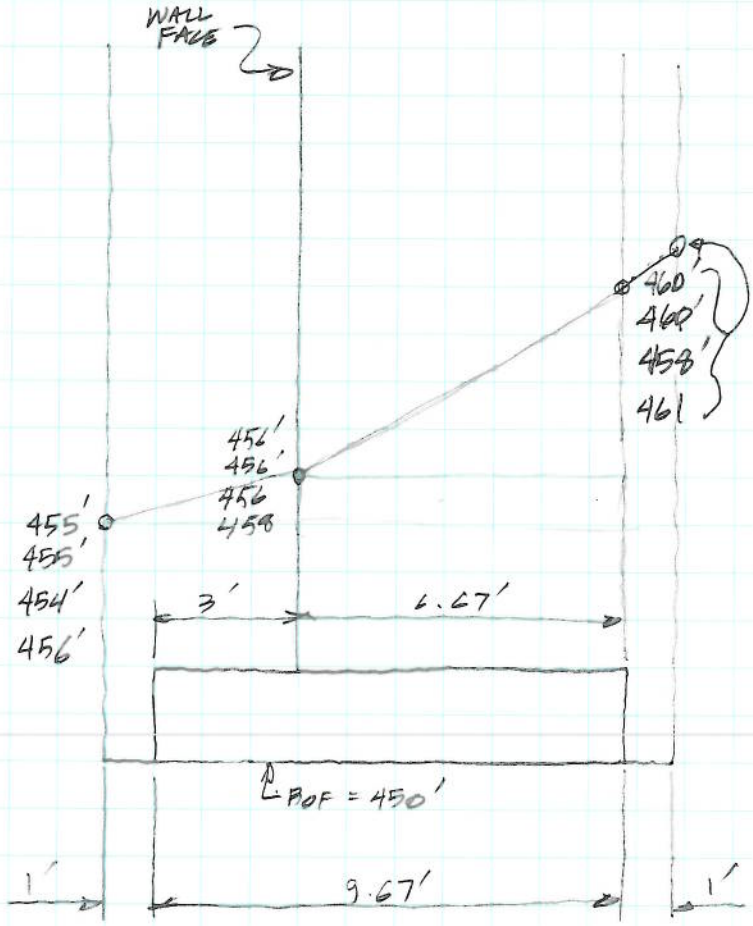

$A_1 = (455' - 450')(11.67') + (452' - 455')(7.67') + \frac{1}{2}(456' - 455')(4') + \frac{1}{2}(460' - 456')(7.67') = 83.36\ FT^2$

$A_2 = (455' - 450')(11.67') + (452' - 455')(7.67') + \frac{1}{2}(456' - 455')(4') + \frac{1}{2}(460' - 456')(7.67') = 83.36\ FT^2$

$A_3 = (454' - 450')(11.67') + (456 - 454')(7.67') + \frac{1}{2}(456' - 454')(4') + \frac{1}{2}(458' - 456')(7.67') = 73.69\ FT^2$

$A_4 = (456' - 450')(11.67') + (458' - 456')(7.67') + \frac{1}{2}(461' - 458')(7.67') + \frac{1}{2}(458' - 456')(4') = 100.87\ FT^2$

$A_{AVG} = \Sigma A / n = 341.28\ FT^2 / 4 = 85.32\ FT^2$

$V = 85.32\ FT^2 \times 288' = 24572.16\ FT^3$

SECTION 5

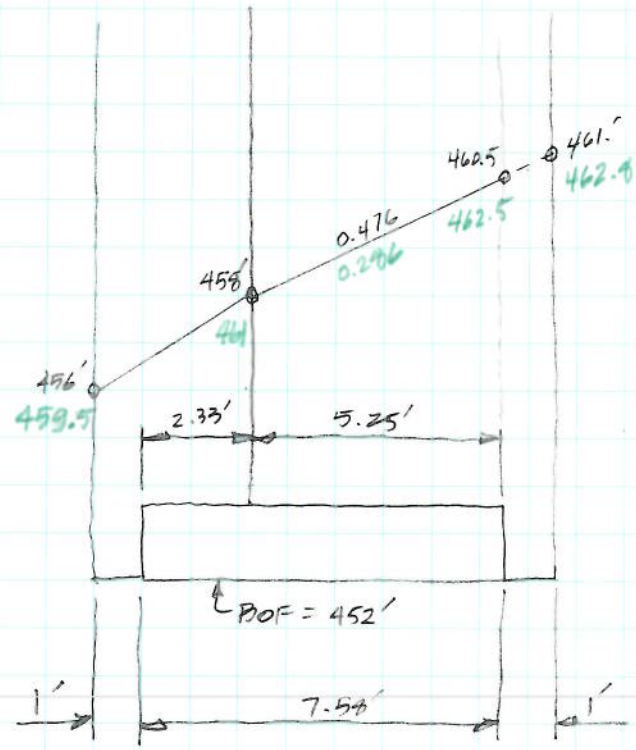

$$A_{BEG} = (456' - 452')(9.58') + (458' - 456')(6.25') + \tfrac{1}{2}(458' - 456')(3.33') + \tfrac{1}{2}(461' - 458')(6.25') = 63.53\ FT^2$$

$$A_{END} = (459.5' - 452')(9.58') + (461 - 459.5')(6.25') + \tfrac{1}{2}(461' - 459.5')(3.33') + \tfrac{1}{2}(462.8' - 461')(6.25') = 69.35\ FT^2$$

$$A_{AVG} = 76.44\ FT^2$$

$$V = 76.44\ FT^2 \times 48' = 3669.12\ FT^3$$

SECTION 6

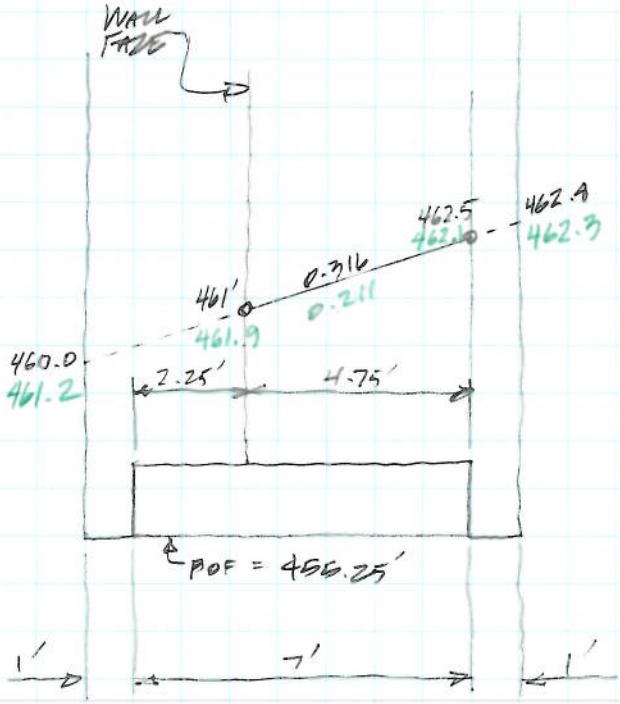

$A_{BEG} = (460' - 455.25')(9') + \frac{1}{2}(462.4' - 460')(9') = 55.35\ FT^2$

$A_{END} = (461.2 - 455.25')(9') + \frac{1}{2}(462.3' - 461.2')(9') = 58.50\ FT^2$

$A_{AVG} = 56.93\ FT^2$

$V = 56.93\ FT^2 \times 48' = 2732.4\ FT^3$

STRUCTURE EXCAVATION (RETAINING WALL)

SUMMARY

$$
\begin{aligned}
V = \; & 1058.40 \text{ FT}^3 \\
& + 1184.16 \text{ FT}^3 \\
& + 2624.64 \text{ FT}^3 \\
& + 24572.16 \text{ FT}^3 \\
& + 3669.12 \text{ FT}^3 \\
& + 2732.40 \text{ FT}^3
\end{aligned}
$$

$= 35840.88 \text{ FT}^3$

$= 1327.44 \text{ CY}$

SAY 1328 CY

PERVIOUS BACKFILL MATERIAL

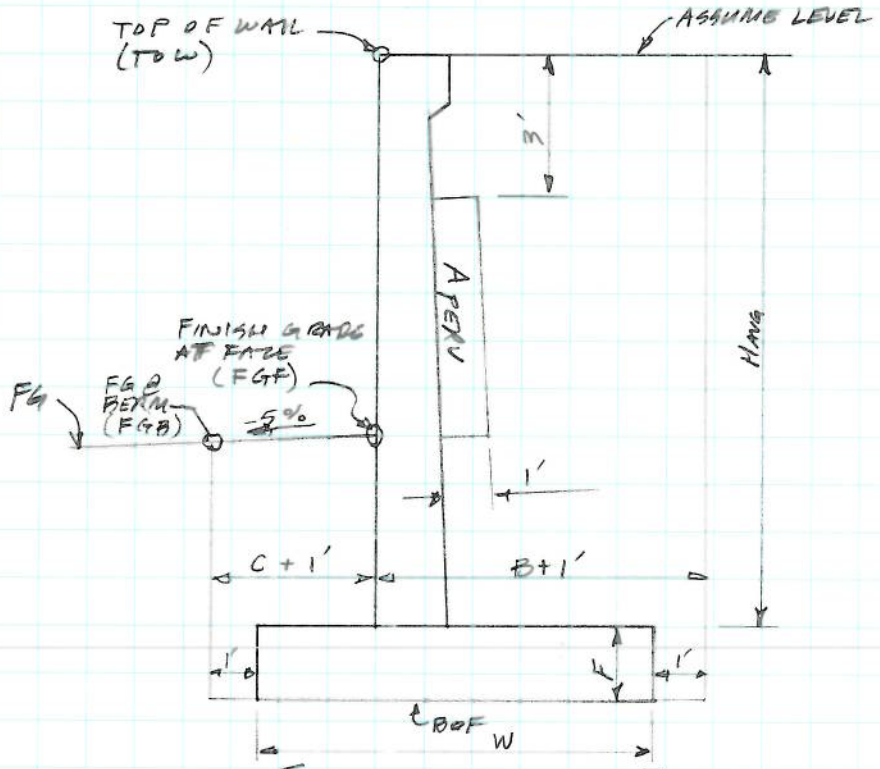

$$A_{PERV} = 1' \times [(TOW - 3') - FGF]$$

$$V_{PERV} = A_{PERV} \times L$$

LOC	TOW	FGF	AREA
1 BEG	465.12	465.12	—
2	465.64	461.30	1.34
3	465.80	458.23	4.57
4	465.93	456.61	6.32
5 EXP.	465.98	456.12	6.86
6	465.97	456.12	6.85
7	465.89	455.97	6.91
8	465.80	456.0	6.80
9 EXP	465.78	455.6	7.18
10	465.82	455.3	7.52
11	465.64	455.0	7.64
12	465.40	454.5	7.90
13 EXP	465.11	454.2	7.91
14	464.74	454.5	7.24
15	464.29	454.8	6.49
16	463.73	454.8	5.93
17 EXP	463.04	456.1	3.94
18	462.52	457.7	1.82
19	462.23	459.5	—
20	462.01	461.0	—
21 END	461.90	461.9	—

$$A_{AVG} = \frac{103.22\ FT^2}{17} = 6.07\ FT^2$$

$$L = 480' - 16' = 464'$$

$$V_{PERV} = 6.07\ FT^2 \times 464' = 2816.48\ FT^3$$

$$= 104.3\ CY$$

SAY 105 CY

GEOCOMPOSITE DRAIN (ALTERNATIVE TO PERVIOUS BACKFILL)

$$A = 105\ CY\left(\frac{27\ FT^3}{1\ CY}\right)\left(\frac{1}{1\ FT}\right) = \underline{2835\ FT^2}$$

11/14/12

STRUCTURE BACKFILL (RETAINING WALL)

$$A_{BF} = (TOW - BOF)(W + 2') - (TOW - FGF)(C + 1') - \tfrac{1}{2}(FGF - FGB)(C + 1') - A_{WALL} - A_{PERM}$$

SECTION 1:

$$A_B = (465.12' - 457.50')(9') - (465.12' - 465.12')(3.25') - \tfrac{1}{2}(465.12' - 464.96')(3.25')$$
$$= 68.32\ FT^2$$

$$A_{B'} = (465.32' - 457.50')(9') - \phi - \tfrac{1}{2}(465.32' - 465.16')(3.25')$$
$$= 70.12\ FT^2$$

$$A_E = (465.64 - 457.50')(9') - (465.64' - 461.30')(3.25') - \tfrac{1}{2}(461.30' - 461.14')(3.25')$$
$$= 58.90\ FT^2$$

$$V_1 = (68.32\ FT^2 + 70.12\ FT^2)/2 \times 8' + (70.12\ FT^2 + 58.90\ FT^2)/2 \times 16' - (171.95\ FT^3 + 266.00\ FT^3)$$
$$= 1147.97\ FT^3$$

SECTION 2:

$$A_B = (465.64 - 454.75')(9.58') - (465.64 - 461.30')(3.33') - \tfrac{1}{2}(461.3 - 461.13)(3.33')$$
$$= 89.59\ FT^2$$

$$A_E = (465.80 - 454.75)(9.58') - (465.80 - 458.23)(3.33) - \tfrac{1}{2}(458.23 - 458.06)(3.33')$$
$$= 80.37\ FT^2$$

$$V_2 = (89.59\ FT^2 + 80.37\ FT^2)/2 \times 25' - 269.45\ FT^3 - 300.17\ FT^3$$
$$= 1554.88\ FT^3$$

SECTION 3:

$$A_B = (465.80' - 452.75')(10.33') - (465.80' - 458.23')(3.5') - \tfrac{1}{2}(458.23' - 458.06)(3.5')$$
$$= 108.01\ FT^2$$

$$A_M = (465.93 - 452.75)(10.33) - (465.93 - 456.61)(3.5) - \tfrac{1}{2}(456.61 - 456.44')(3.5')$$
$$= 103.23\ FT^2$$

$$A_E = (465.98 - 452.75)(10.33) - (465.98 - 456.12)(3.5) - \tfrac{1}{2}(456.12 - 455.95)(3.5)$$
$$= 101.86\ FT^2$$

$$V_3 = (108.01\ FT^2 + 103.23\ FT^2 + 101.86\ FT^2)/3 \times 49' - 678.58\ FT^3 - 714.58\ FT^3$$
$$= 3720.81\ FT^3$$

SECTION 4:

$$A_1 = (465.98' - 450)(11.58) - (465.98 - 456.12)(4) - \tfrac{1}{2}(456.12 - 455.92)(4)$$
$$= 145.21\ FT^2$$

$$A_2 = (465.97' - 450)(11.58) - (465.97 - 456.12)(4) - \tfrac{1}{2}(456.12 - 455.92)(4)$$
$$= 145.13\ FT^2$$

$$A_3 = (465.88' - 450)(11.58) - (465.88 - 455.97)(4) - \tfrac{1}{2}(455.97 - 455.77)(4)$$
$$= 143.85\ FT^2$$

$$A_4 = (465.80' - 450)(11.58) - (465.80 - 456.0)(4) - \tfrac{1}{2}(456.0 - 455.8)(4)$$
$$= 143.36\ FT^2$$

$$A_5 = (465.78' - 450)(11.58) - (465.78 - 455.6)(4) - \tfrac{1}{2}(455.6 - 455.4)(4)$$
$$= 141.61\ FT^2$$

$$A_6 = (465.82 - 450)(11.58) - (465.82 - 455.3)(4) - 1/2(455.3 - 455.1)(4)$$
$$= 140.72\ FT^2$$

$A_7 = (465.64 - 450)(11.58) - (465.64 - 455)(4)$
$\quad - \frac{1}{2}(455 - 454.8)(4)$
$\quad = 138.15\ FT^2$

0.4

$A_8 = (465.40 - 450)(11.58) - (465.40 - 454.5)(4)$
$\quad - \frac{1}{2}(454.5 - 454.3)(4)$
$\quad = 134.33\ FT^2$

$A_9 = (465.11 - 450)(11.58) - (465.11 - 454.2)(4)$
$\quad - \frac{1}{2}(454.2 - 454.0)(4)$
$\quad = 130.93\ FT^2$

$A_{10} = (464.74 - 450)(11.58) - (464.74 - 454.5)(4)$
$\quad - \frac{1}{2}(454.5 - 454.3)(4)$
$\quad = 129.33\ FT^2$

$A_{11} = (464.29 - 450)(11.58) - (464.29 - 454.8)(4)$
$\quad - \frac{1}{2}(454.8 - 454.6)(4)$
$\quad = 127.12\ FT^2$

$A_{12} = (463.73 - 450)(11.58) - (463.73 - 454.8)(4)$
$\quad - \frac{1}{2}(454.8 - 454.6)(4)$
$\quad = 122.87\ FT^2$

$A_{13} = (463.04 - 450)(11.58) - (463.04 - 456.1)(4)$
$\quad - \frac{1}{2}(456.1 - 455.9)(4)$
$\quad = 122.84\ FT^2$

$A_{AVG} = 1765.45\ FT^2 / 13 = 135.80\ FT^2$

$V_4 = (135.80\ FT^2)(290\ FT) - 4902.21\ FT^3 - 5326.74\ FT^3$
$\quad = 29,153.05\ FT^3$

SECTION 5:

$A_B = (463.04 - 452)(9.58) - (463.04 - 456.1)(3.33)$
$\quad - \frac{1}{2}(456.1 - 455.93)(3.33)$
$\quad = 82.37\ FT^2$

$A_M = (462.52 - 452)(9.58) - (462.52 - 457.7)(3.33)$
$\quad - \frac{1}{2}(457.7 - 457.53)(3.33)$
$\quad = 84.45\ FT^2$

$A_E = (462.23 - 452)(9.58) - (462.23 - 459.5)(3.33)$
$\quad - \frac{1}{2}(459.5 - 459.33)(3.33)$
$\quad = 88.63\ FT^2$

$V_5 = (82.37\ FT^2 + 84.45\ FT^2 + 88.63\ FT^2)/3 \times 49'$
$- 511.68\ FT^3 - 588.34\ FT^3$
$= 3072.33\ FT^3$

SECTION 6:

$A_B = (462.23 - 455.25)(9) - (462.23 - 459.5)(3.25)$
$- 1/2(459.5 - 459.34)(3.25)$
$= 53.69\ FT^2$

$A_M = (462.01 - 455.25)(9) - (462.01 - 461.0)(3.25)$
$- 1/2(461.0 - 460.84)(3.25)$
$= 57.30\ FT^2$

$A_E = (461.90 - 455.25)(9) - (461.90 - 461.9)(3.25)$
$- 1/2(461.9 - 461.74)(3.25)$
$= 59.59\ FT^2$

$V_3 = (53.69 + 57.30)/2 \times 24' + (57.30 + 59.59)/2 \times 16')$
$+ 59.59 \times 8' - 276.64\ FT^3 - 532.00\ FT^3$
$= 1935.08\ FT^3$

$V_{BF} =$ 1147.97
+ 1554.88
+ 3720.81
+ 29153.05
+ 3072.33
+ 1935.08
− 2816.48
$= 37,767.64\ FT^3$

$= 1398.80\ CY$

SAY 1399 CY

DIST	COUNTY	ROUTE	POST MILES TOTAL PROJECT	SHEET No.	TOTAL SHEETS
07	LA	60			

REGISTERED CIVIL ENGINEER X DATE

PLANS APPROVAL DATE

REGISTERED PROFESSIONAL ENGINEER DOUGLAS C. MENZMER No. C 63498 Exp. 09-30-2014 CIVIL STATE OF CALIFORNIA

The State of California or its officers or agents shall not be responsible for the accuracy or completeness of electronic copies of this plan sheet.

CURVE DATA

No.	R	Δ	T	L
Ⓐ	246.00	65°17'07"	157.58	280.30
Ⓑ	248.00	36°18'19"	81.31	157.14
Ⓒ	200.00	57°43'14"	110.22	201.48
Ⓓ	400.00	58°42'41"	224.98	409.88

SURVEY CONTROL

SUHV501
SET 1" IP RED PLUG
45.29 FT Rt. "F" LINE WESTBOUND OFF RAMP
Sta. 78+42.41
N 1,820,653.94
E 6,595,526.72
Elev. = 469.30

SUHV502
SET 1" IP PLUG/CT
31.17 FT Rt. "F" LINE WESTBOUND OFF RAMP
Sta. 82+90.82
N 1,820,452.69
E 6,595,862.12
Elev. = 461.55

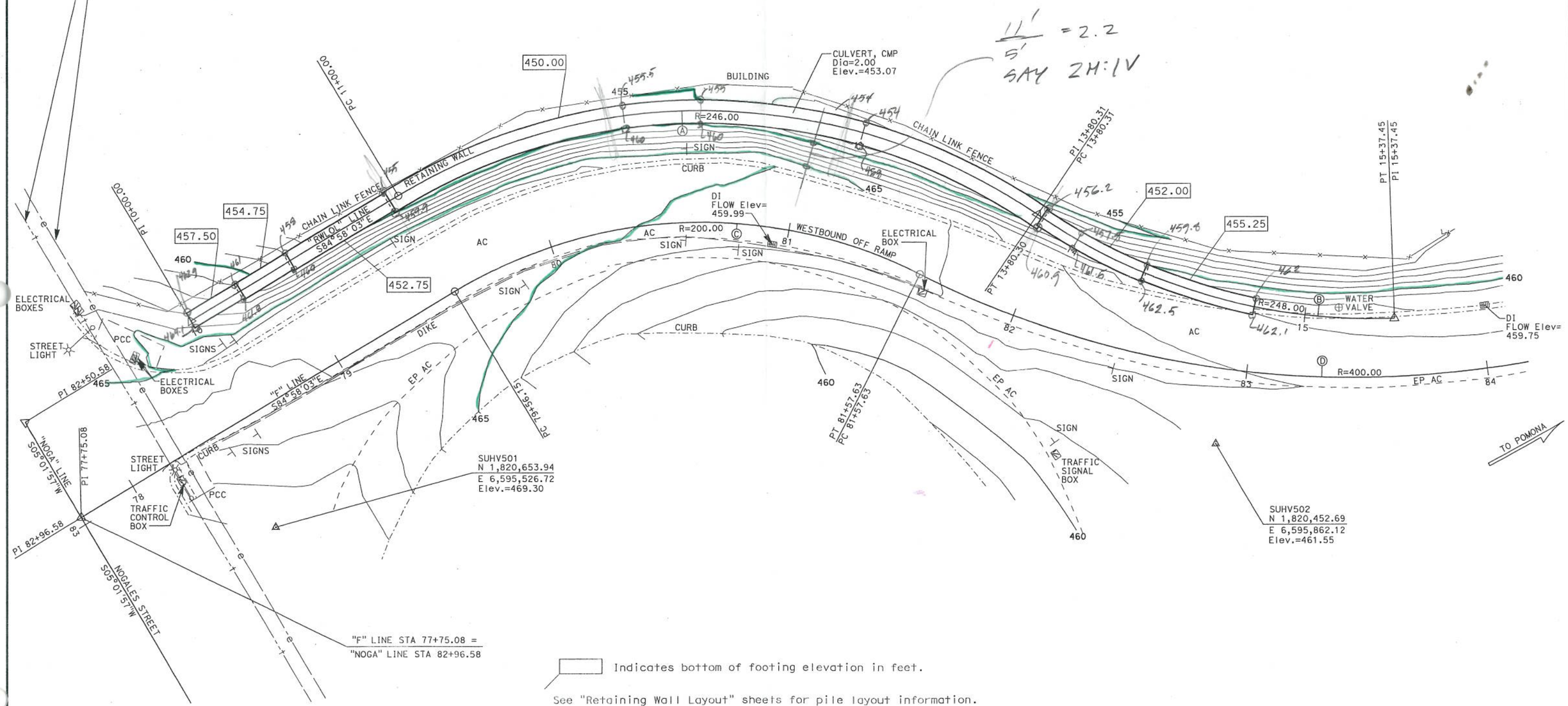

Indicates bottom of footing elevation in feet.

See "Retaining Wall Layout" sheets for pile layout information.

PRELIMINARY INVESTIGATION SECTION							
SCALE 1"=20'	VERT.DATUM NAVD88	PHOTOGRAMMETRY AS OF: X					
	HORZ.DATUM NAD83 (1991.35)	SURVEYED	BY DISTRICT	CHECKED	BY D.IVY	07/2012	
ALIGNMENT TIES Dist. Traverse Sheet		DRAFTED	BY T.ZOLNIKOV 07/2012	CHECKED	BY S.SOU	07/2012	

DESIGN	BY D. Menzmer	CHECKED W. Addlespurger
DETAILS	BY kc	CHECKED W. Addlespurger
QUANTITIES	BY X	CHECKED X

STATE OF CALIFORNIA DEPARTMENT OF TRANSPORTATION

DIVISION OF ENGINEERING SERVICES STRUCTURE DESIGN
DESIGN BRANCH 12

BRIDGE NO. 53E0216
POST MILE 20.60

RETAINING WALL NO. 1
FOUNDATION PLAN

STRUCTURES FOUNDATION PLAN SHEET (ENGLISH) (REV. 09-01-10)

ORIGINAL SCALE IN INCHES FOR REDUCED PLANS 0 1 2 3

UNIT: 07
PROJECT NUMBER & PHASE: 07000210791
CONTRACT NO.: 07-4H9001

DISREGARD PRINTS BEARING EARLIER REVISION DATES

REVISION DATES 07/09/12 9-5-12

SHEET 3 OF 9

FILE => plan sheets.dgn

DIST	COUNTY	ROUTE	POST MILES TOTAL PROJECT	SHEET No.	TOTAL SHEETS
07	LA	60			

REGISTERED CIVIL ENGINEER X DATE

PLANS APPROVAL DATE

REGISTERED PROFESSIONAL ENGINEER DOUGLAS C. MENZMER No. C 63498 Exp. 09-30-2014 CIVIL STATE OF CALIFORNIA

The State of California or its officers or agents shall not be responsible for the accuracy or completeness of electronic copies of this plan sheet.

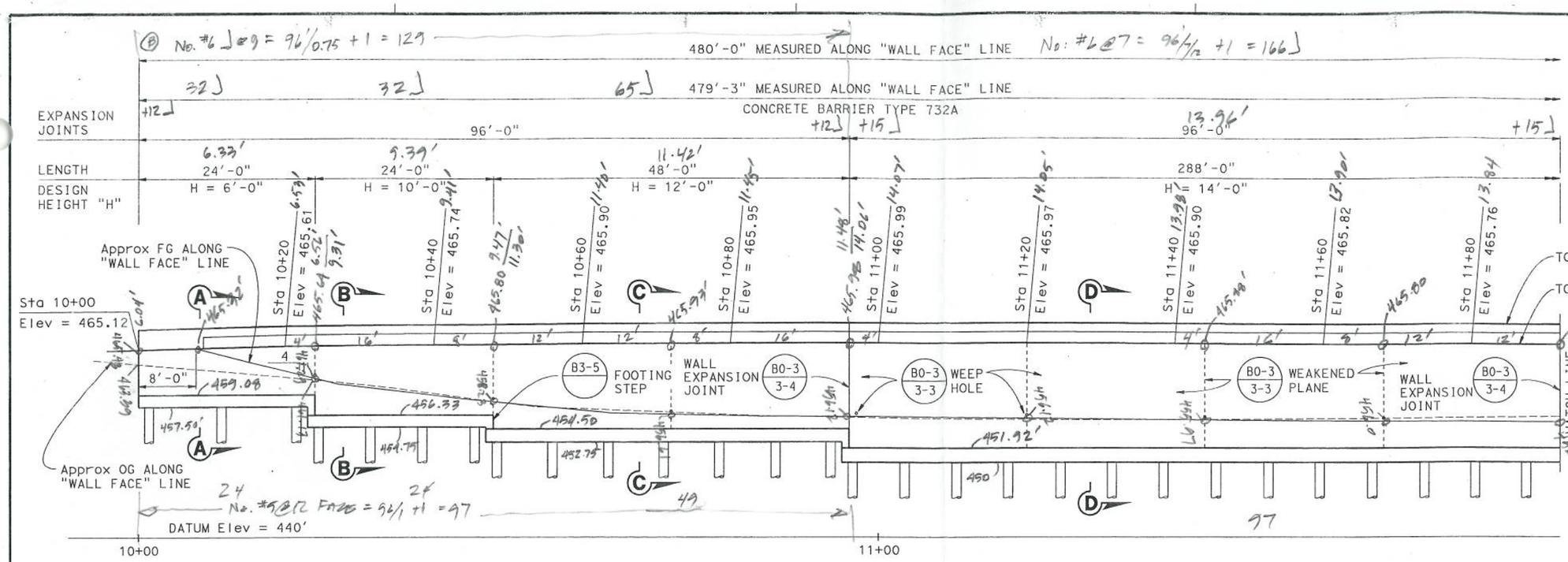

MIRRORED DEVELOPED ELEVATION

1/8" = 1'-0"

Note:

For Sections "A-A" and "B-B", see "Retaining Wall Details No. 1" sheet.

For Sections "C-C" and "D-D" see "Retaining Wall Details No. 2" sheet.

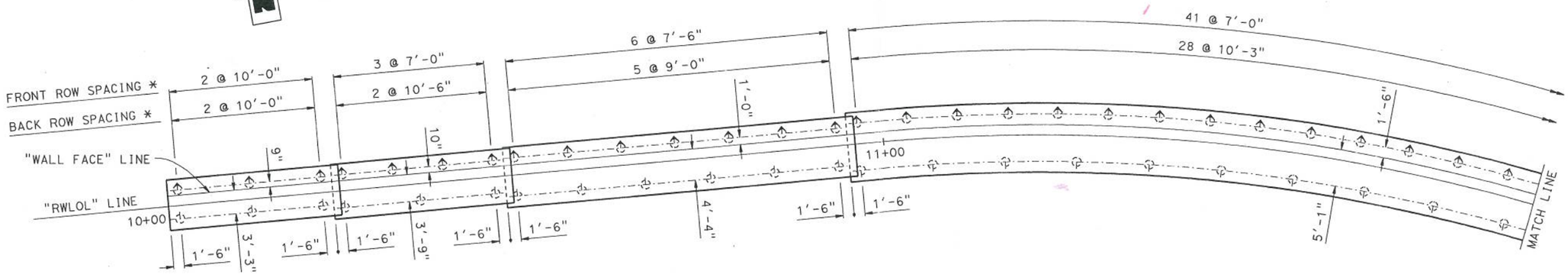

PLAN

1/8" = 1'-0"

Legend:

Indicates battered pile

Indicates vertical pile

* All spacing is measured along "Wall Face" Line.

DESIGN	BY D. Menzmer	CHECKED W. Addlespurger	
DETAILS	BY kc	CHECKED W. Addlespurger	
QUANTITIES	BY X	CHECKED X	

STATE OF CALIFORNIA DEPARTMENT OF TRANSPORTATION

DIVISION OF ENGINEERING SERVICES STRUCTURE DESIGN DESIGN BRANCH 12

BRIDGE NO. 53E0216

POST MILE 20.6

RETAINING WALL NO. 1

RETAINING WALL LAYOUT NO. 1

STRUCTURES DESIGN DETAIL SHEET (ENGLISH) (REV. 09-01-10)

ORIGINAL SCALE IN INCHES FOR REDUCED PLANS 0 1 2 3

UNIT: 07 PROJECT NUMBER & PHASE: 07000210791 CONTRACT NO.: 07-4H9001

DISREGARD PRINTS BEARING EARLIER REVISION DATES

REVISION DATES

SHEET 4 OF 9

FILE => plan sheets.dgn

DATE PLOTTED => 06-SEP-2012 TIME PLOTTED => 13:13

DIST	COUNTY	ROUTE	POST MILES TOTAL PROJECT	SHEET No.	TOTAL SHEETS
07	LA	60			

REGISTERED CIVIL ENGINEER X DATE

PLANS APPROVAL DATE

REGISTERED PROFESSIONAL ENGINEER DOUGLAS C. MENZMER No. C 63498 Exp. 09-30-2014 CIVIL STATE OF CALIFORNIA

The State of California or its officers or agents shall not be responsible for the accuracy or completeness of electronic copies of this plan sheet.

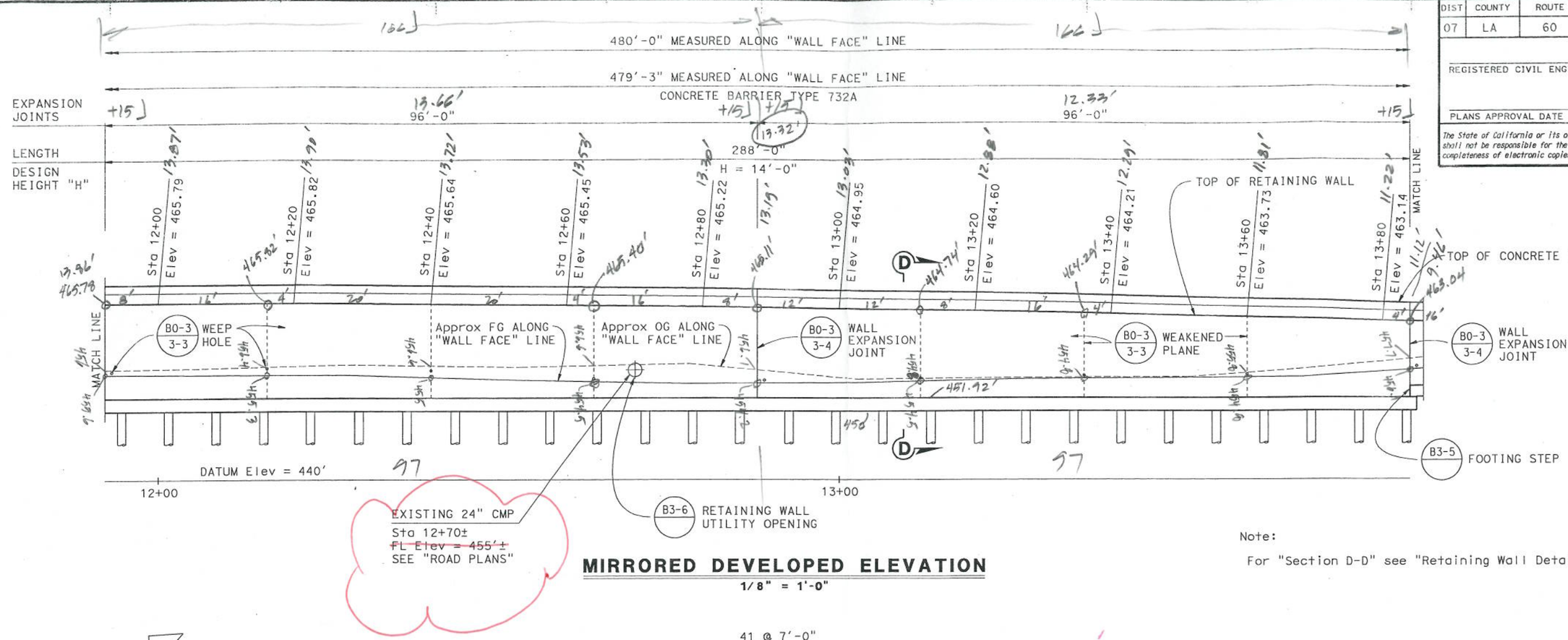

MIRRORED DEVELOPED ELEVATION

1/8" = 1'-0"

Note:

For "Section D-D" see "Retaining Wall Details No. 2" sheet.

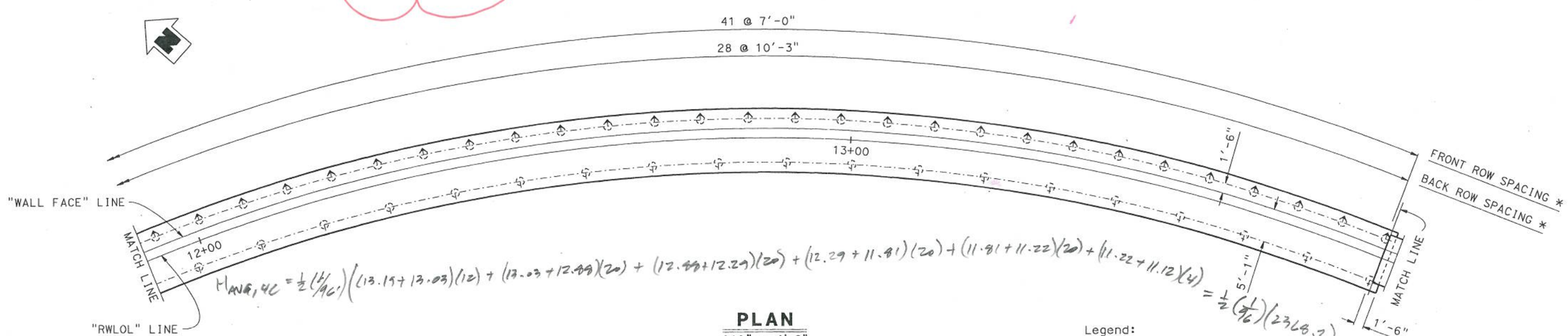

PLAN

1/8" = 1'-0"

Legend:

Indicates battered pile

Indicates vertical pile

* All spacing is measured along "Wall Face" Line.

$H_{AVG,4C} = \frac{1}{2}\left(\frac{1}{96'}\right)\left((13.19+13.03)(12) + (13.03+12.88)(20) + (12.88+12.29)(20) + (12.29+11.81)(20) + (11.81+11.22)(20) + (11.22+11.12)(4)\right) = \frac{1}{2}\left(\frac{1}{96'}\right)(2368.2) = 12.33'$

$H_{AVG,4B} = \frac{1}{2}\left(\frac{1}{96'}\right)\left((13.86+13.97)(8') + (13.97+13.90)(20) + (13.90+13.72)(20) + (13.72+13.53)(20) + (13.53+13.30)(20) + (13.30+13.10)(8)\right) = \frac{1}{2}(96')(2623.16) = 13.66'$

DESIGN	BY D. Menzmer	CHECKED W. Addlespurger	STATE OF CALIFORNIA DEPARTMENT OF TRANSPORTATION	DIVISION OF ENGINEERING SERVICES STRUCTURE DESIGN DESIGN BRANCH 12	BRIDGE NO. 53E0216
DETAILS	BY kc	CHECKED W. Addlespurger			POST MILE 20.6
QUANTITIES	BY X	CHECKED X			

RETAINING WALL NO. 1

RETAINING WALL LAYOUT NO. 2

STRUCTURES DESIGN DETAIL SHEET (ENGLISH) (REV. 09-01-10)

ORIGINAL SCALE IN INCHES FOR REDUCED PLANS 0 1 2 3

UNIT: 07 PROJECT NUMBER & PHASE: 07000210791 CONTRACT NO.: 07-4H9001

DISREGARD PRINTS BEARING EARLIER REVISION DATES

REVISION DATES 7-24-12 9-5-12

SHEET 5 OF 9

FILE => plan sheets.dgn

USERNAME => s126699 DATE PLOTTED => 06-SEP-2012 TIME PLOTTED => 13:15

DIST	COUNTY	ROUTE	POST MILES TOTAL PROJECT	SHEET No.	TOTAL SHEETS
07	LA	60			

REGISTERED CIVIL ENGINEER X DATE

PLANS APPROVAL DATE

REGISTERED PROFESSIONAL ENGINEER DOUGLAS C. MENZMER No. C 63498 Exp. 09-30-2014 CIVIL STATE OF CALIFORNIA

The State of California or its officers or agents shall not be responsible for the accuracy or completeness of electronic copies of this plan sheet.

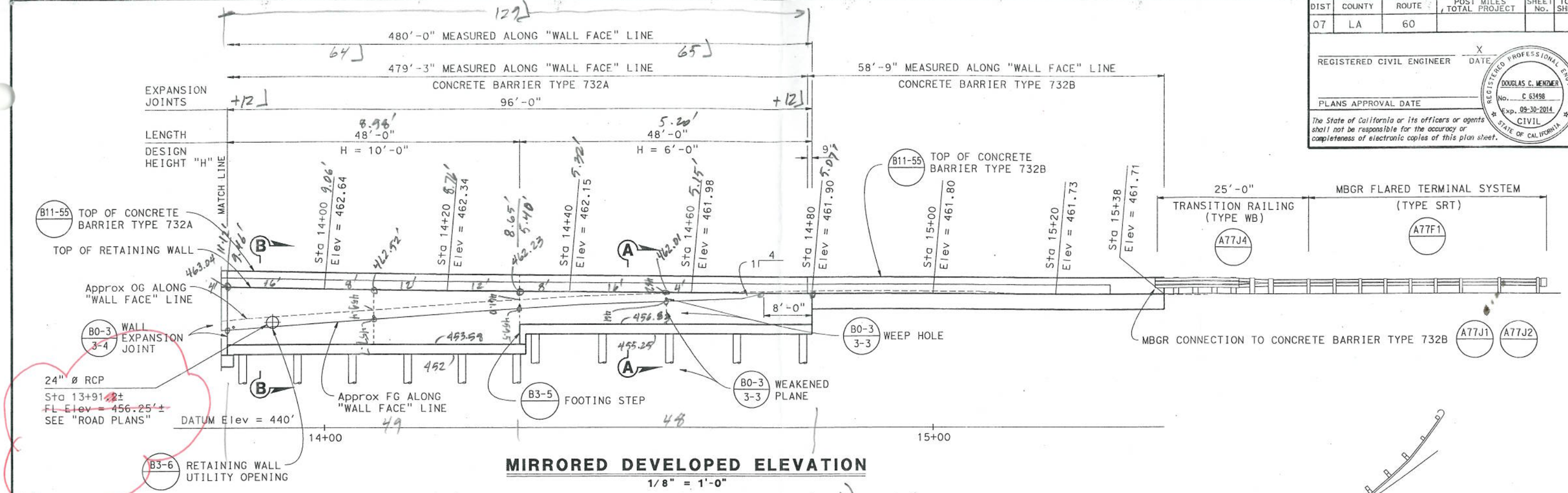

MIRRORED DEVELOPED ELEVATION

1/8" = 1'-0"

$$H_{AVG,A} = \frac{1}{2}\left(\frac{1}{48'}\right)\left((9.46+9.06)(16) + (9.06+8.76)(20) + (8.76+8.65)(12)\right) = 8.98'$$

$$H_{AVG,B} = \frac{1}{2}\left(\frac{1}{48'}\right)\left((5.40+5.32)(8) + (5.32+5.12)(20) + (5.15+5.07)(20)\right) = 5.20'$$

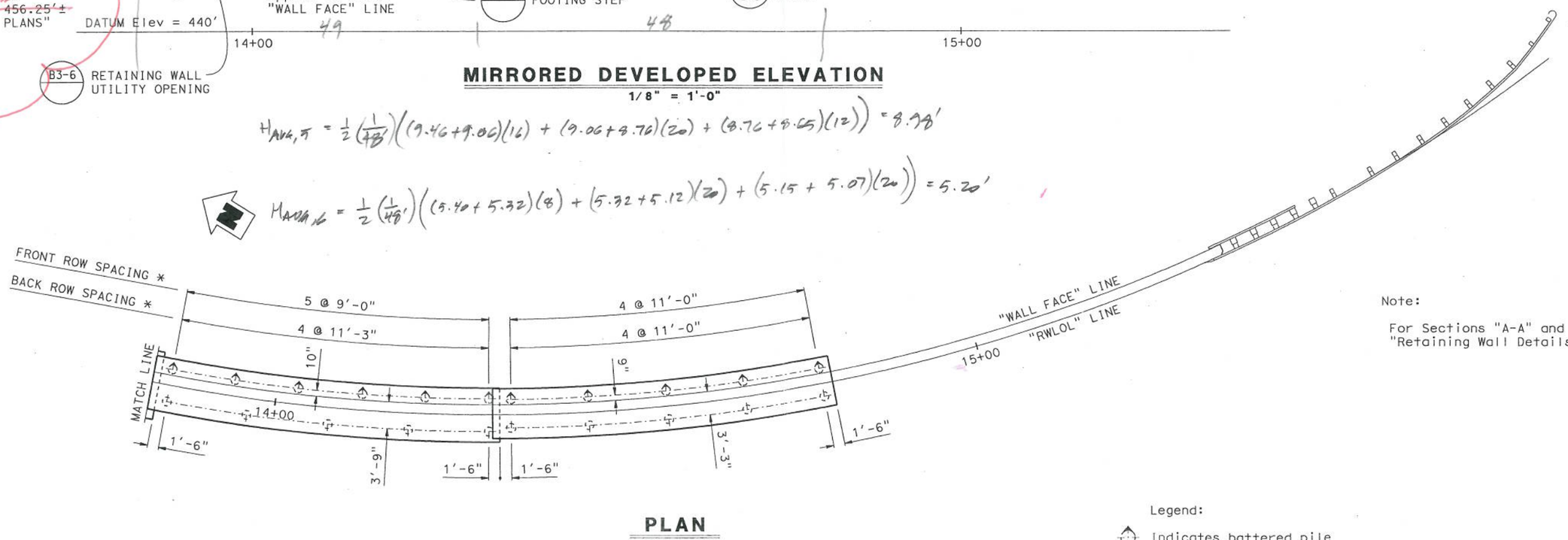

PLAN

1/8" = 1'-0"

Note:

For Sections "A-A" and "B-B", see "Retaining Wall Details No. 1" sheet.

Legend:

Indicates battered pile

Indicates vertical pile

* All spacing is measured along "Wall Face" Line.

	BY	CHECKED
DESIGN	D. Menzmer	W. Addlespurger
DETAILS	KC	W. Addlespurger
QUANTITIES	X	X

STATE OF CALIFORNIA DEPARTMENT OF TRANSPORTATION

DIVISION OF ENGINEERING SERVICES STRUCTURE DESIGN DESIGN BRANCH 12

BRIDGE NO. 53E0216 POST MILE 20.6

RETAINING WALL NO. 1

RETAINING WALL LAYOUT NO. 3

STRUCTURES DESIGN DETAIL SHEET (ENGLISH) (REV. 09-01-10)

ORIGINAL SCALE IN INCHES FOR REDUCED PLANS 0 1 2 3

UNIT: 07

PROJECT NUMBER & PHASE: 07000210791 CONTRACT NO.: 07-4H9001

DISREGARD PRINTS BEARING EARLIER REVISION DATES

REVISION DATES

SHEET 6 OF 9

FILE => plan sheets.dgn

USERNAME => s160189 DATE PLOTTED => 06-SEP-2012 TIME PLOTTED => 13:17