Dist	COUNTY	ROUTE	KILOMETER POST TOTAL PROJECT	SHEET No.	TOTAL SHEETS
07	LA	5	R72.7/R73.2	1	33

STATE OF CALIFORNIA

DEPARTMENT OF TRANSPORTATION

PROJECT PLANS FOR CONSTRUCTION ON

STATE HIGHWAY

IN LOS ANGELES COUNTY
IN LOS ANGELES
FROM 1.2 KM TO 1.7 KM NORTH OF
BALBOA BOULEVARD OVERCROSSING

TO BE SUPPLEMENTED BY STANDARD PLANS DATED JULY 2004

INDEX OF SHEETS

SHEET No.	DESCRIPTION
1	TITLE AND LOCATION MAP
2-3	LAYOUTS
4-5	CONSTRUCTION DETAILS
6-16	DRAINAGE PLANS, PROFILES, DETAILS, AND QUANTITIES
17-18	UTILITY PLANS
19	CONSTRUCTION AREA SIGNS
20	SUMMARY OF QUANTITIES
21	PLANT LIST
22-23	PLANTING PLANS
24	LANDSCAPE DETAILS
25-33	REVISED STANDARD PLANS

THE STANDARD PLANS LIST APPLICABLE TO THIS CONTRACT IS INCLUDED IN THE NOTICE TO BIDDERS AND SPECIAL PROVISIONS BOOK.

LOCATION MAP

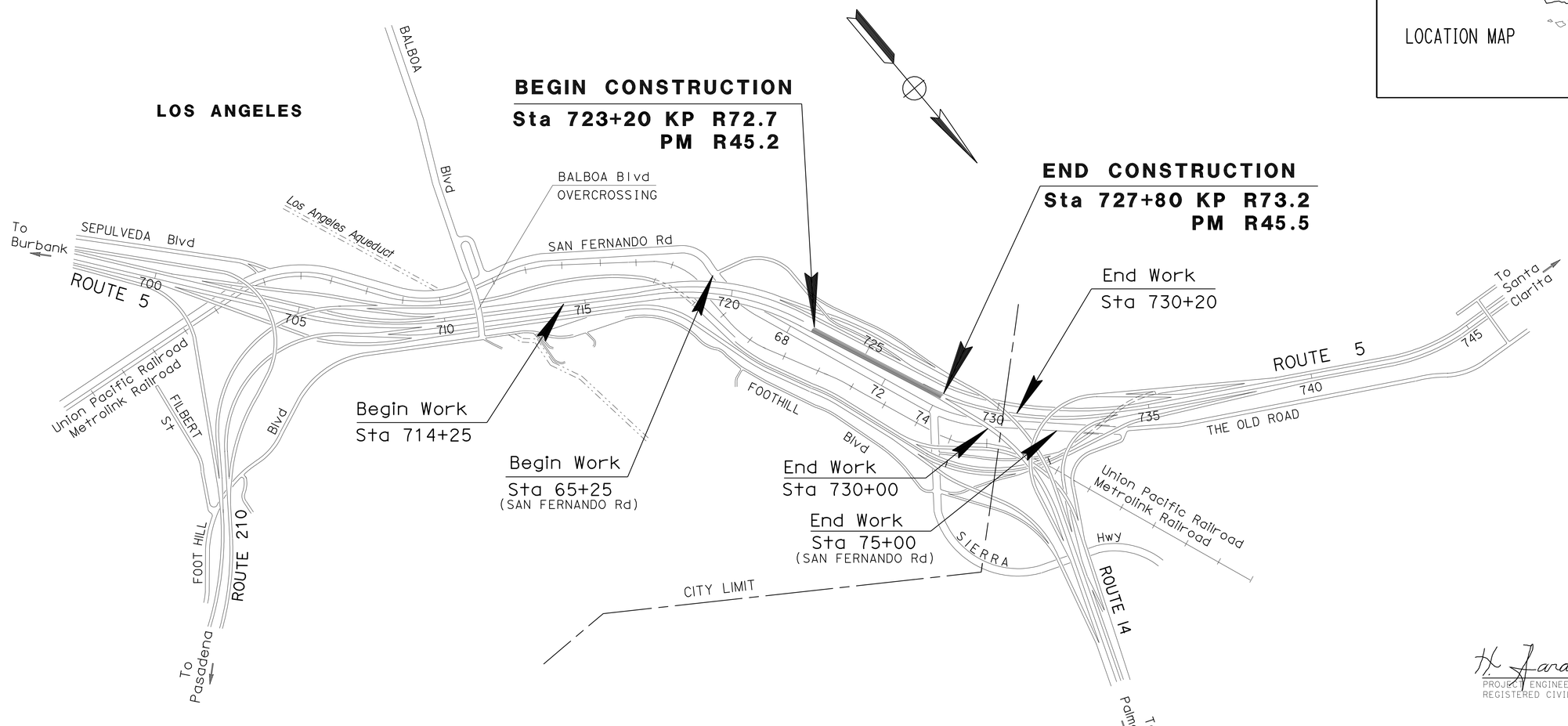

NO SCALE

THE CONTRACTOR SHALL POSSESS THE CLASS (OR CLASSES) OF LICENSE AS SPECIFIED IN THE "NOTICE TO BIDDERS."

PROJECT ENGINEER REGISTERED CIVIL ENGINEER — DATE 12-23-10

REGISTERED PROFESSIONAL ENGINEER — H. FARASAT — No. C 45672 — Exp. 12-31-12 — CIVIL — STATE OF CALIFORNIA

March 28, 2011
PLANS APPROVAL DATE

THE STATE OF CALIFORNIA OR ITS OFFICERS OR AGENTS SHALL NOT BE RESPONSIBLE FOR THE ACCURACY OR COMPLETENESS OF ELECTRONIC COPIES OF THIS PLAN SHEET.

CONTRACT No.	07-4H2404
PROJECT ID	0700000820

PROJECT MANAGER: ERIC WANG
DESIGN ENGINEER: HOSS FARASAT

LAST REVISION 00-00-00 — DATE PLOTTED => 23-MAR-2011 — TIME PLOTTED => 12:20

NOTE:

1. FOR ACCURATE RIGHT OF WAY DATA, CONTACT RIGHT OF WAY ENGINEERING AT THE DISTRICT OFFICE.

CURVE DATA				
No.	R	Δ	T	L
1	914.400	33°45'43"	277.490	538.820

Caltrans Metric

DIST	COUNTY	ROUTE	KILOMETER POST TOTAL PROJECT	SHEET No.	TOTAL SHEETS
07	LA	5	R72.7/R73.2	2	33

H. Farasat 12-23-10
REGISTERED CIVIL ENGINEER

3-28-11
PLANS APPROVAL DATE

REGISTERED PROFESSIONAL ENGINEER H. FARASAT No. 45672 Exp 12-31-12 CIVIL STATE OF CALIFORNIA

The State of California or its officers or agents shall not be responsible for the accuracy or completeness of electronic copies of this plan sheet.

Caltrans now has a web site! To get to the web site, go to: http://www.dot.ca.gov

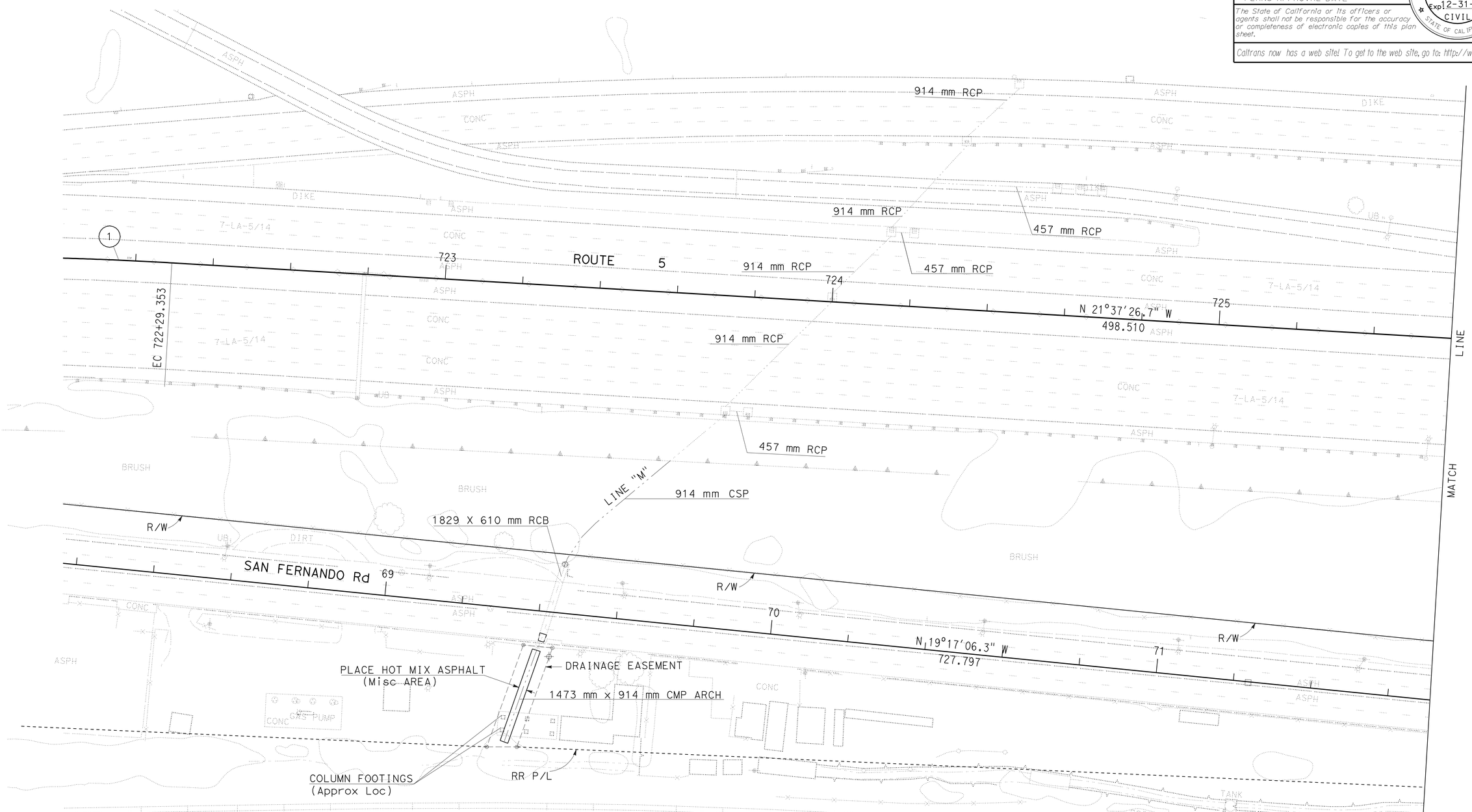

ALL DIMENSIONS ARE IN METERS UNLESS OTHERWISE SHOWN

LAYOUT

SCALE 1:500

L-1

	DATE	REVISED BY	DATE REVISED
CALCULATED/DESIGNED BY	HOSS FARASAT		
CHECKED BY	MANSOOR KHAN		

PROJECT ENGINEER HOSS FARASAT

STATE OF CALIFORNIA - DEPARTMENT OF TRANSPORTATION
Caltrans OFFICE OF DESIGN B

LAST REVISION 00-00-00 | DATE PLOTTED => 23-MAR-2011 | TIME PLOTTED => 12:20

FOR REDUCED PLANS ORIGINAL SCALE IS IN MILLIMETERS 0 20 40 60 80

USERNAME => s126987
DGN FILE => 74h240ea01.dgn

UNIT 1806 | PROJECT NUMBER & PHASE 07000008201

DIST	COUNTY	ROUTE	KILOMETER POST TOTAL PROJECT	SHEET No.	TOTAL SHEETS
07	LA	5	R72.7/R73.2	3	33

REGISTERED CIVIL ENGINEER 12-23-10

3-28-11
PLANS APPROVAL DATE

REGISTERED PROFESSIONAL ENGINEER H. FARASAT No. 45672 Exp 12-31-12 CIVIL STATE OF CALIFORNIA

The State of California or its officers or agents shall not be responsible for the accuracy or completeness of electronic copies of this plan sheet.

Caltrans now has a web site! To get to the web site, go to: http://www.dot.ca.gov

Caltrans Metric

NOTE:

1. FOR ACCURATE RIGHT OF WAY DATA, CONTACT RIGHT OF WAY ENGINEERING AT THE DISTRICT OFFICE.

CURVE DATA				
No.	R	Δ	T	L
1	914.400	29°24'32"	239.970	469.350
2	457.202	26°51'42.3"	109.181	214.348

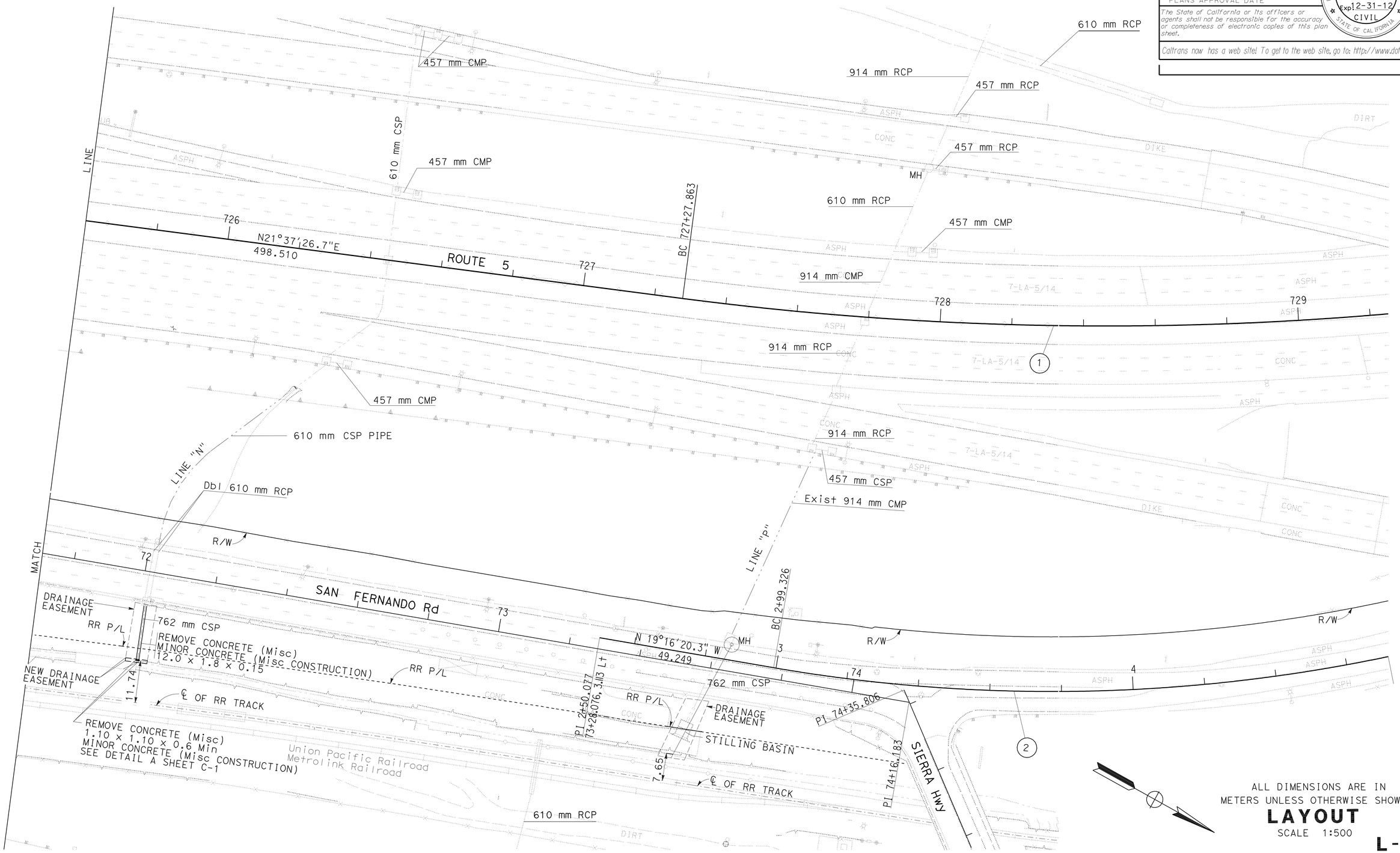

ALL DIMENSIONS ARE IN METERS UNLESS OTHERWISE SHOWN

LAYOUT

SCALE 1:500

L-2

STATE OF CALIFORNIA - DEPARTMENT OF TRANSPORTATION

Caltrans **OFFICE OF DESIGN B**

PROJECT ENGINEER HOSS FARASAT

CALCULATED/DESIGNED BY HOSS FARASAT | DATE | REVISED BY

CHECKED BY MANSOOR KHAN | DATE REVISED

LAST REVISION 00-00-00 | DATE PLOTTED => 23-MAR-2011 | TIME PLOTTED => 12:21

FOR REDUCED PLANS ORIGINAL SCALE IS IN MILLIMETERS 0 20 40 60 80

USERNAME => s126987
DGN FILE => 74h240ea02.dgn

UNIT 1806 | PROJECT NUMBER & PHASE 07000008201

DIST	COUNTY	ROUTE	KILOMETER POST TOTAL PROJECT	SHEET No.	TOTAL SHEETS
07	LA	5	R72.7/R73.2	4	33

H. Farasat 12-23-10
REGISTERED CIVIL ENGINEER

3-28-11
PLANS APPROVAL DATE

REGISTERED PROFESSIONAL ENGINEER
H. FARASAT
No. 45672
Exp. 12-31-12
CIVIL
STATE OF CALIFORNIA

The State of California or its officers or agents shall not be responsible for the accuracy or completeness of electronic copies of this plan sheet.

Caltrans now has a web site! To get to the web site, go to: http://www.dot.ca.gov

Caltrans Metric

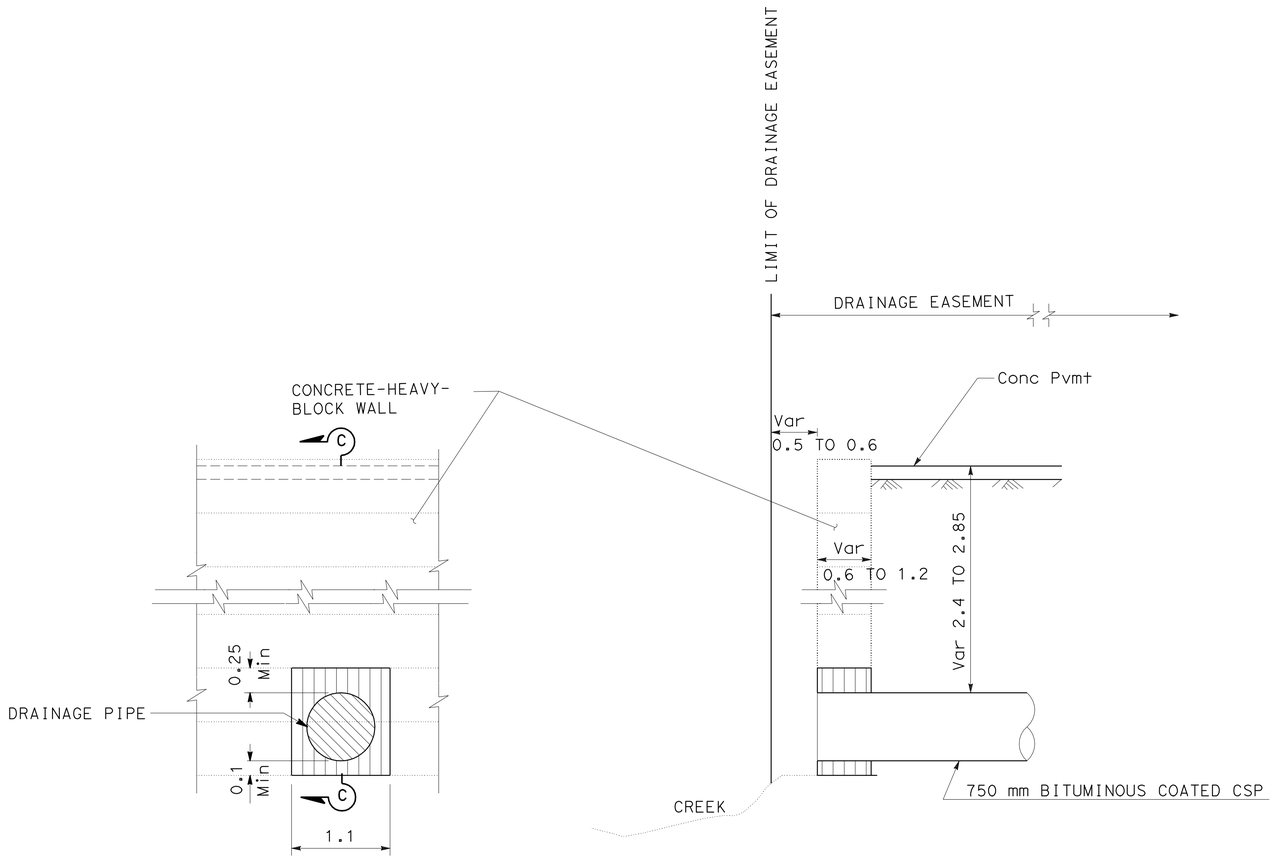

DETAIL A
(ELEVATION)

SECTION C-C

LEGEND:

REMOVE CONCRETE (Misc)

REMOVE CONCRETE (Misc) MINOR CONCRETE-(Misc-CONSTRUCTION)

ALL DIMENSIONS ARE IN METERS UNLESS OTHERWISE SHOWN

CONSTRUCTION DETAILS

NO SCALE

C-1

STATE OF CALIFORNIA - DEPARTMENT OF TRANSPORTATION
Caltrans OFFICE OF DESIGN B

PROJECT ENGINEER: HOSS FARASAT

CALCULATED/DESIGNED BY: HOSS FARASAT
CHECKED BY: MANSOOR KHAN
DATE
REVISED BY
DATE REVISED

LAST REVISION 00-00-00
DATE PLOTTED => 23-MAR-2011
TIME PLOTTED => 12:21

FOR REDUCED PLANS ORIGINAL SCALE IS IN MILLIMETERS 0 20 40 60 80

USERNAME => s126987
DGN FILE => 74h240g01.dgn

UNIT 1806 | PROJECT NUMBER & PHASE 07000008201

DIST	COUNTY	ROUTE	KILOMETER POST TOTAL PROJECT	SHEET No.	TOTAL SHEETS
07	LA	5	R72.7/R73.2	5	33

REGISTERED CIVIL ENGINEER 12-23-10

3-28-11
PLANS APPROVAL DATE

REGISTERED PROFESSIONAL ENGINEER H. FARASAT No. 45672 Exp 12-31-12 CIVIL STATE OF CALIFORNIA

The State of California or its officers or agents shall not be responsible for the accuracy or completeness of electronic copies of this plan sheet.

Caltrans now has a web site! To get to the web site, go to: http://www.dot.ca.gov

Caltrans Metric

GRAVEL BAG BERM (TYPE 3A) SPACING TABLE

SLOPE OF ROADWAY (PERCENT)	1 TO 3.9	4 TO 5.9	6 TO 7.9	8 TO 10	10+
INTERVAL BETWEEN BERM	30.0	22.5	15.0	7.5	4.0

FOR SLOPE OF LESS THAN 1%, INSTALL BARRIERS ONLY IF EROSION/SEDIMENT IS PREVALENT.

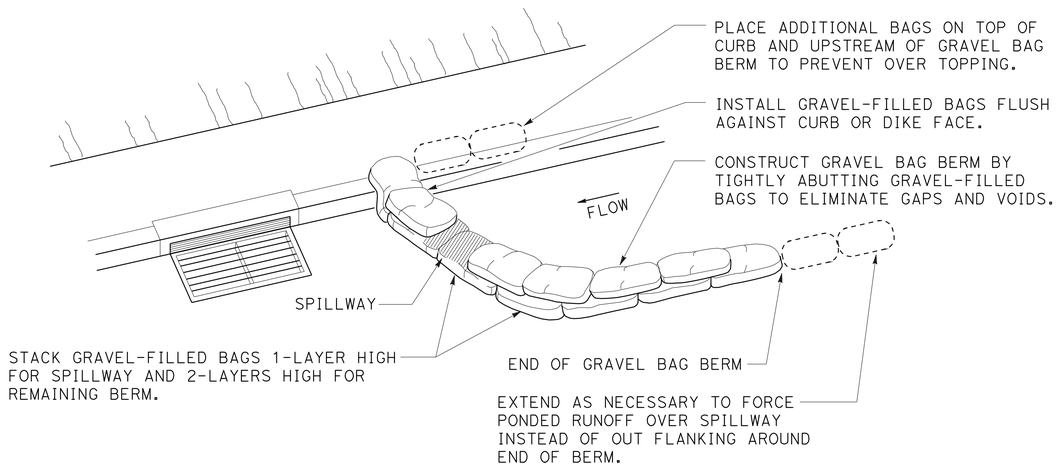

PERSPECTIVE

NOTES:

1. PLACE SAFETY CONES ADJACENT TO DRAINAGE INLET PROTECTION.
2. DIMENSIONS MAY VARY TO FIT FIELD CONDITIONS.
3. INSTALL A MINIMUM OF 3 GRAVEL BAG BERMS UPSTREAM OF EACH DRAINAGE INLET TO BE PROTECTED.

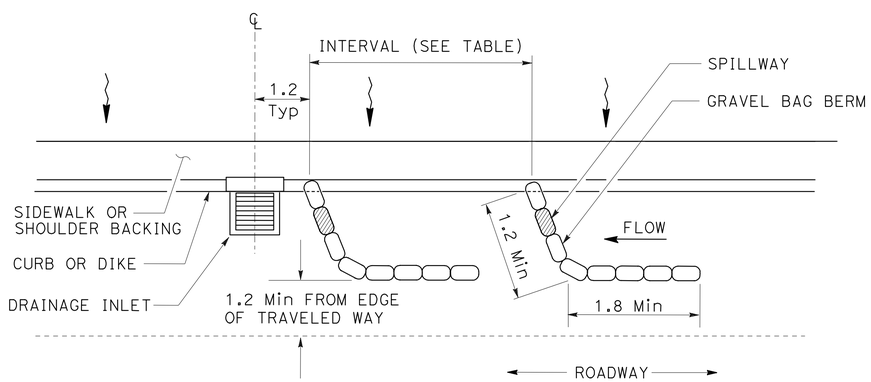

PLAN

TEMPORARY DRAINAGE INLET PROTECTION (TYPE 3A) (GRAVEL BAG BERM)

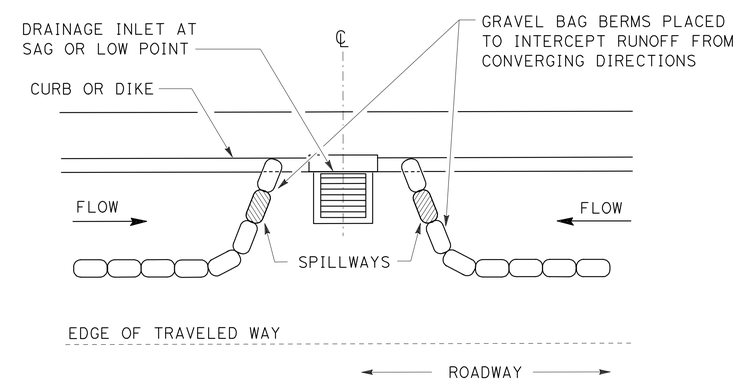

PLAN

CONFIGURATION FOR SAG POINT INLET (GRAVEL BAG BERM)

ALL DIMENSIONS ARE IN METERS UNLESS OTHERWISE SHOWN

CONSTRUCTION DETAILS

NO SCALE

C-2

STATE OF CALIFORNIA - DEPARTMENT OF TRANSPORTATION
Caltrans OFFICE OF DESIGN B

PROJECT ENGINEER HOSS FARASAT

CALCULATED/DESIGNED BY HOSS FARASAT
CHECKED BY MANSOOR KHAN
DATE
REVISED BY
DATE REVISED

LAST REVISION 00-00-00
DATE PLOTTED => 23-MAR-2011
TIME PLOTTED => 12:21

FOR REDUCED PLANS ORIGINAL SCALE IS IN MILLIMETERS 0 20 40 60 80

USERNAME => s126987
DGN FILE => 74h240g02.dgn

UNIT 1806 PROJECT NUMBER & PHASE 07000008201

NOTE:

1. FOR ACCURATE RIGHT OF WAY DATA, CONTACT RIGHT OF WAY ENGINEERING AT THE DISTRICT OFFICE.

LEGENG:

- (No.) DRAINAGE SYSTEM NUMBER
- (X) DRAINAGE UNIT
- DIRECTION OF DITCH FLOW

ABBREVIATION:

CB CATCH BASIN

CURVE DATA				
No.	R	△	T	L
1	27.430	30°45'37"	7.550	14.730

DIST	COUNTY	ROUTE	KILOMETER POST TOTAL PROJECT	SHEET No.	TOTAL SHEETS
07	LA	5	R72.7/R73.2	6	33

Timothy Tieu 12-23-10
REGISTERED CIVIL ENGINEER

3-28-11
PLANS APPROVAL DATE

REGISTERED PROFESSIONAL ENGINEER T. TIEU No. C56970 Exp 06-30-11 CIVIL STATE OF CALIFORNIA

The State of California or its officers or agents shall not be responsible for the accuracy or completeness of electronic copies of this plan sheet.

Caltrans now has a web site! To get to the web site, go to: http://www.dot.ca.gov

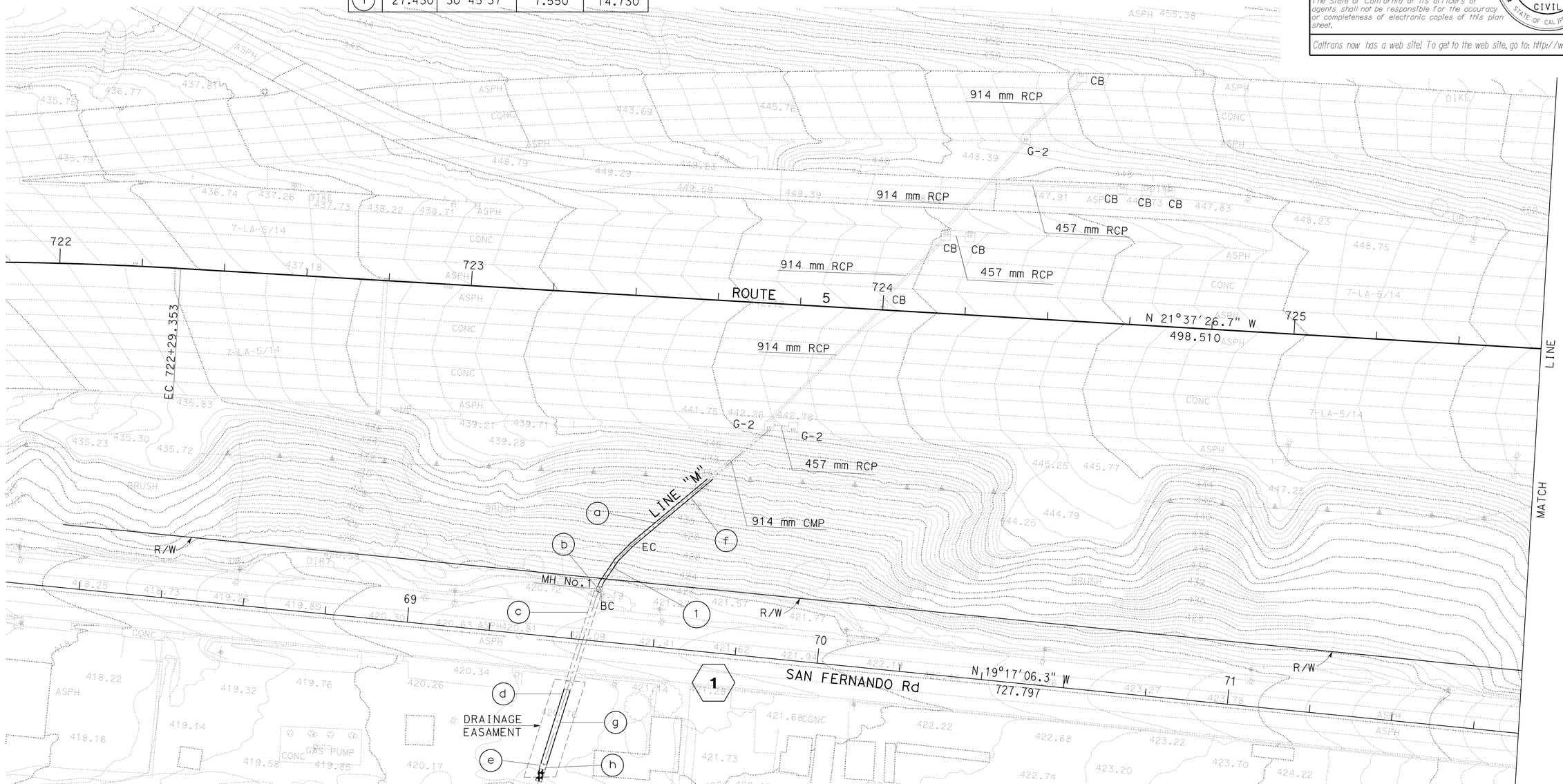

ALL DIMENSIONS ARE IN METERS UNLESS OTHERWISE SHOWN

DRAINAGE PLAN

SCALE 1:500

D-1

THIS PLAN ACCURATE FOR DRAINAGE WORK ONLY

STATE OF CALIFORNIA - DEPARTMENT OF TRANSPORTATION

Caltrans HYDRAULICS

PROJECT ENGINEER TIMOTHY TIEU

CALCULATED/DESIGNED BY STEWART FONG

CHECKED BY TIMOTHY TIEU

REVISED BY DATE

DATE REVISED

FOR REDUCED PLANS ORIGINAL SCALE IS IN MILLIMETERS 0 20 40 60 80

USERNAME => s126987
DGN FILE => 74h240i01.dgn

UNIT 1836 | PROJECT NUMBER & PHASE 07000008201

LAST REVISION 01-15-02 | DATE PLOTTED => 23-MAR-2011 TIME PLOTTED => 12:21

NOTE:

1. FOR ACCURATE RIGHT OF WAY DATA, CONTACT RIGHT OF WAY ENGINEERING AT THE DISTRICT OFFICE.

DIST	COUNTY	ROUTE	KILOMETER POST TOTAL PROJECT	SHEET No.	TOTAL SHEETS
07	LA	5	R72.7/R73.2	7	33

Timothy Tieu 12-23-10
REGISTERED CIVIL ENGINEER

3-28-11
PLANS APPROVAL DATE

REGISTERED PROFESSIONAL ENGINEER TIM TIEU No. C56970 Exp. 06-30-11 CIVIL STATE OF CALIFORNIA

The State of California or its officers or agents shall not be responsible for the accuracy or completeness of electronic copies of this plan sheet.

To get to the web site, go to: http://www.dot.ca.gov

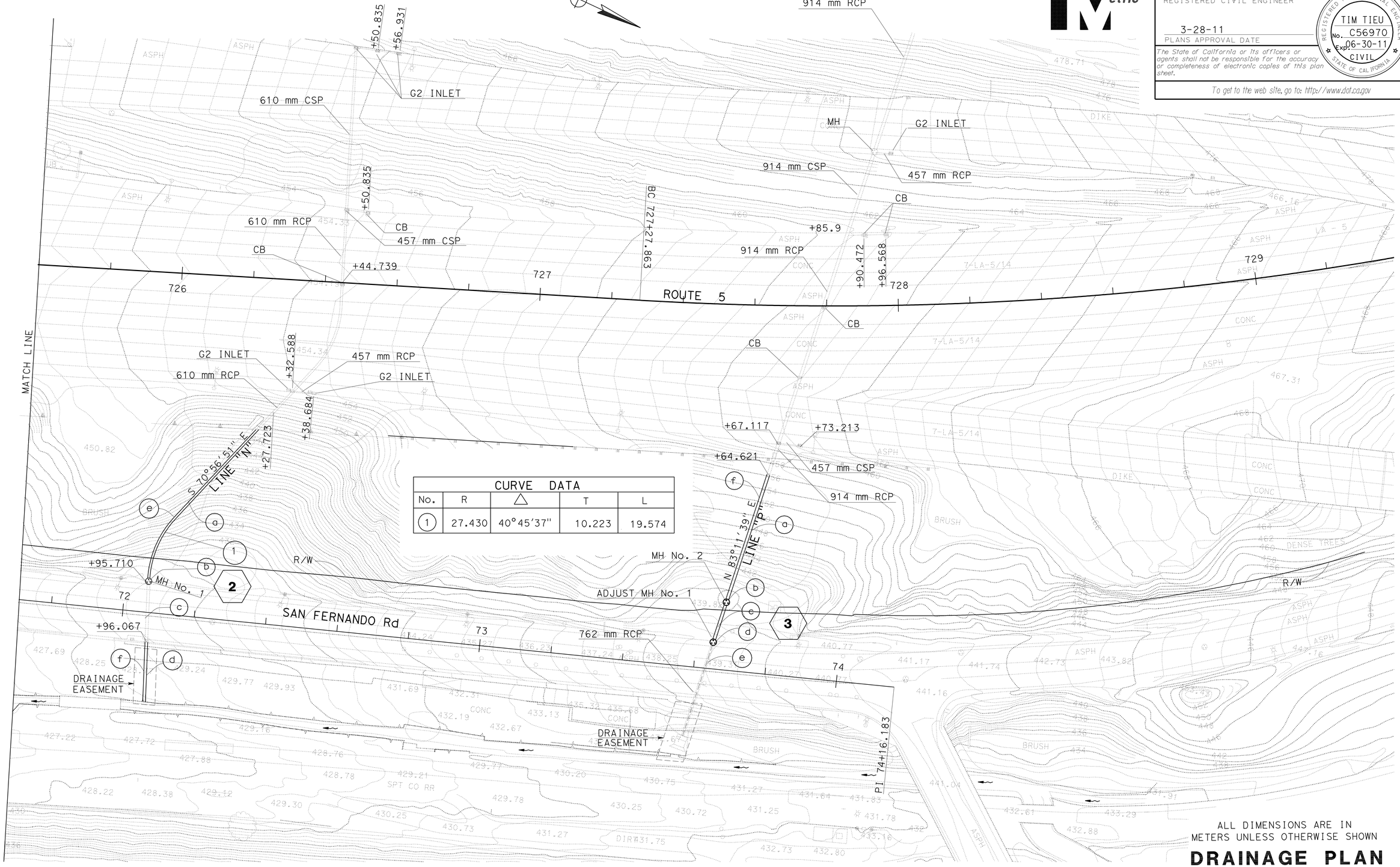

CURVE DATA				
No.	R	△	T	L
1	27.430	40°45'37"	10.223	19.574

ALL DIMENSIONS ARE IN METERS UNLESS OTHERWISE SHOWN

THIS PLAN ACCURATE FOR DRAINAGE WORK ONLY

DRAINAGE PLAN

SCALE 1:500

D-2

DATE	REVISED BY	DATE REVISED

CALCULATED/DESIGNED BY: STEWART FONG
CHECKED BY: TIMOTHY TIEU

PROJECT ENGINEER: TIMOTHY TIEU

STATE OF CALIFORNIA - DEPARTMENT OF TRANSPORTATION
Caltrans
HYDRAULICS

LAST REVISION 01-18-02
DATE PLOTTED => 23-MAR-2011
TIME PLOTTED => 12:21

FOR REDUCED PLANS ORIGINAL SCALE IS IN MILLIMETERS 0 20 40 60 80

USERNAME => s126987
DGN FILE => 74h240i02.dgn

UNIT 1836 | PROJECT NUMBER & PHASE 07000008201

DIST	COUNTY	ROUTE	KILOMETER POST TOTAL PROJECT	SHEET No.	TOTAL SHEETS
07	LA	5	R72.7/R73.2	8	33

Timothy Tieu 12-23-10
REGISTERED CIVIL ENGINEER

3-28-11
PLANS APPROVAL DATE

REGISTERED PROFESSIONAL ENGINEER
TIM TIEU
No. C56970
Exp. 06-30-11
CIVIL
STATE OF CALIFORNIA

The State of California or its officers or agents shall not be responsible for the accuracy or completeness of electronic copies of this plan sheet.

Caltrans now has a web site! To get to the web site, go to: http://www.dot.ca.gov

Caltrans Metric

NOTES:

1. FOR ACCURATE RIGHT OF WAY DATA, CONTACT RIGHT OF WAY ENGINEERING AT THE DISTRICT OFFICE.
2. CONTRACTOR SHALL VERIFY ELEVATIONS AND LOCATION OF EXISTING DRAINAGE SYSTEMS BEFORE COMMENCEMENT OF WORK.

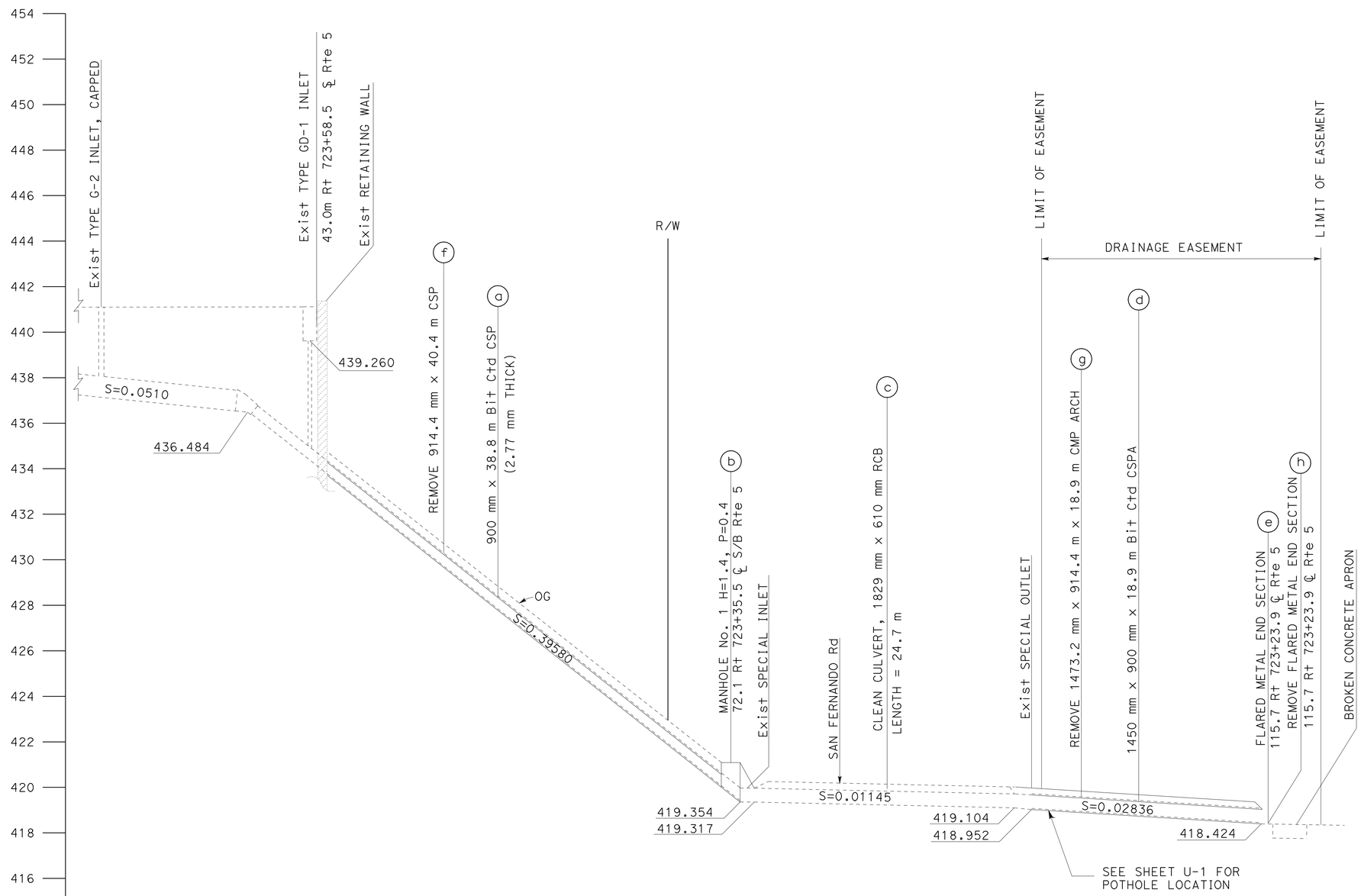

DRAINAGE SYSTEM No. 1

ALL DIMENSIONS ARE IN METERS UNLESS OTHERWISE SHOWN

DRAINAGE PROFILES

SCALE Horiz 1:200 Vert 1:100

DP-1

STATE OF CALIFORNIA - DEPARTMENT OF TRANSPORTATION
Caltrans HYDRAULICS

PROJECT ENGINEER TIMOTHY TIEU

CALCULATED/DESIGNED BY STEWART FONG DATE
CHECKED BY TIMOTHY TIEU
REVISED BY
DATE REVISED

LAST REVISION 01-23-02
DATE PLOTTED => 23-MAR-2011
TIME PLOTTED => 12:21

FOR REDUCED PLANS ORIGINAL SCALE IS IN MILLIMETERS 0 20 40 60 80

USERNAME => s126987
DGN FILE => 74h240i03.dgn

UNIT 1836 PROJECT NUMBER & PHASE 07000008201

DIST	COUNTY	ROUTE	KILOMETER POST TOTAL PROJECT	SHEET No.	TOTAL SHEETS
07	LA	5	R72.7/R73.2	9	33

Timothy Tieu 12-23-10
REGISTERED CIVIL ENGINEER

3-28-11
PLANS APPROVAL DATE

REGISTERED PROFESSIONAL ENGINEER
TIM TIEU
No. C56970
Exp. 6-30-11
CIVIL
STATE OF CALIFORNIA

The State of California or its officers or agents shall not be responsible for the accuracy or completeness of electronic copies of this plan sheet.

Caltrans now has a web site! To get to the web site, go to: http://www.dot.ca.gov

Caltrans Metric

NOTES:

1. FOR ACCURATE RIGHT OF WAY DATA, CONTACT RIGHT OF WAY ENGINEERING AT THE DISTRICT OFFICE.
2. CONTRACTOR SHALL VERIFY ELEVATIONS AND LOCATION OF EXISTING DRAINAGE SYSTEMS BEFORE COMMENCEMENT OF WORK.

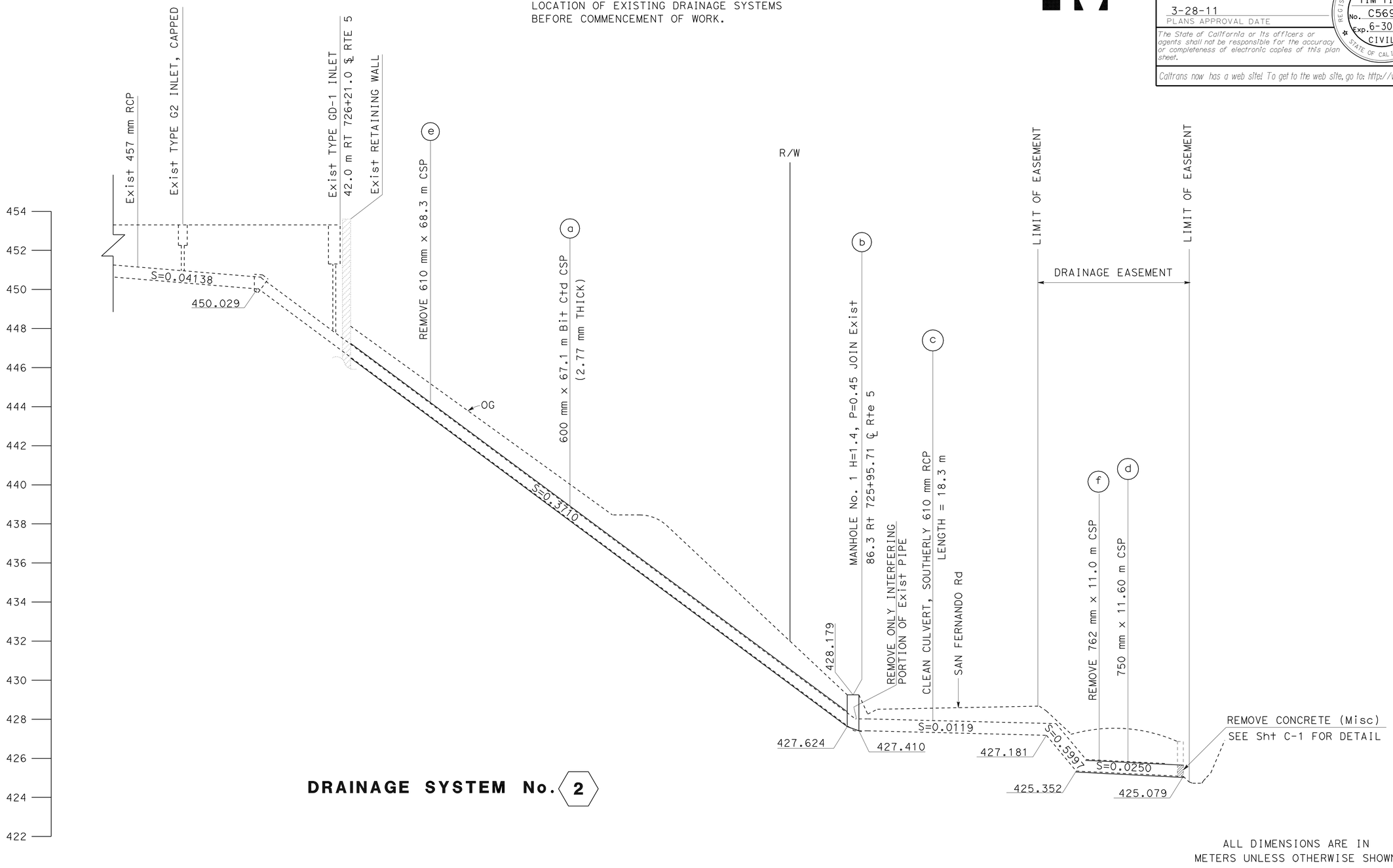

DRAINAGE SYSTEM No. 2

ALL DIMENSIONS ARE IN METERS UNLESS OTHERWISE SHOWN

DRAINAGE PROFILES

SCALE Horiz 1:200
Vert 1:100

DP-2

STATE OF CALIFORNIA - DEPARTMENT OF TRANSPORTATION		PROJECT ENGINEER	CALCULATED/DESIGNED BY	STEWART FONG	DATE	REVISED BY
Caltrans	HYDRAULICS	TIMOTHY TIEU	CHECKED BY	TIMOTHY TIEU		DATE REVISED

LAST REVISION 01-23-02 | DATE PLOTTED => 23-MAR-2011 TIME PLOTTED => 12:21

DIST	COUNTY	ROUTE	KILOMETER POST TOTAL PROJECT	SHEET No.	TOTAL SHEETS
07	LA	5	R72.7/R73.2	10	33

Timothy Tieu 12-23-10
REGISTERED CIVIL ENGINEER

3-28-11
PLANS APPROVAL DATE

REGISTERED PROFESSIONAL ENGINEER TIM TIEU No. C56970 Exp. 06-30-11 CIVIL STATE OF CALIFORNIA

The State of California or its officers or agents shall not be responsible for the accuracy or completeness of electronic copies of this plan sheet.

Caltrans now has a web site! To get to the web site, go to: http://www.dot.ca.gov

Caltrans Metric

NOTES:

1. FOR ACCURATE RIGHT OF WAY DATA, CONTACT RIGHT OF WAY ENGINEERING AT THE DISTRICT OFFICE.
2. CONTRACTOR SHALL VERIFY ELEVATIONS AND LOCATION OF EXISTING DRAINAGE SYSTEMS BEFORE COMMENCEMENT OF WORK.

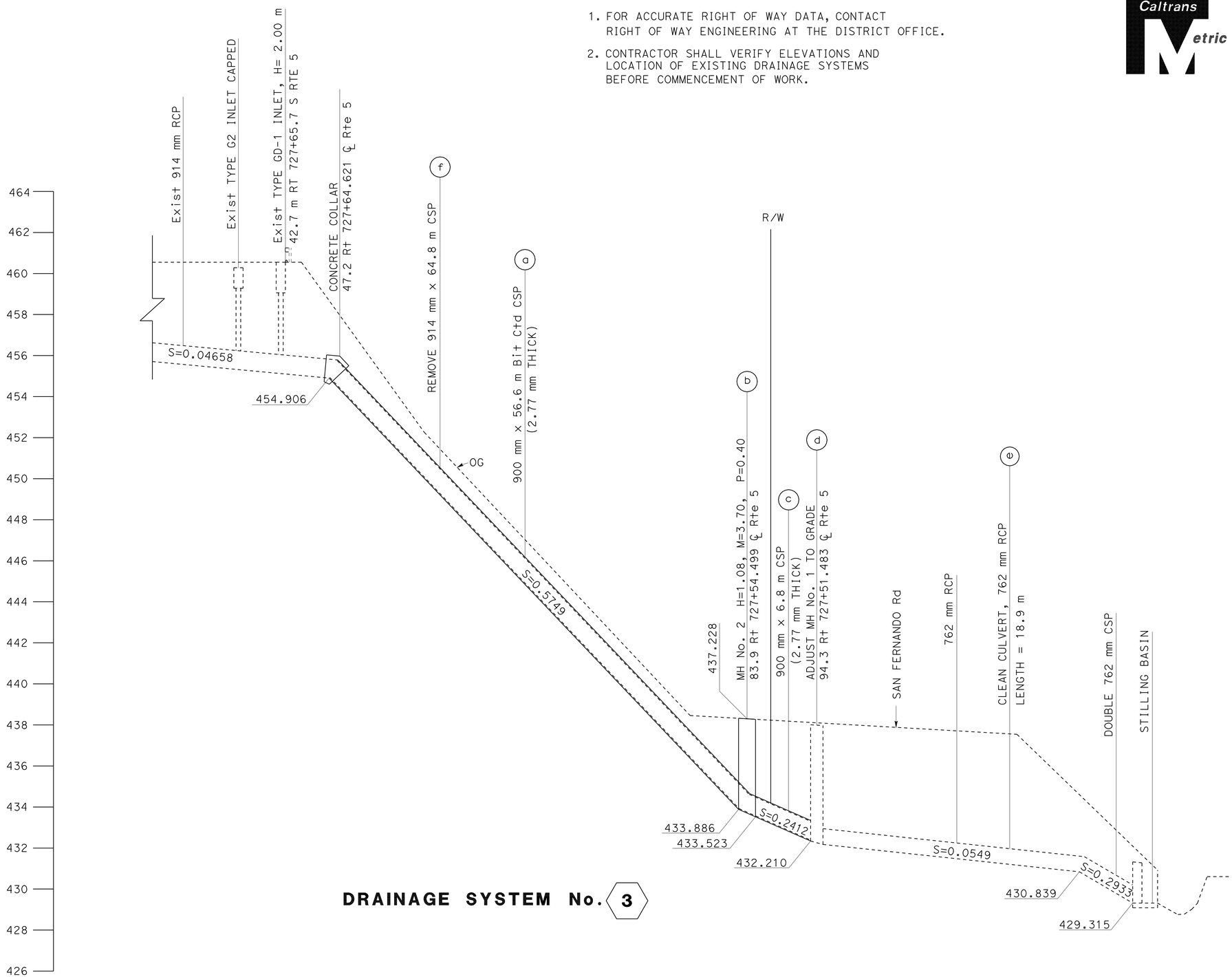

DRAINAGE SYSTEM No. 3

ALL DIMENSIONS ARE IN METERS UNLESS OTHERWISE SHOWN

DRAINAGE PROFILES

SCALE Horiz 1:200 Vert 1:100

DP-3

STATE OF CALIFORNIA - DEPARTMENT OF TRANSPORTATION
Caltrans **HYDRAULICS**

PROJECT ENGINEER TIMOTHY TIEU

CALCULATED/DESIGNED BY STEWART FONG
CHECKED BY TIMOTHY TIEU

DATE | REVISED BY
DATE REVISED

LAST REVISION 01-15-02
DATE PLOTTED => 23-MAR-2011
TIME PLOTTED => 12:22

DIST	COUNTY	ROUTE	KILOMETER POST TOTAL PROJECT	SHEET No.	TOTAL SHEETS
07	LA	5	R72.7/R73.2	11	33

Caltrans Metric

Timothy Tieu 12-23-10
REGISTERED CIVIL ENGINEER

3-28-11
PLANS APPROVAL DATE

REGISTERED PROFESSIONAL ENGINEER TIM TIEU No. C56970 Exp. 6-30-11 CIVIL STATE OF CALIFORNIA

The State of California or its officers or agents shall not be responsible for the accuracy or completeness of electronic copies of this plan sheet.

Caltrans now has a web site! To get to the web site, go to: http://www.dot.ca.gov

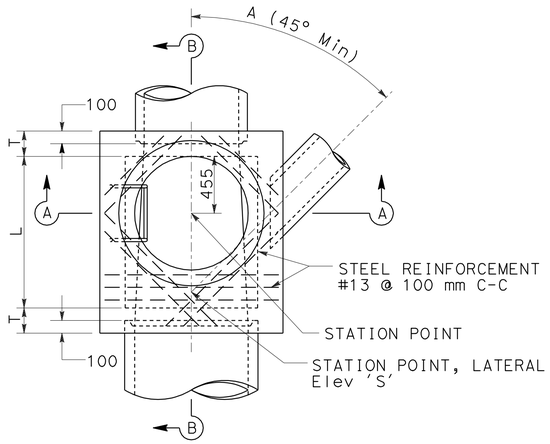

PLAN
(SHAFT NOT SHOWN)

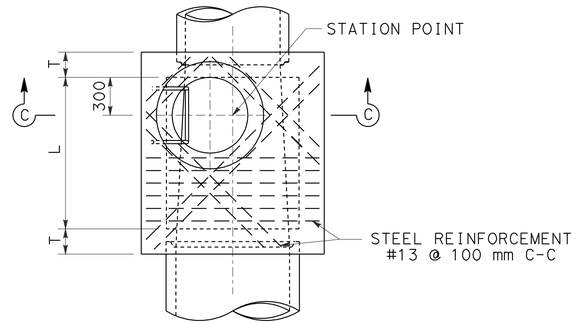

PLAN
DETAIL N
(SHAFT NOT SHOWN)

NOTES

1. HEIGHT "H" (IN Sec A-A AND Sec B-B) SHALL BE NOT LESS THAN 1.40 m, BUT MAY BE INCREASED PROVIDED THAT THE VALUE OF "M" SHALL NOT BE LESS THAN THE MINIMUM SPECIFIED AND THAT THE REDUCER SHALL BE USED. FOR "H" (IN Sec C-C) SEE NOTE 4.
2. LENGTH "L" SHALL BE 1.20 m UNLESS SHOWN OTHERWISE ON DRAINAGE PLAN.
3. SHAFT SHALL BE CONSTRUCTED AS PER Sec C-C AND DETAIL N WHEN DEPTH "M" FROM STREET GRADE TO TOP OF BOX IS LESS THAN 0.87 m FOR PAVED STREETS OR 1.05 m FOR UNPAVED STREETS.
4. DEPTH "P" MAY BE REDUCED TO AN ABSOLUTE LIMIT OF 150 m WHEN LARGER VALUES OF "P" WOULD REDUCE "H" (IN Sec C-C) TO 1.05 m OR LESS.
5. "T" SHALL BE 200 mm FOR VALUES OF "H" UP TO AND INCLUDING 2.40 m. "T" SHALL BE 250 mm FOR VALUES OF "H" OVER 2.40 m.
6. UNLESS OTHERWISE SHOWN, STEPS SHALL BE PLACED 300 mm ON CENTER. THE LOWEST STEP SHALL BE NOT MORE THAN 400 mm ABOVE THE LEDGE AT THE SIDE OF MANHOLE FLOOR.
7. BODY OF MANHOLE SHALL BE POURED IN ONE CONTINUOUS OPERATION, EXCEPT THAT THE CONTRACTOR SHALL HAVE THE OPTION OF PLACING AT THE SPRING LINE A CONSTRUCTION JOINT WITH A LONGITUDINAL KEYWAY.
8. REINFORCING STEEL SHALL BE 40 mm CLEAR FROM FACE OF CONCRETE.
9. FLOOR OF MANHOLE SHALL BE STEEL-TROWELED TO SPRING LINE.
10. RINGS, REDUCER, AND PIPE FOR ACCESS SHAFT SHALL BE SEATED IN 1:2 CEMENT MORTAR AND NEATLY POINTED OR WIPED INSIDE SHAFT.
11. MANHOLE FRAME AND COVER PER STANDARD PLAN B7-11 DETAIL U45.
12. STEP DETAIL PER STANDARD PLANS D74C AND D75C.

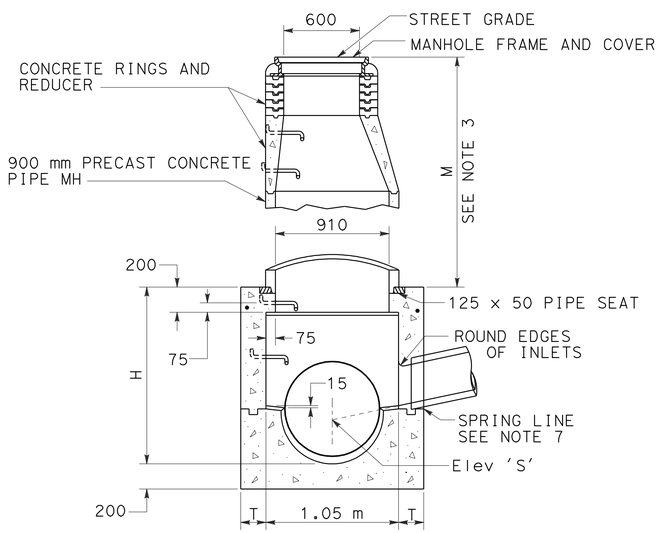

SECTION A-A

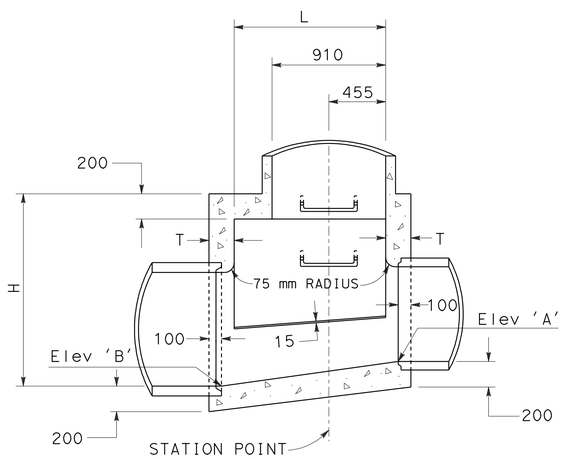

SECTION B-B

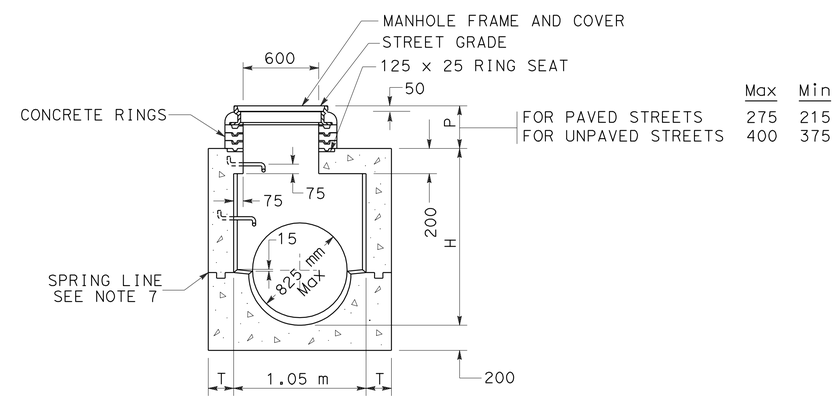

	Max	Min
FOR PAVED STREETS	275	215
FOR UNPAVED STREETS	400	375

SECTION C-C

MANHOLE No.1

ALL DIMENSIONS ARE IN MILLIMETERS UNLESS OTHERWISE SHOWN

DRAINAGE DETAILS

NO SCALE

DD-1

STATE OF CALIFORNIA - DEPARTMENT OF TRANSPORTATION	HYDRAULICS	PROJECT ENGINEER TIMOTHY TIEU	CALCULATED/DESIGNED BY STEWART FONG
Caltrans			CHECKED BY TIMOTHY TIEU
			REVISED BY / DATE REVISED

LAST REVISION 12-5-01 | DATE PLOTTED => 23-MAR-2011 TIME PLOTTED => 12:22

FOR REDUCED PLANS ORIGINAL SCALE IS IN MILLIMETERS 0 20 40 60 80

USERNAME => s126987
DGN FILE => 74h240i06.dgn

UNIT 1836 | PROJECT NUMBER & PHASE 07000008201

DIST	COUNTY	ROUTE	KILOMETER POST TOTAL PROJECT	SHEET No.	TOTAL SHEETS
07	LA	5	R72.7/R73.2	12	33

Caltrans Metric

Timothy Tieu 12-23-10
REGISTERED CIVIL ENGINEER

3-28-11
PLANS APPROVAL DATE

REGISTERED PROFESSIONAL ENGINEER TIM TIEU No. C56970 Exp. 6-30-11 CIVIL STATE OF CALIFORNIA

The State of California or its officers or agents shall not be responsible for the accuracy or completeness of electronic copies of this plan sheet.

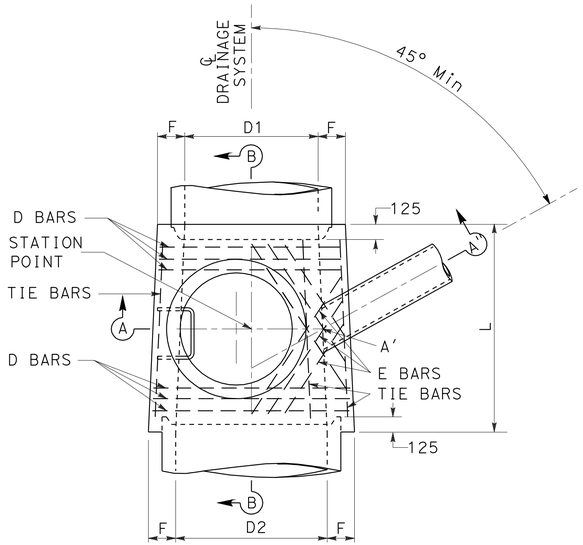

PLAN
(SHAFT NOT SHOWN)

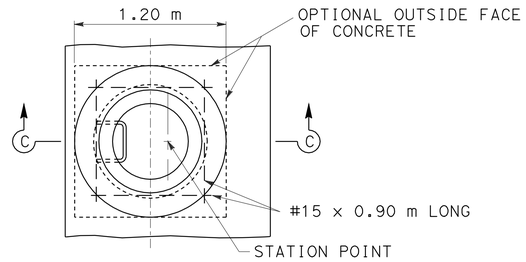

DETAIL N
(SHAFT NOT SHOWN)

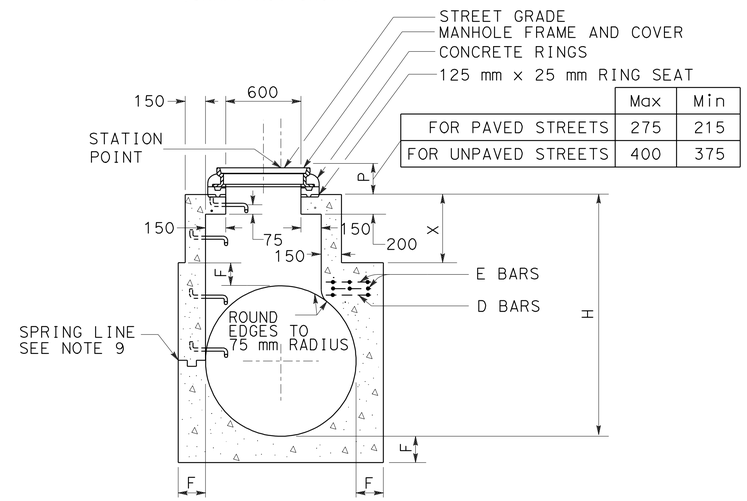

	Max	Min
FOR PAVED STREETS	275	215
FOR UNPAVED STREETS	400	375

SECTION C-C
(SEE NOTE 10)

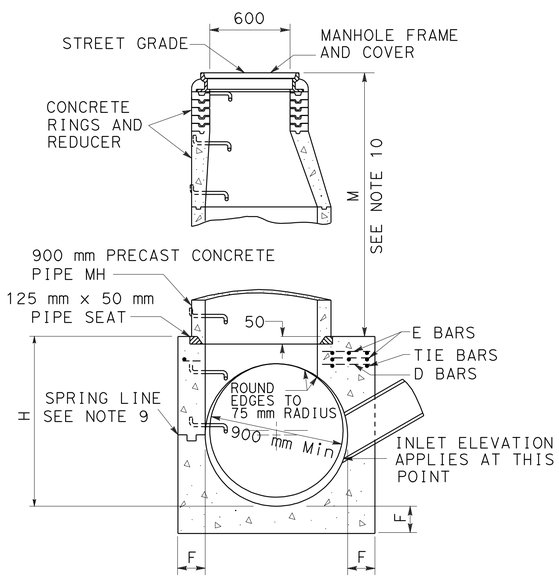

SECTION A-A'-A"

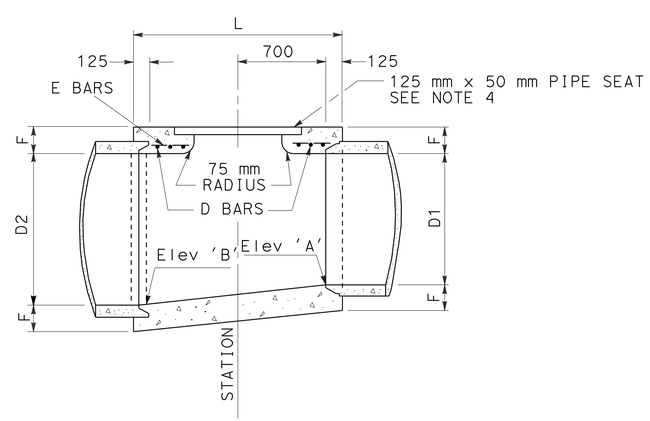

SECTION B-B

NOTES

1. VALUES FOR Elev "A", Elev "B", "H", "L", "M" OR "P" AND "X" ARE SHOWN ON THE DRAINAGE PLAN.
2. CENTER OF MANHOLE SHAFT SHALL BE LOCATED OVER CENTERLINE OF STORM DRAIN WHEN DIAMETER "D1" IS 1200 mm OR LESS, IN WHICH CASE PLACE E BAR SYMMETRICALLY AROUND SHAFT AT 45° WITH CENTERLINE.
3. LENGTH "L" SHALL BE 1.65 m UNLESS SHOWN OTHERWISE ON DRAINAGE PLAN.
4. THICKNESS OF "F" SHALL VARY WHEN NECESSARY TO PROVIDE LEVEL PIPESEAT, BUT SHALL NOT BE LESS THAN TABULAR VALUES FOR "F" SHOWN ON THIS PLAN.
5. REINFORCING STEEL SHALL BE 40 mm CLEAR FROM FACE OF CONCRETE UNLESS SHOWN OTHERWISE. SIZES AND LENGTHS ARE SHOWN IN TABLE BELOW.
6. UNLESS OTHERWISE SHOWN, STEPS SHALL BE PLACED 300 mm ON CENTERS. THE LOWEST STEP SHALL BE NOT MORE THAN 400 mm ABOVE THE LEDGE AT SIDE OF MANHOLE FLOOR.
7. RINGS, REDUCER, AND PIPE FOR ACCESS SHAFT SHALL BE SEATED IN 1:2 CEMENT MORTAR AND NEATLY POINTED OR WIPED INSIDE THE SHAFT.
8. FLOOR OF MANHOLE SHALL BE STEEL-TROWELED TO SPRING LINE.
9. BODY OF MANHOLE SHALL BE POURED IN ONE CONTINOUS OPERATION, EXCEPT THAT THE CONTRACTOR SHALL HAVE THE OPTION OF PLACING AT THE SPRING LINE A CONSTRUCTION JOINT WITH A LONGITUDINAL KEYWAY.
10. SECTION C-C: WHEN DEPTH OF MANHOLE FROM STREET GRADE TO TOP OF BOX IS LESS THAN 0.87 m FOR PAVED STREETS OR 1.05 m FOR UNPAVED STREETS, CONSTRUCT MONOLITHIC SHAFT AS PER SECTION. WHEN DIAMETER "D" IS 1200 mm OR LESS, CENTER OF SHAFT SHALL BE LOCATED AS PER NOTE 2.
11. MANHOLE FRAME AND COVER PER STANDARD PLAN B7-11 DETAIL U45.
12. STEP DETAIL PER STANDARD PLANS D74C AND SP D75C.
13. D BARS SHALL BE PLACED 75 mm C-C. E BARS SHALL BE SPACED 100 mm C-C. TIE BARS SHALL BE #10 SPACED 450 mm C-C OR LESS.
14. WHEN "L" GREATER THAN 1.65 m IS SPECIFIED ON DRAINAGE PLAN, CONTINUE D BARS AT 150 mm C-C.
15. LENGTHS SHOWN IN TABLE ARE FOR LONGEST BARS. WHERE SHORTER BARS ARE REQUIRED, BEND OR CUT TO MEET FIELD REQUIREMENTS.

TABLE OF VALUES FOR F	
D2	F
900	165
975	175
1050	190
1125	197
1200	200
1275	215
1350	225
1425	232
1500	240
1575	250
1650	257
1725	272
1800	275
1950	297
2100	315
2250	332
2400	350

STEEL TABLE						
D BARS				E BARS		
D2	NO REQ	SIZE	LENGTH	NO REQ	SIZE	LENGTH
900	6	#10	1.15 m	4	#10	0.83 m
975	6	"	1.25 m	4	"	0.88 m
1050	6	#15	1.35 m	4	"	0.95 m
1125	6	"	1.45 m	4	"	1.03 m
1200	6	"	1.53 m	4	"	1.08 m
1275	6	"	1.63 m	6	"	1.43 m
1350	6	"	1.73 m	6	"	1.53 m
1425	6	"	1.83 m	6	"	1.65 m
1500	6	"	1.90 m	6	"	1.78 m
1575	6	"	2.00 m	6	"	1.88 m
1650	6	"	2.10 m	8	"	2.00 m
1725	6	"	2.20 m	8	"	2.00 m
1800	6	"	2.28 m	8	"	2.00 m
1950	6	"	2.48 m	8	"	2.00 m
2100	6	"	2.65 m	10	"	2.00 m
2250	6	#20	2.85 m	10	"	2.00 m
2400	6	"	3.03 m	10	"	2.00 m

ALL DIMENSIONS ARE IN MILLIMETERS UNLESS OTHERWISE SHOWN

MANHOLE No. 2

DRAINAGE DETAILS

NO SCALE

DD-2

REVISED BY	DATE	DATE REVISED

CALCULATED/DESIGNED BY: STEWART FONG
CHECKED BY: TIMOTHY TIEU
PROJECT ENGINEER: TIMOTHY TIEU

STATE OF CALIFORNIA - DEPARTMENT OF TRANSPORTATION
Caltrans HYDRAULICS

LAST REVISION 12-5-01
DATE PLOTTED => 23-MAR-2011
TIME PLOTTED => 12:22

Caltrans Metric

Timothy Tieu 12-23-10
REGISTERED CIVIL ENGINEER

3-28-11
PLANS APPROVAL DATE

REGISTERED PROFESSIONAL ENGINEER TIM TIEU No. C56970 Exp 06-30-11 CIVIL STATE OF CALIFORNIA

The State of California or its officers or agents shall not be responsible for the accuracy or completeness of electronic copies of this plan sheet.

Cal-Trans now has a web site! To get to the web site, go to: http://tresc.dot.ca.gov

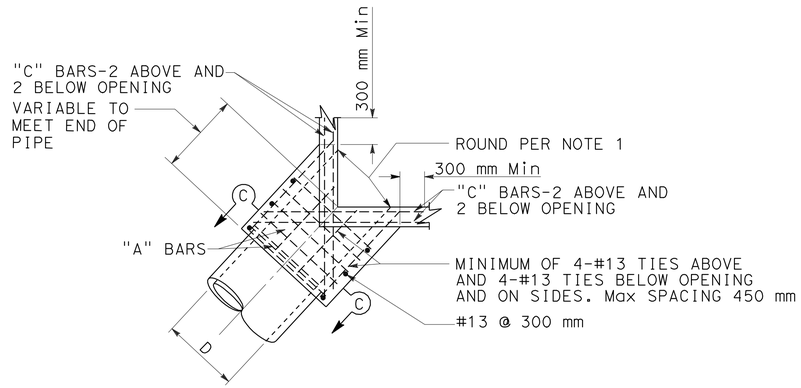

PLAN
CORNER CONNECTION

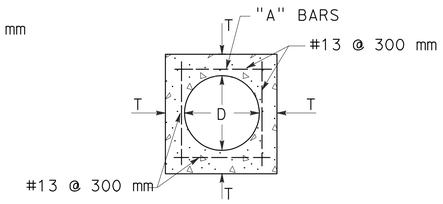

SECTION C-C

D	T	"A"	"B"-"C"
300 mm	110 mm	#13 @ 150 mm	#16
375 mm	110 mm		
450 mm	125 mm		
525 mm	910 mm		
600 mm	150 mm		
675 mm	160 mm		
750 mm	175 mm		
825 mm	175 mm		
900 mm	190 mm		
975 mm	200 mm		
1050 mm	200 mm		
1125 mm	200 mm	#16 @ 150 mm	#19
1200 mm	200 mm		
1275 mm	200 mm		
1350 mm	200 mm		
1425 mm	250 mm		
1500 mm	250 mm		
1575 mm	250 mm		
1650 mm	280 mm		
1725 mm	280 mm		
1800 mm	280 mm		

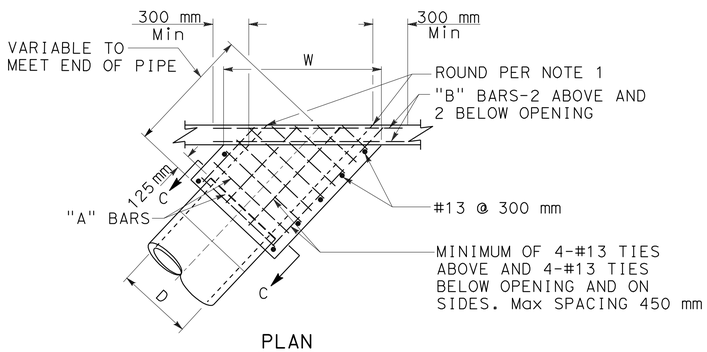

PLAN
SIDE CONNECTION

NOTES:

1. ROUND EDGE OF OUTLET TO 75 mm RADIUS.
2. REINFORCEMENT SHALL BE 40 mm CLEAR FROM THE FACE OF CONCRETE.
3. IN CONNECTING TO AN EXISTING STRUCTURE BREAK OUT PORTIONS OF THE EXISTING STRUCTURE 150 mm OUTSIDE ITS INTERSECTION WITH THE NEW CONNECTION. BEND ENDS OF #13 BARS OVER CONNECTION OPENING AS REQUIRED.

MONOLITHIC CONNECTION
FOR PIPES 300 mm TO 1800 mm INCLUSIVE

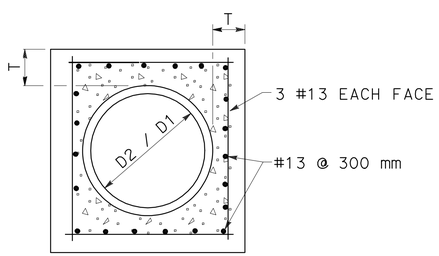

SECTION B-B

D (mm)	L (mm)	T (mm)
300	300	100
450	300	125
600	300	150
900	450	200
1200	450	250
1350	450	250
1500	525	280
1650	525	280
1800	600	300

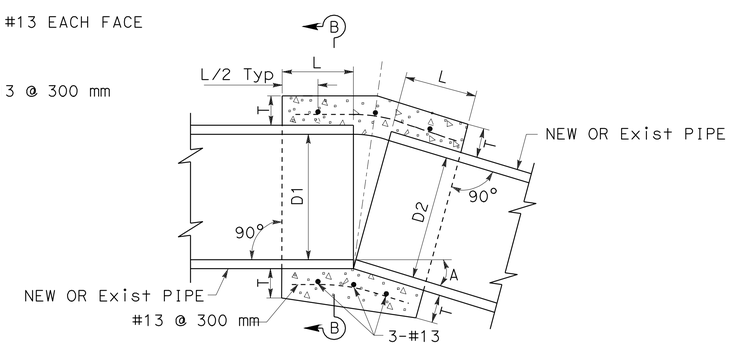

CONCRETE COLLAR

NOTES:

1. WHERE PIPES OF DIFFERENT DIAMETERS ARE JOINED WITH A CONCRETE COLLAR, 'L' AND 'T' SHALL BE THOSE OF THE LARGER PIPE. D=D1 OR D2, WHICHEVER IS GREATER.
2. FOR PIPE SIZE NOT LISTED USE NEXT SIZE LARGER.
3. OMIT REINFORCING ON PIPES 600 mm AND LESS IN DIAMETER AND ON PIPES WHERE ANGLE A IS LESS THAN 10°.
4. JOIN PIPES AT INVERTS.
5. REINFORCEMENT SHALL BE PLACED 40 mm CLEAR FROM OUTSIDE DIAMETER OF PIPE.

ALL DIMENSIONS ARE IN MILLIMETERS UNLESS OTHERWISE SHOWN

DRAINAGE DETAILS

NO SCALE

DD-3

STATE OF CALIFORNIA - DEPARTMENT OF TRANSPORTATION
Caltrans HYDRAULICS

PROJECT ENGINEER TIMOTHY TIEU

CALCULATED/DESIGNED BY STEWART FONG
CHECKED BY TIMOTHY TIEU
REVISED BY DATE
DATE REVISED

DIST	COUNTY	ROUTE	KILOMETER POST TOTAL PROJECT	SHEET No.	TOTAL SHEETS
07	LA	5	R72.7/R73.2	14	33

Timothy Tieu 12-23-10
REGISTERED CIVIL ENGINEER

3-28-11
PLANS APPROVAL DATE

REGISTERED PROFESSIONAL ENGINEER
TIM TIEU
No. C56970
Exp. 06-30-11
CIVIL
STATE OF CALIFORNIA

The State of California or its officers or agents shall not be responsible for the accuracy or completeness of electronic copies of this plan sheet.

Cal-Trans now has a web site! To get to the web site, go to: http://tresc.dot.ca.gov

Caltrans Metric

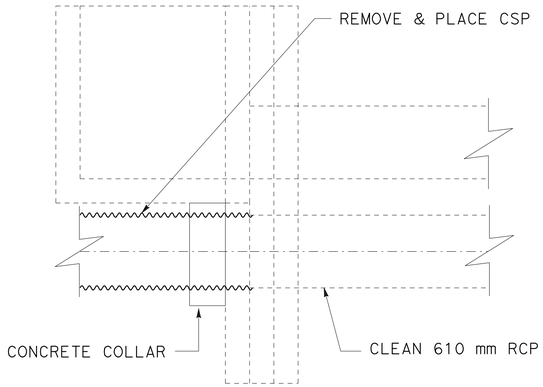

PLAN VIEW OF INLET
LINE "N"

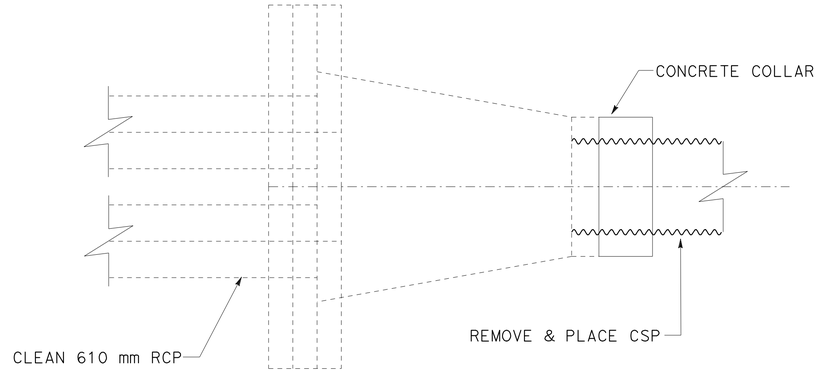

PLAN VIEW OF OUTLET STRUCTURE
LINE "N"

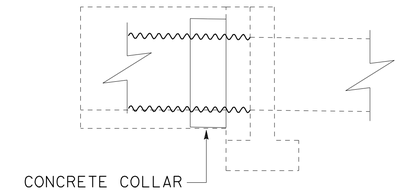

ELEVATION VIEW
LINE "N"

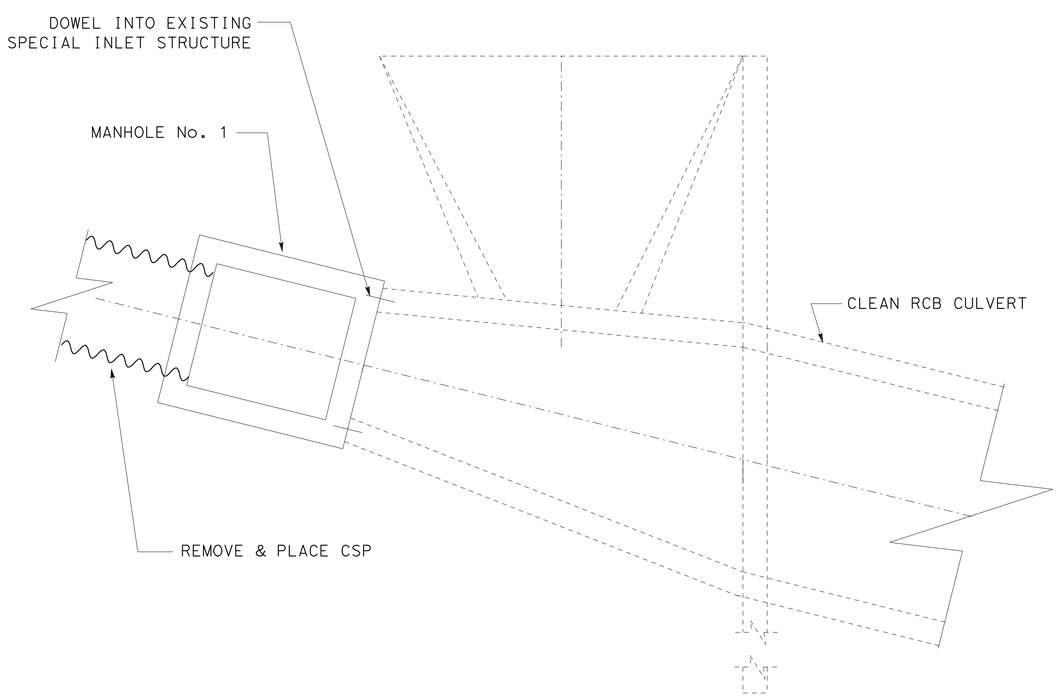

PLAN VIEW OF RC BOX CULVERT INLET STUCTURE
LINE "M"

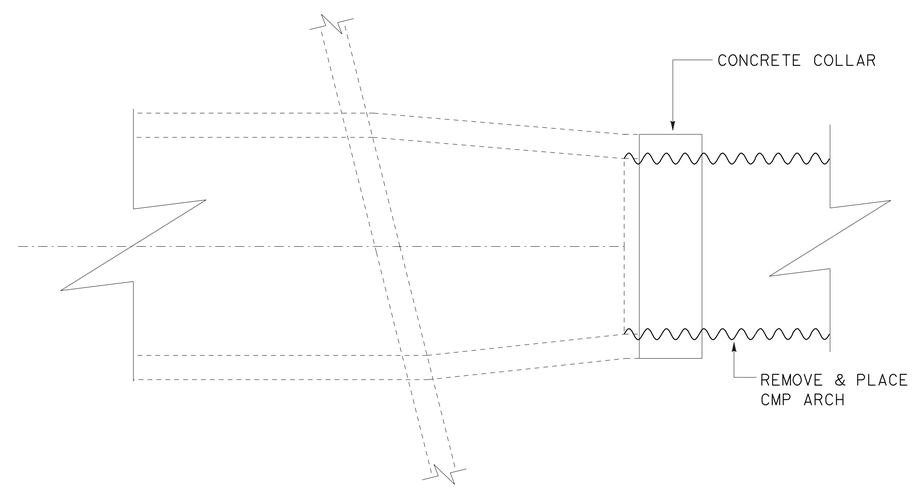

PLAN VIEW OF OUTLET STRUCTURE
LINE "M"

ALL DIMENSIONS ARE IN
METERS UNLESS OTHERWISE SHOWN

THIS PLAN ACCURATE FOR DRAINAGE ONLY

DRAINAGE DETAILS

NO SCALE

DD-4

STATE OF CALIFORNIA - DEPARTMENT OF TRANSPORTATION		
Caltrans	HYDRAULICS	
PROJECT ENGINEER	TIMOTHY TIEU	
CALCULATED/DESIGNED BY	STEWART FONG	REVISED BY / DATE
CHECKED BY	TIMOTHY TIEU	DATE REVISED

LAST REVISION 12-5-01

TIME PLOTTED => 23-MAR-2011 12:22

FOR REDUCED PLANS ORIGINAL SCALE IS IN MILLIMETERS 0 20 40 60 80

USERNAME => s126987
DGN FILE => 74h240i09.dgn

UNIT 1836 | PROJECT NUMBER & PHASE 07000008201

DIST	COUNTY	ROUTE	KILOMETER POST TOTAL PROJECT	SHEET No.	TOTAL SHEETS
07	LA	5	R72.7/R73.2	15	33

Timothy Tieu 12-23-10
REGISTERED CIVIL ENGINEER

3-28-11
PLANS APPROVAL DATE

REGISTERED PROFESSIONAL ENGINEER TIM TIEU No. C56970 Exp. 06-30-11 CIVIL STATE OF CALIFORNIA

The State of California or its officers or agents shall not be responsible for the accuracy or completeness of electronic copies of this plan sheet.

Cal-Trans now has a web site! To get to the web site, go to: http://tresc.dot.ca.gov

Caltrans Metric

ABBREVIATION:

D - DOWNDRAIN JOINT TYPE

SUMMARY OF DRAINAGE QUANTITIES

DRAINAGE SYSTEM No.	DRAINAGE UNIT	"H" OR "V"	MINOR CONCRETE (MINOR STRUCTURE)	MISCELLANEOUS IRON AND STEEL	750 mm BITUMINOUS COATED CSP (2.77 mm THICK)	600 mm BITUMINOUS COATED CSP (2.77 mm THICK)	900 mm BITUMINOUS COATED CSP (2.77 mm THICK)	PIPE JOINT CLASSIFICATION (N)	ADJUST MH TO GRADE	900 mm PRECAST CONCRETE PIPE MANHOLE	REMOVE PIPE	MAXIMUM COVER (N)	1450 mm x 900 mm BITUMINOUS COATED CS ARCH	1450 mm x 900mm BITUMINOUS COATED STEEL FLARED END PIPE ARCH SECTION	REMOVE FLARED END SECTION	CLEAN CULVERT	DESCRIPTION	STATION	DRAINAGE PLAN SHEET No.	DRAINAGE SYSTEM No.	DRAINAGE UNIT
		m	m3	Kg	m	m	m		EA	m	m	m	m	EA	EA	m					
1	a						38.8	D				1.0					900 mm BITUMINOUS COATED CSP		D-1	1	a
	b	1.40	2.28	200													MANHOLE No. 1	72.1 m Rt 723 + 35.5 SB Rte 5			b
	c															24.7	1829 mm x 610 mm RCB				c
	d												18.9				1450 mm x 900 mm BITUMINOUS COATED CSP ARCH				d
	e													1			1450 mm x 900 mm BITUMINOUS COATED STEEL FLARED END PIPE ARCH SECTION	115.7 m Rt 723 + 23.9 SB Rte 5			e
	f										40.4						REMOVE 915 mm CMP				f
	g										18.9						REMOVE 1473 mm x 914 mm CMP ARCH				g
	h														1		REMOVE FLARED END SECTION	115.7 m Rt 723 + 23.9 SB Rte 5			h
2	a					67.1		D				1.0					600 mm BITUMINOUS COATED CSP		D-2	2	a
	b	1.40	2.28	200						0.45							MANHOLE No. 1	86.3 m Rt 725 + 95.71 SB Rte 5			b
	c															18.3	610 mm RCP				c
	d				11.0							1.0					750 mm CORRUGATED STEEL PIPE				d
	e										68.3						REMOVE 610 mm CORRUGATED STEEL PIPE				e
	f										11.0						REMOVE 762 mm CORRUGATED STEEL PIPE				f
SHEET TOTAL			4.56	400	11.0	67.1	38.8			0.45	138.6		18.9	1	1	43.0					

(N) NOT A SEPARATE PAY ITEM, FOR INFORMATION ONLY.

CALCULATED/DESIGNED BY	STEWART FONG	DATE	REVISED BY
CHECKED BY	TIMOTHY TIEU		DATE REVISED

PROJECT ENGINEER TIMOTHY TIEU

STATE OF CALIFORNIA - DEPARTMENT OF TRANSPORTATION
Caltrans HYDRAULICS

DRAINAGE QUANTITIES

DQ-1

LAST REVISION 01-23-02 DATE PLOTTED => 23-MAR-2011 TIME PLOTTED => 12:22

FOR REDUCED PLANS ORIGINAL SCALE IS IN MILLIMETERS 0 20 40 60 80

USERNAME => s126987
DGN FILE => 74h240i10.dgn

UNIT 1836 PROJECT NUMBER & PHASE 07000008201

DIST	COUNTY	ROUTE	KILOMETER POST TOTAL PROJECT	SHEET No.	TOTAL SHEETS
07	LA	5	R72.7/R73.2	16	33

Timothy Tieu 12-23-10
REGISTERED CIVIL ENGINEER

3-28-11
PLANS APPROVAL DATE

REGISTERED PROFESSIONAL ENGINEER TIM TIEU No. C56970 Exp. 06-30-11 CIVIL STATE OF CALIFORNIA

The State of California or its officers or agents shall not be responsible for the accuracy or completeness of electronic copies of this plan sheet.

Cal-Trans now has a web site! To get to the web site, go to: http://tresc.dot.ca.gov

Caltrans Metric

ABBREVIATION:

D - DOWNDRAIN JOINT TYPE

SUMMARY OF DRAINAGE QUANTITIES

DRAINAGE SYSTEM No.	DRAINAGE UNIT	"H" OR "V"	MINOR CONCRETE (MINOR STRUCTURE)	MISCELLANEOUS IRON AND STEEL	750 mm BITUMINOUS COATED CSP (2.77 mm THICK)	600 mm BITUMINOUS COATED CSP (2.77 mm THICK)	900 mm BITUMINOUS COATED CSP (2.77 mm THICK)	PIPE JOINT CLASSIFICATION (N)	ADJUST MH TO GRADE	900 mm PRECAST CONCRETE PIPE MANHOLE	REMOVE PIPE	MAXIMUM COVER (N)	1450 mm x 900 mm BITUMINOUS COATED CSP	1450 mm x 900mm BITIMINOUS COATED STEEL FLARED END PIPE ARCH SECTION	REMOVE FLARED END SECTION	CLEAN CULVERT	DESCRIPTION	STATION	DRAINAGE PLAN SHEET No.	DRAINAGE SYSTEM No.	DRAINAGE UNIT
		m	m3	Kg	m	m	m		EA	m	m	m	m	EA	EA	m					
3	a						56.6	D				3.5					900 mm BITUMINOUS COATED CSP		D-2	3	a
	b	1.08	1.36	200						3.70							MANHOLE No. 2	83.9 m Rt 727+54.5 ℄ Rte 5			b
	c						6.8	D				5.2					900 mm BITUMINOUS COATED CSP				c
	d								1								ADJUST MANHOLE No. 1 TO GRADE	94.3 m Rt 727+51.5 ℄ Rte 5			d
	e															18.9	762 mm RCP				e
	f										64.8						REMOVE 914 mm CORRUGATED STEEL PIPE				f
SHEET TOTAL (DQ-2)		1.36	200			63.4		1	3.70	64.8					18.9						
SHEET TOTAL FROM DQ-1		4.56	400	11.0	67.1	38.8			0.45	138.6		18.9	1	1	43.0						
GRAND TOTAL		5.92	600	11.0	67.1	102.2		1	4.15	203.4		18.9	1	1	61.9						

(N) NOT A SEPARATE PAY ITEM, FOR INFORMATION ONLY.

DRAINAGE QUANTITIES
DQ-2

CALCULATED/DESIGNED BY STEWART FONG
CHECKED BY TIMOTHY TIEU
REVISED BY
DATE REVISED
PROJECT ENGINEER TIMOTHY TIEU

STATE OF CALIFORNIA - DEPARTMENT OF TRANSPORTATION
Caltrans HYDRAULICS

LAST REVISION 01-18-02
DATE PLOTTED => 23-MAR-2011
TIME PLOTTED => 12:22

DIST	COUNTY	ROUTE	KILOMETER POST TOTAL PROJECT	SHEET No.	TOTAL SHEETS
07	LA	5	R72.7/R73.2	17	33

REGISTERED CIVIL ENGINEER 12-23-10

3-28-11
PLANS APPROVAL DATE

REGISTERED PROFESSIONAL ENGINEER PARVIZ YEGANEH No. 53797 Exp. 6-30-11 CIVIL STATE OF CALIFORNIA

The State of California or its officers or agents shall not be responsible for the accuracy or completeness of electronic copies of this plan sheet.

Caltrans now has a web site! To get to the web site, go to: http://www.dot.ca.gov

Caltrans Metric

NOTES:

1. FOR ACCURATE RIGHT OF WAY DATA, CONTACT RIGHT OF WAY ENGINEERING AT THE DISTRICT OFFICE.
2. LOCATIONS OF UTILITY FACILITIES SHOWN ON THESE PLANS ARE APPROXIMATE AND SHALL BE VERIFIED BY THE CONTRACTOR PRIOR TO CONSTRUCTION.
3. EXCAVATION REQUIRED TO REPLACE CMP AT LOCATION OF 762 mm GAS LINE SHALL BE PERFORMED BY HAND WITHOUT THE USE OF POWER EQUIPMENT EXCEPT THAT POWER EQUIPMENT MAY BE USED TO CUT AND TO REMOVE ASPHALT CONCRETE PAVEMENT.

UTILITY OWNERSHIP ON THIS PROJECT:

GAS-	SOUTHERN CALIFORNIA GAS (SCG)
OIL-	PACIFIC OIL PIPELINE MOBIL OIL ARCO OIL METHANE GAS GETTY OIL
ELECTRIC-	SOUTHERN CALIFORNIA EDISION LOS ANGELES DEPARTMENT OF WATER AND POWER (LADWP)
CABLE-	QWEST
TELEPHONE-	VERIZON PAC BELL AT&T

ABBREVIATIONS:

H	HIGH PRESSURE
FO	FIBER OPTIC
CB	CATCH BASIN
EW	EAST OF WEST

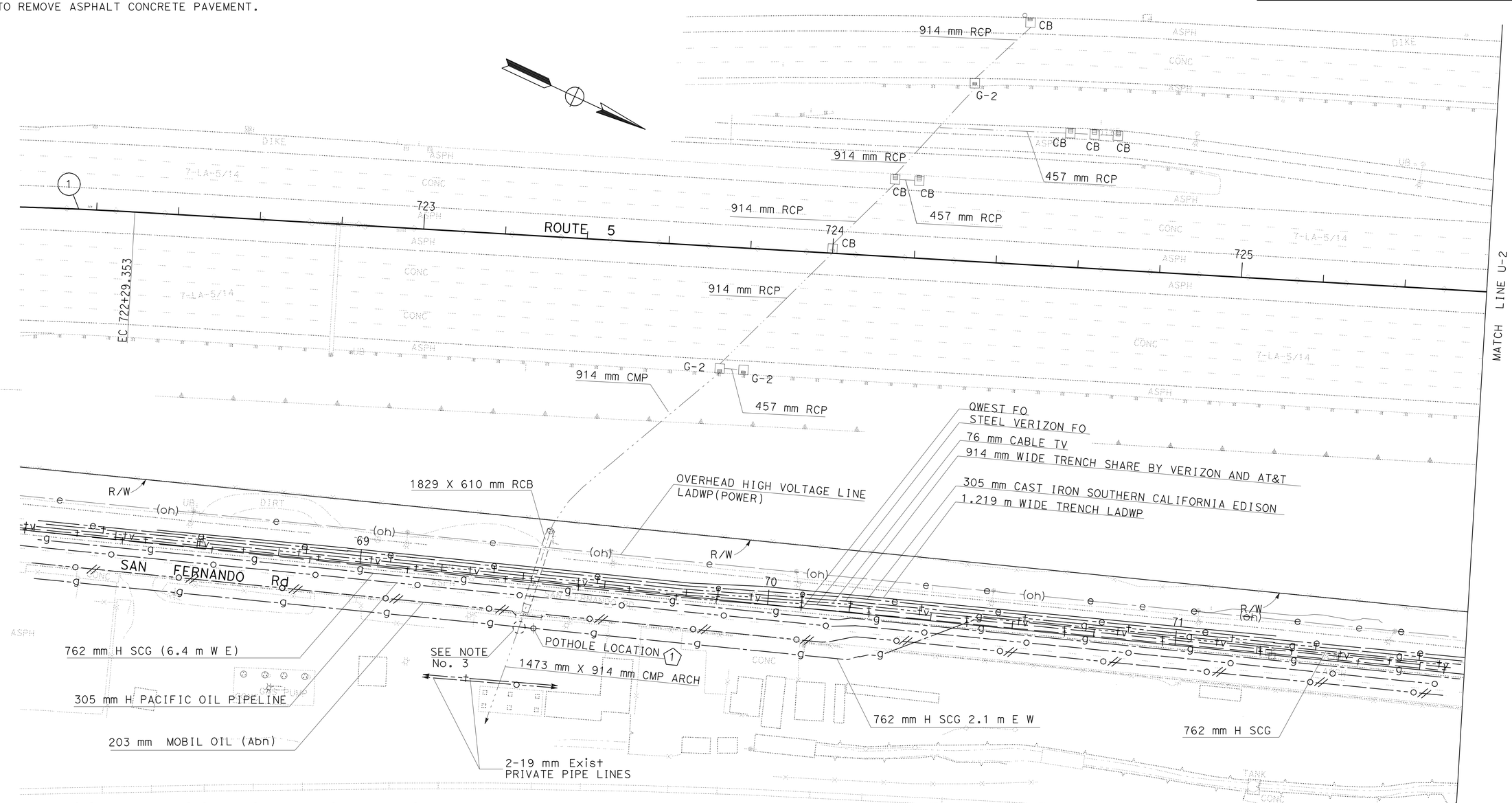

POSITIVE LOCATION INFORMATION

No.	LOCATION	ELEVATION AT TOP OF THE PIPE	METHOD
1	69+43.704 SAN FERNANDO Rd 11.481m Rt	418.796 m	POTHOLE

THIS PLAN ACCURATE FOR UTILITY INFORMATION ONLY.

ALL DIMENSIONS ARE IN METERS UNLESS OTHERWISE SHOWN

UTILITY PLAN

SCALE 1:500

U-1

STATE OF CALIFORNIA - DEPARTMENT OF TRANSPORTATION
Caltrans OFFICE OF DESIGN A

PROJECT ENGINEER HOSS FARASAT

CALCULATED/DESIGNED BY PARVIZ YEGANEH
CHECKED BY CUONG PHAM

DATE REVISED BY
DATE REVISED

LAST REVISION 00-00-00
DATE PLOTTED => 23-MAR-2011
TIME PLOTTED => 12:22

FOR REDUCED PLANS ORIGINAL SCALE IS IN MILLIMETERS 0 20 40 60 80

USERNAME => s126987
DGN FILE => 74h240ka01.dgn

UNIT 1843 PROJECT NUMBER & PHASE 07000008201

NOTES:

1. FOR ACCURATE RIGHT OF WAY DATA, CONTACT RIGHT OF WAY ENGINEERING AT THE DISTRICT OFFICE.
2. SEE UTILITY OWNERSHIP AND NOTE No.2 ON SHEET U-1.

DIST	COUNTY	ROUTE	KILOMETER POST TOTAL PROJECT	SHEET No.	TOTAL SHEETS
07	LA	5	R72.7/R73.2	18	33

Parviz Yeganeh 12-23-10
REGISTERED CIVIL ENGINEER

3-28-11
PLANS APPROVAL DATE

REGISTERED PROFESSIONAL ENGINEER
PARVIZ YEGANEH
No. 53797
Exp. 6-30-11
CIVIL
STATE OF CALIFORNIA

The State of California or its officers or agents shall not be responsible for the accuracy or completeness of electronic copies of this plan sheet.

Caltrans now has a web site! To get to the web site, go to: http://www.dot.ca.gov

Caltrans Metric

ALL DIMENSIONS ARE IN METERS UNLESS OTHERWISE SHOWN

UTILITY PLAN

SCALE 1:500

U-2

THIS PLAN ACCURATE FOR UTILITY INFORMATION ONLY.

FOR REDUCED PLANS ORIGINAL SCALE IS IN MILLIMETERS 0 20 40 60 80

USERNAME => s126987
DGN FILE => 74h240ka02.dgn

UNIT 1843 | PROJECT NUMBER & PHASE 07000008201

STATE OF CALIFORNIA - DEPARTMENT OF TRANSPORTATION
Caltrans OFFICE OF DESIGN A

PROJECT ENGINEER HOSS FARASAT
CALCULATED/DESIGNED BY CUONG PHAM
CHECKED BY PARVIZ YEGANEH
REVISED BY
DATE REVISED
DATE

LAST REVISION 00-00-00
DATE PLOTTED => 23-MAR-2011
TIME PLOTTED => 12:23

DIST	COUNTY	ROUTE	KILOMETER POST TOTAL PROJECT	SHEET No.	TOTAL SHEETS
07	LA	5	R72.7/R73.2	19	33

REGISTERED CIVIL ENGINEER 12-23-10

3-28-11
PLANS APPROVAL DATE

REGISTERED PROFESSIONAL ENGINEER H. FARASAT No. 45672 Exp 12-31-12 CIVIL STATE OF CALIFORNIA

The State of California or its officers or agents shall not be responsible for the accuracy or completeness of electronic copies of this plan sheet.

Caltrans now has a web site! To get to the web site, go to: http://www.dot.ca.gov

Caltrans Metric

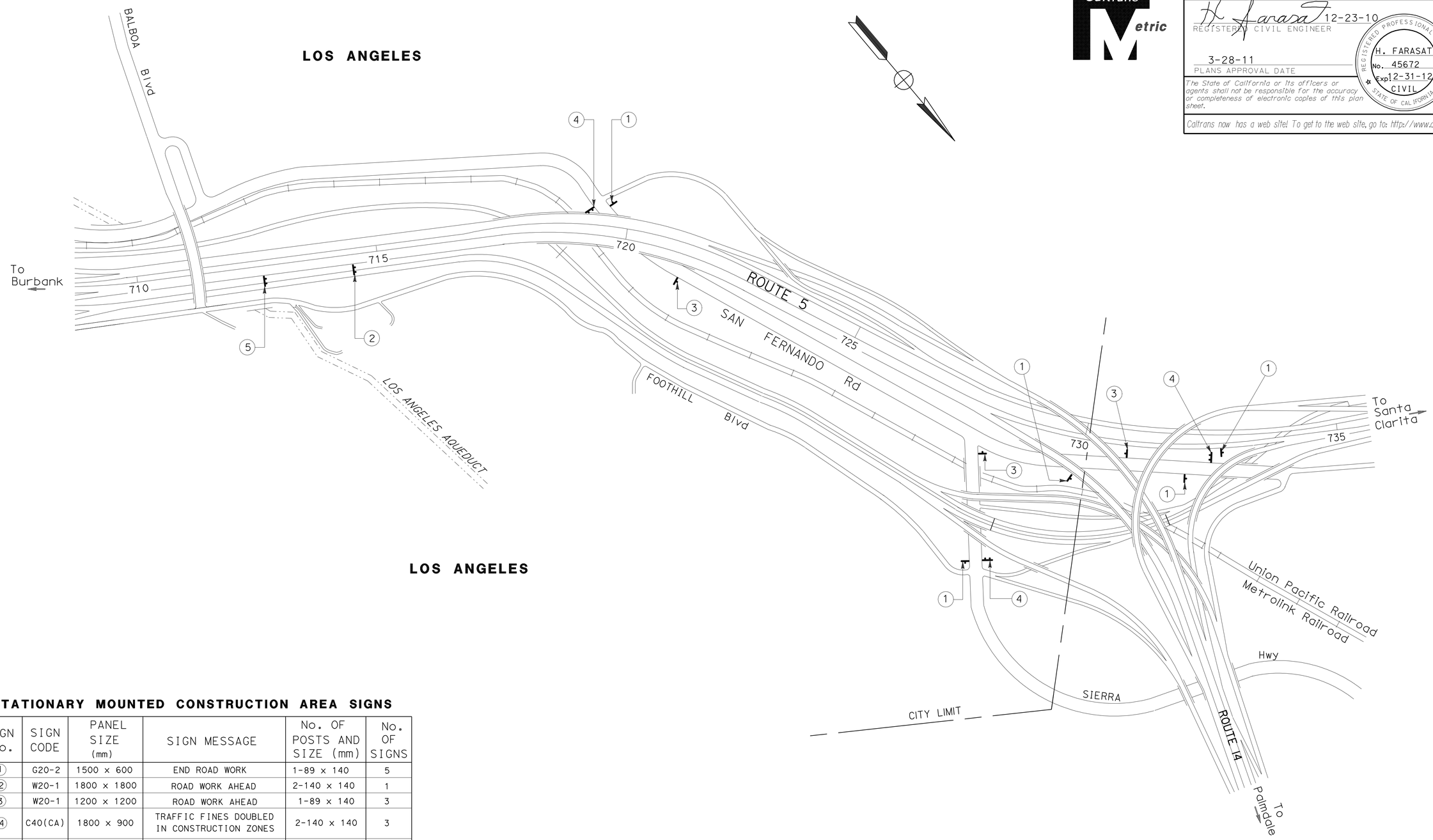

LOS ANGELES

STATIONARY MOUNTED CONSTRUCTION AREA SIGNS

SIGN No.	SIGN CODE	PANEL SIZE (mm)	SIGN MESSAGE	No. OF POSTS AND SIZE (mm)	No. OF SIGNS
1	G20-2	1500 x 600	END ROAD WORK	1-89 x 140	5
2	W20-1	1800 x 1800	ROAD WORK AHEAD	2-140 x 140	1
3	W20-1	1200 x 1200	ROAD WORK AHEAD	1-89 x 140	3
4	C40(CA)	1800 x 900	TRAFFIC FINES DOUBLED IN CONSTRUCTION ZONES	2-140 x 140	3
5	C40(CA)	2600 x 1070	TRAFFIC FINES DOUBLED IN CONSTRUCTION ZONES	2-140 x 140	1

NOTE:

LOCATIONS OF CONSTRUCTION AREA SIGNS SHOWN ARE APPROXIMATE. EXACT LOCATIONS WILL BE DETERMINED BY THE ENGINEER.

THIS PLAN ACCURATE FOR CONSTRUCTION AREA SIGN WORK ONLY.

CONSTRUCTION AREA SIGNS

NO SCALE

CS-1

DATE	REVISED BY	DATE REVISED
CALCULATED/DESIGNED BY	HOSS FARASAT	
CHECKED BY	MANSOOR KHAN	
PROJECT ENGINEER	HOSS FARASAT	

STATE OF CALIFORNIA - DEPARTMENT OF TRANSPORTATION
Caltrans OFFICE OF DESIGN B

LAST REVISION 00-00-00 | DATE PLOTTED => 23-MAR-2011 TIME PLOTTED => 12:23

FOR REDUCED PLANS ORIGINAL SCALE IS IN MILLIMETERS 0 20 40 60 80

USERNAME => s126987
DGN FILE => 74h240m01.dgn

UNIT 1806 | PROJECT NUMBER & PHASE 07000008201

DIST	COUNTY	ROUTE	KILOMETER POST TOTAL PROJECT	SHEET No	TOTAL SHEETS
07	LA	5	R72.7/R73.2	20	33

H. Farasat 12-23-10
REGISTERED CIVIL ENGINEER

3-28-11
PLANS APPROVAL DATE

REGISTERED PROFESSIONAL ENGINEER
H. FARASAT
No. 45672
Exp. 12-31-12
CIVIL
STATE OF CALIFORNIA

The State of California or its officers or agents shall not be responsible for the accuracy or completeness of electronic copies of this plan sheet.

Caltrans now has a web site! To get to the web site, go to: http://www.dot.ca.gov

Caltrans Metric

MISCELLANEOUS QUANTITIES

SHEET No.	REMOVE CONCRETE (MISCELLANEOUS)	MINOR CONCRETE (Misc CONSTRUCTION)	PLACE HOT MIX ASPHALT (MISCELLANEOUS AREA)	MINOR HOT MIX ASPHALT
	m^3	m^3	m^2	TONN
L-1			40	4
L-2	4	4		
TOTAL	4	4	40	4

Temp WATER POLLUTION CONTROL QUANTITIES

DESCRIPTION	UNIT	QUANTITY
TEMPORARY FIBER FOLL	M	75
TEMPORARY GRAVEL BAG BERM	M	40
TEMPORARY CONCRETE WASHOUT FACILITY	EA	1
TEMPORARY CONSTRUCTION ENTRANCE	EA	2
TEMPORARY COVER	M2	30
TEMPORARY CHECK DAM	M	40
TEMPORARY DRAINAGE INLET PROTECTION	EA	2

SUMMARY OF QUANTITIES

Q-1

STATE OF CALIFORNIA - DEPARTMENT OF TRANSPORTATION
Caltrans OFFICE OF DESIGN B

PROJECT ENGINEER: HOSS FARASAT
CALCULATED/DESIGNED BY: HOSS FARASAT
CHECKED BY: MANSOOR KHAN
DATE
REVISED BY
DATE REVISED

LAST REVISION 00-00-00
DATE PLOTTED => 23-MAR-2011
TIME PLOTTED => 12:23

FOR REDUCED PLANS ORIGINAL SCALE IS IN MILLIMETERS 0 20 40 60 80
USERNAME => s126987
DGN FILE => 74h240o01.dgn
UNIT 1806
PROJECT NUMBER & PHASE 07000008201

Dist	COUNTY	ROUTE	KILOMETER POST TOTAL PROJECT	SHEET No.	TOTAL SHEETS
07	LA	5	R72.7/R73.2	21	33

12/23/10
LICENSED LANDSCAPE ARCHITECT DATE

3-28-11
PLANS APPROVAL DATE

LICENSED LANDSCAPE ARCHITECT JENNIFER TAIRA No. 4625 STATE OF CALIFORNIA
08/31/11
Renewal Date
Date

THE STATE OF CALIFORNIA OR ITS OFFICERS OR AGENTS SHALL NOT BE RESPONSIBLE FOR THE ACCURACY OR COMPLETENESS OF ELECTRONIC COPIES OF THIS PLAN SHEET.

PLANT LIST AND PLANTING SPECIFICATIONS

PLANT GROUP	PLANT No	SYMBOL	BOTANICAL NAME	COMMON NAME	SIZE	QUANTITY EACH	HOLE SIZE DIA	HOLE SIZE DEPTH	BASIN TYPE	IRON SULFATE ①	SOIL AMEND ① (m^3)	COMMERCIAL ① FERTILIZER (kg) PLANTING	COMMERCIAL ① FERTILIZER (kg) PLT ESTB	MULCH ① (m^3)	STAKING	PLANTING LIMITS MINIMUM DISTANCE (m) FROM TRVD WAY	PVMT	FENCE	WALL	PAVED DITCH	EARTH DITCH	ON CENTER (m)	REMARKS
	1		SAMBUCUS MEXICANA	BLUE ELDERBERRY	No. 1	404	②	②	II	-	-	0.03	0.03	0.04	-	5	5	-	-	-	-	1.75	⑥ ⑦
	2		BACCHARIS SALICIFOLIA	MULEFAT	CUTTINGS	617	-	-	-	-	-	-	-	-	-	5	5	-	-	-	-	1.25	⑥ ⑦

APPLICABLE WHEN CIRCLED:

① - Quantities shown are "per plant" unless shown as m^2 application rates.
② - Sufficient to receive root ball.
3 - Does not apply to mulch areas.
4 - As shown on plans.
5 - Unless otherwise shown on plans.
⑥ - See detail.
⑦ - See Special Provisions.

ABBREVIATIONS

AMEND — amendment
B & B — balled and burlapped
DIA — diameter
EA — each
g — gram
Kg — kilogram
m — meter
m^2 — square meter
m^3 — cubic meter
MAX — maximum
MIN — minimum
mm — millimeter
No — number
PLT ESTB - plant establishment
PVMT — pavement
R/W — right of way
SF — state furnished
TAB — tablet(s)
TRVD — traveled
TRWA — time release water assembly

NOTE:

Underlined portions of botanical name indicate abbreviations used on Planting Plans.

X IN BOX DENOTES REQUIREMENT

NOTES AND LEGEND:

1. SPACE ADJACENT GROUPINGS OF SAMBUCUS AND BACCHAR IS 1.4 m APART.
2. SAMBUCUS SHALL BE PLANTED NO CLOSER THAN 1.2 m FROM EROSION CONTROL BLANKET.
3. : ROLLED EROSION CONTROL PRODUCT (BLANKET TYPE A) AND EROSION CONTROL (HYDROSEED) (PLACE OVER NEW CORRUGATED STEEL PIPE AND DISTURBED AREAS.)

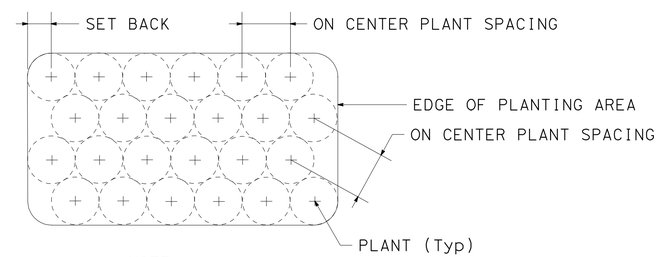

NOTE:
PLACE PLANTS ON TRIANGULAR SPACING

PLANT PLACEMENT

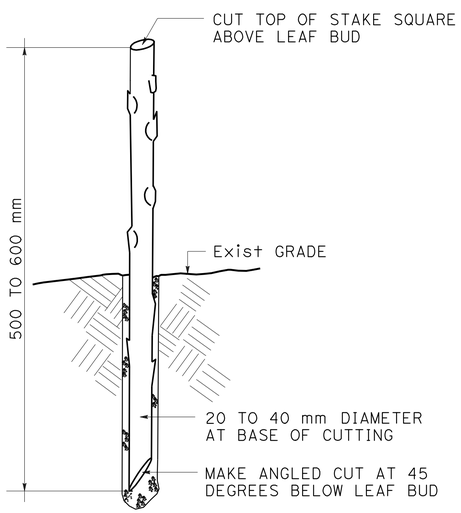

SECTION

NOTE:

PAINT AND SEAL THE TOP SQUARE CUT BY DIPPING THE TOP 25 TO 50 mm INTO A 50-60 MIX OF LIGHT COLORED LATEX PAINT AND WATER.

CUTTING

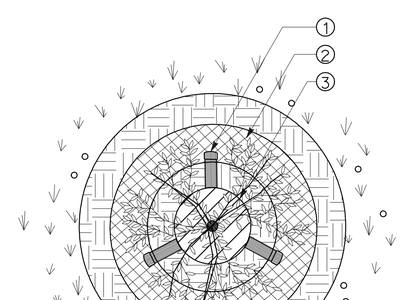

PLAN

NOTES:

① EVENLY SPACED TIME RELEASED WATER ASSEMBLY (Typ) (INSTALL TRWA SO THAT BOTTOM IS IN CONTACT WITH THE ROOT BALL, AS PER THE SPECIAL PROVISIONS.)
② MULCH LAYER IN BASIN WITH WATER WELL
③ ROOT BALL

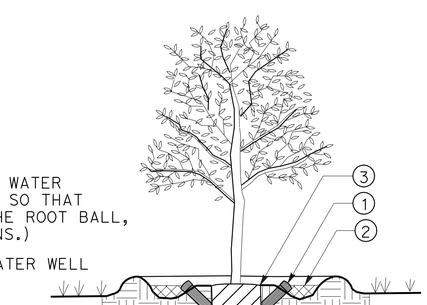

SECTION

TIME RELEASE WATER ASSEMBLY

PLANT LIST

NO SCALE

PL-1

STATE OF CALIFORNIA - DEPARTMENT OF TRANSPORTATION
Caltrans
LANDSCAPE ARCHITECTURE

FUNCTIONAL SUPERVISOR: JENNIFER TAIRA
CALCULATED-DESIGNED BY: NAMSIK LEE
CHECKED BY: JENNIFER TAIRA
REVISED BY
DATE REVISED

LAST REVISION 00-00-00
DATE PLOTTED => 23-MAR-2011
TIME PLOTTED => 12:23

Dist	COUNTY	ROUTE	KILOMETER POST TOTAL PROJECT	SHEET No.	TOTAL SHEETS
07	LA	5	R72.7/R73.2	22	33

12/23/10
LICENSED LANDSCAPE ARCHITECT DATE

3-28-11
PLANS APPROVAL DATE

LICENSED LANDSCAPE ARCHITECT JENNIFER TAIRA No. 4625 STATE OF CALIFORNIA
Expiration Date 08/31/11
Renewal Date
Date

THE STATE OF CALIFORNIA OR ITS OFFICERS OR AGENTS SHALL NOT BE RESPONSIBLE FOR THE ACCURACY OR COMPLETENESS OF ELECTRONIC COPIES OF THIS PLAN SHEET.

Caltrans Metric

NOTE

1. FOR COMPLETE R/W AND ACCURATE ACCESS DATA, SEE R/W RECORD MAPS AT DISTRICT OFFICE.

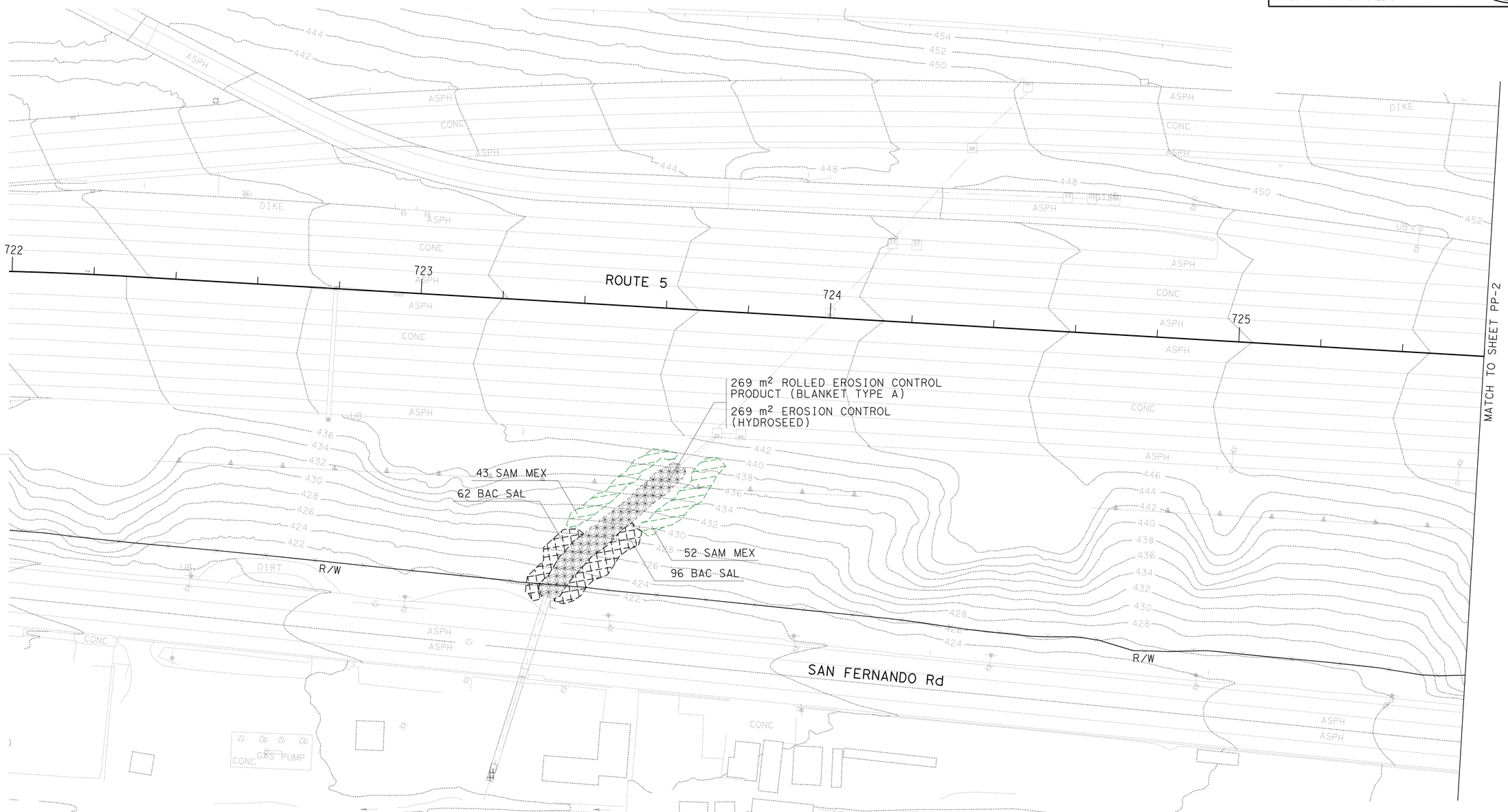

ALL DIMENSIONS ARE IN METERS UNLESS OTHERWISE SHOWN.

PLANTING PLAN

SCALE 1:500

THIS PLAN IS ACCURATE FOR LANDSCAPE WORK ONLY.

PP-1

STATE OF CALIFORNIA - DEPARTMENT OF TRANSPORTATION
Caltrans
LANDSCAPE ARCHITECTURE

FUNCTIONAL SUPERVISOR: JENNIFER TAIRA
CALCULATED-DESIGNED BY: NAMSIK LEE
CHECKED BY: JENNIFER TAIRA
REVISED BY
DATE REVISED

LAST REVISION 00-00-00
DATE PLOTTED => 23-MAR-2011
TIME PLOTTED => 12:23

Dist	COUNTY	ROUTE	KILOMETER POST TOTAL PROJECT	SHEET No.	TOTAL SHEETS
07	LA	5	R72.7/R73.2	23	33

12/23/10
LICENSED LANDSCAPE ARCHITECT DATE

3-28-11
PLANS APPROVAL DATE

LICENSED LANDSCAPE ARCHITECT JENNIFER TAIRA No. 4625 STATE OF CALIFORNIA
Expiration Date 08/31/11
Renewal Date
Date

THE STATE OF CALIFORNIA OR ITS OFFICERS OR AGENTS SHALL NOT BE RESPONSIBLE FOR THE ACCURACY OR COMPLETENESS OF ELECTRONIC COPIES OF THIS PLAN SHEET.

Caltrans Metric

NOTE

1. FOR COMPLETE R/W AND ACCURATE ACCESS DATA, SEE R/W RECORD MAPS AT DISTRICT OFFICE.

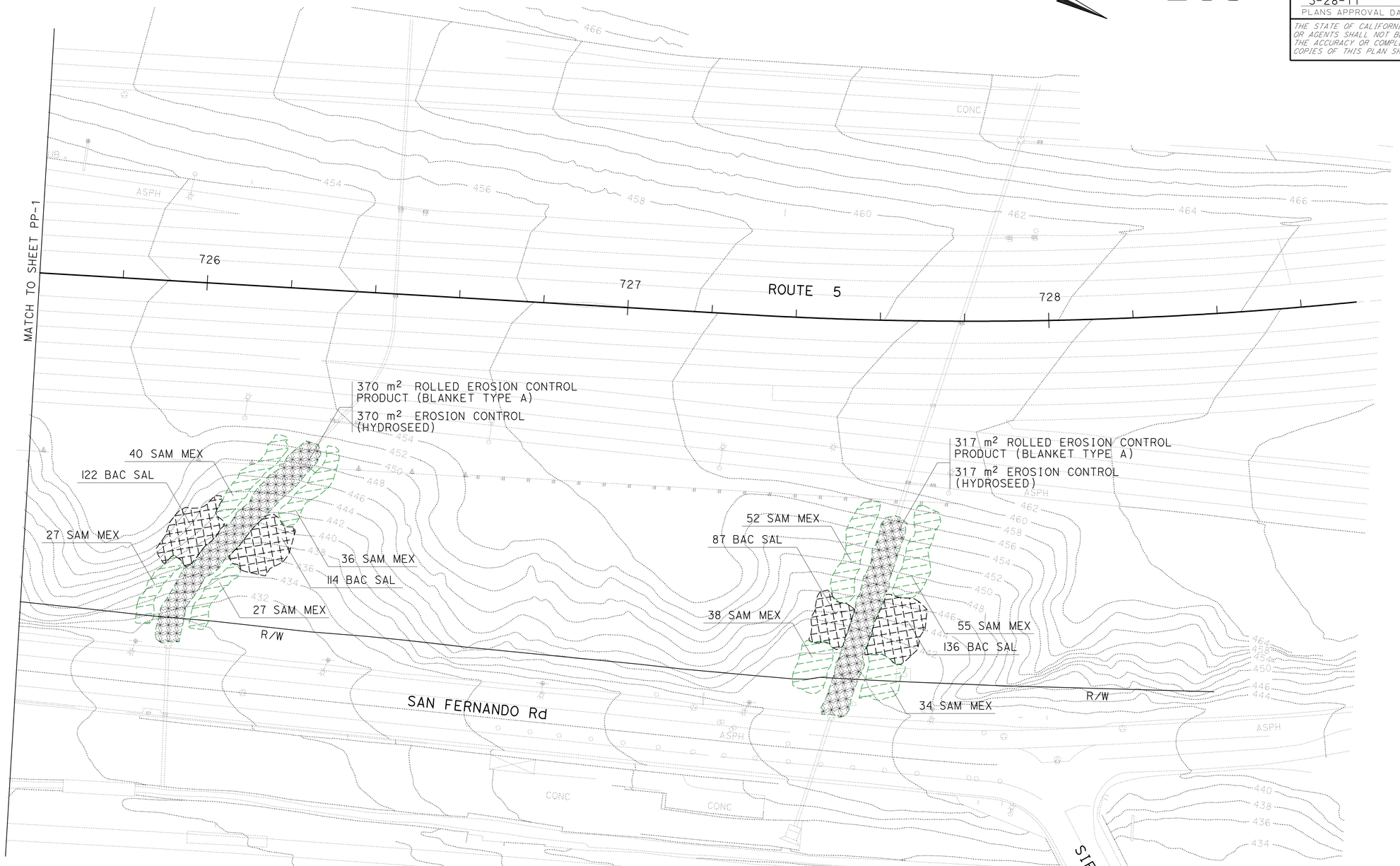

ALL DIMENSIONS ARE IN METERS UNLESS OTHERWISE SHOWN.

PLANTING PLAN

SCALE 1:500

THIS PLAN IS ACCURATE FOR LANDSCAPE WORK ONLY.

PP-2

STATE OF CALIFORNIA - DEPARTMENT OF TRANSPORTATION
Caltrans LANDSCAPE ARCHITECTURE

FUNCTIONAL SUPERVISOR: JENNIFER TAIRA
CALCULATED-DESIGNED BY: NAMSIK LEE
CHECKED BY: JENNIFER TAIRA
REVISED BY
DATE REVISED

LAST REVISION 00-00-00
DATE PLOTTED => 23-MAR-2011
TIME PLOTTED => 12:23

Dist	COUNTY	ROUTE	KILOMETER POST TOTAL PROJECT	SHEET No.	TOTAL SHEETS
07	LA	5	R72.7/R73.2	24	33

12/23/10
LICENSED LANDSCAPE ARCHITECT DATE

3-28-11
PLANS APPROVAL DATE

LICENSED LANDSCAPE ARCHITECT JENNIFER TAIRA No. 4625 Expiration Renewal Date 08/31/11 Date STATE OF CALIFORNIA

THE STATE OF CALIFORNIA OR ITS OFFICERS OR AGENTS SHALL NOT BE RESPONSIBLE FOR THE ACCURACY OR COMPLETENESS OF ELECTRONIC COPIES OF THIS PLAN SHEET.

Caltrans Metric

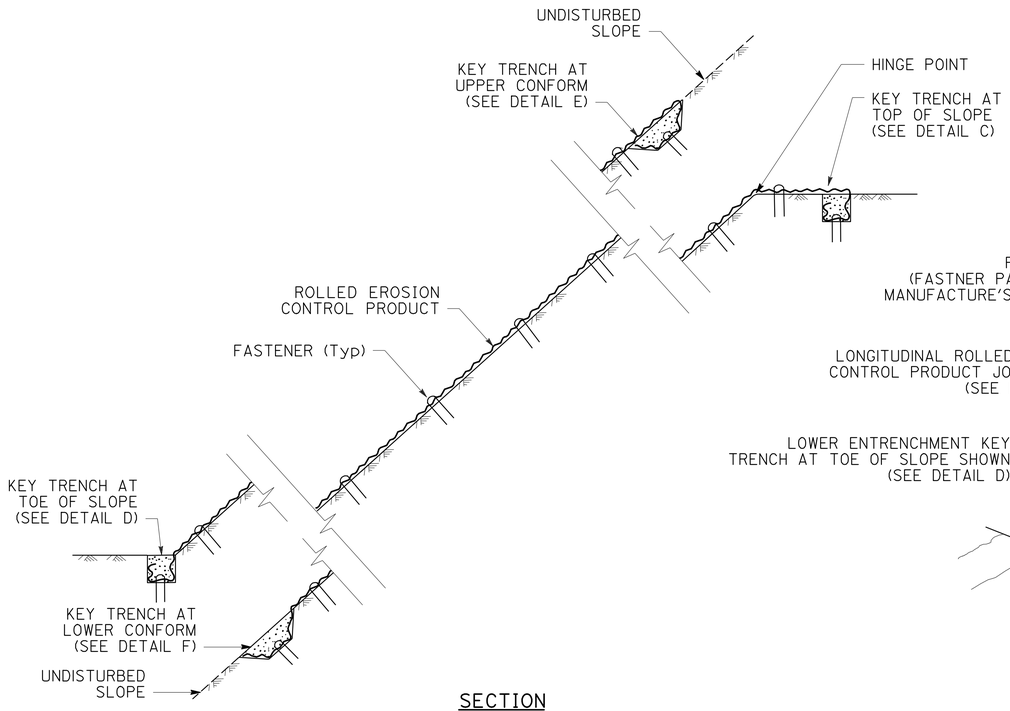

SECTION

ROLLED EROSION CONTROL PRODUCT ON SLOPE WITH VARIOUS KEY ENTRENCHMENTS

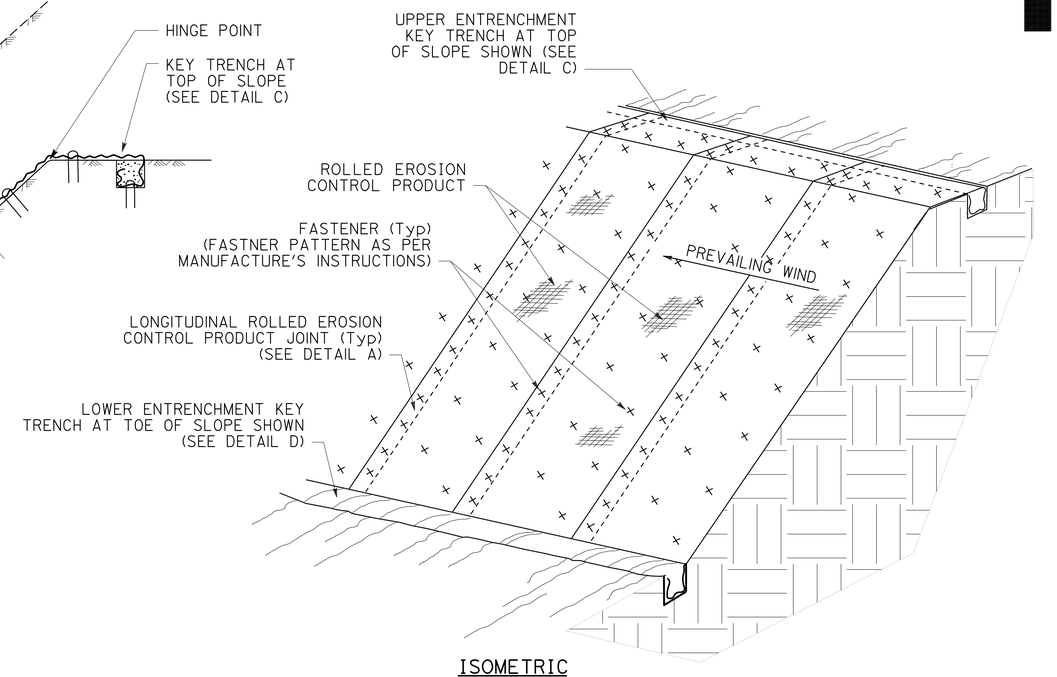

ISOMETRIC

ROLLED EROSION CONTROL PRODUCT ON SLOPE

NOTES:

1. FIBER ROLL/COMPOST SOCK SHOWN FOR REFERENCE PURPOSES ONLY.
2. IF TRANSVERSE ROLLED EROSION CONTROL PRODUCT JOINTS ARE REQUIRED ON SLOPES, SEE DETAIL B.

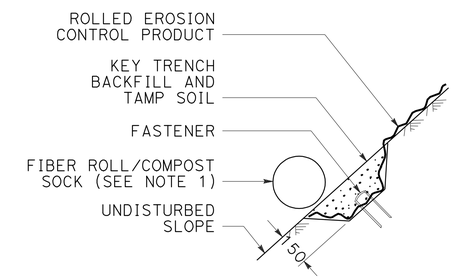

SECTION

DETAIL F

KEY TRENCH AT LOWER CONFORM

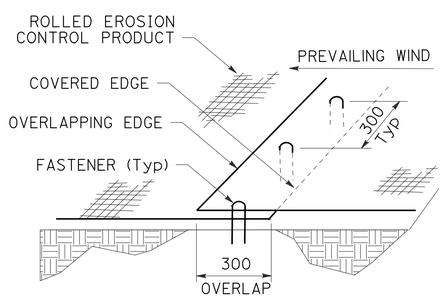

PERSPECTIVE

DETAIL A

LONGITUDINAL ROLLED EROSION CONTROL PRODUCT JOINT

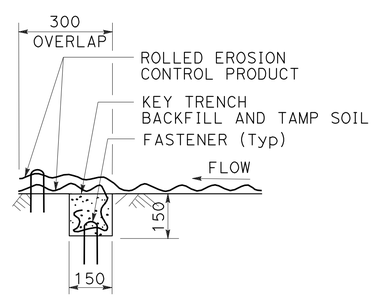

SECTION

DETAIL B

TRANSVERSE ROLLED EROSION CONTROL PRODUCT JOINT

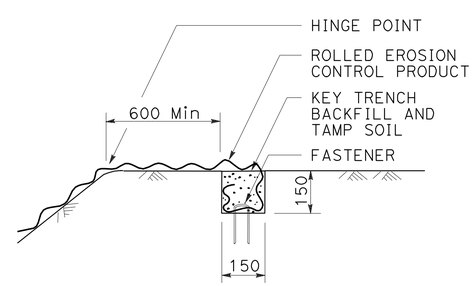

SECTION

DETAIL C

KEY TRENCH AT TOP OF SLOPE

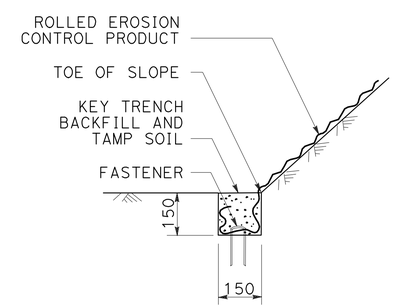

SECTION

DETAIL D

KEY TRENCH AT TOE OF SLOPE

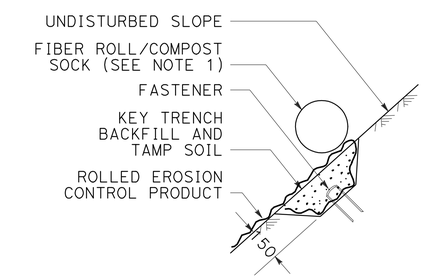

SECTION

DETAIL E

KEY TRENCH AT UPPER CONFORM

ALL DIMENSIONS ARE IN MILLIMETERS UNLESS OTHERWISE SHOWN.

ROLLED EROSION CONTROL PRODUCT

LANDSCAPE DETAILS

NO SCALE

LD-1

NAMSIK LEE	REVISED BY
JENNIFER TAIRA	DATE REVISED
CALCULATED-DESIGNED BY	
CHECKED BY	
FUNCTIONAL SUPERVISOR	
JENNIFER TAIRA	

STATE OF CALIFORNIA - DEPARTMENT OF TRANSPORTATION
Caltrans LANDSCAPE ARCHITECTURE

LAST REVISION 00-00-00 | DATE PLOTTED => 23-MAR-2011 | TIME PLOTTED => 12:23

To accompany plans dated 3-28-11

Caltrans Metric

DIST	COUNTY	ROUTE	KILOMETER POST TOTAL PROJECT	SHEET NO.	TOTAL SHEETS
07	LA	5	R72.7/R73.2	25	33

Raymond Don Tsztoo
REGISTERED CIVIL ENGINEER

June 6, 2008
PLANS APPROVAL DATE

REGISTERED PROFESSIONAL ENGINEER Raymond Don Tsztoo No. C37332 Exp. 6-30-08 STATE OF CALIFORNIA

The State of California or its officers or agents shall not be responsible for the accuracy or completeness of electronic copies of this plan sheet.

To get to the Caltrans web site, go to: http://www.dot.ca.gov

ANNULAR AND HELICAL PROFILE

COUPLING TYPE	PIPE CORRUGATION (mm)	PIPE SIZE (mm)	W OR A (mm)	PIPE WALL THICKNESS CSP (mm)	PIPE WALL THICKNESS CAP (mm)	BAND THICKNESS CSP (mm)	BAND THICKNESS CAP (mm)	BAR AND STRAP (CSP ONLY) STRAP THICKNESS (mm)	BOLTS (mm ø)	BAR Dia (mm)	BAR YIELD STRENGTH (MPa)	ANGLE DIMENSIONS CSP (mm)	ANGLE DIMENSIONS CAP (mm)	BOLTS (No.-mm ø) CSP	BOLTS (No.-mm ø) CAP	RIVETS ANGLE TO BAND CSP	RIVETS ANGLE TO BAND CAP	SPOT WELDS ANGLE TO BAND CSP
TWO PIECE INTEGRAL FLANGE	38 x 6.5	150 - 250	178	1.32 - 2.01	1.22 - 1.52	1.32	1.52							2-10	2-10			
		300 - 450	178	1.32 - 2.01		1.63								2-13				
	68 x 13	300 - 600	178	1.32 - 2.01	1.52 - 2.67	1.63	1.52							2-13	2-13			
UNIVERSAL	68 x 13	THROUGH 900	305	1.32 - 3.51	1.52 - 3.43	1.32	1.52					51 x 51 x 4.8	51 x 51 x 4.8	3-13	3-13	3-9.5 mm	3-9.5 mm	3-15 mm
		1050 - 1500	305	1.32 - 4.27	1.91 - 4.17	1.32	1.52					51 x 51 x 4.8	51 x 51 x 4.8	3-13	3-13	3-9.5 mm	3-9.5 mm	5-15 mm
		THROUGH 1800	305	1.32 - 4.27	4.17	1.32	2.67	2.01	13	22	220	51 x 51 x 4.8	51 x 51 x 4.8	3-13	3-13	3-9.5 mm	3-9.5 mm	5-15 mm
		1950 - 2100	413	4.27		2.01		DOUBLE 2.01	13	22	220							
ANNULAR	68 x 13	THROUGH 900	178	1.63 - 3.51	1.52 - 3.43	1.32	1.52	2.01	13	22	220	51 x 51 x 4.8	51 x 51 x 4.8	2-13	2-13	3-9.5 mm	3-9.5 mm	3-15 mm
		1050 - 1800	305	1.63 - 4.27	1.91 - 4.17	1.32	2.67	2.01	13	22	220	51 x 51 x 4.8	51 x 51 x 4.8	3-13	3-13	3-9.5 mm	3-9.5 mm	5-15 mm
		1950 - 2100	305	4.27		2.01		2.77	13	22	310	51 x 51 x 4.8		3-13		3-9.5 mm		5-15 mm
	75 x 25	1200 - 2250	355	1.63 - 2.77		1.32		2.01	13	22	220	51 x 51 x 4.8		3-13		3-9.5 mm		5-15 mm
		2400 - 3000	355	2.01 - 2.77		1.32		2.77	13	22	310	51 x 51 x 4.8		3-13		4-9.5 mm		
		1050 - 2700	355		1.52 - 3.43		1.52						51 x 51 x 4.8		3-13		3-9.5 mm	
HELICAL	68 x 13	THROUGH 900	305	1.32 - 3.51	1.52 - 3.43	1.32	1.52	2.01	13	22	220	51 x 51 x 4.8	51 x 51 x 4.8	3-13	3-13	3-9.5 mm	3-9.5 mm	3-15 mm
		1050 - 1800	305	1.32 - 4.27	1.91 - 4.17	1.32	1.52	2.01	13	22	220	51 x 51 x 4.8	51 x 51 x 4.8	3-13	3-13	3-9.5 mm	3-9.5 mm	5-15 mm
		1950 - 2100	305	4.27		2.01		2.77	13	22	310	51 x 51 x 4.8		3-13		3-9.5 mm		5-15 mm
	75 x 25	1200 - 2250	355	1.63 - 2.77		1.32		2.01	13	22	220	51 x 51 x 4.8		3-13		3-9.5 mm		5-15 mm
		2400 - 3000	355	2.01 - 2.77		1.32		2.77	13	22	310	51 x 51 x 4.8		3-13		4-9.5 mm		
		1050 - 2700	355		1.52 - 3.43		1.52						51 x 51 x 4.8		3-13		3-9.5 mm	
HUGGER	68 x 13 REROLLED END	300 - 1350	100	1.32 - 2.77		1.32						64 x 38 x 4.8	64 x 38 x 4.8	1-13				3-15 mm
		1500 - 1650	100	2.77		1.63						64 x 38 x 4.8	64 x 38 x 4.8	1-13				3-15 mm
		900 - 1200	100	3.51		1.63						64 x 38 x 4.8	64 x 38 x 4.8	1-13				3-15 mm
		THROUGH 1800	267	1.32 - 4.27		1.32		2.01	13	22	220							
		1950 - 2100	267	4.27		2.01		2.77	13	22	310							
	75 x 25 REROLLED END	1200 - 2250	267	1.63 - 2.77		1.32		2.01	13	22	220							
		2400 - 3000	267	2.01 - 2.77		1.32		2.77	13	22	310							
	125 x 25 REROLLED END	1200 - 1650	190	1.63 - 2.77		1.63		2.01	13	22	220	64 x 38 x 4.8	64 x 38 x 4.8	1-13				3-15 mm
		1800 - 2250	190	1.63 - 2.01		1.63		2.01	13	22	220	64 x 38 x 4.8	64 x 38 x 4.8	1-13				3-15 mm
		1200 - 2250	190	1.63 - 3.51		1.63		2.01	13	22	220							
		1200 - 3000	305 SEE	1.63 - 2.77		1.63		2.01	13	22	220							
		1200 - 2100	305 NOTE	3.51		1.63		2.01	13	22	220							
		2250 - 3000	305 11	3.51		1.63		DOUBLE 2.01	13	22	220							

SPIRAL RIB PROFILE

COUPLING TYPE	PIPE CORRUGATION (mm)	PIPE SIZE (mm)	W (mm)	PIPE WALL THICKNESS SSRP (mm)	PIPE WALL THICKNESS ASRP (mm)	BAND THICKNESS SSRP (mm)	BAND THICKNESS ASRP (mm)	BAR AND STRAP (SSRP ONLY) STRAP THICKNESS (mm)	BOLTS (mm ø)	BAR Dia (mm)	BAR YIELD STRENGTH (MPa)	ANGLE DIMENSIONS SSRP (mm)	ANGLE DIMENSIONS ASRP (mm)	BOLTS (No.- mm ø) SSRP	BOLTS (No.- mm ø) ASRP	RIVETS ANGLE TO BAND SSRP	RIVETS ANGLE TO BAND ASRP	SPOT WELDS ANGLE TO BAND SSRP
ANNULAR	68 x 13 * REROLLED END	600 - 900	305	1.63 - 2.77	1.52 - 2.67	1.32	1.52	2.01	13	22	220	51 x 51 x 4.8	51 x 51 x 4.8	3-13	3-13	3-9.5 mm	3-9.5 mm	5-15 mm
		1050 - 1500	305	1.63 - 2.77	1.91 - 2.67	1.32	2.67	2.01	13	22	220	51 x 51 x 4.8	51 x 51 x 4.8	3-13	3-13	3-9.5 mm	3-9.5 mm	5-15 mm
		1650 - 1800	305	1.63 - 2.77		1.32		2.01	13	22	220	51 x 51 x 4.8	51 x 51 x 4.8	3-13	3-13	3-9.5 mm	3-9.5 mm	5-15 mm
		1950 - 2900	305	2.01 - 2.77		2.01		2.77	13	22	310	51 x 51 x 4.8	51 x 51 x 4.8	3-13	3-13	3-9.5 mm	3-9.5 mm	5-15 mm
HUGGER	68 x 13 * REROLLED END	600 - 1800	267	1.63 - 2.77		1.32		2.01	13	22	220							
		1950 - 2100	267	2.77		2.01		2.77	13	22	310							

* See Note 14.

14. All profiles of Spiral Rib Pipe (19 mm x 19 mm ribs at 191 mm pitch and 19 mm x 25 mm ribs at 292 mm pitch in both steel and aluminum and 19 mm x 25 mm ribs at 216 mm pitch in steel only) shall be manufactured with rerolled ends. Corrugation profile of the rerolled ends shall be 68 mm x 13 mm annual corrugations with a minimum of two full corrugations at each end.

ALL DIMENSIONS ARE IN MILLIMETERS UNLESS OTHERWISE SHOWN

NOTES

1. All ferrous metal coupling band connection hardware shall be galvanized or electro-plated in accordance with the Standard Specifications.
2. For helically corrugated coupling bands, the connection angles may be oriented parallel to the pipe axis, provided connecting holes are slotted lengthwise sufficiently to allow adjustment for the helix angle.
3. Tension strap may be connected to band with either spot welds or fillet welds that develop minimum required strength of strap.
4. Use 32 mm gage line dimension on attached angle leg for rivets and spot welds.
5. Band thickness shall not be less than:
   a. 3 standard thicknesses lighter than the thickness of the pipe for Corrugated Steel Pipe.
   b. 2 standard thicknesses lighter than the thickness of the pipe and in no case lighter than 1.5 mm for Corrugated Aluminum Pipe.
6. Dimensions, thicknesses and strengths shown are minimum.
7. For pipe arches use same width band as for round pipe of equal periphery.
8. Fillet welds of equivalent strenght may be substituted for spot welds or rivets.
9. Spot welds shall develop minimum required strength of strap.
10. Pipe with rerolled ends having at least two 68 mm x 13 mm annular corrugations at each end with or without an upturned flange may be connected with any of the annular coupling bands shown for pipe of the same diameter and wall thickness and having 68 mm x 13 mm corrugations.
11. In the case of H-305 huggerbands, two piece bands are required for diameters through 2400 mm and three piece bands are required for diameters 2550 mm through 3000 mm.
12. Two piece bands are required for pipes greater than 1050 mm diameter.
13. The 57 mm x 51 mm x 2.8 mm thick galvanized die-formed angle connector may be used in lieu of the 51 mm x 51 mm 4.8 mm angle connector for standard joints only on pipes through 1800 mm diameter.

STATE OF CALIFORNIA
DEPARTMENT OF TRANSPORTATION

CORRUGATED METAL PIPE COUPLING DETAILS No. 5 STANDARD JOINT

NO SCALE

RSP D97E DATED JUNE 6, 2008 SUPERSEDES STANDARD PLAN D97E DATED July 1, 2004 - PAGE 187 OF THE STANDARD PLANS BOOK DATED July 2004.

REVISED STANDARD PLAN RSP D97E

2004 REVISED Std PLAN RSP D97E

05-19-08

To accompany plans dated 3-28-11

Caltrans Metric

DIST	COUNTY	ROUTE	KILOMETER POST TOTAL PROJECT	SHEET NO.	TOTAL SHEETS
07	LA	5	R72.7/R73.2	26	33

Raymond Don Tsztoo
REGISTERED CIVIL ENGINEER

June 6, 2008
PLANS APPROVAL DATE

REGISTERED PROFESSIONAL ENGINEER Raymond Don Tsztoo No. C37332 Exp. 6-30-08 STATE OF CALIFORNIA

The State of California or its officers or agents shall not be responsible for the accuracy or completeness of electronic copies of this plan sheet.

To get to the Caltrans web site, go to: http://www.dot.ca.gov

ANNULAR AND HELICAL PROFILE

COUPLING TYPE	PIPE CORRUGATION (mm)	PIPE SIZE (mm)	W OR A (mm)	PIPE WALL THICKNESS		BAND THICKNESS		BAR AND STRAP (CSP ONLY)			ANGLE						
								STRAP THICKNESS (mm)	BOLTS (mm ø)	BAR Dia (mm)	DIMENSIONS		BOLTS (No.-mm ø)		RIVETS ANGLE TO BAND		SPOT WELDS ANGLE TO BAND
				CSP (mm)	CAP (mm)	CSP (mm)	CAP (mm)				CSP (mm)	CAP (mm)	CSP	CAP	CSP	CAP	CSP
TWO PIECE INTEGRAL FLANGE	38 x 6.5	150	178	1.63 - 4.27		1.32							3-10				
	38 x 6.5	200 - 250	178	1.63 - 4.27	1.52 - 4.17	1.63	1.52						3-10	3-10			
ANNULAR	68 x 13	THROUGH 600	305	1.63 - 4.27	1.52 - 4.17	1.63	1.52				51 x 51 x 4.8	51 x 51 x 4.8	3-13	3-13	3-9.5 mm	3-9.5 mm	3-15 mm
HUGGER	68 x 13 REROLLED END	THROUGH 600	267	1.63 - 4.27		1.63		2.01	13	22	51 x 51 x 4.8	51 x 51 x 4.8	3-13	3-13	3-9.5 mm	3-9.5 mm	3-15 mm

SPIRAL RIB PROFILE

COUPLING TYPE	PIPE CORRUGATION (mm)	PIPE SIZE (mm)	W (mm)	PIPE WALL THICKNESS		BAND THICKNESS		BAR AND STRAP (SSRP ONLY)			ANGLE						
											DIMENSIONS		BOLTS (No.- mm ø)		RIVETS ANGLE TO BAND		SPOT WELDS ANGLE TO BAND
				SSRP (mm)	ASRP (mm)	SSRP (mm)	ASRP (mm)	STRAP THICKNESS (mm)	BOLTS (mm ø)	BAR Dia (mm)	SSRP (mm)	ASRP (mm)	SSRP	ASRP	SSRP	ASRP	SSRP
ANNULAR	68 x 13 ✳ REROLLED END	600	305	1.63 - 4.27	1.52 - 4.17	1.63	1.52				51 x 51 x 4.8	51 x 51 x 4.8	3-13	3-13	3-9.5 mm	3-9.5 mm	3-15 mm
HUGGER	68 x 13 ✳ REROLLED END	600	267	1.63 - 4.27		1.63		2.01	13	22							

✳ See Note 12.

NOTES

1. All ferrous metal coupling band connection hardware shall be galvanized or electroplated in accordance with the Standard Specifications.
2. For helically corrugated coupling bands, the connection angles may be oriented parallel to the pipe axis, provided connecting holes are slotted lengthwise sufficiently to allow adjustment for the helix angle.
3. Tension straps may be connected to band with either spot welds or fillet welds that develop minimum required strength of strap.
4. Use 32 mm gage line dimension on attached angle leg for rivets and spot welds.
5. Band thickness shall not be less than:
   a. 3 standard thickness lighter than the thickness of the pipe for corrugated steel pipe.
   b. 2 standard thickness lighter than the thickness of the pipe and in no case lighter than 1.5 mm for corrugated aluminum pipe.
6. Dimensions, thickness and strengths shown are minimum.
7. For pipe arches use same width band as for round pipe of equal periphery.
8. Fillet welds of equivalent strength may be substituted for spot welds or rivets.
9. Spot welds shall develop minimum required strength of strap.
10. Pipe with rerolled ends having at least two 68 mm x 13 mm annular corrugations at each end with or without an upturned flange may be connected with any of the annular coupling bands shown for pipe of the same diameter and wall thickness and having 68 mm x 13 mm corrugations.
11. For downdrain applications, two piece integral flange couplers shall have factory applied sleeve type rubber gaskets with a minimum length of 175 mm measured along the length of the pipe.
12. All profiles of Spiral Rib Pipe (19 mm x 19 mm ribs at 191 mm pitch and 19 mm x 25 mm ribs at 292 mm pitch in both steel and aluminum and 19 mm x 25 mm ribs at 216 mm pitch in steel only) shall be manufactured with rerolled ends. Corrugation profile of the rerolled ends shall be 68 mm x 13 mm annual corrugations with a minimum of two full corrugations at each end.

STATE OF CALIFORNIA
DEPARTMENT OF TRANSPORTATION

CORRUGATED METAL PIPE COUPLING DETAILS No. 7 DOWNDRAIN

NO SCALE

ALL DIMENSIONS ARE IN MILLIMETERS UNLESS OTHERWISE SHOWN

RSP D97G DATED JUNE 6, 2008 SUPERSEDES STANDARD PLAN D97G
DATED July 1, 2004 - PAGE 189 OF THE STANDARD PLANS BOOK DATED July 2004.

REVISED STANDARD PLAN RSP D97G

2004 REVISED Std PLAN RSP D97G

05-19-08

DIST	COUNTY	ROUTE	KILOMETER POST TOTAL PROJECT	SHEET NO.	TOTAL SHEETS
07	LA	5	R72.7/R73.2	27	33

Caltrans Metric

LICENSED LANDSCAPE ARCHITECT

March 7, 2008
PLANS APPROVAL DATE

LICENSED LANDSCAPE ARCHITECT Gregory A. Balzer 2576 Signature 02-28-2009 Renewal Date 02-21-08 Date STATE OF CALIFORNIA

The State of California or its officers or agents shall not be responsible for the accuracy or completeness of electronic copies of this plan sheet.

To get to the Caltrans web site, go to: http://www.dot.ca.gov

To accompany plans dated 3-28-11

EXISTING	PROPOSED	ITEM DESCRIPTION
		WATER METER (WM)
		BACKFLOW PREVENTER ASSEMBLY (BPA)
		BACKFLOW PREVENTER ASSEMBLY IN ENCLOSURE (BPAE)
		BACKFLOW PREVENTER ENCLOSURE (BPE)
		BOOSTER PUMP (BP)
		TRUCK LOADING STANDPIPE (TLS)
fs	FS	FLOW SENSOR (FS)
		MASTER IRRIGATION CONTROLLER (MIC)
		AUXILIARY IRRIGATION CONTROLLER (AIC)
		IRRIGATION CONTROLLER (IC)/ IRRIGATION CONTROLLER (IC) (BATTERY)
		IRRIGATION CONTROLLER(S) IN CONTROLLER ENCLOSURE CABINET (ICC)
		CONTROL AND NEUTRAL CONDUCTORS (CNC)
scc	SCC	SPRINKLER CONTROL CONDUIT (SCC)
		CONDUIT (COND)
		IRRIGATION SLEEVE
dip	DIP	DUCTILE IRON PIPE (SUPPLY LINE) (MAIN) (DIP)
		GALVANIZED STEEL PIPE (SUPPLY LINE) (MAIN) (GSP)
		GALVANIZED STEEL PIPE (SUPPLY LINE) (LATERAL) (GSP)
		PLASTIC PIPE (PR 200) (SUPPLY LINE) (MAIN)
		PLASTIC PIPE (PR 200) (SUPPLY LINE) (LATERAL)
		PLASTIC PIPE (IRRIGATION LINE)
		REMOTE CONTROL VALVE (RCV) REMOTE CONTROL VALVE (MASTER) (RCVM)
		MANUAL CONTROL VALVE (MCV)
		VALVE ASSEMBLY UNIT (VAU)
		WYE STRAINER (WS)
		FILTER ASSEMBLY UNIT (FAU)
		GATE VALVE (GV)
		BALL VALVE (BV)

EXISTING	PROPOSED	ITEM DESCRIPTION
		QUICK COUPLING VALVE (QCV)
		CAM COUPLING ASSEMBLY (CCA)
		PRESSURE REDUCING VALVE (PRV)
		PRESSURE RELIEF VALVE (PRLV)
		FLOW CONTROL VALVE (FCV)
		COMBINATION AIR RELEASE VALVE (CARV)
		CHECK VALVE (CV)
		FLUSH VALVE (FV)
		NOZZLE LINE W/TURNING UNION
		IRRIGATION SYSTEM
		IRRIGATION SYSTEM TO BE REMOVED
		CHAIN LINK GATE
		QUICK COUPLING VALVE W/SPRINKLER PROTECTOR
3	3	SPRINKLER W/SPRINKLER PROTECTOR
	C	CONNECT TO EXISTING SYSTEM
		CAP
		CAP EXISTING

VALVE CODE

RCV SIZE (mm)
IRRIGATION CONTROLLER
CONTROLLER STATION
VALVE IN PARALLEL (IF APPLICABLE)
L/min
QUANTITY OF SPRINKLERS (WHEN SHOWN)

* 63.5-A-2b-151.4-60

MCV SIZE (mm)
VALVE NUMBER
L/min
QUANTITY OF TYPE SPRINKLERS (WHEN SHOWN)

* 50.8-3-113.5-50

* VALVE CODES FOR EXISTING VALVES ARE SHOWN IN A DASHED ENCLOSURE.

STATE OF CALIFORNIA
DEPARTMENT OF TRANSPORTATION

PLANTING AND IRRIGATION SYMBOLS

NO SCALE

ALL DIMENSIONS ARE IN MILLIMETERS UNLESS OTHERWISE SHOWN

RSP H2 DATED MARCH 7, 2008 SUPERSEDES STANDARD PLAN H2 DATED JULY 1, 2004 - PAGE 202 OF THE STANDARD PLANS BOOK DATED JULY 2004.

REVISED STANDARD PLAN RSP H2

2004 REVISED Std PLAN RSP H2

DIST	COUNTY	ROUTE	KILOMETER POST TOTAL PROJECT	SHEET NO.	TOTAL SHEETS
07	LA	5	R72.7/R73.2	28	33

Caltrans Metric

Randell D. Hiatt
REGISTERED CIVIL ENGINEER

June 6, 2008
PLANS APPROVAL DATE

REGISTERED PROFESSIONAL ENGINEER
Randell D. Hiatt
No. C50200
Exp. 6-30-09
CIVIL
STATE OF CALIFORNIA

The State of California or its officers or agents shall not be responsible for the accuracy or completeness of electronic copies of this plan sheet.

To get to the Caltrans web site, go to: http://www.dot.ca.gov

To accompany plans dated 3-28-11

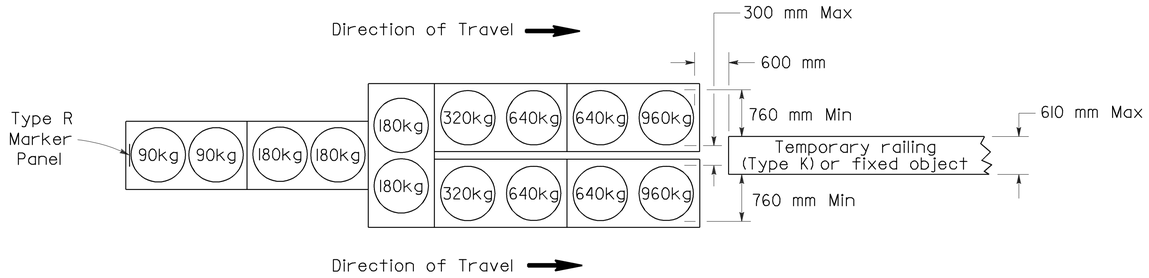

ARRAY 'TU14'

Approach speed 70 km/h or more

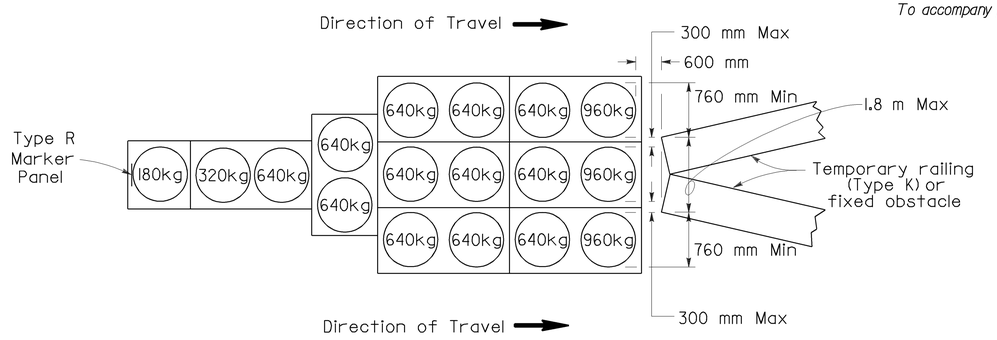

ARRAY 'TU17'

Approach speed less than 70 km/h

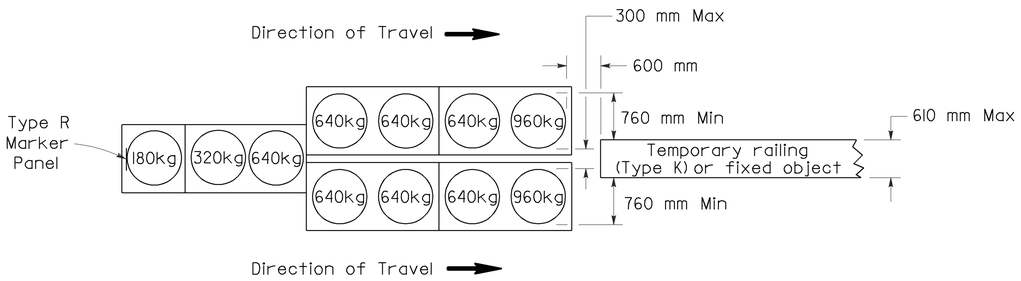

ARRAY 'TU11'

Approach speed less than 70 km/h

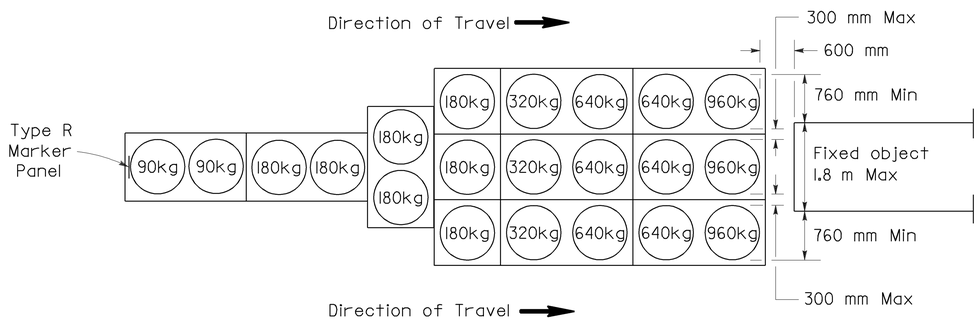

ARRAY 'TU21'

Approach speed 70 km/h or more

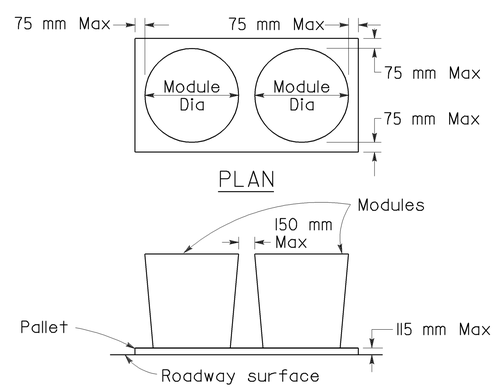

CRASH CUSHION PALLET DETAIL

See Note 7

NOTES

1. (XXX) Indicates sand filled module location and mass of sand in kilograms for each module. Module spacing is based on the greater diameter of the module.
2. All sand masses are nominal.
3. Temporary crash cushion arrays shall not encroach on the traveled way.
4. Place the top of Type R marker panel 25 mm below the module lid.
5. Refer to Standard Plan A73B for marker details.
6. Approach speeds indicated conform to NCHRP 350 Report criteria.
7. Use of Pallets is optional.

STATE OF CALIFORNIA
DEPARTMENT OF TRANSPORTATION

TEMPORARY CRASH CUSHION, SAND FILLED (UNIDIRECTIONAL)

NO SCALE

ALL DIMENSIONS ARE IN MILLIMETERS UNLESS OTHERWISE SHOWN

RSP T1A DATED JUNE 6, 2008 SUPERSEDES STANDARD PLAN T1A
DATED July 1, 2004 - PAGE 211 OF THE STANDARD PLANS BOOK DATED July 2004.

REVISED STANDARD PLAN RSP T1A

2004 REVISED Std PLAN RSP T1A

5-16-08

DIST	COUNTY	ROUTE	KILOMETER POST TOTAL PROJECT	SHEET NO.	TOTAL SHEETS
07	LA	5	R72.7/R73.2	29	33

Caltrans Metric

Randell D. Hiatt
REGISTERED CIVIL ENGINEER

June 6, 2008
PLANS APPROVAL DATE

REGISTERED PROFESSIONAL ENGINEER
Randell D. Hiatt
No. C50200
Exp. 6-30-09
CIVIL
STATE OF CALIFORNIA

The State of California or its officers or agents shall not be responsible for the accuracy or completeness of electronic copies of this plan sheet.

To get to the Caltrans web site, go to: http://www.dot.ca.gov

To accompany plans dated 3-28-11

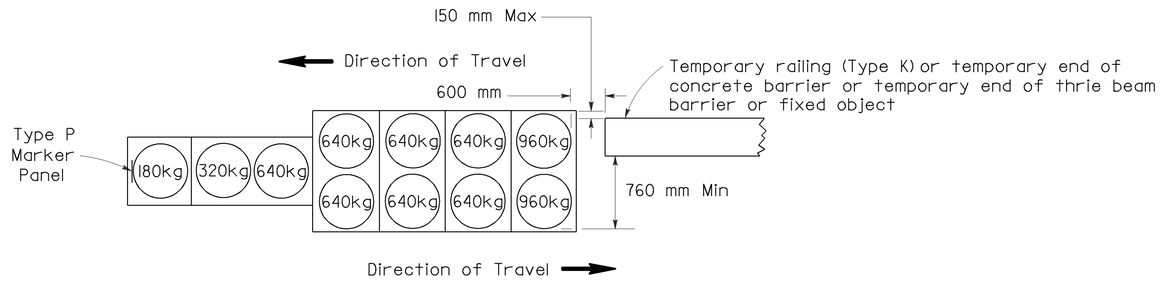

ARRAY 'TBI1'

Approach speed less than 70 km/h

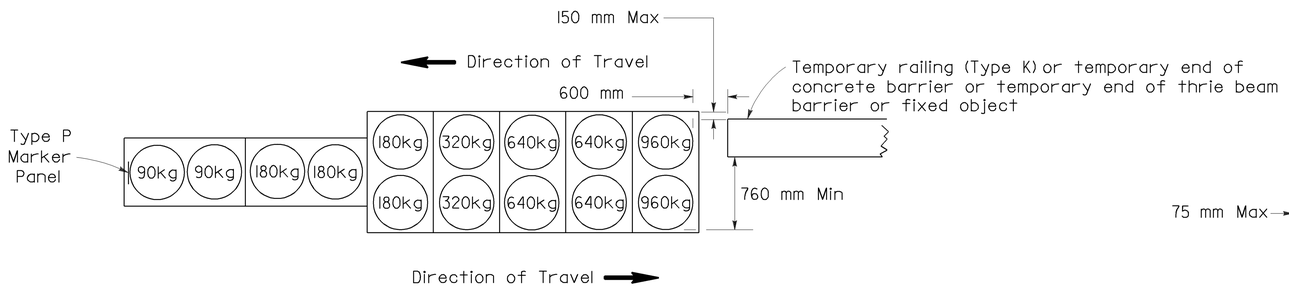

ARRAY 'TBI4'

Approach speed 70 km/h or more

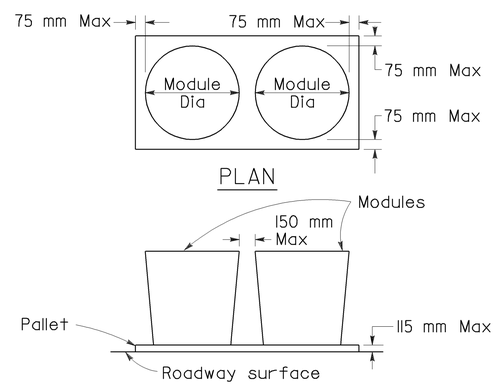

CRASH CUSHION PALLET DETAIL

See Note 7

NOTES

1. (XXX) Indicates sand filled module location and mass of sand in kilograms for each module. Module spacing is based on the greater diameter of the module.
2. All sand masses are nominal.
3. Temporary crash cushion arrays shall not encroach on the traveled way.
4. Place the Type P marker panel so that the bottom of the panel rests upon the pallet.
5. Refer to Standard Plan A73B for marker details.
6. Approach speeds indicated conform to NCHRP 350 Report criteria.
7. Use of Pallets is optional.

STATE OF CALIFORNIA
DEPARTMENT OF TRANSPORTATION

TEMPORARY CRASH CUSHION, SAND FILLED (BIDIRECTIONAL)

NO SCALE

ALL DIMENSIONS ARE IN MILLIMETERS UNLESS OTHERWISE SHOWN

RSP T1B DATED JUNE 6, 2008 SUPERSEDES STANDARD PLAN T1B DATED July 1, 2004 - PAGE 212 OF THE STANDARD PLANS BOOK DATED July 2004.

REVISED STANDARD PLAN RSP T1B

2004 REVISED Std PLAN RSP T1B

5-16-08

DIST	COUNTY	ROUTE	KILOMETER POST TOTAL PROJECT	SHEET NO.	TOTAL SHEETS
07	LA	5	R72.7/R73.2	30	33

Caltrans Metric

Randell D. Hiatt
REGISTERED CIVIL ENGINEER

June 6, 2008
PLANS APPROVAL DATE

REGISTERED PROFESSIONAL ENGINEER
Randell D. Hiatt
No. C50200
Exp. 6-30-09
CIVIL
STATE OF CALIFORNIA

The State of California or its officers or agents shall not be responsible for the accuracy or completeness of electronic copies of this plan sheet.

To get to the Caltrans web site, go to: http://www.dot.ca.gov

To accompany plans dated 3-28-11

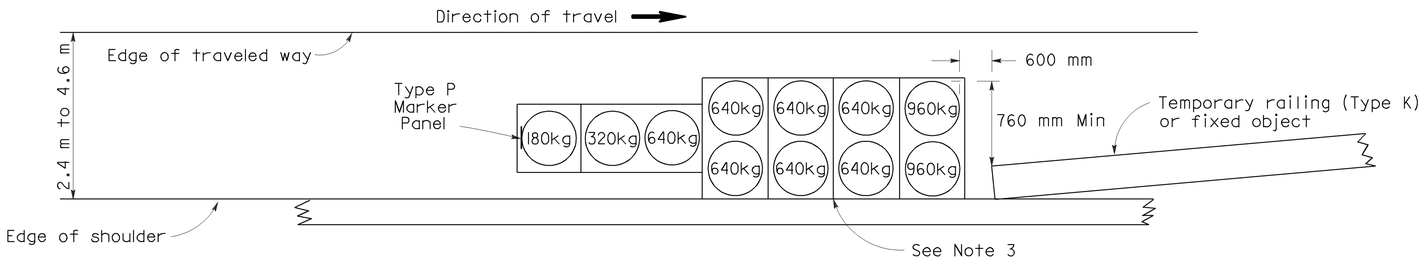

ARRAY 'TSI1'

Approach speed less than 70 km/h
See Note 9

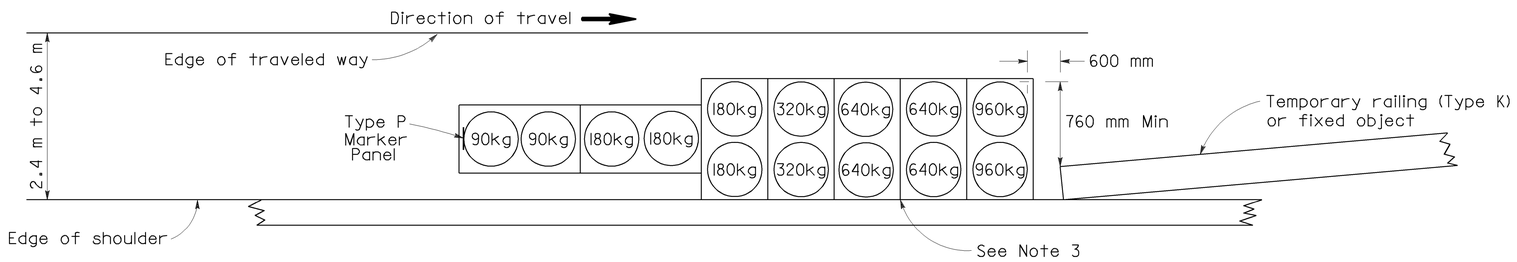

ARRAY 'TSI4'

Approach speed 70 km/h or more
See Note 9

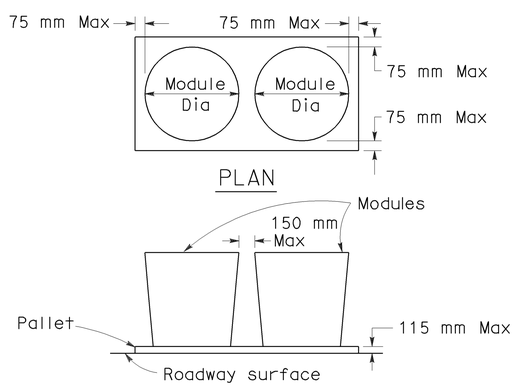

CRASH CUSHION PALLET DETAIL

See Note 11

NOTES

1. (XXX) Indicates sand filled module location and mass of sand in kilograms for each module. Module spacing is based on the greater diameter of the module.
2. All sand masses are nominal.
3. The temporary crash cushion arrays shown on this plan shall be used only in locations where there will be traffic on one side of the temporary crash cushion array.
4. If the fixed object or approach end of the temporary railing is less than 4.60 meters from the edge of traveled way, a temporary crash cushion is required.
5. Temporary crash cushion arrays shall not encroach on the traveled way.
6. Arrays for median shoulders shall conform to details shown on this plan for outside shoulders.
7. Place the Type P marker panel so that the bottom of the panel rest upon the pallet and faces traffic.
8. Refer to Standard Plan A73B for marker details.
9. For shoulder widths less than 2.4 m, appropriate approved crash cushion protection, other than sand filled modules, shall be provided at fixed objects and at approach ends of temporary railing. The specific type of crash cushion shall be as shown on the project plans or as specified in the Special Provisions, or if not shown on the project plans or specified in the Special Provisions, shall be as approved by the Engineer.
10. Approach speeds indicated conform to NCHRP 350 Report criteria.
11. Use of Pallets is optional.

STATE OF CALIFORNIA
DEPARTMENT OF TRANSPORTATION

TEMPORARY CRASH CUSHION, SAND FILLED (SHOULDER INSTALLATIONS)

NO SCALE

ALL DIMENSIONS ARE IN MILLIMETERS UNLESS OTHERWISE SHOWN

RSP T2 DATED JUNE 6, 2008 SUPERSEDES STANDARD PLAN T2
DATED July 1, 2004 - PAGE 213 OF THE STANDARD PLANS BOOK DATED July 2004.

REVISED STANDARD PLAN RSP T2

2004 REVISED Std PLAN RSP T2

5-16-08

To accompany plans dated 3-28-11

Caltrans Metric

DIST	COUNTY	ROUTE	KILOMETER POST TOTAL PROJECT	SHEET NO.	TOTAL SHEETS
07	LA	5	R72.7/R73.2	31	33

REGISTERED CIVIL ENGINEER

April 28, 2005
PLANS APPROVAL DATE

REGISTERED PROFESSIONAL ENGINEER Greg W. Edwards No. C36386 Exp. 6-30-06 CIVIL STATE OF CALIFORNIA

The State of California or its officers or agents shall not be responsible for the accuracy or completeness of electronic copies of this plan sheet.

To get to the Caltrans web site, go to: http://www.dot.ca.gov

NOTES

Unless otherwise specified in the special provisions, all temporary warning signs shall have black legend on orange background.

California code are designated by (CA). Otherwise, Federal codes are shown.

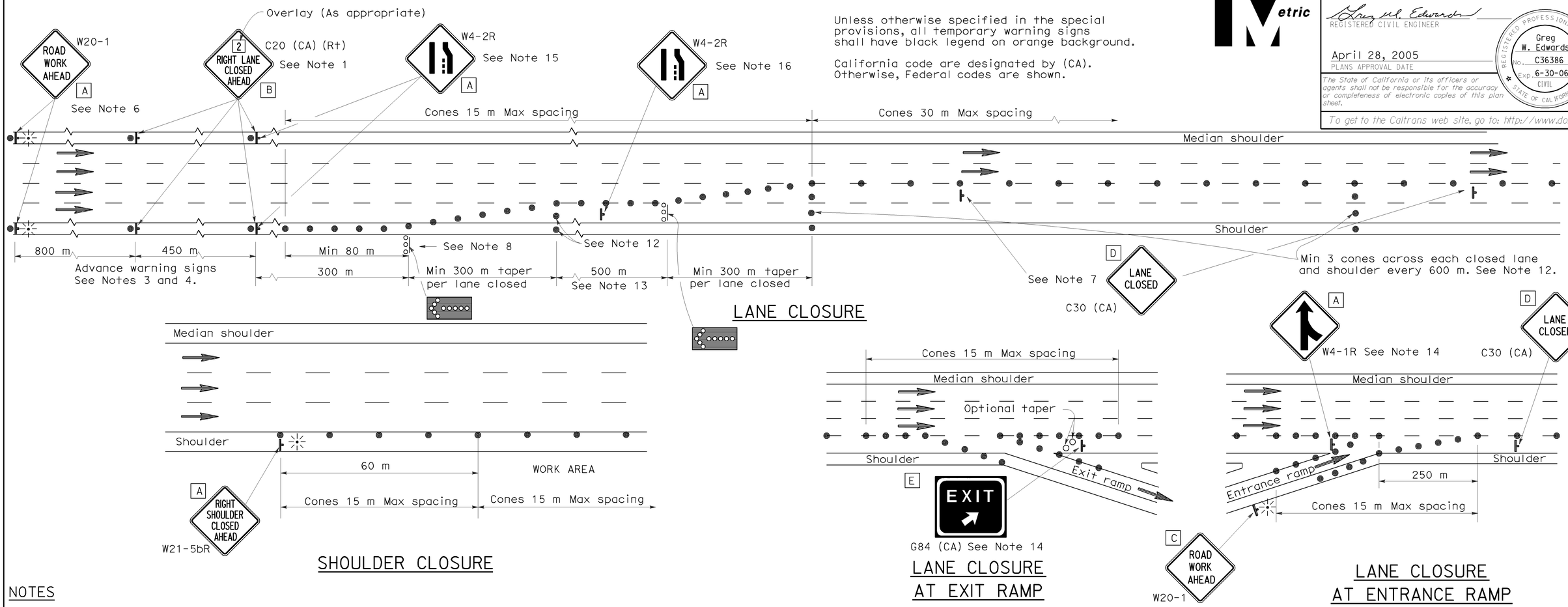

LANE CLOSURE

SHOULDER CLOSURE

LANE CLOSURE AT EXIT RAMP

LANE CLOSURE AT ENTRANCE RAMP

NOTES

1. Median lane closures shall conform to the details for outside lane closures except that C20 (CA) (Lt) signs shall be used.
2. At least one person shall be assigned to provide full time maintenance of traffic control devices for lane closures.
3. Duplicate sign installations are not required:
   a) On opposite shoulder if at least one-half of the available lanes remain open to traffic.
   b) In the median if the width of the median shoulder is less than 2.4 m and the outside lanes are to be closed.
4. Each advance warning sign on each side of the roadway shall be equipped with at least two flags for daytime closure. Each flag shall be at least 400 mm x 400 mm in size and shall be orange or fluorescent red-orange in color. Flashing beacons shall be placed at the locations indicated for lane closure during hours of darkness.
5. A C14 (CA) "END ROAD WORK" sign, as appropriate, shall be placed at the end of the lane closure unless the end of work area is obvious or ends within a larger project's limits.
6. If the W20-1 sign would follow within 600 m of a stationary W20-1 or C11 (CA) "ROAD WORK NEXT _____ MILES", use a C20 (CA) sign for the first advance warning sign.
7. Place a C30 (CA) sign every 600 m throughout length of lane closure.
8. One flashing arrow sign for each lane closed. The first flashing arrow sign shall be Type I. All others may be either Type I or Type II.
9. A minimum 450 m of sight distance shall be provided where possible for vehicles approaching the first flashing arrow sign. Lane closures shall not begin at top of crest vertical curve or on a horizontal curve.
10. All cones used for lane closures during the hours of darkness shall be fitted with retroreflective bands (or sleeves) as specified in the specifications.
11. Portable delineators, placed at one-half the spacing indicated for traffic cones may be used instead of cones for daytime closures only.
12. Unless otherwise specified in the special provisions, a minimum of 3 cones shall be placed transversely across each closed lane and shoulder at each location where a taper across a traffic lane ends and every 600 m as shown on the "Lane Closure" detail. Two Type II barricades may be used instead of the 3 cones. The transverse alignment of the cones or barricades on the closed shoulder may be shifted from the transverse alignment to provide access to the work.
13. Unless otherwise specified in the special provisions, the 500 m tangent shown along lane lines shall be used between the 300 m tapers required for each closed traffic lane.
14. Unless otherwise specified in the special provisions, the G84 (CA) and W4-1 signs shall be used as shown.
15. When specified in the special provisions, a W4-2 "LANE ENDS" symbol sign is to be used in place of the C20 (CA) "RIGHT LANE CLOSED AHEAD" sign.
16. The W4-2 "LANE ENDS" symbol sign shown at this location is to be used where the W4-2 sign is used as advance warning as described in Note 15.

SIGN PANEL SIZE (Min)

A	1200 mm x 1200 mm
B	1219 mm x 1219 mm
C	750 mm x 750 mm
D	762 mm x 762 mm
E	1372 mm x 1219 mm

LEGEND

- Traffic Cone
- Traffic Cone (optional taper)
- Temporary Sign
- Flashing Arrow Sign (FAS)
- FAS Support or Trailer
- Direction of Travel
- Portable Flashing Beacon

STATE OF CALIFORNIA
DEPARTMENT OF TRANSPORTATION

TRAFFIC CONTROL SYSTEM FOR LANE CLOSURE ON FREEWAYS AND EXPRESSWAYS

NO SCALE

ALL DIMENSIONS ARE IN MILLIMETERS UNLESS OTHERWISE SHOWN

RSP T10 DATED APRIL 28, 2005 SUPERSEDES STANDARD PLAN T10 DATED JULY 1, 2004-PAGE 218 OF THE STANDARD PLANS BOOK DATED JULY 2004.

REVISED STANDARD PLAN RSP T10

2004 REVISED Std PLAN RSP T10

DIST	COUNTY	ROUTE	KILOMETER POST TOTAL PROJECT	SHEET NO.	TOTAL SHEETS
07	LA	5	R72.7/R73.2	32	33

Caltrans Metric

REGISTERED CIVIL ENGINEER

April 28, 2005
PLANS APPROVAL DATE

REGISTERED PROFESSIONAL ENGINEER Greg W. Edwards No. C36386 Exp. 6-30-06 CIVIL STATE OF CALIFORNIA

The State of California or its officers or agents shall not be responsible for the accuracy or completeness of electronic copies of this plan sheet.

To get to the Caltrans web site, go to: http://www.dot.ca.gov

To accompany plans dated 3-28-11

TYPICAL LANE CLOSURE

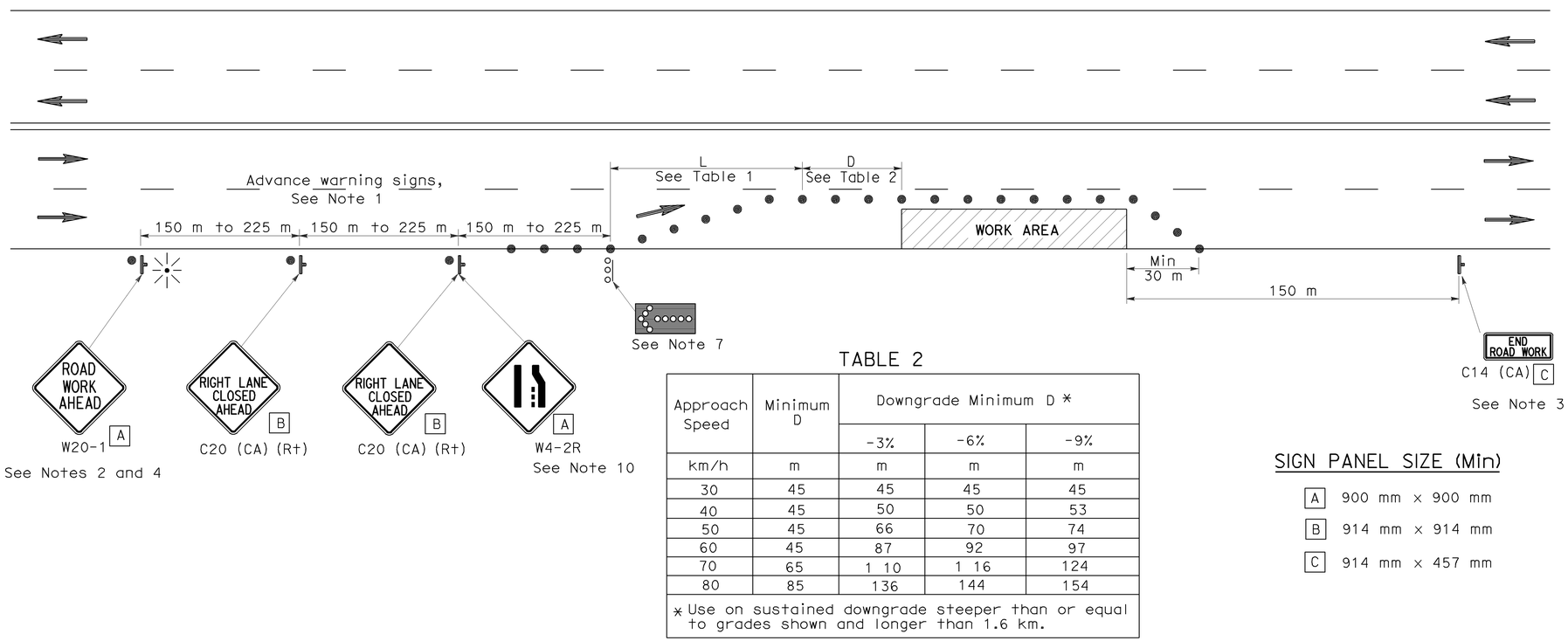

TABLE 2

Approach Speed	Minimum D	Downgrade Minimum D *		
		-3%	-6%	-9%
km/h	m	m	m	m
30	45	45	45	45
40	45	50	50	53
50	45	66	70	74
60	45	87	92	97
70	65	1 10	1 16	124
80	85	136	144	154

* Use on sustained downgrade steeper than or equal to grades shown and longer than 1.6 km.

SIGN PANEL SIZE (Min)

- A 900 mm x 900 mm
- B 914 mm x 914 mm
- C 914 mm x 457 mm

LEGEND

- Traffic Cone
- Temporary Sign
- Direction of Travel
- Flashing Arrow Sign (FAS)
- FAS Support or Trailer
- Portable Flashing Beacon

NOTES

Unless otherwise specified in the special provisions, all temporary warning signs shall have black legend on orange background.

California code are designated by (CA). Otherwise, Federal codes are shown.

NOTES

1. Where approach speeds are low, advance warning signs may be placed at 90 m spacing and placed closer in urban areas.
2. Each advance warning sign shall be equipped with at least two flags for daytime closure. Each flag shall be at least 400 mm x 400 mm in size and shall be orange or fluorescent red-orange in color. Flashing beacons shall be placed at the locations indicated for lane closure during hours of darkness.
3. A C14 (CA) "END ROAD WORK" sign, as appropriate, shall be placed at the end of the lane closure unless the end of work area is obvious, or ends within a larger project's limits.
4. If the W20-1 sign would follow within 600 m of a stationary W20-1 or C11 (CA) "ROAD WORK NEXT _____ MILES", use a C20 (CA) sign for the first advance warning sign.
5. All cones used for lane closures during the hours of darkness shall be fitted with retroreflective bands (or sleeves) as specified in the specifications.
6. Portable delineators, placed at one-half the spacing indicated for traffic cones, may be used instead of cones for daytime closures only.
7. Flashing arrow sign shall be either Type I or Type II.
8. The maximum spacing between cones along a tangent shall be 15 m and along a taper shall be approximately as shown in Table 1.
9. For approach speeds over 80 km/h, use the "Traffic Control System for Lane Closure On Freeways And Expressways" plan for lane closure details and requirements.
10. When specified in the special provisions, a W4-2 "LANE ENDS" symbol sign is to be used in place of the C20 (CA) "RIGHT LANE CLOSED AHEAD" sign.

TABLE I

Approach Speed	* Minimum L	** Max spacing of cones along taper
km/h	m	m
30	38	6
40	38	8
50	98	10
60	98	12
70	183	14
80	183	15
Over 80	See Note 9	

* Use L for lane widths less than or equal to 3.6 m.

** See Note 8

STATE OF CALIFORNIA
DEPARTMENT OF TRANSPORTATION

TRAFFIC CONTROL SYSTEM FOR LANE CLOSURE ON MULTILANE CONVENTIONAL HIGHWAYS

NO SCALE

ALL DIMENSIONS ARE IN MILLIMETERS UNLESS OTHERWISE SHOWN

RSP T11 DATED APRIL 28, 2005 SUPERSEDES STANDARD PLAN T11 DATED JULY 1, 2004-PAGE 220 OF THE STANDARD PLANS BOOK DATED JULY 2004.

REVISED STANDARD PLAN RSP T11

2004 REVISED Std PLAN RSP T11

DIST	COUNTY	ROUTE	KILOMETER POST TOTAL PROJECT	SHEET NO.	TOTAL SHEETS
07	LA	5	R72.7/R73.2	33	33

REGISTERED CIVIL ENGINEER

April 28, 2005
PLANS APPROVAL DATE

REGISTERED PROFESSIONAL ENGINEER Greg W. Edwards No. C36386 Exp. 6-30-06 CIVIL STATE OF CALIFORNIA

The State of California or its officers or agents shall not be responsible for the accuracy or completeness of electronic copies of this plan sheet.

To get to the Caltrans web site, go to: http://www.dot.ca.gov

Caltrans Metric

To accompany plans dated 3-28-11

LEGEND

- Traffic Cone
- Temporary Sign
- Direction of Travel
- Flashing Arrow Sign (FAS)
- FAS Support or Trailer
- Portable Flashing Beacon

TABLE 1

Approach Speed	*Minimum L	** Max spacing of cones along taper
km/h	m	m
30	38	6
40	38	8
50	98	10
60	98	12
70	183	14
80	183	15
Over 80	See Note 11	

* Use L for lane widths less than or equal to 3.6 m.

** See Note 10

TABLE 2

Approach Speed	Minimum D	Downgrade Minimum D *		
		-3%	-6%	-9%
km/h	m	m	m	m
30	45	45	45	45
40	45	50	50	53
50	45	66	70	74
60	45	87	92	97
70	65	110	116	124
80	85	136	144	154

* Use on sustained downgrade steeper than or equal to grades shown and longer than 1.6 km.

TYPICAL CLOSING OF HALF ROADWAY

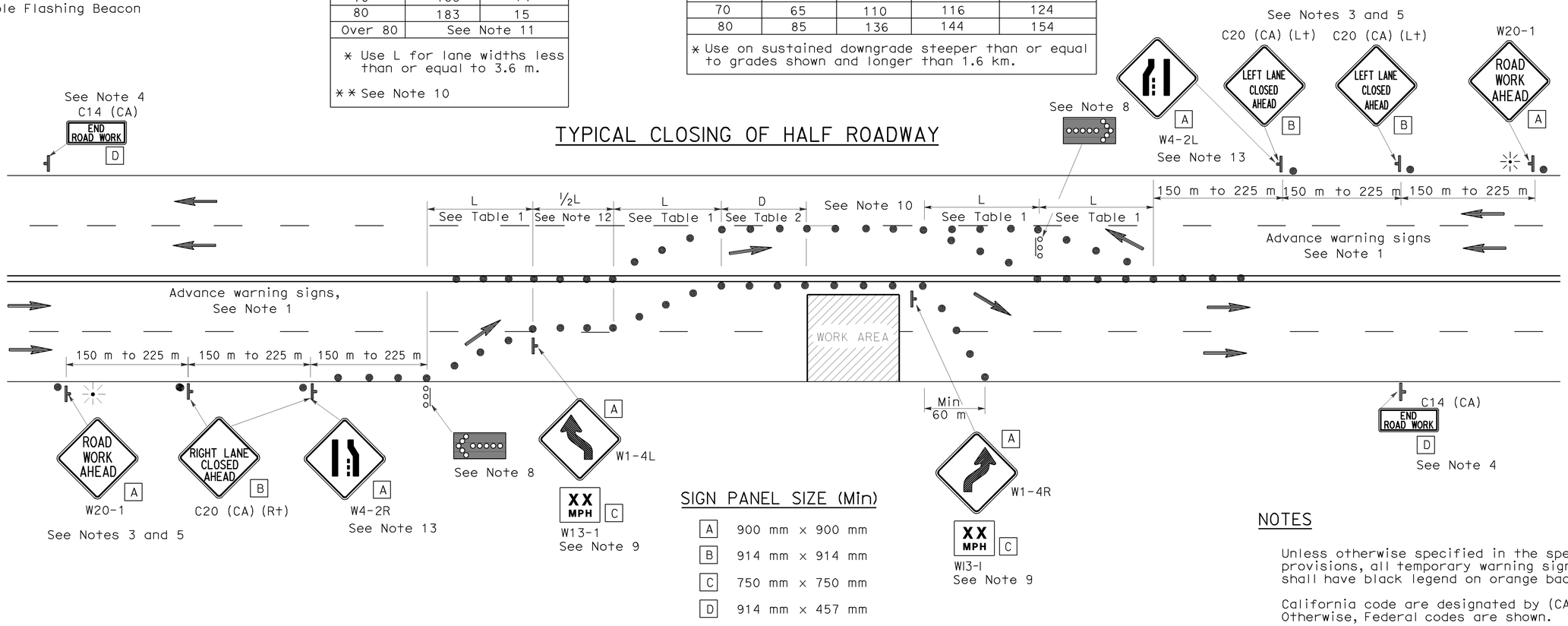

SIGN PANEL SIZE (Min)

A	900 mm × 900 mm
B	914 mm × 914 mm
C	750 mm × 750 mm
D	914 mm × 457 mm

NOTES

Unless otherwise specified in the special provisions, all temporary warning signs shall have black legend on orange background.

California code are designated by (CA). Otherwise, Federal codes are shown.

NOTES

1. Where Approach speeds are low, advance warning signs may be placed at 90 m spacing and placed closer in urban areas.
2. At least one person shall be assigned to provide full time maintenance of traffic control devices for lane closure unless, otherwise directed by the Engineer.
3. Each advance warning sign in each direction of travel shall be equipped with at least two flags for daytime closure. Each flag shall be at least 400 mm × 400 mm in size and shall be orange or fluorescent red-orange in color. Flashing beacons shall be placed at the locations indicated for lane closure during hours of darkness.
4. A C14 (CA) "END ROAD WORK" sign, as appropriate, shall be placed at the end of the lane closure unless the end of work area is obvious, or ends within a larger project's limits.
5. If the W20-1 sign would follow within 600 m of a stationary W20-1 or C11 (CA) "ROAD WORK NEXT _____ MILES", use a C20 (CA) sign for the first advance warning sign.
6. All cones used for lane closures during the hours of darkness shall be fitted with retroreflective bands (or sleeves) as specified in the specifications.
7. Portable delineators, placed at one-half the spacing indicated for traffic cones, may be used instead of cones for daytime closures only.
8. Flashing arrow signs shall be either Type I or Type II.
9. Advisory speed will be determined by the Engineer. The W13-1 Sign will not be required when advisory speed is more than the posted or maximum speed limit.
10. The maximum spacing between cones along a tangent shall be 15 m and along a taper shall be approximately as shown in Table 1.
11. For approach speeds over 80 km/h, use the "Traffic Control System For Lane Closure On Freeways And Expressways" plan for lane closure details and requirements.
12. Unless otherwise specified in the special provisions, the (½ L) shown between the two (L) lane closure tapers shall be used.
13. When specified in the special provisions, a W4-2 "Lane Ends" symbol sign is to be used in place of the C20 (CA) "RIGHT (LEFT) LANE CLOSED AHEAD" sign.

STATE OF CALIFORNIA
DEPARTMENT OF TRANSPORTATION

TRAFFIC CONTROL SYSTEM FOR LANE CLOSURE ON MULTILANE CONVENTIONAL HIGHWAYS

NO SCALE

ALL DIMENSIONS ARE IN MILLIMETERS UNLESS OTHERWISE SHOWN

RSP T12 DATED APRIL 28, 2005 SUPERSEDES STANDARD PLAN T12 DATED JULY 1, 2004-PAGE 221 OF THE STANDARD PLANS BOOK DATED JULY 2004.

REVISED STANDARD PLAN RSP T12

2004 REVISED Std PLAN RSP T12