INDEX OF PLANS

SHEET No.	DESCRIPTION
1	TITLE AND LOCATION MAP
2	LAYOUT
3	UTILITY PLAN
4	CONSTRUCTION AREA SIGNS
5-9	TRAFFIC HANDLING DETAILS
10-24	SIGN PLAN
25-51	SIGN DETAILS
52-56	SIGN QUANTITIES
57	SUMMARY OF QUANTITIES
58-60	LOG OF TEST BORINGS
61-78	MODIFY SIGN ILLUMINATION
79-87	REVISED STANDARD PLANS

THE STANDARD PLANS LIST APPLICABLE TO THIS CONTRACT IS INCLUDED IN THE NOTICE TO BIDDERS AND SPECIAL PROVISIONS BOOK.

STATE OF CALIFORNIA

DEPARTMENT OF TRANSPORTATION

PROJECT PLANS FOR CONSTRUCTION ON

STATE HIGHWAY

IN LOS ANGELES COUNTY
IN LOS ANGELES

FROM FOOTHILL BOULEVARD UNDERCROSSING TO 0.1 MILE WEST OF PAXTON STREET

TO BE SUPPLEMENTED BY STANDARD PLANS DATED MAY 2006

Dist	COUNTY	ROUTE	POST MILES TOTAL PROJECT	SHEET No.	TOTAL SHEETS
07	LA	210	R0.4/R5.9	1	87

LOCATION MAP

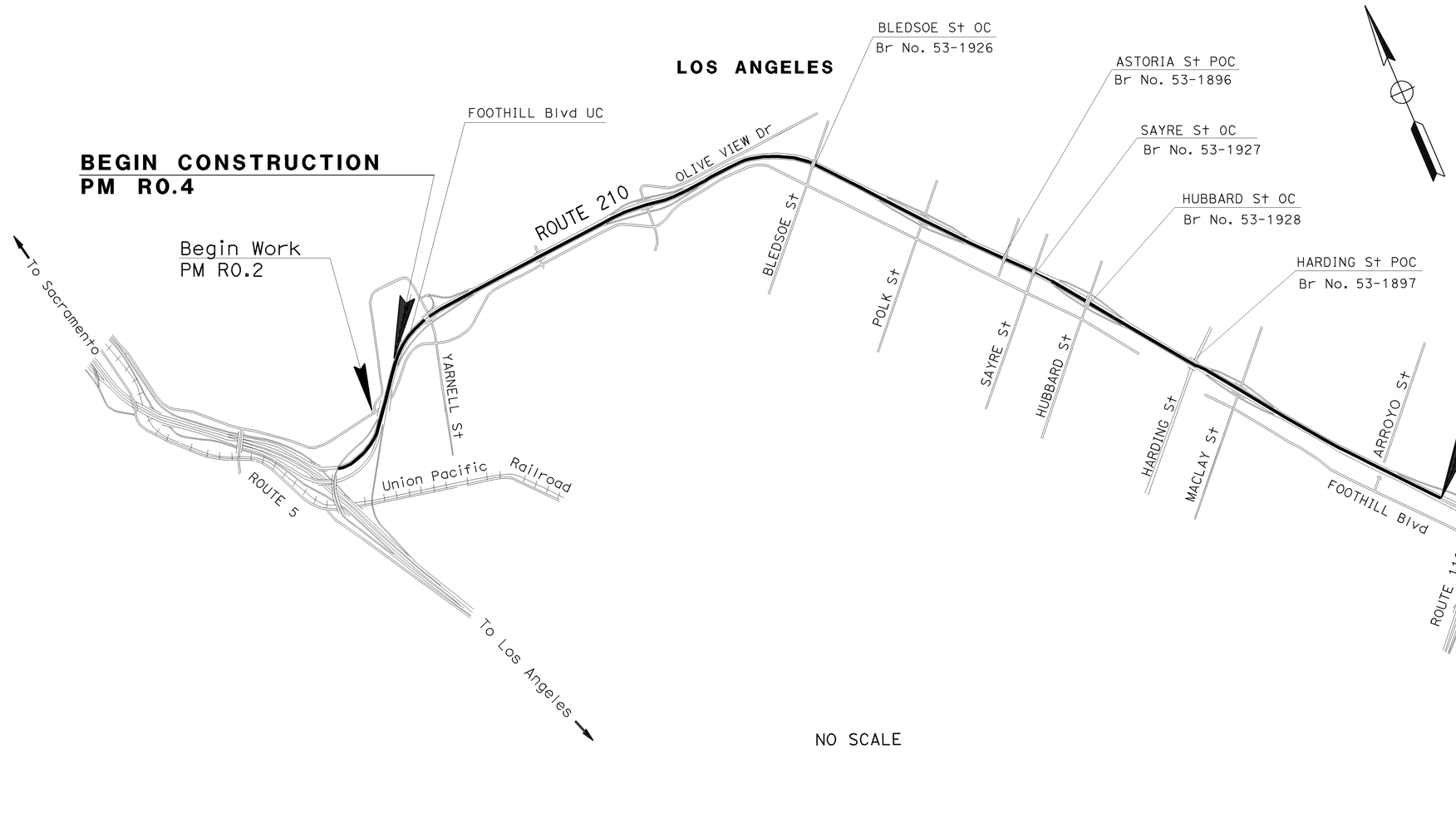

NO SCALE

PROJECT MANAGER: CHRISTIAN SAM

DESIGN ENGINEER: SHAFIQUL ISLAM

THE CONTRACTOR SHALL POSSESS THE CLASS (OR CLASSES) OF LICENSE AS SPECIFIED IN THE "NOTICE TO BIDDERS."

Rania Wassily 2-10-10
PROJECT ENGINEER DATE
REGISTERED CIVIL ENGINEER

RANIA WASSILY
No. 59311
Exp. 6-30-11
CIVIL
REGISTERED PROFESSIONAL ENGINEER
STATE OF CALIFORNIA

February 16, 2010
PLANS APPROVAL DATE

THE STATE OF CALIFORNIA OR ITS OFFICERS OR AGENTS SHALL NOT BE RESPONSIBLE FOR THE ACCURACY OR COMPLETENESS OF SCANNED COPIES OF THIS PLAN SHEET.

CONTRACT No. 07-3Y6004

LAST REVISION 02-16-10 | DATE PLOTTED => 21-FEB-2010 | TIME PLOTTED => 20:30

Dist	COUNTY	ROUTE	POST MILES TOTAL PROJECT	SHEET No.	TOTAL SHEETS
07	LA	210	R0.4/R5.9	2	87

Rania Wassily 2-10-10
REGISTERED CIVIL ENGINEER DATE

2-16-10
PLANS APPROVAL DATE

RANIA WASSILY No. 59311 Exp 6-30-11 CIVIL — REGISTERED PROFESSIONAL ENGINEER — STATE OF CALIFORNIA

THE STATE OF CALIFORNIA OR ITS OFFICERS OR AGENTS SHALL NOT BE RESPONSIBLE FOR THE ACCURACY OR COMPLETENESS OF SCANNED COPIES OF THIS PLAN SHEET.

NOTES:

1. FOR ACCURATE RIGHT OF WAY AND ACCESS DATA, CONTACT RIGHT OF WAY ENGINEERING AT DISTRICT OFFICE.
2. EXACT LOCATIONS AND POSITIONS OF SIGNS WILL BE DETERMINED BY THE ENGINEER.
3. THE CONTRACTOR SHALL VERIFY FIELD CONTROLLING DIMENSIONS BEFORE ORDERING OR FABRICATING MATERIALS.

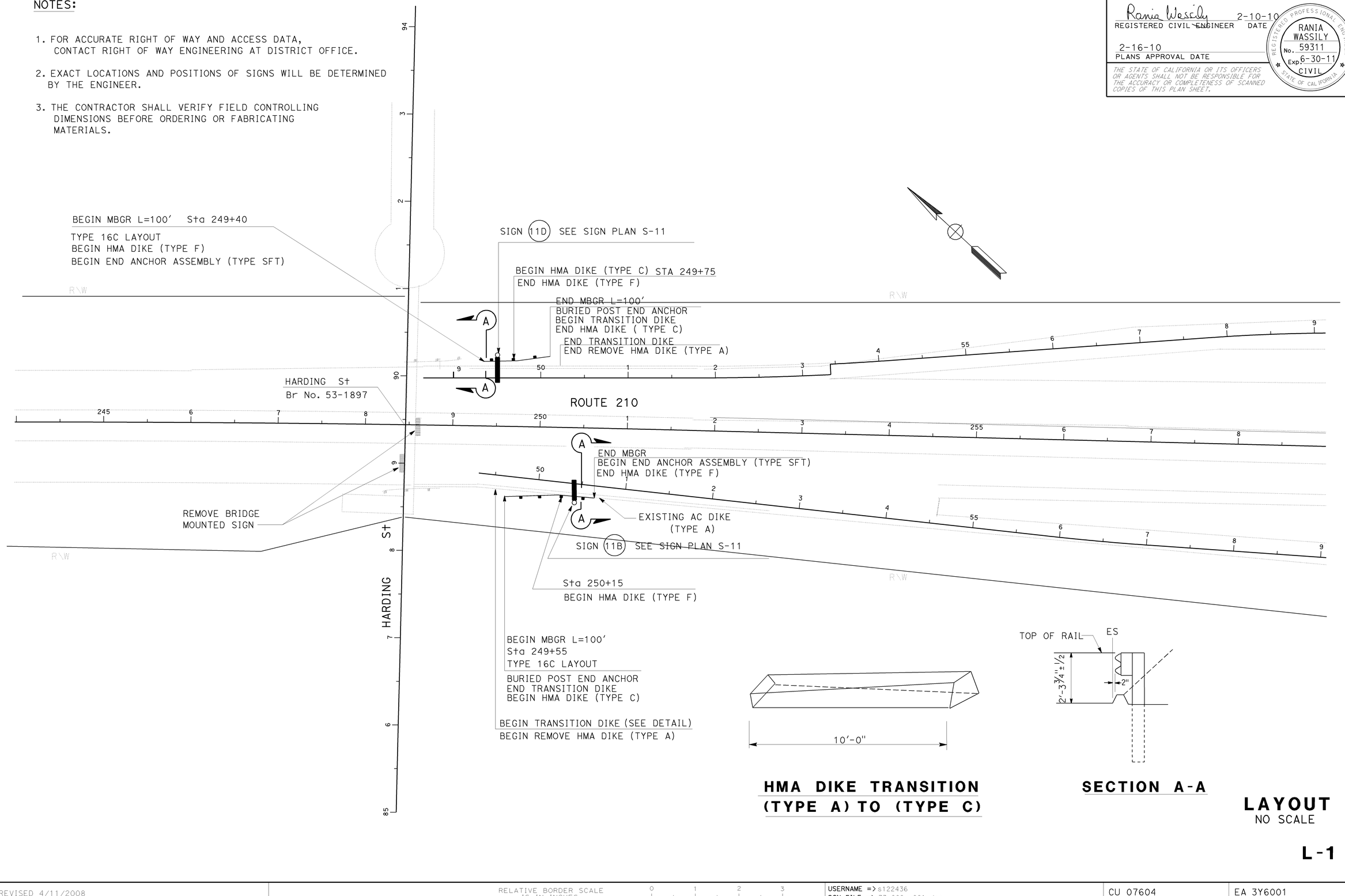

HMA DIKE TRANSITION (TYPE A) TO (TYPE C)

SECTION A-A

LAYOUT
NO SCALE

L-1

CALCULATED-DESIGNED BY
CHECKED BY
REVISED BY
DATE REVISED
RANIA WASSILY
SHAFIQUL ISLAM
FUNCTIONAL SUPERVISOR
SHAFIQUL ISLAM
STATE OF CALIFORNIA - DEPARTMENT OF TRANSPORTATION
Caltrans MAINTENANCE ENGINEERING

LAST REVISION 02-16-10
DATE PLOTTED => 21-FEB-2010
TIME PLOTTED => 20:51

BORDER LAST REVISED 4/11/2008
RELATIVE BORDER SCALE IS IN INCHES 0 1 2 3
USERNAME => s122436
DGN FILE => 73y600ea001.dgn
CU 07604
EA 3Y6001

Dist	COUNTY	ROUTE	POST MILES TOTAL PROJECT	SHEET No.	TOTAL SHEETS
07	LA	210	R0.4/R5.9	3	87

Rania Wassily 2-10-10
REGISTERED CIVIL ENGINEER DATE

2-16-10
PLANS APPROVAL DATE

RANIA WASSILY No. 59311 Exp 6-30-11 CIVIL — REGISTERED PROFESSIONAL ENGINEER — STATE OF CALIFORNIA

THE STATE OF CALIFORNIA OR ITS OFFICERS OR AGENTS SHALL NOT BE RESPONSIBLE FOR THE ACCURACY OR COMPLETENESS OF SCANNED COPIES OF THIS PLAN SHEET.

NOTES:

1. LOCATIONS OF UTILITY FACILITIES SHOWN ON THESE PLANS ARE APPROXIMATE AND SHALL BE VERIFIED BY THE CONTRACTOR PRIOR TO CONSTRUCTION.
2. FOR RIGHT OF WAY AND ACCESS DATA, CONTACT RIGHT OF WAY ENGINEERING AT DISTRICT OFFICE.
3. THIS PLAN IS ACCURATE FOR EXISTING UTITIES ONLY.

ABBREVIATIONS:

DW&P:	DEPARTMENT OF WATER AND POWER
Stm Dr:	STORM DRAIN
SCG Co:	SOUTHERN CALIFORNIA GAS COMPANY
VERIZON:	VERIZON COMMUNICATION
CHC:	CALIFORNIA HIGHWAY COMMISSION
DU:	DUCT

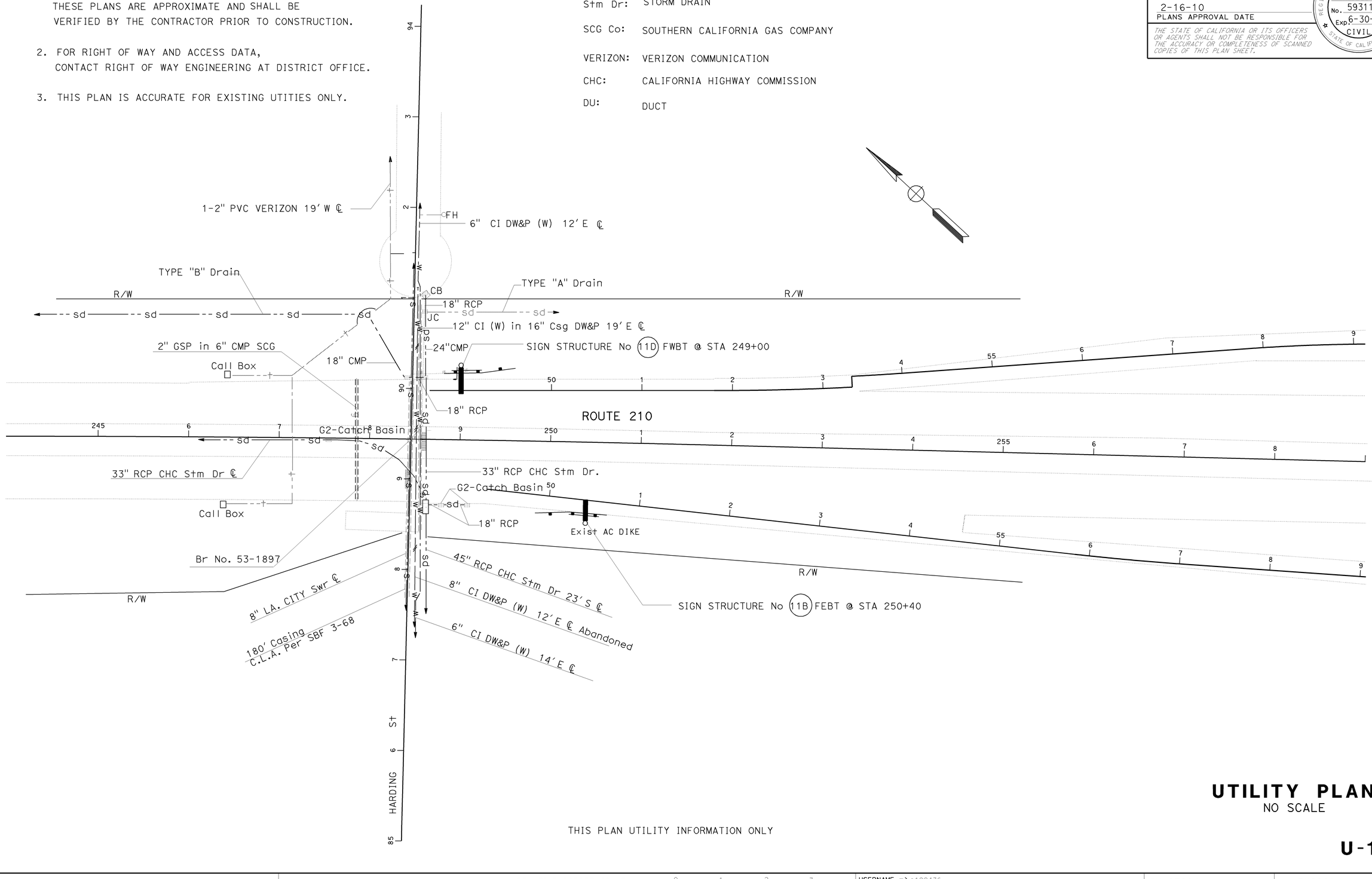

THIS PLAN UTILITY INFORMATION ONLY

UTILITY PLAN
NO SCALE

U-1

RANIA WASSILY — CALCULATED-DESIGNED BY
SHAFIQUL ISLAM — CHECKED BY
REVISED BY — DATE REVISED
FUNCTIONAL SUPERVISOR: SHAFIQUL ISLAM

STATE OF CALIFORNIA - DEPARTMENT OF TRANSPORTATION
Caltrans® MAINTENANCE ENGINEERING

LAST REVISION: DATE PLOTTED => 21-FEB-2010
02-16-10 TIME PLOTTED => 20:52

Dist	COUNTY	ROUTE	POST MILES TOTAL PROJECT	SHEET No.	TOTAL SHEETS
07	LA	210	R0.4/R5.9	4	87

Rania Wassily 2-10-10
REGISTERED CIVIL ENGINEER DATE

2-16-10
PLANS APPROVAL DATE

RANIA WASSILY No. 59311 Exp 6-30-11 CIVIL — REGISTERED PROFESSIONAL ENGINEER — STATE OF CALIFORNIA

THE STATE OF CALIFORNIA OR ITS OFFICERS OR AGENTS SHALL NOT BE RESPONSIBLE FOR THE ACCURACY OR COMPLETENESS OF SCANNED COPIES OF THIS PLAN SHEET.

NOTES:

1. "TRAFFIC FINES DOUBLED IN WORK ZONES" SIGNS SHALL BE PLACED APPROXIMATELY 500 FEET IN ADVANCE OF "ROAD WORK AHEAD" SIGNS OR AS DETERMINED BY THE ENGINEER.
2. LOCATIONS OF CONSTRUCTION AREA SIGNS AS SHOWN ARE APPROXIMATE. EXACT LOCATIONS WILL BE DETERMINED BY THE ENGINEER.

STATIONARY MOUNTED CONSTRUCTION AREA SIGNS

SIGN NUMBER	SIGN CODE	PANEL SIZE	SIGN MESSAGE	NUMBER OF POSTS AND SIZE	QUANTITY
(A)	W20-1	48" x 48"	ROAD WORK AHEAD	1 - 6" x 6"	31
(B)	G20-2	48" x 24"	END ROAD WORK	2 - 4" x 4"	2
(C)	C40(CA)	144" x 60"	TRAFFIC FINES DOUBLED IN WORK ZONES	2 - 4" x 4"	2

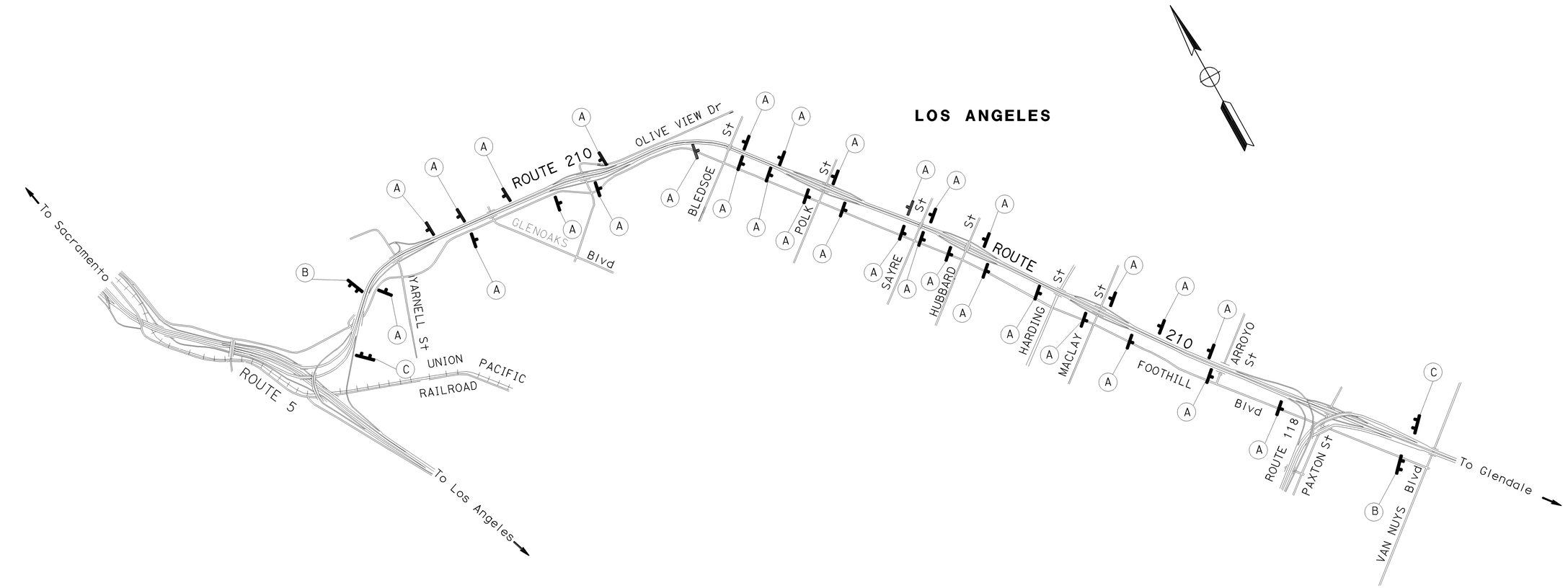

CONSTRUCTION AREA SIGNS

NO SCALE

CS-1

CALCULATED-DESIGNED BY: RANIA WASSILY
CHECKED BY: SHAFIQUL ISLAM
FUNCTIONAL SUPERVISOR: SHAFIQUL ISLAM
REVISED BY / DATE REVISED

STATE OF CALIFORNIA - DEPARTMENT OF TRANSPORTATION
Caltrans® MAINTENANCE ENGINEERING

LAST REVISION | DATE PLOTTED => 21-FEB-2010 | TIME PLOTTED => 17:23 | 02-16-10

BORDER LAST REVISED 4/11/2008

RELATIVE BORDER SCALE IS IN INCHES 0 1 2 3

USERNAME => s122436
DGN FILE => 73y6001a001.dgn

CU 07604

EA 3Y6001

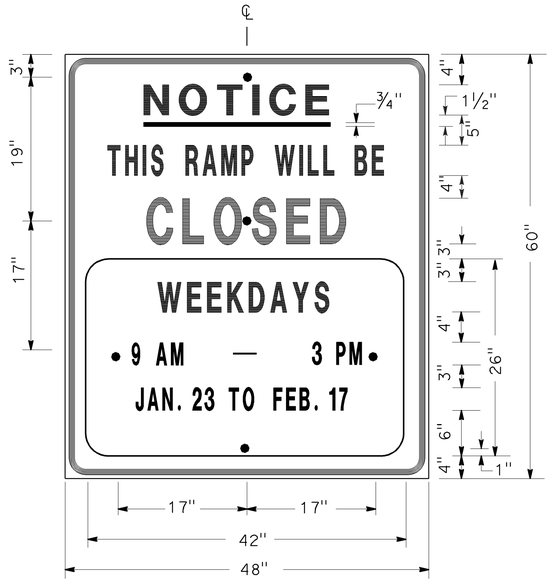

SIGN SP-1

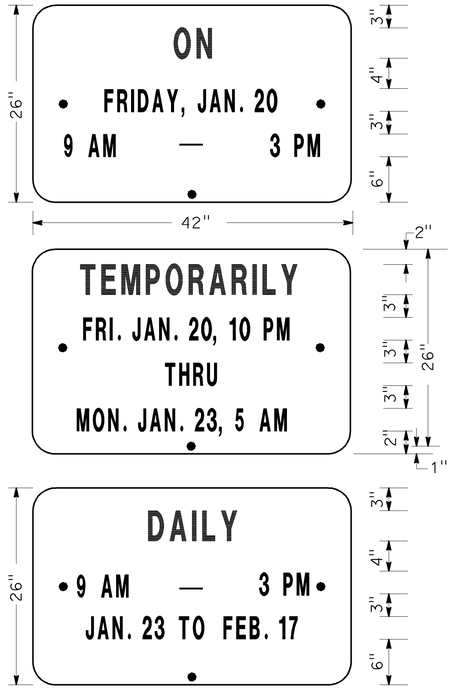

ALTERNATE OVERLAY PANELS (TYPICAL)

NOTES: (SIGN SP-1)

1. SIGNS SHALL HAVE ORANGE RETROREFLECTORIZED BACKGROUND WITH BLACK BORDER AND LETTERS.
2. BOLT HOLES SHALL BE ⅜" DIAMETER.
3. BASE MATERIAL SHALL BE ALUMINUM (MINIMUM 0.06").
4. SIGNS SHALL BE MOUNTED WITH BOTTOMS OF SIGNS A MINIMUM OF 6′ ABOVE GROUND.

Dist	COUNTY	ROUTE	POST MILES TOTAL PROJECT	SHEET No.	TOTAL SHEETS
07	LA	210	R0.4/R5.9	5	87

Mata Oregel 9-15-09
REGISTERED CIVIL ENGINEER DATE

2-16-10
PLANS APPROVAL DATE

REGISTERED PROFESSIONAL ENGINEER — MARTIN OREGEL — No. C56816 — Exp. 6-30-11 — CIVIL — STATE OF CALIFORNIA

THE STATE OF CALIFORNIA OR ITS OFFICERS OR AGENTS SHALL NOT BE RESPONSIBLE FOR THE ACCURACY OR COMPLETENESS OF SCANNED COPIES OF THIS PLAN SHEET.

SIZE	BORDER WIDTH	MARGIN WIDTH	LETTER SIZE					CORNER RADIUS
			LINE 1	LINE 2*	LINE 3	LINE 4	LINE 5,6 & 7*	
48"×60"	1¼"	¾"	4E	4D	6E	4D		3"
42"×26"	OVERLAY						3D	1½"
* CONDENSED SPACING IF NECESSARY								

SPECIAL ADVANCE NOTICE PUBLICITY SIGN

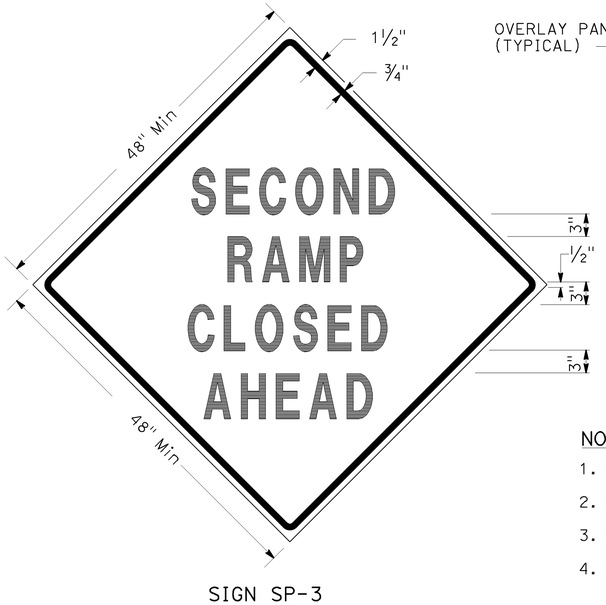

SIGN SP-3

SIGN SP-5

NOTES: (SIGNS SP-3 & SP-5)

1. LETTERS - 6" SERIES D.
2. LETTERS AND BORDERS - BLACK ON RETROREFLECTORIZED ORANGE BACKGROUND.
3. BASE MATERIAL SHALL BE ALUMINUM (MINIMUM 0.06").
4. SIGNS SHALL BE MOUNTED WITH BOTTOMS OF SIGNS A MINIMUM OF 6′ ABOVE GROUND.

SPECIAL SIGN FOR EXIT RAMP CLOSURES

SIGN SP-4

NOTES: (SIGN SP-4)

1. LETTERS - 6" SERIES C.
2. LETTERS AND BORDERS - BLACK ON RETROREFLECTORIZED WHITE BACKGROUND.
3. BASE MATERIAL SHALL BE ALUMINUM (MINIMUM 0.06").
4. SIGNS SHALL BE PLACED AT RAMP ENTRANCES IN ADDITION TO SIGNS POSTED IN ACCORDANCE WITH STANDARD PLAN T14.

SPECIAL SIGN FOR ENTRANCE RAMP CLOSURES

TRAFFIC HANDLING DETAILS
TRAFFIC CONTROL SYSTEM FOR RAMP CLOSURES, DETOUR SIGNS AND MISCELLANEOUS DETAILS
SHEET 1 OF 2

NO SCALE

THD-1

	CALCULATED-DESIGNED BY	CHECKED BY	REVISED BY	DATE REVISED
JC				9/08
JC				8/08
JC				7/08
	ALBERT K YU	JOCELYN C CHIANG		

FUNCTIONAL SUPERVISOR: JOHN YANG

STATE OF CALIFORNIA - DEPARTMENT OF TRANSPORTATION — DTM — Caltrans®

LAST REVISION | DATE PLOTTED => 21-FEB-2010 | TIME PLOTTED => 17:23 | 02-16-10

BORDER LAST REVISED 4/11/2008

RELATIVE BORDER SCALE IS IN INCHES 0 1 2 3

USERNAME => s122436
DGN FILE => 73Y600me001.dgn

CU 07390

EA 3Y6001

Dist	COUNTY	ROUTE	POST MILES TOTAL PROJECT	SHEET No.	TOTAL SHEETS
07	LA	210	R0.4/R5.9	6	87

Martin Oregel 9-15-09
REGISTERED CIVIL ENGINEER DATE

2-16-10
PLANS APPROVAL DATE

REGISTERED PROFESSIONAL ENGINEER — MARTIN OREGEL No. C56816 Exp. 6-30-11 CIVIL — STATE OF CALIFORNIA

THE STATE OF CALIFORNIA OR ITS OFFICERS OR AGENTS SHALL NOT BE RESPONSIBLE FOR THE ACCURACY OR COMPLETENESS OF SCANNED COPIES OF THIS PLAN SHEET.

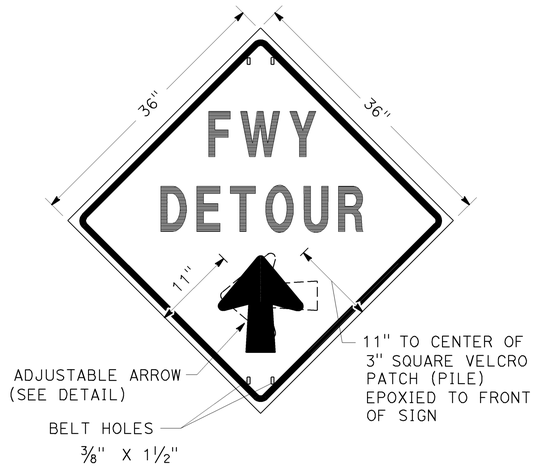

SIGN SP-2

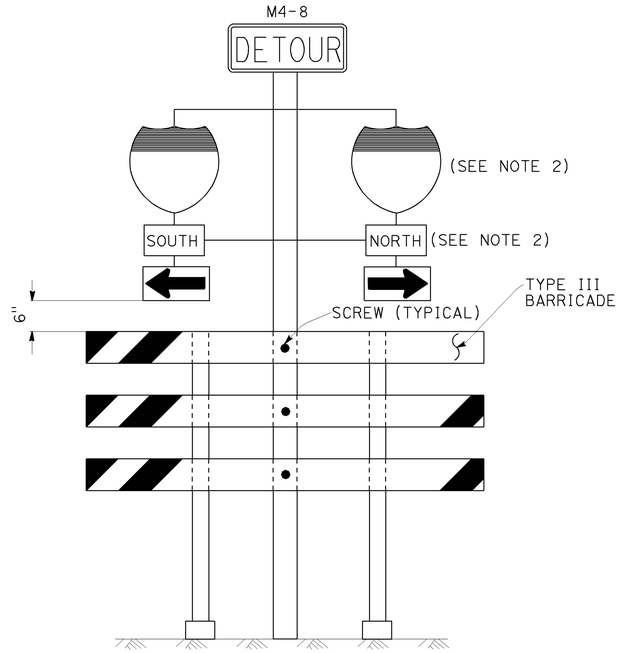

SIGN SP-6 (SEE NOTE 1)

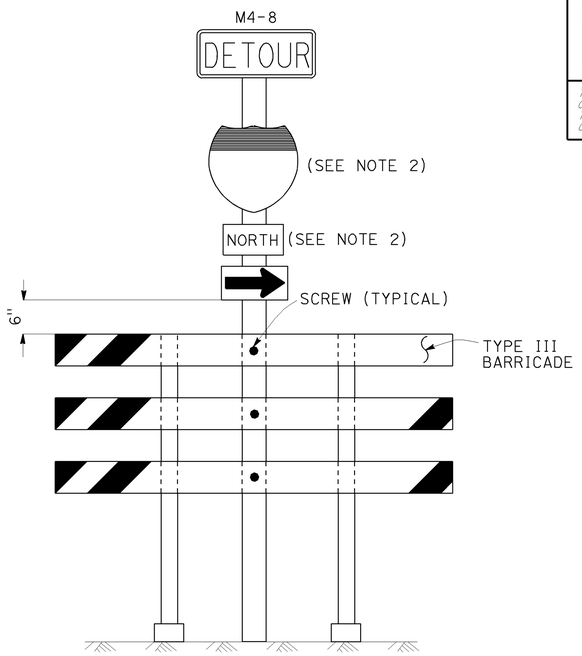

SIGN SP-7 (SEE NOTE 1)

NOTES: (SIGN SP-2)

1. LETTERS -6" SERIES E.
2. LETTERS, BORDER AND ARROW - BLACK ON RETROREFLECTORIZED ORANGE BACKGROUND.
3. BASE MATERIAL FOR SIGNS AND ARROWS SHALL BE ALUMINUM (MINIMUM 0.06").
4. BELTS (LUGGAGE STRAPS) SHALL BE 1" WIDE BY 48" LONG, MADE OF COTTON OR POLYPROPYLENE WEB MATERIAL.
5. SIGNS SHALL BE MOUNTED WITH BOTTOMS OF SIGNS A MINIMUM OF 6' ABOVE GROUND EXCEPT AS OTHERWISE SHOWN ON OTHER TRAFFIC HANDLING DETAILS PLANS.

ABBREVIATION

(CA) CALIFORNIA CODE

NOTES: (SIGNS SP-6 & SP-7)

1. IN LIEU OF PLACING SIGNS ON TYPE III BARRICADES, SIGNS, INCLUDING POSTS, MAY BE PLACED INTO THE GROUND OR FASTENED ONTO ELECTROLIERS.
2. USE APPROPRIATE ROUTE SHIELD [G26-2(CA), G27-2(CA), G28-2(CA)] AND CARDINAL DIRECTION [NORTH (M3-1), SOUTH (M3-3), EAST (M3-2), WEST (M3-4)]

SPECIAL PORTABLE FREEWAY DETOUR SIGNS

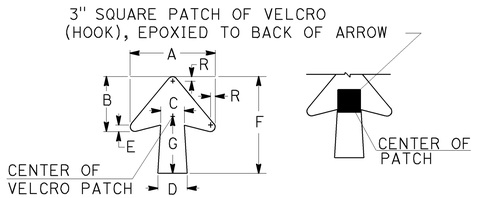

DIMENSIONS							
A	B	C	D	E	F	G	R
11 1/4"	7 1/4"	3 3/8"	4"	7/8"	13"	7 1/2"	5/8"

SPECIAL PORTABLE FREEWAY DETOUR SIGN

ADJUSTABLE ARROW DETAIL

TRAFFIC HANDLING DETAILS

TRAFFIC CONTROL SYSTEM FOR RAMP CLOSURES, DETOUR SIGNS AND MISCELLANEOUS DETAILS

SHEET 2 OF 2

NO SCALE

THD-2

STATE OF CALIFORNIA - DEPARTMENT OF TRANSPORTATION — DTM — Caltrans

FUNCTIONAL SUPERVISOR: JOHN YANG

CALCULATED-DESIGNED BY: ALBERT K YU
CHECKED BY: JOCELYN C CHIANG

REVISED BY	DATE REVISED
JC	7/08
JC	9/08

LAST REVISION DATE PLOTTED => 21-FEB-2010
TIME PLOTTED => 17:25
02-16-10

BORDER LAST REVISED 4/11/2008 — RELATIVE BORDER SCALE IS IN INCHES 0 1 2 3

USERNAME => s122436
DGN FILE => 73Y600me002.dgn

CU 07390 | EA 3Y6001

Dist	COUNTY	ROUTE	POST MILES TOTAL PROJECT	SHEET No.	TOTAL SHEETS
07	LA	210	R0.4/R5.9	7	87

REGISTERED CIVIL ENGINEER — 9-15-09 DATE

2-16-10
PLANS APPROVAL DATE

MARTIN OREGEL No. C56816 Exp. 6-30-11 CIVIL — REGISTERED PROFESSIONAL ENGINEER — STATE OF CALIFORNIA

THE STATE OF CALIFORNIA OR ITS OFFICERS OR AGENTS SHALL NOT BE RESPONSIBLE FOR THE ACCURACY OR COMPLETENESS OF SCANNED COPIES OF THIS PLAN SHEET.

LEGEND

- CONE
- TRAFFIC PLASTIC DRUM
- FLASHING ARROW SIGN
- PORTABLE SIGN
- DIRECTION OF TRAVEL
- PORTABLE CHANGEABLE MESSAGE SIGN (PCMS)

ABBREVIATIONS

(CA) CALIFORNIA CODE

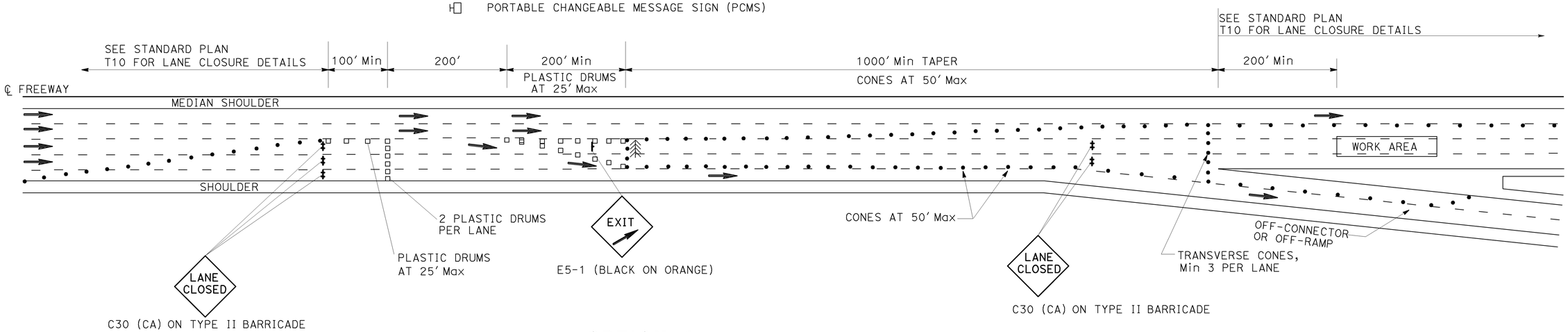

OPTION 1

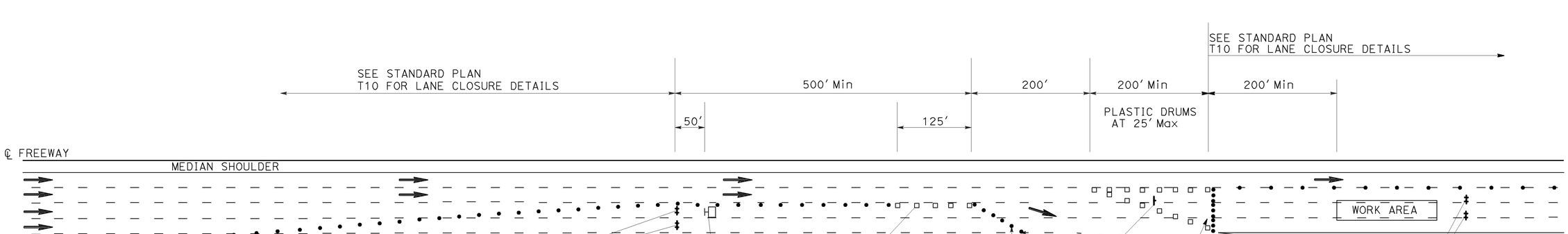

OPTION 2

TRAFFIC HANDLING DETAILS

TRAFFIC CONTROL SYSTEM FOR SLIP-RAMP AT OFF-CONNECTOR OR OFF-RAMP

NO SCALE

THD-3

REVISED BY	DATE REVISED
JC	9/08
JC	7/08

CALCULATED-DESIGNED BY: ALBERT K YU
CHECKED BY: JOCELYN C CHIANG
FUNCTIONAL SUPERVISOR: JOHN YANG

STATE OF CALIFORNIA - DEPARTMENT OF TRANSPORTATION
DTM
Caltrans

LAST REVISION 02-16-10 | DATE PLOTTED => 21-FEB-2010 | TIME PLOTTED => 17:26

Dist	COUNTY	ROUTE	POST MILES TOTAL PROJECT	SHEET No.	TOTAL SHEETS
07	LA	210	R0.4/R5.9	8	87

REGISTERED CIVIL ENGINEER — 9-15-09 DATE

2-16-10
PLANS APPROVAL DATE

REGISTERED PROFESSIONAL ENGINEER
MARTIN OREGEL
No. C56816
Exp. 6-30-11
CIVIL
STATE OF CALIFORNIA

THE STATE OF CALIFORNIA OR ITS OFFICERS OR AGENTS SHALL NOT BE RESPONSIBLE FOR THE ACCURACY OR COMPLETENESS OF SCANNED COPIES OF THIS PLAN SHEET.

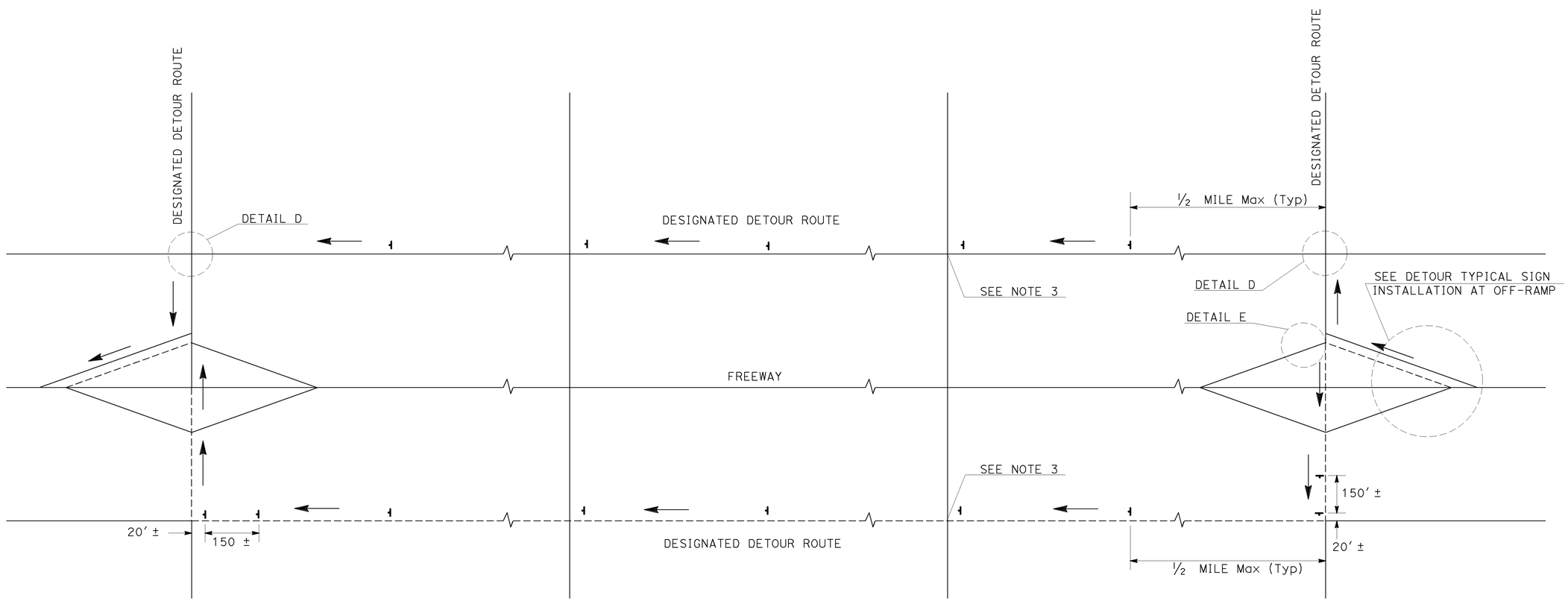

TYPICAL DETOUR SIGN INSTALLATION ALONG DESIGNATED DETOUR ROUTE

LEGEND

⊣	SIGN SP-2
AND/OR	DESIGNATED DETOUR ROUTE
→	DIRECTION OF TRAVEL

NOTES:

1. SP-2 SIGNS SHALL NOT BE INSTALLED ON BARRICADES EXCEPT AS OTHERWISE SHOWN.
2. SIGN LOCATIONS ARE APPROXIMATE. EXACT LOCATIONS WILL BE DETERMINED BY THE ENGINEER.
3. SP-2 SIGNS SHALL BE POSTED AT SIGNALIZED INTERSECTIONS ALONG THE DESIGNATED DETOUR ROUTE OR ½ MILE MAXIMUM APART.

TRAFFIC HANDLING DETAILS
TRAFFIC CONTROL SYSTEM FOR DETOUR SIGN INSTALLATION ALONG DESIGNATED DETOUR ROUTE
SHEET 1 OF 2
NO SCALE

THD-4

	CALCULATED-DESIGNED BY	REVISED BY	JC	JC
FUNCTIONAL SUPERVISOR: JOHN YANG	CHECKED BY: JOCELYN C CHIANG	DATE REVISED: ALBERT K YU	7/08	9/08

STATE OF CALIFORNIA - DEPARTMENT OF TRANSPORTATION
DTM
Caltrans®

LAST REVISION | DATE PLOTTED => 21-FEB-2010
02-16-10 | TIME PLOTTED => 17:26

BORDER LAST REVISED 4/11/2008 | RELATIVE BORDER SCALE IS IN INCHES 0 1 2 3 | USERNAME => s122436 | DGN FILE => 73Y600me004.dgn | CU 07390 | EA 3Y6001

Dist	COUNTY	ROUTE	POST MILES TOTAL PROJECT	SHEET No.	TOTAL SHEETS
07	LA	210	R0.4/R5.9	9	87

REGISTERED CIVIL ENGINEER 9-15-09 DATE

2-16-10
PLANS APPROVAL DATE

MARTIN OREGEL No. C56816 Exp. 6-30-11 CIVIL — REGISTERED PROFESSIONAL ENGINEER — STATE OF CALIFORNIA

THE STATE OF CALIFORNIA OR ITS OFFICERS OR AGENTS SHALL NOT BE RESPONSIBLE FOR THE ACCURACY OR COMPLETENESS OF SCANNED COPIES OF THIS PLAN SHEET.

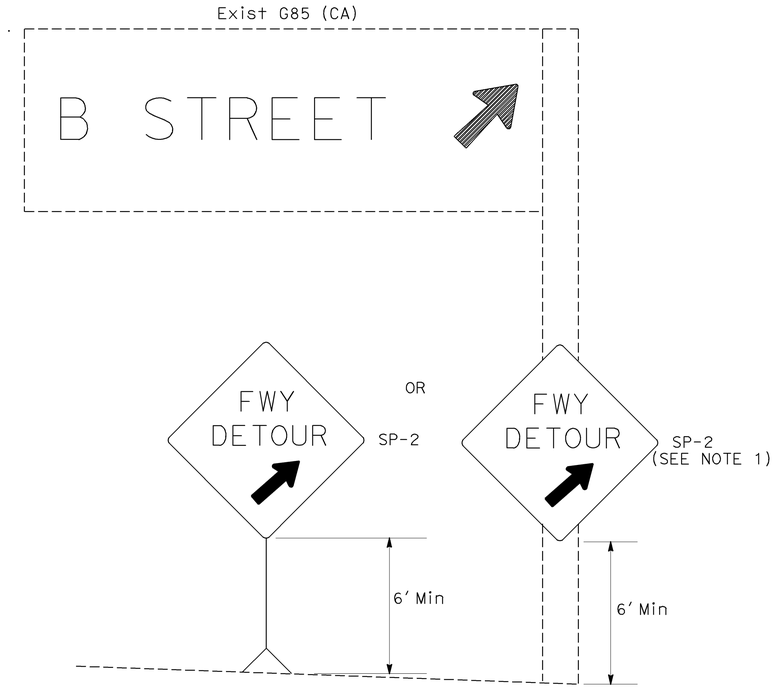

DETAIL A (SEE NOTE 2)

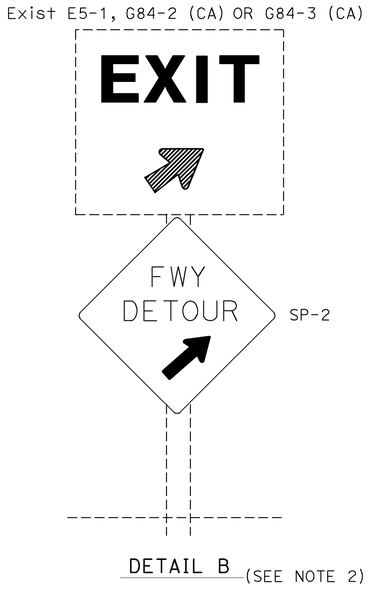

DETAIL B (SEE NOTE 2)

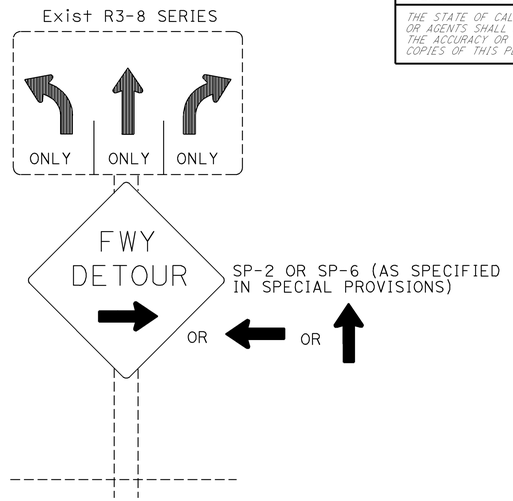

DETAIL C (SEE NOTE 3)

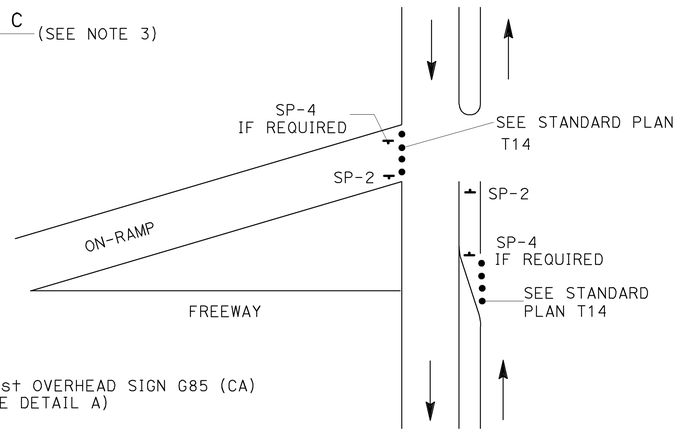

DETAIL E

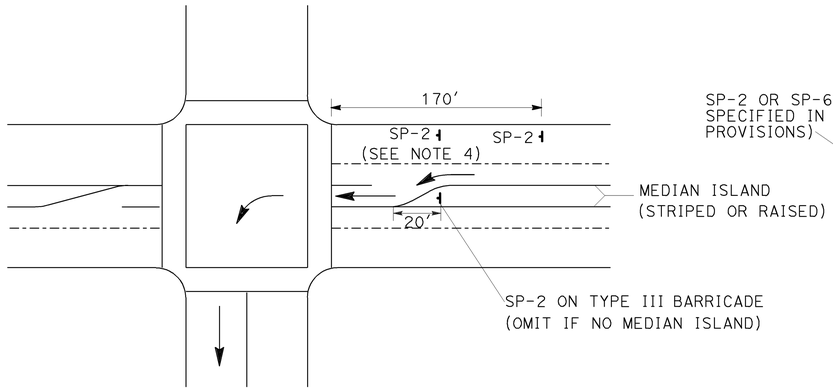

DETAIL D

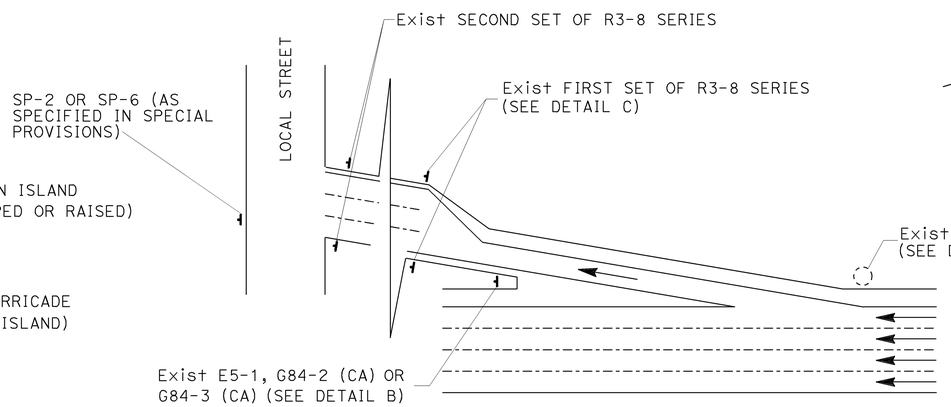

TYPICAL DETOUR SIGN INSTALLATION AT OFF-RAMP

NOTES:

1. SP-2 MAY BE STRAPPED ON EXISTING ELECTROLIER SIGNAL POSTS OR SIGN POSTS.
2. OMIT DETAIL A AND DETAIL B FOR FULL FREEWAY CLOSURES.
3. SEE TRAFFIC HANDLING DETAILS PLAN-TRAFFIC CONTROL SYSTEM FOR RAMP CLOSURES, DETOUR SIGNS AND MISCELLANEOUS DETAILS SHEET 2 OF 2 FOR SP-6.
4. OMIT IF MEDIAN ISLAND EXIST.

ABBREVIATIONS

(CA) CALIFORNIA CODE

LEGENDS

- CONE
- PORTABLE SIGN
- DIRECTION OF TRAVEL
- EXISTING OVERHEAD SIGN

TRAFFIC HANDLING DETAILS
TRAFFIC CONTROL SYSTEM FOR DETOUR SIGN INSTALLATION ALONG DESIGNATED DETOUR ROUTE
SHEET 2 OF 2

NO SCALE

THD-5

REVISED BY	DATE REVISED
JC	9/08
JC	7/08

CALCULATED-DESIGNED BY: ALBERT K YU
CHECKED BY: JOCELYN C CHIANG
FUNCTIONAL SUPERVISOR: JOHN YANG

STATE OF CALIFORNIA - DEPARTMENT OF TRANSPORTATION
DTM
Caltrans

LAST REVISION | DATE PLOTTED => 21-FEB-2010
02-16-10 | TIME PLOTTED => 19:55

BORDER LAST REVISED 4/11/2008

RELATIVE BORDER SCALE IS IN INCHES 0 1 2 3

USERNAME => s122436
DGN FILE => 73Y600me005.dgn

CU 07390

EA 3Y6001

Dist	COUNTY	ROUTE	POST MILES TOTAL PROJECT	SHEET No.	TOTAL SHEETS
07	LA	210	R0.4/R5.9	10	87

REGISTERED CIVIL ENGINEER — DATE 10/14/09

2-16-10
PLANS APPROVAL DATE

REGISTERED PROFESSIONAL ENGINEER — EDGAR HERRERA — No. C67603 — Exp. 6/30/11 — CIVIL — STATE OF CALIFORNIA

THE STATE OF CALIFORNIA OR ITS OFFICERS OR AGENTS SHALL NOT BE RESPONSIBLE FOR THE ACCURACY OR COMPLETENESS OF SCANNED COPIES OF THIS PLAN SHEET.

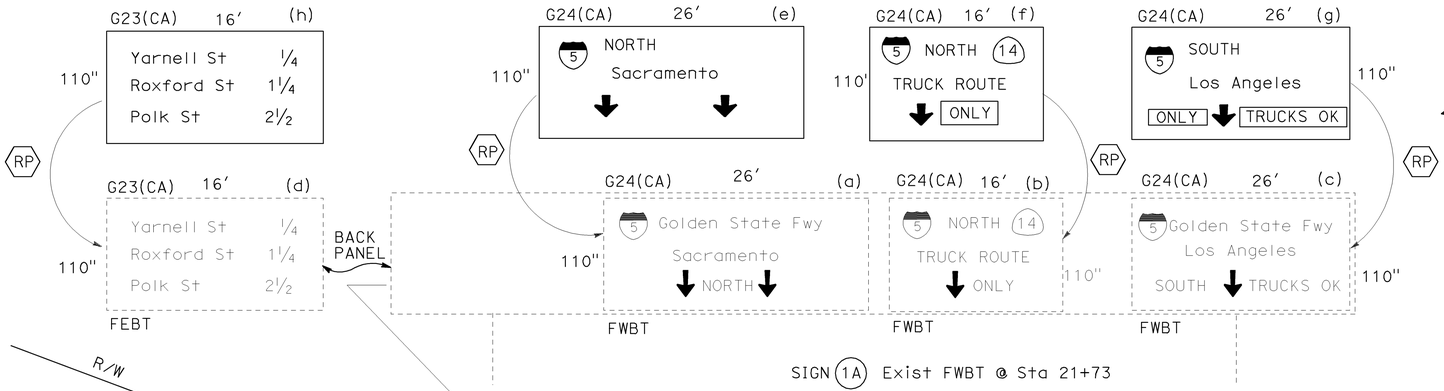

SIGN (1A) Exist FWBT @ Sta 21+73

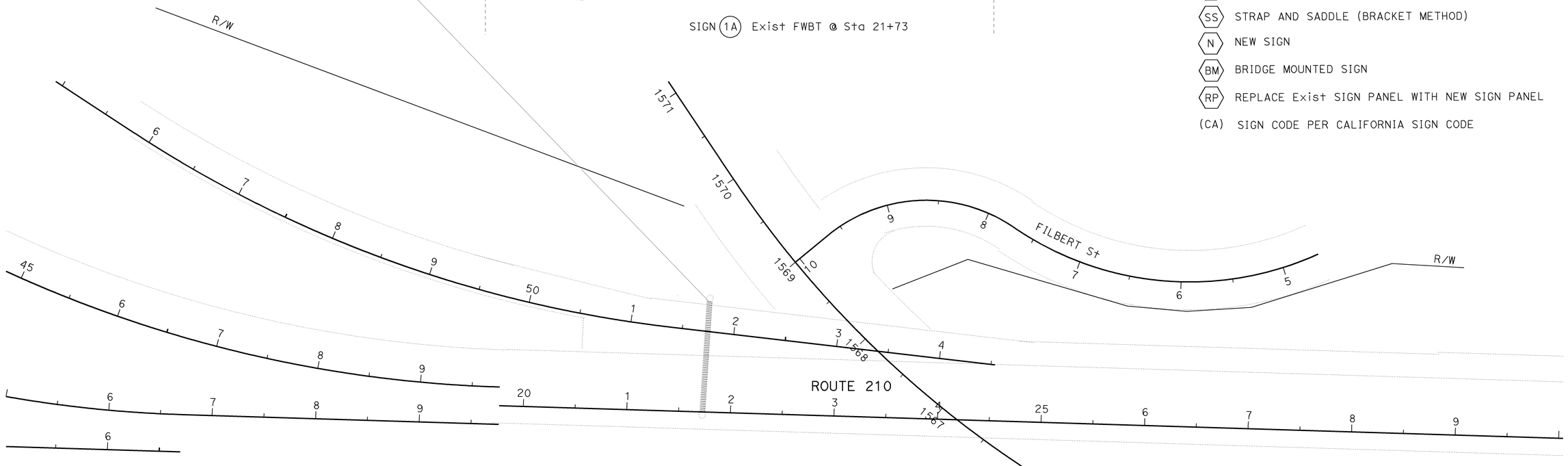

LEGEND

- (A) OVERHEAD SIGN IDENTIFICATION (WITH NUMBER & LETTER)
- (No) ROADSIDE SIGN IDENTIFICATION (WITH NUMBER)
- (R) REMOVE Exist SIGN
- (SS) STRAP AND SADDLE (BRACKET METHOD)
- (N) NEW SIGN
- (BM) BRIDGE MOUNTED SIGN
- (RP) REPLACE Exist SIGN PANEL WITH NEW SIGN PANEL
- (CA) SIGN CODE PER CALIFORNIA SIGN CODE

NOTES:

1. FOR ACCURATE RIGHT OF WAY AND ACCESS DATA, CONTACT RIGHT OF WAY ENGINEERING AT THE DISTRICT OFFICE.
2. SIGN LOCATIONS ARE APPROXIMATE, EXACT POSITIONS AND LOCATIONS WILL BE DETERMINED BY THE ENGINEER.

SIGN PLAN

SCALE 1:50

S-1

THIS PLAN ACCURATE FOR SIGN WORK ONLY

STATE OF CALIFORNIA - DEPARTMENT OF TRANSPORTATION
TRAFFIC DESIGN
FUNCTIONAL SUPERVISOR: CRICORIS BIGLARIAN
CALCULATED-DESIGNED BY: EDGAR HERRERA
CHECKED BY: MARISA G. MANDOCDOC
REVISED BY | DATE REVISED

LAST REVISION: DATE PLOTTED => 21-FEB-2010 | 02-16-10 | TIME PLOTTED => 22:23

BORDER LAST REVISED 4/11/2008 | RELATIVE BORDER SCALE IS IN INCHES (0 1 2 3) | USERNAME => s122436 | DGN FILE => 73y600oa001.dgn | CU 07380 | EA 3Y6001

Dist	COUNTY	ROUTE	POST MILES TOTAL PROJECT	SHEET No.	TOTAL SHEETS
07	LA	210	R0.4/R5.9	11	87

REGISTERED CIVIL ENGINEER — DATE 10-14-09

2-16-10
PLANS APPROVAL DATE

REGISTERED PROFESSIONAL ENGINEER
EDGAR HERRERA
No. C67603
Exp. 6/30/11
CIVIL
STATE OF CALIFORNIA

THE STATE OF CALIFORNIA OR ITS OFFICERS OR AGENTS SHALL NOT BE RESPONSIBLE FOR THE ACCURACY OR COMPLETENESS OF SCANNED COPIES OF THIS PLAN SHEET.

REVISED BY | DATE REVISED

MARISA G. MANDOCDOC | EDGAR HERRERA

CALCULATED-DESIGNED BY | CHECKED BY

FUNCTIONAL SUPERVISOR: CRICORIS BIGLARIAN

STATE OF CALIFORNIA - DEPARTMENT OF TRANSPORTATION

Caltrans® TRAFFIC DESIGN

G24(CA) 28′ (b)
110"
5 SOUTH
Los Angeles
ONLY TRUCKS OK

RP

G24(CA) 28′ (a)
5 Golden State Fwy
Los Angeles
ONLY TRUCKS OK
110"

SIGN (2C) Exist FWBT @ STA 44+54

R/W

ROUTE 210

YARNELL St

G85(CA)16′ (a)
Yarnell St
ONLY
50"

RP

G85(CA) 16′ (b)
50"
Yarnell St
ONLY

SIGN (2A) Exist FEBT @ STA 35+05

N (201) G70-4(CA) SS EXIT 1

G83(CA) 14′ (a)
Roxford St
1 MILE
70"

RP

G83(CA) 14′ (b)
Roxford St
1 MILE
70"

SIGN (2B) Exist FEBT @ STA 46+61

N (202) G70-4(CA) SS EXIT 2

R/W

SIGN PLAN

SCALE 1:50

THIS PLAN ACCURATE FOR SIGN WORK ONLY

S-2

LAST REVISION | DATE PLOTTED => 21-FEB-2010 | TIME PLOTTED => 23:24 | 02-16-10

BORDER LAST REVISED 4/11/2008

RELATIVE BORDER SCALE IS IN INCHES 0 1 2 3

USERNAME => s122436
DGN FILE => 73y600oa002.dgn

CU 07380

EA 3Y6001

Dist	COUNTY	ROUTE	POST MILES TOTAL PROJECT	SHEET No.	TOTAL SHEETS
07	LA	210	R0.4/R5.9	12	87

REGISTERED CIVIL ENGINEER — 10-14-09 DATE

2-16-10
PLANS APPROVAL DATE

EDGAR HERRERA No. C67603 Exp. 6/30/11 CIVIL — REGISTERED PROFESSIONAL ENGINEER — STATE OF CALIFORNIA

THE STATE OF CALIFORNIA OR ITS OFFICERS OR AGENTS SHALL NOT BE RESPONSIBLE FOR THE ACCURACY OR COMPLETENESS OF SCANNED COPIES OF THIS PLAN SHEET.

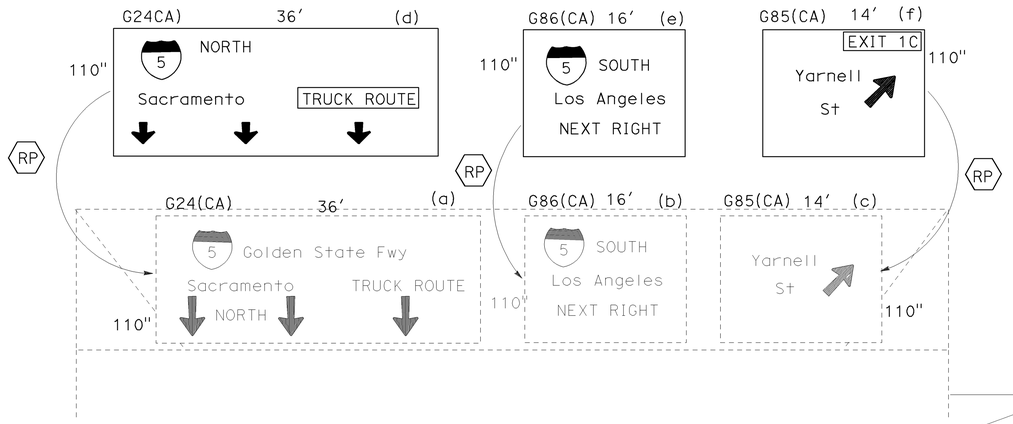

SIGN (3B) Exist FWBT @ Sta 54+79

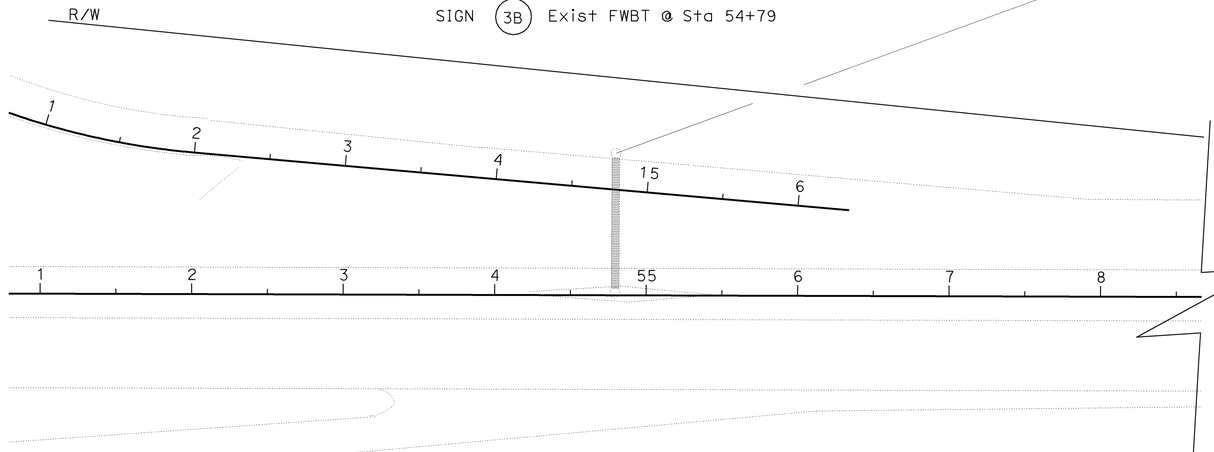

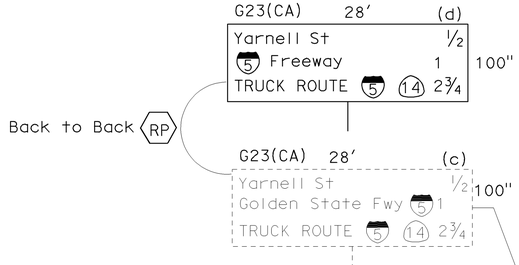

SIGN (3A) Exist FWBT @ Sta 73+79

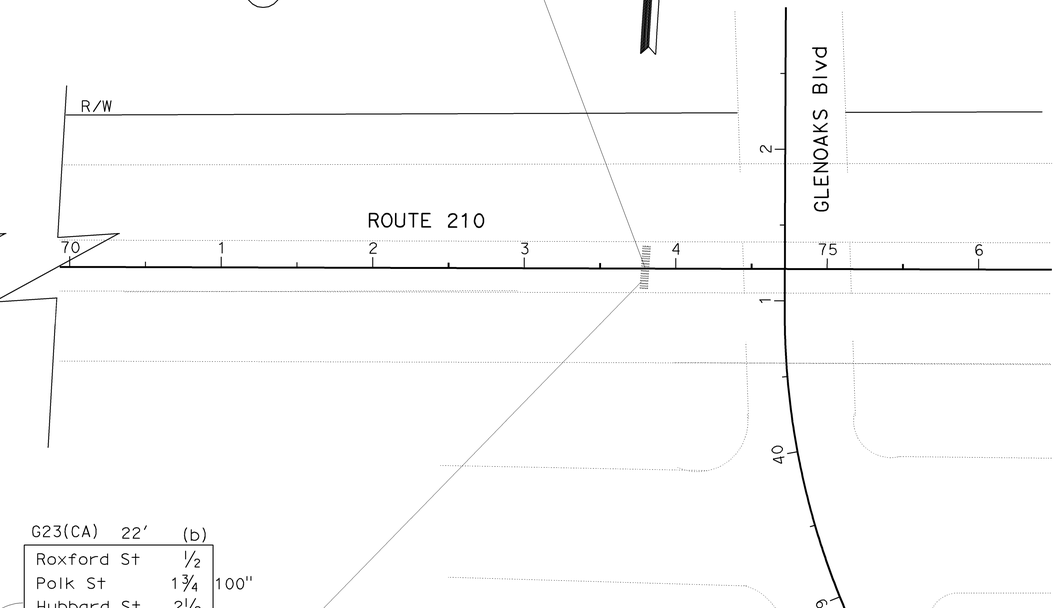

SIGN (3A) Exist FEBT @ Sta 73+79

THIS PLAN ACCURATE FOR SIGN WORK ONLY

SIGN PLAN

SCALE 1:50

S-3

STATE OF CALIFORNIA - DEPARTMENT OF TRANSPORTATION
Caltrans® TRAFFIC DESIGN

FUNCTIONAL SUPERVISOR: CRICORIS BIGLARIAN
CALCULATED-DESIGNED BY: MARISA G. MANDOCDOC
CHECKED BY: EDGAR HERRERA
REVISED BY
DATE REVISED

LAST REVISION 02-16-10
DATE PLOTTED => 21-FEB-2010
TIME PLOTTED => 23:24

BORDER LAST REVISED 4/11/2008
RELATIVE BORDER SCALE IS IN INCHES 0 1 2 3
USERNAME => s122436
DGN FILE => 73y600oa003.dgn
CU 07380
EA 3Y6001

Dist	COUNTY	ROUTE	POST MILES TOTAL PROJECT	SHEET No.	TOTAL SHEETS
07	LA	210	R0.4/R5.9	13	87

REGISTERED CIVIL ENGINEER — DATE 10-14-09

2-16-10
PLANS APPROVAL DATE

REGISTERED PROFESSIONAL ENGINEER
EDGAR HERRERA
No. C67603
Exp. 6/30/11
CIVIL
STATE OF CALIFORNIA

THE STATE OF CALIFORNIA OR ITS OFFICERS OR AGENTS SHALL NOT BE RESPONSIBLE FOR THE ACCURACY OR COMPLETENESS OF SCANNED COPIES OF THIS PLAN SHEET.

G83(CA) 14′ (b)
Yarnell St
1 MILE
70"
RP
G83(CA) 14′ (a)
Yarnell St
1 MILE
70"

N 403 G70-4(CA) SS EXIT 1C

SIGN 4C Exist FWBT @ Sta 101+87

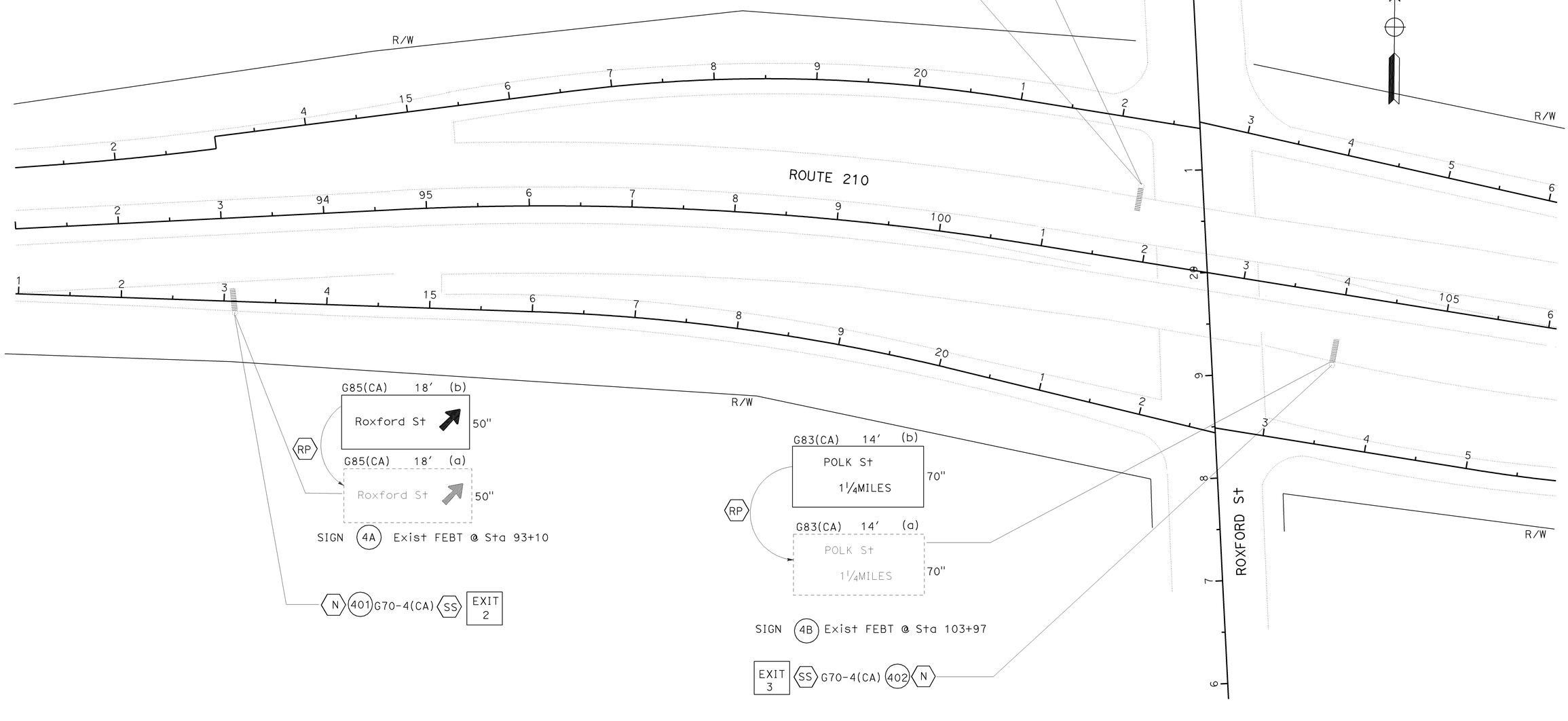

G85(CA) 18′ (b)
Roxford St
50"
RP
G85(CA) 18′ (a)
Roxford St
50"

SIGN 4A Exist FEBT @ Sta 93+10

N 401 G70-4(CA) SS EXIT 2

G83(CA) 14′ (b)
POLK St
1¼MILES
70"
RP
G83(CA) 14′ (a)
POLK St
1¼MILES
70"

SIGN 4B Exist FEBT @ Sta 103+97

EXIT 3 SS G70-4(CA) 402 N

THIS PLAN ACCURATE FOR SIGN WORK ONLY

SIGN PLAN

SCALE 1:50

S-4

STATE OF CALIFORNIA - DEPARTMENT OF TRANSPORTATION
Caltrans® TRAFFIC DESIGN

FUNCTIONAL SUPERVISOR: CRICORIS BIGLARIAN
CALCULATED-DESIGNED BY: MARISA G. MANDOCDOC
CHECKED BY: EDGAR HERRERA
REVISED BY
DATE REVISED

LAST REVISION
DATE PLOTTED => 21-FEB-2010
TIME PLOTTED => 23:24
02-16-10

BORDER LAST REVISED 4/11/2008

RELATIVE BORDER SCALE IS IN INCHES 0 1 2 3

USERNAME => s122436
DGN FILE => 73y600oa004.dgn

CU 07380

EA 3Y6001

Dist	COUNTY	ROUTE	POST MILES TOTAL PROJECT	SHEET No.	TOTAL SHEETS
07	LA	210	R0.4/R5.9	14	87

REGISTERED CIVIL ENGINEER — DATE 10/14/09

2-16-10
PLANS APPROVAL DATE

REGISTERED PROFESSIONAL ENGINEER — EDGAR HERRERA — No. C67603 — Exp. 6/30/11 — CIVIL — STATE OF CALIFORNIA

THE STATE OF CALIFORNIA OR ITS OFFICERS OR AGENTS SHALL NOT BE RESPONSIBLE FOR THE ACCURACY OR COMPLETENESS OF SCANNED COPIES OF THIS PLAN SHEET.

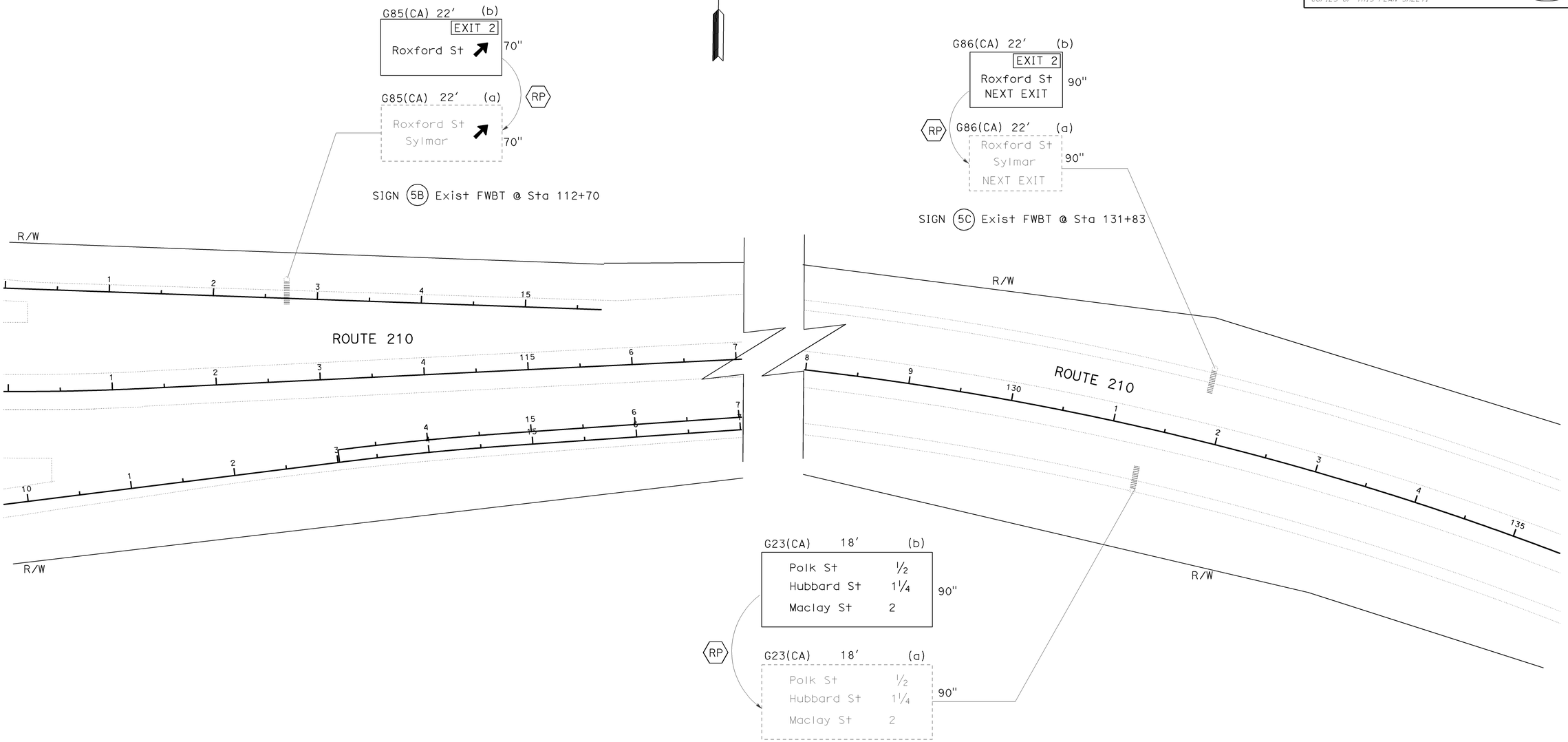

SIGN PLAN

SCALE 1:50

THIS PLAN ACCURATE FOR SIGN WORK ONLY

S-5

STATE OF CALIFORNIA - DEPARTMENT OF TRANSPORTATION
Caltrans® TRAFFIC DESIGN
FUNCTIONAL SUPERVISOR: CRICORIS BIGLARIAN
CALCULATED-DESIGNED BY: MARISA G. MANDOCDOC
CHECKED BY: EDGAR HERRERA
REVISED BY / DATE REVISED

LAST REVISION 02-16-10
DATE PLOTTED => 21-FEB-2010
TIME PLOTTED => 23:25

BORDER LAST REVISED 4/11/2008
RELATIVE BORDER SCALE IS IN INCHES 0 1 2 3
USERNAME => s122436
DGN FILE => 73y600oa005.dgn
CU 07380
EA 3Y6001

Dist	COUNTY	ROUTE	POST MILES TOTAL PROJECT	SHEET No.	TOTAL SHEETS
07	LA	210	R0.4/R5.9	15	87

REGISTERED CIVIL ENGINEER — 10/14/09 DATE

2-16-10
PLANS APPROVAL DATE

REGISTERED PROFESSIONAL ENGINEER
EDGAR HERRERA
No. C67603
Exp. 6/30/11
CIVIL
STATE OF CALIFORNIA

THE STATE OF CALIFORNIA OR ITS OFFICERS OR AGENTS SHALL NOT BE RESPONSIBLE FOR THE ACCURACY OR COMPLETENESS OF SCANNED COPIES OF THIS PLAN SHEET.

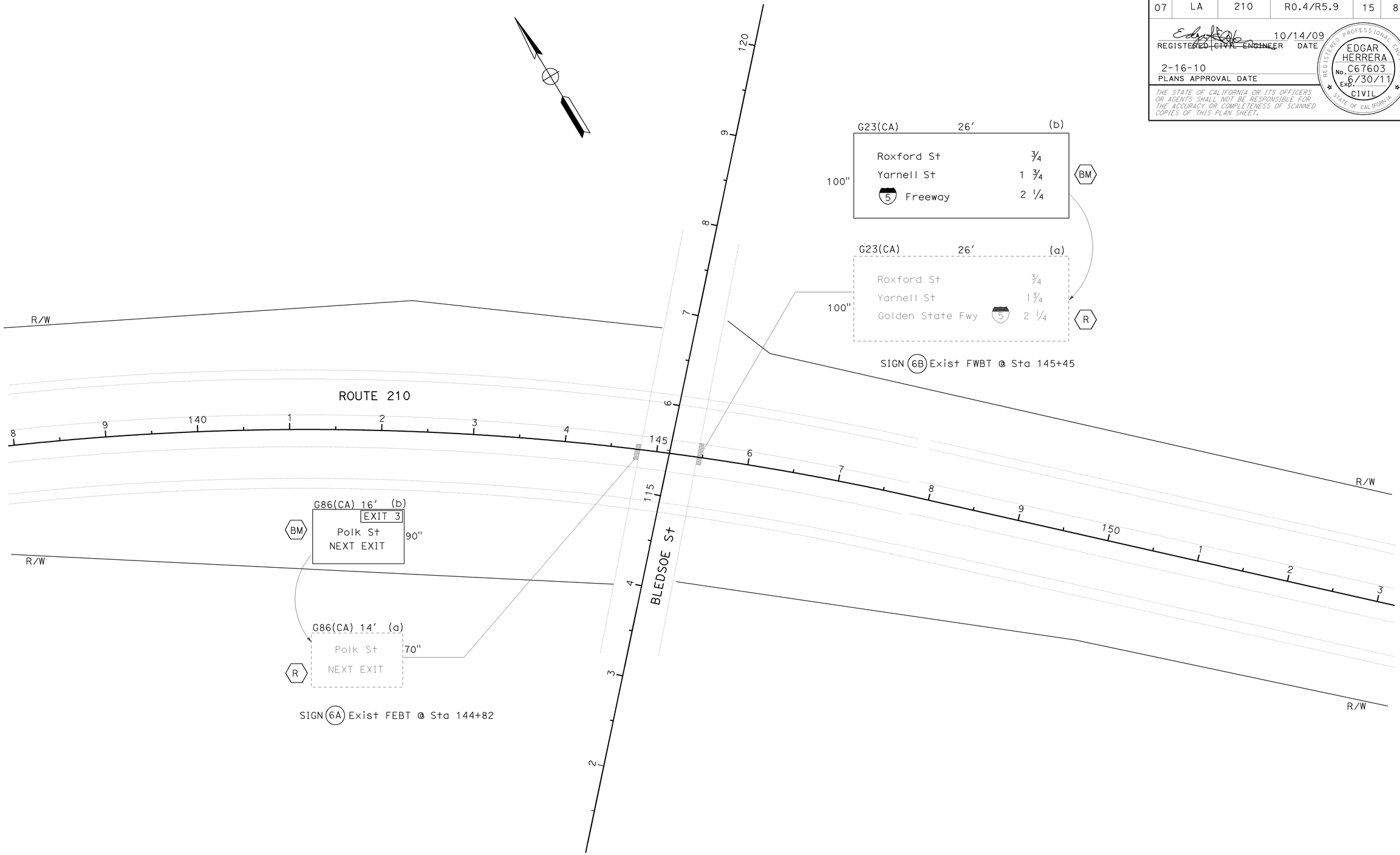

SIGN PLAN

SCALE 1:50

THIS PLAN ACCURATE FOR SIGN WORK ONLY

S-6

STATE OF CALIFORNIA - DEPARTMENT OF TRANSPORTATION
TRAFFIC DESIGN

FUNCTIONAL SUPERVISOR: CRICORIS BIGLARIAN
CALCULATED-DESIGNED BY: MARISA G. MANDOCDOC
CHECKED BY: EDGAR HERRERA
REVISED BY / DATE REVISED

LAST REVISION DATE PLOTTED => 21-FEB-2010
02-16-10 TIME PLOTTED => 23:25

BORDER LAST REVISED 4/11/2008

RELATIVE BORDER SCALE IS IN INCHES 0 1 2 3

USERNAME => s122436
DGN FILE => 73y600oa006.dgn

CU 07380

EA 3Y6001

Dist	COUNTY	ROUTE	POST MILES TOTAL PROJECT	SHEET No.	TOTAL SHEETS
07	LA	210	R0.4/R5.9	16	87

REGISTERED CIVIL ENGINEER — 10/14/09 DATE

2-16-10
PLANS APPROVAL DATE

REGISTERED PROFESSIONAL ENGINEER
EDGAR HERRERA
No. C67603
Exp. 6/30/11
CIVIL
STATE OF CALIFORNIA

THE STATE OF CALIFORNIA OR ITS OFFICERS OR AGENTS SHALL NOT BE RESPONSIBLE FOR THE ACCURACY OR COMPLETENESS OF SCANNED COPIES OF THIS PLAN SHEET.

REVISED BY | DATE REVISED

MARISA G. MANDOCDOC | EDGAR HERRERA

CALCULATED-DESIGNED BY | CHECKED BY

FUNCTIONAL SUPERVISOR: CRICORIS BIGLARIAN

STATE OF CALIFORNIA - DEPARTMENT OF TRANSPORTATION

Caltrans® **TRAFFIC DESIGN**

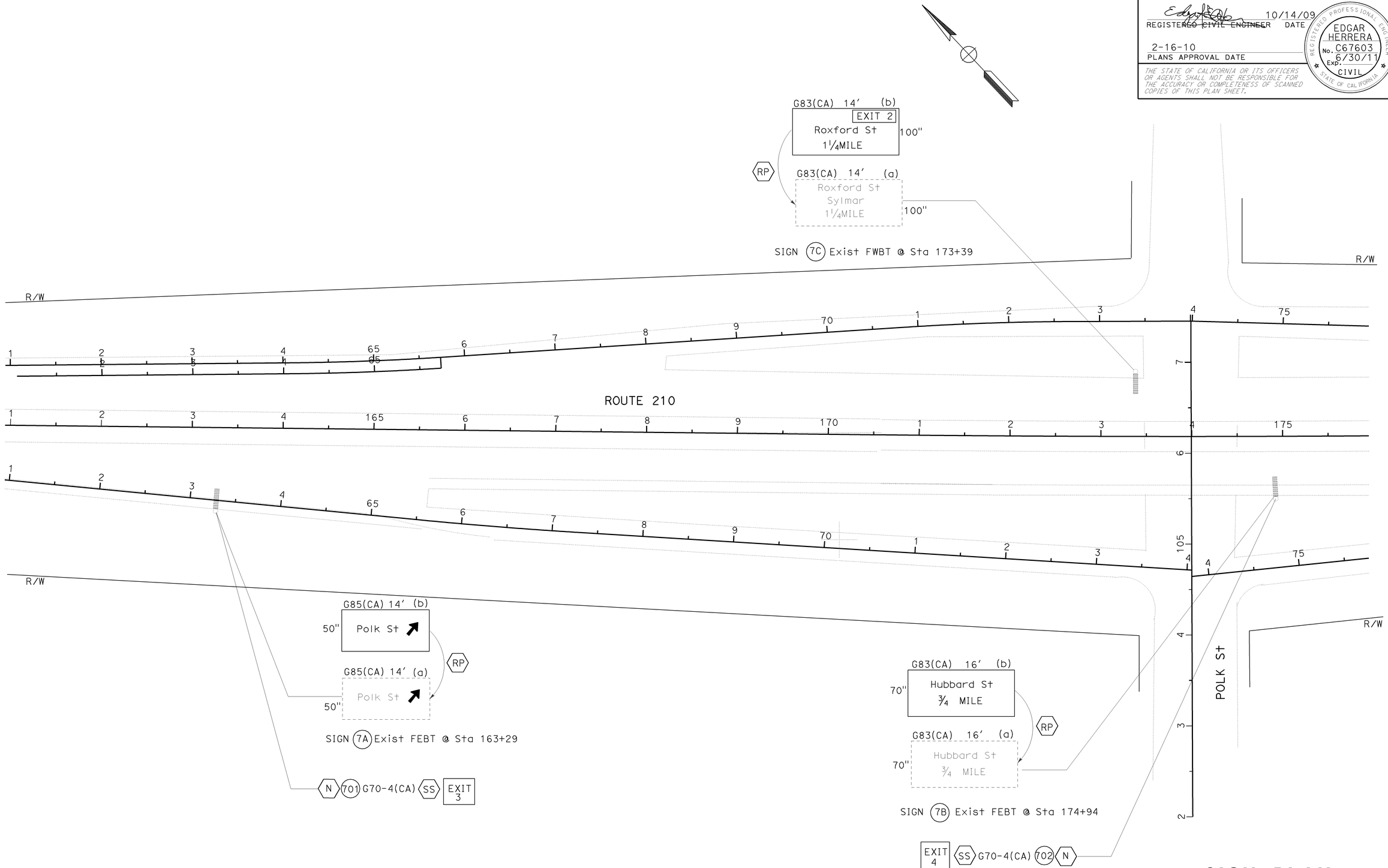

THIS PLAN ACCURATE FOR SIGN WORK ONLY

SIGN PLAN

SCALE 1:50

S-7

LAST REVISION 02-16-10 | DATE PLOTTED => 21-FEB-2010 | TIME PLOTTED => 23:25

BORDER LAST REVISED 4/11/2008 | RELATIVE BORDER SCALE IS IN INCHES 0 1 2 3 | USERNAME => s122436 | DGN FILE => 73y600oa007.dgn | CU 07380 | EA 3Y6001

Dist	COUNTY	ROUTE	POST MILES TOTAL PROJECT	SHEET No.	TOTAL SHEETS
07	LA	210	R0.4/R5.9	18	87

REGISTERED CIVIL ENGINEER — 10/14/09 DATE

EDGAR HERRERA No. C67603 Exp. 6/30/11 CIVIL — REGISTERED PROFESSIONAL ENGINEER — STATE OF CALIFORNIA

2-16-10
PLANS APPROVAL DATE

THE STATE OF CALIFORNIA OR ITS OFFICERS OR AGENTS SHALL NOT BE RESPONSIBLE FOR THE ACCURACY OR COMPLETENESS OF SCANNED COPIES OF THIS PLAN SHEET.

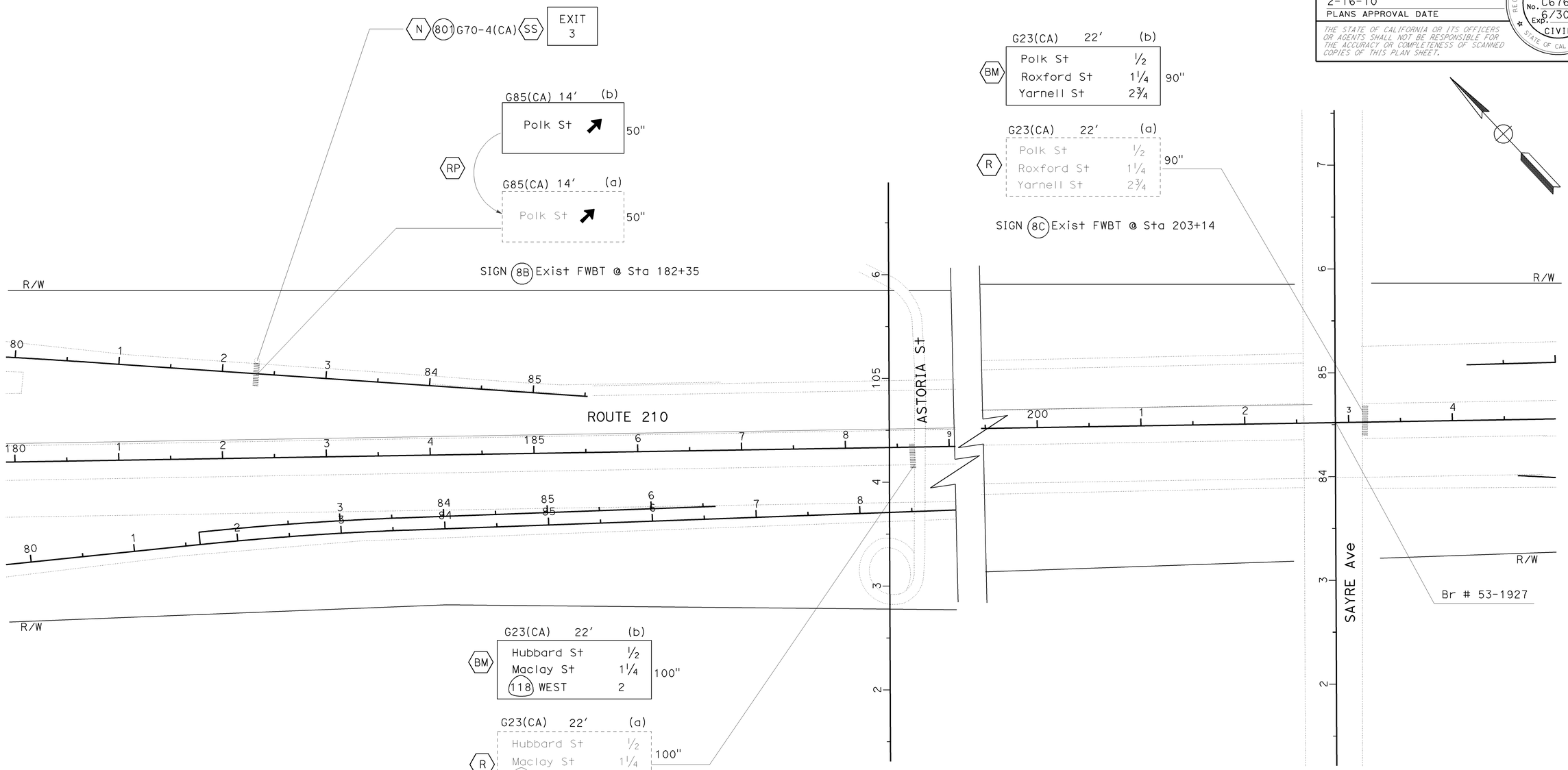

SIGN PLAN

SCALE 1:50

S-8

THIS PLAN ACCURATE FOR SIGN WORK ONLY

STATE OF CALIFORNIA - DEPARTMENT OF TRANSPORTATION
Caltrans® TRAFFIC DESIGN
FUNCTIONAL SUPERVISOR: CRICORIS BIGLARIAN
CALCULATED-DESIGNED BY: MARISA G. MANDOCDOC
CHECKED BY: EDGAR HERRERA
REVISED BY | DATE REVISED

LAST REVISION | DATE PLOTTED => 21-FEB-2010
02-16-10 | TIME PLOTTED => 23:26

BORDER LAST REVISED 4/11/2008

RELATIVE BORDER SCALE IS IN INCHES 0 1 2 3

USERNAME => s122436
DGN FILE => 73y600oa008.dgn

CU 07380

EA 3Y6001

Dist	COUNTY	ROUTE	POST MILES TOTAL PROJECT	SHEET No.	TOTAL SHEETS
07	LA	210	R0.4/R5.9	17	87

10/14/09
REGISTERED CIVIL ENGINEER — DATE

EDGAR HERRERA
No. C67603
Exp. 6/30/11
CIVIL
REGISTERED PROFESSIONAL ENGINEER
STATE OF CALIFORNIA

2-16-10
PLANS APPROVAL DATE

THE STATE OF CALIFORNIA OR ITS OFFICERS OR AGENTS SHALL NOT BE RESPONSIBLE FOR THE ACCURACY OR COMPLETENESS OF SCANNED COPIES OF THIS PLAN SHEET.

G83(CA) 16′ (b)
BM — EXIT 3 / Polk St / ¾MILE — 90"

G83(CA) 14′ (a)
R — Polk St / ¾MILE — 70"

SIGN (9C) Exist FWBT @ Sta 217+70

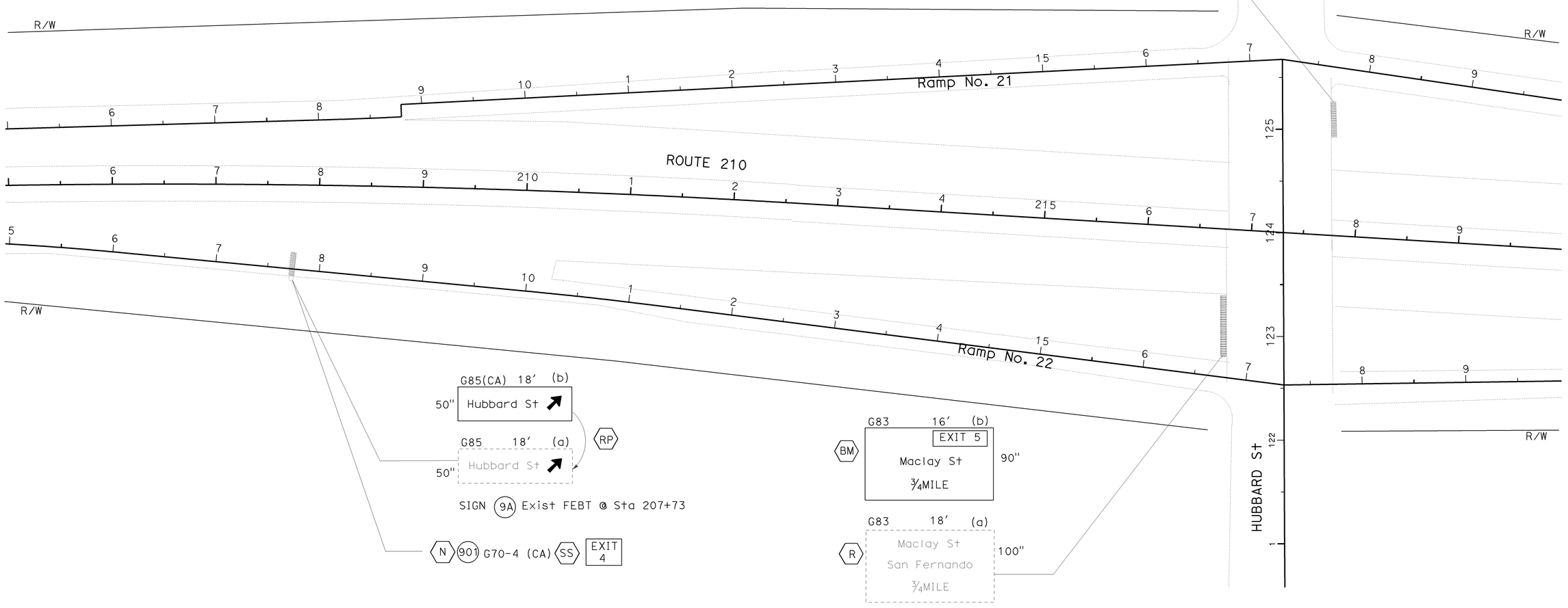

G85(CA) 18′ (b)
50" — Hubbard St ↗ — RP

G85 18′ (a)
50" — Hubbard St ↗

SIGN (9A) Exist FEBT @ Sta 207+73

N — (901) G70-4 (CA) — SS — EXIT 4

G83 16′ (b)
BM — EXIT 5 / Maclay St / ¾MILE — 90"

G83 18′ (a)
R — Maclay St / San Fernando / ¾MILE — 100"

SIGN (9B) Exist FEBT @ Sta 216+25

SIGN PLAN

SCALE 1:50

S-9

THIS PLAN ACCURATE FOR SIGN WORK ONLY

STATE OF CALIFORNIA - DEPARTMENT OF TRANSPORTATION
Caltrans® TRAFFIC DESIGN
FUNCTIONAL SUPERVISOR: CRICORIS BIGLARIAN
CALCULATED-DESIGNED BY: EDGAR HERRERA
CHECKED BY: MARISA G. MANDOCDOC

REVISED BY	DATE REVISED

LAST REVISION — DATE PLOTTED => 21-FEB-2010 / TIME PLOTTED => 23:26
02-16-10

BORDER LAST REVISED 4/11/2008

RELATIVE BORDER SCALE IS IN INCHES 0 1 2 3

USERNAME => s122436
DGN FILE => 73y600oa009.dgn

CU 07380

EA 3Y6001

Dist	COUNTY	ROUTE	POST MILES TOTAL PROJECT	SHEET No.	TOTAL SHEETS
07	LA	210	R0.4/R5.9	19	87

REGISTERED CIVIL ENGINEER — DATE 10/14/09

2-16-10
PLANS APPROVAL DATE

EDGAR HERRERA No. C67603 Exp. 6/30/11 CIVIL — REGISTERED PROFESSIONAL ENGINEER — STATE OF CALIFORNIA

THE STATE OF CALIFORNIA OR ITS OFFICERS OR AGENTS SHALL NOT BE RESPONSIBLE FOR THE ACCURACY OR COMPLETENESS OF SCANNED COPIES OF THIS PLAN SHEET.

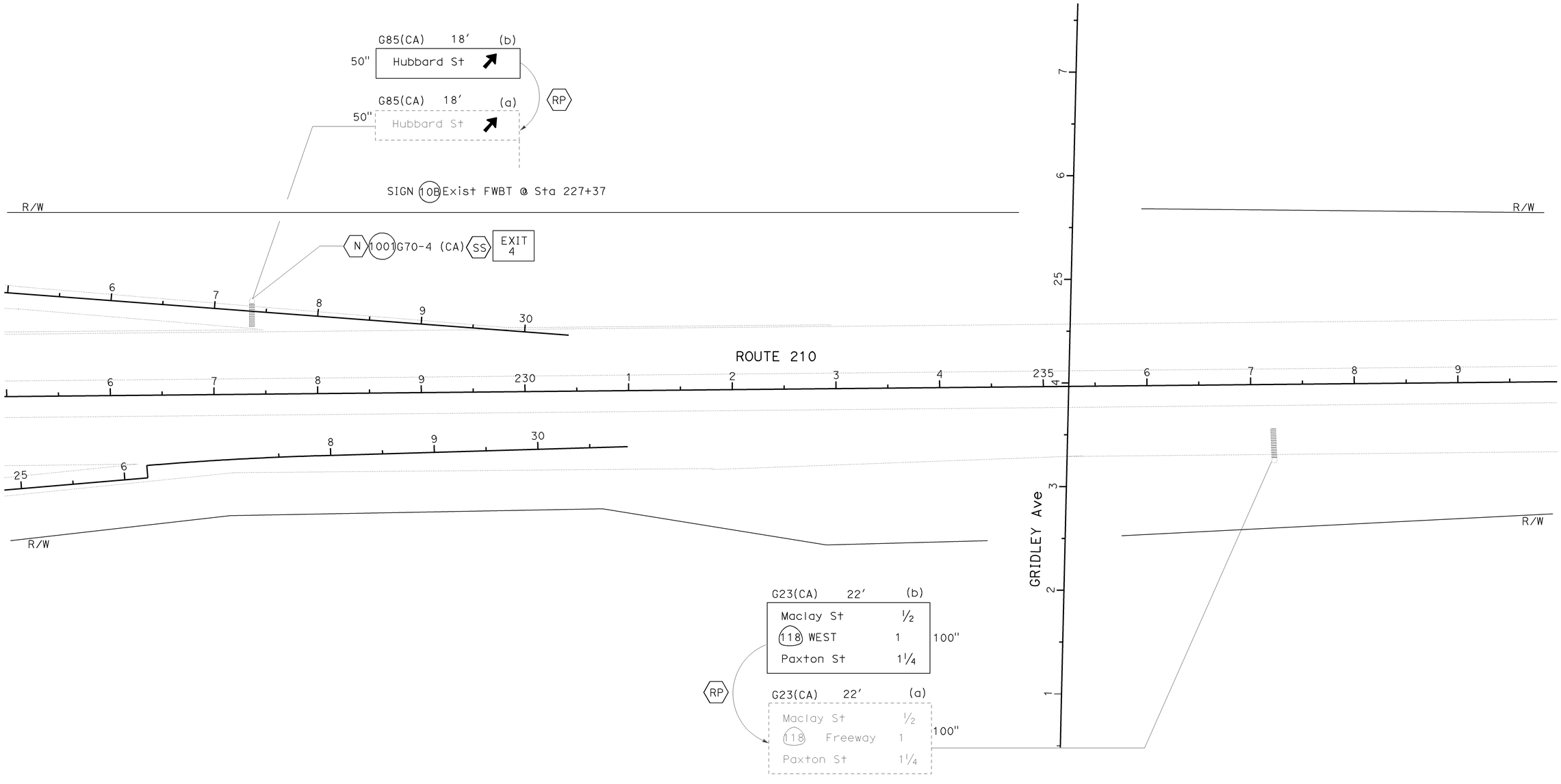

SIGN PLAN

SCALE 1:50

THIS PLAN ACCURATE FOR SIGN WORK ONLY

S-10

STATE OF CALIFORNIA - DEPARTMENT OF TRANSPORTATION
Caltrans® TRAFFIC DESIGN
FUNCTIONAL SUPERVISOR: CRICORIS BIGLARIAN
CALCULATED-DESIGNED BY: EDGAR HERRERA
CHECKED BY: MARISA G. MANDOCDOC
REVISED BY | DATE REVISED

LAST REVISION | DATE PLOTTED => 21-FEB-2010 | TIME PLOTTED => 23:27
02-16-10

BORDER LAST REVISED 4/11/2008

RELATIVE BORDER SCALE IS IN INCHES 0 1 2 3

USERNAME => s122436
DGN FILE => 73y600oa010.dgn

CU 07380

EA 3Y6001

Dist	COUNTY	ROUTE	POST MILES TOTAL PROJECT	SHEET No.	TOTAL SHEETS
07	LA	210	R0.4/R5.9	20	87

REGISTERED CIVIL ENGINEER — DATE 10/14/09

2-16-10
PLANS APPROVAL DATE

REGISTERED PROFESSIONAL ENGINEER — EDGAR HERRERA — No. C67603 — Exp. 6/30/11 — CIVIL — STATE OF CALIFORNIA

THE STATE OF CALIFORNIA OR ITS OFFICERS OR AGENTS SHALL NOT BE RESPONSIBLE FOR THE ACCURACY OR COMPLETENESS OF SCANNED COPIES OF THIS PLAN SHEET.

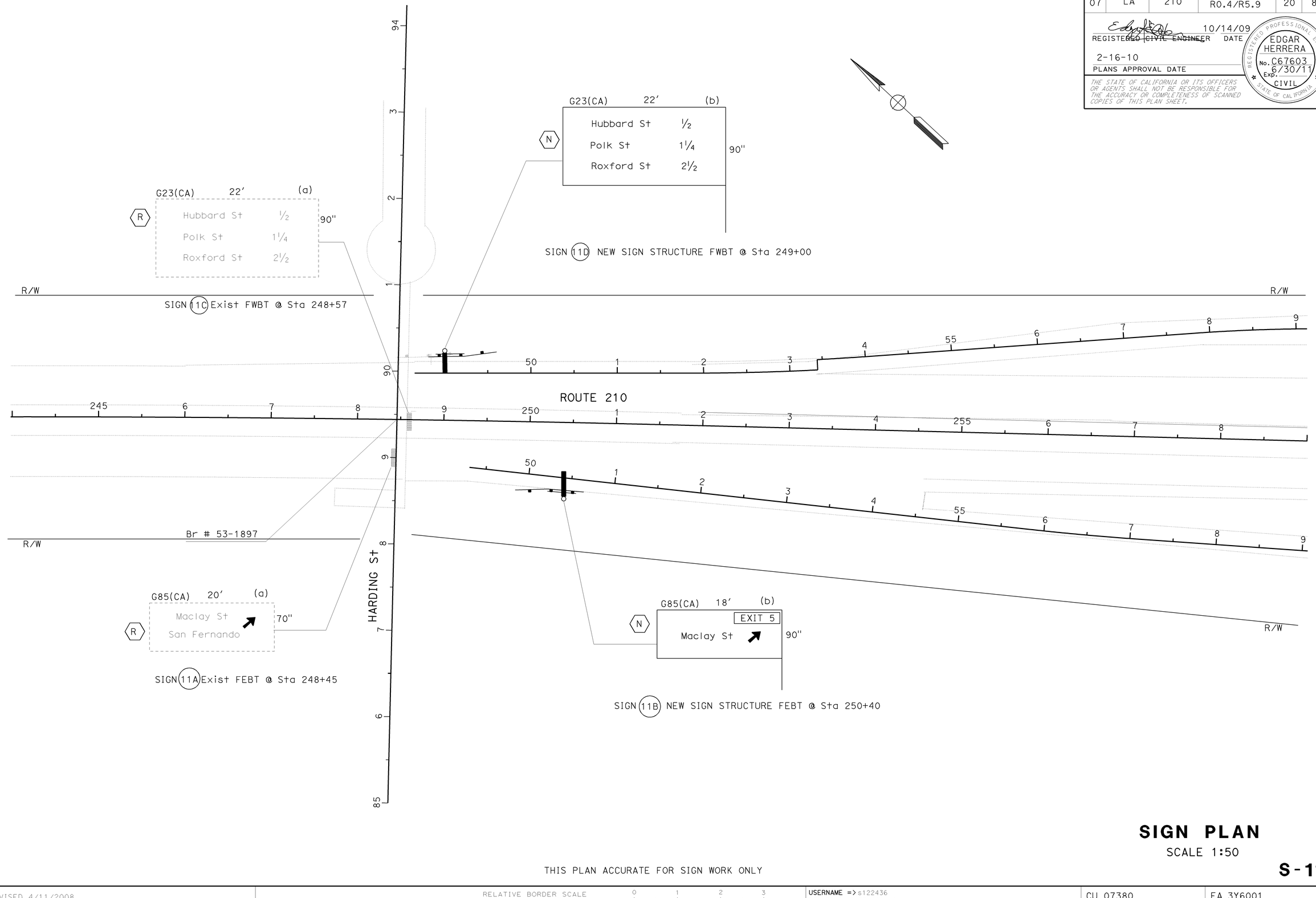

SIGN PLAN

SCALE 1:50

THIS PLAN ACCURATE FOR SIGN WORK ONLY

S-11

STATE OF CALIFORNIA - DEPARTMENT OF TRANSPORTATION
Caltrans® TRAFFIC DESIGN
FUNCTIONAL SUPERVISOR: CRICORIS BIGLARIAN
CALCULATED-DESIGNED BY: MARISA G. MANDOCDOC
CHECKED BY: EDGAR HERRERA
REVISED BY
DATE REVISED

LAST REVISION 2-16-10
DATE PLOTTED => 21-FEB-2010
TIME PLOTTED => 23:27

BORDER LAST REVISED 4/11/2008
RELATIVE BORDER SCALE IS IN INCHES 0 1 2 3
USERNAME => s122436
DGN FILE => 73y600oa011.dgn
CU 07380
EA 3Y6001

Dist	COUNTY	ROUTE	POST MILES TOTAL PROJECT	SHEET No.	TOTAL SHEETS
07	LA	210	R0.4/R5.9	21	87

REGISTERED ~~CIVIL ENGINEER~~ 10-14-09 DATE

2-16-10
PLANS APPROVAL DATE

REGISTERED PROFESSIONAL ENGINEER
EDGAR HERRERA
No. C67603
Exp. 6/30/11
CIVIL
STATE OF CALIFORNIA

THE STATE OF CALIFORNIA OR ITS OFFICERS OR AGENTS SHALL NOT BE RESPONSIBLE FOR THE ACCURACY OR COMPLETENESS OF SCANNED COPIES OF THIS PLAN SHEET.

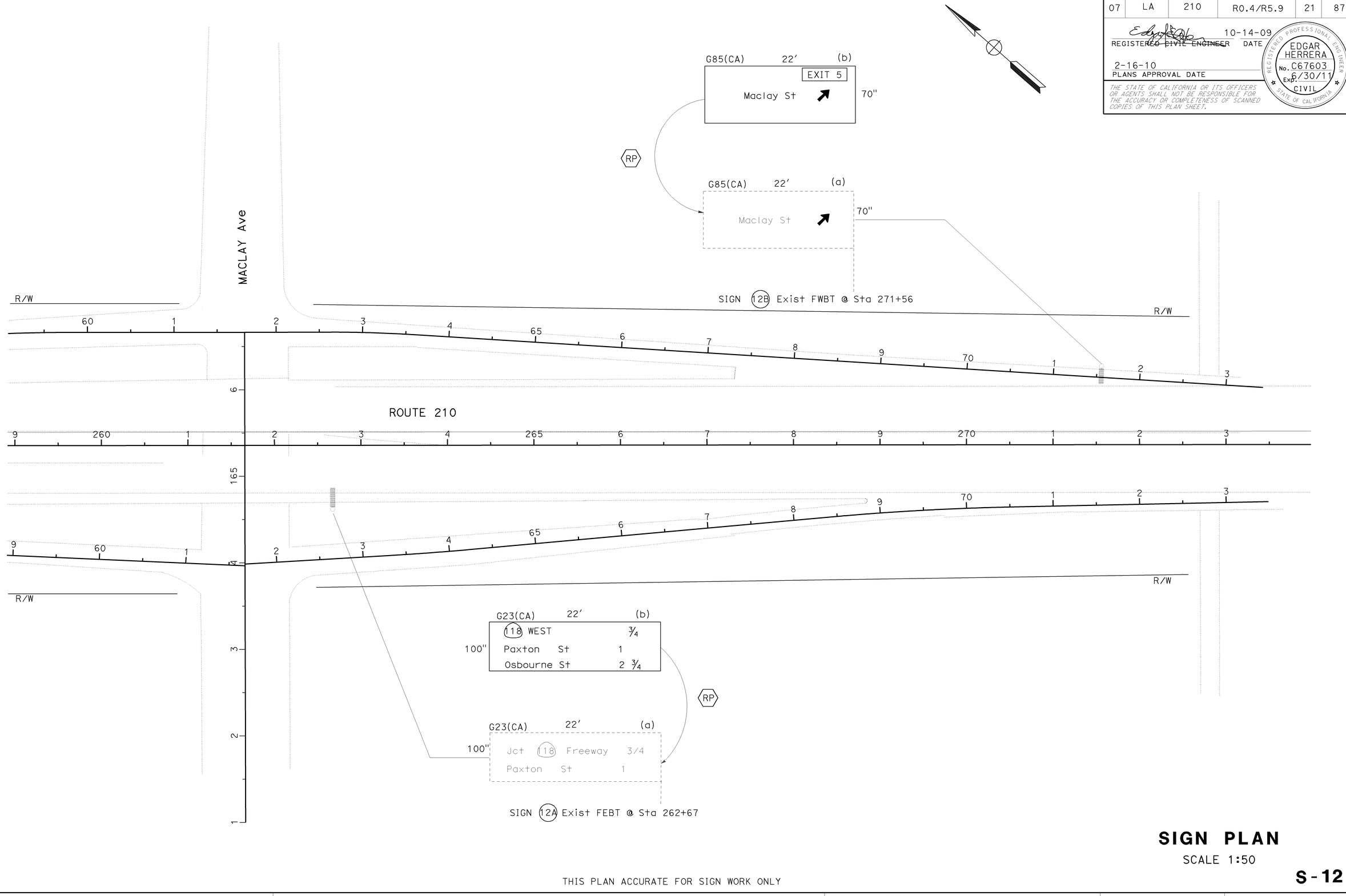

SIGN PLAN

SCALE 1:50

S-12

THIS PLAN ACCURATE FOR SIGN WORK ONLY

STATE OF CALIFORNIA - DEPARTMENT OF TRANSPORTATION
Caltrans® TRAFFIC DESIGN

FUNCTIONAL SUPERVISOR: CRICORIS BIGLARIAN
CALCULATED-DESIGNED BY: MARISA G. MANDOCDOC
CHECKED BY: EDGAR HERRERA
REVISED BY
DATE REVISED

LAST REVISION 02-16-10
DATE PLOTTED => 21-FEB-2010
TIME PLOTTED => 23:27

BORDER LAST REVISED 4/11/2008

RELATIVE BORDER SCALE IS IN INCHES 0 1 2 3

USERNAME => s122436
DGN FILE => 73y600oa012.dgn

CU 07380

EA 3Y6001

Dist	COUNTY	ROUTE	POST MILES TOTAL PROJECT	SHEET No.	TOTAL SHEETS
07	LA	210	R0.4/R5.9	22	87

REGISTERED CIVIL ENGINEER — DATE 10-14-09

2-16-10
PLANS APPROVAL DATE

REGISTERED PROFESSIONAL ENGINEER
EDGAR HERRERA
No. C67603
Exp. 6/30/11
CIVIL
STATE OF CALIFORNIA

THE STATE OF CALIFORNIA OR ITS OFFICERS OR AGENTS SHALL NOT BE RESPONSIBLE FOR THE ACCURACY OR COMPLETENESS OF SCANNED COPIES OF THIS PLAN SHEET.

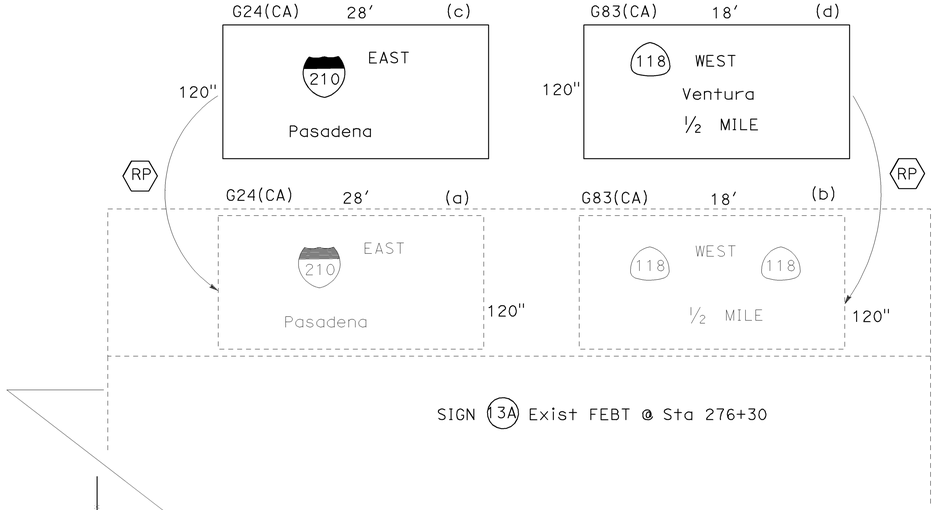

SIGN (13A) Exist FEBT @ Sta 276+30

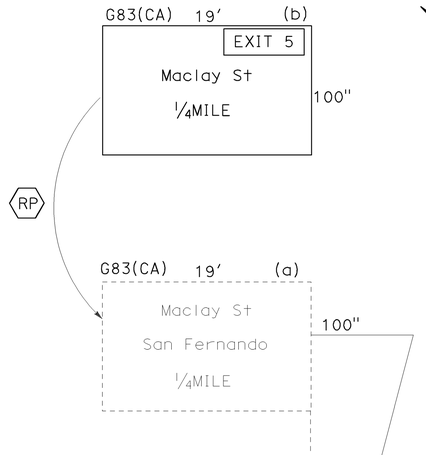

SIGN (13B) Exist FWBT @ Sta 282+32

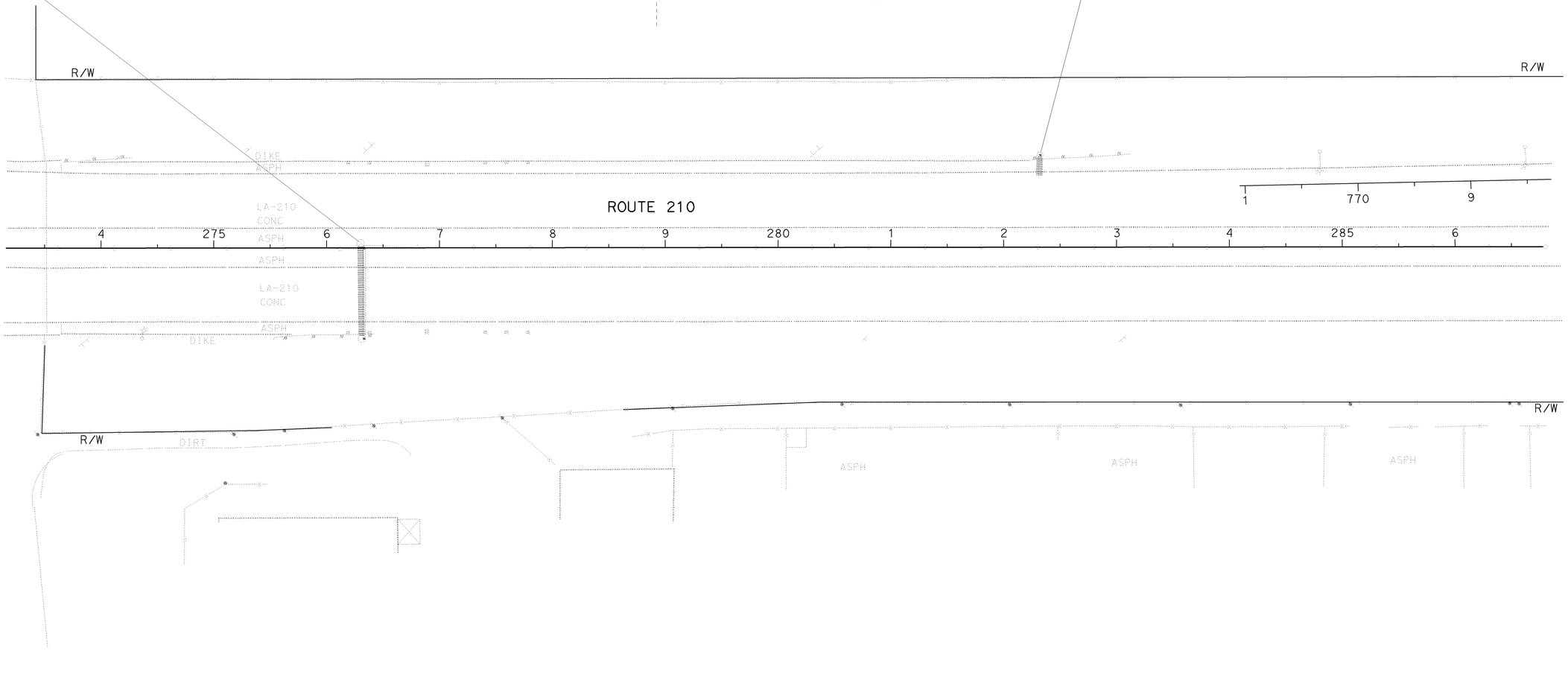

SIGN PLAN

SCALE 1:50

S-13

THIS PLAN ACCURATE FOR SIGN WORK ONLY

STATE OF CALIFORNIA - DEPARTMENT OF TRANSPORTATION
Caltrans® TRAFFIC DESIGN
FUNCTIONAL SUPERVISOR: CRICORIS BIGLARIAN
CALCULATED-DESIGNED BY: MARISA G. MANDOCDOC
CHECKED BY: EDGAR HERRERA
REVISED BY | DATE REVISED

LAST REVISION | DATE PLOTTED => 21-FEB-2010
02-16-10 | TIME PLOTTED => 23:28

BORDER LAST REVISED 4/11/2008

RELATIVE BORDER SCALE IS IN INCHES 0 1 2 3

USERNAME => s122436
DGN FILE => 73y600oa013.dgn

CU 07380 EA 3Y6001

Dist	COUNTY	ROUTE	POST MILES TOTAL PROJECT	SHEET No.	TOTAL SHEETS
07	LA	210	R0.4/R5.9	23	87

REGISTERED CIVIL ENGINEER 10-14-09 DATE

2-16-10
PLANS APPROVAL DATE

REGISTERED PROFESSIONAL ENGINEER EDGAR HERRERA No. C67603 Exp. 6/30/11 CIVIL STATE OF CALIFORNIA

THE STATE OF CALIFORNIA OR ITS OFFICERS OR AGENTS SHALL NOT BE RESPONSIBLE FOR THE ACCURACY OR COMPLETENESS OF SCANNED COPIES OF THIS PLAN SHEET.

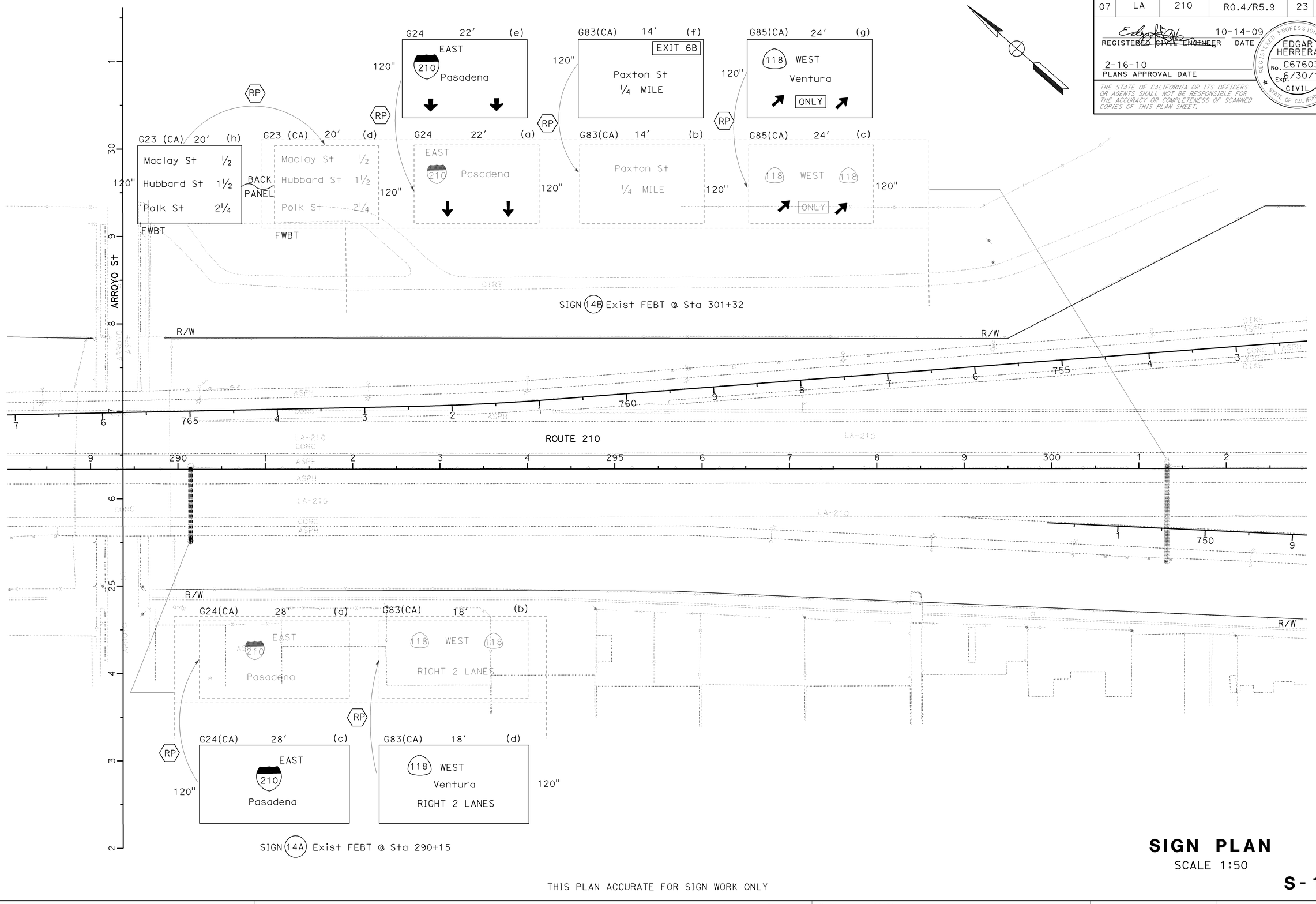

SIGN PLAN

SCALE 1:50

S-14

THIS PLAN ACCURATE FOR SIGN WORK ONLY

STATE OF CALIFORNIA - DEPARTMENT OF TRANSPORTATION
Caltrans TRAFFIC DESIGN

FUNCTIONAL SUPERVISOR: CRICORIS BIGLARIAN
CALCULATED-DESIGNED BY: MARISA G. MANDOCDOC
CHECKED BY: EDGAR HERRERA
REVISED BY
DATE REVISED

LAST REVISION 02-16-10
DATE PLOTTED => 21-FEB-2010
TIME PLOTTED => 23:28

BORDER LAST REVISED 4/11/2008
RELATIVE BORDER SCALE IS IN INCHES 0 1 2 3
USERNAME => s122436
DGN FILE => 73y600oa014.dgn
CU 07380
EA 3Y6001

Dist	COUNTY	ROUTE	POST MILES TOTAL PROJECT	SHEET No.	TOTAL SHEETS
07	LA	210	R0.4/R5.9	24	87

REGISTERED CIVIL ENGINEER — DATE 10-14-09

2-16-10
PLANS APPROVAL DATE

REGISTERED PROFESSIONAL ENGINEER
EDGAR HERRERA
No. C67603
Exp. 6/30/11
CIVIL
STATE OF CALIFORNIA

THE STATE OF CALIFORNIA OR ITS OFFICERS OR AGENTS SHALL NOT BE RESPONSIBLE FOR THE ACCURACY OR COMPLETENESS OF SCANNED COPIES OF THIS PLAN SHEET.

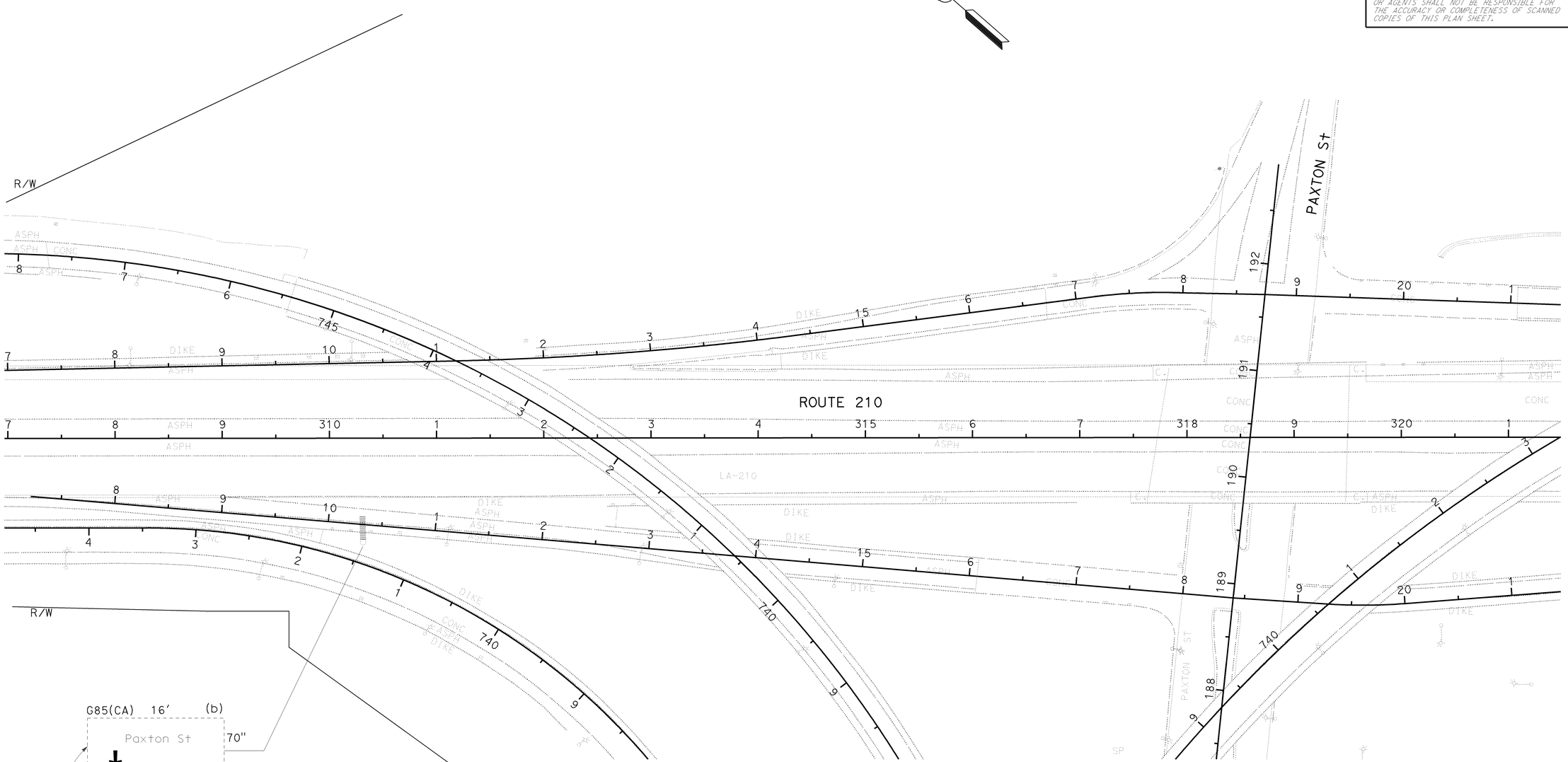

SIGN (15A) Exist FEBT @ Sta 310+31

THIS PLAN ACCURATE FOR SIGN WORK ONLY

SIGN PLAN

SCALE 1:50

S-15

STATE OF CALIFORNIA - DEPARTMENT OF TRANSPORTATION
Caltrans® TRAFFIC DESIGN

FUNCTIONAL SUPERVISOR: CRICORIS BIGLARIAN

CALCULATED-DESIGNED BY: MARISA G. MANDOCDOC
CHECKED BY: EDGAR HERRERA

REVISED BY	DATE REVISED

LAST REVISION: DATE PLOTTED => 21-FEB-2010
02-16-10 TIME PLOTTED => 23:29

BORDER LAST REVISED 4/11/2008

RELATIVE BORDER SCALE IS IN INCHES 0 1 2 3

USERNAME => s122436
DGN FILE => 73y600oa015.dgn

CU 07380

EA 3Y6001

Dist	COUNTY	ROUTE	POST MILES TOTAL PROJECT	SHEET No.	TOTAL SHEETS
07	LA	210	R0.4/R5.9	25	87

REGISTERED CIVIL ENGINEER 10/14/09 DATE

2-16-10 PLANS APPROVAL DATE

EDGAR HERRERA No. C67603 Exp. 6/30/11 CIVIL — REGISTERED PROFESSIONAL ENGINEER — STATE OF CALIFORNIA

THE STATE OF CALIFORNIA OR ITS OFFICERS OR AGENTS SHALL NOT BE RESPONSIBLE FOR THE ACCURACY OR COMPLETENESS OF SCANNED COPIES OF THIS PLAN SHEET.

NOTES:

FOR G83(CA) AND G23(CA) MILEAGE IS IN 1/4 MILE INCREMENTS. SEE FRACTION DETAIL WHEN MILEAGE INCLUDES A FRACTION.

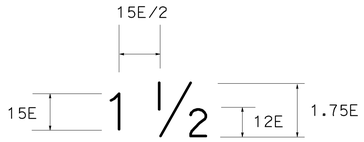

FRACTION DETAIL FOR G83(CA)

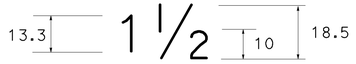

FRACTION DETAIL FOR G23(CA)

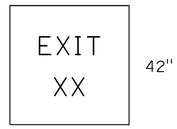

LEGEND			
LINE #	UC (in)	LC (in)	NUM (in)
1	8E		
2			12E

G70-4(CA) FOR SIGN EXIT No. SEE SIGN PLAN

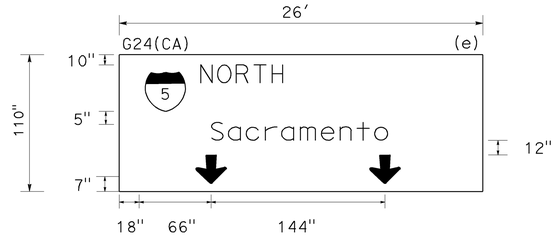

LEGEND				ARROW DEG (in x in)	ROUTE SHIELD SIZE (in x in)
LINE #	UC (in)	LC (in)	NUM (in)		
1	16	12	15D		36 X 36
2	16	12			
3	12E			DOWN 32 x 22	

SIGN (1A) FWBT @ Sta 21+73

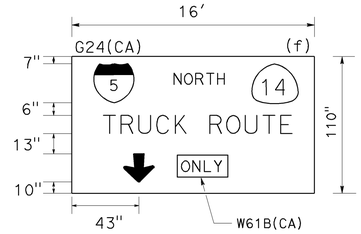

LEGEND				ARROW DEG (in x in)	ROUTE SHIELD SIZE (in x in)	ROUTE SHIELD SIZE (in x in)
LINE #	UC (in)	LC (in)	NUM (in)			
1	12E		15D		36 X 36	36 X 36
2	16	12				
3				DOWN 32 X 22		

SIGN (1A) FWBT @ Sta 21+73

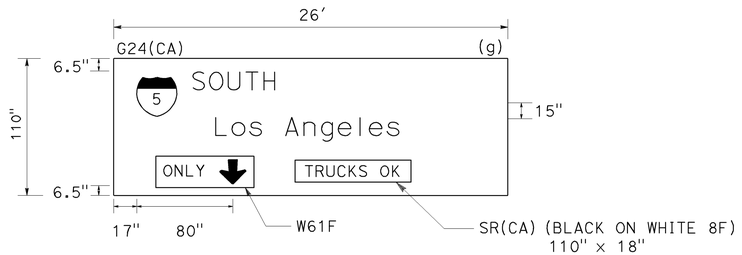

LEGEND				ARROW DEG (in x in)	ROUTE SHIELD SIZE (in x in)
LINE #	UC (in)	LC (in)	NUM (in)		
1	16	12	15D		36 X 36
2	16	12			
3	12E			DOWN 32 X 22	

SIGN (1A) FWBT @ Sta 21+73

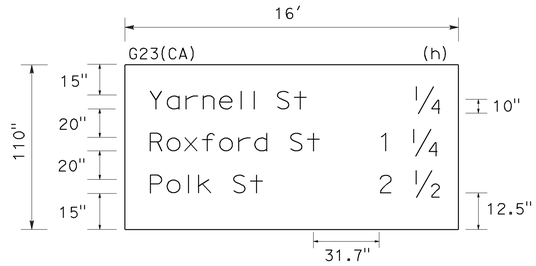

LEGEND				ARROW DEG (in x in)	ROUTE SHIELD SIZE (in x in)
LINE #	UC (in)	LC (in)	NUM (in)		
1	13.3	10			
2	13.3	10			
3	13.3	10			

SIGN (1A) FEBT @ Sta 21+73

SIGN DETAILS

NO SCALE

SD-1

STATE OF CALIFORNIA - DEPARTMENT OF TRANSPORTATION
Caltrans® TRAFFIC DESIGN

FUNCTIONAL SUPERVISOR: CRICORIS BIGLARIAN

CALCULATED-DESIGNED BY: SYED ALI SHAH
CHECKED BY: EDGAR HERRERA

REVISED BY | DATE REVISED

LAST REVISION DATE PLOTTED => 21-FEB-2010
TIME PLOTTED => 17:33
02-16-10

Dist	COUNTY	ROUTE	POST MILES TOTAL PROJECT	SHEET No.	TOTAL SHEETS
07	LA	210	R0.4/R5.9	26	87

REGISTERED ~~CIVIL ENGINEER~~ 10/14/09 DATE

2-16-10
PLANS APPROVAL DATE

REGISTERED PROFESSIONAL ENGINEER
EDGAR HERRERA
No. C67603
Exp. 6/30/11
CIVIL
STATE OF CALIFORNIA

THE STATE OF CALIFORNIA OR ITS OFFICERS OR AGENTS SHALL NOT BE RESPONSIBLE FOR THE ACCURACY OR COMPLETENESS OF SCANNED COPIES OF THIS PLAN SHEET.

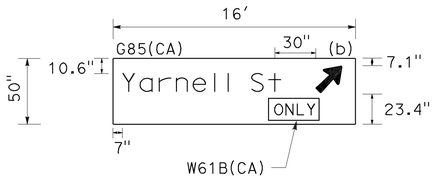

LEGEND				ARROW DEG (in x in)	ROUTE SHIELD SIZE (in x in)
LINE #	UC (in)	LC (in)	NUM (in)		
1	16	12		(45 - RT) 23 x 23	

SIGN (2A) FEBT @ Sta 35+05

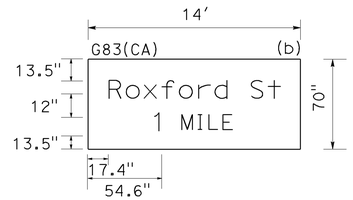

LEGEND				ARROW DEG (in x in)	ROUTE SHIELD SIZE (in x in)
LINE #	UC (in)	LC (in)	NUM (in)		
1	16	12			
2	12E		15E		

SIGN (2B) FEBT @ Sta 46+61

LEGEND				ARROW DEG (in x in)	ROUTE SHIELD SIZE (in x in)
LINE #	UC (in)	LC (in)	NUM (in)		
1	16	12	15D		36 X 36
2	16	12			
3				DOWN 32 X 22	

SIGN (2C) FWBT @ Sta 44+54

LEGEND				ARROW DEG (in x in)	ROUTE SHIELD SIZE (in x in)
LINE #	UC (in)	LC (in)	NUM (in)		
1	13.3	10			
2	13.3	10			
3	13.3	10			

SIGN (3A) FEBT @ Sta 73+79

LEGEND				ARROW DEG (in x in)	ROUTE SHIELD SIZE (in x in)	ROUTE SHIELD SIZE (in x in)
LINE #	UC (in)	LC (in)	NUM (in)			
1	13.3	10				
2	13.3	10	10D		24 X 24	
3	13.3		10D		24 X 24	28 X 25

SIGN (3A) FWBT @ Sta 73+79

SIGN DETAILS

NO SCALE

SD-2

CALCULATED-DESIGNED BY
CHECKED BY
REVISED BY
DATE REVISED
SYED ALI SHAH
EDGAR HERRERA
FUNCTIONAL SUPERVISOR
CRICORIS BIGLARIAN

STATE OF CALIFORNIA - DEPARTMENT OF TRANSPORTATION
Caltrans® TRAFFIC DESIGN

LAST REVISION DATE PLOTTED => 21-FEB-2010
02-16-10 TIME PLOTTED => 17:33

BORDER LAST REVISED 4/11/2008

RELATIVE BORDER SCALE IS IN INCHES 0 1 2 3

USERNAME => s122436
DGN FILE => 73y600ab002.dgn

CU 07380

EA 3Y6001

Dist	COUNTY	ROUTE	POST MILES TOTAL PROJECT	SHEET No.	TOTAL SHEETS
07	LA	210	R0.4/R5.9	27	87

REGISTERED ~~CIVIL ENGINEER~~ 10/14/09 DATE

2-16-10
PLANS APPROVAL DATE

REGISTERED PROFESSIONAL ENGINEER
EDGAR HERRERA
No. C67603
Exp. 6/30/11
CIVIL
STATE OF CALIFORNIA

THE STATE OF CALIFORNIA OR ITS OFFICERS OR AGENTS SHALL NOT BE RESPONSIBLE FOR THE ACCURACY OR COMPLETENESS OF SCANNED COPIES OF THIS PLAN SHEET.

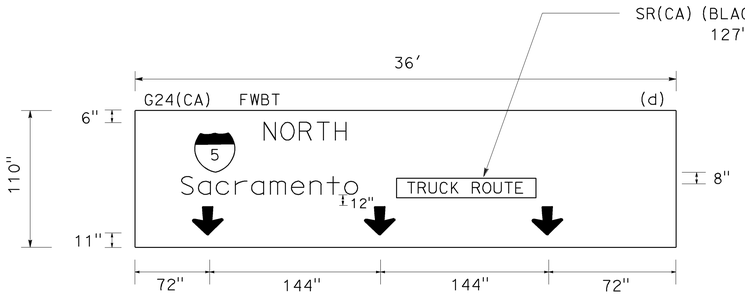

LEGEND				ARROW DEG (in x in)	ROUTE SHIELD SIZE (in x in)
LINE #	UC (in)	LC (in)	NUM (in)		
1	16	12	15D		36 X 36
2	16	12			
3	12E			DOWN 32 x 22	

SIGN (3B) FWBT @ Sta 54+79

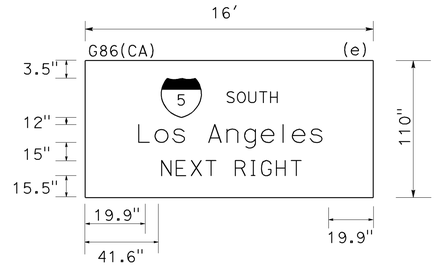

LEGEND				ARROW DEG (in x in)	ROUTE SHIELD SIZE (in x in)
LINE #	UC (in)	LC (in)	NUM (in)		
1	12E		15D		36 X 36
2	16	12			
3	12E				

SIGN (3B) FWBT @ Sta 54+79

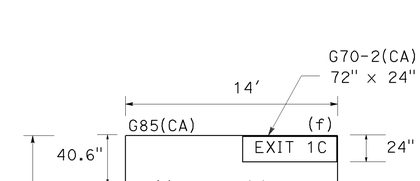

LEGEND				ARROW DEG (in x in)	ROUTE SHIELD SIZE (in x in)
LINE #	UC (in)	LC (in)	NUM (in)		
1	8E		12E		
2	16	12			
3				(45 - RT) 23 x 23	

SIGN (3B) FWBT @ Sta 54+79

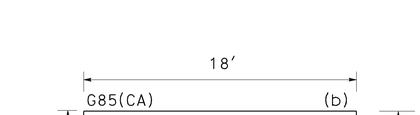

LEGEND				ARROW DEG (in x in)	ROUTE SHIELD SIZE (in x in)
LINE #	UC (in)	LC (in)	NUM (in)		
1	16	12		(45 - RT) 23 x 23	

SIGN (4A) FEBT @ Sta 93+10

SIGN DETAILS

NO SCALE

SD-3

STATE OF CALIFORNIA - DEPARTMENT OF TRANSPORTATION
Caltrans® TRAFFIC DESIGN
FUNCTIONAL SUPERVISOR: CRICORIS BIGLARIAN
CALCULATED-DESIGNED BY: SYED ALI SHAH
CHECKED BY: EDGAR HERRERA
REVISED BY / DATE REVISED

LAST REVISION 02-16-10
DATE PLOTTED => 21-FEB-2010
TIME PLOTTED => 20:12

Dist	COUNTY	ROUTE	POST MILES TOTAL PROJECT	SHEET No.	TOTAL SHEETS
07	LA	210	R0.4/R5.9	28	87

REGISTERED CIVIL ENGINEER — DATE 10/14/09

2-16-87
PLANS APPROVAL DATE

REGISTERED PROFESSIONAL ENGINEER — EDGAR HERRERA — No. C67603 — Exp. 6/30/11 — CIVIL — STATE OF CALIFORNIA

THE STATE OF CALIFORNIA OR ITS OFFICERS OR AGENTS SHALL NOT BE RESPONSIBLE FOR THE ACCURACY OR COMPLETENESS OF SCANNED COPIES OF THIS PLAN SHEET.

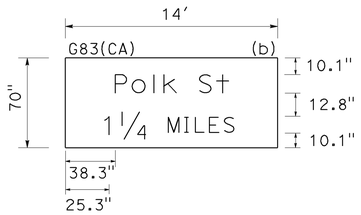

LEGEND				ARROW DEG (in x in)	ROUTE SHIELD SIZE (in x in)
LINE #	UC (in)	LC (in)	NUM (in)		
1	16	12			
2	12E		15E		

SIGN (4B) FEBT Sta 103+97

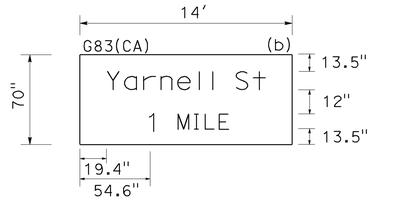

LEGEND				ARROW DEG (in x in)	ROUTE SHIELD SIZE (in x in)
LINE #	UC (in)	LC (in)	NUM (in)		
1	16	12			
2	12E		15E		

SIGN (4C) FWBT Sta 101+87

LEGEND				ARROW DEG (in x in)	ROUTE SHIELD SIZE (in x in)
LINE #	UC (in)	LC (in)	NUM (in)		
1	13.3	10			
2	13.3	10			
3	13.3	10			

SIGN (5A) FEBT @ Sta 131+32

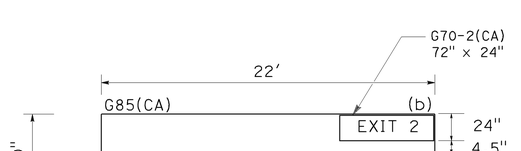

LEGEND				ARROW DEG (in x in)	ROUTE SHIELD SIZE (in x in)
LINE #	UC (in)	LC (in)	NUM (in)		
1	8E		12E		
2	16	12		45 - RT(23 X 23)	

SIGN (5B) FWBT @ Sta 112+70

SIGN DETAILS

NO SCALE

SD-4

REVISED BY	DATE REVISED
SYED ALI SHAH	
EDGAR HERRERA	

CALCULATED-DESIGNED BY

CHECKED BY

FUNCTIONAL SUPERVISOR: CRICORIS BIGLARIAN

STATE OF CALIFORNIA - DEPARTMENT OF TRANSPORTATION

Caltrans® TRAFFIC DESIGN

LAST REVISION 02-16-10 | DATE PLOTTED => 21-FEB-2010 | TIME PLOTTED => 17:35

Dist	COUNTY	ROUTE	POST MILES TOTAL PROJECT	SHEET No.	TOTAL SHEETS
07	LA	210	R0.4/R5.9	29	87

REGISTERED ~~CIVIL ENGINEER~~ 10/14/09 DATE

2-16-10
PLANS APPROVAL DATE

REGISTERED PROFESSIONAL ENGINEER
EDGAR HERRERA
No. C67603
Exp. 6/30/11
CIVIL
STATE OF CALIFORNIA

THE STATE OF CALIFORNIA OR ITS OFFICERS OR AGENTS SHALL NOT BE RESPONSIBLE FOR THE ACCURACY OR COMPLETENESS OF SCANNED COPIES OF THIS PLAN SHEET.

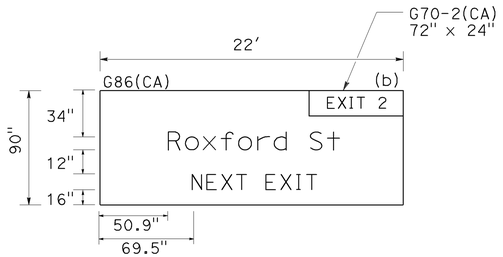

LEGEND				ARROW DEG (in x in)	ROUTE SHIELD SIZE (in x in)
LINE #	UC (in)	LC (in)	NUM (in)		
1	8E		12E		
2	16	12			
3	12E				

SIGN (5C) FWBT @ Sta 131+83

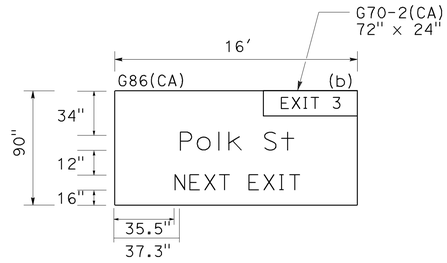

LEGEND				ARROW DEG (in x in)	ROUTE SHIELD SIZE (in x in)
LINE #	UC (in)	LC (in)	NUM (in)		
1	8E		12E		
2	16	12			
3	12E				

SIGN (6A) Br # 53 1926

FEBT @ Sta 144+82

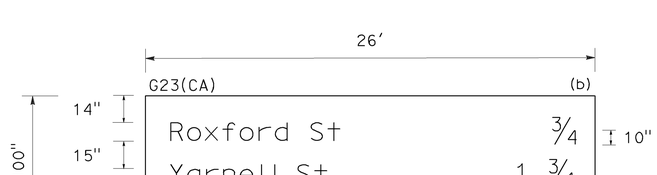

LEGEND				ARROW DEG (in x in)	ROUTE SHIELD SIZE (in x in)
LINE #	UC (in)	LC (in)	NUM (in)		
1	13.3	10			
2	13.3	10			
3	13.3	10	10D		24 X 24

SIGN (6B) Br # 53 1926

FWBT @ Sta 145+45

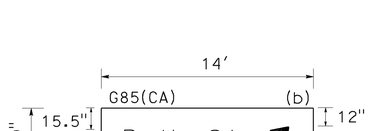

LEGEND				ARROW DEG (in x in)	ROUTE SHIELD SIZE (in x in)
LINE #	UC (in)	LC (in)	NUM (in)		
1	16	12		45 - RT (23 X 23)	

SIGN (7A) FEBT @ Sta 163+29

SIGN DETAILS

NO SCALE

SD-5

SYED ALI SHAH
EDGAR HERRERA
CRICORIS BIGLARIAN
CHECKED BY
CALCULATED-DESIGNED BY
FUNCTIONAL SUPERVISOR
REVISED BY
DATE REVISED

STATE OF CALIFORNIA - DEPARTMENT OF TRANSPORTATION
Caltrans® TRAFFIC DESIGN

LAST REVISION 02-16-10
DATE PLOTTED => 21-FEB-2010
TIME PLOTTED => 17:35

Dist	COUNTY	ROUTE	POST MILES TOTAL PROJECT	SHEET No.	TOTAL SHEETS
07	LA	210	R0.4/R5.9	30	87

REGISTERED CIVIL ENGINEER — 10/14/09 DATE

2-16-10
PLANS APPROVAL DATE

REGISTERED PROFESSIONAL ENGINEER — EDGAR HERRERA — No. C67603 — Exp. 6/30/11 — CIVIL — STATE OF CALIFORNIA

THE STATE OF CALIFORNIA OR ITS OFFICERS OR AGENTS SHALL NOT BE RESPONSIBLE FOR THE ACCURACY OR COMPLETENESS OF SCANNED COPIES OF THIS PLAN SHEET.

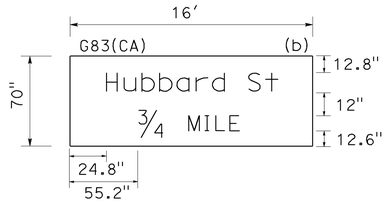

LEGEND				ARROW DEG (in x in)	ROUTE SHIELD SIZE (in x in)
LINE #	UC (in)	LC (in)	NUM (in)		
1	16	12			
2	12E		15E		

SIGN (7B) FEBT STA 174+94

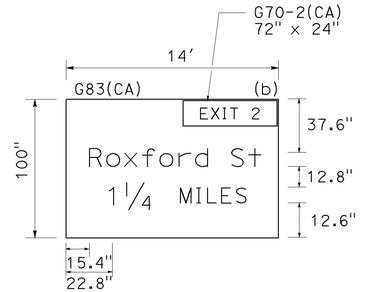

LEGEND				ARROW DEG (in x in)	ROUTE SHIELD SIZE (in x in)
LINE #	UC (in)	LC (in)	NUM (in)		
1	8E		12E		
2	16	12			
3	12E		15E		

SIGN (7C) FWBT @ STA 173+39

LEGEND				ARROW DEG (in x in)	ROUTE SHIELD SIZE (in x in)
LINE #	UC (in)	LC (in)	NUM (in)		
1	13.3	10			
2	13.3	10			
3	13.3	10	10D		25 X 32

SIGN (8A) Br # 53 1896

FEBT @ STA 188+66

LEGEND				ARROW DEG (in x in)	ROUTE SHIELD SIZE (in x in)
LINE #	UC (in)	LC (in)	NUM (in)		
1	16	12		45 - RT	

SIGN (8B) FWBT @ STA 182+35

SIGN DETAILS

NO SCALE

SD-6

STATE OF CALIFORNIA - DEPARTMENT OF TRANSPORTATION
Caltrans® TRAFFIC DESIGN

FUNCTIONAL SUPERVISOR: CRICORIS BIGLARIAN

CALCULATED-DESIGNED BY: SYED ALI SHAH
CHECKED BY: EDGAR HERRERA

REVISED BY | DATE REVISED

LAST REVISION 02-16-10
DATE PLOTTED => 21-FEB-2010
TIME PLOTTED => 17:35

Dist	COUNTY	ROUTE	POST MILES TOTAL PROJECT	SHEET No.	TOTAL SHEETS
07	LA	210	R0.4/R5.9	31	87

REGISTERED CIVIL ENGINEER — 10/14/09 DATE

2-16-10
PLANS APPROVAL DATE

REGISTERED PROFESSIONAL ENGINEER
EDGAR HERRERA
No. C67603
Exp. 6/30/11
CIVIL
STATE OF CALIFORNIA

THE STATE OF CALIFORNIA OR ITS OFFICERS OR AGENTS SHALL NOT BE RESPONSIBLE FOR THE ACCURACY OR COMPLETENESS OF SCANNED COPIES OF THIS PLAN SHEET.

LEGEND				ARROW DEG (in x in)	ROUTE SHIELD SIZE (in x in)
LINE #	UC (in)	LC (in)	NUM (in)		
1	13.3	10			
2	13.3	10			
3	13.3	10			

SIGN (8C) Br # 53 1927

FWBT @ STA 203+14

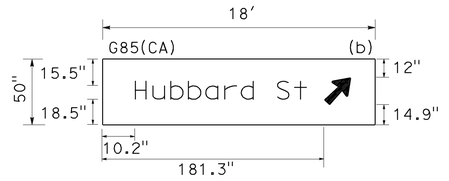

LEGEND				ARROW DEG (in x in)	ROUTE SHIELD SIZE (in x in)
LINE #	UC (in)	LC (in)	NUM (in)		
1	16	12		(45 - RT) 23 X 23	

SIGN (9A) FEBT @ STA 207+73

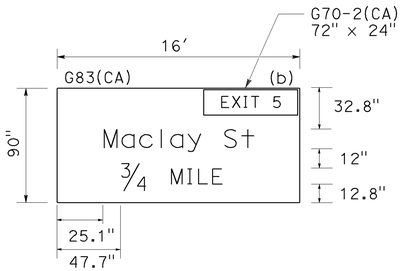

LEGEND				ARROW DEG (in x in)	ROUTE SHIELD SIZE (in x in)
LINE #	UC (in)	LC (in)	NUM (in)		
1	8E		12E		
2	16	12			
3	12E		15E		

SIGN (9B) Br # 53 1928

FEBT @ STA 216+25

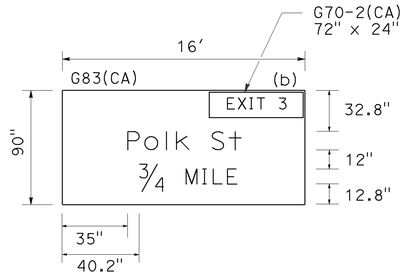

LEGEND				ARROW DEG (in x in)	ROUTE SHIELD SIZE (in x in)
LINE #	UC (in)	LC (in)	NUM (in)		
1	8E		12E		
2	16	12			
3	12E		15E		

SIGN (9C) Br # 53 1928

FWBT @ STA 217+70

SIGN DETAILS

NO SCALE

SD-7

STATE OF CALIFORNIA - DEPARTMENT OF TRANSPORTATION
TRAFFIC DESIGN
FUNCTIONAL SUPERVISOR: CRICORIS BIGLARIAN
CALCULATED-DESIGNED BY: SYED ALI SHAH
CHECKED BY: EDGAR HERRERA
REVISED BY
DATE REVISED

LAST REVISION DATE PLOTTED => 21-FEB-2010
TIME PLOTTED => 17:36
02-16-10

BORDER LAST REVISED 4/11/2008

RELATIVE BORDER SCALE IS IN INCHES 0 1 2 3

USERNAME => s122436
DGN FILE => 73y600ob007.dgn

CU 07380

EA 3Y6001

Dist	COUNTY	ROUTE	POST MILES TOTAL PROJECT	SHEET No.	TOTAL SHEETS
07	LA	210	R0.4/R5.9	32	87

REGISTERED CIVIL ENGINEER — 10/14/09 DATE

2-16-10
PLANS APPROVAL DATE

REGISTERED PROFESSIONAL ENGINEER — EDGAR HERRERA — No. C67603 — Exp. 6/30/11 — CIVIL — STATE OF CALIFORNIA

THE STATE OF CALIFORNIA OR ITS OFFICERS OR AGENTS SHALL NOT BE RESPONSIBLE FOR THE ACCURACY OR COMPLETENESS OF SCANNED COPIES OF THIS PLAN SHEET.

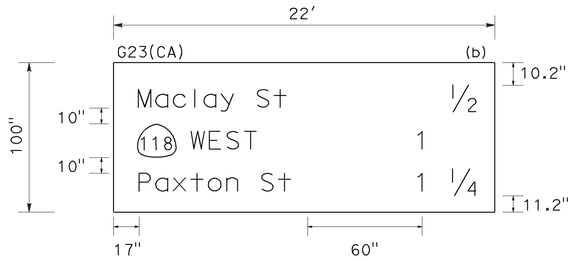

LEGEND				ARROW DEG (in x in)	ROUTE SHIELD SIZE (in x in)
LINE #	UC (in)	LC (in)	NUM (in)		
1	13.3	10			
2	13.3	10	10D		40 x 32
3	13.3	10			

SIGN (10A) FEBT @ Sta 237+22

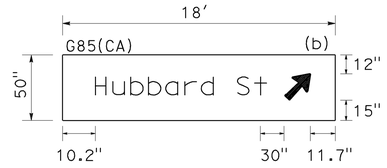

LEGEND				ARROW DEG (in x in)	ROUTE SHIELD SIZE (in x in)
LINE #	UC (in)	LC (in)	NUM (in)		
1	16	12		(45 - RT) 23 x 23	

SIGN (10B) FWBT @ Sta 227+37

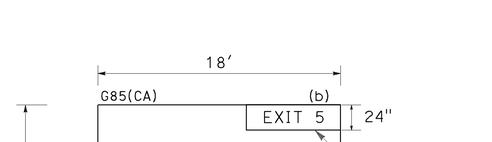

LEGEND				ARROW DEG (in x in)	ROUTE SHIELD SIZE (in x in)
LINE #	UC (in)	LC (in)	NUM (in)		
1	8E		12E		
2	16	12		(45 - RT) 23 x 23	

SIGN (11B) FEBT @ Sta 250+40

LEGEND				ARROW DEG (in x in)	ROUTE SHIELD SIZE (in x in)
LINE #	UC (in)	LC (in)	NUM (in)		
1	13.3	10			
2	13.3	10			
3	13.3	10			

SIGN (11D) FWBT @ Sta 249+00

SIGN DETAILS
NO SCALE

SD-8

STATE OF CALIFORNIA - DEPARTMENT OF TRANSPORTATION
Caltrans® TRAFFIC DESIGN
FUNCTIONAL SUPERVISOR: CRICORIS BIGLARIAN
CALCULATED-DESIGNED BY: SYED ALI SHAH
CHECKED BY: EDGAR HERRERA
REVISED BY | DATE REVISED

LAST REVISION 02-16-10 | DATE PLOTTED => 21-FEB-2010 | TIME PLOTTED => 17:36

BORDER LAST REVISED 4/11/2008 | RELATIVE BORDER SCALE IS IN INCHES (0 1 2 3) | USERNAME => s122436 | DGN FILE => 73y600ob008.dgn | CU 07380 | EA 3Y6001

Dist	COUNTY	ROUTE	POST MILES TOTAL PROJECT	SHEET No.	TOTAL SHEETS
07	LA	210	R0.4/R5.9	33	87

REGISTERED CIVIL ENGINEER — DATE 10/14/09

2-16-10
PLANS APPROVAL DATE

EDGAR HERRERA No. C67603 Exp. 6/30/11 CIVIL — REGISTERED PROFESSIONAL ENGINEER — STATE OF CALIFORNIA

THE STATE OF CALIFORNIA OR ITS OFFICERS OR AGENTS SHALL NOT BE RESPONSIBLE FOR THE ACCURACY OR COMPLETENESS OF SCANNED COPIES OF THIS PLAN SHEET.

LEGEND				ARROW DEG (in x in)	ROUTE SHIELD SIZE (in x in)
LINE #	UC (in)	LC (in)	NUM (in)		
1	13.3	10	10D		40 x 32
2	13.3	10			
3	13.3	10			

SIGN (12A) FEBT @ Sta 262+67

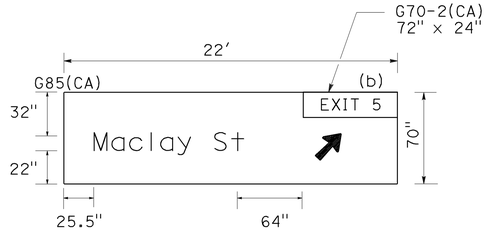

LEGEND				ARROW DEG (in x in)	ROUTE SHIELD SIZE (in x in)
LINE #	UC (in)	LC (in)	NUM (in)		
1	8E		12E		
2	16	12		(45 - RT) 23 x 23	

SIGN (12B) FWBT @ Sta 271+56

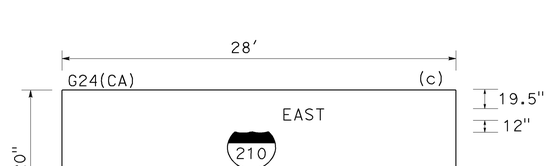

LEGEND				ARROW DEG (in x in)	ROUTE SHIELD SIZE (in x in)
LINE #	UC (in)	LC (in)	NUM (in)		
1	16	12	15D		45 x 38
2	16	12			
3					

SIGN (13A) FEBT @ Sta 276+30

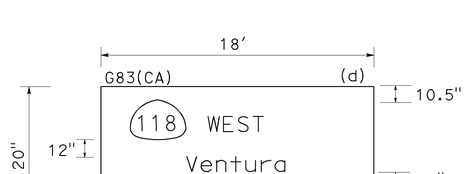

LEGEND				ARROW DEG (in x in)	ROUTE SHIELD SIZE (in x in)
LINE #	UC (in)	LC (in)	NUM (in)		
1	15E		12E		45 x 36
2	16	12			
3	12E		15E		

SIGN (13A) FEBT @ Sta 276+30

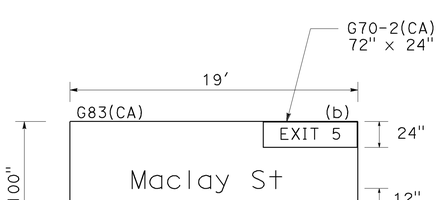

LEGEND				ARROW DEG (in x in)	ROUTE SHIELD SIZE (in x in)
LINE #	UC (in)	LC (in)	NUM (in)		
1	8E		12E		
2	16	12			
3	12E		15E		

SIGN (13B) FWBT @ Sta 282+32

SIGN DETAILS

NO SCALE

SD-9

STATE OF CALIFORNIA - DEPARTMENT OF TRANSPORTATION
Caltrans® **TRAFFIC DESIGN**

CALCULATED-DESIGNED BY	CHECKED BY
SYED ALI SHAH	EDGAR HERRERA

FUNCTIONAL SUPERVISOR: CRICORIS BIGLARIAN

REVISED BY	DATE REVISED

LAST REVISION 02-16-10 | DATE PLOTTED => 21-FEB-2010 | TIME PLOTTED => 17:37

BORDER LAST REVISED 4/11/2008 | RELATIVE BORDER SCALE IS IN INCHES 0 1 2 3 | USERNAME => s122436 | DGN FILE => 73y600ob009.dgn | CU 07380 | EA 3Y6001

Dist	COUNTY	ROUTE	POST MILES TOTAL PROJECT	SHEET No.	TOTAL SHEETS
07	LA	210	R0.4/R5.9	34	87

REGISTERED ~~CIVIL ENGINEER~~ 10/14/09 DATE

2-16-10
PLANS APPROVAL DATE

REGISTERED PROFESSIONAL ENGINEER
EDGAR HERRERA
No. C67603
Exp. 6/30/11
CIVIL
STATE OF CALIFORNIA

THE STATE OF CALIFORNIA OR ITS OFFICERS OR AGENTS SHALL NOT BE RESPONSIBLE FOR THE ACCURACY OR COMPLETENESS OF SCANNED COPIES OF THIS PLAN SHEET.

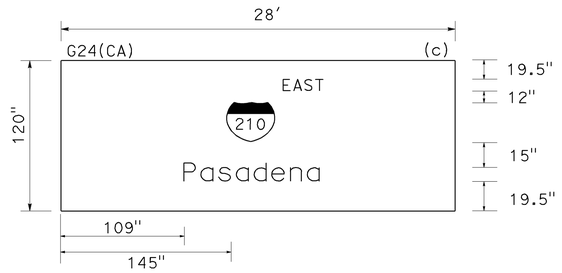

LEGEND				ARROW DEG (in x in)	ROUTE SHIELD SIZE (in x in)
LINE #	UC (in)	LC (in)	NUM (in)		
1	16	12	15D		45 x 38
2	16	12			
3					

SIGN (14A) FEBT @ Sta 290+15

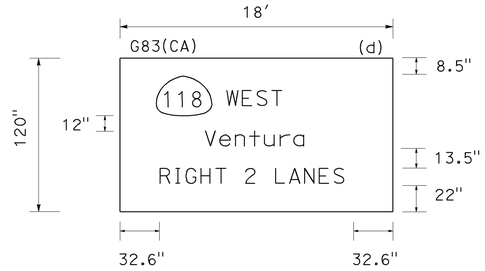

LEGEND				ARROW DEG (in x in)	ROUTE SHIELD SIZE (in x in)
LINE #	UC (in)	LC (in)	NUM (in)		
1	15E		15D		45 x 36
2	15E				

SIGN (14A) FEBT @ Sta 290+15

LEGEND				ARROW DEG (in x in)	ROUTE SHIELD SIZE (in x in)
LINE #	UC (in)	LC (in)	NUM (in)		
1	12E				
2	16	12	15D		45 x 38
3				DOWN (32 x 22)	

SIGN (14B) FEBT Sta 301+32

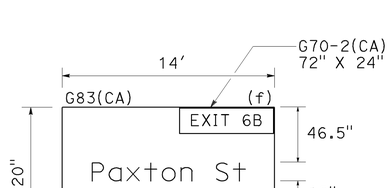

LEGEND				ARROW DEG (in x in)	ROUTE SHIELD SIZE (in x in)
LINE #	UC (in)	LC (in)	NUM (in)		
1	8E		12E		
2	16	12			
3	12E		15E		

SIGN (14B) FEBT @ Sta 301+32

LEGEND				ARROW DEG (in x in)	ROUTE SHIELD SIZE (in x in)
LINE #	UC (in)	LC (in)	NUM (in)		
1	15E		15D		45 x 36
2				(45 - RT) 23 x 23	

SIGN (14B) FEBT @ Sta 301+32

SIGN DETAILS
NO SCALE

SD-10

STATE OF CALIFORNIA - DEPARTMENT OF TRANSPORTATION
Caltrans® TRAFFIC DESIGN

FUNCTIONAL SUPERVISOR: CRICORIS BIGLARIAN
CALCULATED-DESIGNED BY: SYED ALI SHAH
CHECKED BY: EDGAR HERRERA
REVISED BY / DATE REVISED

LAST REVISION 02-16-10 | DATE PLOTTED => 21-FEB-2010 | TIME PLOTTED => 17:37

BORDER LAST REVISED 4/11/2008 | RELATIVE BORDER SCALE IS IN INCHES (0 1 2 3) | USERNAME => s122436 | DGN FILE => 73y600ob010.dgn | CU 07380 | EA 3Y6001

Dist	COUNTY	ROUTE	POST MILES TOTAL PROJECT	SHEET No.	TOTAL SHEETS
07	LA	210	R0.4/R5.9	35	87

REGISTERED ~~CIVIL ENGINEER~~ 10/14/09 DATE

2-16-10
PLANS APPROVAL DATE

REGISTERED PROFESSIONAL ENGINEER
EDGAR HERRERA
No. C67603
Exp 6/3011
CIVIL
STATE OF CALIFORNIA

THE STATE OF CALIFORNIA OR ITS OFFICERS OR AGENTS SHALL NOT BE RESPONSIBLE FOR THE ACCURACY OR COMPLETENESS OF SCANNED COPIES OF THIS PLAN SHEET.

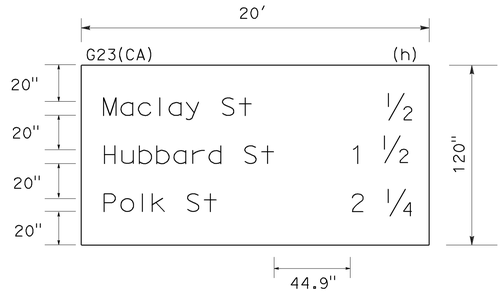

LEGEND				ARROW DEG (in x in)	ROUTE SHIELD SIZE (in x in)
LINE #	UC (in)	LC (in)	NUM (in)		
1	13.3	10			
2	13.3	10			
3	13.3	10			

SIGN (14B) FWBT @ Sta 301+32

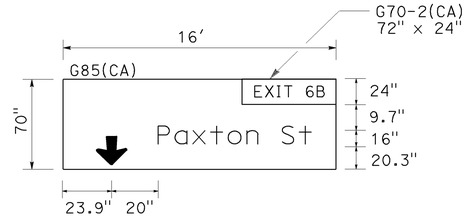

LEGEND				ARROW DEG (in x in)	ROUTE SHIELD SIZE (in x in)
LINE #	UC (in)	LC (in)	NUM (in)		
1	8E		12E		
2	16	12		DOWN (32 x 22)	

SIGN (15A) FEBT @ Sta 310+31

SIGN DETAILS

NO SCALE

SD-11

STATE OF CALIFORNIA - DEPARTMENT OF TRANSPORTATION
Caltrans® TRAFFIC DESIGN

FUNCTIONAL SUPERVISOR: CRICORIS BIGLARIAN
CALCULATED-DESIGNED BY:
CHECKED BY:
REVISED BY:
DATE REVISED:
SYED ALI SHAH
EDGAR HERRERA

LAST REVISION DATE PLOTTED => 21-FEB-2010
TIME PLOTTED => 17:37
00-00-00

BORDER LAST REVISED 4/11/2008
RELATIVE BORDER SCALE IS IN INCHES 0 1 2 3
USERNAME => s122436
DGN FILE => 73y600ob011.dgn
CU 07380
EA 3Y6001

Dist	COUNTY	ROUTE	POST MILES TOTAL PROJECT	SHEET No.	TOTAL SHEETS
07	LA	210	R0.4/R5.9	36	87

REGISTERED CIVIL ENGINEER — 10/14/09 DATE

2-16-10
PLANS APPROVAL DATE

REGISTERED PROFESSIONAL ENGINEER
EDGAR HERRERA
No. C67603
Exp. 6/30/11
CIVIL
STATE OF CALIFORNIA

THE STATE OF CALIFORNIA OR ITS OFFICERS OR AGENTS SHALL NOT BE RESPONSIBLE FOR THE ACCURACY OR COMPLETENESS OF SCANNED COPIES OF THIS PLAN SHEET.

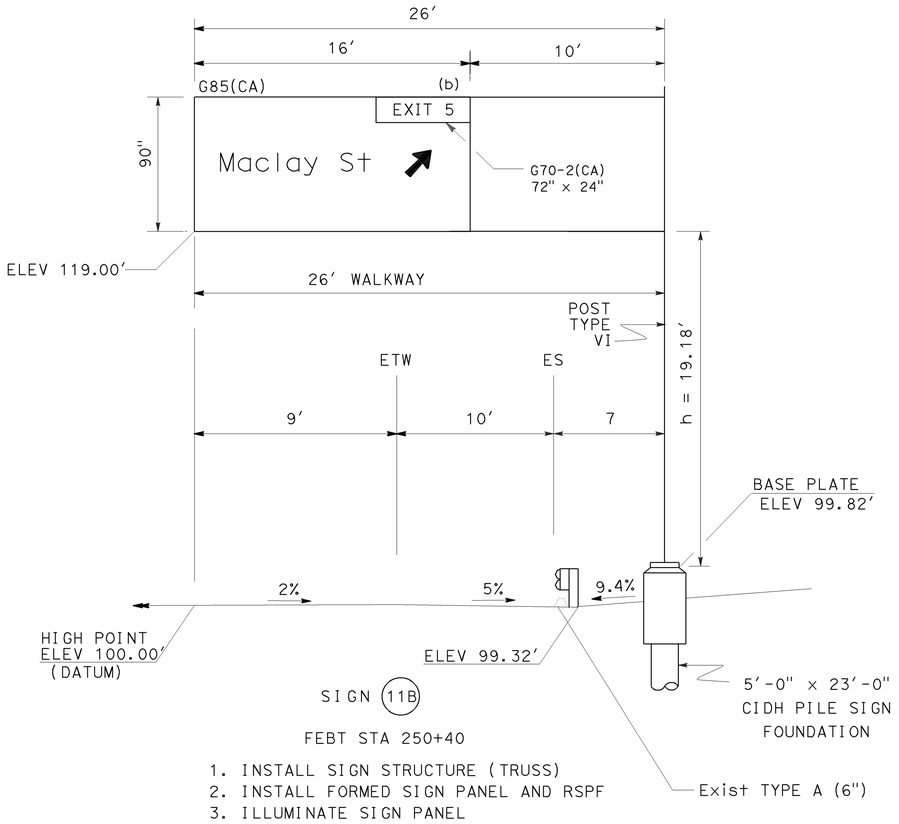

FEBT STA 250+40

1. INSTALL SIGN STRUCTURE (TRUSS)
2. INSTALL FORMED SIGN PANEL AND RSPF
3. ILLUMINATE SIGN PANEL

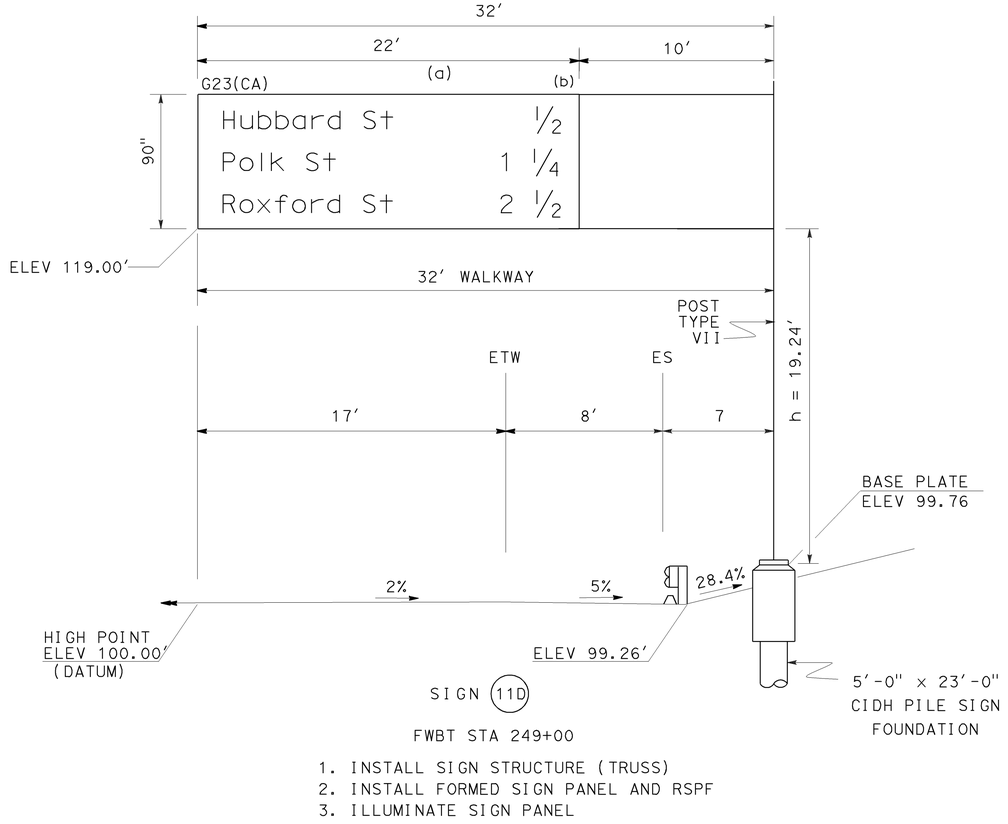

FWBT STA 249+00

1. INSTALL SIGN STRUCTURE (TRUSS)
2. INSTALL FORMED SIGN PANEL AND RSPF
3. ILLUMINATE SIGN PANEL

SIGN DETAILS

NO SCALE

SD-12

CALCULATED-DESIGNED BY: MARISA G. MANDOCDOC
CHECKED BY: EDGAR HERRERA
REVISED BY
DATE REVISED
FUNCTIONAL SUPERVISOR: CRICORIS BIGLARIAN

STATE OF CALIFORNIA - DEPARTMENT OF TRANSPORTATION
Caltrans® TRAFFIC DESIGN

LAST REVISION: DATE PLOTTED => 21-FEB-2010
02-16-10 TIME PLOTTED => 17:38

BORDER LAST REVISED 4/11/2008

RELATIVE BORDER SCALE IS IN INCHES 0 1 2 3

USERNAME => s122436
DGN FILE => 73y600ob012.dgn

CU 07380

EA 3Y6001

DIST	COUNTY	ROUTE	POST MILES TOTAL PROJECT	SHEET No	TOTAL SHEETS
07	LA	210	R0.4/R5.9	37	87

REGISTERED CIVIL ENGINEER DATE

2-16-10
PLANS APPROVAL DATE

REGISTERED PROFESSIONAL ENGINEER
ANDREW BUI
No. C63560
Exp. 9/30/10
CIVIL
STATE OF CALIFORNIA

The State of California or its officers or agents shall not be responsible for the accuracy or completeness of electronic copies of this plan sheet.

To get to the Caltrans web site, go to: http://www.dot.ca.gov

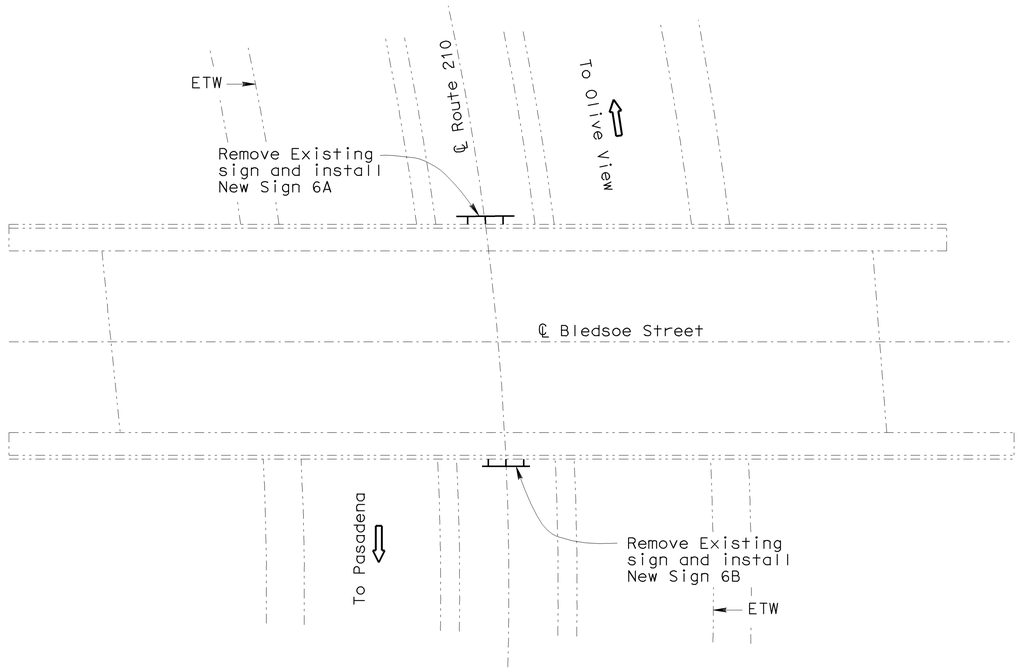

LOCATION PLAN
No Scale

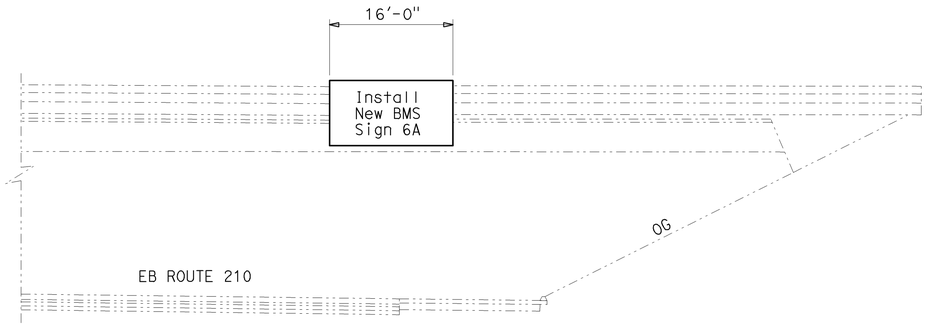

EB ELEVATION
Bledsoe Street OC
53-1926
No Scale

LEGEND

Existing structure.

New structure.

STANDARD PLANS DATED MAY 2006

A10A ACRONYMS AND ABBREVIATIONS (A-L)
A10B ACRONYMS AND ABBREVIATIONS (M-Z)

Notes:

1. For details not shown, see "STANDARD PLANS MAY 2006".
2. Unless otherwise shown, all steel shall be galvanized after fabrication.
3. Min size fillet weld is ¼" or thickness of thinner part unless noted otherwise.
4. Contractor to provide anchor bolt layout before anchor bolts are placed.
5. For sign location, see "PAVEMENT DELINEATION AND SIGN PLANS".

NOTE:
THE CONTRACTOR SHALL VERIFY ALL CONTROLLING FIELD DIMENSIONS BEFORE ORDERING OR FABRICATING ANY MATERIAL.

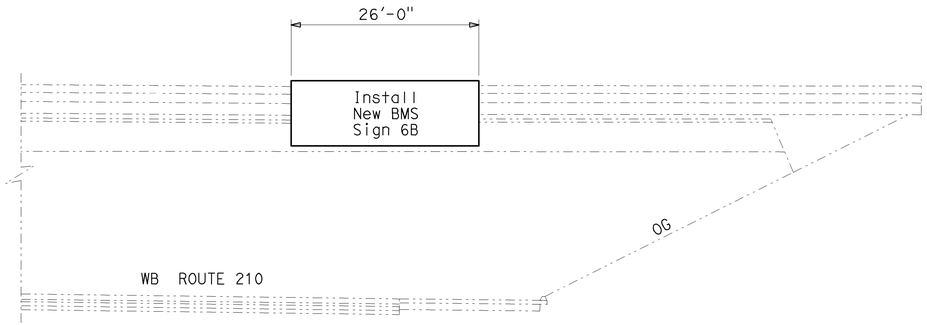

WB ELEVATION
Bledsoe Street OC
53-1926
No Scale

BRANCH CHIEF Jeffrey B Woody

	BY	CHECKED
DESIGN	A GUTIERREZ	A BUI/D VORA
DETAILS	D W JUSTICE Jr	D VORA
QUANTITIES	A GUTIERREZ	D VORA

STATE OF CALIFORNIA
DEPARTMENT OF TRANSPORTATION

DIVISION OF ENGINEERING SERVICES
DESIGN AND TECHNICAL SERVICES
SPECIAL DESIGNS BRANCH A

BRIDGE NO. 53-1926
POST MILE R1.1/R6.7

BLEDSOE STREET OVERCROSSING
SIGN 6A & 6B LOCATION PLAN

SD-13

(ENGLISH) SPECIAL DESIGNS BRANCH BORDER SHEET (REV. 7-1-09)

ORIGINAL SCALE IN INCHES FOR REDUCED PLANS 0 1 2 3

CU 07
EA 3Y6001

DISREGARD PRINTS BEARING EARLIER REVISION DATES →

REVISION DATES										SHEET	OF
9-28-09	10-13-09	10-22-09	2-1-10								

FILE => spec_des_br_prj/2009sd/07-3Y6001/sd13-bledsoe.dgn

USERNAME => djustice DATE PLOTTED => 01-FEB-2010 TIME PLOTTED => 14:16

DIST	COUNTY	ROUTE	POST MILES TOTAL PROJECT	SHEET No	TOTAL SHEETS
07	LA	210	R0.4/R5.9	38	87

REGISTERED CIVIL ENGINEER DATE

2-16-10
PLANS APPROVAL DATE

REGISTERED PROFESSIONAL ENGINEER — ANDREW BUI — No. C63560 — Exp. 9/30/10 — CIVIL — STATE OF CALIFORNIA

The State of California or its officers or agents shall not be responsible for the accuracy or completeness of electronic copies of this plan sheet.

To get to the Caltrans web site, go to: http://www.dot.ca.gov

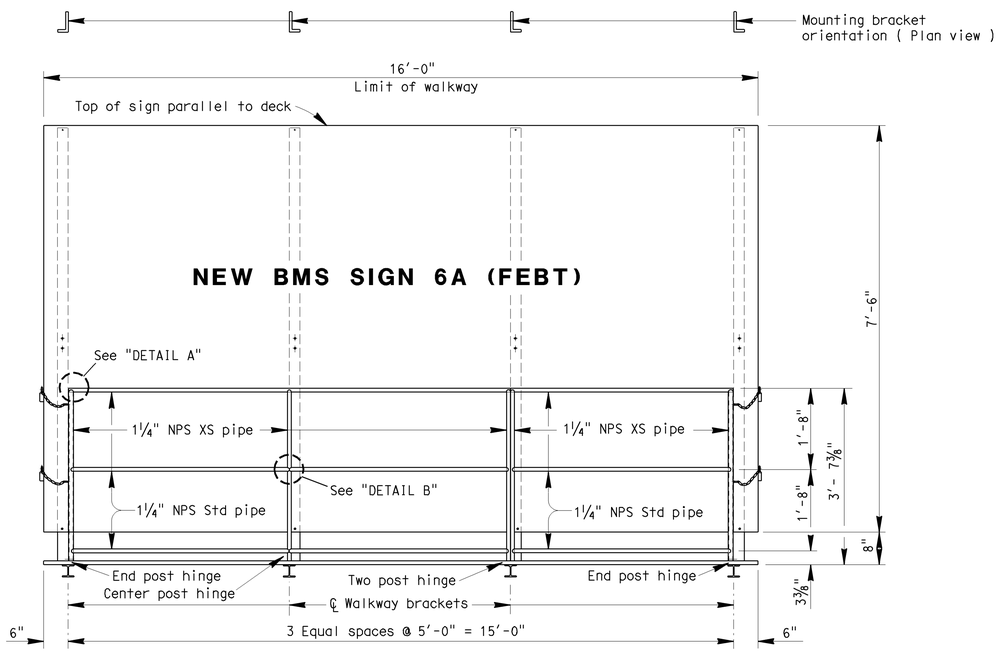

FRONT VIEW

No Scale

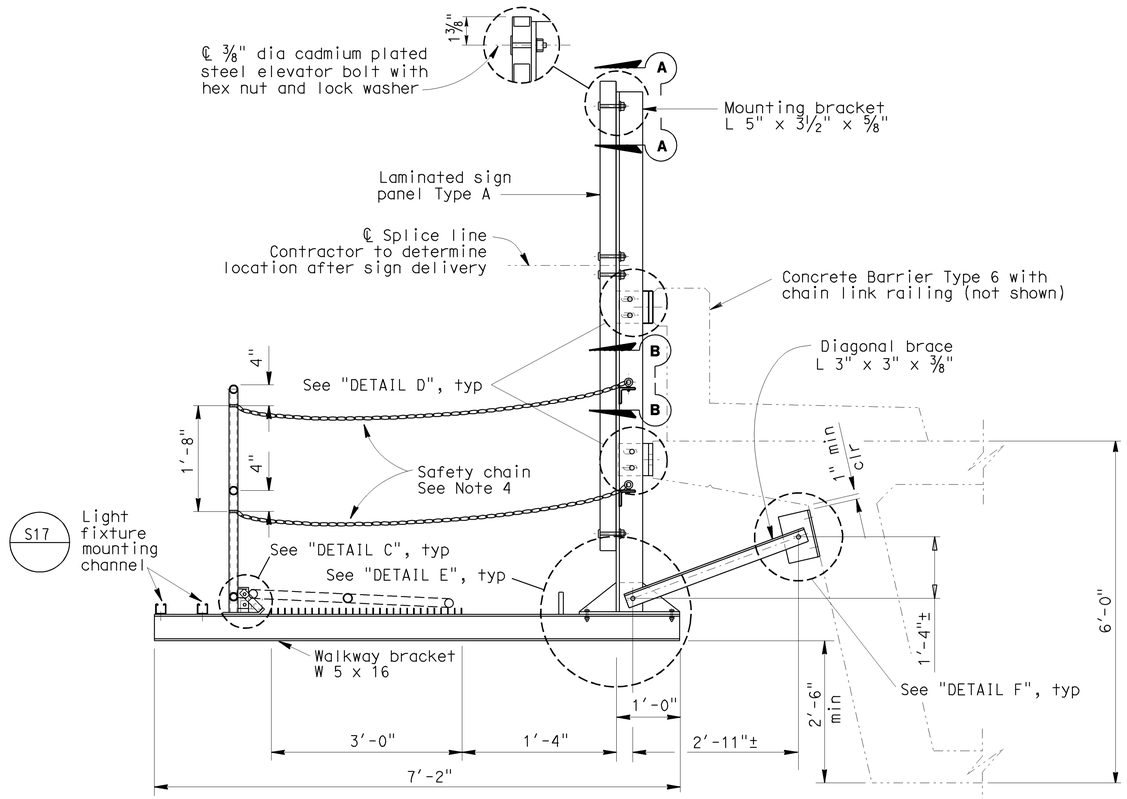

TYPICAL SECTION

No Scale

NOTES:

1. For details not shown, see "BRIDGE MOUNTED SIGN TYPICAL DETAILS NO.1", "BRIDGE MOUNTED SIGN TYPICAL DETAILS NO.2" and "BRIDGE MOUNTED SIGN TYPICAL DETAILS NO.3".
2. Special care shall be taken to insure that the complete hinge and latch assembly will hold the safety railing in a steady manner, free of wobble while in the raised position. Max allowable displacement from vertical at top of railing when latched shall be 1".
3. Safety chain shall be ¼" galvanized steel coil chain, approximately 12 links per foot. Length shall be min which allows lock-up of safety railing. Min of two safety chains at each end of safety railing. Material shall be Grade 43 high test chain ASTM A413.
4. Safety chain is located at the ends of the walkway only but is shown here for clarity.
5. All high strength (HS) bolts shall be snug tightened.

NOTE:
THE CONTRACTOR SHALL VERIFY ALL CONTROLLING FIELD DIMENSIONS BEFORE ORDERING OR FABRICATING ANY MATERIAL.

REVISED STANDARD PLAN SHEET NO.

DETAIL NO.

BRANCH CHIEF Jeffrey B Woody

	BY	CHECKED
DESIGN	A GUTIERREZ	A BUI/D VORA
DETAILS	D W JUSTICE Jr	D VORA
QUANTITIES	A GUTIERREZ	D VORA

STATE OF CALIFORNIA
DEPARTMENT OF TRANSPORTATION

DIVISION OF ENGINEERING SERVICES
DESIGN AND TECHNICAL SERVICES
SPECIAL DESIGNS BRANCH A

BRIDGE NO. 53-1926
POST MILE R1.1/R6.7

BLEDSOE STREET OVERCROSSING
SIGN 6A LAYOUT

SD-14

(ENGLISH) SPECIAL DESIGNS BRANCH BORDER SHEET (REV. 7-1-09)

ORIGINAL SCALE IN INCHES FOR REDUCED PLANS 0 1 2 3

CU 07
EA 3Y6001

DISREGARD PRINTS BEARING EARLIER REVISION DATES →

REVISION DATES: 9-28-09 | 10-13-09 | 2-1-10

SHEET OF

FILE => spec_des_br_prj/2009sd/07-3Y6001/sd14-bledsoe.dgn

USERNAME => djustice DATE PLOTTED => 01-FEB-2010 TIME PLOTTED => 14:16

DIST	COUNTY	ROUTE	POST MILES TOTAL PROJECT	SHEET No	TOTAL SHEETS
07	LA	210	R0.4/R5.9	39	87

REGISTERED CIVIL ENGINEER DATE

2-16-10
PLANS APPROVAL DATE

REGISTERED PROFESSIONAL ENGINEER — ANDREW BUI — No. C63560 — Exp. 9/30/10 — CIVIL — STATE OF CALIFORNIA

The State of California or its officers or agents shall not be responsible for the accuracy or completeness of electronic copies of this plan sheet.

To get to the Caltrans web site, go to: http://www.dot.ca.gov

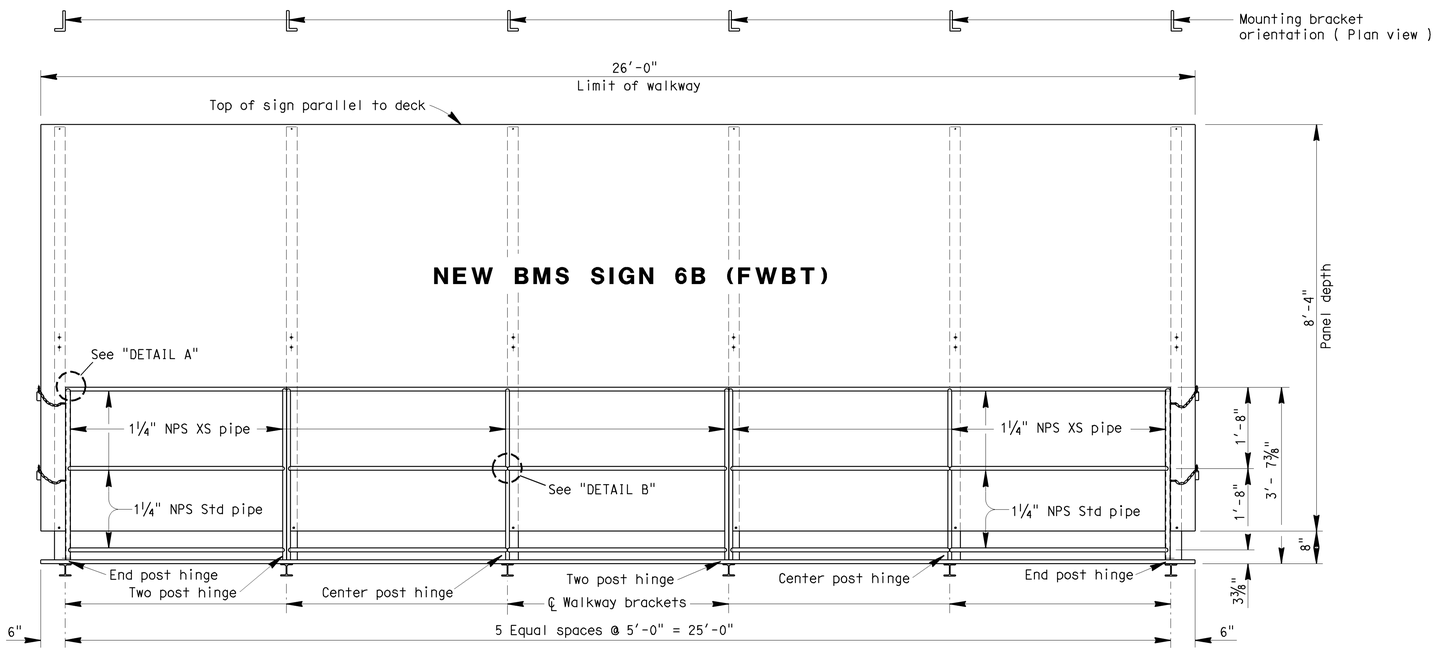

FRONT VIEW
No Scale

NOTES:

1. For details not shown, see "BRIDGE MOUNTED SIGN TYPICAL DETAILS NO.1", "BRIDGE MOUNTED SIGN TYPICAL DETAILS NO.2" and "BRIDGE MOUNTED SIGN TYPICAL DETAILS NO.3".
2. Special care shall be taken to insure that the complete hinge and latch assembly will hold the safety railing in a steady manner, free of wobble while in the raised position. Max allowable displacement from vertical at top of railing when latched shall be 1".
3. Safety chain shall be ¼" galvanized steel coil chain, approximately 12 links per foot. Length shall be min which allows lock-up of safety railing. Min of two safety chains at each end of safety railing. Material shall be Grade 43 high test chain ASTM A413.
4. Safety chain is located at the ends of the walkway only but is shown here for clarity.
5. All high strength (HS) bolts shall be snug tightened.

NOTE:
THE CONTRACTOR SHALL VERIFY ALL CONTROLLING FIELD DIMENSIONS BEFORE ORDERING OR FABRICATING ANY MATERIAL.

REVISED STANDARD PLAN SHEET NO.
DETAIL NO.

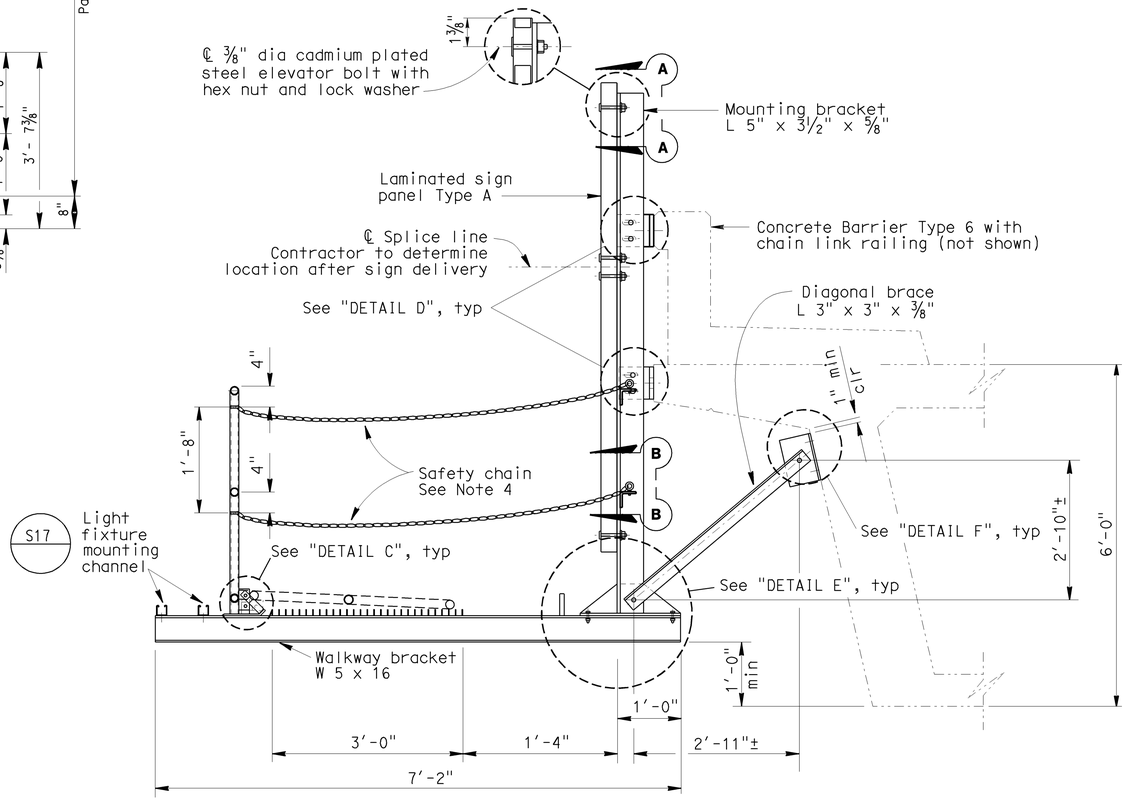

TYPICAL SECTION
No Scale

BRANCH CHIEF Jeffrey B Woody	DESIGN	BY A GUTIERREZ	CHECKED A BUI/D VORA	STATE OF CALIFORNIA DEPARTMENT OF TRANSPORTATION	DIVISION OF ENGINEERING SERVICES DESIGN AND TECHNICAL SERVICES SPECIAL DESIGNS BRANCH A	BRIDGE NO. 53-1926	BLEDSOE STREET OVERCROSSING SIGN 6B LAYOUT	SD-15
	DETAILS	BY D W JUSTICE Jr	CHECKED D VORA			POST MILE R1.1/R6.7		
	QUANTITIES	BY A GUTIERREZ	CHECKED D VORA					

(ENGLISH) SPECIAL DESIGNS BRANCH BORDER SHEET (REV. 7-1-09)

ORIGINAL SCALE IN INCHES FOR REDUCED PLANS 0 1 2 3

CU 07
EA 3Y6001

DISREGARD PRINTS BEARING EARLIER REVISION DATES →

REVISION DATES: 9-28-09 | 10-13-09 | 2-1-10

SHEET OF

FILE => spec_des_br_prj/2009sd/07-3Y6001/sd15-bledsoe.dgn

USERNAME => djustice DATE PLOTTED => 01-FEB-2010 TIME PLOTTED => 14:16

DIST	COUNTY	ROUTE	POST MILES TOTAL PROJECT	SHEET No	TOTAL SHEETS
07	LA	210	R0.4/R5.9	40	87

REGISTERED CIVIL ENGINEER DATE

PLANS APPROVAL DATE

ANDREW BUI
No. C63560
Exp. 9/30/10
CIVIL
REGISTERED PROFESSIONAL ENGINEER
STATE OF CALIFORNIA

The State of California or its officers or agents shall not be responsible for the accuracy or completeness of electronic copies of this plan sheet.

To get to the Caltrans web site, go to: http://www.dot.ca.gov

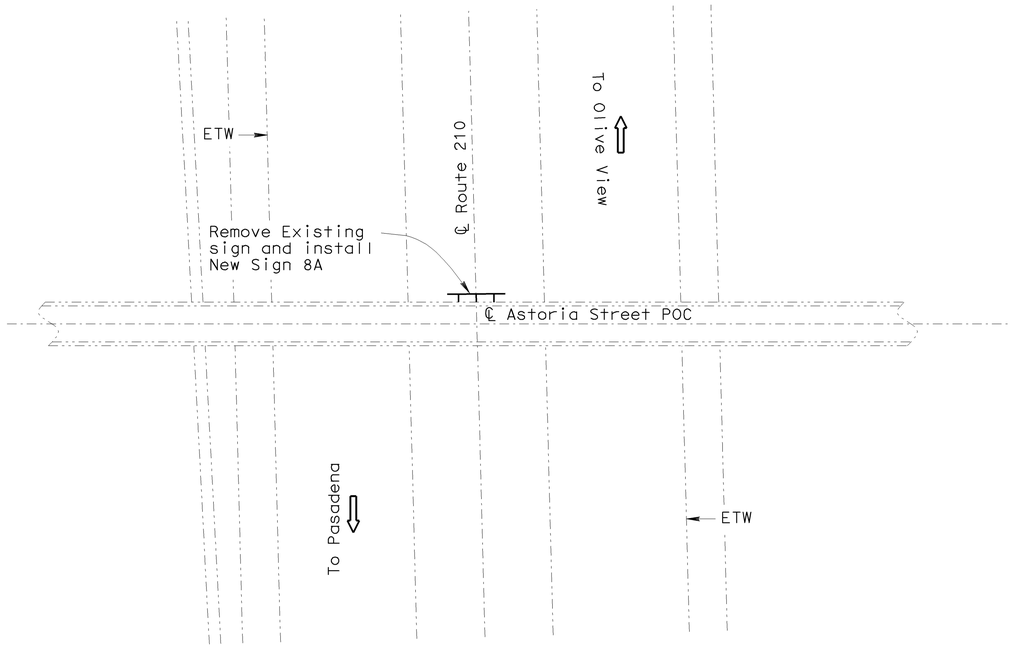

LOCATION PLAN
No Scale

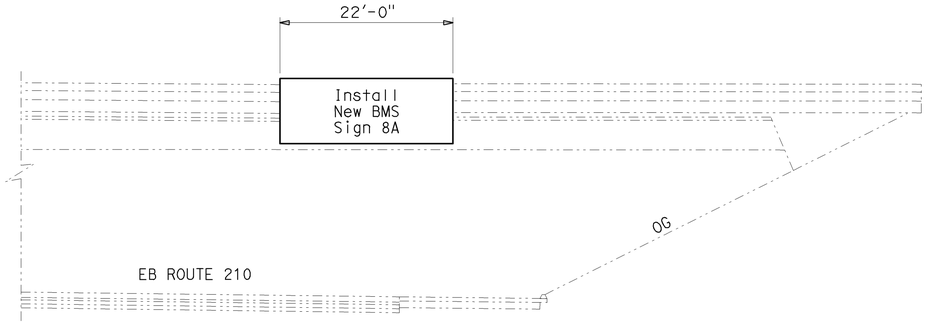

EB ELEVATION
Astoria Street Pedestrian OC
53-1896
No Scale

LEGEND

Existing structure.

New structure.

STANDARD PLANS DATED MAY 2006

A10A ACRONYMS AND ABBREVIATIONS (A-L)
A10B ACRONYMS AND ABBREVIATIONS (M-Z)

Notes:

1. For details not shown, see "STANDARD PLANS MAY 2006".
2. Unless otherwise shown, all steel shall be galvanized after fabrication.
3. Min size fillet weld is ¼" or thickness of thinner part unless noted otherwise.
4. Contractor to provide anchor bolt layout before anchor bolts are placed.
5. For sign location, see "PAVEMENT DELINEATION AND SIGN PLANS".
6. Minimum verticle clearance of sign structure to be 18'-0".

NOTE:
THE CONTRACTOR SHALL VERIFY ALL CONTROLLING FIELD DIMENSIONS BEFORE ORDERING OR FABRICATING ANY MATERIAL.

BRANCH CHIEF Jeffrey B Woody

	BY	CHECKED
DESIGN	A GUTIERREZ	A BUI/D VORA
DETAILS	D W JUSTICE Jr	D VORA
QUANTITIES	A GUTIERREZ	D VORA

STATE OF CALIFORNIA
DEPARTMENT OF TRANSPORTATION

DIVISION OF ENGINEERING SERVICES
DESIGN AND TECHNICAL SERVICES
SPECIAL DESIGNS BRANCH
A

BRIDGE NO. 53-1896
POST MILE R1.1/R6.7

ASTORIA STREET PEDESTIAN OC
SIGN 8A LOCATION PLAN

SD-16

(ENGLISH) SPECIAL DESIGNS BRANCH BORDER SHEET (REV. 7-1-09)

ORIGINAL SCALE IN INCHES FOR REDUCED PLANS 0 1 2 3

CU 07
EA 3Y6001

DISREGARD PRINTS BEARING EARLIER REVISION DATES

REVISION DATES										SHEET	OF
9-28-09	10-13-09	2-1-10									

FILE => spec_des_br_prj/2009sd/07-3Y6001/sd16-astoria.dgn

USERNAME => djustice DATE PLOTTED => 01-FEB-2010 TIME PLOTTED => 14:17

DIST	COUNTY	ROUTE	POST MILES TOTAL PROJECT	SHEET No	TOTAL SHEETS
07	LA	210	R0.4/R5.9	41	87

REGISTERED CIVIL ENGINEER DATE

2-16-10
PLANS APPROVAL DATE

REGISTERED PROFESSIONAL ENGINEER — ANDREW BUI No. C63560 Exp. 9/30/10 CIVIL — STATE OF CALIFORNIA

The State of California or its officers or agents shall not be responsible for the accuracy or completeness of electronic copies of this plan sheet.

To get to the Caltrans web site, go to: http://www.dot.ca.gov

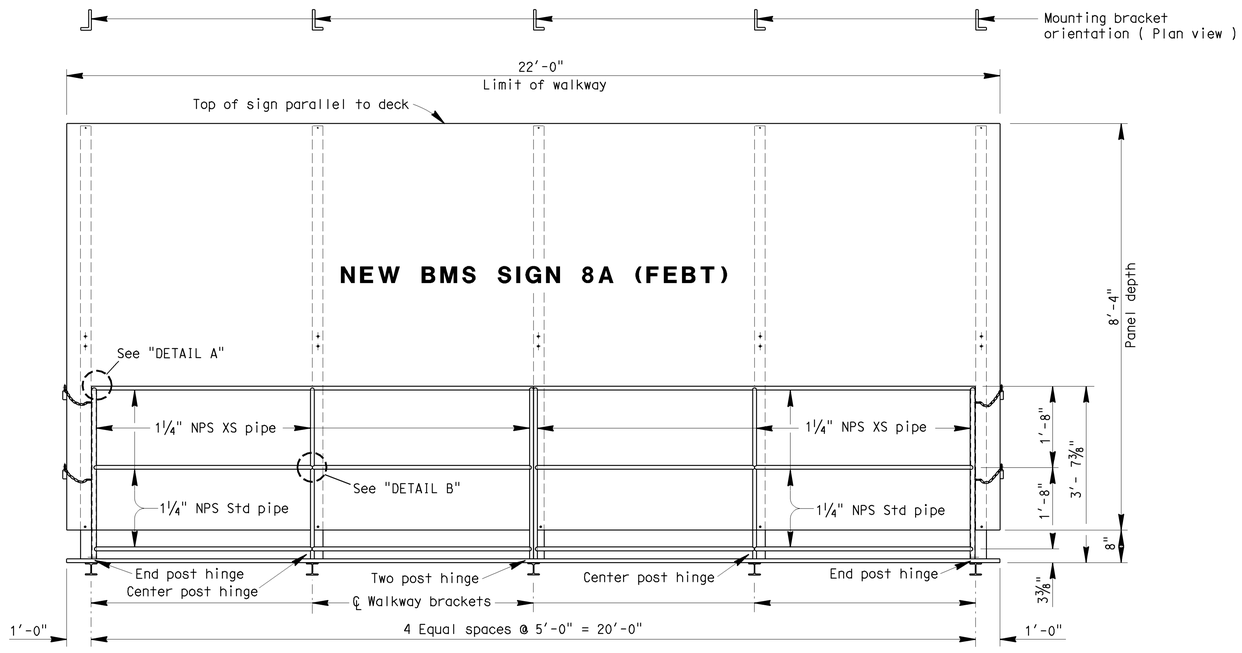

FRONT VIEW

No Scale

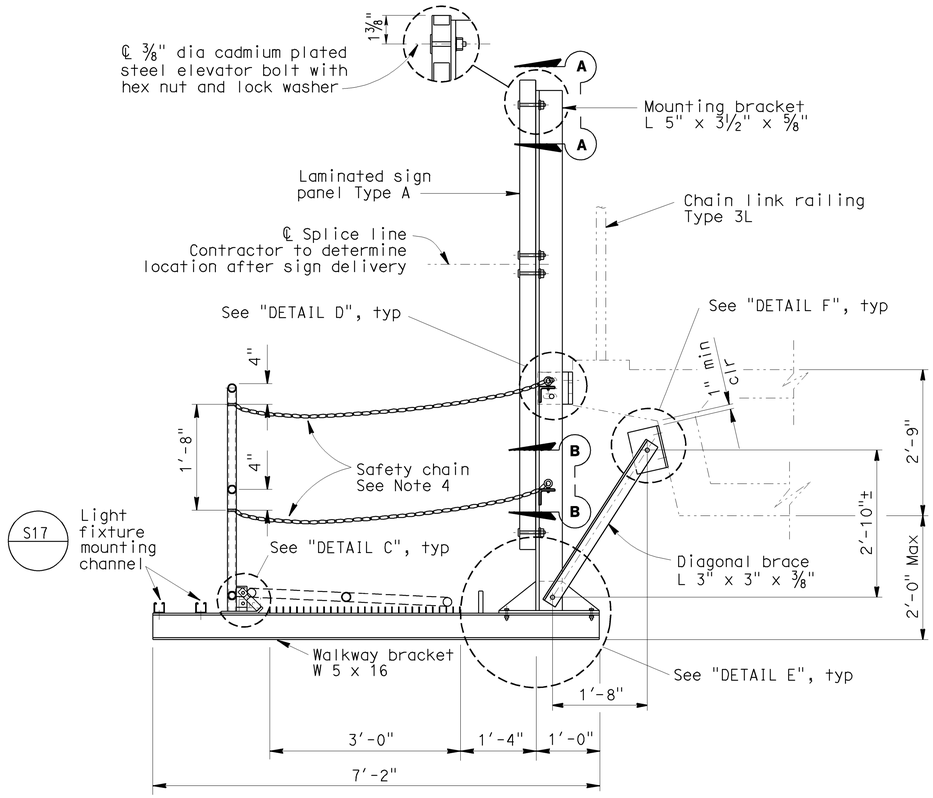

TYPICAL SECTION

No Scale

NOTES:

1. For details not shown, see "BRIDGE MOUNTED SIGN TYPICAL DETAILS NO.1", "BRIDGE MOUNTED SIGN TYPICAL DETAILS NO.2" and "BRIDGE MOUNTED SIGN TYPICAL DETAILS NO.3".
2. Special care shall be taken to insure that the complete hinge and latch assembly will hold the safety railing in a steady manner, free of wobble while in the raised position. Max allowable displacement from vertical at top of railing when latched shall be 1".
3. Safety chain shall be ¼" galvanized steel coil chain, approximately 12 links per foot. Length shall be min which allows lock-up of safety railing. Min of two safety chains at each end of safety railing. Material shall be Grade 43 high test chain ASTM A413.
4. Safety chain is located at the ends of the walkway only but is shown here for clarity.
5. All high strength (HS) bolts shall be snug tightened.

NOTE:
THE CONTRACTOR SHALL VERIFY ALL CONTROLLING FIELD DIMENSIONS BEFORE ORDERING OR FABRICATING ANY MATERIAL.

REVISED STANDARD PLAN SHEET NO.
DETAIL NO.

BRANCH CHIEF Jeffrey B Woody

	BY	CHECKED
DESIGN	A GUTIERREZ	A BUI/D VORA
DETAILS	D W JUSTICE Jr	D VORA
QUANTITIES	A GUTIERREZ	D VORA

STATE OF CALIFORNIA
DEPARTMENT OF TRANSPORTATION

DIVISION OF ENGINEERING SERVICES
DESIGN AND TECHNICAL SERVICES
SPECIAL DESIGNS BRANCH
A

BRIDGE NO. 53-1896
POST MILE R1.1/R6.7

ASTORIA STREET PEDESTRIAN OC
SIGN 8A LAYOUT

SD-17

(ENGLISH) SPECIAL DESIGNS BRANCH BORDER SHEET (REV. 7-1-09)

ORIGINAL SCALE IN INCHES FOR REDUCED PLANS 0 1 2 3

CU 07
EA 3Y6001

DISREGARD PRINTS BEARING EARLIER REVISION DATES →

REVISION DATES										SHEET	OF
9-28-09	10-13-09	2-1-10									

FILE => spec_des_br_prj/2009sd/07-3Y6001/sd17-astoria.dgn

USERNAME => djustice DATE PLOTTED => 01-FEB-2010 TIME PLOTTED => 14:17

DIST	COUNTY	ROUTE	POST MILES TOTAL PROJECT	SHEET No	TOTAL SHEETS
07	LA	210	R0.4/R5.9	42	87

REGISTERED CIVIL ENGINEER DATE

2-16-10
PLANS APPROVAL DATE

ANDREW BUI
No. C63560
Exp. 9/30/10
CIVIL
REGISTERED PROFESSIONAL ENGINEER
STATE OF CALIFORNIA

The State of California or its officers or agents shall not be responsible for the accuracy or completeness of electronic copies of this plan sheet.

To get to the Caltrans web site, go to: http://www.dot.ca.gov

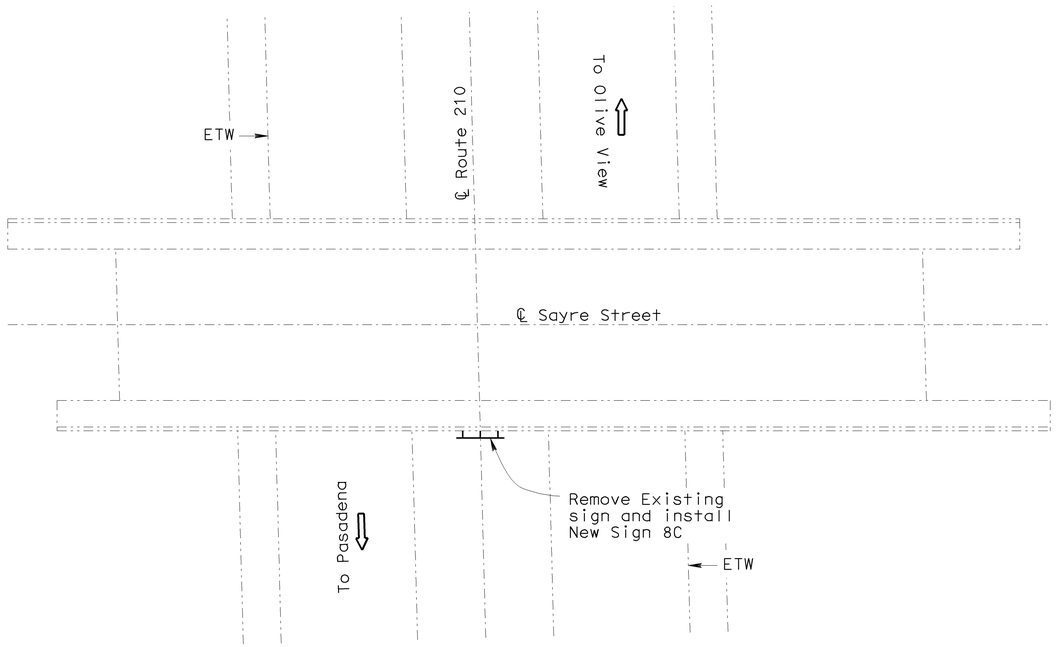

LOCATION PLAN

No Scale

LEGEND

Existing structure.

New structure.

STANDARD PLANS DATED MAY 2006

A10A ACRONYMS AND ABBREVIATIONS (A-L)
A10B ACRONYMS AND ABBREVIATIONS (M-Z)

Notes:

1. For details not shown, see "STANDARD PLANS MAY 2006".
2. Unless otherwise shown, all steel shall be galvanized after fabrication.
3. Min size fillet weld is ¼" or thickness of thinner part unless noted otherwise.
4. Contractor to provide anchor bolt layout before anchor bolts are placed.
5. For sign location, see "PAVEMENT DELINEATION AND SIGN PLANS".

NOTE:
THE CONTRACTOR SHALL VERIFY ALL CONTROLLING FIELD DIMENSIONS BEFORE ORDERING OR FABRICATING ANY MATERIAL.

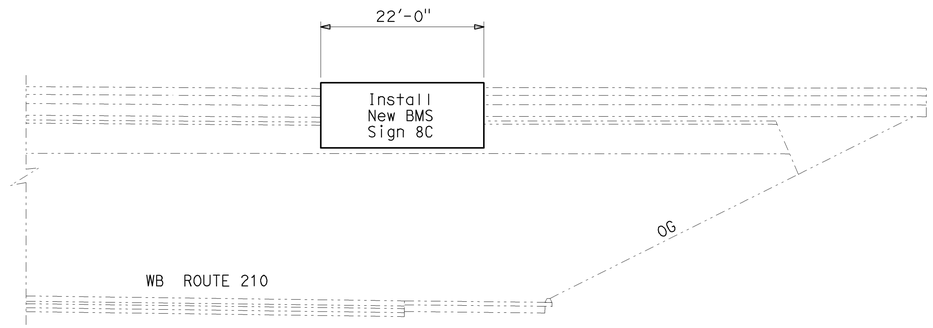

WB ELEVATION

Sayre Street OC
53-1927
No Scale

BRANCH CHIEF Jeffrey B Woody	DESIGN	BY A GUTIERREZ	CHECKED A BUI/D VORA	STATE OF CALIFORNIA DEPARTMENT OF TRANSPORTATION	DIVISION OF ENGINEERING SERVICES DESIGN AND TECHNICAL SERVICES SPECIAL DESIGNS BRANCH A	BRIDGE NO. 53-1927	SAYRE STREET OVERCROSSING SIGN 8A LOCATION PLAN	SD-18
	DETAILS	BY D W JUSTICE Jr	CHECKED D VORA			POST MILE R1.1/R6.7		
	QUANTITIES	BY A GUTIERREZ	CHECKED D VORA					

(ENGLISH) SPECIAL DESIGNS BRANCH BORDER SHEET (REV. 7-1-09)

ORIGINAL SCALE IN INCHES FOR REDUCED PLANS 0 1 2 3

CU 07
EA 3Y6001

DISREGARD PRINTS BEARING EARLIER REVISION DATES →

REVISION DATES										SHEET	OF
9-28-09	10-13-09	10-22-09	2-1-10								

FILE => spec_des_br_prj/2009sd/07-3Y6001/sd18-sayre.dgn

USERNAME => djustice DATE PLOTTED => 01-FEB-2010 TIME PLOTTED => 14:17

DIST	COUNTY	ROUTE	POST MILES TOTAL PROJECT	SHEET No	TOTAL SHEETS
07	LA	210	R0.4/R5.9	43	87

REGISTERED CIVIL ENGINEER DATE

2-16-10
PLANS APPROVAL DATE

REGISTERED PROFESSIONAL ENGINEER — ANDREW BUI — No. C63560 — Exp. 9/30/10 — CIVIL — STATE OF CALIFORNIA

The State of California or its officers or agents shall not be responsible for the accuracy or completeness of electronic copies of this plan sheet.

To get to the Caltrans web site, go to: http://www.dot.ca.gov

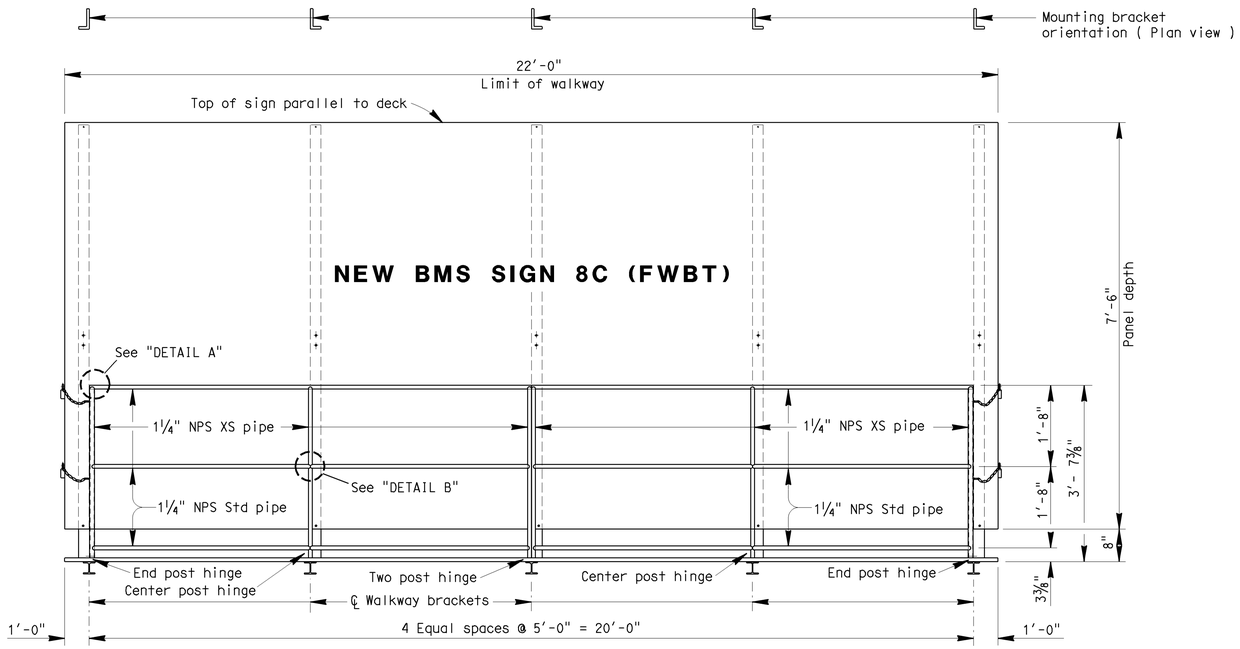

FRONT VIEW

No Scale

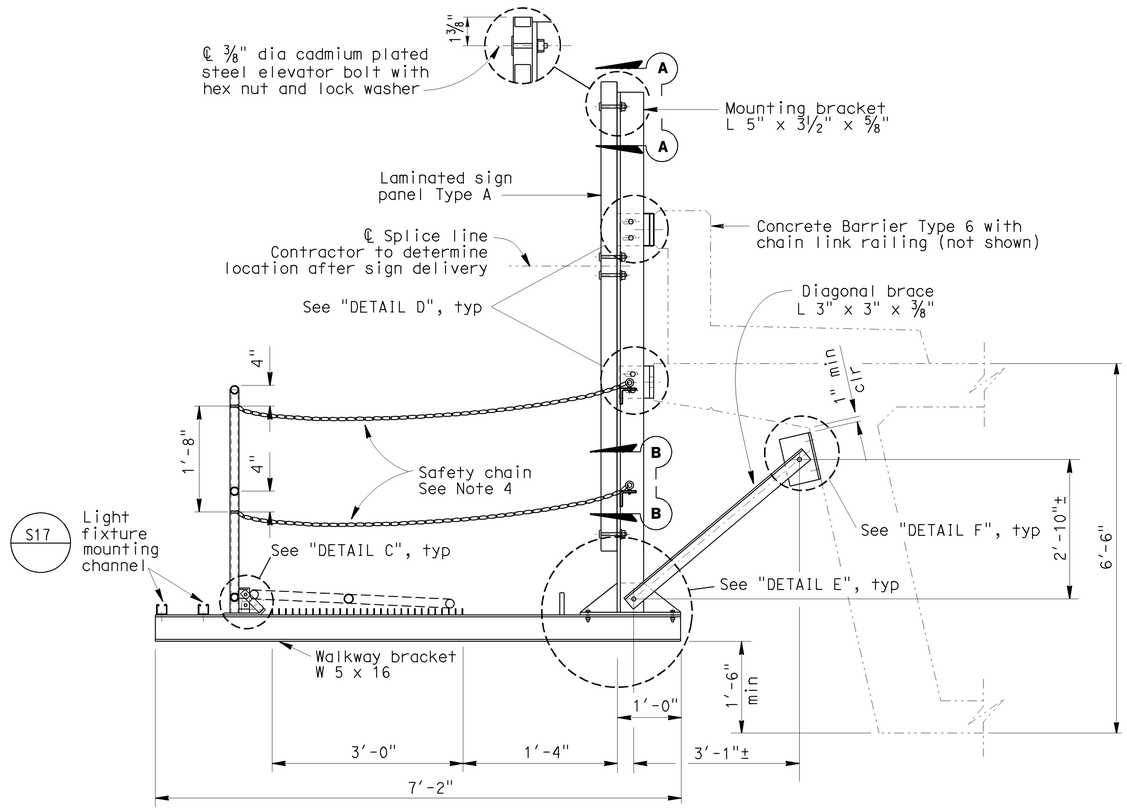

TYPICAL SECTION

No Scale

NOTES:

1. For details not shown, see "BRIDGE MOUNTED SIGN TYPICAL DETAILS NO.1", "BRIDGE MOUNTED SIGN TYPICAL DETAILS NO.2" and "BRIDGE MOUNTED SIGN TYPICAL DETAILS NO.3".
2. Special care shall be taken to insure that the complete hinge and latch assembly will hold the safety railing in a steady manner, free of wobble while in the raised position. Max allowable displacement from vertical at top of railing when latched shall be 1".
3. Safety chain shall be ¼" galvanized steel coil chain, approximately 12 links per foot. Length shall be min which allows lock-up of safety railing. Min of two safety chains at each end of safety railing. Material shall be Grade 43 high test chain ASTM A413.
4. Safety chain is located at the ends of the walkway only but is shown here for clarity.
5. All high strength (HS) bolts shall be snug tightened.

NOTE:
THE CONTRACTOR SHALL VERIFY ALL CONTROLLING FIELD DIMENSIONS BEFORE ORDERING OR FABRICATING ANY MATERIAL.

REVISED STANDARD PLAN SHEET NO.

DETAIL NO.

BRANCH CHIEF Jeffrey B Woody

	BY	CHECKED
DESIGN	A GUTIERREZ	A BUI/D VORA
DETAILS	D W JUSTICE Jr	D VORA
QUANTITIES	A GUTIERREZ	D VORA

STATE OF CALIFORNIA
DEPARTMENT OF TRANSPORTATION

DIVISION OF ENGINEERING SERVICES
DESIGN AND TECHNICAL SERVICES
SPECIAL DESIGNS BRANCH
A

BRIDGE NO. 53-1927
POST MILE R1.1/R6.7

SAYRE STREET OVERCROSSING
SIGN 8C LAYOUT

SD-19

(ENGLISH) SPECIAL DESIGNS BRANCH BORDER SHEET (REV. 7-1-09)

ORIGINAL SCALE IN INCHES FOR REDUCED PLANS 0 1 2 3

CU 07
EA 3Y6001

DISREGARD PRINTS BEARING EARLIER REVISION DATES →

REVISION DATES: 9-28-09 | 10-13-09 | 2-1-10

SHEET OF

FILE => spec_des_br_prj/2009sd/07-3Y6001/sd19-sayre.dgn

USERNAME => djustice DATE PLOTTED => 01-FEB-2010 TIME PLOTTED => 14:17

DIST	COUNTY	ROUTE	POST MILES TOTAL PROJECT	SHEET No	TOTAL SHEETS
07	LA	210	R0.4/R5.9	44	87

REGISTERED CIVIL ENGINEER DATE

2-16-10
PLANS APPROVAL DATE

ANDREW BUI
No. C63560
Exp. 9/30/10
CIVIL
REGISTERED PROFESSIONAL ENGINEER
STATE OF CALIFORNIA

The State of California or its officers or agents shall not be responsible for the accuracy or completeness of electronic copies of this plan sheet.

To get to the Caltrans web site, go to: http://www.dot.ca.gov

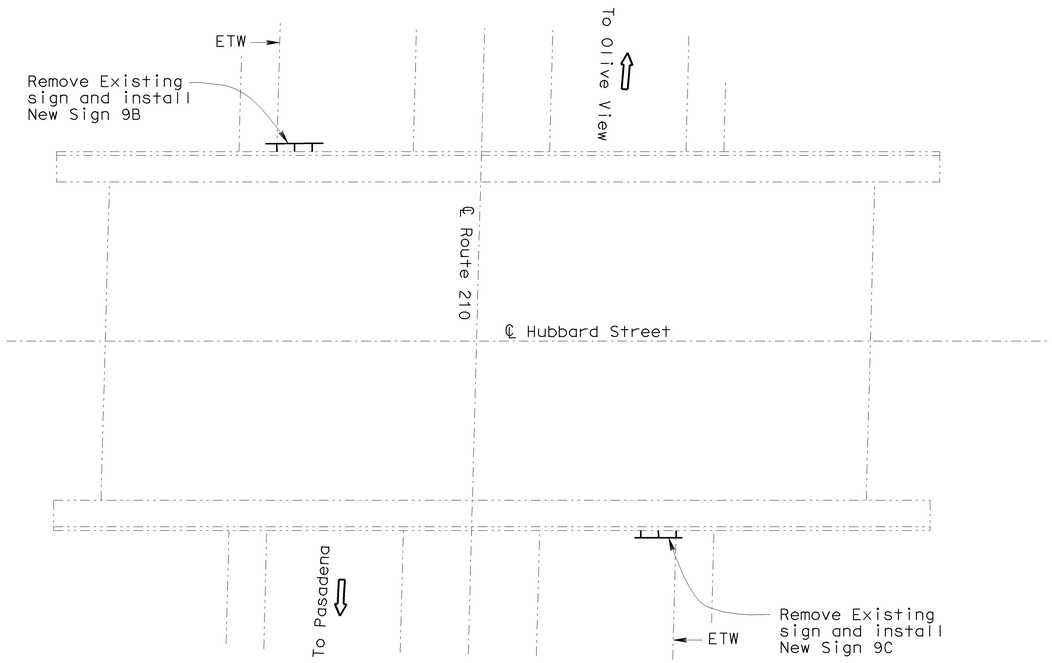

LOCATION PLAN
No Scale

LEGEND

Existing structure.

New structure.

STANDARD PLANS DATED MAY 2006

A10A ACRONYMS AND ABBREVIATIONS (A-L)
A10B ACRONYMS AND ABBREVIATIONS (M-Z)

Notes:

1. For details not shown, see "STANDARD PLANS MAY 2006".
2. Unless otherwise shown, all steel shall be galvanized after fabrication.
3. Min size fillet weld is 1/4" or thickness of thinner part unless noted otherwise.
4. Contractor to provide anchor bolt layout before anchor bolts are placed.
5. For sign location, see "PAVEMENT DELINEATION AND SIGN PLANS".

NOTE:
THE CONTRACTOR SHALL VERIFY ALL CONTROLLING FIELD DIMENSIONS BEFORE ORDERING OR FABRICATING ANY MATERIAL.

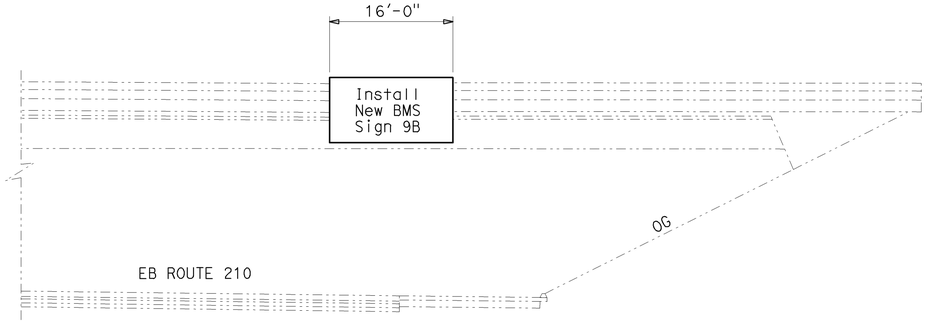

EB ELEVATION
Hubbard Street OC
53-1928
No Scale

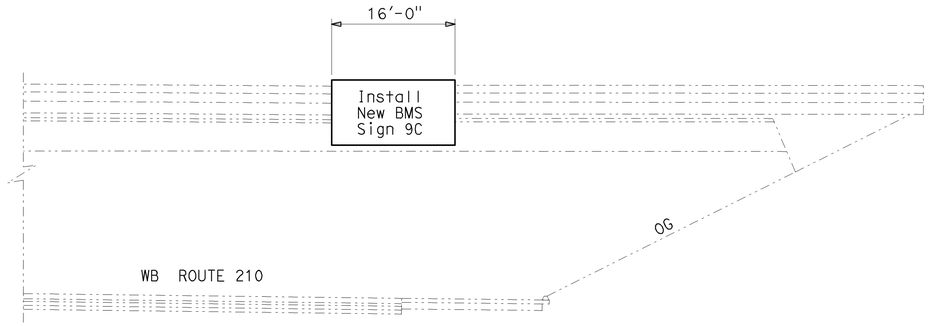

WB ELEVATION
Hubbard Street OC
53-1928
No Scale

BRANCH CHIEF Jeffrey B Woody

	BY	CHECKED
DESIGN	A GUTIERREZ	A BUI/D VORA
DETAILS	D W JUSTICE Jr	D VORA
QUANTITIES	A GUTIERREZ	D VORA

STATE OF CALIFORNIA
DEPARTMENT OF TRANSPORTATION

DIVISION OF ENGINEERING SERVICES
DESIGN AND TECHNICAL SERVICES
SPECIAL DESIGNS BRANCH
A

BRIDGE NO. 53-1928
POST MILE R1.1/R6.7

HUBBARD STREET OVERCROSSING
SIGN 9B & 9C LOCATION PLAN

SD-20

(ENGLISH) SPECIAL DESIGNS BRANCH BORDER SHEET (REV. 7-1-09)

ORIGINAL SCALE IN INCHES FOR REDUCED PLANS 0 1 2 3

CU 07
EA 3Y6001

DISREGARD PRINTS BEARING EARLIER REVISION DATES →

REVISION DATES										SHEET	OF
9-28-09	10-13-09	2-1-10									

FILE => spec_des_br_prj/2009sd/07-3Y6001/sd20-hubbard.dgn

USERNAME => djustice DATE PLOTTED => 01-FEB-2010 TIME PLOTTED => 14:17

DIST	COUNTY	ROUTE	POST MILES TOTAL PROJECT	SHEET No	TOTAL SHEETS
07	LA	210	R0.4/R5.9	45	87

REGISTERED CIVIL ENGINEER DATE

2-16-10
PLANS APPROVAL DATE

REGISTERED PROFESSIONAL ENGINEER — ANDREW BUI — No. C63560 — Exp. 9/30/10 — CIVIL — STATE OF CALIFORNIA

The State of California or its officers or agents shall not be responsible for the accuracy or completeness of electronic copies of this plan sheet.

To get to the Caltrans web site, go to: http://www.dot.ca.gov

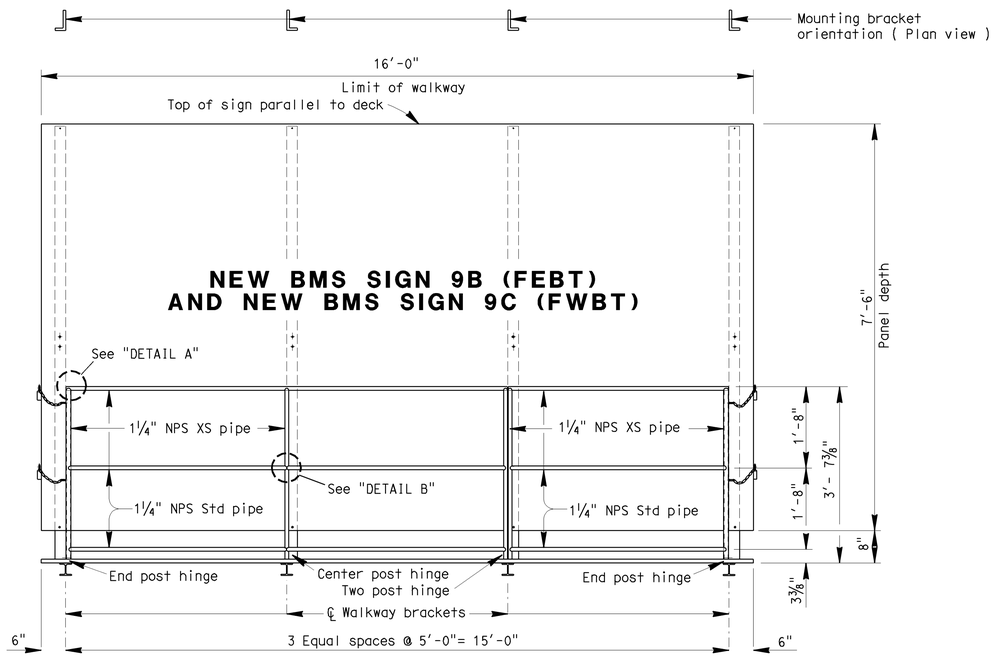

FRONT VIEW
No Scale

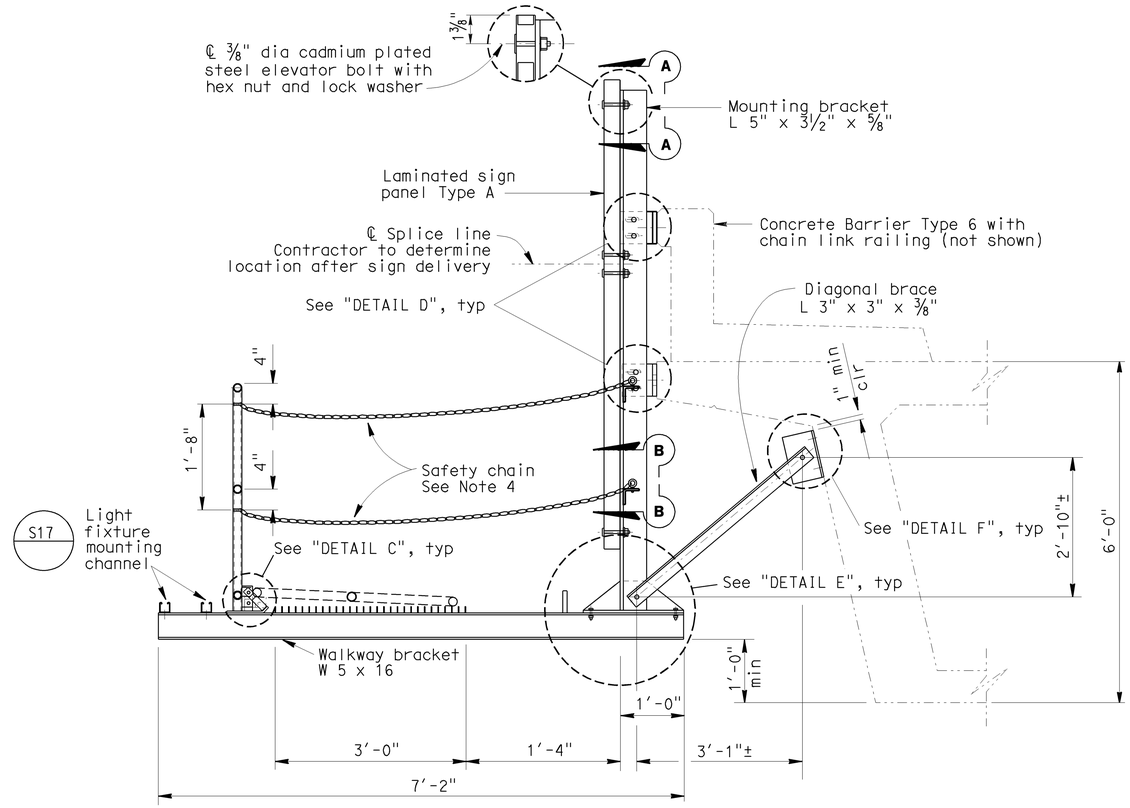

TYPICAL SECTION
No Scale

NOTES:

1. For details not shown, see "BRIDGE MOUNTED SIGN TYPICAL DETAILS NO.1", "BRIDGE MOUNTED SIGN TYPICAL DETAILS NO.2" and "BRIDGE MOUNTED SIGN TYPICAL DETAILS NO.3".
2. Special care shall be taken to insure that the complete hinge and latch assembly will hold the safety railing in a steady manner, free of wobble while in the raised position. Max allowable displacement from vertical at top of railing when latched shall be 1".
3. Safety chain shall be ¼" galvanized steel coil chain, approximately 12 links per foot. Length shall be min which allows lock-up of safety railing. Min of two safety chains at each end of safety railing. Material shall be Grade 43 high test chain ASTM A413.
4. Safety chain is located at the ends of the walkway only but is shown here for clarity.
5. All high strength (HS) bolts shall be snug tightened.

NOTE:
THE CONTRACTOR SHALL VERIFY ALL CONTROLLING FIELD DIMENSIONS BEFORE ORDERING OR FABRICATING ANY MATERIAL.

REVISED STANDARD PLAN SHEET NO.
DETAIL NO.

BRANCH CHIEF Jeffrey B Woody

	BY	CHECKED
DESIGN	A GUTIERREZ	A BUI/D VORA
DETAILS	D W JUSTICE Jr	D VORA
QUANTITIES	A GUTIERREZ	D VORA

STATE OF CALIFORNIA
DEPARTMENT OF TRANSPORTATION

DIVISION OF ENGINEERING SERVICES
DESIGN AND TECHNICAL SERVICES
SPECIAL DESIGNS BRANCH
A

BRIDGE NO. 53-1928
POST MILE R1.1/R6.7

HUBBARD STREET OVERCROSSING
SIGN 9B & 9C LAYOUT

SD-21

(ENGLISH) SPECIAL DESIGNS BRANCH BORDER SHEET (REV. 7-1-09)

ORIGINAL SCALE IN INCHES FOR REDUCED PLANS 0 1 2 3

CU 07
EA 3Y6001

DISREGARD PRINTS BEARING EARLIER REVISION DATES →

REVISION DATES										SHEET	OF
9-28-09	10-13-09	2-1-10									

FILE => spec_des_br_prj/2009sd/07-3Y6001/sd21-hubbard.dgn

USERNAME => djustice DATE PLOTTED => 01-FEB-2010 TIME PLOTTED => 14:18

DIST	COUNTY	ROUTE	POST MILES TOTAL PROJECT	SHEET No	TOTAL SHEETS
07	LA	210	R0.4/R5.9	46	87

REGISTERED CIVIL ENGINEER DATE

2-16-10
PLANS APPROVAL DATE

REGISTERED PROFESSIONAL ENGINEER — ANDREW BUI — No. C63560 — Exp. 9/30/10 — CIVIL — STATE OF CALIFORNIA

The State of California or its officers or agents shall not be responsible for the accuracy or completeness of electronic copies of this plan sheet.

To get to the Caltrans web site, go to: http://www.dot.ca.gov

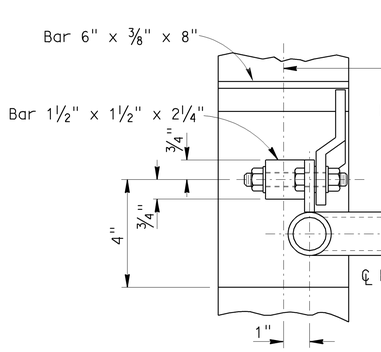

END POST HINGE

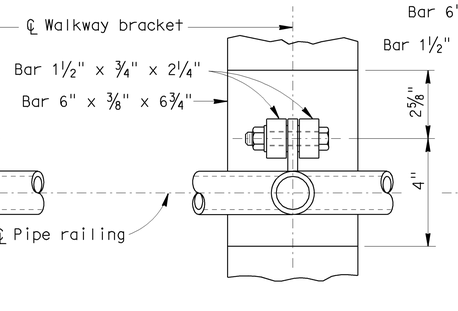

CENTER POST WELDED HINGE - PLAN

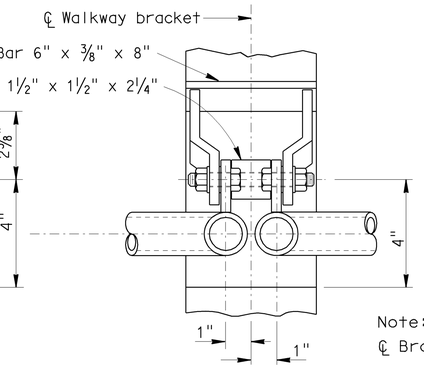

TWO POST HINGE

Note:
℄ Bracket = ℄ Welded hinge

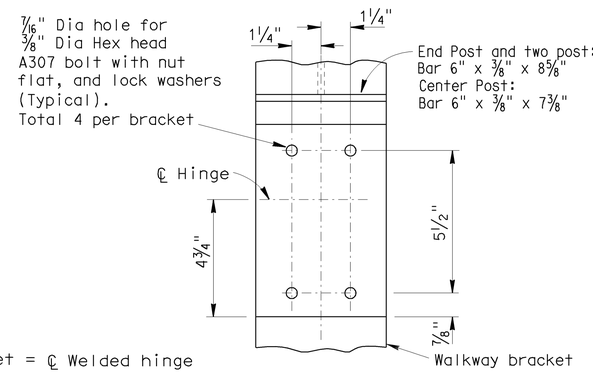

TYPICAL BOLTED (ALTERNATIVE) HINGED CONNECTION

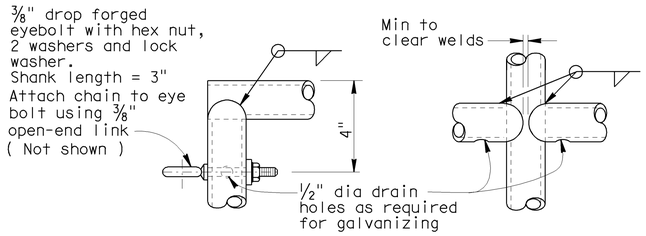

DETAIL A **DETAIL B**

Note: Alternative venting methods may be used if approved by the Engineer.

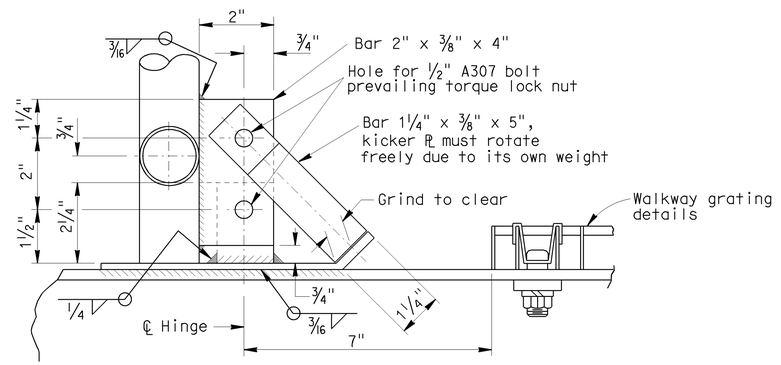

DETAIL C

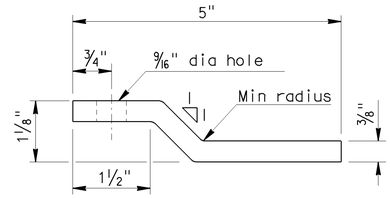

PLAN - KICKER BAR

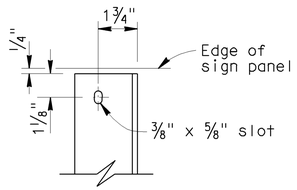

SECTION A-A

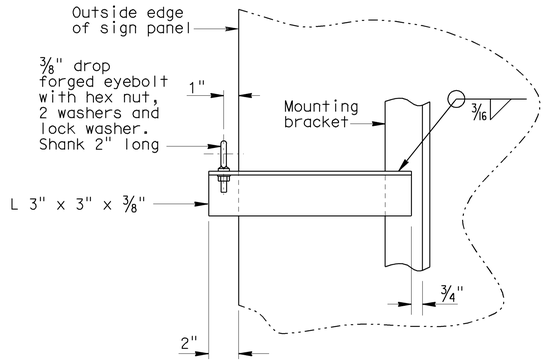

SECTION B-B

NOTE:
THE CONTRACTOR SHALL VERIFY ALL CONTROLLING FIELD DIMENSIONS BEFORE ORDERING OR FABRICATING ANY MATERIAL.

No Scale

BRANCH CHIEF Jeffrey B Woody	DESIGN	BY A GUTIERREZ	CHECKED A BUI/D VORA	STATE OF CALIFORNIA DEPARTMENT OF TRANSPORTATION	DIVISION OF ENGINEERING SERVICES DESIGN AND TECHNICAL SERVICES SPECIAL DESIGNS BRANCH A	BRIDGE NO. N/A POST MILE -	BRIDGE MOUNTED SIGN DETAILS TYPICAL DETAILS NO. 1	SD-22
	DETAILS	BY D W JUSTICE Jr	CHECKED D VORA					
	QUANTITIES	BY A GUTIERREZ	CHECKED D VORA					

(ENGLISH) SPECIAL DESIGNS BRANCH BORDER SHEET (REV. 7-1-09)

ORIGINAL SCALE IN INCHES FOR REDUCED PLANS 0 1 2 3

CU 07
EA 3Y6001

DISREGARD PRINTS BEARING EARLIER REVISION DATES →

REVISION DATES: 9-28-09 | 10-13-09 | 2-1-10

SHEET OF

FILE => spec_des_br_prj/2009sd/07-3Y6001/sd22-details1.dgn

USERNAME => djustice DATE PLOTTED => 01-FEB-2010 TIME PLOTTED => 14:18

DIST	COUNTY	ROUTE	POST MILES TOTAL PROJECT	SHEET No	TOTAL SHEETS
07	LA	210	R0.4/R5.9	47	87

REGISTERED CIVIL ENGINEER DATE

2-16-10
PLANS APPROVAL DATE

REGISTERED PROFESSIONAL ENGINEER — ANDREW BUI No. C63560 Exp. 9/30/10 CIVIL — STATE OF CALIFORNIA

The State of California or its officers or agents shall not be responsible for the accuracy or completeness of electronic copies of this plan sheet.

To get to the Caltrans web site, go to: http://www.dot.ca.gov

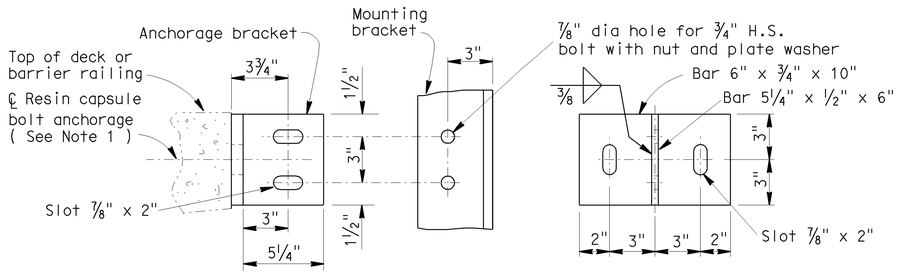

DETAIL D

Note:

Where new resin capsule bolt anchorage coincides with Type 7 fence post or existing bridge mounted sign anchorage, adjust new mounting bracket to create a minimum distance of 6" measured from the ℄ of nearest resin capsule bolt anchorage to the ℄ fence post or ℄ existing bridge mounted sign anchorage, or as approved by the Engineer.

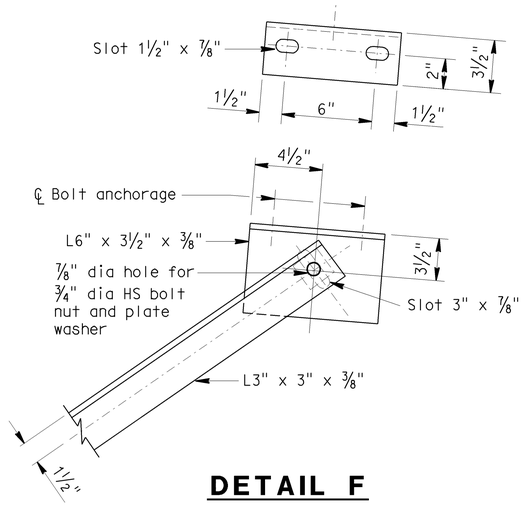

DETAIL F

NOTES:

1. Resin capsule bolts shall not interfere with existing railing anchorages.
2. Resin capsule anchorage is subject to approval of engineer. Installation procedure shall comply with manufacturer's instructions.
3. Unless otherwise shown all steel shall be galvanized after fabrication.
4. Existing bridge mounted sign anchors shall be cut flush with edge of deck by mechanical means. Damage to concrete surface resulting from cut shall be repaired at the Contractor's expense to the Engineers satisfaction. Cut ends of anchors shall be coated with 2 coats of zinc rich primer.
5. Resin capsule bolt anchors shall be installed in sound concrete free of cracks or delamination.

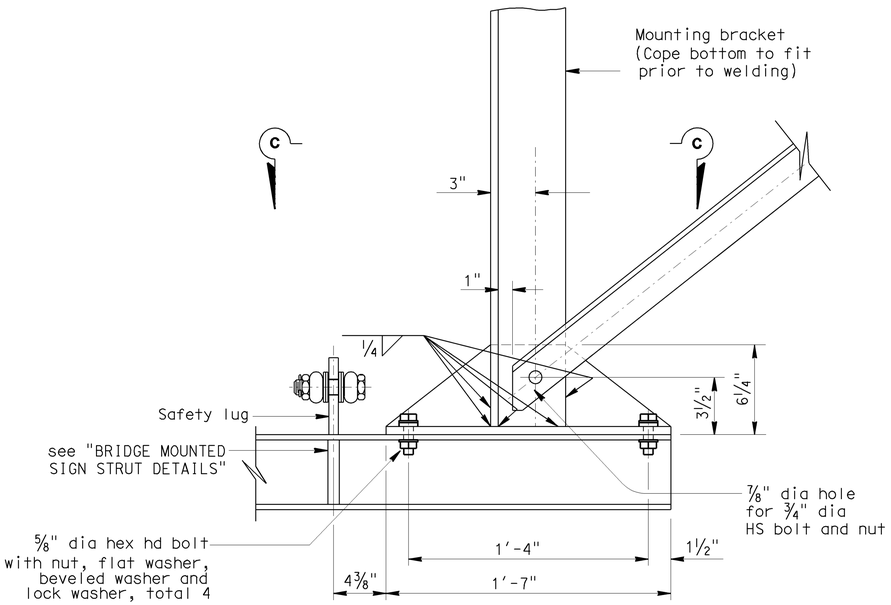

DETAIL E

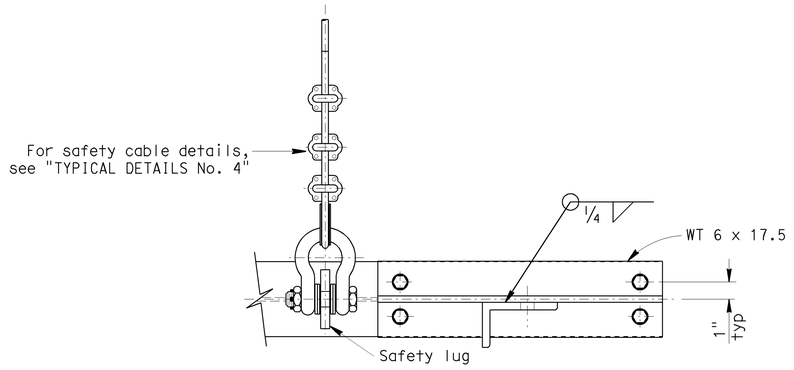

SECTION C-C

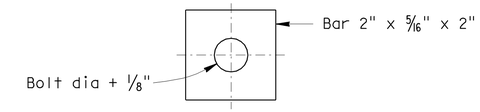

PLATE WASHER

FOR ALL SLOTTED HOLES

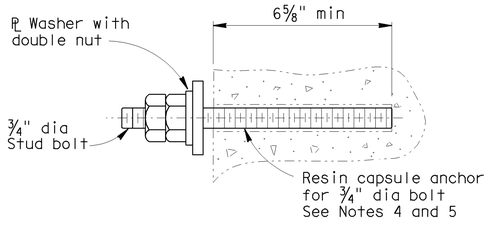

RESIN CAPSULE BOLT ANCHORAGE

NOTE:
THE CONTRACTOR SHALL VERIFY ALL CONTROLLING FIELD DIMENSIONS BEFORE ORDERING OR FABRICATING ANY MATERIAL.

No Scale

BRANCH CHIEF Jeffrey B Woody

	BY	CHECKED
DESIGN	A GUTIERREZ	A BUI/D VORA
DETAILS	D W JUSTICE Jr	D VORA
QUANTITIES	A GUTIERREZ	D VORA

STATE OF CALIFORNIA
DEPARTMENT OF TRANSPORTATION

DIVISION OF ENGINEERING SERVICES
DESIGN AND TECHNICAL SERVICES
SPECIAL DESIGNS BRANCH
A

BRIDGE NO. N/A
POST MILE –

BRIDGE MOUNTED SIGN DETAILS
TYPICAL DETAILS NO. 2

SD-23

(ENGLISH) SPECIAL DESIGNS BRANCH BORDER SHEET (REV. 7-1-09)

ORIGINAL SCALE IN INCHES FOR REDUCED PLANS 0 1 2 3

CU 07
EA 3Y6001

DISREGARD PRINTS BEARING EARLIER REVISION DATES →

REVISION DATES										SHEET	OF
9-28-09	10-13-09	2-1-10									

FILE => spec_des_br_prj/2009sd/07-3Y6001/sd23-details2.dgn

USERNAME => djustice DATE PLOTTED => 01-FEB-2010 TIME PLOTTED => 14:18

DIST	COUNTY	ROUTE	POST MILES TOTAL PROJECT	SHEET No	TOTAL SHEETS
07	LA	210	R0.4/R5.9	48	87

REGISTERED CIVIL ENGINEER DATE

2-16-10
PLANS APPROVAL DATE

REGISTERED PROFESSIONAL ENGINEER — ANDREW BUI — No. C63560 — Exp. 9/30/10 — CIVIL — STATE OF CALIFORNIA

The State of California or its officers or agents shall not be responsible for the accuracy or completeness of electronic copies of this plan sheet.

To get to the Caltrans web site, go to: http://www.dot.ca.gov

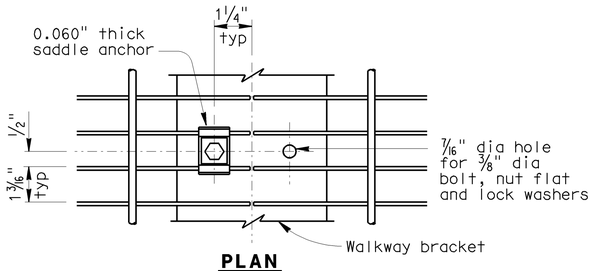

PLAN

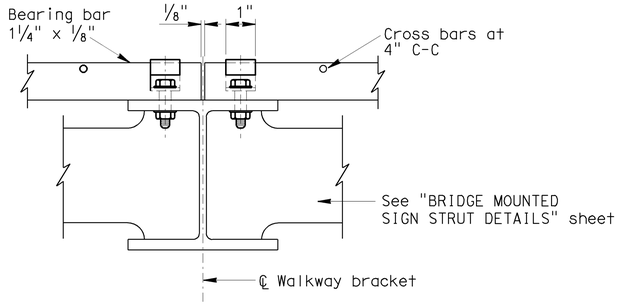

WALKWAY GRATING DETAILS

(Shown at splice)

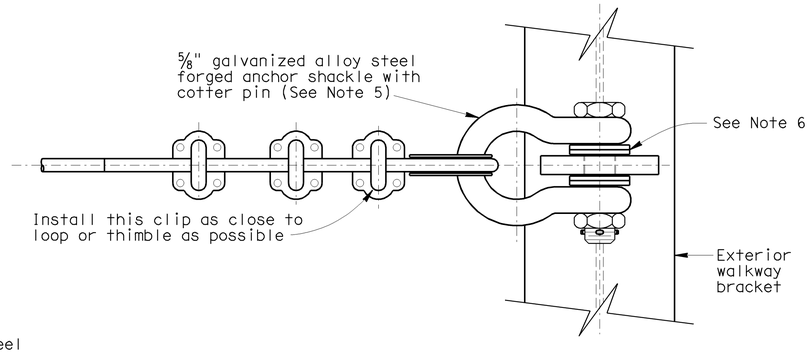

PLAN

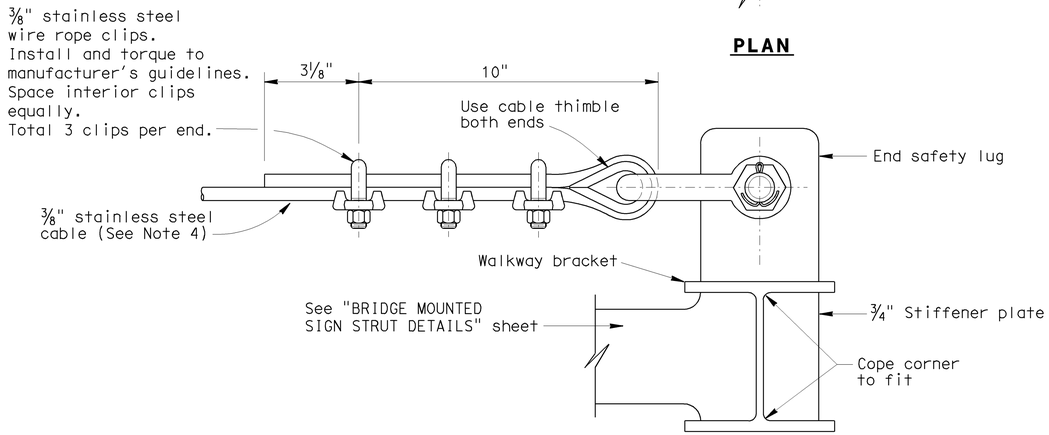

ELEVATION

END VIEW SAFETY CABLE

NOTES:

1. Welded type grating shall have 1¼" x ⅛" bearing bars at 1 3/16" centers with ¼" diameter (or equal) cross bars at 4" centers. If mechanical lock grating is used, it shall be equal in strength to the welded type. Alternate hold-down clips may be submitted for approval.
2. Walkway grating and light fixture mounting channels to be continuous (no splices) over as many walkway brackets as practical and consistent with fabrication, ease of handling and assembly.
3. Contractor may substitute 1⅝" x 1⅝" x .1084" cont-slot steel channel with pre-punched slots not larger than 13/32" x 3". Slots shall be at bottom of channel and shall be parallel to channel. Slots shall be spaced not closer than 4" center to center.
4. Stainless steel cable shall be plain with 7 x 19 class strand core construction using Type 302 or 304 alloy stainless steel strands. Minimum cable breaking strength shall be 10,000 pounds. Cable shall be free of kinks, knots, or deformation and shall be continuous between end lugs. Splices not allowed. Safety cable shall not be prestretched.
5. Shackle shall be galvanized steel with working load limit of 10,000 pounds.
6. Place an equal amount of washers on each side to align cable with end lug without restricting shackle bolt rotation or contacting cable.
7. Prior to tightening cable clips at exterior anchorage, slack in cable shall be removed by the full effort of a typical construction worker.

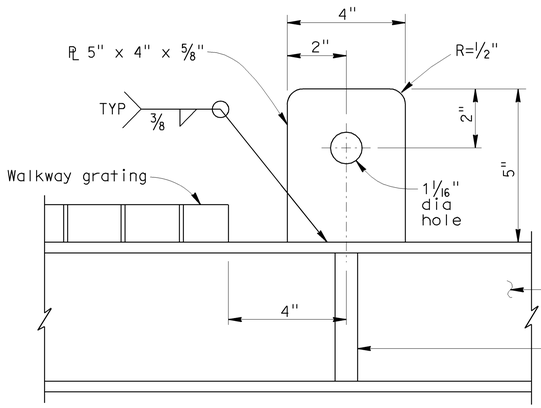

INTERIOR SAFETY LUG DETAIL

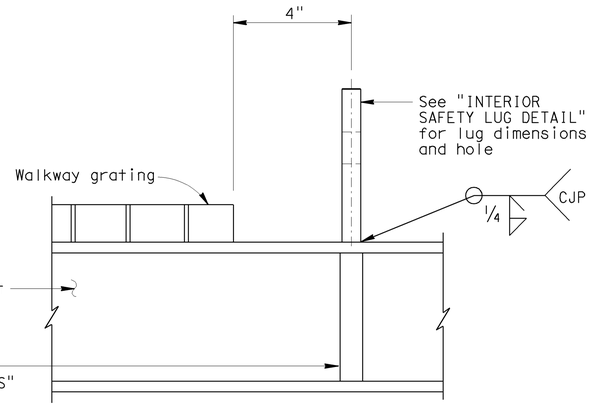

END SAFETY LUG DETAIL

NOTE:
THE CONTRACTOR SHALL VERIFY ALL CONTROLLING FIELD DIMENSIONS BEFORE ORDERING OR FABRICATING ANY MATERIAL.

No Scale

DESIGN	BY A GUTIERREZ	CHECKED A BUI/D VORA	
DETAILS	BY D W JUSTICE Jr	CHECKED D VORA	
QUANTITIES	BY A GUTIERREZ	CHECKED D VORA	

BRANCH CHIEF Jeffrey B Woody

STATE OF CALIFORNIA
DEPARTMENT OF TRANSPORTATION

DIVISION OF ENGINEERING SERVICES
DESIGN AND TECHNICAL SERVICES
SPECIAL DESIGNS BRANCH A

BRIDGE NO. N/A
POST MILE –

BRIDGE MOUNTED SIGN DETAILS
TYPICAL DETAILS NO. 3

SD-24

(ENGLISH) SPECIAL DESIGNS BRANCH BORDER SHEET (REV. 7-1-09)

ORIGINAL SCALE IN INCHES FOR REDUCED PLANS 0 1 2 3

CU 07
EA 3Y6001

DISREGARD PRINTS BEARING EARLIER REVISION DATES →

REVISION DATES										SHEET	OF
9-28-09	10-13-09	2-1-10									

FILE => spec_des_br_prj/2009sd/07-3Y6001/sd24-details3.dgn

USERNAME => djustice DATE PLOTTED => 01-FEB-2010 TIME PLOTTED => 14:19

DIST	COUNTY	ROUTE	POST MILES TOTAL PROJECT	SHEET No	TOTAL SHEETS
07	LA	210	R0.4/R5.9	49	87

REGISTERED CIVIL ENGINEER DATE

2-16-10
PLANS APPROVAL DATE

REGISTERED PROFESSIONAL ENGINEER — ANDREW BUI — No. C63560 — Exp. 9/30/10 — CIVIL — STATE OF CALIFORNIA

The State of California or its officers or agents shall not be responsible for the accuracy or completeness of electronic copies of this plan sheet.

To get to the Caltrans web site, go to: http://www.dot.ca.gov

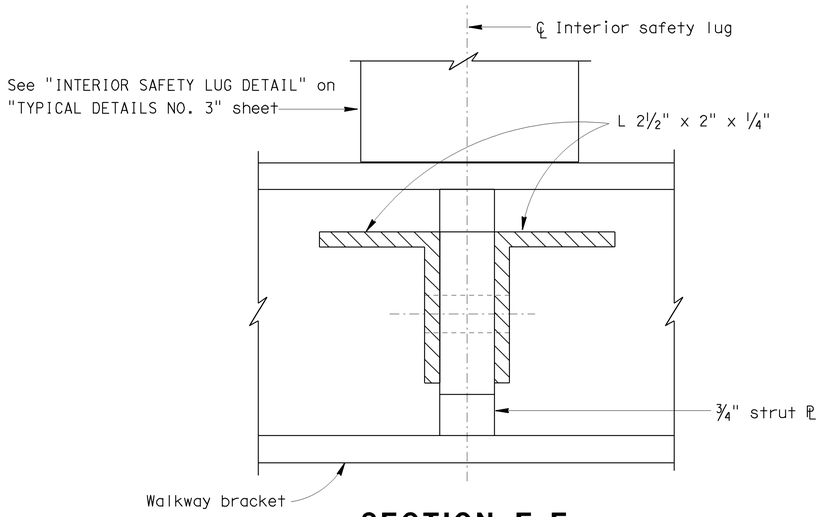

SECTION E-E

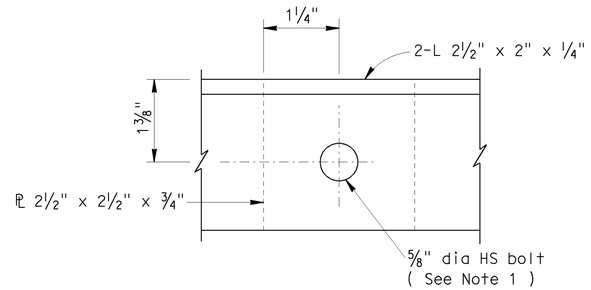

FILLER PLATE (TYP)

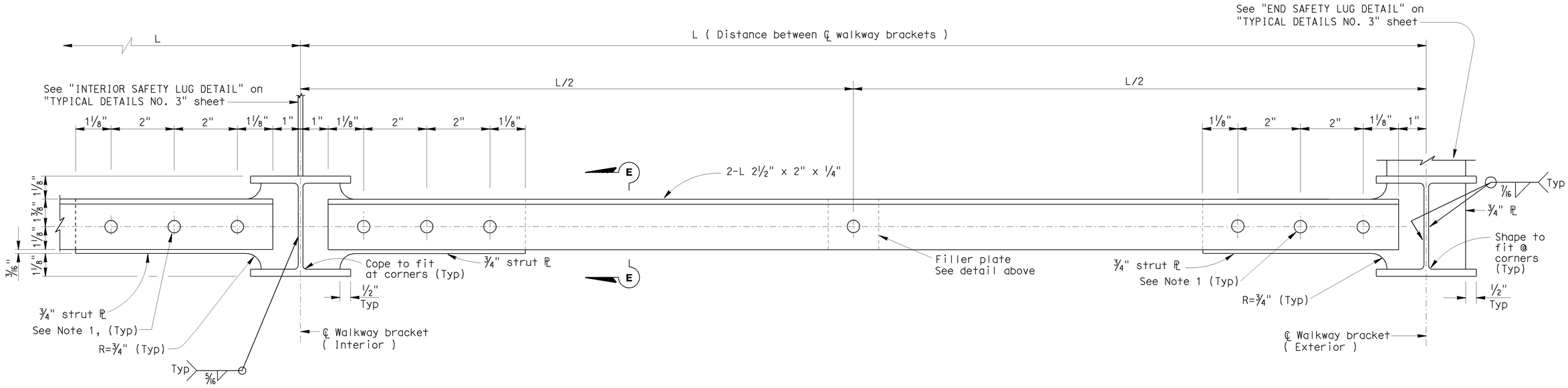

INTERIOR SAFETY LUG LOCATION (TYP)

STRUT SYSTEM (TYP)

(Continuous between end safety lug locations)

END SAFETY LUG LOCATION (TYP)

NOTE:
THE CONTRACTOR SHALL VERIFY ALL CONTROLLING FIELD DIMENSIONS BEFORE ORDERING OR FABRICATING ANY MATERIAL.

NOTE:

1. Drill ¾" dia hole for ⅝" dia HS bolt, 2 hardened washers and nut.

No Scale

BRANCH CHIEF Jeffrey B Woody

	BY	CHECKED
DESIGN	A GUTIERREZ	A BUI/D VORA
DETAILS	D W JUSTICE Jr	D VORA
QUANTITIES	A GUTIERREZ	D VORA

STATE OF CALIFORNIA
DEPARTMENT OF TRANSPORTATION

DIVISION OF ENGINEERING SERVICES
DESIGN AND TECHNICAL SERVICES
SPECIAL DESIGNS BRANCH A

BRIDGE NO. N/A
POST MILE –

BRIDGE MOUNTED SIGN DETAILS
STRUT DETAILS

SD-25

(ENGLISH) SPECIAL DESIGNS BRANCH BORDER SHEET (REV. 7-1-09)

ORIGINAL SCALE IN INCHES FOR REDUCED PLANS 0 1 2 3

CU 07
EA 3Y6001

DISREGARD PRINTS BEARING EARLIER REVISION DATES →

REVISION DATES: 9-28-09 | 10-13-09 | 2-1-10

SHEET OF

FILE => spec_des_br_prj/2009sd/07-3Y6001/sd25-strutdetails.dgn

USERNAME => djustice DATE PLOTTED => 01-FEB-2010 TIME PLOTTED => 14:19

DIST	COUNTY	ROUTE	POST MILES TOTAL PROJECT	SHEET No	TOTAL SHEETS
07	LA	210	R0.4/R5.9	50	87

REGISTERED CIVIL ENGINEER

2-16-10
PLANS APPROVAL DATE

REGISTERED PROFESSIONAL ENGINEER — TILLAT SATTER — No. C42892 — Exp. 3-31-10 — CIVIL — STATE OF CALIFORNIA

The State of California or its officers or agents shall not be responsible for the accuracy or completeness of electronic copies of this plan sheet.

Caltrans now has a web site! To get to the web site, go to: http://www.dot.ca.gov

DETAILS	QUANTITIES
CALCULATED/ DESIGNED BY	T. SATTER
CHECKED BY	K. C. LIU
DATE	6/27/05 — 9/25/08

PROJECT ENGINEER
K C LIU

STATE OF CALIFORNIA - DEPARTMENT OF TRANSPORTATION
Caltrans
SPECIAL DESIGNS BRANCH

~~NOTE:~~
~~No bolt holes required for "ALTERNATIVE EXTERIOR SAFETY CABLE LUG ANCHORAGE DETAILS".~~

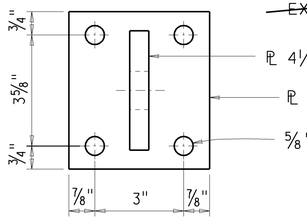

PLAN

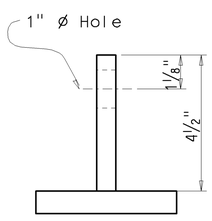

FRONT ELEVATION

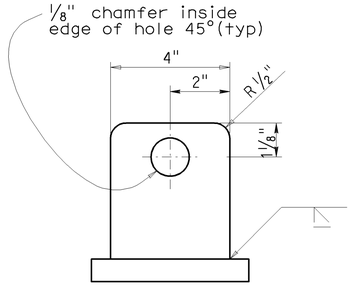

SIDE ELEVATION

EXTERIOR LUG DETAILS
no scale

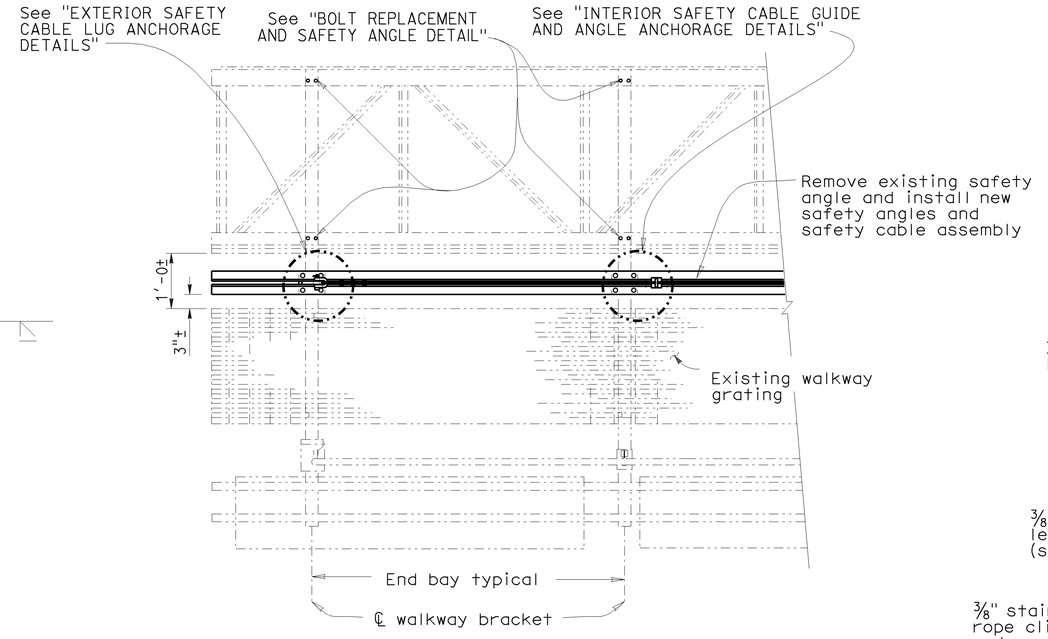

PLAN
no scale

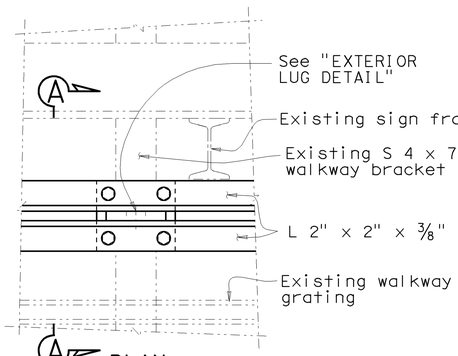

PLAN

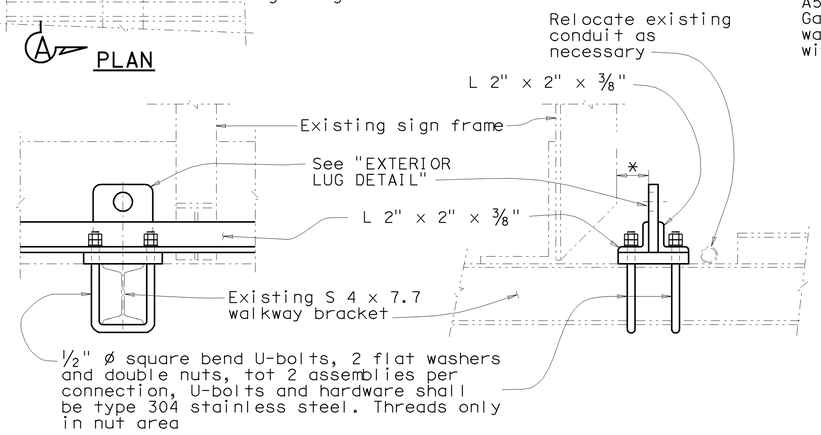

ELEVATION

SECTION A-A

EXTERIOR SAFETY CABLE LUG ANCHORAGE DETAILS
no scale

* minimum of 2" clear from sign face or sign frame.

THE CONTRACTOR SHALL VERIFY ALL CONTROLLING FIELD DIMENSIONS BEFORE ORDERING OR FABRICATING ANY MATERIAL.

Remove existing 3/8" Ø bolts in both end bays and replace with 3/8" Ø SAE J429-Grade 8 bolts, (each end bay), ASTM A563 Grade DH or DH3 or ASTM A194 grade 2H nut, Mechanical Galvanize nut and bolt per ASTM B695. Reuse washer, beveled washer, and lock washer if in good condition. Otherwise replace with galvanized washer, beveled washer and lock washer.

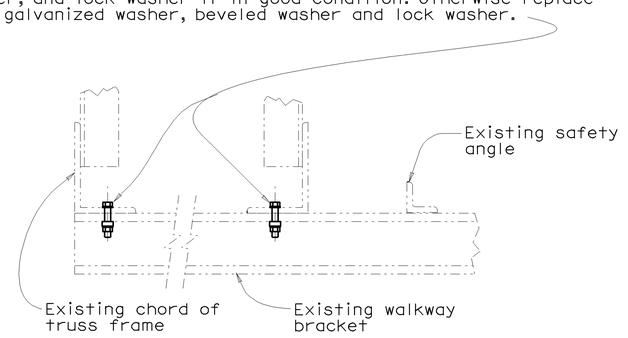

BOLT REPLACEMENT AND SAFETY ANGLE DETAIL
no scale

LEGEND

Existing structure

New construction

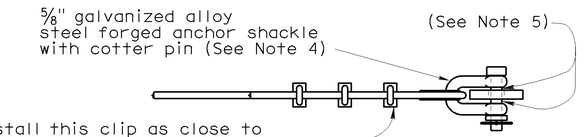

PLAN

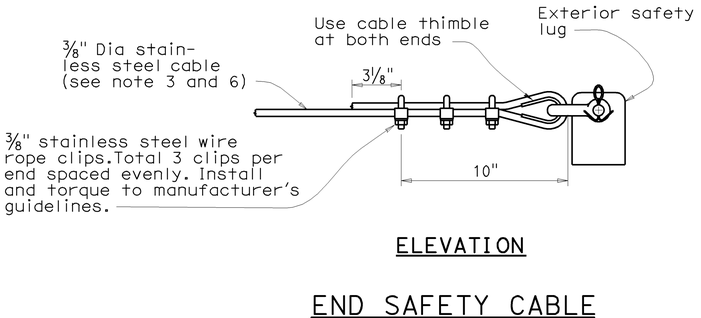

ELEVATION

END SAFETY CABLE
no scale

NOTES

1. Safety cable not shown in all views for clarity.
2. Unless otherwise shown all steel shall be galvanized after fabrication.
3. Stainless steel cable shall be plain with 7 x 19 Class strand core construction using Type 302 or 304 alloy stainless steel strands. Minimum cable breaking strength shall be 10,000 pounds. Cable shall be free of kinks, knots, or deformation and shall be continuous between end lugs. Splices not allowed. Safety cable shall not be prestretched.
4. Shackle shall be galvanized steel with working load limit of 10,000 pounds.
5. Place an equal amount of washers on each side to align cable with end lug without restricting shackle bolt rotation or contacting cable.
6. Prior to tightening cable clips at exterior anchorage, slack in cable shall be removed by the full effort of a typical construction worker.

OVERHEAD SIGN SAFETY CABLE RETROFIT DETAILS

SD-26

LAST REVISION 2-1-10
DATE PLOTTED => 01-FEB-2010
TIME PLOTTED => 14:15

ORIGINAL SCALE IN INCHES FOR REDUCED PLANS 0 1 2 3

USERNAME => djustice
DGN FILE => spec_des_br_proj/2009sd/07-3y6001/07-3y6001sd-26.dgn

CU 07

EA 3Y6001

DIST	COUNTY	ROUTE	KILOMETER POST TOTAL PROJECT	SHEET No	TOTAL SHEETS
07	LA	210	R0.4/R5.9	51	87

REGISTERED CIVIL ENGINEER

2-16-10
PLANS APPROVAL DATE

REGISTERED PROFESSIONAL ENGINEER
TILLAT SATTER
No. C42892
Exp. 3-31-10
CIVIL
STATE OF CALIFORNIA

The State of California or its officers or agents shall not be responsible for the accuracy or completeness of electronic copies of this plan sheet.

Caltrans now has a web site! To get to the web site, go to: http://www.dot.ca.gov

DESIGNED BY	CALCULATED/	CHECKED BY	DETAILS	QUANTITIES
D W JUSTICE Jr	T SATTER	K C LIU	K C LIU	K C LIU
DATE	6/27/05		9/25/08	

PROJECT ENGINEER
K C LIU

STATE OF CALIFORNIA - DEPARTMENT OF TRANSPORTATION
Caltrans SPECIAL DESIGNS BRANCH

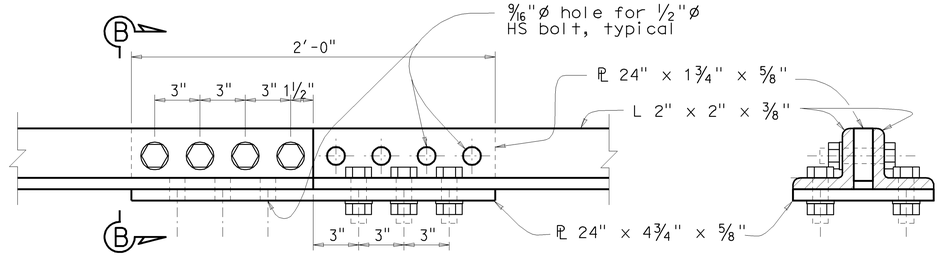

ELEVATION

SECTION B-B

ANGLE SPLICE DETAILS

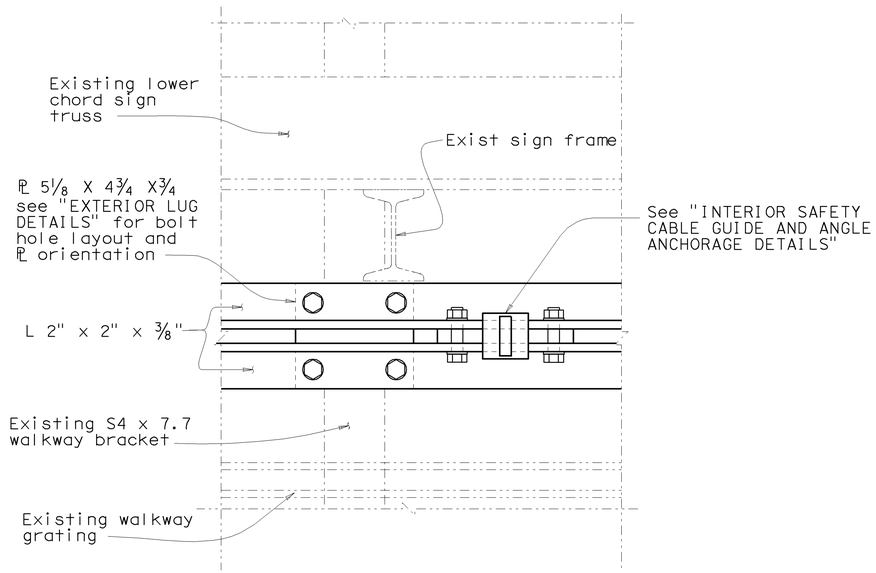

PLAN

NOTE:
Interior cable guide spacing to be max. 5'-6" CC

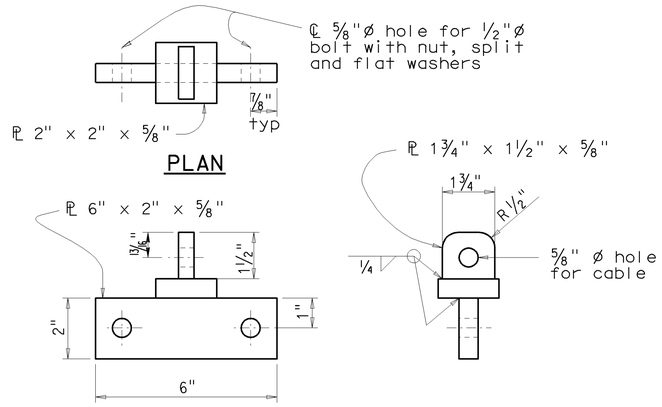

PLAN

FRONT ELEVATION

SIDE ELEVATION

INTERIOR CABLE GUIDE DETAILS

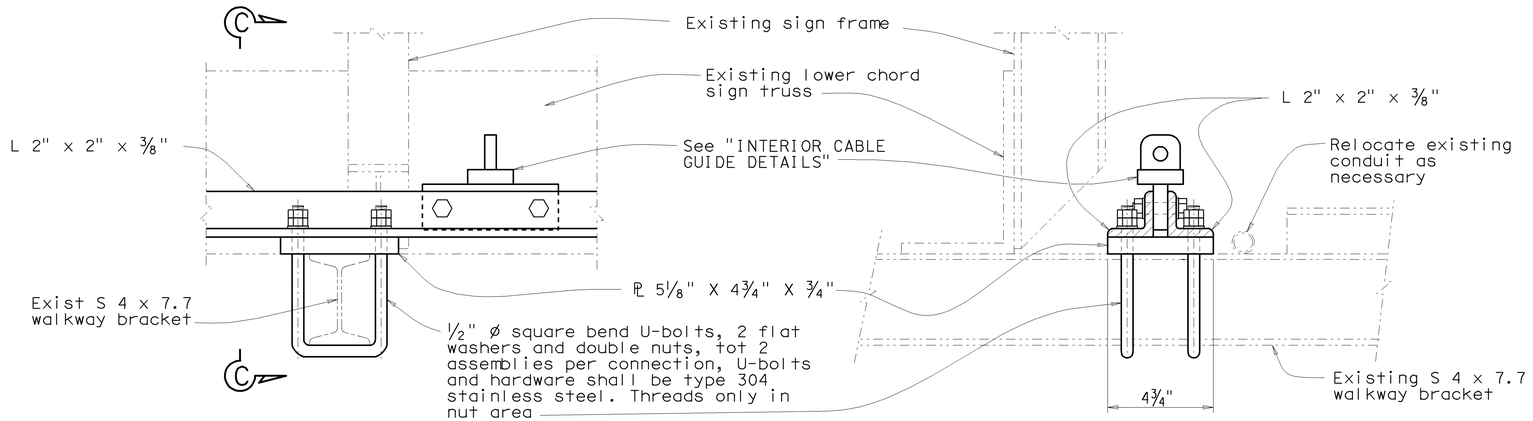

ELEVATION

SECTION C-C

INTERIOR SAFETY CABLE GUIDE AND ANGLE ANCHORAGE DETAILS

no scale

THE CONTRACTOR SHALL VERIFY ALL CONTROLLING FIELD DIMENSIONS BEFORE ORDERING OR FABRICATING ANY MATERIAL.

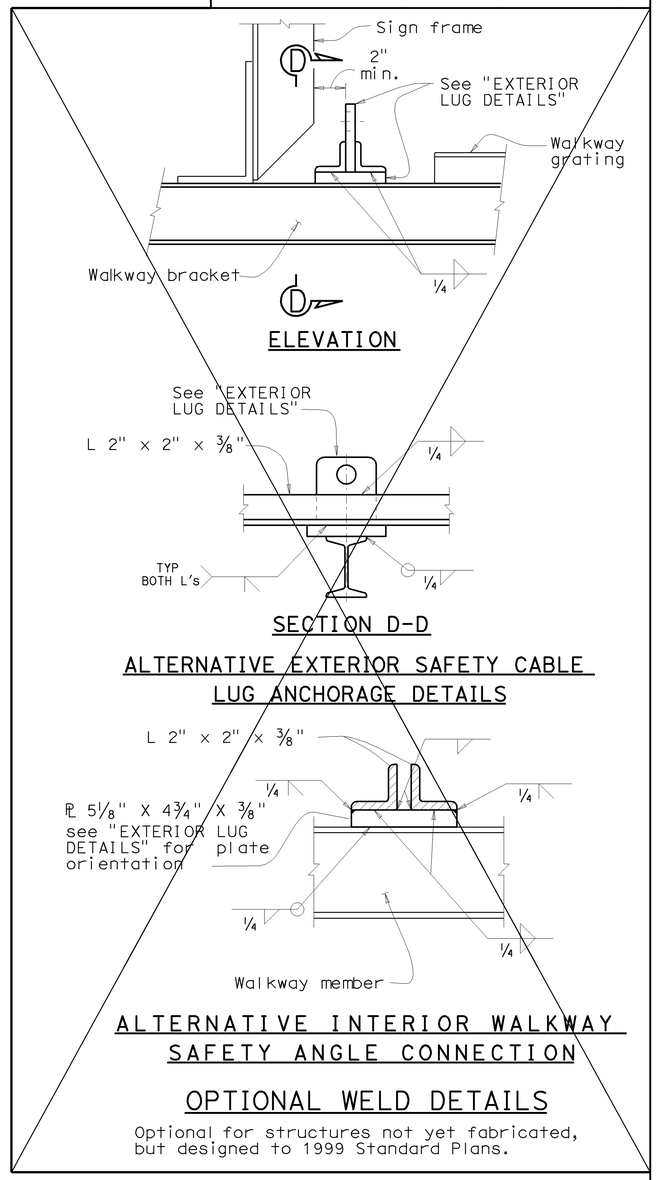

OVERHEAD SIGN SAFETY CABLE RETROFIT DETAILS

SD-27

LAST REVISION 2-1-10
DATE PLOTTED => 01-FEB-2010
TIME PLOTTED => 14:16

ORIGINAL SCALE IN INCHES FOR REDUCED PLANS 0 1 2 3

USERNAME => djustice
DGN FILE => spec_des_br_proj/2009sd/04-3y6001/07-3y6001sd-27.dgn

CU 07

EA 3Y6001

Dist	COUNTY	ROUTE	POST MILES TOTAL PROJECT	SHEET No.	TOTAL SHEETS
07	LA	210	R0.4/R5.9	52	87

REGISTERED CIVIL ENGINEER — DATE 10/14/09

2-16-10
PLANS APPROVAL DATE

REGISTERED PROFESSIONAL ENGINEER — EDGAR HERRERA — No. C67603 — Exp. 6/30/11 — CIVIL — STATE OF CALIFORNIA

THE STATE OF CALIFORNIA OR ITS OFFICERS OR AGENTS SHALL NOT BE RESPONSIBLE FOR THE ACCURACY OR COMPLETENESS OF SCANNED COPIES OF THIS PLAN SHEET.

OVERHEAD SIGN QUANTITIES

SHEET No.	SIGN No.	LOCATION	SIGN CODE	SIGN SIZE L X D (in x in)	60" CIDH CONCRETE PILE (SIGN FOUNDATION)		SIGN STRUCTURE (TRUSS)		SIGN STRUCTURE (BRIDGE MOUNTED WITH WALKWAY)		REMOVE BRIDGE MOUNTED SIGN STRUCTURE	MATERIAL SUMMARY												REMARKS
												SINGLE FACED	BACKGROUND		LEGEND			GRAFFITI FILM		FURNISH FORMED PANEL SIGN (OVERHEAD)	FURNISH LAMINATED PANEL SIGN (1"-TYPE A)	INSTALL SIGN PANEL ON EXISTING FRAME	(N) REMOVE SIGN PANEL	INSTALL SIGN OVERLAY	
					L†	R†	FURNISH	INSTALL	FURNISH	INSTALL			SHEETING COLOR	RETROREFLECTIVE ASTM TYPE	SHEETING COLOR	RETROREFLECTIVE ASTM TYPE	NON-RETROREFLECTIVE ASTM TYPE	STANDARD	PREMIUM					
					F†	F†	LB	LB	LB	LB	EA									SQFT	SQFT	SQFT	SQFT	SQFT	
S-1	1A	FWBT @ STA 21+73	G24(CA)	312 X 110								X	GREEN	IV	WHITE	IV			X	238		238	238		
			G24(CA)	192 X 110								X	GREEN	IV	WHITE	IV			X		147	147	147		
			G24(CA)	312 X 110								X	GREEN	IV	WHITE	IV			X	238		238	238		
			G23(CA)	192 X 110								X	GREEN	IV	WHITE	IV			X	147		147	147		
			W61B(CA)	44 X 20								X	YELLOW	IV	BLACK	IV			X					6	
			SR(CA)	84 X 12								X	WHITE	IV	BLACK	IV			X					7	
S-2	2A	FEBT @ STA 35+05	G85(CA)	192 X 50								X	GREEN	IV	WHITE	IV			X	67		67	67		
			W61B(CA)	44 X 20								X	YELLOW	IV	BLACK	IV			X					6	
	2B	FEBT @ STA 46+61	G83(CA)	168 X 70								X	GREEN	IV	WHITE	IV			X	82		82	82		
	2C	FWBT @ STA 44+54	G24(CA)	336 X 110								X	GREEN	IV	WHITE	IV			X	256		256	256		
			W61B(CA)	44 X 20								X	YELLOW	IV	BLACK	IV			X					6	
			SR(CA)	84 X 12								X	WHITE	IV	BLACK	IV			X					7	
S-3	3A	FEBT @ STA 73+79	G23(CA)	264 X 110								X	GREEN	IV	WHITE	IV			X	202		202	202		
		FWBT @ STA 73+79	G23(CA)	336 X 110								X	GREEN	IV	WHITE	IV			X	257		257	257		
	3B	FWBT @ STA 54+79	G24(CA)	432 X 110								X	GREEN	IV	WHITE	IV			X	330		330	330		
			SR(CA)	132 X 18								X	WHITE	IV	BLACK	IV			X					17	
			G86(CA)	192 X 110								X	GREEN	IV	WHITE	IV			X		147	147	147		
			G85(CA)	168 X 110								X	GREEN	IV	WHITE	IV			X	128		128	128		
			G70-2(CA)	72 X 24								X	GREEN	IV	WHITE	IV			X					12	
	4A	FEBT @ STA 93+10	G85(CA)	216 X 50								X	GREEN	IV	WHITE	IV			X	75		75	75		
S-4	4B	FEBT @ STA 103+97	G83(CA)	168 X 70								X	GREEN	IV	WHITE	IV			X	82		82	82		
	4C	FWBT @ STA 101+87	G83(CA)	168 X 70								X	GREEN	IV	WHITE	IV			X	82		82	82		
SHEET TOTAL																				2,184	294	2,478	2,478	61	

(N) NOT A PAY ITEM

SIGN QUANTITIES

SQ-1

REVISED BY	MARISA G. MANDOCDOC
DATE REVISED	EDGAR HERRERA
CALCULATED-DESIGNED BY	
CHECKED BY	
FUNCTIONAL SUPERVISOR	CRICORIS BIGLARIAN

STATE OF CALIFORNIA - DEPARTMENT OF TRANSPORTATION — TRAFFIC DESIGN

LAST REVISION DATE PLOTTED => 21-FEB-2010
02-16-10 TIME PLOTTED => 20:04

BORDER LAST REVISED 4/11/2008

RELATIVE BORDER SCALE IS IN INCHES 0 1 2 3

USERNAME => s122436
DGN FILE => 73y600oc001.dgn

CU 07380 EA 3Y6001

Dist	COUNTY	ROUTE	POST MILES TOTAL PROJECT	SHEET No.	TOTAL SHEETS
07	LA	210	R0.4/R5.9	53	87

REGISTERED CIVIL ENGINEER — DATE 10/14/09

2-16-10
PLANS APPROVAL DATE

REGISTERED PROFESSIONAL ENGINEER — EDGAR HERRERA — No. C67603 — Exp. 6/30/11 — CIVIL — STATE OF CALIFORNIA

THE STATE OF CALIFORNIA OR ITS OFFICERS OR AGENTS SHALL NOT BE RESPONSIBLE FOR THE ACCURACY OR COMPLETENESS OF SCANNED COPIES OF THIS PLAN SHEET.

OVERHEAD SIGN QUANTITIES

SHEET No.	SIGN No.	LOCATION	SIGN CODE	SIGN SIZE L X D (in x in)	60" CIDH CONCRETE PILE (SIGN FOUNDATION) L†	60" CIDH CONCRETE PILE (SIGN FOUNDATION) R†	SIGN STRUCTURE (TRUSS) FURNISH	SIGN STRUCTURE (TRUSS) INSTALL	SIGN STRUCTURE (BRIDGE MOUNTED WITH WALKWAY) FURNISH	SIGN STRUCTURE (BRIDGE MOUNTED WITH WALKWAY) INSTALL	REMOVE BRIDGE MOUNTED SIGN STRUCTURE	MATERIAL SUMMARY: SINGLE FACED	BACKGROUND: SHEETING COLOR	BACKGROUND: RETROREFLECTIVE ASTM TYPE	LEGEND: SHEETING COLOR	LEGEND: RETROREFLECTIVE ASTM TYPE	LEGEND: NON-RETROREFLECTIVE ASTM TYPE	GRAFFITI FILM: STANDARD	GRAFFITI FILM: PREMIUM	FURNISH FORMED PANEL SIGN (OVERHEAD)	FURNISH LAMINATED PANEL SIGN (1"-TYPE A)	INSTALL SIGN PANEL ON EXISTING FRAME	(N) REMOVE SIGN PANEL	INSTALL SIGN OVERLAY	REMARKS
					F†	F†	LB	LB	LB	LB	EA									SQFT	SQFT	SQFT	SQFT	SQFT	
S-5	5A	FWBT @ STA 131+32	G23(CA)	216 X 90								X	GREEN	IV	WHITE	IV			X	135		135	135		
	5B	FWBT @ STA 112+70	G85(CA)	264 x 70								X	GREEN	IV	WHITE	IV			X	128		128	128		
			G70-2(CA)	72 X 24								X	GREEN	IV	WHITE	IV			X					12	
	5C	FWBT @ STA 131+83	G86(CA)	264 X 90								X	GREEN	IV	WHITE	IV			X	165		165	165		
			G70-2(CA)	72 X 24								X	GREEN	IV	WHITE	IV			X					12	
S-6	6A	FEBT @ STA 144+82	G86(CA)	192 X 90					2,264.73	2,264.73	1	X	GREEN	IV	WHITE	IV			X	120					
			G70-2(CA)	72 X 24								X	GREEN	IV	WHITE	IV			X					12	
	6B	FEBT @ STA 145+45	G23(CA)	312 X 100					3,736.76	3,736.76	1	X	GREEN	IV	WHITE	IV			X	216					
S-7	7A	FEBT @ STA 163+29	G85(CA)	168 X 50								X	GREEN	IV	WHITE	IV			X	58		58	58		
	7B	FEBT @ STA 174+94	G83(CA)	192 X 70								X	GREEN	IV	WHITE	IV			X	93		93	93		
	7C	FWBT @ STA 173+39	G83(CA)	168 X 100								X	GREEN	IV	WHITE	IV			X	117		117	117		
			G70-2(CA)	72 X 24								X	GREEN	IV	WHITE	IV			X					12	
S-8	8A	FEBT @ STA 188+66	G23(CA)	264 X 100					3,026.29	3,026.29	1	X	GREEN	IV	WHITE	IV			X	183					
	8B	FWBT @ STA 182+35	G85(CA)	168 X 50								X	GREEN	IV	WHITE	IV			X	58		58	58		
	8C	FWBT @ STA 203+14	G23(CA)	264 X 90					2,986.96	2,986.96	1	X	GREEN	IV	WHITE	IV			X	165					
S-9	9A	FEBT @ STA 207+73	G85(CA)	216 X 50								X	GREEN	IV	WHITE	IV			X	75		75	75		
	9B	FEBT @ STA 216+25	G83(CA)	192 X 90					2,392.12	2,392.12	1	X	GREEN	IV	WHITE	IV			X	120					
			G70-2(CA)	72 X 24								X	GREEN	IV	WHITE	IV			X					12	
	9C	FEBT @ STA 217+70	G83(CA)	192 X 90					2,392.12	2,392.12	1	X	GREEN	IV	WHITE	IV			X	120					
			G70-2(CA)	72 X 24								X	GREEN	IV	WHITE	IV			X					12	
SHEET TOTAL									16,799.0	16,799.0	6									1,753		829	829	72	

(N) NOT A PAY ITEM

SIGN QUANTITIES

SQ-2

STATE OF CALIFORNIA - DEPARTMENT OF TRANSPORTATION
TRAFFIC DESIGN

FUNCTIONAL SUPERVISOR: CRICORIS BIGLARIAN
CALCULATED-DESIGNED BY: MARISA G. MANDOCDOC
CHECKED BY: EDGAR HERRERA
REVISED BY / DATE REVISED

LAST REVISION DATE PLOTTED => 21-FEB-2010
TIME PLOTTED => 17:39
02-16-10

BORDER LAST REVISED 4/11/2008

RELATIVE BORDER SCALE IS IN INCHES 0 1 2 3

USERNAME => s122436
DGN FILE => 73y600oc002.dgn

CU 07380

EA 3Y6001

Dist	COUNTY	ROUTE	POST MILES TOTAL PROJECT	SHEET No.	TOTAL SHEETS
07	LA	210	R0.4/R5.9	54	87

REGISTERED CIVIL ENGINEER 10/14/09 DATE

2-16-10
PLANS APPROVAL DATE

REGISTERED PROFESSIONAL ENGINEER EDGAR HERRERA No. C67603 Exp. 6/30/11 CIVIL STATE OF CALIFORNIA

THE STATE OF CALIFORNIA OR ITS OFFICERS OR AGENTS SHALL NOT BE RESPONSIBLE FOR THE ACCURACY OR COMPLETENESS OF SCANNED COPIES OF THIS PLAN SHEET.

OVERHEAD SIGN QUANTITIES

SHEET No.	SIGN No.	LOCATION	SIGN CODE	SIGN SIZE L X D (in x in)	60" CIDH CONCRETE PILE (SIGN FOUNDATION) Lt	60" CIDH CONCRETE PILE (SIGN FOUNDATION) Rt	SIGN STRUCTURE (TRUSS) FURNISH	SIGN STRUCTURE (TRUSS) INSTALL	SIGN STRUCTURE (BRIDGE MOUNTED WITH WALKWAY) FURNISH	SIGN STRUCTURE (BRIDGE MOUNTED WITH WALKWAY) INSTALL	REMOVE BRIDGE MOUNTED SIGN STRUCTURE	MATERIAL SUMMARY: SINGLE FACED	BACKGROUND: SHEETING COLOR	BACKGROUND: RETROREFLECTIVE ASTM TYPE	LEGEND: SHEETING COLOR	LEGEND: RETROREFLECTIVE ASTM TYPE	LEGEND: NON-RETROREFLECTIVE ASTM TYPE	GRAFFITI FILM: STANDARD	GRAFFITI FILM: PREMIUM	FURNISH FORMED PANEL SIGN (OVERHEAD)	FURNISH LAMINATED PANEL SIGN (1"-TYPE A)	INSTALL SIGN PANEL ON EXISTING FRAME	(N) REMOVE SIGN PANEL	INSTALL SIGN OVERLAY	REMARKS
					Ft	Ft	LB	LB	LB	LB	EA									SQFT	SQFT	SQFT	SQFT	SQFT	
S-10	10A	FEBT @ STA 237+22	G23(CA)	264 X 100								X	GREEN	IV	WHITE	IV			X	183		183	183		
	10B	FWBT @ STA 227+37	G85(CA)	216 X 50								X	GREEN	IV	WHITE	IV			X	75		75	75		
S-11	11A	FEBT @ STA 248+45	G85(CA)	192 X 90							1														
	11B	FEBT @ STA 250+40	G85(CA)	216 X 90		23	14,450	14,450				X	GREEN	IV	WHITE	IV			X						
			G70-2(CA)	72 X 24								X	GREEN	IV	WHITE	IV			X	120				12	
	11C	FWBT @ STA 248+57	G23(CA)	264 X 90							1														
	11D	FWBT @ STA 249+00	G23(CA)	264 X 90		23	18,170	18,170				X	GREEN	IV	WHITE	IV			X	165					
S-12	12A	FEBT @ STA 262+67	G23(CA)	264 X 100								X	GREEN	IV	WHITE	IV			X	183		183	183		
	12B	FWBT @ STA 271+56	G85(CA)	264 X 70								X	GREEN	IV	WHITE	IV			X	128		128	128		
			G70-2(CA)	72 X 24								X	GREEN	IV	WHITE	IV			X					12	
S-13	13A	FEBT @ STA 276+30	G24(CA)	336 X 120								X	GREEN	IV	WHITE	IV			X	280		280	280		
			G83(CA)	216 X 120								X	GREEN	IV	WHITE	IV			X	180		180	180		
	13B	FWBT @ STA 282+32	G83(CA)	228 X 120								X	GREEN	IV	WHITE	IV			X	190		190	190		
			G70-2(CA)	72 X 24								X	GREEN	IV	WHITE	IV			X					12	
SHEET TOTAL						46	32,620	32,620			2									1,504		1,219	1,219	36	

(N) NOT A PAY ITEM

SIGN QUANTITIES

SQ-3

STATE OF CALIFORNIA - DEPARTMENT OF TRANSPORTATION
Caltrans® TRAFFIC DESIGN

FUNCTIONAL SUPERVISOR: CRICORIS BIGLARIAN
CALCULATED-DESIGNED BY: MARISA G. MANDOCDOC
CHECKED BY: EDGAR HERRERA
REVISED BY
DATE REVISED

LAST REVISION 02-16-10
DATE PLOTTED => 21-FEB-2010
TIME PLOTTED => 17:39

Dist	COUNTY	ROUTE	POST MILES TOTAL PROJECT	SHEET No.	TOTAL SHEETS
07	LA	210	R0.4/R5.9	55	87

REGISTERED CIVIL ENGINEER — DATE 10/14/09

2-16-10
PLANS APPROVAL DATE

REGISTERED PROFESSIONAL ENGINEER — EDGAR HERRERA — No. C67603 — Exp. 6/30/11 — CIVIL — STATE OF CALIFORNIA

THE STATE OF CALIFORNIA OR ITS OFFICERS OR AGENTS SHALL NOT BE RESPONSIBLE FOR THE ACCURACY OR COMPLETENESS OF SCANNED COPIES OF THIS PLAN SHEET.

OVERHEAD SIGN QUANTITIES

SHEET No.	SIGN No.	LOCATION	SIGN CODE	SIGN SIZE L X D (in x in)	60" CIDH CONCRETE PILE (SIGN FOUNDATION)		SIGN STRUCTURE (TRUSS)		SIGN STRUCTURE (BRIDGE MOUNTED WITH WALKWAY)		REMOVE BRIDGE MOUNTED SIGN STRUCTURE	MATERIAL SUMMARY								FURNISH FORMED PANEL SIGN (OVERHEAD)	FURNISH LAMINATED PANEL SIGN (1"-TYPE A)	INSTALL SIGN PANEL ON EXISTING FRAME	(N) REMOVE SIGN PANEL	INSTALL SIGN OVERLAY	REMARKS
					L†	R†	FURNISH	INSTALL	FURNISH	INSTALL		SINGLE FACED	BACKGROUND		LEGEND			GRAFFITI FILM						
					F†	F†	LB	LB	LB	LB	EA		SHEETING COLOR	RETROREFLECTIVE ASTM TYPE	SHEETING COLOR	RETROREFLECTIVE ASTM TYPE	NON-RETROREFLECTIVE ASTM TYPE	STANDARD	PREMIUM	SQFT	SQFT	SQFT	SQFT	SQFT	
S-14	14A	FEBT @ STA 290+15	G24(CA)	336 X 120								X	GREEN	IV	WHITE	IV			X	280		280	280		
			G83(CA)	216 X 120								X	GREEN	IV	WHITE	IV			X	180		180	180		
	14B	FEBT @ STA 301+32	G24(CA)	264 X 120								X	GREEN	IV	WHITE	IV			X	220		220	220		
			G83(CA)	168 X 120								X	GREEN	IV	WHITE	IV			X	140		140	140		
			G70-2(CA)	72 X 24								X	GREEN	IV	WHITE	IV			X					12	
			G85(CA)	288 X 120								X	GREEN	IV	WHITE	IV			X	240		240	240		
			W61B(CA)	44 X 20								X	YELLOW	IV	BLACK	IV			X					6	
		FWBT @ STA 301+32	G23(CA)	240 X 120								X	GREEN	IV	WHITE	IV			X	200		200	200		
S-15	15A	FEBT @ STA 310+31	G85(CA)	192 X 70								X	GREEN	IV	WHITE	IV			X	93		93	93		
			G70-2(CA)	72 X 24								X	GREEN	IV	WHITE	IV			X					12	
SHEET TOTAL																				1,353		1,353	1,353	30	
TOTAL						46	32,620	32,620	16,799	16,799	8									6,794	294	5,879	5,879	199	

(N) NOT A PAY ITEM

SIGN QUANTITIES

SQ-4

CALCULATED-DESIGNED BY: MARISA G. MANDOCDOC
CHECKED BY: EDGAR HERRERA
REVISED BY
DATE REVISED
FUNCTIONAL SUPERVISOR: CRICORIS BIGLARIAN

STATE OF CALIFORNIA - DEPARTMENT OF TRANSPORTATION
Caltrans® TRAFFIC DESIGN

LAST REVISION | DATE PLOTTED => 21-FEB-2010 | 02-16-10 | TIME PLOTTED => 17:40

BORDER LAST REVISED 4/11/2008

RELATIVE BORDER SCALE IS IN INCHES 0 1 2 3

USERNAME => s122436
DGN FILE => 73y600oc004.dgn

CU 07380 EA 3Y6001

Dist	COUNTY	ROUTE	POST MILES TOTAL PROJECT	SHEET No.	TOTAL SHEETS
07	LA	210	R0.4/R5.9	56	87

REGISTERED ~~CIVIL ENGINEER~~ 10/14/09 DATE

2-16-10
PLANS APPROVAL DATE

REGISTERED PROFESSIONAL ENGINEER
EDGAR HERRERA
No. C67603
Exp. 6/30/11
CIVIL
STATE OF CALIFORNIA

THE STATE OF CALIFORNIA OR ITS OFFICERS OR AGENTS SHALL NOT BE RESPONSIBLE FOR THE ACCURACY OR COMPLETENESS OF SCANNED COPIES OF THIS PLAN SHEET.

ROADSIDE SIGN QUANTITIES

SHEET No.	LOCATION	SIGN No.	SIGN CODE	PANEL SIZE (in X in)	SIGN FACING MATERIAL							FURNISH SINGLE SHEET ALUMINUM SIGN (SQFT)				ROADSIDE SIGN (STRAP & SADDLE BRACKET METHOD)	REMARKS
					SINGLE FACED	BACKGROUND		LEGEND			GRAFFITI FILM	UNFRAMED ALUMINUM		FRAMED ALUMINUM			
						SHEETING COLOR	RETRO - REFLECTIVE ASTM TYPE	SHEETING COLOR	RETRO - REFLECTIVE ASTM TYPE	NON - REFLECTIVE	PREMIUM	0.063"	0.080"	0.063"	0.080"	EA	
S-2	FEBT @ PM 0.7	201	G70-4(CA)	42 X 42	X	G	III	W	III		X	12.25				1	EXIT NUMBER
	FEBT @ PM 0.9	202	G70-4(CA)	42 X 42	X	G	III	W	III		X	12.25				1	EXIT NUMBER
S-4	FEBT @ PM 1.8	401	G70-4(CA)	42 X 42	X	G	III	W	III		X	12.25				1	EXIT NUMBER
	FEBT @ PM 2	402	G70-4(CA)	42 X 42	X	G	III	W	III		X	12.25				1	EXIT NUMBER
	FWBT @ PM 1.9	403	G70-4(CA)	42 X 42	X	G	III	W	III		X	12.25				1	EXIT NUMBER
S-7	FEBT @ PM 3.1	701	G70-4(CA)	42 X 42	X	G	III	W	III		X	12.25				1	EXIT NUMBER
	FEBT @ PM 3.31	702	G70-4(CA)	42 X 42	X	G	III	W	III		X	12.25				1	EXIT NUMBER
S-9	FEBT @ PM 3.9	901	G70-4(CA)	42 X 42	X	G	III	W	III		X	12.25				1	EXIT NUMBER
S-10	FEBT @ PM 4.3	1001	G70-4(CA)	42 X 42	X	G	III	W	III		X	12.25				1	EXIT NUMBER
	TOTAL											110				9	

LEGEND: B = BLACK ; Y = YELLOW ; R = RED ; W = WHITE ; G = GREEN ; BLU = BLUE

SIGN QUANTITIES

SQ-5

CALCULATED-DESIGNED BY: MARISA G. MANDOCDOC
CHECKED BY: EDGAR HERRERA
FUNCTIONAL SUPERVISOR: CRICORIS BIGLARIAN
REVISED BY
DATE REVISED
STATE OF CALIFORNIA - DEPARTMENT OF TRANSPORTATION
Caltrans® TRAFFIC DESIGN

LAST REVISION 02-16-10
DATE PLOTTED => 21-FEB-2010
TIME PLOTTED => 17:40

BORDER LAST REVISED 4/11/2008
RELATIVE BORDER SCALE IS IN INCHES 0 1 2 3
USERNAME => s122436
DGN FILE => 73y600oc005.dgn
CU 07380 EA 3Y6001

Dist	COUNTY	ROUTE	POST MILES TOTAL PROJECT	SHEET No.	TOTAL SHEETS
07	LA	210	R0.4/R5.9	57	87

Rania Wassily 2-10-10
REGISTERED CIVIL ENGINEER DATE

2-16-10
PLANS APPROVAL DATE

REGISTERED PROFESSIONAL ENGINEER
RANIA WASSILY
No. 59311
Exp 6-30-11
CIVIL
STATE OF CALIFORNIA

THE STATE OF CALIFORNIA OR ITS OFFICERS OR AGENTS SHALL NOT BE RESPONSIBLE FOR THE ACCURACY OR COMPLETENESS OF SCANNED COPIES OF THIS PLAN SHEET.

SUMMARY OF QUANTITIES

ITEM DESCRIPTION	UNIT OF MEASURE	QUANTITY
REMOVE ASPHALT CONCRETE DIKE	LF	200
HOT MIX ASPHALT (TYPR B)	TON	2
PLACE HOT MIX ASPHALT DIKE (TYPE C)	LF	150
PLACE HOT MIX ASPHALT DIKE (TYPE F)	LF	70
METAL BEAM GUARD RAILING (WOOD POST)	LF	200
END ANCHOR ASSEMBLY	EA	2

REVISED BY | DATE REVISED
RANIA WASSILY | SHAFIQUL ISLAM
CALCULATED-DESIGNED BY | CHECKED BY
FUNCTIONAL SUPERVISOR: SHAFIQUL ISLAM

STATE OF CALIFORNIA - DEPARTMENT OF TRANSPORTATION
Caltrans® MAINTENANCE ENGINEERING

SUMMARY OF QUANTITIES

Q-1

LAST REVISION | DATE PLOTTED => 21-FEB-2010
02-16-10 | TIME PLOTTED => 17:41

DIST	COUNTY	ROUTE	POST MILES TOTAL PROJECT	SHEET No	TOTAL SHEETS
07	LA	210	R0.4/R5.9	58	87

Amare Tsegie 1-5-10
REGISTERED CIVIL ENGINEER

2-16-10
PLANS APPROVAL DATE

REGISTERED PROFESSIONAL ENGINEER
Amare Tsegie
No. C67529
Exp. 6-30-11
CIVIL
STATE OF CALIFORNIA

The State of California or its officers or agents shall not be responsible for the accuracy or completeness of electronic copies of this plan sheet.

This LOTB sheet was prepared in accordance with the Caltrans Soil & Rock Logging, Classification, & Presentation Manual (June 2007).

BENCH MARK

GPS 2025
2.25" bronze survey disk (CADH)
set in asphaltic conc. face of shoulder.
N 588847.944
E 1961273.445
Elev = 1235.8'
Datum; NAVD 88

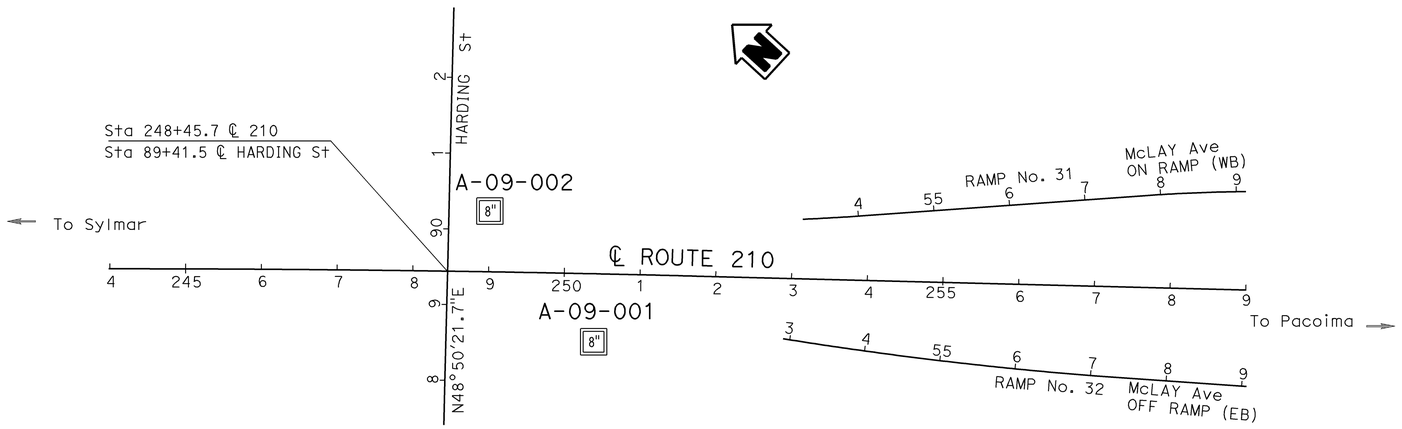

PLAN
1"=100'

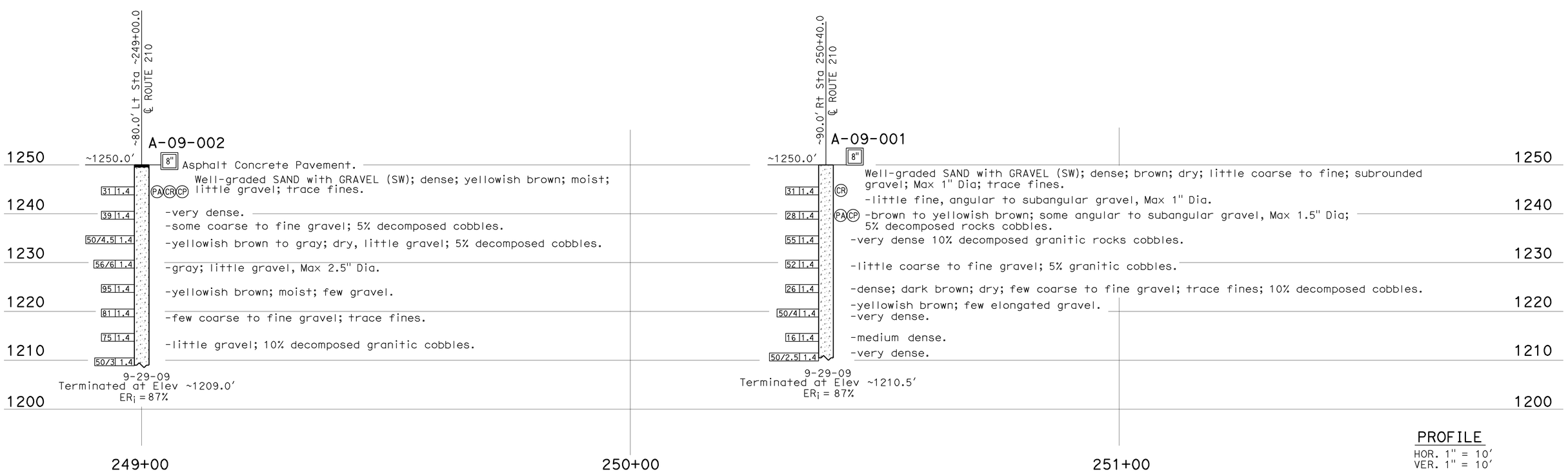

PROFILE
HOR. 1" = 10'
VER. 1" = 10'

ENGINEERING SERVICES	GEOTECHNICAL SERVICES	STATE OF CALIFORNIA DEPARTMENT OF TRANSPORTATION	DIVISION OF ENGINEERING SERVICES STRUCTURE DESIGN DESIGN BRANCH	BRIDGE NO. / POST MILES R4.5	CANTILEVER OVERHEAD SIGN LOG OF TEST BORINGS 1 OF 3
FUNCTIONAL SUPERVISOR NAME: Chi-Tseng Liu	DRAWN BY: C. Christian, I.G-Remmen 12/09 CHECKED BY: F. Gerami	FIELD INVESTIGATION BY: A. Tsegie			
OGS CIVIL LOG OF TEST BORINGS SHEET	ORIGINAL SCALE IN INCHES FOR REDUCED PLANS 0 1 2 3		CU 07 EA 3Y6001	DISREGARD PRINTS BEARING EARLIER REVISION DATES	REVISION DATES 12-29-09 01-05-10 SHEET OF

USERNAME => s122436 DATE PLOTTED => 21-FEB-2010 TIME PLOTTED => 17:41

REFERENCE: CALTRANS SOIL & ROCK LOGGING, CLASSIFICATION, AND PRESENTATION MANUAL (JUNE 2007)

DIST	COUNTY	ROUTE	POST MILES TOTAL PROJECT	SHEET No	TOTAL SHEETS
07	LA	210	R0.4/R5.9	59	87

Amare Tsegie 1-5-10
REGISTERED CIVIL ENGINEER

2-16-10
PLANS APPROVAL DATE

REGISTERED PROFESSIONAL ENGINEER — Amare Tsegie No. C67529 Exp. 6-30-11 CIVIL — STATE OF CALIFORNIA

The State of California or its officers or agents shall not be responsible for the accuracy or completeness of electronic copies of this plan sheet.

CEMENTATION

Description	Criteria
Weak	Crumbles or breaks with handling or little finger pressure.
Moderate	Crumbles or breaks with considerable finger pressure.
Strong	Will not crumble or break with finger pressure.

BOREHOLE IDENTIFICATION

Symbol	Hole Type	Description
Size	A	Auger Boring
Size	R P	Rotary drilled boring Rotary percussion boring (air)
Size	R	Rotary drilled diamond core
Size	HD HA	Hand driven (1-inch soil tube) Hand Auger
●	D	Dynamic Cone Penetration Boring
▲	CPT	Cone Penetration Test (ASTM D 5778-95)
⬚	O	Other

Note: Size in inches.

CONSISTENCY OF COHESIVE SOILS

Description	Unconfined Compressive Strength (tsf)	Pocket Penetrometer Measurement (tsf)	Torvane Measurement (tsf)	Field Approximation
Very Soft	< 0.25	< 0.25	< 0.12	Easily penetrated several inches by fist
Soft	0.25 to 0.50	0.25 to 0.50	0.12 to 0.25	Easily penetrated several inches by thumb
Medium Stiff	0.50 to 1.0	0.50 to 1.0	0.25 to 0.50	Penetrated several inches by thumb with moderate effort
Stiff	1 to 2	1 to 2	0.50 to 1.0	Readily indented by thumb but penetrated only with great effort
Very Stiff	2 to 4	2 to 4	1.0 to 2.0	Readily indented by thumbnail
Hard	> 4.0	> 4.0	> 2.0	Indented by thumbnail with difficulty

PLASTICITY OF FINE-GRAINED SOILS

Description	Criteria
Nonplastic	A 1/8-inch thread cannot be rolled at any water content.
Low	The thread can barely be rolled and the lump cannot be formed when drier than the plastic limit.
Medium	The thread is easy to roll and not much time is required to reach the plastic limit. The thread cannot be rerolled after reaching the plastic limit. The lump crumbles when drier than the plastic limit.
High	It takes considerable time rolling and kneading to reach the plastic limit. The thread can be rerolled several times after reaching the plastic limit. The lump can be formed without crumbling when drier than the plastic limit.

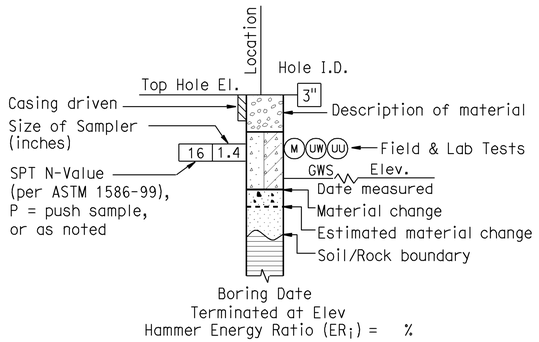

ROTARY BORING

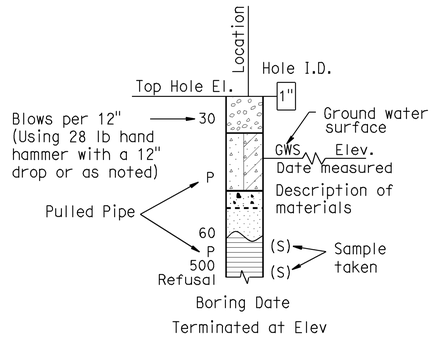

HAND BORING

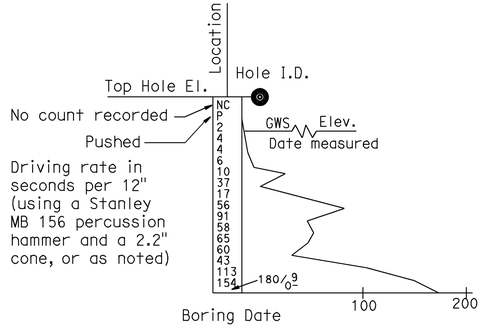

DYNAMIC CONE PENETRATION BORING

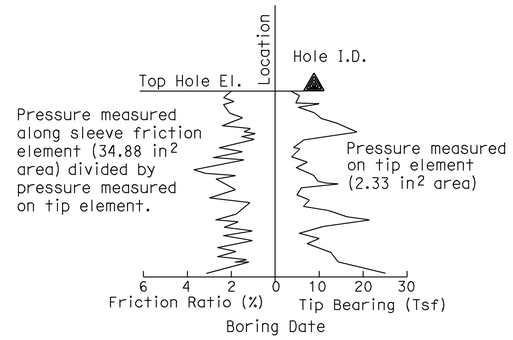

CONE PENETRATION TEST (CPT) SOUNDING

ENGINEERING SERVICES	GEOTECHNICAL SERVICES	STATE OF CALIFORNIA DEPARTMENT OF TRANSPORTATION	DIVISION OF ENGINEERING SERVICES STRUCTURE DESIGN	BRIDGE NO.	CANTILEVER OVERHEAD SIGN
	PREPARED BY: I.G-Remmen 12/09		DESIGN BRANCH	POST MILE R4.5	LOG OF TEST BORINGS 2 OF 3

GS LOTB SOIL LEGEND

ORIGINAL SCALE IN INCHES FOR REDUCED PLANS 0 1 2 3

CU 07 EA 3Y6001

DISREGARD PRINTS BEARING EARLIER REVISION DATES →

REVISION DATES | SHEET | OF

FILE => 73y600qa002.dgn

USERNAME => s122436 DATE PLOTTED => 21-FEB-2010 TIME PLOTTED => 17:42

REFERENCE: CALTRANS SOIL & ROCK LOGGING, CLASSIFICATION, AND PRESENTATION MANUAL (JUNE 2007)

GROUP SYMBOLS AND NAMES

Graphic/Symbol	Group Names	Graphic/Symbol	Group Names
GW	Well-graded GRAVEL Well-graded GRAVEL with SAND	CL	Lean CLAY Lean CLAY with SAND Lean CLAY with GRAVEL SANDY lean CLAY SANDY lean CLAY with GRAVEL GRAVELLY lean CLAY GRAVELLY lean CLAY with SAND
GP	Poorly graded GRAVEL Poorly graded GRAVEL with SAND		
GW-GM	Well-graded GRAVEL with SILT Well-graded GRAVEL with SILT and SAND	CL-ML	SILTY CLAY SILTY CLAY with SAND SILTY CLAY with GRAVEL SANDY SILTY CLAY SANDY SILTY CLAY with GRAVEL GRAVELLY SILTY CLAY GRAVELLY SILTY CLAY with SAND
GW-GC	Well-graded GRAVEL with CLAY (or SILTY CLAY) Well-graded GRAVEL with CLAY and SAND (or SILTY CLAY and SAND)		
GP-GM	Poorly graded GRAVEL with SILT Poorly graded GRAVEL with SILT and SAND	ML	SILT SILT with SAND SILT with GRAVEL SANDY SILT SANDY SILT with GRAVEL GRAVELLY SILT GRAVELLY SILT with SAND
GP-GC	Poorly graded GRAVEL with CLAY (or SILTY CLAY) Poorly graded GRAVEL with CLAY and SAND (or SILTY CLAY and SAND)		
GM	SILTY GRAVEL SILTY GRAVEL with SAND	OL	ORGANIC lean CLAY ORGANIC lean CLAY with SAND ORGANIC lean CLAY with GRAVEL SANDY ORGANIC lean CLAY SANDY ORGANIC lean CLAY with GRAVEL GRAVELLY ORGANIC lean CLAY GRAVELLY ORGANIC lean CLAY with SAND
GC	CLAYEY GRAVEL CLAYEY GRAVEL with SAND		
GC-GM	SILTY, CLAYEY GRAVEL SILTY, CLAYEY GRAVEL with SAND	OL	ORGANIC SILT ORGANIC SILT with SAND ORGANIC SILT with GRAVEL SANDY ORGANIC SILT SANDY ORGANIC SILT with GRAVEL GRAVELLY ORGANIC SILT GRAVELLY ORGANIC SILT with SAND
SW	Well-graded SAND Well-graded SAND with GRAVEL		
SP	Poorly graded SAND Poorly graded SAND with GRAVEL	CH	Fat CLAY Fat CLAY with SAND Fat CLAY with GRAVEL SANDY fat CLAY SANDY fat CLAY with GRAVEL GRAVELLY fat CLAY GRAVELLY fat CLAY with SAND
SW-SM	Well-graded SAND with SILT Well-graded SAND with SILT and GRAVEL		
SW-SC	Well-graded SAND with CLAY (or SILTY CLAY) Well-graded SAND with CLAY and GRAVEL (or SILTY CLAY and GRAVEL)	MH	Elastic SILT Elastic SILT with SAND Elastic SILT with GRAVEL SANDY elastic SILT SANDY elastic SILT with GRAVEL GRAVELLY elastic SILT GRAVELLY elastic SILT with SAND
SP-SM	Poorly graded SAND with SILT Poorly graded SAND with SILT and GRAVEL		
SP-SC	Poorly graded SAND with CLAY (or SILTY CLAY) Poorly graded SAND with CLAY and GRAVEL (or SILTY CLAY and GRAVEL)	OH	ORGANIC fat CLAY ORGANIC fat CLAY with SAND ORGANIC fat CLAY with GRAVEL SANDY ORGANIC fat CLAY SANDY ORGANIC fat CLAY with GRAVEL GRAVELLY ORGANIC fat CLAY GRAVELLY ORGANIC fat CLAY with SAND
SM	SILTY SAND SILTY SAND with GRAVEL		
SC	CLAYEY SAND CLAYEY SAND with GRAVEL	OH	ORGANIC elastic SILT ORGANIC elastic SILT with SAND ORGANIC elastic SILT with GRAVEL SANDY ORGANIC elastic SILT SANDY ORGANIC elastic SILT with GRAVEL GRAVELLY ORGANIC elastic SILT GRAVELLY ORGANIC elastic SILT with SAND
SC-SM	SILTY, CLAYEY SAND SILTY, CLAYEY SAND with GRAVEL		
PT	PEAT	OL/OH	ORGANIC SOIL ORGANIC SOIL with SAND ORGANIC SOIL with GRAVEL SANDY ORGANIC SOIL SANDY ORGANIC SOIL with GRAVEL GRAVELLY ORGANIC SOIL GRAVELLY ORGANIC SOIL with SAND
	COBBLES COBBLES and BOULDERS BOULDERS		

FIELD AND LABORATORY TESTING

- (C) Consolidation (ASTM D 2435)
- (CL) Collapse Potential (ASTM D 5333)
- (CP) Compaction Curve (CTM 216)
- (CR) Corrosivity Testing (CTM 643, CTM 422, CTM 417)
- (CU) Consolidated Undrained Triaxial (ASTM D 4767)
- (DS) Direct Shear (ASTM D 3080)
- (EI) Expansion Index (ASTM D 4829)
- (M) Moisture Content (ASTM D 2216)
- (OC) Organic Content-% (ASTM D 2974)
- (P) Permeability (CTM 220)
- (PA) Particle Size Analysis (ASTM D 422)
- (PI) Plasticity Index (AASHTO T 90) Liquid Limit (AASHTO T 89)
- (PL) Point Load Index (ASTM D 5731)
- (PM) Pressure Meter
- (PP) Pocket Penetrometer
- (R) R-Value (CTM 301)
- (SE) Sand Equivalent (CTM 217)
- (SG) Specific Gravity (AASHTO T 100)
- (SL) Shrinkage Limit (ASTM D 427)
- (SW) Swell Potential (ASTM D 4546)
- (TV) Pocket Torvane
- (UC) Unconfined Compression-Soil (ASTM D 2166) Unconfined Compression-Rock (ASTM D 2938)
- (UU) Unconsolidated Undrained Triaxial (ASTM D 2850)
- (UW) Unit Weight (ASTM D 4767)
- (VS) Vane Shear (AASHTO T 223)

DIST	COUNTY	ROUTE	POST MILES TOTAL PROJECT	SHEET No	TOTAL SHEETS
07	LA	210	R0.4/R5.9	60	87

Amare T 1-5-10
REGISTERED CIVIL ENGINEER

2-16-10
PLANS APPROVAL DATE

REGISTERED PROFESSIONAL ENGINEER — Amare Tsegie — No. C67529 — Exp. 6-30-11 — CIVIL — STATE OF CALIFORNIA

The State of California or its officers or agents shall not be responsible for the accuracy or completeness of electronic copies of this plan sheet.

APPARENT DENSITY OF COHESIONLESS SOILS

Description	SPT N_{60} (Blows / 12 inches)
Very loose	0 - 4
Loose	5 - 10
Medium Dense	11 - 30
Dense	31 - 50
Very Dense	> 50

MOISTURE

Description	Criteria
Dry	Absence of moisture, dusty, dry to the touch
Moist	Damp but no visible water
Wet	Visible free water, usually soil is below water table

PERCENT OR PROPORTION OF SOILS

Description	Criteria
Trace	Particles are present but estimated to be less than 5%
Few	5 to 10%
Little	15 to 25%
Some	30 to 45%
Mostly	50 to 100%

PARTICLE SIZE

Description		Size
Boulder		> 12"
Cobble		3" to 12"
Gravel	Coarse	3/4" to 3"
	Fine	No. 4 to 3/4"
Sand	Coarse	No. 10 to No. 4
	Medium	No. 40 to No. 10
	Fine	No. 200 to No. 40

ENGINEERING SERVICES	GEOTECHNICAL SERVICES	STATE OF CALIFORNIA DEPARTMENT OF TRANSPORTATION	DIVISION OF ENGINEERING SERVICES STRUCTURE DESIGN	BRIDGE NO.	CANTILEVER OVERHEAD SIGN
	PREPARED BY: I.G-Remmen 12/09		DESIGN BRANCH	POST MILE R4.5	LOG OF TEST BORINGS 3 OF 3

GS LOTB SOIL LEGEND

ORIGINAL SCALE IN INCHES FOR REDUCED PLANS 0 1 2 3

CU 07 EA 3Y6001

DISREGARD PRINTS BEARING EARLIER REVISION DATES →

REVISION DATES | SHEET | OF

USERNAME => s122436 DATE PLOTTED => 21-FEB-2010 TIME PLOTTED => 17:43

FILE => 73y600qq003.dgn

NOTE: FOR ACCURATE RIGHT OF WAY AND ACCESS DATA,
CONTACT RIGHT OF WAY ENGINEERING AT THE DISTRICT OFFICE.

Dist	COUNTY	ROUTE	POST MILES TOTAL PROJECT	SHEET No.	TOTAL SHEETS
07	LA	210	R0.4/R5.9	61	87

1/14/10
REGISTERED ELECTRICAL ENGINEER DATE

2-16-10
PLANS APPROVAL DATE

REGISTERED PROFESSIONAL ENGINEER
C. BURCIAGA
No. E015302
Exp. 3/31/11
ELECT
STATE OF CALIFORNIA

THE STATE OF CALIFORNIA OR ITS OFFICERS OR AGENTS SHALL NOT BE RESPONSIBLE FOR THE ACCURACY OR COMPLETENESS OF SCANNED COPIES OF THIS PLAN SHEET.

PROJECT NOTES: (THIS SHEET)

1 RC SIGN ILLUMINATION EQUIPMENT.
2 EXISTING 2"C, 4#6.
3 EXISTING 2"C, 2#6.

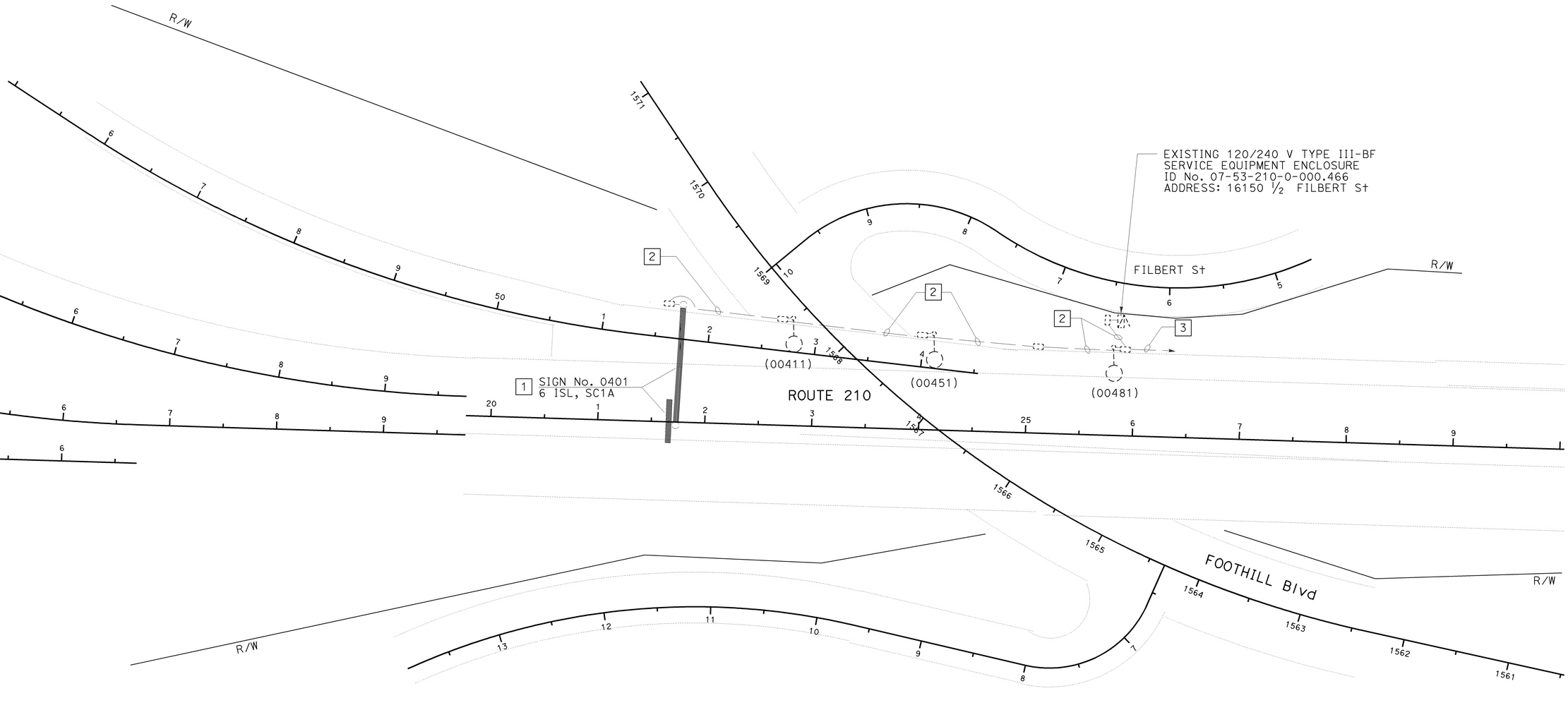

MODIFY SIGN ILLUMINATION

SCALE 1:50

E-1

FOR WIRING DIAGRAM SEE SHEET E-16
THIS PLAN IS ACCURATE FOR ELECTRICAL WORK ONLY.

STATE OF CALIFORNIA - DEPARTMENT OF TRANSPORTATION
Caltrans® TRAFFIC DESIGN
FUNCTIONAL SUPERVISOR: YI TSAU
CALCULATED-DESIGNED BY: FARIDA MAHMOOD
CHECKED BY: CECILIO BURCIAGA
REVISED BY
DATE REVISED
LAST REVISION | DATE PLOTTED => 21-FEB-2010 | TIME PLOTTED => 17:45 | 02-16-10

BORDER LAST REVISED 4/11/2008
RELATIVE BORDER SCALE IS IN INCHES 0 1 2 3
USERNAME => s122436
DGN FILE => 73y600ua001.dgn
CU 07380
EA 3Y6001

NOTE: FOR ACCURATE RIGHT OF WAY AND ACCESS DATA,
CONTACT RIGHT OF WAY ENGINEERING AT THE DISTRICT OFFICE.

Dist	COUNTY	ROUTE	POST MILES TOTAL PROJECT	SHEET No.	TOTAL SHEETS
07	LA	210	R0.4/R5.9	62	87

1/14/10
REGISTERED ELECTRICAL ENGINEER DATE

2-16-10
PLANS APPROVAL DATE

REGISTERED PROFESSIONAL ENGINEER
C. BURCIAGA
No. E015302
Exp. 3/31/11
ELECT
STATE OF CALIFORNIA

THE STATE OF CALIFORNIA OR ITS OFFICERS OR AGENTS SHALL NOT BE RESPONSIBLE FOR THE ACCURACY OR COMPLETENESS OF SCANNED COPIES OF THIS PLAN SHEET.

PROJECT NOTES: (THIS SHEET)

1 RC SIGN ILLUMINATION EQUIPMENT.
2 EXISTING 2"C, 2#6.

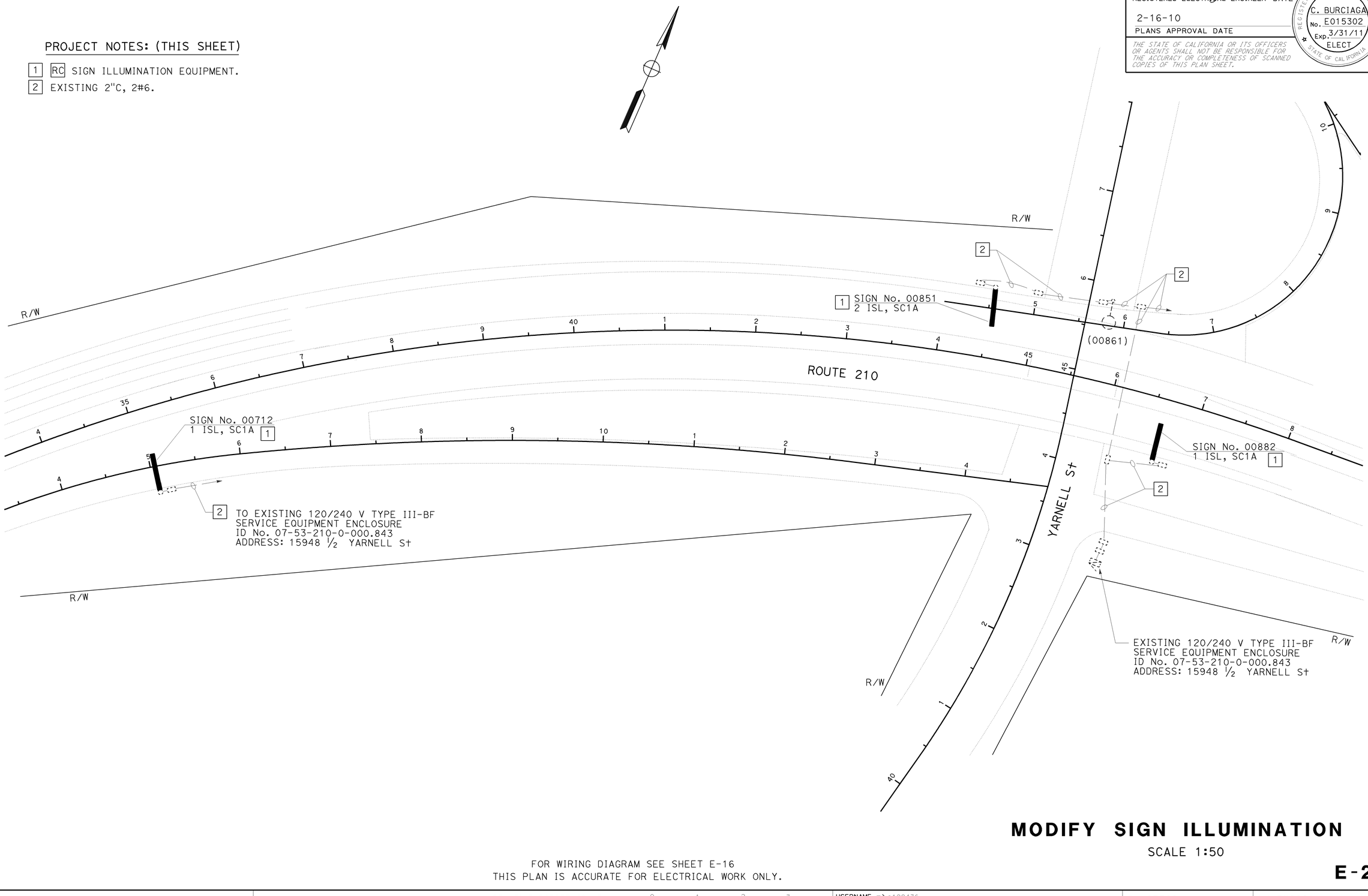

MODIFY SIGN ILLUMINATION

SCALE 1:50

FOR WIRING DIAGRAM SEE SHEET E-16
THIS PLAN IS ACCURATE FOR ELECTRICAL WORK ONLY.

E-2

REVISED BY	DATE REVISED
FARIDA MAHMOOD	
CECILIO BURCIAGA	
CALCULATED-DESIGNED BY	CHECKED BY
FUNCTIONAL SUPERVISOR	
Y1 TSAU	

STATE OF CALIFORNIA - DEPARTMENT OF TRANSPORTATION
Caltrans® TRAFFIC DESIGN

LAST REVISION 00-00-00
DATE PLOTTED => 21-FEB-2010
TIME PLOTTED => 17:45

BORDER LAST REVISED 4/11/2008 | RELATIVE BORDER SCALE IS IN INCHES 0 1 2 3 | USERNAME => s122436 | DGN FILE => 73y600ua002.dgn | CU 07380 | EA 3Y6001

Dist	COUNTY	ROUTE	POST MILES TOTAL PROJECT	SHEET No.	TOTAL SHEETS
07	LA	210	R0.4/R5.9	63	87

REGISTERED ELECTRICAL ENGINEER — 1/14/10 DATE

C. BURCIAGA No. E015302 Exp. 3/31/11 ELECT — REGISTERED PROFESSIONAL ENGINEER — STATE OF CALIFORNIA

2-16-10
PLANS APPROVAL DATE

THE STATE OF CALIFORNIA OR ITS OFFICERS OR AGENTS SHALL NOT BE RESPONSIBLE FOR THE ACCURACY OR COMPLETENESS OF SCANNED COPIES OF THIS PLAN SHEET.

NOTE: FOR ACCURATE RIGHT OF WAY AND ACCESS DATA, CONTACT RIGHT OF WAY ENGINEERING AT THE DISTRICT OFFICE.

PROJECT NOTES: (THIS SHEET)

1 RC SIGN ILLUMINATION EQUIPMENT.

2 EXISTING 2"C, 2#8.

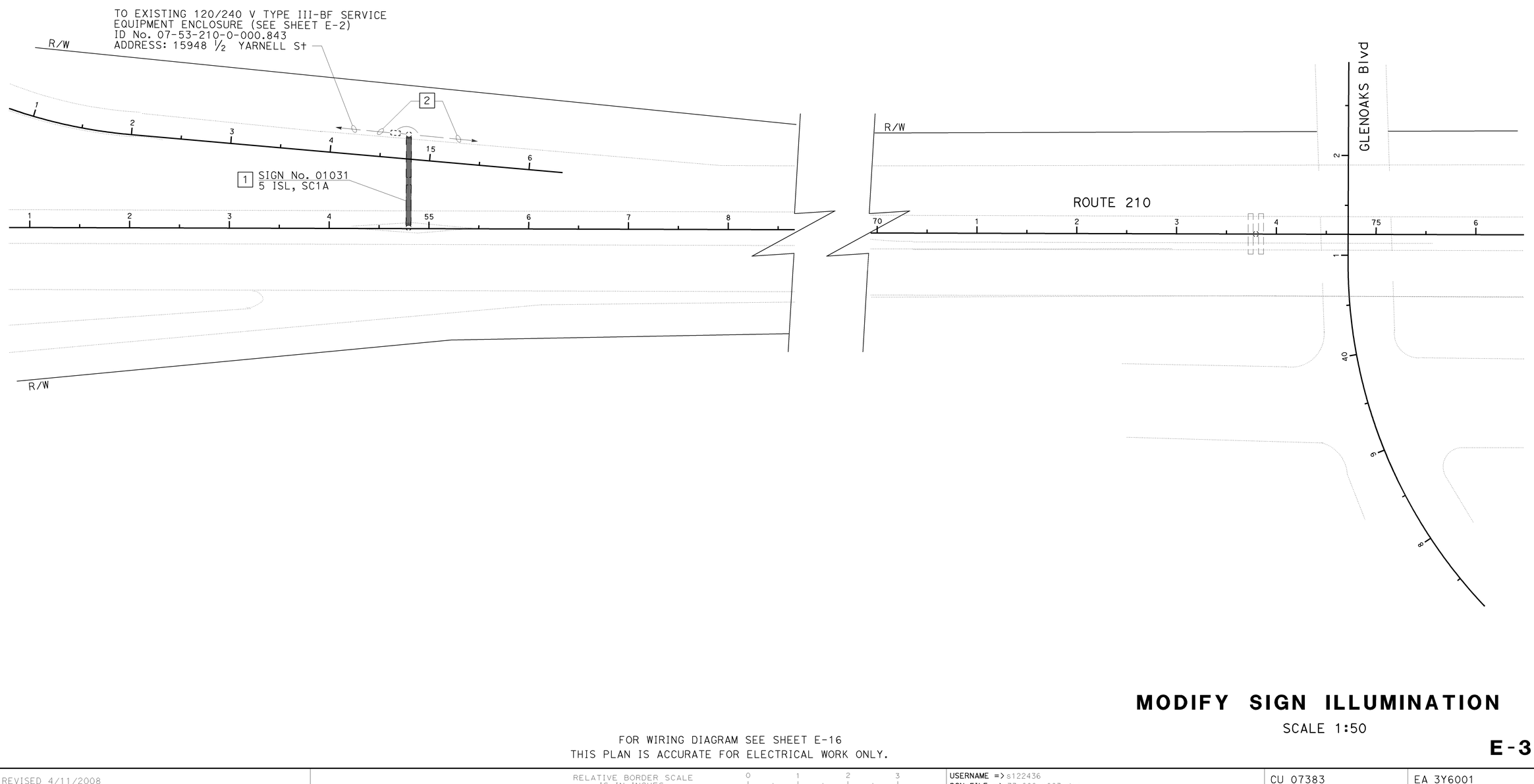

MODIFY SIGN ILLUMINATION

SCALE 1:50

FOR WIRING DIAGRAM SEE SHEET E-16
THIS PLAN IS ACCURATE FOR ELECTRICAL WORK ONLY.

E-3

STATE OF CALIFORNIA - DEPARTMENT OF TRANSPORTATION
Caltrans® TRAFFIC DESIGN
FUNCTIONAL SUPERVISOR: Yi TSAU
CALCULATED-DESIGNED BY: FARIDA MAHMOOD
CHECKED BY: CECILIO BURCIAGA
REVISED BY
DATE REVISED

LAST REVISION 02-16-10 | DATE PLOTTED => 21-FEB-2010 | TIME PLOTTED => 17:45

BORDER LAST REVISED 4/11/2008 | RELATIVE BORDER SCALE IS IN INCHES 0 1 2 3 | USERNAME => s122436 | DGN FILE => 73y600ua003.dgn | CU 07383 | EA 3Y6001

NOTE: FOR ACCURATE RIGHT OF WAY AND ACCESS DATA,
CONTACT RIGHT OF WAY ENGINEERING AT THE DISTRICT OFFICE.

Dist	COUNTY	ROUTE	POST MILES TOTAL PROJECT	SHEET No.	TOTAL SHEETS
07	LA	210	R0.4/R5.9	64	87

1/14/10
REGISTERED ELECTRICAL ENGINEER DATE

2-16-10
PLANS APPROVAL DATE

REGISTERED PROFESSIONAL ENGINEER
C. BURCIAGA
No. E015302
Exp. 3/31/11
ELECT
STATE OF CALIFORNIA

THE STATE OF CALIFORNIA OR ITS OFFICERS OR AGENTS SHALL NOT BE RESPONSIBLE FOR THE ACCURACY OR COMPLETENESS OF SCANNED COPIES OF THIS PLAN SHEET.

PROJECT NOTES: (THIS SHEET)

1. RC SIGN ILLUMINATION EQUIPMENT.
2. EXISTING 1½"C, 2#8.
3. EXISTING 1½"C, 2#10.
4. EXISTING 2"C, 2#10.

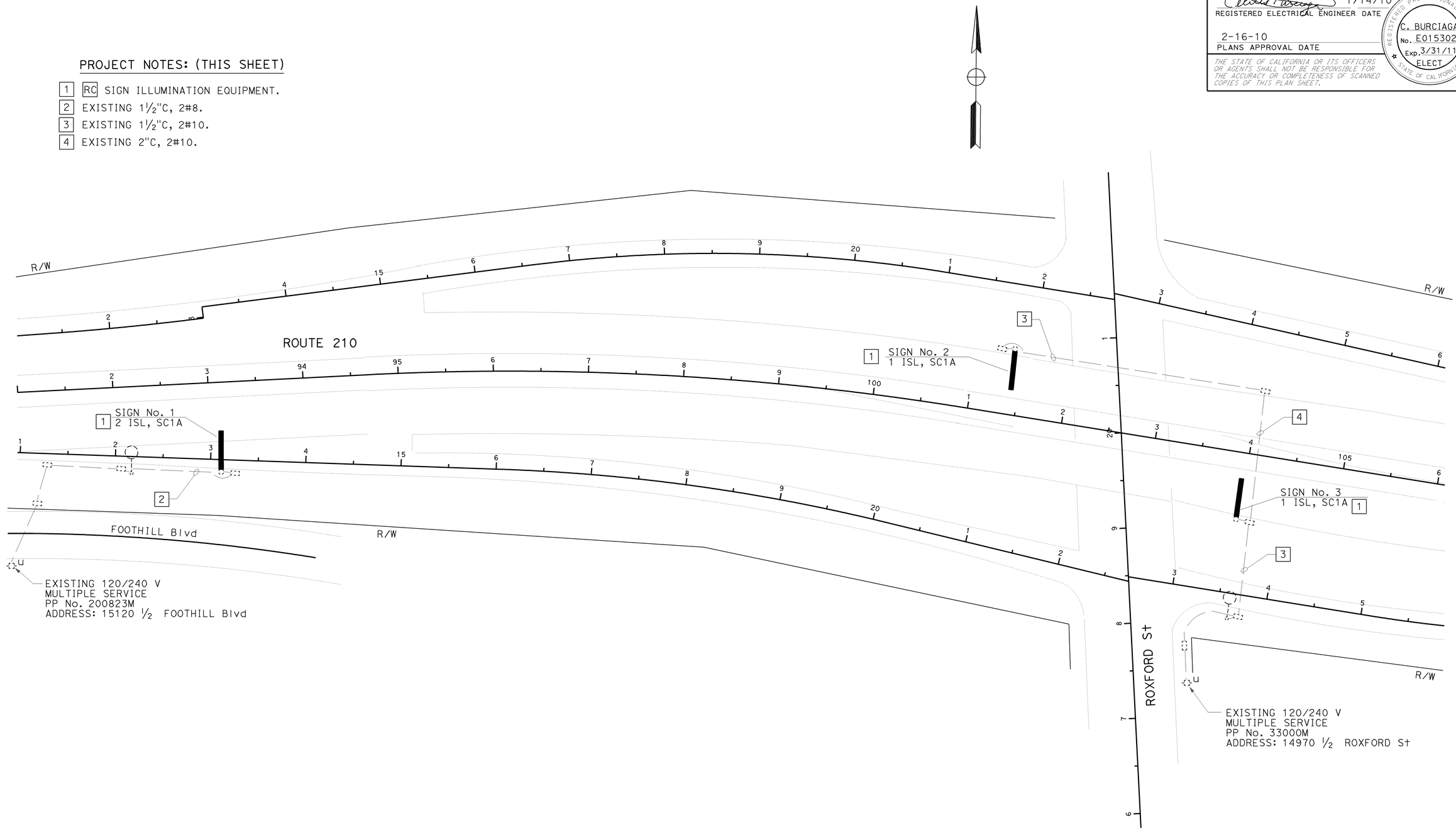

MODIFY SIGN ILLUMINATION

SCALE 1:50

FOR WIRING DIAGRAM SEE SHEET E-17
THIS PLAN IS ACCURATE FOR ELECTRICAL WORK ONLY.

E-4

STATE OF CALIFORNIA - DEPARTMENT OF TRANSPORTATION
Caltrans® TRAFFIC DESIGN
FUNCTIONAL SUPERVISOR: YI TSAU
CALCULATED-DESIGNED BY: FARIDA MAHMOOD
CHECKED BY: CECILIO BURCIAGA
REVISED BY
DATE REVISED

LAST REVISION DATE PLOTTED => 21-FEB-2010
02-16-10 TIME PLOTTED => 17:46

BORDER LAST REVISED 4/11/2008
RELATIVE BORDER SCALE IS IN INCHES 0 1 2 3
USERNAME => s122436
DGN FILE => 73y600ua004.dgn
CU 07383
EA 3Y6001

Dist	COUNTY	ROUTE	POST MILES TOTAL PROJECT	SHEET No.	TOTAL SHEETS
07	LA	210	R0.4/R5.9	65	87

1/14/10
REGISTERED ELECTRICAL ENGINEER **DATE**

2-16-10
PLANS APPROVAL DATE

REGISTERED PROFESSIONAL ENGINEER
C. BURCIAGA
No. E015302
Exp. 3/31/11
ELECT
STATE OF CALIFORNIA

THE STATE OF CALIFORNIA OR ITS OFFICERS OR AGENTS SHALL NOT BE RESPONSIBLE FOR THE ACCURACY OR COMPLETENESS OF SCANNED COPIES OF THIS PLAN SHEET.

NOTE: FOR ACCURATE RIGHT OF WAY AND ACCESS DATA, CONTACT RIGHT OF WAY ENGINEERING AT THE DISTRICT OFFICE.

PROJECT NOTES: (THIS SHEET)

1 RC SIGN ILLUMINATION EQUIPMENT.
2 EXISTING 1½"C, 2#8.
3 EXISTING 2"C, 2#8.

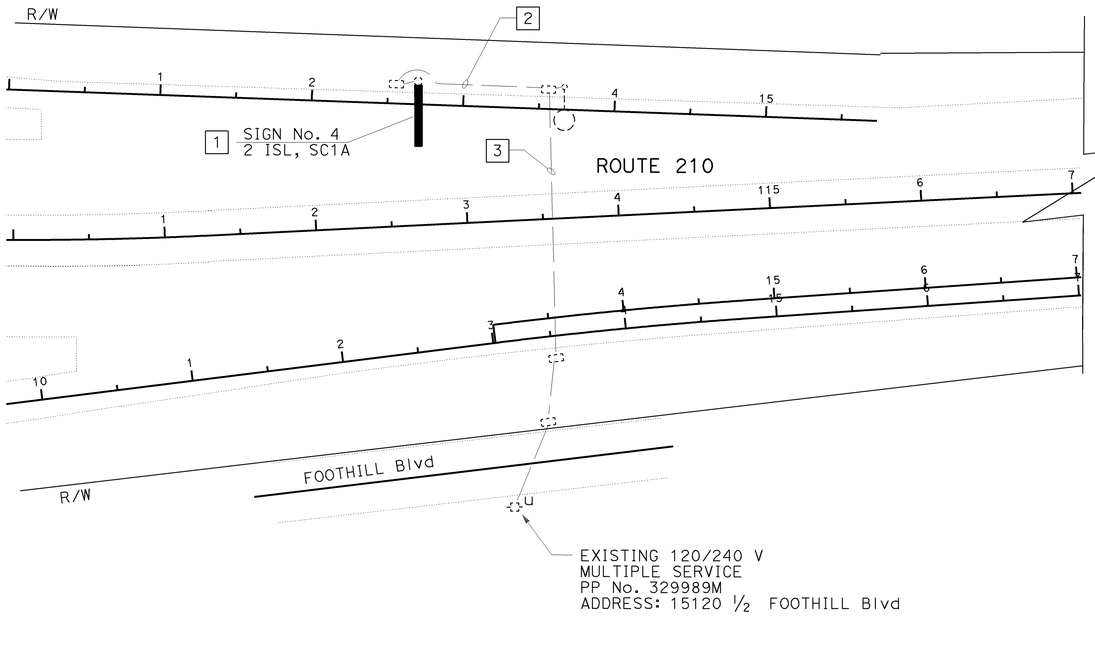

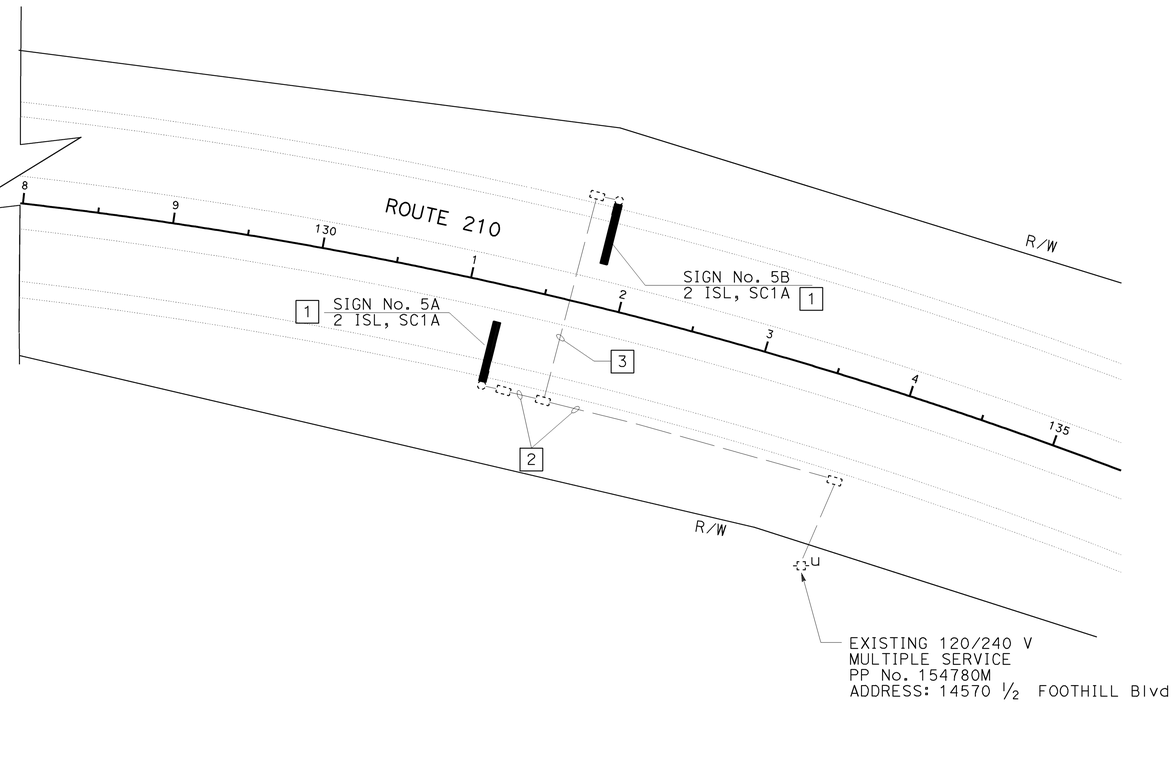

FOR WIRING DIAGRAM SEE SHEET E-17
THIS PLAN IS ACCURATE FOR ELECTRICAL WORK ONLY.

MODIFY SIGN ILLUMINATION

SCALE 1:50

E-5

REVISED BY | DATE REVISED
FARIDA MAHMOOD | CECILIO BURCIAGA
CALCULATED-DESIGNED BY | CHECKED BY
FUNCTIONAL SUPERVISOR: Y1 TSAU
STATE OF CALIFORNIA - DEPARTMENT OF TRANSPORTATION
Caltrans® TRAFFIC DESIGN

LAST REVISION | DATE PLOTTED => 21-FEB-2010
02-16-10 | TIME PLOTTED => 17:46

BORDER LAST REVISED 4/11/2008
RELATIVE BORDER SCALE IS IN INCHES 0 1 2 3
USERNAME => s122436
DGN FILE => 73y600ua005.dgn
CU 07383
EA 3Y6001

Dist	COUNTY	ROUTE	POST MILES TOTAL PROJECT	SHEET No.	TOTAL SHEETS
07	LA	210	R0.4/R5.9	66	87

1/14/10
REGISTERED ELECTRICAL ENGINEER DATE

2-16-10
PLANS APPROVAL DATE

REGISTERED PROFESSIONAL ENGINEER
C. BURCIAGA
No. E015302
Exp. 3/31/11
ELECT
STATE OF CALIFORNIA

THE STATE OF CALIFORNIA OR ITS OFFICERS OR AGENTS SHALL NOT BE RESPONSIBLE FOR THE ACCURACY OR COMPLETENESS OF SCANNED COPIES OF THIS PLAN SHEET.

NOTE: FOR ACCURATE RIGHT OF WAY AND ACCESS DATA, CONTACT RIGHT OF WAY ENGINEERING AT THE DISTRICT OFFICE.

PROJECT NOTES: (THIS SHEET)

1 RC SIGN ILLUMINATION EQUIPMENT.
2 EXISTING 1½"C, 2#10.

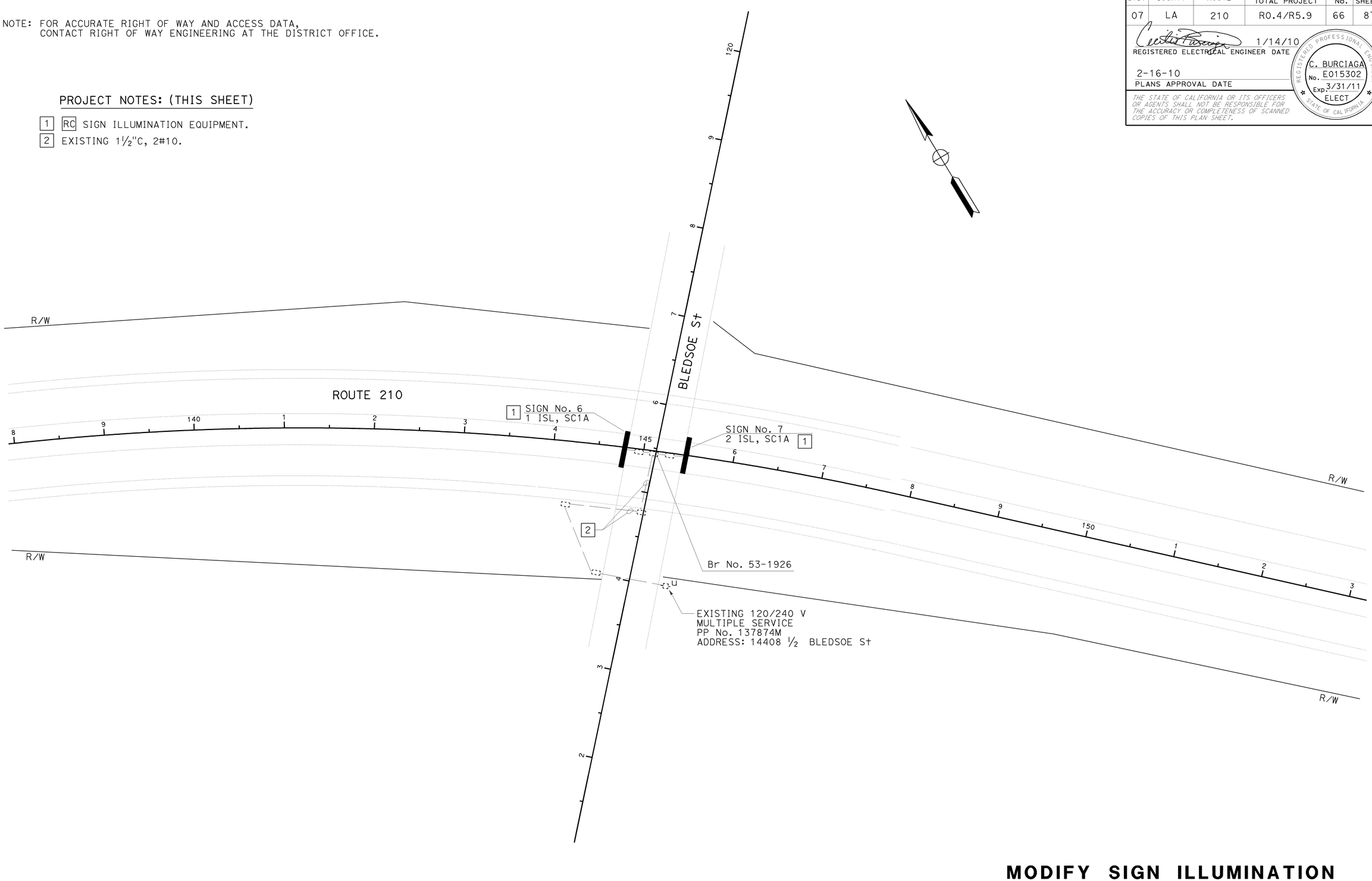

FOR WIRING DIAGRAM SEE SHEET E-17
THIS PLAN IS ACCURATE FOR ELECTRICAL WORK ONLY.

MODIFY SIGN ILLUMINATION

SCALE 1:50

E-6

STATE OF CALIFORNIA - DEPARTMENT OF TRANSPORTATION
Caltrans® TRAFFIC DESIGN
FUNCTIONAL SUPERVISOR: Y1 TSAU
CALCULATED-DESIGNED BY: FARIDA MAHMOOD
CHECKED BY: CECILIO BURCIAGA
REVISED BY
DATE REVISED

LAST REVISION DATE PLOTTED => 21-FEB-2010
02-16-10 TIME PLOTTED => 17:46

BORDER LAST REVISED 4/11/2008
RELATIVE BORDER SCALE IS IN INCHES 0 1 2 3
USERNAME => s122436
DGN FILE => 73y600ua006.dgn
CU 07383
EA 3Y6001

NOTE: FOR ACCURATE RIGHT OF WAY AND ACCESS DATA,
CONTACT RIGHT OF WAY ENGINEERING AT THE DISTRICT OFFICE.

Dist	COUNTY	ROUTE	POST MILES TOTAL PROJECT	SHEET No.	TOTAL SHEETS
07	LA	210	R0.4/R5.9	67	87

1/14/10
REGISTERED ELECTRICAL ENGINEER DATE

2-16-10
PLANS APPROVAL DATE

REGISTERED PROFESSIONAL ENGINEER
C. BURCIAGA
No. E015302
Exp. 3/31/11
ELECT
STATE OF CALIFORNIA

THE STATE OF CALIFORNIA OR ITS OFFICERS OR AGENTS SHALL NOT BE RESPONSIBLE FOR THE ACCURACY OR COMPLETENESS OF SCANNED COPIES OF THIS PLAN SHEET.

PROJECT NOTES: (THIS SHEET)

1 RC SIGN ILLUMINATION EQUIPMENT.
2 EXISTING 1½"C, 2#8.
3 EXISTING 2"C, 2#8.

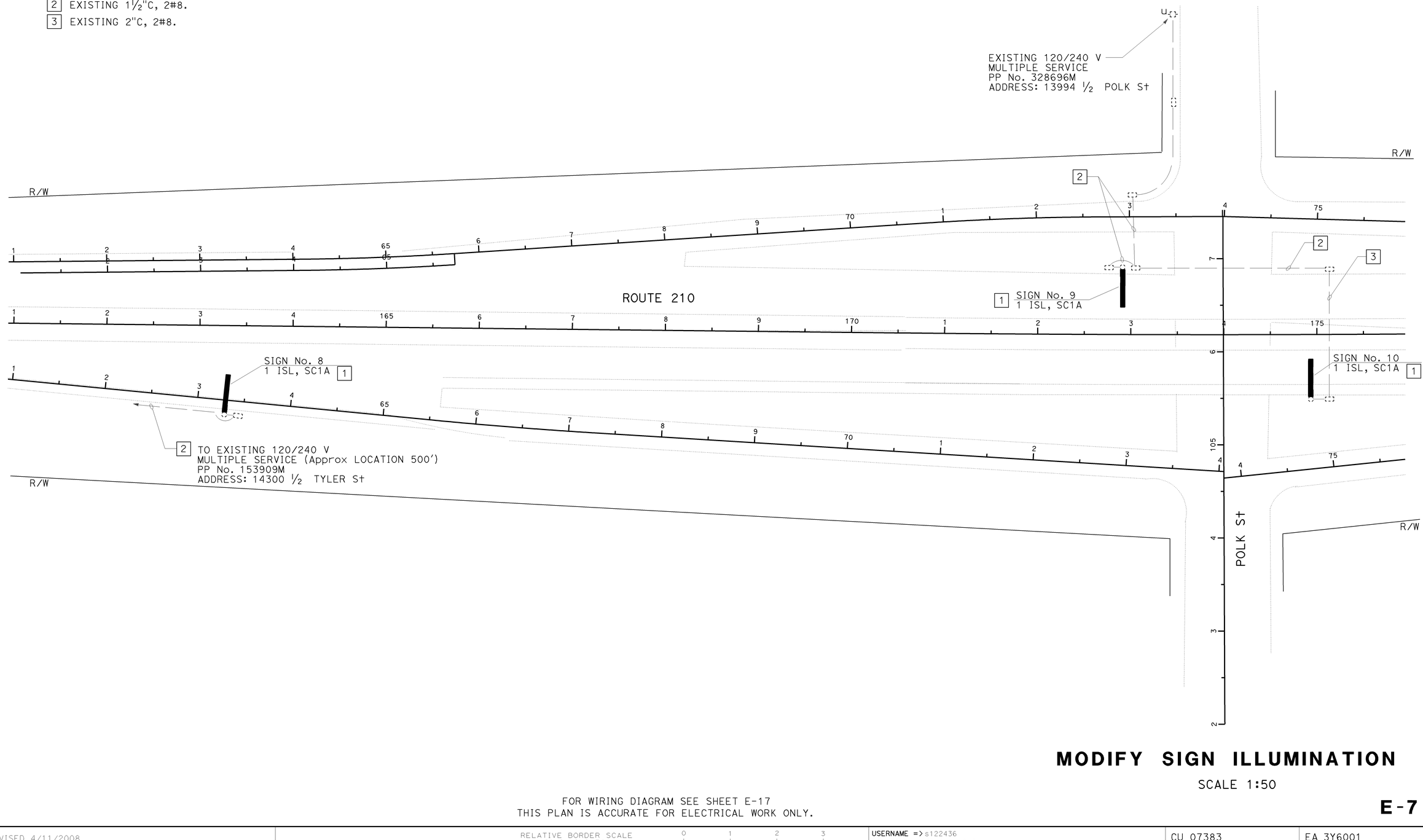

MODIFY SIGN ILLUMINATION

SCALE 1:50

FOR WIRING DIAGRAM SEE SHEET E-17
THIS PLAN IS ACCURATE FOR ELECTRICAL WORK ONLY.

E-7

REVISED BY	DATE REVISED

CALCULATED-DESIGNED BY: FARIDA MAHMOOD
CHECKED BY: CECILIO BURCIAGA
FUNCTIONAL SUPERVISOR: Y1 TSAU

STATE OF CALIFORNIA - DEPARTMENT OF TRANSPORTATION
Caltrans® TRAFFIC DESIGN

LAST REVISION 02-16-10 | DATE PLOTTED => 21-FEB-2010 TIME PLOTTED => 17:47

BORDER LAST REVISED 4/11/2008 | RELATIVE BORDER SCALE IS IN INCHES 0 1 2 3 | USERNAME => s122436 DGN FILE => 73y600ua007.dgn | CU 07383 | EA 3Y6001

Dist	COUNTY	ROUTE	POST MILES TOTAL PROJECT	SHEET No.	TOTAL SHEETS
07	LA	210	R0.4/R5.9	68	87

REGISTERED ELECTRICAL ENGINEER 1/14/10 DATE

2-16-10
PLANS APPROVAL DATE

REGISTERED PROFESSIONAL ENGINEER C. BURCIAGA No. E015302 Exp. 3/31/11 ELECT STATE OF CALIFORNIA

THE STATE OF CALIFORNIA OR ITS OFFICERS OR AGENTS SHALL NOT BE RESPONSIBLE FOR THE ACCURACY OR COMPLETENESS OF SCANNED COPIES OF THIS PLAN SHEET.

NOTE: FOR ACCURATE RIGHT OF WAY AND ACCESS DATA, CONTACT RIGHT OF WAY ENGINEERING AT THE DISTRICT OFFICE.

PROJECT NOTES: (THIS SHEET)

1. RC SIGN ILLUMINATION EQUIPMENT.
2. EXISTING 1½"C, 2#8.
3. EXISTING 1½"C, 2#6.

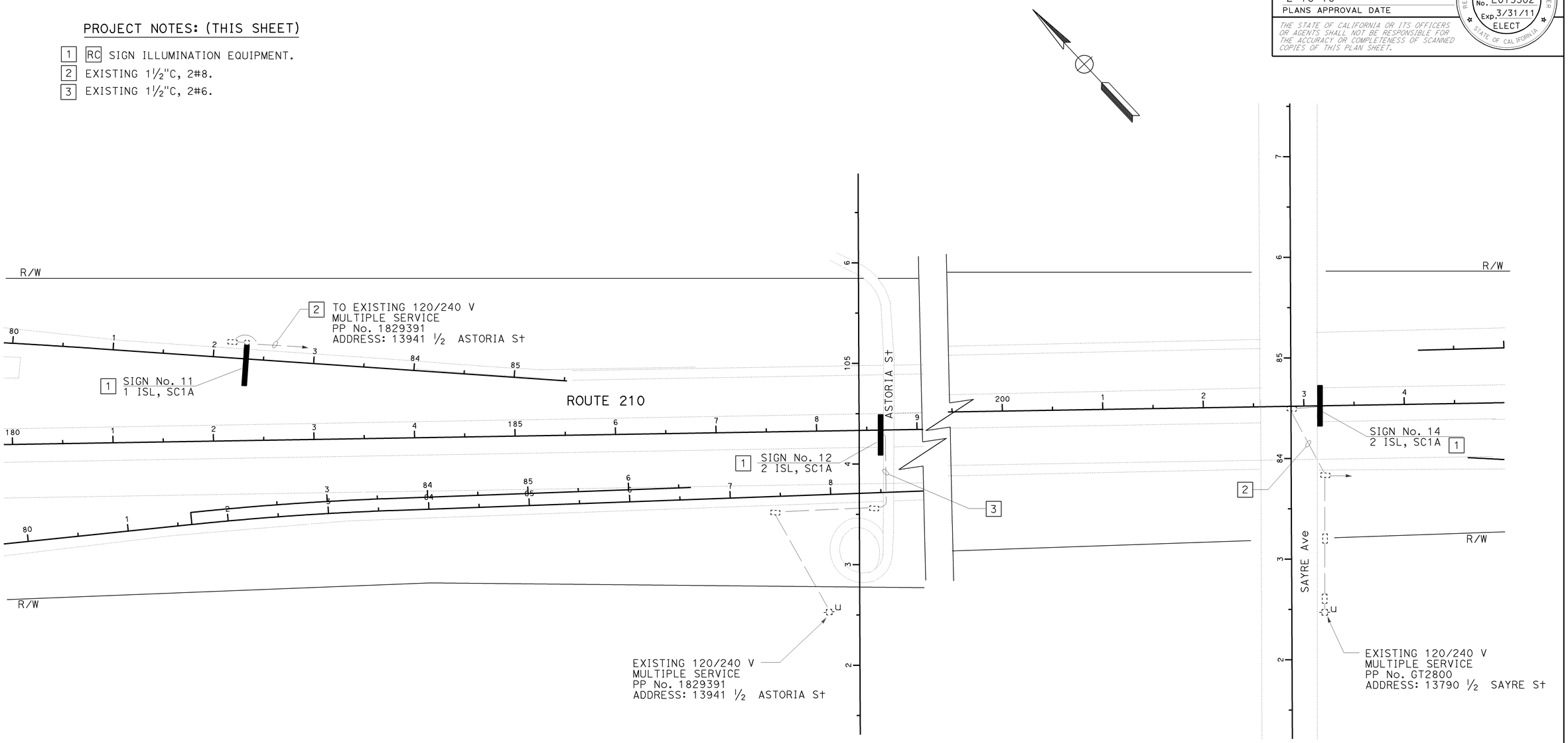

MODIFY SIGN ILLUMINATION

SCALE 1:50

FOR WIRING DIAGRAM SEE SHEET E-17
THIS PLAN IS ACCURATE FOR ELECTRICAL WORK ONLY.

E-8

STATE OF CALIFORNIA - DEPARTMENT OF TRANSPORTATION
Caltrans TRAFFIC DESIGN

FUNCTIONAL SUPERVISOR: YI TSAU
CALCULATED-DESIGNED BY: FARIDA MAHMOOD
CHECKED BY: CECILIO BURCIAGA
REVISED BY
DATE REVISED

LAST REVISION 02-16-10
DATE PLOTTED => 21-FEB-2010
TIME PLOTTED => 17:47

Dist	COUNTY	ROUTE	POST MILES TOTAL PROJECT	SHEET No.	TOTAL SHEETS
07	LA	210	R0.4/R5.9	69	87

1/14/10
REGISTERED ELECTRICAL ENGINEER DATE

2-16-10
PLANS APPROVAL DATE

REGISTERED PROFESSIONAL ENGINEER
C. BURCIAGA
No. E015302
Exp. 3/31/11
ELECT
STATE OF CALIFORNIA

THE STATE OF CALIFORNIA OR ITS OFFICERS OR AGENTS SHALL NOT BE RESPONSIBLE FOR THE ACCURACY OR COMPLETENESS OF SCANNED COPIES OF THIS PLAN SHEET.

NOTE: FOR ACCURATE RIGHT OF WAY AND ACCESS DATA, CONTACT RIGHT OF WAY ENGINEERING AT THE DISTRICT OFFICE.

PROJECT NOTES: (THIS SHEET)

1. RC SIGN ILLUMINATION EQUIPMENT.
2. EXISTING 1½"C, 2#8.
3. RL SIGN ILLUMINATION EQUIPMENT.
4. EXISTING 1½"C, 2#10.

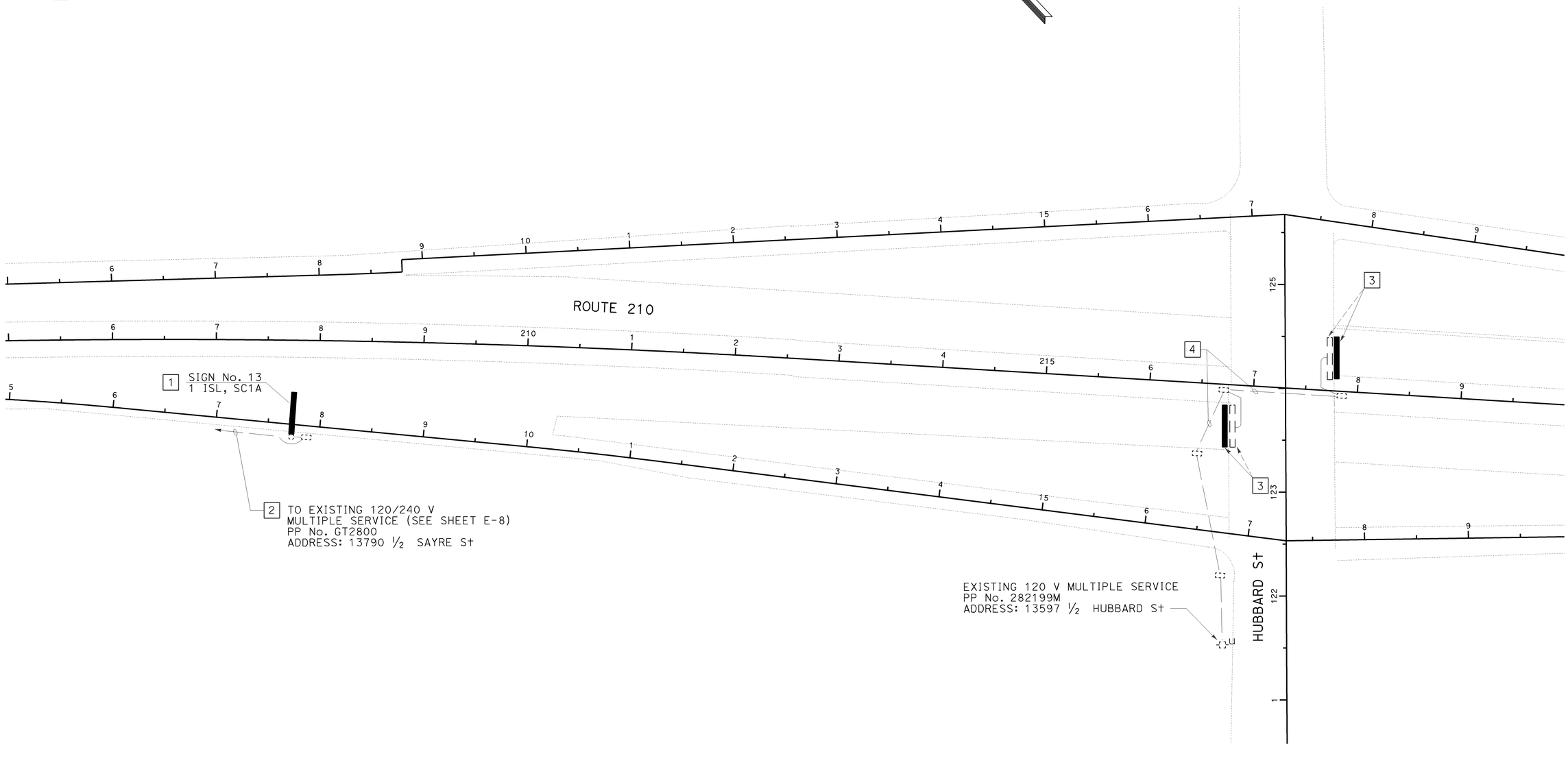

MODIFY SIGN ILLUMINATION

SCALE 1:50

FOR WIRING DIAGRAM SEE SHEET E-17
THIS PLAN IS ACCURATE FOR ELECTRICAL WORK ONLY.

E-9

REVISED BY	DATE REVISED

CALCULATED-DESIGNED BY: FARIDA MAHMOOD
CHECKED BY: CECILIO BURCIAGA
FUNCTIONAL SUPERVISOR: Y1 TSAU

STATE OF CALIFORNIA - DEPARTMENT OF TRANSPORTATION
Caltrans® TRAFFIC DESIGN

LAST REVISION: DATE PLOTTED => 21-FEB-2010
02-16-10 TIME PLOTTED => 17:48

NOTE: FOR ACCURATE RIGHT OF WAY AND ACCESS DATA,
CONTACT RIGHT OF WAY ENGINEERING AT THE DISTRICT OFFICE.

Dist	COUNTY	ROUTE	POST MILES TOTAL PROJECT	SHEET No.	TOTAL SHEETS
07	LA	210	R0.4/R5.9	70	87

1/14/10
REGISTERED ELECTRICAL ENGINEER DATE

2-16-10
PLANS APPROVAL DATE

C. BURCIAGA
No. E015302
Exp. 3/31/11
ELECT
REGISTERED PROFESSIONAL ENGINEER
STATE OF CALIFORNIA

THE STATE OF CALIFORNIA OR ITS OFFICERS OR AGENTS SHALL NOT BE RESPONSIBLE FOR THE ACCURACY OR COMPLETENESS OF SCANNED COPIES OF THIS PLAN SHEET.

PROJECT NOTES: (THIS SHEET)

1 RC SIGN ILLUMINATION EQUIPMENT.
2 EXISTING 1½"C, 2#8.

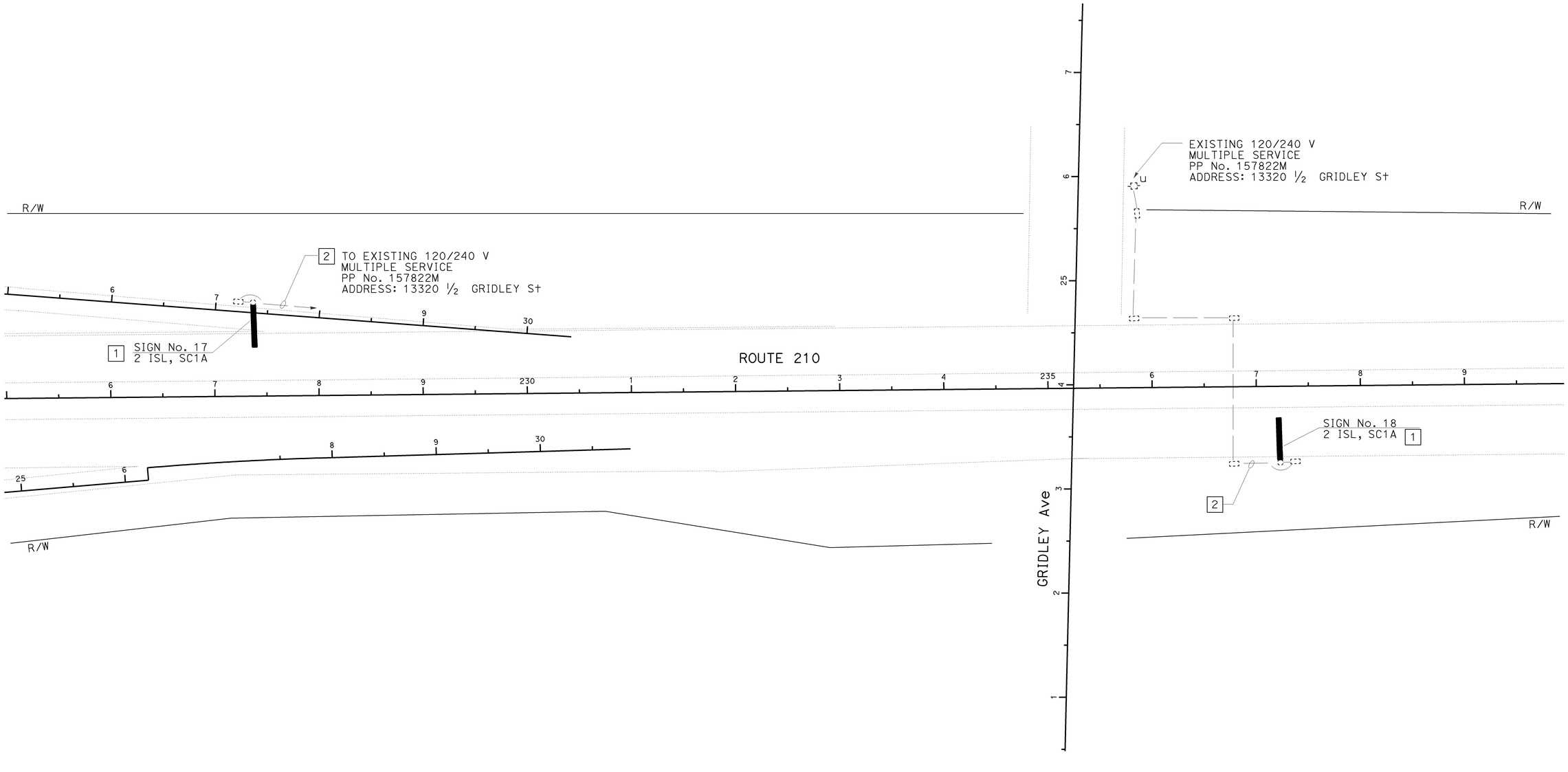

MODIFY SIGN ILLUMINATION

SCALE 1:50

FOR WIRING DIAGRAM SEE SHEET E-18
THIS PLAN IS ACCURATE FOR ELECTRICAL WORK ONLY.

E-10

STATE OF CALIFORNIA - DEPARTMENT OF TRANSPORTATION
TRAFFIC DESIGN
FUNCTIONAL SUPERVISOR: Y1 TSAU
CALCULATED-DESIGNED BY: FARIDA MAHMOOD
CHECKED BY: CECILIO BURCIAGA
REVISED BY
DATE REVISED

LAST REVISION DATE PLOTTED => 21-FEB-2010
02-16-10 TIME PLOTTED => 17:48

BORDER LAST REVISED 4/11/2008
RELATIVE BORDER SCALE IS IN INCHES 0 1 2 3
USERNAME => s122436
DGN FILE => 73y600ua010.dgn
CU 07383
EA 3Y6001

NOTE: FOR ACCURATE RIGHT OF WAY AND ACCESS DATA,
CONTACT RIGHT OF WAY ENGINEERING AT THE DISTRICT OFFICE.

Dist	COUNTY	ROUTE	POST MILES TOTAL PROJECT	SHEET No.	TOTAL SHEETS
07	LA	210	R0.4/R5.9	71	87

1/14/10
REGISTERED ELECTRICAL ENGINEER DATE

2-16-10
PLANS APPROVAL DATE

REGISTERED PROFESSIONAL ENGINEER
C. BURCIAGA
No. E015302
Exp. 3/31/11
ELECT
STATE OF CALIFORNIA

THE STATE OF CALIFORNIA OR ITS OFFICERS OR AGENTS SHALL NOT BE RESPONSIBLE FOR THE ACCURACY OR COMPLETENESS OF SCANNED COPIES OF THIS PLAN SHEET.

PROJECT NOTES: (THIS SHEET)

1. RC SIGN ILLUMINATION EQUIPMENT.
2. EXISTING 1½"C, 2#8.
3. EXISTING 1½"C, 2#8, INSTALL 2#8, 1#8G.
4. EXISTING 2"C, 2#8, INSTALL 2#8, 1#8G.

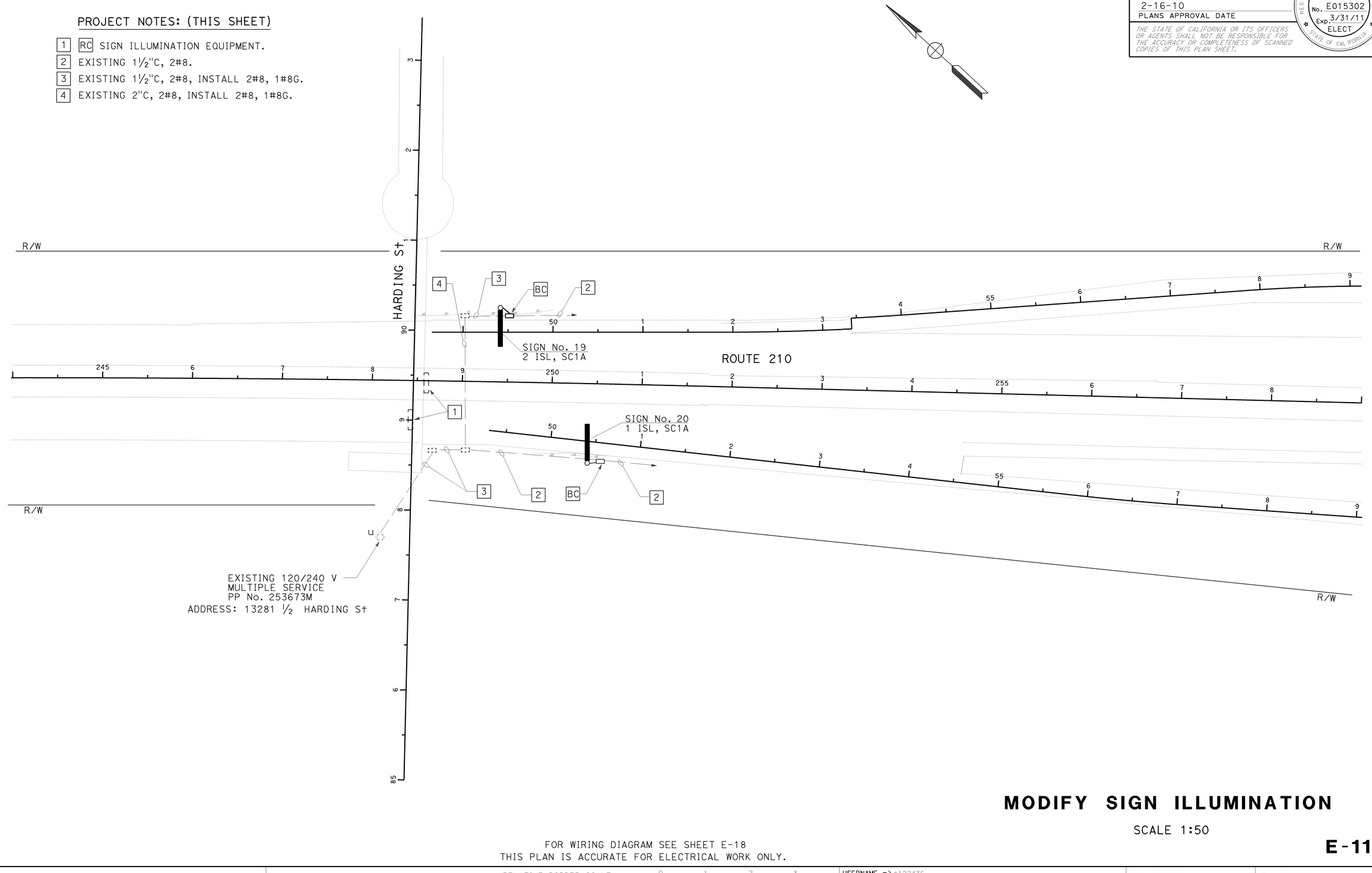

FOR WIRING DIAGRAM SEE SHEET E-18
THIS PLAN IS ACCURATE FOR ELECTRICAL WORK ONLY.

MODIFY SIGN ILLUMINATION

SCALE 1:50

E-11

LAST REVISION: DATE PLOTTED => 21-FEB-2010
02-16-10 TIME PLOTTED => 17:48

FARIDA MAHMOOD
CECILIO BURCIAGA
Y1 TSAU

STATE OF CALIFORNIA - DEPARTMENT OF TRANSPORTATION
Caltrans® TRAFFIC DESIGN

REVISED BY | DATE REVISED
CALCULATED-DESIGNED BY
CHECKED BY
FUNCTIONAL SUPERVISOR

BORDER LAST REVISED 4/11/2008
RELATIVE BORDER SCALE IS IN INCHES 0 1 2 3
USERNAME => s122436
DGN FILE => 73y600ua011.dgn
CU 07383
EA 3Y6001

NOTE: FOR ACCURATE RIGHT OF WAY AND ACCESS DATA,
CONTACT RIGHT OF WAY ENGINEERING AT THE DISTRICT OFFICE.

Dist	COUNTY	ROUTE	POST MILES TOTAL PROJECT	SHEET No.	TOTAL SHEETS
07	LA	210	R0.4/R5.9	72	87

1/14/10
REGISTERED ELECTRICAL ENGINEER DATE

2-16-10
PLANS APPROVAL DATE

REGISTERED PROFESSIONAL ENGINEER
C. BURCIAGA
No. E015302
Exp. 3/31/11
ELECT
STATE OF CALIFORNIA

THE STATE OF CALIFORNIA OR ITS OFFICERS OR AGENTS SHALL NOT BE RESPONSIBLE FOR THE ACCURACY OR COMPLETENESS OF SCANNED COPIES OF THIS PLAN SHEET.

PROJECT NOTES: (THIS SHEET)

1 RC SIGN ILLUMINATION EQUIPMENT.
2 EXISTING 1½"C, 2#4.
3 EXISTING 2"C, 2#4.

MODIFY SIGN ILLUMINATION

SCALE 1:50

FOR WIRING DIAGRAM SEE SHEET E-18
THIS PLAN IS ACCURATE FOR ELECTRICAL WORK ONLY.

E-12

REVISED BY | DATE REVISED
FARIDA MAHMOOD | CECILIO BURCIAGA
CALCULATED-DESIGNED BY | CHECKED BY
FUNCTIONAL SUPERVISOR: Y1 TSAU
STATE OF CALIFORNIA - DEPARTMENT OF TRANSPORTATION
Caltrans® TRAFFIC DESIGN

LAST REVISION | DATE PLOTTED => 21-FEB-2010 | TIME PLOTTED => 17:49
02-16-10

BORDER LAST REVISED 4/11/2008
RELATIVE BORDER SCALE IS IN INCHES 0 1 2 3
USERNAME => s122436
DGN FILE => 73y600ua012.dgn
CU 07383
EA 3Y6001

NOTE: FOR ACCURATE RIGHT OF WAY AND ACCESS DATA,
CONTACT RIGHT OF WAY ENGINEERING AT THE DISTRICT OFFICE.

Dist	COUNTY	ROUTE	POST MILES TOTAL PROJECT	SHEET No.	TOTAL SHEETS
07	LA	210	R0.4/R5.9	73	87

1/14/10
REGISTERED ELECTRICAL ENGINEER DATE

2-16-10
PLANS APPROVAL DATE

REGISTERED PROFESSIONAL ENGINEER
C. BURCIAGA
No. E015302
Exp. 3/31/11
ELECT
STATE OF CALIFORNIA

THE STATE OF CALIFORNIA OR ITS OFFICERS OR AGENTS SHALL NOT BE RESPONSIBLE FOR THE ACCURACY OR COMPLETENESS OF SCANNED COPIES OF THIS PLAN SHEET.

PROJECT NOTES: (THIS SHEET)

1 RC SIGN ILLUMINATION EQUIPMENT.
2 EXISTING 1½"C, 2#4.

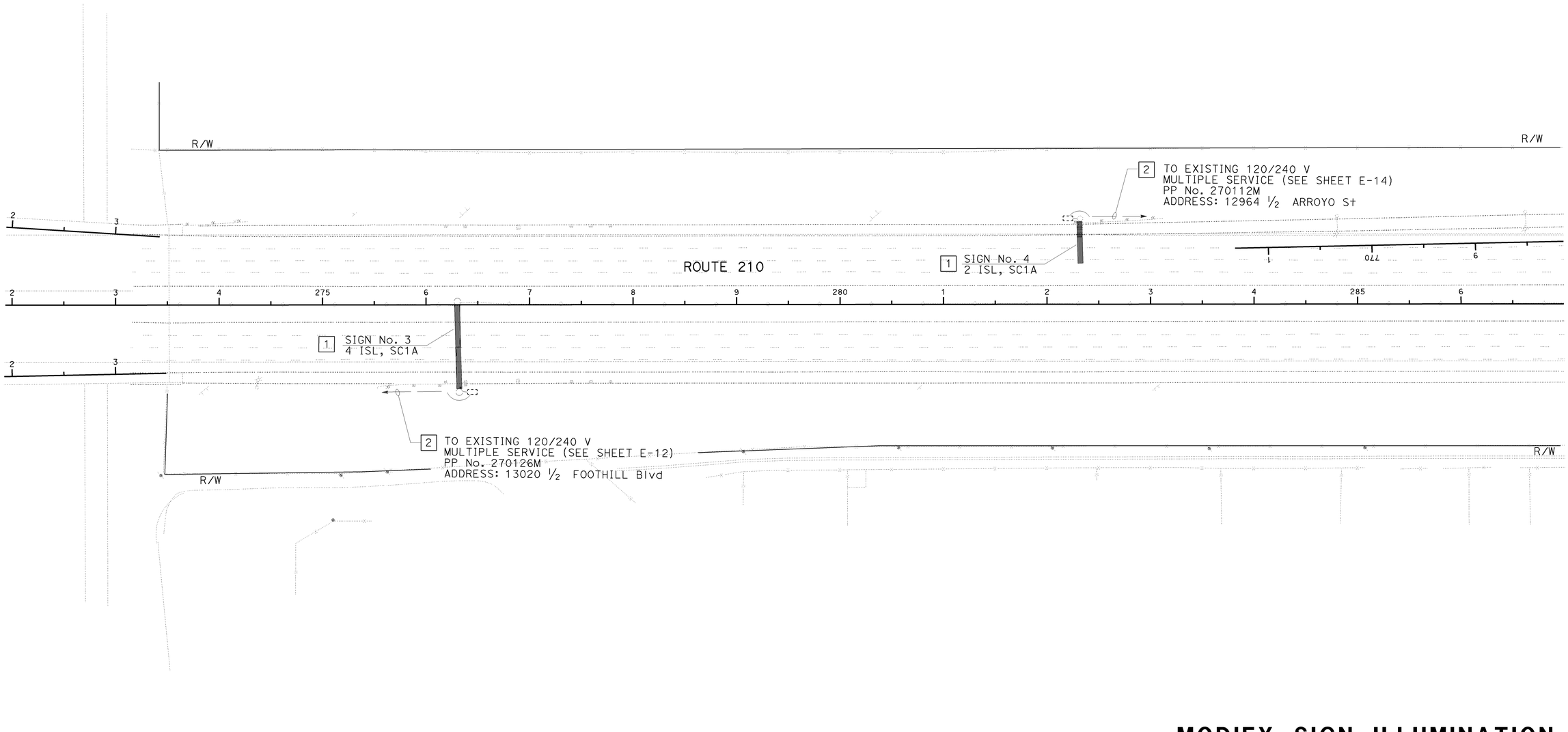

FOR WIRING DIAGRAM SEE SHEET E-18
THIS PLAN IS ACCURATE FOR ELECTRICAL WORK ONLY.

MODIFY SIGN ILLUMINATION

SCALE 1:50

E-13

STATE OF CALIFORNIA - DEPARTMENT OF TRANSPORTATION
Caltrans® TRAFFIC DESIGN
FUNCTIONAL SUPERVISOR: YI TSAU
CALCULATED-DESIGNED BY: FARIDA MAHMOOD
CHECKED BY: CECILIO BURCIAGA
REVISED BY
DATE REVISED

LAST REVISION DATE PLOTTED => 21-FEB-2010
02-16-10 TIME PLOTTED => 17:49

BORDER LAST REVISED 4/11/2008
RELATIVE BORDER SCALE IS IN INCHES 0 1 2 3
USERNAME => s122436
DGN FILE => 73y600ua013.dgn
CU 07383
EA 3Y6001

NOTE: FOR ACCURATE RIGHT OF WAY AND ACCESS DATA,
CONTACT RIGHT OF WAY ENGINEERING AT THE DISTRICT OFFICE.

Dist	COUNTY	ROUTE	POST MILES TOTAL PROJECT	SHEET No.	TOTAL SHEETS
07	LA	210	R0.4/R5.9	74	87

1/14/10
REGISTERED ELECTRICAL ENGINEER DATE

2-16-10
PLANS APPROVAL DATE

REGISTERED PROFESSIONAL ENGINEER
C. BURCIAGA
No. E015302
Exp. 3/31/11
ELECT
STATE OF CALIFORNIA

THE STATE OF CALIFORNIA OR ITS OFFICERS OR AGENTS SHALL NOT BE RESPONSIBLE FOR THE ACCURACY OR COMPLETENESS OF SCANNED COPIES OF THIS PLAN SHEET.

PROJECT NOTES: (THIS SHEET)

1 RC SIGN ILLUMINATION EQUIPMENT.
2 EXISTING 2"C, 2#4.

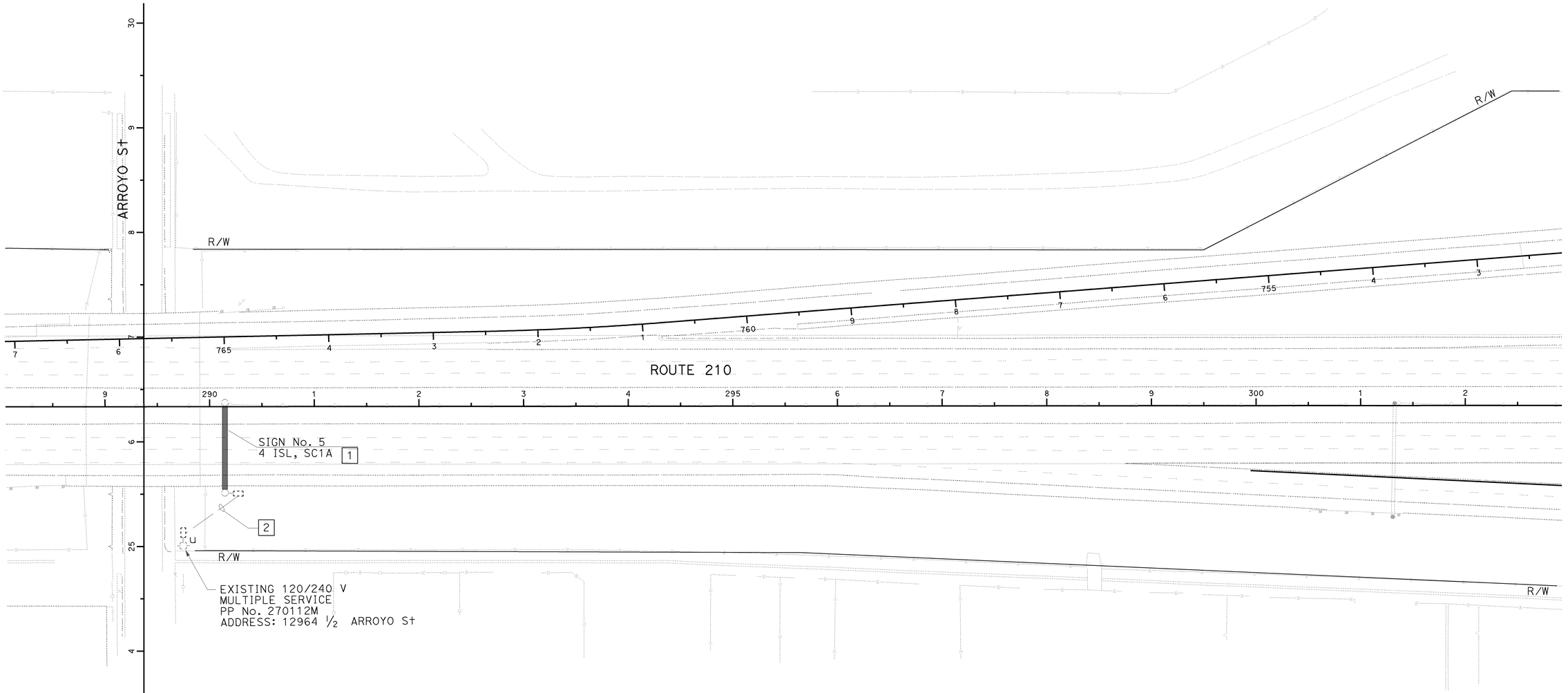

FOR WIRING DIAGRAM SEE SHEET E-18
THIS PLAN IS ACCURATE FOR ELECTRICAL WORK ONLY.

MODIFY SIGN ILLUMINATION

SCALE 1:50

E-14

STATE OF CALIFORNIA - DEPARTMENT OF TRANSPORTATION
Caltrans®
TRAFFIC DESIGN

FUNCTIONAL SUPERVISOR: YI TSAU
CALCULATED-DESIGNED BY: FARIDA MAHMOOD
CHECKED BY: CECILIO BURCIAGA
REVISED BY
DATE REVISED

LAST REVISION DATE PLOTTED => 21-FEB-2010
02-16-10 TIME PLOTTED => 17:50

BORDER LAST REVISED 4/11/2008
RELATIVE BORDER SCALE IS IN INCHES 0 1 2 3
USERNAME => s122436
DGN FILE => 73y600ua014.dgn
CU 07383
EA 3Y6001

NOTE: FOR ACCURATE RIGHT OF WAY AND ACCESS DATA,
CONTACT RIGHT OF WAY ENGINEERING AT THE DISTRICT OFFICE.

Dist	COUNTY	ROUTE	POST MILES TOTAL PROJECT	SHEET No.	TOTAL SHEETS
07	LA	210	R0.4/R5.9	75	87

1/14/10
REGISTERED ELECTRICAL ENGINEER DATE

2-16-10
PLANS APPROVAL DATE

REGISTERED PROFESSIONAL ENGINEER
C. BURCIAGA
No. E015302
Exp. 3/31/11
ELECT
STATE OF CALIFORNIA

THE STATE OF CALIFORNIA OR ITS OFFICERS OR AGENTS SHALL NOT BE RESPONSIBLE FOR THE ACCURACY OR COMPLETENESS OF SCANNED COPIES OF THIS PLAN SHEET.

PROJECT NOTES: (THIS SHEET)

1. RC SIGN ILLUMINATION EQUIPMENT.
2. EXISTING 1½"C, 2#10.
3. EXISTING 2"C, 2#10.

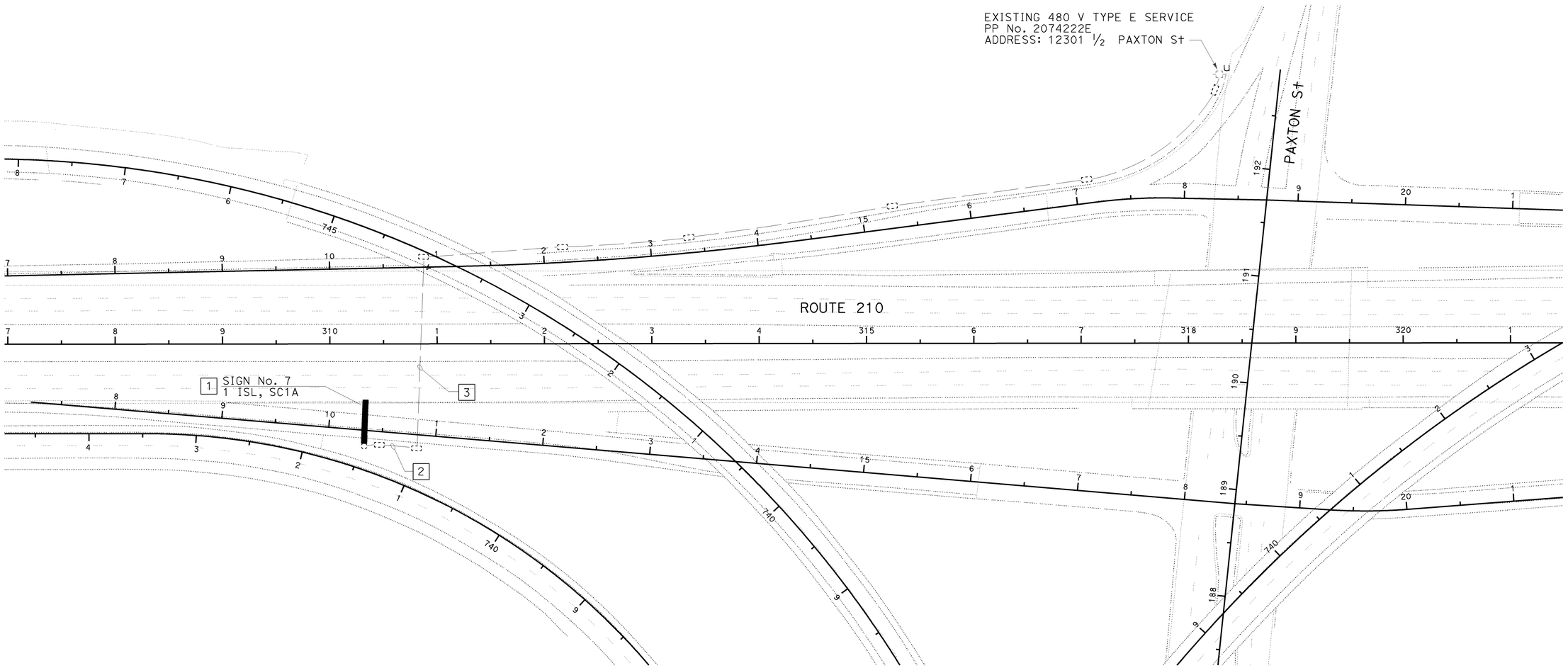

MODIFY SIGN ILLUMINATION

SCALE 1:50

FOR WIRING DIAGRAM SEE SHEET E-18
THIS PLAN IS ACCURATE FOR ELECTRICAL WORK ONLY.

E-15

CALCULATED-DESIGNED BY: FARIDA MAHMOOD
CHECKED BY: CECILIO BURCIAGA
REVISED BY
DATE REVISED
FUNCTIONAL SUPERVISOR: YI TSAU
STATE OF CALIFORNIA - DEPARTMENT OF TRANSPORTATION
Caltrans® TRAFFIC DESIGN

LAST REVISION DATE PLOTTED => 21-FEB-2010
TIME PLOTTED => 17:50
02-16-10

BORDER LAST REVISED 4/11/2008
RELATIVE BORDER SCALE IS IN INCHES 0 1 2 3
USERNAME => s122436
DGN FILE => 73y600ua015.dgn
CU 07383
EA 3Y6001

Dist	COUNTY	ROUTE	POST MILES TOTAL PROJECT	SHEET No.	TOTAL SHEETS
07	LA	210	R0.4/R5.9	76	87

1/14/10
REGISTERED ELECTRICAL ENGINEER DATE

2-16-10
PLANS APPROVAL DATE

REGISTERED PROFESSIONAL ENGINEER
C. BURCIAGA
No. E015302
Exp. 3/31/11
ELECT
STATE OF CALIFORNIA

THE STATE OF CALIFORNIA OR ITS OFFICERS OR AGENTS SHALL NOT BE RESPONSIBLE FOR THE ACCURACY OR COMPLETENESS OF SCANNED COPIES OF THIS PLAN SHEET.

WIRING DIAGRAM LEGEND: (SHEET E-16 TO E-18)

- INSTALL SIGN LAMP AND BALLAST
- RELOCATE SIGN LAMP AND BALLAST
- REMOVE SIGN LAMP AND BALLAST
- EXISTING LAMP AND BALLAST TO REMAIN
- INSTALL CONDUCTOR
- EXISTING CONDUCTOR
- SPLICE CONDUCTORS
- REMOVE CONDUCTOR

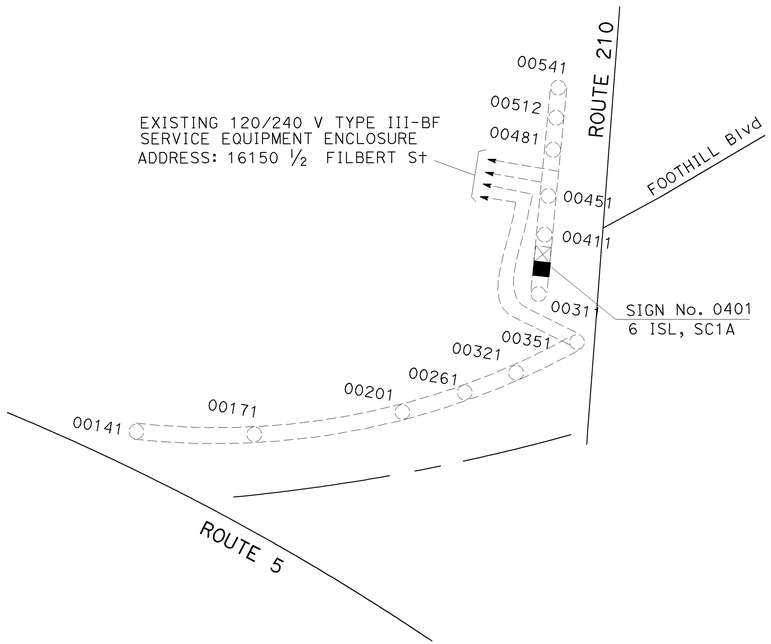

(SEE SHEET E-1)

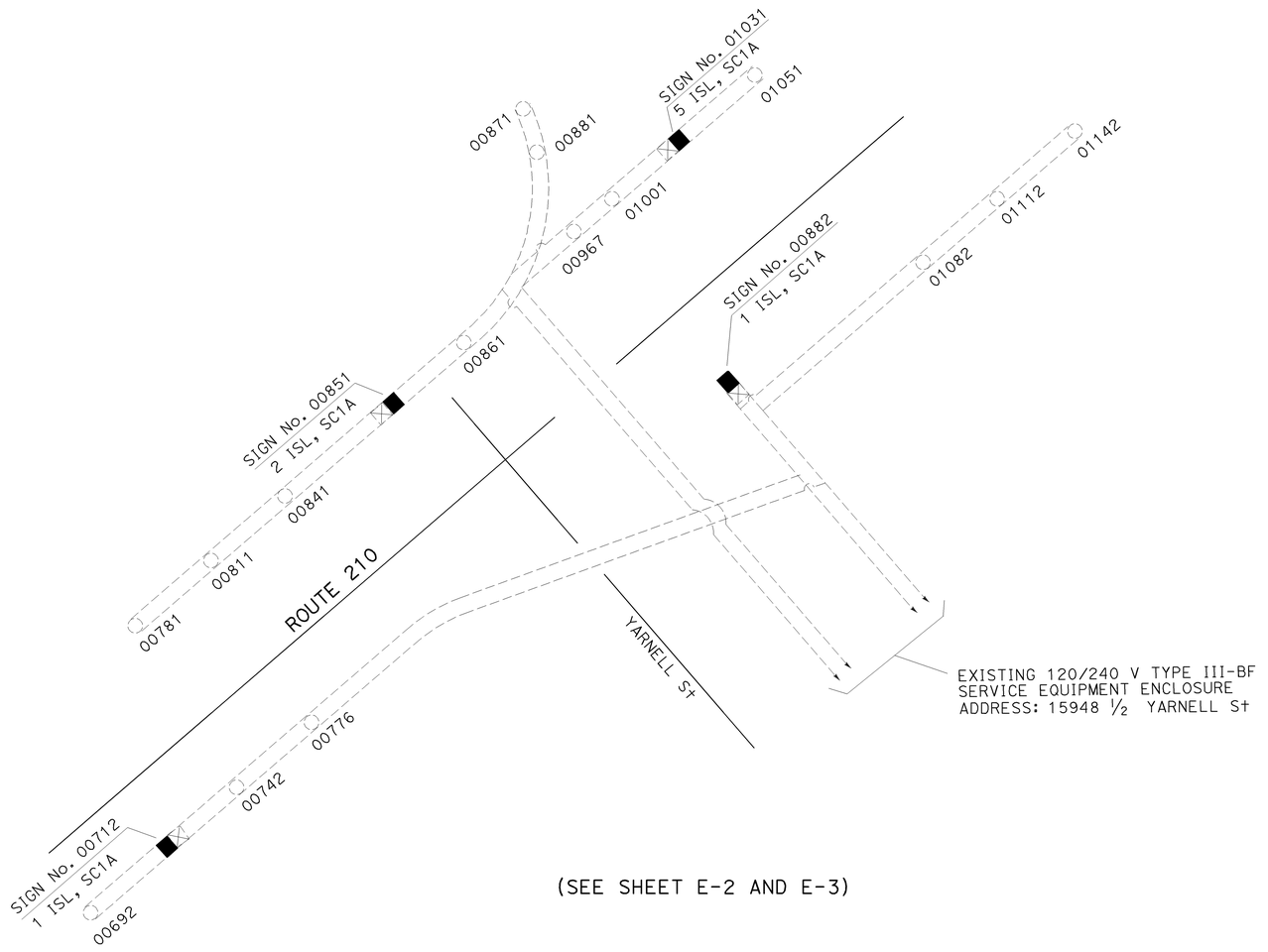

(SEE SHEET E-2 AND E-3)

MODIFY SIGN ILLUMINATION
(WIRING DIAGRAM)

NO SCALE

E-16

THIS PLAN IS ACCURATE FOR ELECTRICAL WORK ONLY.

STATE OF CALIFORNIA - DEPARTMENT OF TRANSPORTATION
Caltrans® TRAFFIC DESIGN

CALCULATED-DESIGNED BY	CHECKED BY	FUNCTIONAL SUPERVISOR	REVISED BY	DATE REVISED
FARIDA MAHMOOD	CECILIO BURCIAGA	YI TSAU		

LAST REVISION DATE PLOTTED => 21-FEB-2010
02-16-10 TIME PLOTTED => 17:50

BORDER LAST REVISED 4/11/2008

RELATIVE BORDER SCALE IS IN INCHES 0 1 2 3

USERNAME => s122436
DGN FILE => 73y600ua016.dgn

CU 07383

EA 3Y6001

Dist	COUNTY	ROUTE	POST MILES TOTAL PROJECT	SHEET No.	TOTAL SHEETS
07	LA	210	R0.4/R5.9	77	87

1/14/10
REGISTERED ELECTRICAL ENGINEER DATE

2-16-10
PLANS APPROVAL DATE

REGISTERED PROFESSIONAL ENGINEER
C. BURCIAGA
No. E015302
Exp. 3/31/11
ELECT
STATE OF CALIFORNIA

THE STATE OF CALIFORNIA OR ITS OFFICERS OR AGENTS SHALL NOT BE RESPONSIBLE FOR THE ACCURACY OR COMPLETENESS OF SCANNED COPIES OF THIS PLAN SHEET.

SIGN No. 1
2 ISL, 240 V

Exist 120/240 V MULTIPLE SERVICE
PP No. 200823M
ADDRESS: 15120 ½ FOOTHILL Blvd

(SEE SHEET E-4)

SIGN No. 2
1 ISL, 240 V

SIGN No. 3
1 ISL, 240 V

ROXFORD St

Exist 120/240 V MULTIPLE SERVICE
PP No. 33000M
ADDRESS: 14970 ½ ROXFORD St

(SEE SHEET E-4)

SIGN No. 4
2 ISL, 240 V

Exist 120/240 V MULTIPLE SERVICE
PP No. 329989M
ADDRESS: 15120 ½ FOOTHILL Blvd

(SEE SHEET E-5)

Exist 120/240 V MULTIPLE SERVICE
PP No. 328696M
ADDRESS: 13994 ½ POLK St

SIGN No. 9
1 ISL, 240 V

POLK St

SIGN No. 10
1 ISL, 240 V

(SEE SHEET E-7)

SIGN No. 5B
2 ISL, 240 V

SIGN No. 5A
2 ISL, 240 V

Exist 120/240 V MULTIPLE SERVICE
PP No. 154780M
ADDRESS: 14570 ½ FOOTHILL Blvd

(SEE SHEET E-5)

SIGN No. 6
1 ISL, 240 V

SIGN No. 7
2 ISL, 240 V

BLEDSOE St

Exist 120/240 V MULTIPLE SERVICE
PP No. 137874M
ADDRESS: 14408 ½ BLEDSOE St

(SEE SHEET E-6)

SIGN No. 8
1 ISL, 240 V

Exist 120/240 V MULTIPLE SERVICE
PP No. 153909M
ADDRESS: 14300 ½ TYLER St

(SEE SHEET E-7)

SIGN No. 11
1 ISL, 240 V

SIGN No. 12
2 ISL, 240 V

Exist 120/240 V MULTIPLE SERVICE
PP No. 1829391
ADDRESS: 13941 ½ ASTORIA St

ASTORIA St

(SEE SHEET E-8)

SIGN No. 14
2 ISL, 240 V

SIGN No. 13
2 ISL, 240 V

SAYRE St

Exist 120/240 V MULTIPLE SERVICE
PP No. GT2800
ADDRESS: 13790 ½ SAYRE St

(SEE SHEET E-8 AND E-9)

HUBBARD St

SIGN No. 16

SIGN No. 15

Exist 120 V MULTIPLE SERVICE
PP No. 282199M
ADDRESS: 13597 ½ HUBBARD St

(SEE SHEET E-9)

MODIFY SIGN ILLUMINATION
(WIRING DIAGRAM)

NO SCALE

E-17

THIS PLAN IS ACCURATE FOR ELECTRICAL WORK ONLY.

REVISED BY	DATE REVISED

CALCULATED-DESIGNED BY: FARIDA MAHMOOD
CHECKED BY: CECILIO BURCIAGA
FUNCTIONAL SUPERVISOR: YI TSAU

STATE OF CALIFORNIA - DEPARTMENT OF TRANSPORTATION
Caltrans® TRAFFIC DESIGN

LAST REVISION 02-16-10
DATE PLOTTED => 21-FEB-2010
TIME PLOTTED => 17:51

BORDER LAST REVISED 4/11/2008

RELATIVE BORDER SCALE IS IN INCHES 0 1 2 3

USERNAME => s122436
DGN FILE => 73y600ua017.dgn

CU 07383

EA 3Y6001

Dist	COUNTY	ROUTE	POST MILES TOTAL PROJECT	SHEET No.	TOTAL SHEETS
07	LA	210	R0.4/R5.9	78	87

1/14/10
REGISTERED ELECTRICAL ENGINEER DATE

2-16-10
PLANS APPROVAL DATE

REGISTERED PROFESSIONAL ENGINEER
C. BURCIAGA
No. E015302
Exp. 3/31/11
ELECT
STATE OF CALIFORNIA

THE STATE OF CALIFORNIA OR ITS OFFICERS OR AGENTS SHALL NOT BE RESPONSIBLE FOR THE ACCURACY OR COMPLETENESS OF SCANNED COPIES OF THIS PLAN SHEET.

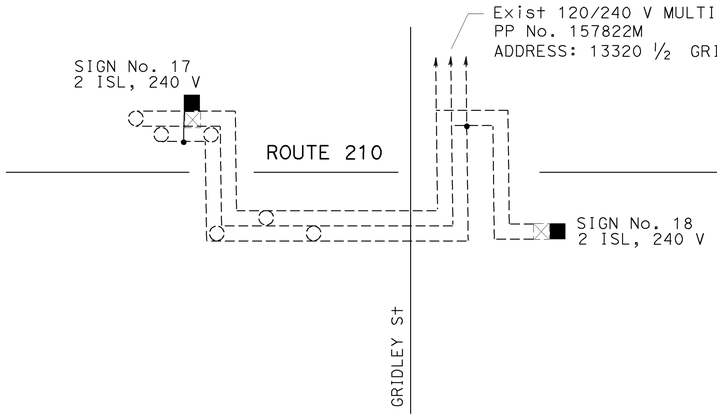

(SEE SHEET E-10)

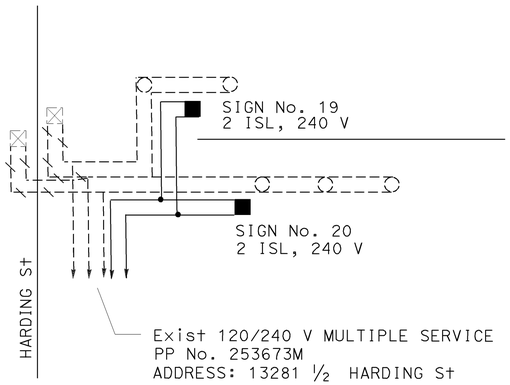

(SEE SHEET E-11)

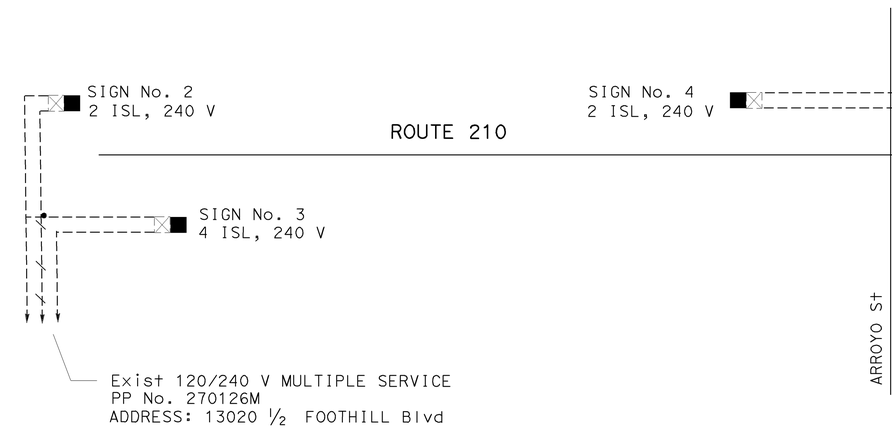

(SEE SHEET E-12 AND E-13)

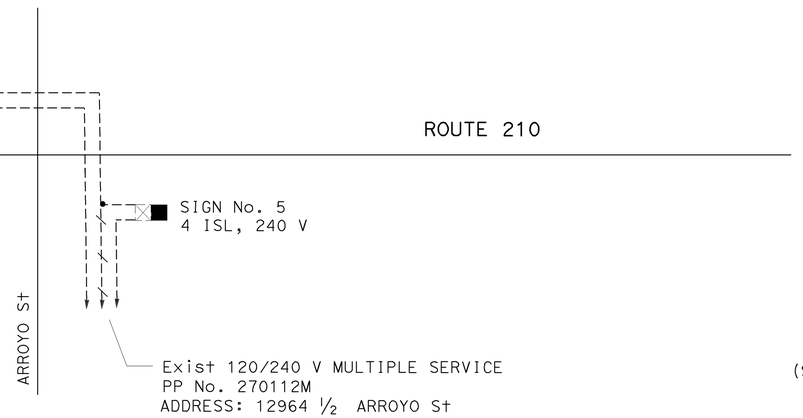

(SEE SHEET E-13 AND E-14)

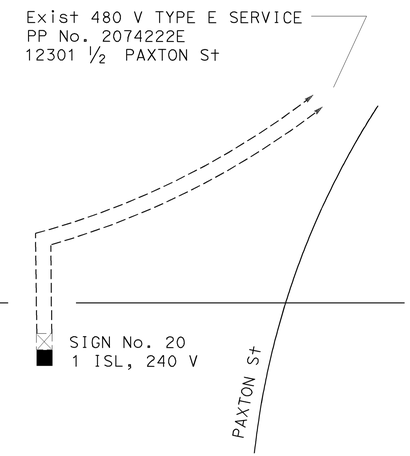

(SEE SHEET E-15)

MODIFY SIGN ILLUMINATION
(WIRING DIAGRAM)

NO SCALE

E-18

THIS PLAN IS ACCURATE FOR ELECTRICAL WORK ONLY.

REVISED BY	DATE REVISED

CALCULATED-DESIGNED BY: FARIDA MAHMOOD
CHECKED BY: CECILIO BURCIAGA
FUNCTIONAL SUPERVISOR: YI TSAU

STATE OF CALIFORNIA - DEPARTMENT OF TRANSPORTATION
Caltrans® TRAFFIC DESIGN

LAST REVISION | DATE PLOTTED => 21-FEB-2010 | 02-16-10 | TIME PLOTTED => 17:51

BORDER LAST REVISED 4/11/2008

RELATIVE BORDER SCALE IS IN INCHES 0 1 2 3

USERNAME => s122436
DGN FILE => 73y600ua018.dgn

CU 07383

EA 3Y6001

DIST	COUNTY	ROUTE	POST MILES TOTAL PROJECT	SHEET NO.	TOTAL SHEETS
07	LA	210	R0.4/R5.9	79	87

Randell D. Hiatt
REGISTERED CIVIL ENGINEER

June 6, 2008
PLANS APPROVAL DATE

REGISTERED PROFESSIONAL ENGINEER
Randell D. Hiatt
No. C50200
Exp. 6-30-09
CIVIL
STATE OF CALIFORNIA

The State of California or its officers or agents shall not be responsible for the accuracy or completeness of electronic copies of this plan sheet.

To accompany plans dated 2-16-10

NOTES:

1. When necessary to place dike in front of face of guard railing, only Type C dike may be used. For dike details, see Standard Plan A87B.
2. For standard railing post embedment, see Standard Plans A77C3.
3. Guard railing delineation to be used where shown on the Project Plans.
4. When dike or curb is placed under guard railing, the maximum height of the dike or curb shall be 4". Mountable dike should not be used. For dike and curb details, see Revised Standard Plans RSP A87A and Standard Plan A87B.
5. For details of typical distance between the face of rail and hinge point, see Standard Plan A77C3.

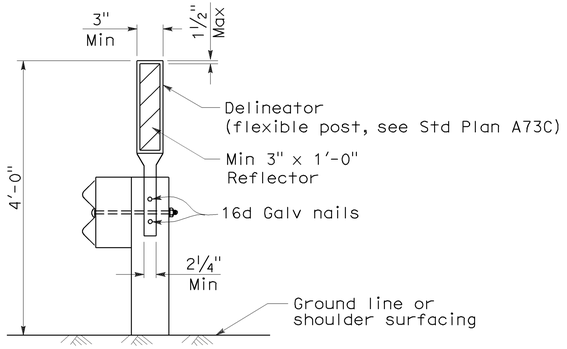

GUARD RAILING DELINEATION
See Note 3

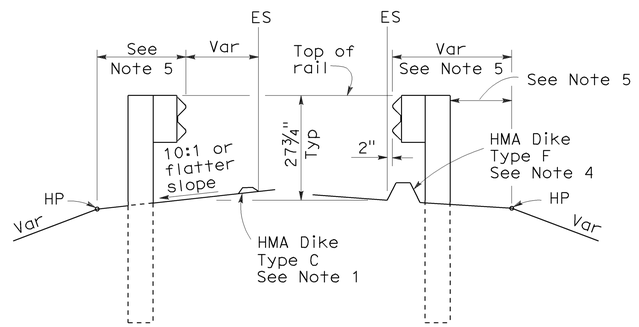

DIKE POSITIONING
See Note 1

STATE OF CALIFORNIA
DEPARTMENT OF TRANSPORTATION

METAL BEAM GUARD RAILING TYPICAL RAILING DELINEATION AND DIKE POSITIONING DETAILS

NO SCALE

RSP A77C4 DATED JUNE 6, 2008 SUPERSEDES STANDARD PLAN A77C4
DATED MAY 1, 2006 - PAGE 47 OF THE STANDARD PLANS BOOK DATED MAY 2006.

REVISED STANDARD PLAN RSP A77C4

2006 REVISED STANDARD PLAN RSP A77C4

12-10-07

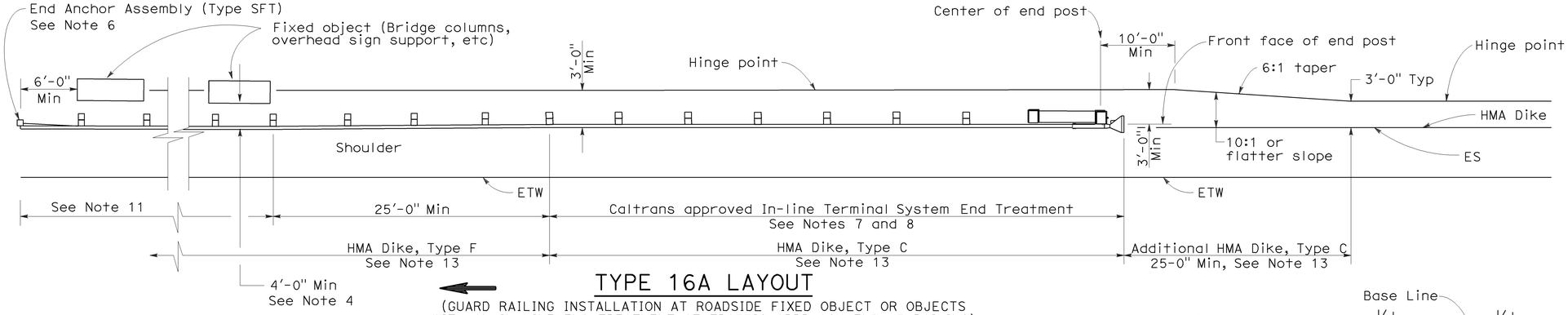

TYPE 16A LAYOUT

(GUARD RAILING INSTALLATION AT ROADSIDE FIXED OBJECT OR OBJECTS WITH AN IN-LINE END TREATMENT AT TRAFFIC APPROACH END OF RAILING)
See Notes 12 and 13

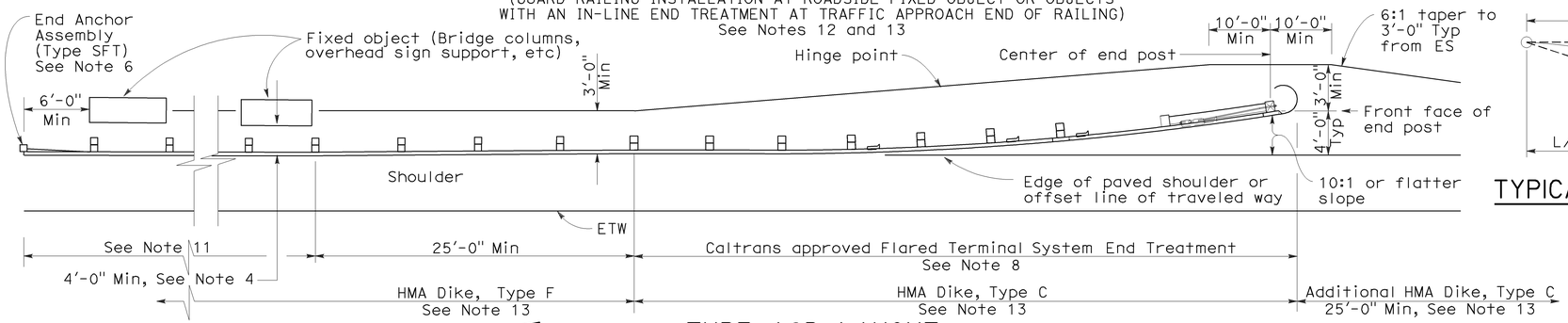

TYPE 16B LAYOUT

(GUARD RAILING INSTALLATION AT ROADSIDE FIXED OBJECT OR OBJECTS WITH A FLARED END TREATMENT AT TRAFFIC APPROACH END OF RAILING)
See Notes 12 and 13

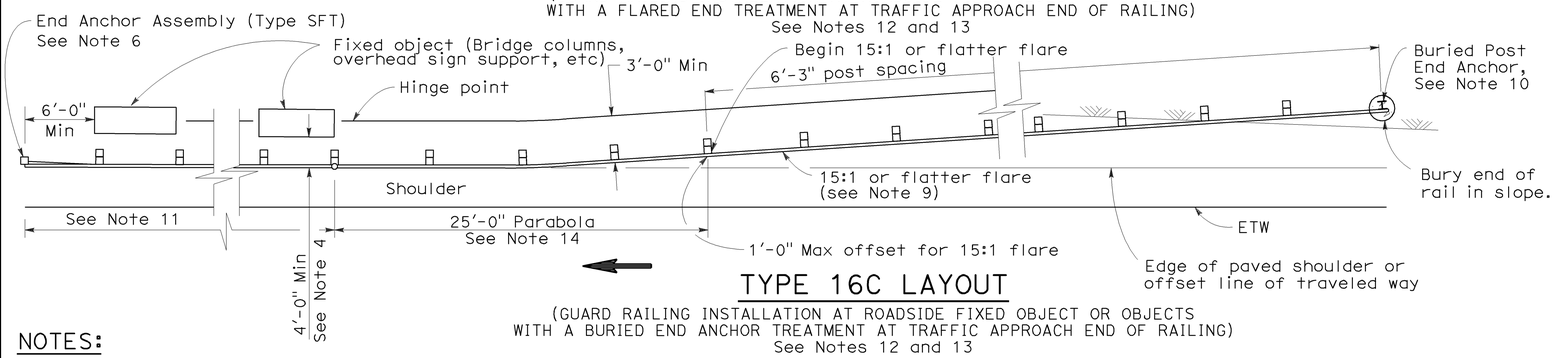

TYPE 16C LAYOUT

(GUARD RAILING INSTALLATION AT ROADSIDE FIXED OBJECT OR OBJECTS WITH A BURIED END ANCHOR TREATMENT AT TRAFFIC APPROACH END OF RAILING)
See Notes 12 and 13

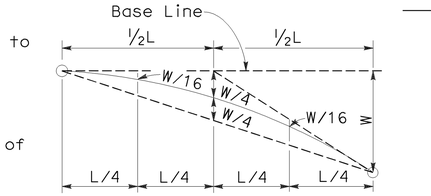

TYPICAL PARABOLIC LAYOUT

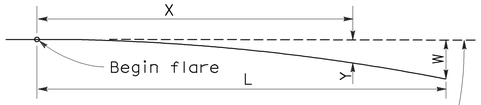

Base Line (Edge of paved shoulder or offset line of edge of traveled way)

$$Y = \frac{WX^2}{L^2}$$

Y = Offset from base line
W = Maximum offset
X = Distance along base line
L = Length of flare

PARABOLIC FLARE OFFSETS

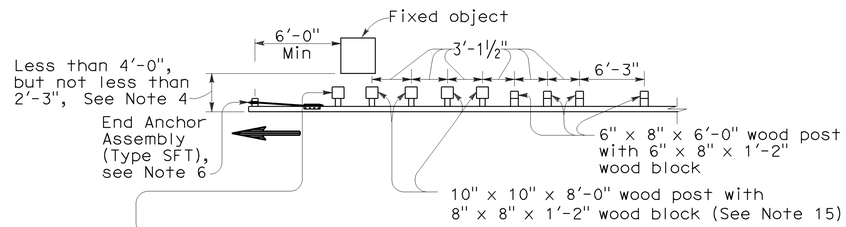

NOTE A: For a series of fixed objects (bridge columns, overhead sign supports, etc.) additional 10" x 10" x 8'-0" wood post with 8" x 8" x 1'-2" wood blocks at 3'-1½" center to center spacing are to be used between fixed objects.

STRENGTHENED RAILING SECTIONS FOR FIXED OBJECT

Use strengthened railing sections with Types 16A, 16B or 16C Layouts where minimum clearance between the face of the guard railing and fixed object(s) is less than 4'-0", but not less than 2'-3". See Note 4

NOTES:

1. Line post, blocks and hardware to be used are shown on Revised Standard Plans A77A1, A77A2, A77B1, A77C1 and A77C2.
2. Guard railing post spacing to be 6'-3" center to center, except as otherwise noted.
3. Except as noted, line posts are 6" x 8" x 6'-0" wood with 6" x 8" x 1'-2" wood blocks. W6 x 9 steel posts, 6'-0" in length, with 6" x 8" x 1'-2" notched wood blocks or notched recycled plastic blocks may be used for 6" x 8" x 6'-0" wood line posts with 6" x 8" x 1'-2" wood blocks where applicable and when specified.
4. A 4'-0" minimum clearance is required between the face of the railing and the face of a fixed object located directly behind standard guard railing sections with post spacing of 6'-3". Construct guard railing as shown in the detail "Strengthened Railing Sections for Fixed Objects" on this plan, where the clearance between the face of the railing and the face of a fixed object is less than 4'-0", but not less than 2'-3". Where the clearance is less than 2'-3", a concrete wall or barrier should be constructed to shield the fixed object(s).
5. Direction of adjacent traffic indicated by ⟶.
6. For End Anchor Assembly (Type SFT) details, see Standard Plan A77H1.
7. In-line Terminal System End Treatments are used where site conditions will not accommodate a flared end treatment.
8. The type of terminal system to be used will be shown on the Project Plans.
9. The 15:1 or flatter flare used with Type 16C Layout is based on the edge of the paved shoulder or offset line of edge of the traveled way. The length of guard railing within the 15:1 or flatter flare is based on site conditions and should be a length equal to multiples of 12'-6".
10. For details of the Buried Post End Anchor used with Type 16C Layout, see Standard Plan A77I2.
11. As site conditions dictate, construct additional guard railing to shield fixed object(s). Additional guard railing length equal to multiples of 12'-6". Post spacing at 6'-3" except as specified in Note 4.
12. Layout Types 16A, 16B or 16C are typically used where guard railing is recommended to shield roadside fixed object(s) and a crashworthy end treatment is required for only one direction of traffic.
13. Where placement of dike is required with guard railing, see Revised Standard Plan RSP A77C4 for dike positioning details.
14. For typical flare offsets for 25'-0" length parabola with maximum offset of 1'-0", see Revised Standard Plan RSP A77E1.
15. W6 x 15 steel post, 8'-0" in length, with 8" x 8" x 1'-2" notched wood block or notched recycled plastic blocks may be used in place of the 10" x 10" x 8'-0" wood post with 8" x 8" x 1'-2" wood block shown in the "Strengthened Railing Sections Detail".

DIST	COUNTY	ROUTE	POST MILES TOTAL PROJECT	SHEET NO.	TOTAL SHEETS
07	LA	210	R0.4/R5.9	80	87

Randell D. Hiatt
REGISTERED CIVIL ENGINEER

June 6, 2008
PLANS APPROVAL DATE

REGISTERED PROFESSIONAL ENGINEER — Randell D. Hiatt — No. C50200 — Exp. 6-30-09 — CIVIL — STATE OF CALIFORNIA

The State of California or its officers or agents shall not be responsible for the accuracy or completeness of electronic copies of this plan sheet.

To accompany plans dated 2-16-10

STATE OF CALIFORNIA
DEPARTMENT OF TRANSPORTATION

METAL BEAM GUARD RAILING TYPICAL LAYOUTS FOR ROADSIDE FIXED OBJECTS

NO SCALE

RSP A77G3 DATED JUNE 6, 2008 SUPERSEDES STANDARD PLAN A77G3 DATED MAY 1, 2006 - PAGE 61 OF THE STANDARD PLANS BOOK DATED MAY 2006.

REVISED STANDARD PLAN RSP A77G3

2006 REVISED STANDARD PLAN RSP A77G3

12-10-07

DIST	COUNTY	ROUTE	POST MILES TOTAL PROJECT	SHEET NO.	TOTAL SHEETS
07	LA	210	R0.4/R5.9	81	87

Randell D. Hiatt
REGISTERED CIVIL ENGINEER

June 6, 2008
PLANS APPROVAL DATE

Randell D. Hiatt
No. C50200
Exp. 6-30-09
CIVIL
REGISTERED PROFESSIONAL ENGINEER
STATE OF CALIFORNIA

The State of California or its officers or agents shall not be responsible for the accuracy or completeness of electronic copies of this plan sheet.

To accompany plans dated 2-16-10

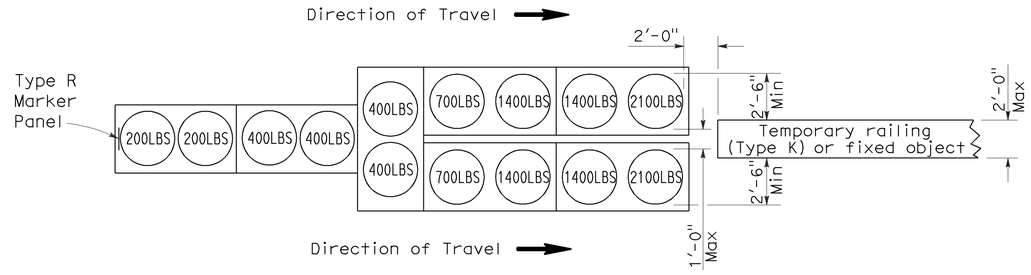

ARRAY 'TU14'

Approach speed 45 mph or more

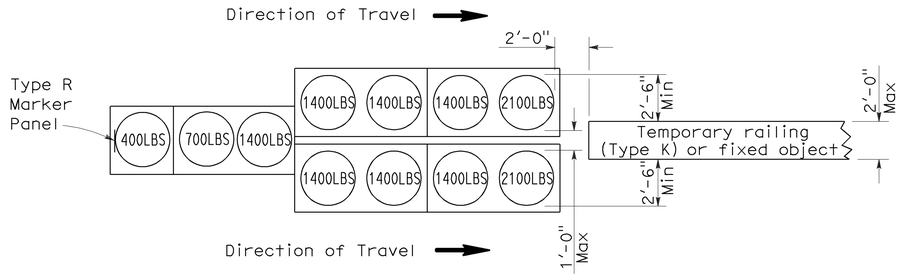

ARRAY 'TU11'

Approach speed less than 45 mph

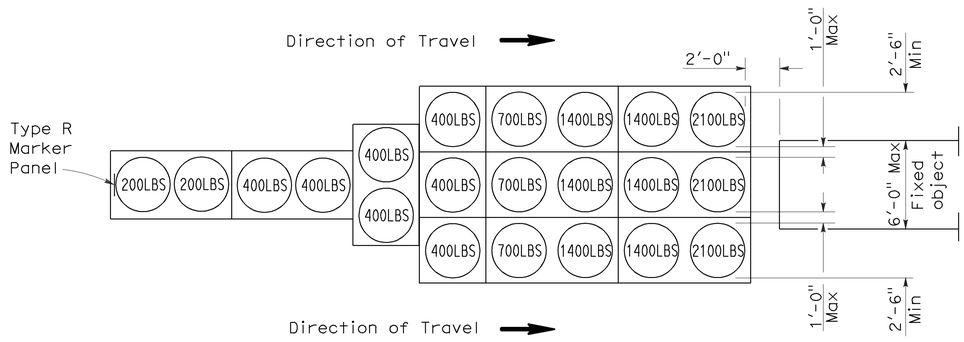

ARRAY 'TU21'

Approach speed 45 mph or more

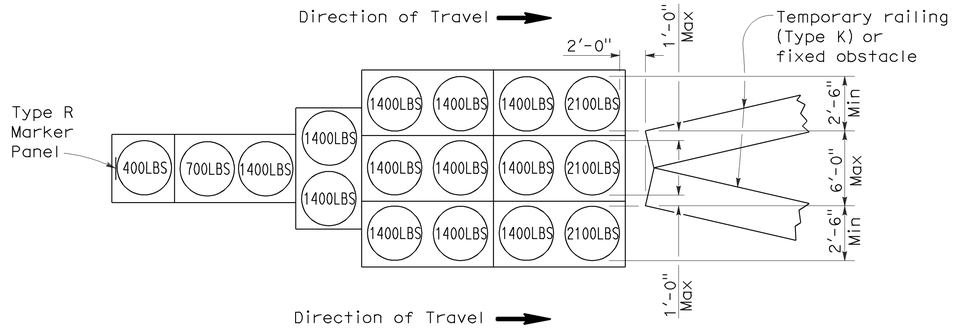

ARRAY 'TU17'

Approach speed less than 45 mph

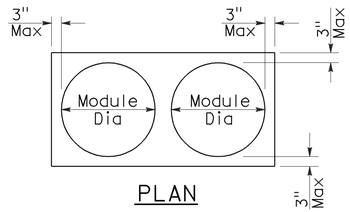

PLAN

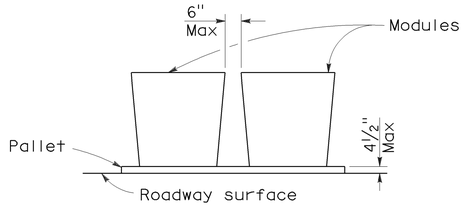

ELEVATION

CRASH CUSHION PALLET DETAIL

See Note 7

NOTES:

1. (XXX) Indicates sand filled module location and weight of sand in pounds for each module. Module spacing is based on the greater diameter of the module.
2. All sand weights are nominal.
3. Temporary crash cushion arrays shall not encroach on the traveled way.
4. Place the top of Type R marker panel 1" below the module lid.
5. Refer to Standard Plan A73B for marker details.
6. Approach speeds indicated conform to NCHRP 350 Report criteria.
7. Use of pallets is optional.

STATE OF CALIFORNIA
DEPARTMENT OF TRANSPORTATION

TEMPORARY CRASH CUSHION, SAND FILLED (UNIDIRECTIONAL)

NO SCALE

RSP T1A DATED JUNE 6, 2008 SUPERSEDES STANDARD PLAN T1A
DATED MAY 1, 2006 - PAGE 211 OF THE STANDARD PLANS BOOK DATED MAY 2006.

REVISED STANDARD PLAN RSP T1A

2006 REVISED STANDARD PLAN RSP T1A

5-15-08

DIST	COUNTY	ROUTE	POST MILES TOTAL PROJECT	SHEET NO.	TOTAL SHEETS
07	LA	210	R0.4/R5.9	82	87

Randell D. Hiatt
REGISTERED CIVIL ENGINEER

June 6, 2008
PLANS APPROVAL DATE

REGISTERED PROFESSIONAL ENGINEER
Randell D. Hiatt
No. C50200
Exp. 6-30-09
CIVIL
STATE OF CALIFORNIA

The State of California or its officers or agents shall not be responsible for the accuracy or completeness of electronic copies of this plan sheet.

To accompany plans dated 2-16-10

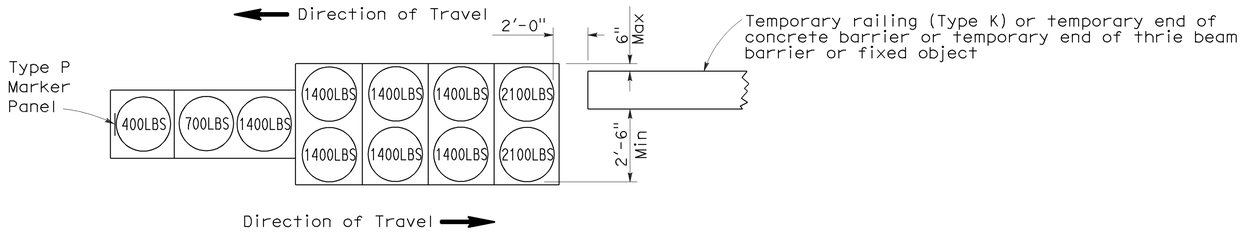

ARRAY 'TB11'

Approach speed less than 45 mph

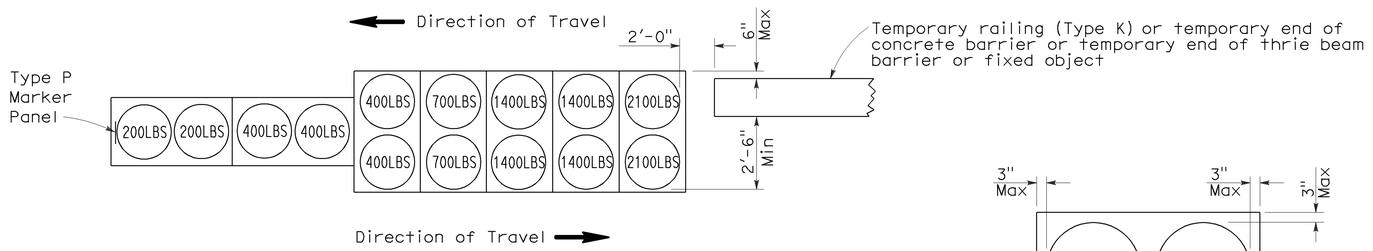

ARRAY 'TB14'

Approach speed 45 mph or more

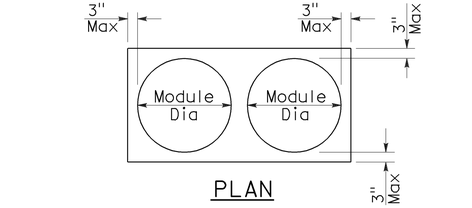

PLAN

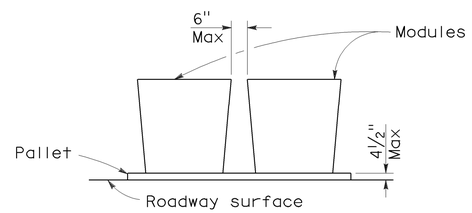

ELEVATION

CRASH CUSHION PALLET DETAIL

See Note 7

NOTES:

1. (XXX) Indicates sand filled module location and weight of sand in pounds for each module. Module spacing is based on the greater diameter of the module.
2. All sand weights are nominal.
3. Temporary crash cushion arrays shall not encroach on the traveled way.
4. Place the Type P marker panel so that the bottom of the panel rests upon the pallet.
5. Refer to Standard Plan A73B for marker details.
6. Approach speeds indicated conform to NCHRP 350 Report criteria.
7. Use of pallets is optional.

STATE OF CALIFORNIA
DEPARTMENT OF TRANSPORTATION

TEMPORARY CRASH CUSHION, SAND FILLED (BIDIRECTIONAL)

NO SCALE

RSP T1B DATED JUNE 6, 2008 SUPERSEDES STANDARD PLAN T1B
DATED MAY 1, 2006 - PAGE 212 OF THE STANDARD PLANS BOOK DATED MAY 2006.

REVISED STANDARD PLAN RSP T1B

2006 REVISED STANDARD PLAN RSP T1B

5-15-08

DIST	COUNTY	ROUTE	POST MILES TOTAL PROJECT	SHEET NO.	TOTAL SHEETS
07	LA	210	R0.4/R5.9	83	87

Randell D. Hiatt
REGISTERED CIVIL ENGINEER

June 6, 2008
PLANS APPROVAL DATE

REGISTERED PROFESSIONAL ENGINEER — Randell D. Hiatt — No. C50200 — Exp. 6-30-09 — CIVIL — STATE OF CALIFORNIA

The State of California or its officers or agents shall not be responsible for the accuracy or completeness of electronic copies of this plan sheet.

To accompany plans dated 2-16-10

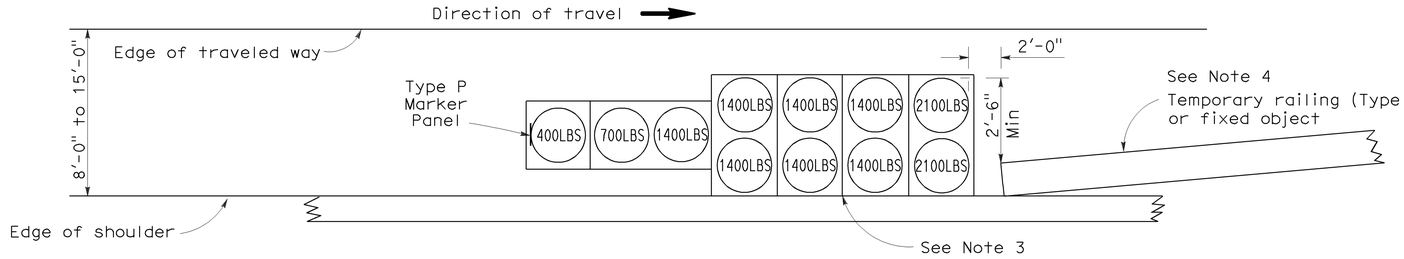

ARRAY 'TS11'

Approach speed less than 45 mph
See Note 9

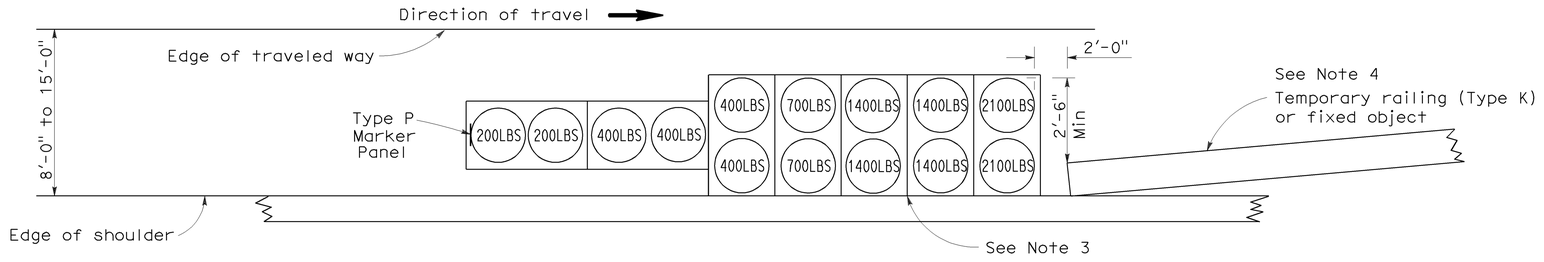

ARRAY 'TS14'

Approach speed 45 mph or more
See Note 9

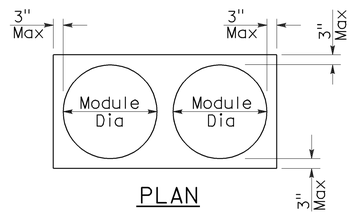

PLAN

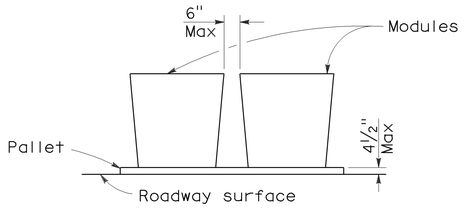

ELEVATION

CRASH CUSHION PALLET DETAIL

See Note 11

NOTES:

1. (XXX) Indicates sand filled module location and weight of sand in pounds for each module. Module spacing is based on the greater diameter of the module.
2. All sand weights are nominal.
3. The temporary crash cushion arrays shown on this plan shall be used only in locations where there will be traffic on one side of the temporary crash cushion array.
4. If the fixed object or approach end of the temporary railing is less than 15'-0" from the edge of traveled way, a temporary crash cushion is required in a construction or work zone.
5. Temporary crash cushion arrays shall not encroach on the traveled way.
6. Arrays for median shoulders shall conform to details shown on this plan for outside shoulders.
7. Place the Type P marker panel so that the bottom of the panel rests upon the pallet and faces traffic.
8. Refer to Standard Plan A73B for marker details.
9. For shoulder widths less than 8'-0", appropriate approved crash cushion protection, other than sand filled modules, shall be provided at fixed objects and at approach ends of temporary railing. The specific type of crash cushion shall be as shown on the project plans or as specified in the Special Provisions, or if not shown on the project plans or specified in the Special Provisions, shall be as approved by the Engineer.
10. Approach speeds indicated conform to NCHRP 350 Report criteria.
11. Use of pallets is optional.

STATE OF CALIFORNIA
DEPARTMENT OF TRANSPORTATION

TEMPORARY CRASH CUSHION, SAND FILLED (SHOULDER INSTALLATIONS)

NO SCALE

RSP T2 DATED JUNE 6, 2008 SUPERSEDES STANDARD PLAN T2
DATED MAY 1, 2006 - PAGE 213 OF THE STANDARD PLANS BOOK DATED MAY 2006.

REVISED STANDARD PLAN RSP T2

2006 REVISED STANDARD PLAN RSP T2

5-15-08

DIST	COUNTY	ROUTE	POST MILES TOTAL PROJECT	SHEET NO.	TOTAL SHEETS
07	LA	210	R0.4/R5.9	84	87

Jeffery G. McRae
REGISTERED ELECTRICAL ENGINEER

REGISTERED PROFESSIONAL ENGINEER
Jeffery G. McRae
No. E14512
Exp. 6-30-08
ELECTRICAL
STATE OF CALIFORNIA

October 5, 2007
PLANS APPROVAL DATE

The State of California or its officers or agents shall not be responsible for the accuracy or completeness of electronic copies of this plan sheet.

To accompany plans dated 2-16-10

ELECTROLIERS

STANDARD TYPES
15, 15D
15 STRUCTURE
21, 21D STRUCTURE
30
31
32
35
36-20A

High mast light pole

Double Arm lighting standard

Existing electrolier

(F) Electrolier foundation (Future installation)

NOTES:

1. Luminaires shall be 310 W HPS when installed on Type 21, 21D, 30, 31, 32, 35 and 36-20A Standards, unless otherwise specified. Luminaires shall be 200 W HPS when installed on other type standards or poles, unless otherwise specified.
2. Luminaires shall be the cutoff type, ANSI Type III medium cutoff lighting distribution, unless otherwise specified.
3. Variations noted adjacent to symbol on project plans.

Electrolier (see project notes or project plans)

Luminaire on wood pole

STANDARD NOTES:

- AB Abandon. If applied to conduit, remove conductors.
- BC Install pull box in existing conduit run.
- BP Pedestrian barricade, type as indicated on plan.
- CB Install conduit into existing pull box.
- CC Connect new and existing conduit. Remove existing conductors and install conductors as indicated.
- CF Conduit to remain for future use. Remove conductors. Install pull wire or rope.
- DH Detector handhole.
- FA Foundation to be abandoned.
- IS Install sign on signal mast arm.
- NS No slip base on standard.
- PEC Photoelectric control.
- PEU Photoelectric unit.
- RC Equipment or material to be removed and become the property of the Contractor.
- RE Remove electrolier, fuses and ballast. Tape ends of conductors.
- RL Relocate equipment.
- RR Remove and reuse equipment.
- RS Remove and salvage equipment.
- SC Splice new to existing conductors.
- SD Service disconnect.
- SF Standard to remain for future use. Remove luminaire, pole conductors, fuses and ballast.
- TSP Telephone service point.

ABBREVIATIONS AND EQUIPMENT DESIGNATIONS

PROPOSED	EXISTING	
BBS	bbs	Battery backup system
BC	bc	Bolt circle
C	C	Conduit
CCTV	cctv	Closed circuit television
CKT	ckt	Circuit
CMS	cms	Changeable message sign
DLC	dlc	Loop detector lead-in cable
EMS	ems	Extinguishable message sign
EVC	evc	Emergency vehicle cable
EVD	evd	Emergency vehicle detector
FB	fb	Flashing beacon
FBCA	fbca	Flashing beacon control assembly
FBS	fbs	Flashing beacon with slip base
FO	fo	Fiber optic
G	G	Ground (Equipment Grounding Conductor)
GFCI	GFCI	Ground fault circuit interrupt
HAR	har	Highway advisory radio
HEX	hex	Hexagonal
HPS	hps	High pressure sodium
IISNS	iisns	Internally illuminated street name sign
ISL	isl	Induction sign lighting
LED	led	Light emitting diode
LMA	lma	Luminaire mast arm
LPS	lps	Low pressure sodium
LTG	ltg	Lighting
LUM	lum	Luminaire
MAT	mat	Mast arm mounting vehicle signal faces, top attachment
MAS	mas	Mast arm mounting vehicle signal faces, side attachment
MAS-4A	mas-4A	Mast arm mounting vehicle signal faces,
MAS-4B	mas-4B	side attachment - 4 signal section
MAS-4C	mas-4C	
MAS-5A	mas-5A	Mast arm mounting vehicle signal faces,
MAS-5B	mas-5B	side attachment - 5 signal section
MC	mc	Mercury contactor
M/M	m/m	Multiple to multiple transformer
MT	mt	Conduit with pull wire or rope only
MTG	mtg	Mounting
	mv	Mercury vapor lighting fixture
N	N	Neutral (Grounded Conductor)
NC	NC	Normally closed
NO	NO	Normally open
PB	pb	Pull box
PEC	pec	Photoelectric control (Type I, II, III, IV or V as shown)
PED	ped	Pedestrian
PEU	peu	Photoelectric unit
PPB	ppb	Pedestrian push button
RL		Relocated equipment
RM	rm	Ramp metering
SB	sb	Slip base
SIC	sic	Signal interconnect cable
SIG	sig	Signal
SMA	sma	Signal mast arm
SNS	sns	Street name sign
SP	sp	Service point
TDC	tdc	Telephone demarcation cabinet
TMS	tms	Traffic monitoring station
TOS	tos	Traffic Operations System
VEH	veh	Vehicle
XFMR	xfmr	Transformer
COMM	comm	Communication
RWIS	rwis	Roadway weather information system

SOFFIT AND WALL MOUNTED LUMINAIRES

- Pendant, 70 W HPS unless otherwise specified.
- Flush, 70 W HPS unless otherwise specified.
- Wall surface, 70 W HPS unless otherwise specified.
- Existing soffit or wall luminaire to remain unmodified.
- (M) Existing soffit or wall luminaire to be modified as specified.

NOTE:

Arrow indicates "street side" of luminaire.

STATE OF CALIFORNIA
DEPARTMENT OF TRANSPORTATION

ELECTRICAL SYSTEMS (SYMBOLS AND ABBREVIATIONS)

NO SCALE

RSP ES-1A DATED OCTOBER 5, 2007 SUPERSEDES STANDARD PLAN ES-1A
DATED MAY 1, 2006 - PAGE 400 OF THE STANDARD PLANS BOOK DATED MAY 2006.

REVISED STANDARD PLAN RSP ES-1A

2006 REVISED STANDARD PLAN RSP ES-1A

7-10-07

CONDUIT

PROPOSED	EXISTING	
— — —	— — —	Lighting Conduit, unless otherwise indicated or noted
— - — - —	— - — - —	Traffic signal conduit
— C — —	— c — —	Communication conduit
— T — —	— t — —	Telephone conduit
— F — —	— f — —	Fire alarm conduit
— FO — —	— fo — —	Fiber optic conduit
— — —]	— — —]	Conduit termination (RSP ES-9A C)
R	r	Conduit riser in/on structure or service pole

SERVICE EQUIPMENT

PROPOSED	EXISTING	
— -- OH	— -- oh	Overhead lines
U	U	Wood pole "U" indicates utility owned
		Pole guy with anchor
		Utility transformer - ground mounted
III		Service equipment enclosure type
		Service equipment enclosure door indicates front of enclosure
T	t	Telephone demarcation cabinet

POLE-MOUNTED SERVICE DESIGNATION

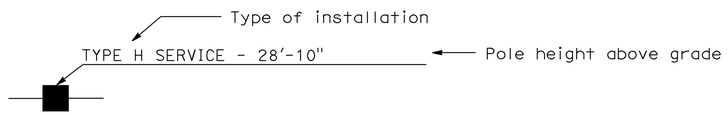

ILLUMINATED OVERHEAD SIGN

PROPOSED	EXISTING	
		Overhead sign - Single post
		Overhead sign - Two post
		Overhead sign - Mounted on structure
		Overhead sign with electrolier

SIGNAL EQUIPMENT

PROPOSED	EXISTING	
		Pedestrian signal face
		Pedestrian push button post
		Pedestrian barricade
		Vehicle signal face (with backplate, 3-Section: red, yellow and green)
		Vehicle signal face with angle visors
PV	PV	Modifications of basic symbols: "L" Indicates all non-arrow sections louvered "LG" Indicates louvered green section only "PV" Indicates 12" programmed visibility sections "8" indicates all 8" sections (only when specified)
		Type 15TS and Vehicle signal face
		Vehicle signal face with red, yellow and green left arrow sections
		Vehicle signal face with red and yellow sections and up green arrow
		Vehicle signal face (5 Section) with red, yellow and green sections and yellow and green right arrows
		Type 1 Standard and attached vehicle signal faces
		Standard with signal mast arm only and attached vehicle signal faces and internally illuminated street name sign
		Type 33 Standard, Left-turn vehicle signal face and sign
		Standard with luminaire and signal mast arms and attached vehicle signal faces
		Cantilever flashing beacon Type 9 Frame, with a sign unless otherwise specified or indicated
		Type 15-FBS Standard with two vehicle signal face sections with lens, backplate and visor with a sign
R	Y	Flashing beacon. One vehicle signal face section with lens, backplate and visor. "R" indicates red indication, "Y" indicates yellow indication
		Controller assembly. Door indicates front of cabinet

DIST	COUNTY	ROUTE	POST MILES TOTAL PROJECT	SHEET NO.	TOTAL SHEETS
07	LA	210	R0.4/R5.9	85	87

Jeffery G. McRae
REGISTERED ELECTRICAL ENGINEER

Jeffery G. McRae
No. E14512
Exp. 6-30-08
ELECTRICAL
REGISTERED PROFESSIONAL ENGINEER
STATE OF CALIFORNIA

October 5, 2007
PLANS APPROVAL DATE

The State of California or its officers or agents shall not be responsible for the accuracy or completeness of electronic copies of this plan sheet.

To accompany plans dated 2-16-10

SIGNAL EQUIPMENT Cont

PROPOSED	EXISTING	
●	○	Guard post
		Type 1 Standard with "Meter On" sign
		Emergency Vehicle detector

NOTES:

1. All signal sections shall be 12" unless shown otherwise.
2. Signal heads shall be provided with backplates unless shown otherwise.
3. Signal indication shall be LED.

STATE OF CALIFORNIA
DEPARTMENT OF TRANSPORTATION

ELECTRICAL SYSTEMS (SYMBOLS AND ABBREVIATIONS)

NO SCALE

RSP ES-1B DATED OCTOBER 5, 2007 SUPERCEDES STANDARD PLAN ES-1B DATED MAY 1, 2006 - PAGE 401 OF THE STANDARD PLANS BOOK DATED MAY 2006.

REVISED STANDARD PLAN RSP ES-1B

2006 REVISED STANDARD PLAN RSP ES-1B

7-10-07

DIST	COUNTY	ROUTE	POST MILES TOTAL PROJECT	SHEET NO.	TOTAL SHEETS
07	LA	210	R0.4/R5.9	86	87

Jeffrey G. McRae
REGISTERED ELECTRICAL ENGINEER

October 5, 2007
PLANS APPROVAL DATE

Jeffery G. McRae
No. E14512
Exp. 6-30-08
ELECTRICAL
REGISTERED PROFESSIONAL ENGINEER
STATE OF CALIFORNIA

The State of California or its officers or agents shall not be responsible for the accuracy or completeness of electronic copies of this plan sheet.

To accompany plans dated 2-16-10

EQUIPMENT IDENTIFICATION

ILLUMINATED SIGN IDENTIFICATION NUMBER:

Sign No. 12345 — Sign number - Place on post or structure

10 ISL SCI 1.0
- 1.0 — Transformer rating (kVA)
- SCI — Lighting control type
- ISL — Number and type of fixtures

Do NOT place on standard or structure

ELECTROLIER OR EQUIPMENT IDENTIFICATION NUMBER:

12345 - 15'-0"
- 15'-0" — Mast arm length, if shown. Do not place on standard or structure.
- 12345 — Equipment number - Place on standard or structure. Existing equipment numbers are shown in parenthesis

CONDUIT AND CONDUCTOR IDENTIFICATION:

1½"C, 2#10, 15#14, 2 DLC
- 2#10, 15#14, 2 DLC — Number and size of conductors and cables
- 1½"C, — Size of conduit in inches

ø1, ø2, ø2P, etc. — Traffic phase identification for signal faces, detectors and phase diagrams

[1] [2] [3] — Project note numbers

(A) (B) (C) — Equipment description, installation or item numbers

△1 △2 △3 — Conduit run numbers

SIGNAL AND LIGHTING STANDARD (TYPICAL DESIGNATION):

19A - 3 - 100
- 100 — Wind velocity = 100 mph
- 3 — Case 3 arm loading
- 19A — Standard type
- Standard Plan sheet number
- Detail number or letter

MISCELLANEOUS EQUIPMENT

PROPOSED	EXISTING	
CMS	cms	Changeable message sign
		Closed circuit television camera
		Highway advisory radio pole and antenna
EMS	ems	Extinguishable message sign
M V	m v	Detection device M = Microwave sensor V = Video image sensor

WIRING DIAGRAM LEGEND

P	Pole
CB	Circuit breaker
A	Ampere
V	Volt
M	Metered
UM	Unmetered
NB	Neutral bus
GB	Ground bus
G	Equipment grounding conductor
N	Grounded conductor (Neutral)

- External conductor
- Conductor or bus
- Tie point
- Contactor coil
- Contactor, Contact NO
- Terminal blocks
- Contactor, Contact NC
- Enclosure bond
- Grounding electrode
- Circuit breaker
- Receptacle

PULL BOXES

PROPOSED EXISTING

Pull box-No. 5 unless otherwise indicated or noted.

3 / 9A(21)

Pull box-Additional designations or descriptions

3 = No. 3½ pull box
5 = No. 5 pull box
6 = No. 6 pull box
7 = No. 7 (Ceiling pull box)
8 = No. 8 (Pendant soffit pull box)
9 = No. 9 pull box
9A = No. 9A pull box

(C) = Communications pull box
(E) = Pull box with extension
(S) = Sprinkler control pull box
(21) = Anchor bolts and conduit for future installation of Type 21 Standard
(T) = Traffic pull box

VEHICLE DETECTORS

5 J 9 U
- 9 — Vehicle detector designation
- U = Upper, L = Lower
- 5 — Slot number in input file
- J — Input file (I or J)
- U — Phase

PROPOSED EXISTING

- Type A detector loop. Outline of sawcut shown.
- Type B detector loop. Outline of sawcut shown.
- Type C detector loop. Outline of sawcut shown.
- Type D detector loop. Outline of sawcut shown.
- Type E detector loop. Outline of sawcut shown.
- Type Q detector loop. Outline of sawcut shown.
- Magnetic detector
- DH / dh — Detector handhole
- Microwave or video detection zone

STATE OF CALIFORNIA
DEPARTMENT OF TRANSPORTATION

ELECTRICAL SYSTEMS (SYMBOLS AND ABBREVIATIONS)

NO SCALE

RSP ES-1C DATED OCTOBER 5, 2007 SUPERCEDES STANDARD PLAN ES-1C
DATED MAY 1, 2006 - PAGE 402 OF THE STANDARD PLANS BOOK DATED MAY 2006.

REVISED STANDARD PLAN RSP ES-1C

2006 REVISED STANDARD PLAN RSP ES-1C

7-10-07

DIST	COUNTY	ROUTE	POST MILES TOTAL PROJECT	SHEET NO.	TOTAL SHEETS
07	LA	210	R0.4/R5.9	87	87

Jeffery G. McRae
REGISTERED ELECTRICAL ENGINEER

Jeffery G. McRae
No. E14512
Exp. 6-30-08
ELECTRICAL
REGISTERED PROFESSIONAL ENGINEER
STATE OF CALIFORNIA

October 5, 2007
PLANS APPROVAL DATE

The State of California or its officers or agents shall not be responsible for the accuracy or completeness of electronic copies of this plan sheet.

To accompany plans dated 2-16-10

NOTES: (FOR LIGHTING AND SIGN ILLUMINATION CONTROL)

1. The ballast voltages of lighting fixtures and luminaires shall match line service voltages.
2. Voltage rating of photoelectric controls shall conform to the service voltage indicated on the plans.
3. Terminal strip shall be provided for wiring to fixtures.
4. Type SC1A, SC2A, SC3A controls are similar to Types SC1, SC2 and SC3 controls respectively except test switch and wiring are not required.

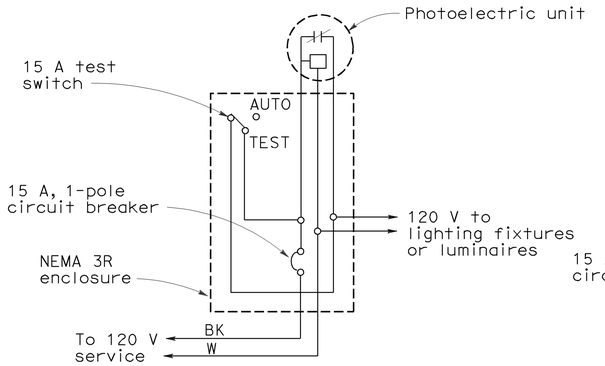

TYPE LC1 CONTROL

For 120 V unswitched circuit with no more than 800 W load.

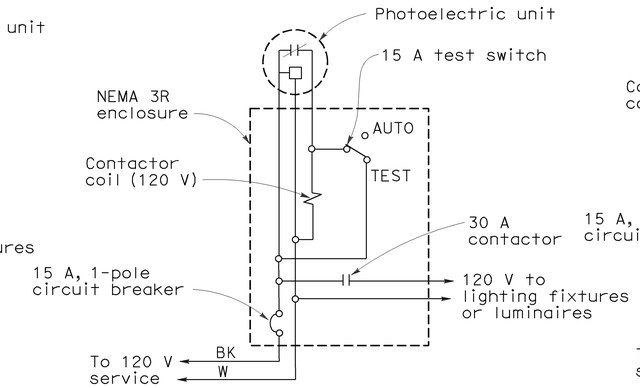

TYPE LC2 CONTROL

For 120 V unswitched circuit

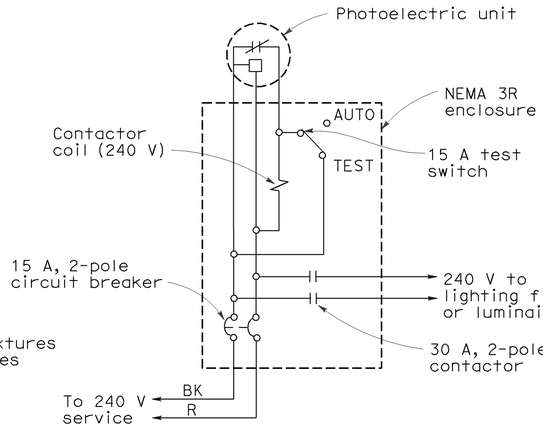

TYPE LC3 CONTROL

For 240 V and 480 V unswitched circuits

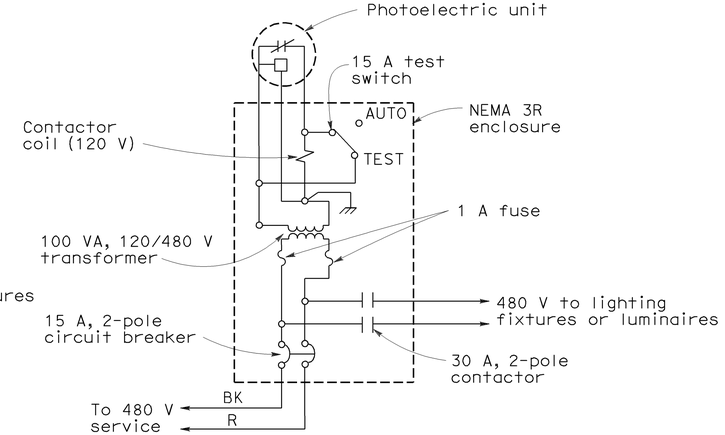

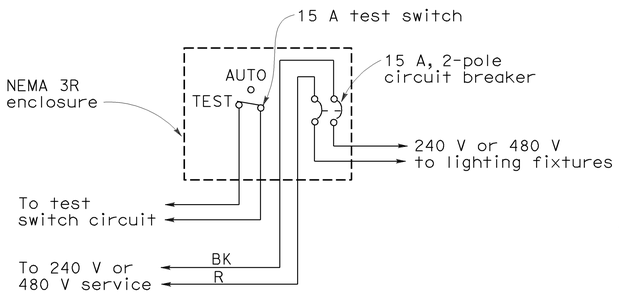

TYPE SC1 CONTROL

For 240 V or 480 V switched circuit, see Note 4 for Type SC1A

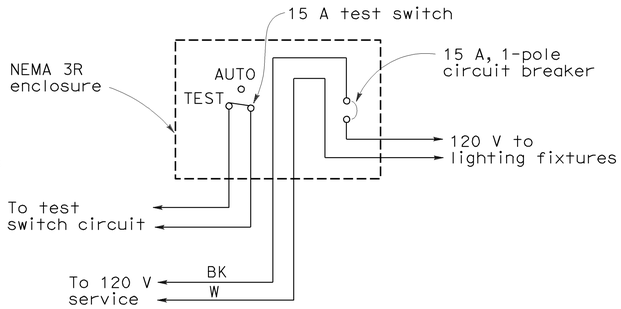

TYPE SC2 CONTROL

For 120 V switched circuit, see Note 4 for Type SC2A

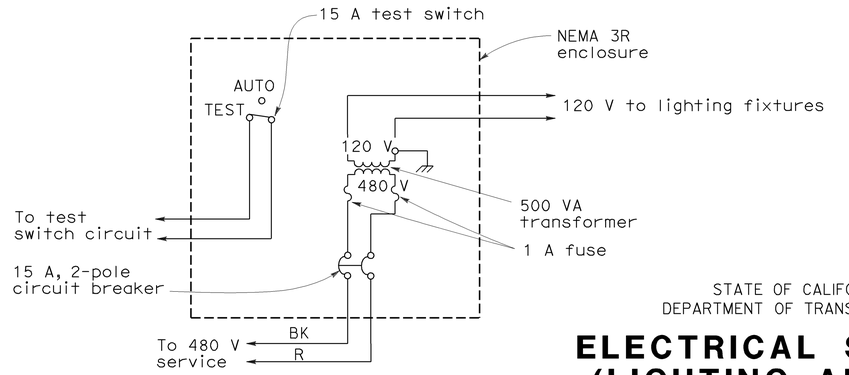

TYPE SC3 CONTROL

For 480 V switched sign circuit, see Note 4 for Type SC3A

STATE OF CALIFORNIA
DEPARTMENT OF TRANSPORTATION

ELECTRICAL SYSTEMS (LIGHTING AND SIGN ILLUMINATION CONTROL)

NO SCALE

RSP ES-15D DATED OCTOBER 5, 2007 SUPERCEDES STANDARD PLAN ES-15D DATED MAY 1, 2006 - PAGE 472 OF THE STANDARD PLANS BOOK DATED MAY 2006.

REVISED STANDARD PLAN RSP ES-15D

2006 REVISED STANDARD PLAN RSP ES-15D

9-10-07