Dist	COUNTY	ROUTE	POST MILES TOTAL PROJECT	SHEET No.	TOTAL SHEETS
07	LA	5	C43.9/C46.4	1	199

ACNHPI-005-3(115)E

STATE OF CALIFORNIA
DEPARTMENT OF TRANSPORTATION

PROJECT PLANS FOR CONSTRUCTION ON
STATE HIGHWAY

IN LOS ANGELES COUNTY NEAR SYLMAR FROM 0.5 MILE SOUTH OF SAN FERNANDO ROAD OVERHEAD TO 0.2 MILE SOUTH OF WELDON CANYON OVERCROSSING

TO BE SUPPLEMENTED BY STANDARD PLANS DATED 2010

INDEX OF PLANS

SHEET No.	DESCRIPTION
1	TITLE AND LOCATION MAP
2-5	TYPICAL CROSS SECTIONS
6-17	LAYOUTS
18-20	CONSTRUCTION DETAILS
21-37	WATER POLLUTION CONTROL DETAILS
38-51	DRAINAGE PLANS, PROFILES, DETAILS AND QUANTITIES
52-63	UTILITY PLANS
64	CONSTRUCTION AREA SIGNS
65-75	TRAFFIC HANDLING PLANS AND QUANTITIES
76-79	PAVEMENT DELINEATION PLANS AND QUANTITIES
80-93	SIGN PLANS, DETAILS AND QUANTITIES
94-95	SUMMARY OF QUANTITIES
96-99	LANDSCAPE PLANS
100-138	ELECTRICAL PLANS
139-199	REVISED STANDARD PLANS

THE STANDARD PLANS LIST APPLICABLE TO THIS CONTRACT IS INCLUDED IN THE NOTICE TO BIDDERS AND SPECIAL PROVISIONS BOOK

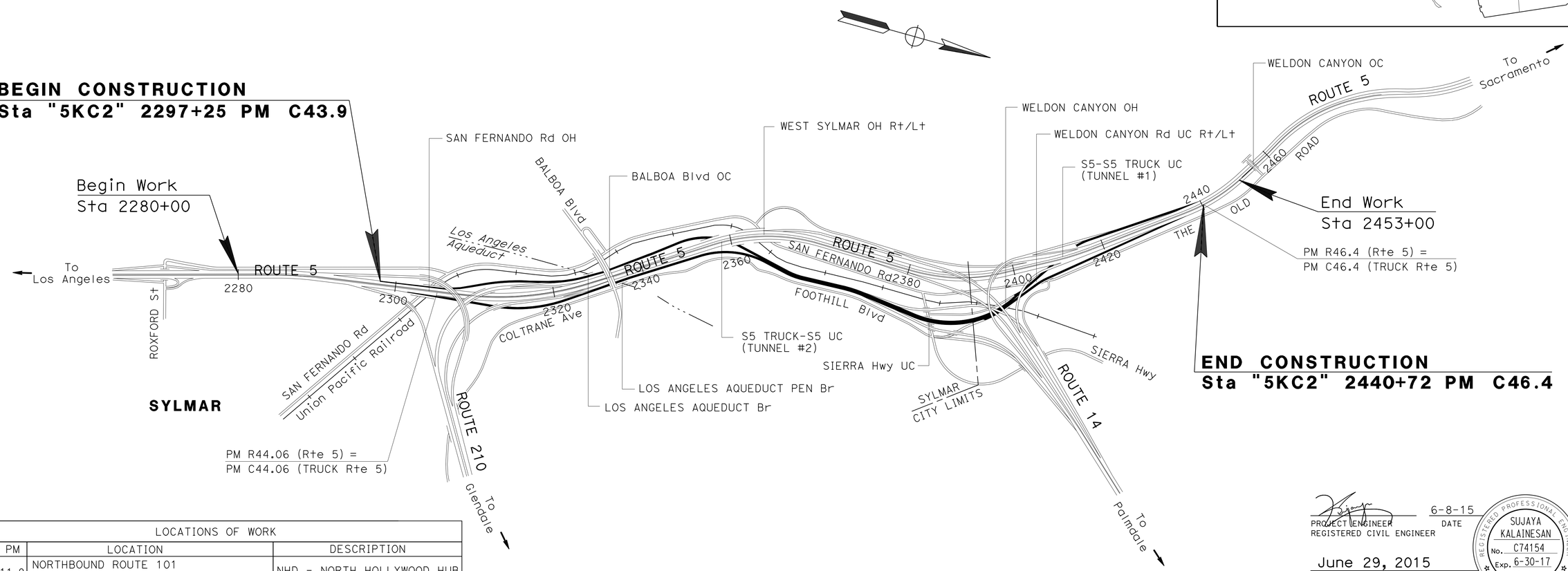

LOCATIONS OF WORK			
ROUTE	PM	LOCATION	DESCRIPTION
101	11.8	NORTHBOUND ROUTE 101 EAST OF TUJUNGA Ave	NHD - NORTH HOLLYWOOD HUB
2	18.7	ROUTE 134 AND ROUTE 2 INTERCHANGE (2901 WEST BROADWAY LOS ANGELES, CA 90041)	LARTMC - LOS ANGELES REGIONAL TRANSPORTATION MANAGEMENT CENTER

THE CONTRACTOR SHALL POSSESS THE CLASS (OR CLASSES) OF LICENSE AS SPECIFIED IN THE "NOTICE TO BIDDERS."

NO SCALE

PROJECT ENGINEER
REGISTERED CIVIL ENGINEER
6-8-15
DATE

June 29, 2015
PLANS APPROVAL DATE

REGISTERED PROFESSIONAL ENGINEER
SUJAYA KALAINESAN
No. C74154
Exp. 6-30-17
CIVIL
STATE OF CALIFORNIA

THE STATE OF CALIFORNIA OR ITS OFFICERS OR AGENTS SHALL NOT BE RESPONSIBLE FOR THE ACCURACY OR COMPLETENESS OF SCANNED COPIES OF THIS PLAN SHEET.

PROJECT MANAGER MIRNA DAGHER
DESIGN MANAGER KYLE KUNITAKE

CONTRACT No.	07-302904
PROJECT ID	0713000478

LAST REVISION 00-00-00
DATE PLOTTED => 05-AUG-2015
TIME PLOTTED => 10:19

Dist	COUNTY	ROUTE	POST MILES TOTAL PROJECT	SHEET No.	TOTAL SHEETS
07	LA	5	C43.9/C46.4	2	199

REGISTERED CIVIL ENGINEER 6-8-15 DATE

6-29-15
PLANS APPROVAL DATE

REGISTERED PROFESSIONAL ENGINEER SUJAYA KALAINESAN No. C74154 Exp. 6-30-17 CIVIL STATE OF CALIFORNIA

THE STATE OF CALIFORNIA OR ITS OFFICERS OR AGENTS SHALL NOT BE RESPONSIBLE FOR THE ACCURACY OR COMPLETENESS OF SCANNED COPIES OF THIS PLAN SHEET.

NOTES:

1. DIMENSIONS OF THE PAVEMENT STRUCTURES (STRUCTURAL SECTIONS) ARE SUBJECT TO TOLERANCES SPECIFIED IN THE STANDARD SPECIFICATIONS.
2. SUPERELEVATIONS ARE SHOWN ON THE SUPERELEVATION DIAGRAMS.
3. EXACT LOCATIONS AND TYPES OF DIKES, CURBS, GUARD RAILINGS, AND CONCRETE BARRIERS ARE SHOWN ON THE LAYOUTS AND THE SUMMARY OF QUANTITIES SHEETS.
4. EXACT LOCATIONS OF PANELS TO BE PROTECTED IN PLACE WILL BE IDENTIFIED BY THE ENGINEER.
5. LIMITS OF PAVEMENT WORK MAY BE ADJUSTED BY THE ENGINEER BASED ON FIELD CONDITIONS AND LOCATIONS OF PANELS TO BE PROTECTED IN PLACE.
6. OMIT ALL BRIDGE SECTIONS AND APPROACH SLABS.

LEGEND:

PPCP: PRECAST PANEL CONCRETE PAVEMENT
RHMA-G: RUBBERIZED HOT MIX ASPHALT (GAP GRADED)

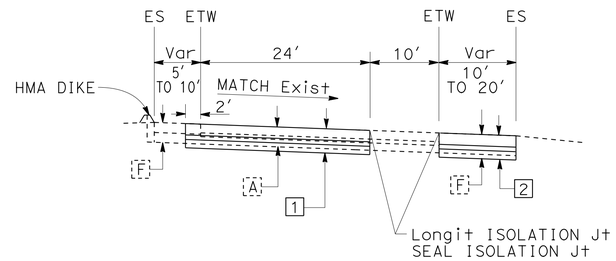

Sta 2360+28.2 TO Sta 237+00

LOCATIONS OF PROTECT IN PLACE PANELS (SEE LAYOUTS):

NB
2337+06.00 TO 2337+26.00
2337+73.00 TO 2340+03.00
2340+23.00 TO 2340+47.00
2340+67.00 TO 2340+91.00
2341+11.00 TO 2341+35.00
2338+53.00 TO 2338+65.00
2339+93.00 TO 2340+17.00
2344+59.00 TO 2345+09.00
2345+39.00 TO 2345+65.00
2345+89.00 TO 2346+19.00
2347+27.00 TO 2347+57.00
2344+48.00 TO 2346+19.00
2347+27.00 TO 2347+67.00
2357+71.00 TO 2358+41.00
2358+74.00 TO 2359+05.00
240+38.47 TO 240+59.47
242+46.47 TO 242+67.47
245+41.47 TO 245+62.47
247+68.47 TO 247+89.47
248+04.47 TO 248+45.47
249+09.47 TO 249+39.47
251+55.47 TO 251+65.47
253+20.47 TO 253+40.47
254+78.00 TO 255+08.00
255+08.00 TO 255+28.00
261+36.00 TO 261+77.00
261+97.00 TO 262+07.00
268+80.00 TO 269+00.00
269+30.00 TO 269+50.00
269+72.00 TO 270+02.00
269+72.00 TO 269+92.00
270+32.00 TO 270+42.00

SB
2308+58.3 TO 2308+98.3
2311+93.3 TO 2312+13.3
2313+05.3 TO 2313+65.3
2315+47.3 TO 2316+27.3
2318+98.3 TO 2319+58.3
2336+71.0 TO 2337+71.0
2339+56.0 TO 2340+46.0
2360+80.0 TO 2361+00.0
245+41.5 TO 245+71.5
256+33.3 TO 256+43.3
261+50.0 TO 261+80.0
266+72.0 TO 267+72.0
268+14.0 TO 268+64.0
2419+12.7 TO 2419+32.7
2424+15.0 TO 2424+45.0
2427+54.3 TO 2428+04.3
2431+40.3 TO 2432+00.3

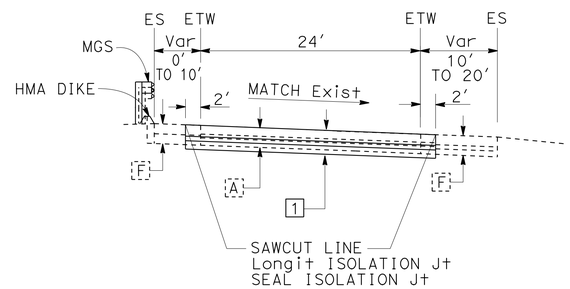

Sta 2354+13.5 TO Sta 2360+28.2

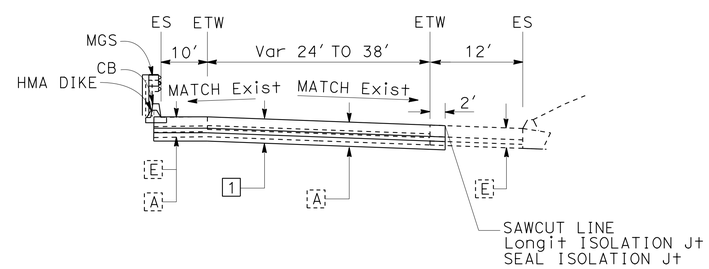

Sta 2336+00.0 TO Sta 2354+13.5

PAVEMENT CLIMATE REGION

INLAND VALLEY

TYPICAL STRUCTURAL SECTIONS

1
- 1.15' JPCP (RAPID STRENGTH CONCRETE)
- ---- BOND BREAKER
- 0.35' ALTERNATE TREATED BASE (ATB)
- 0.70' CLASS 3 AGGREGATE BASE

2
- 0.75' JPCP (RAPID STRENGTH CONCRETE)
- ---- BOND BREAKER
- 0.35' ALTERNATE TREATED BASE (ATB)
- 0.70' CLASS 3 AGGREGATE BASE

EXISTING STRUCTURAL SECTIONS

A
- 0.80' PORTLAND CEMENT CONCRETE
- 0.40' CEMENT TREATED BASE
- 0.50' AGGREGATE BASE

B
- 0.15' RHMA-G
- 0.25' ASPHALT CONCRETE
- 0.80' AGGREGATE BASE
- Var AGGREGATE SUBBASE

C
- 0.90' PPCP
- ---- BOND BREAKER
- 0.35' LCB RAPID SETTING
- 0.50' CLASS 3 AB

D
- 0.65' JPCP
- (ROLLER COMPACTED Conc)

E
- 1.00' PORTLAND CEMENT CONCRETE
- 0.50' LEAN CONCRETE BASE
- 0.70' AGGREGATE BASE

F
- (0.15'-0.25') RHMA-G
- (0.25'-0.15') ASPHALT CONCRETE
- 0.65' AGGREGATE BASE
- Var AGGREGATE SUBBASE

ROUTE 5 NORTHBOUND TRUCK ROUTE

TYPICAL CROSS SECTIONS

NO SCALE

X-1

STATE OF CALIFORNIA - DEPARTMENT OF TRANSPORTATION
Caltrans® DESIGN
FUNCTIONAL SUPERVISOR: KYLE KUNITAKE
CALCULATED-DESIGNED BY: KATHLEEN PHAM
CHECKED BY: SUJAYA KALAINESAN
REVISED BY
DATE REVISED

LAST REVISION 00-00-00
DATE PLOTTED => 05-AUG-2015
TIME PLOTTED => 10:19

Dist	COUNTY	ROUTE	POST MILES TOTAL PROJECT	SHEET No.	TOTAL SHEETS
07	LA	5	C43.9/C46.4	3	199

REGISTERED CIVIL ENGINEER 6-8-15 DATE

6-29-15
PLANS APPROVAL DATE

REGISTERED PROFESSIONAL ENGINEER SUJAYA KALAINESAN No. C74154 Exp. 6-30-17 CIVIL STATE OF CALIFORNIA

THE STATE OF CALIFORNIA OR ITS OFFICERS OR AGENTS SHALL NOT BE RESPONSIBLE FOR THE ACCURACY OR COMPLETENESS OF SCANNED COPIES OF THIS PLAN SHEET.

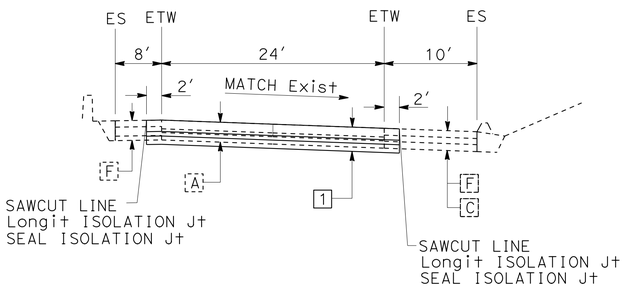

Sta 260+00.0 TO Sta 270+36.8

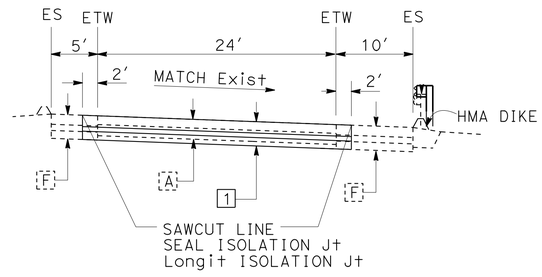

Sta 2408+50.0 TO Sta 2430+32.0

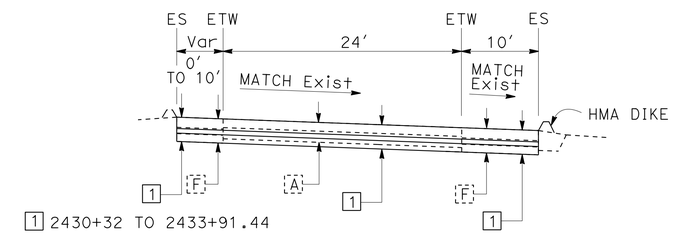

1 2430+32 TO 2433+91.44

Sta 2430+32.0 TO Sta 2440+86.4

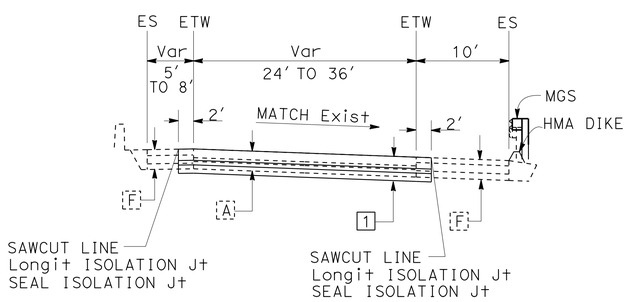

Sta 237+00 TO Sta 257+11.2

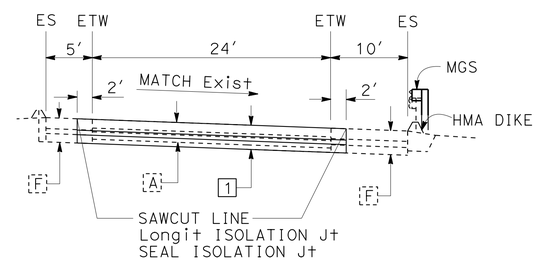

Sta 2403+53.0 TO Sta 2404+94.4

ROUTE 5 NORTHBOUND TRUCK ROUTE

TYPICAL CROSS SECTIONS

NO SCALE

X-2

REVISED BY | DATE REVISED
KATHLEEN PHAM | SUJAYA KALAINESAN
CALCULATED-DESIGNED BY | CHECKED BY
FUNCTIONAL SUPERVISOR | KYLE KUNITAKE
STATE OF CALIFORNIA - DEPARTMENT OF TRANSPORTATION
Caltrans
DESIGN

LAST REVISION 00-00-00 | DATE PLOTTED => 05-AUG-2015 | TIME PLOTTED => 10:19

Dist	COUNTY	ROUTE	POST MILES TOTAL PROJECT	SHEET No.	TOTAL SHEETS
07	LA	5	C43.9/C46.4	4	199

REGISTERED CIVIL ENGINEER 6-8-15 DATE

6-29-15
PLANS APPROVAL DATE

REGISTERED PROFESSIONAL ENGINEER SUJAYA KALAINESAN No. C74154 Exp. 6-30-17 CIVIL STATE OF CALIFORNIA

THE STATE OF CALIFORNIA OR ITS OFFICERS OR AGENTS SHALL NOT BE RESPONSIBLE FOR THE ACCURACY OR COMPLETENESS OF SCANNED COPIES OF THIS PLAN SHEET.

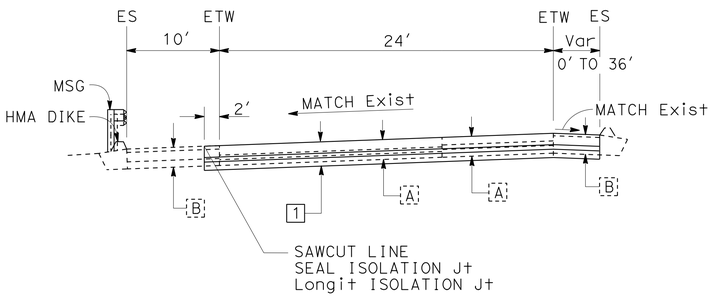

Sta 2318+64.6 TO Sta 2322+27.7

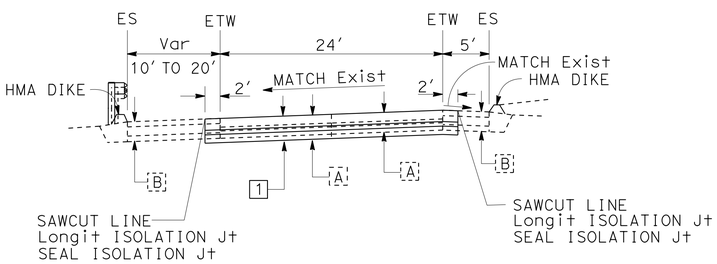

Sta 2308+14.3 TO Sta 2318+64.6

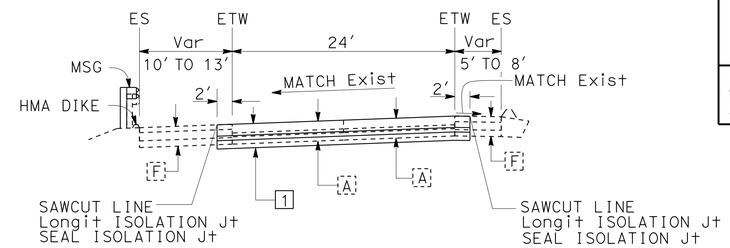

Sta 259+89.6 TO Sta 270+80.0

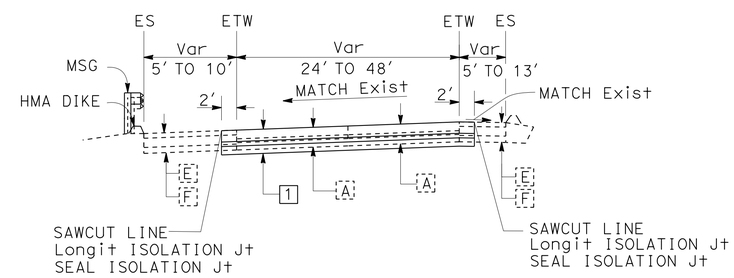

Sta 2360+09 TO Sta 256+53.0

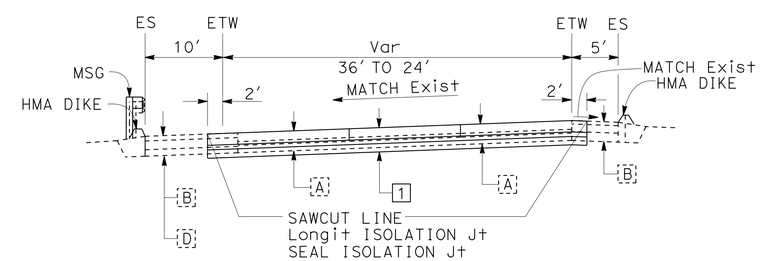

Sta 2331+15.3 TO Sta 2343+25.6

ROUTE 5 SOUTHBOUND TRUCK ROUTE

TYPICAL CROSS SECTIONS

NO SCALE

X-3

STATE OF CALIFORNIA - DEPARTMENT OF TRANSPORTATION
Caltrans
DESIGN

FUNCTIONAL SUPERVISOR: KYLE KUNITAKE
CALCULATED-DESIGNED BY: KATHLEEN PHAM
CHECKED BY: SUJAYA KALAINESAN
REVISED BY
DATE REVISED

LAST REVISION 00-00-00
DATE PLOTTED => 05-AUG-2015
TIME PLOTTED => 10:19

Dist	COUNTY	ROUTE	POST MILES TOTAL PROJECT	SHEET No.	TOTAL SHEETS
07	LA	5	C43.9/C46.4	5	199

REGISTERED CIVIL ENGINEER DATE 6-8-15

6-29-15
PLANS APPROVAL DATE

REGISTERED PROFESSIONAL ENGINEER
SUJAYA KALAINESAN
No. C74154
Exp. 6-30-17
CIVIL
STATE OF CALIFORNIA

THE STATE OF CALIFORNIA OR ITS OFFICERS OR AGENTS SHALL NOT BE RESPONSIBLE FOR THE ACCURACY OR COMPLETENESS OF SCANNED COPIES OF THIS PLAN SHEET.

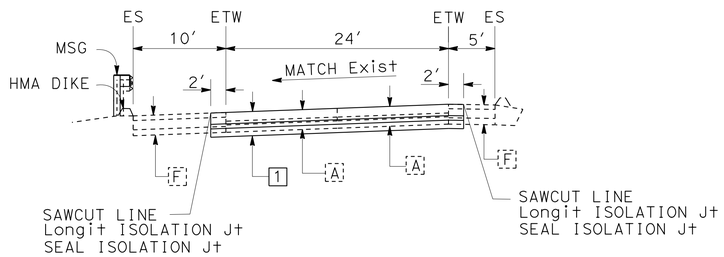

Sta 2418+12.8 TO Sta 2427+31.6

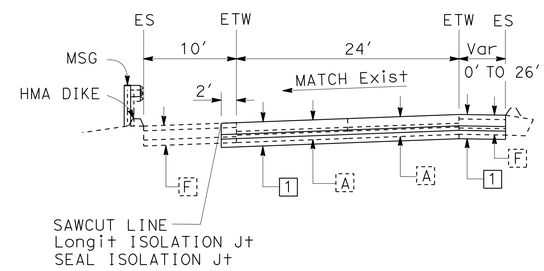

Sta 2427+31.6 TO Sta 2432+89.0

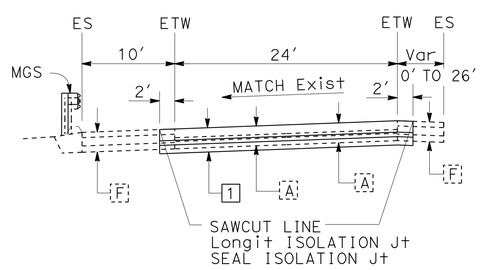

Sta 2415+18.0 TO Sta 2418+12.8

ROUTE 5 SOUTHBOUND TRUCK ROUTE

TYPICAL CROSS SECTIONS

NO SCALE

X-4

STATE OF CALIFORNIA - DEPARTMENT OF TRANSPORTATION
Caltrans
DESIGN

FUNCTIONAL SUPERVISOR: KYLE KUNITAKE

CALCULATED-DESIGNED BY: KATHLEEN PHAM
CHECKED BY: SUJAYA KALAINESAN

REVISED BY
DATE REVISED

LAST REVISION 00-00-00
DATE PLOTTED => 05-AUG-2015
TIME PLOTTED => 10:19

Dist	COUNTY	ROUTE	POST MILES TOTAL PROJECT	SHEET No.	TOTAL SHEETS
07	LA	5	C43.9/C46.4	6	199

REGISTERED CIVIL ENGINEER 6-8-15 DATE

6-29-15
PLANS APPROVAL DATE

REGISTERED PROFESSIONAL ENGINEER SUJAYA KALAINESAN No. C74154 Exp. 6-30-17 CIVIL STATE OF CALIFORNIA

THE STATE OF CALIFORNIA OR ITS OFFICERS OR AGENTS SHALL NOT BE RESPONSIBLE FOR THE ACCURACY OR COMPLETENESS OF SCANNED COPIES OF THIS PLAN SHEET.

NOTES:

1. FOR ACCURATE RIGHT OF WAY DATA, CONTACT RIGHT OF WAY ENGINEERING AT THE DISTRICT OFFICE.
2. DO NOT REMOVE APPROACH SLABS.
3. EXACT LOCATIONS OF PANELS TO BE PROTECTED IN-PLACE WILL BE IDENTIFIED BY THE ENGINEER.
4. LIMITS OF PAVEMENT WORK MAY BE ADJUSTED BY THE ENGINEER BASED ON FIELD CONDITIONS AND LOCATIONS OF PANELS TO BE PROTECTED IN PLACE.

ABBREVIATIONS:

BFS BIOFILTRATION SWALE / STRIP
GSRD GROSS SOLIDS REMOVAL DEVICES

LEGEND:

PLACE HIGH FRICTION SURFACE TREATMENT

REMOVE AND REPLACE CONCRETE, BASE AND SUB-BASE (SEE TYPICAL CROSS SECTION PLANS FOR PAVEMENT STRUCTURAL SECTIONS)

PANELS TO BE PROTECTED IN PLACE

ADL SOIL (TYPE Z2)

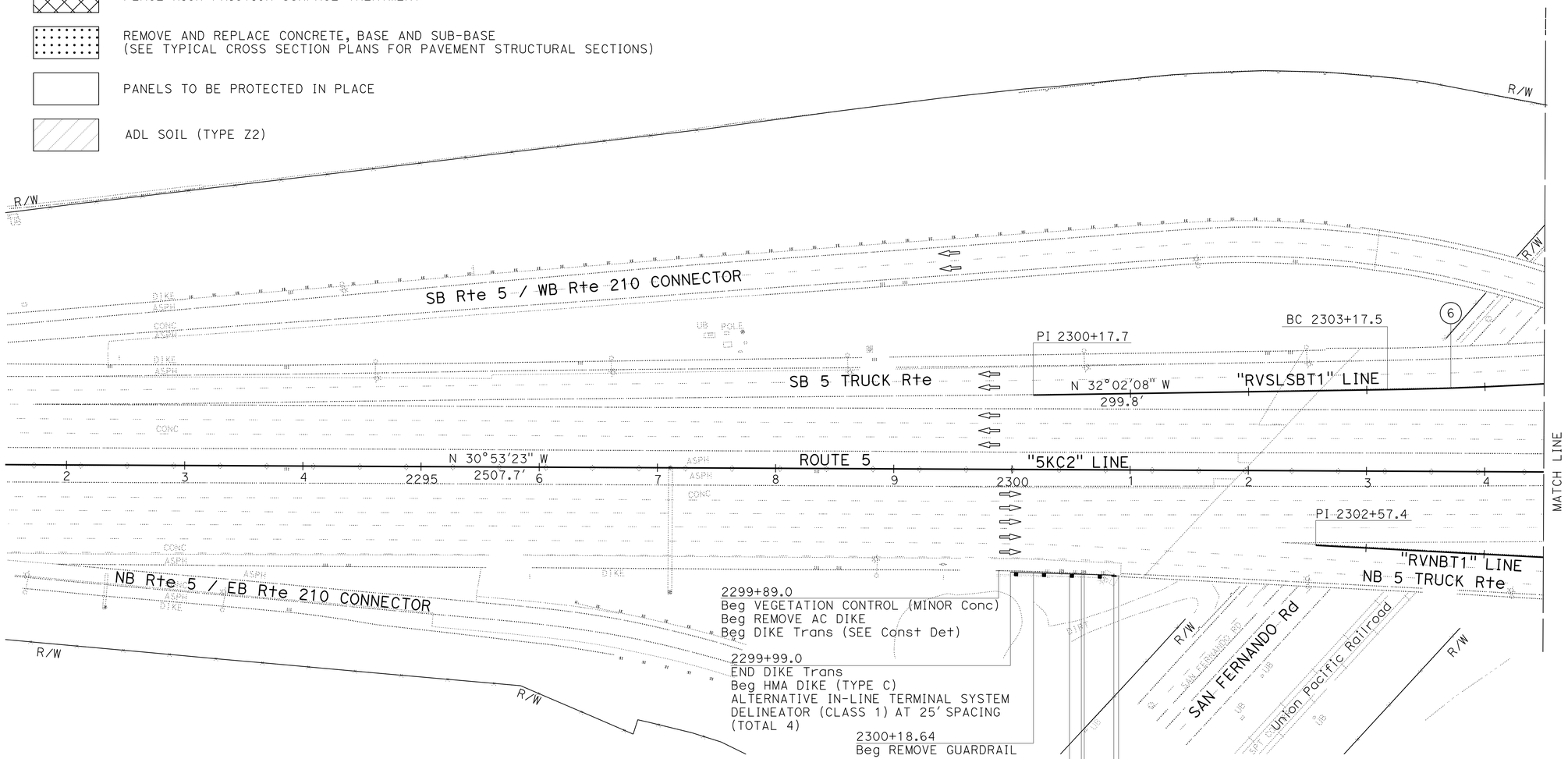

CURVE DATA

No. ⊕	R	Δ	T	L
6	3000'	12°31'52"	329.38'	656.13'

LAYOUT

SCALE: 1" = 50'

L-1

STATE OF CALIFORNIA - DEPARTMENT OF TRANSPORTATION
Caltrans
DESIGN
FUNCTIONAL SUPERVISOR: KYLE KUNITAKE
CALCULATED-DESIGNED BY: O. BLACKSTOCK
CHECKED BY: SUJAYA KALAINESAN
REVISED BY
DATE REVISED

LAST REVISION 00-00-00
DATE PLOTTED => 05-AUG-2015
TIME PLOTTED => 10:19

Dist	COUNTY	ROUTE	POST MILES TOTAL PROJECT	SHEET No.	TOTAL SHEETS
07	LA	5	C43.9/C46.4	7	199

REGISTERED CIVIL ENGINEER 6-8-15 DATE

6-29-15
PLANS APPROVAL DATE

REGISTERED PROFESSIONAL ENGINEER SUJAYA KALAINESAN No. C74154 Exp. 6-30-17 CIVIL STATE OF CALIFORNIA

THE STATE OF CALIFORNIA OR ITS OFFICERS OR AGENTS SHALL NOT BE RESPONSIBLE FOR THE ACCURACY OR COMPLETENESS OF SCANNED COPIES OF THIS PLAN SHEET.

NOTES:

1. FOR ACCURATE RIGHT OF WAY DATA, CONTACT RIGHT OF WAY ENGINEERING AT THE DISTRICT OFFICE.
2. DO NOT REMOVE APPROACH SLABS.

CURVE DATA

No. ⊕	R	Δ	T	L
1	5000′	24°29′47″	1085.44′	2137.70′
6	3000′	12°31′52″	329.38′	656.13′
7	2000′	09°03′55″	158.55′	316.44′
17	2250′	29°39′47″	595.80′	1164.87′

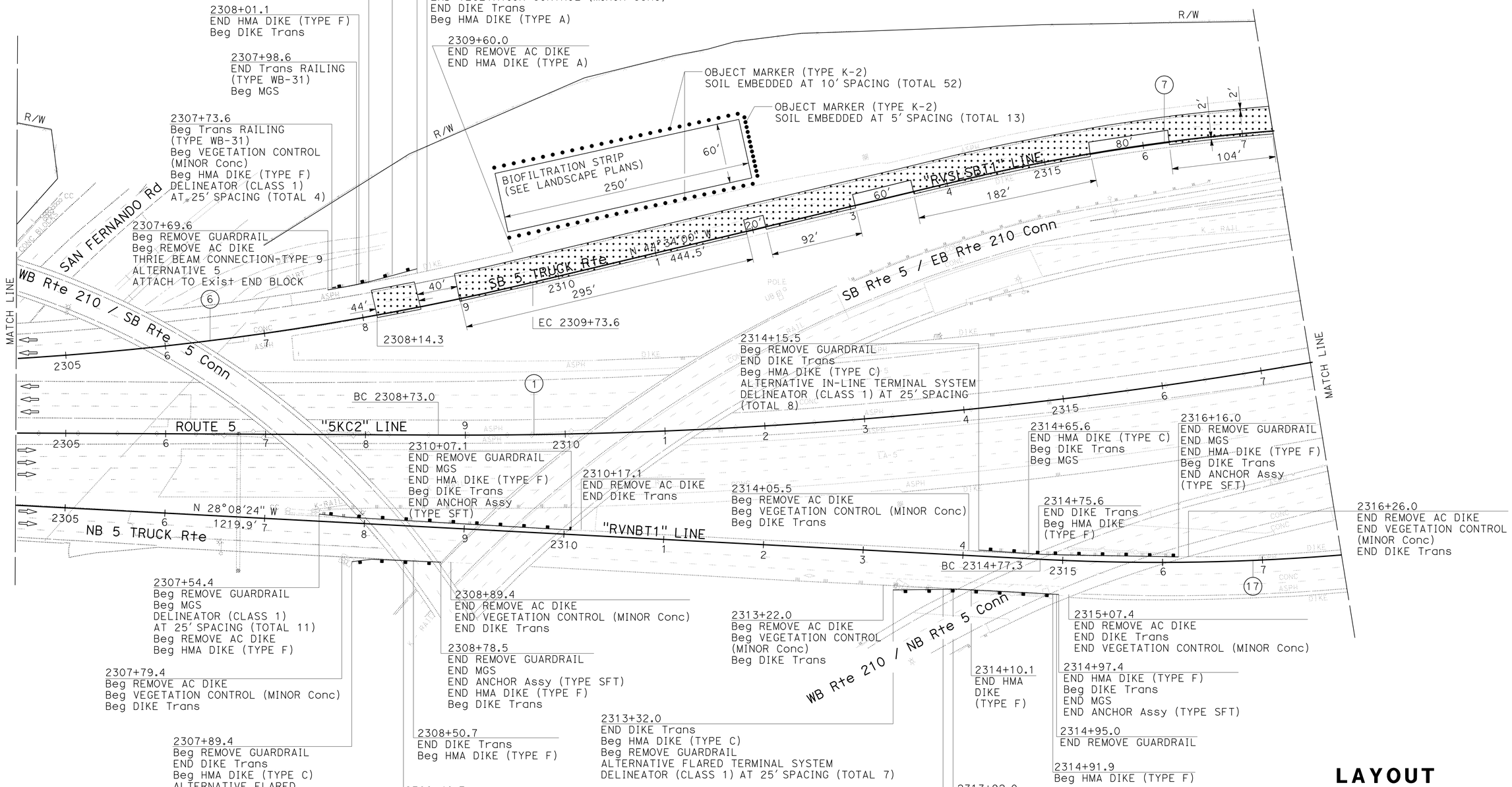

LAYOUT

SCALE: 1" = 50′

L-2

STATE OF CALIFORNIA - DEPARTMENT OF TRANSPORTATION
Caltrans®
DESIGN

FUNCTIONAL SUPERVISOR: KYLE KUNITAKE
CALCULATED-DESIGNED BY: O. BLACKSTOCK
CHECKED BY: SUJAYA KALAINESAN
REVISED BY
DATE REVISED

LAST REVISION 00-00-00
DATE PLOTTED => 05-AUG-2015
TIME PLOTTED => 10:19

Dist	COUNTY	ROUTE	POST MILES TOTAL PROJECT	SHEET No.	TOTAL SHEETS
07	LA	5	C43.9/C46.4	8	199

REGISTERED CIVIL ENGINEER 6-8-15 DATE

6-29-15
PLANS APPROVAL DATE

REGISTERED PROFESSIONAL ENGINEER SUJAYA KALAINESAN No. C74154 Exp. 6-30-17 CIVIL STATE OF CALIFORNIA

THE STATE OF CALIFORNIA OR ITS OFFICERS OR AGENTS SHALL NOT BE RESPONSIBLE FOR THE ACCURACY OR COMPLETENESS OF SCANNED COPIES OF THIS PLAN SHEET.

NOTES:

1. FOR ACCURATE RIGHT OF WAY DATA, CONTACT RIGHT OF WAY ENGINEERING AT THE DISTRICT OFFICE.
2. DO NOT REMOVE APPROACH SLABS.

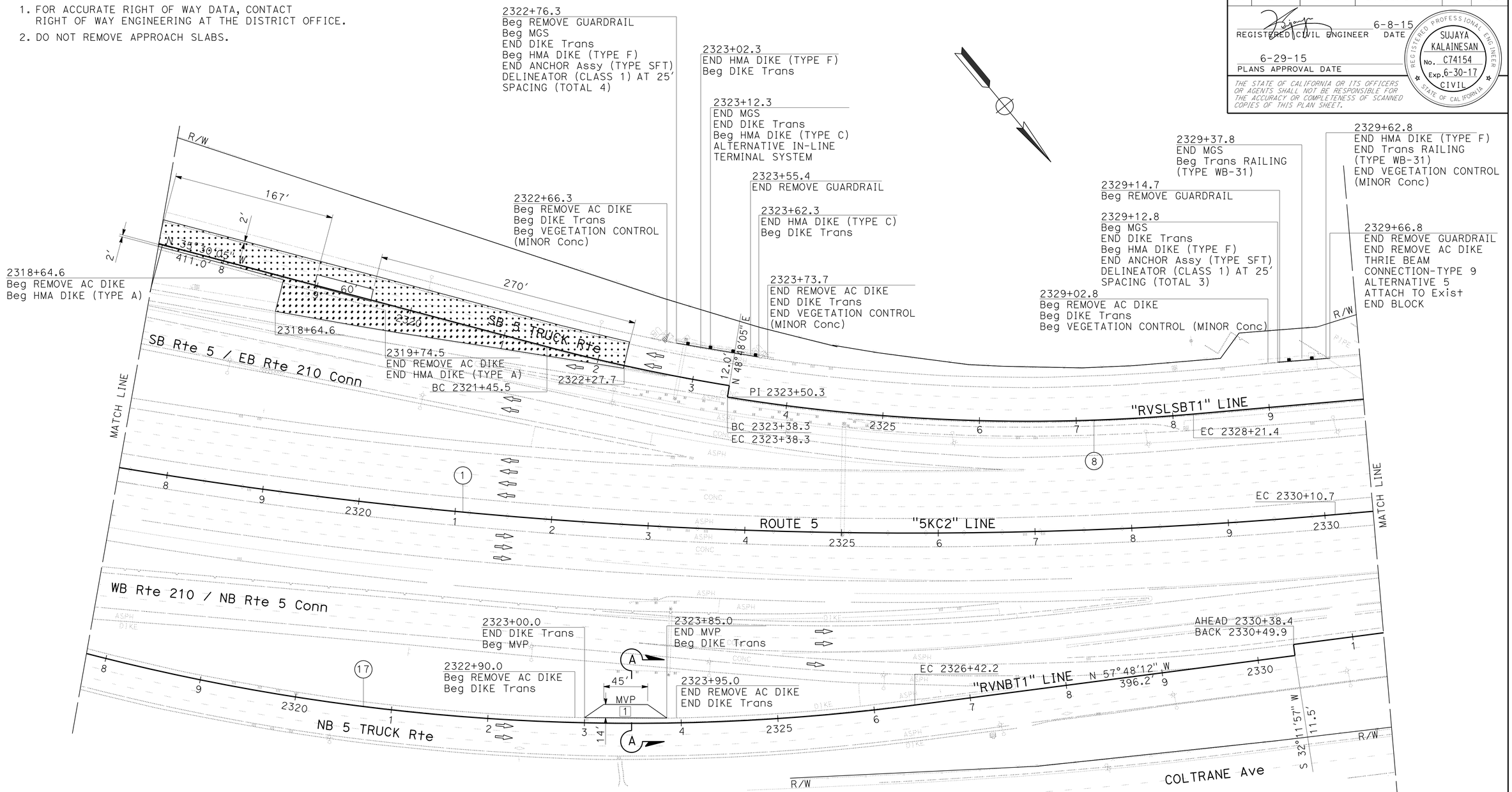

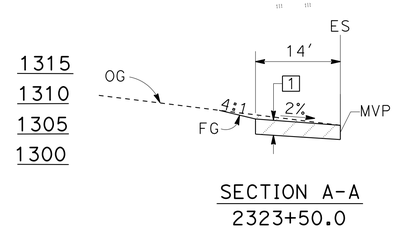

SECTION A-A
2323+50.0
SCALE: 1" = 12.5′

CURVE DATA

No. ⊕	R	Δ	T	L
1	5000′	24°29′47″	1085.44′	2137.70′
8	1951′	14°11′16″	242.80′	483.11′
17	2250′	29°39′47″	595.80′	1164.87′

LAYOUT
SCALE: 1" = 50′

L-3

STATE OF CALIFORNIA - DEPARTMENT OF TRANSPORTATION
Caltrans® DESIGN
FUNCTIONAL SUPERVISOR: KYLE KUNITAKE
CALCULATED-DESIGNED BY: O. BLACKSTOCK
CHECKED BY: SUJAYA KALAINESAN
REVISED BY
DATE REVISED

LAST REVISION 00-00-00
DATE PLOTTED => 05-AUG-2015
TIME PLOTTED => 10:19

Dist	COUNTY	ROUTE	POST MILES TOTAL PROJECT	SHEET No.	TOTAL SHEETS
07	LA	5	C43.9/C46.4	9	199

REGISTERED CIVIL ENGINEER 6-8-15 DATE

6-29-15
PLANS APPROVAL DATE

REGISTERED PROFESSIONAL ENGINEER SUJAYA KALAINESAN No. C74154 Exp. 6-30-17 CIVIL STATE OF CALIFORNIA

THE STATE OF CALIFORNIA OR ITS OFFICERS OR AGENTS SHALL NOT BE RESPONSIBLE FOR THE ACCURACY OR COMPLETENESS OF SCANNED COPIES OF THIS PLAN SHEET.

NOTES:

1. FOR ACCURATE RIGHT OF WAY DATA, CONTACT RIGHT OF WAY ENGINEERING AT THE DISTRICT OFFICE.
2. DO NOT REMOVE APPROACH SLABS.

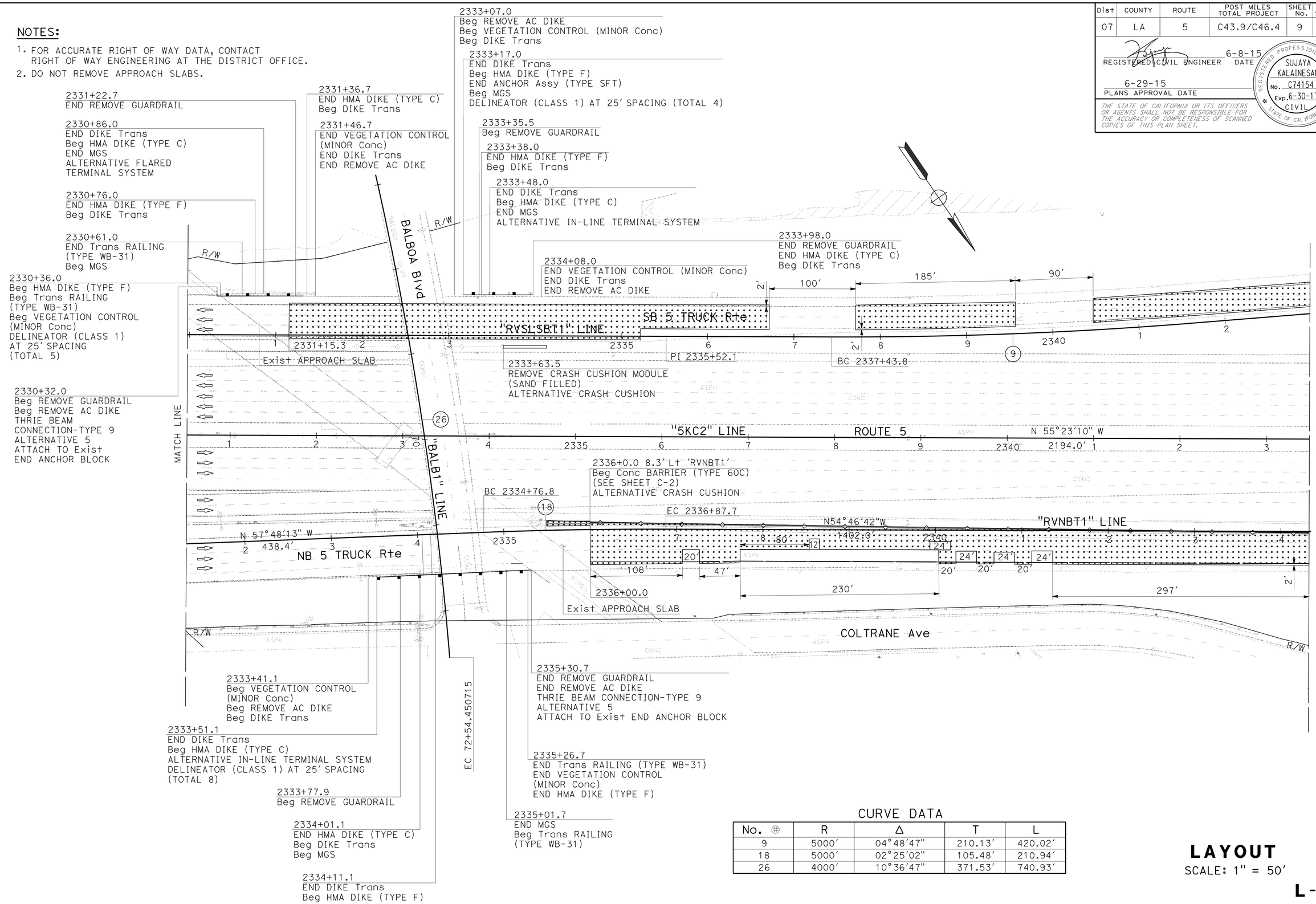

CURVE DATA

No. ⊕	R	Δ	T	L
9	5000'	04°48'47"	210.13'	420.02'
18	5000'	02°25'02"	105.48'	210.94'
26	4000'	10°36'47"	371.53'	740.93'

LAYOUT

SCALE: 1" = 50'

L-4

STATE OF CALIFORNIA - DEPARTMENT OF TRANSPORTATION
Caltrans® DESIGN

FUNCTIONAL SUPERVISOR: KYLE KUNITAKE
CALCULATED-DESIGNED BY: O. BLACKSTOCK
CHECKED BY: SUJAYA KALAINESAN
REVISED BY / DATE REVISED

LAST REVISION 00-00-00 | DATE PLOTTED => 05-AUG-2015 | TIME PLOTTED => 10:19

Dist	COUNTY	ROUTE	POST MILES TOTAL PROJECT	SHEET No.	TOTAL SHEETS
07	LA	5	C43.9/C46.4	10	199

REGISTERED CIVIL ENGINEER 6-8-15 DATE

6-29-15
PLANS APPROVAL DATE

REGISTERED PROFESSIONAL ENGINEER SUJAYA KALAINESAN No. C74154 Exp. 6-30-17 CIVIL STATE OF CALIFORNIA

THE STATE OF CALIFORNIA OR ITS OFFICERS OR AGENTS SHALL NOT BE RESPONSIBLE FOR THE ACCURACY OR COMPLETENESS OF SCANNED COPIES OF THIS PLAN SHEET.

NOTES:

1. FOR ACCURATE RIGHT OF WAY DATA, CONTACT RIGHT OF WAY ENGINEERING AT THE DISTRICT OFFICE.
2. DO NOT REMOVE APPROACH SLABS.

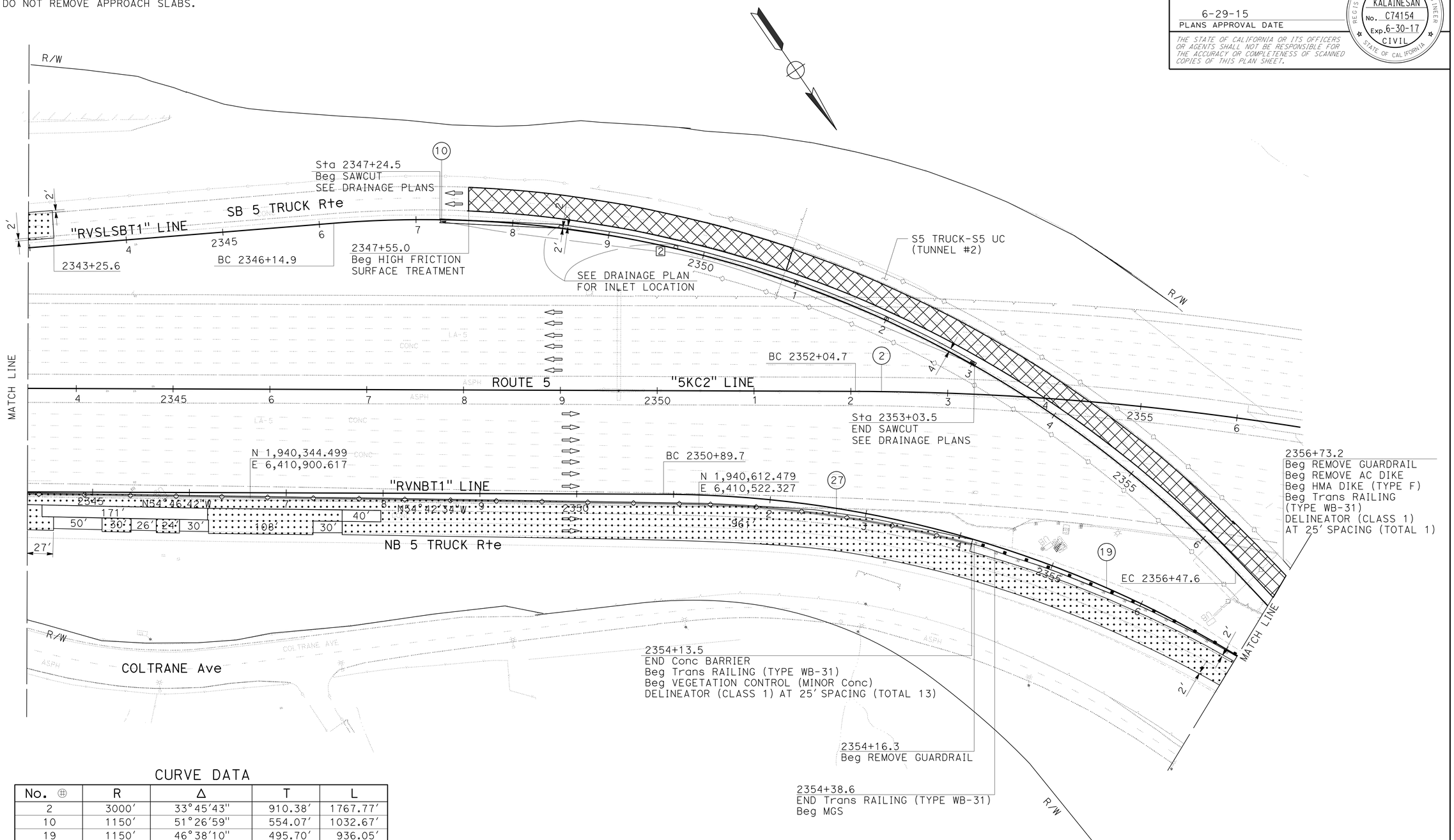

CURVE DATA

No. ⊕	R	Δ	T	L
2	3000'	33°45'43"	910.38'	1767.77'
10	1150'	51°26'59"	554.07'	1032.67'
19	1150'	46°38'10"	495.70'	936.05'

CONCRETE BARRIER CURVE DATA

No. ⊕	R	Δ	T	L
27	1190'	13°43'39"	143.24'	285.11'

LAYOUT

SCALE: 1" = 50'

L-5

STATE OF CALIFORNIA - DEPARTMENT OF TRANSPORTATION
Caltrans® DESIGN

FUNCTIONAL SUPERVISOR: KYLE KUNITAKE
CALCULATED-DESIGNED BY: O. BLACKSTOCK
CHECKED BY: SUJAYA KALAINESAN
REVISED BY / DATE REVISED

LAST REVISION 00-00-00
DATE PLOTTED => 05-AUG-2015
TIME PLOTTED => 10:19

Dist	COUNTY	ROUTE	POST MILES TOTAL PROJECT	SHEET No.	TOTAL SHEETS
07	LA	5	C43.9/C46.4	11	199

REGISTERED CIVIL ENGINEER 6-8-15 DATE

6-29-15
PLANS APPROVAL DATE

REGISTERED PROFESSIONAL ENGINEER SUJAYA KALAINESAN No. C74154 Exp. 6-30-17 CIVIL STATE OF CALIFORNIA

THE STATE OF CALIFORNIA OR ITS OFFICERS OR AGENTS SHALL NOT BE RESPONSIBLE FOR THE ACCURACY OR COMPLETENESS OF SCANNED COPIES OF THIS PLAN SHEET.

NOTES:

1. FOR ACCURATE RIGHT OF WAY DATA, CONTACT RIGHT OF WAY ENGINEERING AT THE DISTRICT OFFICE.
2. DO NOT REMOVE APPROACH SLABS.

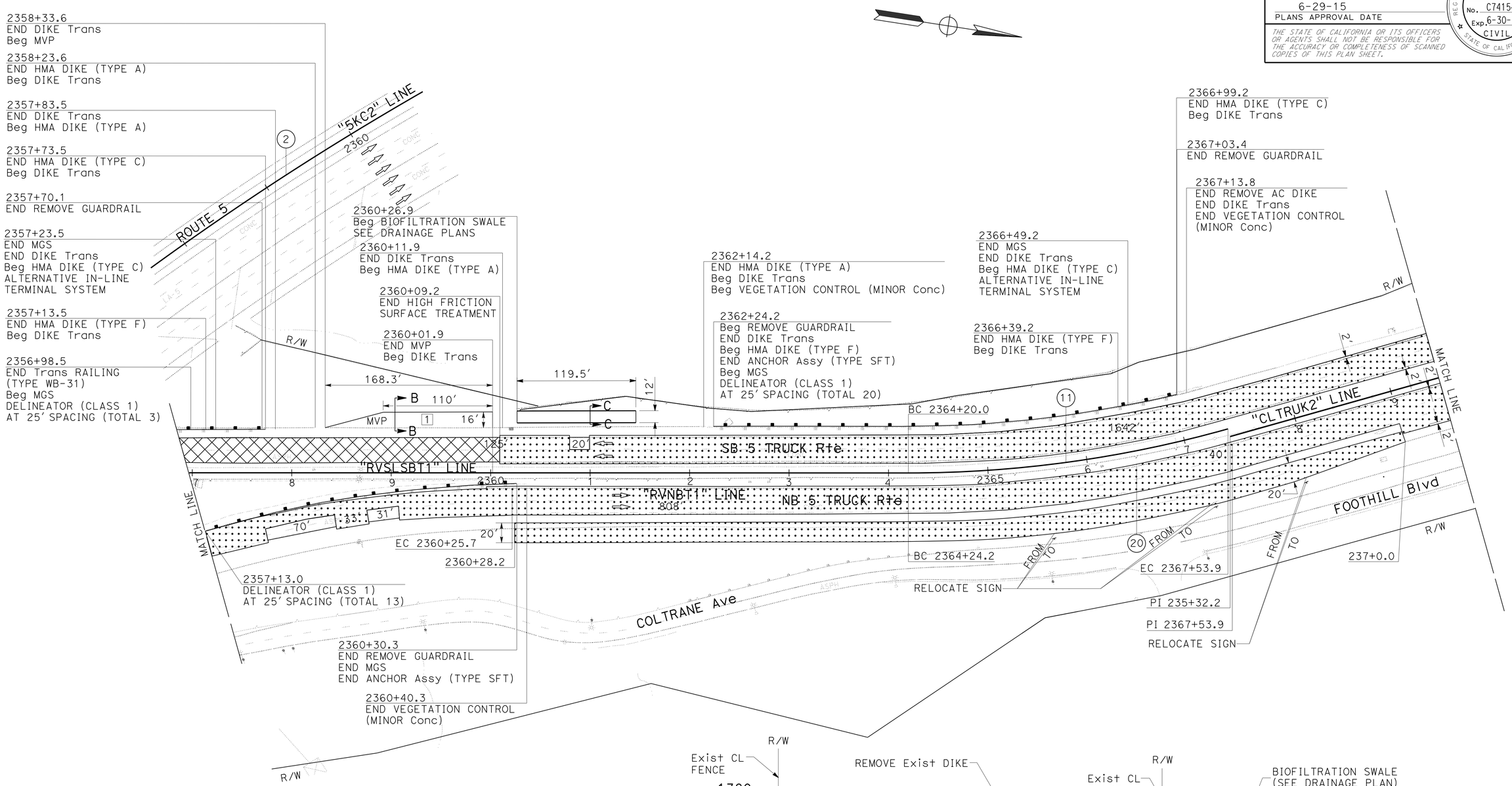

CURVE DATA

No.	R	Δ	T	L
2	3000'	33°45'43"	910.38'	1767.77'
11	1184'	15°44'45"	163.72'	325.38'
20	1200'	15°44'40"	165.92'	329.75'

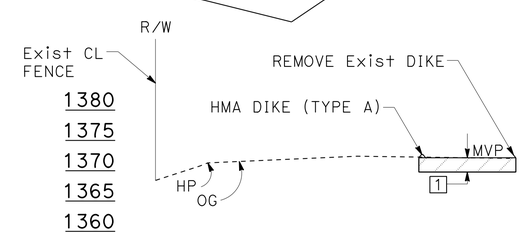

SECTION B-B
2359+00.0
SCALE: 1" = 12.5'

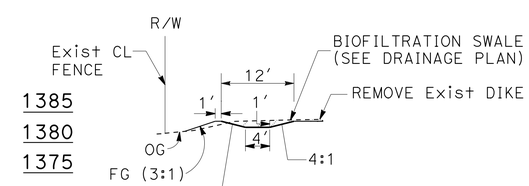

SECTION C-C
2361+00.0
SCALE: 1" = 12.5'

LAYOUT
SCALE: 1" = 50'

L-6

STATE OF CALIFORNIA - DEPARTMENT OF TRANSPORTATION
Caltrans DESIGN
FUNCTIONAL SUPERVISOR KYLE KUNITAKE
CALCULATED-DESIGNED BY O. BLACKSTOCK
CHECKED BY SUJAYA KALAINESAN
REVISED BY
DATE REVISED

LAST REVISION 00-00-00
DATE PLOTTED => 05-AUG-2015
TIME PLOTTED => 10:19

Dist	COUNTY	ROUTE	POST MILES TOTAL PROJECT	SHEET No.	TOTAL SHEETS
07	LA	5	C43.9/C46.4	12	199

REGISTERED CIVIL ENGINEER 6-8-15 DATE

6-29-15
PLANS APPROVAL DATE

REGISTERED PROFESSIONAL ENGINEER SUJAYA KALAINESAN No. C74154 Exp. 6-30-17 CIVIL STATE OF CALIFORNIA

THE STATE OF CALIFORNIA OR ITS OFFICERS OR AGENTS SHALL NOT BE RESPONSIBLE FOR THE ACCURACY OR COMPLETENESS OF SCANNED COPIES OF THIS PLAN SHEET.

NOTES:

1. FOR ACCURATE RIGHT OF WAY DATA, CONTACT RIGHT OF WAY ENGINEERING AT THE DISTRICT OFFICE.
2. DO NOT REMOVE APPROACH SLABS.

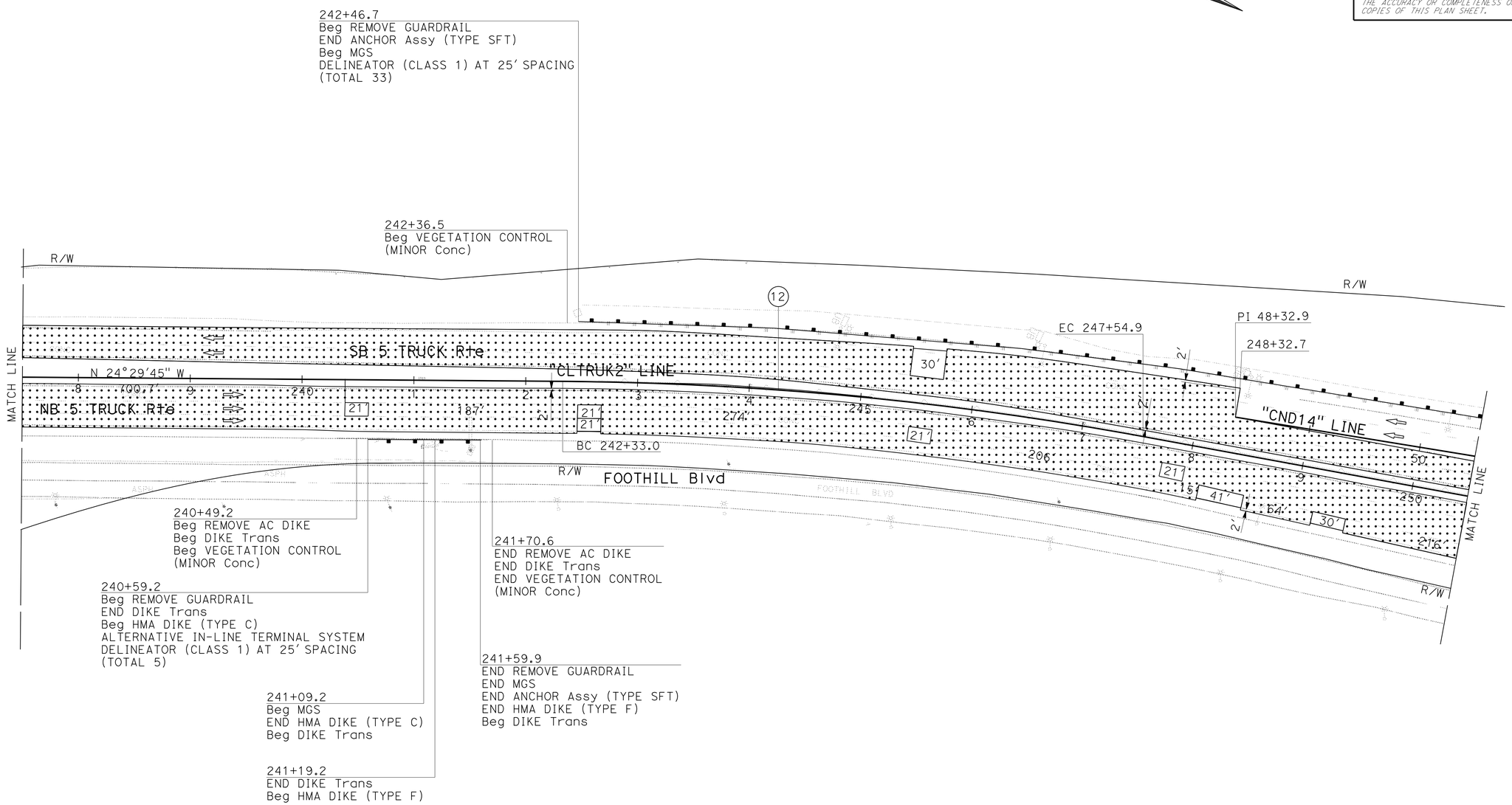

CURVE DATA

No. ⊕	R	Δ	T	L
12	3000'	09°58'07"	261.60'	521.88'

LAYOUT

SCALE: 1" = 50'

L-7

STATE OF CALIFORNIA - DEPARTMENT OF TRANSPORTATION
Caltrans® DESIGN

FUNCTIONAL SUPERVISOR: KYLE KUNITAKE
CALCULATED-DESIGNED BY: O. BLACKSTOCK
CHECKED BY: SUJAYA KALAINESAN
REVISED BY
DATE REVISED

LAST REVISION 00-00-00
DATE PLOTTED => 05-AUG-2015
TIME PLOTTED => 10:19

Dist	COUNTY	ROUTE	POST MILES TOTAL PROJECT	SHEET No.	TOTAL SHEETS
07	LA	5	C43.9/C46.4	13	199

REGISTERED CIVIL ENGINEER 6-8-15 DATE

6-29-15
PLANS APPROVAL DATE

REGISTERED PROFESSIONAL ENGINEER SUJAYA KALAINESAN No. C74154 Exp. 6-30-17 CIVIL STATE OF CALIFORNIA

THE STATE OF CALIFORNIA OR ITS OFFICERS OR AGENTS SHALL NOT BE RESPONSIBLE FOR THE ACCURACY OR COMPLETENESS OF SCANNED COPIES OF THIS PLAN SHEET.

CURVE DATA

No. ⊕	R	Δ	T	L
13	1600′	34°24′06"	495.20′	960.47′
23	3000′	03°11′29"	83.57′	167.10′
24	1200′	25°19′57"	269.69′	530.56′
25	1600′	42°49′33"	627.45′	1195.92′

NOTES:

1. FOR ACCURATE RIGHT OF WAY DATA, CONTACT RIGHT OF WAY ENGINEERING AT THE DISTRICT OFFICE.
2. DO NOT REMOVE APPROACH SLABS.

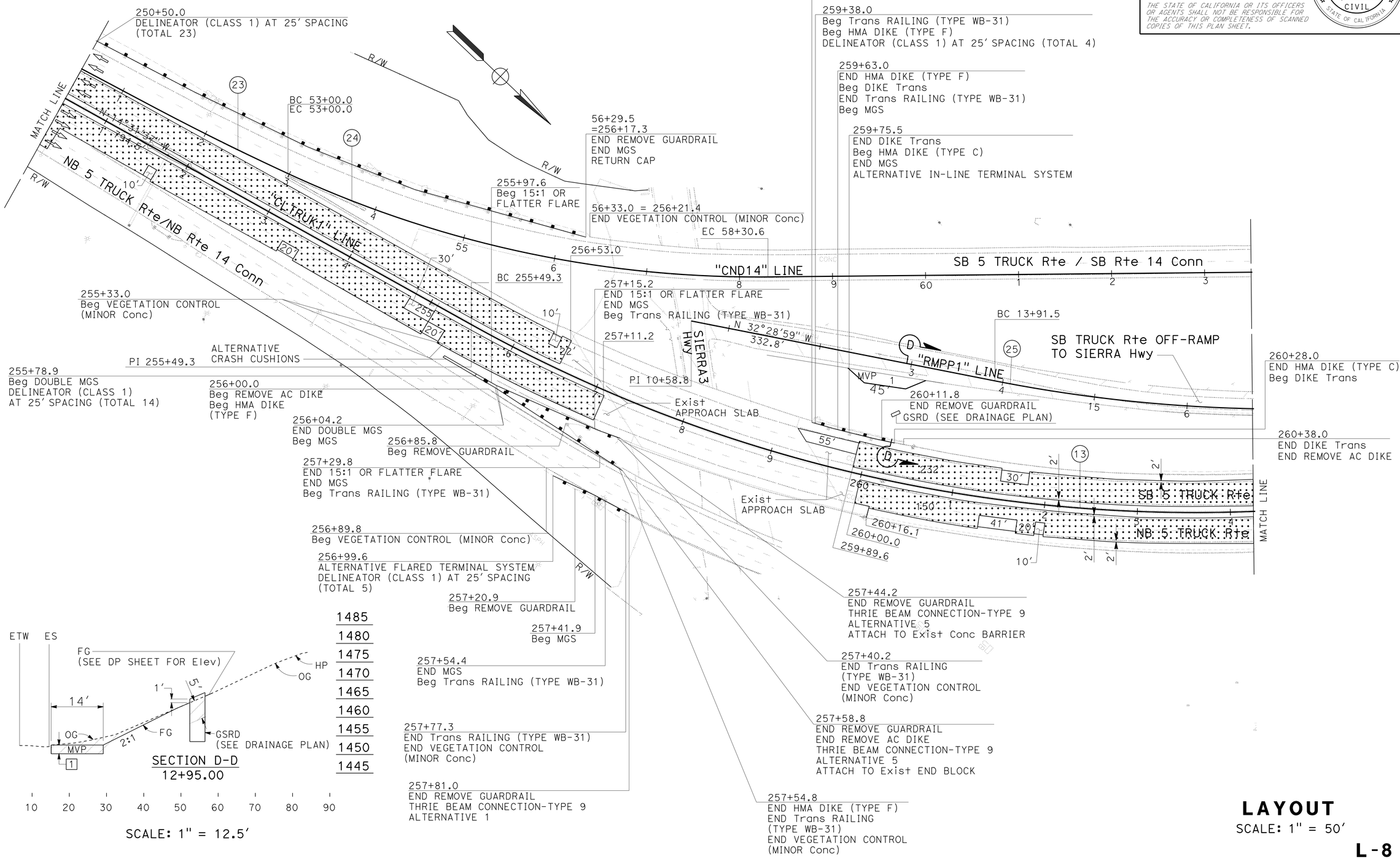

LAYOUT

SCALE: 1" = 50′

L-8

STATE OF CALIFORNIA - DEPARTMENT OF TRANSPORTATION
Caltrans
DESIGN

FUNCTIONAL SUPERVISOR: KYLE KUNITAKE
CALCULATED-DESIGNED BY: O. BLACKSTOCK
CHECKED BY: SUJAYA KALAINESAN
REVISED BY
DATE REVISED

LAST REVISION 00-00-00
DATE PLOTTED => 05-AUG-2015
TIME PLOTTED => 10:19

Dist	COUNTY	ROUTE	POST MILES TOTAL PROJECT	SHEET No.	TOTAL SHEETS
07	LA	5	C43.9/C46.4	14	199

REGISTERED CIVIL ENGINEER 6-8-15 DATE

6-29-15
PLANS APPROVAL DATE

REGISTERED PROFESSIONAL ENGINEER SUJAYA KALAINESAN No. C74154 Exp. 6-30-17 CIVIL STATE OF CALIFORNIA

THE STATE OF CALIFORNIA OR ITS OFFICERS OR AGENTS SHALL NOT BE RESPONSIBLE FOR THE ACCURACY OR COMPLETENESS OF SCANNED COPIES OF THIS PLAN SHEET.

NOTES:

1. FOR ACCURATE RIGHT OF WAY DATA, CONTACT RIGHT OF WAY ENGINEERING AT THE DISTRICT OFFICE.
2. DO NOT REMOVE APPROACH SLABS.

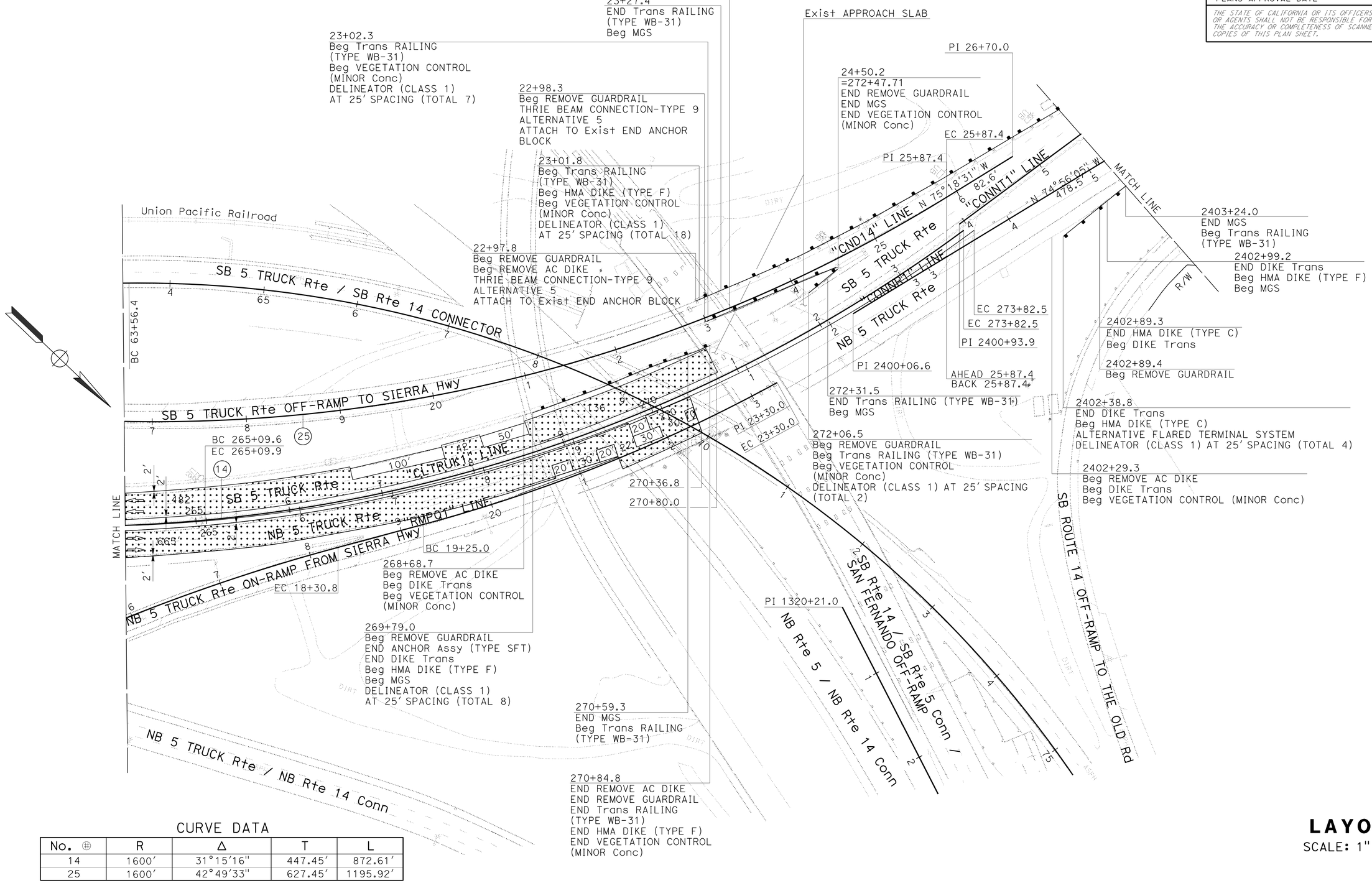

CURVE DATA

No. ⊕	R	Δ	T	L
14	1600'	31°15'16"	447.45'	872.61'
25	1600'	42°49'33"	627.45'	1195.92'

LAYOUT

SCALE: 1" = 50'

L-9

STATE OF CALIFORNIA - DEPARTMENT OF TRANSPORTATION
DESIGN
FUNCTIONAL SUPERVISOR: KYLE KUNITAKE
CALCULATED-DESIGNED BY: O. BLACKSTOCK
CHECKED BY: SUJAYA KALAINESAN
REVISED BY
DATE REVISED

LAST REVISION 00-00-00
DATE PLOTTED => 05-AUG-2015
TIME PLOTTED => 10:19

Dist	COUNTY	ROUTE	POST MILES TOTAL PROJECT	SHEET No.	TOTAL SHEETS
07	LA	5	C43.9/C46.4	15	199

REGISTERED CIVIL ENGINEER 6-8-15 DATE

6-29-15
PLANS APPROVAL DATE

REGISTERED PROFESSIONAL ENGINEER SUJAYA KALAINESAN No. C74154 Exp. 6-30-17 CIVIL STATE OF CALIFORNIA

THE STATE OF CALIFORNIA OR ITS OFFICERS OR AGENTS SHALL NOT BE RESPONSIBLE FOR THE ACCURACY OR COMPLETENESS OF SCANNED COPIES OF THIS PLAN SHEET.

NOTES:

1. FOR ACCURATE RIGHT OF WAY DATA, CONTACT RIGHT OF WAY ENGINEERING AT THE DISTRICT OFFICE.
2. DO NOT REMOVE APPROACH SLABS.

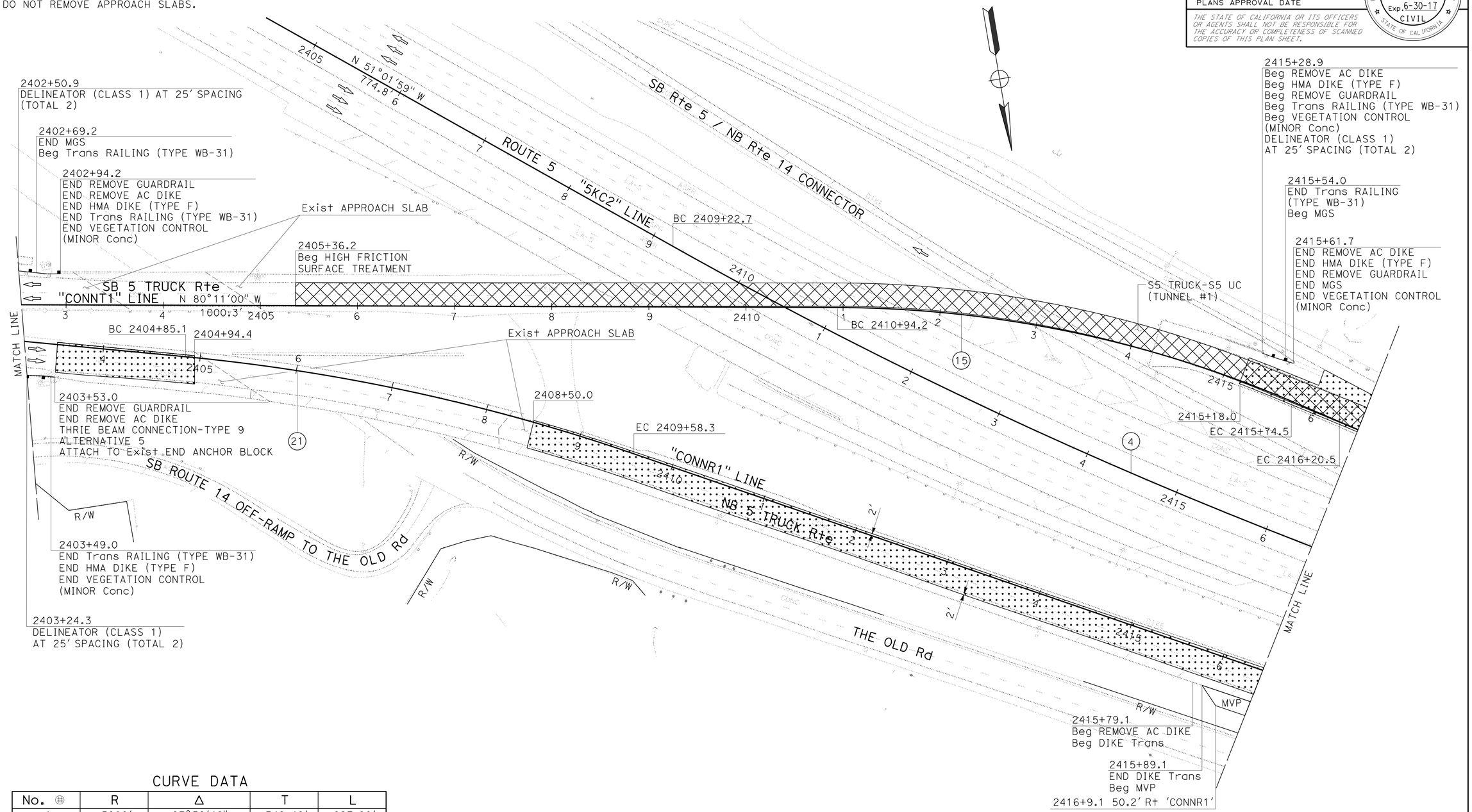

CURVE DATA

No. ⊕	R	Δ	T	L
4	5000'	07°59'46"	349.46'	697.80'
15	1200'	22°55'54"	243.40'	480.28'
21	2000'	13°33'27"	237.73'	473.25'

LAYOUT

SCALE: 1" = 50'

L-10

STATE OF CALIFORNIA - DEPARTMENT OF TRANSPORTATION
DESIGN
FUNCTIONAL SUPERVISOR: KYLE KUNITAKE
CALCULATED-DESIGNED BY: O. BLACKSTOCK
CHECKED BY: SUJAYA KALAINESAN
REVISED BY
DATE REVISED

LAST REVISION 00-00-00
DATE PLOTTED => 05-AUG-2015
TIME PLOTTED => 10:19

Dist	COUNTY	ROUTE	POST MILES TOTAL PROJECT	SHEET No.	TOTAL SHEETS
07	LA	5	C43.9/C46.4	16	199

REGISTERED CIVIL ENGINEER 6-8-15 DATE

6-29-15
PLANS APPROVAL DATE

REGISTERED PROFESSIONAL ENGINEER SUJAYA KALAINESAN No. C74154 Exp. 6-30-17 CIVIL STATE OF CALIFORNIA

THE STATE OF CALIFORNIA OR ITS OFFICERS OR AGENTS SHALL NOT BE RESPONSIBLE FOR THE ACCURACY OR COMPLETENESS OF SCANNED COPIES OF THIS PLAN SHEET.

NOTES:

1. FOR ACCURATE RIGHT OF WAY DATA, CONTACT RIGHT OF WAY ENGINEERING AT THE DISTRICT OFFICE.
2. DO NOT REMOVE APPROACH SLABS.

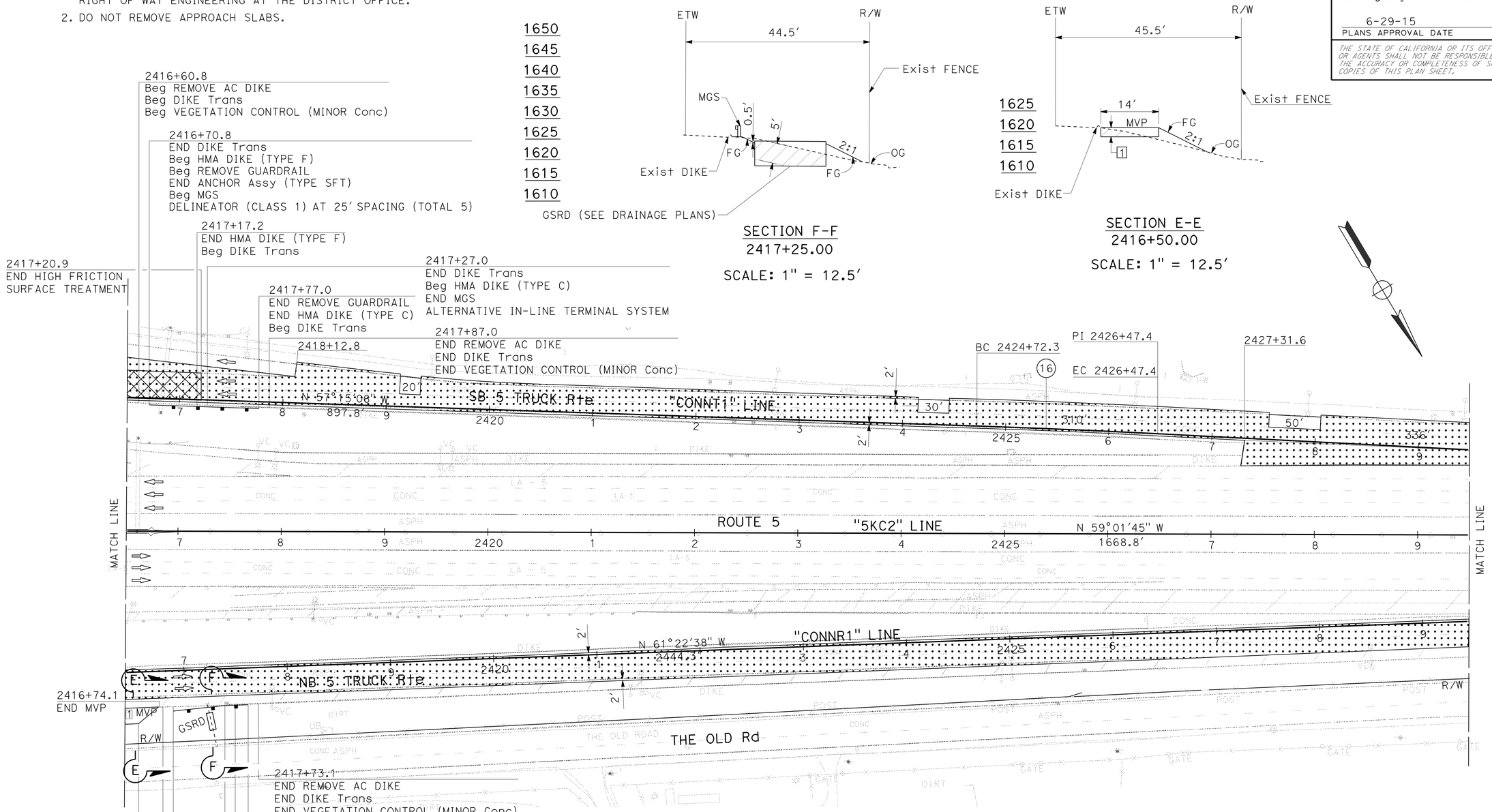

SECTION F-F
2417+25.00
SCALE: 1" = 12.5'

SECTION E-E
2416+50.00
SCALE: 1" = 12.5'

CURVE DATA

No. ⊕	R	Δ	T	L
16	10000'	01°00'12"	87.56'	175.12'

LAYOUT
SCALE: 1" = 50'

L-11

STATE OF CALIFORNIA - DEPARTMENT OF TRANSPORTATION
Caltrans
DESIGN

FUNCTIONAL SUPERVISOR: KYLE KUNITAKE
CALCULATED-DESIGNED BY: O. BLACKSTOCK
CHECKED BY: SUJAYA KALAINESAN
REVISED BY
DATE REVISED

LAST REVISION 00-00-00
DATE PLOTTED => 05-AUG-2015
TIME PLOTTED => 10:19

Dist	COUNTY	ROUTE	POST MILES TOTAL PROJECT	SHEET No.	TOTAL SHEETS
07	LA	5	C43.9/C46.4	17	199

REGISTERED CIVIL ENGINEER 6-8-15 DATE

6-29-15
PLANS APPROVAL DATE

REGISTERED PROFESSIONAL ENGINEER SUJAYA KALAINESAN No. C74154 Exp. 6-30-17 CIVIL STATE OF CALIFORNIA

THE STATE OF CALIFORNIA OR ITS OFFICERS OR AGENTS SHALL NOT BE RESPONSIBLE FOR THE ACCURACY OR COMPLETENESS OF SCANNED COPIES OF THIS PLAN SHEET.

NOTES:

1. FOR ACCURATE RIGHT OF WAY DATA, CONTACT RIGHT OF WAY ENGINEERING AT THE DISTRICT OFFICE.
2. DO NOT REMOVE APPROACH SLABS.

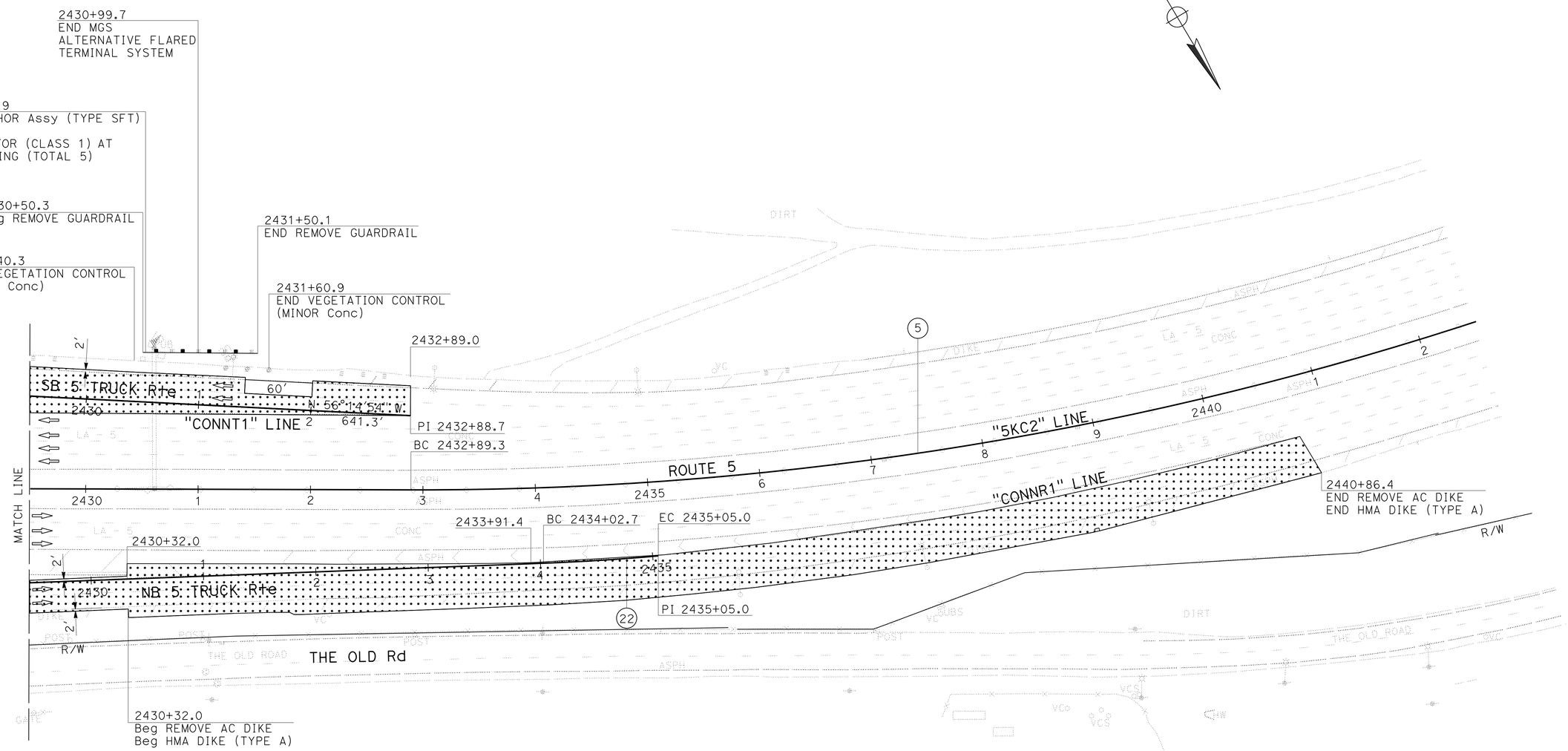

CURVE DATA

No. ⊕	R	Δ	T	L
5	3018'	21°41'21"	578.15'	1142.46'
22	2000'	02°55'54"	51.18'	102.33'

LAYOUT

SCALE: 1" = 50'

L-12

STATE OF CALIFORNIA - DEPARTMENT OF TRANSPORTATION
Caltrans® DESIGN
FUNCTIONAL SUPERVISOR: KYLE KUNITAKE
CALCULATED-DESIGNED BY: O. BLACKSTOCK
CHECKED BY: SUJAYA KALAINESAN
REVISED BY
DATE REVISED

LAST REVISION 00-00-00
DATE PLOTTED => 05-AUG-2015
TIME PLOTTED => 10:19

Dist	COUNTY	ROUTE	POST MILES TOTAL PROJECT	SHEET No.	TOTAL SHEETS
07	LA	5	C43.9/C46.4	18	199

REGISTERED CIVIL ENGINEER 6-8-15 DATE

6-29-15
PLANS APPROVAL DATE

REGISTERED PROFESSIONAL ENGINEER SUJAYA KALAINESAN No. C74154 Exp. 6-30-17 CIVIL STATE OF CALIFORNIA

THE STATE OF CALIFORNIA OR ITS OFFICERS OR AGENTS SHALL NOT BE RESPONSIBLE FOR THE ACCURACY OR COMPLETENESS OF SCANNED COPIES OF THIS PLAN SHEET.

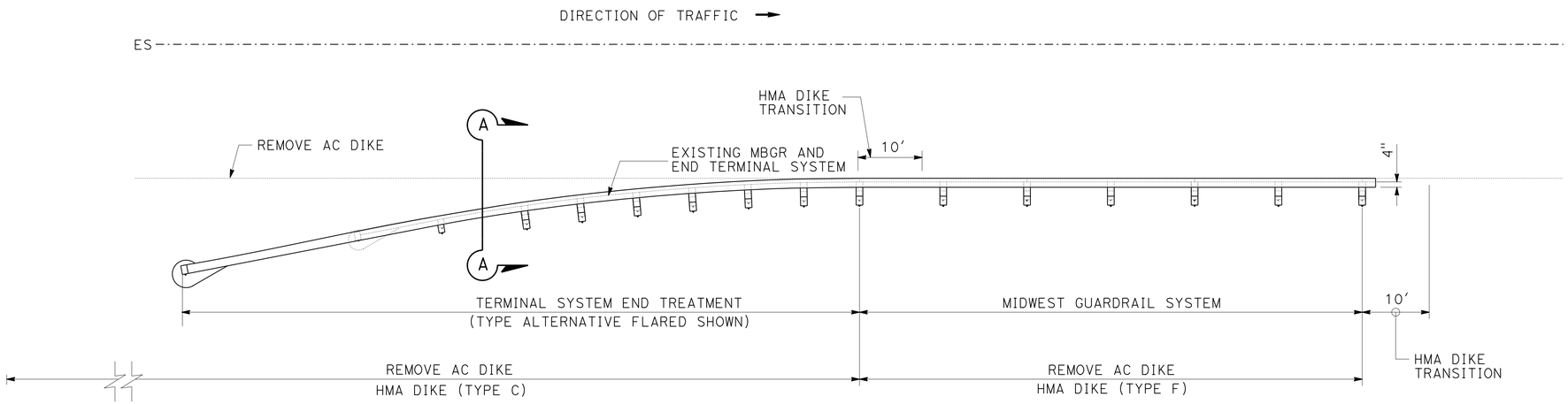

PLAN

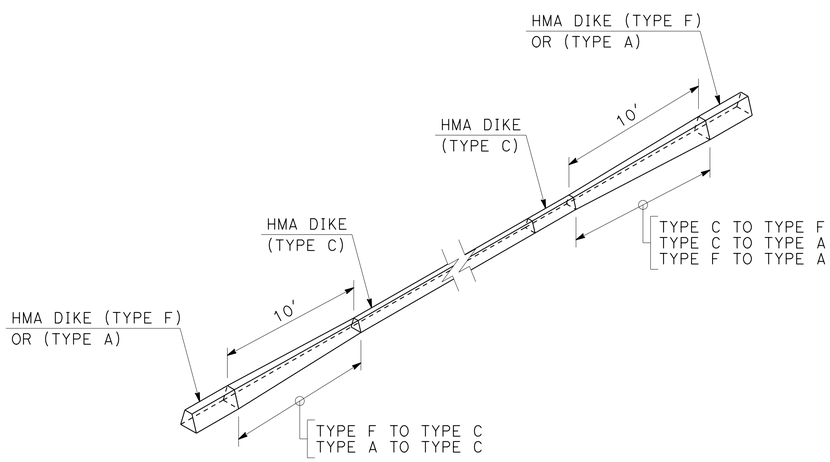

HMA DIKE TRANSITION DETAILS

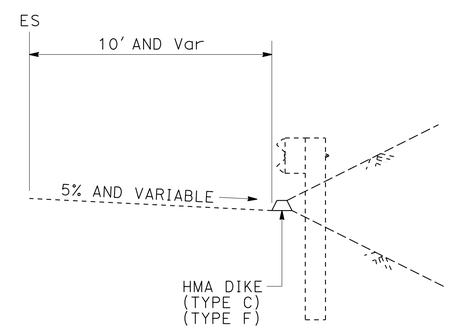

SECTION A-A

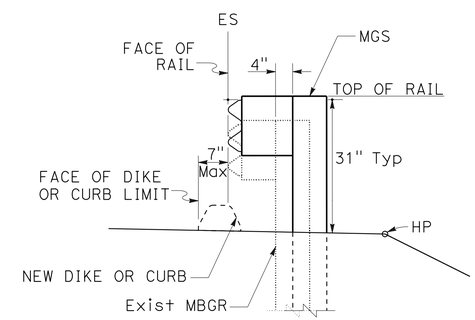

MGS POSITIONING (Typ)

NO SCALE

TYPICAL REMOVE AND PLACE HMA DIKE DETAILS AT MGS LOCATIONS

CONSTRUCTION DETAILS

NO SCALE

C-1

STATE OF CALIFORNIA - DEPARTMENT OF TRANSPORTATION
Caltrans
DESIGN

FUNCTIONAL SUPERVISOR: KYLE KUNITAKE
CALCULATED-DESIGNED BY: SUJAYA KALAINESAN
CHECKED BY: KYLE KUNITAKE
REVISED BY
DATE REVISED

LAST REVISION 00-00-00
DATE PLOTTED => 05-AUG-2015
TIME PLOTTED => 10:19

Dist	COUNTY	ROUTE	POST MILES TOTAL PROJECT	SHEET No.	TOTAL SHEETS
07	LA	5	C43.9/C46.4	19	199

REGISTERED CIVIL ENGINEER 6-8-15 DATE

6-29-15
PLANS APPROVAL DATE

REGISTERED PROFESSIONAL ENGINEER SUJAYA KALAINESAN No. C74154 Exp. 6-30-17 CIVIL STATE OF CALIFORNIA

THE STATE OF CALIFORNIA OR ITS OFFICERS OR AGENTS SHALL NOT BE RESPONSIBLE FOR THE ACCURACY OR COMPLETENESS OF SCANNED COPIES OF THIS PLAN SHEET.

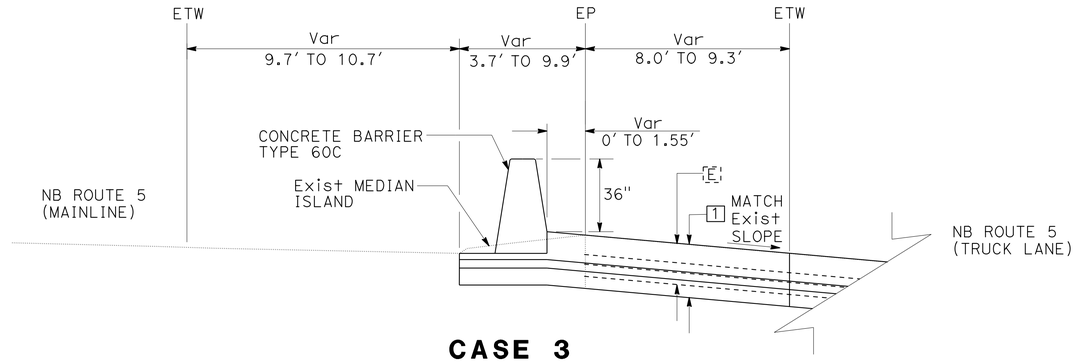

CASE 3

Sta 2351+26.60 TO Sta 2354+13.54

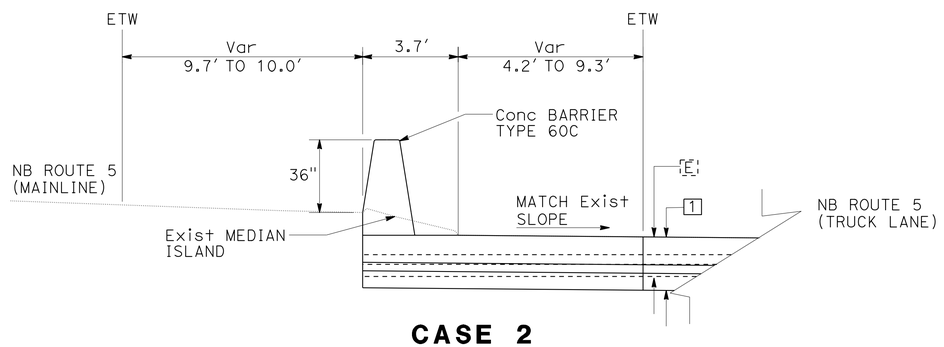

CASE 2

Sta 2337+00.00 TO Sta 2351+26.60

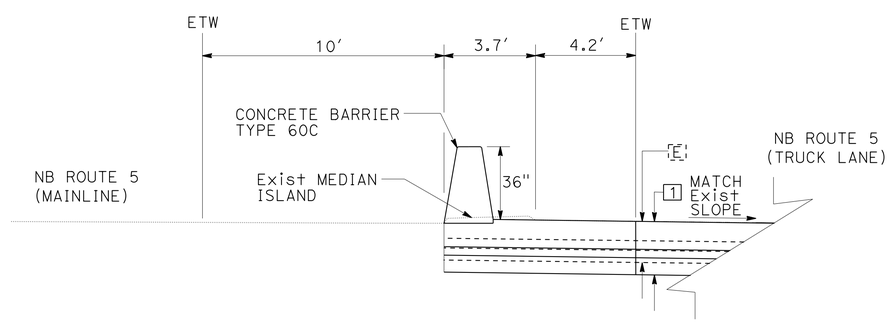

CASE 1

Sta 2336+85.35 TO Sta 2337+00.00

CONCRETE BARRIER DETAIL

CONSTRUCTION DETAILS

NO SCALE

C-2

STATE OF CALIFORNIA - DEPARTMENT OF TRANSPORTATION
Caltrans
DESIGN

FUNCTIONAL SUPERVISOR: KYLE KUNITAKE
CALCULATED-DESIGNED BY: SUJAYA KALAINESAN
CHECKED BY: O. BLACKSTOCK
REVISED BY
DATE REVISED

LAST REVISION 00-00-00
DATE PLOTTED => 05-AUG-2015
TIME PLOTTED => 10:19

Dist	COUNTY	ROUTE	POST MILES TOTAL PROJECT	SHEET No.	TOTAL SHEETS
07	LA	5	C43.9/C46.4	20	199

REGISTERED CIVIL ENGINEER 6-8-15 DATE

6-29-15
PLANS APPROVAL DATE

REGISTERED PROFESSIONAL ENGINEER SUJAYA KALAINESAN No. C74154 Exp. 6-30-17 CIVIL STATE OF CALIFORNIA

THE STATE OF CALIFORNIA OR ITS OFFICERS OR AGENTS SHALL NOT BE RESPONSIBLE FOR THE ACCURACY OR COMPLETENESS OF SCANNED COPIES OF THIS PLAN SHEET.

NOTES:

1. ALTERNATIVE 1 SHOWN (NO EXISTING END BLOCK), ALTERNATIVE 5 SIMILAR (EXISTING END BLOCK)
2. THE CONTRACTOR MUST VERIFY ALL CONTROLLING FIELD DIMENSIONS BEFORE ORDERING OR FABRICATING ANY MATERIAL.

LEGEND:

-·-·-·- INDICATES EXISTING STRUCTURE

——— INDICATES NEW STRUCTURE

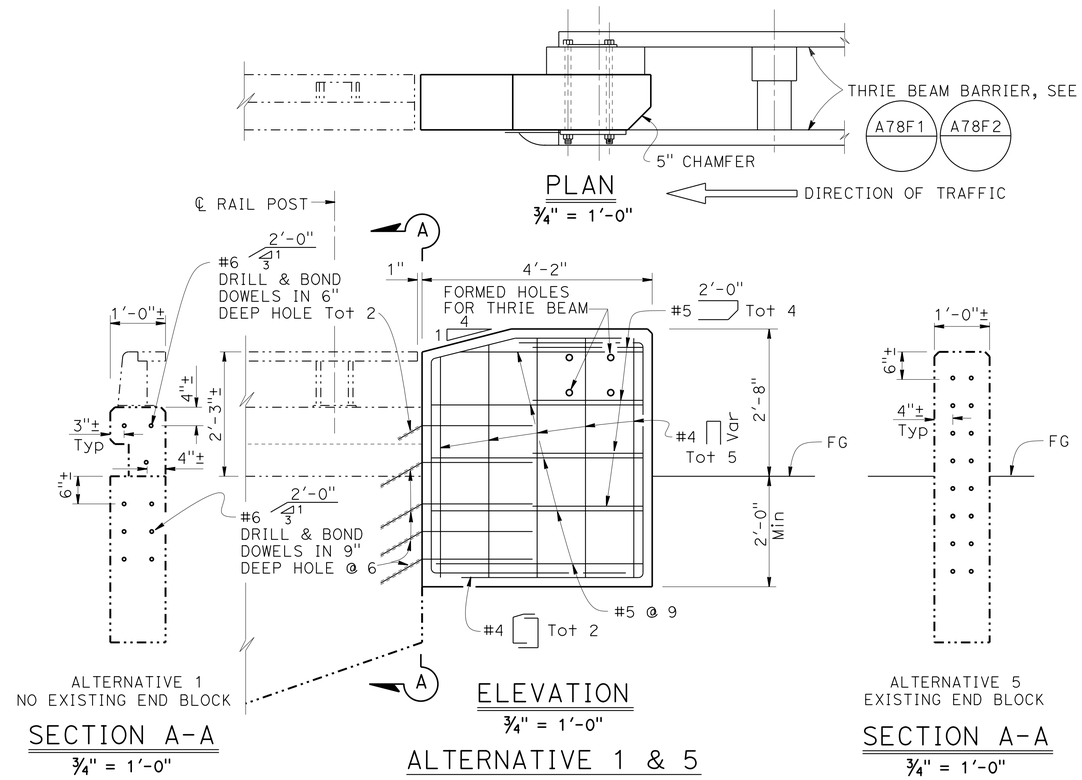

THRIE BEAM CONNECTION-TYPE 9

CONSTRUCTION DETAILS

NO SCALE

C-3

STATE OF CALIFORNIA - DEPARTMENT OF TRANSPORTATION
Caltrans DESIGN

FUNCTIONAL SUPERVISOR: KYLE KUNITAKE
CALCULATED-DESIGNED BY: SUJAYA KALAINESAN
CHECKED BY: O. BLACKSTOCK
REVISED BY
DATE REVISED

LAST REVISION 00-00-00
DATE PLOTTED => 05-AUG-2015
TIME PLOTTED => 10:19

Dist	COUNTY	ROUTE	POST MILES TOTAL PROJECT	SHEET No.	TOTAL SHEETS
07	LA	5	C43.9/C46.4	21	199

REGISTERED CIVIL ENGINEER 12-12-12 DATE

6-29-15
PLANS APPROVAL DATE

REGISTERED PROFESSIONAL ENGINEER TIMOTHY B. SOBELMAN No. 59249 Exp. 6-30-17 CIVIL STATE OF CALIFORNIA

THE STATE OF CALIFORNIA OR ITS OFFICERS OR AGENTS SHALL NOT BE RESPONSIBLE FOR THE ACCURACY OR COMPLETENESS OF SCANNED COPIES OF THIS PLAN SHEET.

GENERAL NOTES

Designation:
Types of Gross Solids Removal Devices (GSRDs) are Linear Radial (LR) and Inclined Screen. The Linear Radial has either a standard or high velocity configuration noted as Linear Radial or Linear Radial (HV). All GSRD BMP Detail Drawings are applicable for velocities up to 20 fps.

Special Reinforcement Coverage:
GSRD BMP Detail Drawings are not to be used in a corrosive environment or where there is a severe abrasive flow condition or in freeze-thaw locations.

Special Design:
Required for ground water conditions above bottom of GSRD, surcharge loads exceeding HS20 truck load, design bearing pressures or sizes greater than those on this plan.

Traffic Loading:
No traffic load is allowed over GSRDs. As determined by the Engineer, barriers or MBGR shall be provided between GSRDs and traffic lanes.

DESIGN FLOW CHART

INCLINED SCREEN

GSRD TYPE	TOTAL SCREEN LENGTH "C"	FLOW RATE (cfs)	DEBRIS AREA (acres)
A	3′-4″	5.83	2.21
B	5′-0″	8.74	3.31
C	6′-8″	11.65	4.41
D	8′-4″	14.57	5.52
E	10′-0″	17.48	6.63
F	11′-8″	20.39	7.74

NOTE:

1. The total screen length "C" is shown on the "Inclined Screen Layout" sheet and "Inclined Screen Details No. 1" sheet.

DESIGN NOTES

Specifications:
Design:
Bridge Design Specification April 2000 (LFD)
(1996 AASHTO) with interims and revisions by Caltrans

Wall (LFD) : 1.5 D + 1.5 E and 1.5D + W
Footing (LFD): 1.5 D + 1.5 E
Where D = Dead Load
E = Earth Load

Capacity reduction factor is included.

Earth Load:
125 lb/ft vertical,

Water Load:
62.4 lb/ft horizontal,

Equivalent Fluid Pressure =
100 lb/ft horizontal (Case I).

Earth pressure for 2:1 unlimited slope determined from Rankine's formula with ø = 33°42′ (Case II).

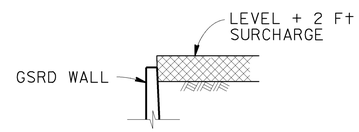

CASE I

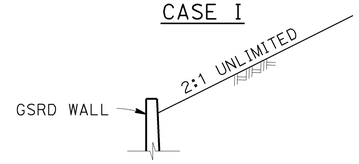

CASE II

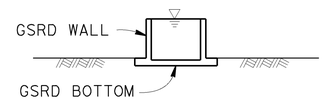

CASE III

DETAIL OF DESIGN LOADING CASES

CASE I Level + 2′-0″ surcharge, GSRD empty
CASE II 2:1 Unlimited slope, GSRD empty
CASE III GSRD full of water, no soil pressure

Grating (LL) Load :
0.5 psi

Unit Stresses:
f'_c = 4.0 ksi
fy = 60 ksi (bar reinforcing)

Design Soil Bearing Pressure (Service Load) = 20 psi

ABBREVIATIONS

cfs	CUBIC FEET PER SECOND
EWT&B	EACH WAY TOP AND BOTTOM
fps	FEET PER SECOND
GSRD	GROSS SOLIDS REMOVAL DEVICE
LL	LIVE LOAD

LEGEND

DESIGN WATER DEPTH

STANDARD PLAN SHEET No.

DETAIL No.

NOTES

Expansion joints:
Inverts - No expansion joints permitted.
Walls - Place ½" expansion joint filler vertically at 26′-0″ centers with strip water stop (B0-1 / 1-3).

Construction Joints:
Construction joints may be permitted if normal (or radial) to ℄ of GSRD.

Backfill:
See Standard Specifications, except the difference in backfill will not exceed 4 ft between side walls and will not exceed the lesser of wall height "H" or 4 ft between inlet and outlet walls.

Earthwork:
Excavation and Backfill with Cut and Exposed conditions:

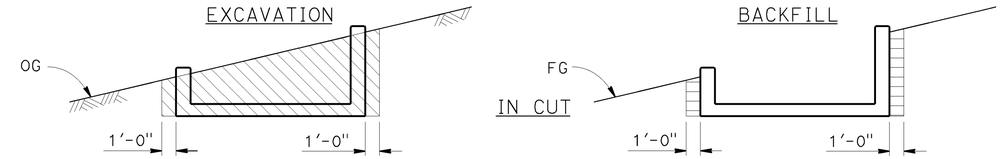

INCLINED SCREEN

LEGEND

STRUCTURE EXCAVATION

STRUCTURE BACKFILL
90% RELATIVE COMPACTION

NOTES

1. Slope or shore excavation sides as necessary.
2. Dimensions shown are minimum.

WATER POLLUTION CONTROL DETAILS
GROSS SOLIDS REMOVAL DEVICE
INCLINED SCREEN LEGEND

NO SCALE

WD-1

STATE OF CALIFORNIA - DEPARTMENT OF TRANSPORTATION
Caltrans
DIVISION OF DESIGN
OFFICE OF STORM WATER MANAGEMENT

FUNCTIONAL SUPERVISOR: TIMOTHY B. SOBELMAN
CALCULATED-DESIGNED BY: D. WANG
CHECKED BY: L. HE
REVISED BY
DATE REVISED

LAST REVISION 10-16-13
DATE PLOTTED => 25-JUN-2015
TIME PLOTTED => 09:27

Dist	COUNTY	ROUTE	POST MILES TOTAL PROJECT	SHEET No.	TOTAL SHEETS
07	LA	5	C43.9/C46.4	22	199

Timothy B. Sobelman 12-12-12
REGISTERED CIVIL ENGINEER DATE

6-29-15
PLANS APPROVAL DATE

REGISTERED PROFESSIONAL ENGINEER TIMOTHY B. SOBELMAN No. 59249 Exp. 6-30-17 CIVIL STATE OF CALIFORNIA

THE STATE OF CALIFORNIA OR ITS OFFICERS OR AGENTS SHALL NOT BE RESPONSIBLE FOR THE ACCURACY OR COMPLETENESS OF SCANNED COPIES OF THIS PLAN SHEET.

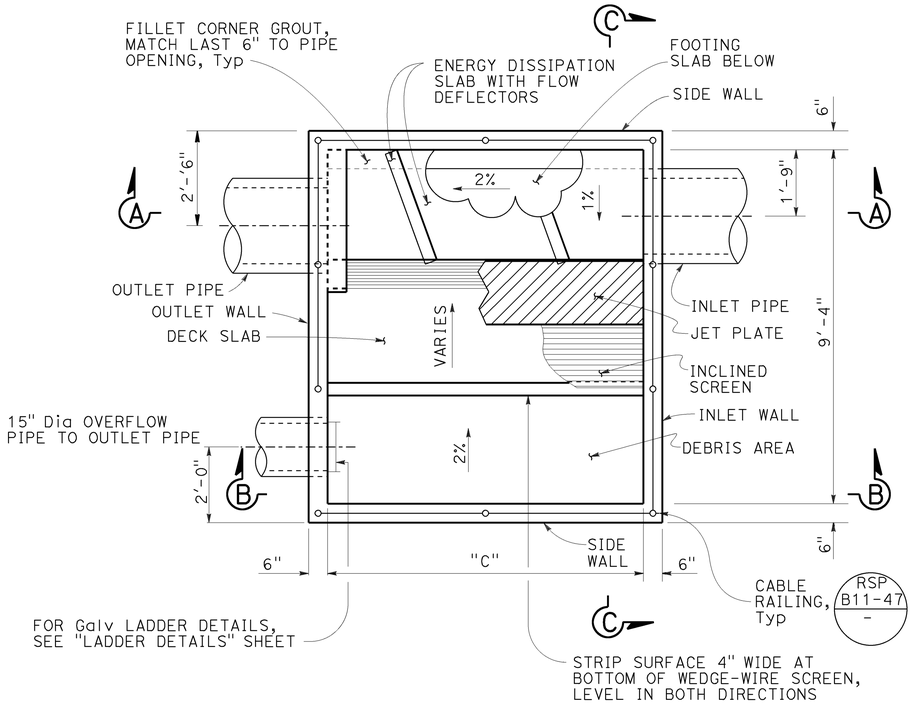

PLAN

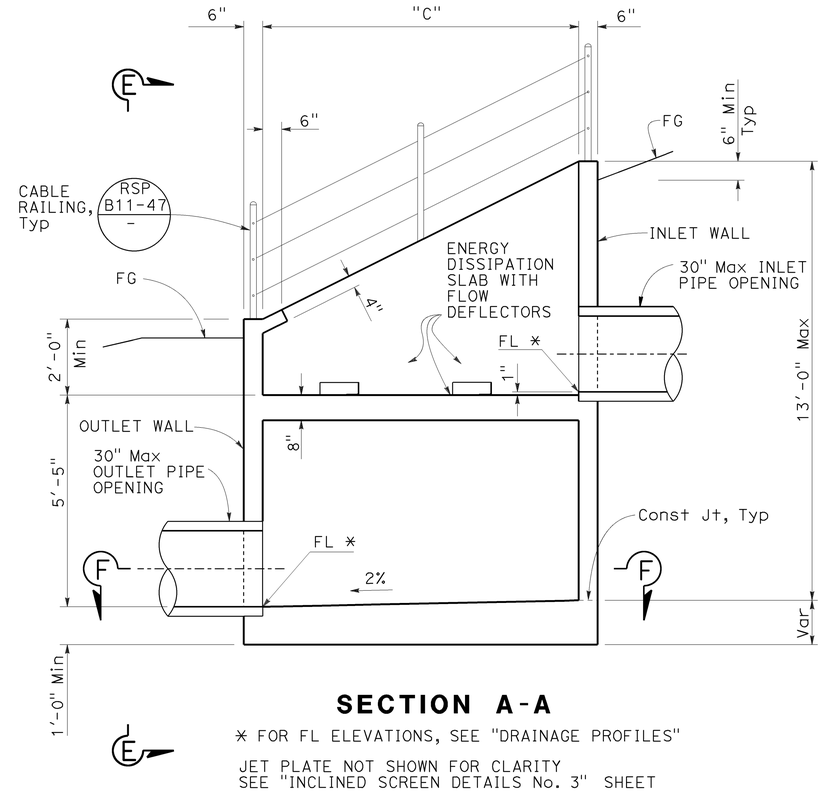

SECTION A-A

* FOR FL ELEVATIONS, SEE "DRAINAGE PROFILES"

JET PLATE NOT SHOWN FOR CLARITY
SEE "INCLINED SCREEN DETAILS No. 3" SHEET

NOTES (THIS SHEET ONLY):

1. See "Drainage Plans" for additional details.
2. Inlet and outlet pipe opening sizes are shown on "Drainage Plans". The overflow and outlet piping must be connected via standard elbows and tees.
3. For Sections B-B and C-C, see "Inclined Screen Details No. 1" sheet.
4. For reinforcing details which include Sections A-A, B-B, C-C and F-F, see "Inclined Screen Details No. 3" sheet.
5. For inlet and outlet pipe details not shown, see "Inclined Screen Details No. 2" sheet.
6. For View E-E, see "Inclined Screen Details No. 2" sheet.

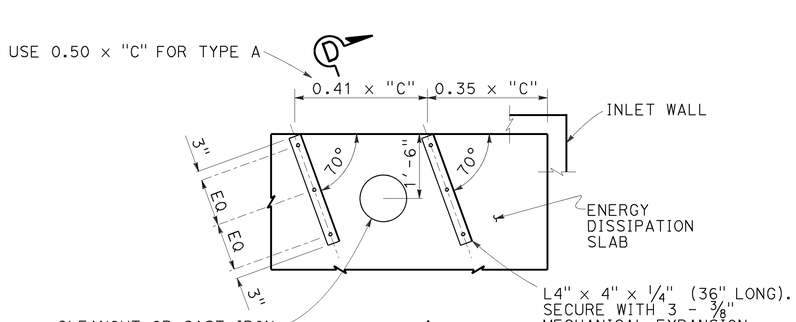

DEFLECTOR PLAN

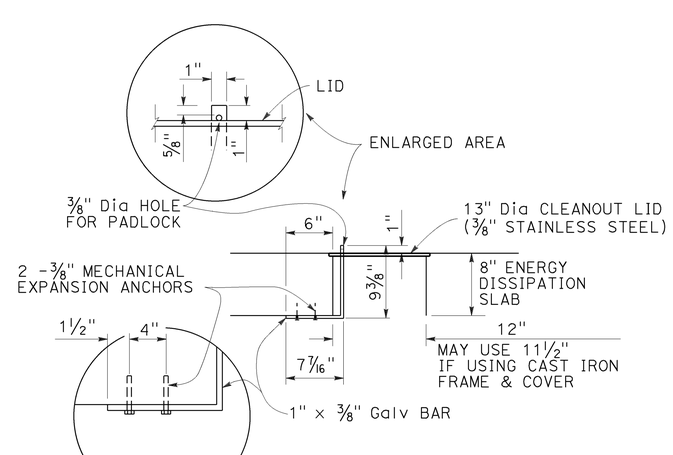

SECTION D-D

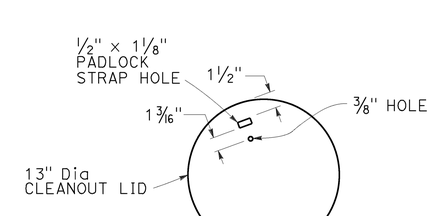

CLEANOUT LID DETAIL

WATER POLLUTION CONTROL DETAILS
GROSS SOLIDS REMOVAL DEVICE
INCLINED SCREEN LAYOUT

NO SCALE

WD-2

STATE OF CALIFORNIA - DEPARTMENT OF TRANSPORTATION
DIVISION OF DESIGN
OFFICE OF STORM WATER MANAGEMENT
Caltrans

FUNCTIONAL SUPERVISOR: TIMOTHY B. SOBELMAN
CALCULATED-DESIGNED BY: D. WANG
CHECKED BY: L. HE
REVISED BY
DATE REVISED

LAST REVISION 10-16-13
DATE PLOTTED => 25-JUN-2015
TIME PLOTTED => 09:27

Dist	COUNTY	ROUTE	POST MILES TOTAL PROJECT	SHEET No.	TOTAL SHEETS
07	LA	5	C43.9/C46.4	23	199

Timothy B. Sobelman 12-12-12
REGISTERED CIVIL ENGINEER DATE

6-29-15
PLANS APPROVAL DATE

REGISTERED PROFESSIONAL ENGINEER TIMOTHY B. SOBELMAN No. 59249 Exp. 6-30-17 CIVIL STATE OF CALIFORNIA

THE STATE OF CALIFORNIA OR ITS OFFICERS OR AGENTS SHALL NOT BE RESPONSIBLE FOR THE ACCURACY OR COMPLETENESS OF SCANNED COPIES OF THIS PLAN SHEET.

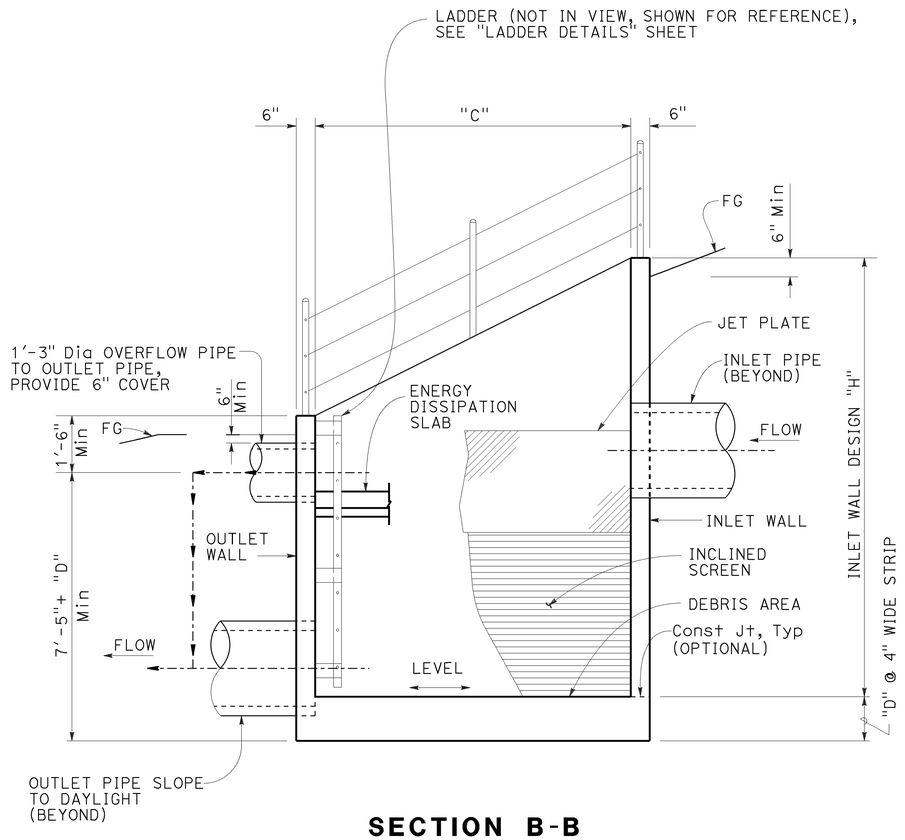

SECTION B-B

* FLOW DEFLECTORS NOT SHOWN FOR CLARITY

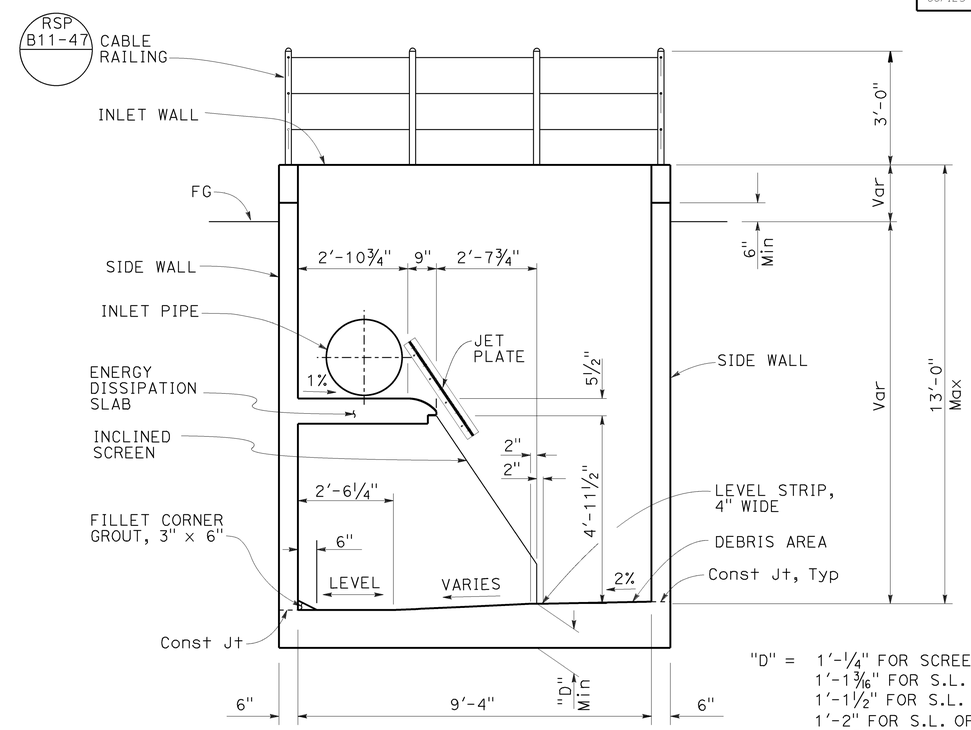

"D" = 1'-¼" FOR SCREEN LENGTH (S.L.) OF 3'-4⅛".
1'-1 3/16" FOR S.L. OF 5'-0"
1'-1½" FOR S.L. OF 6'-8"
1'-2" FOR S.L. OF 8'-4"
1'-2⅜" FOR S.L. OF 10'-0"
1'-2¾" FOR S.L. OF 11'-8⅛"

SECTION C-C

* FLOW DEFLECTORS NOT SHOWN FOR CLARITY

NOTES:

1. See "Drainage Plans" for additional details.
2. For Section B-B & C-C locations, see "Inclined Screen Layout" sheet.
3. Inlet and outlet piping opening sizes are shown on the "Drainage Plans." The overflow and outlet piping shall be connected via standard elbows and tees.
4. For inlet and outlet pipe details not shown, see "Drainage Plans".

WATER POLLUTION CONTROL DETAILS
GROSS SOLIDS REMOVAL DEVICE
INCLINED SCREEN DETAILS No. 1

NO SCALE

WD-3

STATE OF CALIFORNIA - DEPARTMENT OF TRANSPORTATION
DIVISION OF DESIGN
OFFICE OF STORM WATER MANAGEMENT

FUNCTIONAL SUPERVISOR: TIMOTHY B. SOBELMAN
CALCULATED-DESIGNED BY: D. WANG
CHECKED BY: L. HE
REVISED BY
DATE REVISED

LAST REVISION 00-00-00
DATE PLOTTED => 25-JUN-2015
TIME PLOTTED => 09:27

Dist	COUNTY	ROUTE	POST MILES TOTAL PROJECT	SHEET No.	TOTAL SHEETS
07	LA	5	C43.9/C46.4	24	199

Timothy B. Sobelman 12-12-12
REGISTERED CIVIL ENGINEER DATE

6-29-15
PLANS APPROVAL DATE

REGISTERED PROFESSIONAL ENGINEER TIMOTHY B. SOBELMAN No. 59249 Exp. 6-30-17 CIVIL STATE OF CALIFORNIA

THE STATE OF CALIFORNIA OR ITS OFFICERS OR AGENTS SHALL NOT BE RESPONSIBLE FOR THE ACCURACY OR COMPLETENESS OF SCANNED COPIES OF THIS PLAN SHEET.

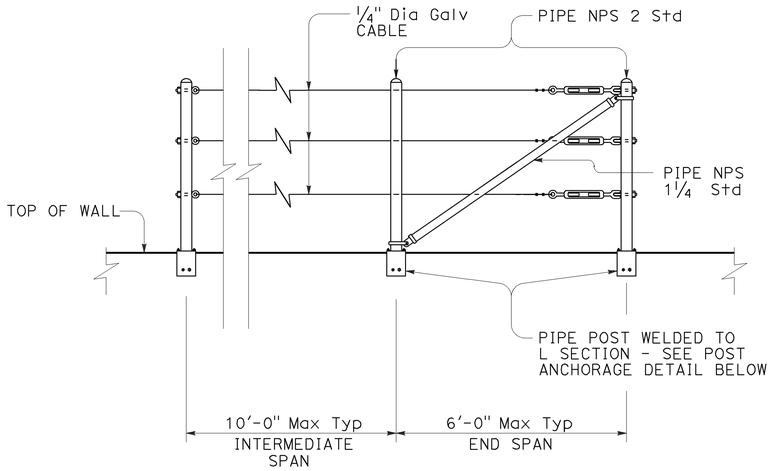

CABLE RAILING

NOTE:
REFER TO REVISED STANDARD PLAN RSP B11-47 FOR ADDITIONAL INFORMATION.

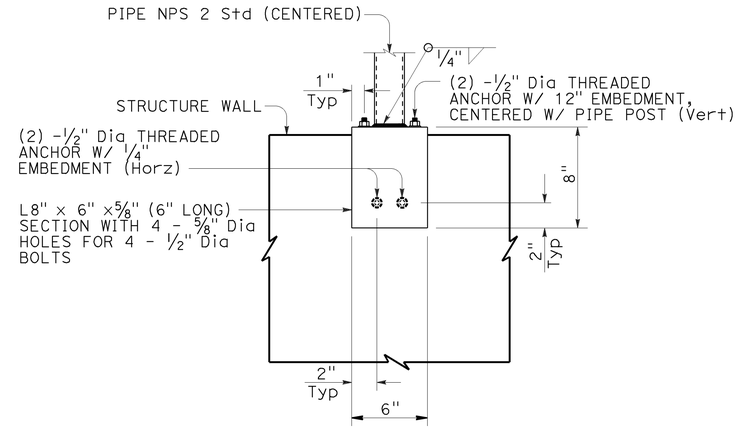

POST ANCHORAGE

NOTE:

1. Safety chain must be 1/4" galvanized steel coil chain, approximately 12 links per foot. Length must be minimum which allows lock-up of safety railing. Minimum of two safety chains per safety railing. Material must be grade 43 high test chain ASTM A413.

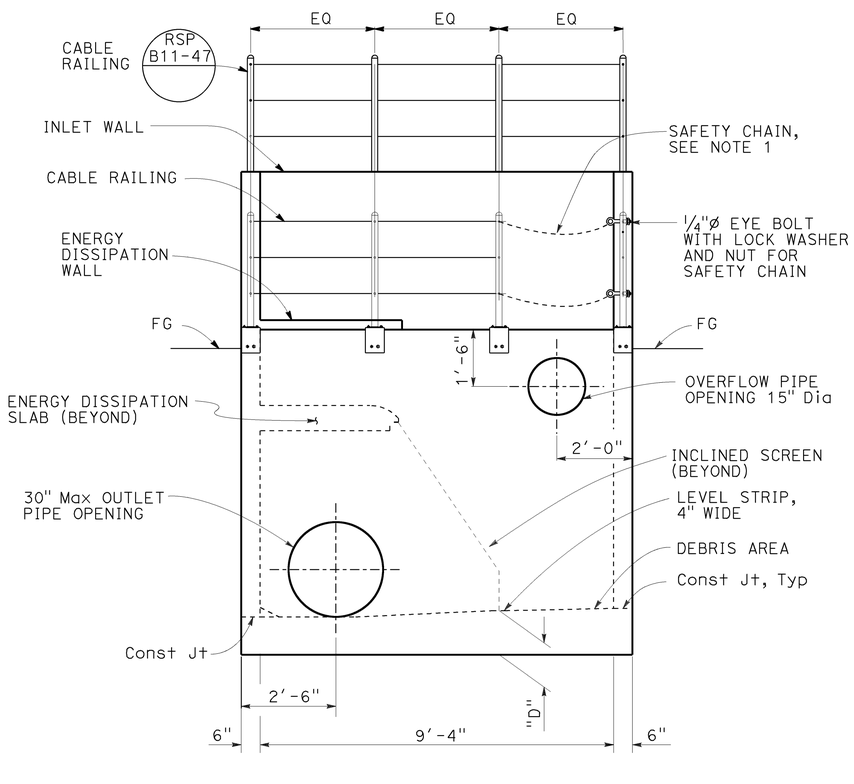

VIEW E-E

NOTE:
JET PLATE AND FLOW DEFLECTORS NOT SHOWN FOR CLARITY.

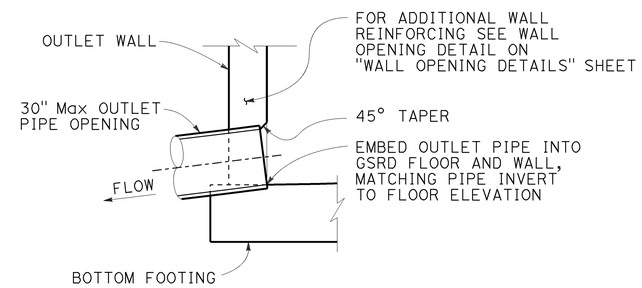

OUTLET DETAIL

PIPE EXIT AT WALL - INCLINED SCREEN

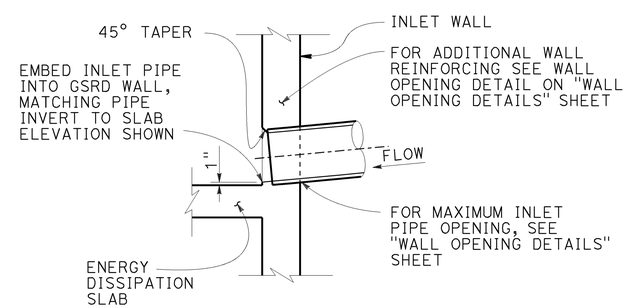

INLET DETAIL

PIPE ENTRANCE AT WALL

WATER POLLUTION CONTROL DETAILS
GROSS SOLIDS REMOVAL DEVICE
INCLINED SCREEN DETAILS No.2

NO SCALE

WD-4

STATE OF CALIFORNIA - DEPARTMENT OF TRANSPORTATION
DIVISION OF DESIGN
OFFICE OF STORM WATER MANAGEMENT

FUNCTIONAL SUPERVISOR: TIMOTHY B. SOBELMAN
CALCULATED-DESIGNED BY: D. WANG
CHECKED BY: L. HE
REVISED BY
DATE REVISED

LAST REVISION 00-00-00
DATE PLOTTED => 25-JUN-2015
TIME PLOTTED => 09:27

Dist	COUNTY	ROUTE	POST MILES TOTAL PROJECT	SHEET No.	TOTAL SHEETS
07	LA	5	C43.9/C46.4	25	199

REGISTERED CIVIL ENGINEER 12-12-12 DATE

6-29-15
PLANS APPROVAL DATE

REGISTERED PROFESSIONAL ENGINEER TIMOTHY B. SOBELMAN No. 59249 Exp. 6-30-17 CIVIL STATE OF CALIFORNIA

THE STATE OF CALIFORNIA OR ITS OFFICERS OR AGENTS SHALL NOT BE RESPONSIBLE FOR THE ACCURACY OR COMPLETENESS OF SCANNED COPIES OF THIS PLAN SHEET.

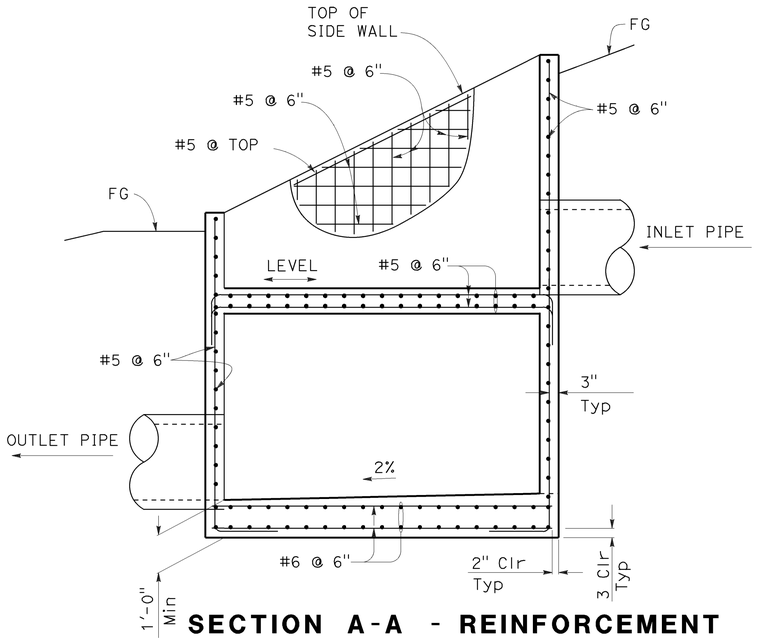

SECTION A-A - REINFORCEMENT

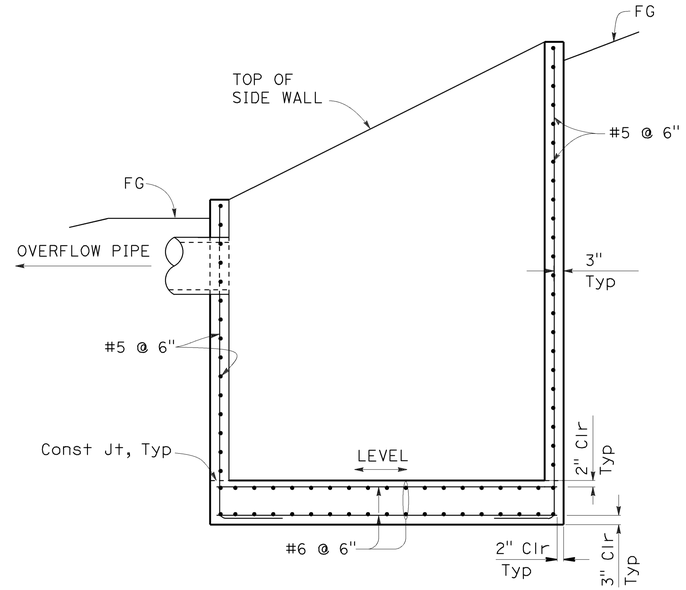

SECTION B-B - REINFORCEMENT

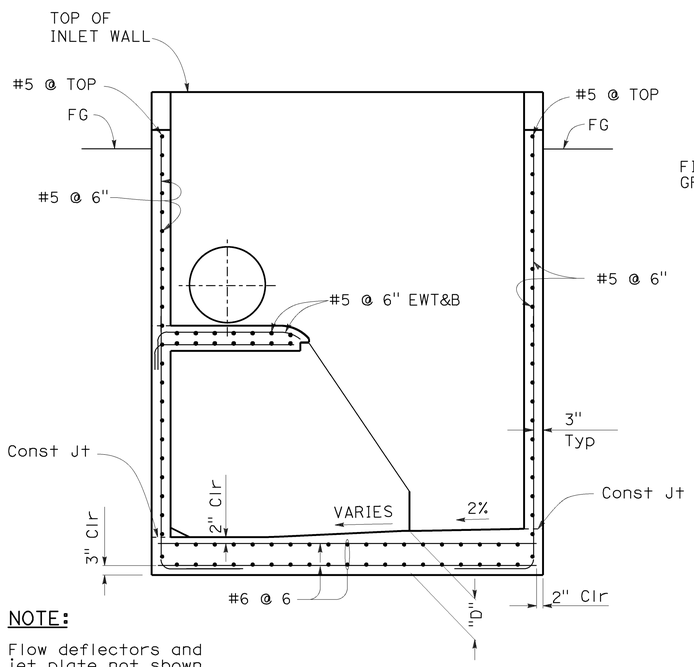

NOTE:

Flow deflectors and jet plate not shown for clarity

SECTION C-C - REINFORCEMENT

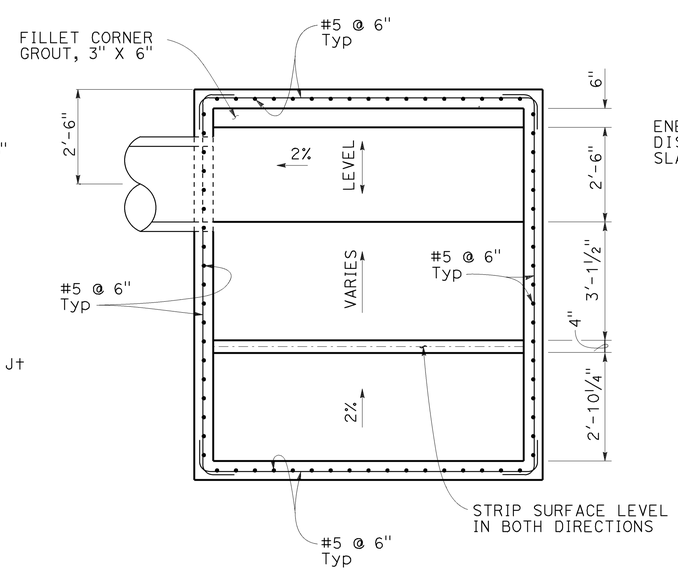

SECTION F-F

WALL REINFORCEMENT AND GRADES AT FOOTING SLAB

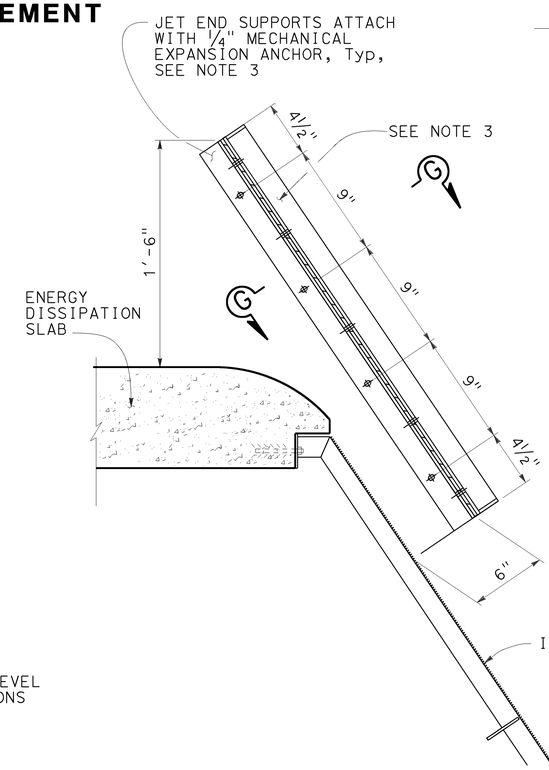

JET PLATE DETAIL

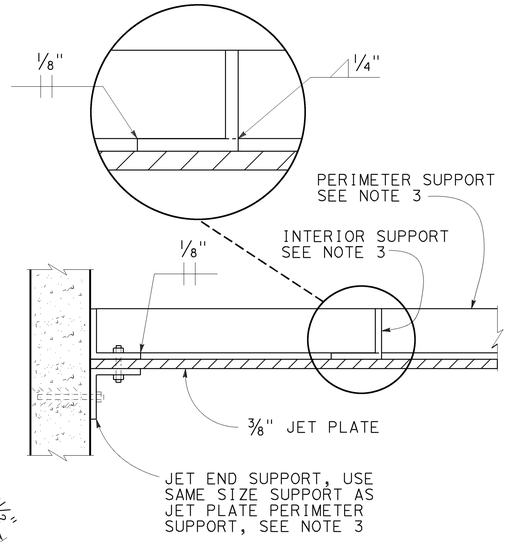

SECTION G-G

NOTES:

1. For additional reinforcing at openings, see "Wall Opening Details" sheet.
2. For section locations, see "Inclined Screen Layout" sheet.
3. ⅜" jet plate with L2" x 2" x ¼" braced supports around perimeter for screen lengths up to 6'-8". For longer screen lengths use L3" x 2" x ¼". Use additional interior supports at 2'-6" Max O.C. equally spaced. Fillet weld brace supports to plate @ 1'-6" O.C. Fasten jet plate assembly to jet end supports with five ¼" machine bolts A307 equally spaced. Start bolt pattern @ 2¼" Max from edge.

WATER POLLUTION CONTROL DETAILS
GROSS SOLIDS REMOVAL DEVICE
INCLINED SCREEN DETAILS No. 3

NO SCALE

WD-5

STATE OF CALIFORNIA - DEPARTMENT OF TRANSPORTATION
DIVISION OF DESIGN
OFFICE OF STORM WATER MANAGEMENT
Caltrans

FUNCTIONAL SUPERVISOR: TIMOTHY B. SOBELMAN
CALCULATED-DESIGNED BY: D. WANG
CHECKED BY: L. HE
REVISED BY
DATE REVISED

LAST REVISION 10-16-13
DATE PLOTTED => 25-JUN-2015
TIME PLOTTED => 09:27

Dist	COUNTY	ROUTE	POST MILES TOTAL PROJECT	SHEET No.	TOTAL SHEETS
07	LA	5	C43.9/C46.4	26	199

REGISTERED CIVIL ENGINEER 12-12-12 DATE

6-29-15
PLANS APPROVAL DATE

REGISTERED PROFESSIONAL ENGINEER TIMOTHY B. SOBELMAN No. 59249 Exp. 6-30-17 CIVIL STATE OF CALIFORNIA

THE STATE OF CALIFORNIA OR ITS OFFICERS OR AGENTS SHALL NOT BE RESPONSIBLE FOR THE ACCURACY OR COMPLETENESS OF SCANNED COPIES OF THIS PLAN SHEET.

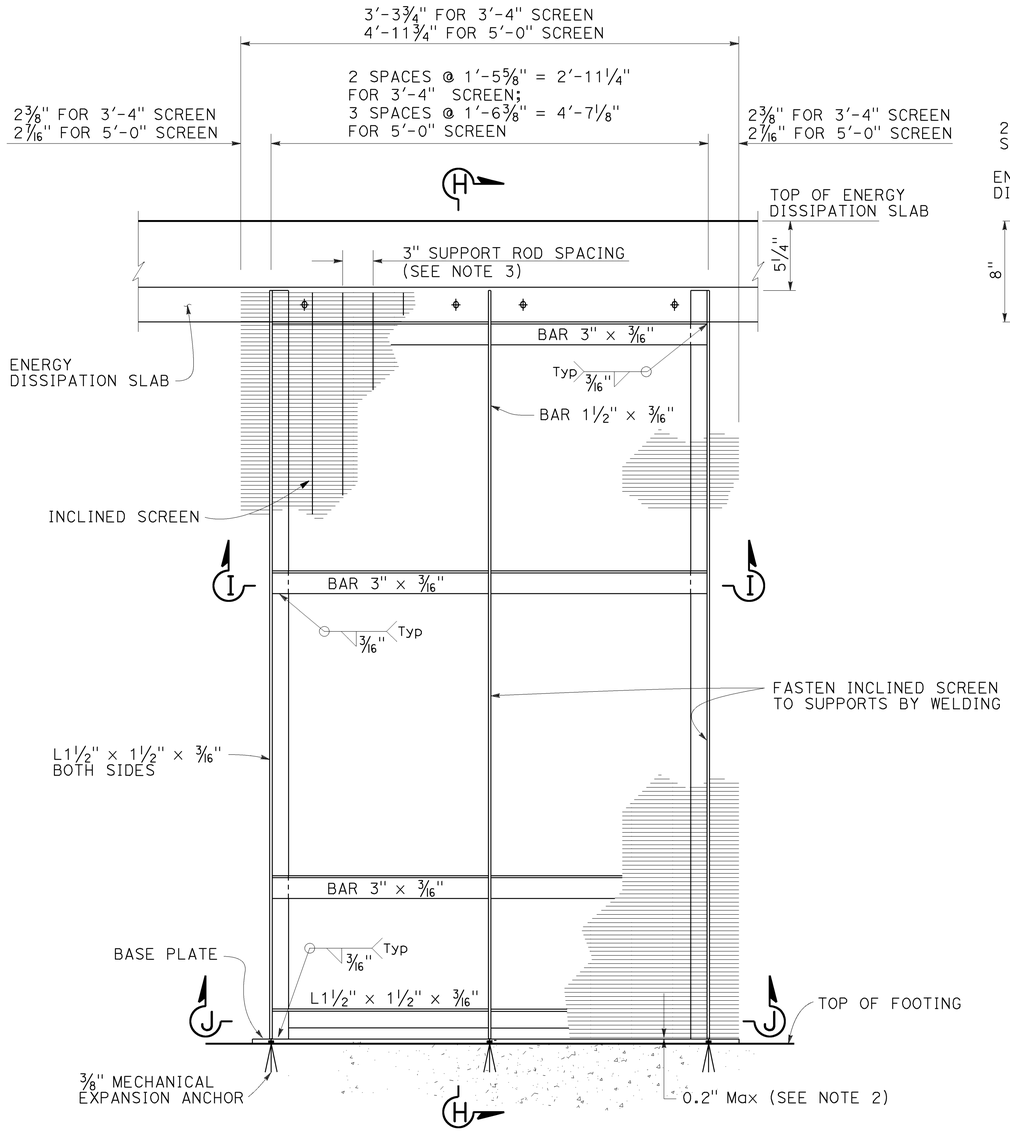

ELEVATION

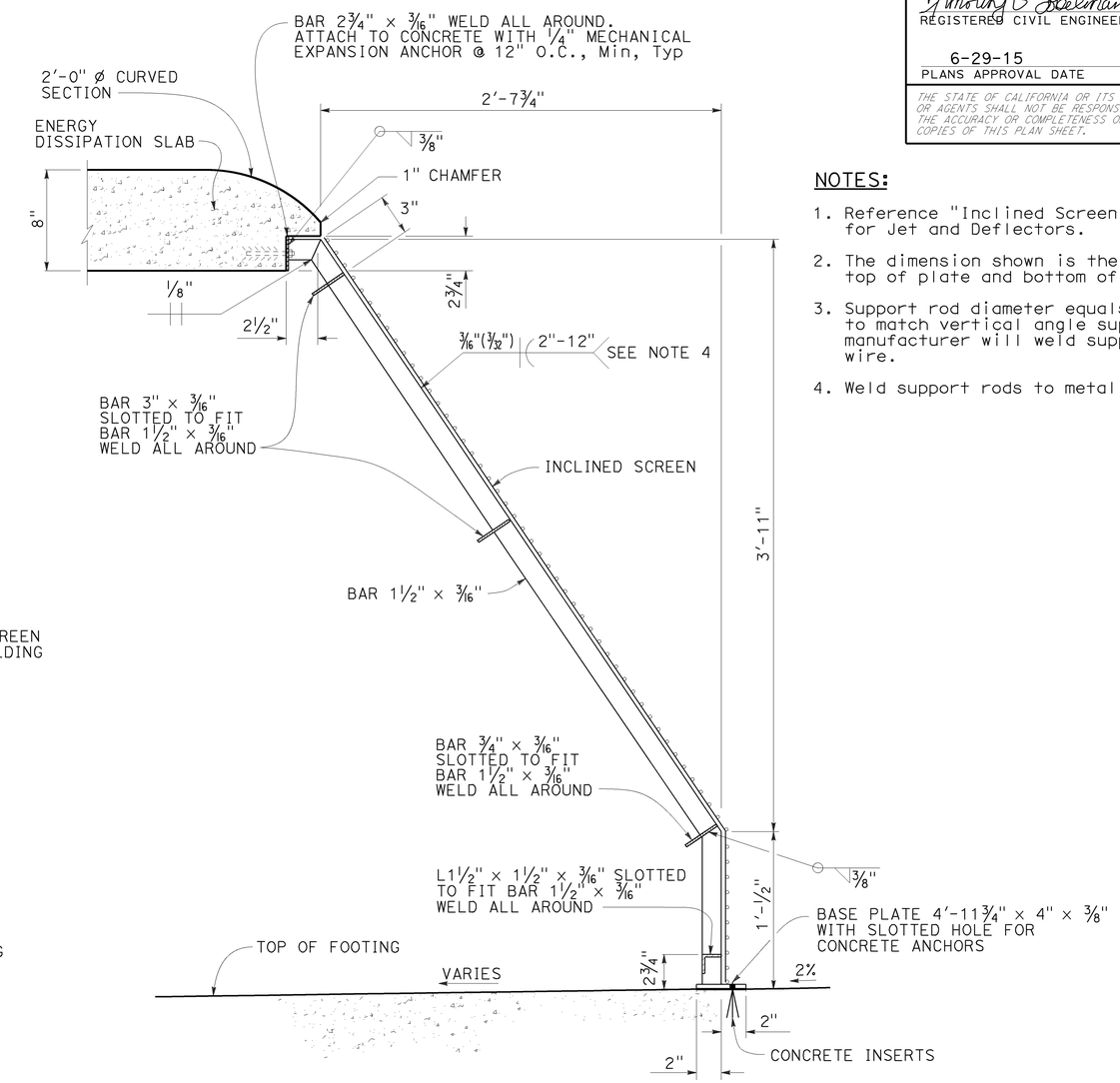

SECTION H-H

NOTES:

1. Reference "Inclined Screen Details No. 3" for Jet and Deflectors.
2. The dimension shown is the distance between top of plate and bottom of wire.
3. Support rod diameter equals ⅜". Align rods to match vertical angle supports. Screen manufacturer will weld support rods to wedge wire.
4. Weld support rods to metal frame (all around).

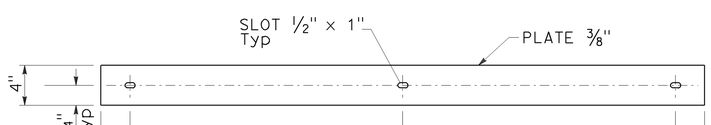

BASE PLATE

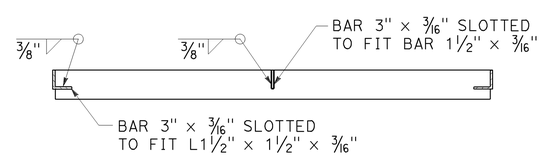

SECTION I-I

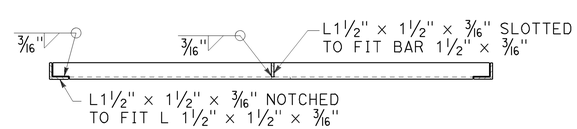

SECTION J-J

WATER POLLUTION CONTROL DETAILS
GROSS SOLIDS REMOVAL DEVICE
INCLINED SCREEN DETAILS

NO SCALE

WD-6

STATE OF CALIFORNIA - DEPARTMENT OF TRANSPORTATION
DIVISION OF DESIGN
OFFICE OF STORM WATER MANAGEMENT

FUNCTIONAL SUPERVISOR: TIMOTHY B. SOBELMAN
CALCULATED-DESIGNED BY: D. WANG
CHECKED BY: L. HE
REVISED BY
DATE REVISED

LAST REVISION 10-16-13
DATE PLOTTED => 25-JUN-2015
TIME PLOTTED => 09:27

Dist	COUNTY	ROUTE	POST MILES TOTAL PROJECT	SHEET No.	TOTAL SHEETS
07	LA	5	C43.9/C46.4	27	199

REGISTERED CIVIL ENGINEER — DATE 1-22-12

6-29-15
PLANS APPROVAL DATE

REGISTERED PROFESSIONAL ENGINEER — TIMOTHY B. SOBELMAN — No. 59249 — Exp. 6-30-17 — CIVIL — STATE OF CALIFORNIA

THE STATE OF CALIFORNIA OR ITS OFFICERS OR AGENTS SHALL NOT BE RESPONSIBLE FOR THE ACCURACY OR COMPLETENESS OF SCANNED COPIES OF THIS PLAN SHEET.

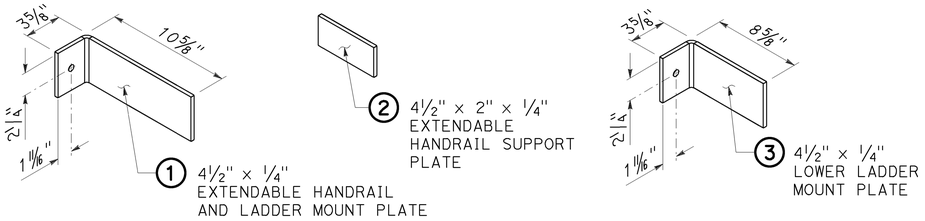

BRACKET DETAILS

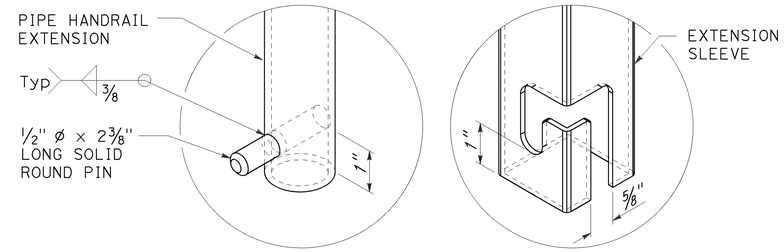

EXTENDABLE HANDRAIL LATCH

NOTES (THIS SHEET ONLY):

1. Rungs must be skid resistant.
2. Extendable handrail plates 1 and 2 to be welded to extension sleeve and ladder rails. Lower ladder mount plate 3 to be welded to ladder.
3. Grind exposed corners of metal parts to 3/16" radius.

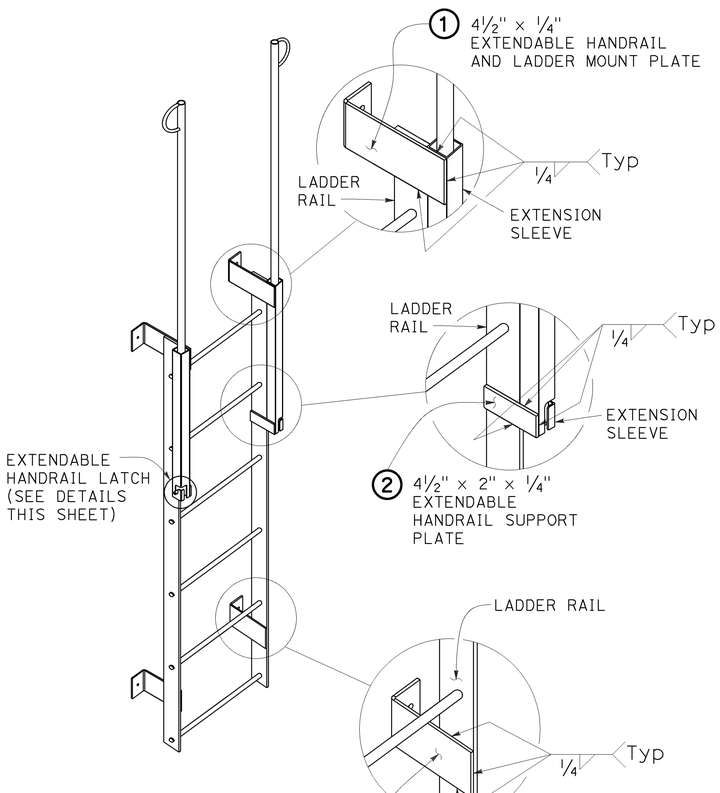

LADDER

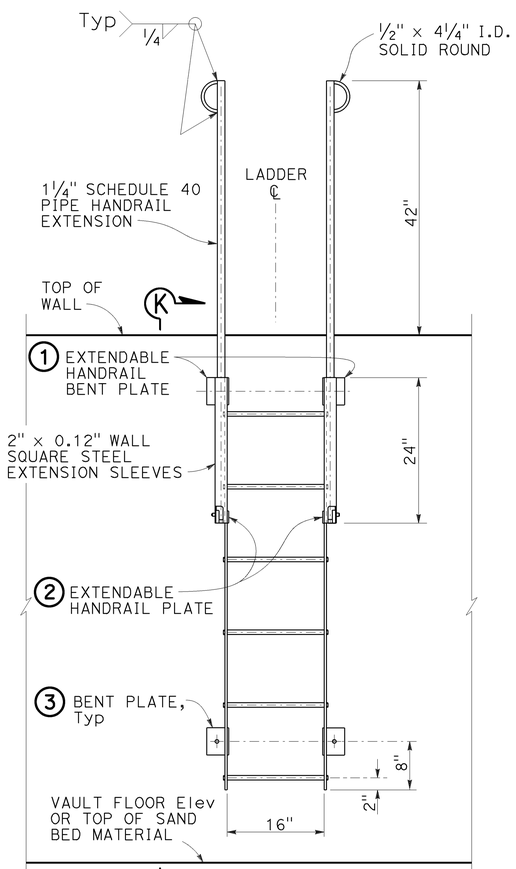

ELEVATION

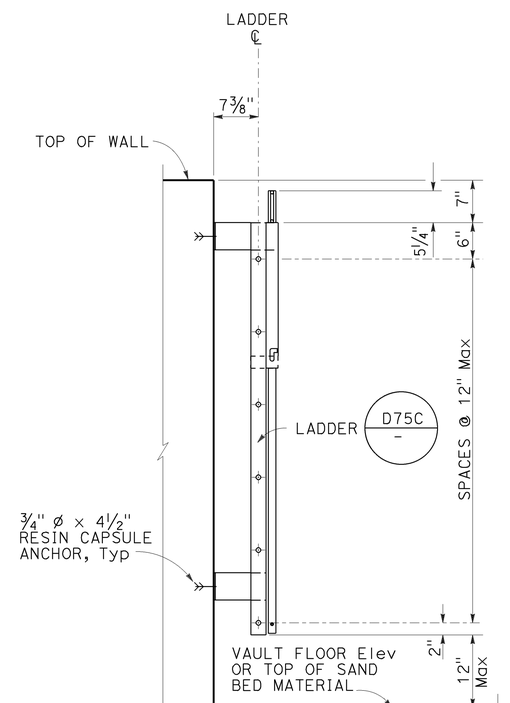

SECTION K-K

EXTENDABLE HANDRAIL

WATER POLLUTION CONTROL DETAILS
GROSS SOLIDS REMOVAL DEVICE
INCLINED SCREEN LADDER DETAILS

NO SCALE

WD-7

STATE OF CALIFORNIA - DEPARTMENT OF TRANSPORTATION
Caltrans®
DIVISION OF DESIGN
OFFICE OF STORM WATER MANAGEMENT

FUNCTIONAL SUPERVISOR: TIMOTHY B. SOBELMAN
CALCULATED-DESIGNED BY: D. WANG
CHECKED BY: L. HE
REVISED BY
DATE REVISED

LAST REVISION 10-16-13
DATE PLOTTED => 25-JUN-2015
TIME PLOTTED => 09:27

Dist	COUNTY	ROUTE	POST MILES TOTAL PROJECT	SHEET No.	TOTAL SHEETS
07	LA	5	C43.9/C46.4	28	199

Timothy B. Sobelman 12-12-12
REGISTERED CIVIL ENGINEER DATE

6-29-15
PLANS APPROVAL DATE

REGISTERED PROFESSIONAL ENGINEER TIMOTHY B. SOBELMAN No. 59249 Exp. 6-30-17 CIVIL STATE OF CALIFORNIA

THE STATE OF CALIFORNIA OR ITS OFFICERS OR AGENTS SHALL NOT BE RESPONSIBLE FOR THE ACCURACY OR COMPLETENESS OF SCANNED COPIES OF THIS PLAN SHEET.

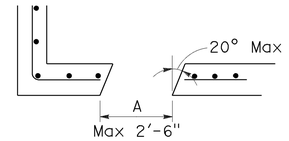

SECTION L-L

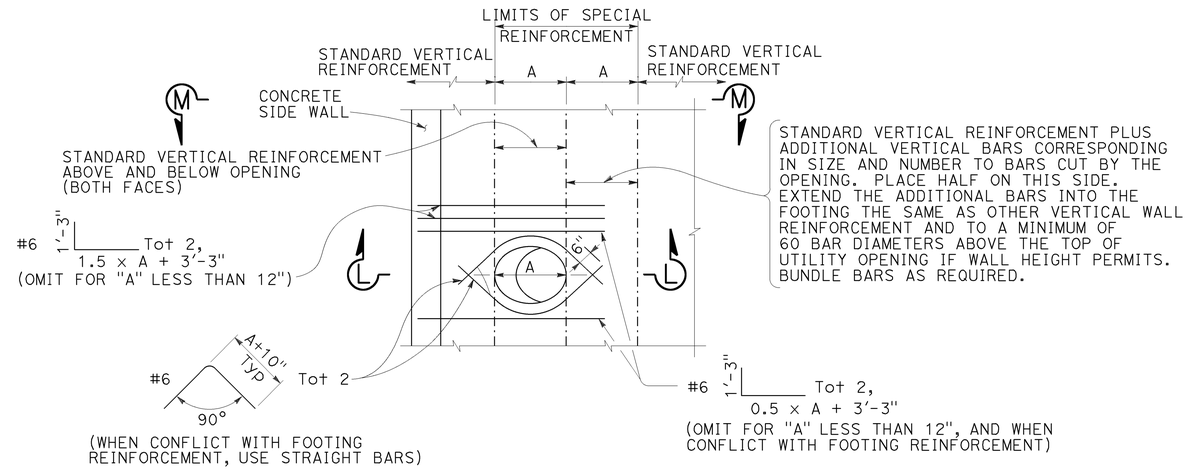

WALL OPENING

To be used at inlet and outlet pipe locations

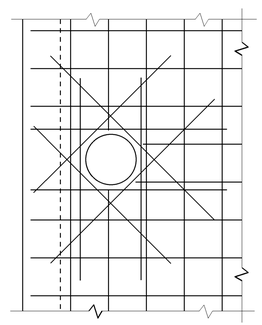

ENERGY DISSIPATION SLAB

To be used at 12" cast iron frame and cover (Place 8 - #5 as shown top and bottom. Extend bars 1'-3" past the opening or use 6" hook if development length is not available.)

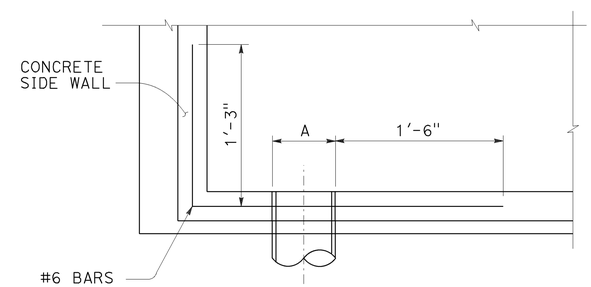

SECTION M-M

(Only specified horizontal bars are shown)

NOTE:
In all opening locations, horizontal reinforcement to be standard except as shown. All reinforcement to clear opening by 2" minimum.

WATER POLLUTION CONTROL DETAILS
GROSS SOLIDS REMOVAL DEVICE
INCLINED SCREEN WALL OPENING DETAILS

NO SCALE

WD-8

STATE OF CALIFORNIA - DEPARTMENT OF TRANSPORTATION
Caltrans
DIVISION OF DESIGN
OFFICE OF STORM WATER MANAGEMENT

FUNCTIONAL SUPERVISOR: TIMOTHY B. SOBELMAN
CALCULATED-DESIGNED BY: D. WANG
CHECKED BY: L. HE
REVISED BY
DATE REVISED

LAST REVISION 00-00-00
DATE PLOTTED => 25-JUN-2015
TIME PLOTTED => 09:27

Dist	COUNTY	ROUTE	POST MILES TOTAL PROJECT	SHEET No.	TOTAL SHEETS
07	LA	5	C43.9/C46.4	29	199

REGISTERED CIVIL ENGINEER 12-12-12 DATE

6-29-15
PLANS APPROVAL DATE

REGISTERED PROFESSIONAL ENGINEER TIMOTHY B. SOBELMAN No. 59249 Exp. 6-30-17 CIVIL STATE OF CALIFORNIA

THE STATE OF CALIFORNIA OR ITS OFFICERS OR AGENTS SHALL NOT BE RESPONSIBLE FOR THE ACCURACY OR COMPLETENESS OF SCANNED COPIES OF THIS PLAN SHEET.

GENERAL NOTES

Designation:
Types of Gross Solids Removal Devices (GSRDs) are Linear Radial (LR) and Inclined Screen. The Linear Radial has either a standard or high velocity configuration noted as Linear Radial or Linear Radial (HV). All GSRD BMP Detail Drawings are applicable for velocities up to 20 fps.

Special Reinforcement Coverage:
GSRD BMP Detail Drawings are not to be used in a corrosive environment or where there is a severe abrasive flow condition or in freeze-thaw locations.

Special Design:
Required for ground water conditions above bottom of GSRD, surcharge loads exceeding HS20 truck load, design bearing pressures or sizes greater than those on this plan.

Traffic Loading:
No traffic load is allowed over GSRDs. As determined by the Engineer, barriers or MBGR shall be provided between GSRDs and traffic lanes.

LINEAR RADIAL DESIGN CHART

GSRD TYPE	TOTAL SCREENED PIPE LENGTH "T_S"	FLOW RATE (cfs)	DEBRIS AREA (acres)	INSIDE LENGTH "L"	HIGH VELOCITY INSIDE LENGTH "L_{HV}" *	No. OF INTERMEDIATE SCREENED PIPES
LR-1	5′-6"	3.54	0.79	11′-11"	14′-3¾"	0
LR-2	10′-6"	7.07	1.58	16′-11"	19′-3¾"	1
LR-3	15′-6"	10.96	2.25	21′-11"	24′-3¾"	2
LR-4	20′-6"	14.49	3.16	26′-11"	29′-3¾"	3
LR-5	25′-6"	18.38	3.95	31′-11"	34′-3¾"	4
LR-6	30′-6"	21.91	4.74	36′-11"	39′-3¾"	5

* High velocity is achieved when inlet Velocity exceeds 8.2 fps.

NOTES:

1. The total screened pipe length "T_S" is the sum of the end screened and intermediate screened pipes. For dimension "T_S" and location of end screened pipe and intermediate screened pipes, see "GSRD Layout" sheet.
2. Example of Linear Radial nomenclature is LR-1 (6′-0"); for high velocity type LR(HV)-3 (3′-0"). The wall height is the number represented in the parentheses.
3. The inside length "L" is shown on the "Linear Radial Layout" sheet, see plan view. Like wise the inside length "L_{HV}" is shown on the "Linear Radial (High Velocity) Layout sheet, see plan view.

DESIGN NOTES

Specifications:
Design:
Bridge Design Specification April 2000 (LFD)
(1996 AASHTO) with interims and revisions by Caltrans

Wall (LFD) : 1.5 D + 1.5 E and 1.5 D + W
Footing (LFD): 1.5 D + 1.5 E
Where D = Dead Load
E = Earth Load

Capacity reduction factor is included.

Earth Load:
125 lb/ft^3 vertical,

Water Load:
62.4 lb/ft^3 horizontal,

Equivalent Fluid Pressure =
100 lb/ft^3 horizontal (Case I).

Earth pressure for 2:1 unlimited slope determined from Rankine's formula with ϕ = 33°42′ (Case II).

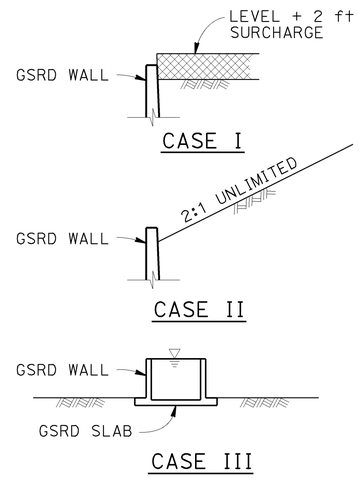

DETAIL OF DESIGN LOADING CASES

CASE I Level + 2′-0" surcharge, GSRD empty
CASE II 2:1 Unlimited slope, GSRD empty
CASE III GSRD full of water, no soil pressure

Grating (LL) Load :
0.5 psi

Unit Stresses:
f'_c = 3.6 ksi
f_y = 60 ksi (bar reinforcing)

Design Soil Bearing Pressure (Service Load) = 20 psi

ABBREVIATIONS

cfs	CUBIC FEET PER SECOND
fps	FEET PER SECOND
GSRD	GROSS SOLIDS REMOVAL DEVICE
HV	HIGH VELOCITY
LL	LIVE LOAD
LR	LINEAR RADIAL

LEGEND

DESIGN WATER DEPTH

STANDARD PLAN SHEET No.

DETAIL No.

NOTES

Expansion joints:
Inverts - No expansion joints shall be permitted.
Walls - Place ½" expansion joint filler vertically at 26′-0" centers with strip water stop (B0-1 / 1-3).

Construction Joints:
Construction joints may be permitted if normal (or radial) to ℄ of GSRD.

Backfill:
See Standard Specifications, except the difference in backfill shall not exceed 4 ft between side walls and shall not exceed the lesser of wall height "H" or 4 ft between inlet and outlet walls.

Earthwork:
Excavation and Backfill with Cut and Exposed conditions:

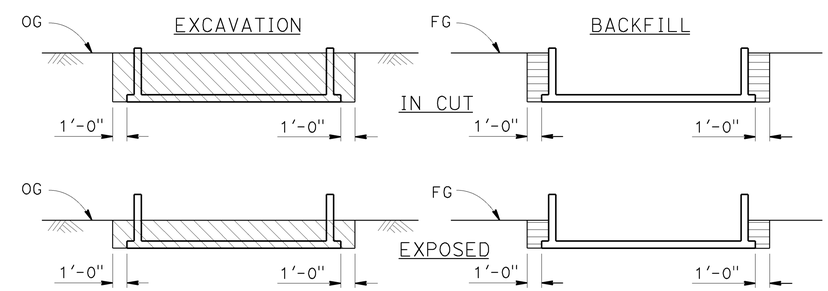

LINEAR RADIAL

LEGEND

STRUCTURE EXCAVATION

STRUCTURE BACKFILL
90% RELATIVE COMPACTION

NOTES

1. Slope or shore excavation sides as necessary.
2. Dimensions shown are minimum.

WATER POLLUTION CONTROL DETAILS
GROSS SOLIDS REMOVAL DEVICE
LINEAR RADIAL LEGEND

NO SCALE

WD-9

STATE OF CALIFORNIA - DEPARTMENT OF TRANSPORTATION
DIVISION OF DESIGN
OFFICE OF STORM WATER MANAGEMENT
Caltrans

FUNCTIONAL SUPERVISOR: TIMOTHY B. SOBELMAN
CALCULATED-DESIGNED BY: D. WANG
CHECKED BY: L. HE
REVISED BY
DATE REVISED

LAST REVISION 10-15-13
DATE PLOTTED => 25-JUN-2015
TIME PLOTTED => 09:28

Dist	COUNTY	ROUTE	POST MILES TOTAL PROJECT	SHEET No.	TOTAL SHEETS
07	LA	5	C43.9/C46.4	30	199

Timothy B. Sobelman 12-12-12
REGISTERED CIVIL ENGINEER DATE

6-29-15
PLANS APPROVAL DATE

REGISTERED PROFESSIONAL ENGINEER TIMOTHY B. SOBELMAN No. 59249 Exp. 6-30-17 CIVIL STATE OF CALIFORNIA

THE STATE OF CALIFORNIA OR ITS OFFICERS OR AGENTS SHALL NOT BE RESPONSIBLE FOR THE ACCURACY OR COMPLETENESS OF SCANNED COPIES OF THIS PLAN SHEET.

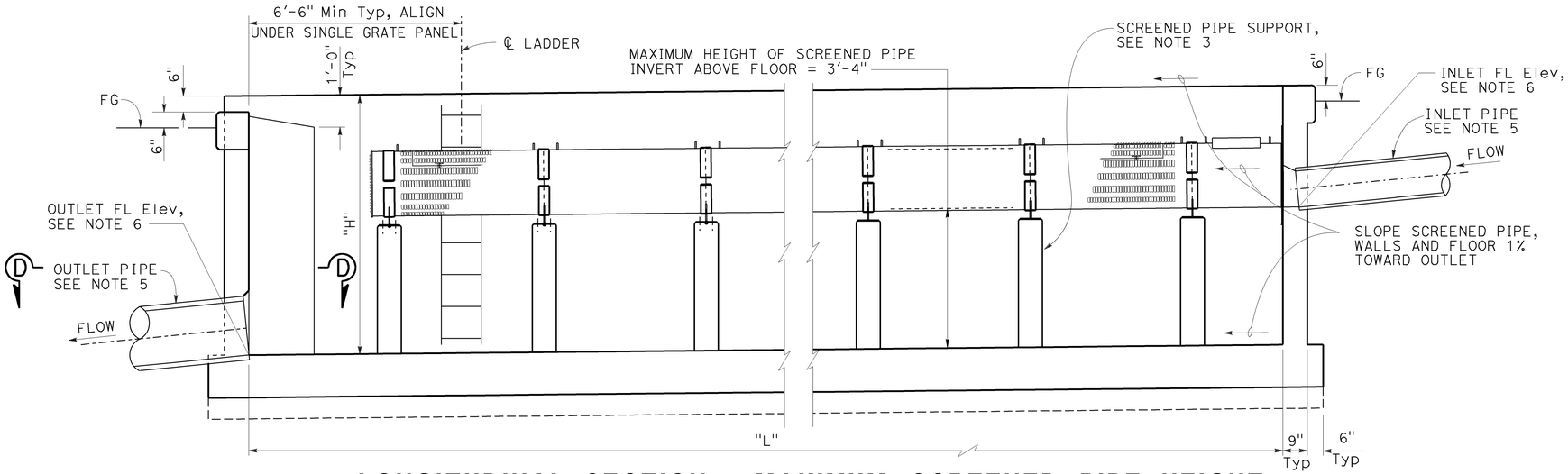

LONGITUDINAL SECTION - MAXIMUM SCREENED PIPE HEIGHT

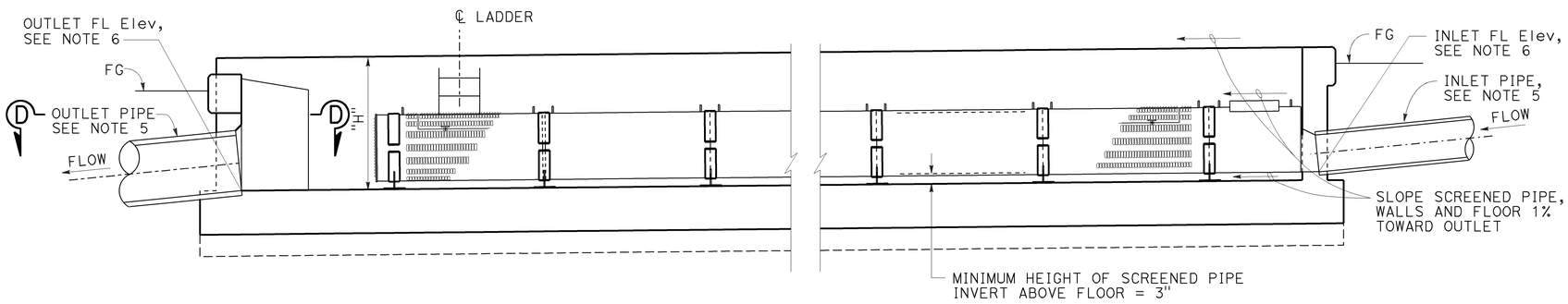

LONGITUDINAL SECTION - MINIMUM SCREENED PIPE HEIGHT

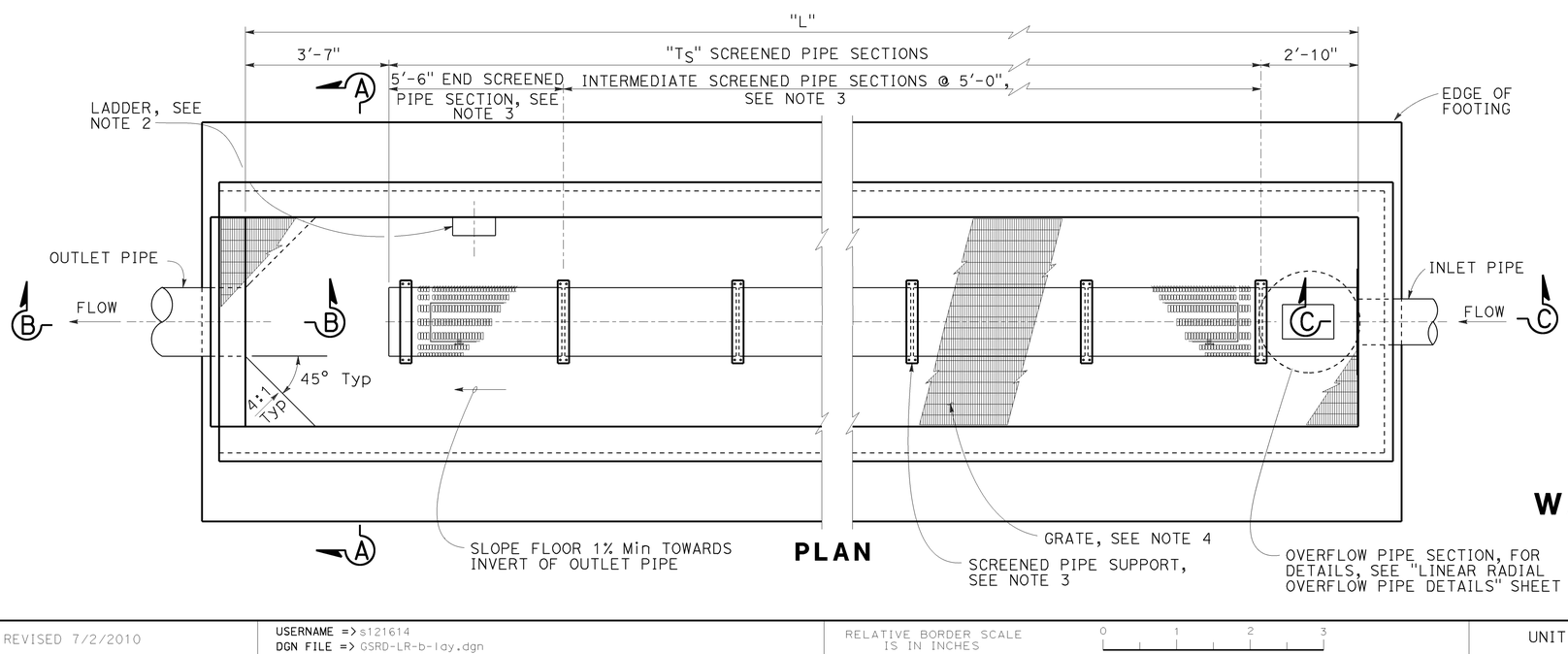

PLAN

NOTES (THIS SHEET ONLY):

1. For Section A-A, B-B, C-C and D-D, see "Linear Radial Details" sheet.
2. For ladder details see "Linear Radial Ladder Details" sheet.
3. For end and intermediate screened pipe details, see "Linear Radial Screened Pipe Details" sheet.
4. For grate details, see "Linear Radial Grate Panel Details" sheet.
5. For layout of inlet and outlet pipes, see "Drainage Plans".
6. For FL elevation of inlet and outlet pipes, see "Drainage Profiles".
7. For dimension "L", "Ts" and other design data, see Design Chart on "Linear Radial Legend" sheet.
8. For dimension "H", see "Linear Radial Details sheet.

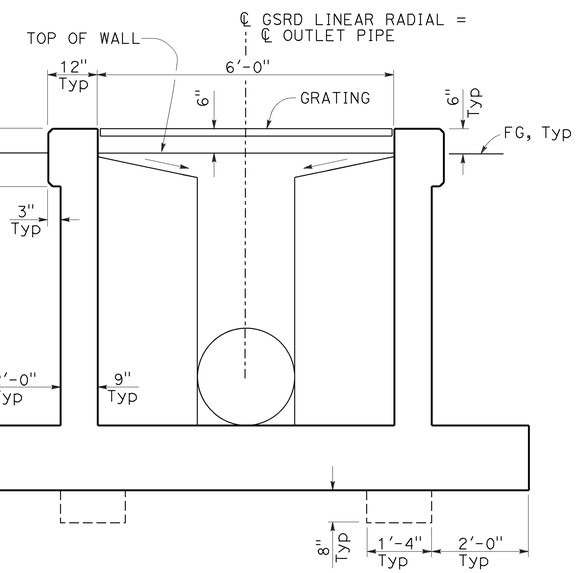

TYPICAL SECTION

WATER POLLUTION CONTROL DETAILS
GROSS SOLIDS REMOVAL DEVICE
LINEAR RADIAL LAYOUT

NO SCALE

WD-10

STATE OF CALIFORNIA - DEPARTMENT OF TRANSPORTATION
DIVISION OF DESIGN
OFFICE OF STORM WATER MANAGEMENT
Caltrans

FUNCTIONAL SUPERVISOR: TIMOTHY B. SOBELMAN
CALCULATED-DESIGNED BY: D. WANG
CHECKED BY: L. HE
REVISED BY
DATE REVISED

LAST REVISION 10-15-13
DATE PLOTTED => 25-JUN-2015
TIME PLOTTED => 09:28

Dist	COUNTY	ROUTE	POST MILES TOTAL PROJECT	SHEET No.	TOTAL SHEETS
07	LA	5	C43.9/C46.4	31	199

REGISTERED CIVIL ENGINEER 12-12-12 DATE

6-29-15
PLANS APPROVAL DATE

REGISTERED PROFESSIONAL ENGINEER TIMOTHY B. SOBELMAN No. 59249 Exp. 6-30-17 CIVIL STATE OF CALIFORNIA

THE STATE OF CALIFORNIA OR ITS OFFICERS OR AGENTS SHALL NOT BE RESPONSIBLE FOR THE ACCURACY OR COMPLETENESS OF SCANNED COPIES OF THIS PLAN SHEET.

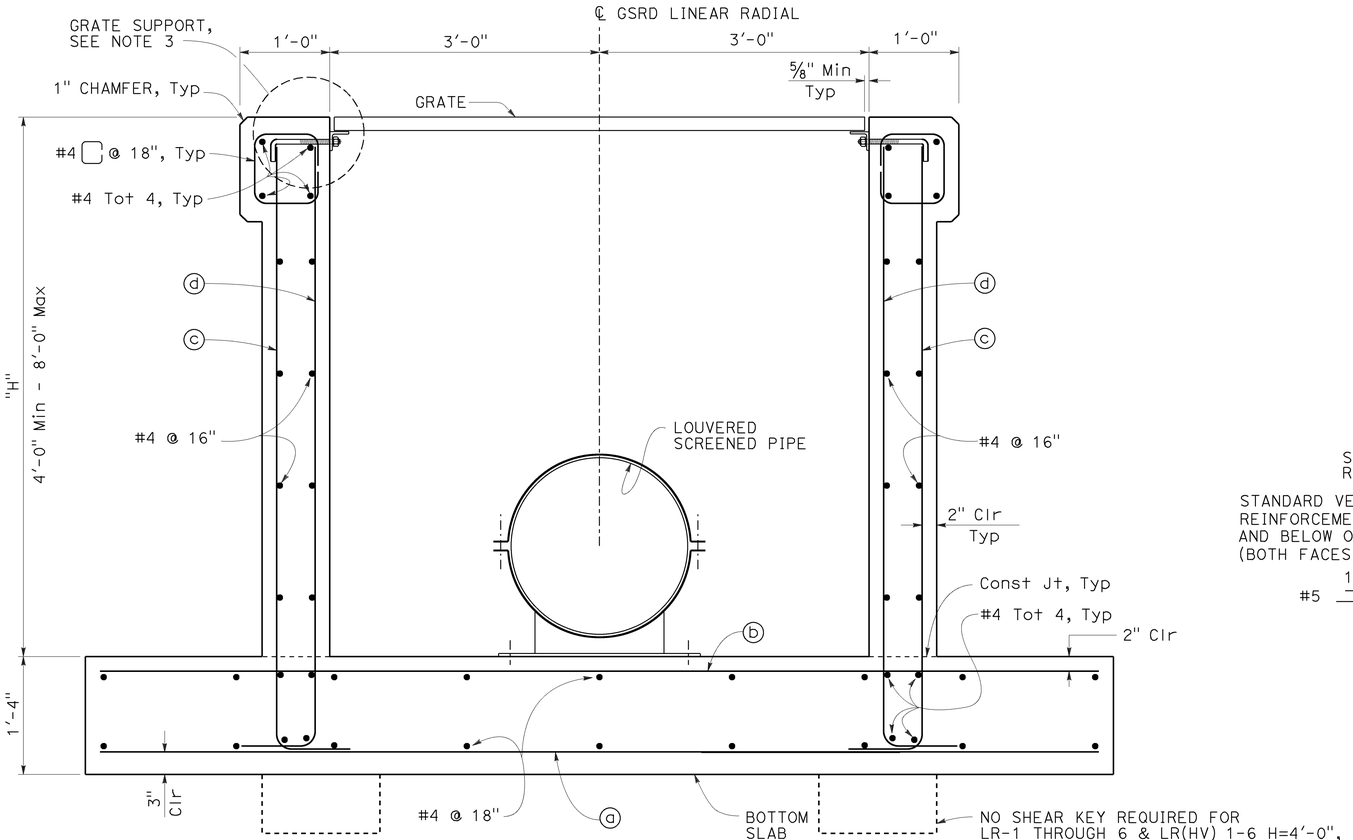

SECTION A-A

NOTES (THIS SHEET ONLY):

1. For location of sections A-A, B-B, C-C and D-D, see "Linear Radial Layout" sheet.
2. For invert elevation differential between inlet and outlet, see "Drainage Profiles" sheets.
3. For grate support detail, see "Linear Radial Grate Panel Details" sheet.

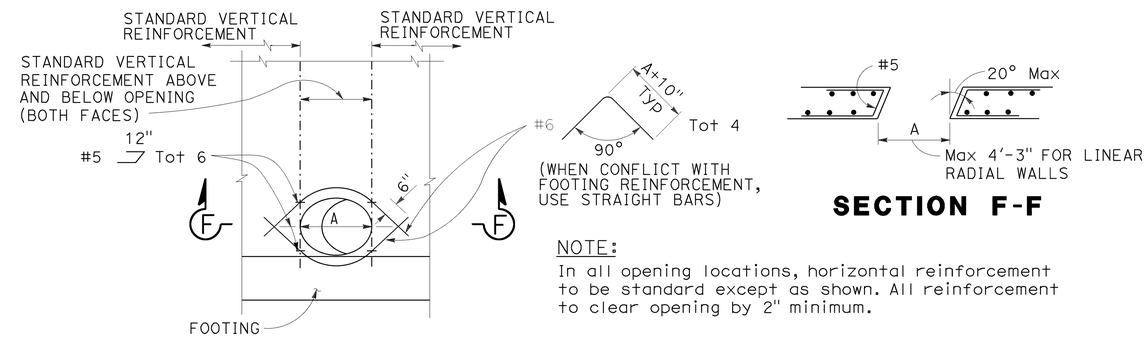

SECTION F-F

NOTE:
In all opening locations, horizontal reinforcement to be standard except as shown. All reinforcement to clear opening by 2" minimum.

WALL OPENING DETAILS

To be used at Linear Radial inlet and outlet pipe locations

REINFORCING STEEL AND DATA FOR WALLS

Design "H"	4'-0"	6'-0"	8'-0"
ⓐ BARS	#4 @ 18"	#5 @ 12"	#5 @ 8"
ⓑ BARS	#4 @ 18"	#4 @ 18"	#5 @ 16"
ⓒ BARS ⌊	#5 @ 14"	#5 @ 9"	#5 @ 4"
ⓓ BARS ⌋	#5 @ 14"	#5 @ 14"	#5 @ 12"

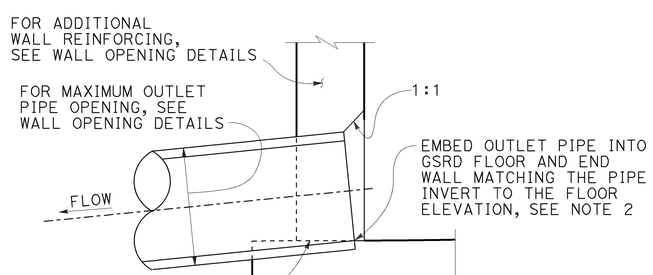

SECTION B-B

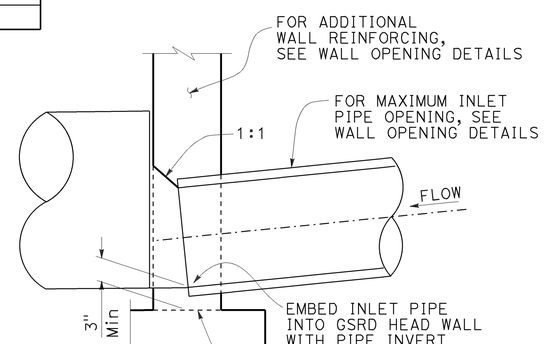

SECTION C-C

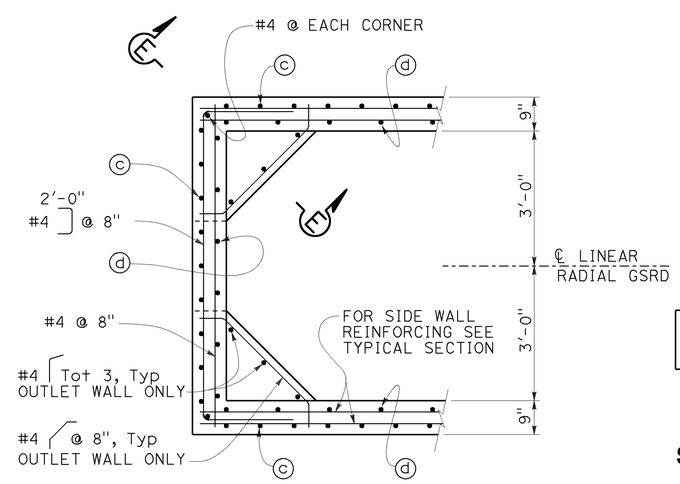

SECTION D-D

NOTE: OUTLET WALL SHOWN, INLET WALL SIMILAR.

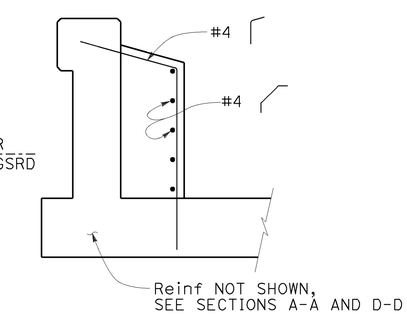

SECTION E-E

(OUTLET END ONLY)

WATER POLLUTION CONTROL DETAILS
GROSS SOLIDS REMOVAL DEVICE
LINEAR RADIAL DETAILS

NO SCALE

WD-11

STATE OF CALIFORNIA - DEPARTMENT OF TRANSPORTATION
DIVISION OF DESIGN
OFFICE OF STORM WATER MANAGEMENT
Caltrans

FUNCTIONAL SUPERVISOR: TIMOTHY B. SOBELMAN
CALCULATED-DESIGNED BY: D. WANG
CHECKED BY: L. HE
REVISED BY
DATE REVISED

LAST REVISION 10-15-13
DATE PLOTTED => 25-JUN-2015
TIME PLOTTED => 09:28

Dist	COUNTY	ROUTE	POST MILES TOTAL PROJECT	SHEET No.	TOTAL SHEETS
07	LA	5	C43.9/C46.4	32	199

Timothy B. Sobelman 12-12-12
REGISTERED CIVIL ENGINEER DATE

6-29-15
PLANS APPROVAL DATE

REGISTERED PROFESSIONAL ENGINEER TIMOTHY B. SOBELMAN No. 59249 Exp. 6-30-17 CIVIL STATE OF CALIFORNIA

THE STATE OF CALIFORNIA OR ITS OFFICERS OR AGENTS SHALL NOT BE RESPONSIBLE FOR THE ACCURACY OR COMPLETENESS OF SCANNED COPIES OF THIS PLAN SHEET.

NOTE (THIS SHEET ONLY):

1. All metal components of screen pipe including connections to concrete must be stainless steel.

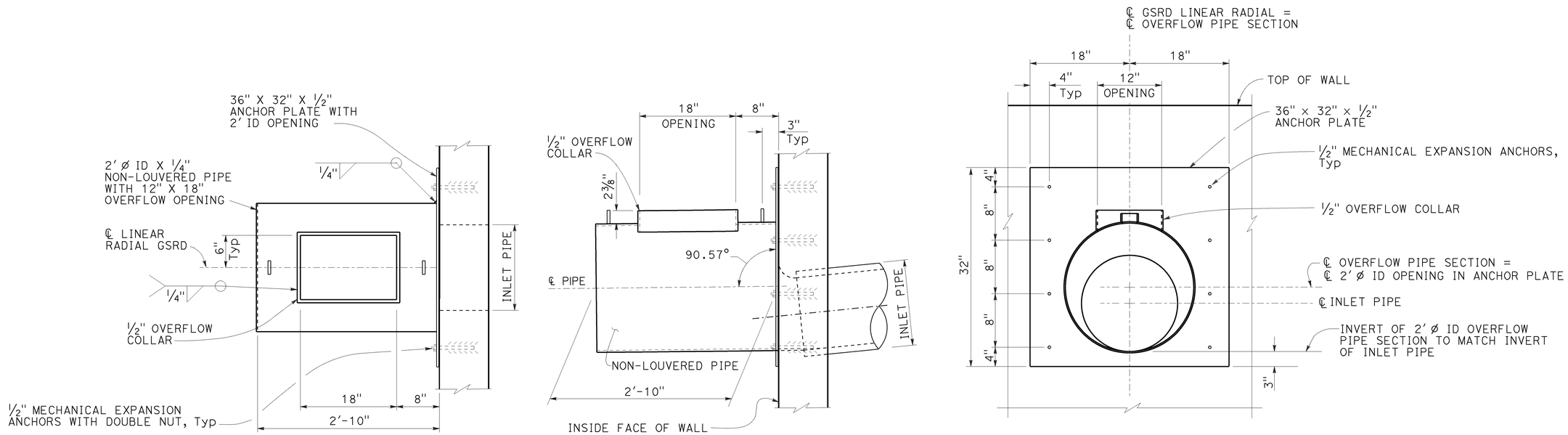

OVERFLOW PIPE AND ANCHOR PLATE DETAILS

WATER POLLUTION CONTROL DETAILS
GROSS SOLIDS REMOVAL DEVICE
LINEAR RADIAL OVERFLOW PIPE DETAILS

NO SCALE

WD-12

STATE OF CALIFORNIA - DEPARTMENT OF TRANSPORTATION
DIVISION OF DESIGN
OFFICE OF STORM WATER MANAGEMENT

FUNCTIONAL SUPERVISOR: TIMOTHY B. SOBELMAN
CALCULATED-DESIGNED BY: D. WANG
CHECKED BY: L. HE
REVISED BY
DATE REVISED

LAST REVISION 10-15-13
DATE PLOTTED => 25-JUN-2015
TIME PLOTTED => 09:28

Dist	COUNTY	ROUTE	POST MILES TOTAL PROJECT	SHEET No.	TOTAL SHEETS
07	LA	5	C43.9/C46.4	33	199

Timothy B Sobelman 12-12-12
REGISTERED CIVIL ENGINEER DATE

6-29-15
PLANS APPROVAL DATE

REGISTERED PROFESSIONAL ENGINEER TIMOTHY B. SOBELMAN No. 59249 Exp. 6-30-17 CIVIL STATE OF CALIFORNIA

THE STATE OF CALIFORNIA OR ITS OFFICERS OR AGENTS SHALL NOT BE RESPONSIBLE FOR THE ACCURACY OR COMPLETENESS OF SCANNED COPIES OF THIS PLAN SHEET.

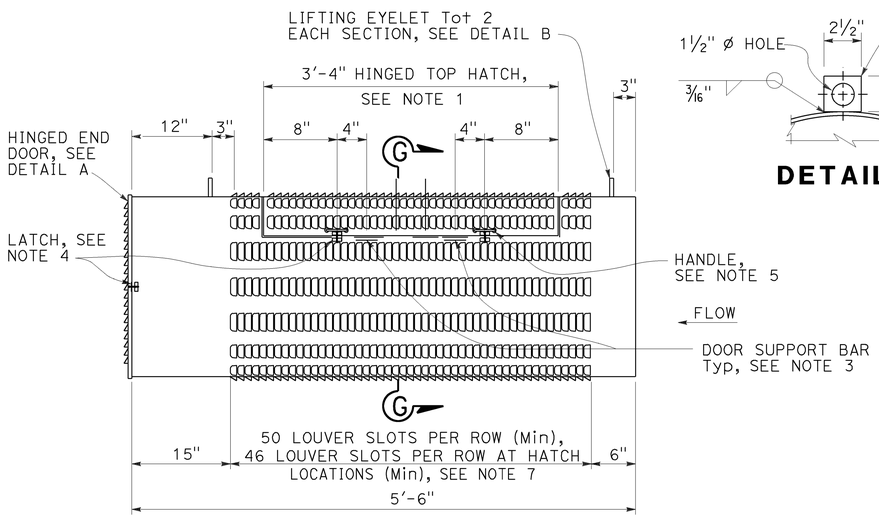

END SCREENED PIPE

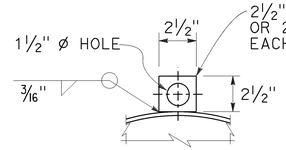

DETAIL B

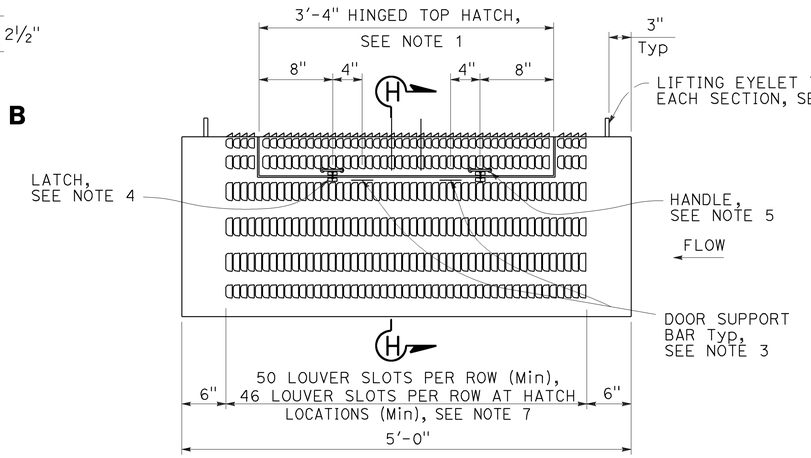

INTERMEDIATE SCREENED PIPE

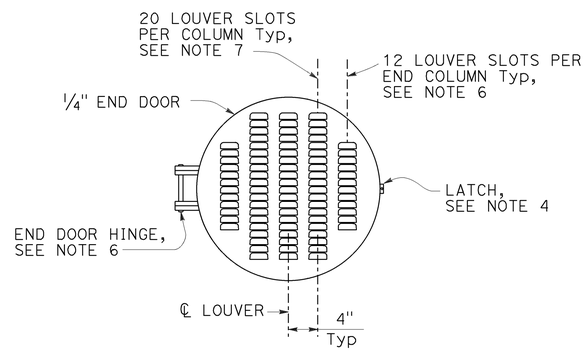

DETAIL A

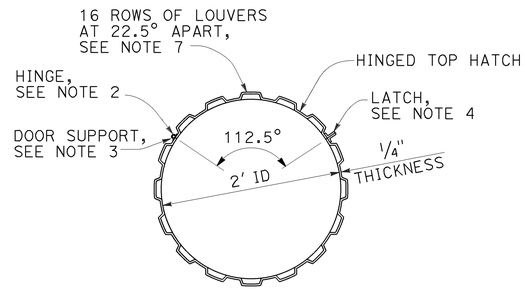

SECTION G-G

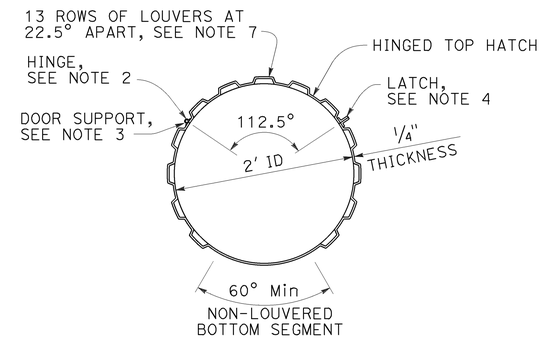

SECTION H-H

NOTES (THIS SHEET ONLY):

1. Provide 1" x 3/16" stainless steel bar at all cut edges to provide a seat and support for all doors when closed.
2. Provide stainless steel ¼" thick heavy duty hinges 4" x 4" thick with ⅝" Dia pin. Use fillet weld at cover and frame. Total 2 each door, evenly spaced.
3. Attach 2- 1" x 1" x 3" stainless steel bars (or fabricator equivalent design) to support doors when in an open position. Mechanical stops can be welded on hinges.
4. Provide latch. Latch must have threaded U-bolt for adjustment. Latch to have ⅜" total adjustability and 1 7/16" drawing movement and be rated at 360 LB.
5. Provide stainless steel handles at locations indicated.
6. End door to be secured to end screen with ⅜" Dia x 10" continuous bolt with lock nut through flat bars.
7. The aperture size of each louver slot must be 3/16" wide x 2½" long. Louver slot apertures must meet the following requirements:

Width	% of Total
0.189" - 0.209"	90
0.181" - 0.209"	95
0.169" - 0.209"	100

Length	% of Total
2.250" - 2.750"	90
2.000" - 3.000"	100

8. If inlet invert height above floor is at the minimum 3 inch height, use anchor bolts to mount the pipe support base plate to the floor. Otherwise, construct concrete support.

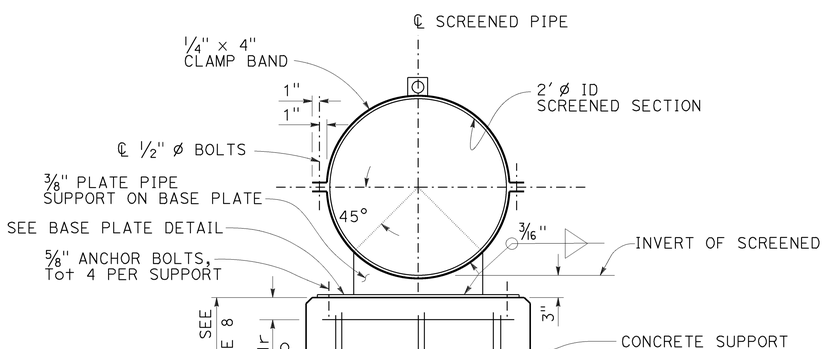

SECTION I-I

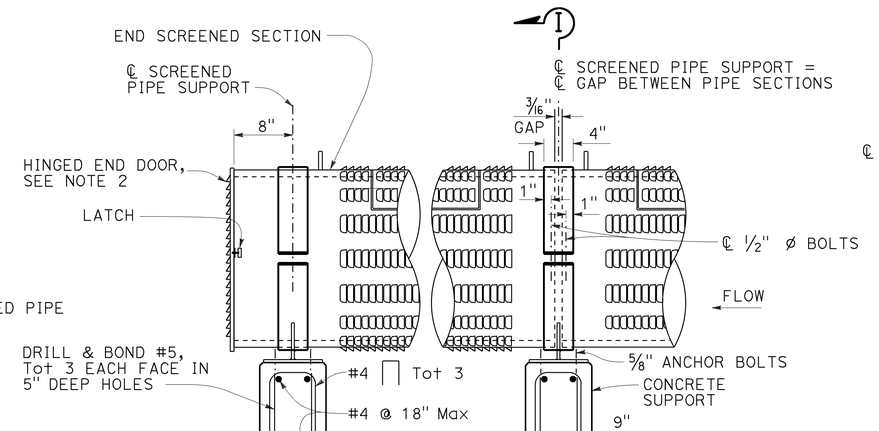

SCREENED PIPE SUPPORT

SIDE VIEW

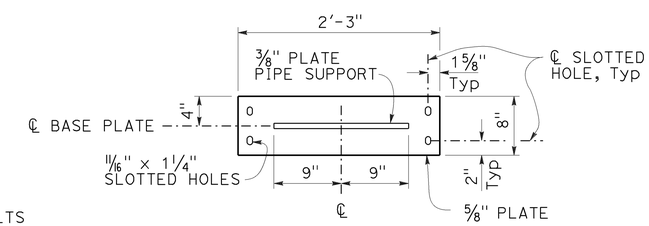

BASE PLATE DETAIL

WATER POLLUTION CONTROL DETAILS
GROSS SOLIDS REMOVAL DEVICE
LINEAR RADIAL SCREENED PIPE DETAILS

NO SCALE

WD-13

STATE OF CALIFORNIA - DEPARTMENT OF TRANSPORTATION
DIVISION OF DESIGN
OFFICE OF STORM WATER MANAGEMENT
Caltrans

FUNCTIONAL SUPERVISOR: TIMOTHY B. SOBELMAN
CALCULATED-DESIGNED BY: D. WANG
CHECKED BY: L. HE
REVISED BY
DATE REVISED

LAST REVISION 10-15-13
DATE PLOTTED => 25-JUN-2015
TIME PLOTTED => 09:28

Dist	COUNTY	ROUTE	POST MILES TOTAL PROJECT	SHEET No.	TOTAL SHEETS
07	LA	5	C43.9/C46.4	34	199

REGISTERED CIVIL ENGINEER 12-12-12 DATE

6-29-15
PLANS APPROVAL DATE

REGISTERED PROFESSIONAL ENGINEER TIMOTHY B. SOBELMAN No. 59249 Exp. 6-30-17 CIVIL STATE OF CALIFORNIA

THE STATE OF CALIFORNIA OR ITS OFFICERS OR AGENTS SHALL NOT BE RESPONSIBLE FOR THE ACCURACY OR COMPLETENESS OF SCANNED COPIES OF THIS PLAN SHEET.

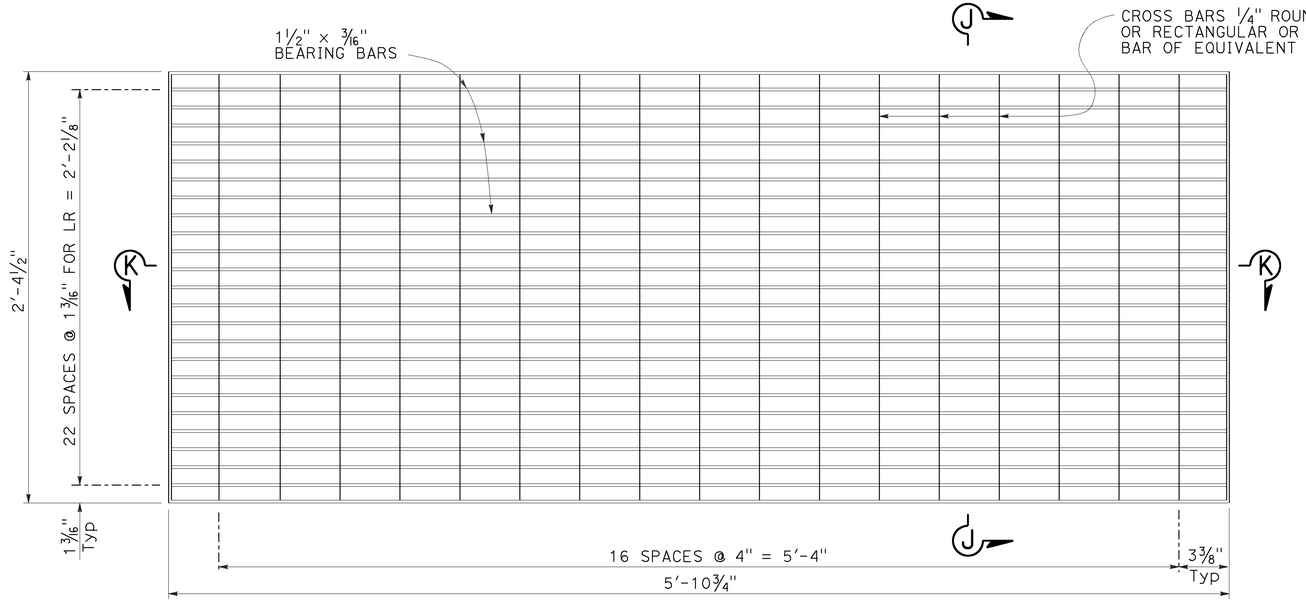

GRATE PANEL

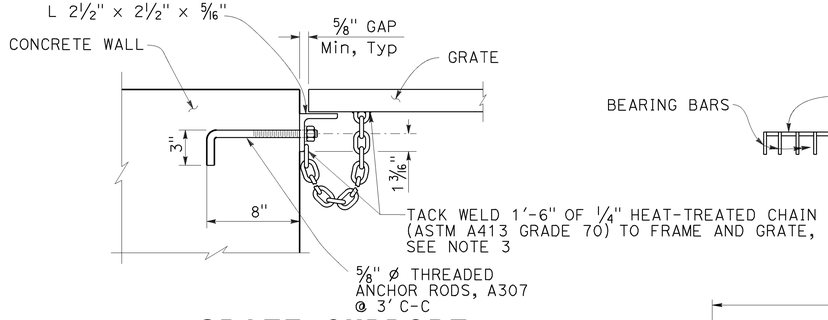

GRATE SUPPORT

SECTION J-J

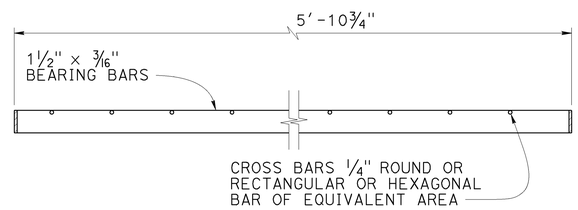

SECTION K-K

NOTE: CROSS BARS MAYBE FILLET WELDED, RESISTANCE WELDED OR ELECTROFORGED TO BEARING BARS.

No. OF INTERMEDIATE SCREENED PIPES	LR No. OF GRATES	LR(HV) No. OF GRATES
0	5	6
1	7	8
2	9	10
3	11	12
4	13	14
5	15	16

NOTES (THIS SHEET ONLY):

1. Gap between grate panels is 1".
2. All metal components of grating including connections to wall must be galvanized.
3. Attach "heat-treated chain" per grate on wall opposite of service ladder, see "Grate Support Detail" this sheet.

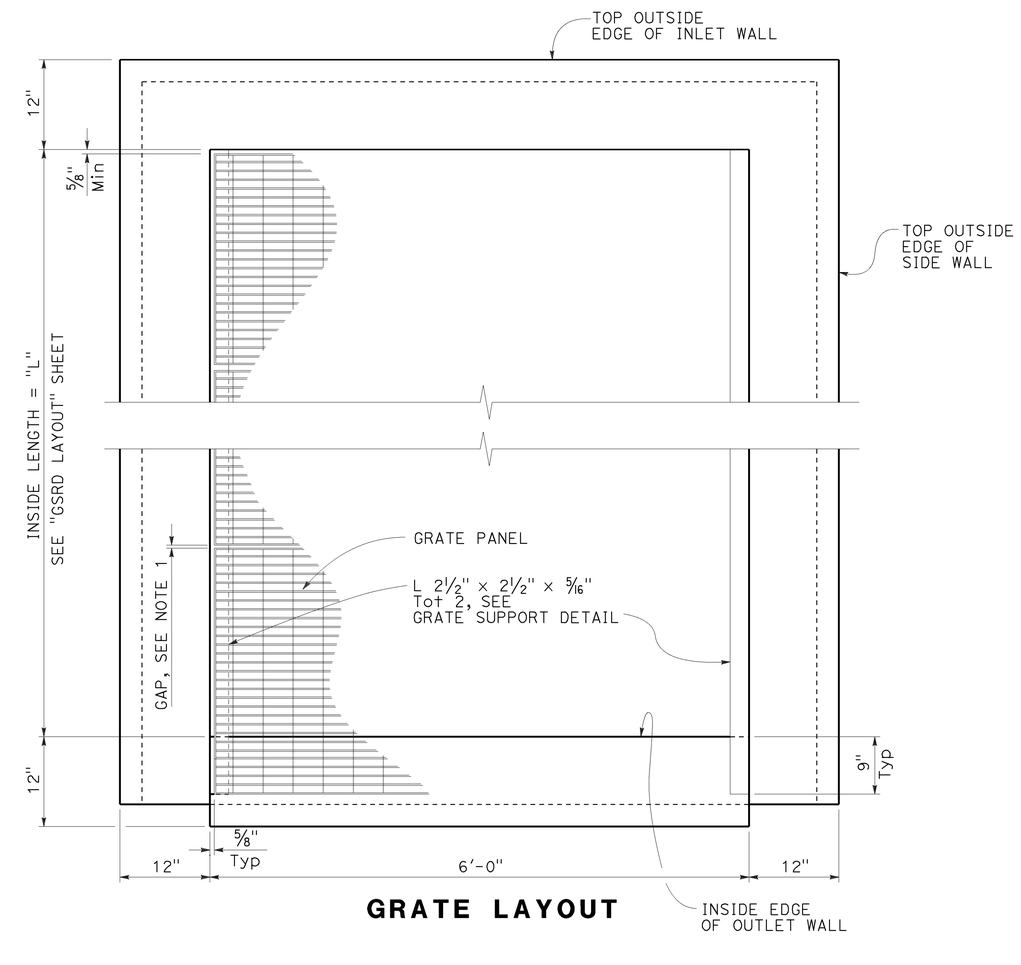

GRATE LAYOUT

WATER POLLUTION CONTROL DETAILS
GROSS SOLIDS REMOVAL DEVICE
LINEAR RADIAL GRATE PANEL DETAILS

NO SCALE

WD-14

STATE OF CALIFORNIA - DEPARTMENT OF TRANSPORTATION
DIVISION OF DESIGN
OFFICE OF STORM WATER MANAGEMENT
Caltrans

FUNCTIONAL SUPERVISOR: TIMOTHY B. SOBELMAN
CALCULATED-DESIGNED BY: D. WANG
CHECKED BY: L. HE
REVISED BY
DATE REVISED

LAST REVISION 10-15-13
DATE PLOTTED => 25-JUN-2015
TIME PLOTTED => 09:28

Dist	COUNTY	ROUTE	POST MILES TOTAL PROJECT	SHEET No.	TOTAL SHEETS
07	LA	5	C43.9/C46.4	35	199

Timothy B Sobelman 12-12-12
REGISTERED CIVIL ENGINEER DATE

6-29-15
PLANS APPROVAL DATE

REGISTERED PROFESSIONAL ENGINEER TIMOTHY B. SOBELMAN No. 59249 Exp. 6-30-17 CIVIL STATE OF CALIFORNIA

THE STATE OF CALIFORNIA OR ITS OFFICERS OR AGENTS SHALL NOT BE RESPONSIBLE FOR THE ACCURACY OR COMPLETENESS OF SCANNED COPIES OF THIS PLAN SHEET.

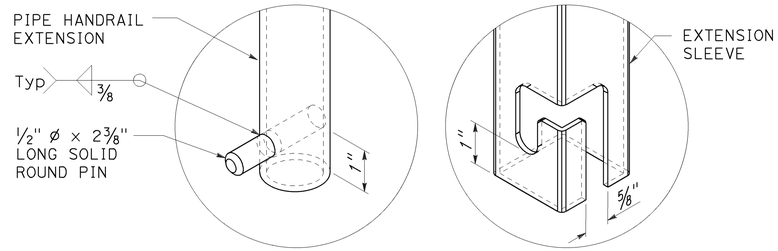

EXTENDABLE HANDRAIL LATCH

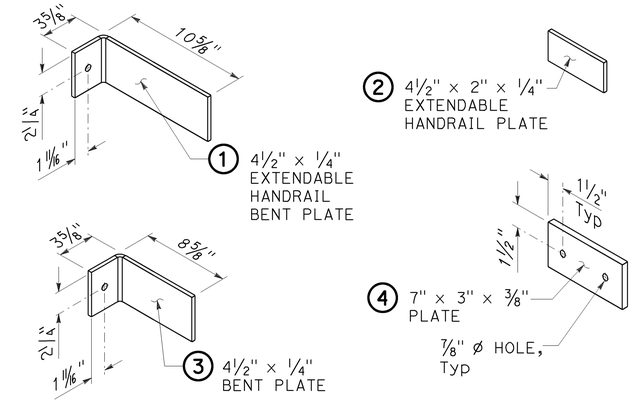

BRACKET DETAILS

NOTES (THIS SHEET ONLY):

1. Rungs must be skid resistant.
2. Use handrails for vault depths between 4'-0" and 6'-6". For deeper vaults use extendable handrail detail. Vault depth is distance between top of wall and either top of floor slab or top of filter media material (use which ever distance is less). Ladders must not extend into filter media material.
3. No handrail required for Linear Radial GSRD 4'-0" depth, due to grate conflict.

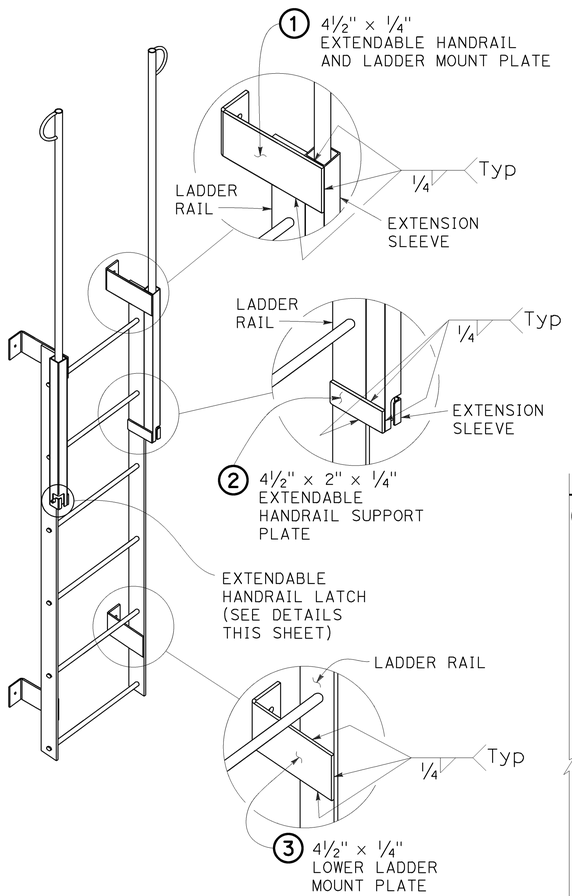

LADDER

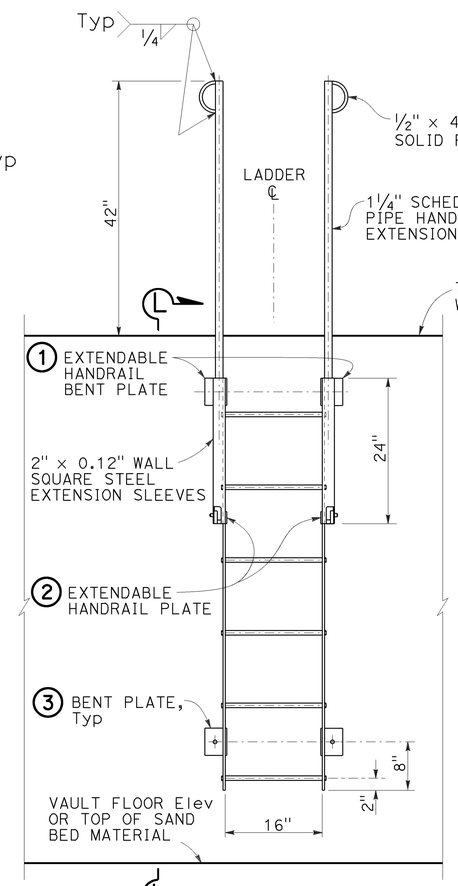

ELEVATION

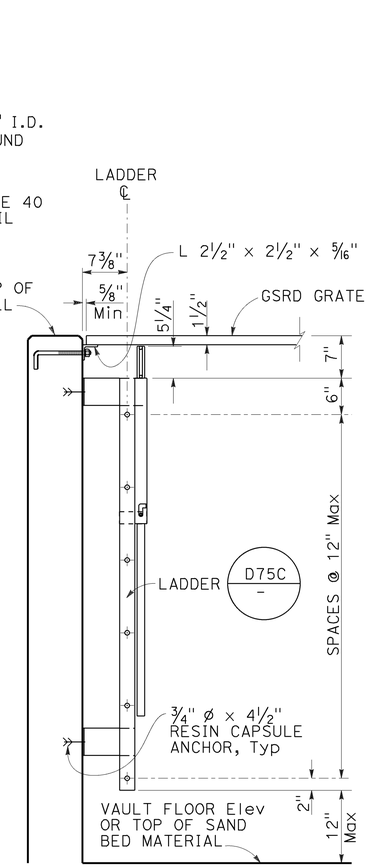

SECTION L-L

EXTENDABLE HANDRAIL

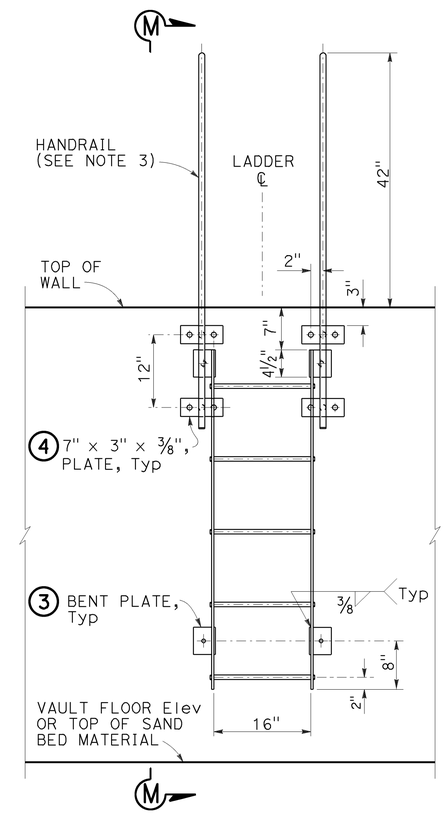

ELEVATION

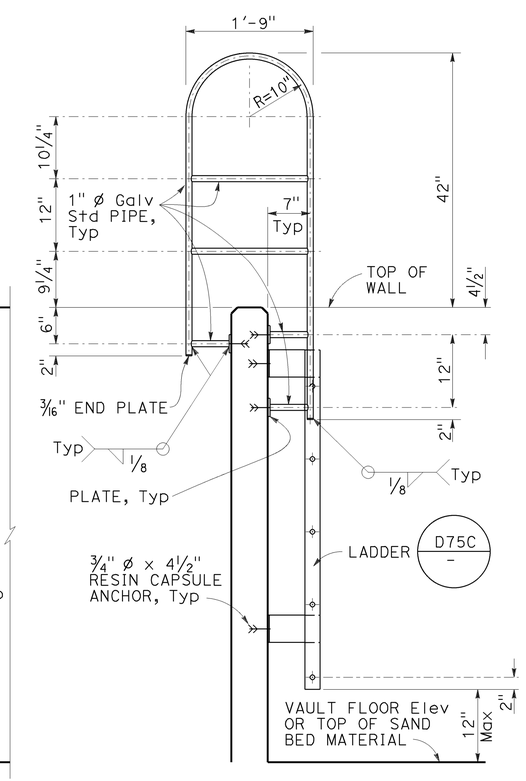

SECTION M-M

WALL MOUNTED HANDRAIL

WATER POLLUTION CONTROL DETAILS
GROSS SOLIDS REMOVAL DEVICE
LINEAR RADIAL LADDER DETAILS

NO SCALE

WD-15

STATE OF CALIFORNIA - DEPARTMENT OF TRANSPORTATION
DIVISION OF DESIGN
OFFICE OF STORM WATER MANAGEMENT
Caltrans

FUNCTIONAL SUPERVISOR: TIMOTHY B. SOBELMAN
CALCULATED-DESIGNED BY: D. WANG
CHECKED BY: L. HE
REVISED BY
DATE REVISED

LAST REVISION 10-15-13
DATE PLOTTED => 25-JUN-2015
TIME PLOTTED => 09:28

Dist	COUNTY	ROUTE	POST MILES TOTAL PROJECT	SHEET No.	TOTAL SHEETS
07	LA	5	C43.9/C46.4	36	199

Timothy B Sobelman 12-12-12
REGISTERED CIVIL ENGINEER DATE

6-29-15
PLANS APPROVAL DATE

REGISTERED PROFESSIONAL ENGINEER TIMOTHY B. SOBELMAN No. 59249 Exp. 6-30-17 CIVIL STATE OF CALIFORNIA

THE STATE OF CALIFORNIA OR ITS OFFICERS OR AGENTS SHALL NOT BE RESPONSIBLE FOR THE ACCURACY OR COMPLETENESS OF SCANNED COPIES OF THIS PLAN SHEET.

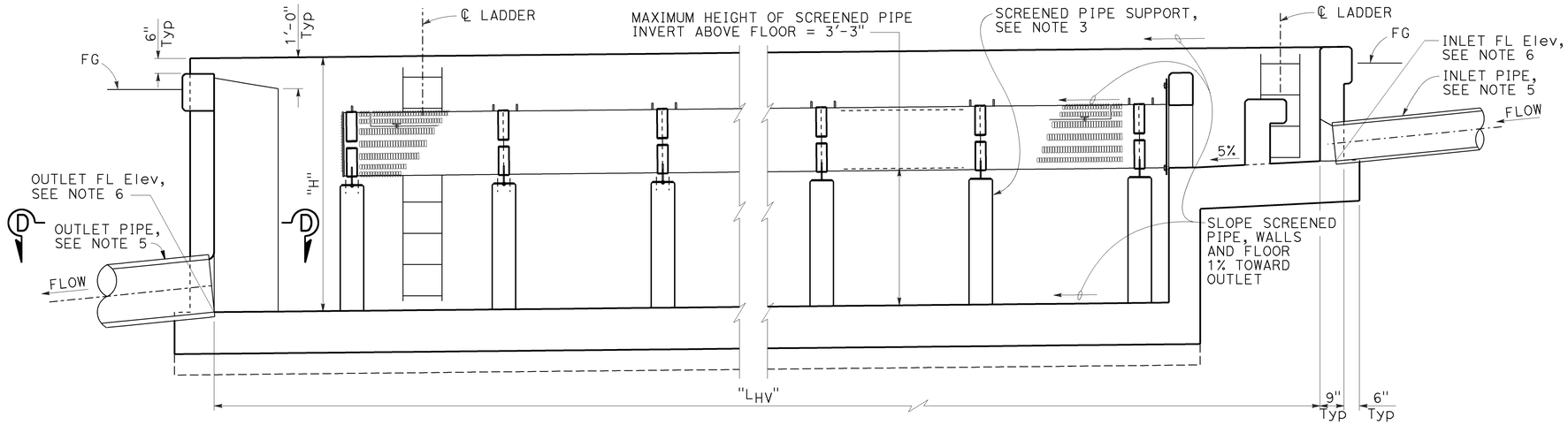

LONGITUDINAL SECTION - MAXIMUM SCREENED PIPE HEIGHT

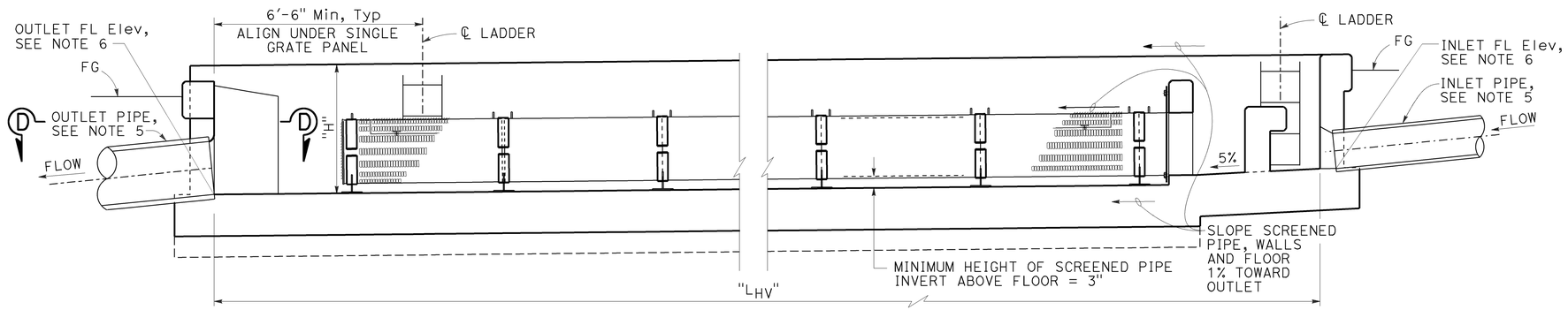

LONGITUDINAL SECTION - MINIMUM SCREENED PIPE HEIGHT

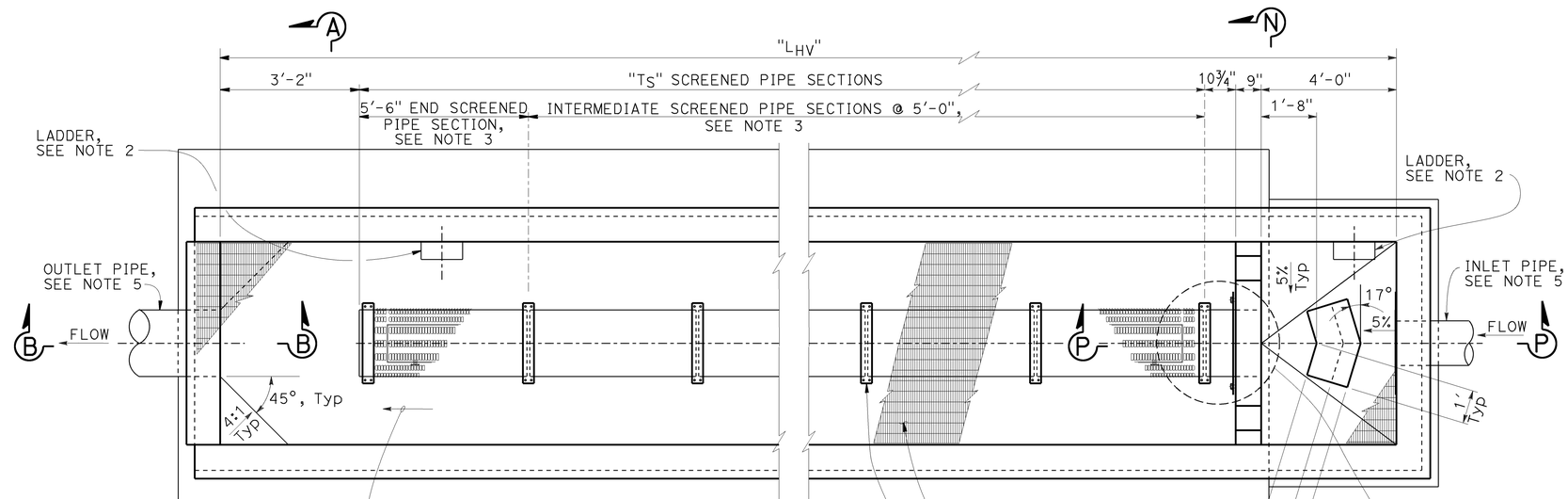

PLAN

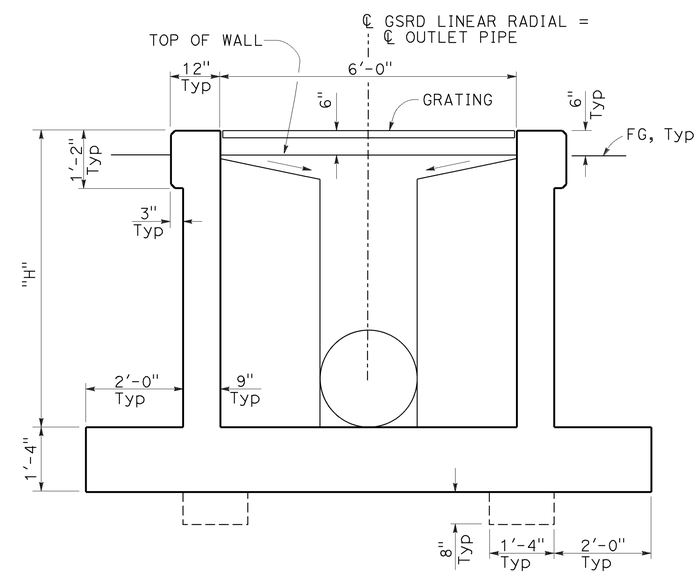

TYPICAL SECTION

NOTES (THIS SHEET ONLY):

1. For Section A-A, B-B, and D-D, see "Linear Radial Details" sheet.
2. For ladder details see "Linear Radial Ladder Details" sheet.
3. For end and intermediate screened pipe details, see "Linear Radial Screened Pipe Details" sheet.
4. For grate details, see "Linear Radial Grate Panel Details" sheet.
5. For layout of inlet and outlet pipes, see "Drainage Plans".
6. For FL elevations of inlet and outlet pipes, see "Drainage Profiles".
7. For dimension "L_{HV}", "T_S" and other design data, see Design Chart on "Linear Radial Legend" sheet.
8. For dimension "H", see "Linear Radial Details sheet.
9. For Section M-M and N-N, see "Linear Radial (High Velocity) Details No. 1" sheet.

WATER POLLUTION CONTROL DETAILS
GROSS SOLIDS REMOVAL DEVICE
LINEAR RADIAL (HIGH VELOCITY) LAYOUT

NO SCALE

WD-16

STATE OF CALIFORNIA - DEPARTMENT OF TRANSPORTATION
DIVISION OF DESIGN
OFFICE OF STORM WATER MANAGEMENT
Caltrans

FUNCTIONAL SUPERVISOR: TIMOTHY B. SOBELMAN
CALCULATED-DESIGNED BY: D. WANG
CHECKED BY: L. HE
REVISED BY
DATE REVISED

LAST REVISION 10-15-13
DATE PLOTTED => 25-JUN-2015
TIME PLOTTED => 09:28

Dist	COUNTY	ROUTE	POST MILES TOTAL PROJECT	SHEET No.	TOTAL SHEETS
07	LA	5	C43.9/C46.4	37	199

REGISTERED CIVIL ENGINEER 12-12-12 DATE

6-29-15
PLANS APPROVAL DATE

REGISTERED PROFESSIONAL ENGINEER TIMOTHY B. SOBELMAN No. 59249 Exp. 6-30-17 CIVIL STATE OF CALIFORNIA

THE STATE OF CALIFORNIA OR ITS OFFICERS OR AGENTS SHALL NOT BE RESPONSIBLE FOR THE ACCURACY OR COMPLETENESS OF SCANNED COPIES OF THIS PLAN SHEET.

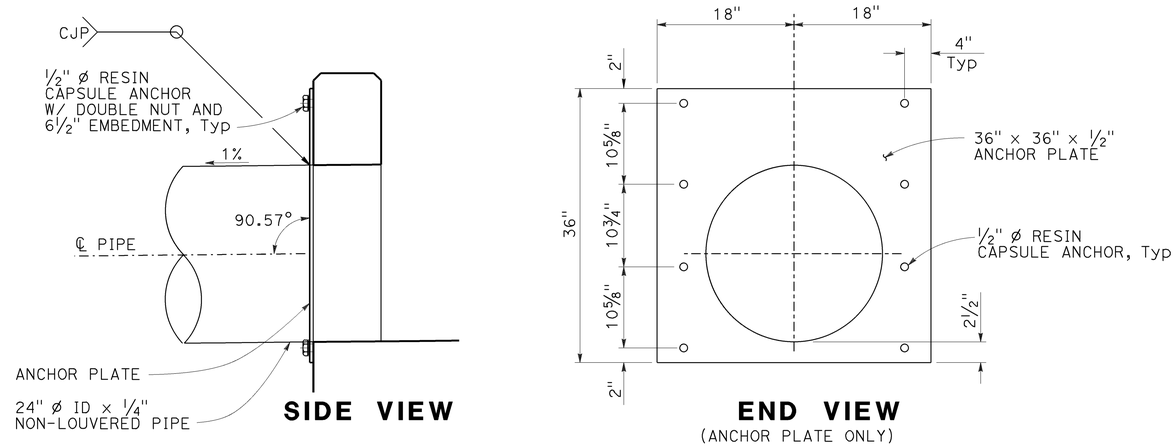

ANCHOR PLATE DETAILS

NOTES:

1. For location of Sections M-M and N-N, see "Linear Radial (High Velocity) Layout" sheet.
2. For Grate Support Details, see "Linear Radial Grate Panel Details" sheet.
3. For bottom slab details not shown, see Section A-A on "Linear Radial Details" sheet.

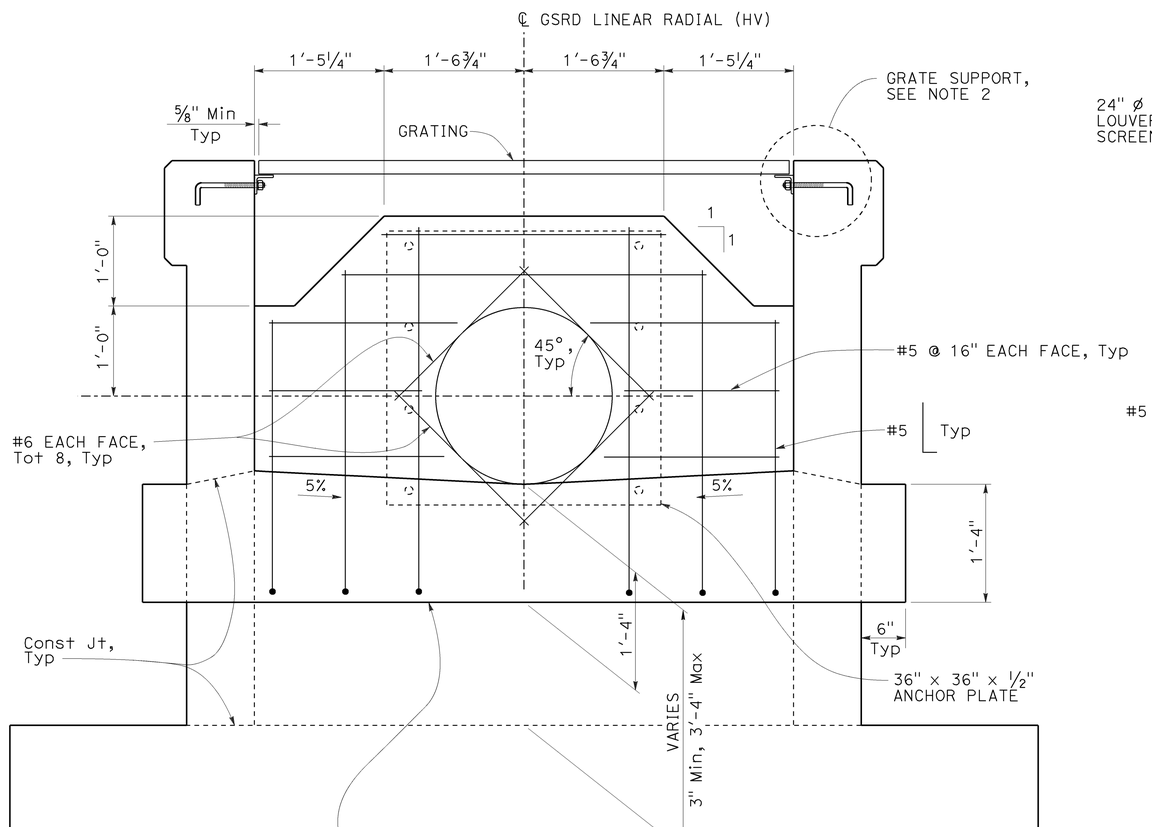

SECTION N-N

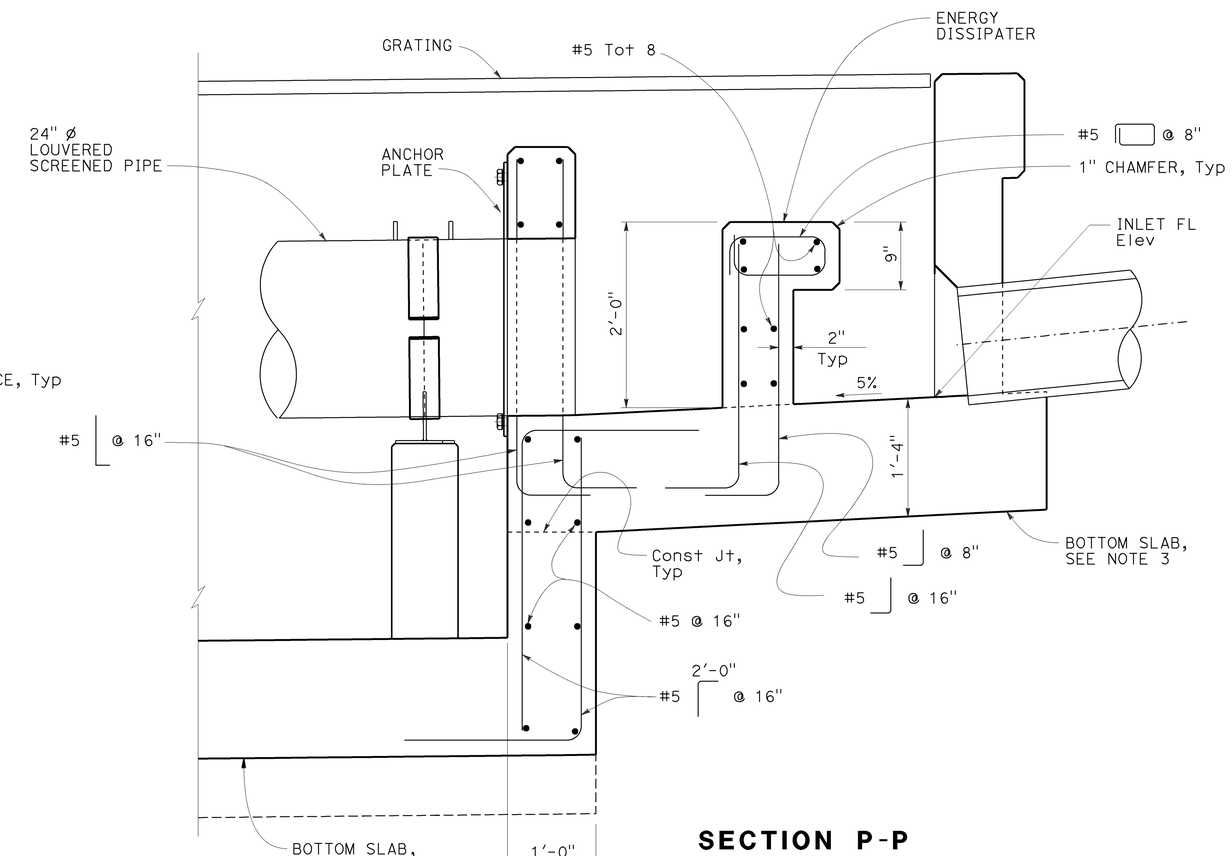

SECTION P-P

NOTE: Ladder not shown for clarity.

WATER POLLUTION CONTROL DETAILS
GROSS SOLIDS REMOVAL DEVICE
LINEAR RADIAL (HIGH VELOCITY) DETAILS

NO SCALE

WD-17

STATE OF CALIFORNIA - DEPARTMENT OF TRANSPORTATION
DIVISION OF DESIGN
OFFICE OF STORM WATER MANAGEMENT

FUNCTIONAL SUPERVISOR: TIMOTHY B. SOBELMAN
CALCULATED-DESIGNED BY: D. WANG
CHECKED BY: L. HE
REVISED BY
DATE REVISED

LAST REVISION 10-15-13
DATE PLOTTED => 25-JUN-2015
TIME PLOTTED => 09:29

Dist	COUNTY	ROUTE	POST MILES TOTAL PROJECT	SHEET No.	TOTAL SHEETS
07	LA	5	C43.9/C46.4	38	199

Paul Fong 6-8-15
REGISTERED CIVIL ENGINEER DATE

6-29-15
PLANS APPROVAL DATE

REGISTERED PROFESSIONAL ENGINEER
PAUL FONG
No. C67053
Exp. 9/30/16
CIVIL
STATE OF CALIFORNIA

THE STATE OF CALIFORNIA OR ITS OFFICERS OR AGENTS SHALL NOT BE RESPONSIBLE FOR THE ACCURACY OR COMPLETENESS OF SCANNED COPIES OF THIS PLAN SHEET.

NOTES:

1. FOR ACCURATE RIGHT OF WAY DATA, CONTACT RIGHT OF WAY ENGINEERING AT THE DISTRICT OFFICE.
2. VERIFY LOCATIONS AND ELEVATIONS OF EXISTING DRAINAGE SYSTEMS BEFORE COMMENCEMENT OF WORK.

LEGEND:

DRAINAGE SYSTEM No.

DRAINAGE UNIT

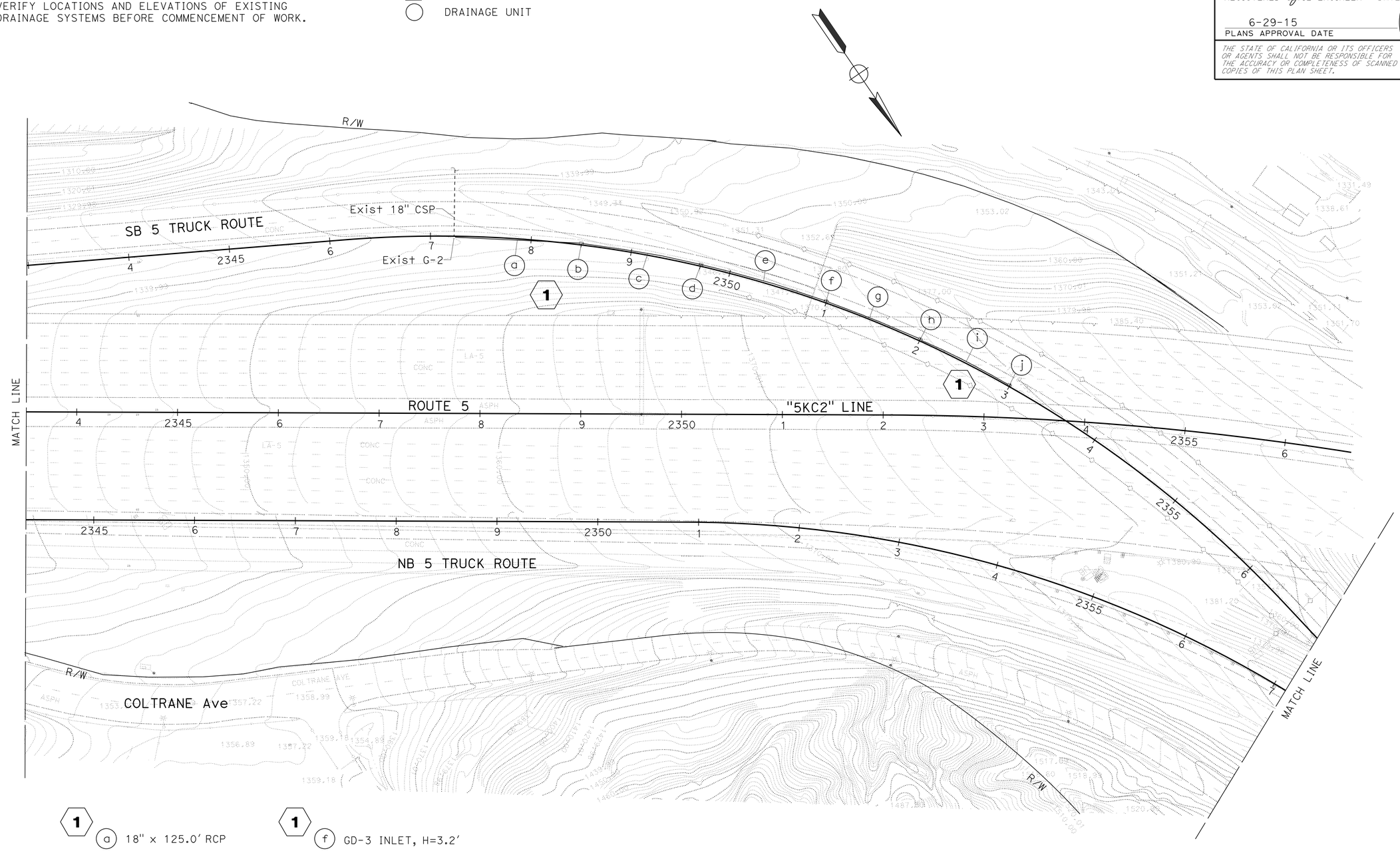

1

- (a) 18" x 125.0' RCP
- (b) TYPE G2 INLET, H=3.3'
- (c) 18" x 118.0' RCP
- (d) TYPE G2 INLET, H=3.3'
- (e) 18" x 128.0' RCP

1

- (f) GD-3 INLET, H=3.2'
- (g) 18" x 98.0' RCP
- (h) GD-3 INLET, H=3.1'
- (i) 18" x 98.0' RCP
- (j) GD-3 INLET, H=3.0'

APPROVED FOR DRAINAGE WORK ONLY

DRAINAGE PLAN

SCALE: 1" = 50'

D-1

STATE OF CALIFORNIA - DEPARTMENT OF TRANSPORTATION
Caltrans
HYDRAULICS

FUNCTIONAL SUPERVISOR: DAVE BHALLA
CALCULATED-DESIGNED BY: PAUL FONG
CHECKED BY: ROMULO D. ROBENIOL
REVISED BY
DATE REVISED

LAST REVISION 00-00-00
DATE PLOTTED => 05-AUG-2015
TIME PLOTTED => 10:20

Dist	COUNTY	ROUTE	POST MILES TOTAL PROJECT	SHEET No.	TOTAL SHEETS
07	LA	5	C43.9/C46.4	39	199

Paul Fong 6-8-15
REGISTERED CIVIL ENGINEER DATE

6-29-15
PLANS APPROVAL DATE

REGISTERED PROFESSIONAL ENGINEER
PAUL FONG
No. C67053
Exp. 9/30/16
CIVIL
STATE OF CALIFORNIA

THE STATE OF CALIFORNIA OR ITS OFFICERS OR AGENTS SHALL NOT BE RESPONSIBLE FOR THE ACCURACY OR COMPLETENESS OF SCANNED COPIES OF THIS PLAN SHEET.

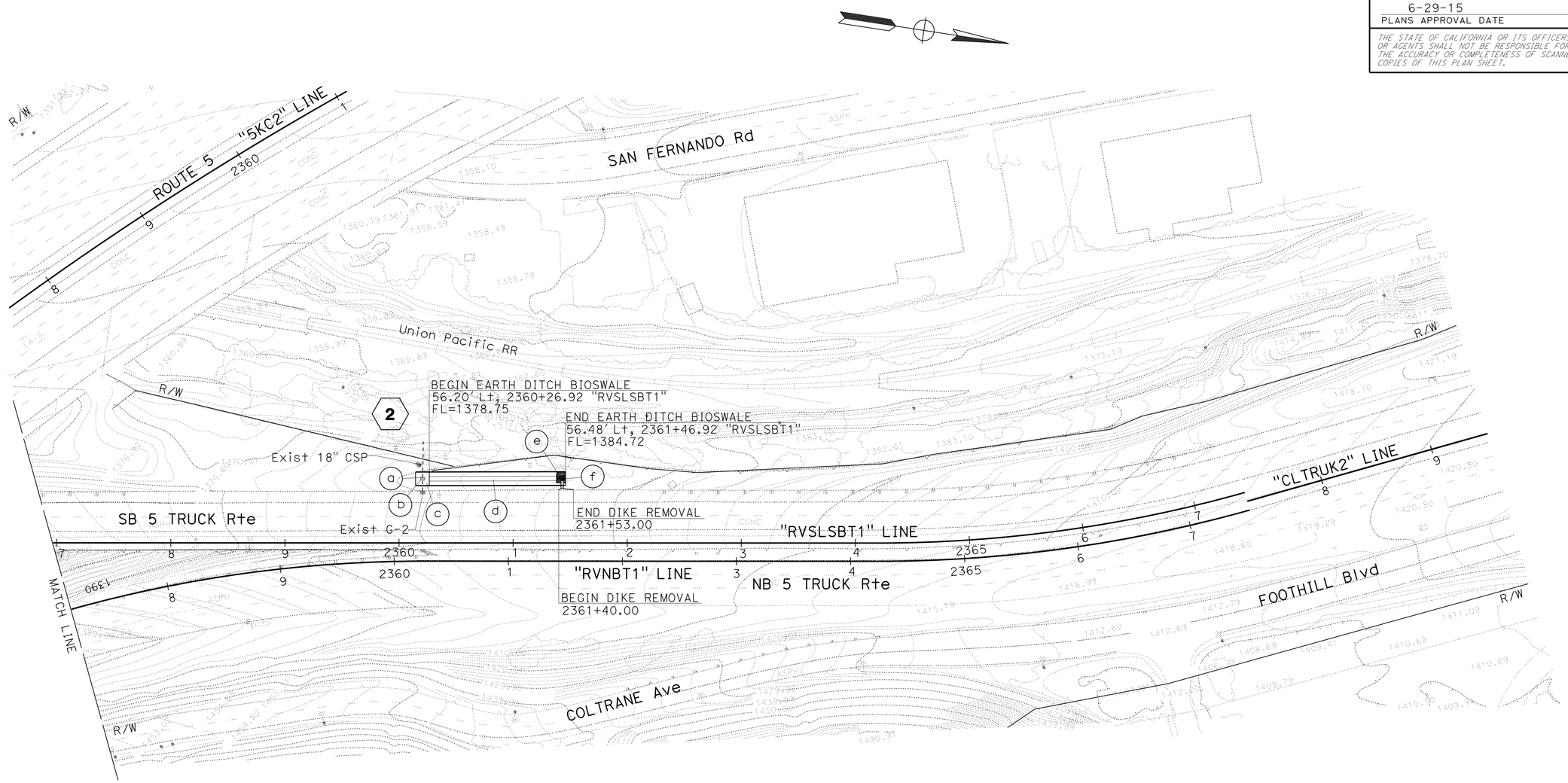

2

- (a) REMOVE 18" x 4.0' CSP
- (b) GD-1 INLET, H=4.5'
- (c) Conc APRON
- (d) EARTH DITCH BIOSWALE, L=120.0'
- (e) RSP (FACING, METHOD B), L=8.0'
- (f) OVERSIDE DRAIN, L=8.0'

DRAINAGE PLAN

SCALE: 1" = 50'

D-2

APPROVED FOR DRAINAGE WORK ONLY

STATE OF CALIFORNIA - DEPARTMENT OF TRANSPORTATION
Caltrans
HYDRAULICS
FUNCTIONAL SUPERVISOR: DAVE BHALLA
CALCULATED-DESIGNED BY: PAUL FONG
CHECKED BY: ROMULO D. ROBENIOL
REVISED BY
DATE REVISED

LAST REVISION 00-00-00 | DATE PLOTTED => 05-AUG-2015 | TIME PLOTTED => 10:20

Dist	COUNTY	ROUTE	POST MILES TOTAL PROJECT	SHEET No.	TOTAL SHEETS
07	LA	5	C43.9/C46.4	40	199

Paul Fong 6-8-15
REGISTERED CIVIL ENGINEER DATE

6-29-15
PLANS APPROVAL DATE

REGISTERED PROFESSIONAL ENGINEER
PAUL FONG
No. C67053
Exp. 9/30/16
CIVIL
STATE OF CALIFORNIA

THE STATE OF CALIFORNIA OR ITS OFFICERS OR AGENTS SHALL NOT BE RESPONSIBLE FOR THE ACCURACY OR COMPLETENESS OF SCANNED COPIES OF THIS PLAN SHEET.

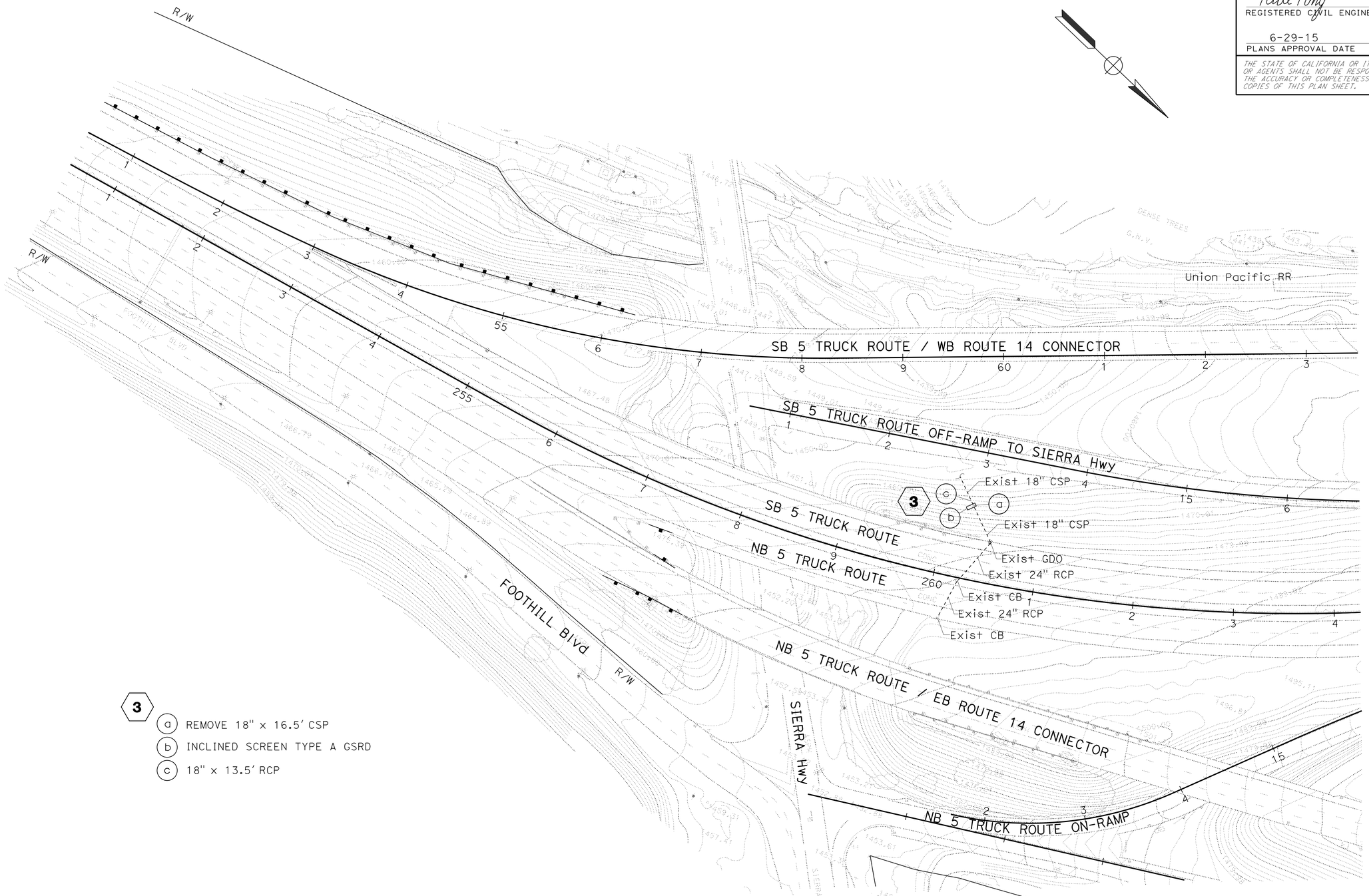

3
- (a) REMOVE 18" x 16.5' CSP
- (b) INCLINED SCREEN TYPE A GSRD
- (c) 18" x 13.5' RCP

DRAINAGE PLAN

SCALE: 1" = 50'

APPROVED FOR DRAINAGE WORK ONLY

D-3

STATE OF CALIFORNIA - DEPARTMENT OF TRANSPORTATION
Caltrans
HYDRAULICS

FUNCTIONAL SUPERVISOR: DAVE BHALLA
CALCULATED-DESIGNED BY: PAUL FONG
CHECKED BY: ROMULO D. ROBENIOL
REVISED BY
DATE REVISED

LAST REVISION 00-00-00
DATE PLOTTED => 05-AUG-2015
TIME PLOTTED => 10:20

Dist	COUNTY	ROUTE	POST MILES TOTAL PROJECT	SHEET No.	TOTAL SHEETS
07	LA	5	C43.9/C46.4	41	199

Paul Fong 6-8-15
REGISTERED CIVIL ENGINEER DATE

6-29-15
PLANS APPROVAL DATE

REGISTERED PROFESSIONAL ENGINEER
PAUL FONG
No. C67053
Exp. 9/30/16
CIVIL
STATE OF CALIFORNIA

THE STATE OF CALIFORNIA OR ITS OFFICERS OR AGENTS SHALL NOT BE RESPONSIBLE FOR THE ACCURACY OR COMPLETENESS OF SCANNED COPIES OF THIS PLAN SHEET.

4
- (a) REMOVE 18" x 22.0' RCP
- (b) LINEAR RADIAL TYPE LR-2 (6'-0")
- (c) 18" x 6.5' RCP

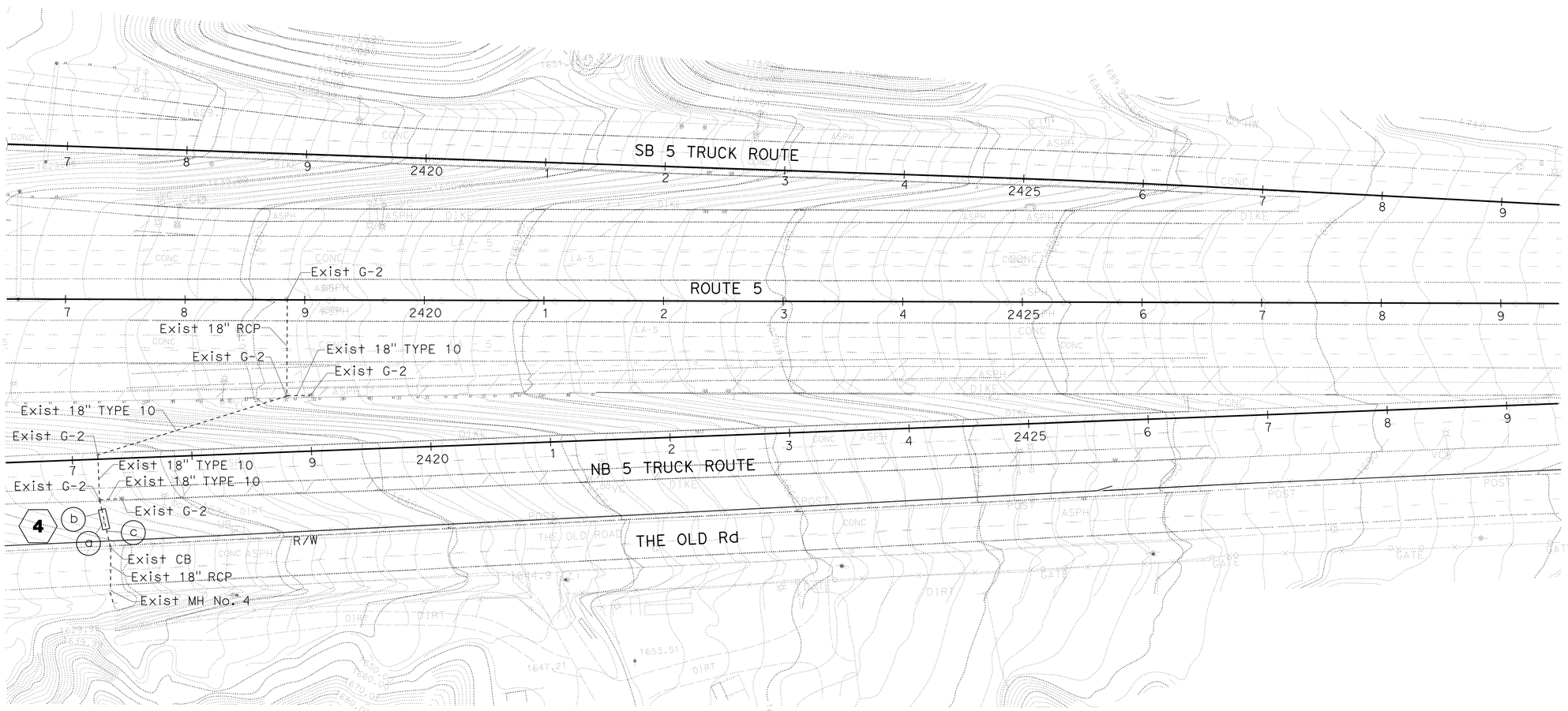

DRAINAGE PLAN

SCALE: 1" = 50'

APPROVED FOR DRAINAGE WORK ONLY

D-4

STATE OF CALIFORNIA - DEPARTMENT OF TRANSPORTATION
Caltrans
HYDRAULICS

FUNCTIONAL SUPERVISOR: DAVE BHALLA

CALCULATED-DESIGNED BY: PAUL FONG
CHECKED BY: ROMULO D. ROBENIOL

REVISED BY
DATE REVISED

LAST REVISION 00-00-00
DATE PLOTTED => 05-AUG-2015
TIME PLOTTED => 10:20

Dist	COUNTY	ROUTE	POST MILES TOTAL PROJECT	SHEET No.	TOTAL SHEETS
07	LA	5	C43.9/C46.4	42	199

Paul Fong 6-8-15
REGISTERED CIVIL ENGINEER DATE

6-29-15
PLANS APPROVAL DATE

REGISTERED PROFESSIONAL ENGINEER
PAUL FONG
No. C67053
Exp. 9/30/16
CIVIL
STATE OF CALIFORNIA

THE STATE OF CALIFORNIA OR ITS OFFICERS OR AGENTS SHALL NOT BE RESPONSIBLE FOR THE ACCURACY OR COMPLETENESS OF SCANNED COPIES OF THIS PLAN SHEET.

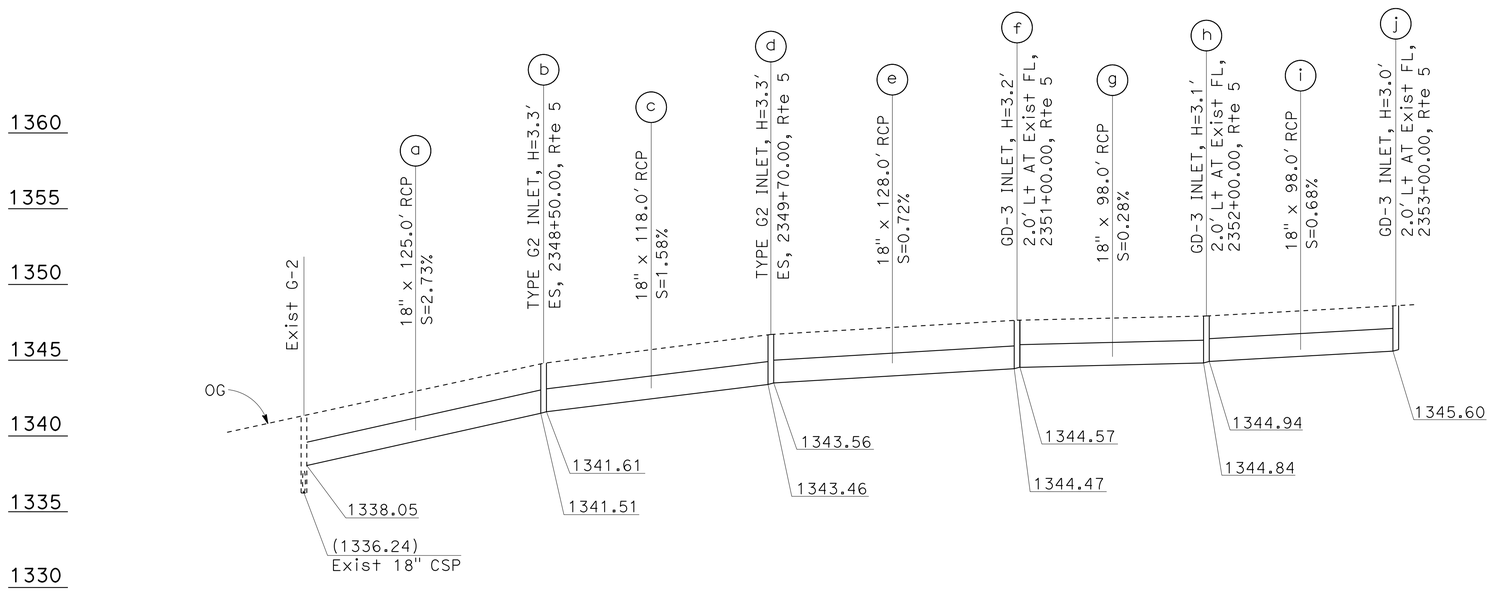

DRAINAGE SYSTEM No. 1

DRAINAGE PROFILES

SCALE: Horiz 1" = 40'
Vert 1" = 5'

DP-1

STATE OF CALIFORNIA - DEPARTMENT OF TRANSPORTATION
Caltrans
HYDRAULICS

FUNCTIONAL SUPERVISOR: DAVE BHALLA

CALCULATED-DESIGNED BY: PAUL FONG
CHECKED BY: ROMULO D. ROBENIOL

REVISED BY
DATE REVISED

LAST REVISION 00-00-00
DATE PLOTTED => 05-AUG-2015
TIME PLOTTED => 10:20

Dist	COUNTY	ROUTE	POST MILES TOTAL PROJECT	SHEET No.	TOTAL SHEETS
07	LA	5	C43.9/C46.4	43	199

Paul Fong 6-8-15
REGISTERED CIVIL ENGINEER DATE

6-29-15
PLANS APPROVAL DATE

REGISTERED PROFESSIONAL ENGINEER
PAUL FONG
No. C67053
Exp. 9/30/16
CIVIL
STATE OF CALIFORNIA

THE STATE OF CALIFORNIA OR ITS OFFICERS OR AGENTS SHALL NOT BE RESPONSIBLE FOR THE ACCURACY OR COMPLETENESS OF SCANNED COPIES OF THIS PLAN SHEET.

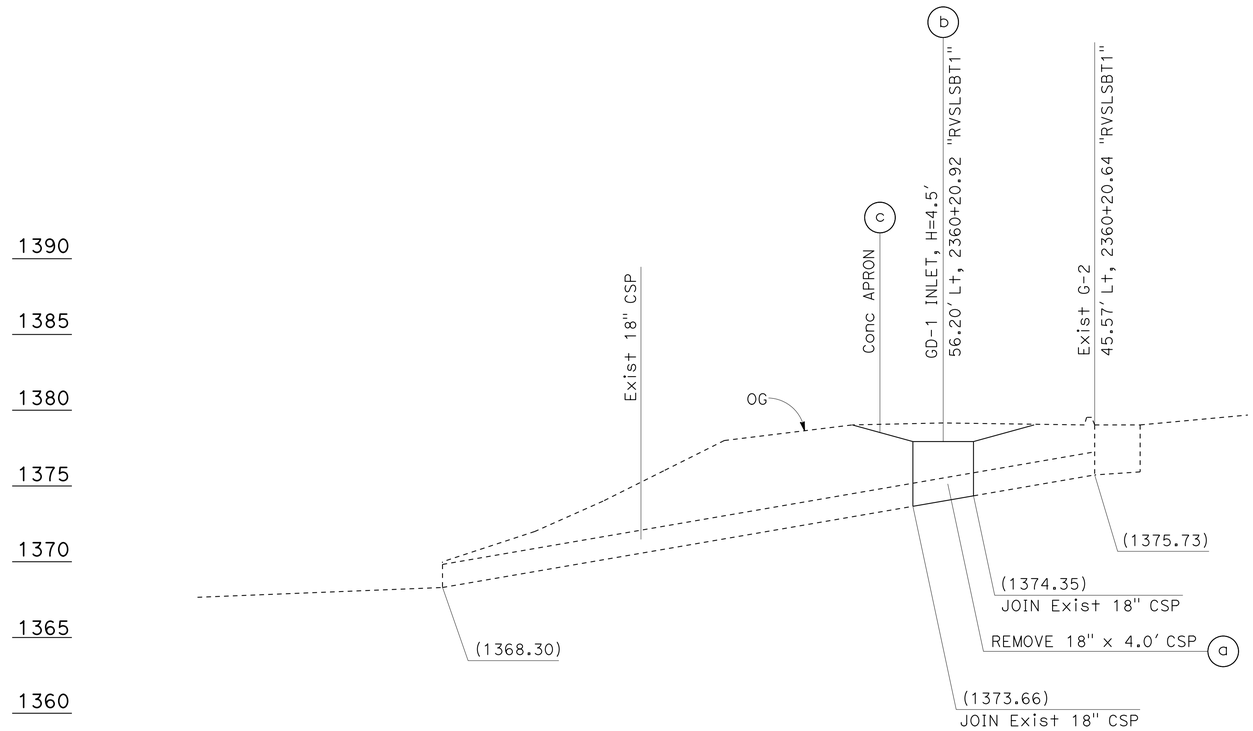

DRAINAGE SYSTEM No. 2

DRAINAGE PROFILES

SCALE: Horiz 1" = 5'
Vert 1" = 5'

DP-2

STATE OF CALIFORNIA - DEPARTMENT OF TRANSPORTATION
Caltrans
HYDRAULICS

FUNCTIONAL SUPERVISOR: DAVE BHALLA
CALCULATED-DESIGNED BY: PAUL FONG
CHECKED BY: ROMULO D. ROBENIOL
REVISED BY
DATE REVISED

LAST REVISION 00-00-00
DATE PLOTTED => 05-AUG-2015
TIME PLOTTED => 10:20

Dist	COUNTY	ROUTE	POST MILES TOTAL PROJECT	SHEET No.	TOTAL SHEETS
07	LA	5	C43.9/C46.4	44	199

Paul Fong 6-8-15
REGISTERED CIVIL ENGINEER DATE

6-29-15
PLANS APPROVAL DATE

REGISTERED PROFESSIONAL ENGINEER
PAUL FONG
No. C67053
Exp. 9/30/16
CIVIL
STATE OF CALIFORNIA

THE STATE OF CALIFORNIA OR ITS OFFICERS OR AGENTS SHALL NOT BE RESPONSIBLE FOR THE ACCURACY OR COMPLETENESS OF SCANNED COPIES OF THIS PLAN SHEET.

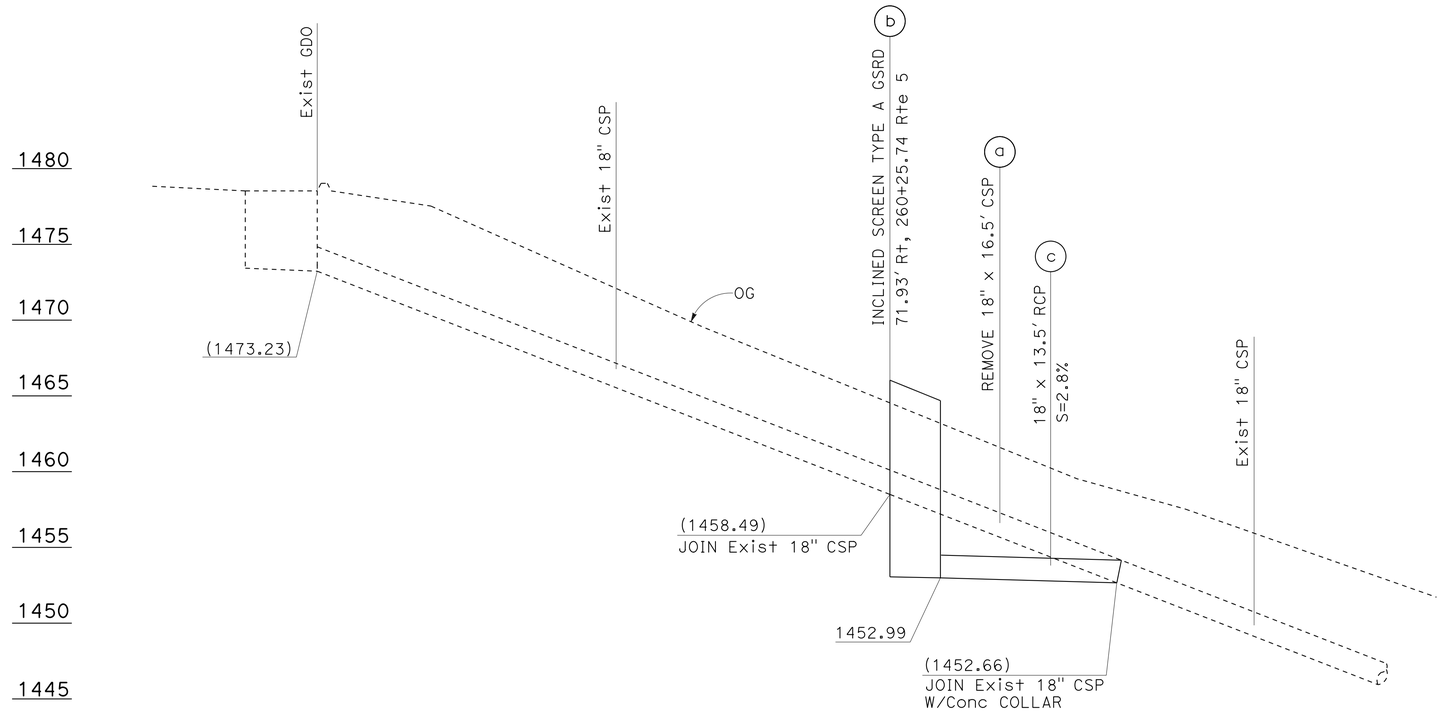

DRAINAGE SYSTEM No. 3

GSRD TYPE	TOP OF WALL ELEVATION				PIPE Dia (INCHES)		
	TW1	TW2	TW3	TW4	FL IN	IN	OUT
A	1464.69	1464.69	1466.04	1466.04	1458.49	18	18
	FG1	FG2	FG3	FG4			
	1463.19	1463.19	1464.54	1464.54			

DRAINAGE PROFILES

SCALE: Horiz 1" = 5'
Vert 1" = 5'

DP-3

STATE OF CALIFORNIA - DEPARTMENT OF TRANSPORTATION
Caltrans
HYDRAULICS

FUNCTIONAL SUPERVISOR: DAVE BHALLA
CALCULATED-DESIGNED BY: PAUL FONG
CHECKED BY: ROMULO D. ROBENIOL
REVISED BY
DATE REVISED

LAST REVISION 00-00-00
DATE PLOTTED => 05-AUG-2015
TIME PLOTTED => 10:20

Dist	COUNTY	ROUTE	POST MILES TOTAL PROJECT	SHEET No.	TOTAL SHEETS
07	LA	5	C43.9/C46.4	45	199

Paul Fong 6-8-15
REGISTERED CIVIL ENGINEER DATE

6-29-15
PLANS APPROVAL DATE

REGISTERED PROFESSIONAL ENGINEER
PAUL FONG
No. C67053
Exp. 9/30/16
CIVIL
STATE OF CALIFORNIA

THE STATE OF CALIFORNIA OR ITS OFFICERS OR AGENTS SHALL NOT BE RESPONSIBLE FOR THE ACCURACY OR COMPLETENESS OF SCANNED COPIES OF THIS PLAN SHEET.

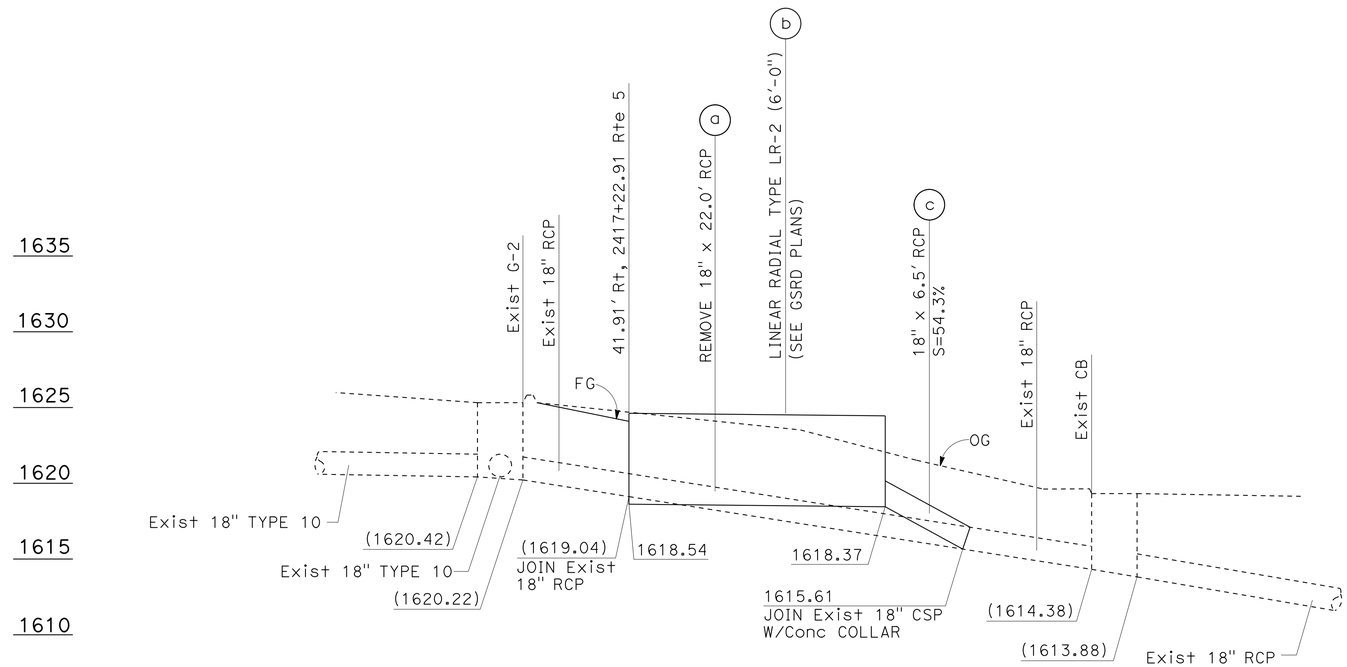

DRAINAGE SYSTEM No. 4

DRAINAGE PROFILES

SCALE: Horiz 1" = 5'
Vert 1" = 5'

DP-4

STATE OF CALIFORNIA - DEPARTMENT OF TRANSPORTATION
Caltrans
HYDRAULICS

FUNCTIONAL SUPERVISOR: DAVE BHALLA
CALCULATED-DESIGNED BY: PAUL FONG
CHECKED BY: ROMULO D. ROBENIOL
REVISED BY
DATE REVISED

LAST REVISION 00-00-00
DATE PLOTTED => 05-AUG-2015
TIME PLOTTED => 10:20

Dist	COUNTY	ROUTE	POST MILES TOTAL PROJECT	SHEET No.	TOTAL SHEETS
07	LA	5	C43.9/C46.4	46	199

Paul Fong 6-8-15
REGISTERED CIVIL ENGINEER DATE

6-29-15
PLANS APPROVAL DATE

REGISTERED PROFESSIONAL ENGINEER
PAUL FONG
No. C67053
Exp. 9/30/16
CIVIL
STATE OF CALIFORNIA

THE STATE OF CALIFORNIA OR ITS OFFICERS OR AGENTS SHALL NOT BE RESPONSIBLE FOR THE ACCURACY OR COMPLETENESS OF SCANNED COPIES OF THIS PLAN SHEET.

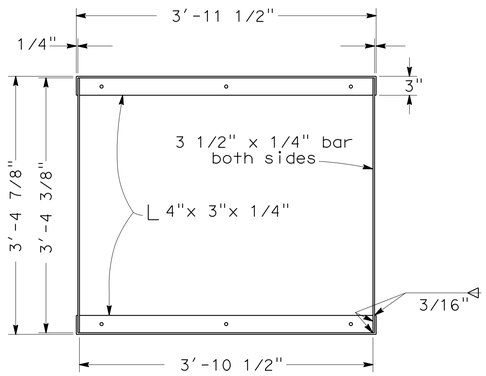

GRATE FRAME DETAIL

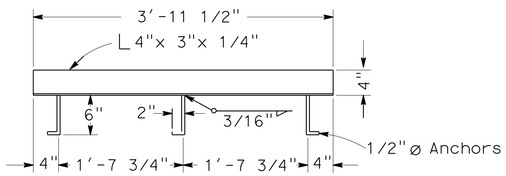

ANCHOR PLACEMENT DETAIL

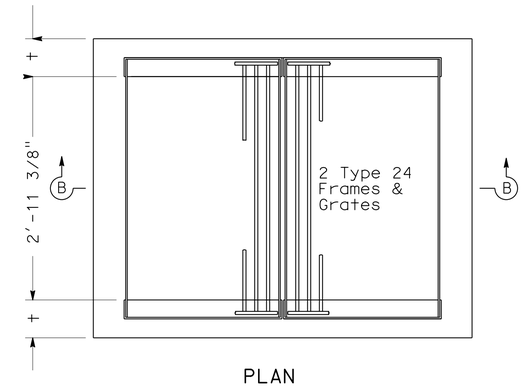

PLAN

For grate, frame and anchor placement details see Standard Plans D77-A and D77-B

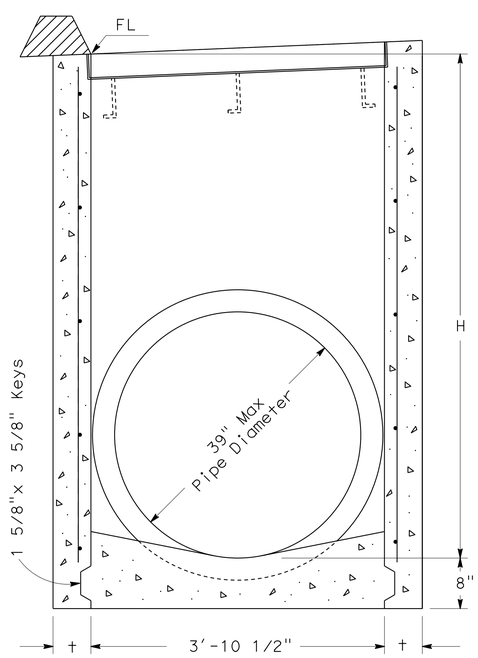

SECTION A-A
(For pipe diameters 39" or less)

GD-1

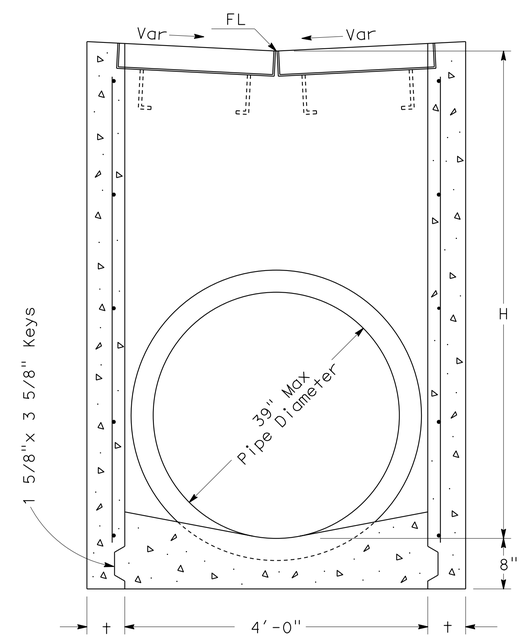

SECTION B-B
(For pipe diameters 39" or less)

GD-3

DRAINAGE INLETS

NOTES:

1. 'H' is the difference in elevation between the outlet pipe flow line and the flow line of the grates.
2. Steps - None required when 'H' is 3'-6" or less. Install one step 16"± above floor when 'H' is more than 3'-6" and less than 5'-0". Where 'H' is more than 5'-0" steps shall be evenly spaced @ 12"± intervals from 16"± above floor to within 12"± of the top of the box. Place steps in wall without pipe openings. See Standard Plan D74C for step detail.
3. Pipe(s) can be placed in any wall.
4. Reinforcing steel not required in walls when H=6' or less.
5. Reinforcing steel in walls shall be #4 bars @ 18"± centers placed 1 1/2" clear to inside of box.

MISCELLANEOUS IRON & STEEL

Inlet Type	Grate Type	Weight
GD-1 & GD-2	24 - 12	580
	24 - 10C	379
	24 - 10S	433
	24 - 12X	453
	24 - 13	351
GD-3	24 - 12	652

H	t
8'-0" or less	6"
8'1" to 20'- 0"	8"

DRAINAGE DETAILS

NO SCALE

DD-1

STATE OF CALIFORNIA - DEPARTMENT OF TRANSPORTATION
Caltrans
HYDRAULICS
FUNCTIONAL SUPERVISOR: DAVE BHALLA
CALCULATED-DESIGNED BY: PAUL FONG
CHECKED BY: ROMULO D. ROBENIOL
REVISED BY
DATE REVISED

LAST REVISION 00-00-00
DATE PLOTTED => 05-AUG-2015
TIME PLOTTED => 10:20

Dist	COUNTY	ROUTE	POST MILES TOTAL PROJECT	SHEET No.	TOTAL SHEETS
07	LA	5	C43.9/C46.4	47	199

Paul Fong 6-8-15
REGISTERED CIVIL ENGINEER DATE

6-29-15
PLANS APPROVAL DATE

REGISTERED PROFESSIONAL ENGINEER
PAUL FONG
No. C67053
Exp. 9/30/16
CIVIL
STATE OF CALIFORNIA

THE STATE OF CALIFORNIA OR ITS OFFICERS OR AGENTS SHALL NOT BE RESPONSIBLE FOR THE ACCURACY OR COMPLETENESS OF SCANNED COPIES OF THIS PLAN SHEET.

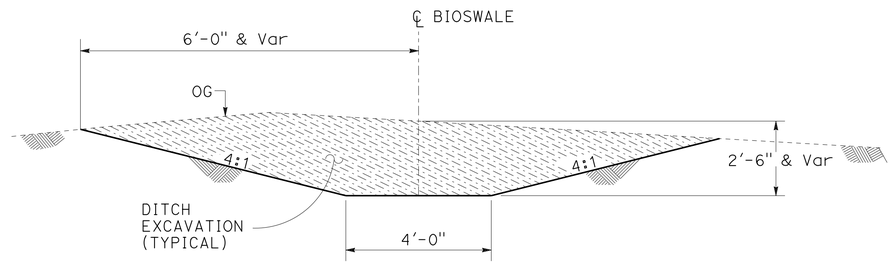

L = 120.0'
S = 5.0%
L = LENGTH OF BIOSWALE
S = LONGITUDINAL SLOPE

DRAINAGE SYSTEM 2 d

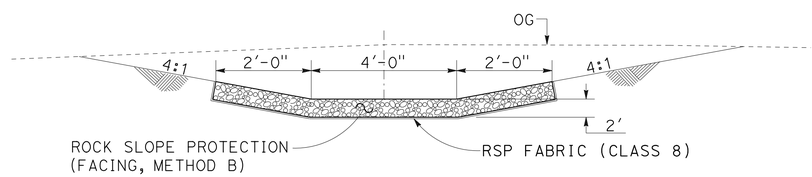

CROSS SECTION

ROCK SLOPE PROTECTION DETAIL

(FACING, METHOD B)

L = 8.0'
L = LENGTH OF RSP

DRAINAGE SYSTEM 2 e

DRAINAGE DETAILS

NO SCALE

DD-2

STATE OF CALIFORNIA - DEPARTMENT OF TRANSPORTATION
Caltrans
HYDRAULICS

FUNCTIONAL SUPERVISOR: DAVE BHALLA
CALCULATED-DESIGNED BY: ROMULO D. ROBENIOL
CHECKED BY: PAUL FONG
REVISED BY
DATE REVISED

LAST REVISION 00-00-00
DATE PLOTTED => 05-AUG-2015
TIME PLOTTED => 10:20

Dist	COUNTY	ROUTE	POST MILES TOTAL PROJECT	SHEET No.	TOTAL SHEETS
07	LA	5	C43.9/C46.4	48	199

Paul Fong 6-8-15
REGISTERED CIVIL ENGINEER DATE

6-29-15
PLANS APPROVAL DATE

REGISTERED PROFESSIONAL ENGINEER
PAUL FONG
No. C67053
Exp. 9/30/16
CIVIL
STATE OF CALIFORNIA

THE STATE OF CALIFORNIA OR ITS OFFICERS OR AGENTS SHALL NOT BE RESPONSIBLE FOR THE ACCURACY OR COMPLETENESS OF SCANNED COPIES OF THIS PLAN SHEET.

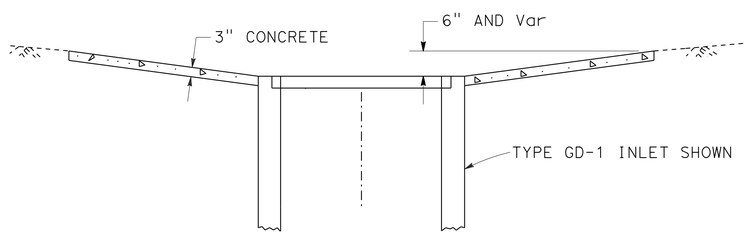

SECTION A-A

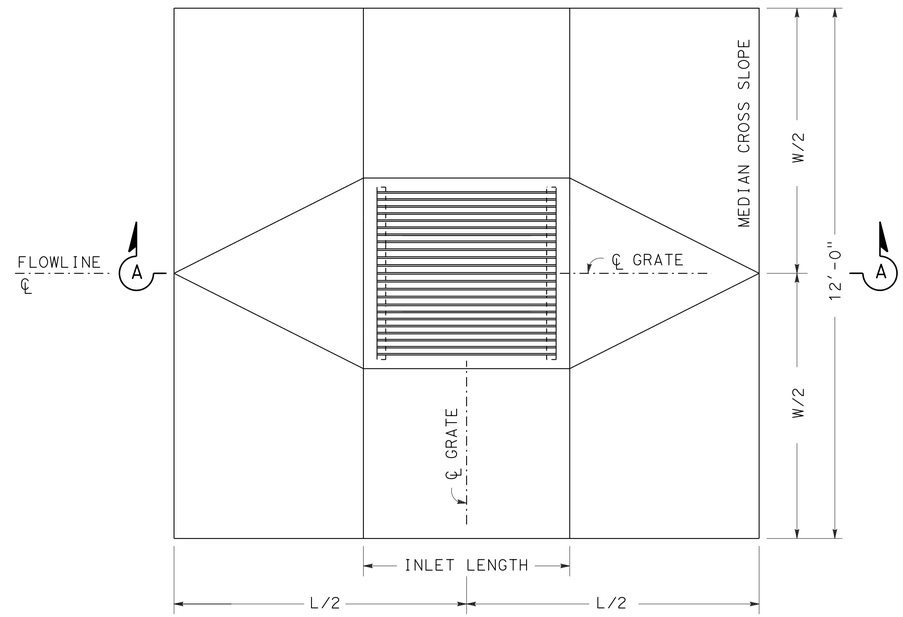

PLAN

MEDIAN INLET CONCRETE APRON DETAIL

DRAINAGE SYSTEM	L (FT)	W (FT)	D (FT)
2 (C)	12.0	12.0	0.25

WATER POLLUTION CONTROL DETAILS

NO SCALE

DD-3

STATE OF CALIFORNIA - DEPARTMENT OF TRANSPORTATION
Caltrans
HYDRAULICS

FUNCTIONAL SUPERVISOR: DAVE BHALLA
CALCULATED-DESIGNED BY: PAUL FONG
CHECKED BY: ROMULO D. ROBENIOL
REVISED BY
DATE REVISED

LAST REVISION 00-00-00
DATE PLOTTED => 05-AUG-2015
TIME PLOTTED => 10:20

Dist	COUNTY	ROUTE	POST MILES TOTAL PROJECT	SHEET No.	TOTAL SHEETS
07	LA	5	C43.9/C46.4	49	199

Paul Fong 6-8-15
REGISTERED CIVIL ENGINEER DATE

6-29-15
PLANS APPROVAL DATE

REGISTERED PROFESSIONAL ENGINEER
PAUL FONG
No. C67053
Exp. 9/30/16
CIVIL
STATE OF CALIFORNIA

THE STATE OF CALIFORNIA OR ITS OFFICERS OR AGENTS SHALL NOT BE RESPONSIBLE FOR THE ACCURACY OR COMPLETENESS OF SCANNED COPIES OF THIS PLAN SHEET.

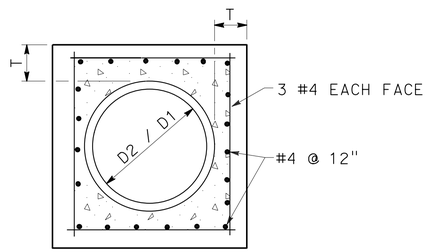

SECTION B-B

D	L	T
12"	1.0'	4"
18"	1.0'	5"
24"	1.0'	6"
36"	1.5'	8"
48"	1.5'	10"
54"	1.5'	10"
60"	1.75'	11"
66"	1.75'	11"
72"	2.0'	12"

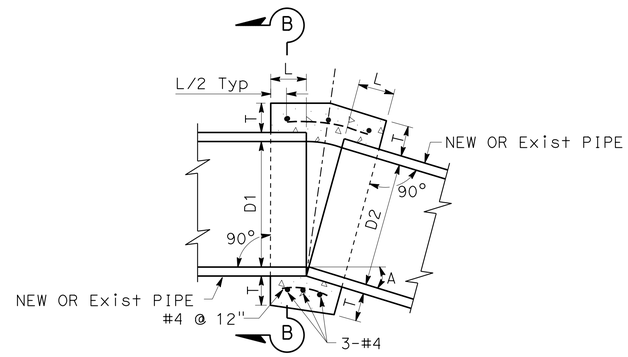

CONCRETE COLLAR

NOTES:

1. WHERE PIPES OF DIFFERENT DIAMETERS ARE JOINED WITH A CONCRETE COLLAR, 'L' AND 'T' SHALL BE THOSE OF THE LARGER PIPE. D=D1 OR D2, WHICHEVER IS GREATER.
2. FOR PIPE SIZE NOT LISTED USE NEXT SIZE LARGER.
3. OMIT REINFORCING ON PIPES 24" AND LESS IN DIAMETER AND ON ALL PIPES WHERE ANGLE A IS LESS THAN 10°.
4. JOIN PIPES AT INVERTS.
5. REINFORCEMENT SHALL BE PLACED 1½" CLEAR FROM OUTSIDE DIAMETER OF PIPE.

DRAINAGE DETAILS

NO SCALE

DD-4

STATE OF CALIFORNIA - DEPARTMENT OF TRANSPORTATION
Caltrans
HYDRAULICS

FUNCTIONAL SUPERVISOR: DAVE BHALLA
CALCULATED-DESIGNED BY: PAUL FONG
CHECKED BY: ROMULO D. ROBENIOL
REVISED BY
DATE REVISED

LAST REVISION 00-00-00
DATE PLOTTED => 05-AUG-2015
TIME PLOTTED => 10:20

Dist	COUNTY	ROUTE	POST MILES TOTAL PROJECT	SHEET No.	TOTAL SHEETS
07	LA	5	C43.9/C46.4	50	199

Paul Fong 6-8-15
REGISTERED CIVIL ENGINEER DATE

6-29-15
PLANS APPROVAL DATE

REGISTERED PROFESSIONAL ENGINEER PAUL FONG No. C67053 Exp. 9/30/16 CIVIL STATE OF CALIFORNIA

THE STATE OF CALIFORNIA OR ITS OFFICERS OR AGENTS SHALL NOT BE RESPONSIBLE FOR THE ACCURACY OR COMPLETENESS OF SCANNED COPIES OF THIS PLAN SHEET.

NOTES:

1. PIPE JOINTS ARE STANDARD OR AS NOTED ON PLANS.
2. (N) NOT A SEPARATE PAY ITEM, FOR INFORMATION ONLY.

SUMMARY OF DRAINAGE QUANTITIES

DRAINAGE SHEET No.	DRAINAGE SYSTEM No. ⬡	DRAINAGE UNIT ○	HEIGHT OF INLET H OR V (N)	MINOR CONCRETE (MINOR STRUCTURE)	MISCELLANEOUS IRON AND STEEL	CONCRETE (CONCRETE APRON)	REMOVE PIPE	18" REINFORCED CONCRETE PIPE	(N) TYPE 24-12 FRAME AND GRATE	STRUCTURE EXCAVATION	STRUCTURE BACKFILL	STRUCTURAL CONCRETE	BAR REINFORCING STEEL	CABLE RAILING	FRAME AND GRATE	MISCELLANEOUS METAL	MISCELLANEOUS METAL (INCLINED SCREEN)	MISCELLANEOUS METAL (SCREENED PIPE)	ROCK SLOPE PROTECTION (FACING, METHOD B)	ROCK SLOPE PROTECTION FABRIC (CLASS 8)	DITCH EXCAVATION	HOT MIX ASPHALT (TYPE A) *	PLACE HOT MIX ASPHALT (Misc AREA) *	CONCRETE COLLAR (N)						MAXIMUM COVER (N)	DESCRIPTION	STATION
			Ft	CY	LB	CY	LF	LF	EA	CY	CY	CY	LB	LF	EA	LB	LB	LB	CY	SQYD	CY	TON	SQYD	EA						Ft		
D-1	1	a						125.0																						2.0	18" RCP	
		b	3.3	1.5	326				1																						TYPE G2 INLET	2348+00.00, Rte 5
		c						118.0																						2.0	18" RCP	
		d	3.3	1.5	326				1																						TYPE G2 INLET	2349+70.00, Rte 5
		e						128.0																						2.0	18" RCP	
		f	3.2	1.6	652				2																						GD-3 INLET	2.0' Lt, 2351+00.00, Rte 5
		g						98.0																						1.7	18" RCP	
		h	3.1	1.6	652				2																						GD-3 INLET	2.0' Lt, 2352+00.00, Rte 5
		i						98.0																						1.7	18" RCP	
D-1		j	3.0	1.5	652				2																						GD-3 INLET	2.0' Lt, 2353+00.00, Rte 5
D-2		a					4.0																								REMOVE 18" x 4.0' CSP	
		b	4.5	2.1	652				2																						GD-1 INLET	56.20' Lt, 2360+20.64 "RVSLSBT1"
		c				1.5																									CONCRETE APRON	
		d																			95.0										EARTH DITCH BIOSWALE	
		e																	15.0	12.0											RSP (FACING, METHOD B)	
D-2		f																			3.0	1.0	6.1								OVERSIDE DRAIN	
SHEET TOTAL				9.8	3,260	1.5	4.0	567.0	10										15.0	12.0	98.0	1.0	6.1									

* SEE ROADWAY Q-SHEET

DRAINAGE QUANTITIES

DQ-1

STATE OF CALIFORNIA - DEPARTMENT OF TRANSPORTATION
Caltrans
HYDRAULICS

FUNCTIONAL SUPERVISOR: DAVE BHALLA
CALCULATED-DESIGNED BY: PAUL FONG
CHECKED BY: ROMULO D. ROBENIOL
REVISED BY
DATE REVISED

LAST REVISION 00-00-00
DATE PLOTTED => 05-AUG-2015
TIME PLOTTED => 10:20

Dist	COUNTY	ROUTE	POST MILES TOTAL PROJECT	SHEET No.	TOTAL SHEETS
07	LA	5	C43.9/C46.4	51	199

Paul Fong 6-8-15
REGISTERED CIVIL ENGINEER DATE

6-29-15
PLANS APPROVAL DATE

REGISTERED PROFESSIONAL ENGINEER PAUL FONG No. C67053 Exp. 9/30/16 CIVIL STATE OF CALIFORNIA

THE STATE OF CALIFORNIA OR ITS OFFICERS OR AGENTS SHALL NOT BE RESPONSIBLE FOR THE ACCURACY OR COMPLETENESS OF SCANNED COPIES OF THIS PLAN SHEET.

NOTES:

1. PIPE JOINTS ARE STANDARD OR AS NOTED ON PLANS.
2. (N) NOT A SEPARATE PAY ITEM, FOR INFORMATION ONLY.

SUMMARY OF DRAINAGE QUANTITIES

DRAINAGE SHEET No.	DRAINAGE SYSTEM No. ⬡	DRAINAGE UNIT ○	HEIGHT OF INLET H OR V (N)	MINOR CONCRETE (MINOR STRUCTURE)	MISCELLANEOUS IRON AND STEEL	CONCRETE (CONCRETE APRON)	REMOVE PIPE	18" REINFORCED CONCRETE PIPE	TYPE 24-12 FRAME AND GRATE (N)	STRUCTURE EXCAVATION	STRUCTURE BACKFILL	STRUCTURAL CONCRETE	BAR REINFORCING STEEL	CABLE RAILING	FRAME AND GRATE	MISCELLANEOUS METAL	MISCELLANEOUS METAL (INCLINED SCREEN)	MISCELLANEOUS METAL (SCREENED PIPE)	ROCK SLOPE PROTECTION (FACING, METHOD B)	ROCK SLOPE PROTECTION FABRIC (CLASS 8)	DITCH EXCAVATION	HOT MIX ASPHALT (TYPE A) *	PLACE HOT MIX ASPHALT (Misc AREA) *	CONCRETE COLLAR (N)						MAXIMUM COVER (N)	DESCRIPTION	STATION
			Ft	CY	LB	CY	LF	LF	EA	CY	CY	CY	LB	LF	EA	LB	LB	LB	CY	SQYD	CY	TON	SQYD	EA						Ft		
D-3	3	a					16.5																								REMOVE 18" CSP	
		b								35	15	9.0	3,500	27		470	170														INCLINED SCREEN TYPE A GSRD	71.93′ Rt, 260+25.74 Rte 5
D-3		c						13.5																1						11.0	18" RCP	
D-4	4	a					22.0																								REMOVE 18" RCP	
		b								130	30	20.3	2,791	50	7	1,382		1,091													LINEAR RADIAL TYPE LR-2 (6′-0")	41.91′ Rt, 241+22.91 Rte 5
D-4		c						6.5																1						3.6	18" RCP	
SHEET TOTAL							38.5	20.0		165	45	29.3	6,291	77	7	1,852	170	1,091														
TOTAL			9.8	3,260	1.5		42.5	587.0	10	165	45	29.3	6,291	77	7	1,852	170	1,091	15.0	12.0	98.0	1.0	6.1									

* SEE ROADWAY Q-SHEET

DRAINAGE QUANTITIES

DQ-2

STATE OF CALIFORNIA - DEPARTMENT OF TRANSPORTATION
Caltrans HYDRAULICS

FUNCTIONAL SUPERVISOR: DAVE BHALLA
CALCULATED-DESIGNED BY: PAUL FONG
CHECKED BY: ROMULO D. ROBENIOL
REVISED BY
DATE REVISED

LAST REVISION 00-00-00 | DATE PLOTTED => 05-AUG-2015 | TIME PLOTTED => 10:20

Dist	COUNTY	ROUTE	POST MILES TOTAL PROJECT	SHEET No.	TOTAL SHEETS
07	LA	5	C43.9/C46.4	52	199

Zewdie Burka 6-8-15
REGISTERED CIVIL ENGINEER DATE

6-29-15
PLANS APPROVAL DATE

REGISTERED PROFESSIONAL ENGINEER
ZEWDIE BURKA
No. C63554
Exp. 9/30/16
CIVIL
STATE OF CALIFORNIA

THE STATE OF CALIFORNIA OR ITS OFFICERS OR AGENTS SHALL NOT BE RESPONSIBLE FOR THE ACCURACY OR COMPLETENESS OF SCANNED COPIES OF THIS PLAN SHEET.

NOTES:

1- FOR ACCURATE RIGHT OF WAY DATA, CONTACT RIGHT OF WAY ENGINEERING AT THE DISTRICT OFFICE.

2- UTILITY OWNERSHIP

GAS - SOUTHERN CALIFORNIA GAS COMPANY

WATER - LOS ANGELES DEPARTMENT OF WATER & POWER (W)
- THE METROPOLITAN WATER DISTRICT OF SOUTHERN CALIFORNIA

ELECTRIC - LOS ANGELES DEPARTMENT WATER & POWER (P)
- SOUTHERN CALIFORNIA EDISON (SCE)

TELEPHONE - AMERICAN TELEPHONE & TELEGRAPH (AT&T)
- VERIZON COMMUNICATIONS

FIBER OPTIC - VERIZON, QWEST, MCI, ATC, SPRINT AND TIME WARNER

PETROLEUM - ARCO OIL COMPANY (BP/ARCO)
- MOBIL OIL COMPANY (EXXON MOBIL)
- PACIFIC OIL PIPELINE (PPS, LLC)
- PLAINS ALL AMERICAN PIPELINE

SEWER - LOS ANGELES COUNTY SANITARY SEWER

LEGEND:

WORK AREA

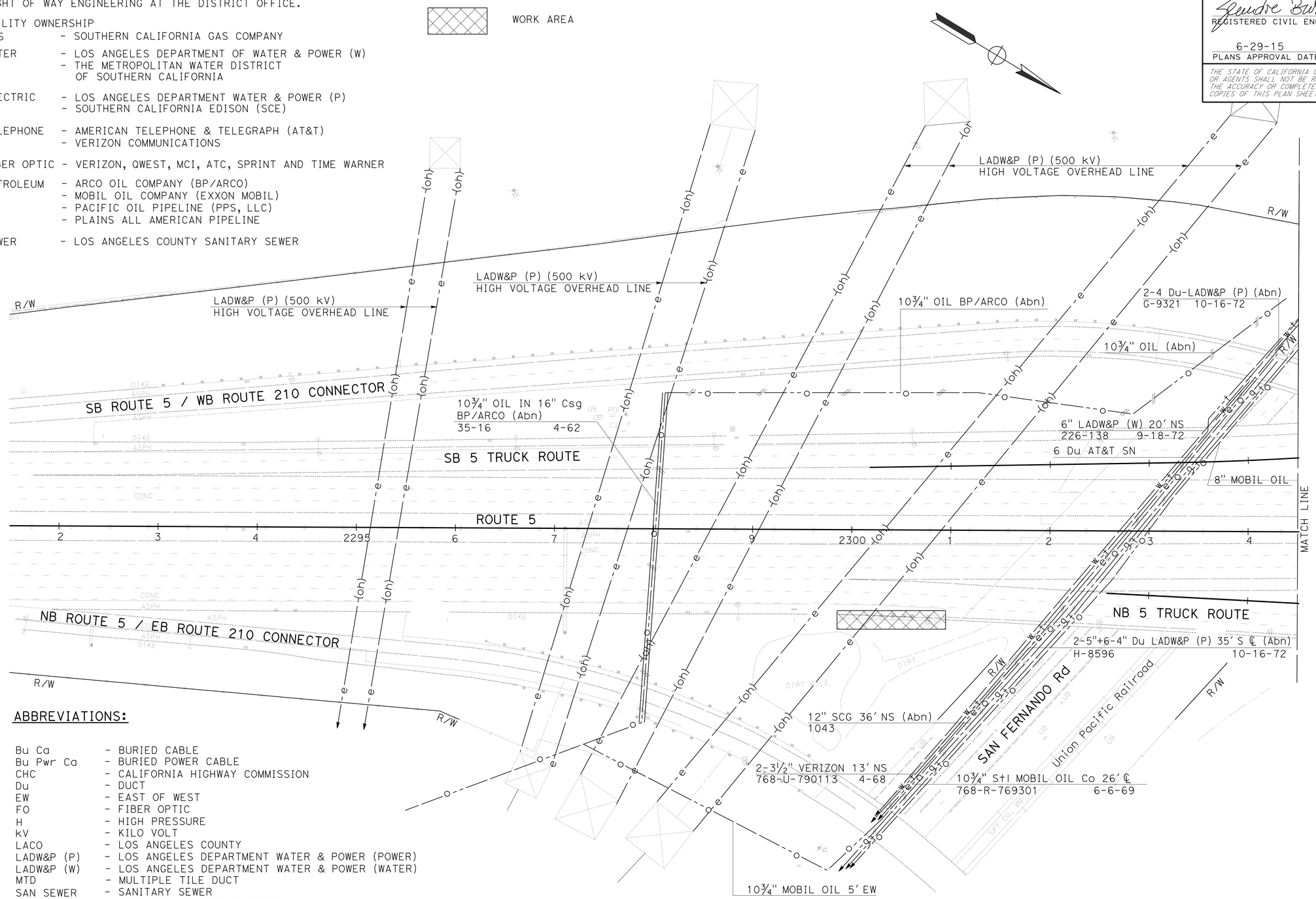

ABBREVIATIONS:

Bu Ca	- BURIED CABLE
Bu Pwr Ca	- BURIED POWER CABLE
CHC	- CALIFORNIA HIGHWAY COMMISSION
Du	- DUCT
EW	- EAST OF WEST
FO	- FIBER OPTIC
H	- HIGH PRESSURE
kV	- KILO VOLT
LACO	- LOS ANGELES COUNTY
LADW&P (P)	- LOS ANGELES DEPARTMENT WATER & POWER (POWER)
LADW&P (W)	- LOS ANGELES DEPARTMENT WATER & POWER (WATER)
MTD	- MULTIPLE TILE DUCT
SAN SEWER	- SANITARY SEWER
SCE	- SOUTHERN CALIFORNIA EDISON
SCG	- SOUTHERN CALIFORNIA GAS COMPANY
SN	- SOUTH OF NORTH
Stl	- STEEL

THIS PLAN TO BE USED FOR UTILITY INFORMATION ONLY

UTILITY PLAN

SCALE: 1" = 50'

U-1

STATE OF CALIFORNIA - DEPARTMENT OF TRANSPORTATION
Caltrans® OFFICE OF DESIGN A

FUNCTIONAL SUPERVISOR: CELINA AVILES
CALCULATED-DESIGNED BY: KATHLEEN PHAM
CHECKED BY: ZEWDIE BURKA
REVISED BY
DATE REVISED

LAST REVISION DATE PLOTTED => 05-AUG-2015
00-00-00 TIME PLOTTED => 10:20

Dist	COUNTY	ROUTE	POST MILES TOTAL PROJECT	SHEET No.	TOTAL SHEETS
07	LA	5	C43.9/C46.4	53	199

REGISTERED CIVIL ENGINEER DATE 6-8-15

6-29-15
PLANS APPROVAL DATE

REGISTERED PROFESSIONAL ENGINEER ZEWDIE BURKA No. C63554 Exp. 9/30/16 CIVIL STATE OF CALIFORNIA

THE STATE OF CALIFORNIA OR ITS OFFICERS OR AGENTS SHALL NOT BE RESPONSIBLE FOR THE ACCURACY OR COMPLETENESS OF SCANNED COPIES OF THIS PLAN SHEET.

NOTE:

FOR ACCURATE RIGHT OF WAY DATA, CONTACT RIGHT OF WAY ENGINEERING AT THE DISTRICT OFFICE.

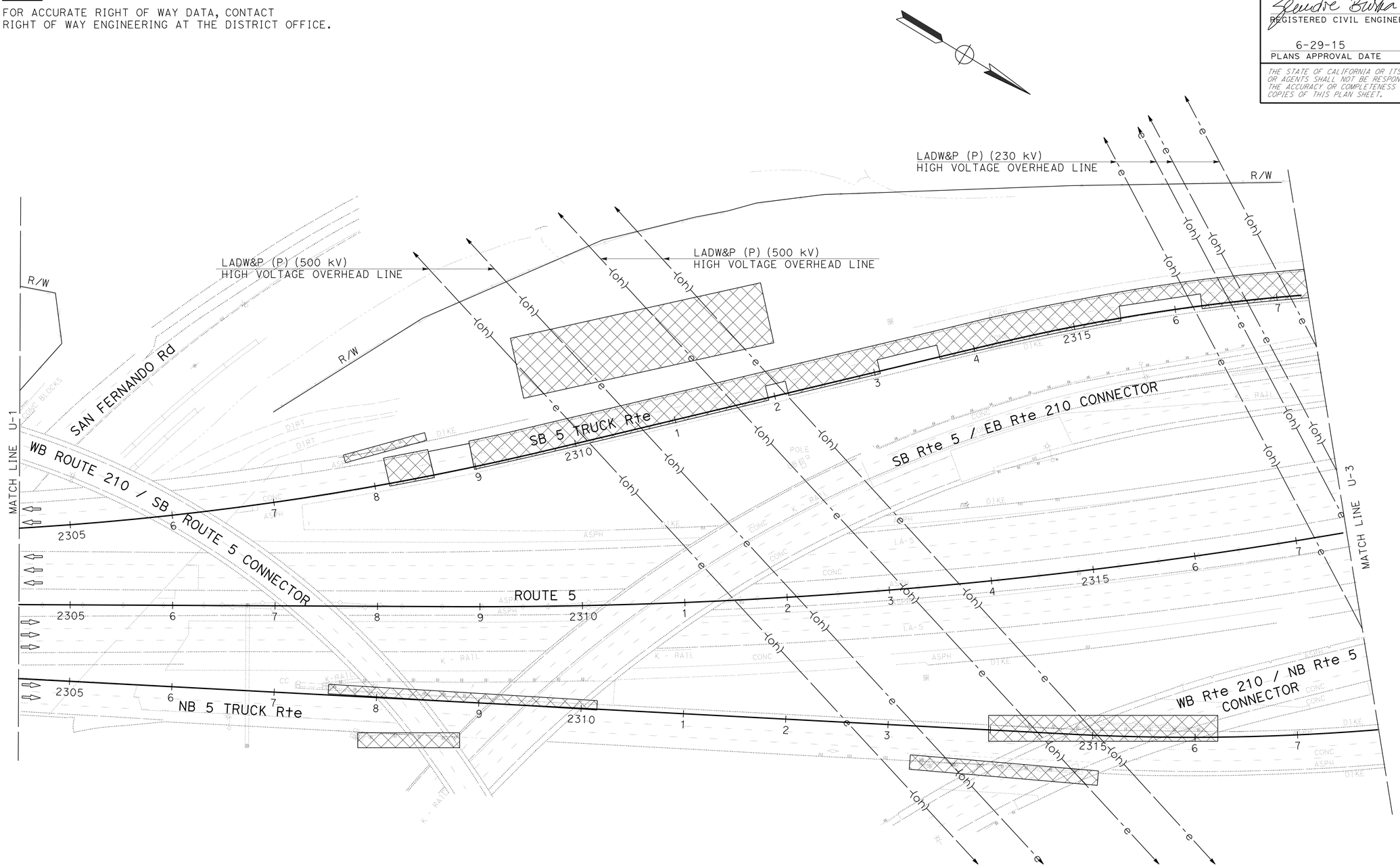

UTILITY PLAN

SCALE: 1" = 50'

THIS PLAN TO BE USED FOR UTILITY INFORMATION ONLY

U-2

STATE OF CALIFORNIA - DEPARTMENT OF TRANSPORTATION
Caltrans OFFICE OF DESIGN A

FUNCTIONAL SUPERVISOR: CELINA AVILES

CALCULATED-DESIGNED BY: KATHLEEN PHAM
CHECKED BY: ZEWDIE BURKA

REVISED BY
DATE REVISED

LAST REVISION 00-00-00
DATE PLOTTED => 05-AUG-2015
TIME PLOTTED => 10:20

Dist	COUNTY	ROUTE	POST MILES TOTAL PROJECT	SHEET No.	TOTAL SHEETS
07	LA	5	C43.9/C46.4	54	199

Zewdie Burka 6-8-15
REGISTERED CIVIL ENGINEER DATE

6-29-15
PLANS APPROVAL DATE

REGISTERED PROFESSIONAL ENGINEER ZEWDIE BURKA No. C63554 Exp. 9/30/16 CIVIL STATE OF CALIFORNIA

THE STATE OF CALIFORNIA OR ITS OFFICERS OR AGENTS SHALL NOT BE RESPONSIBLE FOR THE ACCURACY OR COMPLETENESS OF SCANNED COPIES OF THIS PLAN SHEET.

NOTE:

FOR ACCURATE RIGHT OF WAY DATA, CONTACT RIGHT OF WAY ENGINEERING AT THE DISTRICT OFFICE.

POSITIVE LOCATION INFORMATION

POTHOLE No.	LOCATION NORTHING	LOCATION EASTING	DESCRIPTION AND METHOD USED	SURFACE ELEVATION (ft)	DEPTH (ft)
1	1938373.44	6412564.88	22' HP SCG LINE, ELECTRONIC DETECTION	1279.60	6.70
2	1938426.76	6412594.15	22' HP SCG LINE, ELECTRONIC DETECTION	1280.78	10.10
3	1938581.87	6412696.20	22' HP SCG LINE, ELECTRONIC DETECTION	1301.75	17.11
4	1938618.94	6412719.92	22' HP SCG LINE, ELECTRONIC DETECTION	1302.25	18.10
5	1939051.80	6412954.11	22' HP SCG LINE, SURVEY	1323.13	-

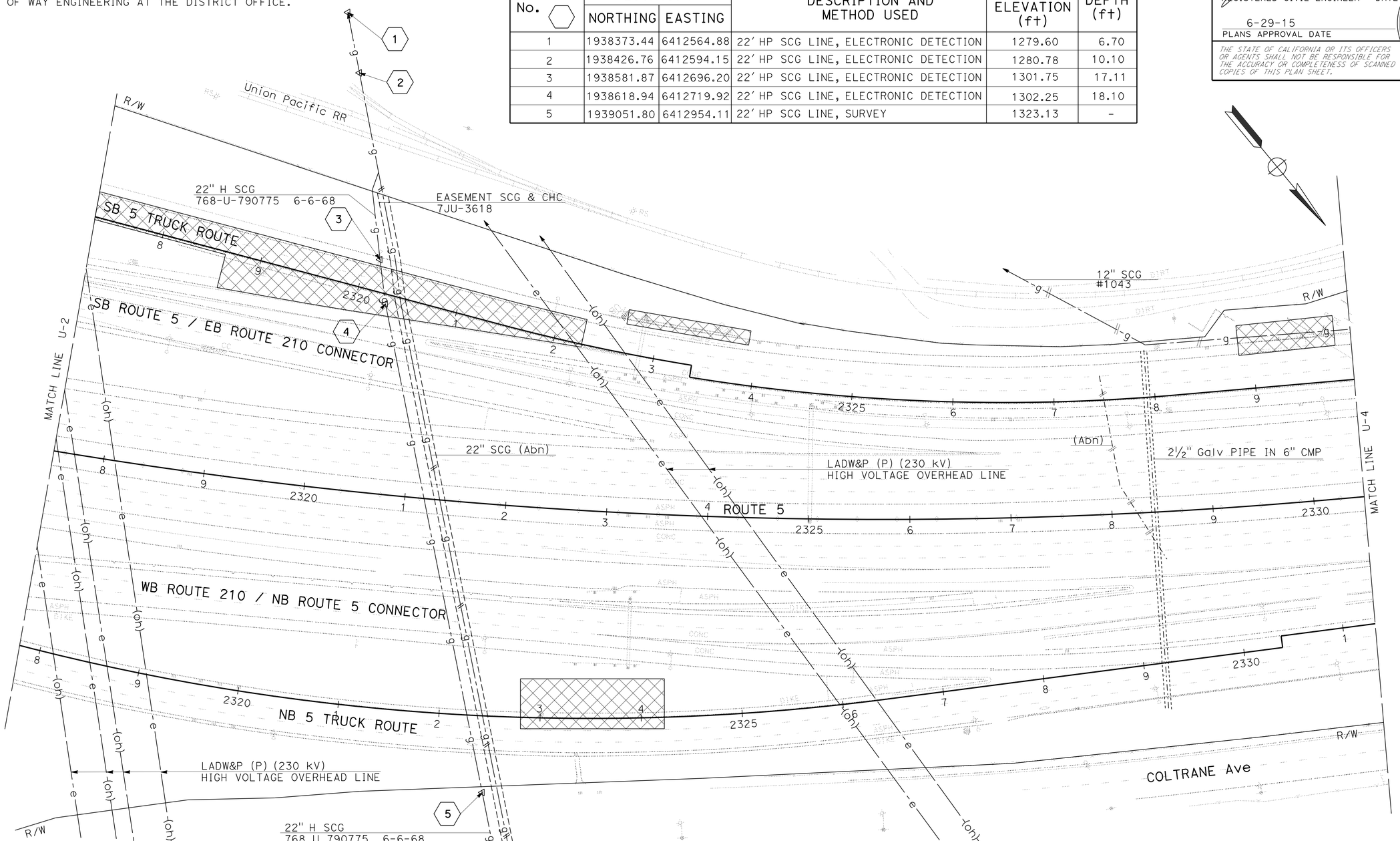

UTILITY PLAN

SCALE: 1" = 50'

THIS PLAN TO BE USED FOR UTILITY INFORMATION ONLY

U-3

STATE OF CALIFORNIA - DEPARTMENT OF TRANSPORTATION
Caltrans® OFFICE OF DESIGN A

FUNCTIONAL SUPERVISOR: CELINA AVILES
CALCULATED-DESIGNED BY: KATHLEEN PHAM
CHECKED BY: ZEWDIE BURKA
REVISED BY
DATE REVISED

LAST REVISION 00-00-00
DATE PLOTTED => 05-AUG-2015
TIME PLOTTED => 10:20

BORDER LAST REVISED 7/2/2010
USERNAME => s119140
DGN FILE => 730290ka003.dgn
RELATIVE BORDER SCALE IS IN INCHES 0 1 2 3
UNIT 1843
PROJECT NUMBER & PHASE 07130004781

Dist	COUNTY	ROUTE	POST MILES TOTAL PROJECT	SHEET No.	TOTAL SHEETS
07	LA	5	C43.9/C46.4	55	199

REGISTERED CIVIL ENGINEER 6-8-15 DATE

6-29-15
PLANS APPROVAL DATE

REGISTERED PROFESSIONAL ENGINEER ZEWDIE BURKA No. C63554 Exp. 9/30/16 CIVIL STATE OF CALIFORNIA

THE STATE OF CALIFORNIA OR ITS OFFICERS OR AGENTS SHALL NOT BE RESPONSIBLE FOR THE ACCURACY OR COMPLETENESS OF SCANNED COPIES OF THIS PLAN SHEET.

NOTE:

FOR ACCURATE RIGHT OF WAY DATA, CONTACT
RIGHT OF WAY ENGINEERING AT THE DISTRICT OFFICE.

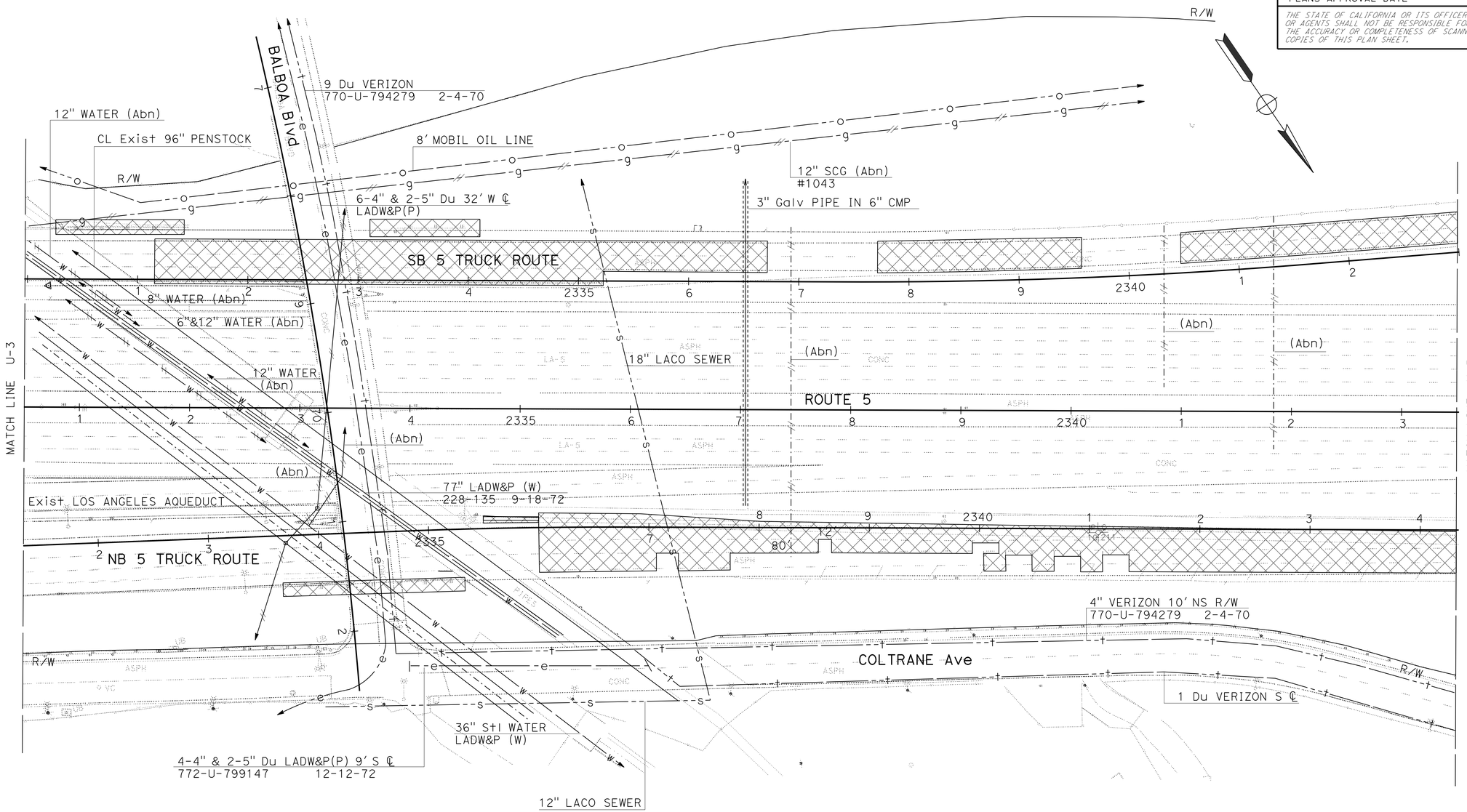

UTILITY PLAN

SCALE: 1" = 50'

THIS PLAN TO BE USED FOR UTILITY INFORMATION ONLY

U-4

STATE OF CALIFORNIA - DEPARTMENT OF TRANSPORTATION
Caltrans® OFFICE OF DESIGN A

FUNCTIONAL SUPERVISOR: CELINA AVILES
CALCULATED-DESIGNED BY: KATHLEEN PHAM
CHECKED BY: ZEWDIE BURKA
REVISED BY
DATE REVISED

LAST REVISION 00-00-00
DATE PLOTTED => 05-AUG-2015
TIME PLOTTED => 10:20

Dist	COUNTY	ROUTE	POST MILES TOTAL PROJECT	SHEET No.	TOTAL SHEETS
07	LA	5	C43.9/C46.4	56	199

Zewdie Burka 6-8-15
REGISTERED CIVIL ENGINEER DATE

6-29-15
PLANS APPROVAL DATE

REGISTERED PROFESSIONAL ENGINEER
ZEWDIE BURKA
No. C63554
Exp. 9/30/16
CIVIL
STATE OF CALIFORNIA

THE STATE OF CALIFORNIA OR ITS OFFICERS OR AGENTS SHALL NOT BE RESPONSIBLE FOR THE ACCURACY OR COMPLETENESS OF SCANNED COPIES OF THIS PLAN SHEET.

NOTE:

FOR ACCURATE RIGHT OF WAY DATA, CONTACT RIGHT OF WAY ENGINEERING AT THE DISTRICT OFFICE.

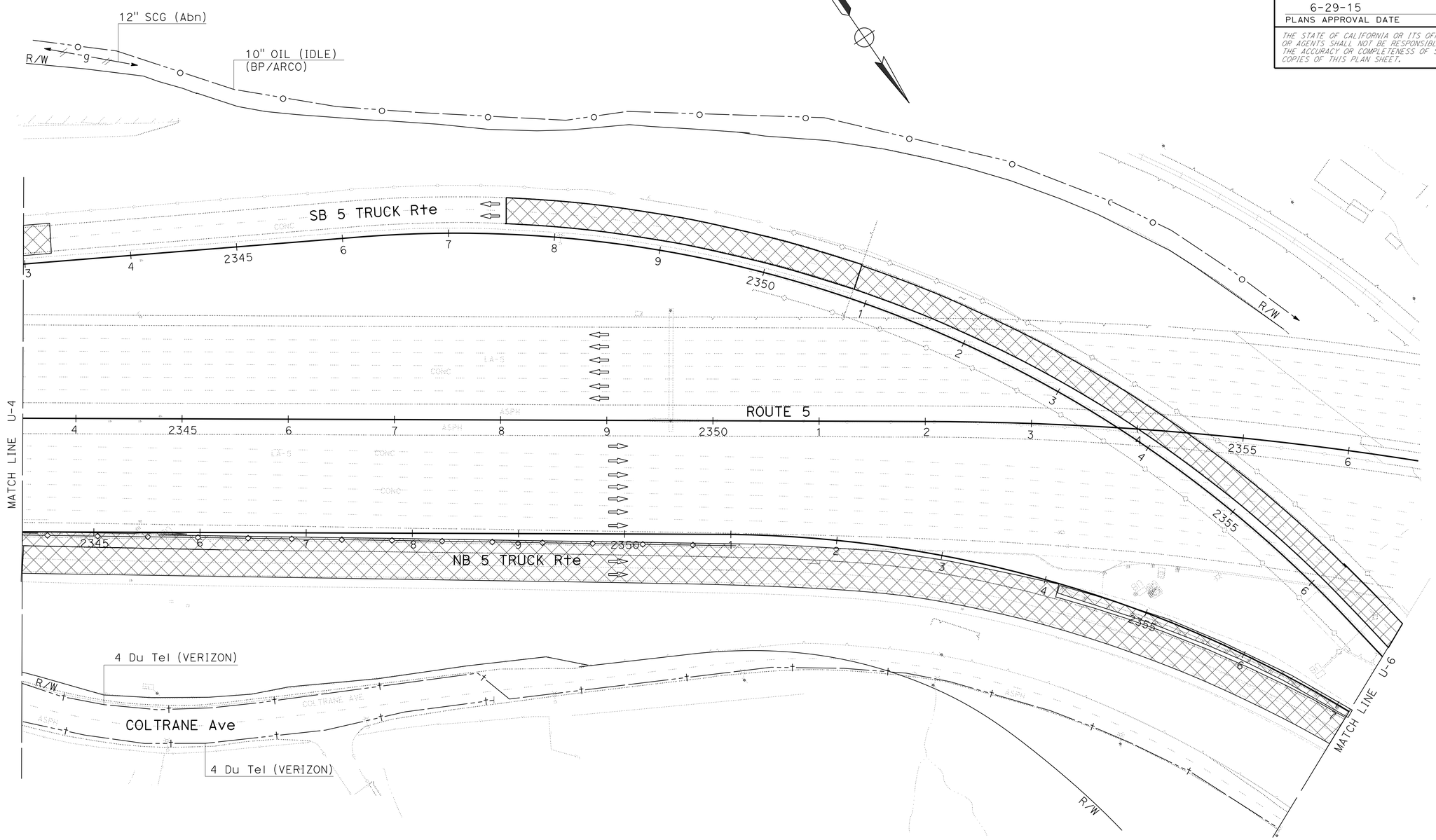

UTILITY PLAN

SCALE: 1" = 50'

THIS PLAN TO BE USED FOR UTILITY INFORMATION ONLY

U-5

STATE OF CALIFORNIA - DEPARTMENT OF TRANSPORTATION
Caltrans® OFFICE OF DESIGN A

FUNCTIONAL SUPERVISOR: CELINA AVILES
CALCULATED-DESIGNED BY: KATHLEEN PHAM
CHECKED BY: ZEWDIE BURKA
REVISED BY
DATE REVISED

LAST REVISION 00-00-00
DATE PLOTTED => 05-AUG-2015
TIME PLOTTED => 10:20

Dist	COUNTY	ROUTE	POST MILES TOTAL PROJECT	SHEET No.	TOTAL SHEETS
07	LA	5	C43.9/C46.4	57	199

Zewdie Burka 6-8-15
REGISTERED CIVIL ENGINEER DATE

6-29-15
PLANS APPROVAL DATE

REGISTERED PROFESSIONAL ENGINEER
ZEWDIE BURKA
No. C63554
Exp. 9/30/16
CIVIL
STATE OF CALIFORNIA

THE STATE OF CALIFORNIA OR ITS OFFICERS OR AGENTS SHALL NOT BE RESPONSIBLE FOR THE ACCURACY OR COMPLETENESS OF SCANNED COPIES OF THIS PLAN SHEET.

NOTE:

FOR ACCURATE RIGHT OF WAY DATA, CONTACT
RIGHT OF WAY ENGINEERING AT THE DISTRICT OFFICE.

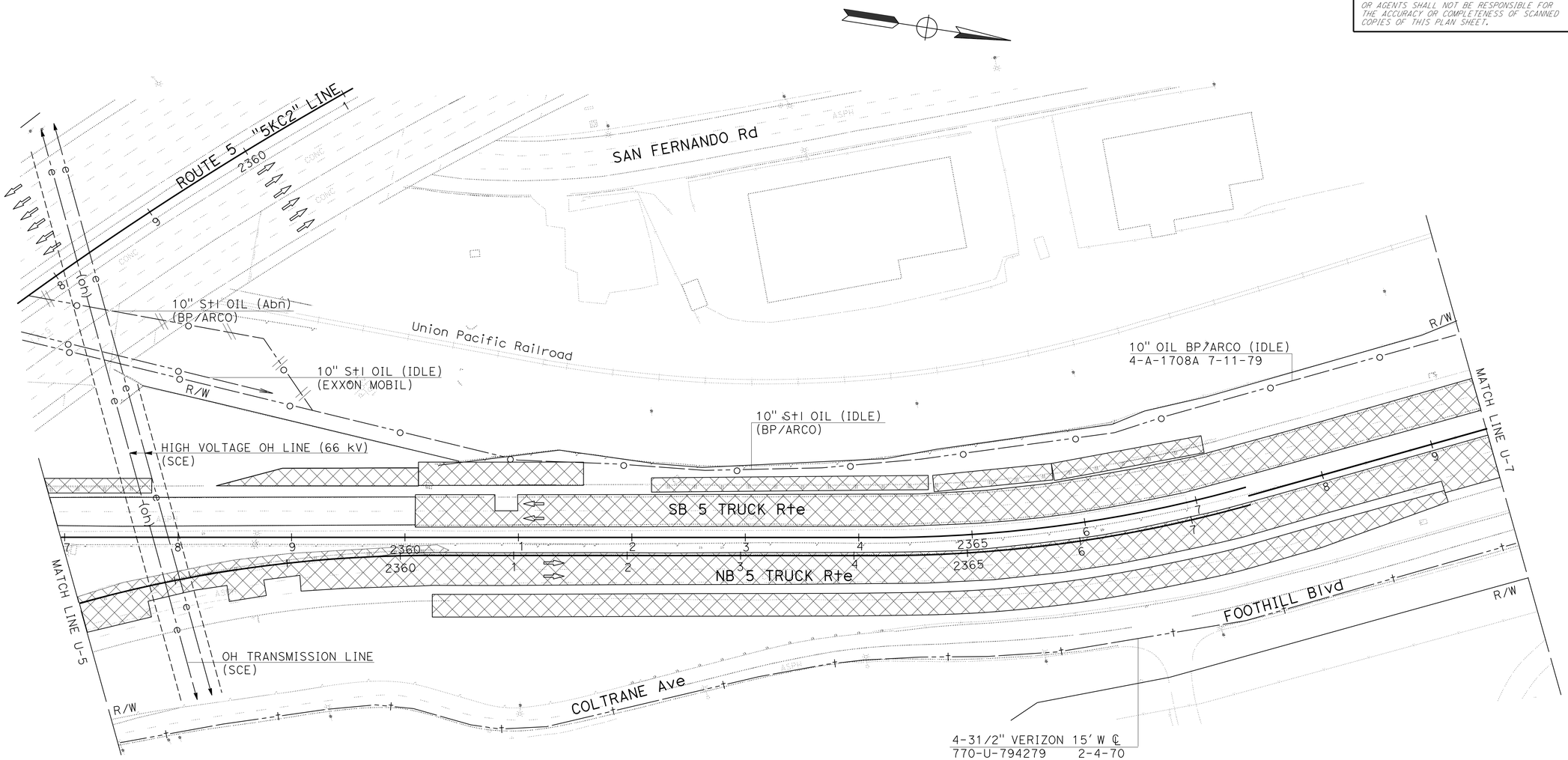

UTILITY PLAN

SCALE: 1" = 50'

U-6

THIS PLAN TO BE USED FOR UTILITY INFORMATION ONLY

STATE OF CALIFORNIA - DEPARTMENT OF TRANSPORTATION
Caltrans® OFFICE OF DESIGN A

FUNCTIONAL SUPERVISOR: CELINA AVILES
CALCULATED-DESIGNED BY: KATHLEEN PHAM
CHECKED BY: ZEWDIE BURKA
REVISED BY
DATE REVISED

LAST REVISION 00-00-00
DATE PLOTTED => 05-AUG-2015
TIME PLOTTED => 10:20

Dist	COUNTY	ROUTE	POST MILES TOTAL PROJECT	SHEET No.	TOTAL SHEETS
07	LA	5	C43.9/C46.4	58	199

Zewdie Burka 6-8-15
REGISTERED CIVIL ENGINEER DATE

6-29-15
PLANS APPROVAL DATE

REGISTERED PROFESSIONAL ENGINEER
ZEWDIE BURKA
No. C63554
Exp. 9/30/16
CIVIL
STATE OF CALIFORNIA

THE STATE OF CALIFORNIA OR ITS OFFICERS OR AGENTS SHALL NOT BE RESPONSIBLE FOR THE ACCURACY OR COMPLETENESS OF SCANNED COPIES OF THIS PLAN SHEET.

NOTE:

FOR ACCURATE RIGHT OF WAY DATA, CONTACT RIGHT OF WAY ENGINEERING AT THE DISTRICT OFFICE.

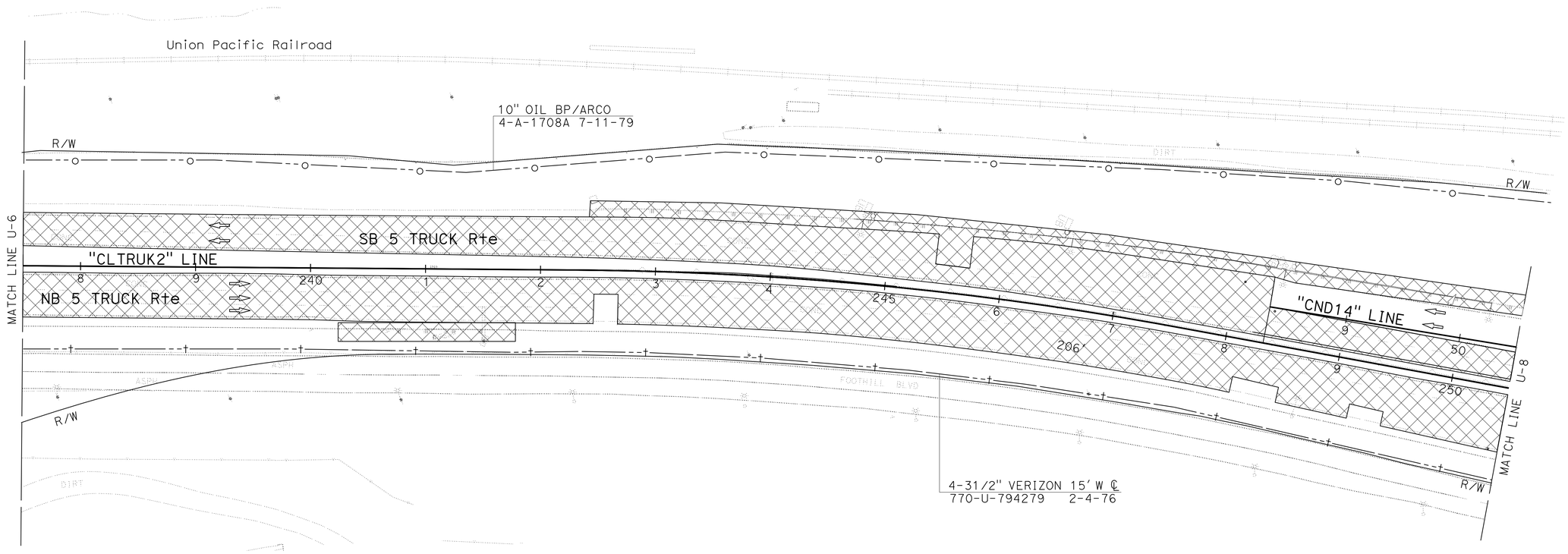

THIS PLAN TO BE USED FOR UTILITY INFORMATION ONLY

UTILITY PLAN

SCALE: 1" = 50'

U-7

STATE OF CALIFORNIA - DEPARTMENT OF TRANSPORTATION
Caltrans® OFFICE OF DESIGN A

FUNCTIONAL SUPERVISOR: CELINA AVILES

CALCULATED-DESIGNED BY: KATHLEEN PHAM
CHECKED BY: ZEWDIE BURKA

REVISED BY
DATE REVISED

LAST REVISION 00-00-00
DATE PLOTTED => 05-AUG-2015
TIME PLOTTED => 10:20

Dist	COUNTY	ROUTE	POST MILES TOTAL PROJECT	SHEET No.	TOTAL SHEETS
07	LA	5	C43.9/C46.4	59	199

Zewdie Burka 6-8-15
REGISTERED CIVIL ENGINEER DATE

6-29-15
PLANS APPROVAL DATE

REGISTERED PROFESSIONAL ENGINEER ZEWDIE BURKA No. C63554 Exp. 9/30/16 CIVIL STATE OF CALIFORNIA

THE STATE OF CALIFORNIA OR ITS OFFICERS OR AGENTS SHALL NOT BE RESPONSIBLE FOR THE ACCURACY OR COMPLETENESS OF SCANNED COPIES OF THIS PLAN SHEET.

NOTE:

FOR ACCURATE RIGHT OF WAY DATA, CONTACT RIGHT OF WAY ENGINEERING AT THE DISTRICT OFFICE.

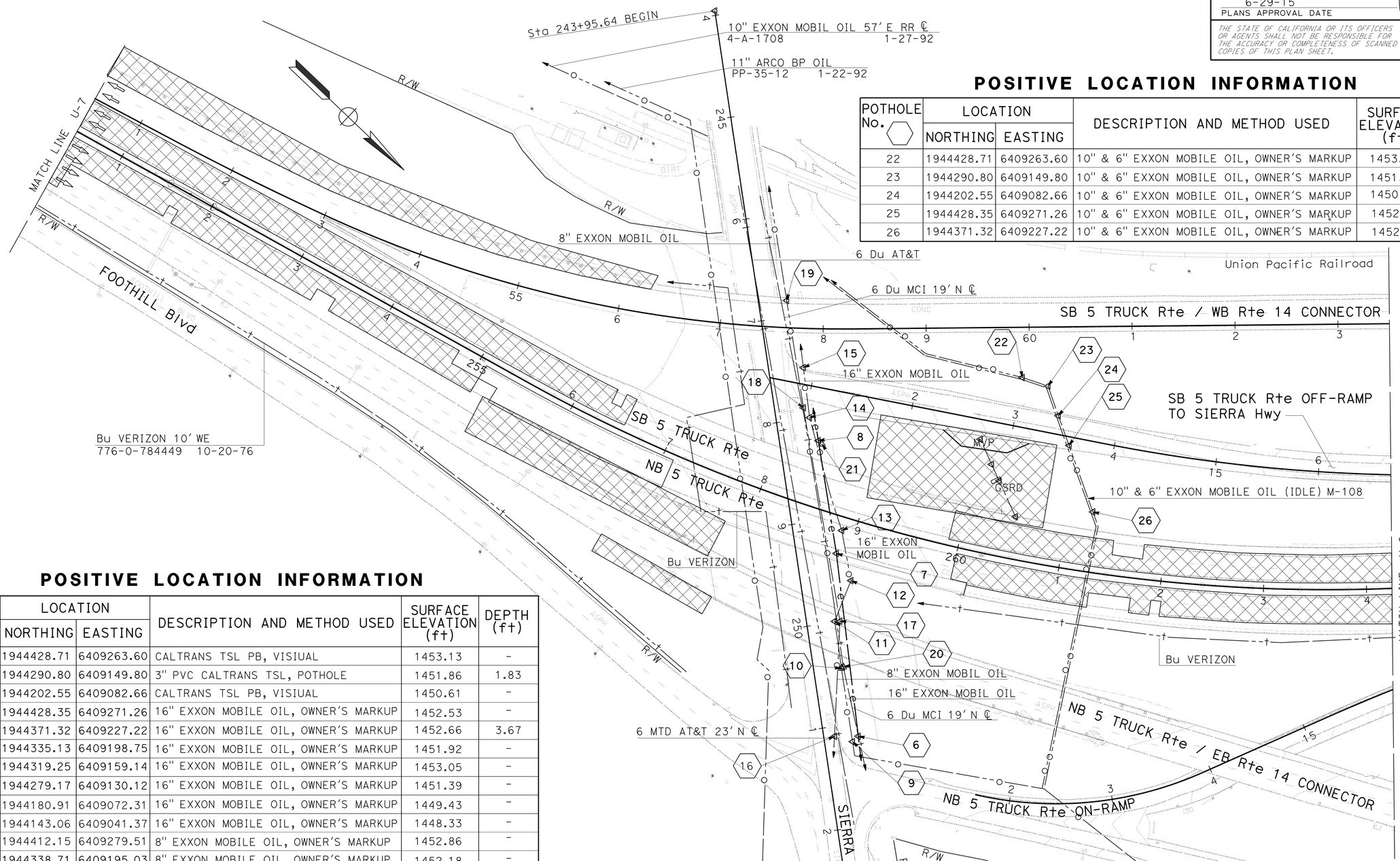

POSITIVE LOCATION INFORMATION

POTHOLE No.	LOCATION NORTHING	LOCATION EASTING	DESCRIPTION AND METHOD USED	SURFACE ELEVATION (ft)	DEPTH (ft)
22	1944428.71	6409263.60	10" & 6" EXXON MOBILE OIL, OWNER'S MARKUP	1453.13	-
23	1944290.80	6409149.80	10" & 6" EXXON MOBILE OIL, OWNER'S MARKUP	1451.86	-
24	1944202.55	6409082.66	10" & 6" EXXON MOBILE OIL, OWNER'S MARKUP	1450.61	-
25	1944428.35	6409271.26	10" & 6" EXXON MOBILE OIL, OWNER'S MARKUP	1452.53	-
26	1944371.32	6409227.22	10" & 6" EXXON MOBILE OIL, OWNER'S MARKUP	1452.66	-

POSITIVE LOCATION INFORMATION

POTHOLE No.	LOCATION NORTHING	LOCATION EASTING	DESCRIPTION AND METHOD USED	SURFACE ELEVATION (ft)	DEPTH (ft)
6	1944428.71	6409263.60	CALTRANS TSL PB, VISIUAL	1453.13	-
7	1944290.80	6409149.80	3" PVC CALTRANS TSL, POTHOLE	1451.86	1.83
8	1944202.55	6409082.66	CALTRANS TSL PB, VISIUAL	1450.61	-
9	1944428.35	6409271.26	16" EXXON MOBILE OIL, OWNER'S MARKUP	1452.53	-
10	1944371.32	6409227.22	16" EXXON MOBILE OIL, OWNER'S MARKUP	1452.66	3.67
11	1944335.13	6409198.75	16" EXXON MOBILE OIL, OWNER'S MARKUP	1451.92	-
12	1944319.25	6409159.14	16" EXXON MOBILE OIL, OWNER'S MARKUP	1453.05	-
13	1944279.17	6409130.12	16" EXXON MOBILE OIL, OWNER'S MARKUP	1451.39	-
14	1944180.91	6409072.31	16" EXXON MOBILE OIL, OWNER'S MARKUP	1449.43	-
15	1944143.06	6409041.37	16" EXXON MOBILE OIL, OWNER'S MARKUP	1448.33	-
16	1944412.15	6409279.51	8" EXXON MOBILE OIL, OWNER'S MARKUP	1452.86	-
17	1944338.71	6409195.03	8" EXXON MOBILE OIL, OWNER'S MARKUP	1452.18	-
18	1944170.03	6409069.56	8" EXXON MOBILE OIL, OWNER'S MARKUP	1448.69	-
19	1944086.31	6409005.34	8" EXXON MOBILE OIL, OWNER'S MARKUP	1447.12	-
20	1944371.69	6409224.94	8" MCI 10" x 10" CB, POTHOLE	1452.63	4.58
21	1944207.32	6409079.01	6" UNKNOWN Stl Pipe, POTHOLE	1450.69	5.42

UTILITY PLAN

SCALE: 1" = 50'

THIS PLAN TO BE USED FOR UTILITY INFORMATION ONLY

U-8

STATE OF CALIFORNIA - DEPARTMENT OF TRANSPORTATION
Caltrans® OFFICE OF DESIGN A

FUNCTIONAL SUPERVISOR: CELINA AVILES
CALCULATED-DESIGNED BY: KATHLEEN PHAM
CHECKED BY: ZEWDIE BURKA
REVISED BY / DATE REVISED

LAST REVISION 00-00-00 | DATE PLOTTED => 05-AUG-2015 | TIME PLOTTED => 10:20

BORDER LAST REVISED 7/2/2010 | USERNAME => s119140 | DGN FILE => 730290ka008.dgn | RELATIVE BORDER SCALE IS IN INCHES 0 1 2 3 | UNIT 1843 | PROJECT NUMBER & PHASE 07130004781

Dist	COUNTY	ROUTE	POST MILES TOTAL PROJECT	SHEET No.	TOTAL SHEETS
07	LA	5	C43.9/C46.4	60	199

Zewdie Burka 6-8-15
REGISTERED CIVIL ENGINEER DATE

6-29-15
PLANS APPROVAL DATE

REGISTERED PROFESSIONAL ENGINEER
ZEWDIE BURKA
No. C63554
Exp. 9/30/16
CIVIL
STATE OF CALIFORNIA

THE STATE OF CALIFORNIA OR ITS OFFICERS OR AGENTS SHALL NOT BE RESPONSIBLE FOR THE ACCURACY OR COMPLETENESS OF SCANNED COPIES OF THIS PLAN SHEET.

NOTE:

FOR ACCURATE RIGHT OF WAY DATA, CONTACT RIGHT OF WAY ENGINEERING AT THE DISTRICT OFFICE.

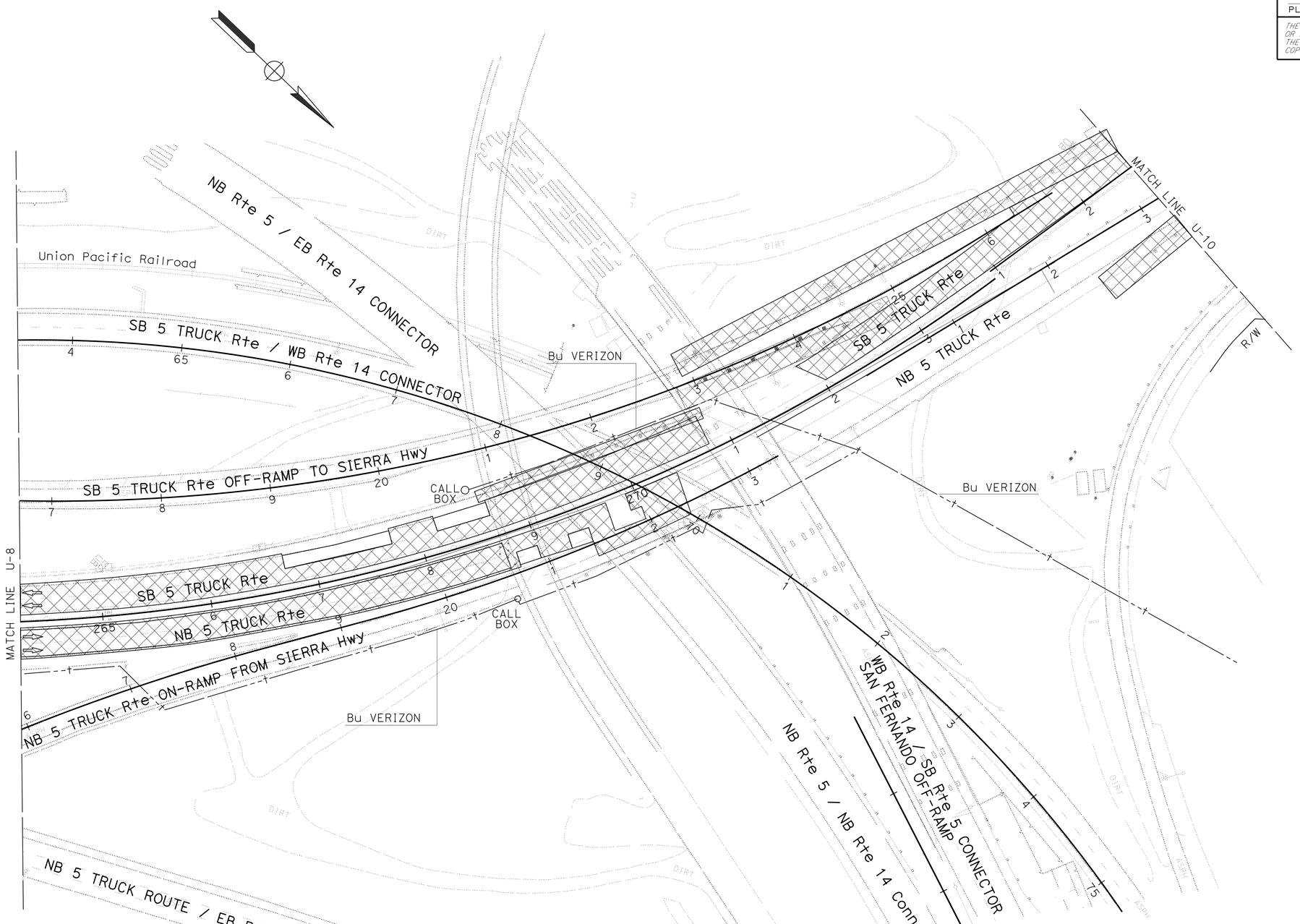

UTILITY PLAN

SCALE: 1" = 50'

THIS PLAN TO BE USED FOR UTILITY INFORMATION ONLY

U-9

STATE OF CALIFORNIA - DEPARTMENT OF TRANSPORTATION
Caltrans® OFFICE OF DESIGN A

FUNCTIONAL SUPERVISOR: CELINA AVILES

CALCULATED-DESIGNED BY: KATHLEEN PHAM
CHECKED BY: ZEWDIE BURKA

REVISED BY
DATE REVISED

LAST REVISION 00-00-00
DATE PLOTTED => 05-AUG-2015
TIME PLOTTED => 10:20

Dist	COUNTY	ROUTE	POST MILES TOTAL PROJECT	SHEET No.	TOTAL SHEETS
07	LA	5	C43.9/C46.4	61	199

Zewdie Burka 6-8-15
REGISTERED CIVIL ENGINEER DATE

6-29-15
PLANS APPROVAL DATE

REGISTERED PROFESSIONAL ENGINEER
ZEWDIE BURKA
No. C63554
Exp. 9/30/16
CIVIL
STATE OF CALIFORNIA

THE STATE OF CALIFORNIA OR ITS OFFICERS OR AGENTS SHALL NOT BE RESPONSIBLE FOR THE ACCURACY OR COMPLETENESS OF SCANNED COPIES OF THIS PLAN SHEET.

NOTE:

FOR ACCURATE RIGHT OF WAY DATA, CONTACT RIGHT OF WAY ENGINEERING AT THE DISTRICT OFFICE.

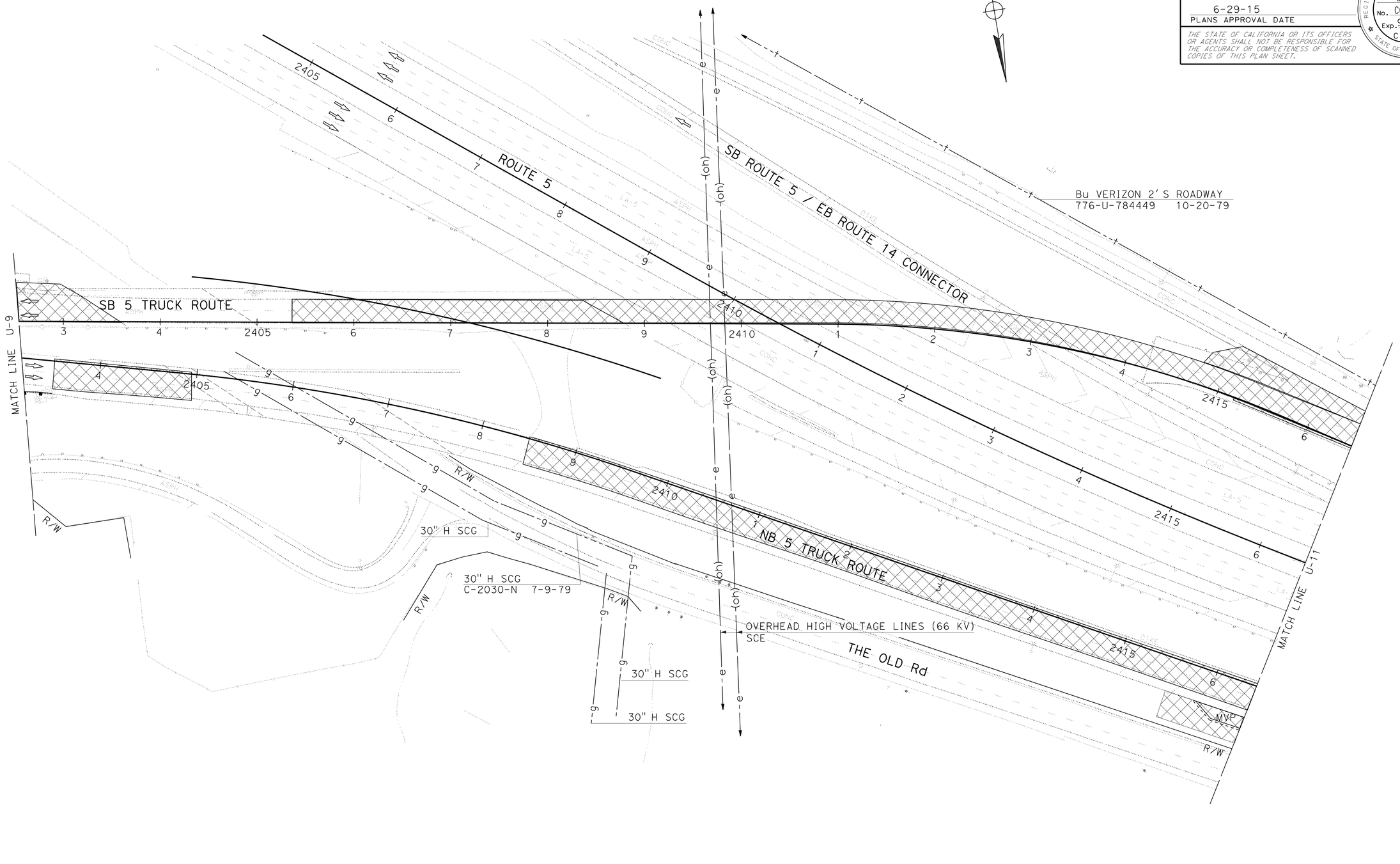

THIS PLAN TO BE USED FOR UTILITY INFORMATION ONLY

UTILITY PLAN

SCALE: 1" = 50'

U-10

STATE OF CALIFORNIA - DEPARTMENT OF TRANSPORTATION
Caltrans® OFFICE OF DESIGN A

FUNCTIONAL SUPERVISOR: CELINA AVILES

CALCULATED-DESIGNED BY: KATHLEEN PHAM
CHECKED BY: ZEWDIE BURKA

REVISED BY | DATE REVISED

LAST REVISION 00-00-00 | DATE PLOTTED => 05-AUG-2015 | TIME PLOTTED => 10:20

Dist	COUNTY	ROUTE	POST MILES TOTAL PROJECT	SHEET No.	TOTAL SHEETS
07	LA	5	C43.9/C46.4	62	199

Zewdie Burka 6-8-15
REGISTERED CIVIL ENGINEER DATE

6-29-15
PLANS APPROVAL DATE

REGISTERED PROFESSIONAL ENGINEER
ZEWDIE BURKA
No. C63554
Exp. 9/30/16
CIVIL
STATE OF CALIFORNIA

THE STATE OF CALIFORNIA OR ITS OFFICERS OR AGENTS SHALL NOT BE RESPONSIBLE FOR THE ACCURACY OR COMPLETENESS OF SCANNED COPIES OF THIS PLAN SHEET.

NOTE:

FOR ACCURATE RIGHT OF WAY DATA, CONTACT RIGHT OF WAY ENGINEERING AT THE DISTRICT OFFICE.

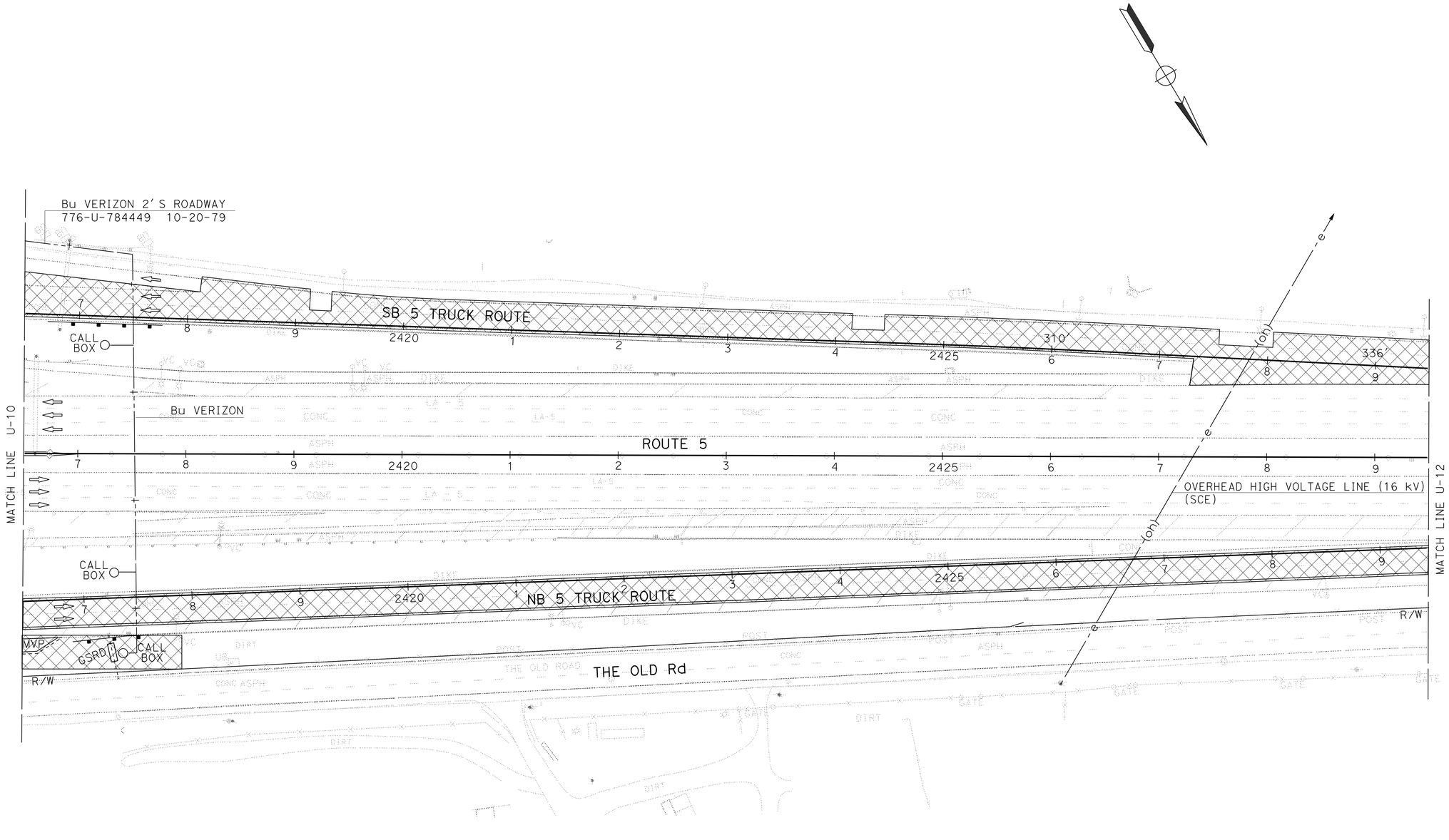

THIS PLAN TO BE USED FOR UTILITY INFORMATION ONLY

UTILITY PLAN

SCALE: 1" = 50'

U-11

STATE OF CALIFORNIA - DEPARTMENT OF TRANSPORTATION
Caltrans® OFFICE OF DESIGN A

FUNCTIONAL SUPERVISOR: CELINA AVILES
CALCULATED-DESIGNED BY: KATHLEEN PHAM
CHECKED BY: ZEWDIE BURKA
REVISED BY
DATE REVISED

LAST REVISION 00-00-00
DATE PLOTTED => 05-AUG-2015
TIME PLOTTED => 10:20

Dist	COUNTY	ROUTE	POST MILES TOTAL PROJECT	SHEET No.	TOTAL SHEETS
07	LA	5	C43.9/C46.4	63	199

Zewdie Burka 6-8-15
REGISTERED CIVIL ENGINEER DATE

6-29-15
PLANS APPROVAL DATE

REGISTERED PROFESSIONAL ENGINEER
ZEWDIE BURKA
No. C63554
Exp. 9/30/16
CIVIL
STATE OF CALIFORNIA

THE STATE OF CALIFORNIA OR ITS OFFICERS OR AGENTS SHALL NOT BE RESPONSIBLE FOR THE ACCURACY OR COMPLETENESS OF SCANNED COPIES OF THIS PLAN SHEET.

NOTE:

FOR ACCURATE RIGHT OF WAY DATA, CONTACT
RIGHT OF WAY ENGINEERING AT THE DISTRICT OFFICE.

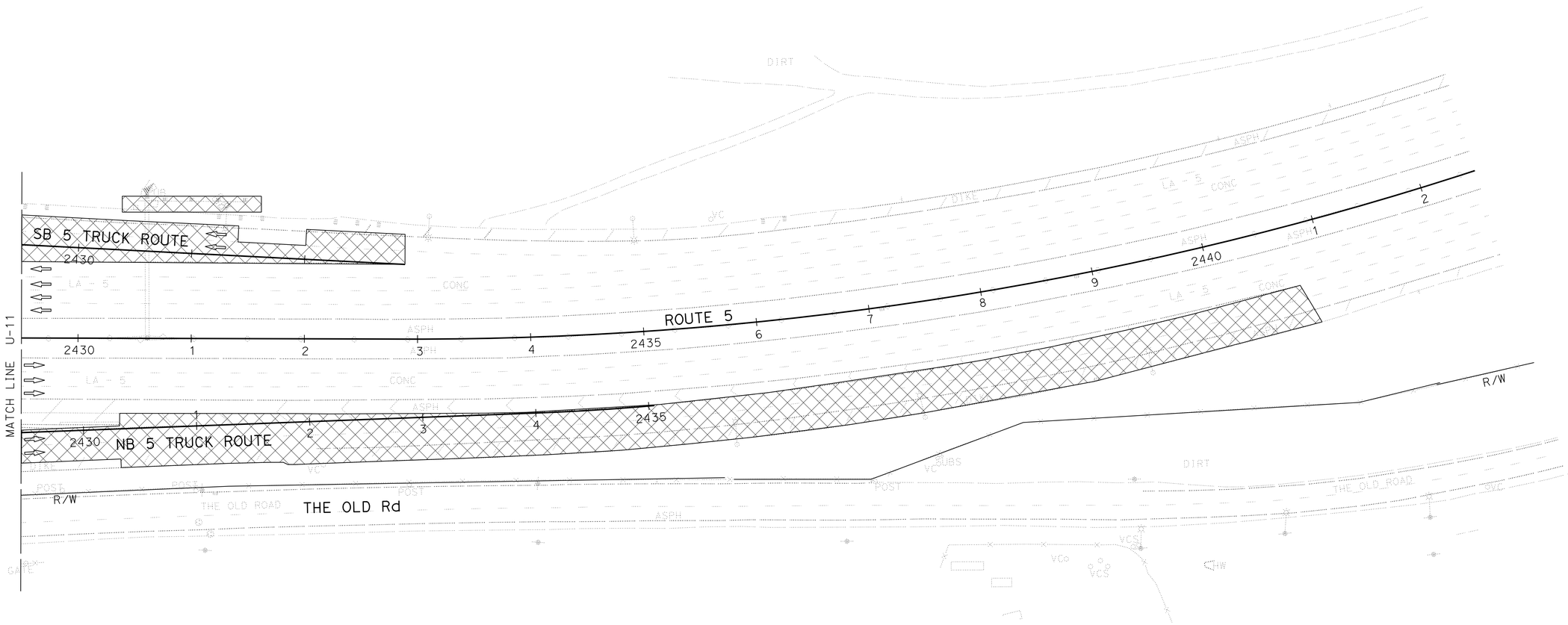

UTILITY PLAN

SCALE: 1" = 50'

THIS PLAN TO BE USED FOR UTILITY INFORMATION ONLY

U-12

STATE OF CALIFORNIA - DEPARTMENT OF TRANSPORTATION
Caltrans® OFFICE OF DESIGN A

FUNCTIONAL SUPERVISOR: CELINA AVILES

CALCULATED-DESIGNED BY: KATHLEEN PHAM
CHECKED BY: ZEWDIE BURKA

REVISED BY
DATE REVISED

LAST REVISION 00-00-00
DATE PLOTTED => 05-AUG-2015
TIME PLOTTED => 10:20

Dist	COUNTY	ROUTE	POST MILES TOTAL PROJECT	SHEET No.	TOTAL SHEETS
07	LA	5	C43.9/C46.4	64	199

REGISTERED CIVIL ENGINEER 6-8-15 DATE

6-29-15
PLANS APPROVAL DATE

REGISTERED PROFESSIONAL ENGINEER SUJAYA KALAINESAN No. C74154 Exp. 6-30-17 CIVIL STATE OF CALIFORNIA

THE STATE OF CALIFORNIA OR ITS OFFICERS OR AGENTS SHALL NOT BE RESPONSIBLE FOR THE ACCURACY OR COMPLETENESS OF SCANNED COPIES OF THIS PLAN SHEET.

STATIONARY MOUNTED CONSTRUCTION AREA SIGNS

SIGN No. (X)	SIGN CODE FEDERAL	SIGN CODE CALIFORNIA	PANEL SIZE	SIGN MESSAGE	NUMBER OF POSTS AND SIZE	NUMBER OF SIGNS
A	W20-1		36" x 36"	ROAD WORK AHEAD	1 - 4" x 6"	3
B	G20-2		48" x 24"	END ROAD WORK	1 - 6" x 6"	5
C		C40(CA)	144" x 60"	TRAFFIC FINES DOUBLED IN CONSTRUCTION ZONES	2 - 6" x 8"	2

FOR ADDITIONAL CONSTRUCTION AREA SIGNS SEE TRAFFIC HANDLING SHEETS

NOTES:

1. EXACT LOCATIONS WILL BE DETERMINED BY THE ENGINEER.
2. SIGN POST LENGTH ARE APPROXIMATE. EXACT SIZE AND LENGTH WILL BE DETERMINED BY THE ENGINEER.

LOS ANGELES

CONSTRUCTION AREA SIGNS

NO SCALE

CS-1

APPROVED FOR CONSTRUCTION AREA SIGN WORK ONLY

STATE OF CALIFORNIA - DEPARTMENT OF TRANSPORTATION
Caltrans DESIGN

FUNCTIONAL SUPERVISOR: KYLE KUNITAKE

CALCULATED-DESIGNED BY: O. BLACKSTOCK
CHECKED BY: SUJAYA KALAINESAN

REVISED BY
DATE REVISED

LAST REVISION 00-00-00 | DATE PLOTTED => 05-AUG-2015 | TIME PLOTTED => 10:21

Dist	COUNTY	ROUTE	POST MILES TOTAL PROJECT	SHEET No.	TOTAL SHEETS
07	LA	5	C43.9/C46.4	65	199

REGISTERED CIVIL ENGINEER 6-8-15 DATE

6-29-15
PLANS APPROVAL DATE

REGISTERED PROFESSIONAL ENGINEER SUJAYA KALAINESAN No. C74154 Exp. 6-30-17 CIVIL STATE OF CALIFORNIA

THE STATE OF CALIFORNIA OR ITS OFFICERS OR AGENTS SHALL NOT BE RESPONSIBLE FOR THE ACCURACY OR COMPLETENESS OF SCANNED COPIES OF THIS PLAN SHEET.

NOTES:

1. FOR ACCURATE RIGHT OF WAY DATA, CONTACT RIGHT OF WAY ENGINEERING AT THE DISTRICT OFFICE.
2. REMOVE ALL CONFLICTING STRIPING AND PAVEMENT MARKINGS.
3. COVER ALL CONFLICTING SIGNS.

LEGEND:

- CONSTRUCTION AREA
- CHANNELIZER (SURFACE MOUNTED)
- CRASH CUSHION

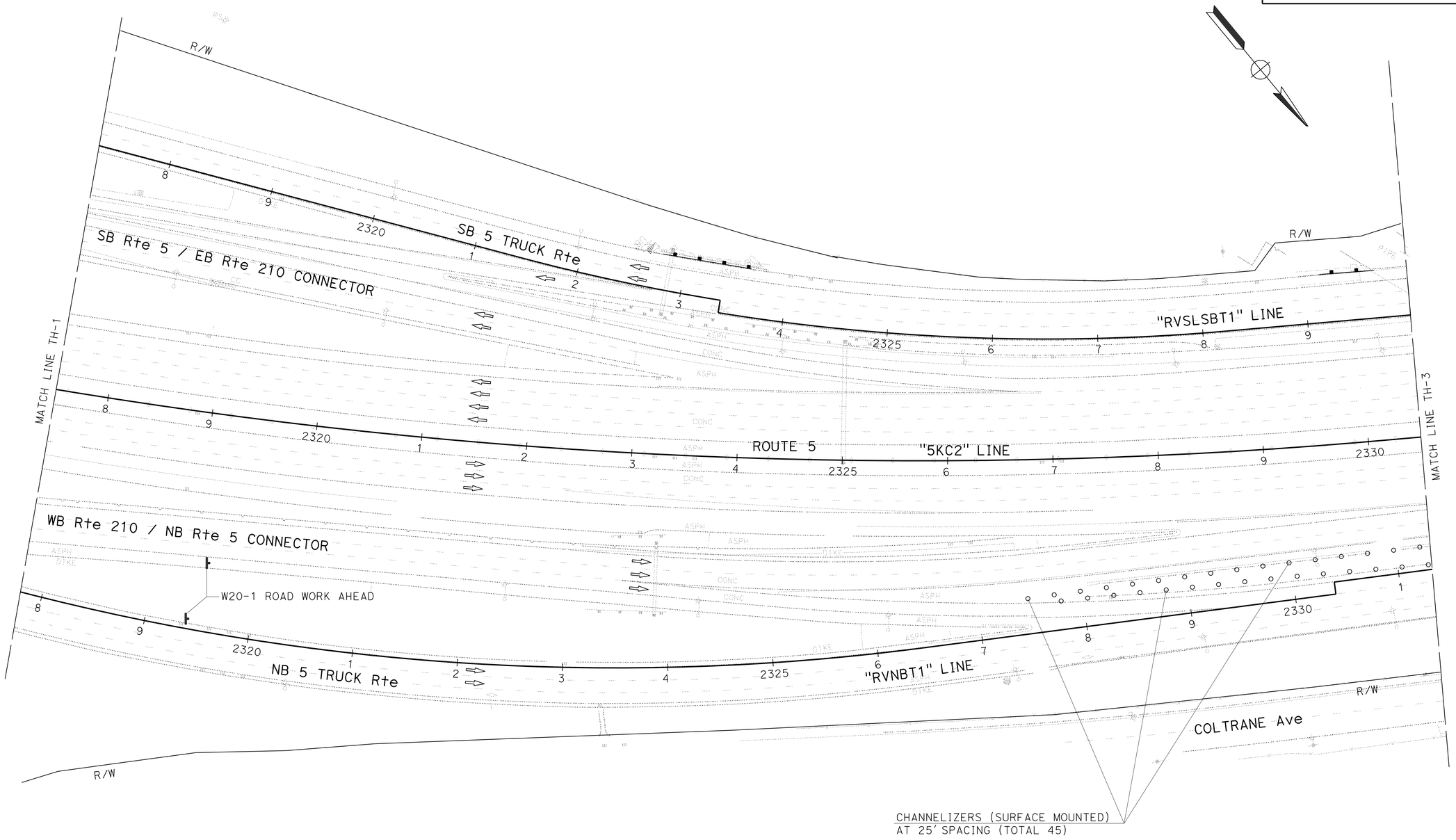

TRAFFIC HANDLING PLAN

SCALE: 1" = 50'

APPROVED FOR TRAFFIC HANDLING WORK ONLY

TH-1

STATE OF CALIFORNIA - DEPARTMENT OF TRANSPORTATION
Caltrans® DESIGN

FUNCTIONAL SUPERVISOR: KYLE KUNITAKE
CALCULATED-DESIGNED BY: SUJAYA KALAINESAN
CHECKED BY: O. BLACKSTOCK
REVISED BY
DATE REVISED

LAST REVISION 00-00-00 | DATE PLOTTED => 05-AUG-2015 | TIME PLOTTED => 10:21

BORDER LAST REVISED 7/2/2010 | USERNAME => s119140 | DGN FILE => 730290md001.dgn | RELATIVE BORDER SCALE IS IN INCHES 0 1 2 3 | UNIT 1823 | PROJECT NUMBER & PHASE 07130004781

Dist	COUNTY	ROUTE	POST MILES TOTAL PROJECT	SHEET No.	TOTAL SHEETS
07	LA	5	C43.9/C46.4	66	199

REGISTERED CIVIL ENGINEER 6-8-15 DATE

6-29-15
PLANS APPROVAL DATE

REGISTERED PROFESSIONAL ENGINEER SUJAYA KALAINESAN No. C74154 Exp. 6-30-17 CIVIL STATE OF CALIFORNIA

THE STATE OF CALIFORNIA OR ITS OFFICERS OR AGENTS SHALL NOT BE RESPONSIBLE FOR THE ACCURACY OR COMPLETENESS OF SCANNED COPIES OF THIS PLAN SHEET.

NOTE:

1. FOR ACCURATE RIGHT OF WAY DATA, CONTACT RIGHT OF WAY ENGINEERING AT THE DISTRICT OFFICE.

NB 5 TRUCK Rte

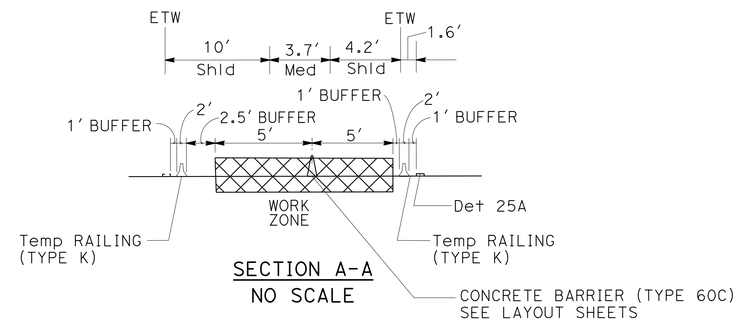

SECTION A-A
NO SCALE

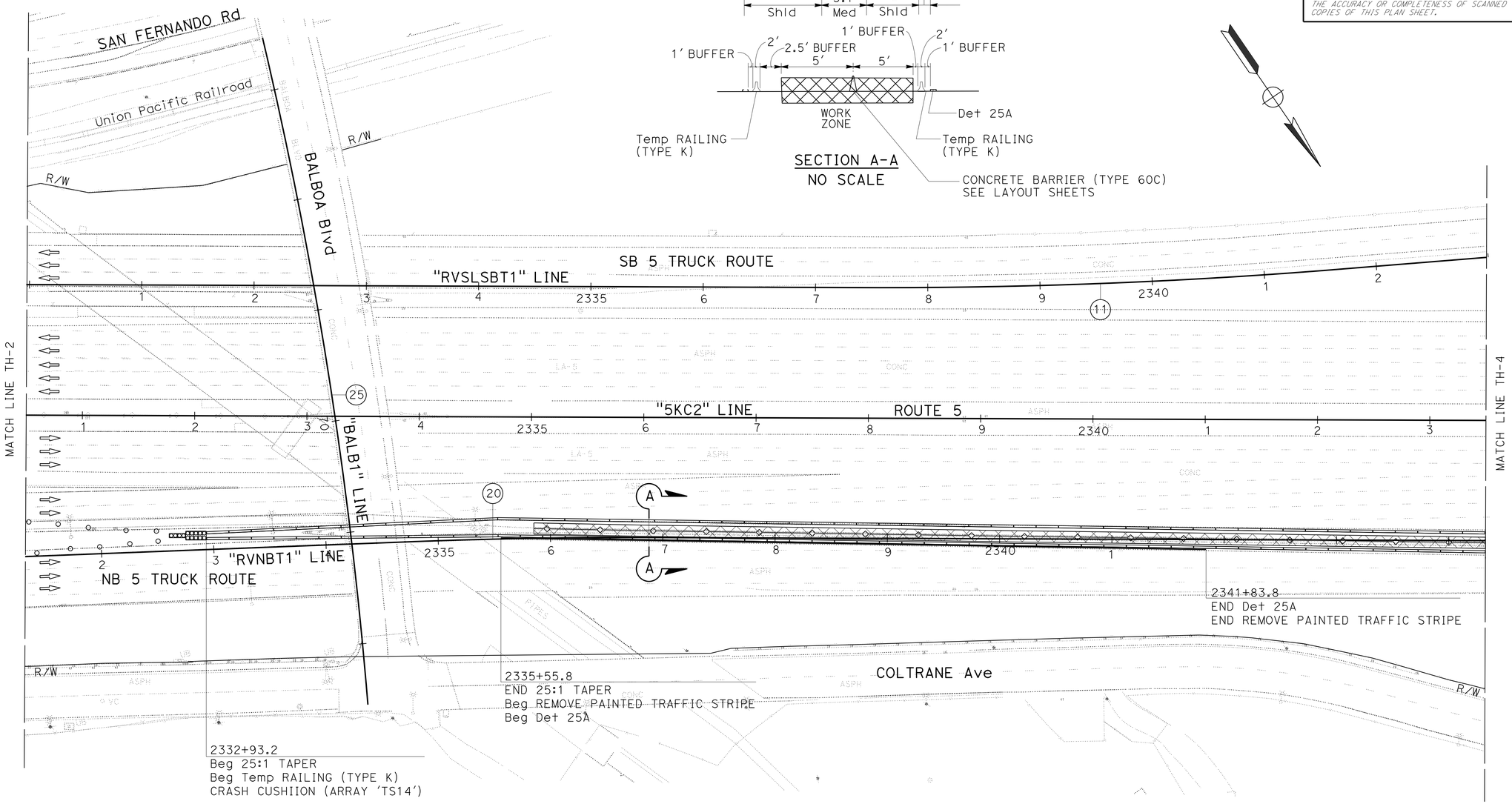

CURVE DATA

No. ⊕	R	Δ	T	L
11	5000′	04°48′47″	210.13′	420.02′
20	5000′	02°25′02″	105.48′	210.94′
25	4000′	10°36′47″	371.53′	740.93′

TRAFFIC HANDLING PLAN

SCALE: 1" = 50′

APPROVED FOR TRAFFIC HANDLING WORK ONLY

TH-2

STATE OF CALIFORNIA - DEPARTMENT OF TRANSPORTATION
Caltrans®
DESIGN

FUNCTIONAL SUPERVISOR: KYLE KUNITAKE
CALCULATED-DESIGNED BY: SUJAYA KALAINESAN
CHECKED BY: O. BLACKSTOCK
REVISED BY
DATE REVISED

LAST REVISION 00-00-00
DATE PLOTTED => 05-AUG-2015
TIME PLOTTED => 10:21

Dist	COUNTY	ROUTE	POST MILES TOTAL PROJECT	SHEET No.	TOTAL SHEETS
07	LA	5	C43.9/C46.4	67	199

REGISTERED CIVIL ENGINEER 6-8-15 DATE

6-29-15
PLANS APPROVAL DATE

REGISTERED PROFESSIONAL ENGINEER SUJAYA KALAINESAN No. C74154 Exp. 6-30-17 CIVIL STATE OF CALIFORNIA

THE STATE OF CALIFORNIA OR ITS OFFICERS OR AGENTS SHALL NOT BE RESPONSIBLE FOR THE ACCURACY OR COMPLETENESS OF SCANNED COPIES OF THIS PLAN SHEET.

NOTE:

1. FOR ACCURATE RIGHT OF WAY DATA, CONTACT RIGHT OF WAY ENGINEERING AT THE DISTRICT OFFICE.

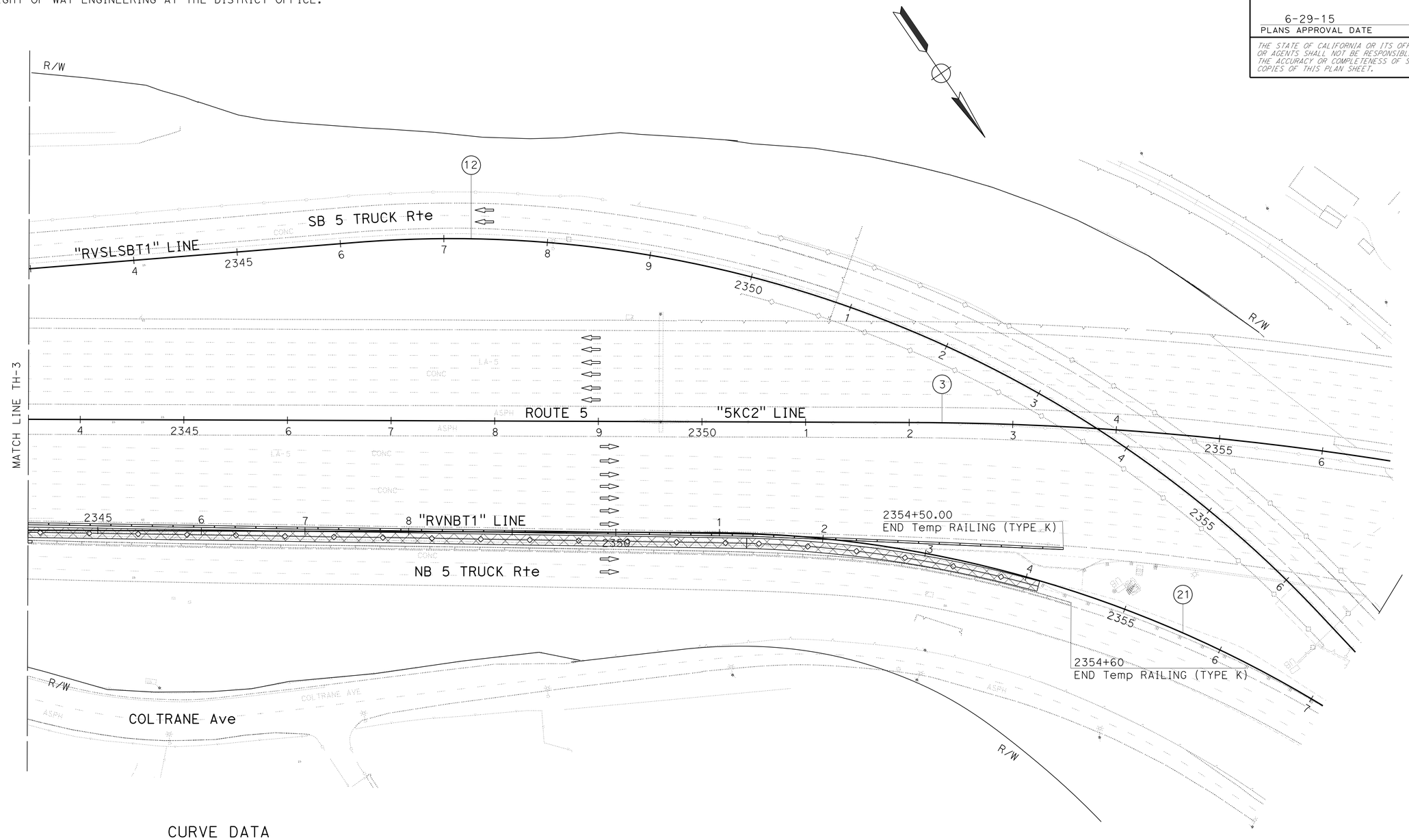

CURVE DATA

No. ⊕	R	Δ	T	L
3	3000′	33°45′43″	910.38′	1767.77′
12	1150′	51°26′59″	554.07′	1032.67′
21	1150′	46°38′10″	495.70′	936.05′

TRAFFIC HANDLING PLAN

SCALE: 1" = 50′

APPROVED FOR TRAFFIC HANDLING WORK ONLY

TH-3

STATE OF CALIFORNIA - DEPARTMENT OF TRANSPORTATION
Caltrans
DESIGN

FUNCTIONAL SUPERVISOR: KYLE KUNITAKE
CALCULATED-DESIGNED BY: SUJAYA KALAINESAN
CHECKED BY: O. BLACKSTOCK
REVISED BY
DATE REVISED

LAST REVISION 00-00-00
DATE PLOTTED => 05-AUG-2015
TIME PLOTTED => 10:21

Dist	COUNTY	ROUTE	POST MILES TOTAL PROJECT	SHEET No.	TOTAL SHEETS
07	LA	5	C43.9/C46.4	68	199

REGISTERED CIVIL ENGINEER 6-8-15 DATE

6-29-15
PLANS APPROVAL DATE

REGISTERED PROFESSIONAL ENGINEER SUJAYA KALAINESAN No. C74154 Exp. 6-30-17 CIVIL STATE OF CALIFORNIA

THE STATE OF CALIFORNIA OR ITS OFFICERS OR AGENTS SHALL NOT BE RESPONSIBLE FOR THE ACCURACY OR COMPLETENESS OF SCANNED COPIES OF THIS PLAN SHEET.

STATIONARY MOUNTED CONSTRUCTION AREA SIGNS

SHEET No.	SIGN CODE	PANEL SIZE	SIGN MESSAGE	NUMBER OF POSTS AND SIZE	NUMBER OF SIGNS
TH-1	W20-1	48" x 48"	ROAD WORK AHEAD	1 - 4" x 6"	2

SHEET No.	TEMPORARY TRAFFIC STRIPE (PAINT) DETAIL 25A YELLOW STRIPE 4 INCH SOLID (2 COAT)	REMOVE PAINTED TRAFFIC STRIPE	TEMPORARY RAILING (TYPE K)	TEMPORARY CRASH CUSHION MODULE	CHANNELIZER (SURFACE MOUNTED)	REMOVE PAVEMENT MARKER
	LF	LF	LF	EA	EA	EA
TH-1					35	
TH-2	628	628	2,280	14	10	26
TH-3			2,020			
TOTAL	628	628	4,300	14	45	26

TRAFFIC HANDLING QUANTITIES

APPROVED FOR TRAFFIC HANDLING WORK ONLY

THQ-1

STATE OF CALIFORNIA - DEPARTMENT OF TRANSPORTATION
Caltrans DESIGN

FUNCTIONAL SUPERVISOR: KYLE KUNITAKE
CALCULATED-DESIGNED BY: SUJAYA KALAINESAN
CHECKED BY: O. BLACKSTOCK
REVISED BY
DATE REVISED

LAST REVISION 00-00-00 | DATE PLOTTED => 05-AUG-2015 | TIME PLOTTED => 10:21

Dist	COUNTY	ROUTE	POST MILES TOTAL PROJECT	SHEET No.	TOTAL SHEETS
07	LA	5	C43.9/C46.4	69	199

REGISTERED CIVIL ENGINEER 6-8-15 DATE

6-29-15
PLANS APPROVAL DATE

REGISTERED PROFESSIONAL ENGINEER DENNIS DO No. C68587 Exp. 9-30-15 CIVIL STATE OF CALIFORNIA

THE STATE OF CALIFORNIA OR ITS OFFICERS OR AGENTS SHALL NOT BE RESPONSIBLE FOR THE ACCURACY OR COMPLETENESS OF SCANNED COPIES OF THIS PLAN SHEET.

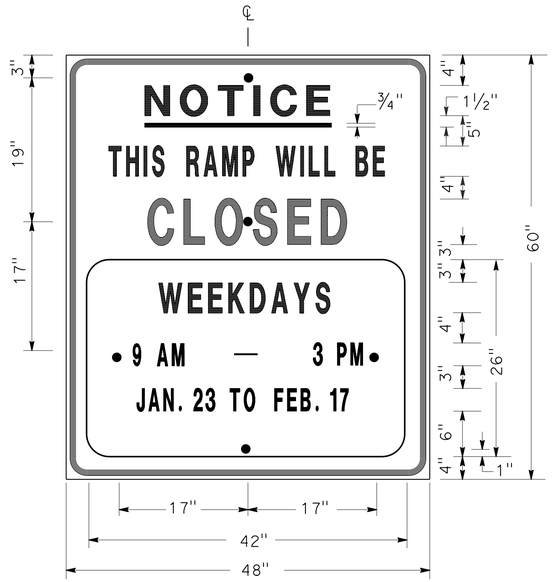

SIGN SP-1

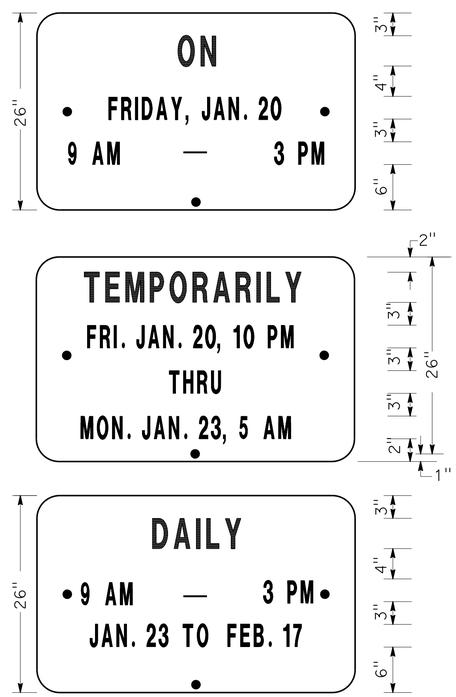

ALTERNATE OVERLAY PANELS (TYPICAL)

SPECIAL ADVANCE NOTICE PUBLICITY SIGN

NOTES: SIGN SP-1

1. LETTERS AND BORDER MUST BE BLACK ON REFLECTORIZED ORANGE BACKGROUND.
2. BOLT HOLES MUST BE 3/8" DIAMETER.
3. BASE MATERIAL MUST BE ALUMINUM (MINIMUM 0.06").
4. SIGNS MUST BE MOUNTED WITH BOTTOMS OF SIGNS A MINIMUM OF 7' ABOVE GROUND.

SIZE	BORDER WIDTH	MARGIN WIDTH	LETTER SIZE					CORNER RADIUS
			LINE 1	LINE 2*	LINE 3	LINE 4	LINE 5, 6, & 7*	
48"x60"	1 1/4"	3/4"	4E	4D	6E	4D		3"
42"x26"	OVERLAY						3D	1 1/2"
* CONDENSED SPACING IF NECESSARY								

SIGN SP-4

NOTES: SIGN SP-4

1. LETTERS - 6" SERIES C.
2. LETTERS AND BORDER MUST BE BLACK ON REFLECTORIZED WHITE BACKGROUND.
3. BOLT HOLES MUST BE 3/8" DIAMETER.
4. BASE MATERIAL MUST BE ALUMINUM (MINIMUM 0.06").
5. SIGNS MUST BE PLACED AT RAMP ENTRANCES IN ADDITION TO SIGNS POSTED IN ACCORDANCE WITH REVISED STANDARD PLAN RSP T14.

SPECIAL SIGN FOR ENTRANCE RAMP CLOSURES

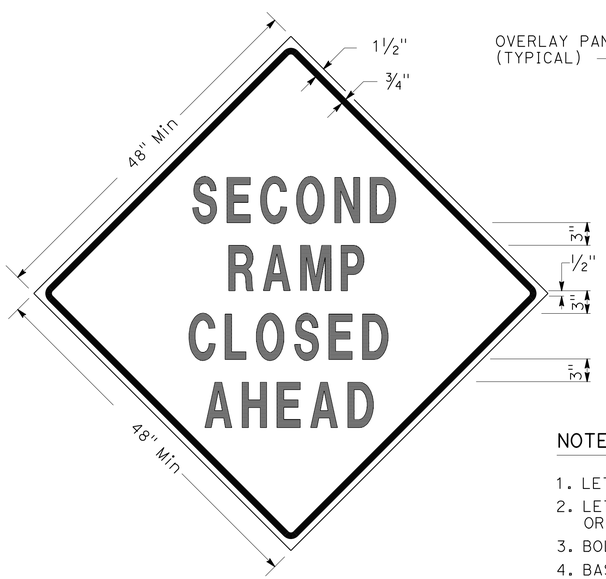

SIGN SP-3

SIGN SP-5

NOTES: SIGNS SP-3 & SP-5

1. LETTERS - 6" SERIES D.
2. LETTERS AND BORDER MUST BE BLACK ON REFLECTORIZED ORANGE BACKGROUND.
3. BOLT HOLES MUST BE 3/8" DIAMETER.
4. BASE MATERIAL MUST BE ALUMINUM (MINIMUM 0.06").
5. SIGNS MUST BE MOUNTED WITH BOTTOMS OF SIGNS A MINIMUM OF 7' ABOVE GROUND.
6. SIGN SP-5 MUST BE USED IF THE OFF-RAMP TO BE CLOSED FOLLOWS A FREEWAY OFF-CONNECTOR.

SPECIAL SIGNS FOR EXIT RAMP CLOSURES

TRAFFIC HANDLING DETAILS
TRAFFIC CONTROL SYSTEM FOR RAMP CLOSURES, DETOUR SIGNS, AND MISCELLANEOUS DETAILS
SHEET 1 OF 2

NO SCALE

THD-1

ALBERT K YU	JC		
JOCELYN C CHIANG	2/14		
REVISED BY			
DATE REVISED			
CALCULATED-DESIGNED BY	FUNCTIONAL SUPERVISOR		
CHECKED BY	ALI BAMSHAD		

STATE OF CALIFORNIA - DEPARTMENT OF TRANSPORTATION
Caltrans DTM

LAST REVISION 00-00-00 | DATE PLOTTED => 05-AUG-2015 | TIME PLOTTED => 10:21

Dist	COUNTY	ROUTE	POST MILES TOTAL PROJECT	SHEET No.	TOTAL SHEETS
07	LA	5	C43.9/C46.4	70	199

REGISTERED CIVIL ENGINEER 6-8-15 DATE

6-29-15
PLANS APPROVAL DATE

REGISTERED PROFESSIONAL ENGINEER DENNIS DO No. C68587 Exp. 9-30-15 CIVIL STATE OF CALIFORNIA

THE STATE OF CALIFORNIA OR ITS OFFICERS OR AGENTS SHALL NOT BE RESPONSIBLE FOR THE ACCURACY OR COMPLETENESS OF SCANNED COPIES OF THIS PLAN SHEET.

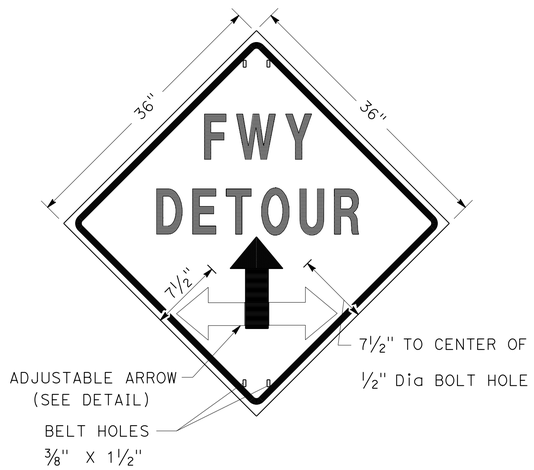

SIGN SP-2

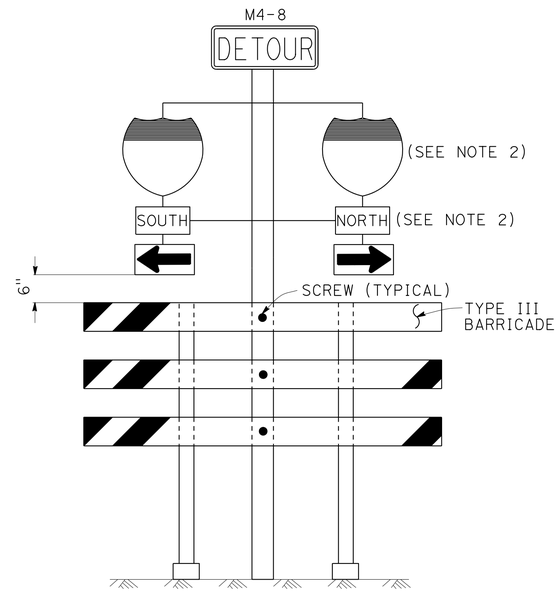

SIGN SP-6 (SEE NOTE 1)

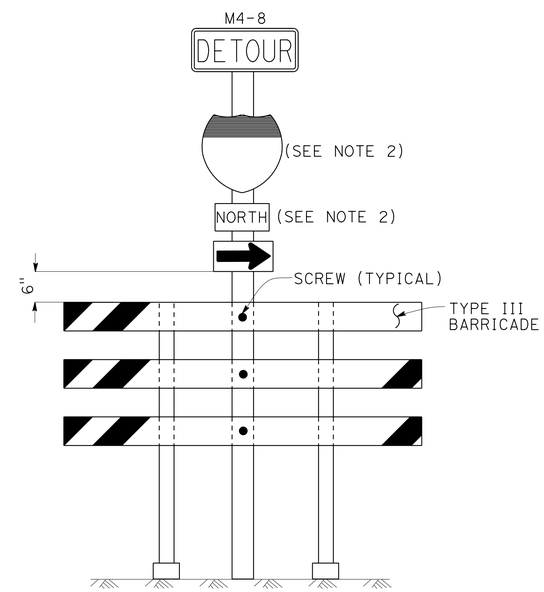

SIGN SP-7 (SEE NOTE 1)

NOTES: SIGN SP-2

1. LETTERS - 6" SERIES E.
2. LETTERS, BORDER AND ARROW - BLACK ON RETROREFLECTORIZED ORANGE BACKGROUND.
3. BASE MATERIAL FOR SIGNS AND ARROWS MUST BE ALUMINUM (MINIMUM 0.06").
4. BELTS (LUGGAGE STRAPS) MUST BE 1" WIDE BY 48" LONG, MADE OF COTTON OR POLYPROPYLENE WEB MATERIAL.
5. SIGNS MUST BE MOUNTED WITH BOTTOMS OF SIGNS A MINIMUM OF 7' ABOVE GROUND EXCEPT AS OTHERWISE SHOWN ON OTHER TRAFFIC HANDLING DETAILS PLANS.

NOTES: SIGNS SP-6 & SP-7

1. IN LIEU OF PLACING SIGNS ON TYPE III BARRICADES, SIGNS, INCLUDING POSTS, MAY BE PLACED INTO THE GROUND OR FASTENED ONTO ELECTROLIERS.
2. USE APPROPRIATE ROUTE MARKER [G26-2(CA), G27-2(CA), G28-2(CA)] AND CARDINAL DIRECTION [NORTH (M3-1), SOUTH (M3-3), EAST (M3-2), WEST (M3-4)].

SPECIAL PORTABLE FREEWAY DETOUR SIGNS

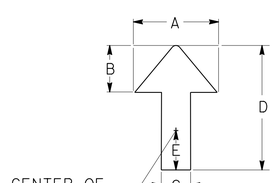

DIMENSIONS				
A	B	C	D	E
6"	3"	2"	8"	1"

ADJUSTABLE ARROW DETAIL

ABBREVIATION

(CA) CALIFORNIA CODE

TRAFFIC HANDLING DETAILS

TRAFFIC CONTROL SYSTEM FOR RAMP CLOSURES, DETOUR SIGNS, AND MISCELLANEOUS DETAILS

SHEET 2 OF 2

NO SCALE

THD-2

STATE OF CALIFORNIA - DEPARTMENT OF TRANSPORTATION
Caltrans® DTM

FUNCTIONAL SUPERVISOR: ALI BAMSHAD
CALCULATED-DESIGNED BY: ALBERT K YU
CHECKED BY: JOCELYN C CHIANG
REVISED BY: JC
DATE REVISED: 2/14

LAST REVISION: DATE PLOTTED => 05-AUG-2015 TIME PLOTTED => 10:21
00-00-00

Dist	COUNTY	ROUTE	POST MILES TOTAL PROJECT	SHEET No.	TOTAL SHEETS
07	LA	5	C43.9/C46.4	71	199

REGISTERED CIVIL ENGINEER 6-8-15 DATE

6-29-15
PLANS APPROVAL DATE

REGISTERED PROFESSIONAL ENGINEER
DENNIS DO
No. C68587
Exp. 9-30-15
CIVIL
STATE OF CALIFORNIA

THE STATE OF CALIFORNIA OR ITS OFFICERS OR AGENTS SHALL NOT BE RESPONSIBLE FOR THE ACCURACY OR COMPLETENESS OF SCANNED COPIES OF THIS PLAN SHEET.

LEGEND

- SIGN SP-2
- AND/OR — DESIGNATED DETOUR ROUTE
- DETOUR DIRECTION
- CONTROLLED INTERSECTION

NOTES:

1. SP-2 SIGNS MAY BE STRAPPED ON EXISTING ELECTROLIER, SIGNAL POST OR SIGN POST.
2. SP-2 SIGNS MUST NOT BE INSTALLED ON BARRICADES EXCEPT AS OTHERWISE SHOWN.
3. SIGN LOCATIONS ARE APPROXIMATE. EXACT LOCATIONS WILL BE DETERMINED BY THE ENGINEER.
4. SP-2 SIGNS MUST BE POSTED AT EACH CONTROLLED INTERSECTION (EXCEPT AT COMMERCIAL PROPERTY, RESIDENTIAL COMPLEX OR T-INTERSECTION FROM ONE-WAY STREET) ALONG THE DESIGNATED DETOUR ROUTE.
5. UNLESS OTHERWISE SHOWN ON OTHER THD PLANS, WHEN CONTROLLED INTERSECTIONS ALONG THE DESIGNATED DETOUR ROUTE ARE CLOSELY SPACED, PLACE SP-2 SIGNS AT CONTROLLED INTERSECTIONS AT A DISTANCE NOT TO EXCEED 1/4 MILE FROM THE PRECEDING DETOUR SIGN.
6. EXCEPT AS OTHERWISE SHOWN ON OTHER PLANS OR SPECIFIED IN THE SPECIAL PROVISIONS, SP-2 SIGNS MUST BE PLACED AS SHOWN ON THIS PLAN.

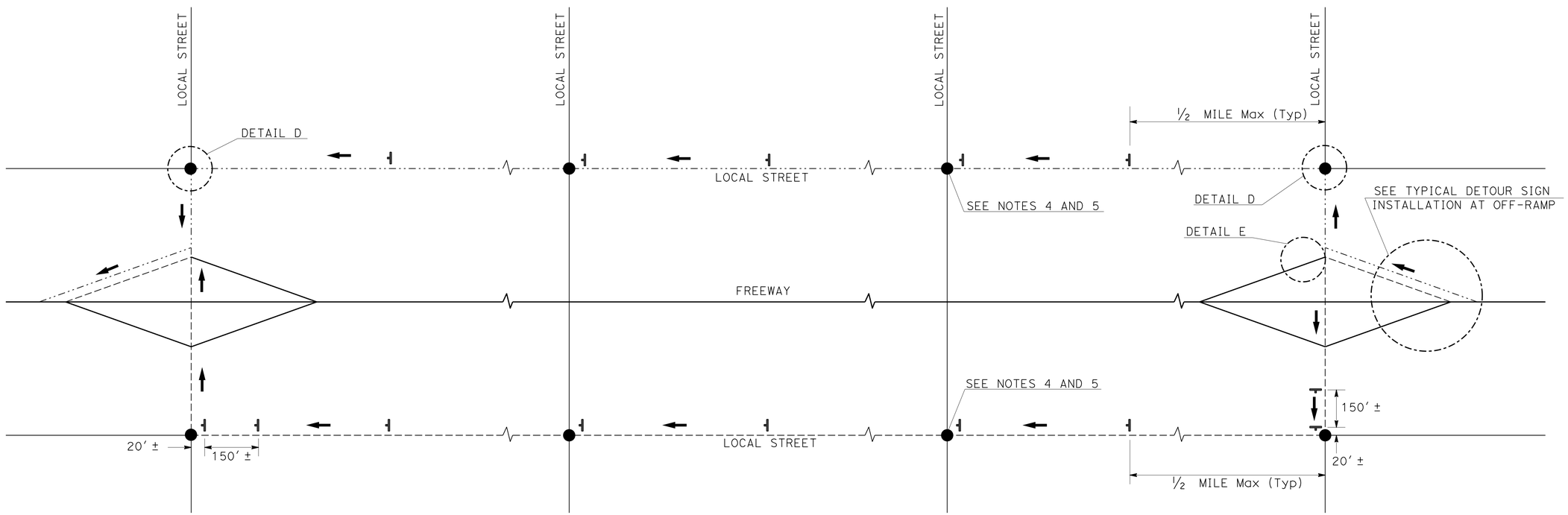

TYPICAL DETOUR SIGN INSTALLATION ALONG DESIGNATED DETOUR ROUTE

TRAFFIC HANDLING DETAILS

TRAFFIC CONTROL SYSTEM FOR DETOUR SIGN INSTALLATION ALONG DESIGNATED DETOUR ROUTE

SHEET 1 OF 3

NO SCALE

THD-3

STATE OF CALIFORNIA - DEPARTMENT OF TRANSPORTATION
Caltrans
DTM

FUNCTIONAL SUPERVISOR: ALI BAMSHAD
CALCULATED-DESIGNED BY: ALBERT K YU
CHECKED BY: JOCELYN C CHIANG
REVISED BY: JC
DATE REVISED: 2/14

LAST REVISION 00-00-00
DATE PLOTTED => 05-AUG-2015
TIME PLOTTED => 10:21

Dist	COUNTY	ROUTE	POST MILES TOTAL PROJECT	SHEET No.	TOTAL SHEETS
07	LA	5	C43.9/C46.4	72	199

REGISTERED CIVIL ENGINEER 6-8-15 DATE

6-29-15
PLANS APPROVAL DATE

REGISTERED PROFESSIONAL ENGINEER DENNIS DO No. C68587 Exp. 9-30-15 CIVIL STATE OF CALIFORNIA

THE STATE OF CALIFORNIA OR ITS OFFICERS OR AGENTS SHALL NOT BE RESPONSIBLE FOR THE ACCURACY OR COMPLETENESS OF SCANNED COPIES OF THIS PLAN SHEET.

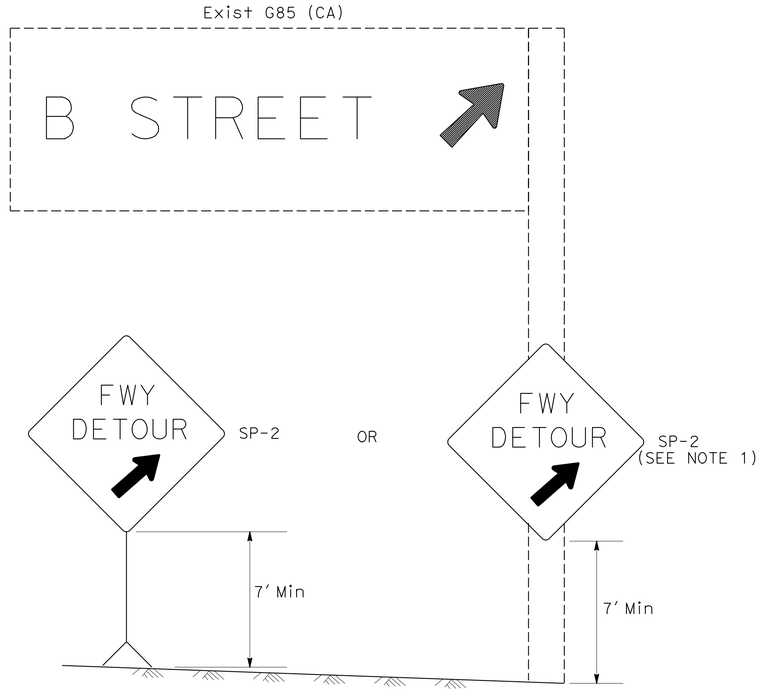

DETAIL A (SEE NOTE 3)

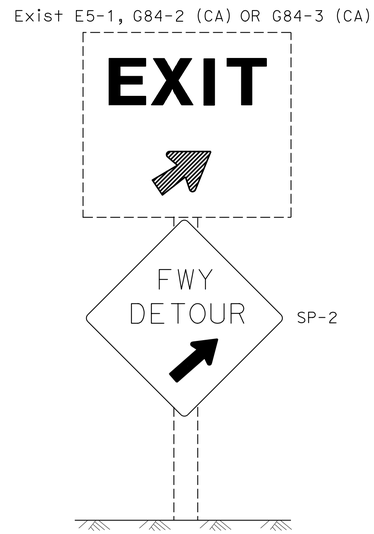

DETAIL B (SEE NOTE 3)

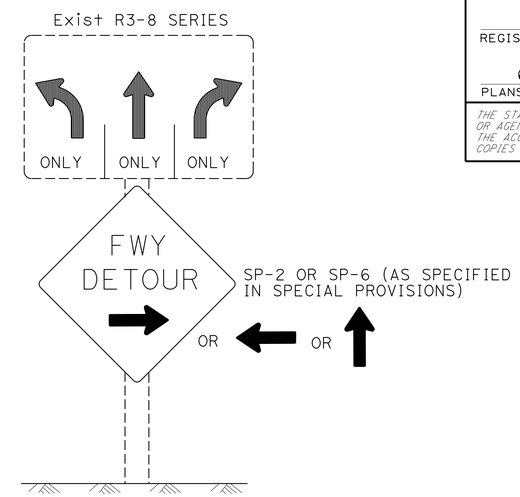

DETAIL C (SEE NOTES 4, 5, AND 6)

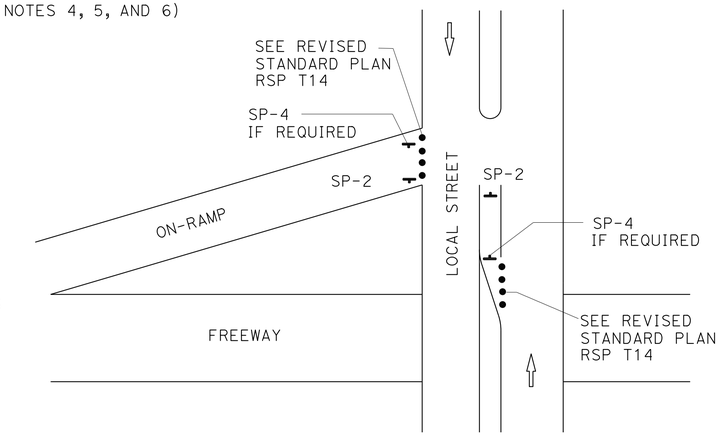

DETAIL E

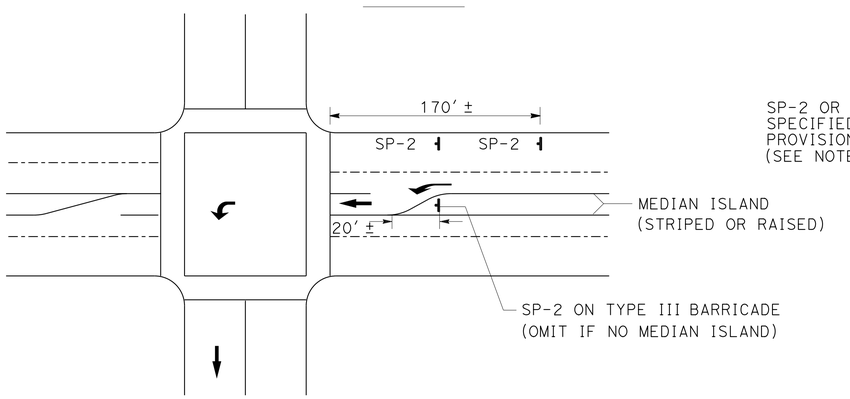

DETAIL D

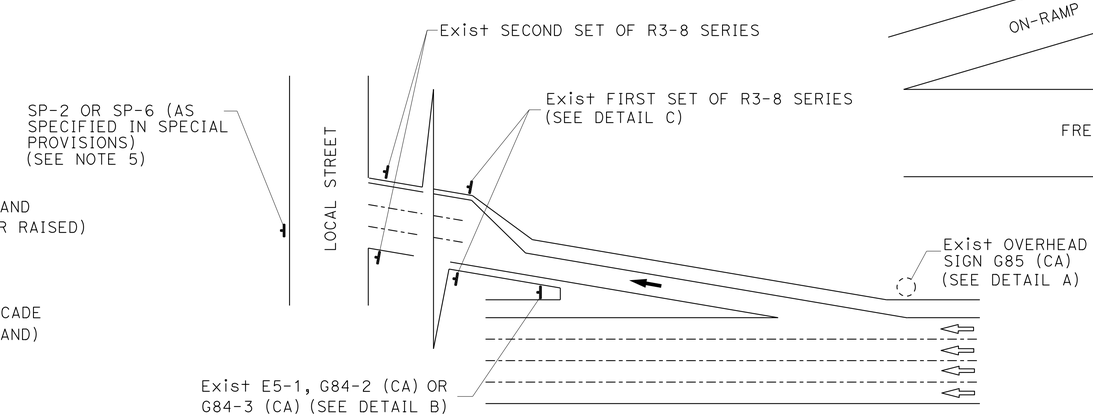

TYPICAL DETOUR SIGN INSTALLATION AT OFF-RAMP

LEGEND

- • TRAFFIC CONE
- TEMPORARY TRAFFIC CONTROL SIGN
- → DETOUR DIRECTION
- ◌ EXISTING OVERHEAD SIGN

NOTES: SIGN SP-2

1. SP-2 SIGNS MAY BE STRAPPED ON EXISTING ELECTROLIER, SIGNAL POST OR SIGN POST.
2. SP-2 SIGNS MUST NOT BE INSTALLED ON BARRICADES EXCEPT AS OTHERWISE SHOWN.
3. OMIT DETAILS A AND B FOR FULL FREEWAY CLOSURES.
4. SEE TRAFFIC HANDLING DETAILS-TRAFFIC CONTROL SYSTEM FOR RAMP CLOSURES, DETOUR SIGNS, AND MISCELLANEOUS DETAILS PLAN SHEET 2 OF 2 FOR SP-6 SIGN DETAILS.
5. IF R3-8 SERIES SIGNS ARE NOT PRESENT AT THE OFF-RAMP, SP-2 OR SP-6 SIGNS MUST BE FASTENED ONTO EXISTING ELECTROLIER, SIGNAL POST OR SIGN POST.
6. EXCEPT FOR DETAILS A & B, OMIT SP-2 SIGNS IF RAMP HAS MANDATORY SINGLE MOVE.

SIGN CODE LEGEND

XXYY-Y: FEDERAL SIGN CODE PER MANUAL ON UNIFORM TRAFFIC CONTROL DEVICES (MUTCD)

XXYY-Y (CA): CALIFORNIA SIGN CODE PER CALIFORNIA MUTCD

TRAFFIC HANDLING DETAILS
TRAFFIC CONTROL SYSTEM FOR DETOUR SIGN INSTALLATION ALONG DESIGNATED DETOUR ROUTE
SHEET 2 OF 3

NO SCALE

THD-4

REVISED BY	DATE REVISED	FUNCTIONAL SUPERVISOR	CALCULATED-DESIGNED BY	CHECKED BY
JC	2/14	ALI BAMSHAD	ALBERT K YU	JOCELYN C CHIANG

STATE OF CALIFORNIA - DEPARTMENT OF TRANSPORTATION
Caltrans DTM

LAST REVISION 00-00-00 | DATE PLOTTED => 05-AUG-2015 | TIME PLOTTED => 10:21

Dist	COUNTY	ROUTE	POST MILES TOTAL PROJECT	SHEET No.	TOTAL SHEETS
07	LA	5	C43.9/C46.4	73	199

REGISTERED CIVIL ENGINEER 6-8-15 DATE

6-29-15
PLANS APPROVAL DATE

REGISTERED PROFESSIONAL ENGINEER
DENNIS DO
No. C68587
Exp. 9-30-15
CIVIL
STATE OF CALIFORNIA

THE STATE OF CALIFORNIA OR ITS OFFICERS OR AGENTS SHALL NOT BE RESPONSIBLE FOR THE ACCURACY OR COMPLETENESS OF SCANNED COPIES OF THIS PLAN SHEET.

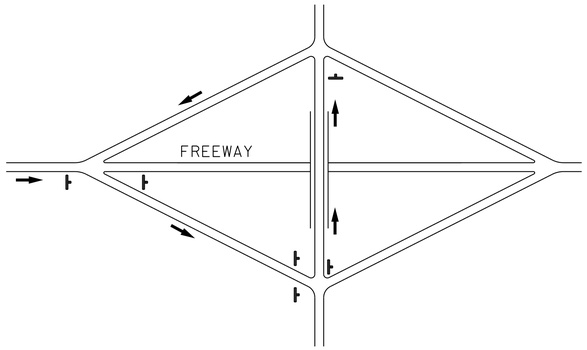

TYPE I

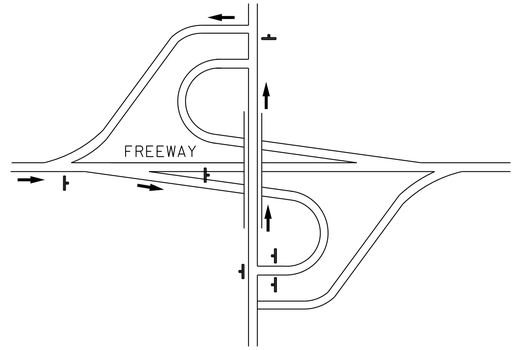

TYPE II

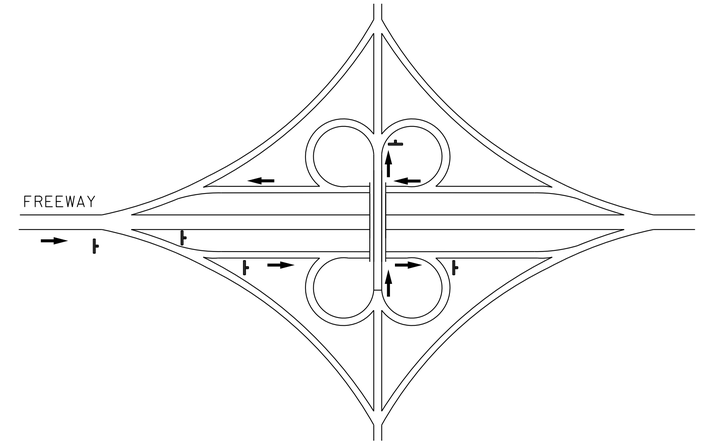

TYPE III

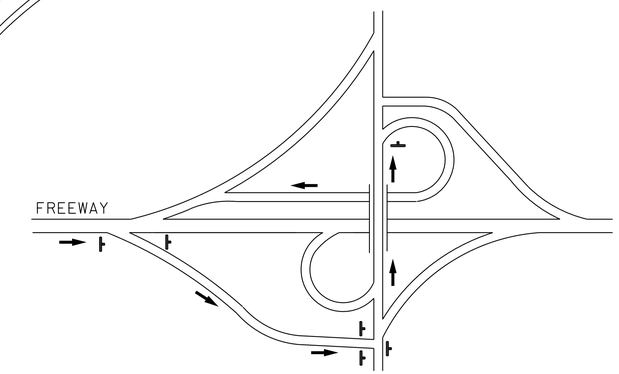

TYPE IV

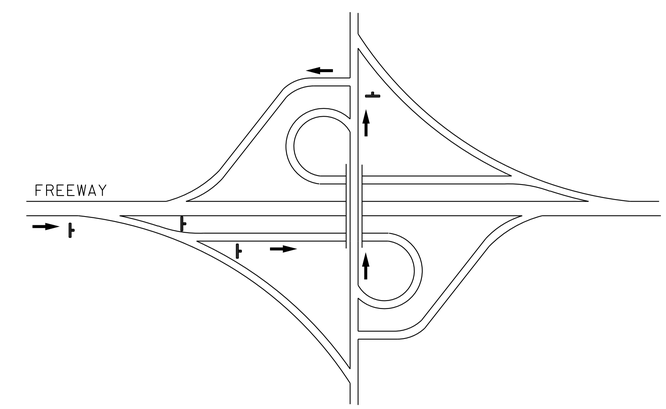

TYPE V

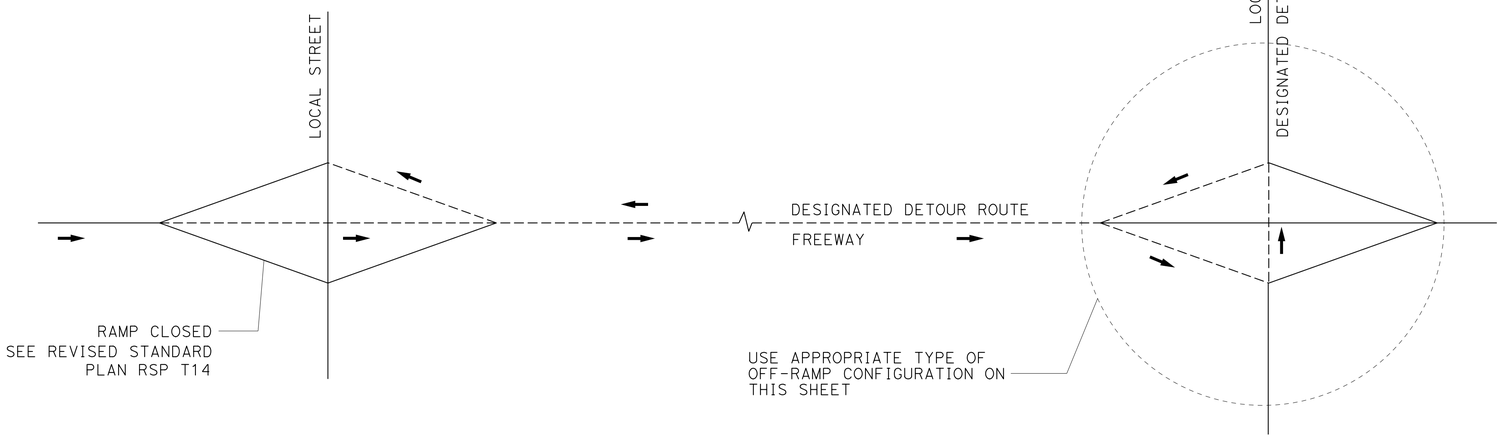

TYPE OF OFF-RAMP CONFIGURATION	MINIMUM No. OF SP-2
TYPE I	6
TYPE II	6
TYPE III	5
TYPE IV	6
TYPE V	4

TYPICAL DETOUR SIGN INSTALLATION FOR OFF-RAMP CLOSURE

NOTES:

1. FOR RAMP CONFIGURATIONS NOT SHOWN, THE EXACT LOCATIONS AND MINIMUM NUMBER OF SP-2 SIGNS MUST BE DETERMINED BY THE ENGINEER.
2. SEE TRAFFIC HANDLING DETAILS-TRAFFIC CONTROL SYSTEM FOR RAMP CLOSURES, DETOUR SIGNS, AND MISCELLANEOUS DETAILS PLAN SHEET 2 OF 2 FOR SP-2 SIGN DETAILS.

LEGEND

- SIGN SP-2
- DETOUR DIRECTION
- ----- DESIGNATED DETOUR ROUTE

TRAFFIC HANDLING DETAILS
TRAFFIC CONTROL SYSTEM FOR DETOUR SIGN INSTALLATION ALONG DESIGNATED DETOUR ROUTE
SHEET 3 OF 3

NO SCALE

THD-5

STATE OF CALIFORNIA - DEPARTMENT OF TRANSPORTATION
DTM
Caltrans

FUNCTIONAL SUPERVISOR: ALI BAMSHAD
CALCULATED-DESIGNED BY: ALBERT K YU
CHECKED BY: JOCELYN C CHIANG
REVISED BY: JC
DATE REVISED: 2/14

LAST REVISION 00-00-00
DATE PLOTTED => 05-AUG-2015
TIME PLOTTED => 10:21

Dist	COUNTY	ROUTE	POST MILES TOTAL PROJECT	SHEET No.	TOTAL SHEETS
07	LA	5	C43.9/C46.4	74	199

REGISTERED CIVIL ENGINEER 6-8-15 DATE

6-29-15
PLANS APPROVAL DATE

REGISTERED PROFESSIONAL ENGINEER DENNIS DO No. C68587 Exp. 9-30-15 CIVIL STATE OF CALIFORNIA

THE STATE OF CALIFORNIA OR ITS OFFICERS OR AGENTS SHALL NOT BE RESPONSIBLE FOR THE ACCURACY OR COMPLETENESS OF SCANNED COPIES OF THIS PLAN SHEET.

NOTES:

1. LANE CLOSURES MUST NOT BE PLACED ON CREST VERTICAL CURVES OR ON HORIZONTAL CURVES.
2. PCMS MUST BE ACTIVATED PRIOR TO TRAFFIC CONTROL ACTIVITIES ON THE LANE.
3. A MINIMUM SIGHT DISTANCE OF 1500′ MUST BE PROVIDED IN ADVANCE OF PCMS.
4. VEHICLE-MOUNTED SIGN PANELS MUST BE TYPE III OR IV RETROREFLECTORIZED SHEETING, BLACK ON WHITE OR BLACK ON ORANGE WITH 8" MINIMUM SERIES D LETTERS PER CALTRANS SIGN SPECIFICATIONS.

LEGEND

V1, V2	SHADOW VEHICLES
V3	WORK/APPLICATION VEHICLE
	PCMS
	TEMPORARY TRAFFIC CONTROL SIGN
	FLASHING ARROW SIGN (FAS)

ABBREVIATIONS

IAV	IMPACT ATTENUATOR VEHICLE
(CA)	CALIFORNIA CODE

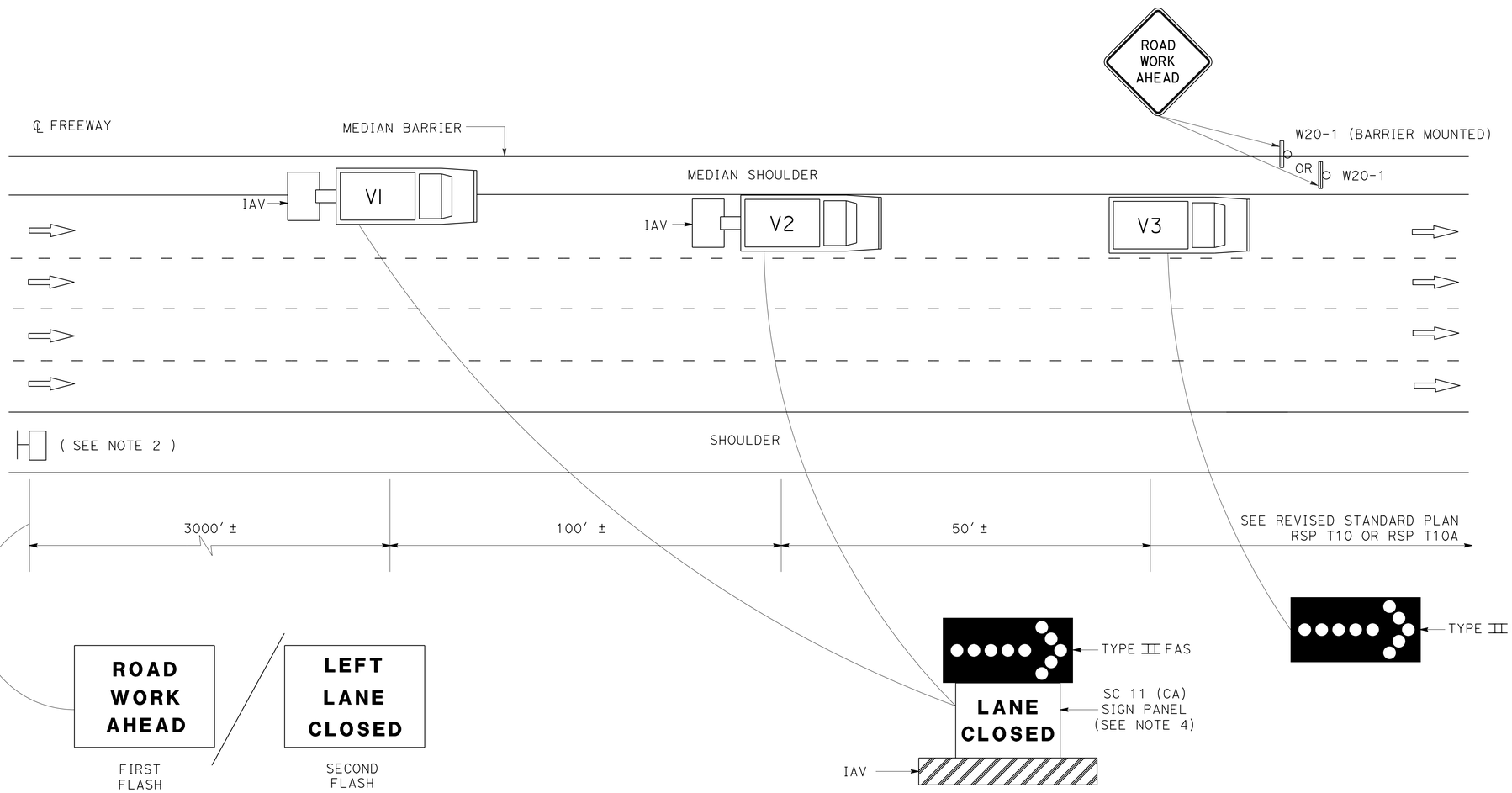

PCMS OR TRUCK MOUNTED CMS MESSAGE

TRAFFIC HANDLING DETAILS
TRAFFIC CONTROL SYSTEM
FOR MEDIAN SHOULDERS LESS THAN 8 FEET

NO SCALE

THD-6

STATE OF CALIFORNIA - DEPARTMENT OF TRANSPORTATION
Caltrans
DTM
FUNCTIONAL SUPERVISOR: ALI BAMSHAD
CALCULATED-DESIGNED BY: JOCELYN C CHIANG
CHECKED BY: ALBERT K YU
REVISED BY: JC
DATE REVISED: 2/14

LAST REVISION 00-00-00
DATE PLOTTED => 05-AUG-2015
TIME PLOTTED => 10:21

Dist	COUNTY	ROUTE	POST MILES TOTAL PROJECT	SHEET No.	TOTAL SHEETS
07	LA	5	C43.9/C46.4	75	199

REGISTERED CIVIL ENGINEER 6-8-15 DATE

6-29-15
PLANS APPROVAL DATE

REGISTERED PROFESSIONAL ENGINEER DENNIS DO No. C68587 Exp. 9-30-15 CIVIL STATE OF CALIFORNIA

THE STATE OF CALIFORNIA OR ITS OFFICERS OR AGENTS SHALL NOT BE RESPONSIBLE FOR THE ACCURACY OR COMPLETENESS OF SCANNED COPIES OF THIS PLAN SHEET.

NOTES:

1. LANE CLOSURES MUST NOT BE PLACED ON CREST VERTICAL CURVES OR ON HORIZONTAL CURVES.
2. PCMS MUST BE ACTIVATED PRIOR TO TRAFFIC CONTROL ACTIVITIES ON THE HOV LANE.
3. A MINIMUM SIGHT DISTANCE OF 1500′ MUST BE PROVIDED IN ADVANCE OF PCMS.
4. VEHICLE-MOUNTED SIGN PANELS MUST BE TYPE III OR IV RETROREFLECTORIZED SHEETING, BLACK ON WHITE OR BLACK ON ORANGE WITH 8" MINIMUM SERIES D LETTERS PER CALTRANS SIGN SPECIFICATIONS.
5. PLACE PCMS ON THE MEDIAN SHOULDER WHERE SUFFICIENT ROOM (SUCH AS CHP ENFORCEMENT AREAS) EXISTS.
6. ADVANCE WARNING SIGN INSTALLATIONS MUST BE EQUIPPED WITH FLAGS FOR DAYTIME CLOSURES. TYPE B HIGH INTENSITY FLASHING WARNING LIGHTS MUST BE USED ON SP-16 SIGN DURING NIGHT LANE CLOSURES. FLAGS AND WARNING LIGHTS MUST BE ATTACHED TO SIGNS AS APPROVED BY THE ENGINEER.

LEGEND

V1, V2	SHADOW VEHICLES
V3	WORK/APPLICATION VEHICLE
	PCMS
	PORTABLE FLASHING BEACON
	TEMPORARY TRAFFIC CONTROL SIGN
	FLASHING ARROW SIGN (FAS)

ABBREVIATIONS

IAV	IMPACT ATTENUATOR VEHICLE
(CA)	CALIFORNIA CODE
CHP	CALIFORNIA HIGHWAY PATROL

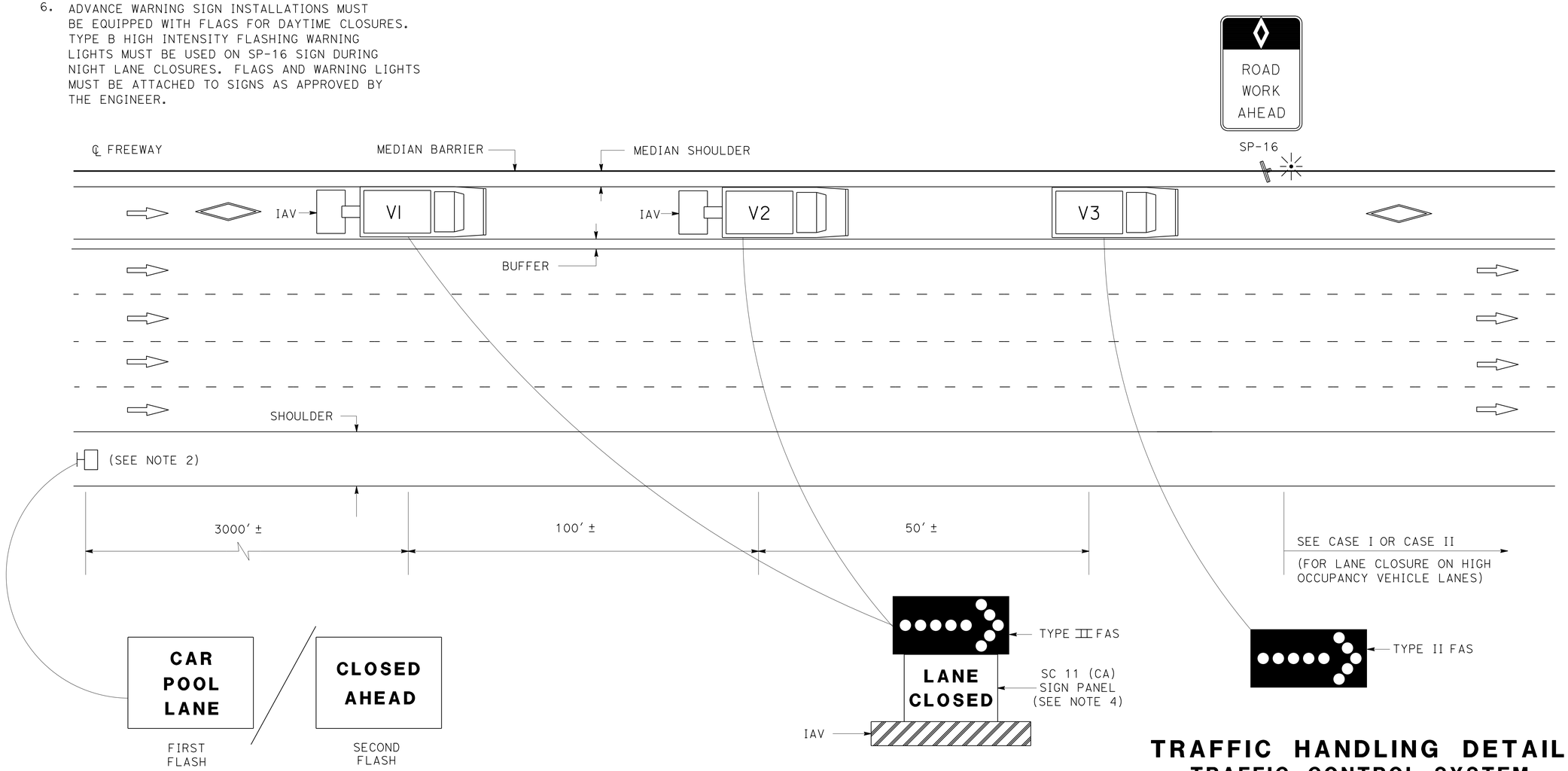

PCMS OR TRUCK MOUNTED CMS MESSAGE

(SEE NOTE 5)

TRAFFIC HANDLING DETAILS
TRAFFIC CONTROL SYSTEM FOR HIGH OCCUPANCY VEHICLE LANES WITH MEDIAN SHOULDERS LESS THAN 8 FEET

NO SCALE

THD-7

STATE OF CALIFORNIA - DEPARTMENT OF TRANSPORTATION
Caltrans® DTM

FUNCTIONAL SUPERVISOR: ALI BAMSHAD
CALCULATED-DESIGNED BY: ALBERT K YU
CHECKED BY: JOCELYN C CHIANG
REVISED BY: JC
DATE REVISED: 2/14

LAST REVISION 00-00-00 | DATE PLOTTED => 05-AUG-2015 | TIME PLOTTED => 10:21

Dist	COUNTY	ROUTE	POST MILES TOTAL PROJECT	SHEET No.	TOTAL SHEETS
07	LA	5	C43.9/C46.4	76	199

REGISTERED CIVIL ENGINEER 6/10/15 DATE

6-29-15
PLANS APPROVAL DATE

REGISTERED PROFESSIONAL ENGINEER
VINCENT NGUYEN
No. C057797
Exp. 03/31/16
CIVIL
STATE OF CALIFORNIA

THE STATE OF CALIFORNIA OR ITS OFFICERS OR AGENTS SHALL NOT BE RESPONSIBLE FOR THE ACCURACY OR COMPLETENESS OF SCANNED COPIES OF THIS PLAN SHEET.

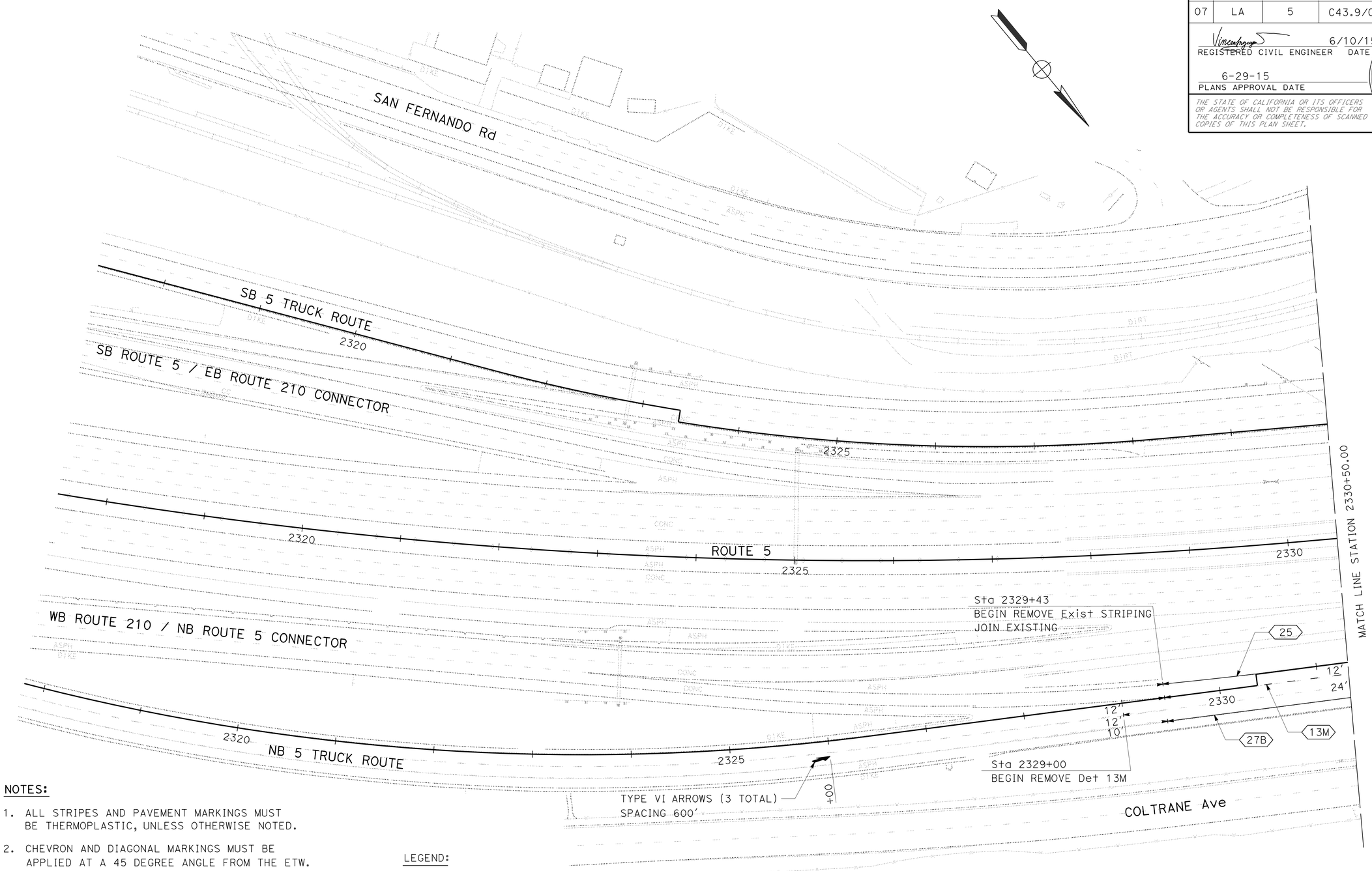

NOTES:

1. ALL STRIPES AND PAVEMENT MARKINGS MUST BE THERMOPLASTIC, UNLESS OTHERWISE NOTED.
2. CHEVRON AND DIAGONAL MARKINGS MUST BE APPLIED AT A 45 DEGREE ANGLE FROM THE ETW.
3. ALL CONFLICTING STRIPING MUST BE REMOVED.
4. ALL LIMIT LINES, CROSSWALKS, CHEVRONS AND DIAGONALS MUST BE 12" SOLID WHITE, UNLESS OTHERWISE NOTED.
5. ALL EXIST STRIPES, PAVEMENT MARKINGS & SIGNS SHALL REMAINED IN PLACE UNLESS OTHERWIES NOTED

LEGEND:

- (No) INSTALL STRIPING DETAIL NUMBER PER CALTRANS STANDARD PLANS (WITH NUMBER)
- (A) INSTALL STRIPING DETAIL NUMBER PER PAVEMENT DELINEATION DETAIL SHEET (WITH LETTER)
- CHANGE IN PAVEMENT DELINEATION DETAILS

PAVEMENT DELINEATION PLAN

SCALE: 1" = 50'

APPROVED FOR PAVEMENT DELINEATION WORK ONLY

PD-1

STATE OF CALIFORNIA - DEPARTMENT OF TRANSPORTATION
Caltrans
TRAFFIC DESIGN

FUNCTIONAL SUPERVISOR: GRISH BIGLARIAN
CALCULATED-DESIGNED BY: EUGENE BRAVO
CHECKED BY: VINCENT NGUYEN
REVISED BY
DATE REVISED

LAST REVISION 00-00-00
DATE PLOTTED => 05-AUG-2015
TIME PLOTTED => 10:21

Dist	COUNTY	ROUTE	POST MILES TOTAL PROJECT	SHEET No.	TOTAL SHEETS
07	LA	5	C43.9/C46.4	77	199

REGISTERED CIVIL ENGINEER 6/10/15 DATE

6-29-15
PLANS APPROVAL DATE

REGISTERED PROFESSIONAL ENGINEER
VINCENT NGUYEN
No. C057797
Exp 03/31/16
CIVIL
STATE OF CALIFORNIA

THE STATE OF CALIFORNIA OR ITS OFFICERS OR AGENTS SHALL NOT BE RESPONSIBLE FOR THE ACCURACY OR COMPLETENESS OF SCANNED COPIES OF THIS PLAN SHEET.

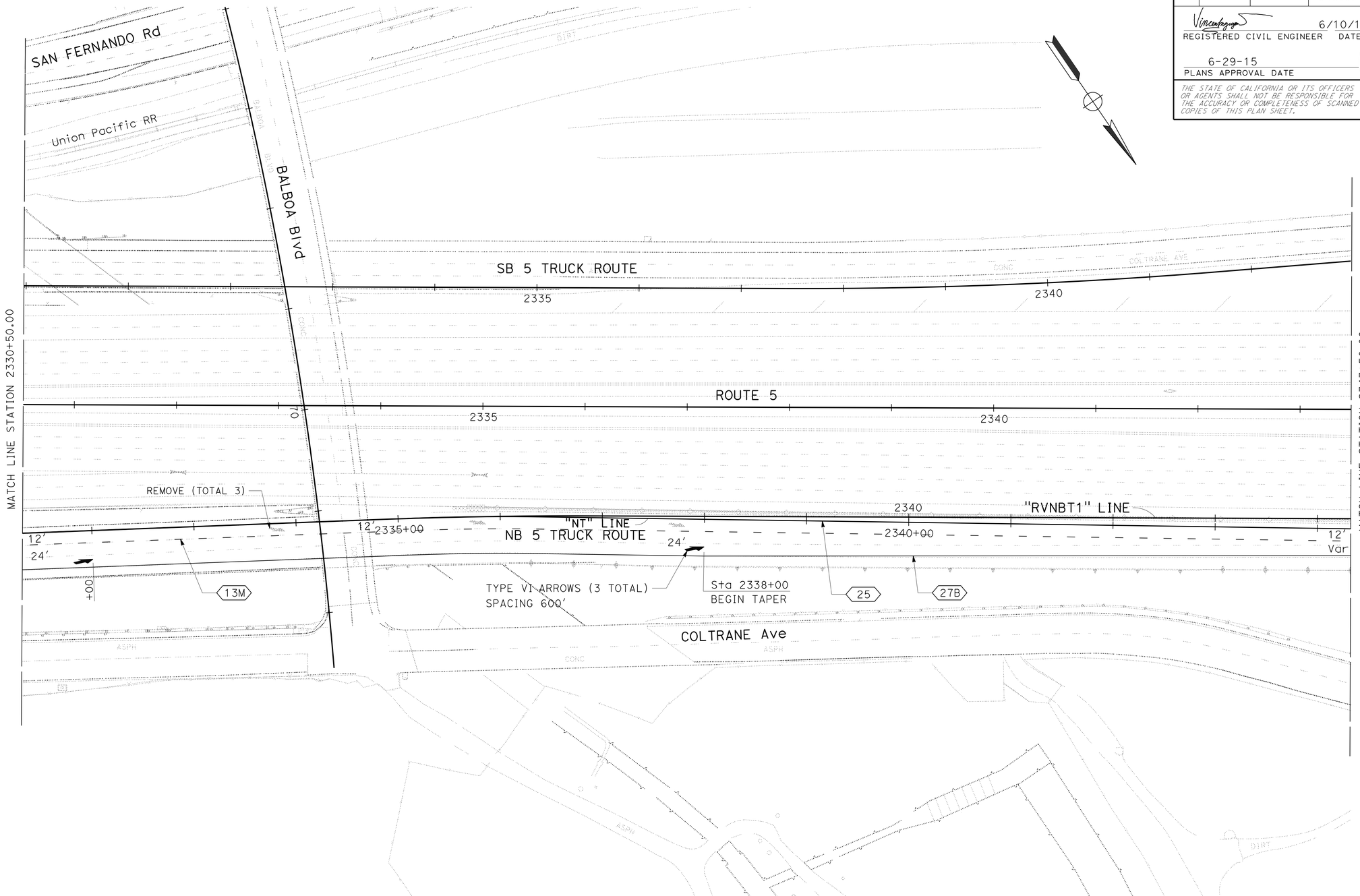

PAVEMENT DELINEATION PLAN

SCALE: 1" = 50'

APPROVED FOR PAVEMENT DELINEATION WORK ONLY

PD-2

STATE OF CALIFORNIA - DEPARTMENT OF TRANSPORTATION
Caltrans
TRAFFIC DESIGN

FUNCTIONAL SUPERVISOR: GRISH BIGLARIAN
CALCULATED-DESIGNED BY: EUGENE BRAVO
CHECKED BY: VINCENT NGUYEN
REVISED BY
DATE REVISED

LAST REVISION 00-00-00
DATE PLOTTED => 05-AUG-2015
TIME PLOTTED => 10:21

Dist	COUNTY	ROUTE	POST MILES TOTAL PROJECT	SHEET No.	TOTAL SHEETS
07	LA	5	C43.9/C46.4	78	199

REGISTERED CIVIL ENGINEER 6/10/15 DATE

6-29-15
PLANS APPROVAL DATE

REGISTERED PROFESSIONAL ENGINEER
VINCENT NGUYEN
No. C057797
Exp. 03/31/16
CIVIL
STATE OF CALIFORNIA

THE STATE OF CALIFORNIA OR ITS OFFICERS OR AGENTS SHALL NOT BE RESPONSIBLE FOR THE ACCURACY OR COMPLETENESS OF SCANNED COPIES OF THIS PLAN SHEET.

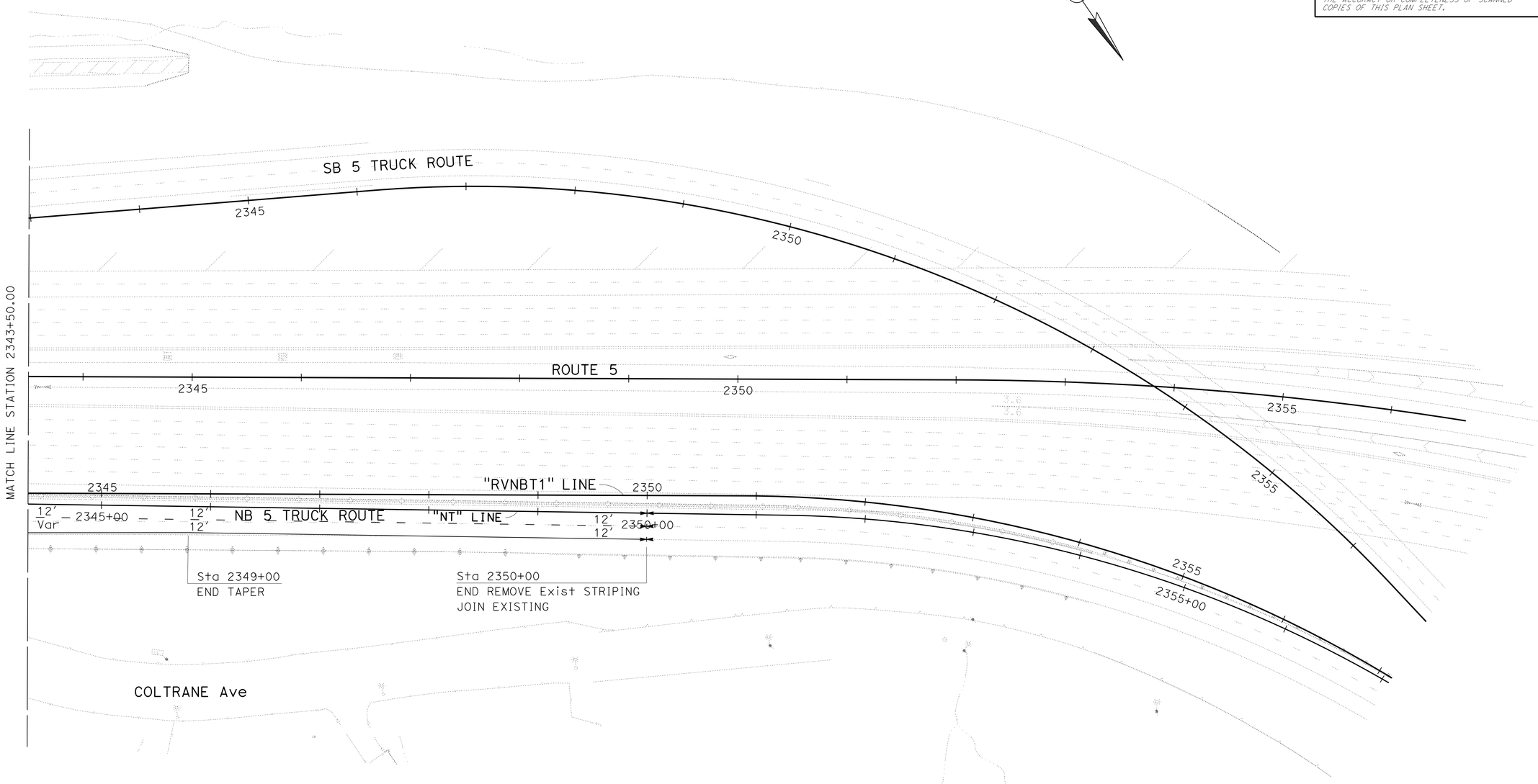

PAVEMENT DELINEATION PLAN

SCALE: 1" = 50'

APPROVED FOR PAVEMENT DELINEATION WORK ONLY

PD-3

REVISED BY	DATE REVISED

CALCULATED-DESIGNED BY: EUGENE BRAVO
CHECKED BY: VINCENT NGUYEN

FUNCTIONAL SUPERVISOR: GRISH BIGLARIAN

STATE OF CALIFORNIA - DEPARTMENT OF TRANSPORTATION
Caltrans
TRAFFIC DESIGN

LAST REVISION 00-00-00
DATE PLOTTED => 05-AUG-2015
TIME PLOTTED => 10:21

Dist	COUNTY	ROUTE	POST MILES TOTAL PROJECT	SHEET No.	TOTAL SHEETS
07	LA	5	C43.9/C46.4	79	199

REGISTERED CIVIL ENGINEER 6/10/15 DATE

6-29-15
PLANS APPROVAL DATE

REGISTERED PROFESSIONAL ENGINEER VINCENT NGUYEN No. C057797 Exp. 03/31/16 CIVIL STATE OF CALIFORNIA

THE STATE OF CALIFORNIA OR ITS OFFICERS OR AGENTS SHALL NOT BE RESPONSIBLE FOR THE ACCURACY OR COMPLETENESS OF SCANNED COPIES OF THIS PLAN SHEET.

PAVEMENT DELINEATION QUANTITIES

SHEET No.	PAINTED TRAFFIC STRIPE (2-COAT) BLACK	THERMOPLASTIC TRAFFIC STRIPE (ENHANCED WET NIGHT VISIBILITY)								THERMOPLASTIC CROSSWALK AND PAVEMENT MARKINGS (ENHANCED WET NIGHT VISIBILITY)						PAVEMENT MARKER				
		4"			8"								12"				RETROREFLECTIVE			
		DETAIL 13M (BROKEN 36' - 12')	DETAIL 25 SOLID YELLOW STRIPE	DETAIL 27B SOLID WHITE STRIPE	DETAIL 36 SOLID WHITE	DETAIL 36A SOLID WHITE	DETAIL 36B SOLID WHITE	DETAIL 38B SOLID WHITE	DETAIL 37 (BROKEN 12'- 3')	ARROW	SYMBOL	WORDS	CROSSWALK/ LIMIT LINE	DIAGONALS WHITE STRIPE	CHEVRON WHITE STRIPE	TYPE A NON-REFLECTIVE	TYPE C	TYPE D	TYPE G	TYPE H
	LF	LF	LF	LF	LF	LF	LF	LF	LF	SQFT	SQFT	SQFT	SQFT	SQFT	SQFT	EA	EA	EA	EA	EA
L-1	200	200	0	200	200											17			13	
L-2	2,800	2,800	2,800	2,800	250					252						233			69	58
PD-1	2,800	2,800	2,170	2,800	900		250	300	550							233	8		162	45
PD-2	3,650	3,650	2,600	2,600					470	126						304	8		101	54
PD-3	2,700	2,700	2,700	2,700												225			56	56
L-6	2,560	2,560	2,560	2,560												213			53	53
L-7	2,600	2,600	2,600	2,770			460		1,150							217	8		144	54
L-8	3,310	3,310	2,760	3,010	1,100		250		150					100		276	8		129	58
L-9	2,230	2,230	2,230	2,530	400	200										186			71	46
L-10	2,800	2,800	2,800	2,800	300									336		233			71	58
L-11	2,600	2,600	2,600	2,600	780									364		217			87	54
L-12	1,470	1,470	80	1,470	700		1,040							322		123			103	2
SUBTOTAL	29,720	29,720	25,900	28,840	4,630	200	2,000	300	2,320	378	0	0	0	1,122	0	2,477	32	0	1,059	540
TOTAL PDQ-1	29,720	29,720	54,740		7,130				2,320	1,500						2,477	1,631			

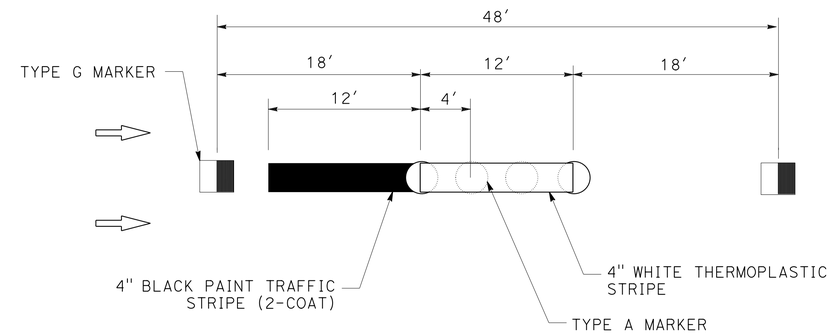

DETAIL 13M

PAVEMENT DELINEATION QUANTITIES

PDQ-1

STATE OF CALIFORNIA - DEPARTMENT OF TRANSPORTATION
Caltrans® TRAFFIC DESIGN

FUNCTIONAL SUPERVISOR: GRISH BIGLARIAN
CALCULATED-DESIGNED BY: BRIAN NGUYEN
CHECKED BY: VINCENT NGUYEN
REVISED BY
DATE REVISED

LAST REVISION 12-30-13 | DATE PLOTTED => 05-AUG-2015 | TIME PLOTTED => 10:21

Dist	COUNTY	ROUTE	POST MILES TOTAL PROJECT	SHEET No.	TOTAL SHEETS
07	LA	5	C43.9/C46.4	80	199

REGISTERED CIVIL ENGINEER 6/10/15 DATE

6-29-15
PLANS APPROVAL DATE

REGISTERED PROFESSIONAL ENGINEER VINCENT NGUYEN No. C057797 Exp. 03/31/16 CIVIL STATE OF CALIFORNIA

THE STATE OF CALIFORNIA OR ITS OFFICERS OR AGENTS SHALL NOT BE RESPONSIBLE FOR THE ACCURACY OR COMPLETENESS OF SCANNED COPIES OF THIS PLAN SHEET.

LEGEND:

- No. — OVERHEAD SIGN INDENTIFICATION (WITH NUMBER & LETTER)
- No. — ROADSIDE SIGN INDENTIFICATION (WITH NUMBER)
- E — EXISTING SIGN TO REMAIN
- I — INSTALL SIGN
- R — REMOVE SIGN
- RP — REMOVE SIGN PANEL
- IP — INSTALL NEW SIGN PANEL ON EXISTING FRAME
- SINGLE POST SIGN
- DOUBLE POST SIGN

NOTES:

1. ALL EXISTING SIGNS TO BE REMAIN UNLESS OTHERWISE NOTED.
2. FOR SIGN DETAILS ON NEW AND/OR MODIFIED OVERHEAD SIGNS, SEE SD SHEETS.

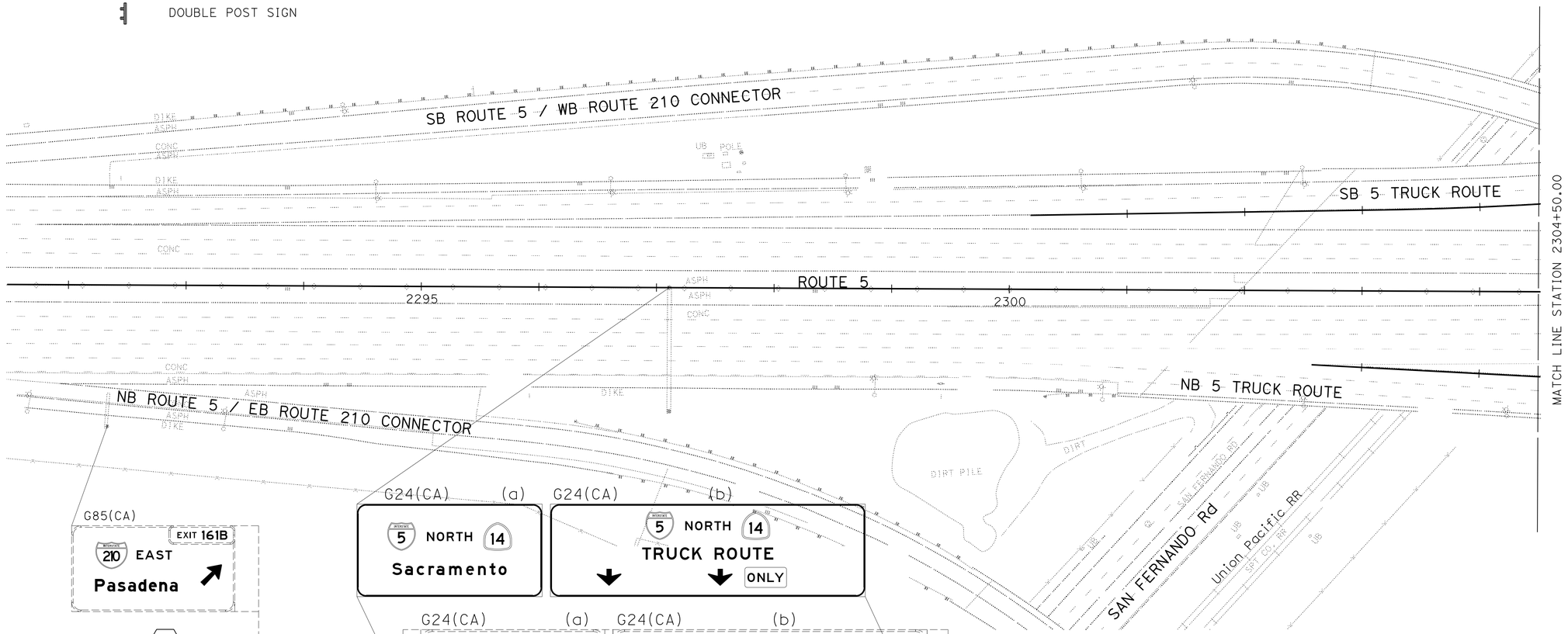

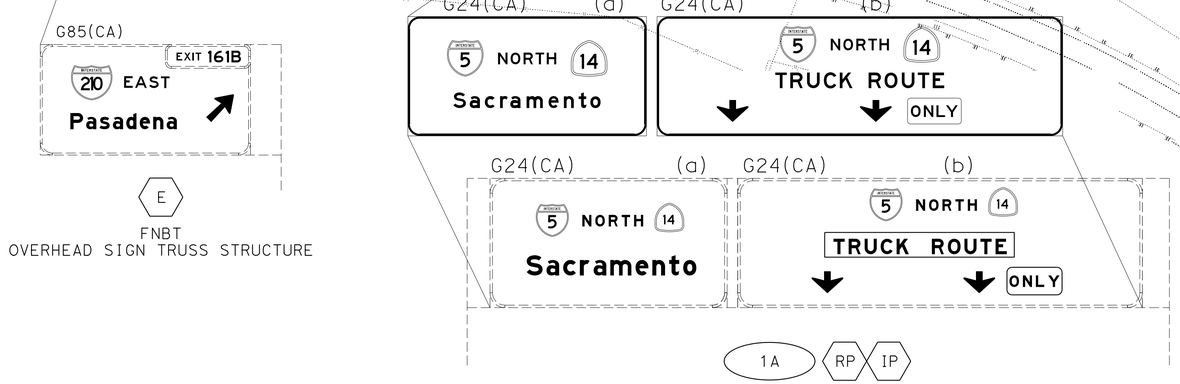

SIGN PLAN

SCALE: 1" = 50'

APPROVED FOR SIGN WORK ONLY

S-1

STATE OF CALIFORNIA - DEPARTMENT OF TRANSPORTATION
Caltrans
TRAFFIC DESIGN

FUNCTIONAL SUPERVISOR: GRISH BIGLARIAN
CALCULATED-DESIGNED BY: EUGENE BRAVO
CHECKED BY: VINCENT NGUYEN
REVISED BY
DATE REVISED

LAST REVISION 00-00-00
DATE PLOTTED => 05-AUG-2015
TIME PLOTTED => 10:21

Dist	COUNTY	ROUTE	POST MILES TOTAL PROJECT	SHEET No.	TOTAL SHEETS
07	LA	5	C43.9/C46.4	81	199

REGISTERED CIVIL ENGINEER 6/10/15 DATE

6-29-15
PLANS APPROVAL DATE

REGISTERED PROFESSIONAL ENGINEER
VINCENT NGUYEN
No. C057797
Exp. 03/31/16
CIVIL
STATE OF CALIFORNIA

THE STATE OF CALIFORNIA OR ITS OFFICERS OR AGENTS SHALL NOT BE RESPONSIBLE FOR THE ACCURACY OR COMPLETENESS OF SCANNED COPIES OF THIS PLAN SHEET.

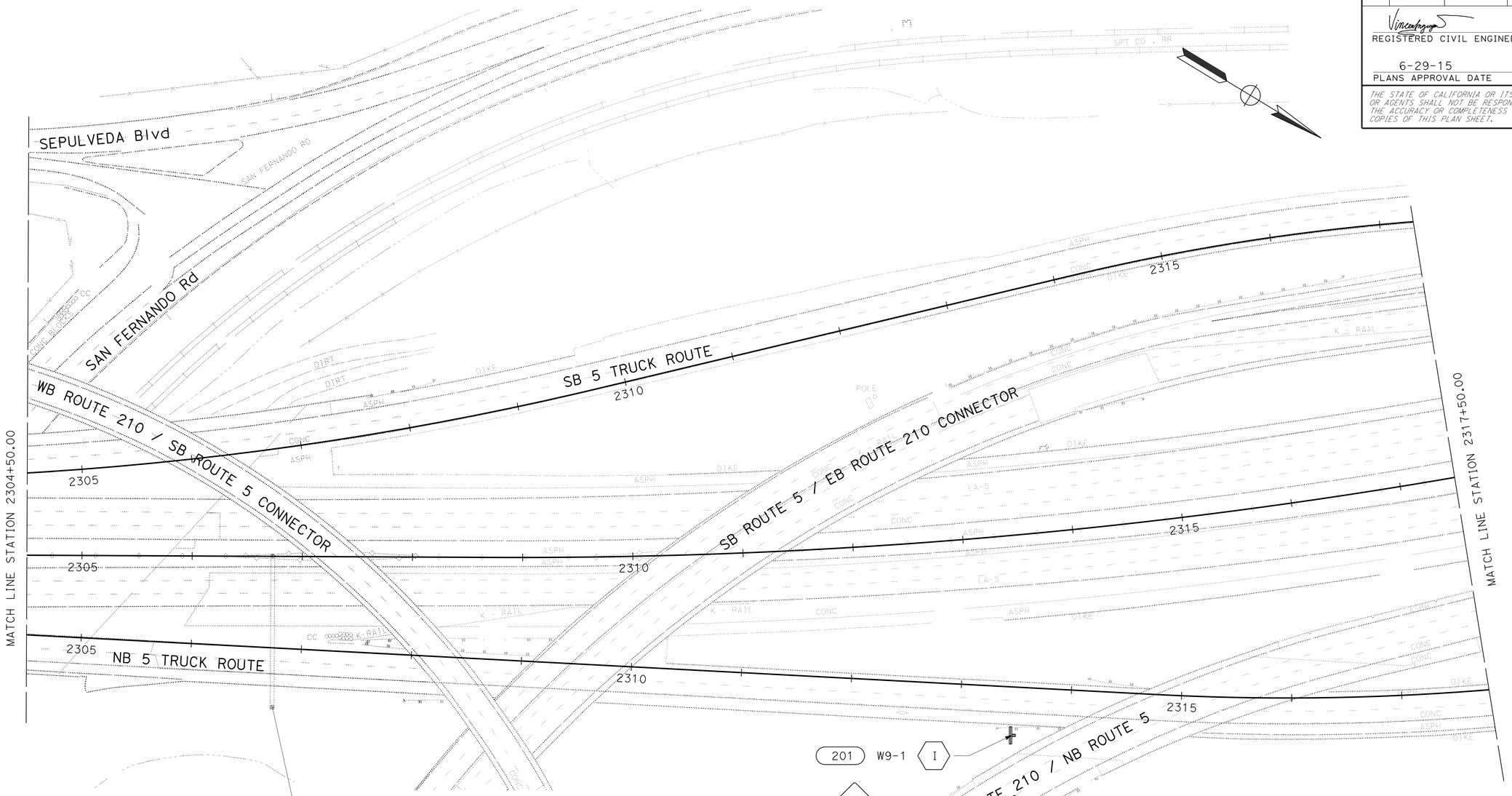

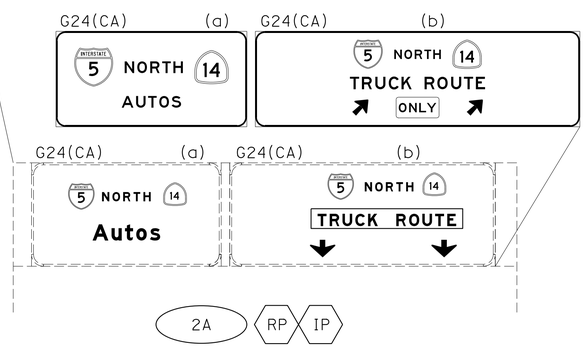

FNBT OVERHEAD
SIGN (TRUSS) STRUCTURE

SIGN PLAN

SCALE: 1" = 50'

APPROVED FOR SIGN WORK ONLY

S-2

STATE OF CALIFORNIA - DEPARTMENT OF TRANSPORTATION
Caltrans
TRAFFIC DESIGN

FUNCTIONAL SUPERVISOR: GRISH BIGLARIAN
CALCULATED-DESIGNED BY: EUGENE BRAVO
CHECKED BY: VINCENT NGUYEN
REVISED BY
DATE REVISED

LAST REVISION 00-00-00
DATE PLOTTED => 05-AUG-2015
TIME PLOTTED => 10:21

Dist	COUNTY	ROUTE	POST MILES TOTAL PROJECT	SHEET No.	TOTAL SHEETS
07	LA	5	C43.9/C46.4	82	199

REGISTERED CIVIL ENGINEER 6/10/15 DATE

6-29-15
PLANS APPROVAL DATE

REGISTERED PROFESSIONAL ENGINEER VINCENT NGUYEN No. C057797 Exp. 03/31/16 CIVIL STATE OF CALIFORNIA

THE STATE OF CALIFORNIA OR ITS OFFICERS OR AGENTS SHALL NOT BE RESPONSIBLE FOR THE ACCURACY OR COMPLETENESS OF SCANNED COPIES OF THIS PLAN SHEET.

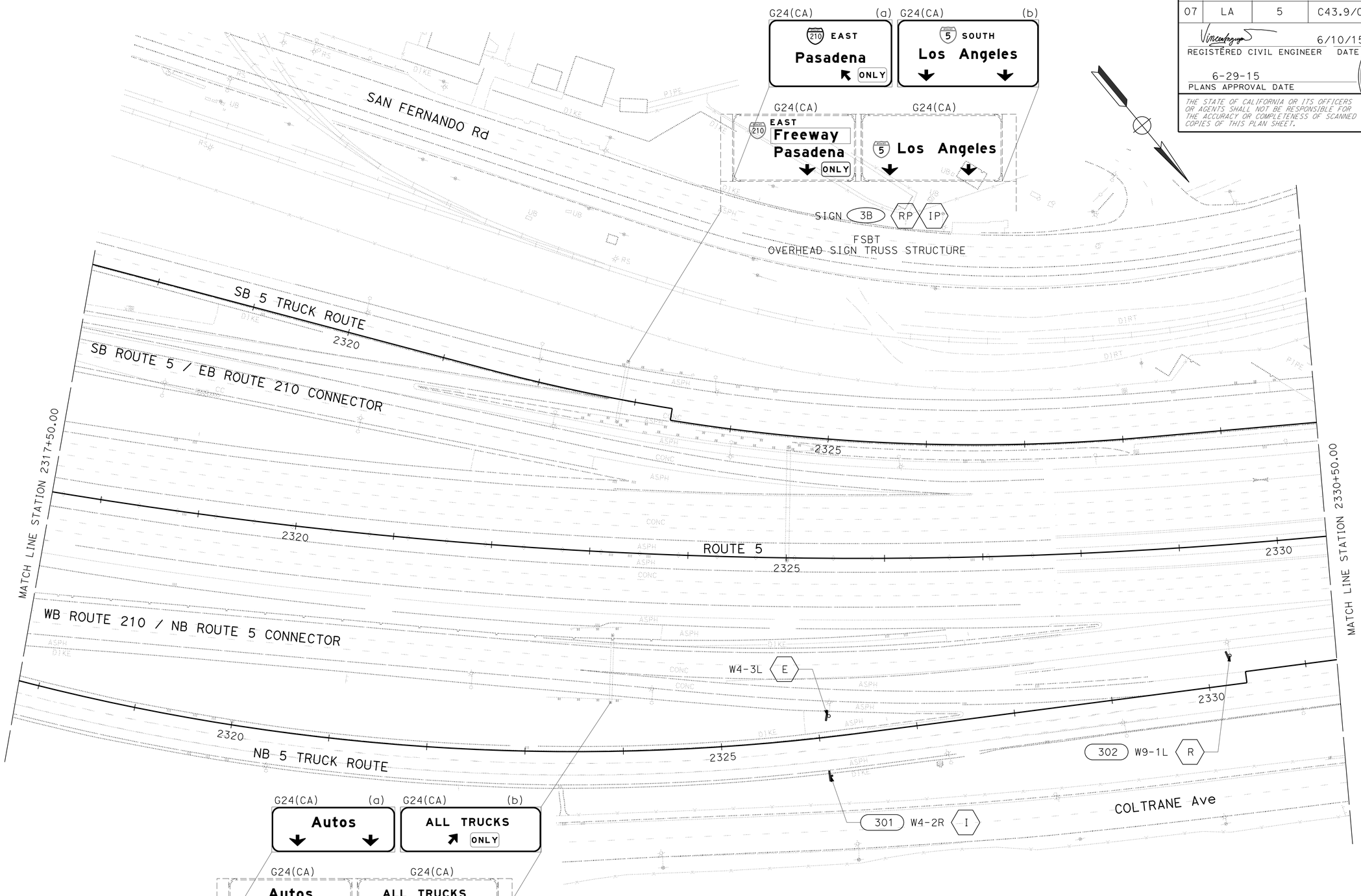

SIGN PLAN

SCALE: 1" = 50'

APPROVED FOR SIGN WORK ONLY

S-3

STATE OF CALIFORNIA - DEPARTMENT OF TRANSPORTATION
Caltrans
TRAFFIC DESIGN

FUNCTIONAL SUPERVISOR: GRISH BIGLARIAN
CALCULATED-DESIGNED BY: EUGENE BRAVO
CHECKED BY: VINCENT NGUYEN
REVISED BY
DATE REVISED

LAST REVISION 00-00-00
DATE PLOTTED => 05-AUG-2015
TIME PLOTTED => 10:21

Dist	COUNTY	ROUTE	POST MILES TOTAL PROJECT	SHEET No.	TOTAL SHEETS
07	LA	5	C43.9/C46.4	83	199

REGISTERED CIVIL ENGINEER 6/10/15 DATE

6-29-15
PLANS APPROVAL DATE

REGISTERED PROFESSIONAL ENGINEER VINCENT NGUYEN No. C057797 Exp. 03/31/16 CIVIL STATE OF CALIFORNIA

THE STATE OF CALIFORNIA OR ITS OFFICERS OR AGENTS SHALL NOT BE RESPONSIBLE FOR THE ACCURACY OR COMPLETENESS OF SCANNED COPIES OF THIS PLAN SHEET.

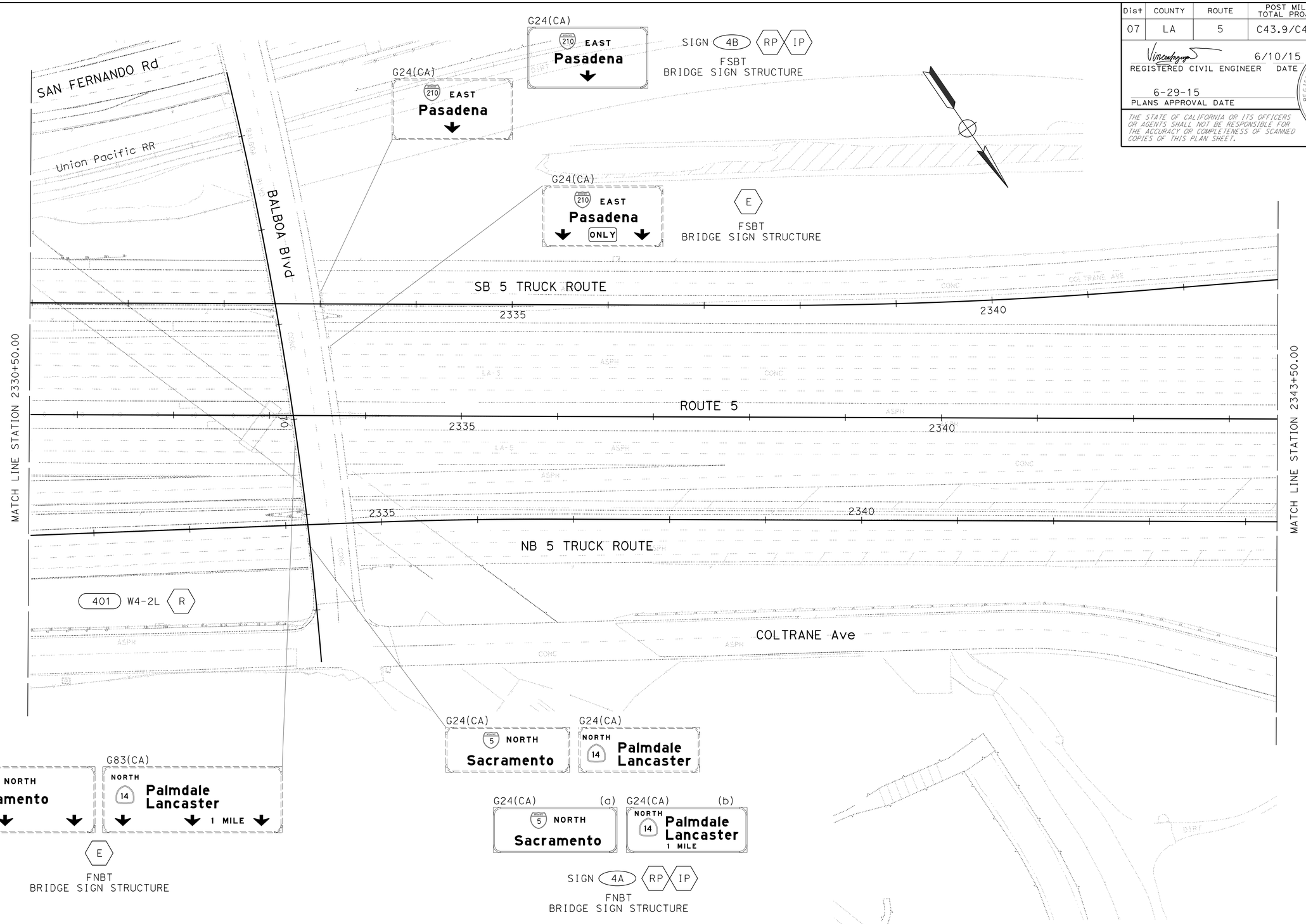

SIGN PLAN

SCALE: 1" = 50'

APPROVED FOR SIGN WORK ONLY

S-4

STATE OF CALIFORNIA - DEPARTMENT OF TRANSPORTATION
TRAFFIC DESIGN

FUNCTIONAL SUPERVISOR: GRISH BIGLARIAN
CALCULATED-DESIGNED BY: EUGENE BRAVO
CHECKED BY: VINCENT NGUYEN
REVISED BY
DATE REVISED

LAST REVISION 00-00-00
DATE PLOTTED => 05-AUG-2015
TIME PLOTTED => 10:21

BORDER LAST REVISED 7/2/2010
USERNAME => s119140
DGN FILE => 730290oa004.dgn
RELATIVE BORDER SCALE IS IN INCHES 0 1 2 3
UNIT 1877
PROJECT NUMBER & PHASE 07130004781

Dist	COUNTY	ROUTE	POST MILES TOTAL PROJECT	SHEET No.	TOTAL SHEETS
07	LA	5	C43.9/C46.4	84	199

REGISTERED CIVIL ENGINEER 6/10/15 DATE

6-29-15
PLANS APPROVAL DATE

REGISTERED PROFESSIONAL ENGINEER
VINCENT NGUYEN
No. C057797
Exp. 03/31/16
CIVIL
STATE OF CALIFORNIA

THE STATE OF CALIFORNIA OR ITS OFFICERS OR AGENTS SHALL NOT BE RESPONSIBLE FOR THE ACCURACY OR COMPLETENESS OF SCANNED COPIES OF THIS PLAN SHEET.

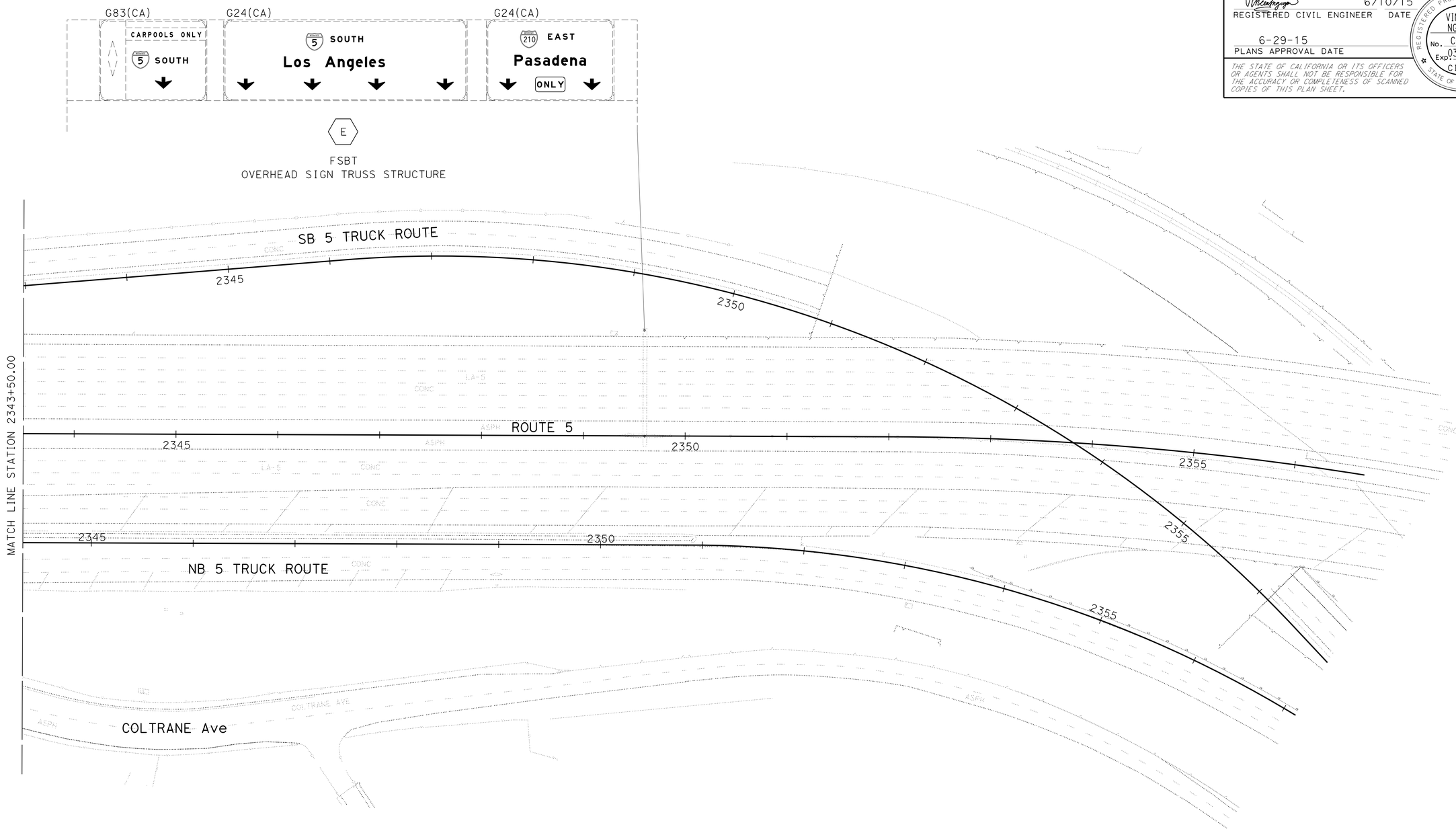

SIGN PLAN

SCALE: 1" = 50'

APPROVED FOR SIGN WORK ONLY

S-5

STATE OF CALIFORNIA - DEPARTMENT OF TRANSPORTATION
Caltrans®
TRAFFIC DESIGN

FUNCTIONAL SUPERVISOR: GRISH BIGLARIAN
CALCULATED-DESIGNED BY: EUGENE BRAVO
CHECKED BY: VINCENT NGUYEN
REVISED BY
DATE REVISED

LAST REVISION 00-00-00
DATE PLOTTED => 05-AUG-2015
TIME PLOTTED => 10:21

Dist	COUNTY	ROUTE	POST MILES TOTAL PROJECT	SHEET No.	TOTAL SHEETS
07	LA	5	C43.9/C46.4	85	199

REGISTERED CIVIL ENGINEER 6/10/15 DATE

6-29-15
PLANS APPROVAL DATE

REGISTERED PROFESSIONAL ENGINEER
VINCENT NGUYEN
No. C057797
Exp. 03/31/16
CIVIL
STATE OF CALIFORNIA

THE STATE OF CALIFORNIA OR ITS OFFICERS OR AGENTS SHALL NOT BE RESPONSIBLE FOR THE ACCURACY OR COMPLETENESS OF SCANNED COPIES OF THIS PLAN SHEET.

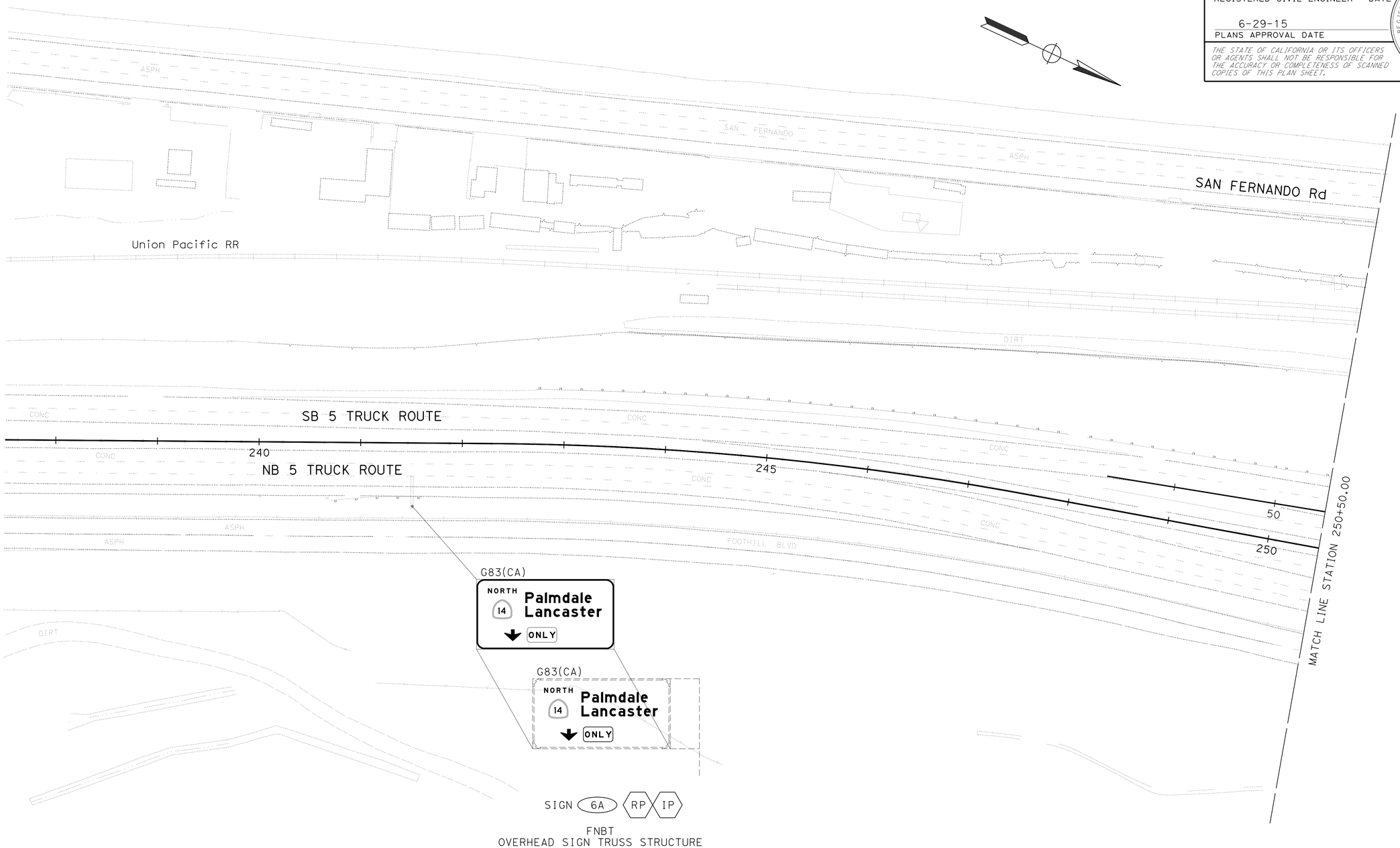

SIGN PLAN

SCALE: 1" = 50'

APPROVED FOR SIGN WORK ONLY

S-6

STATE OF CALIFORNIA - DEPARTMENT OF TRANSPORTATION
Caltrans
TRAFFIC DESIGN

FUNCTIONAL SUPERVISOR: GRISH BIGLARIAN
CALCULATED-DESIGNED BY: EUGENE BRAVO
CHECKED BY: VINCENT NGUYEN
REVISED BY
DATE REVISED

LAST REVISION 00-00-00
DATE PLOTTED => 05-AUG-2015
TIME PLOTTED => 10:21

Dist	COUNTY	ROUTE	POST MILES TOTAL PROJECT	SHEET No.	TOTAL SHEETS
07	LA	5	C43.9/C46.4	86	199

REGISTERED CIVIL ENGINEER 6/10/15 DATE

6-29-15
PLANS APPROVAL DATE

REGISTERED PROFESSIONAL ENGINEER VINCENT NGUYEN No. C057797 Exp. 03/31/16 CIVIL STATE OF CALIFORNIA

THE STATE OF CALIFORNIA OR ITS OFFICERS OR AGENTS SHALL NOT BE RESPONSIBLE FOR THE ACCURACY OR COMPLETENESS OF SCANNED COPIES OF THIS PLAN SHEET.

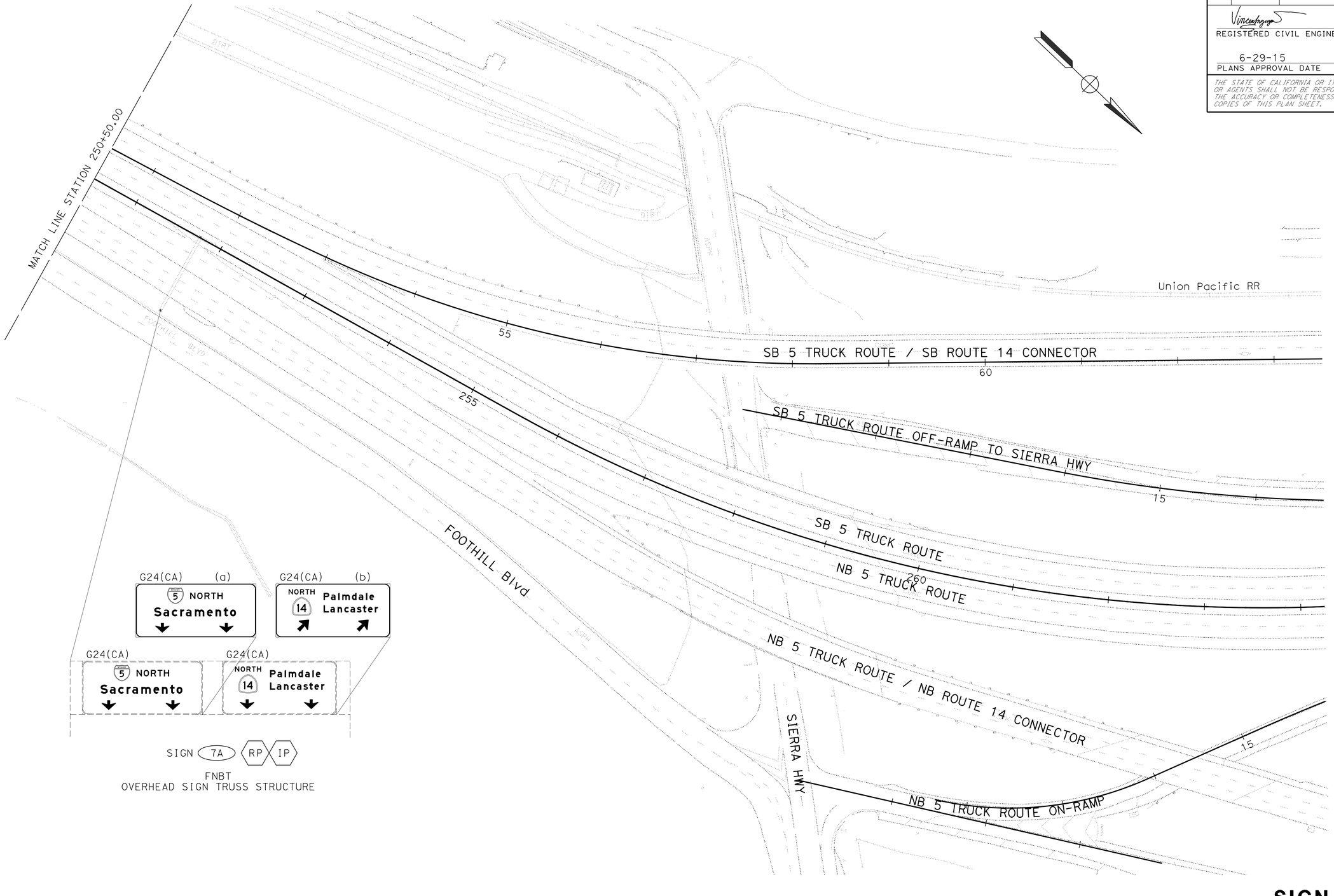

SIGN PLAN

SCALE: 1" = 50'

APPROVED FOR SIGN WORK ONLY

S-7

STATE OF CALIFORNIA - DEPARTMENT OF TRANSPORTATION
Caltrans
TRAFFIC DESIGN

FUNCTIONAL SUPERVISOR: GRISH BIGLARIAN
CALCULATED-DESIGNED BY: EUGENE BRAVO
CHECKED BY: VINCENT NGUYEN
REVISED BY
DATE REVISED

LAST REVISION 00-00-00
DATE PLOTTED => 05-AUG-2015
TIME PLOTTED => 10:21

Dist	COUNTY	ROUTE	POST MILES TOTAL PROJECT	SHEET No.	TOTAL SHEETS
07	LA	5	C43.9/C46.4	87	199

REGISTERED CIVIL ENGINEER DATE 6/10/15

PLANS APPROVAL DATE 6-29-15

REGISTERED PROFESSIONAL ENGINEER VINCENT NGUYEN No. C057797 Exp. 03/31/16 CIVIL STATE OF CALIFORNIA

THE STATE OF CALIFORNIA OR ITS OFFICERS OR AGENTS SHALL NOT BE RESPONSIBLE FOR THE ACCURACY OR COMPLETENESS OF SCANNED COPIES OF THIS PLAN SHEET.

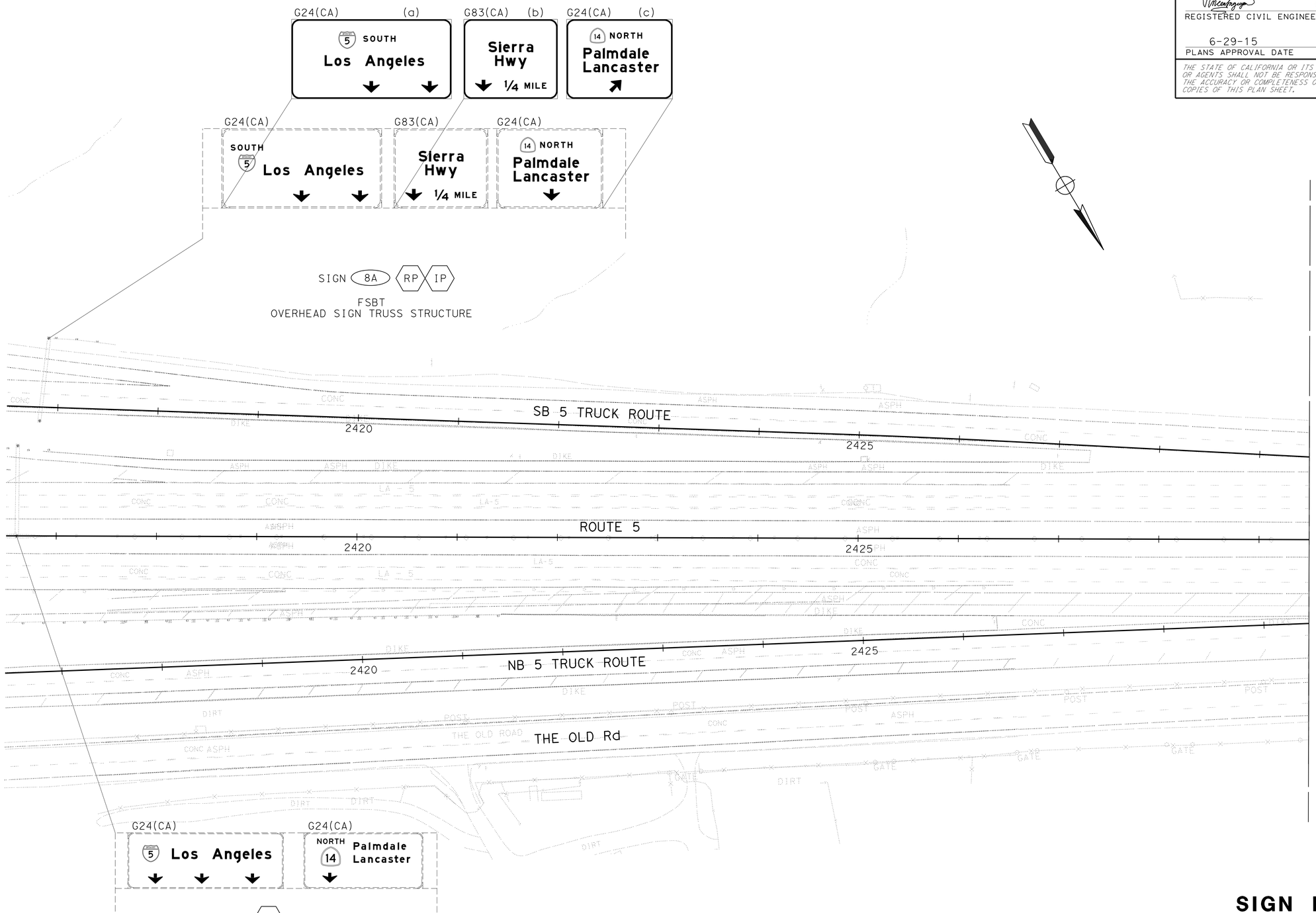

SIGN PLAN

SCALE: 1" = 50'

APPROVED FOR SIGN WORK ONLY

S-8

STATE OF CALIFORNIA - DEPARTMENT OF TRANSPORTATION

Caltrans

TRAFFIC DESIGN

FUNCTIONAL SUPERVISOR: GRISH BIGLARIAN

CALCULATED-DESIGNED BY: EUGENE BRAVO

CHECKED BY: VINCENT NGUYEN

REVISED BY

DATE REVISED

LAST REVISION 00-00-00

DATE PLOTTED => 05-AUG-2015

TIME PLOTTED => 10:21

Dist	COUNTY	ROUTE	POST MILES TOTAL PROJECT	SHEET No.	TOTAL SHEETS
07	LA	5	C43.9/C46.4	88	199

REGISTERED CIVIL ENGINEER DATE 6/10/15

PLANS APPROVAL DATE 6-29-15

REGISTERED PROFESSIONAL ENGINEER VINCENT NGUYEN No. C057797 Exp. 03/31/16 CIVIL STATE OF CALIFORNIA

THE STATE OF CALIFORNIA OR ITS OFFICERS OR AGENTS SHALL NOT BE RESPONSIBLE FOR THE ACCURACY OR COMPLETENESS OF SCANNED COPIES OF THIS PLAN SHEET.

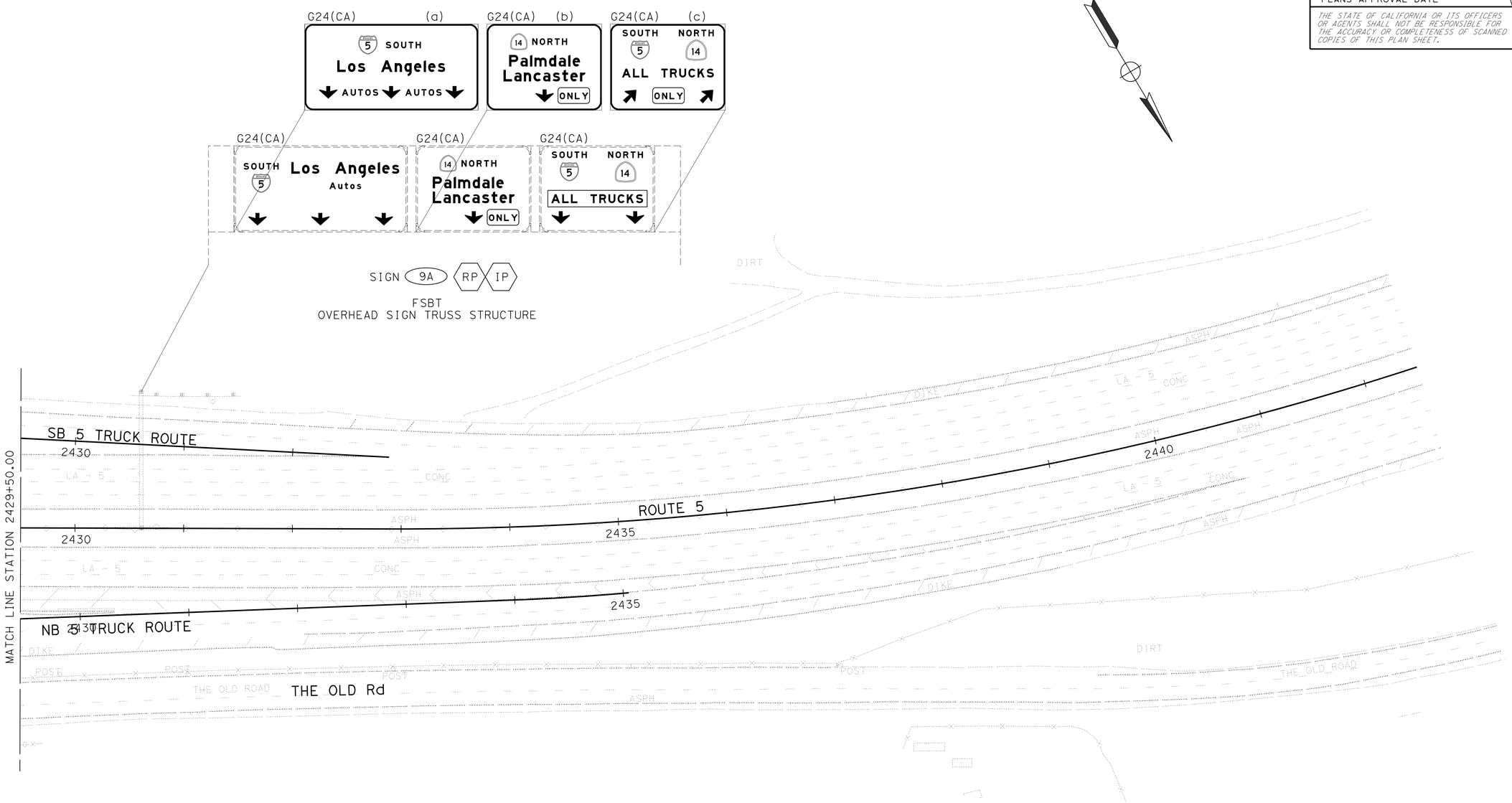

SIGN PLAN

SCALE: 1" = 50'

APPROVED FOR SIGN WORK ONLY

S-9

STATE OF CALIFORNIA - DEPARTMENT OF TRANSPORTATION

Caltrans

TRAFFIC DESIGN

FUNCTIONAL SUPERVISOR: GRISH BIGLARIAN

CALCULATED-DESIGNED BY: EUGENE BRAVO

CHECKED BY: VINCENT NGUYEN

REVISED BY

DATE REVISED

LAST REVISION 00-00-00

DATE PLOTTED => 05-AUG-2015

TIME PLOTTED => 10:21

Dist	COUNTY	ROUTE	POST MILES TOTAL PROJECT	SHEET No.	TOTAL SHEETS
07	LA	5	C43.9/C46.4	89	199

REGISTERED CIVIL ENGINEER 6/10/15 DATE

6-29-15
PLANS APPROVAL DATE

REGISTERED PROFESSIONAL ENGINEER VINCENT NGUYEN No. C057797 Exp. 03/31/16 CIVIL STATE OF CALIFORNIA

THE STATE OF CALIFORNIA OR ITS OFFICERS OR AGENTS SHALL NOT BE RESPONSIBLE FOR THE ACCURACY OR COMPLETENESS OF SCANNED COPIES OF THIS PLAN SHEET.

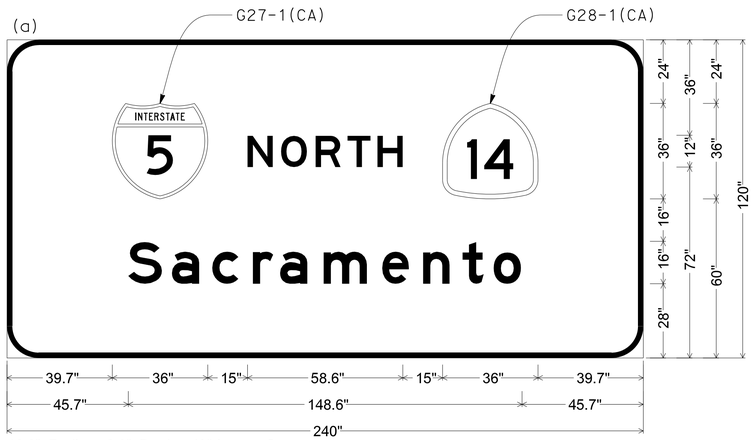

12.0" Radius, 2.0" Border, White on Green;
[NORTH] E; [Sacramento] E;

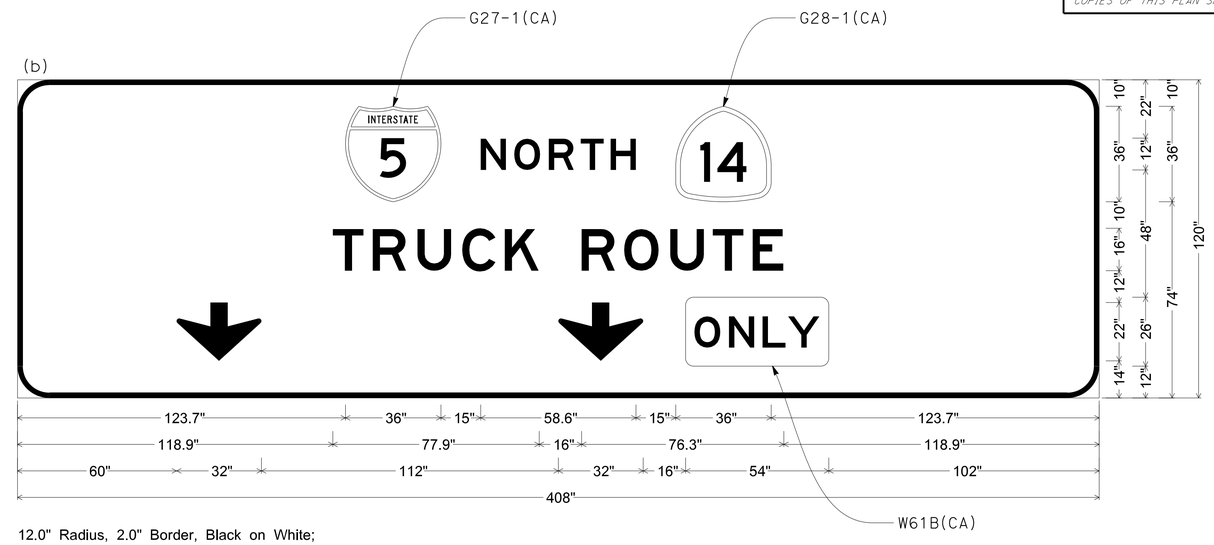

12.0" Radius, 2.0" Border, Black on White;
[NORTH] E; [TRUCK ROUTE] E; Down Arrow 22.0" 270°; Down Arrow 22.0" 270°; Rounded Rectangle 3.0" Radius Yellow;

SIGN 1A

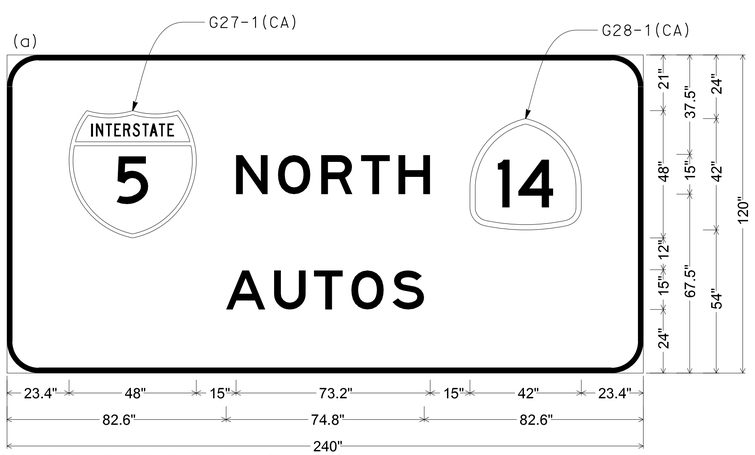

12.0" Radius, 2.0" Border, White on Green;
[NORTH] E; [AUTOS] E;

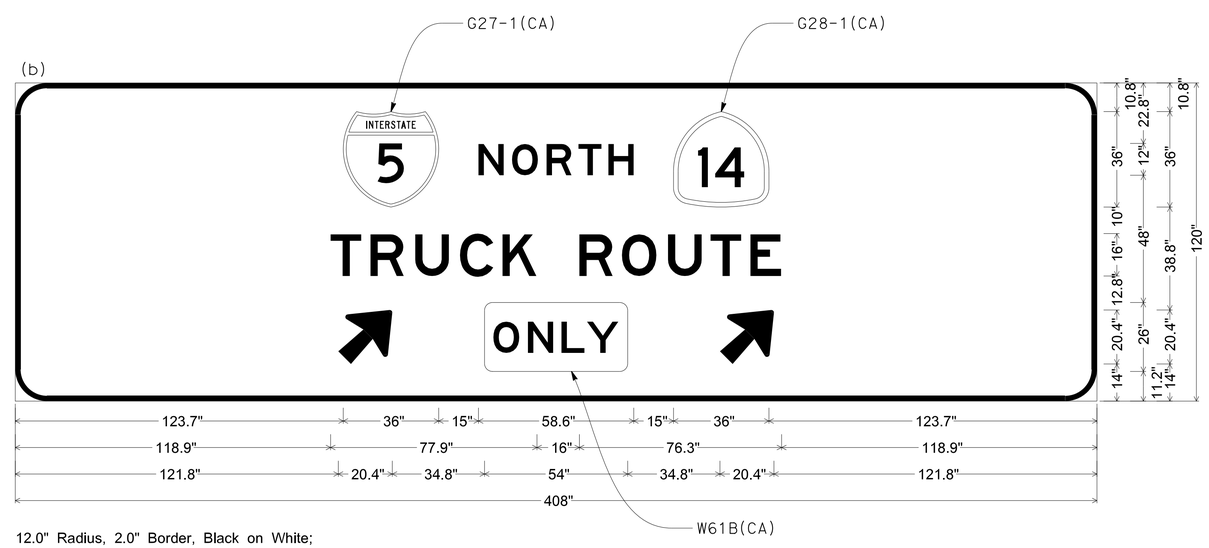

12.0" Radius, 2.0" Border, Black on White;
[NORTH] E; [TRUCK ROUTE] E; Arrow 16CAP-1L - 25.0" 45°; Rounded Rectangle 3.0" Radius Yellow;
Arrow 16CAP-1L - 25.0" 45°;

SIGN 2A

SIGN DETAILS

NO SCALE

SD-1

STATE OF CALIFORNIA - DEPARTMENT OF TRANSPORTATION
Caltrans® TRAFFIC DESIGN

FUNCTIONAL SUPERVISOR: GRISH BIGLARIAN
CALCULATED-DESIGNED BY: EUGENE BRAVO
CHECKED BY: VINCENT NGUYEN
REVISED BY / DATE REVISED

LAST REVISION 00-00-00 | DATE PLOTTED => 05-AUG-2015 | TIME PLOTTED => 10:21

Dist	COUNTY	ROUTE	POST MILES TOTAL PROJECT	SHEET No.	TOTAL SHEETS
07	LA	5	C43.9/C46.4	90	199

REGISTERED CIVIL ENGINEER 6/10/15 DATE

6-29-15
PLANS APPROVAL DATE

REGISTERED PROFESSIONAL ENGINEER VINCENT NGUYEN No. C057797 Exp. 03/31/16 CIVIL STATE OF CALIFORNIA

THE STATE OF CALIFORNIA OR ITS OFFICERS OR AGENTS SHALL NOT BE RESPONSIBLE FOR THE ACCURACY OR COMPLETENESS OF SCANNED COPIES OF THIS PLAN SHEET.

(a)

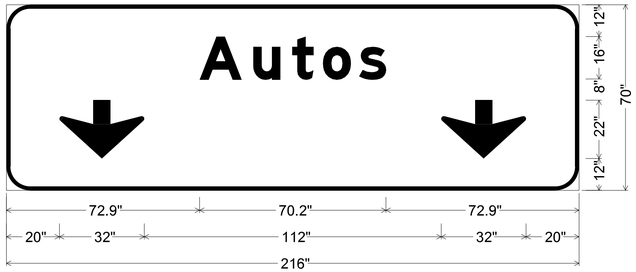

9.0" Radius, 1.5" Border, White on Green;
[Autos] E Mod; Down Arrow 22.0" 270°; Down Arrow 22.0" 270°;

(b)

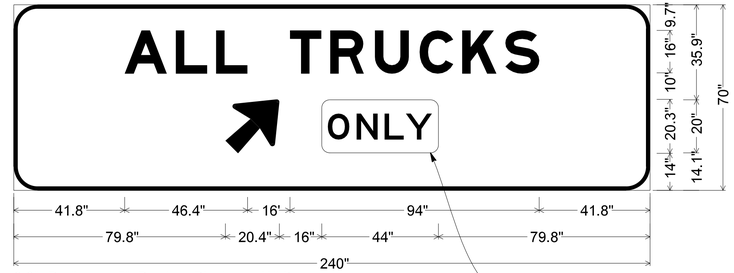

9.0" Radius, 1.5" Border, Black on White;
[ALL TRUCKS] E Mod; Arrow 16CAP-1L - 25.0" 45°;
Rounded Rectangle 3.0" Radius Yellow;

W61B(CA)

SIGN 3A

(a)

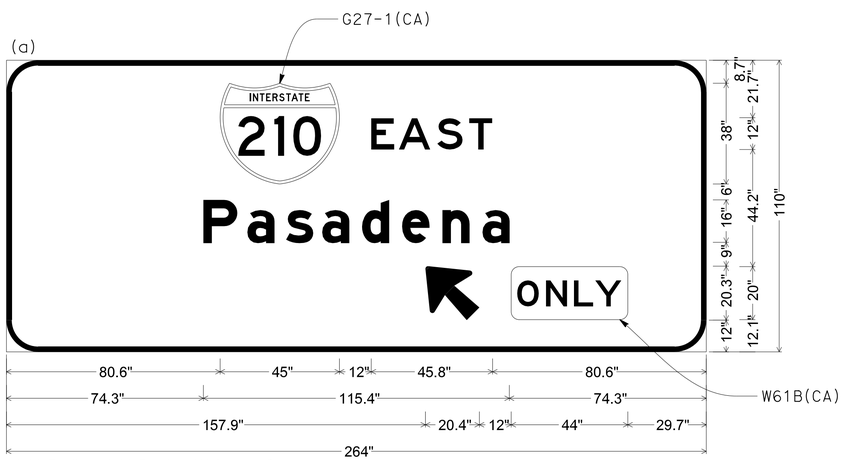

12.0" Radius, 2.0" Border, White on Green;
[EAST] E; [Pasadena] E Mod; Arrow 16CAP-1L - 25.0" 135°;
Rounded Rectangle 3.0" Radius Yellow;

SIGN 3B

(b)

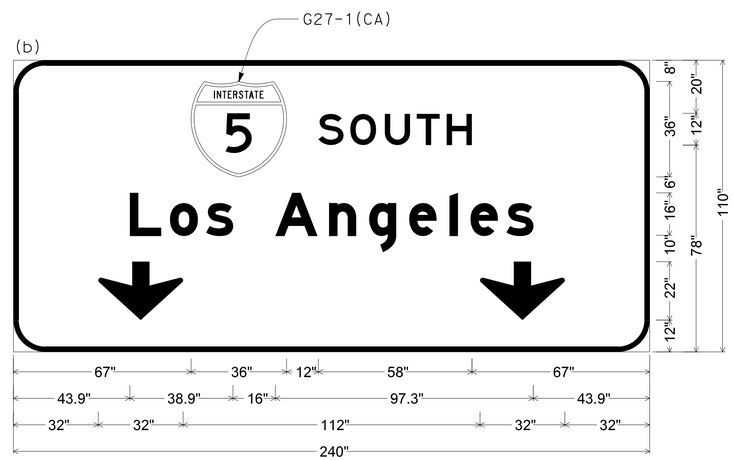

12.0" Radius, 2.0" Border, White on Green;
[SOUTH] E; [Los Angeles] E Mod; Down Arrow 22.0" 270°; Down Arrow 22.0" 270°;

(a)

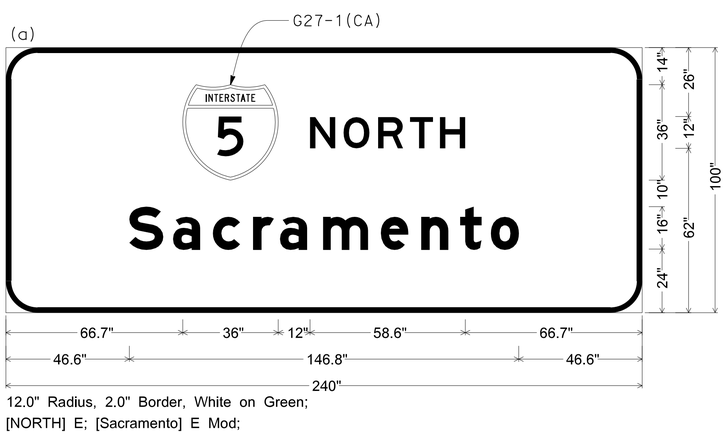

12.0" Radius, 2.0" Border, White on Green;
[NORTH] E; [Sacramento] E Mod;

SIGN 4A

(b)

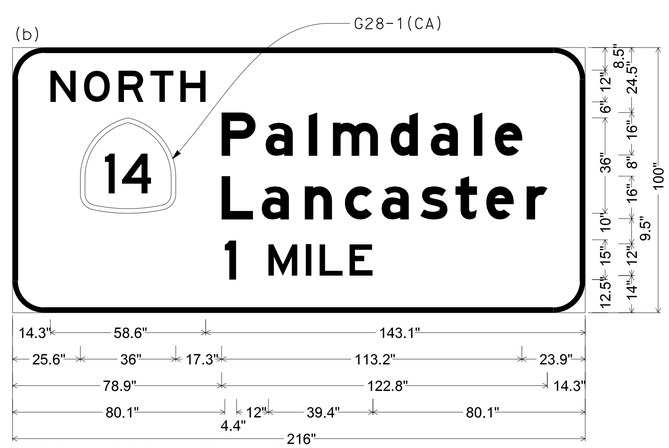

12.0" Radius, 2.0" Border, White on Green;
[NORTH] E; [Palmdale] E Mod; [Lancaster] E Mod; [1 MILE] E;

(b)

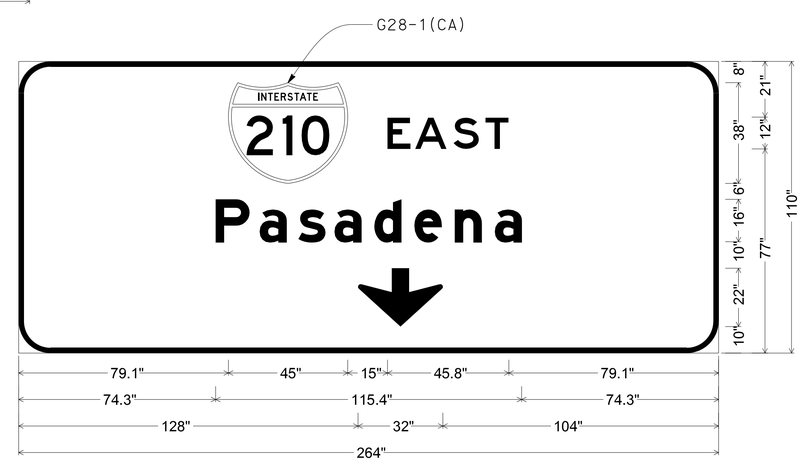

12.0" Radius, 2.0" Border, White on Green;
[EAST] E; [Pasadena] E Mod; Down Arrow 22.0" 270°;

SIGN 4B

SIGN DETAILS

NO SCALE

SD-2

STATE OF CALIFORNIA - DEPARTMENT OF TRANSPORTATION
Caltrans
TRAFFIC DESIGN

FUNCTIONAL SUPERVISOR: GRISH BIGLARIAN
CALCULATED-DESIGNED BY: EUGENE BRAVO
CHECKED BY: VINCENT NGUYEN
REVISED BY
DATE REVISED

LAST REVISION 00-00-00
DATE PLOTTED => 05-AUG-2015
TIME PLOTTED => 10:21

Dist	COUNTY	ROUTE	POST MILES TOTAL PROJECT	SHEET No.	TOTAL SHEETS
07	LA	5	C43.9/C46.4	91	199

REGISTERED CIVIL ENGINEER 6/10/15 DATE

6-29-15
PLANS APPROVAL DATE

REGISTERED PROFESSIONAL ENGINEER VINCENT NGUYEN No. C057797 Exp. 03/31/16 CIVIL STATE OF CALIFORNIA

THE STATE OF CALIFORNIA OR ITS OFFICERS OR AGENTS SHALL NOT BE RESPONSIBLE FOR THE ACCURACY OR COMPLETENESS OF SCANNED COPIES OF THIS PLAN SHEET.

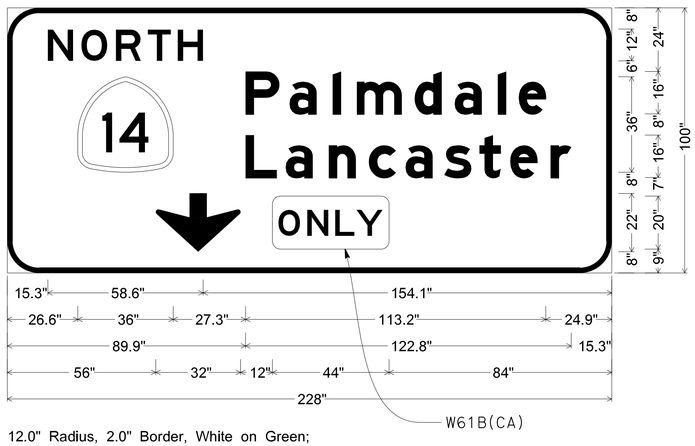

12.0" Radius, 2.0" Border, White on Green;
[NORTH] E; [Palmdale] E Mod; [Lancaster] E Mod; Down Arrow 22.0" 270°;
Rounded Rectangle 3.0" Radius Yellow;

SIGN 6A

(a)

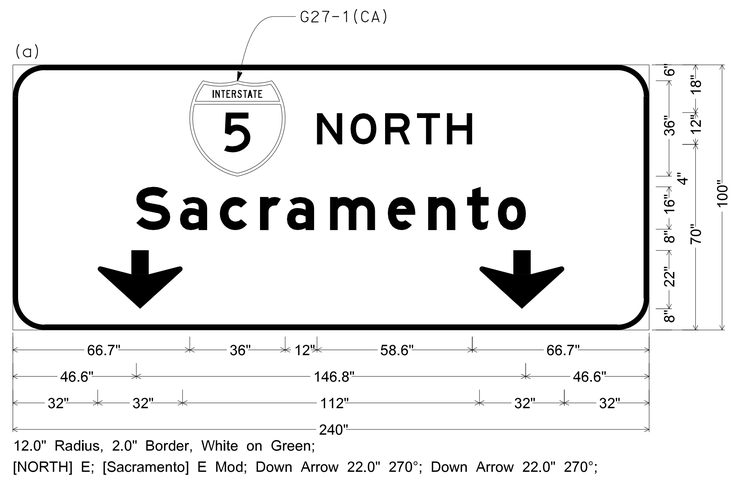

12.0" Radius, 2.0" Border, White on Green;
[NORTH] E; [Sacramento] E Mod; Down Arrow 22.0" 270°; Down Arrow 22.0" 270°;

(b)

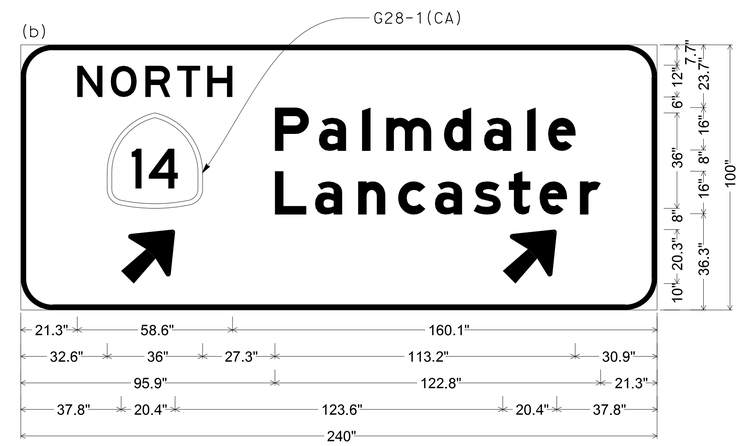

12.0" Radius, 2.0" Border, White on Green;
[NORTH] E; [Palmdale] E Mod; [Lancaster] E Mod; Arrow 16CAP-1L - 25.0" 45°;
Arrow 16CAP-1L - 25.0" 45°;

SIGN 7A

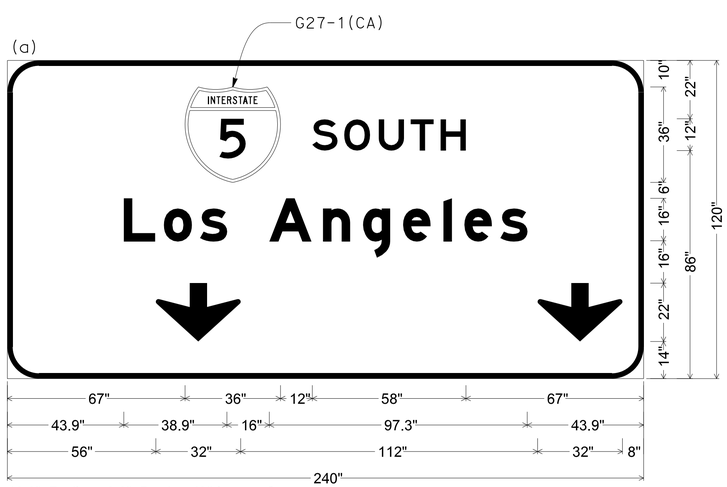

12.0" Radius, 2.0" Border, White on Green;
[SOUTH] E; [Los Angeles] E Mod; Down Arrow 22.0" 270°; Down Arrow 22.0" 270°;

(b)

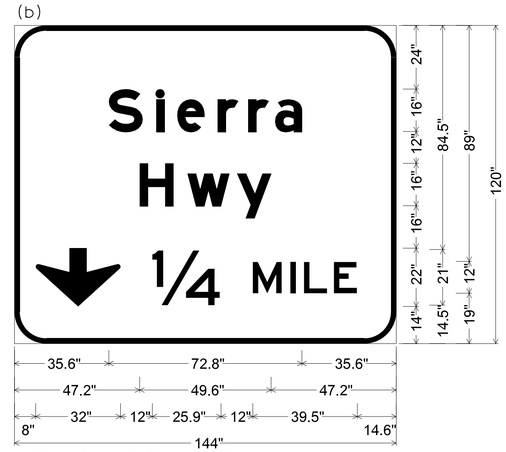

12.0" Radius, 2.0" Border, White on Green;
[Sierra] E Mod; [Hwy] E Mod;
Down Arrow 22.0" 270°; [1/4 MILE] E;

SIGN 8A

(c)

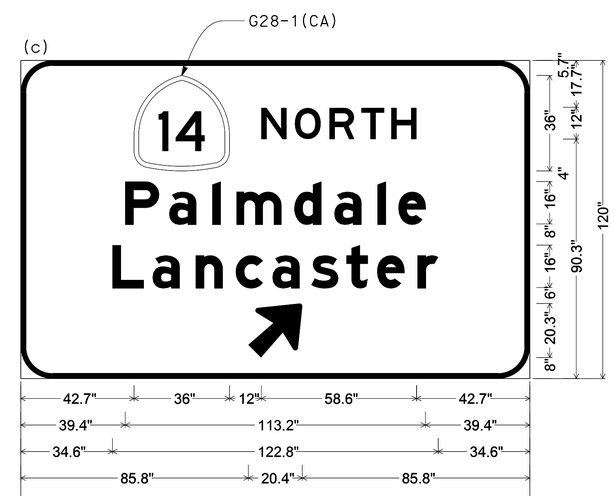

12.0" Radius, 2.0" Border, White on Green;
[NORTH] E; [Palmdale] E Mod; [Lancaster] E Mod;
Arrow 16CAP-1L - 25.0" 45°;

SIGN DETAILS
NO SCALE

SD-3

STATE OF CALIFORNIA - DEPARTMENT OF TRANSPORTATION
Caltrans®
TRAFFIC DESIGN

FUNCTIONAL SUPERVISOR: GRISH BIGLARIAN
CALCULATED-DESIGNED BY: EUGENE BRAVO
CHECKED BY: VINCENT NGUYEN
REVISED BY
DATE REVISED

LAST REVISION 00-00-00
DATE PLOTTED => 05-AUG-2015
TIME PLOTTED => 10:21

Dist	COUNTY	ROUTE	POST MILES TOTAL PROJECT	SHEET No.	TOTAL SHEETS
07	LA	5	C43.9/C46.4	92	199

REGISTERED CIVIL ENGINEER 6/10/15 DATE

6-29-15
PLANS APPROVAL DATE

REGISTERED PROFESSIONAL ENGINEER VINCENT NGUYEN No. C057797 Exp. 03/31/16 CIVIL STATE OF CALIFORNIA

THE STATE OF CALIFORNIA OR ITS OFFICERS OR AGENTS SHALL NOT BE RESPONSIBLE FOR THE ACCURACY OR COMPLETENESS OF SCANNED COPIES OF THIS PLAN SHEET.

(a)

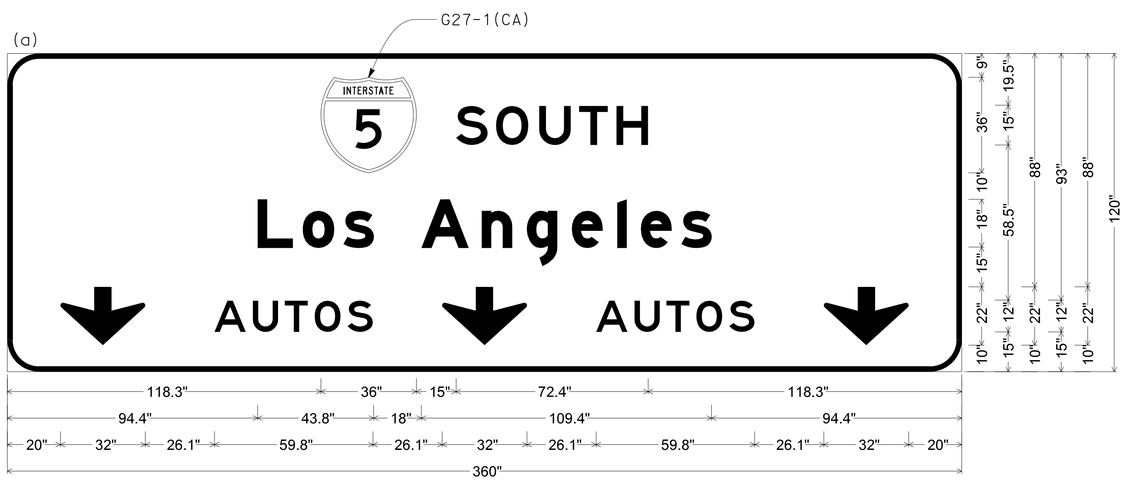

12.0" Radius, 2.0" Border, White on Green;
[SOUTH] E; [Los Angeles] E Mod; Down Arrow 22.0" 270°; [AUTOS] E; Down Arrow 22.0" 270°; [AUTOS] E;
Down Arrow 22.0" 270°;

SIGN 9A

(b)

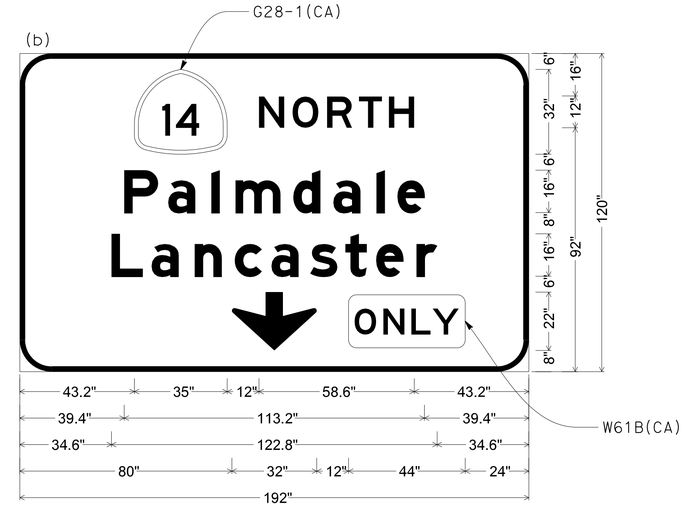

12.0" Radius, 2.0" Border, White on Green;
[NORTH] E; [Palmdale] E Mod; [Lancaster] E Mod;
Down Arrow 22.0" 270°;

(c)

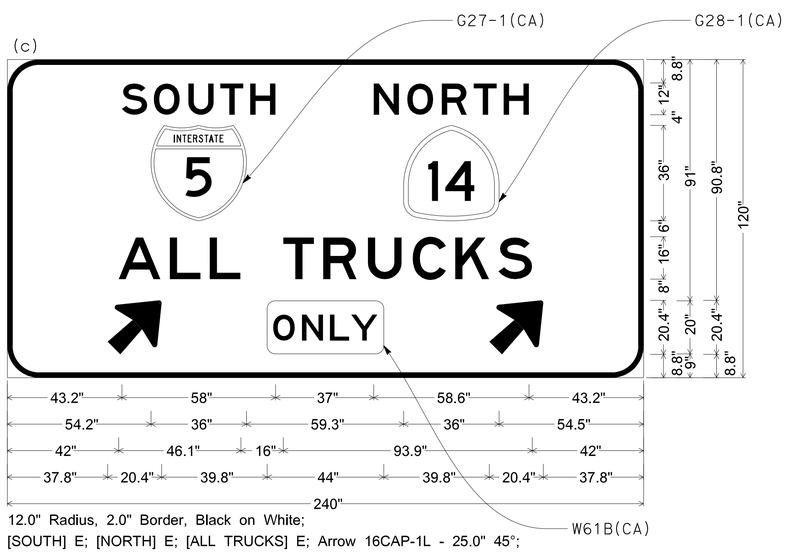

12.0" Radius, 2.0" Border, Black on White;
[SOUTH] E; [NORTH] E; [ALL TRUCKS] E; Arrow 16CAP-1L - 25.0" 45°;
Rounded Rectangle 3.0" Radius Yellow;
Arrow 16CAP-1L - 25.0" 45°;

SIGN 9A

SIGN DETAILS

NO SCALE

SD-4

STATE OF CALIFORNIA - DEPARTMENT OF TRANSPORTATION
Caltrans® TRAFFIC DESIGN

FUNCTIONAL SUPERVISOR: GRISH BIGLARIAN
CALCULATED-DESIGNED BY: EUGENE BRAVO
CHECKED BY: VINCENT NGUYEN
REVISED BY
DATE REVISED

LAST REVISION 00-00-00
DATE PLOTTED => 05-AUG-2015
TIME PLOTTED => 10:21

Dist	COUNTY	ROUTE	POST MILES TOTAL PROJECT	SHEET No.	TOTAL SHEETS
07	LA	5	C43.9/C46.4	93	199

REGISTERED CIVIL ENGINEER 6/10/15 DATE

6-29-15
PLANS APPROVAL DATE

REGISTERED PROFESSIONAL ENGINEER VINCENT NGUYEN No. C057797 Exp. 03/31/16 CIVIL STATE OF CALIFORNIA

THE STATE OF CALIFORNIA OR ITS OFFICERS OR AGENTS SHALL NOT BE RESPONSIBLE FOR THE ACCURACY OR COMPLETENESS OF SCANNED COPIES OF THIS PLAN SHEET.

OVERHEAD SIGN QUANTITIES

SIGN No.	SIGN CODE	SIGN PANEL L X D	REMOVE SIGN (N) PANEL SQFT	INSTALL SIGN PANEL ON EXISTING FRAME SQFT	MATERIAL SUMMARY: SINGLE FACED	BACKGROUND: SHEETING COLOR	BACKGROUND: RETRO-REFLECTIVE ASTM TYPE	LEGEND: SHEETING COLOR	LEGEND: RETRO-REFLECTIVE ASTM TYPE	GRAFFITI: STANDARD	GRAFFITI: PREMIUM	FURNISH FORMED PANEL SIGN (OVERHEAD) FOR RETROREFLECTIVE SHEETING (TYPE XI) SQFT	FURNISH LAMINATED PANEL SIGN (1" - TYPE A) FOR RETROREFLECTIVE SHEETING (TYPE XI) SQFT	REMARKS
1A (a)	G24(CA)	240" X 120"	200.0	200.0	X	GREEN	XI	WHITE	XI		X	200.0		
1A (b)	G24(CA)	408" X 120"	340.0	340.0	X	WHITE	XI	BLACK			X		340.0	
2A (a)	G24(CA)	240" X 120"	200.0	200.0	X	GREEN	XI	WHITE	XI		X	200.0		
2A (b)	G24(CA)	408" X 120"	340.0	340.0	X	WHITE	XI	BLACK			X		340.0	
3A (a)	G24(CA)	216" X 70"	105.0	105.0	X	GREEN	XI	WHITE	XI		X	105.0		
3A (b)	G83(CA)	240" X 70"	116.7	116.7	X	WHITE	XI	BLACK			X		116.7	
3B (a)	G24(CA)	264" X 110"	201.7	201.7	X	GREEN	XI	WHITE	XI		X	201.7		
3B (b)	G83(CA)	240" X 110"	183.3	183.3	X	GREEN	XI	WHITE	XI		X	183.3		
4A (a)	G24(CA)	240" X 100"	166.7	166.7	X	GREEN	XI	WHITE	XI		X		166.7	
4A (b)	G24(CA)	216" X 100"	150.0	150.0	X	GREEN	XI	WHITE	XI		X		150.0	
4B	G24(CA)	264" X 110"	201.7	201.7	X	GREEN	XI	WHITE	XI		X	201.7		
6A	G83(CA)	228" X 100"	158.3	158.3	X	GREEN	XI	WHITE	XI		X		158.3	
7A (a)	G24(CA)	240" X 100"	166.7	166.7	X	GREEN	XI	WHITE	XI		X		166.7	
7A (b)	G24(CA)	240" X 100"	166.7	166.7	X	GREEN	XI	WHITE	XI		X		166.7	
8A (a)	G24(CA)	240" X 120"	200.0	200.0	X	GREEN	XI	WHITE	XI		X		200.0	
8A (b)	G83(CA)	144" X 120"	120.0	120.0	X	GREEN	XI	WHITE	XI		X		120.0	
8A (c)	G24(CA)	192" X 120"	160.0	160.0	X	GREEN	XI	WHITE	XI		X		160.0	
9A (a)	G24(CA)	360" X 120"	300.0	300.0	X	GREEN	XI	WHITE	XI		X		300.0	
9A (b)	G24(CA)	192" X 120"	160.0	160.0	X	GREEN	XI	WHITE	XI		X		160.0	
9A (c)	G24(CA)	240" X 120"	200.0	200.0	X	GREEN	XI	WHITE	XI		X		200.0	
TOTAL			3,836.7	3,836.7								1,091.7	2,745.0	

ROADSIDE SIGN QUANTITIES

SIGN No	SIGN CODE	PANEL SIZE (in X in)	POST SIZE (WOOD)	SIGN FACING MATERIAL: SINGLE FACED	DOUBLE FACED	BACKGROUND: SHEETING COLOR	BACKGROUND: RETRO - REFLECTIVE ASTM TYPE	LEGEND: SHEETING COLOR	LEGEND: RETRO - REFLECTIVE ASTM TYPE	LEGEND: NON - REFLECTIVE	GRAFFITI FILM PREMIUM	FURNISH SINGLE SHEET ALUMINUM SIGN (0.080"-UNFRAMED) FOR RETROREFLECTIVE SHEETING (TYPE XI)	ROADSIDE SIGN (WOOD) ONE POST EA	REMOVE ROADSIDE SIGN EA	REMARKS
201	W9-1	48" X 48"	4" X 6"	X		Y	XI	B		X	X	16.0	1		RIGHT LANE ENDS
301	W4-2R	48" X 48"	4" X 6"	X		Y	XI	B		X	X	16.0	1		LANE ENDS
302	W9-1													1	LEFT LANE ENDS
401	W4-2L													1	LANE ENDS
TOTAL												32.0	2	2	

NOTES:

1. EXACT LOCATION AND POSITION OF ROADSIDE SIGNS WILL BE DETERMINED BY THE ENGINEER.
2. SIGNS ARE MUTCD (MANUAL ON UNIFORM TRAFFIC CONTROL DEVICES, NOVEMBER 2014 EDITION) CODED EXCEPT AS NOTED.
3. (CA) DENOTES CALIFORNIA CODED SIGNS.
4. FOR SIGN SPECIFICATIONS SEE CALTRANS WEBSITE: http://www.dot.ca.gov/hq/traffops/signtech/signdel/specs.htm
5. ALL DIMENSIONS SHALL BE VERIFIED IN THE FIELD BY THE CONTRACTOR BEFORE ORDERING MATERIAL.

LEGEND:

(N) = NOT A SEPARATE PAY ITEM

SIGN QUANTITIES

SQ-1

REVISED BY | DATE REVISED
EUGENE BRAVO | VINCENT NGUYEN
CALCULATED-DESIGNED BY | CHECKED BY
FUNCTIONAL SUPERVISOR: GRISH BIGLARIAN

STATE OF CALIFORNIA - DEPARTMENT OF TRANSPORTATION
Caltrans® TRAFFIC DESIGN

LAST REVISION 00-00-00 | DATE PLOTTED => 05-AUG-2015 | TIME PLOTTED => 10:21

Dist	COUNTY	ROUTE	POST MILES TOTAL PROJECT	SHEET No.	TOTAL SHEETS
07	LA	5	C43.9/C46.4	94	199

REGISTERED CIVIL ENGINEER 6-8-15 DATE

6-29-15
PLANS APPROVAL DATE

REGISTERED PROFESSIONAL ENGINEER SUJAYA KALAINESAN No. C74154 Exp. 6-30-17 CIVIL STATE OF CALIFORNIA

THE STATE OF CALIFORNIA OR ITS OFFICERS OR AGENTS SHALL NOT BE RESPONSIBLE FOR THE ACCURACY OR COMPLETENESS OF SCANNED COPIES OF THIS PLAN SHEET.

ABBREVIATIONS:

ADL- AERIALLY DEPOSITED LEAD
RSC- RAPID SETTING CONCRETE

SUMMARY OF QUANTITIES

SHEET NUMBER	REMOVE CONCRETE, BASE AND SUB-BASE	REMOVE AC DIKE	PLACE HMA DIKE (TYPE A)	PLACE HMA DIKE (TYPE C)	PLACE HMA DIKE (TYPE F)	JPCP (RSC)	ALTERNATE TREATED BASE	CLASS 3 AGGREGATE BASE	ROADWAY EXCAVATION (TYPE Z-2) ADL	STRUCTURAL EXCAVATION (TYPE Z-2) (ADL)	CONCRETE BARRIER (TYPE 60C)	BASE BOND BREAKER	DRILL & BOND DOWEL BAR	ISOLATION JOINT SEAL(PREFORMED COMPRESSION)	HIGH FRICTION SURFACE TREATMENT	OBJECT MARKER TYPE K-2	REMOVE CHANNELIZER	REMOVE CRASH CUSHION MODULE (SAND FILLED)	ALTERNATIVE CRASH CUSHION	DITCH EXCAVATION (TYPE Z-2) ADL	EMBANKMENT
	CY	LF	LF	LF	LF	CY	CY	CY	CY	CY	LF	SQYD	EA	LF	SQYD	EA	EA	EA	EA	CY	CY
NORTHBOUND																					
L-1	0.0	101.6	0.0	60.1	27.5	0.0	0.0	0.0	0.0	0.0	0.0	0.0	0	0	0	0	0	0	0	0.0	0.0
L-2	0.0	778.5	0.0	181.4	596.1	0.0	0.0	0.0	0.0	0.0	0.0	0.0	0	0	0	0	0	0	0	0.0	0.0
L-3	0.0	105.0	20.0	0.0	0.0	0.0	0.0	0.0	136.3	0.0	0.0	0.0	0	0	0	0	0	0	0	0.0	0.0
L-4	2,364.6	189.6	0.0	0.0	125.6	1,236.0	376.2	752.4	0.0	0.0	664.6	3,224.4	237	1,937	0	0	96	0	1	0.0	0.0
L-5	3,375.4	0.0	0.0	0.0	0.0	1,764.4	537.0	1,074.0	0.0	0.0	1,063.5	4,602.9	160	2,835	0	0	154	0	0	0.0	0.0
L-6	3,840.1	0.0	0.0	0.0	0.0	1,883.1	652.3	1,304.7	0.0	0.0	0.0	5,591.6	82	3,508	0	0	0	0	0	0.0	0.0
L-7	4,158.9	121.4	0.0	60.0	60.8	2,174.0	661.6	1,323.3	0.0	0.0	0.0	5,671.2	180	2,899	0	0	0	0	0	0.0	0.0
L-8	2,308.0	158.8	0.0	0.0	154.8	1,206.4	367.2	734.4	0.0	0.0	0.0	3,147.2	223	2,439	0	0	0	0	1	0.0	0.0
L-9	1,438.8	974.7	0.0	60.5	34.8	752.1	228.9	457.8	0.0	0.0	0.0	1,961.9	142	1,460	0	0	0	0	0	0.0	0.0
L-10	2,285.5	92.9	0.0	0.0	25.0	1,194.7	363.6	727.2	21.3	0.0	0.0	3,116.7	90	1,959	0	0	0	0	0	0.0	0.0
L-11	2,970.6	130.1	0.0	59.8	32.5	1,552.8	472.6	945.2	13.1	27.2	0.0	4,050.7	0	2,603	0	0	0	0	0	0.0	0.0
L-12	3,608.0	1,054.3	1,054.4	0.0	0.0	1,886.0	574.0	1,148.0	0.0	0.0	0.0	4,920.0	57	2,358	0	0	0	0	0	0.0	0.0
NB SUBTOTAL	26,349.9	3,706.9	1,074.4	421.8	1,057.1	13,649.5	4,233.4	8,467	170.7	27.2	1,728.1	36,286.6	1,171	21,998	0	0	250	0	2	0.0	0.0
SOUTHBOUND																					
L-1	0.0	0.0	0.0	0.0	0.0	0.0	0.0	0.0	0.0	0.0	0.0	0	0	0	0	0	0	0	0	0.0	0.0
L-2	1,846.7	190.4	98.9	50.0	37.5	965.3	293.8	587.6	0.0	0.0	0.0	2,518.2	168	1,925	0	65	0	0	0	0.0	0.0
L-3	1,562.2	279.4	109.9	60.0	106.0	816.6	248.5	497.1	0.0	0.0	0.0	2,130.3	85	1,204	0	0	0	0	0	0.0	0.0
L-4	2,406.6	215.7	0.0	120.8	91.0	1,258.0	382.9	765.7	0.0	0.0	0.0	3,281.8	168	2,155	2,225.3	0	0	14	1	0.0	0.0
L-5	58.2	22.8	0.0	0.0	22.8	94.9	39.3	78.7	0.0	0.0	0.0	337.2	36	1,250	888.3	0	0	0	0	0.0	0.0
L-6	2,149.1	1,121.0	282.3	110.0	452.5	1,123.4	341.9	683.8	98.0	0.0	0.0	2,930.7	56	1,952	0	0	0	0	0	213.2	14.5
L-7	3,769.6	0.0	0.0	0.0	0.0	1,970.6	599.8	1,199.5	0.0	0.0	0.0	5,140.8	80	2,691	0	0	0	0	0	0.0	0.0
L-8	2,320.3	104.0	0.0	62.5	35.0	1,212.9	369.1	738.3	194.0	8.5	0.0	3,164.0	112	2,179	0	0	0	0	0	0.0	0.0
L-9	1,318.7	653.4	0.0	0.0	549.2	689.3	209.8	419.6	0.0	0.0	0.0	1,798.2	84	1,018	0	0	0	0	0	0.0	0.0
L-10	458.2	76.2	0.0	0.0	76.2	239.5	72.9	145.8	0.0	0.0	0.0	624.8	46	310	2,982.4	0	0	0	0	0.0	0.0
L-11	3,422.8	126.2	0.0	60.0	66.5	1,789.2	544.5	1,089.1	0.0	0.0	0.0	4,667.4	132	2,738	212.0	0	0	0	0	0.0	0.0
L-12	31.4	0.0	0.0	0.0	0.0	16.4	5.0	10.0	0.0	0.0	0.0	42.8	55	733	0	0	0	0	0	0.0	0.0
SB SUBTOTAL	19,344.1	2,789.1	491.1	463.3	1436.7	10,176.1	3,107.5	6,215.2	292.0	8.5	0.0	26,636.2	1,022	18,155	6,608.0	65	0	14	1	213.2	14.5
SUBTOTAL	45,694.0	6,493.8	1,565.5	885.0	2,493.8	23,825.6	7,340.9	14,682.2	462.7	35.7	1,728.1	62,922.8	2,193	40,153	6,608.0	65	250	14	3	213.2	14.5
TOTAL	45,694.0	6,496.0	1,565.5	885.0	2,493.8	23,825.6	7,340.9	14,682.2	462.7	35.7	1,728.1	62,922.8	2,193	40,153	6,608.0	65	250	14	3	213.2	14.5

STATE OF CALIFORNIA - DEPARTMENT OF TRANSPORTATION
Caltrans® DESIGN

FUNCTIONAL SUPERVISOR: KYLE KUNITAKE
CALCULATED-DESIGNED BY: O. BLACKSTOCK
CHECKED BY: SUJAYA KALAINESAN
REVISED BY
DATE REVISED

SUMMARY OF QUANTITIES

Q-1

LAST REVISION 00-00-00
DATE PLOTTED => 05-AUG-2015
TIME PLOTTED => 10:21

Dist	COUNTY	ROUTE	POST MILES TOTAL PROJECT	SHEET No.	TOTAL SHEETS
07	LA	5	C43.9/C46.4	95	199

REGISTERED CIVIL ENGINEER 6-8-15 DATE

6-29-15
PLANS APPROVAL DATE

REGISTERED PROFESSIONAL ENGINEER SUJAYA KALAINESAN No. C74154 Exp. 6-30-17 CIVIL STATE OF CALIFORNIA

THE STATE OF CALIFORNIA OR ITS OFFICERS OR AGENTS SHALL NOT BE RESPONSIBLE FOR THE ACCURACY OR COMPLETENESS OF SCANNED COPIES OF THIS PLAN SHEET.

MIDWEST GUARDRAIL SYSTEM

SHEET NUMBER	MGS	DOUBLE MGS (WOOD POST)	ALTERNATIVE IN-LINE TERMINAL SYSTEM	ALTERNATIVE FLARED TERMINAL SYSTEM	TRANSITION RAILING (TYPE WB-31)	END ANCHOR ASSEMBLY (TYPE SFT)	RETURN CAP	DELINEATOR (CLASS 1)	REMOVE GUARDRAIL	TREATED WOOD WASTE
	LF	LF	EA	EA	EA	EA	EA	EA	LF	LB
L-1	12.5	0	1	0	1	0	0	4	72.0	858.9
L-2	568.7	0	1	3	1	4	0	34	772.2	8,549.2
L-3	61.0	0	1	0	1	1	0	7	131.2	1,509.5
L-4	156.6	0	2	1	2	1	0	17	306.1	3,430.7
L-5	274.4	0	0	0	2	0	0	14	336.5	3,764.7
L-6	767.3	0	2	0	0	2	0	36	853.6	9,443.7
L-7	854.0	0	1	0	0	2	0	38	904.0	9,996.7
L-8	829.0	25	1	1	4	0	1	42	836.7	9,257.4
L-9	652.7	0	0	1	5	1	0	34	670.6	7,433.4
L-10	26.0	0	0	0	2	0	0	6	110.9	1,286.4
L-11	81.3	0	1	1	0	2	0	3	106.3	1,235.6
L-12	46.8	0	0	1	0	1	0	5	99.8	1,164.5
TOTAL	4,330.2	25	10	8	18	14	1	240	5,199.9	57,930.7

MINOR CONCRETE

SHEET NUMBER	VEGETATION CONTROL
	SQYD
L-1	54.2
L-2	340.3
L-3	93.0
L-4	243.0
L-5	166.2
L-6	570.0
L-7	699.5
L-8	826.0
L-9	514.8
L-10	66.6
L-11	117.1
L-12	93.6
TOTAL	3,784.3

TEMPORARY WATER POLLUTION CONTROL

RAIN EVENT ACTION PLAN	STORM WATER SAMPLING AND ANALYSIS DAY	STORM WATER ANNUAL REPORT	TEMPORARY HYDRAULIC MULCH (BONDED FIBER MATRIX)	TEMPORARY COVER	TEMPORARY DRAINAGE INLET PROTECTION	TEMPORARY FIBER ROLL	TEMPORARY GRAVEL BAG BERM	TEMPORARY CONSTRUCTION ENTRANCE
EA	EA	EA	SQYD	SQYD	EA	LF	LF	EA
50	24	3	13,200	200	51	9,600	500	2

THRIE BEAM CONNECTION - TYPE 9

SHEET NUMBER	TYPE	STATION	DIRECTION	MINOR CONCRETE (MINOR STRUCTURE)
				CY
L-1	ALTERNATIVE 5	2300+90.6	NB	0.71
L-2	ALTERNATIVE 5	2307+69.6	SB	0.71
L-3	ALTERNATIVE 5	2329+66.8	SB	0.71
L-4	ALTERNATIVE 5	2330+32.0	SB	0.71
	ALTERNATIVE 5	2335+30.7	NB	0.71
	ALTERNATIVE 5	259+34.0	SB	0.71
	ALTERNATIVE 1	257+58.8	NB	0.71
L-8	ALTERNATIVE 5	257+44.2	NB	0.71
	ALTERNATIVE 5	257+81.0	NB	0.71
L-9	ALTERNATIVE 5	22+97.8	SB	0.71
	ALTERNATIVE 5	22+98.3	SB	0.71
L-10	ALTERNATIVE 5	2403+53.0	NB	0.71
TOTAL				8.52

SUMMARY OF QUANTITIES

Q-2

STATE OF CALIFORNIA - DEPARTMENT OF TRANSPORTATION
Caltrans®
DESIGN
FUNCTIONAL SUPERVISOR: KYLE KUNITAKE
CALCULATED-DESIGNED BY: O. BLACKSTOCK
CHECKED BY: SUJAYA KALAINESAN
REVISED BY
DATE REVISED

LAST REVISION 00-00-00
DATE PLOTTED => 05-AUG-2015
TIME PLOTTED => 10:21

Dist	COUNTY	ROUTE	POST MILES TOTAL PROJECT	SHEET No.	TOTAL SHEETS
07	LA	5	C43.9/C46.4	96	199

LICENSED LANDSCAPE ARCHITECT

6-29-15
PLANS APPROVAL DATE

LICENSED LANDSCAPE ARCHITECT KATHLEEN LEDESMA No. 5888 STATE OF CALIFORNIA Signature 12/31/15 Renewal Date 06/08/15 Date

THE STATE OF CALIFORNIA OR ITS OFFICERS OR AGENTS SHALL NOT BE RESPONSIBLE FOR THE ACCURACY OR COMPLETENESS OF SCANNED COPIES OF THIS PLAN SHEET.

NOTE:
UNDERLINED PORTIONS OF BOTANICAL NAME INDICATE ABBREVIATIONS USED ON PLANTING PLANS.

PLANT LIST AND PLANTING SPECIFICATIONS

PLANT GROUP	PLANT No.	SYMBOL	BOTANICAL NAME	COMMON NAME	SIZE	QUANTITY EACH	HOLE SIZE (INCH) Dia	HOLE SIZE (INCH) DEPTH	BASIN TYPE	IRON SULFATE ①	SOIL AMEND ①	COMMERCIAL FERTILIZER ① PLANTING	COMMERCIAL FERTILIZER ① PLT ESTB	BASIN MULCH (CY)	STAKING	PLANTING LIMITS MINIMUM DISTANCE (ft) FROM ETW	Pvmt	FENCE	WALL	PAVED DITCH	EARTH DITCH	ON CENTER (ft)	REMARKS
A			— —				○	○															SHRUB
	2		MUHLENBERGIA RIGENS	DEERGRASS			○	○															SHRUB ④

APPLICABLE WHEN CIRCLED:

① - QUANTITIES SHOWN ARE "PER PLANT" UNLESS SHOWN AS SQFT OR SQYD APPLICATION RATES
2 - BASIN MULCH IS INCLUDED WITH MULCH QUANTITIES SHOWN ON PLANTING PLAN
③ - SUFFICIENT TO RECEIVE ROOT BALL AND AMENDMENTS IF REQUIRED
④ - SEE DETAIL
5 - SEE SPECIAL PROVISIONS
6 - SEE STANDARD SPECIFICATIONS
7 - AS SHOWN ON PLANS
8 - UNLESS OTHERWISE SHOWN ON PLANS
9 - FOLIAGE PROTECTOR REQUIRED
10 - ROOT PROTECTOR REQUIRED
11 - ROOT BARRIER REQUIRED
12 - STATE-FURNISHED

LEGEND:

XX SQFT
EC TYPE 1

RC ROADSIDE CLEARING (REMOVE Exist PLANTS)

SEED MIX

SEED	BOTANICAL NAME (COMMON NAME)	PERCENT GERMINATION (MINIMUM)	POUNDS PURE LIVE SEED PER ACRE (SLOPE MEASUREMENT)
MIX 1	ACHILLEA MILLEFOLIUM (WHITE YARROW)	40	2.0
	ACMISPON GLABER (DEERWEED)	40	5.0
	BACCHARIS PILULARIS (COYOTE BRUSH)	20	0.1
	ERIOGONUM FASCICULATUM (CALIFORNIA BUCKWHEAT)	5	1.5
	HAZARDIA SQUARROSA (SAW TOOTHED GOLDENBUSH)	10	0.2
	LASTHENIA CALIFORNICA (DWARF GOLDFIELDS)	30	0.5
	VULPIA MICROSTACHYS (SMALL FESCUE)	40	5.0

SEED PRODUCED IN CALIFORNIA ONLY.

EROSION CONTROL TYPE 1

SEQUENCE	ITEM	MATERIAL DESCRIPTION	MATERIAL TYPE	APPLICATION RATE	DEPTH
STEP 1	COMPOST	COMPOST	MEDIUM	270 CY/ACRE	
STEP 2	INCORPORATE MATERIALS	COMPOST			18"
STEP 3	HYDROSEED	SEED	MIX 1	14.3 LB/ACRE	
		FIBER	WOOD	2000 LB/ACRE	

EROSION CONTROL QUANTITIES

SHEET	DESCRIPTION	COMPOST SQFT	INCORPORATE MATERIALS SQFT	HYDROSEED SQFT
PP-1	EROSION CONTROL TYPE 1	25,400	25,400	25,400
PP-2	EROSION CONTROL TYPE 1	7,200	7,200	7,200
PP-3	INCORPORATE COMPOST	1,600	1,600	--
	TOTAL	34,200	34,200	32,600

WOOD MULCH QUANTITIES

TYPE	LOCATION BASIN	LOCATION SPREAD	QUANTITY (CY)
WOOD CHIP (N)	45	--	45
		TOTAL	45

NOTE: PLACE PLANTS ON TRIANGULAR SPACING

TYPICAL PLANT PLACEMENT

PLANT LIST
NO SCALE

PL-1

REVISED BY | DATE REVISED
D. PERSOFF | K. LEDESMA
CALCULATED-DESIGNED BY | CHECKED BY
SENIOR LANDSCAPE ARCHITECT PATTY WATANABE
STATE OF CALIFORNIA - DEPARTMENT OF TRANSPORTATION
Caltrans® LANDSCAPE ARCHITECTURE

LAST REVISION 00-00-00 | DATE PLOTTED => 05-AUG-2015 | TIME PLOTTED => 10:21

Dist	COUNTY	ROUTE	POST MILES TOTAL PROJECT	SHEET No.	TOTAL SHEETS
07	LA	5	C43.9/C46.4	97	199

LICENSED LANDSCAPE ARCHITECT

6-29-15
PLANS APPROVAL DATE

LICENSED LANDSCAPE ARCHITECT
KATHLEEN LEDESMA
No. 5888
Signature
12/31/15
Renewal Date
06/08/15
Date
STATE OF CALIFORNIA

THE STATE OF CALIFORNIA OR ITS OFFICERS OR AGENTS SHALL NOT BE RESPONSIBLE FOR THE ACCURACY OR COMPLETENESS OF SCANNED COPIES OF THIS PLAN SHEET.

NOTE:

FOR ACCURATE RIGHT OF WAY DATA, CONTACT
RIGHT OF WAY ENGINEERING AT THE DISTRICT OFFICE.

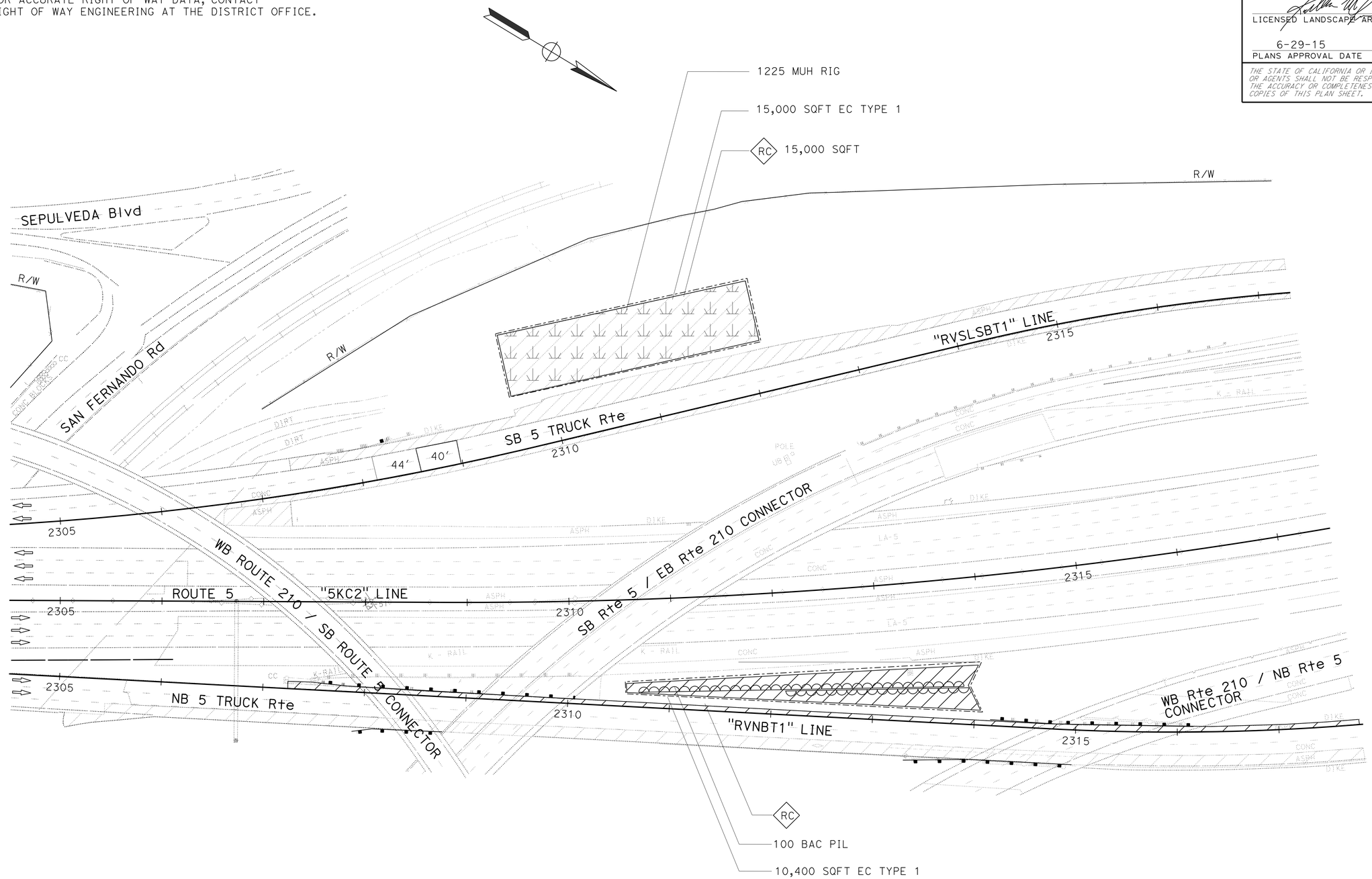

PLANTING PLAN

SCALE: 1" = 50'

APPROVED FOR PLANTING WORK ONLY

PP-1

STATE OF CALIFORNIA - DEPARTMENT OF TRANSPORTATION
Caltrans LANDSCAPE ARCHITECTURE

SENIOR LANDSCAPE ARCHITECT: PATTY WATANABE
CALCULATED-DESIGNED BY: D. PERSOFF
CHECKED BY: K. LEDESMA
REVISED BY
DATE REVISED

LAST REVISION 00-00-00
DATE PLOTTED => 05-AUG-2015
TIME PLOTTED => 10:21

Dist	COUNTY	ROUTE	POST MILES TOTAL PROJECT	SHEET No.	TOTAL SHEETS
07	LA	5	C43.9/C46.4	98	199

LICENSED LANDSCAPE ARCHITECT

6-29-15
PLANS APPROVAL DATE

LICENSED LANDSCAPE ARCHITECT
KATHLEEN LEDESMA
No. 5888
Signature
12/31/15
Renewal Date
06/08/15
Date
STATE OF CALIFORNIA

THE STATE OF CALIFORNIA OR ITS OFFICERS OR AGENTS SHALL NOT BE RESPONSIBLE FOR THE ACCURACY OR COMPLETENESS OF SCANNED COPIES OF THIS PLAN SHEET.

NOTE:

FOR ACCURATE RIGHT OF WAY DATA, CONTACT
RIGHT OF WAY ENGINEERING AT THE DISTRICT OFFICE.

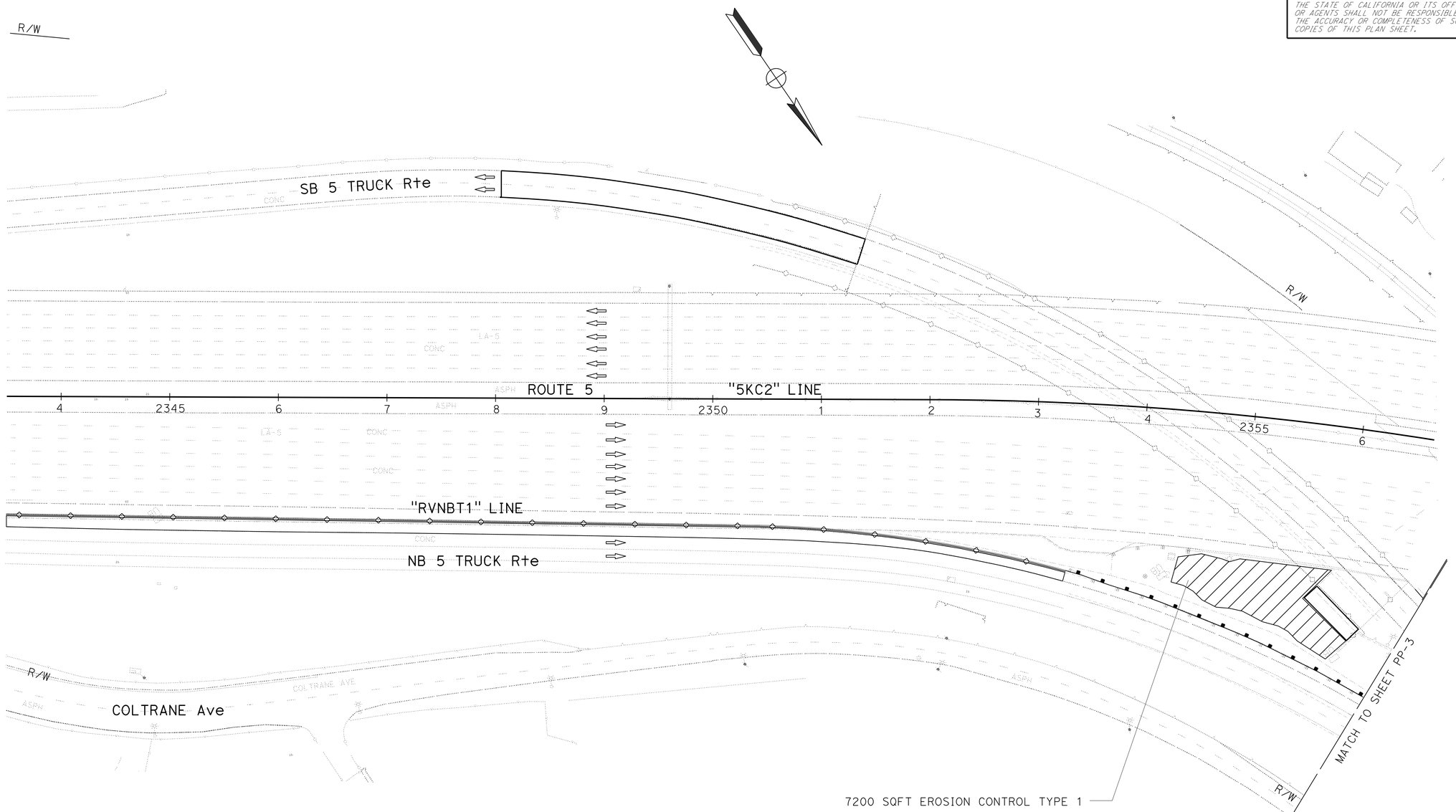

PLANTING PLAN

SCALE 1" = 50'

PP-2

APPROVED FOR PLANTING WORK ONLY

STATE OF CALIFORNIA - DEPARTMENT OF TRANSPORTATION
Caltrans® LANDSCAPE ARCHITECTURE

SENIOR LANDSCAPE ARCHITECT: PATTY WATANABE

CALCULATED-DESIGNED BY: D. PERSOFF
CHECKED BY: K. LEDESMA

REVISED BY
DATE REVISED

LAST REVISION 00-00-00
DATE PLOTTED => 05-AUG-2015
TIME PLOTTED => 10:21

Dist	COUNTY	ROUTE	POST MILES TOTAL PROJECT	SHEET No.	TOTAL SHEETS
07	LA	5	C43.9/C46.4	99	199

LICENSED LANDSCAPE ARCHITECT

6-29-15
PLANS APPROVAL DATE

LICENSED LANDSCAPE ARCHITECT
KATHLEEN LEDESMA
No. 5888
Signature
12/31/15
Renewal Date
06/08/15
Date
STATE OF CALIFORNIA

THE STATE OF CALIFORNIA OR ITS OFFICERS OR AGENTS SHALL NOT BE RESPONSIBLE FOR THE ACCURACY OR COMPLETENESS OF SCANNED COPIES OF THIS PLAN SHEET.

NOTE:

FOR ACCURATE RIGHT OF WAY DATA, CONTACT RIGHT OF WAY ENGINEERING AT THE DISTRICT OFFICE.

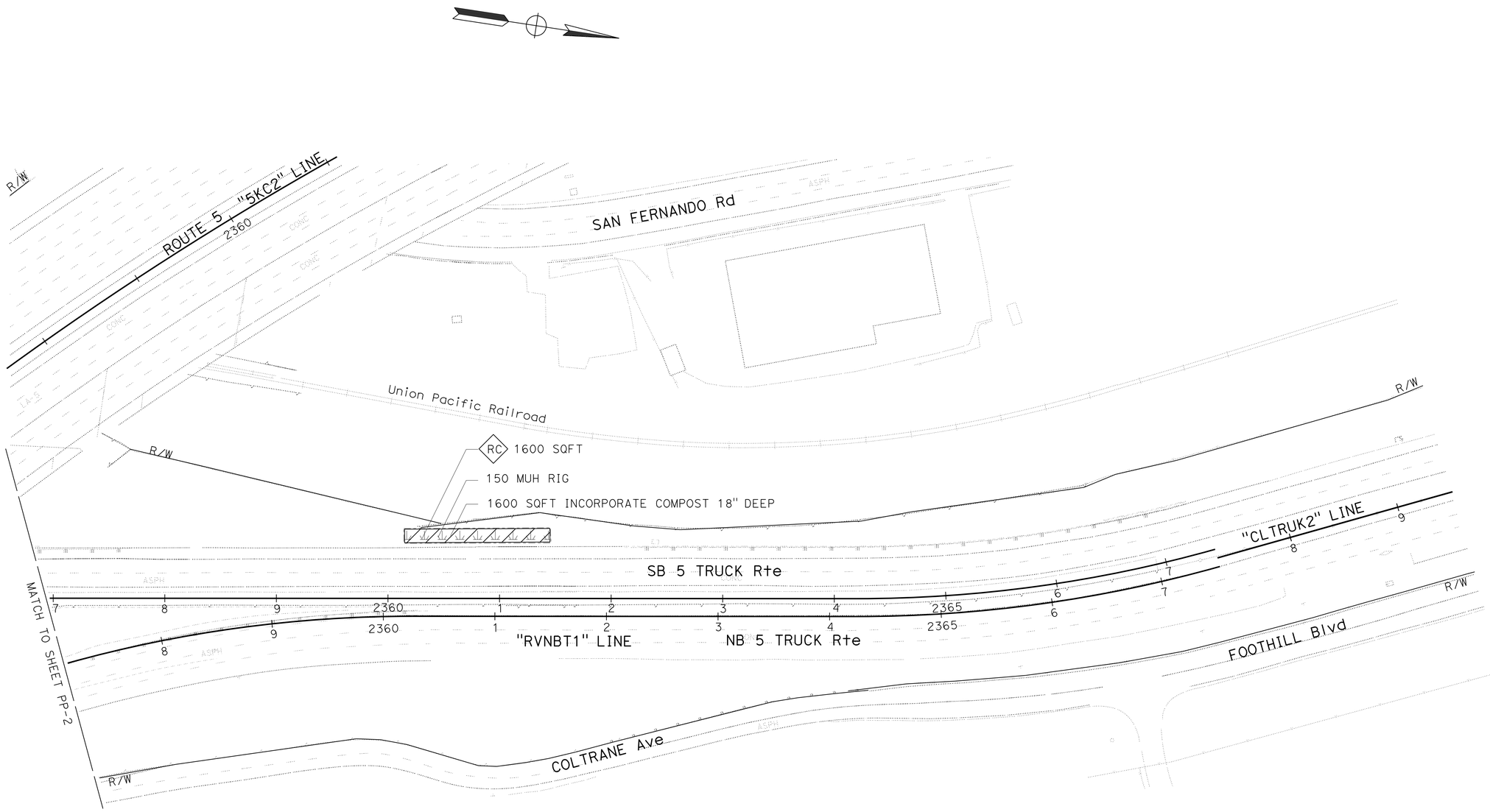

PLANTING PLAN

SCALE: 1" = 50'

APPROVED FOR PLANTING WORK ONLY

PP-3

STATE OF CALIFORNIA - DEPARTMENT OF TRANSPORTATION
Caltrans® LANDSCAPE ARCHITECTURE

SENIOR LANDSCAPE ARCHITECT: PATTY WATANABE

CALCULATED-DESIGNED BY: D. PERSOFF
CHECKED BY: K. LEDESMA

REVISED BY
DATE REVISED

LAST REVISION 00-00-00
DATE PLOTTED => 05-AUG-2015
TIME PLOTTED => 10:21

Dist	COUNTY	ROUTE	POST MILES TOTAL PROJECT	SHEET No.	TOTAL SHEETS
07	LA	5	C43.9/C46.4	100	199

REGISTERED ELECTRICAL ENGINEER DATE 6/8/15

PLANS APPROVAL DATE 6-29-15

REGISTERED PROFESSIONAL ENGINEER PATRICK P. LUI No. E17534 Exp. 06/30/17 ELECTRICAL STATE OF CALIFORNIA

THE STATE OF CALIFORNIA OR ITS OFFICERS OR AGENTS SHALL NOT BE RESPONSIBLE FOR THE ACCURACY OR COMPLETENESS OF SCANNED COPIES OF THIS PLAN SHEET.

ABBREVIATIONS: (SHEETS E-2 TO E-30, E-38)

#	NUMBER
4WTO	4 WIRE TRANSMIT ONLY
6P22	6 PAIR 22 AWG TWISTED PAIR CABLE
4SMFO	4 SINGLEMODE FIBER OPTIC CABLE
12SMFO	12 SINGLEMODE FIBER OPTIC CABLE
36SMFO	36 SINGLEMODE FIBER OPTIC CABLE
48SMFO	48 SINGLEMODE FIBER OPTIC CABLE
50P22	50 PAIR 22 AWG TWISTED PAIR CABLE
AC	ALTERNATING CURRENT
ATMS	ADVANCED TRANSPORTATION MANAGEMENT SYSTEM
AUX LN	AUXILLARY LANE
AVC	AUTOMATIC VEHICLE CLASSIFICATION STATION
BNC	BAYONET NEILL-CONCELMAN CONNECTOR
CAT-5E	EHTERNET CABLE PER ANSI/TIA-568 STANDARD
CCM	CAMERA CONTROL MODEM
CCR	CAMERA CONTROL RECEIVER
CN	CABLE NODE
COAX	COAXIAL CABLE
Ctid	CALTRANS IDENTIFICATION
CTS OR CTX	CLEAR TO SEND
DB-9	9 PIN D-SUBMINIATURE CONNECTOR
DCD	DATA CARRIER DETECT
FDU	FIBER DISTRIBUTION UNIT
FOCM	FIBER OPTIC CONTROL MODEM
FOSE	FIBER OPTIC SPLICE ENCLOSURE
FOTM	FIBER OPTIC TRAFFIC MODEM
HT	HIGH TEMPERATURE
ID	IDENTIFICATION NUMBER
IP	INTERNET PROTOCOL
LARTMC	LOS ANGLELES REGIONAL TRANSPORTATION MANAGEMENT CENTER
LCU	LOCAL CONTROL UNIT
MMFO	MULTIMODE FIBER OPTIC CABLE
NHD	NORTH HOLLYWOOD HUB
P22	PAIR 22 AMERICAN WIRE GAUGE
PC	PERSONAL COMPUTER
PDA	POWER DISTRIBUTION ASSEMBLY
PR	PAIR
RD	RECEIVE DATA
RG-6A/U	COAXIAL CABLE
8P8C	8 PIN 8 CONDUCTOR CONNECTOR PER
RMS	RAMP METERING SYSTEM
RTS	REQUEST TO SEND
RX	RECEIVE OR RECEIVER
SFP	SMALL FORM FACTOR PLUGGABLE TRANSCEIVER (LX OR ZX TYPE)
SMFO	SINGLEMODE FIBER OPTIC CABLE
TIA-232	TELECOMMUNICATIONS INDUSTRY ASSOCIATION STANDARD
TIA-422	TELECOMMUNICATIONS INDUSTRY ASSOCIATION STANDARD
TD	TRANSMIT DATA
TPS	TWISTED PAIR CABLE
TS	TEMPERATURE SENSOR
TX	TRANSMIT OR TRANSMITTER
W/GFI	WITH GROUND FAULT INTERRUPTER

LEGEND: (SHEETS E-2 TO E-30)

1,2	FIBER OPTIC STRAND NUMBER
V	SPLICE VAULT
CCTV	CCTV CABINET
V S	SPLICE VAULT WITH SPLICE ENCLOSURE
	FIBER OPTIC CABLE
	SURGE PROTECTOR
HT	HIGH TEMPERATURE RELAY COIL
6	WIRE SIZE, IF NOT INDICATED SHALL BE #12 AWG
F	FAN
L	INDICATOR LAMP
	THERMOSTATIC CONTROL
THERMO	ADJUSTABLE CALIBRATED THERMOSTAT
R	DUPLEX RECEPTACLE
	GROUNDING ELECTRODE

NOTES: (E-2 THROUGH E-14)

1. MAIN LINE CONDUITS MUST ENTER PULL BOXES ON THE SHORT SIDE OF THE PULLBOX.
2. EXISTING IRRIGATION SYSTEMS ARE NOT SHOWN FOR CLARITY.
3. NEW FIBER OPTIC COMMUNICATION CONDUIT RUNS MUST HAVE A TRACER WIRE.
4. NUMBER OF CONDUITS IN SOME COMMUNICATION RUNS MAY NOT BE SHOWN FOR CLARITY. THE CONTRACTOR MUST REROUTE IMPACTED CONDUITS AND REPLACE ITS CONTENTS AS NOTED ON THE PLANS.
5. PULL BOXES INSTALLED IN THE SHOULDER MUST BE TRAFFIC RATED.
6. INSTALL CONTROLLER CABINETS OR CCTV POLES A MINIMUM OF 30 FEET FROM ETW, OR 6 FEET BEHIND METAL BEAM GUARD RAILING.

(ABBREVIATIONS, LEGEND AND NOTES)

MODIFY COMMUNICATION SYSTEM

E-1

STATE OF CALIFORNIA - DEPARTMENT OF TRANSPORTATION
Caltrans OFFICE OF ITS

FUNCTIONAL SUPERVISOR: JACQUELINE C. TAN
CALCULATED-DESIGNED BY: PATRICK P. LUI
CHECKED BY: JACQUELINE C. TAN
REVISED BY
DATE REVISED

LAST REVISION 00-00-00
DATE PLOTTED => 05-AUG-2015
TIME PLOTTED => 10:21