Dist	COUNTY	LOCATION CODE	POST MILES TOTAL PROJECT	SHEET No.	TOTAL SHEETS
07	LA	5,10,105, 118,134, etc.	Var	1	17

INDEX OF PLANS

SHEET NO.	DESCRIPTION
1	TITLE AND LOCATION
2	LOCATIONS OF CONSTRUCTION
3	LAYOUT
4-5	CONSTRUCTION DETAILS
6	UTILITY PLAN
7	CONSTRUCTION AREA SIGNS
8	TRAFFIC HANDLING PLAN
9-13	TRAFFIC HANDLING DETAILS
14	SUMMARY OF QUANTITIES
15-17	REVISED STANDARD PLANS

STATE OF CALIFORNIA

DEPARTMENT OF TRANSPORTATION

PROJECT PLANS FOR CONSTRUCTION ON

STATE HIGHWAY

IN LOS ANGELES COUNTY AT VARIOUS LOCATIONS

TO BE SUPPLEMENTED BY STANDARD PLANS DATED 2010

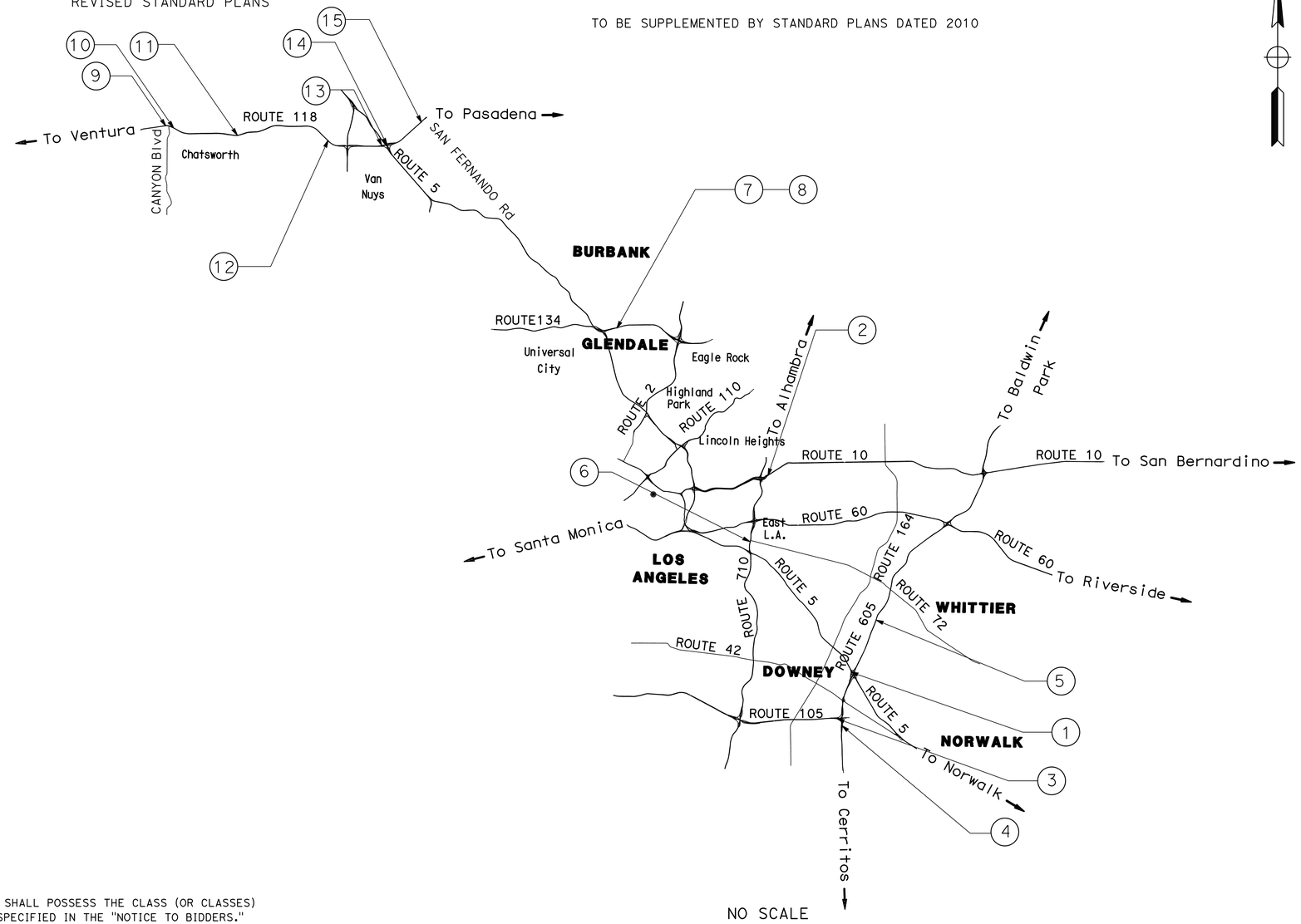

NO SCALE

PROJECT MANAGER	CHRISTIAN SAM
DESIGN ENGINEER	EDGAR HERRERA

THE CONTRACTOR SHALL POSSESS THE CLASS (OR CLASSES) OF LICENSE AS SPECIFIED IN THE "NOTICE TO BIDDERS."

PROJECT ENGINEER REGISTERED CIVIL ENGINEER — DATE 4/4/13

REGISTERED PROFESSIONAL ENGINEER — EDGAR HERRERA — No. C67603 — Exp. 6/30/15 — CIVIL — STATE OF CALIFORNIA

October 28, 2013
PLANS APPROVAL DATE

THE STATE OF CALIFORNIA OR ITS OFFICERS OR AGENTS SHALL NOT BE RESPONSIBLE FOR THE ACCURACY OR COMPLETENESS OF SCANNED COPIES OF THIS PLAN SHEET.

CONTRACT No.	07-2W4304
PROJECT ID	0713000143

LAST REVISION 10-11-13 — DATE PLOTTED => 01-NOV-2013 — TIME PLOTTED => 16:42

Dist	COUNTY	ROUTE	POST MILES TOTAL PROJECT	SHEET No.	TOTAL SHEETS
07	LA	5,10,105, 118,134,etc.	Var	2	17

REGISTERED CIVIL ENGINEER 2/5/13 DATE

10-28-13
PLANS APPROVAL DATE

REGISTERED PROFESSIONAL ENGINEER EDGAR HERRERA No. C67603 Exp. 6/30/15 CIVIL STATE OF CALIFORNIA

THE STATE OF CALIFORNIA OR ITS OFFICERS OR AGENTS SHALL NOT BE RESPONSIBLE FOR THE ACCURACY OR COMPLETENESS OF SCANNED COPIES OF THIS PLAN SHEET.

(*) NOT SHOWN ON LAYOUTS

LOCATIONS OF CONSTRUCTION

Loc	ROUTE	DIRECTION	PM	LOCATION/DESCRIPTION
1	5	SB	R7.1	(*) CONNECTOR TO Rte 605
2	10	WB	R21.7	(*) CONNECTOR TO Rte 710
3	105	EB	R17.8	(*) CONNECTOR TO Rte 605
4	605	NB	R7.5	(*) OFF-RAMP TO IMPERIAL Hwy
5	605	NB	R11.9	(*) OFF-RAMP TO WASHINGTON Blvd
6	710	SB	R23.7	(*) OFF-RAMP TO WHITTIER Blvd
7	134	EB	R6.7	COLUMBUS Ave Ped OC
8	134	WB	R6.7	COLUMBUS Ave Ped OC
9	118	EB	R1.6	(*) OFF-RAMP TO TOPANGA CANYON Blvd
10	118	EB	R2.5	(*) OFF-RAMP TO DE SOTO Ave
11	118	EB	R4.6	(*) OFF-RAMP TO TAMPA Ave
12	118	EB	R8.9	(*) OFF-RAMP TO WOODLEY Ave
13	118	EB	R11.2	(*) CONNECTOR TO Rte 5
14	118	EB	R11.4	(*) OFF-RAMP TO LAUREL CANYON Blvd
15	118	EB	R12.2	(*) OFF-RAMP TO SAN FERNANDO Rd

LOCATIONS OF CONSTRUCTION

LC-1

REVISED BY | DATE REVISED
SYED ALI SHAH | EDGAR HERRERA
CALCULATED-DESIGNED BY | CHECKED BY
FUNCTIONAL SUPERVISOR: GRISH BIGLARIAN
STATE OF CALIFORNIA - DEPARTMENT OF TRANSPORTATION
Caltrans® TRAFFIC DESIGN

LAST REVISION 10-05-12 | DATE PLOTTED => 01-NOV-2013 | TIME PLOTTED => 16:42

Dist	COUNTY	ROUTE	POST MILES TOTAL PROJECT	SHEET No.	TOTAL SHEETS
07	LA	5,10,105, 118,134,etc.	Var	3	17

REGISTERED CIVIL ENGINEER 2/5/13 DATE

10-28-13
PLANS APPROVAL DATE

THE STATE OF CALIFORNIA OR ITS OFFICERS OR AGENTS SHALL NOT BE RESPONSIBLE FOR THE ACCURACY OR COMPLETENESS OF SCANNED COPIES OF THIS PLAN SHEET.

REGISTERED PROFESSIONAL ENGINEER
EDGAR HERRERA
No. C67603
Exp. 6/30/15
CIVIL
STATE OF CALIFORNIA

NOTE:

FOR ACCURATE RIGHT OF WAY AND ACCESS DATA, CONTACT RIGHT OF WAY ENGINEERING AT THE DISTRICT OFFICE.

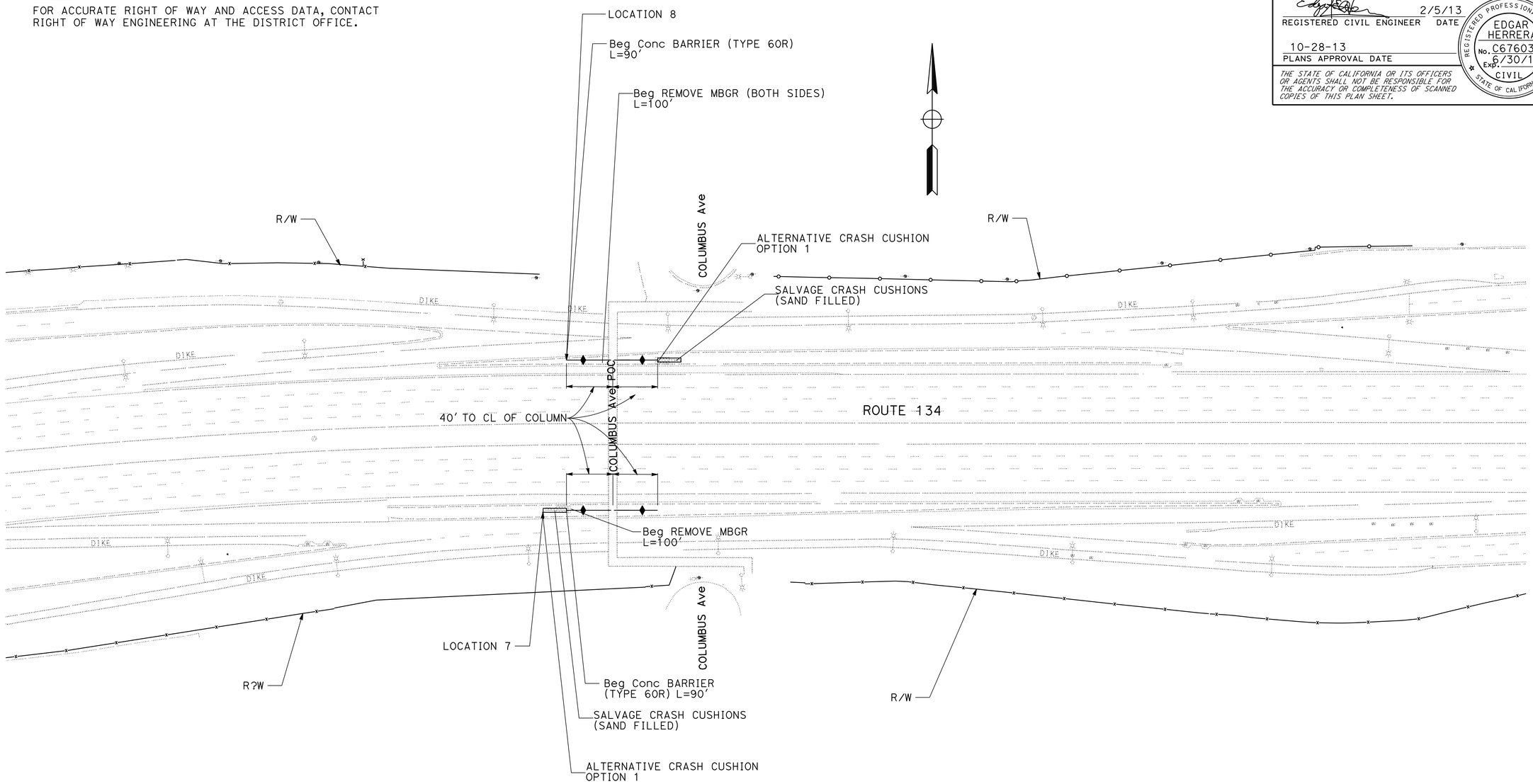

LAYOUT
SCALE: 1"= 50'

L-1

STATE OF CALIFORNIA - DEPARTMENT OF TRANSPORTATION
Caltrans® **TRAFFIC DESIGN**

FUNCTIONAL SUPERVISOR: GRISH BIGLARIAN

CALCULATED-DESIGNED BY: SYED ALI SHAH
CHECKED BY: EDGAR HERRERA

REVISED BY
DATE REVISED

LAST REVISION 10-05-12
DATE PLOTTED => 01-NOV-2013
TIME PLOTTED => 16:42

DIST	COUNTY	ROUTE	POST MILES TOTAL PROJECT	SHEET No.	TOTAL SHEETS
07	LA	5,10,105, 118,134,etc.	Var	4	17

REGISTERED CIVIL ENGINEER 2/5/13 DATE

10-28-13
PLANS APPROVAL DATE

REGISTERED PROFESSIONAL ENGINEER EDGAR HERRERA No. C67603 Exp. 6/30/15 CIVIL STATE OF CALIFORNIA

The State of California or its officers or agents shall not be responsible for the accuracy or completeness of electronic copies of this plan sheet.

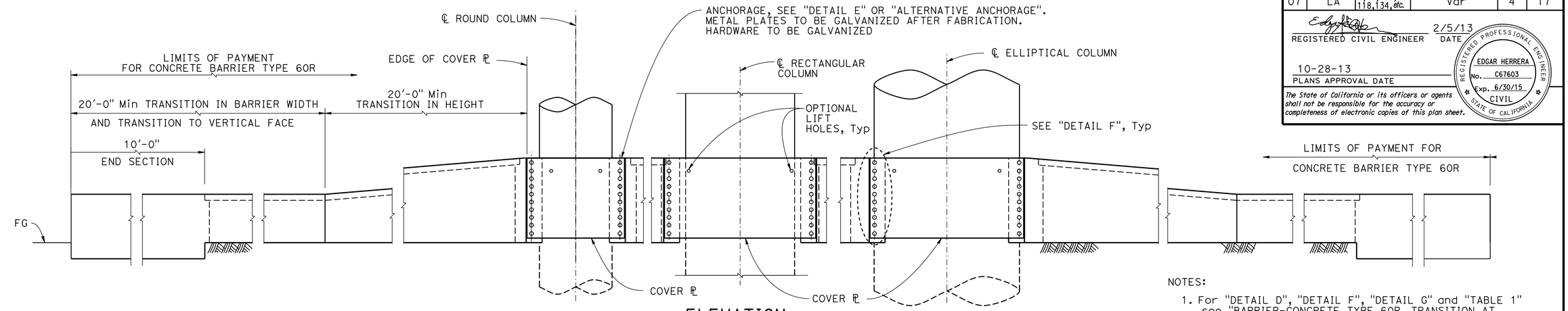

ELEVATION

3/8" = 1'-0"

NOTES:

1. For "DETAIL D", "DETAIL F", "DETAIL G" and "TABLE 1" see "BARRIER-CONCRETE TYPE 60R, TRANSITION AT BRIDGE COLUMN - DETAILS NO. 2" sheet
2. For cover plate length see "TABLE 1" on "TRANSITION AT BRIDGE COLUMN-DETAILS NO. 2" sheet
3. Adjust height of concrete barriers wall on low side of offset or superelevated roadways to provide level grade across top of concrete barrier cap.

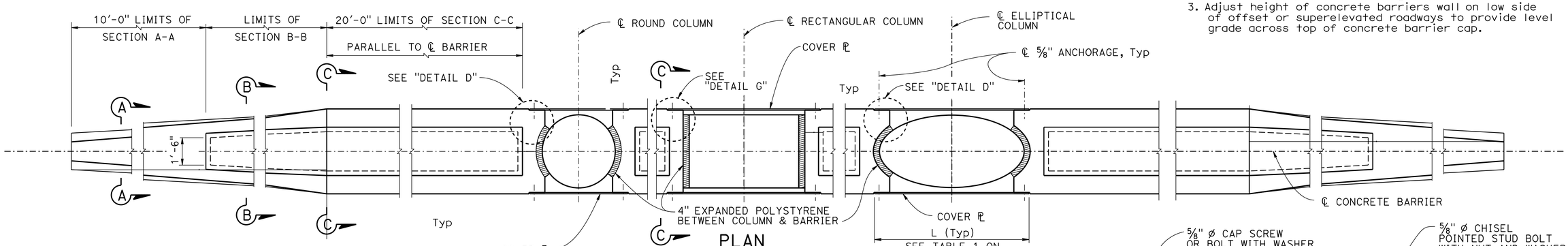

PLAN

3/8" = 1'-0"

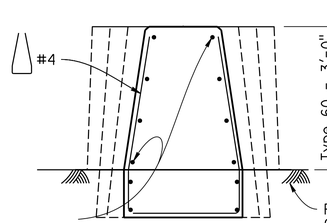

SECTION A-A

3/4" = 1'-0"

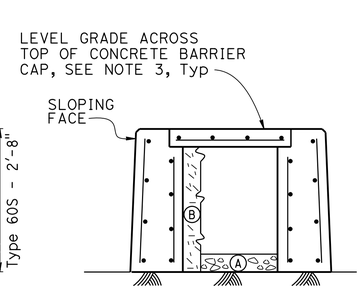

SECTION B-B

3/4" = 1'-0"

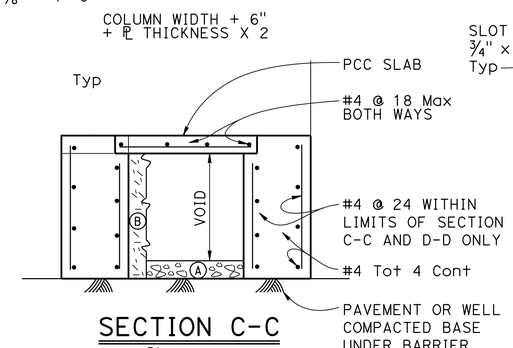

SECTION C-C

3/4" = 1'-0"

NOTES:

1. Contractor options for fill between barrier walls
   - (A) Place 4" PCC at base between barrier walls
   - (B) Place granular material from base to bottom of 4" cap

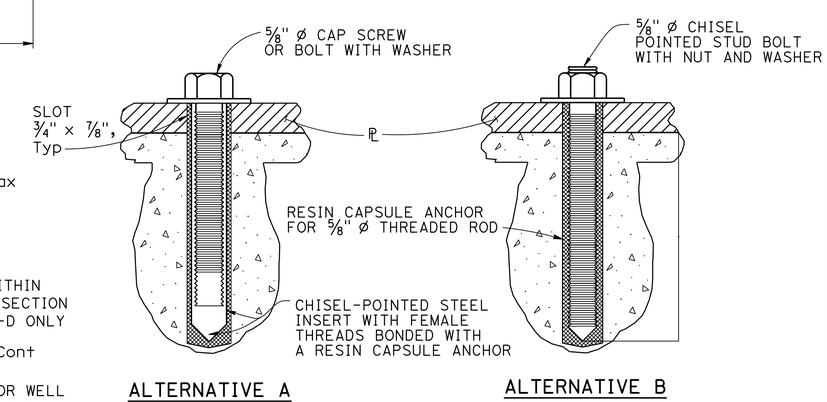

ALTERNATIVE ANCHORAGE

NO SCALE

STANDARD DRAWING

FILE NO. xs16-090-1

APPROVAL DATE July 2012

STATE OF CALIFORNIA DEPARTMENT OF TRANSPORTATION

DIVISION OF ENGINEERING SERVICES

BRIDGE NO. X

POST MILE X

CONSTRUCTION DETAILS

CONCRETE BARRIER TYPE 60R

TRANSITION AT BRIDGE COLUMN-DETAILS NO. 1

DS OSD 2147A (ENGLISH STANDARD DRAWING "XS" BORDER REV. (02-02-11)

ORIGINAL SCALE IN INCHES FOR REDUCED PLANS 0 1 2 3

UNIT: X
PROJECT NUMBER & PHASE: 07130001431
CONTRACT NO.: 07W4304

DISREGARD PRINTS BEARING EARLIER REVISION DATES

REVISION DATES 6-05-12 7/18/12

SHEET X OF X

FILE => 072w430ga001.dgn

USERNAME => s115484 DATE PLOTTED => 01-NOV-2013 TIME PLOTTED => 16:42

DIST	COUNTY	ROUTE	POST MILES TOTAL PROJECT	SHEET No.	TOTAL SHEETS
07	LA	5,10,105, 118,134, etc.	Var	5	17

REGISTERED CIVIL ENGINEER 2/5/13 DATE

7-19-13
PLANS APPROVAL DATE

REGISTERED PROFESSIONAL ENGINEER EDGAR HERRERA No. C67603 Exp. 6/30/15 CIVIL STATE OF CALIFORNIA

The State of California or its officers or agents shall not be responsible for the accuracy or completeness of electronic copies of this plan sheet.

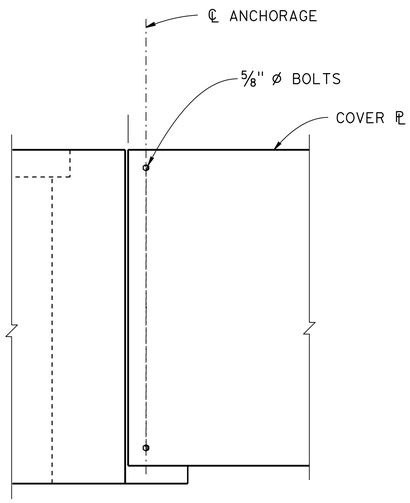

DETAIL F
1" = 1'-0"

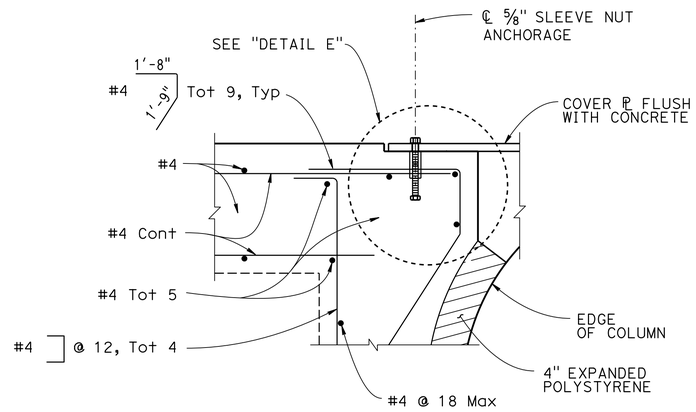

DETAIL D
1½" = 1'-0"

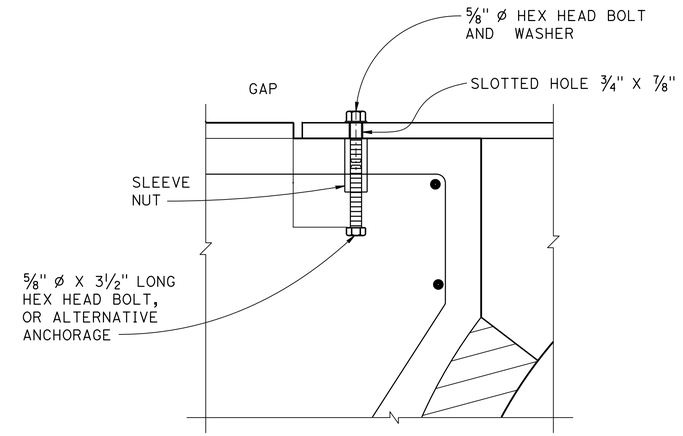

DETAIL E
3" = 1'-0"

TABLE 1		
L (ft)	PLATE THICKNESS (in)	TOTAL NO. OF BOLTS
8'-6" Max	7/8	10
6'-6" Max	11/16	7
4'-6" Max	7/16	5

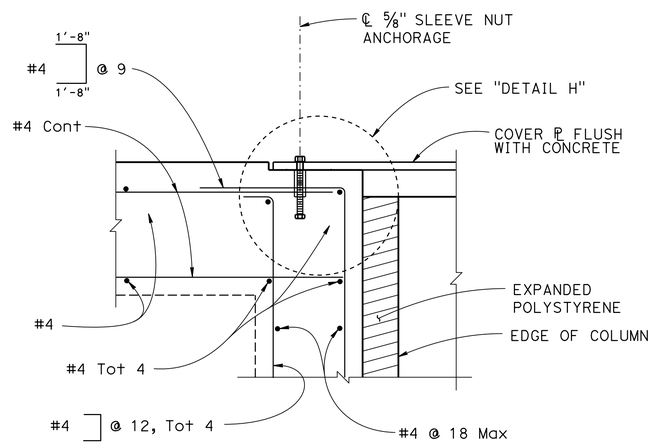

DETAIL G
1½" = 1'-0"

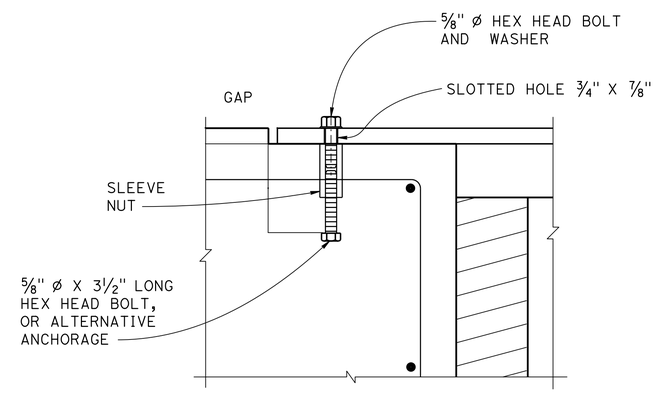

DETAIL H
3" = 1'-0"

NOTE:

Structural steel, f_y = 50,000 psi
Unless otherwise noted

STANDARD DRAWING

FILE NO. xs16-090-2

APPROVAL DATE July 2012

DS OSD 2147A (ENGLISH STANDARD DRAWING "XS" BORDER REV. (02-02-11)

ORIGINAL SCALE IN INCHES FOR REDUCED PLANS 0 1 2 3

CALIFORNIA
DEPARTMENT OF TRANSPORTATION

DIVISION OF ENGINEERING SERVICES

BRIDGE NO. X
POST MILE X

CONSTRUCTION DETAILS
CONCRETE BARRIER TYPE 60R
TRANSITION AT BRIDGE COLUMN-DETAILS NO. 2

UNIT: 1877
PROJECT NUMBER & PHASE: 07130001431
CONTRACT NO.: 2W4304

DISREGARD PRINTS BEARING EARLIER REVISION DATES

REVISION DATES 6-05-12 7/24/12 SHEET X OF X

FILE => 072w430ga002.dgn

USERNAME => s115484 DATE PLOTTED => 01-NOV-2013 TIME PLOTTED => 16:42

Dist	COUNTY	ROUTE	POST MILES TOTAL PROJECT	SHEET No.	TOTAL SHEETS
07	LA	5,10,105, 118,134,etc.	Var	6	17

REGISTERED CIVIL ENGINEER — DATE 2/5/13

7-19-13
PLANS APPROVAL DATE

REGISTERED PROFESSIONAL ENGINEER — EDGAR HERRERA — No. C67603 — Exp. 6/30/15 — CIVIL — STATE OF CALIFORNIA

THE STATE OF CALIFORNIA OR ITS OFFICERS OR AGENTS SHALL NOT BE RESPONSIBLE FOR THE ACCURACY OR COMPLETENESS OF SCANNED COPIES OF THIS PLAN SHEET.

NOTES:

1. FOR ACCURATE RIGHT OF WAY DATA, CONTACT RIGHT OF WAY ENGINEERING AT THE DISTRICT OFFICE.
2. LOCATIONS OF UTILITY FACILITIES SHOWN ON THESE PLANS ARE APPROXIMATE AND MUST BE VERIFIED PRIOR TO CONSTRUCTION.

LEGEND:

Ca	CABLE
Du	DUCT
kV	KILOVOLT
Glen W&P	CITY OF GLENDALE DEPARTMENT OF WATER & POWER

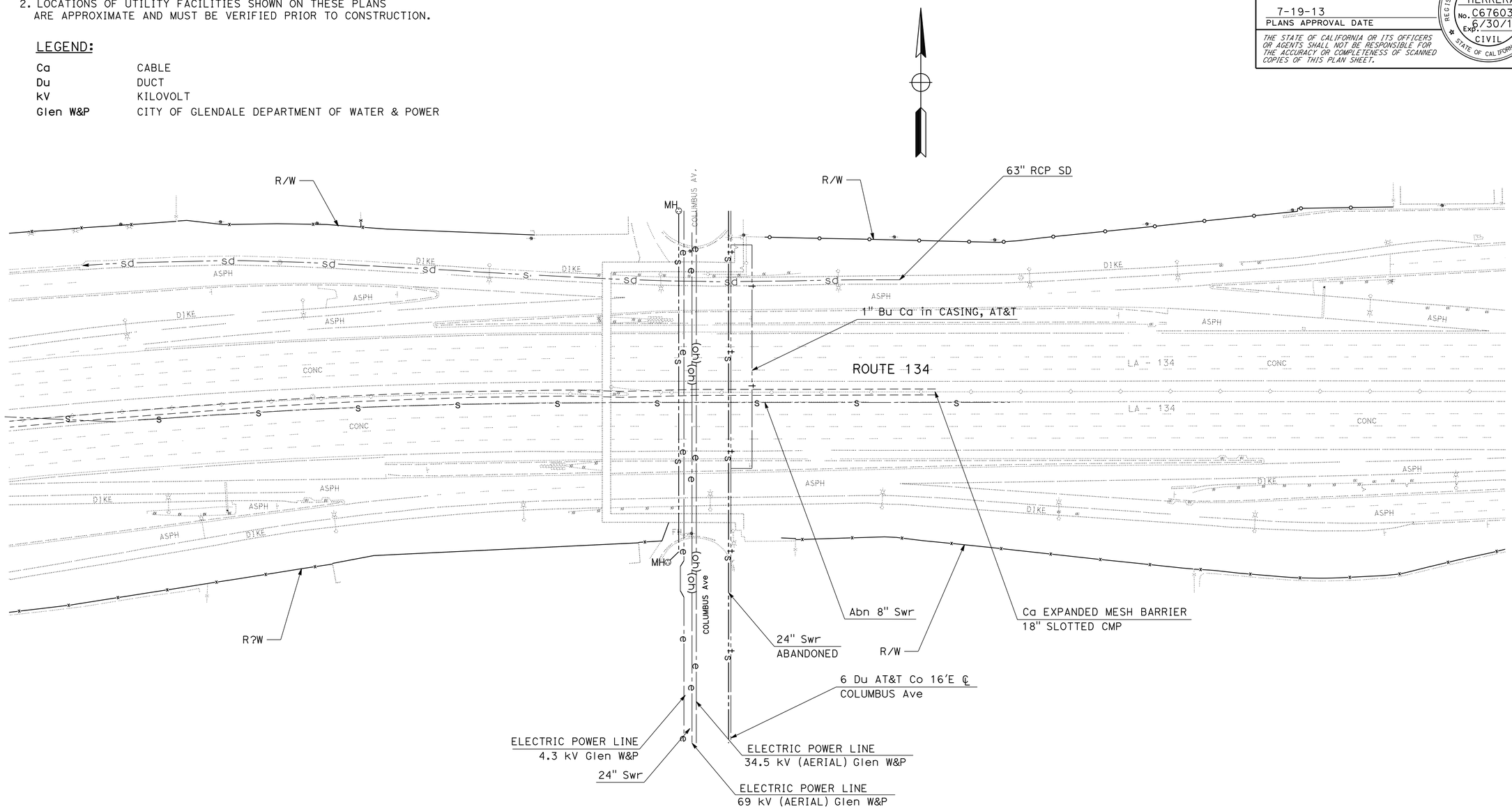

UTILITY PLAN

SCALE: 1"= 50'

U-1

APPROVED FOR UTILITY INFORMATION ONLY

STATE OF CALIFORNIA - DEPARTMENT OF TRANSPORTATION
Caltrans® **TRAFFIC DESIGN**

FUNCTIONAL SUPERVISOR: GRISH BIGLARIAN
CALCULATED-DESIGNED BY: SYED ALI SHAH
CHECKED BY: EDGAR HERRERA
REVISED BY / DATE REVISED

LAST REVISION 10-05-12 | DATE PLOTTED => 01-NOV-2013 | TIME PLOTTED => 16:42

Dist	COUNTY	ROUTE	POST MILES TOTAL PROJECT	SHEET No.	TOTAL SHEETS
07	LA	5,10,105, 118,134,etc.	Var	7	17

REGISTERED CIVIL ENGINEER 2/5/13 DATE

7-19-13
PLANS APPROVAL DATE

REGISTERED PROFESSIONAL ENGINEER EDGAR HERRERA No. C67603 Exp. 6/30/15 CIVIL STATE OF CALIFORNIA

THE STATE OF CALIFORNIA OR ITS OFFICERS OR AGENTS SHALL NOT BE RESPONSIBLE FOR THE ACCURACY OR COMPLETENESS OF SCANNED COPIES OF THIS PLAN SHEET.

NOTES:

1. LOCATIONS OF CONSTRUCTION AREA SIGNS SHOWN ARE APPROXIMATE. THE ENGINEER DETERMINES EXACT LOCATION.
2. "TRAFFIC FINES DOUBLED IN CONSTRUCTION ZONES" SIGN MUST BE PLACED APPROXIMATELY 500 FEET IN ADVANCE OF "ROAD WORK AHEAD" SIGN OR AS DETERMINED BY THE ENGINEER.
3. FOR ADDITIONAL CONSTRUCTION AREA SIGNS SEE TRAFFIC HANDLING PLANS.

LEGEND:

WORK LOCATION

STATIONARY MOUNTED CONSTRUCTION AREA SIGNS (TOTAL SHEET CS-1)

SIGN No.	SIGN CODE	PANEL SIZE	SIGN MESSAGE	No. OF POSTS AND SIZE	No. OF SIGNS (SHEET CS-1)
1	C40 (CA)	108" x 42"	TRAFFIC FINES DOUBLED IN CONSTRUCTION ZONES	2-6" x 6"	15
2	W20-1	48" x 48"	ROAD WORK AHEAD	1-6" x 6"	15
3	G20-2	48" x 24"	END ROAD WORK	1-4" x 6"	32

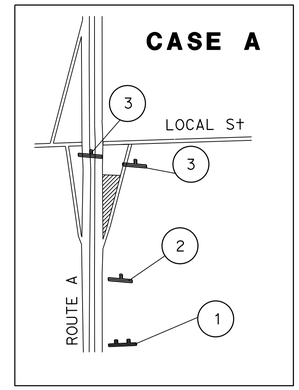

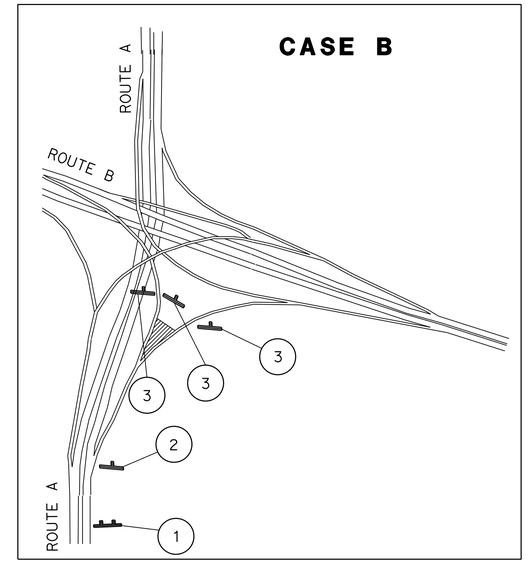

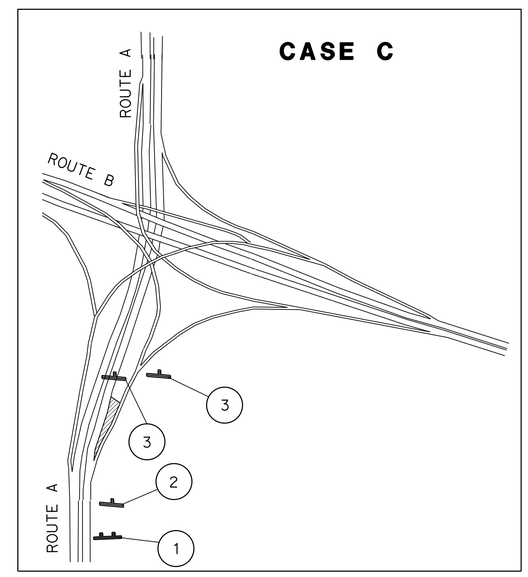

STATIONARY MOUNTED CONSTRUCTION AREA SIGNS

LOCATION				TYPE	LOCAL STREET	ROUTE B	REMARKS
Loc	ROUTE	DIRECTION	PM				
1	5	SB	7.1	CASE B		605	
2	10	WB	21.7	CASE C		710	
3	105	EB	R17.8	CASE B		605	
4	605	NB	R 7.5	CASE A	IMPERIAL Hwy		
5	605	NB	R11.9	CASE A	WASHINGTON Blvd		
6	710	SB	23.7	CASE A	WHITTIER Blvd		
7	134	EB	R 6.7	CASE A	COLUMBUS Ave Ped OC		ADD ADDITIONAL SIGNING PER TH-1
8	134	WB	R 6.7	CASE A	COLUMBUS Ave Ped OC		ADD ADDITIONAL SIGNING PER TH-1
9	118	EB	R 1.6	CASE A	TOPANGA CANYON Blvd		
10	118	EB	R 2.5	CASE A	DE SOTO Ave		
11	118	EB	R 4.6	CASE A	TAMPA Ave		
12	118	EB	R 8.9	CASE A	WOODLEY Ave		
13	118	EB	R11.2	CASE C		5	
14	118	EB	R11.4	CASE A	LAUREL CANYON Blvd		
15	118	EB	R12.2	CASE A	SAN FERNANDO Rd		

CONSTRUCTION AREA SIGNS

NO SCALE

CS-1

STATE OF CALIFORNIA - DEPARTMENT OF TRANSPORTATION
Caltrans® TRAFFIC DESIGN

FUNCTIONAL SUPERVISOR: GRISH BIGLARIAN
CALCULATED-DESIGNED BY: SYED ALI SHAH
CHECKED BY: EDGAR HERRERA
REVISED BY / DATE REVISED

LAST REVISION 10-05-12
DATE PLOTTED => 01-NOV-2013
TIME PLOTTED => 16:42

Dist	COUNTY	ROUTE	POST MILES TOTAL PROJECT	SHEET No.	TOTAL SHEETS
07	LA	5,10,105, 118,134,etc.	Var	8	17

REGISTERED CIVIL ENGINEER 2/5/13 DATE

7-19-13
PLANS APPROVAL DATE

REGISTERED PROFESSIONAL ENGINEER EDGAR HERRERA No. C67603 Exp. 6/30/15 CIVIL STATE OF CALIFORNIA

THE STATE OF CALIFORNIA OR ITS OFFICERS OR AGENTS SHALL NOT BE RESPONSIBLE FOR THE ACCURACY OR COMPLETENESS OF SCANNED COPIES OF THIS PLAN SHEET.

STATIONARY MOUNTED CONSTRUCTION AREA SIGNS

SIGN No.	SIGN CODE	PANEL SIZE	SIGN MESSAGE	No. OF POSTS AND SIZE	No. OF SIGNS
4	C30A (CA)	48" X 48"	SHOULDER CLOSED	1 - 6" X 6"	2

NOTES:

1. LOCATIONS OF CONSTRUCTION AREA SIGNS SHOWN ARE APPROXIMATE THE ENGINEER DETERMINES EXACT LOCATIONS.

LEGEND:

WORK LOCATION

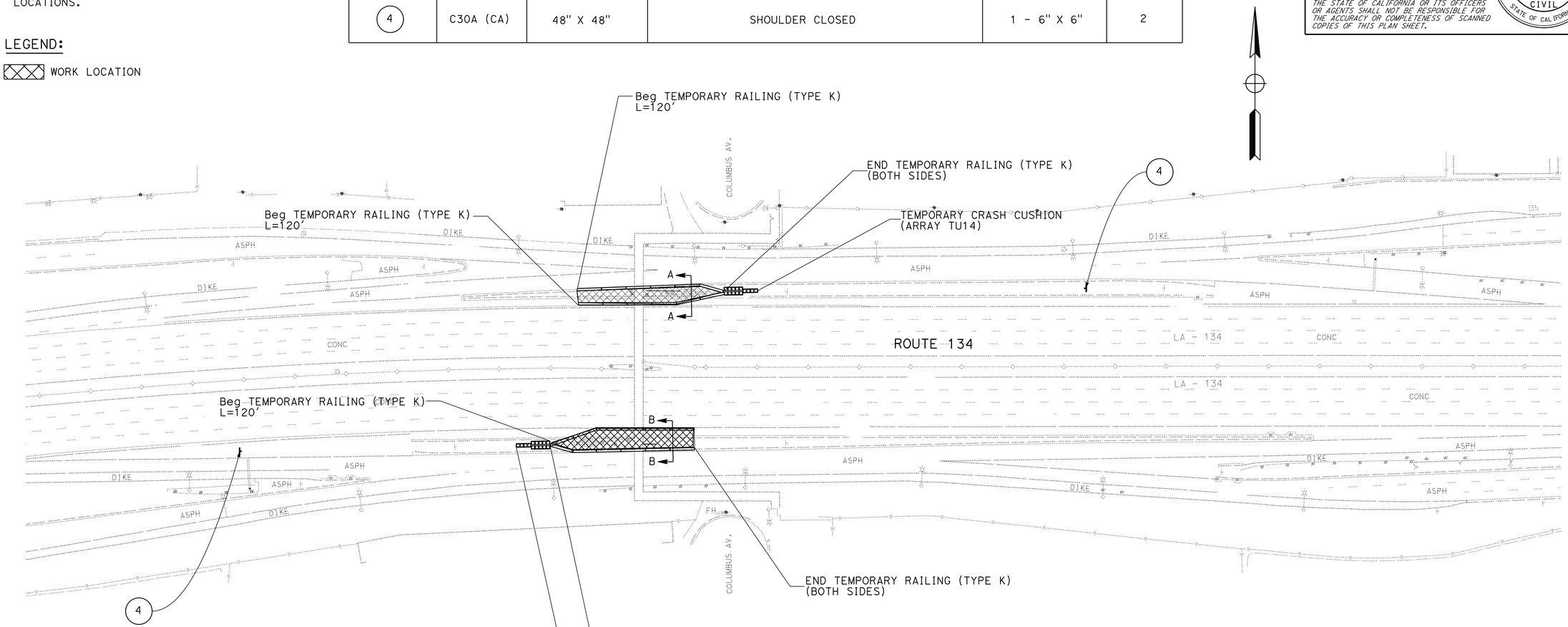

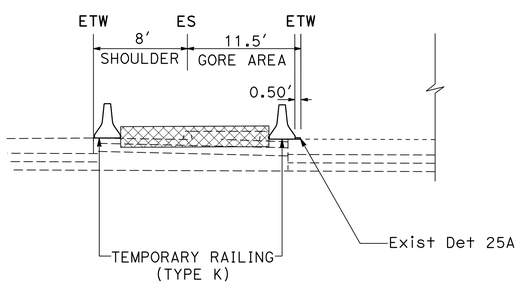

SECTION A-A
(LOCATION 8)

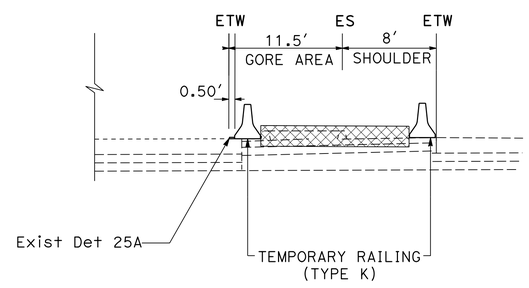

SECTION B-B
(LOCATION 7)

TRAFFIC HANDLING PLAN

SCALE: 1"= 50'

TH-1

STATE OF CALIFORNIA - DEPARTMENT OF TRANSPORTATION
Caltrans® TRAFFIC DESIGN

FUNCTIONAL SUPERVISOR: GRISH BIGLARIAN
CALCULATED-DESIGNED BY: SYED ALI SHAH
CHECKED BY: EDGAR HERRERA
REVISED BY / DATE REVISED

LAST REVISION 10-05-12
DATE PLOTTED => 01-NOV-2013
TIME PLOTTED => 16:42

Dist	COUNTY	ROUTE	POST MILES TOTAL PROJECT	SHEET No.	TOTAL SHEETS
07	LA	5,10,105, 118,134,etc.	Var	9	17

REGISTERED CIVIL ENGINEER 10-22-12 DATE

10-28-13
PLANS APPROVAL DATE

REGISTERED PROFESSIONAL ENGINEER D.S. KATAYAMA No. C50648 Exp. 9-30-15 CIVIL STATE OF CALIFORNIA

THE STATE OF CALIFORNIA OR ITS OFFICERS OR AGENTS SHALL NOT BE RESPONSIBLE FOR THE ACCURACY OR COMPLETENESS OF SCANNED COPIES OF THIS PLAN SHEET.

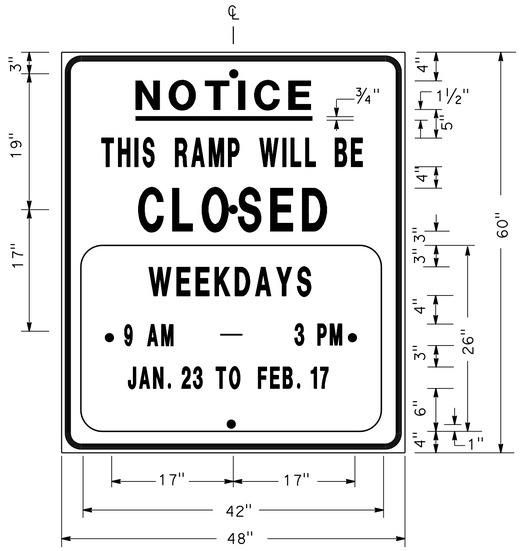

SIGN SP-1

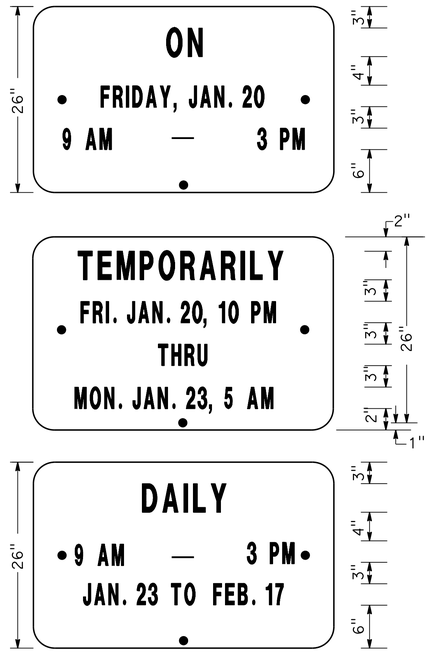

ALTERNATE OVERLAY PANELS (TYPICAL)

SPECIAL ADVANCE NOTICE PUBLICITY SIGN

NOTES: SIGN SP-1

1. LETTERS AND BORDER SHALL BE BLACK ON REFLECTORIZED ORANGE BACKGROUND.
2. BOLT HOLES SHALL BE 3/8" DIAMETER.
3. BASE MATERIAL SHALL BE ALUMINUM (MINIMUM 0.06").
4. SIGNS SHALL BE MOUNTED WITH BOTTOMS OF SIGNS A MINIMUM OF 7' ABOVE GROUND.

SIZE	BORDER WIDTH	MARGIN WIDTH	LETTER SIZE					CORNER RADIUS
			LINE 1	LINE 2*	LINE 3	LINE 4	LINE 5, 6, & 7*	
48"x60"	1 1/4"	3/4"	4E	4D	6E	4D		3"
42"x26"	OVERLAY						3D	1 1/2"
* CONDENSED SPACING IF NECESSARY								

SIGN SP-4

NOTES: SIGN SP-4

1. LETTERS - 6" SERIES C.
2. LETTERS AND BORDER SHALL BE BLACK ON REFLECTORIZED WHITE BACKGROUND.
3. BOLT HOLES SHALL BE 3/8" DIAMETER.
4. BASE MATERIAL SHALL BE ALUMINUM (MINIMUM 0.06").
5. SIGNS SHALL BE PLACED AT RAMP ENTRANCES IN ADDITION TO SIGNS POSTED IN ACCORDANCE WITH REVISED STANDARD PLAN RSP T14.

SPECIAL SIGN FOR ENTRANCE RAMP CLOSURES

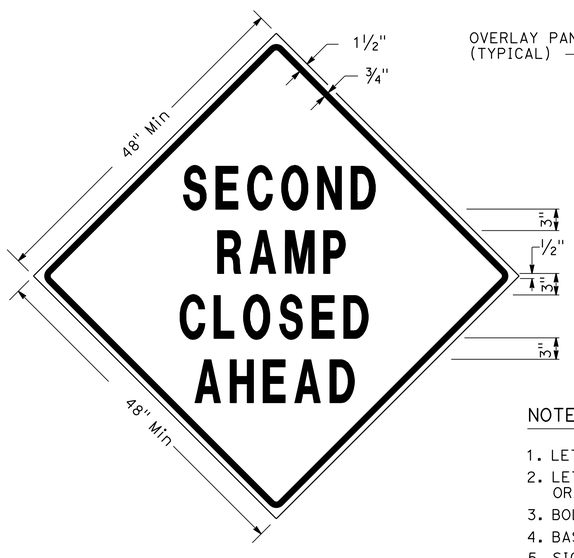

SIGN SP-3

SIGN SP-5

NOTES: SIGNS SP-3 & SP-5

1. LETTERS - 6" SERIES D.
2. LETTERS AND BORDER SHALL BE BLACK ON REFLECTORIZED ORANGE BACKGROUND.
3. BOLT HOLES SHALL BE 3/8" DIAMETER.
4. BASE MATERIAL SHALL BE ALUMINUM (MINIMUM 0.06").
5. SIGNS SHALL BE MOUNTED WITH BOTTOMS OF SIGNS A MINIMUM OF 7' ABOVE GROUND.
6. SIGN SP-5 SHALL BE USED IF THE OFF-RAMP TO BE CLOSED FOLLOWS A FREEWAY OFF-CONNECTOR.

SPECIAL SIGNS FOR EXIT RAMP CLOSURES

TRAFFIC HANDLING DETAILS
TRAFFIC CONTROL SYSTEM FOR RAMP CLOSURES, DETOUR SIGNS, AND MISCELLANEOUS DETAILS
SHEET 1 OF 2

NO SCALE

THD-1

CALCULATED-DESIGNED BY	JC
CHECKED BY	JOCELYN C CHIANG
REVISED BY	ALBERT K YU
DATE REVISED	3/12
FUNCTIONAL SUPERVISOR	JOHN YANG

STATE OF CALIFORNIA - DEPARTMENT OF TRANSPORTATION
Caltrans DTM

LAST REVISION 00-00-00 | DATE PLOTTED => 01-NOV-2013 | TIME PLOTTED => 16:42

Dist	COUNTY	ROUTE	POST MILES TOTAL PROJECT	SHEET No.	TOTAL SHEETS
07	LA	5,10,105 118,134,etc	Var	10	17

REGISTERED CIVIL ENGINEER Denis Katayama DATE 10-22-12

PLANS APPROVAL DATE 10-28-13

REGISTERED PROFESSIONAL ENGINEER D.S. KATAYAMA No. C50648 Exp. 9-30-15 CIVIL STATE OF CALIFORNIA

THE STATE OF CALIFORNIA OR ITS OFFICERS OR AGENTS SHALL NOT BE RESPONSIBLE FOR THE ACCURACY OR COMPLETENESS OF SCANNED COPIES OF THIS PLAN SHEET.

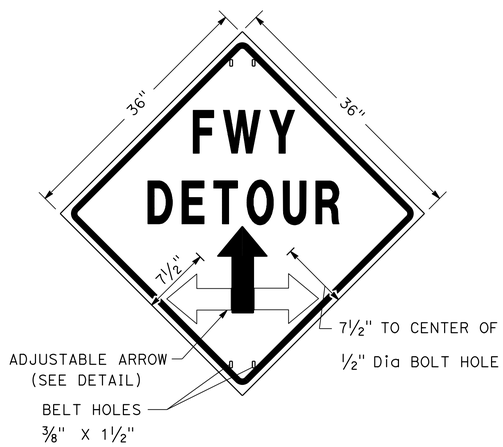

SIGN SP-2

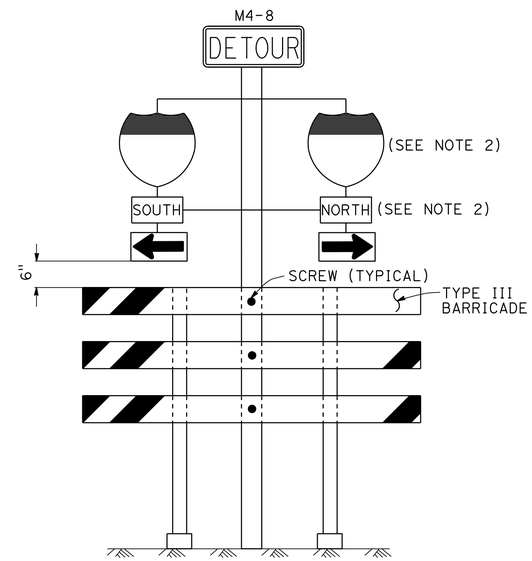

SIGN SP-6 (SEE NOTE 1)

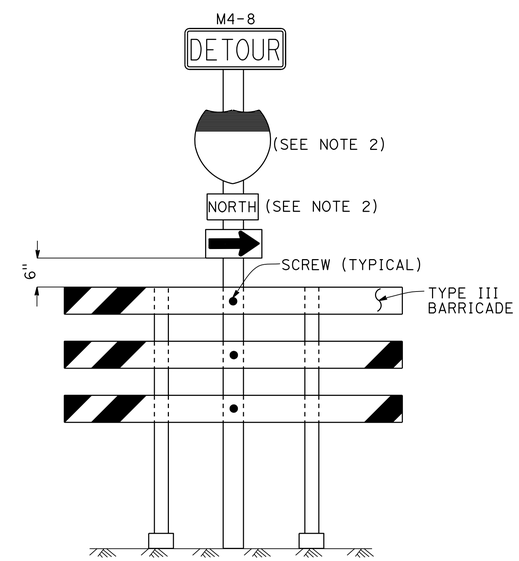

SIGN SP-7 (SEE NOTE 1)

NOTES: SIGN SP-2

1. LETTERS - 6" SERIES E.
2. LETTERS, BORDER AND ARROW - BLACK ON RETROREFLECTORIZED ORANGE BACKGROUND.
3. BASE MATERIAL FOR SIGNS AND ARROWS SHALL BE ALUMINUM (MINIMUM 0.06").
4. BELTS (LUGGAGE STRAPS) SHALL BE 1" WIDE BY 48" LONG, MADE OF COTTON OR POLYPROPYLENE WEB MATERIAL.
5. SIGNS SHALL BE MOUNTED WITH BOTTOMS OF SIGNS A MINIMUM OF 7' ABOVE GROUND EXCEPT AS OTHERWISE SHOWN ON OTHER TRAFFIC HANDLING DETAILS PLANS.

NOTES: SIGNS SP-6 & SP-7

1. IN LIEU OF PLACING SIGNS ON TYPE III BARRICADES, SIGNS, INCLUDING POSTS, MAY BE PLACED INTO THE GROUND OR FASTENED ONTO ELECTROLIERS.
2. USE APPROPRIATE ROUTE MARKER [G26-2(CA), G27-2(CA), G28-2(CA)] AND CARDINAL DIRECTION [NORTH (M3-1), SOUTH (M3-3), EAST (M3-2), WEST (M3-4)].

SPECIAL PORTABLE FREEWAY DETOUR SIGNS

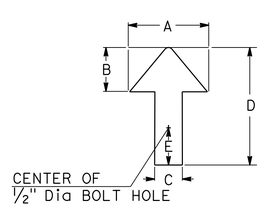

DIMENSIONS				
A	B	C	D	E
6"	3"	2"	8"	1"

ADJUSTABLE ARROW DETAIL

ABBREVIATION

(CA) CALIFORNIA CODE

TRAFFIC HANDLING DETAILS

TRAFFIC CONTROL SYSTEM FOR RAMP CLOSURES, DETOUR SIGNS, AND MISCELLANEOUS DETAILS

SHEET 2 OF 2

NO SCALE

THD-2

STATE OF CALIFORNIA - DEPARTMENT OF TRANSPORTATION

Caltrans DTM

FUNCTIONAL SUPERVISOR JOHN YANG

CALCULATED-DESIGNED BY ALBERT K YU

CHECKED BY JOCELYN C CHIANG

REVISED BY JC

DATE REVISED 3/12

LAST REVISION 00-00-00

DATE PLOTTED => 01-NOV-2013

TIME PLOTTED => 16:42

Dist	COUNTY	ROUTE	POST MILES TOTAL PROJECT	SHEET No.	TOTAL SHEETS
07	LA	5,10,105, 118,134,etc	Var	11	17

Denis Katayama 10-22-12
REGISTERED CIVIL ENGINEER DATE

10-28-13
PLANS APPROVAL DATE

REGISTERED PROFESSIONAL ENGINEER D.S. KATAYAMA No. C50648 Exp. 9-30-15 CIVIL STATE OF CALIFORNIA

THE STATE OF CALIFORNIA OR ITS OFFICERS OR AGENTS SHALL NOT BE RESPONSIBLE FOR THE ACCURACY OR COMPLETENESS OF SCANNED COPIES OF THIS PLAN SHEET.

LEGEND

- SIGN SP-2
- AND/OR — DESIGNATED DETOUR ROUTE
- DETOUR DIRECTION
- CONTROLLED INTERSECTION

NOTES:

1. SP-2 SIGNS MAY BE STRAPPED ON EXISTING ELECTROLIER, SIGNAL POST OR SIGN POST.
2. SP-2 SIGNS SHALL NOT BE INSTALLED ON BARRICADES EXCEPT AS OTHERWISE SHOWN.
3. SIGN LOCATIONS ARE APPROXIMATE. EXACT LOCATIONS WILL BE DETERMINED BY THE ENGINEER.
4. SP-2 SIGNS SHALL BE POSTED AT EACH CONTROLLED INTERSECTION (EXCEPT AT COMMERCIAL PROPERTY, RESIDENTIAL COMPLEX OR T-INTERSECTION FROM ONE-WAY STREET) ALONG THE DESIGNATED DETOUR ROUTE.
5. UNLESS OTHERWISE SHOWN ON OTHER THD PLANS, WHEN CONTROLLED INTERSECTIONS ALONG THE DESIGNATED DETOUR ROUTE ARE CLOSELY SPACED, PLACE SP-2 SIGNS AT CONTROLLED INTERSECTIONS AT A DISTANCE NOT TO EXCEED 1/4 MILE FROM THE PRECEDING DETOUR SIGN.
6. EXCEPT AS OTHERWISE SHOWN ON OTHER PLANS OR SPECIFIED IN THE SPECIAL PROVISIONS, SP-2 SIGNS SHALL BE PLACED AS SHOWN ON THIS PLAN.

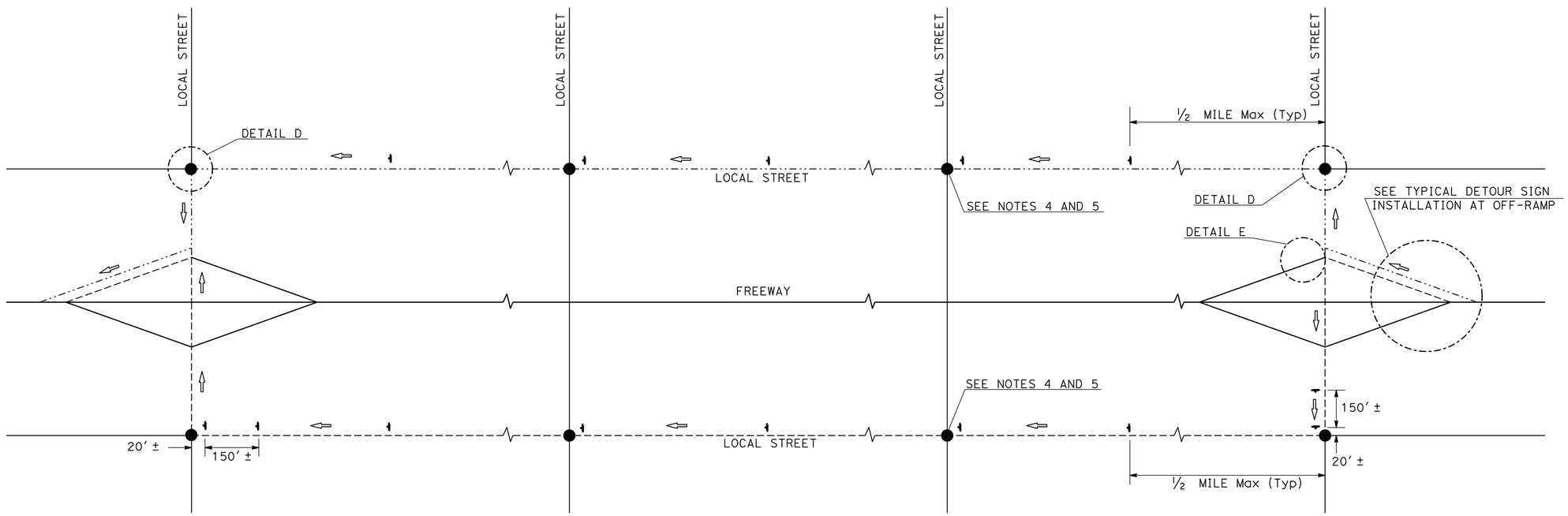

TYPICAL DETOUR SIGN INSTALLATION ALONG DESIGNATED DETOUR ROUTE

TRAFFIC HANDLING DETAILS

TRAFFIC CONTROL SYSTEM FOR DETOUR SIGN INSTALLATION ALONG DESIGNATED DETOUR ROUTE

SHEET 1 OF 3

NO SCALE

THD-3

STATE OF CALIFORNIA - DEPARTMENT OF TRANSPORTATION
Caltrans® DTM

FUNCTIONAL SUPERVISOR: JOHN YANG
CALCULATED-DESIGNED BY: ALBERT K YU
CHECKED BY: JOCELYN C CHIANG
REVISED BY: JC
DATE REVISED: 3/12

LAST REVISION: 00-00-00
DATE PLOTTED => 01-NOV-2013
TIME PLOTTED => 16:42

Dist	COUNTY	ROUTE	POST MILES TOTAL PROJECT	SHEET No.	TOTAL SHEETS
07	LA	5,10,105, 118,134,etc.	Var	12	17

REGISTERED CIVIL ENGINEER 10-22-12 DATE

10-28-13
PLANS APPROVAL DATE

THE STATE OF CALIFORNIA OR ITS OFFICERS OR AGENTS SHALL NOT BE RESPONSIBLE FOR THE ACCURACY OR COMPLETENESS OF SCANNED COPIES OF THIS PLAN SHEET.

REGISTERED PROFESSIONAL ENGINEER D.S. KATAYAMA No. C50648 Exp. 9-30-15 CIVIL STATE OF CALIFORNIA

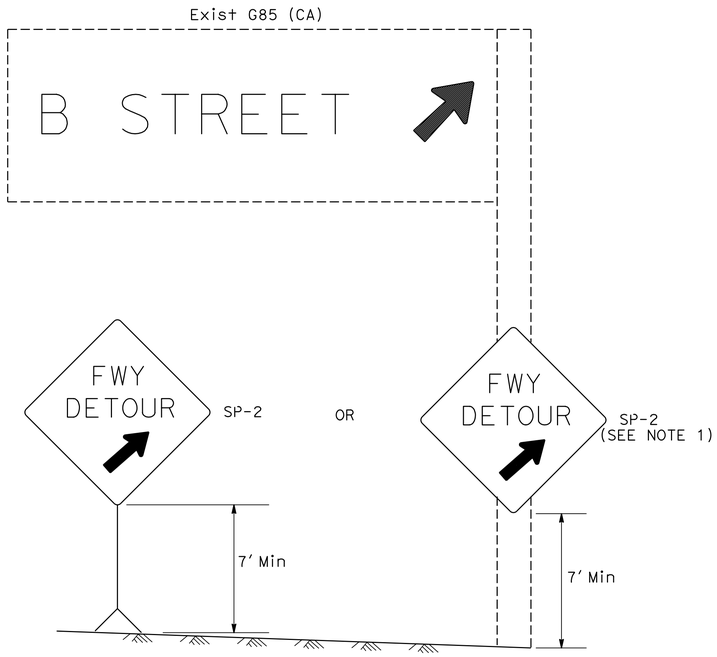

DETAIL A (SEE NOTE 3)

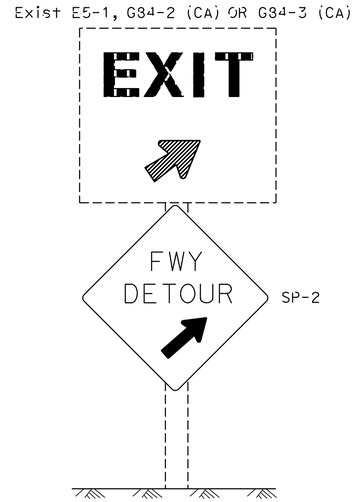

DETAIL B (SEE NOTE 3)

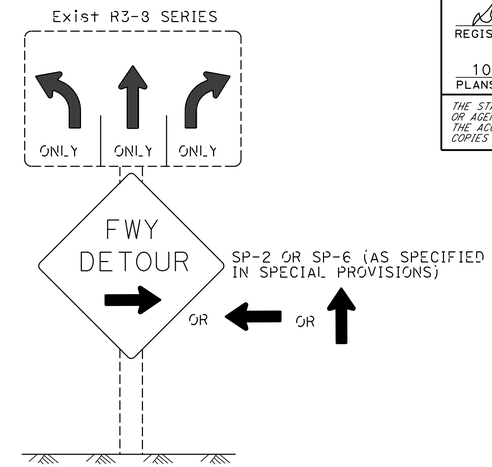

DETAIL C (SEE NOTES 4, 5, AND 6)

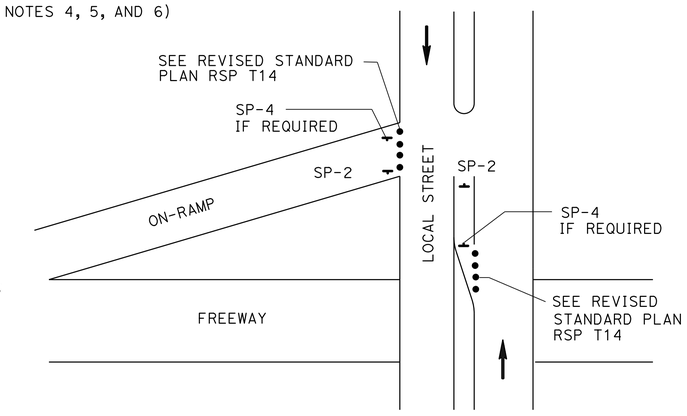

DETAIL E

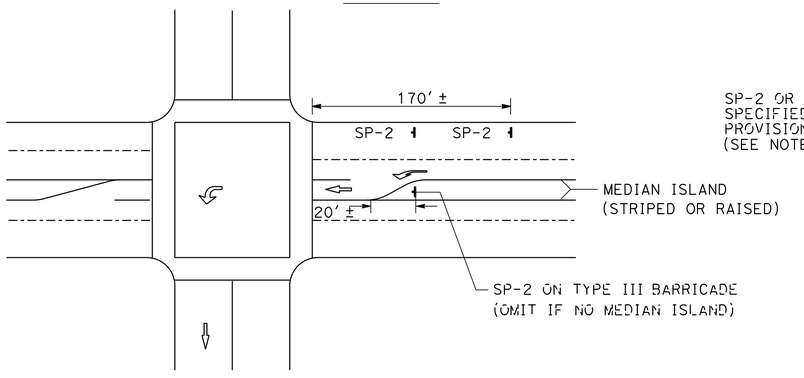

DETAIL D

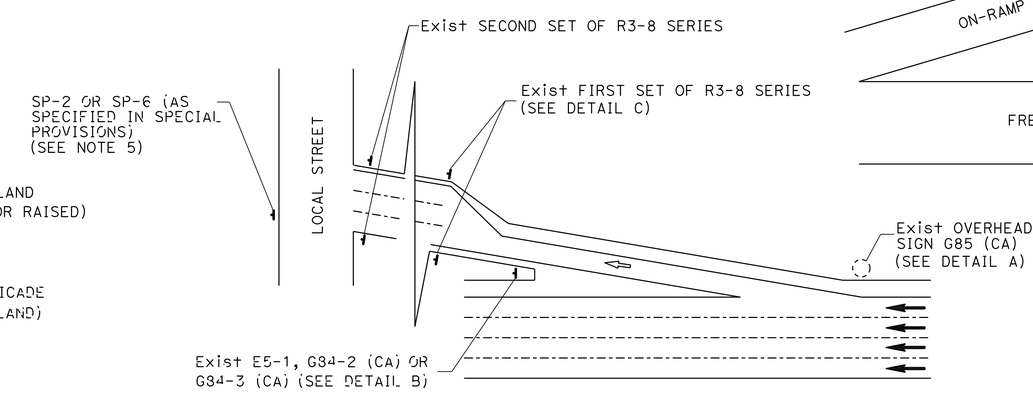

TYPICAL DETOUR SIGN INSTALLATION AT OFF-RAMP

LEGEND

- CONE
- PORTABLE SIGN
- DIRECTION OF TRAVEL
- DETOUR DIRECTION
- EXISTING OVERHEAD SIGN

NOTES: SIGN SP-2

1. SP-2 SIGNS MAY BE STRAPPED ON EXISTING ELECTROLIER, SIGNAL POST OR SIGN POST.
2. SP-2 SIGNS SHALL NOT BE INSTALLED ON BARRICADES EXCEPT AS OTHERWISE SHOWN.
3. OMIT DETAILS A AND B FOR FULL FREEWAY CLOSURES.
4. SEE TRAFFIC HANDLING DETAILS-TRAFFIC CONTROL SYSTEM FOR RAMP CLOSURES, DETOUR SIGNS, AND MISCELLANEOUS DETAILS PLAN SHEET 2 OF 2 FOR SP-6 SIGN DETAILS.
5. IF R3-8 SERIES SIGNS ARE NOT PRESENT AT THE OFF-RAMP, SP-2 OR SP-6 SIGNS SHALL BE FASTENED ONTO EXISTING ELECTROLIER, SIGNAL POST OR SIGN POST.
6. EXCEPT FOR DETAILS A & B, OMIT SP-2 SIGNS IF RAMP HAS MANDATORY SINGLE MOVE.

SIGN CODE LEGEND

XXYY-Y: FEDERAL SIGN CODE PER MANUAL ON UNIFORM TRAFFIC CONTROL DEVICES (MUTCD)

XXYY-Y (CA): CALIFORNIA SIGN CODE PER CALIFORNIA MUTCD

TRAFFIC HANDLING DETAILS
TRAFFIC CONTROL SYSTEM FOR DETOUR SIGN INSTALLATION ALONG DESIGNATED DETOUR ROUTE
SHEET 2 OF 3

NO SCALE **THD-4**

CALCULATED-DESIGNED BY	ALBERT K YU	REVISED BY	JC
CHECKED BY	JOCELYN C CHIANG	DATE REVISED	3/12

FUNCTIONAL SUPERVISOR: JOHN YANG

STATE OF CALIFORNIA - DEPARTMENT OF TRANSPORTATION
Caltrans® DTM

LAST REVISION 00-00-00 DATE PLOTTED => 01-NOV-2013 TIME PLOTTED => 16:42

Dist	COUNTY	ROUTE	POST MILES TOTAL PROJECT	SHEET No.	TOTAL SHEETS
07	LA	5,10,105, 118,134,etc.	Var	13	17

Denis Katayama 10-22-12
REGISTERED CIVIL ENGINEER DATE

10-28-13
PLANS APPROVAL DATE

REGISTERED PROFESSIONAL ENGINEER D.S. KATAYAMA No. C50648 Exp. 9-30-15 CIVIL STATE OF CALIFORNIA

THE STATE OF CALIFORNIA OR ITS OFFICERS OR AGENTS SHALL NOT BE RESPONSIBLE FOR THE ACCURACY OR COMPLETENESS OF SCANNED COPIES OF THIS PLAN SHEET.

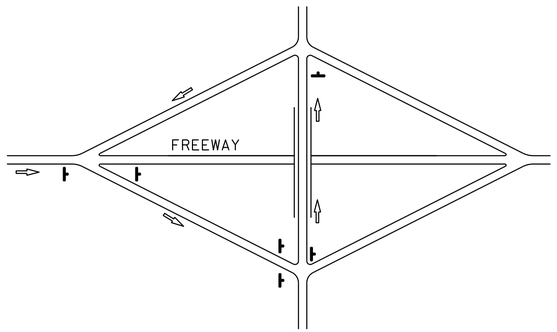

TYPE I

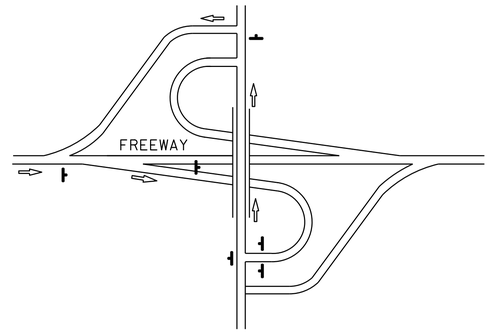

TYPE II

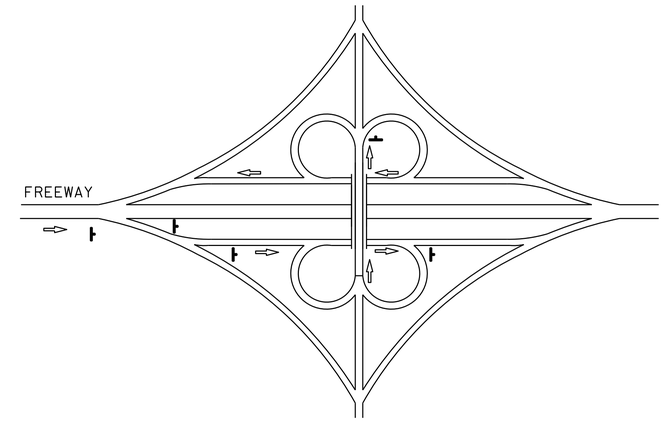

TYPE III

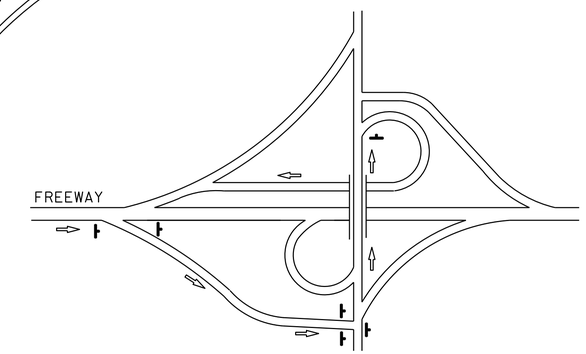

TYPE IV

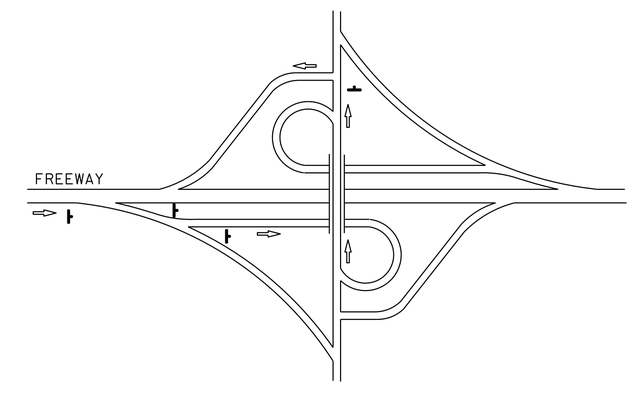

TYPE V

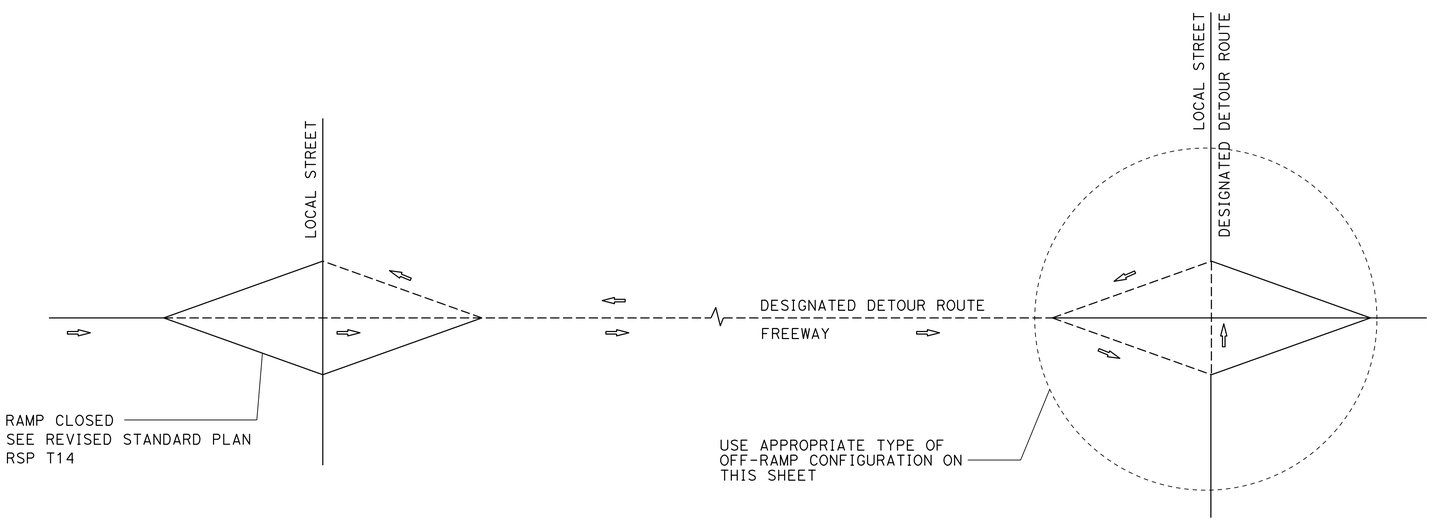

TYPE OF OFF-RAMP CONFIGURATION	MINIMUM No. OF SP-2
TYPE I	6
TYPE II	6
TYPE III	5
TYPE IV	6
TYPE V	4

TYPICAL DETOUR SIGN INSTALLATION FOR OFF-RAMP CLOSURE

NOTES:

1. FOR RAMP CONFIGURATIONS NOT SHOWN, THE EXACT LOCATIONS AND MINIMUM NUMBER OF SP-2 SIGNS SHALL BE DETERMINED BY THE ENGINEER.
2. SEE TRAFFIC HANDLING DETAILS-TRAFFIC CONTROL SYSTEM FOR RAMP CLOSURES, DETOUR SIGNS, AND MISCELLANEOUS DETAILS PLAN SHEET 2 OF 2 FOR SP-2 SIGN DETAILS.

LEGEND

- SIGN SP-2
- DETOUR DIRECTION
- DESIGNATED DETOUR ROUTE

TRAFFIC HANDLING DETAILS
TRAFFIC CONTROL SYSTEM FOR DETOUR SIGN INSTALLATION ALONG DESIGNATED DETOUR ROUTE
SHEET 3 OF 3

NO SCALE

THD-5

REVISED BY	DATE REVISED
JC	3/12

ALBERT K YU
JOCELYN C CHIANG
CALCULATED-DESIGNED BY
CHECKED BY
FUNCTIONAL SUPERVISOR
JOHN YANG

STATE OF CALIFORNIA - DEPARTMENT OF TRANSPORTATION
Caltrans®
DTM

LAST REVISION 00-00-00
DATE PLOTTED => 01-NOV-2013
TIME PLOTTED => 16:42

Dist	COUNTY	ROUTE	POST MILES TOTAL PROJECT	SHEET No.	TOTAL SHEETS
07	LA	5,10,105, 118,134,etc.	Var	14	17

REGISTERED CIVIL ENGINEER 2/5/13 DATE

10-28-13
PLANS APPROVAL DATE

REGISTERED PROFESSIONAL ENGINEER EDGAR HERRERA No. C67603 Exp. 6/30/13 CIVIL STATE OF CALIFORNIA

THE STATE OF CALIFORNIA OR ITS OFFICERS OR AGENTS SHALL NOT BE RESPONSIBLE FOR THE ACCURACY OR COMPLETENESS OF SCANNED COPIES OF THIS PLAN SHEET.

NOTES:

1. CRASH CUSHIONS MUST BE INSTALLED ACCORDING TO MANUFACTURER'S SPECIFICATIONS.
2. USE 6" THICK REINFORCED CRASH CUSHION CONCRETE PAD. CONSTRUCT ACCORDING TO MANUFACTURER'S SPECIFICATIONS.

LEGEND:

(*) NOT A SEPARATE PAY ITEM, FOR INFORMATION ONLY.

SUMMARY OF QUANTITIES

LOC	ROUTE	DIRECTION	PM	SALVAGE CRASH CUSHION SYSTEMS QUADGUARD	SALVAGE CRASH CUSHION SYSTEMS GREAT	SALVAGE CRASH CUSHION MODULES (SAND FILLED)	ALTERNATIVE CRASH CUSHION OPTION 1	ALTERNATIVE CRASH CUSHION OPTION 2	ALTERNATIVE CRASH CUSHION OPTION 3	TYPE COMPRESSOR CRASH CUSHION	REMOVE GUARDRAIL	(*) MARKER PANEL (TYPE R)	CONCRETE BARRIER (TYPE 60R)	TEMPORARY RAILING (TYPE K)	TEMPORARY CRASH CUSHION MODULE	TEMPORARY DRAINAGE INLET PROTECTION	TREATED WOOD WASTE	COMMENTS/REMARKS
				EA	EA	EA	EA	EA	EA	EA	LF	EA	LF	LF	EA	EA	LB	
1	5	SB	R7.1	1			1					1						
2	10	WB	R21.7	1			1					1				1		
3	105	EB	R17.8		1				1			1				1		
4	605	NB	R7.5			12	1					1						
5	605	NB	R11.9			10	1					1				2		
6	710	SB	R23.7	1						1		1						
7	134	EB	R6.7			14	1				100	1	90	240	14		1545	
8	134	WB	R6.7			14	1				100	1	90	240	14		1545	
9	118	EB	R1.6			14	1					1						
10	118	EB	R2.5			22		1				1				2		
11	118	EB	R4.6			22		1				1				4		
12	118	EB	R8.9			12	1					1						
13	118	EB	R11.2			22		1				1				2		
14	118	EB	R11.4			22		1				1				2		
15	118	EB	R12.2			9		1				1				2		
SUBTOTAL				3	1	173	8	5	1	1	200	15	180	480	28	16	3090	
TOTAL				4		173	8	5	1	1	200	15	180	480	28	16	3090	

SUMMARY OF QUANTITIES

Q-1

STATE OF CALIFORNIA - DEPARTMENT OF TRANSPORTATION
Caltrans® TRAFFIC DESIGN

FUNCTIONAL SUPERVISOR: GRISH BIGLARIAN
CALCULATED-DESIGNED BY: SYED ALI SHAH
CHECKED BY: EDGAR HERRERA
REVISED BY / DATE REVISED

LAST REVISION 10-05-12
DATE PLOTTED => 01-NOV-2013
TIME PLOTTED => 16:42

Dist	COUNTY	ROUTE	POST MILES TOTAL PROJECT	SHEET No.	TOTAL SHEETS
07	LA	5,10,105,	Var	15	17

REGISTERED CIVIL ENGINEER

July 19, 2013
PLANS APPROVAL DATE

REGISTERED PROFESSIONAL ENGINEER
Gurinderpal Bhullar
No. C48815
Exp. 9-30-14
CIVIL
STATE OF CALIFORNIA

THE STATE OF CALIFORNIA OR ITS OFFICERS OR AGENTS SHALL NOT BE RESPONSIBLE FOR THE ACCURACY OR COMPLETENESS OF SCANNED COPIES OF THIS PLAN SHEET.

TO ACCOMPANY PLANS DATED 10-28-13

2010 REVISED STANDARD PLAN RSP T9

TABLE 1

TAPER LENGTH CRITERIA AND CHANNELIZING DEVICE SPACING

SPEED (S)	MINIMUM TAPER LENGTH * FOR WIDTH OF OFFSET 12 FEET (W)				MAXIMUM CHANNELIZING DEVICE SPACING		
					X	Y	Z **
	TANGENT 2L	MERGING L	SHIFTING L/2	SHOULDER L/3	TAPER	TANGENT	CONFLICT
mph	ft	ft	ft	ft	ft	ft	ft
20	160	80	40	27	20	40	10
25	250	125	63	42	25	50	12
30	360	180	90	60	30	60	15
35	490	245	123	82	35	70	17
40	640	320	160	107	40	80	20
45	1080	540	270	180	45	90	22
50	1200	600	300	200	50	100	25
55	1320	660	330	220	55	110	27
60	1440	720	360	240	60	120	30
65	1560	780	390	260	65	130	32
70	1680	840	420	280	70	140	35

* - For other offsets, use the following merging taper length formula for L:
For speed of 40 mph or less, $L = WS^2/60$
For speed of 45 mph or more, $L = WS$

Where: L = Taper length in feet
W = Width of offset in feet
S = Posted speed limit, off-peak 85th-percentile speed prior to work starting, or the anticipated operating speed in mph

** - Use for taper and tangent sections where there are no pavement markings or where there is a conflict between existing pavement markings and channelizers (CA).

TABLE 2

LONGITUDINAL BUFFER SPACE AND FLAGGER STATION SPACING

SPEED *	Min D **	DOWNGRADE Min D ***		
		-3%	-6%	-9%
mph	ft	ft	ft	ft
20	115	116	120	126
25	155	158	165	173
30	200	205	215	227
35	250	257	271	287
40	305	315	333	354
45	360	378	400	427
50	425	446	474	507
55	495	520	553	593
60	570	598	638	686
65	645	682	728	785
70	730	771	825	891

* - Speed is posted speed limit, off-peak 85th-percentile speed prior to work starting, or the anticipated operating speed in mph

** - Longitudinal buffer space or flagger station spacing

*** - Use on sustained downgrade steeper than -3 percent and longer than 1 mile.

TABLE 3

ADVANCE WARNING SIGN SPACING

ROAD TYPE	DISTANCE BETWEEN SIGNS *		
	A	B	C
	ft	ft	ft
URBAN - 25 mph OR LESS	100	100	100
URBAN - MORE THAN 25 mph TO 40 mph	250	250	250
URBAN - MORE THAN 40 mph	350	350	350
RURAL	500	500	500
EXPRESSWAY / FREEWAY	1000	1500	2640

* - The distances are approximate, are intended for guidance purposes only, and should be applied with engineering judgment. These distances should be adjusted by the Engineer for field conditions, if necessary, by increasing or decreasing the recommmended distances.

STATE OF CALIFORNIA
DEPARTMENT OF TRANSPORTATION

TRAFFIC CONTROL SYSTEM TABLES FOR LANE AND RAMP CLOSURES

NO SCALE

RSP T9 DATED JULY 19, 2013 SUPERSEDES RSP T9 DATED APRIL 19, 2013 THAT SUPPLEMENTS THE STANDARD PLANS BOOK DATED 2010.

REVISED STANDARD PLAN RSP T9

4-30-13

Dist	COUNTY	ROUTE	POST MILES TOTAL PROJECT	SHEET NO.	TOTAL SHEETS
07	LA	5,10,105, 118,134,etc	Var	16	17

REGISTERED CIVIL ENGINEER

April 19, 2013
PLANS APPROVAL DATE

REGISTERED PROFESSIONAL ENGINEER Gurinderpal Bhullar No. C48815 Exp. 9-30-14 CIVIL STATE OF CALIFORNIA

THE STATE OF CALIFORNIA OR ITS OFFICERS OR AGENTS SHALL NOT BE RESPONSIBLE FOR THE ACCURACY OR COMPLETENESS OF SCANNED COPIES OF THIS PLAN SHEET.

TO ACCOMPANY PLANS DATED 10-28-13

NOTES:

See Revised Standard Plan RSP T9 for tables.

Use cone spacing X for taper segment, Y for tangent segment or Z for conflict situations, as approriate, per Table 1, unless X, Y, or Z cone spacing is shown on this sheet.

Unless otherwise specified in the special provisions, all temporary warning signs shall have black legend on fluorescent orange background.

California codes are designated by (CA). Otherwise, Federal (MUTCD) codes are shown.

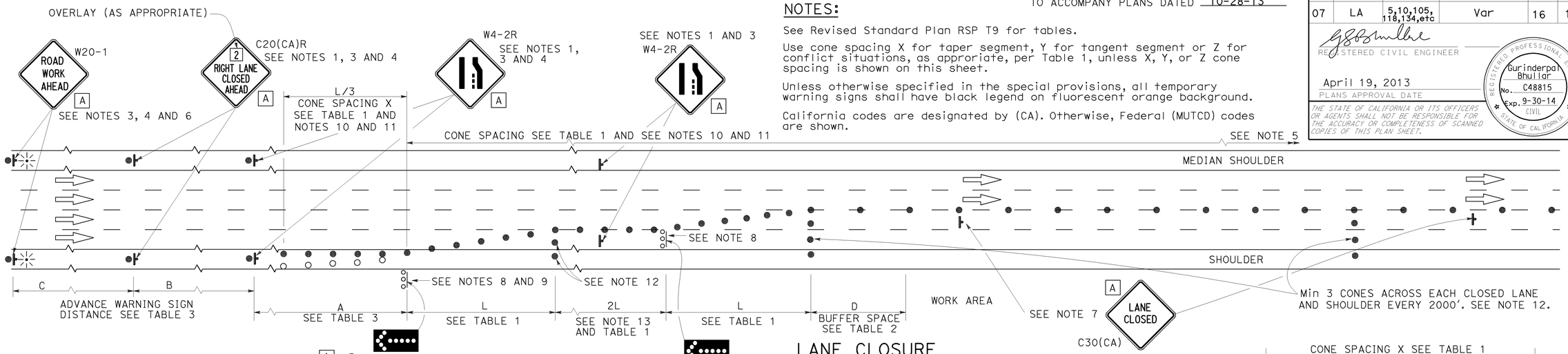

LANE CLOSURE

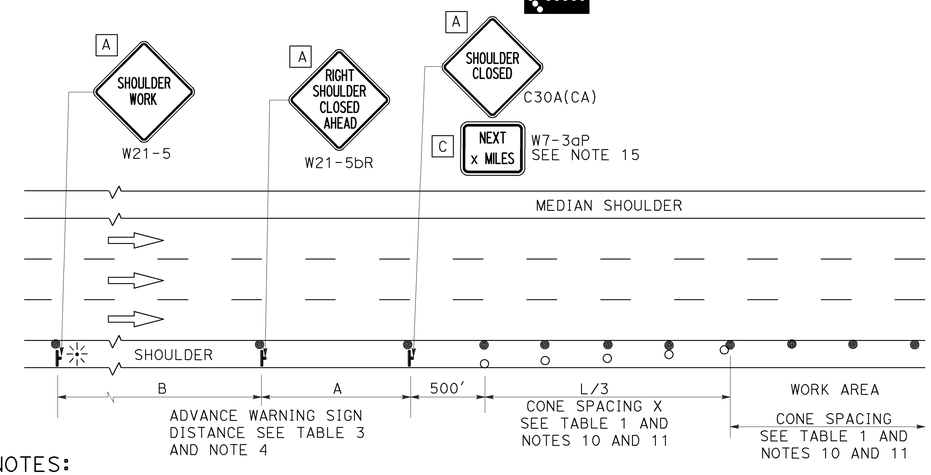

SHOULDER CLOSURE

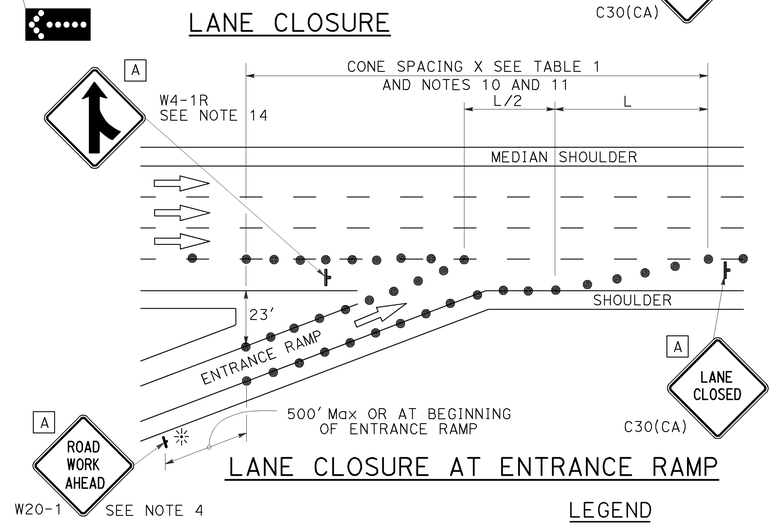

LANE CLOSURE AT ENTRANCE RAMP

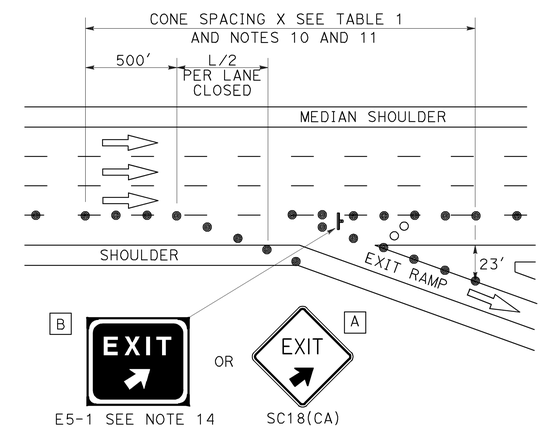

LANE CLOSURE AT EXIT RAMP

NOTES:

1. Median lane closures shall conform to the details as shown except that C20(CA)L and W4-2L signs shall be used.
2. At least one person shall be assigned to provide full time maintenance of traffic control devices for lane closures.
3. Duplicate sign installations are not required:
   a) On opposite shoulder if at least one-half of the available lanes remain open to traffic.
   b) In the median if the width of the median shoulder is less than 8′ and the outside lanes are to be closed.
4. Each advance warning sign on each side of the roadway shall be equipped with at least two flags for daytime closure. Each flag shall be at least 16" x 16" in size and shall be orange or fluorescent red-orange in color. Flashing beacons shall be placed at the locations indicated for lane closure during hours of darkness.
5. A G20-2 "END ROAD WORK" sign, with minimum size of 48" x 24" as appropriate, shall be placed at the end of the lane closure unless the end of work area is obvious or ends within a larger project's limits.
6. If the W20-1 sign would follow within 2000′ of a stationary W20-1 or G20-1 "ROAD WORK NEXT _____ MILES", use a C20(CA) sign for the first advance warning sign.
7. Place a C30(CA) sign every 2000′ throughout length of lane closure.
8. One flashing arrow sign for each lane closed. The flashing arrow signs shall be Type I.
9. A minimum 1500′ of sight distance shall be provided where possible for vehicles approaching the first flashing arrow sign. Lane closures shall not begin at top of crest vertical curve or on a horizontal curve.
10. All cones used for lane closures during the hours of darkness shall be fitted with retroreflective bands (or sleeves) as specified in the specifications.
11. Portable delineators, placed at one-half the spacing indicated for traffic cones may be used instead of cones for daytime closures only.
12. Unless otherwise specified in the special provisions, a minimum of 3 cones shall be placed transversely across each closed lane and shoulder at each location where a taper across a traffic lane ends and every 2000′ as shown on the "Lane Closure" detail. Two Type II barricades may be used instead of the 3 cones. The transverse alignment of the cones or barricades on the closed shoulder may be shifted from the transverse alignment to provide access to the work.
13. Unless otherwise specified in the special provisions, the 2L tangent shown along lane lines shall be used between the L tapers required for each closed traffic lane.
14. Unless otherwise specified in the special provisions, the E5-1 or SC18(CA) and W4-1 signs shall be used as shown.
15. A W7-3aP "NEXT____ MILES" plaque must be used if theshoulder closure extends beyond the distance that can be perceived by road users.

LEGEND

- TRAFFIC CONE
- TRAFFIC CONE (OPTIONAL TAPER)
- TEMPORARY TRAFFIC CONTROL SIGN
- FLASHING ARROW SIGN (FAS)
- FAS SUPPORT OR TRAILER
- PORTABLE FLASHING BEACON

SIGN PANEL SIZE (Min)

A	48" x 48"
B	72" x 60"
C	36" x 30"

STATE OF CALIFORNIA
DEPARTMENT OF TRANSPORTATION

TRAFFIC CONTROL SYSTEM FOR LANE CLOSURE ON FREEWAYS AND EXPRESSWAYS

NO SCALE

RSP T10 DATED APRIL 19, 2013 SUPERSEDES STANDARD PLAN T10 DATED MAY 20, 2011 - PAGE 237 OF THE STANDARD PLANS BOOK DATED 2010.

REVISED STANDARD PLAN RSP T10

2010 REVISED STANDARD PLAN RSP T10

12-18-12

Dist	COUNTY	ROUTE	POST MILES TOTAL PROJECT	SHEET No.	TOTAL SHEETS
07	LA	5,10,105, 118,134,etc	Var	17	17

REGISTERED CIVIL ENGINEER

April 19, 2013
PLANS APPROVAL DATE

REGISTERED PROFESSIONAL ENGINEER Gurinderpal Bhullar No. C48815 Exp. 9-30-14 CIVIL STATE OF CALIFORNIA

THE STATE OF CALIFORNIA OR ITS OFFICERS OR AGENTS SHALL NOT BE RESPONSIBLE FOR THE ACCURACY OR COMPLETENESS OF SCANNED COPIES OF THIS PLAN SHEET.

TO ACCOMPANY PLANS DATED 10-28-13

TYPICAL RAMP CLOSURES

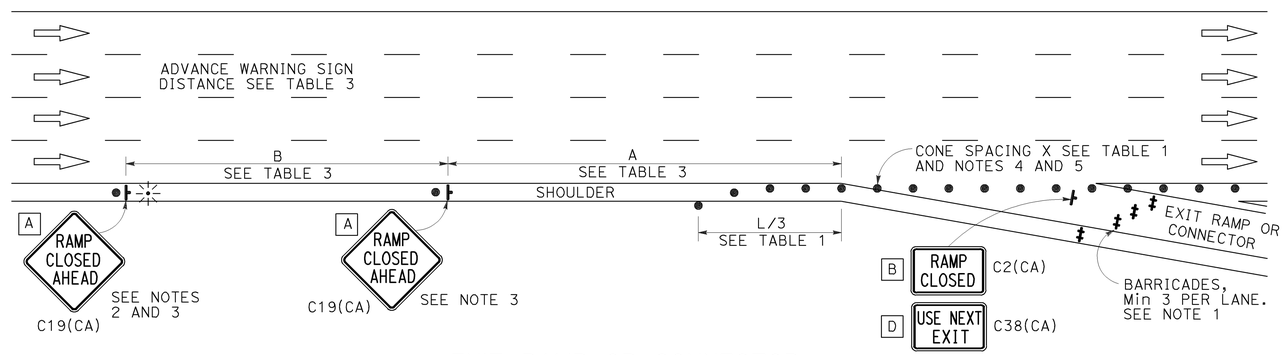

EXIT RAMP OR CONNECTOR

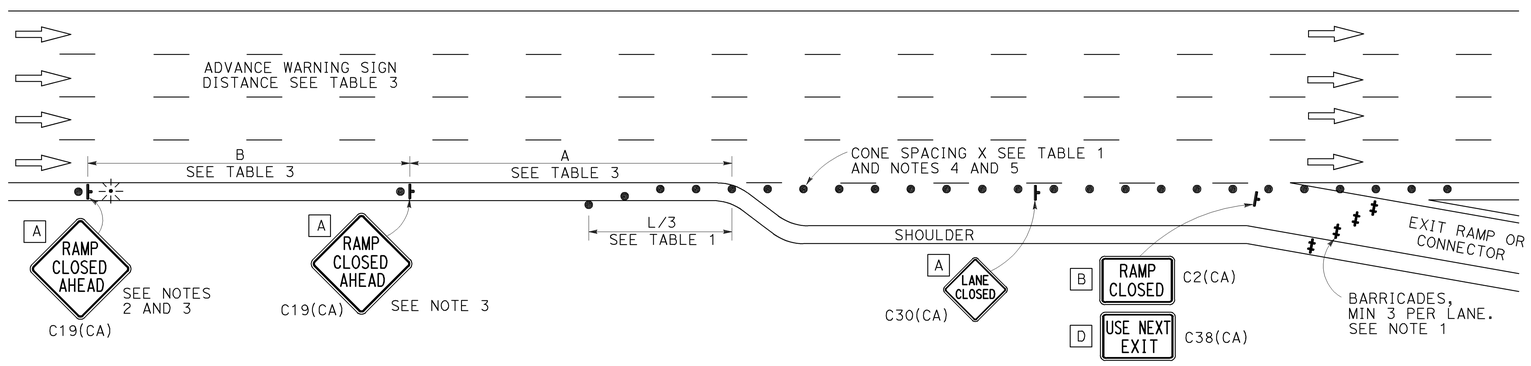

EXIT RAMP OR CONNECTOR WITH ADDITIONAL LANE

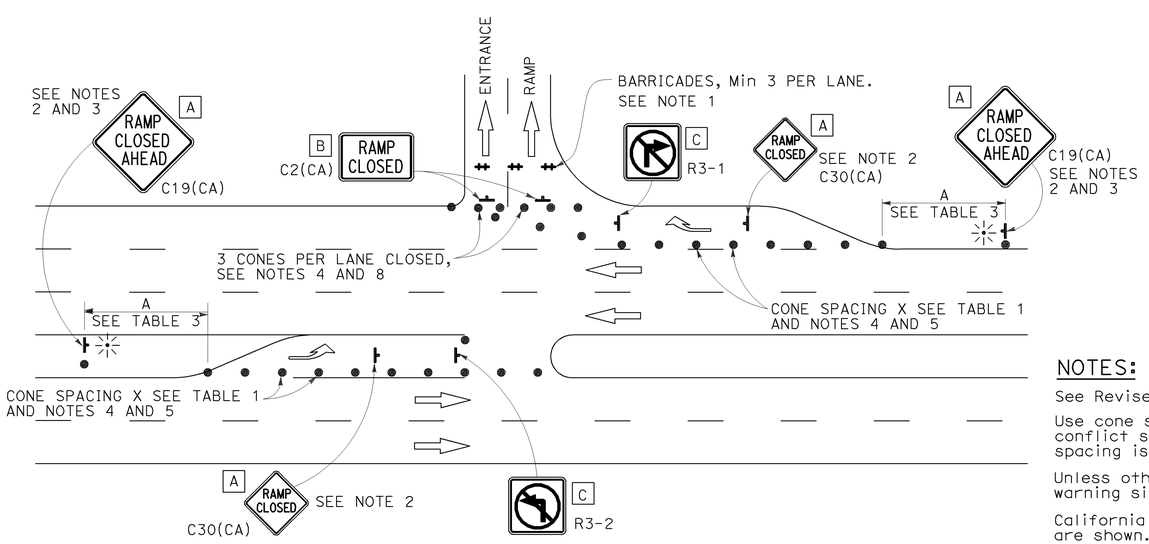

ENTRANCE RAMP WITH TURNING POCKETS

SIGN PANEL SIZE (Min)

- A 48" x 48"
- B 48" x 30"
- C 36" x 36"
- D 48" x 36"

LEGEND

- TRAFFIC CONE
- TEMPORARY TRAFFIC CONTROL SIGN
- BARRICADES
- PORTABLE FLASHING BEACON

NOTES:

1. Barricades shall be Type I, II, or III for closures lasting one week or less and Type III for closures lasting longer than one week.
2. In addition to placing the C19(CA) "RAMP CLOSED AHEAD" and C30(CA) "RAMP CLOSED" signs, black on orange overlay plates with the word "CLOSED" may be mounted, as directed by the Engineer, on all guide signs that refer to the closed ramp. The letter size on the overlay shall be the same as the guide sign.
3. Each advance C19(CA) "RAMP CLOSED AHEAD" sign shall be equipped with at least two flags for daytime closure. Each flag shall be at least 16" x 16" in size and shall be orange or fluorescent red-orange in color. A flashing beacon shall be placed on top of the first C19(CA) sign during hours of darkness.
4. All cones used for ramp closures during the hours of darkness shall be fitted with retroreflective bands (or sleeves) as specified in the specifications.
5. Portable delineators, placed at one-half the spacing indicated for traffic cones, may be used instead of cones for daytime ramp closures only.
6. At least one person shall be assigned to provide full time maintenance of traffic control devices, unless otherwise directed by the Engineer.
7. The existing "EXIT" signs shall be covered during ramp closures.
8. A minimum of 3 cones shall be placed transversely across each closed lane and shoulder.

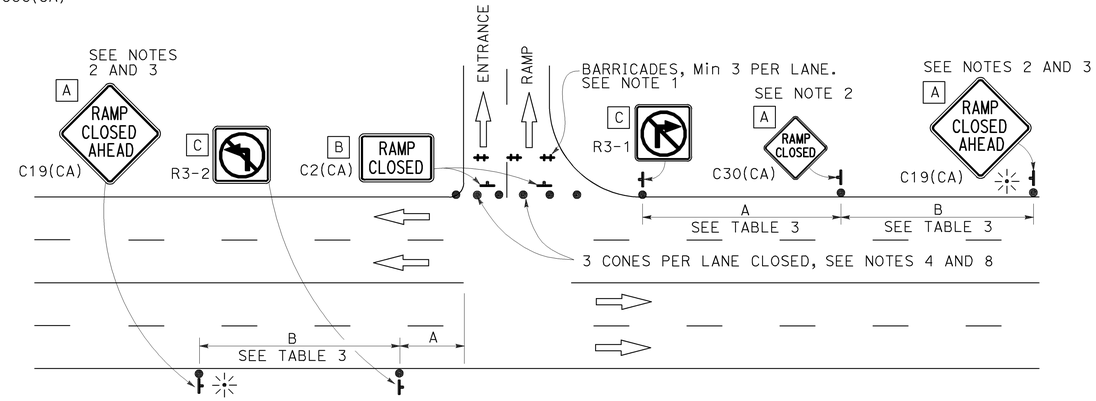

ENTRANCE RAMP WITHOUT TURNING POCKETS

NOTES:

See Revised Standard Plan RSP T9 for tables.

Use cone spacing X for taper segment, Y for tangent segment or Z for conflict situations, as approriate, per Table 1, unless X, Y, or Z cone spacing is shown on this sheet.

Unless otherwise specified in the special provisions, all temporary warning signs shall have black legend on fluorescent orange background.

California codes are designated by (CA). Otherwise, Federal (MUTCD) codes are shown.

STATE OF CALIFORNIA
DEPARTMENT OF TRANSPORTATION

TRAFFIC CONTROL SYSTEM FOR RAMP CLOSURE

NO SCALE

RSP T14 DATED APRIL 19, 2013 SUPERSEDES STANDARD PLAN T14 DATED MAY 20, 2011 - PAGE 242 OF THE STANDARD PLANS BOOK DATED 2010.

REVISED STANDARD PLAN RSP T14

2010 REVISED STANDARD PLAN RSP T14

12-18-12