DIST	COUNTY	ROUTE	POST MILES TOTAL PROJECT	SHEET No.	TOTAL SHEETS
07	LA	605	R0.0/20.5	201	208

Jay Posey 11-21-13
REGISTERED CIVIL ENGINEER DATE

2-10-14
PLANS APPROVAL DATE

REGISTERED PROFESSIONAL ENGINEER
Jay Posey
No. 51770
Exp. 6-30-14
CIVIL
STATE OF CALIFORNIA

The State of California or its officers or agents shall not be responsible for the accuracy or completeness of electronic copies of this plan sheet.

QUANTITIES

STRUCTURAL CONCRETE, APPROACH SLAB (TYPE R)	92	CY
PAVING NOTCH EXTENSION	38	CF
JOINT SEAL (MR 1")	50	LF

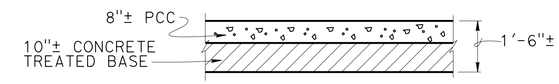

EXISTING ROADWAY SECTION

NO SCALE

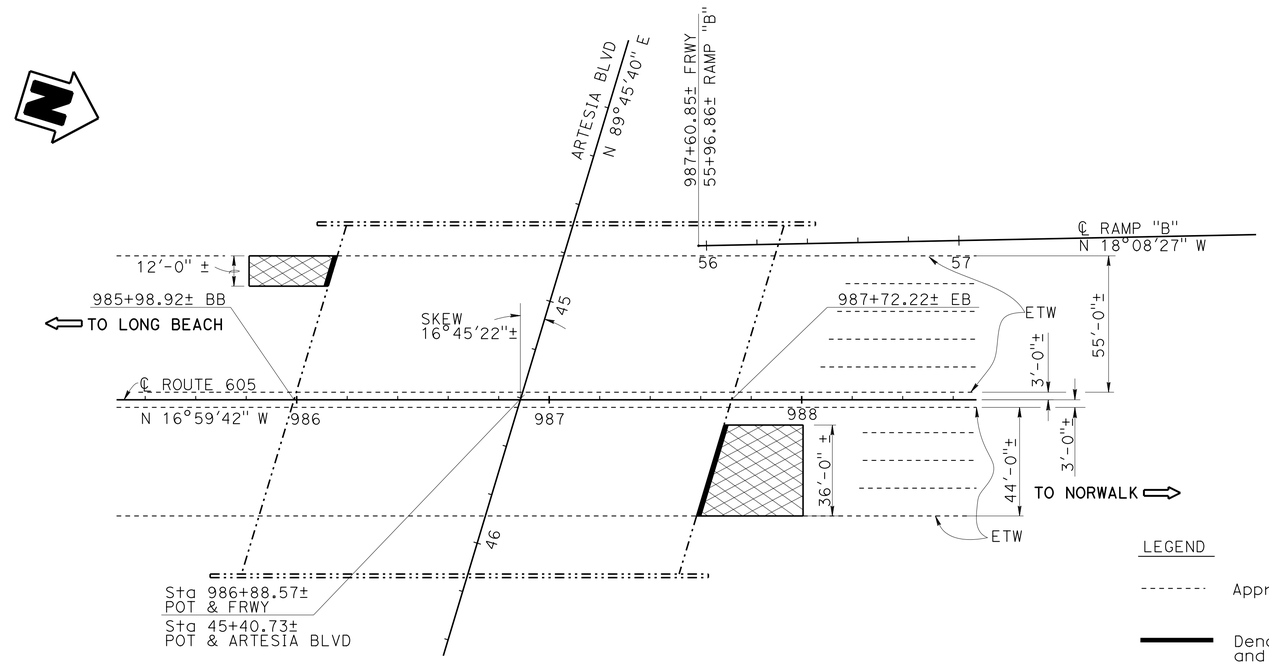

LEGEND

- - - - - - - Approximate Lane Line location

Denotes Length to extend Paving Notch and install Joint Seal, MR=1" (B6-21)

Remove existing Approach Slab and replace with new Type R(30D) Approach Slab.

PLAN 53-1735

1" = 30'

NOTE
For "INDEX TO PLANS","JOINT SEAL TABLE", "JOINT SEAL NOTES" and "STANDARD PLANS DATE 2010" See "GENERAL PLAN NO 1" Sheet

NOTE:
THE CONTRACTOR SHALL VERIFY ALL CONTROLLING FIELD DIMENSIONS BEFORE ORDERING OR FABRICATING ANY MATERIAL.

RTE 605 APPROACH SLAB REPLACEMENT
ARTESIA BOULEVARD SEPARATION
GENERAL PLAN NO. 2

Ramin Rashedi DESIGN ENGINEER	DESIGN	BY Jay Posey	CHECKED Phu Nguyen	LOAD & RESISTANCE FACTOR DESIGN	
	DETAILS	BY Jaime Ramirez	CHECKED Jay Posey	LAYOUT BY Jay Posey	CHECKED Phu Nguyen
	QUANTITIES	BY Jay Posey	CHECKED Phu Nguyen	SPECIFICATIONS BY Christa Siegenthaler	PLANS AND SPECS COMPARED X

STATE OF CALIFORNIA
DEPARTMENT OF TRANSPORTATION

DIVISION OF ENGINEERING SERVICES
STRUCTURE DESIGN
DESIGN BRANCH 11

BRIDGE NO. 53-1735
POST MILE 4.78

ORIGINAL SCALE IN INCHES FOR REDUCED PLANS 0 1 2 3

UNIT: 3587
PROJECT NUMBER & PHASE: 0713000025
CONTRACT NO.: 295701

DISREGARD PRINTS BEARING EARLIER REVISION DATES

REVISION DATES 8/21/13 9/12/13

SHEET 2 OF 9

USERNAME => s125624 DATE PLOTTED => 02-APR-2014 TIME PLOTTED => 11:17

STRUCTURES DESIGN GENERAL PLAN SHEET (ENGLISH) (REV.09-01-10)

FILE => b53-1735Strucpl2.dgn

DIST	COUNTY	ROUTE	POST MILES TOTAL PROJECT	SHEET No.	TOTAL SHEETS
07	LA	605	R0.0/20.5	202	208

REGISTERED CIVIL ENGINEER 11-21-13 DATE

2-10-14
PLANS APPROVAL DATE

REGISTERED PROFESSIONAL ENGINEER Jay Posey No. 51770 Exp. 6-30-14 CIVIL STATE OF CALIFORNIA

The State of California or its officers or agents shall not be responsible for the accuracy or completeness of electronic copies of this plan sheet.

QUANTITIES

AGGREGATE BASE (APPROACH SLAB)	1	CY
STRUCTURAL CONCRETE, APPROACH SLAB (TYPE R)	11	CY
JOINT SEAL (MR 1/2")	10	LF

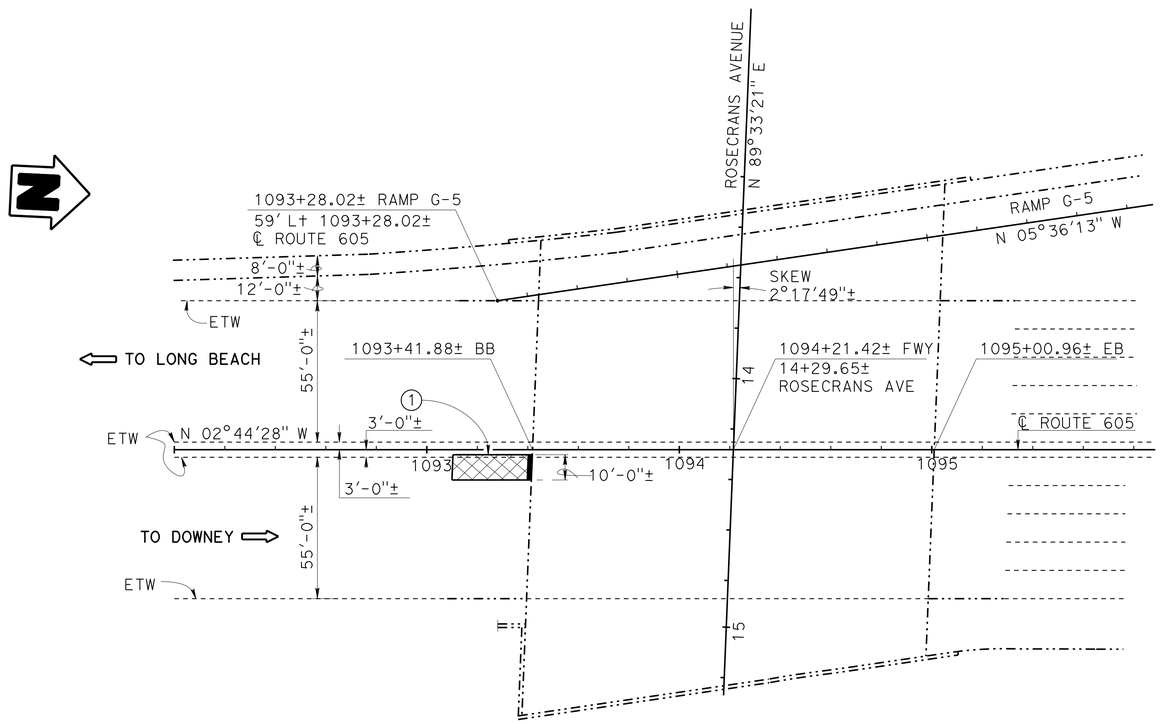

PLAN 53-1648

1" = 30'

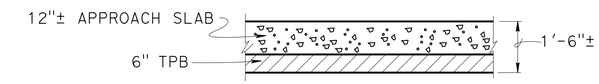

EXISTING ROADWAY SECTION

NO SCALE

NOTE

For "INDEX TO PLANS","JOINT SEAL TABLE", "JOINT SEAL NOTES" and "STANDARD PLANS DATE 2010" See "GENERAL PLAN NO 1" Sheet

LEGEND

(1) Existing Concrete Barrier to remain. Begin Approach Slab at face of Barrier

-------- Approximate Lane Line location

Install Joint Seal MR=1/2" (Note: Asbuilt plan indicate paving notch has been extended at this location) B6-21

Remove existing Approach Slab and replace with new Type R(30D) Approach Slab.

NOTE:
THE CONTRACTOR SHALL VERIFY ALL CONTROLLING FIELD DIMENSIONS BEFORE ORDERING OR FABRICATING ANY MATERIAL.

RTE 605 APPROACH SLAB REPLACEMENT
ROSECRANS AVENUE UNDERCROSSING
GENERAL PLAN NO 3

Ramin Rashedi
DESIGN ENGINEER

	BY	CHECKED				
DESIGN	Jay Posey	Phu Nguyen	LOAD & RESISTANCE FACTOR DESIGN			
DETAILS	Jaime Ramirez	Jay Posey	LAYOUT	Jay Posey	Phu Nguyen	
QUANTITIES	Jay Posey	Phu Nguyen	SPECIFICATIONS	Christa Siegenthaler	PLANS AND SPECS COMPARED	

ORIGINAL SCALE IN INCHES FOR REDUCED PLANS 0 1 2 3

STATE OF CALIFORNIA
DEPARTMENT OF TRANSPORTATION

DIVISION OF ENGINEERING SERVICES
STRUCTURE DESIGN
DESIGN BRANCH 11

BRIDGE NO. 53-1648
POST MILE 6.81

UNIT: 3587
PROJECT NUMBER & PHASE: 0713000025
CONTRACT NO.: 295701

DISREGARD PRINTS BEARING EARLIER REVISION DATES

REVISION DATES 9/17/13 8/27/13 3/20/13

SHEET 3 OF 9

STRUCTURES DESIGN GENERAL PLAN SHEET (ENGLISH) (REV.09-01-10)

FILE => c53-1648Strucpl3.dgn

USERNAME => s125624 DATE PLOTTED => 02-APR-2014 TIME PLOTTED => 11:17

DIST	COUNTY	ROUTE	POST MILES TOTAL PROJECT	SHEET No.	TOTAL SHEETS
07	LA	605	R0.0/20.5	203	208

Jay Posey 11-21-13
REGISTERED CIVIL ENGINEER DATE

2-10-14
PLANS APPROVAL DATE

REGISTERED PROFESSIONAL ENGINEER Jay Posey No. 51770 Exp. 6-30-14 CIVIL STATE OF CALIFORNIA

The State of California or its officers or agents shall not be responsible for the accuracy or completeness of electronic copies of this plan sheet.

QUANTITIES

AGGREGATE BASE (APPROACH SLAB)	3	CY
STRUCTURAL CONCRETE, APPROACH SLAB (TYPE R)	27	CY
PAVING NOTCH EXTENSION	18	CF
JOINT SEAL (MR 1")	24	LF

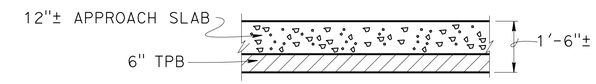

EXISTING ROADWAY SECTION

NO SCALE

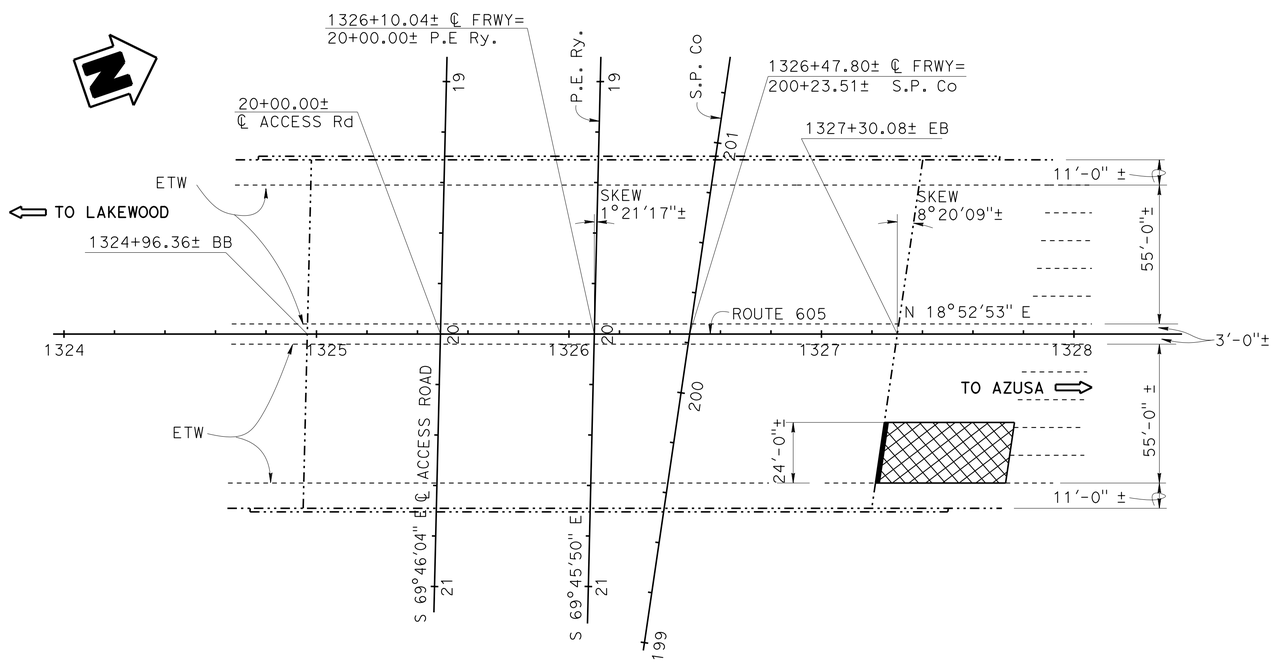

PLAN 53-1663

1" = 30'

LEGEND

- - - - - - - Approximate Lane Line location

Denotes Length to extend Paving Notch and install Joint Seal, MR=1" (B6-21)

Remove existing Approach Slab and replace with new Type R(30D) Approach Slab.

NOTE

For "INDEX TO PLANS","JOINT SEAL TABLE", "JOINT SEAL NOTES" and "STANDARD PLANS DATE 2010" See "GENERAL PLAN NO 1" Sheet

NOTE:
THE CONTRACTOR SHALL VERIFY ALL CONTROLLING FIELD DIMENSIONS BEFORE ORDERING OR FABRICATING ANY MATERIAL.

RTE 605 APPROACH SLAB REPLACEMENT
LOS NIETOS OVERHEAD
GENERAL PLAN NO 4

Ramin Rashedi
DESIGN ENGINEER

	BY	CHECKED
DESIGN	Jay Posey	Phu Nguyen
DETAILS	Jaime Ramirez	Jay Posey
QUANTITIES	Jay Posey	Phu Nguyen

	BY	CHECKED
LOAD & RESISTANCE FACTOR DESIGN		
LAYOUT	Jay Posey	Phu Nguyen
SPECIFICATIONS	Christa Siegenthaler	PLANS AND SPECS COMPARED

ORIGINAL SCALE IN INCHES FOR REDUCED PLANS 0 1 2 3

STATE OF CALIFORNIA
DEPARTMENT OF TRANSPORTATION

DIVISION OF ENGINEERING SERVICES
STRUCTURE DESIGN
DESIGN BRANCH 11

BRIDGE NO. 53-1663
POST MILE 11.24

UNIT: 3587
PROJECT NUMBER & PHASE: 0713000025
CONTRACT NO.: 295701

DISREGARD PRINTS BEARING EARLIER REVISION DATES
REVISION DATES 8/20/13 9/17/13 8/27/13 9/10/13
SHEET 4 OF 9

USERNAME => s125624 DATE PLOTTED => 02-APR-2014 TIME PLOTTED => 11:17

STRUCTURES DESIGN GENERAL PLAN SHEET (ENGLISH) (REV.09-01-10)

FILE => d53-1663Strucpl4.dgn

DIST	COUNTY	ROUTE	POST MILES TOTAL PROJECT	SHEET No.	TOTAL SHEETS
07	LA	605	R0.0/20.5	204	208

REGISTERED CIVIL ENGINEER 11-21-13 DATE

2-10-14
PLANS APPROVAL DATE

REGISTERED PROFESSIONAL ENGINEER Jay Posey No. 51770 Exp. 6-30-14 CIVIL STATE OF CALIFORNIA

The State of California or its officers or agents shall not be responsible for the accuracy or completeness of electronic copies of this plan sheet.

QUANTITIES

AGGREGATE BASE (APPROACH SLAB)	5	CY
STRUCTURAL CONCRETE, APPROACH SLAB (TYPE R)	73	CY
PAVING NOTCH EXTENSION	35	CF
JOINT SEAL (MR 1/2")	60	LF

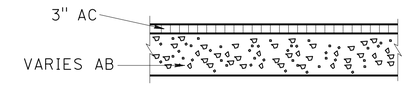

EXISTING ROADWAY SECTION AT WEST COLLECOR

NO SCALE

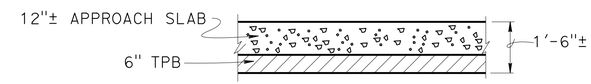

EXISTING ROADWAY SECTION ROUTE 605

NO SCALE

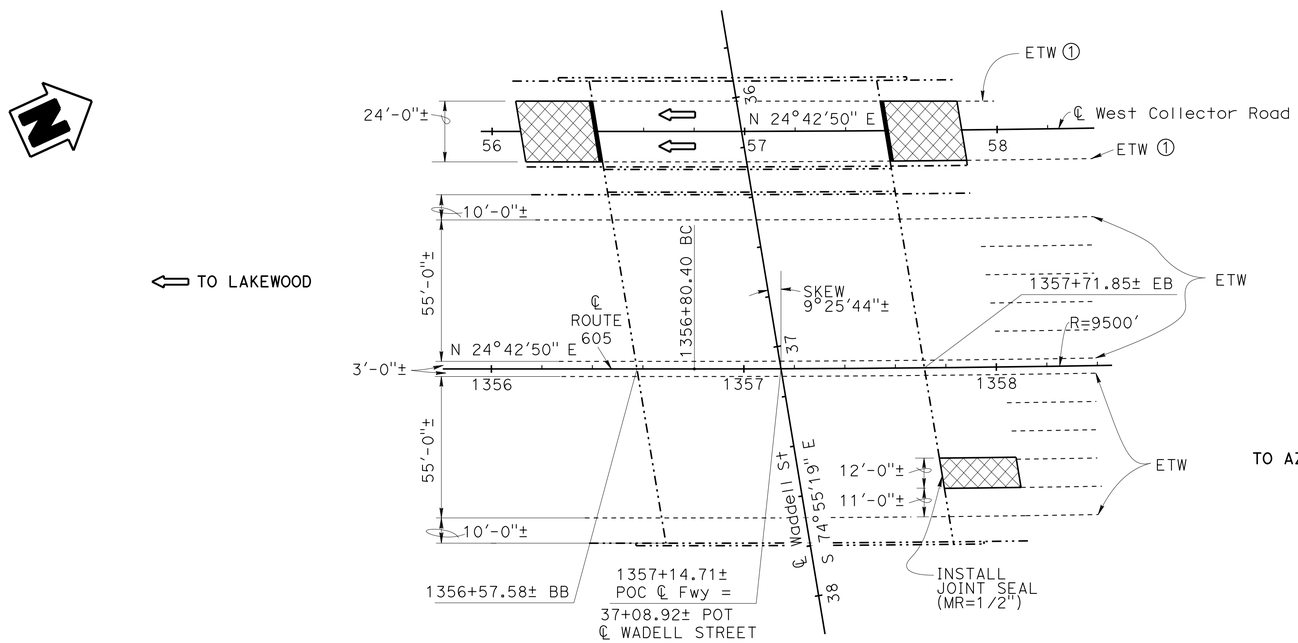

PLAN 53-1666

1" = 30'

LEGEND

-------- Approximate Lane Line location

Denotes Length to extend Paving Notch and install Joint Seal, MR=1/2" (B6-21)

Remove existing Slab and replace with new Type R(30D) Approach Slab.

NOTE

For "INDEX TO PLANS","JOINT SEAL TABLE", "JOINT SEAL NOTES" and "STANDARD PLANS DATE 2010" See "GENERAL PLAN NO 1" Sheet

① EWT = Edge of Concrete Gutter to remain undamaged

NOTE:
THE CONTRACTOR SHALL VERIFY ALL CONTROLLING FIELD DIMENSIONS BEFORE ORDERING OR FABRICATING ANY MATERIAL.

Ramin Rashedi
DESIGN ENGINEER

	BY	CHECKED		BY	CHECKED
DESIGN	Jay Posey	Phu Nguyen	LOAD & RESISTANCE FACTOR DESIGN		
DETAILS	Jaime Ramirez	Jay Posey	LAYOUT	Jay Posey	Phu Nguyen
QUANTITIES	Jay Posey	Phu Nguyen	SPECIFICATIONS	Christa Siegenthaler	PLANS AND SPECS COMPARED

ORIGINAL SCALE IN INCHES FOR REDUCED PLANS 0 1 2 3

STATE OF CALIFORNIA
DEPARTMENT OF TRANSPORTATION

DIVISION OF ENGINEERING SERVICES
STRUCTURE DESIGN
DESIGN BRANCH 11

BRIDGE NO. 53-1666
POST MILE 11.79

RTE 605 APPROACH SLAB REPLACEMENT
WADDELL STREET UNDERCROSSING
GENERAL PLAN NO 5

UNIT: 3587
PROJECT NUMBER & PHASE: 0713000025
CONTRACT NO.: 295701

DISREGARD PRINTS BEARING EARLIER REVISION DATES

REVISION DATES: 8/20/13 9/23/13 9/24/13 9/25/13

SHEET 5 OF 9

STRUCTURES DESIGN GENERAL PLAN SHEET (ENGLISH) (REV.09-01-10)

FILE => e53-1666Strucpl5.dgn

USERNAME => s125624 DATE PLOTTED => 02-APR-2014 TIME PLOTTED => 11:17

DIST	COUNTY	ROUTE	POST MILES TOTAL PROJECT	SHEET No.	TOTAL SHEETS
07	LA	605	R0.0/20.5	205	208

REGISTERED CIVIL ENGINEER 11-21-13 DATE

2-10-14
PLANS APPROVAL DATE

REGISTERED PROFESSIONAL ENGINEER Jay Posey No. 51770 Exp. 6-30-14 CIVIL STATE OF CALIFORNIA

The State of California or its officers or agents shall not be responsible for the accuracy or completeness of electronic copies of this plan sheet.

QUANTITIES

STRUCTURAL CONCRETE, APPROACH SLAB (TYPE R)	120	CY
PAVING NOTCH EXTENSION	54	CF
JOINT SEAL (MR 1/2")	72	LF

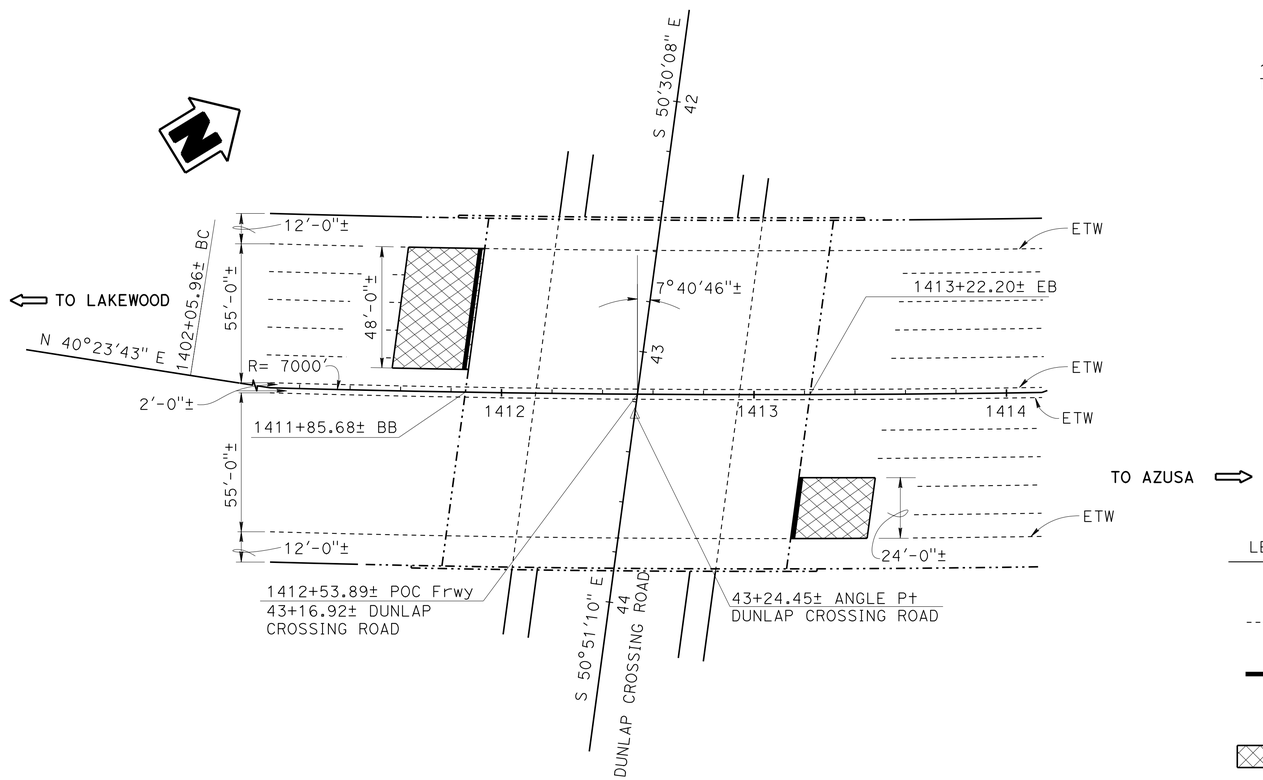

PLAN 53-1669

1" = 30'

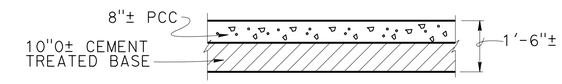

EXISTING ROADWAY SECTION

NO SCALE

LEGEND

-------- Approximate Lane Line location

Denotes Length to extend Paving Notch and install Joint Seal, MR=1/2" (B6-21)

Remove existing Approach Slab and replace with new Type R(30D) Approach Slab.

NOTE

For "INDEX TO PLANS","JOINT SEAL TABLE", "JOINT SEAL NOTES" and "STANDARD PLANS DATE 2010" See "GENERAL PLAN NO 1" Sheet

NOTE:
THE CONTRACTOR SHALL VERIFY ALL CONTROLLING FIELD DIMENSIONS BEFORE ORDERING OR FABRICATING ANY MATERIAL.

RTE 605 APPROACH SLAB REPLACEMENT
DUNLAP CROSSING ROAD UNDERCROSSING
GENERAL PLAN NO 6

Ramin Rashedi
DESIGN ENGINEER

	BY	CHECKED			BY	CHECKED
DESIGN	Jay Posey	Phu Nguyen	LOAD & RESISTANCE FACTOR DESIGN			
DETAILS	Jaime Ramirez	Jay Posey	LAYOUT	Jay Posey		Phu Nguyen
QUANTITIES	Jay Posey	Phu Nguyen	SPECIFICATIONS	Christa Siegenthaler		PLANS AND SPECS COMPARED

STATE OF CALIFORNIA
DEPARTMENT OF TRANSPORTATION

DIVISION OF ENGINEERING SERVICES
STRUCTURE DESIGN
DESIGN BRANCH 11

BRIDGE NO. 53-1669
POST MILE 12.87

ORIGINAL SCALE IN INCHES FOR REDUCED PLANS 0 1 2 3

UNIT: 3587
PROJECT NUMBER & PHASE: 0713000025
CONTRACT NO.: 295701

DISREGARD PRINTS BEARING EARLIER REVISION DATES

REVISION DATES: 8/22/13 9/27/13 3/27/13 9/25/13

SHEET 6 OF 9

STRUCTURES DESIGN GENERAL PLAN SHEET (ENGLISH) (REV.09-01-10)

FILE => f53-1669Strucpl6.dgn

USERNAME => s125624 DATE PLOTTED => 02-APR-2014 TIME PLOTTED => 11:18

DIST	COUNTY	ROUTE	POST MILES TOTAL PROJECT	SHEET No.	TOTAL SHEETS
07	LA	605	R0.0/20.5	206	208

Jay Posey 11-21-13
REGISTERED CIVIL ENGINEER DATE

2-10-14
PLANS APPROVAL DATE

REGISTERED PROFESSIONAL ENGINEER Jay Posey No. 51770 Exp. 6-30-14 CIVIL STATE OF CALIFORNIA

The State of California or its officers or agents shall not be responsible for the accuracy or completeness of electronic copies of this plan sheet.

LEGEND

- - - - - - - Approximate Lane Line location

Denotes Length to remove Existing Backwall and install Joint Seal, MR=1"

B6-21

Remove existing Approach Slab and replace with new Type R(30S) Approach Slab.

NOTE
For "INDEX TO PLANS","JOINT SEAL TABLE", "JOINT SEAL NOTES" and "STANDARD PLANS DATE 2010" See "GENERAL PLAN NO 1" Sheet

QUANTITIES

STRUCTURAL CONCRETE, APPROACH SLAB (TYPE R)	199	CY
JOINT SEAL (MR 1")	115	LF

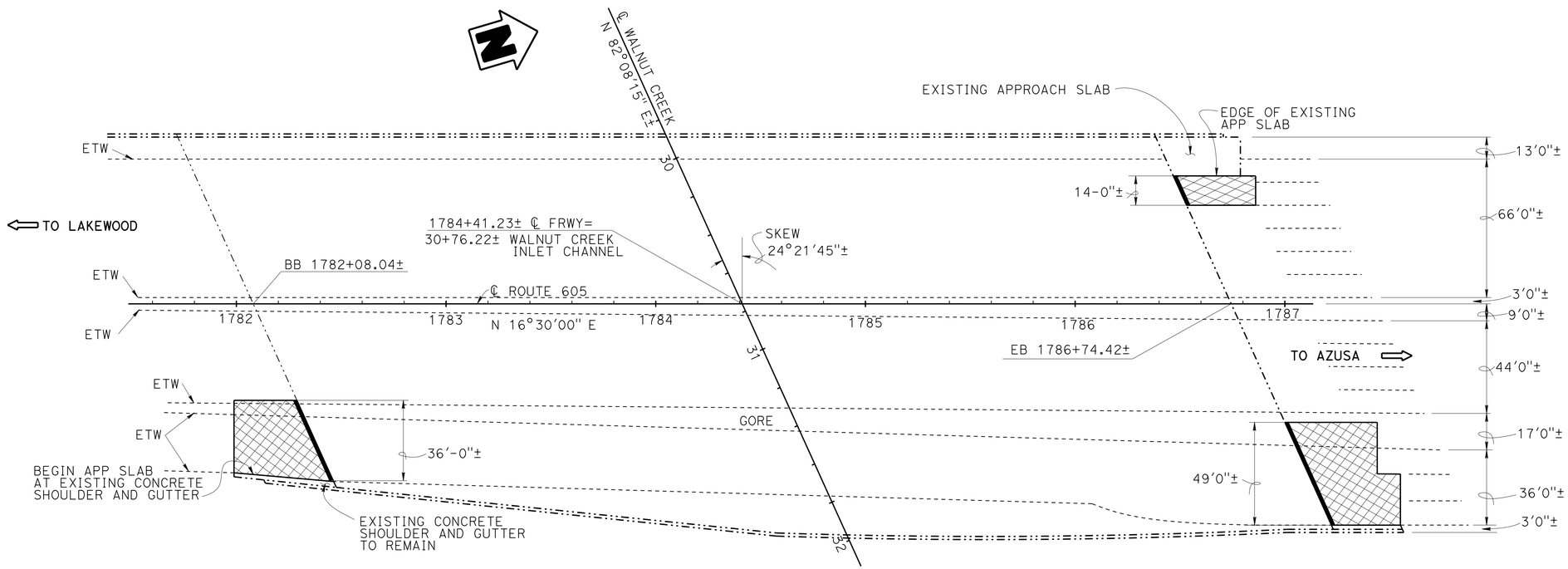

PLAN 53-1343

1" = 30'

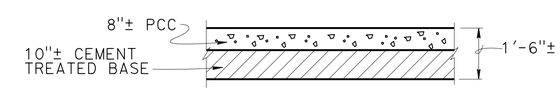

EXISTING ROADWAY SECTION

NO SCALE

NOTE:
THE CONTRACTOR SHALL VERIFY ALL CONTROLLING FIELD DIMENSIONS BEFORE ORDERING OR FABRICATING ANY MATERIAL.

RTE 605 APPROACH SLAB REPLACEMENT
WALNUT CREEK BRIDGE
GENERAL PLAN NO 7

Ramin Rashedi
DESIGN ENGINEER

	BY	CHECKED
DESIGN	Jay Posey	Phu Nguyen
DETAILS	John M Hunter	Jay Posey
QUANTITIES	Jay Posey	Phu Nguyen

LOAD & RESISTANCE FACTOR DESIGN
LAYOUT BY Jay Posey CHECKED Phu Nguyen
SPECIFICATIONS BY Christa Siegenthaler PLANS AND SPECS COMPARED

STATE OF CALIFORNIA
DEPARTMENT OF TRANSPORTATION

DIVISION OF ENGINEERING SERVICES
STRUCTURE DESIGN
DESIGN BRANCH 11

BRIDGE NO. 53-1343
POST MILE 19.85

ORIGINAL SCALE IN INCHES FOR REDUCED PLANS 0 1 2 3

UNIT: 3587
PROJECT NUMBER & PHASE: 0713000025
CONTRACT NO.: 295701

DISREGARD PRINTS BEARING EARLIER REVISION DATES
REVISION DATES 9/3/13 9/10/13 9/17/13
SHEET 7 OF 9

STRUCTURES DESIGN GENERAL PLAN SHEET (ENGLISH) (REV.09-01-10)

FILE => g53-1343Strucpl7.dgn

USERNAME => s125624 DATE PLOTTED => 02-APR-2014 TIME PLOTTED => 11:18

DIST	COUNTY	ROUTE	POST MILES TOTAL PROJECT	SHEET No.	TOTAL SHEETS
07	LA	605	R0.0/20.5	207	208

REGISTERED CIVIL ENGINEER 11-21-13 DATE

2-10-14
PLANS APPROVAL DATE

REGISTERED PROFESSIONAL ENGINEER Jay Posey No. 51770 Exp. 6-30-14 CIVIL STATE OF CALIFORNIA

The State of California or its officers or agents shall not be responsible for the accuracy or completeness of electronic copies of this plan sheet.

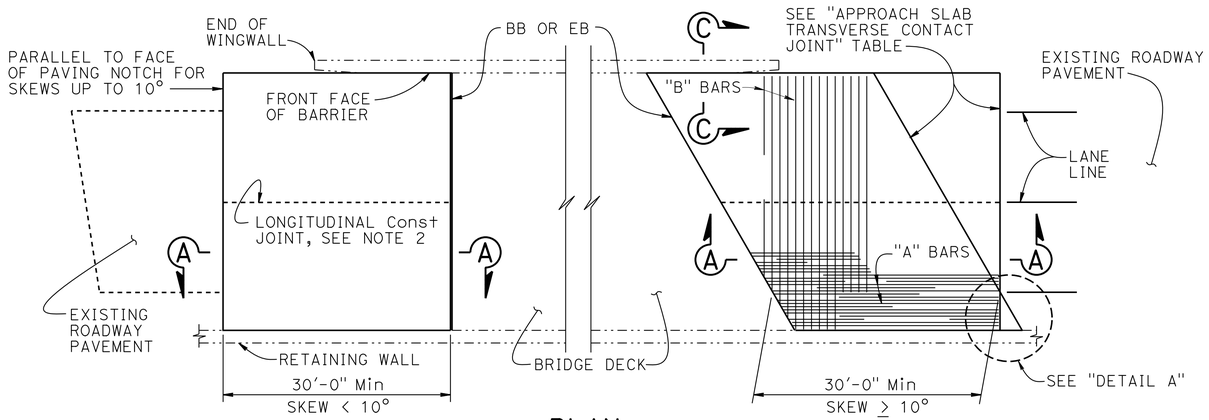

PLAN
1" = 10'

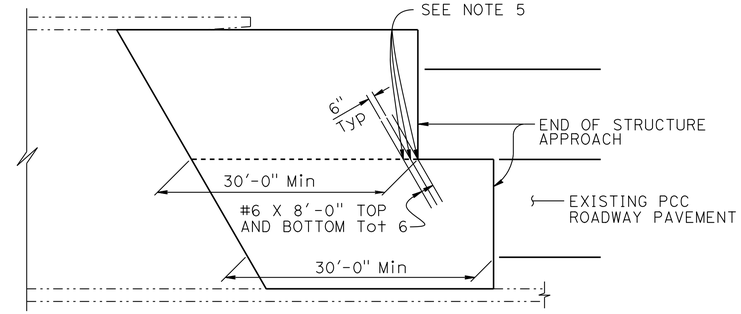

STRUCTURE APPROACH - END STAGGER DETAIL
NO SCALE

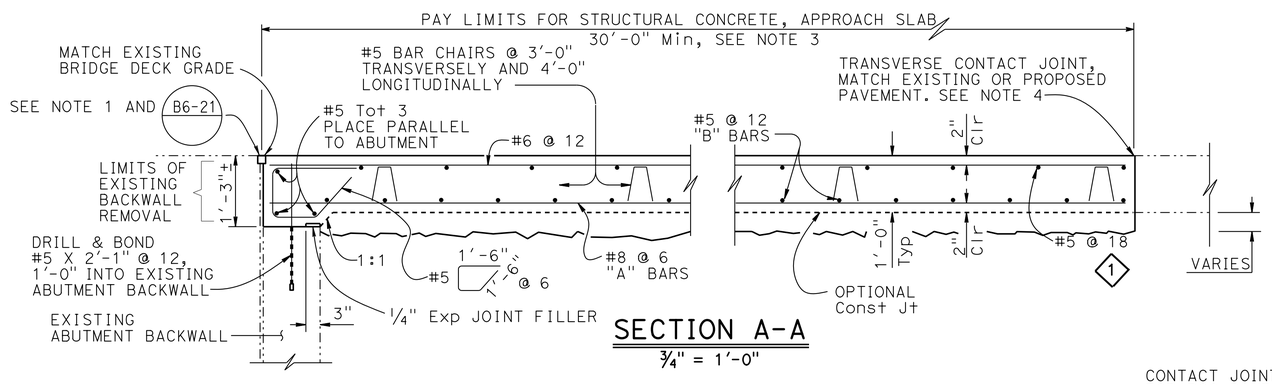

SECTION A-A
3/4" = 1'-0"

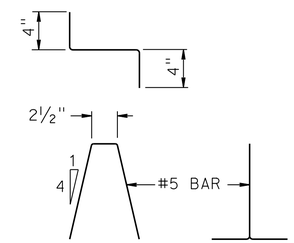

BAR CHAIR DETAIL
1 1/2" = 1'-0"

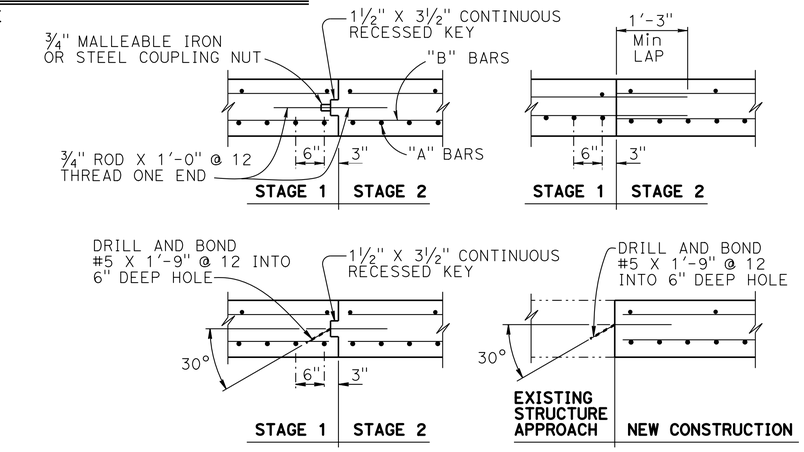

LONGITUDINAL CONSTRUCTION JOINT ALTERNATIVES
3/4" = 1'-0"

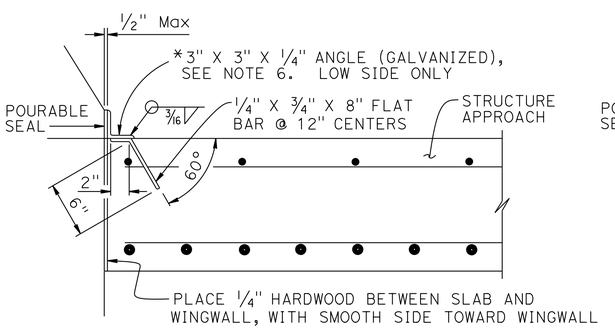

*(TO BE USED WITH CONCRETE BARRIER WITH VERTICAL FACE)

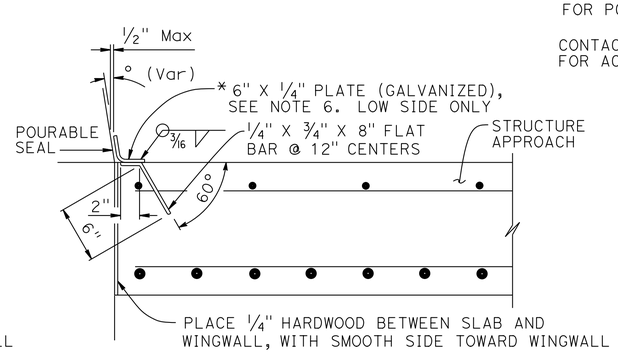

*(TO BE USED WITH CONCRETE BARRIER WITH SLOPING FACE)

DETAIL B
1 1/2" = 1'-0"

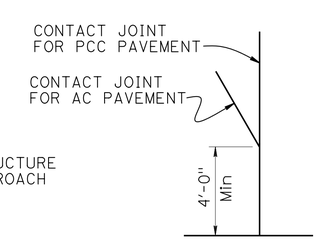

DETAIL A
No Scale

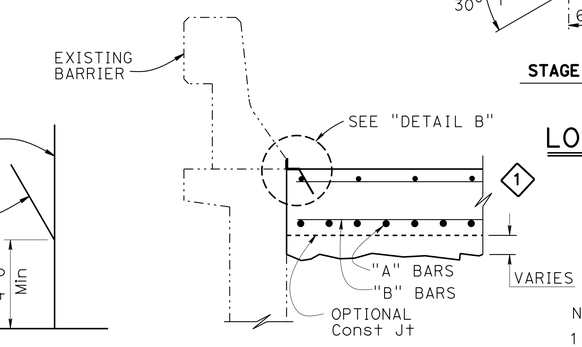

SECTION C-C
3/4" = 1'-0"

APPROACH SLAB TRANSVERSE CONTACT JOINT		
APPROACH SKEW	WITH AC ROADWAY PAVEMENT	WITH PCC ROADWAY PAVEMENT
< 10°	PARALLEL TO FACE OF PN	PARALLEL TO FACE OF PN
10° - 45°	PARALLEL TO FACE OF PN USE "DETAIL A"	STAGGER LINES 24' TO 36' APART
> 45°	PARALLEL TO FACE OF PN USE "DETAIL A"	STAGGER AT EACH LANE LINE

NOTES:

1. Sealed joint,for MR see Structure Plans. Adjust bar reinforcement to clear a sawcut for sealed joint, when required
2. Longitudinal construction joints, when permitted by Engineer, shall be located on lane lines
3. Transverse contact joint shall be a minimum of 5'-0" from an existing or constructed weakened plane joint
4. For transverse contact joint with new PCC paving, refer to Standard Plan P10
5. Couplers are required for stage construction
6. End angle or plate at beginning of barrier transition, end of wingwall or end of structure approach as applicable

NOTE:
THE CONTRACTOR SHALL VERIFY ALL CONTROLLING FIELD DIMENSIONS BEFORE ORDERING OR FABRICATING ANY MATERIAL.

STANDARD DRAWING
FILE NO. xs3-130
APPROVAL DATE July 2011

1 INCREASED APPROACH SLAB THICKNESS IS REQUIRED TO FILL VOID LEFT BY EXISTING CTB.

STATE OF CALIFORNIA
DEPARTMENT OF TRANSPORTATION

DIVISION OF ENGINEERING SERVICES

BRIDGE NO. VARIES
POST MILE VARIES

RTE 605 APPROACH SLAB REPLACEMENT
STRUCTURE APPROACH TYPE R(30S)

DS OSD 2147A (ENGLISH STANDARD DRAWING "XS" BORDER REV. (02-02-11)

ORIGINAL SCALE IN INCHES FOR REDUCED PLANS 0 1 2 3

UNIT: 3587
PROJECT NUMBER & PHASE: 0713000025
CONTRACT NO.: 295701

DISREGARD PRINTS BEARING EARLIER REVISION DATES
REVISION DATES 9/9/13 9/11/13
SHEET 8 OF 9

FILE => hxs3-130Strucpl8.dgn

USERNAME => s125624 DATE PLOTTED => 02-APR-2014 TIME PLOTTED => 11:18

DIST	COUNTY	ROUTE	POST MILES TOTAL PROJECT	SHEET No.	TOTAL SHEETS
07	LA	605	R0.0/20.5	208	208

REGISTERED CIVIL ENGINEER 11-21-13 DATE

2-10-14
PLANS APPROVAL DATE

REGISTERED PROFESSIONAL ENGINEER Jay Posey No. 51770 Exp. 6-30-14 CIVIL STATE OF CALIFORNIA

The State of California or its officers or agents shall not be responsible for the accuracy or completeness of electronic copies of this plan sheet.

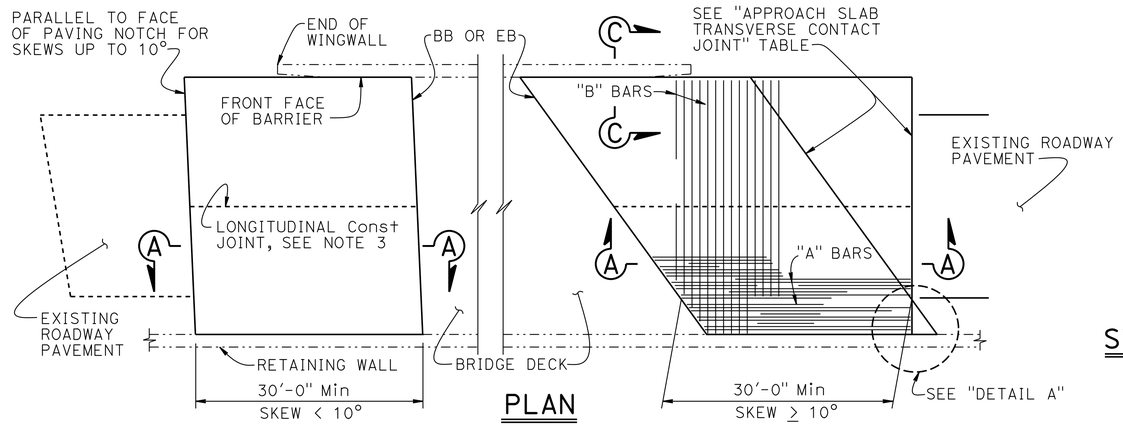

PLAN
1" = 10'

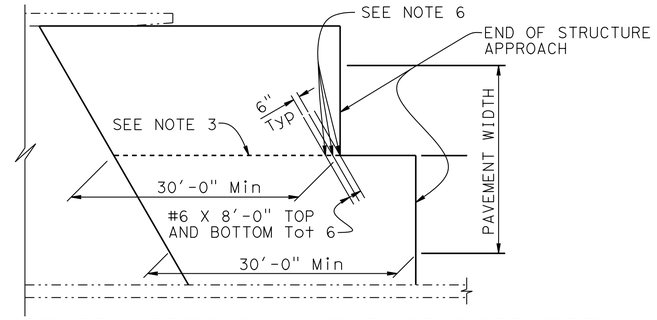

STRUCTURE APPROACH - END STAGGER DETAIL
NO SCALE

APPROACH SLAB TRANSVERSE CONTACT JOINT		
APPROACH SKEW	WITH AC ROADWAY PAVEMENT	WITH PCC ROADWAY PAVEMENT
< 10°	PARALLEL TO FACE OF PN	PARALLEL TO FACE OF PAVING NOTCH
10° - 45°	PARALLEL TO FACE OF PN USE "DETAIL A"	STAGGER LINES 24' TO 36' APART
> 45°	PARALLEL TO FACE OF PN USE "DETAIL A"	STAGGER AT EACH LANE LINE

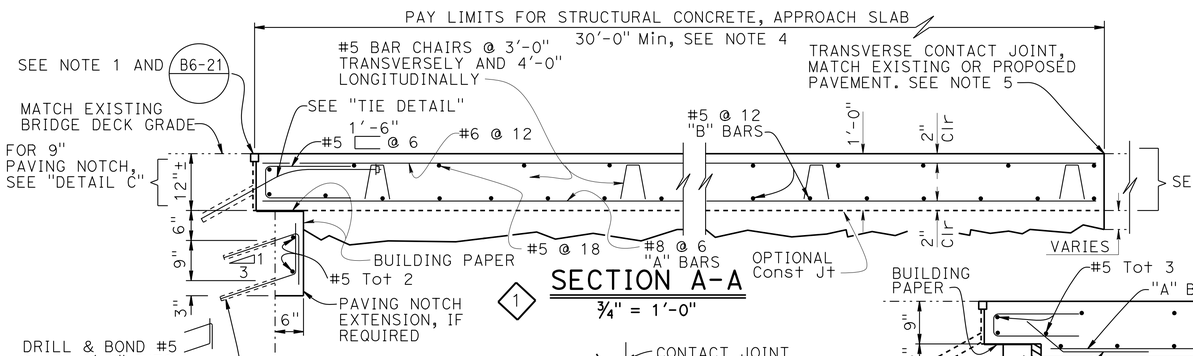

SECTION A-A
3/4" = 1'-0"

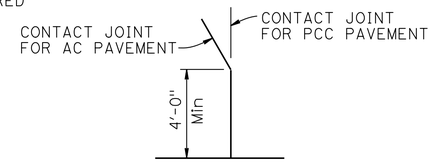

DETAIL A
No Scale

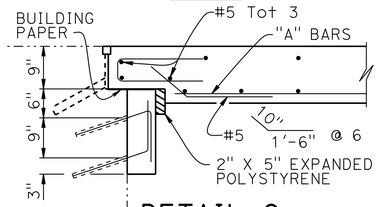

DETAIL C
3/4" = 1'-0"

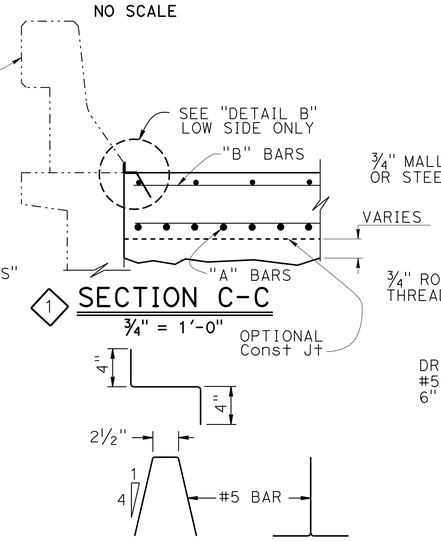

SECTION C-C
3/4" = 1'-0"

BAR CHAIR DETAIL
1½" = 1'-0"

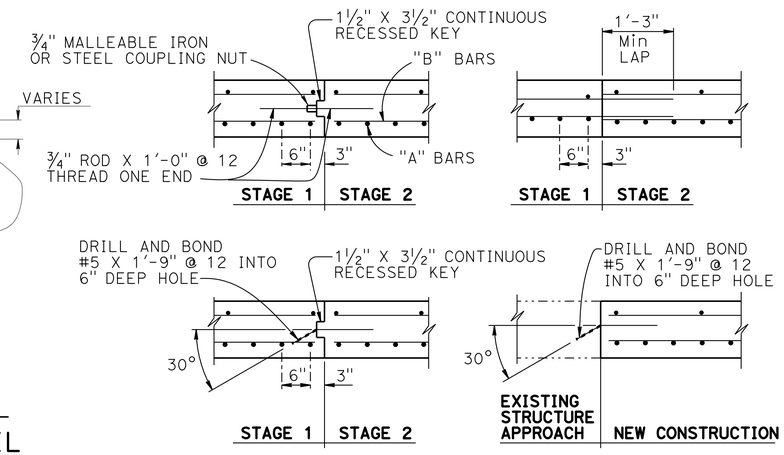

LONGITUDINAL CONSTRUCTION JOINT ALTERNATIVES
3/4" = 1'-0"

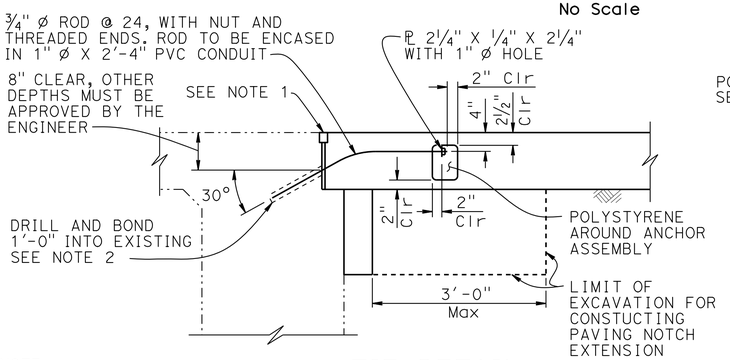

TIE DETAIL
3/4" = 1'-0"

NOTE: For details not shown, see "SECTION A-A"

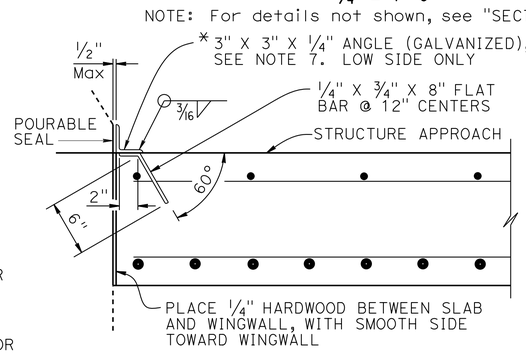

*(TO BE USED WITH CONCRETE BARRIER WITH VERTICAL FACE)

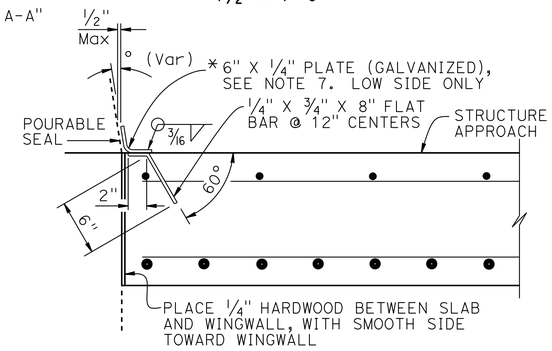

*(TO BE USED WITH CONCRETE BARRIER WITH SLOPING FACE)

DETAIL B
1½" = 1'-0"

NOTES:
1. For details not shown or noted, see Structure Plans. Adjust bar reinforcement to clear a sawcut for sealed joint, when required
2. Space to avoid existing prestress anchorages and main reinforcement
3. Longitudinal construction joints, when permitted by the Engineer, shall be located on lane lines
4. Transverse contact joint shall be a minimum of 5'-0" from an existing or constructed weakened plane joint
5. For transverse contact joint with new PCC paving. refer to Standard Plan P10
6. Couplers are required for stage construction
7. End angle or plate at beginning of barrier transition, end of wingwall or end of structure approach as applicable

NOTE:
THE CONTRACTOR SHALL VERIFY ALL CONTROLLING FIELD DIMENSIONS BEFORE ORDERING OR FABRICATING ANY MATERIAL.

STANDARD DRAWING
FILE NO. xs3-150
APPROVAL DATE July 2011

1 INCREASED APPROACH SLAB THICKNESS IS REQUIRED TO FILL VOID LEFT BY EXISTING CTB.

STATE OF CALIFORNIA
DEPARTMENT OF TRANSPORTATION

DIVISION OF ENGINEERING SERVICES

BRIDGE NO. VARIES
POST MILE VARIES

RTE 605 APPROACH SLAB REPLACEMENT
STRUCTURE APPROACH TYPE R(30D)

DS OSD 2147A (ENGLISH STANDARD DRAWING "XS" BORDER REV. (02-02-11)

ORIGINAL SCALE IN INCHES FOR REDUCED PLANS 0 1 2 3

UNIT: 3587
PROJECT NUMBER & PHASE: 0713000025
CONTRACT NO.: 295701

DISREGARD PRINTS BEARING EARLIER REVISION DATES

REVISION DATES 9/9/13

SHEET 9 OF 9

FILE => jxs3-150Strucpl9.dgn

USERNAME => s128624 DATE PLOTTED => 02-APR-2014 TIME PLOTTED => 11:18