Dist	COUNTY	ROUTE	POST MILES TOTAL PROJECT	SHEET No.	TOTAL SHEETS
07	LA	101	1.8/8.4	1	183

STATE OF CALIFORNIA

DEPARTMENT OF TRANSPORTATION

ACNHP-Q101(250)E

PROJECT PLANS FOR CONSTRUCTION ON

STATE HIGHWAY

IN LOS ANGELES COUNTY
IN LOS ANGELES
FROM BEAUDRY AVENUE UNDERCROSSING
TO 0.4 MILE NORTH OF PILGRIMAGE OVERCROSSING

TO BE SUPPLEMENTED BY STANDARD PLANS DATED 2010

INDEX OF PLANS

SHEET No.	DESCRIPTION
1	TITLE AND LOCATION MAP
2-4	LOCATIONS OF CONSTRUCTION
5-8	TYPICAL CROSS SECTIONS
9-80	CONSTRUCTION DETAILS
81-82	CONSTRUCTION AREA SIGNS
83-87	TRAFFIC HANDLING DETAILS
88-90	PAVEMENT DELINEATION QUANTITIES
91-100	SIGN PLANS AND SIGN DETAILS
101-108	SIGN QUANTITIES
109-118	SUMMARY OF QUANTITIES
119	IRRIGATION SPRINKLER SCHEDULE
120-121	IRRIGATION QUANTITIES
122	LANDSCAPE DETAILS
123-134	ELECTRICAL PLANS
135-177	REVISED STANDARD PLANS

STRUCTURE PLANS

178-183	ROUTE 101 BRIDGE REPLACE APPROACH SLABS

THE STANDARD PLANS LIST APPLICABLE TO THIS CONTRACT IS INCLUDED IN THE NOTICE TO BIDDERS AND SPECIAL PROVISIONS BOOK.

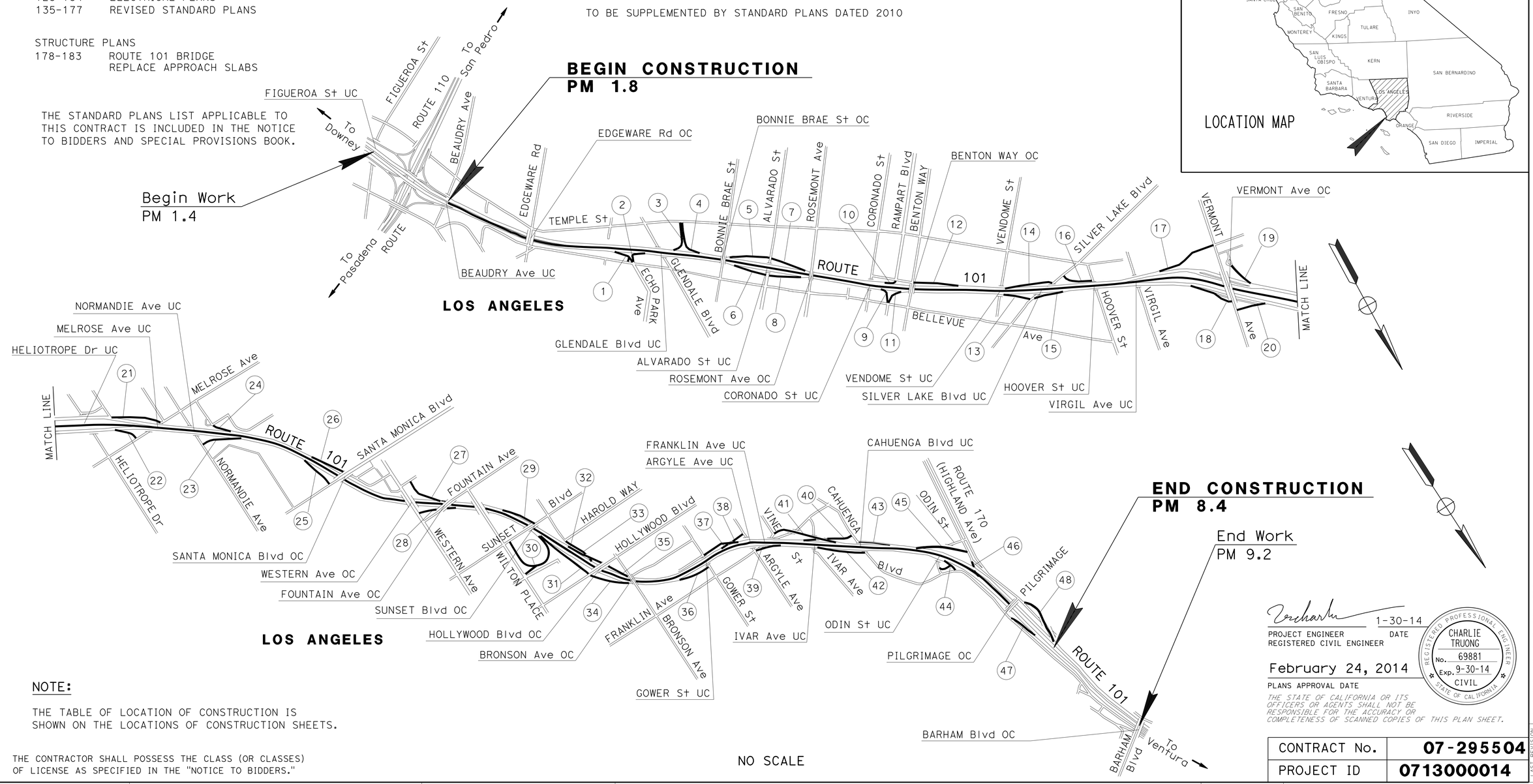

LOCATION MAP

NOTE:

THE TABLE OF LOCATION OF CONSTRUCTION IS SHOWN ON THE LOCATIONS OF CONSTRUCTION SHEETS.

THE CONTRACTOR SHALL POSSESS THE CLASS (OR CLASSES) OF LICENSE AS SPECIFIED IN THE "NOTICE TO BIDDERS."

PROJECT MANAGER JAVAD RAHIMZADEH

DESIGN ENGINEER KEVIN KWAN

PROJECT ENGINEER REGISTERED CIVIL ENGINEER — DATE 1-30-14

February 24, 2014
PLANS APPROVAL DATE

REGISTERED PROFESSIONAL ENGINEER CHARLIE TRUONG No. 69881 Exp. 9-30-14 CIVIL STATE OF CALIFORNIA

THE STATE OF CALIFORNIA OR ITS OFFICERS OR AGENTS SHALL NOT BE RESPONSIBLE FOR THE ACCURACY OR COMPLETENESS OF SCANNED COPIES OF THIS PLAN SHEET.

CONTRACT No.	07-295504
PROJECT ID	0713000014

LAST REVISION 00-00-00 DATE PLOTTED => 24-MAY-2014 TIME PLOTTED => 05:30

Dist	COUNTY	ROUTE	POST MILES TOTAL PROJECT	SHEET No.	TOTAL SHEETS
07	LA	101	1.8/8.4	2	183

REGISTERED CIVIL ENGINEER 1-30-14 DATE

2-24-14
PLANS APPROVAL DATE

REGISTERED PROFESSIONAL ENGINEER
CHARLIE TRUONG
No. 69881
Exp. 9-30-14
CIVIL
STATE OF CALIFORNIA

THE STATE OF CALIFORNIA OR ITS OFFICERS OR AGENTS SHALL NOT BE RESPONSIBLE FOR THE ACCURACY OR COMPLETENESS OF SCANNED COPIES OF THIS PLAN SHEET.

LOCATIONS OF RAMPS

RAMP	PM	DESCRIPTION	RAMP	PM	DESCRIPTION
1	2.37	NB OFF TO ECHO PARK Ave/GLENDALE Blvd	25	5.45	NB OFF TO SANTA MONICA Blvd
2	2.42	NB ON FROM ECHO PARK Ave/GLENDALE Blvd	26	5.46	SB ON FROM SANTA MONICA Blvd
3	2.55	SB ON FROM BELMONT Ave/GLENDALE Blvd	27	5.88	SB OFF TO WESTERN Ave
4	2.61	SB OFF TO BELMONT Ave/GLENDALE Blvd	28	5.96	NB ON FROM WESTERN Ave
5	2.73	SB ON FROM ALVARADO St/BUS	29	6.10	SB ON FROM SUNSET Blvd
6	2.74	NB OFF TO ALVARADO St/BUS	30	6.26	NB OFF TO SUNSET Blvd/WILTON PLACE
7	2.96	SB OFF TO ALVARADO St/BUS	31	6.37	NB OFF TO HOLLYWOOD Blvd
8	2.98	NB ON FROM ALVARADO St	32	6.37	SB ON FROM HOLLYWOOD Blvd
9	3.25	NB OFF TO RAMPART Blvd/BENTON WAY	33	6.46	SB OFF TO SUNSET Blvd
10	3.25	SB ON FROM RAMPART Blvd/BENTON WAY	34	6.58	NB ON FROM HOLLYWOOD Blvd
11	3.31	NB ON FROM RAMPART Blvd/BENTON WAY	35	6.63	SB OFF TO HOLLYWOOD Blvd
12	3.44	SB OFF TO BENTON WAY	36	6.82	NB OFF TO GOWER St/BEACHWOOD Dr
13	3.64	NB OFF TO SILVER LAKE Blvd	37	6.95	SB ON FROM ARGYLE Ave
14	3.69	SB ON FROM SILVER LAKE Blvd	38	7.06	SB OFF TO GOWER St
15	3.86	NB ON FROM SILVER LAKE Blvd	39	7.21	NB ON FROM ARGYLE Ave/FRANKLIN Ave
16	3.92	SB OFF TO SILVER LAKE Blvd	40	7.28	SB ON FROM CAHUENGA Blvd
17	4.14	SB ON FROM VERMONT Ave	41	7.37	SB OFF TO VINE St
18	4.29	NB OFF TO VERMONT Ave	42	7.40	NB OFF TO CAHUENGA Blvd
19	4.48	SB OFF TO VERMONT Ave	43	7.59	SB OFF TO CAHUENGA Blvd
20	4.53	NB ON FROM VERMONT Ave	44	7.74	NB OFF TO HIGHLAND Ave
21	4.74	SB ON FROM MELROSE Ave	45	7.75	SB ON FROM HIGHLAND Ave
22	4.74	NB OFF TO MELROSE Ave	46	7.96	NB ON FROM HIGHLAND Ave
23	5.11	NB ON FROM NORMANDIE Ave	47	8.17	NB ON FROM CAHUENGA Blvd
24	5.16	SB OFF TO MELROSE Ave/NORMANDIE Ave	48	8.40	SB OFF TO CAHUENGA Blvd

LOCATIONS OF CONSTRUCTION

LC-1

STATE OF CALIFORNIA - DEPARTMENT OF TRANSPORTATION
Caltrans MAINTENANCE ENGINEERING

FUNCTIONAL SUPERVISOR: KEVIN KWAN
CALCULATED-DESIGNED BY: CHARLIE TRUONG
CHECKED BY: KEVIN KWAN
REVISED BY
DATE REVISED

LAST REVISION 00-00-00
DATE PLOTTED => 24-MAY-2014
TIME PLOTTED => 05:30

Dist	COUNTY	ROUTE	POST MILES TOTAL PROJECT	SHEET No.	TOTAL SHEETS
07	LA	101	1.8/8.4	3	183

REGISTERED CIVIL ENGINEER 1-30-14 DATE

2-24-14
PLANS APPROVAL DATE

REGISTERED PROFESSIONAL ENGINEER CHARLIE TRUONG No. 69881 Exp. 9-30-14 CIVIL STATE OF CALIFORNIA

THE STATE OF CALIFORNIA OR ITS OFFICERS OR AGENTS SHALL NOT BE RESPONSIBLE FOR THE ACCURACY OR COMPLETENESS OF SCANNED COPIES OF THIS PLAN SHEET.

LOCATIONS OF CURB RAMPS

No.	CURB RAMP NAME	PM	DESCRIPTION
1	1CL	2.37	NB OFF TO ECHO Pkwy/GLENDALE Blvd CENTER
2	1CR	3.37	NB OFF TO ECHO Pkwy/GLENDALE Blvd CENTER
3	1R	2.37	NB OFF TO ECHO Pkwy/GLENDALE Blvd RIGHT
4	2R	2.42	NB ON FROM ECHO Pkwy/GLENDALE Blvd RIGHT
5	5L	2.73	SB ON FROM ALVARADO St/BUS LEFT
6	5R	2.73	SB ON FROM ALVARADO St/BUS RIGHT
7	6L	2.74	NB OFF TO ALVARADO St/BUS LEFT
8	6R	2.74	NB OFF TO ALVARADO St/BUS RIGHT
9	7L	2.96	SB OFF TO ALVARADO St/BUS LEFT
10	7R	2.96	SB OFF TO ALVARADO St/BUS RIGHT
11	8L	2.98	NB ON FROM ALVARADO St LEFT
12	9C	3.25	NB OFF TO RAMPART Blvd/BENTON WAY CENTER
13	9R	3.25	NB OFF TO RAMPART Blvd/BENTON WAY RIGHT
14	11R	3.31	NB ON FROM RAMPART Blvd/BENTON WAY RIGHT
15	12L	3.44	SB OFF TO BENTON WAY LEFT
16	12R	3.44	SB OFF TO BENTON WAY RIGHT
17	13L	3.64	NB OFF TO SILVER LAKE Blvd LEFT
18	13R	3.64	NB OFF TO SILVER LAKE Blvd RIGHT
19	14R	3.69	SB ON FROM SILVER LAKE Blvd LEFT
20	14L	3.69	SB ON FROM SILVER LAKE Blvd RIGHT
21	15L	3.86	NB ON FROM SILVER LAKE Blvd LEFT
22	15R	3.86	NB ON FROM SILVER LAKE Blvd RIGHT
23	16L	3.92	SB OFF TO SILVER LAKE Blvd LEFT
24	16R	3.92	SB OFF TO SILVER LAKE Blvd RIGHT
25	20L	4.53	NB ON FROM VERMONT Ave LEFT
26	20R	4.53	NB ON FROM VERMONT Ave RIGHT
27	21L	4.74	SB ON FROM MELROSE Ave LEFT
28	21R	4.74	SB ON FROM MELROSE Ave RIGHT
29	22L	4.74	NB OFF TO MELROSE Ave LEFT
30	22R	4.74	NB OFF TO MELROSE Ave RIGHT
31	23L	5.11	NB ON FROM NORMANDIE Ave LEFT
32	23R	5.11	NB ON FROM NORMANDIE Ave RIGHT
33	25L	5.45	NB OFF TO SANTA MONICA Blvd LEFT
34	25R	5.45	NB OFF TO SANTA MONICA Blvd RIGHT
35	26R	5.46	SB ON FROM SANTA MONICA Blvd RIGHT
36	26L	5.46	SB ON FROM SANTA MONICA Blvd LEFT
37	27L	5.88	SB OFF TO WESTERN Ave LEFT
38	27R	5.88	SB OFF TO WESTERN Ave RIGHT
39	28L	5.96	NB ON FROM WESTERN Ave LEFT
40	29R	6.10	SB ON FROM SUNSET Blvd RIGHT
41	30L2	6.26	NB OFF TO SUNSET Blvd LEFT 2
42	30R1	6.26	NB OFF TO SUNSET/WILTON PLACE RIGHT 1
43	30R2	6.26	NB OFF TO SUNSET Blvd RIGHT 2
44	31L	6.37	NB OFF TO HOLLYWOOD Blvd LEFT
45	31R	6.37	NB OFF TO HOLLYWOOD Blvd RIGHT
46	32L	6.37	SB ON FROM HOLLYWOOD Blvd LEFT
47	33R	6.46	SB OFF TO SUNSET Blvd RIGHT
48	34R	6.58	NB ON FROM HOLLYWOOD Blvd RIGHT
49	35L	6.63	SB OFF TO HOLLYWOOD Blvd LEFT
50	35R	6.63	SB OFF TO HOLLYWOOD Blvd RIGHT
51	37L	6.95	SB ON FROM ARGYLE Ave LEFT
52	37R	6.95	SB ON FROM ARGYLE Ave RIGHT
53	38L	7.06	SB OFF TO GOWER St LEFT
54	38R	7.06	SB OFF TO GOWER St RIGHT
55	40R	7.28	SB ON FROM CAHUENGA Blvd LEFT
56	40L	7.28	SB ON FROM CAHUENGA Blvd RIGHT
57	41C	7.37	SB OFF TO VINE St CENTER
58	41L	7.37	SB OFF TO VINE St LEFT
59	41R	7.37	SB OFF TO VINE St RIGHT
60	42L	7.40	NB OFF TO CAHUENGA Blvd LEFT
61	43L	7.59	SB OFF TO CAHUENGA Blvd LEFT
62	43R	7.59	SB OFF TO CAHUENGA Blvd RIGHT

LOCATIONS OF CONSTRUCTION

LC-2

REVISED BY | DATE REVISED

CHARLIE TRUONG | KEVIN KWAN

CALCULATED-DESIGNED BY | CHECKED BY

FUNCTIONAL SUPERVISOR: KEVIN KWAN

STATE OF CALIFORNIA - DEPARTMENT OF TRANSPORTATION
Caltrans MAINTENANCE ENGINEERING

LAST REVISION 00-00-00 | DATE PLOTTED => 24-MAY-2014 | TIME PLOTTED => 05:30

Dist	COUNTY	ROUTE	POST MILES TOTAL PROJECT	SHEET No.	TOTAL SHEETS
07	LA	101	1.8/8.4	4	183

REGISTERED CIVIL ENGINEER 1-30-14 DATE

2-24-14
PLANS APPROVAL DATE

REGISTERED PROFESSIONAL ENGINEER ESTHER M. KIM No. 48363 Exp. 6-30-14 CIVIL STATE OF CALIFORNIA

THE STATE OF CALIFORNIA OR ITS OFFICERS OR AGENTS SHALL NOT BE RESPONSIBLE FOR THE ACCURACY OR COMPLETENESS OF SCANNED COPIES OF THIS PLAN SHEET.

LOCATIONS OF MAINLINE MGS

No.	PM	DIRECTION	DESCRIPTION
1	2.06	NORTHBOUND	EDGEWARE Rd OC (Br No. 53-620)
2	2.59	NORTHBOUND	BELMONT Ave Ped OC (Br No. 53-808)
3	2.71	NORTHBOUND	BONNIE BRAE St OC (Br No. 53-618)
4	3.01	NORTHBOUND	ROSEMONT Ave OC (Br No. 53-616)
5	3.34	NORTHBOUND	BENTON WAY OC (Br No. 53-614)
6	4.29	NORTHBOUND	VERMONT Ave SOUNDWALL (BEFORE OVERHEAD SIGN STRUCTURE)
7	6.81	NORTHBOUND	NB OFF-RAMP GOWER St AT GORE
8	7.39	NORTHBOUND	NB OFF-RAMP CAHUENGA Blvd AT GORE
9	2.71	SOUTHBOUND	BONNIE BRAE St OC (Br No. 53-618)
10	4.79	SOUTHBOUND	MELROSE Ave UC LEFT SIDE (Br No. 53-673L)
11	4.79	SOUTHBOUND	CLINTON St BRIDGE LEFT SIDE (Br No. 53-317)
12	5.16	SOUTHBOUND	SB OFF-RAMP MELROSE Ave/NORMANDIE Ave AT GORE

LOCATIONS OF CONSTRUCTION

LC-3

REVISED BY | DATE REVISED
JAMES M. CANALITA | ESTHER M. KIM
CALCULATED-DESIGNED BY | CHECKED BY
FUNCTIONAL SUPERVISOR
MOHAMMED CHOWDHURY

STATE OF CALIFORNIA - DEPARTMENT OF TRANSPORTATION
Caltrans® TRAFFIC DESIGN

S:\projects\295501\07-295501\729550ba003.dgn

LAST REVISION | DATE PLOTTED => 24-MAY-2014 | TIME PLOTTED => 05:30

Dist	COUNTY	ROUTE	POST MILES TOTAL PROJECT	SHEET No.	TOTAL SHEETS
07	LA	101	1.8/8.4	5	183

REGISTERED CIVIL ENGINEER 1-30-14 DATE

2-24-14
PLANS APPROVAL DATE

REGISTERED PROFESSIONAL ENGINEER CHARLIE TRUONG No. 69881 Exp. 9-30-14 CIVIL STATE OF CALIFORNIA

THE STATE OF CALIFORNIA OR ITS OFFICERS OR AGENTS SHALL NOT BE RESPONSIBLE FOR THE ACCURACY OR COMPLETENESS OF SCANNED COPIES OF THIS PLAN SHEET.

NOTES:

1. DIMENSIONS OF THE PAVEMENT STRUCTURES (STRUCTURAL SECTIONS) ARE SUBJECT TO TOLERANCES SPECIFIED IN THE STANDARD SPECIFICATIONS.
2. SUPERELEVATION AS SHOWN OR AS DIRECTED BY THE ENGINEER.
3. EXISTING DRAINAGE INLETS HAVE NOT BEEN PLOTTED.
4. FOR ACCURATE RIGHT OF WAY DATA, CONTACT RIGHT OF WAY ENGINEERING AT THE DISTRICT OFFICE.
5. OMIT COLD PLANING AND AC OVERLAY ON BRIDGE DECKS, PCC PAVEMENT, MANHOLES AND GUTTERS.
6. OMIT GRINDING ON AC PAVEMENT, BRIDGE DECKS, AND APPROACH AND DEPARTURE SLABS.
7. SEE QUANTITY SHEETS FOR LIMITS INDIVIDUAL PRECAST SLAB REPLACEMENT AND GRIND EXISTING CONCRETE PAVEMENT. EXACT LOCATIONS WILL BE DETERMINED BY THE ENGINEER.

TYPICAL PAVEMENT STRUCTURES

1
- 0.15′ COLD PLANE AC Pvmt
- 0.15′ RHMA-SP-G

2
- 0.20′ COLD PLANE AC Pvmt
- 0.20′ RHMA-SP-G

3
- 0.70′ IPSR
- 0.05′ LCB-CS

4
- 0.80′ PJCP
- ----- BASE BOND BREAKER
- 0.40′ ALTERNATE TREATED BASE

ABBREVIATIONS:

RHMA-SP-G: RUBBERIZED HOT MIX ASPHALT, SUPERPAVE (GAP GRADED)
IPSR: INDIVIDUAL PRECAST SLAB REPLACEMENT
PJCP: PRECAST JOINTED CONCRETE PAVEMENT
CS: CONCRETE SLURRY

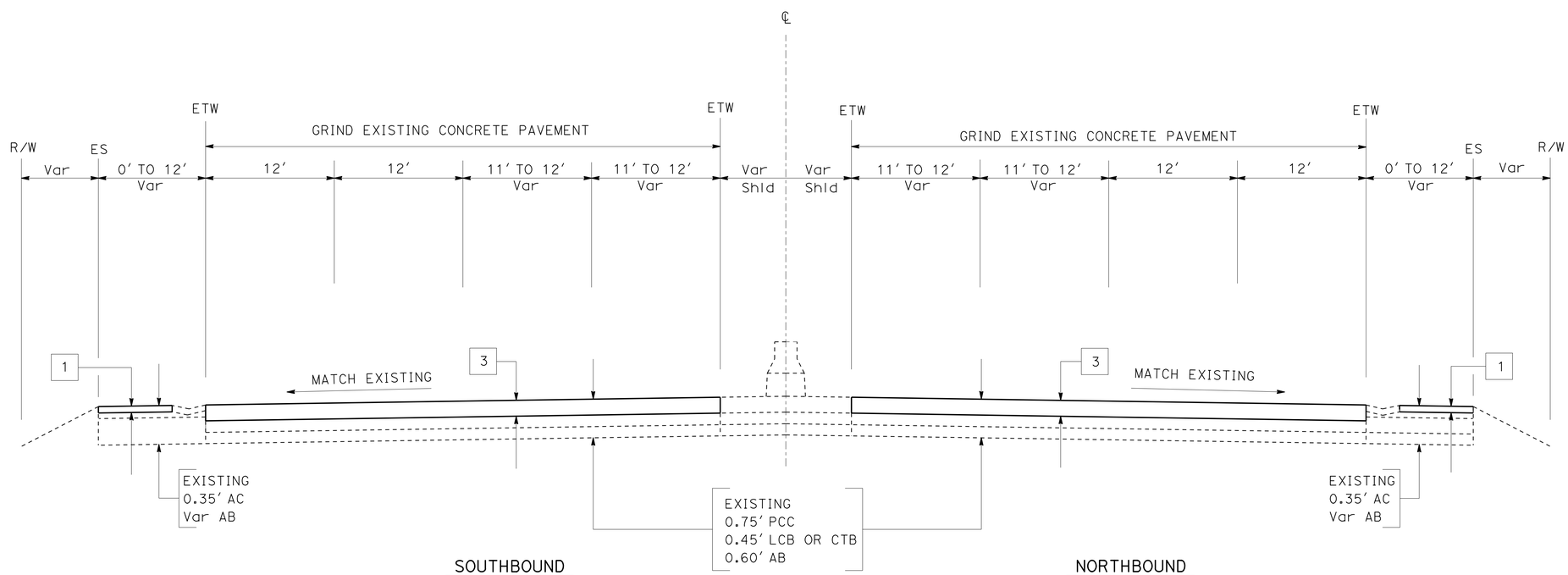

SOUTHBOUND
PM 1.80/3.63
PM 3.76/4.10
PM 4.57/7.77

NORTHBOUND
PM 1.80/3.63
PM 3.76/4.10
PM 4.57/7.46
PM 7.50/7.77

TYPICAL CROSS SECTIONS

NO SCALE

X-1

REVISED BY	DATE REVISED

CALCULATED-DESIGNED BY: CHARLIE TRUONG
CHECKED BY: KEVIN KWAN
FUNCTIONAL SUPERVISOR: KEVIN KWAN

STATE OF CALIFORNIA - DEPARTMENT OF TRANSPORTATION
Caltrans MAINTENANCE ENGINEERING

LAST REVISION DATE PLOTTED => 24-MAY-2014
TIME PLOTTED => 05:30

Dist	COUNTY	ROUTE	POST MILES TOTAL PROJECT	SHEET No.	TOTAL SHEETS
07	LA	101	1.8/8.4	6	183

REGISTERED CIVIL ENGINEER 1-30-14 DATE

2-24-14
PLANS APPROVAL DATE

REGISTERED PROFESSIONAL ENGINEER CHARLIE TRUONG No. 69881 Exp. 9-30-14 CIVIL STATE OF CALIFORNIA

THE STATE OF CALIFORNIA OR ITS OFFICERS OR AGENTS SHALL NOT BE RESPONSIBLE FOR THE ACCURACY OR COMPLETENESS OF SCANNED COPIES OF THIS PLAN SHEET.

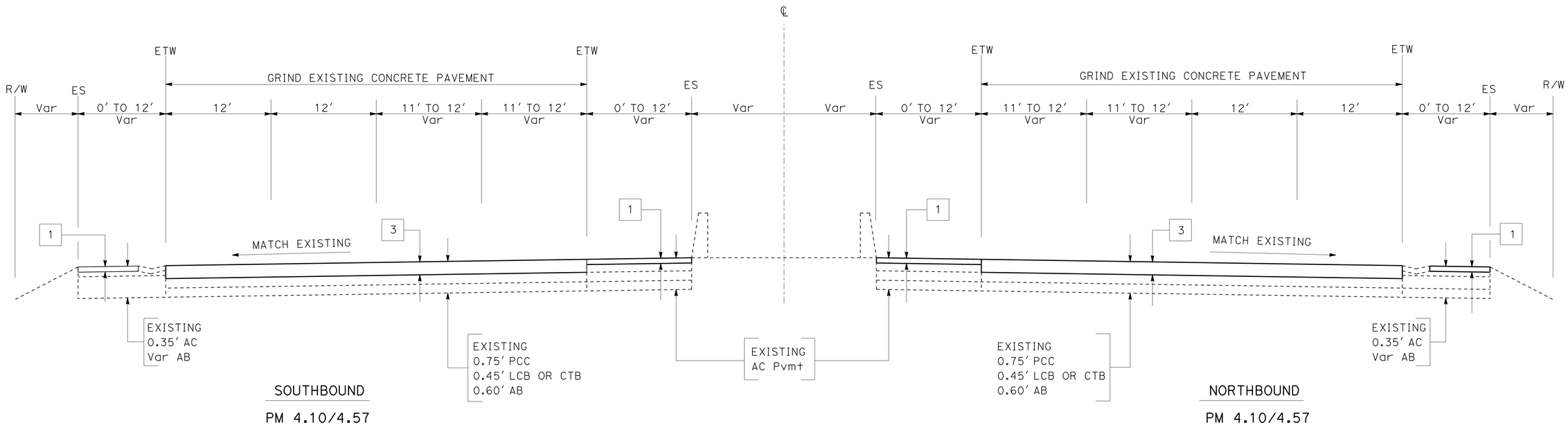

SOUTHBOUND

PM 4.10/4.57

NORTHBOUND

PM 4.10/4.57

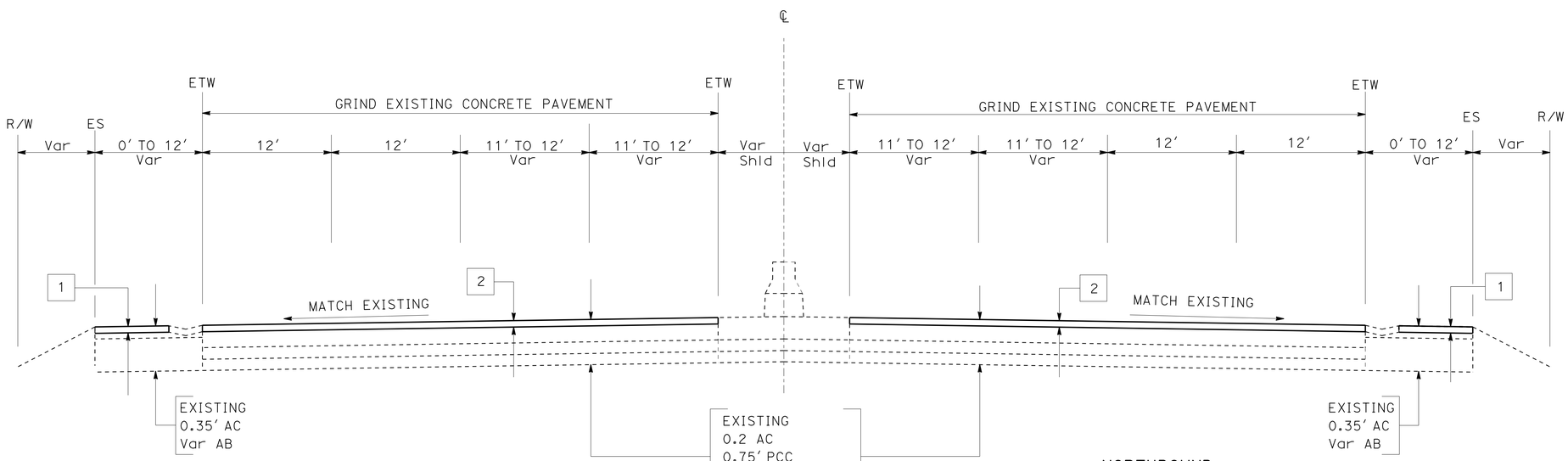

SOUTHBOUND

PM 3.63/3.76

NORTHBOUND

PM 3.63/3.76

PM 7.46/7.50

TYPICAL CROSS SECTIONS

NO SCALE

X-2

REVISED BY | DATE REVISED

CALCULATED-DESIGNED BY: CHARLIE TRUONG | CHECKED BY: KEVIN KWAN

FUNCTIONAL SUPERVISOR: KEVIN KWAN

STATE OF CALIFORNIA - DEPARTMENT OF TRANSPORTATION
Caltrans® MAINTENANCE ENGINEERING

LAST REVISION | DATE PLOTTED => 24-MAY-2014 | TIME PLOTTED => 05:30

Dist	COUNTY	ROUTE	POST MILES TOTAL PROJECT	SHEET No.	TOTAL SHEETS
07	LA	101	1.8/8.4	7	183

REGISTERED CIVIL ENGINEER 1-30-14 DATE

2-24-14
PLANS APPROVAL DATE

REGISTERED PROFESSIONAL ENGINEER CHARLIE TRUONG No. 69881 Exp. 9-30-14 CIVIL STATE OF CALIFORNIA

THE STATE OF CALIFORNIA OR ITS OFFICERS OR AGENTS SHALL NOT BE RESPONSIBLE FOR THE ACCURACY OR COMPLETENESS OF SCANNED COPIES OF THIS PLAN SHEET.

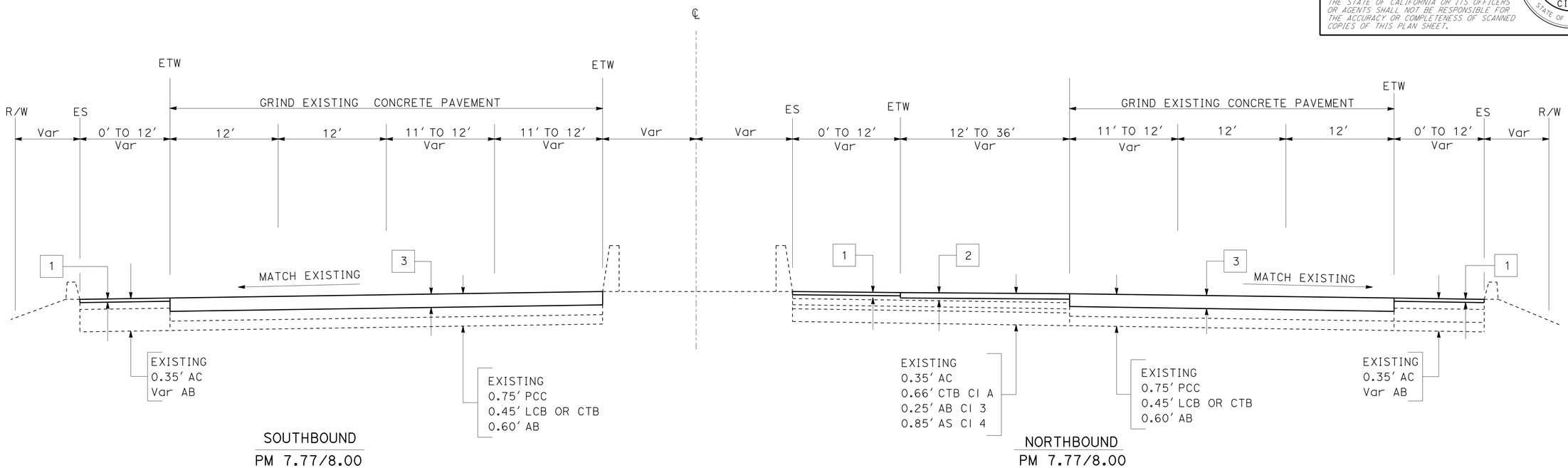

SOUTHBOUND
PM 7.77/8.00

NORTHBOUND
PM 7.77/8.00

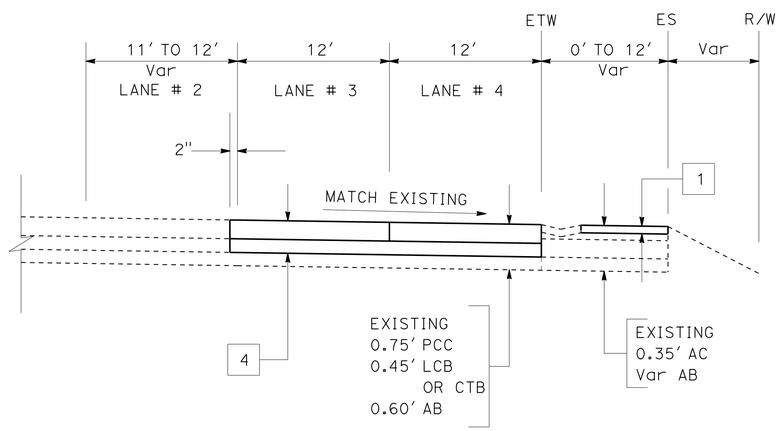

SOUTHBOUND
PM 1.82/2.45
PM 2.54/2.85
PM 5.55/5.80

NORTHBOUND
PM 1.82/2.45
PM 2.54/2.85
PM 5.55/5.80
PM 7.16/7.45

PJCP

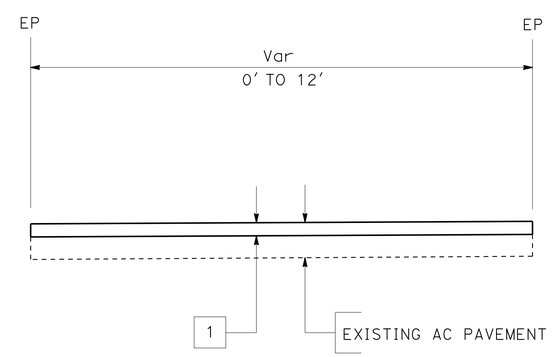

DETAIL FOR MAINTENANCE

VEHICLE PULLOUT AREA (EXISTING AC PAVEMENT)

TYPICAL CROSS SECTIONS

NO SCALE

X-3

REVISED BY | DATE REVISED
CHARLIE TRUONG | KEVIN KWAN
CALCULATED-DESIGNED BY | CHECKED BY
FUNCTIONAL SUPERVISOR | KEVIN KWAN
STATE OF CALIFORNIA - DEPARTMENT OF TRANSPORTATION
Caltrans MAINTENANCE ENGINEERING

LAST REVISION 00-00-00 | DATE PLOTTED => 24-MAY-2014 | TIME PLOTTED => 05:30

Dist	COUNTY	ROUTE	POST MILES TOTAL PROJECT	SHEET No.	TOTAL SHEETS
07	LA	101	1.8/8.4	8	183

REGISTERED CIVIL ENGINEER 1-30-14 DATE

2-24-14
PLANS APPROVAL DATE

REGISTERED PROFESSIONAL ENGINEER
CHARLIE TRUONG
No. 69881
Exp. 9-30-14
CIVIL
STATE OF CALIFORNIA

THE STATE OF CALIFORNIA OR ITS OFFICERS OR AGENTS SHALL NOT BE RESPONSIBLE FOR THE ACCURACY OR COMPLETENESS OF SCANNED COPIES OF THIS PLAN SHEET.

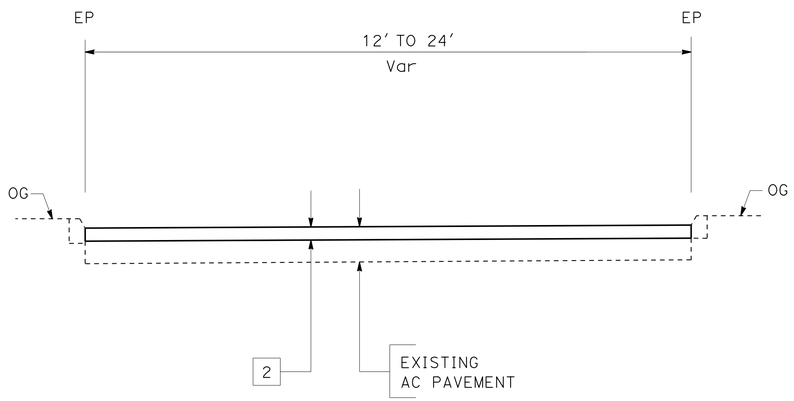

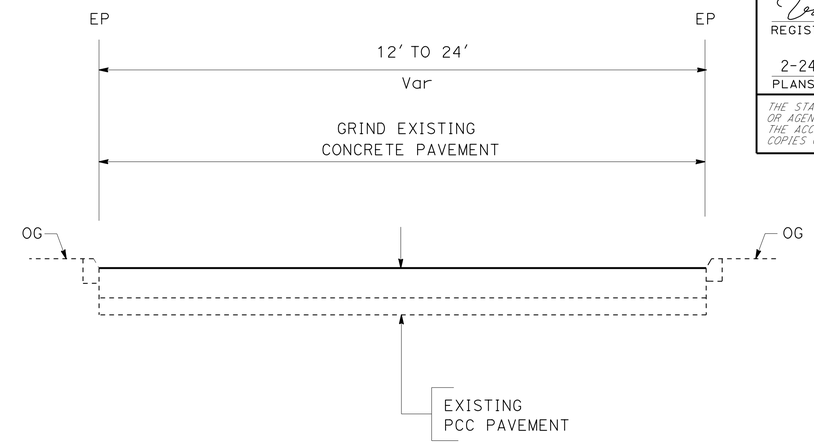

DETAIL FOR BUS LANE

SOUTHBOUND	NORTHBOUND
PM 2.75/2.96	PM 2.75/2.96
PM 4.26/4.46	PM 4.34/4.55
PM 5.66/5.86	PM 5.70/5.94

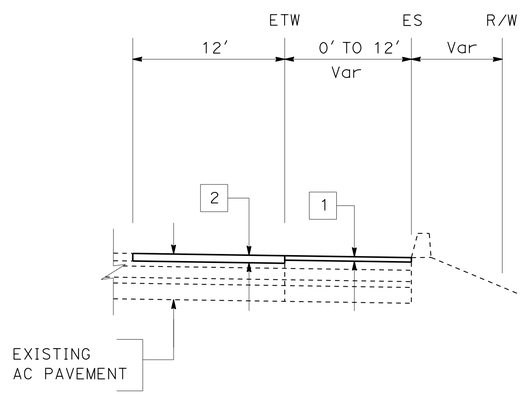

DETAIL FOR AUXILIARY LANE

SOUTHBOUND		NORTHBOUND	
PM 2.71/2.64	PM 4.54/4.58	PM 4.60/4.67	PM 7.26/7.46
PM 3.00/3.19	PM 6.67/6.89	PM 5.15/5.40	PM 7.50/7.64
PM 3.53/3.67	PM 7.48/7.72	PM 6.62/6.79	
PM 4.01/4.07			

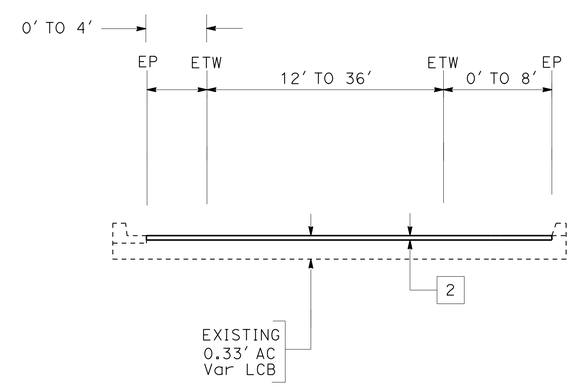

RAMP

TYPICAL CROSS SECTIONS

NO SCALE

X-4

STATE OF CALIFORNIA - DEPARTMENT OF TRANSPORTATION
Caltrans MAINTENANCE ENGINEERING

FUNCTIONAL SUPERVISOR: KEVIN KWAN
CALCULATED-DESIGNED BY: CHARLIE TRUONG
CHECKED BY: KEVIN KWAN
REVISED BY
DATE REVISED

LAST REVISION 00-00-00
DATE PLOTTED => 24-MAY-2014
TIME PLOTTED => 05:30

Dist	COUNTY	ROUTE	POST MILES TOTAL PROJECT	SHEET No.	TOTAL SHEETS
07	LA	101	1.8/8.4	9	183

REGISTERED CIVIL ENGINEER 1-30-14 DATE

2-24-14
PLANS APPROVAL DATE

REGISTERED PROFESSIONAL ENGINEER CHARLIE TRUONG No. 69881 Exp. 9-30-14 CIVIL STATE OF CALIFORNIA

THE STATE OF CALIFORNIA OR ITS OFFICERS OR AGENTS SHALL NOT BE RESPONSIBLE FOR THE ACCURACY OR COMPLETENESS OF SCANNED COPIES OF THIS PLAN SHEET.

NOTES:

1. EXISTING DRAINAGE INLETS HAVE NOT BEEN PLOTTED.
2. EXISTING UTILITY FACILITIES HAVE NOT BEEN PLOTTED ON THESE PLANS.
3. OMIT COLD PLANNING AND OVERLAY HMA ON BRIDGE DECKS, PCC PAVEMENT, MANHOLES AND GUTTERS.
4. EXACT DIMENSIONS AND LIMITS FOR REPLACE ASPHALT CONCRETE SURFACING WILL BE DETERMINED BY ENGINEER.
5. EXACT PAVING LIMITS WILL BE DETERMINED BY THE ENGINEER.
6. FOR COMPLETE RIGHT OF WAY AND ACCURATE ACCESS DATE, SEE RIGHT OF WAY RECORDS MAPS AT DISTRICT OFFICE.

ABBREVIATIONS:

RHMA-SP-G: RUBBERIZED HOT MIX ALPHALT, SUPERPAVE (GAP GRADED)

HMA: HOT MIX ALPHALT

LEGEND:

REPLACE ASPHALT CONCRETE SURFACING

COLD PLANE AC PAVEMENT AND OVERLAY WITH RHMA-SP-G

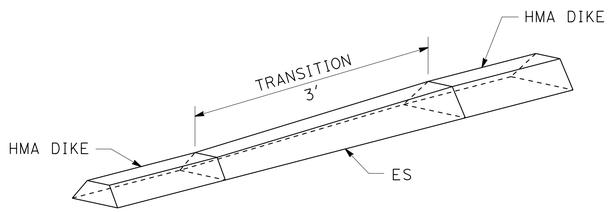

TYPE A - TYPE F
TYPE A - TYPE C
TYPE F - TYPE C

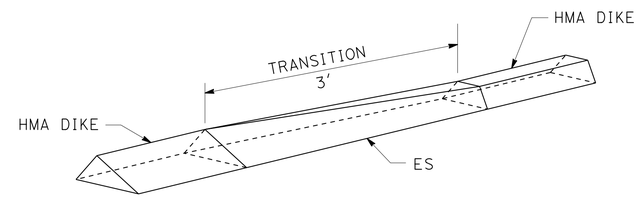

TYPE D - TYPE A
TYPE D - TYPE C
TYPE D - TYPE F

HMA DIKE TRANSITIONS

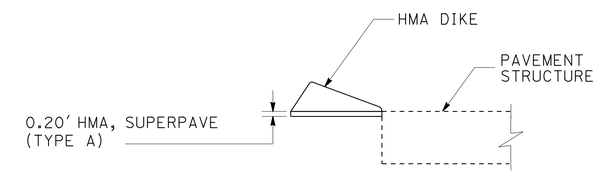

HMA DIKE

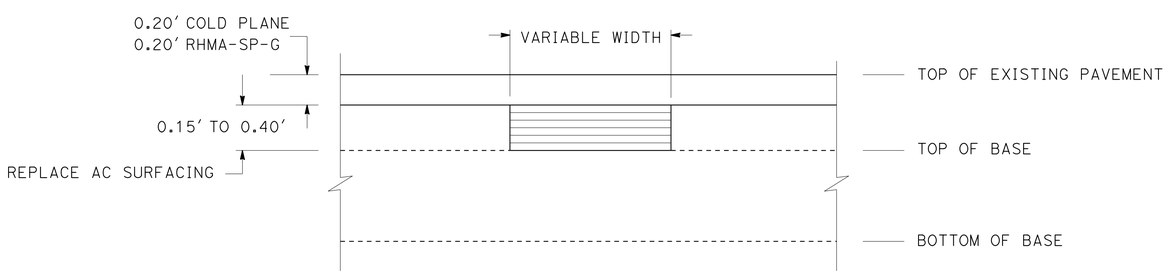

SECTION B-B

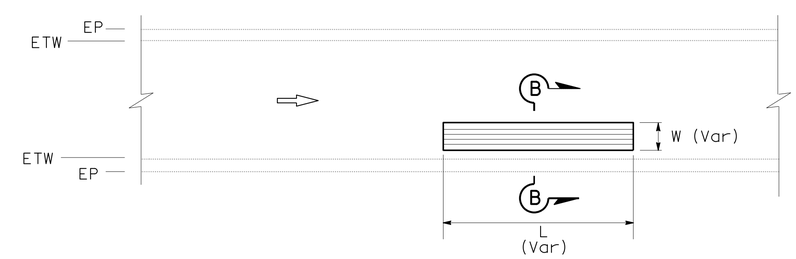

PLAN

TYPICAL DETAIL FOR REPLACE ASPHALT CONCRETE SURFACING

CONSTRUCTION DETAILS

NO SCALE

C-1

STATE OF CALIFORNIA - DEPARTMENT OF TRANSPORTATION
Caltrans MAINTENANCE ENGINEERING

FUNCTIONAL SUPERVISOR: KEVIN KWAN

CALCULATED-DESIGNED BY: CHARLIE TRUONG
CHECKED BY: KEVIN KWAN

REVISED BY | DATE REVISED

LAST REVISION 00-00-00 | DATE PLOTTED => 24-MAY-2014 | TIME PLOTTED => 05:30

Dist	COUNTY	ROUTE	POST MILES TOTAL PROJECT	SHEET No.	TOTAL SHEETS
07	LA	101	1.8/8.4	10	183

REGISTERED CIVIL ENGINEER 1-30-14 DATE

2-24-14
PLANS APPROVAL DATE

REGISTERED PROFESSIONAL ENGINEER JEFFREY MILLER No. 69162 Exp. 6-30-14 CIVIL STATE OF CALIFORNIA

THE STATE OF CALIFORNIA OR ITS OFFICERS OR AGENTS SHALL NOT BE RESPONSIBLE FOR THE ACCURACY OR COMPLETENESS OF SCANNED COPIES OF THIS PLAN SHEET.

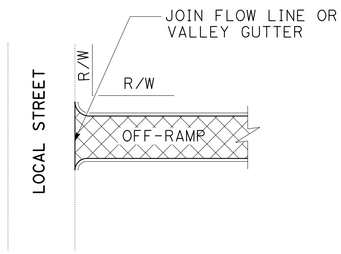

OFF-RAMP

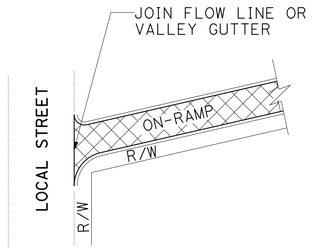

ON-RAMP

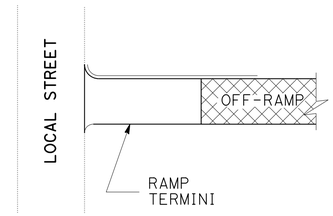

OFF-RAMP

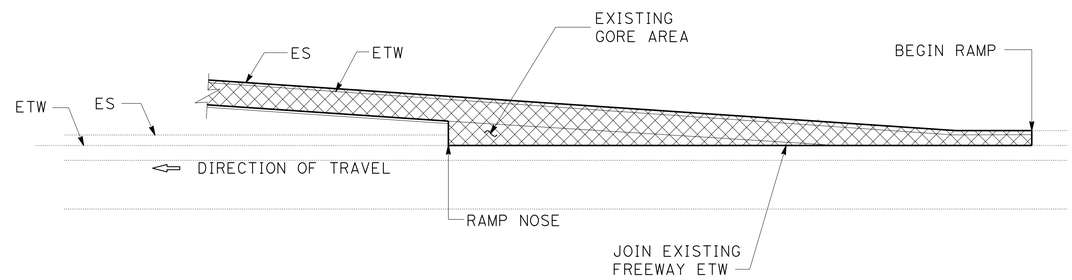

OFF-RAMP

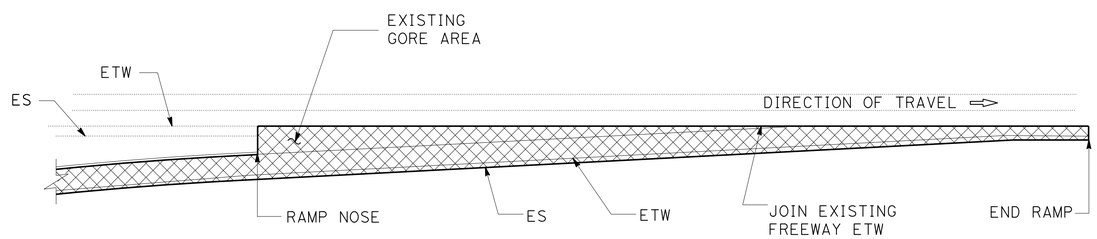

ON-RAMP

TYPICAL RAMP PAVING DETAILS

CONSTRUCTION DETAILS

NO SCALE

C-2

STATE OF CALIFORNIA - DEPARTMENT OF TRANSPORTATION
Caltrans MAINTENANCE ENGINEERING

FUNCTIONAL SUPERVISOR: KEVIN KWAN
CALCULATED-DESIGNED BY: JEFFREY MILLER
CHECKED BY: CHARLIE TRUONG
REVISED BY
DATE REVISED

LAST REVISION 00-00-00 | DATE PLOTTED => 24-MAY-2014 | TIME PLOTTED => 05:30

Dist	COUNTY	ROUTE	POST MILES TOTAL PROJECT	SHEET No.	TOTAL SHEETS
07	LA	101	1.8/8.4	11	183

REGISTERED CIVIL ENGINEER 1-30-14 DATE

2-24-14
PLANS APPROVAL DATE

REGISTERED PROFESSIONAL ENGINEER JEFFREY MILLER No. 69162 Exp. 6-30-14 CIVIL STATE OF CALIFORNIA

THE STATE OF CALIFORNIA OR ITS OFFICERS OR AGENTS SHALL NOT BE RESPONSIBLE FOR THE ACCURACY OR COMPLETENESS OF SCANNED COPIES OF THIS PLAN SHEET.

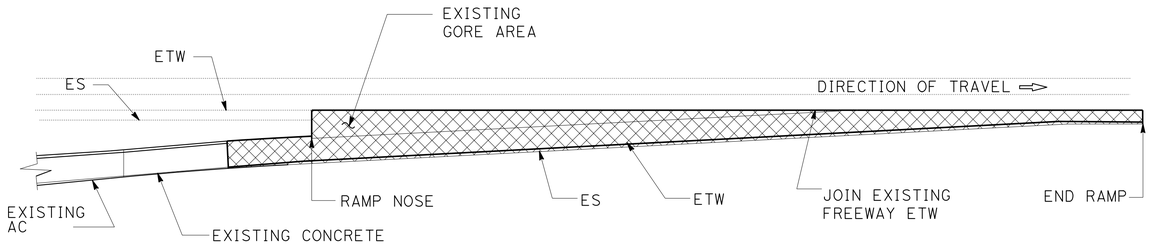

PAVING DETAILS FOR SB HOLLYWOOD Blvd ON-RAMP

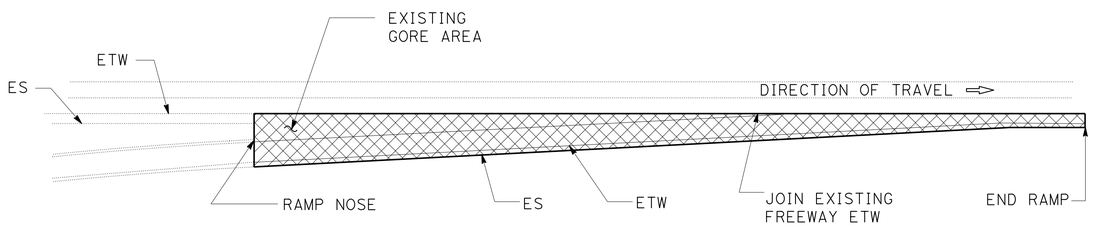

PAVING DETAILS FOR NB WESTERN Ave, SB VERMONT Ave ON-RAMP

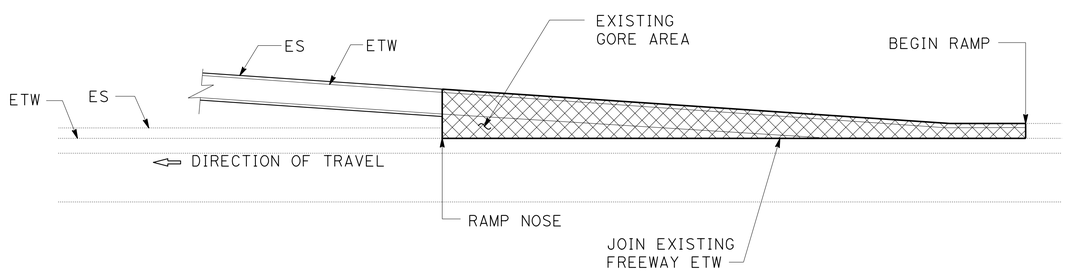

PAVING DETAILS FOR NB GOWER St/BEECHWOOD Dr OFF-RAMP

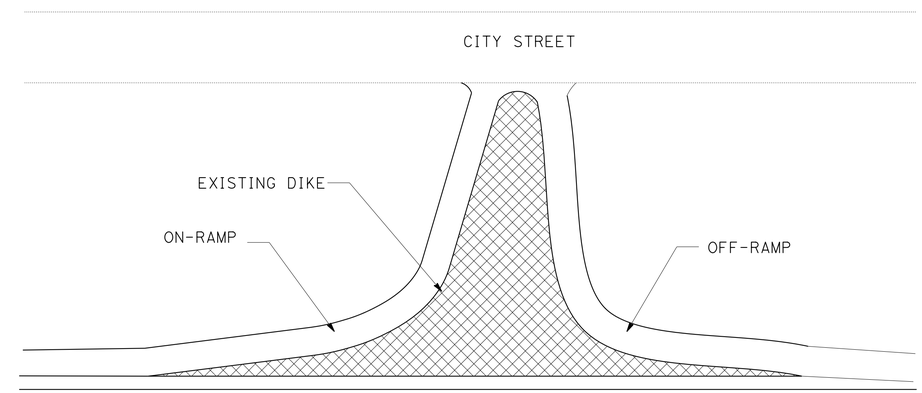

SOUTHBOUND	NORTHBOUND
BELMONT Ave/GLENDALE Blvd	ECHO PARK Ave/GLENDALE Blvd RAMPART Blvd/BENTON WAY

RAMP PAVING DETAIL

CONSTRUCTION DETAILS

NO SCALE

C-3

STATE OF CALIFORNIA - DEPARTMENT OF TRANSPORTATION
Caltrans MAINTENANCE ENGINEERING

FUNCTIONAL SUPERVISOR: KEVIN KWAN
CALCULATED-DESIGNED BY: JEFFREY MILLER
CHECKED BY: CHARLIE TRUONG
REVISED BY
DATE REVISED

LAST REVISION 00-00-00
DATE PLOTTED => 24-MAY-2014
TIME PLOTTED => 05:30

Dist	COUNTY	ROUTE	POST MILES TOTAL PROJECT	SHEET No.	TOTAL SHEETS
07	LA	101	1.8/8.4	12	183

REGISTERED CIVIL ENGINEER 1-30-14 DATE

2-24-14
PLANS APPROVAL DATE

REGISTERED PROFESSIONAL ENGINEER JEFFREY MILLER No. 69162 Exp. 6-30-14 CIVIL STATE OF CALIFORNIA

THE STATE OF CALIFORNIA OR ITS OFFICERS OR AGENTS SHALL NOT BE RESPONSIBLE FOR THE ACCURACY OR COMPLETENESS OF SCANNED COPIES OF THIS PLAN SHEET.

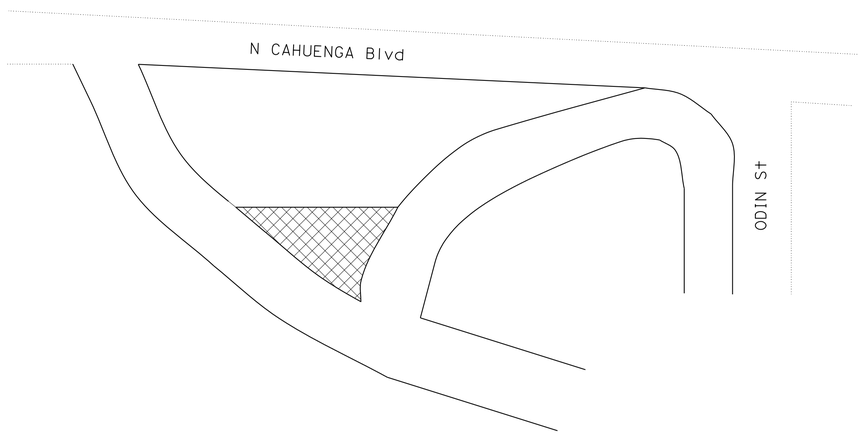

NB OFF-RAMP TO CAHUENGA Blvd

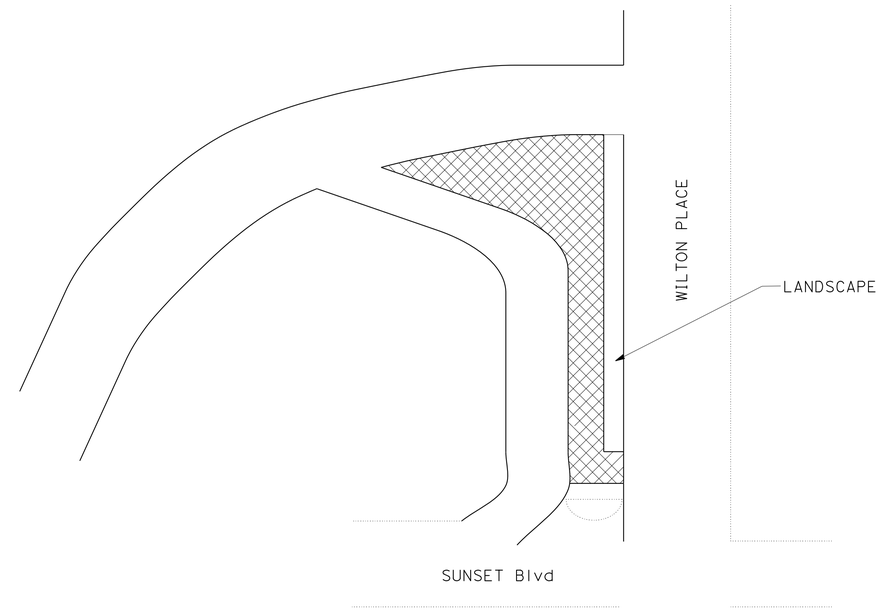

NB OFF-RAMP TO SUNSET Blvd/WILTON PLACE

RAMP PAVING DETAIL

CONSTRUCTION DETAILS

NO SCALE

C-4

STATE OF CALIFORNIA - DEPARTMENT OF TRANSPORTATION
Caltrans MAINTENANCE ENGINEERING

FUNCTIONAL SUPERVISOR: KEVIN KWAN
CALCULATED-DESIGNED BY: JEFFREY MILLER
CHECKED BY: CHARLIE TRUONG
REVISED BY
DATE REVISED

LAST REVISION 00-00-00
DATE PLOTTED => 24-MAY-2014
TIME PLOTTED => 05:30

Dist	COUNTY	ROUTE	POST MILES TOTAL PROJECT	SHEET No.	TOTAL SHEETS
07	LA	101	1.8/8.4	13	183

REGISTERED CIVIL ENGINEER 1-30-14 DATE

2-24-14
PLANS APPROVAL DATE

REGISTERED PROFESSIONAL ENGINEER CHARLIE TRUONG No. 69881 Exp. 9-30-14 CIVIL STATE OF CALIFORNIA

THE STATE OF CALIFORNIA OR ITS OFFICERS OR AGENTS SHALL NOT BE RESPONSIBLE FOR THE ACCURACY OR COMPLETENESS OF SCANNED COPIES OF THIS PLAN SHEET.

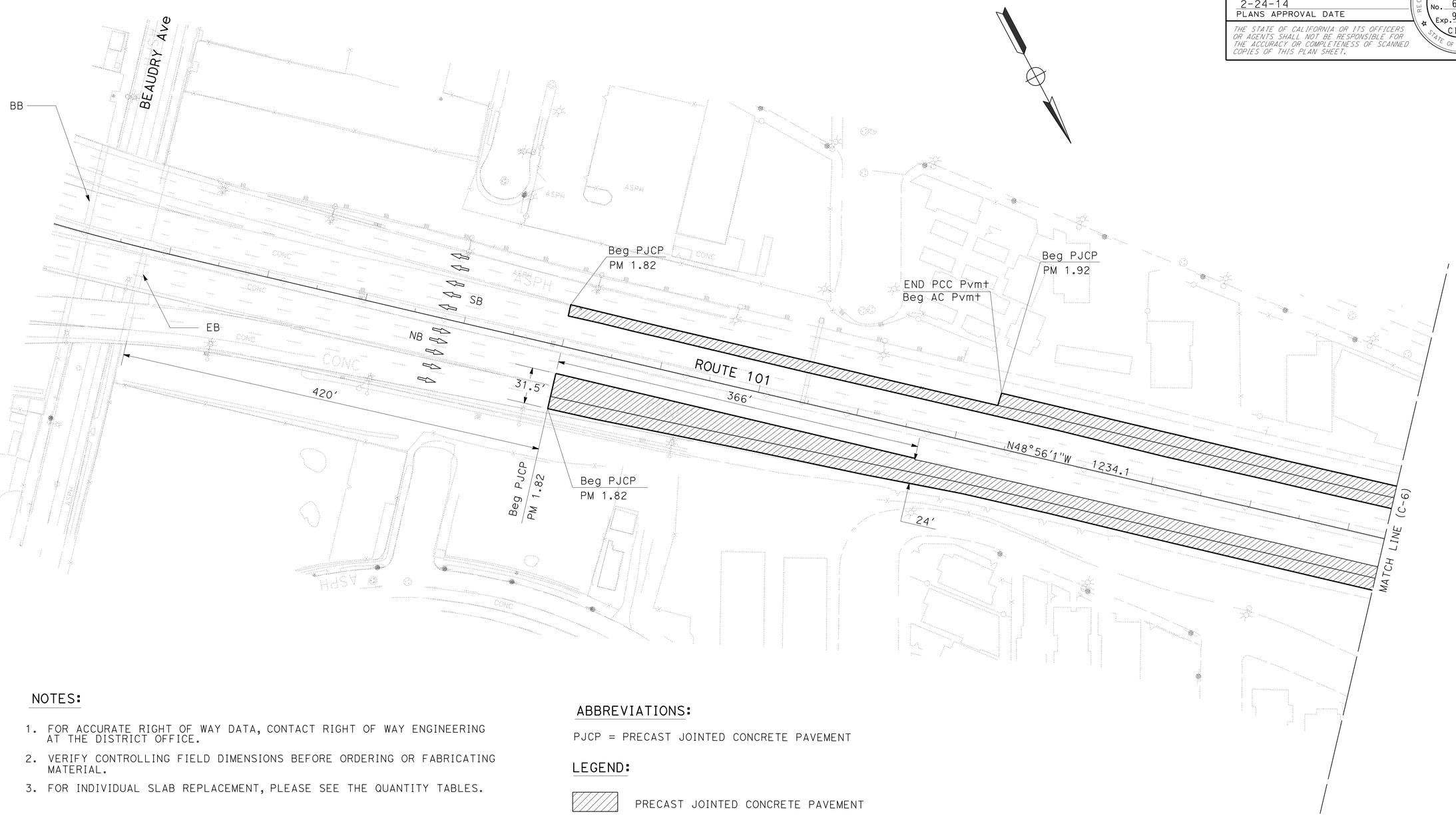

NOTES:

1. FOR ACCURATE RIGHT OF WAY DATA, CONTACT RIGHT OF WAY ENGINEERING AT THE DISTRICT OFFICE.
2. VERIFY CONTROLLING FIELD DIMENSIONS BEFORE ORDERING OR FABRICATING MATERIAL.
3. FOR INDIVIDUAL SLAB REPLACEMENT, PLEASE SEE THE QUANTITY TABLES.

ABBREVIATIONS:

PJCP = PRECAST JOINTED CONCRETE PAVEMENT

LEGEND:

PRECAST JOINTED CONCRETE PAVEMENT

CONSTRUCTION DETAILS

NO SCALE

C-5

STATE OF CALIFORNIA - DEPARTMENT OF TRANSPORTATION
Caltrans MAINTENANCE ENGINEERING

FUNCTIONAL SUPERVISOR: KEVIN KWAN
CALCULATED-DESIGNED BY: CHARLIE TRUONG
CHECKED BY: KEVIN KWAN
REVISED BY
DATE REVISED

LAST REVISION
DATE PLOTTED => 24-MAY-2014
TIME PLOTTED => 05:30

Dist	COUNTY	ROUTE	POST MILES TOTAL PROJECT	SHEET No.	TOTAL SHEETS
07	LA	101	1.8/8.4	14	183

REGISTERED CIVIL ENGINEER 1-30-14 DATE

2-24-14
PLANS APPROVAL DATE

REGISTERED PROFESSIONAL ENGINEER
CHARLIE TRUONG
No. 69881
Exp. 9-30-14
CIVIL
STATE OF CALIFORNIA

THE STATE OF CALIFORNIA OR ITS OFFICERS OR AGENTS SHALL NOT BE RESPONSIBLE FOR THE ACCURACY OR COMPLETENESS OF SCANNED COPIES OF THIS PLAN SHEET.

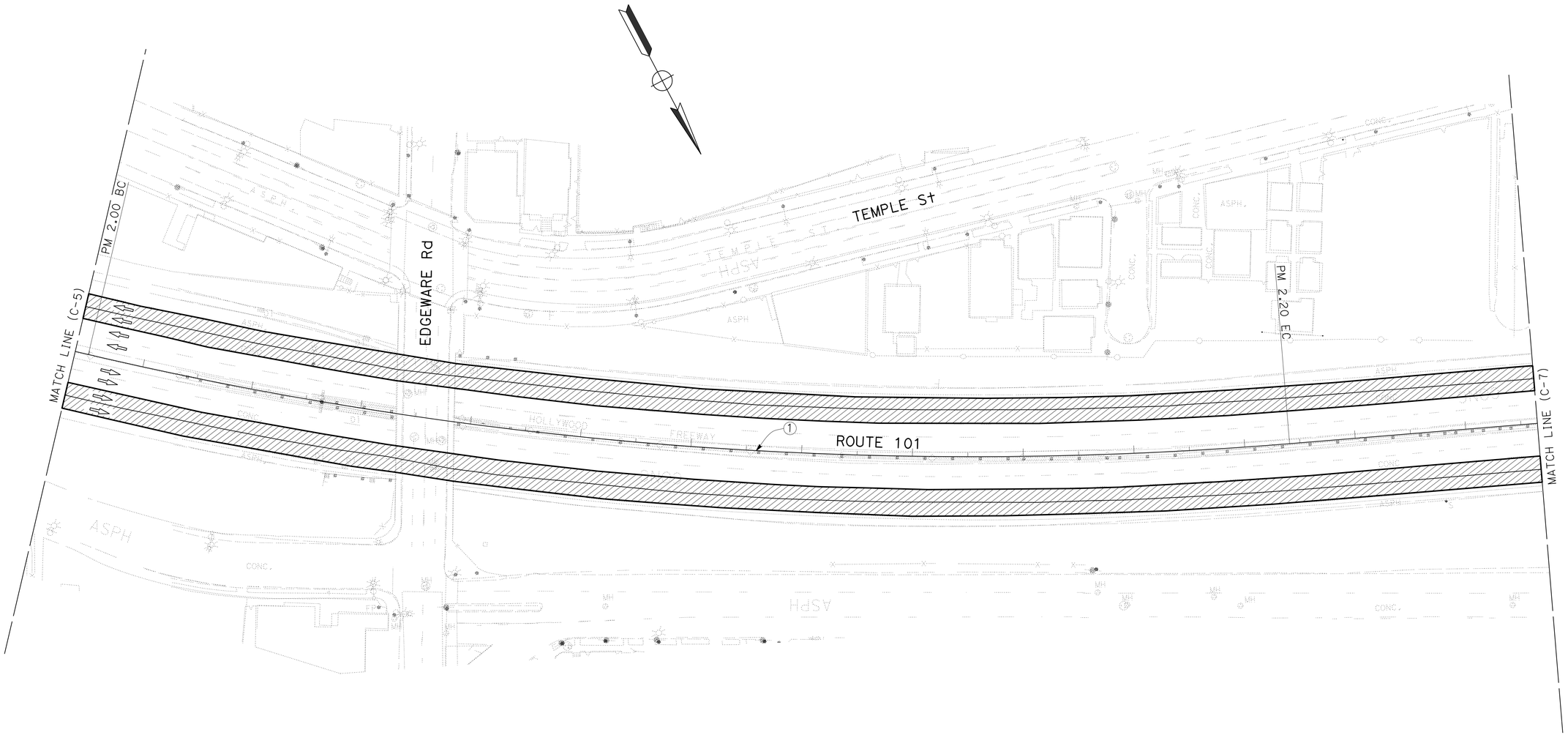

CURVE DATA

No. ⊕	R	Δ	T	L
1	3500′	17°51′42"	550.00′	1091.08′

CONSTRUCTION DETAILS

NO SCALE

C-6

STATE OF CALIFORNIA - DEPARTMENT OF TRANSPORTATION
Caltrans MAINTENANCE ENGINEERING

FUNCTIONAL SUPERVISOR: KEVIN KWAN

CALCULATED-DESIGNED BY: CHARLIE TRUONG
CHECKED BY: KEVIN KWAN

REVISED BY
DATE REVISED

LAST REVISION 00-00-00
DATE PLOTTED => 24-MAY-2014
TIME PLOTTED => 05:30

Dist	COUNTY	ROUTE	POST MILES TOTAL PROJECT	SHEET No.	TOTAL SHEETS
07	LA	101	1.8/8.4	15	183

REGISTERED CIVIL ENGINEER 1-30-14 DATE

2-24-14
PLANS APPROVAL DATE

REGISTERED PROFESSIONAL ENGINEER
CHARLIE TRUONG
No. 69881
Exp. 9-30-14
CIVIL
STATE OF CALIFORNIA

THE STATE OF CALIFORNIA OR ITS OFFICERS OR AGENTS SHALL NOT BE RESPONSIBLE FOR THE ACCURACY OR COMPLETENESS OF SCANNED COPIES OF THIS PLAN SHEET.

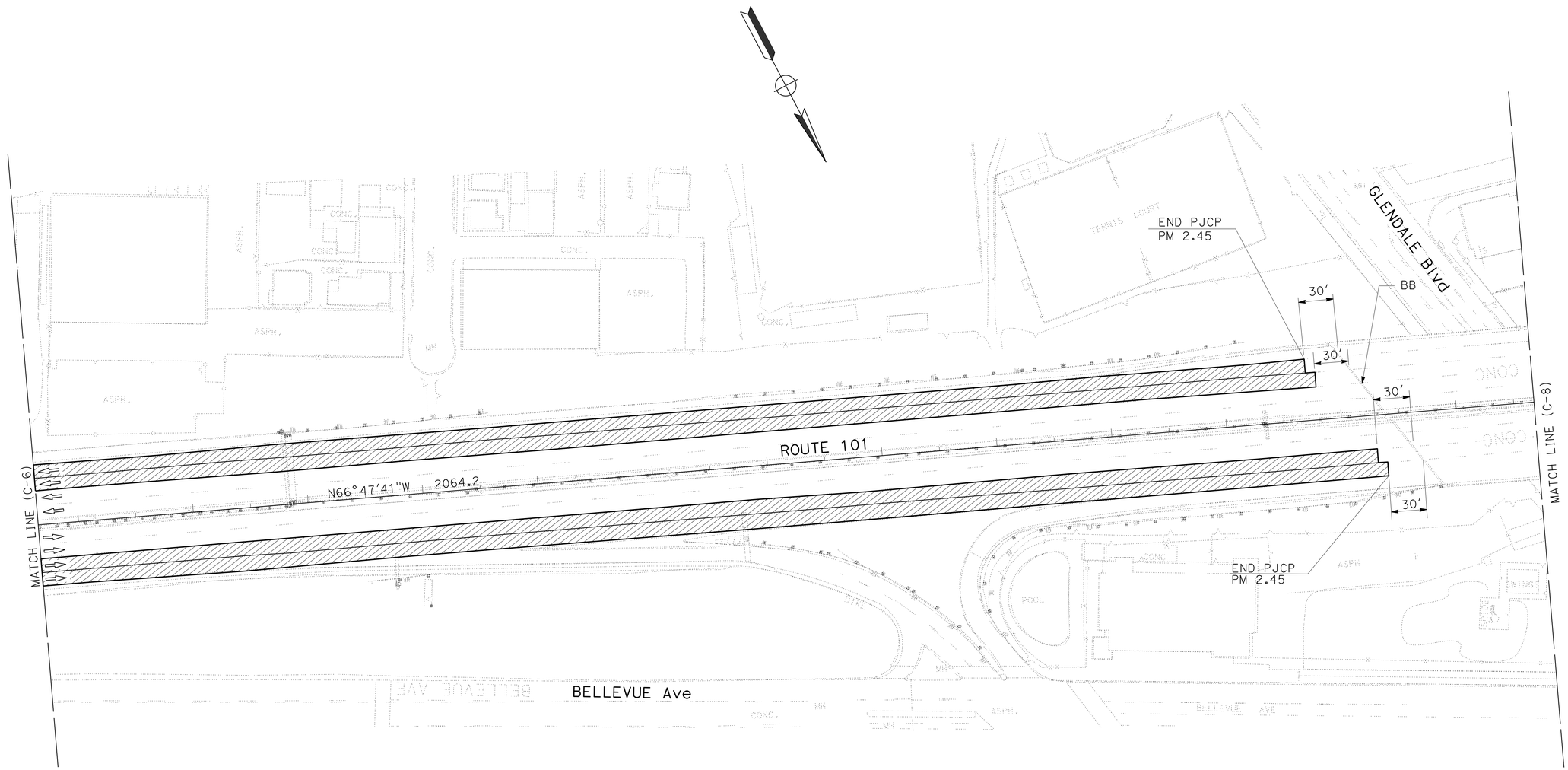

CONSTRUCTION DETAILS

NO SCALE

C-7

STATE OF CALIFORNIA - DEPARTMENT OF TRANSPORTATION
Caltrans® MAINTENANCE ENGINEERING

FUNCTIONAL SUPERVISOR: KEVIN KWAN
CALCULATED-DESIGNED BY: CHARLIE TRUONG
CHECKED BY: KEVIN KWAN
REVISED BY
DATE REVISED

LAST REVISION
DATE PLOTTED => 24-MAY-2014
TIME PLOTTED => 05:31

Dist	COUNTY	ROUTE	POST MILES TOTAL PROJECT	SHEET No.	TOTAL SHEETS
07	LA	101	1.8/8.4	16	183

REGISTERED CIVIL ENGINEER 1-30-14 DATE

2-24-14
PLANS APPROVAL DATE

REGISTERED PROFESSIONAL ENGINEER
CHARLIE TRUONG
No. 69881
Exp. 9-30-14
CIVIL
STATE OF CALIFORNIA

THE STATE OF CALIFORNIA OR ITS OFFICERS OR AGENTS SHALL NOT BE RESPONSIBLE FOR THE ACCURACY OR COMPLETENESS OF SCANNED COPIES OF THIS PLAN SHEET.

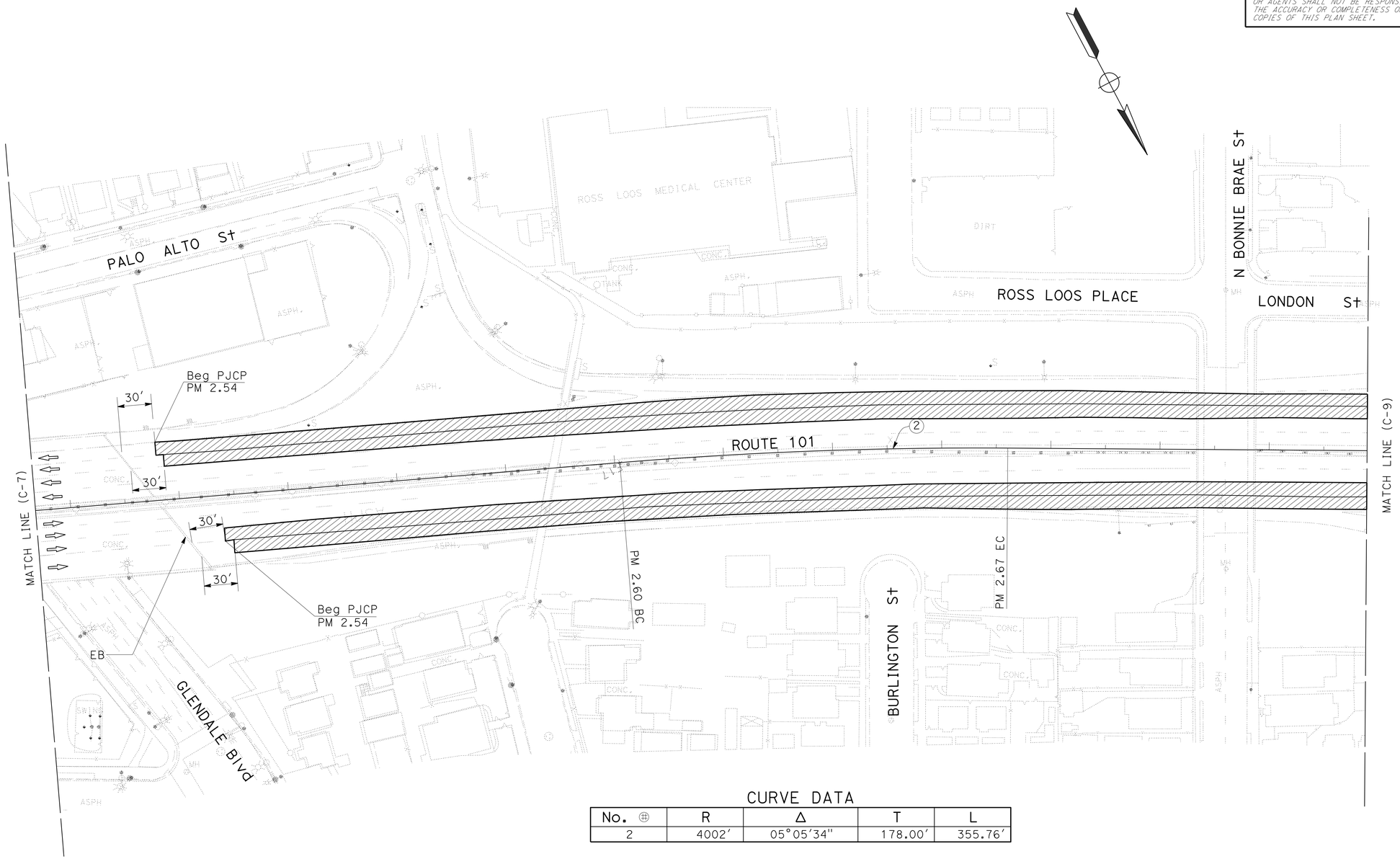

CURVE DATA

No. ⊕	R	Δ	T	L
2	4002′	05°05′34″	178.00′	355.76′

CONSTRUCTION DETAILS

NO SCALE

C-8

STATE OF CALIFORNIA - DEPARTMENT OF TRANSPORTATION
Caltrans MAINTENANCE ENGINEERING

FUNCTIONAL SUPERVISOR: KEVIN KWAN
CALCULATED-DESIGNED BY: CHARLIE TRUONG
CHECKED BY: KEVIN KWAN
REVISED BY
DATE REVISED

LAST REVISION 00-00-00
DATE PLOTTED => 24-MAY-2014
TIME PLOTTED => 05:31

Dist	COUNTY	ROUTE	POST MILES TOTAL PROJECT	SHEET No.	TOTAL SHEETS
07	LA	101	1.8/8.4	17	183

REGISTERED CIVIL ENGINEER 1-30-14 DATE

2-24-14
PLANS APPROVAL DATE

REGISTERED PROFESSIONAL ENGINEER
CHARLIE TRUONG
No. 69881
Exp. 9-30-14
CIVIL
STATE OF CALIFORNIA

THE STATE OF CALIFORNIA OR ITS OFFICERS OR AGENTS SHALL NOT BE RESPONSIBLE FOR THE ACCURACY OR COMPLETENESS OF SCANNED COPIES OF THIS PLAN SHEET.

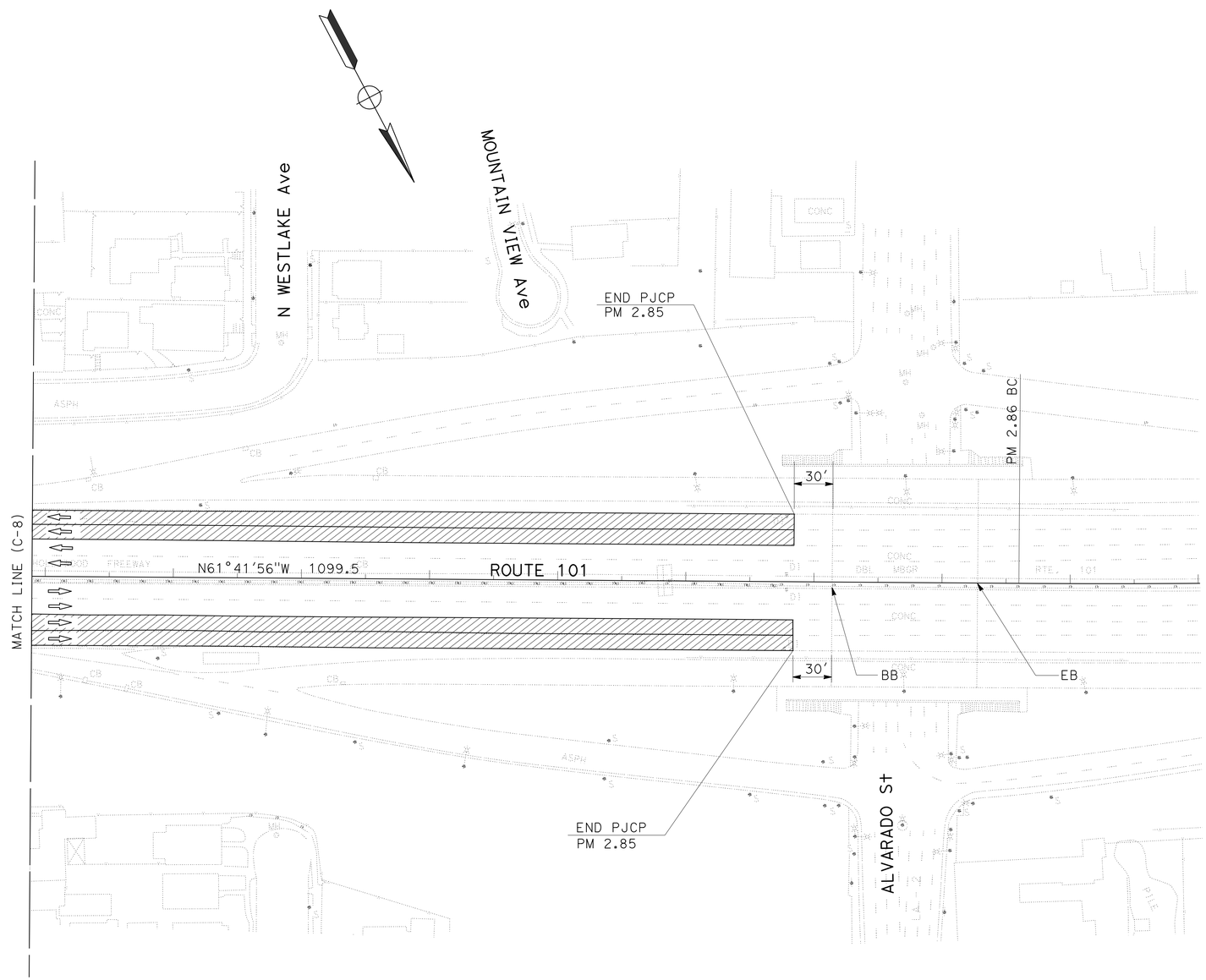

CONSTRUCTION DETAILS

NO SCALE

C-9

CHARLIE TRUONG	REVISED BY
KEVIN KWAN	DATE REVISED
CALCULATED-DESIGNED BY	
CHECKED BY	
FUNCTIONAL SUPERVISOR	
KEVIN KWAN	

STATE OF CALIFORNIA - DEPARTMENT OF TRANSPORTATION
Caltrans MAINTENANCE ENGINEERING

LAST REVISION 00-00-00
DATE PLOTTED => 24-MAY-2014
TIME PLOTTED => 09:31

Dist	COUNTY	ROUTE	POST MILES TOTAL PROJECT	SHEET No.	TOTAL SHEETS
07	LA	101	1.8/8.4	18	183

REGISTERED CIVIL ENGINEER 1-30-14 DATE

2-24-14
PLANS APPROVAL DATE

REGISTERED PROFESSIONAL ENGINEER MICHAEL DUONG No. 73425 Exp. 12-31-14 CIVIL STATE OF CALIFORNIA

THE STATE OF CALIFORNIA OR ITS OFFICERS OR AGENTS SHALL NOT BE RESPONSIBLE FOR THE ACCURACY OR COMPLETENESS OF SCANNED COPIES OF THIS PLAN SHEET.

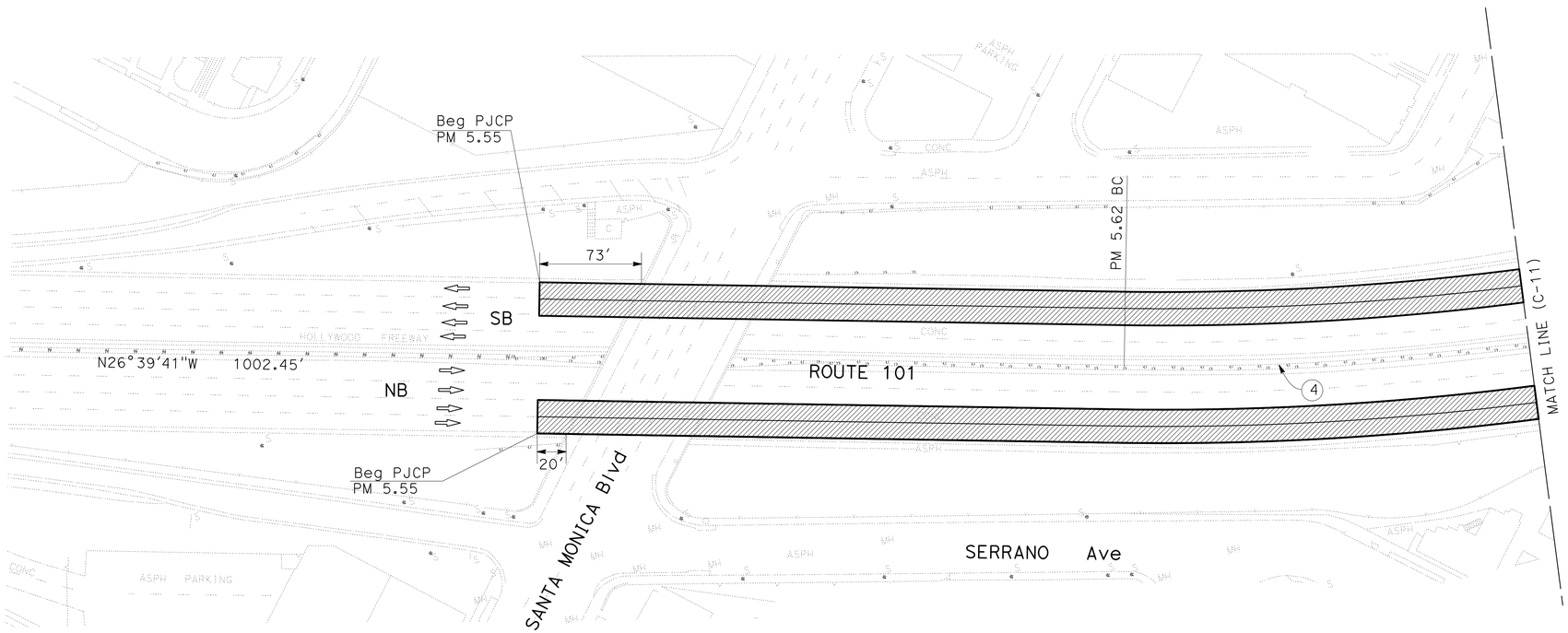

CURVE DATA

No. ④	R	Δ	T	L
4	2000'	26°02'43"	462.57'	909.16'

CONSTRUCTION DETAILS

NO SCALE

C-10

MICHAEL DUONG
CHARLIE TRUONG
KEVIN KWAN

REVISED BY
DATE REVISED
CALCULATED-DESIGNED BY
CHECKED BY
FUNCTIONAL SUPERVISOR

STATE OF CALIFORNIA - DEPARTMENT OF TRANSPORTATION
Caltrans MAINTENANCE ENGINEERING

LAST REVISION 00-00-00
DATE PLOTTED => 24-MAY-2014
TIME PLOTTED => 05:31

Dist	COUNTY	ROUTE	POST MILES TOTAL PROJECT	SHEET No.	TOTAL SHEETS
07	LA	101	1.8/8.4	19	183

REGISTERED CIVIL ENGINEER — DATE 1-30-14

2-24-14
PLANS APPROVAL DATE

REGISTERED PROFESSIONAL ENGINEER — MICHAEL DUONG — No. 73425 — Exp. 12-31-14 — CIVIL — STATE OF CALIFORNIA

THE STATE OF CALIFORNIA OR ITS OFFICERS OR AGENTS SHALL NOT BE RESPONSIBLE FOR THE ACCURACY OR COMPLETENESS OF SCANNED COPIES OF THIS PLAN SHEET.

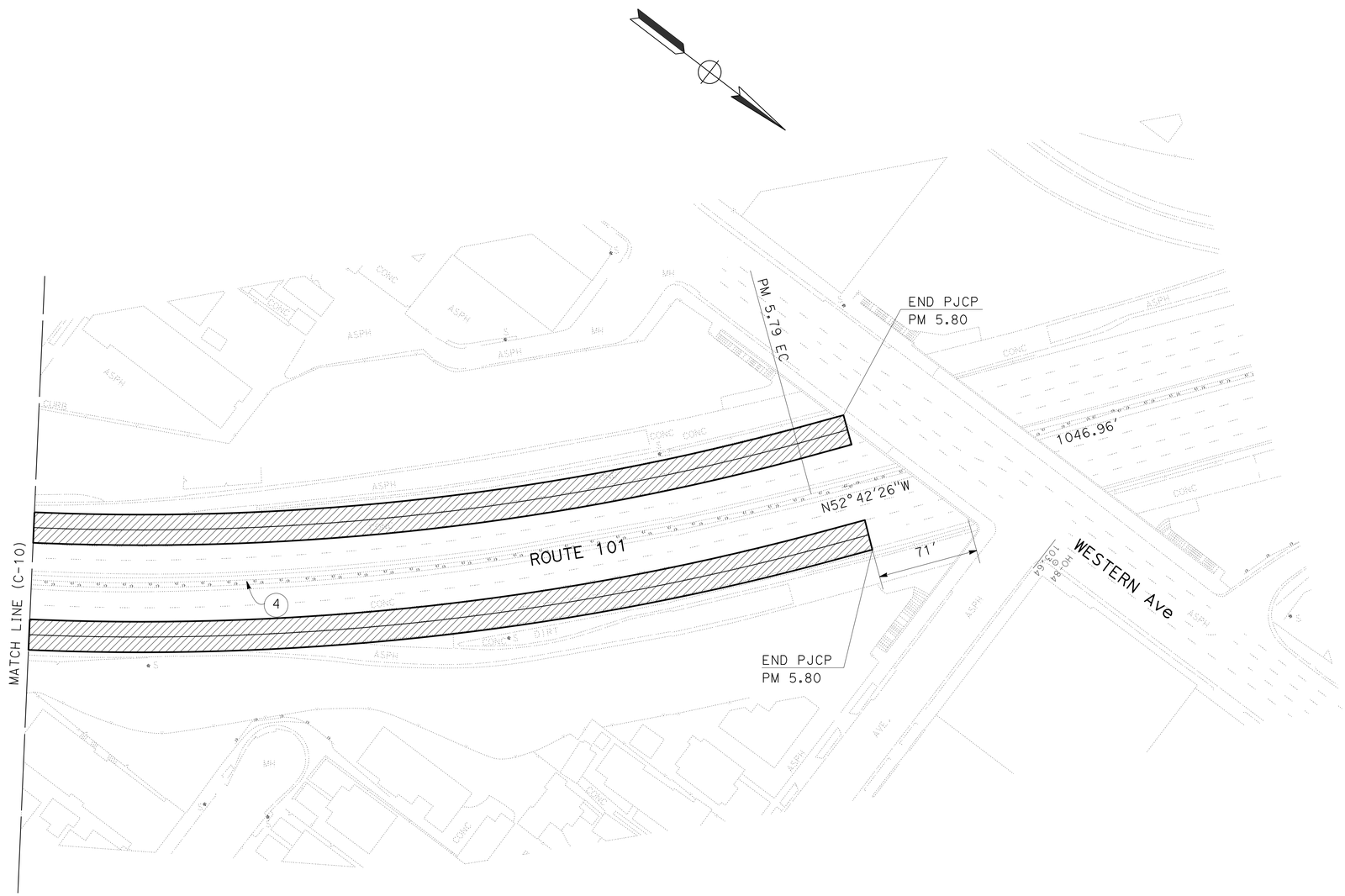

CURVE DATA

No. ⊕	R	Δ	T	L
4	2000′	26°02′43"	462.57′	909.16′

CONSTRUCTION DETAILS

NO SCALE

C-11

REVISED BY | DATE REVISED

MICHAEL DUONG | KEVIN KWAN

CALCULATED-DESIGNED BY | CHECKED BY

FUNCTIONAL SUPERVISOR: KEVIN KWAN

STATE OF CALIFORNIA - DEPARTMENT OF TRANSPORTATION
Caltrans MAINTENANCE ENGINEERING

LAST REVISION | DATE PLOTTED => 24-MAY-2014 | TIME PLOTTED => 05:31

Dist	COUNTY	ROUTE	POST MILES TOTAL PROJECT	SHEET No.	TOTAL SHEETS
07	LA	101	1.8/8.4	20	183

REGISTERED CIVIL ENGINEER 1-30-14 DATE

2-24-14
PLANS APPROVAL DATE

REGISTERED PROFESSIONAL ENGINEER MICHAEL DUONG No. 73425 Exp. 12-31-14 CIVIL STATE OF CALIFORNIA

THE STATE OF CALIFORNIA OR ITS OFFICERS OR AGENTS SHALL NOT BE RESPONSIBLE FOR THE ACCURACY OR COMPLETENESS OF SCANNED COPIES OF THIS PLAN SHEET.

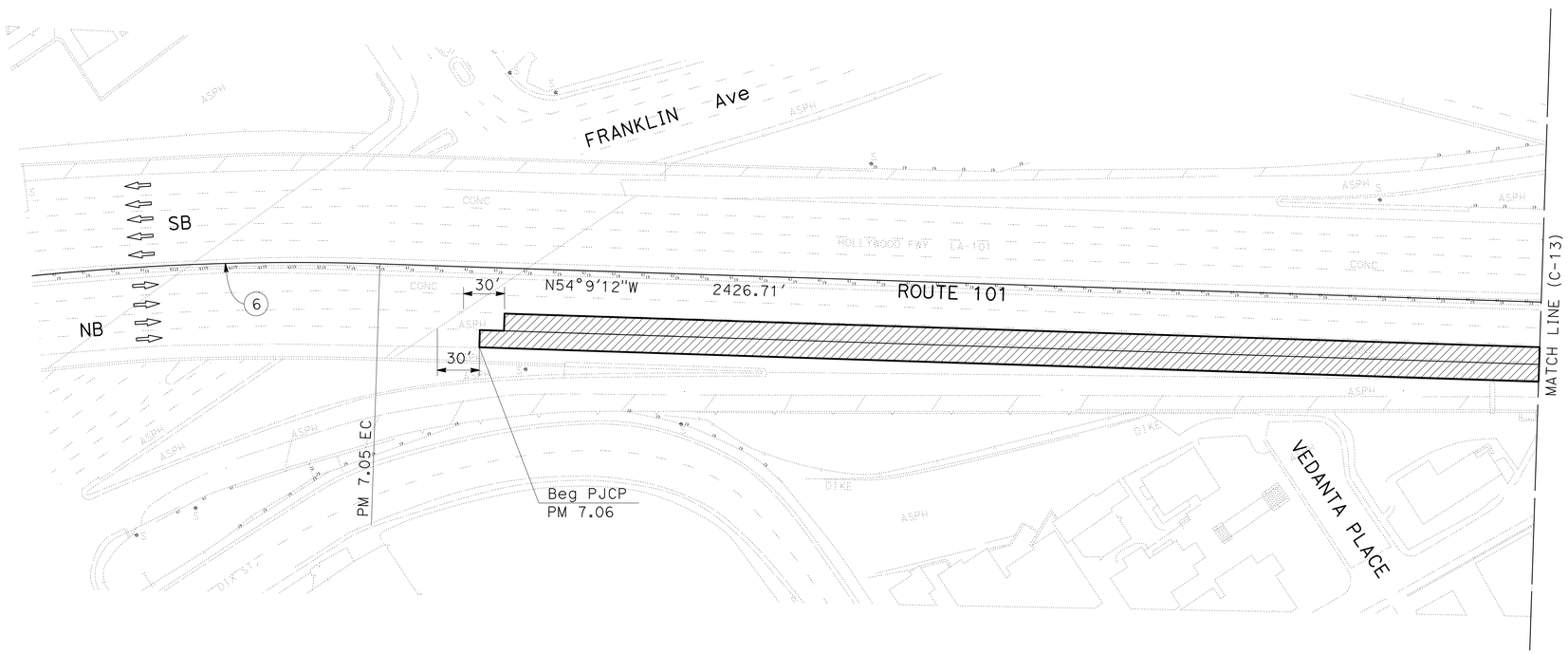

CURVE DATA

No. ⊕	R	Δ	T	L
6	1800'	34°06'06"	552.05'	1071.31'

CONSTRUCTION DETAILS

NO SCALE

C-12

STATE OF CALIFORNIA - DEPARTMENT OF TRANSPORTATION
Caltrans MAINTENANCE ENGINEERING

FUNCTIONAL SUPERVISOR: KEVIN KWAN
CALCULATED-DESIGNED BY: MICHAEL DUONG
CHECKED BY: KEVIN KWAN
REVISED BY
DATE REVISED

LAST REVISION
DATE PLOTTED => 24-MAY-2014
TIME PLOTTED => 05:31

Dist	COUNTY	ROUTE	POST MILES TOTAL PROJECT	SHEET No.	TOTAL SHEETS
07	LA	101	1.8/8.4	21	183

REGISTERED CIVIL ENGINEER 1-30-14 DATE

2-24-14
PLANS APPROVAL DATE

REGISTERED PROFESSIONAL ENGINEER MICHAEL DUONG No. 73425 Exp. 12-31-14 CIVIL STATE OF CALIFORNIA

THE STATE OF CALIFORNIA OR ITS OFFICERS OR AGENTS SHALL NOT BE RESPONSIBLE FOR THE ACCURACY OR COMPLETENESS OF SCANNED COPIES OF THIS PLAN SHEET.

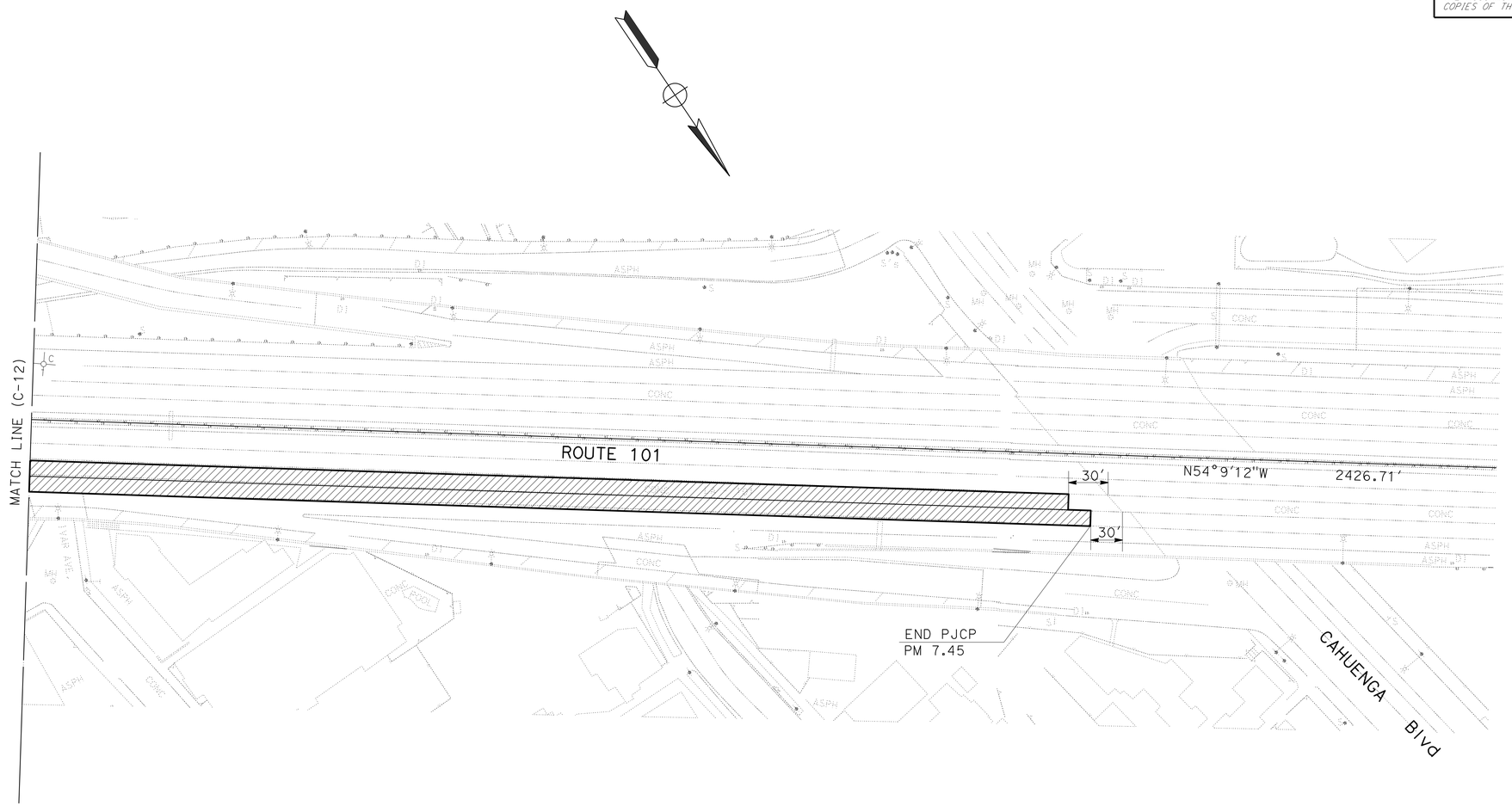

CONSTRUCTION DETAILS

NO SCALE

C-13

REVISED BY	DATE REVISED

CALCULATED-DESIGNED BY	MICHAEL DUONG
CHECKED BY	KEVIN KWAN

FUNCTIONAL SUPERVISOR: KEVIN KWAN

STATE OF CALIFORNIA - DEPARTMENT OF TRANSPORTATION
Caltrans® MAINTENANCE ENGINEERING

LAST REVISION DATE PLOTTED => 24-MAY-2014
TIME PLOTTED => 05:31

Dist	COUNTY	ROUTE	POST MILES TOTAL PROJECT	SHEET No.	TOTAL SHEETS
07	LA	101	1.8/8.4	22	183

REGISTERED CIVIL ENGINEER 10-3-13 DATE

2-24-14
PLANS APPROVAL DATE

REGISTERED PROFESSIONAL ENGINEER DEBORAH WONG No. 58313 Exp. 6/30/14 CIVIL STATE OF CALIFORNIA

THE STATE OF CALIFORNIA OR ITS OFFICERS OR AGENTS SHALL NOT BE RESPONSIBLE FOR THE ACCURACY OR COMPLETENESS OF SCANNED COPIES OF THIS PLAN SHEET.

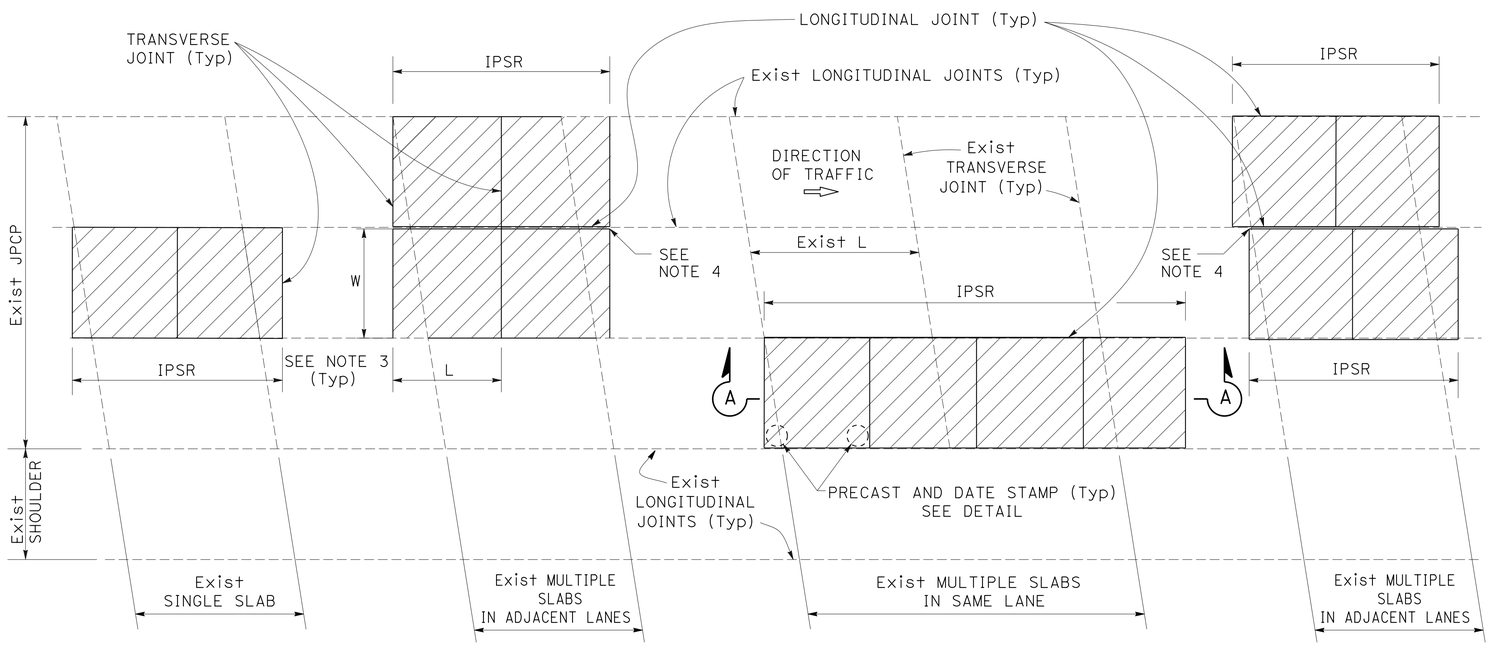

PLAN

NOTES:

1. FOR DETAILS NOT SHOWN, SEE CONSTRUCTION DETAILS SHEETS FOR IPSR.
2. FOR DOWEL BAR AND JOINT DETAILS, SEE CONSTRUCTION JOINT DETAILS FOR IPSR.
3. 6′ Min DIMENSION OF EXISTING PAVEMENT SLABS MUST REMAIN.
4. PRECAST PANELS MAY BE TRIMMED 2" Max. AT EDGES THAT ARE NOT DOWELED OR SLOTTED.
5. FOR IMPRESSION DEPTH AND DATE STAMP DETAIL, SEE REVISED STANDARD PLAN RSP P8. USE PR FOR PRECAST REINFORCED AND PT FOR PRECAST PRETENSIONED ALTERNATIVES TO REPLACE P.

ABBREVIATIONS:

IPSR INDIVIDUAL PRECAST SLAB REPLACEMENT

LEGEND:

REPLACE CONCRETE PAVEMENT WITH IPSR

POLYESTER CONCRETE

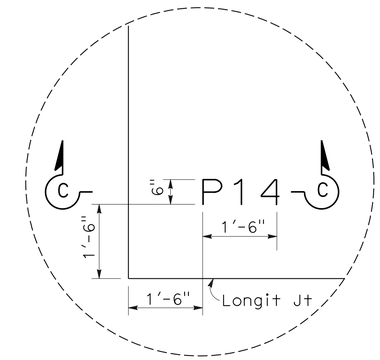

PRECAST STAMP DETAIL

FOR SECTION C-C, SEE NOTE 5

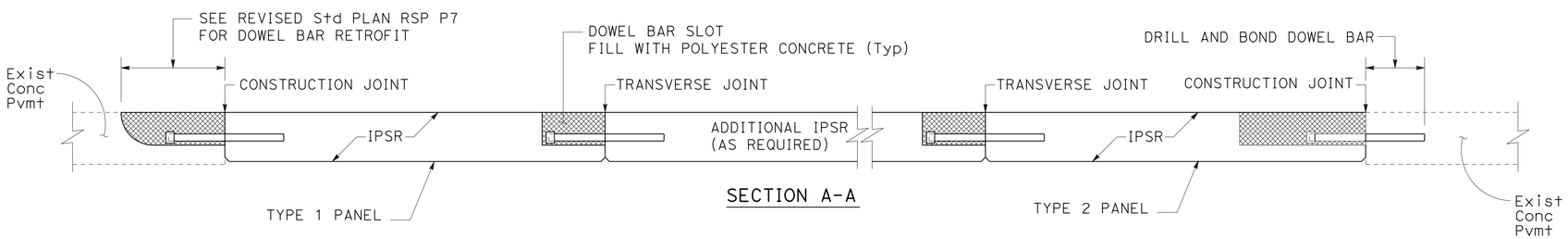

SECTION A-A

SLAB REPLACEMENT

CONSTRUCTION DETAILS

INDIVIDUAL PRECAST SLAB REPLACEMENT

NO SCALE

C-14

STATE OF CALIFORNIA - DEPARTMENT OF TRANSPORTATION
Caltrans® DESIGN

FUNCTIONAL SUPERVISOR: DEBORAH WONG
CALCULATED-DESIGNED BY: DEBORAH WONG
CHECKED BY: CHARLIE TRUONG
REVISED BY
DATE REVISED

LAST REVISION 09-19-13
DATE PLOTTED => 24-MAY-2014
TIME PLOTTED => 05:31

Dist	COUNTY	ROUTE	POST MILES TOTAL PROJECT	SHEET No.	TOTAL SHEETS
07	LA	101	1.8/8.4	23	183

REGISTERED CIVIL ENGINEER 10-3-13 DATE

2-24-14
PLANS APPROVAL DATE

REGISTERED PROFESSIONAL ENGINEER DEBORAH WONG No. 58313 Exp 6/30/14 CIVIL STATE OF CALIFORNIA

THE STATE OF CALIFORNIA OR ITS OFFICERS OR AGENTS SHALL NOT BE RESPONSIBLE FOR THE ACCURACY OR COMPLETENESS OF SCANNED COPIES OF THIS PLAN SHEET.

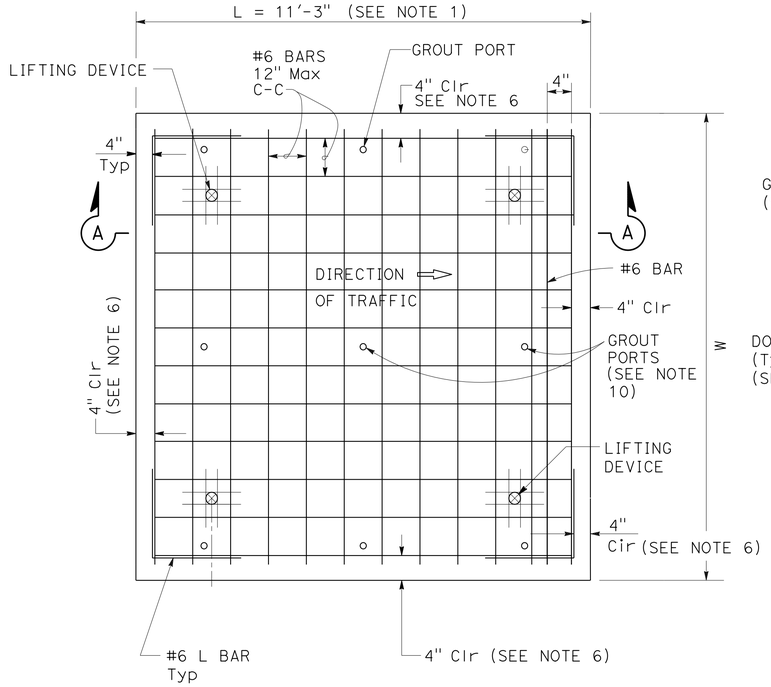

REBAR MAT (BOTTOM)

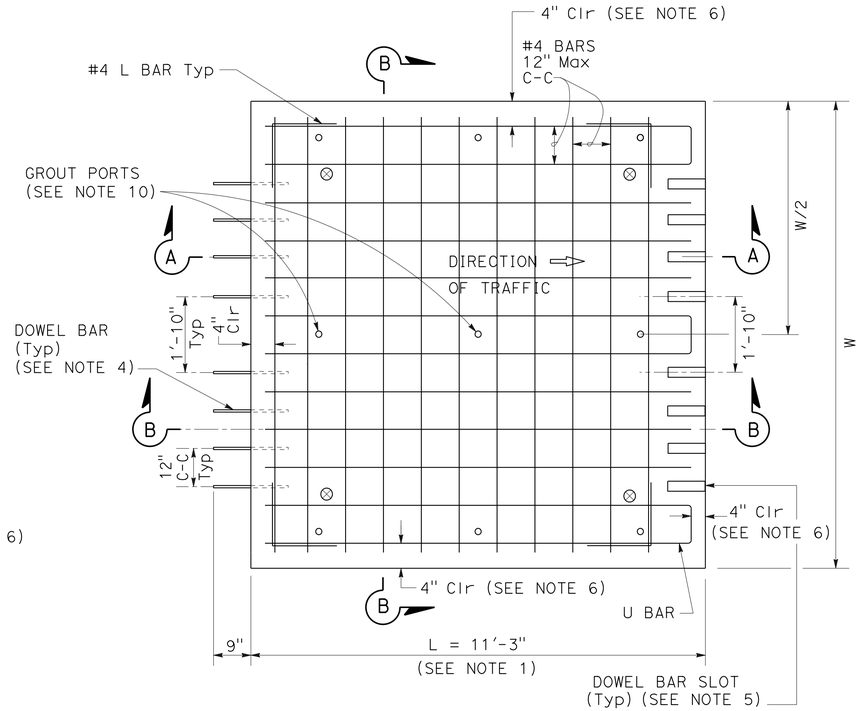

REBAR MAT (TOP)

NOTES:

1. ADJUST L FROM 8' TO 15' TO CONFORM TO BRIDGES AND CHANGES IN PAVEMENT TYPES.
2. FOR DOWEL BARS AND JOINT DETAILS, SEE CONSTRUCTION JOINT DETAILS FOR IPSR.
3. VERIFY ALL DIMENSIONS BEFORE PANEL FABRICATION.
4. ADJUST REINFORCEMENT BARS, LIFTING DEVICES, AND GROUT PORTS TO ACCOMMODATE DOWEL BARS, AND DOWEL BAR SLOTS.
5. DOWEL BAR SLOT OFFSET AND SPACING MUST MATCH OFFSET AND SPACING OF DOWELS IN ADJACENT PRECAST PAVEMENT.
6. IF W OR L DIMENSION IS REDUCED, THE 4" OF COVER MUST REMAIN.
7. FOR PRECAST PANEL THICKNESS, SEE TYPICAL CROSS-SECTION.
8. DETERMINE THE TYPE AND FINAL LOCATIONS OF LIFTING DEVICES.
9. THE POSITIONS OF THE SLOTS AND DOWEL BARS SHOWN ARE BASED ON PLACEMENT OF THE PANELS IN THE DIRECTION OF TRAFFIC. THE POSITIONS OF THE SLOTS AND DOWEL BARS MAY BE REVERSED IF THE PANEL IS PLACED IN THE OPPOSITE DIRECTION OF TRAFFIC.
10. DETERMINE THE QUANTITY, LOCATION, AND SPACING OF THE UNDERSLAB GROUT PORTS. PROVIDE AT LEAST ONE GROUT PORT ON EACH CORNER OF THE PANEL AT 2.5'±0.5' FROM THE EDGES OF THE PANEL AND PROVIDE ADDITIONAL PORTS WITH NO MORE THAN 5' DISTANCE MEASURED ALONG THE EDGE OF THE PANEL AND BETWEEN EACH OTHER.
11. FOR T < 8", USE PRECAST PRETENSION REPLACEMENT PANEL.

LEGEND:

⊗ LIFTING DEVICE (SEE NOTE 4,8)

○ 1¼" Dia GROUT PORT

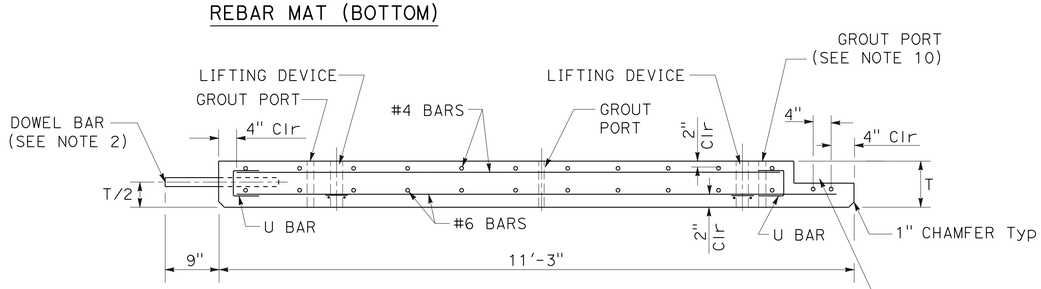

SECTION A-A
TYPE 1 PANEL

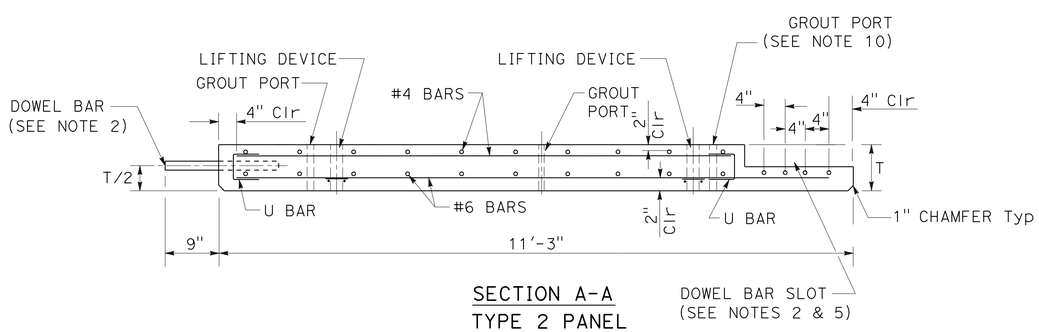

SECTION A-A
TYPE 2 PANEL
(PLAN VIEW NOT SHOWN)

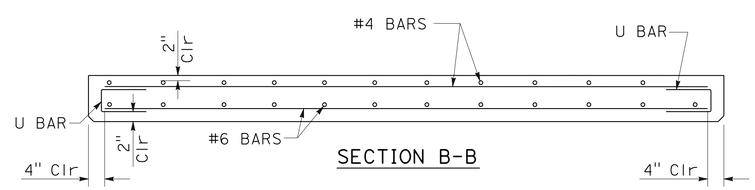

SECTION B-B

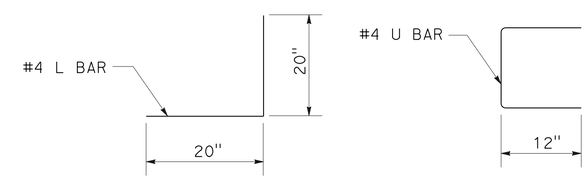

PLAN

PLAN

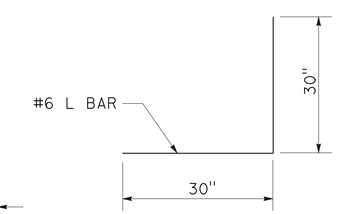

PLAN

PRECAST REINFORCED REPLACEMENT PANEL

CONSTRUCTION DETAILS

INDIVIDUAL PRECAST SLAB REPLACEMENT

NO SCALE

C-15

STATE OF CALIFORNIA - DEPARTMENT OF TRANSPORTATION
Caltrans DESIGN
FUNCTIONAL SUPERVISOR: DEBORAH WONG
CALCULATED-DESIGNED BY: DEBORAH WONG
CHECKED BY: CHARLIE TRUONG
REVISED BY
DATE REVISED

LAST REVISION 09-19-13
DATE PLOTTED => 24-MAY-2014
TIME PLOTTED => 05:31

Dist	COUNTY	ROUTE	POST MILES TOTAL PROJECT	SHEET No.	TOTAL SHEETS
07	LA	101	1.8/8.4	24	183

M. Parvini 10-3-13
REGISTERED CIVIL ENGINEER DATE

2-24-14
PLANS APPROVAL DATE

REGISTERED PROFESSIONAL ENGINEER MEHDI PARVINI No. C63186 Exp. 6-30-14 CIVIL STATE OF CALIFORNIA

THE STATE OF CALIFORNIA OR ITS OFFICERS OR AGENTS SHALL NOT BE RESPONSIBLE FOR THE ACCURACY OR COMPLETENESS OF SCANNED COPIES OF THIS PLAN SHEET.

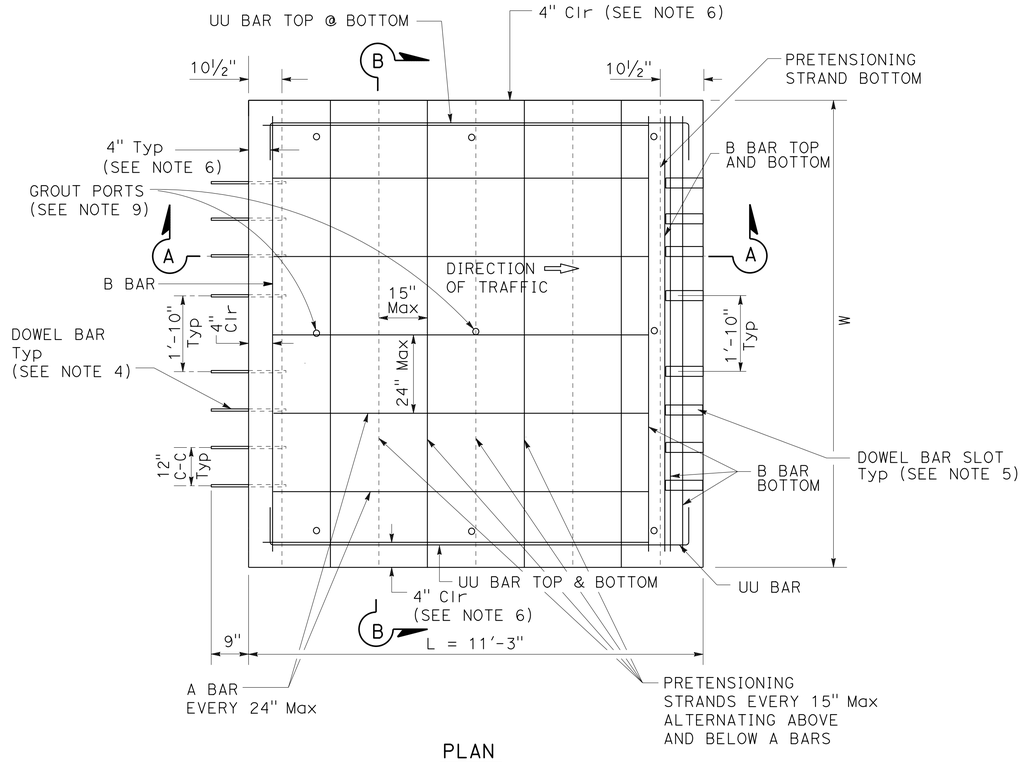

PLAN

NOTES:

1. ADJUST L FROM 8' TO 15' TO CONFORM TO BRIDGES AND CHANGES IN PAVEMENT TYPES.
2. FOR DOWEL BARS AND JOINT DETAILS, SEE CONSTRUCTION JOINT DETAILS FOR IPSR.
3. VERIFY ALL REINFORCEMENT DIMENSIONS BEFORE PANEL FABRICATION.
4. ADJUST REINFORCEMENT BARS, LIFTING DEVICES, AND GROUT PORTS TO ACCOMMODATE DOWEL BARS, DOWEL BAR SLOTS, AND PRETENSIONING STRANDS.
5. DOWEL BAR SLOT OFFSET AND SPACING MUST MATCH OFFSET AND SPACING OF DOWELS IN ADJACENT PRECAST PAVEMENT.
6. IF W OR L DIMENSION IS REDUCED, THE 4" OF COVER MUST REMAIN.
7. DETERMINE THE TYPE, NUMBER, AND FINAL LOCATIONS OF LIFTING DEVICES.
8. THE POSITIONS OF THE SLOTS AND DOWEL BARS SHOWN ARE BASED ON PLACEMENT OF THE PANELS IN THE DIRECTION OF TRAFFIC. THE POSITIONS OF THE SLOTS AND DOWEL BARS MAY BE REVERSED IF THE PANEL IS PLACED IN THE OPPOSITE DIRECTION OF TRAFFIC.
9. DETERMINE THE QUANTITY, LOCATION, AND SPACING OF THE UNDERSLAB GROUT PORTS. PROVIDE AT LEAST ONE GROUT PORT ON EACH CORNER OF THE PANEL AT 2.5'±0.5' FROM THE EDGES OF THE PANEL AND PROVIDE ADDITIONAL PORTS WITH NO MORE THAN 5' DISTANCE MEASURED ALONG THE EDGE OF THE PANEL AND BETWEEN EACH OTHER.

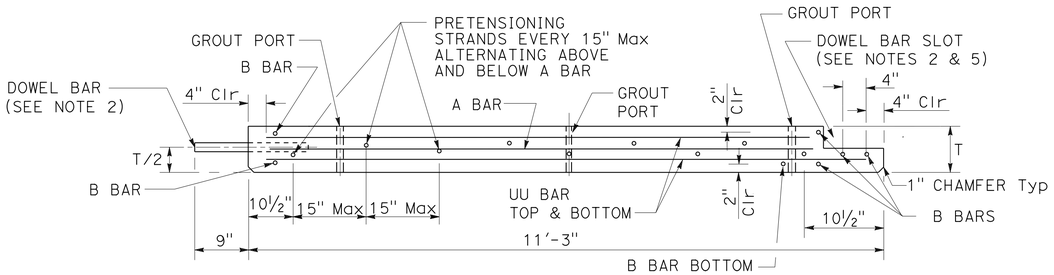

SECTION A-A
TYPE 1 PANEL

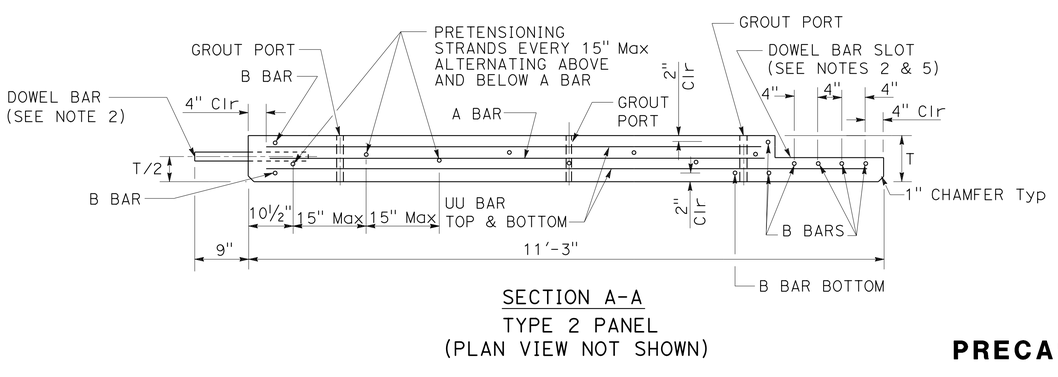

SECTION A-A
TYPE 2 PANEL
(PLAN VIEW NOT SHOWN)

10'-5"
A BAR 7 #4

11'-8"
B BAR 6 #4 TYPE 1
8 #4 TYPE 2

LEGEND:

○ GROUT PORT

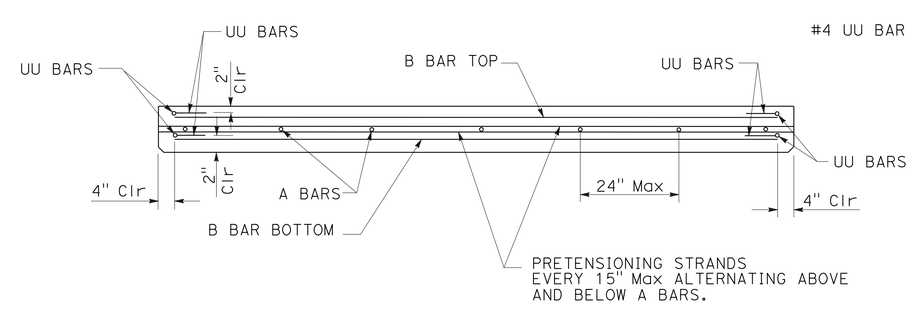

SECTION B-B

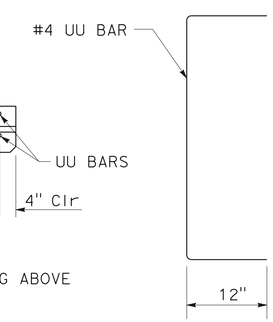

PLAN

CONSTRUCTION DETAILS

INDIVIDUAL PRECAST SLAB REPLACEMENT

NO SCALE

C-16

PRECAST PRETENSION REPLACEMENT PANEL

STATE OF CALIFORNIA - DEPARTMENT OF TRANSPORTATION
Caltrans® DESIGN

FUNCTIONAL SUPERVISOR: AMY FONG
CALCULATED-DESIGNED BY: MEHDI PARVINI
CHECKED BY: CHARLIE TRUONG
REVISED BY
DATE REVISED

LAST REVISION 09-19-13
DATE PLOTTED => 24-MAY-2014
TIME PLOTTED => 05:31

Dist	COUNTY	ROUTE	POST MILES TOTAL PROJECT	SHEET No.	TOTAL SHEETS
07	LA	101	1.8/8.4	25	183

REGISTERED CIVIL ENGINEER 10-3-13 DATE

2-24-14
PLANS APPROVAL DATE

REGISTERED PROFESSIONAL ENGINEER DEBORAH WONG No. 58313 Exp 6/30/14 CIVIL STATE OF CALIFORNIA

THE STATE OF CALIFORNIA OR ITS OFFICERS OR AGENTS SHALL NOT BE RESPONSIBLE FOR THE ACCURACY OR COMPLETENESS OF SCANNED COPIES OF THIS PLAN SHEET.

NOTES:

1. FOR DETAILS NOT SHOWN, SEE REVISED STANDARD PLAN RSP P7, P10, AND P18.
2. FOR JOINTS BETWEEN 1/4" AND 3/4", SEE TABLE 2.
3. FOR JOINTS > 3/4 TO 1 1/2", SEE CLOSURE JOINT DETAIL.
4. PAVEMENT THICKNESS (T) INCLUDES 1/2" GROUT.

LEGEND:

- FOAM INSERT
- JOINT SEAL (SILICONE)
- POLYESTER CONCRETE
- UNDERSLAB GROUT
- JOINT FILLER MATERIAL

ABBREVIATIONS:

IPSR	INDIVIDUAL PRECAST SLAB REPLACEMENT
×	JOINT WIDTH

TABLE 1

DOWEL BAR DIAMETER TABLE			
PAVEMENT THICKNESS	0.60′ - 0.65′	> 0.65′- 0.85′	> 0.85′
Min DOWEL* BAR Dia	1"	1 1/4"	1 1/2"

* THE DRILLED HOLE DIAMETER MUST BE 1/8" TO 3/16" LARGER THAN THE BAR DIAMETER.

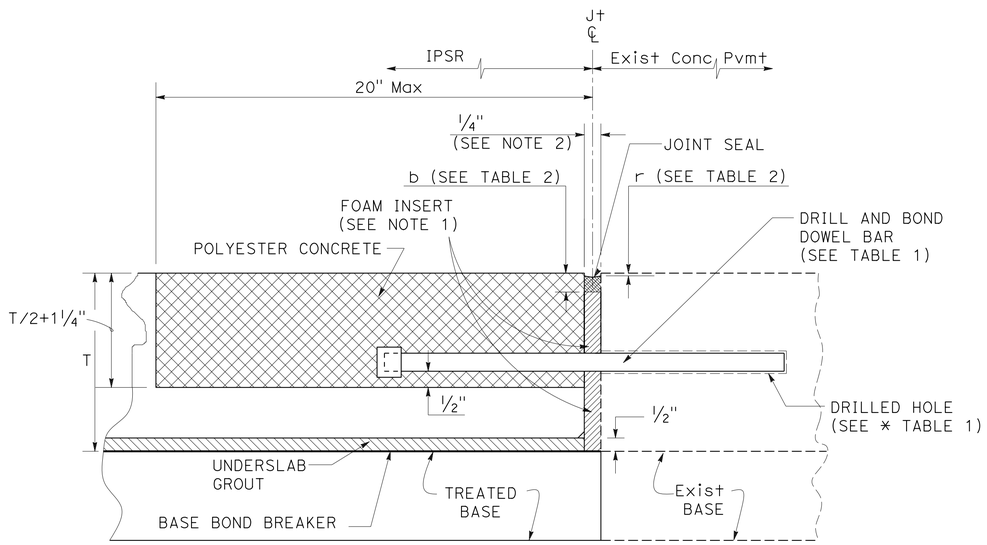

TYPE 2 PANEL

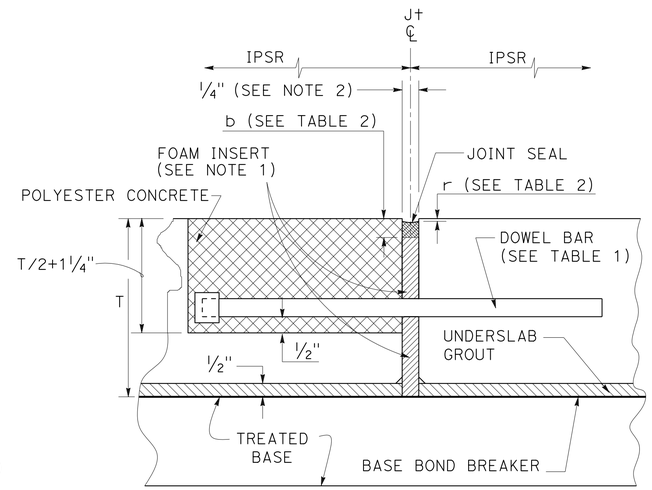

TYPE 1 PANEL

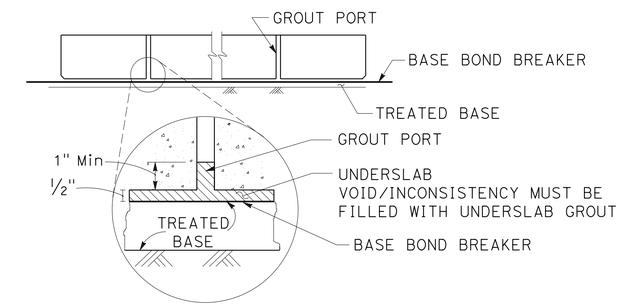

UNDERSLAB GROUT PORT AND POLYETHELENE SHEETING

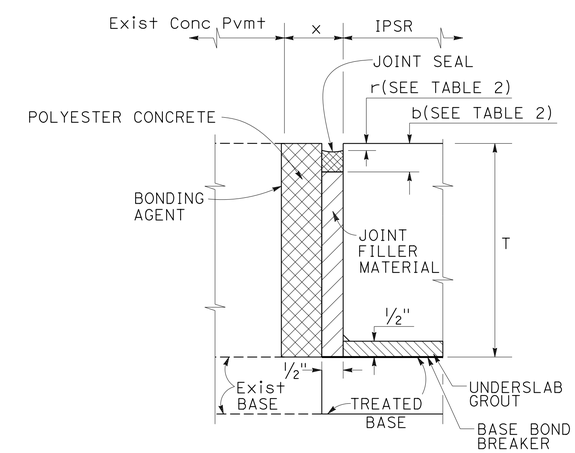

CLOSURE JOINT DETAIL

FOR JOINTS > 3/4" TO 1 1/2" WIDE

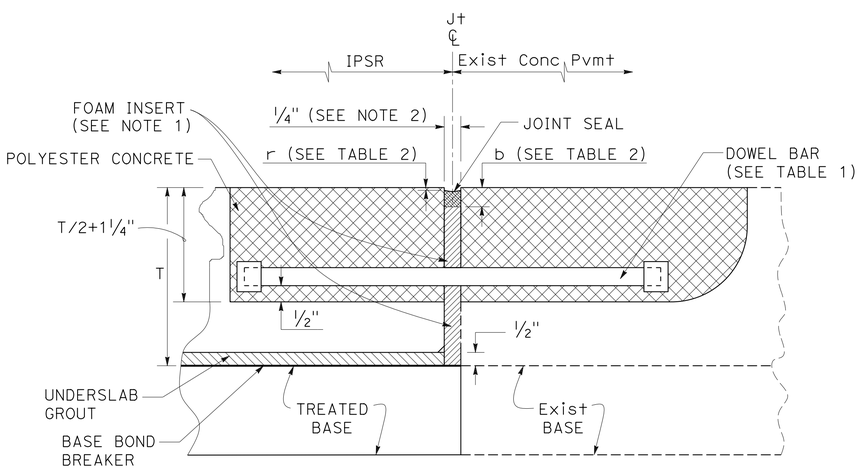

TABLE 2

JOINT WIDTH	LIQUID JOINT SEALANT DIMENSIONS DEPTHS (SILICONE)	
	b ± 1/16"	r ± 1/16"
1/4"	1/2"	1/4"
3/8"	1/2"	1/4"
1/2"	9/16"	5/16"
5/8"	5/8"	5/16"
3/4"	3/4"	3/8"

CONSTRUCTION JOINT DETAILS

CONSTRUCTION DETAILS

INDIVIDUAL PRECAST SLAB REPLACEMENT

NO SCALE

C-17

STATE OF CALIFORNIA - DEPARTMENT OF TRANSPORTATION
Caltrans DESIGN

FUNCTIONAL SUPERVISOR: DEBORAH WONG
CALCULATED-DESIGNED BY: DEBORAH WONG
CHECKED BY: CHARLIE TRUONG
REVISED BY
DATE REVISED

LAST REVISION 09-19-13 | DATE PLOTTED => 24-MAY-2014 | TIME PLOTTED => 05:31

Dist	COUNTY	ROUTE	POST MILES TOTAL PROJECT	SHEET No.	TOTAL SHEETS
07	LA	101	1.8/8.4	26	183

REGISTERED CIVIL ENGINEER 10-3-13 DATE

2-24-14
PLANS APPROVAL DATE

REGISTERED PROFESSIONAL ENGINEER DEBORAH WONG No. 58313 Exp 6/30/14 CIVIL STATE OF CALIFORNIA

THE STATE OF CALIFORNIA OR ITS OFFICERS OR AGENTS SHALL NOT BE RESPONSIBLE FOR THE ACCURACY OR COMPLETENESS OF SCANNED COPIES OF THIS PLAN SHEET.

NOTES:

1. R IS DETERMINED BY THE ENGINEER .
2. VERIFY FIELD MEASUREMENTS BEFORE FABRICATING AND PLACING PRECAST PANELS AT THE CORRECT LOCATIONS AND DIMENSIONS.
3. RETROFIT DOWEL SLOTS IN EXISTING PAVEMENT MUST MATCH PRECAST DOWEL PLACEMENT.
4. VERIFY WIDTH, W IN THE FIELD; ACTUAL W = EXISTING LANE WIDTH +1" FOR 1/2" SIDE-TO-SIDE CLEARANCE. LENGTH, L = 11′-3".
5. FOR DIMENSIONS NOT SHOWN, VERIFY (d) WITH THE ENGINEER. FOR (d) NOT SHOWN, VERIFY DIMENSION WITH THE ENGINEER.
6. FOR W AND L NOT SHOWN, d =6L-(6L(R-W)/R)
   d = INCHES
   L,R,W = FEET

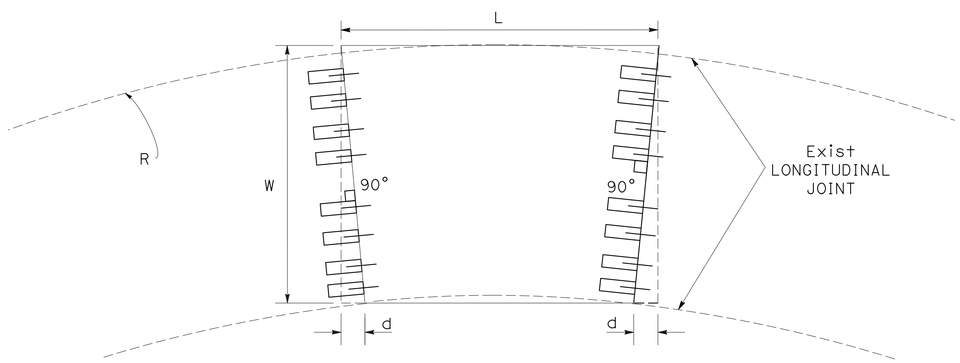

PANEL SKEW DIMENSIONS (d)				
W	12′-4"	12′-2"	12′-0"	11′-10"
R	d"	d"	d"	d"
900′	0.92	0.91	0.90	0.89
1000′	0.83	0.82	0.81	0.80
1200′	0.69	0.68	0.67	0.67
1500′	0.56	0.55	0.54	0.53
1800′	0.46	0.46	0.45	0.44
2000′	0.42	0.41	0.41	0.40
2300′	0.36	0.36	0.35	0.35
2500′	0.33	0.33	0.32	0.32
3000′	0.28	0.27	0.27	0.27
3500′	0.24	0.23	0.23	0.23
4000′	0.21	0.21	0.20	0.20

SEE NOTES 4 & 6

INDIVIDUAL PRECAST SLAB REPLACEMENT PANEL ON A CURVE

CONSTRUCTION DETAILS

INDIVIDUAL PRECAST SLAB REPLACEMENT

NO SCALE

C-18

REVISED BY | DATE REVISED

CALCULATED-DESIGNED BY: DEBORAH WONG
CHECKED BY: CHARLIE TRUONG

FUNCTIONAL SUPERVISOR: DEBORAH WONG

STATE OF CALIFORNIA - DEPARTMENT OF TRANSPORTATION
Caltrans® DESIGN

LAST REVISION 00-00-00 | DATE PLOTTED => 24-MAY-2014 | TIME PLOTTED => 05:31

Dist	COUNTY	ROUTE	POST MILES TOTAL PROJECT	SHEET No.	TOTAL SHEETS
07	LA	101	1.8/8.4	27	183

REGISTERED CIVIL ENGINEER 10-3-13 DATE

2-24-14
PLANS APPROVAL DATE

REGISTERED PROFESSIONAL ENGINEER KIRSTEN R. STAHL No. C46857 Exp. 6-30-15 CIVIL STATE OF CALIFORNIA

THE STATE OF CALIFORNIA OR ITS OFFICERS OR AGENTS SHALL NOT BE RESPONSIBLE FOR THE ACCURACY OR COMPLETENESS OF SCANNED COPIES OF THIS PLAN SHEET.

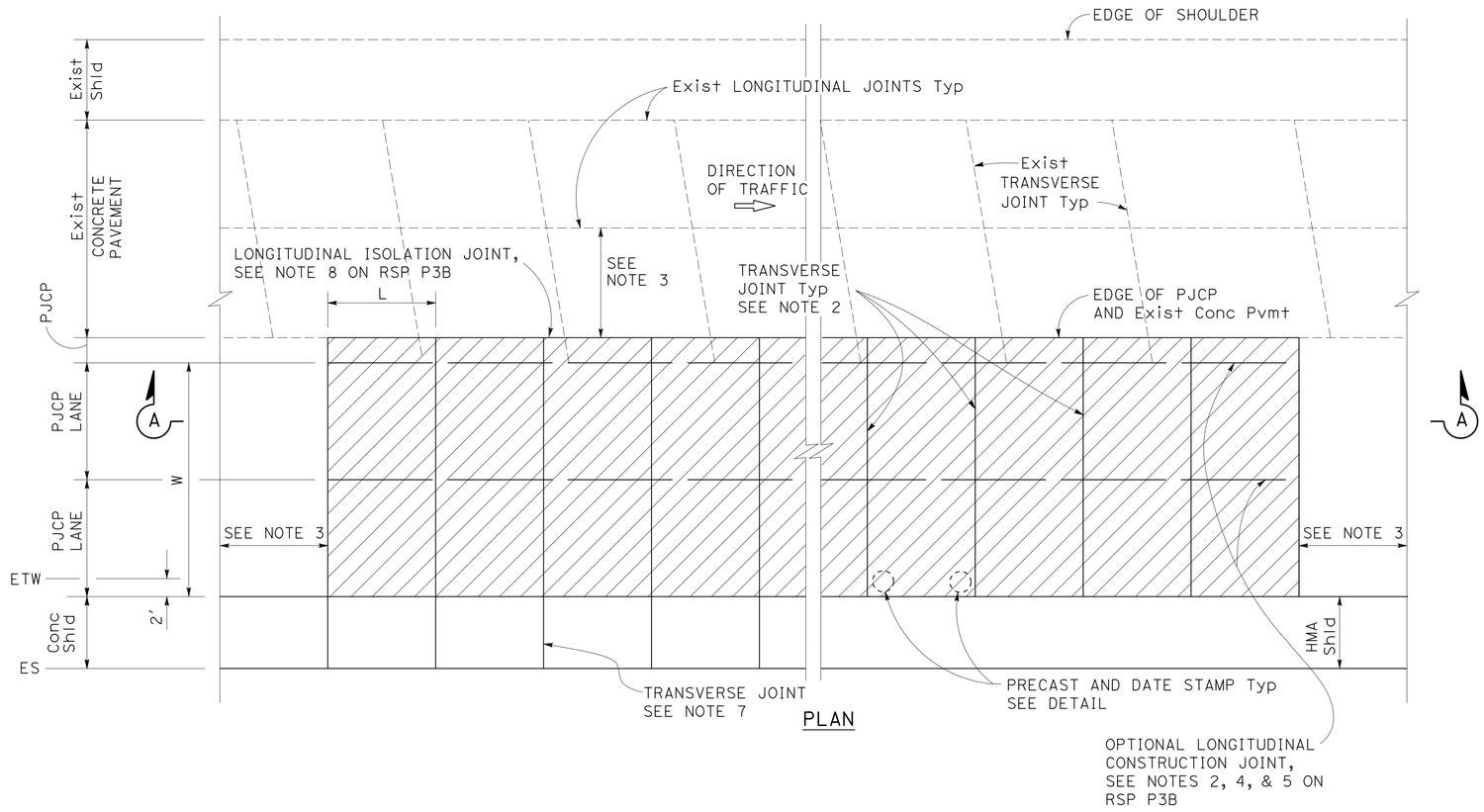

PLAN

NOTES:

1. FOR DETAILS NOT SHOWN, SEE CONSTRUCTION DETAILS SHEETS FOR PJCP.
2. FOR DOWEL BAR AND JOINT DETAILS, SEE CONSTRUCTION JOINT DETAILS FOR PJCP.
3. 6′ Min DIMENSION OF EXISTING PAVEMENT SLABS MUST REMAIN.
4. PRECAST PANELS MAY BE TRIMMED 2" Max. AT EDGES THAT ARE NOT DOWELED OR SLOTTED.
5. FOR IMPRESSION DEPTH AND DATE STAMP DETAIL, SEE REVISED STANDARD PLAN RSP P8. USE PR FOR PRECAST REINFORCED AND PT FOR PRETENSIONED ALTERNATIVES TO REPLACE P.
6. FOR TRANSVERSE JOINT LOAD TRANSFER DETAILS SEE CONSTRUCTION JOINT DETAILS FOR PJCP.
7. MATCH SHOULDER TRANSVERSE JOINTS TO PJCP TRANSVERSE JOINTS, AND SEE NOTE 6 IN RSP P3B.

ABBREVIATIONS:

PJCP PRECAST JOINTED CONCRETE PAVEMENT

LEGEND:

REPLACE EXISTING PAVEMENT WITH PJCP

POLYESTER CONCRETE

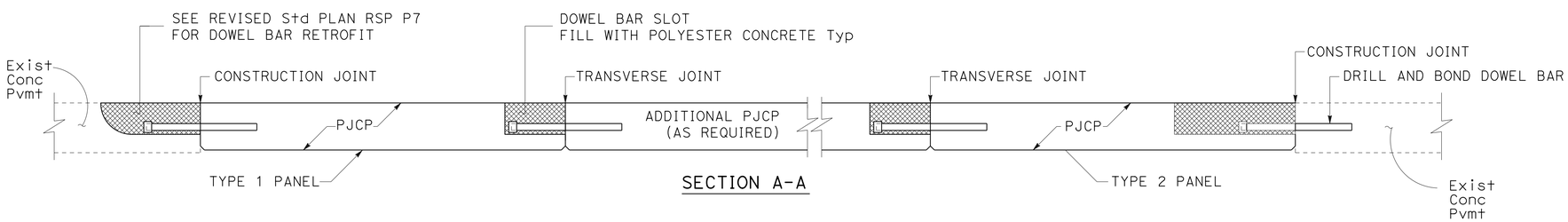

SECTION A-A

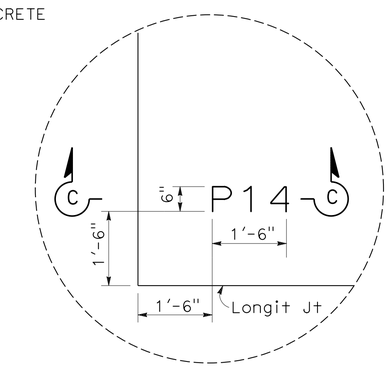

PRECAST STAMP DETAIL

FOR SECTION C-C, SEE NOTE 5

LANE REPLACEMENT

CONSTRUCTION DETAILS
PRECAST JOINTED CONCRETE PAVEMENT

NO SCALE

C-19

STATE OF CALIFORNIA - DEPARTMENT OF TRANSPORTATION
DESIGN
Caltrans

FUNCTIONAL SUPERVISOR: KIRSTEN STAHL
CALCULATED-DESIGNED BY: WINNIE DEGUZMAN
CHECKED BY: CHARLIE TRUONG
REVISED BY
DATE REVISED

LAST REVISION 00-00-00
DATE PLOTTED => 24-MAY-2014
TIME PLOTTED => 05:31

Dist	COUNTY	ROUTE	POST MILES TOTAL PROJECT	SHEET No.	TOTAL SHEETS
07	LA	101	1.8/8.4	28	183

REGISTERED CIVIL ENGINEER 10-3-13 DATE

2-24-14
PLANS APPROVAL DATE

REGISTERED PROFESSIONAL ENGINEER KIRSTEN R. STAHL No. C46857 Exp. 6-30-15 CIVIL STATE OF CALIFORNIA

THE STATE OF CALIFORNIA OR ITS OFFICERS OR AGENTS SHALL NOT BE RESPONSIBLE FOR THE ACCURACY OR COMPLETENESS OF SCANNED COPIES OF THIS PLAN SHEET.

LEGEND:

⊗ LIFTING DEVICE (SEE NOTE 4, 7)

○ 1¼" Dia GROUT PORT (SEE NOTE 2)

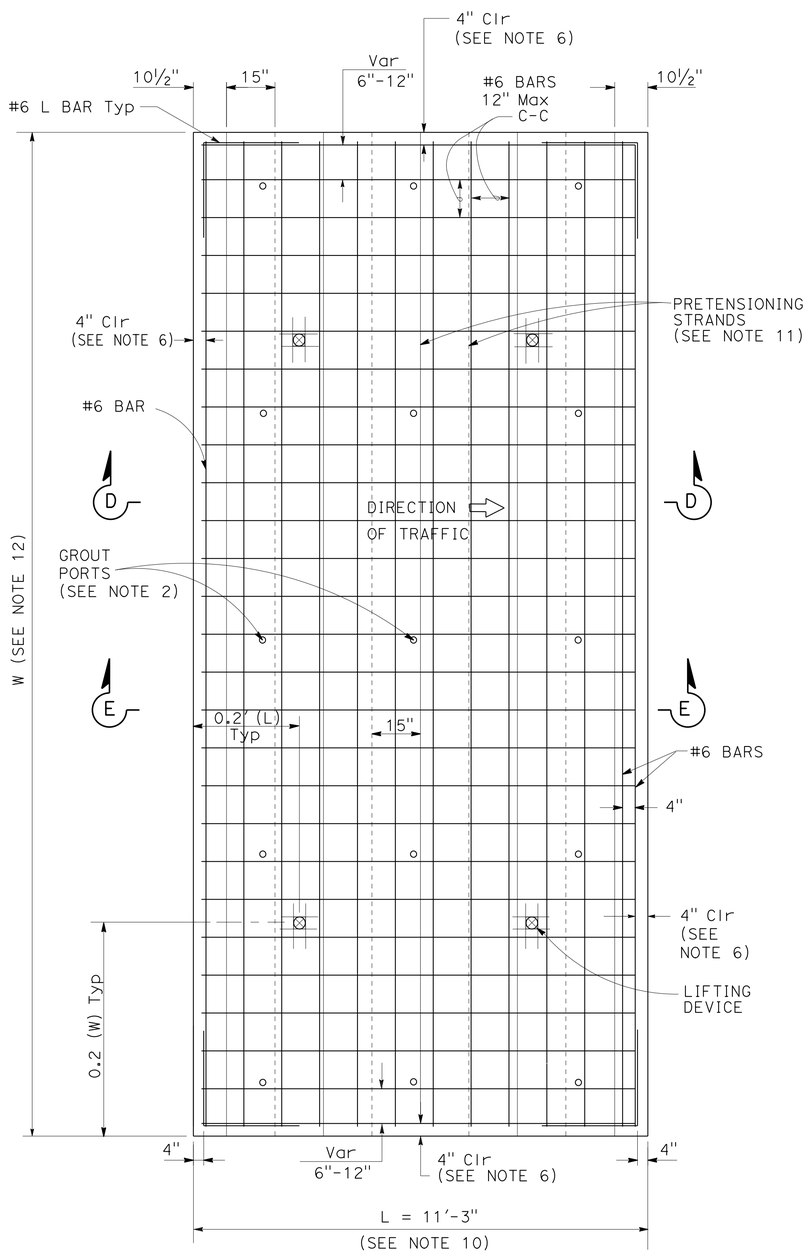

REBAR MAT (BOTTOM)

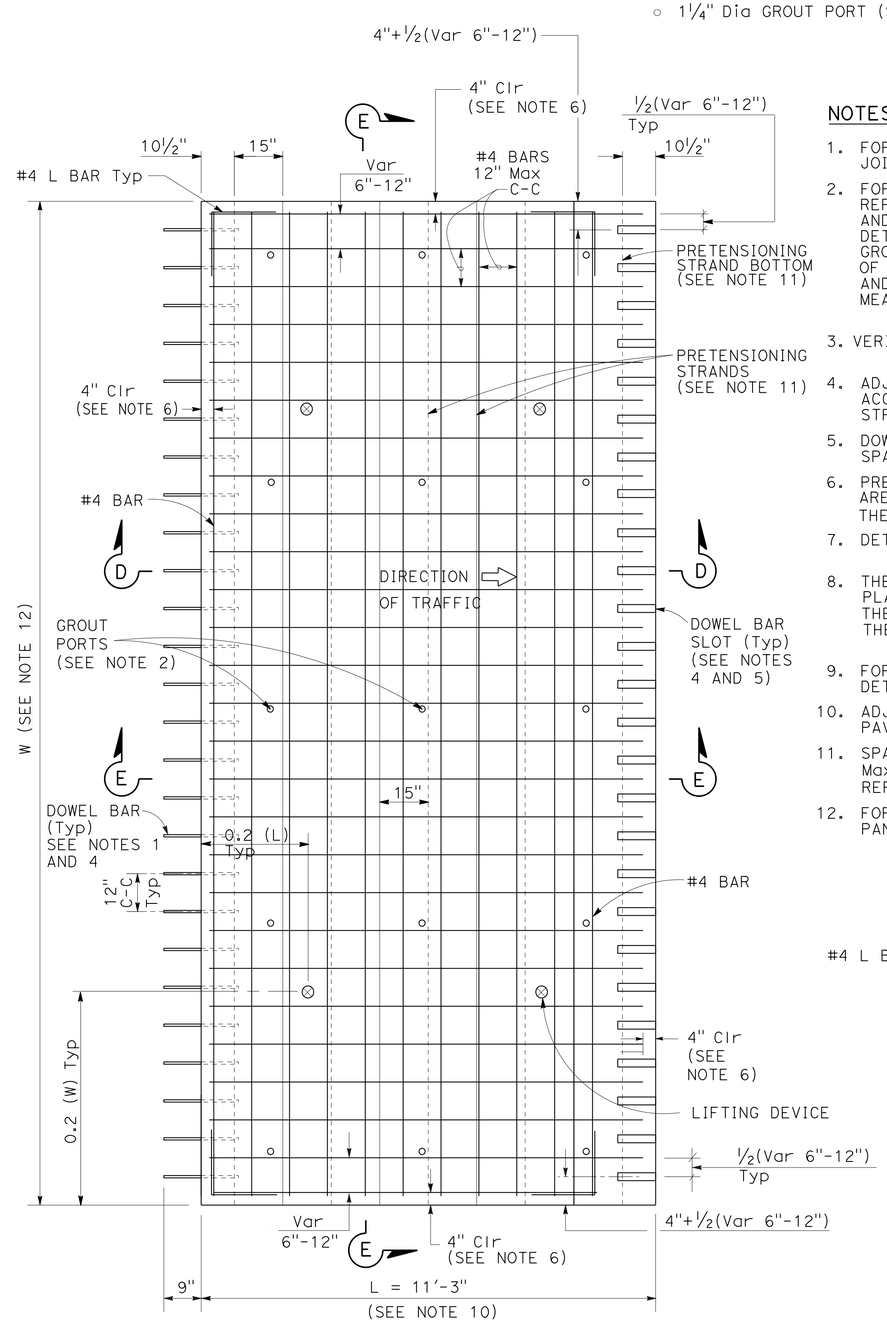

REBAR MAT (TOP)

NOTES:

1. FOR DOWEL BARS AND JOINT DETAILS NOT SHOWN, SEE CONSTRUCTION JOINT DETAILS FOR PJCP.
2. FOR GROUT PORT DETAILS AND JOINT DETAILS, SEE PRECAST REPLACEMENT PANEL DETAILS IN CONSTRUCTION DETAILS FOR PJCP AND CONSTRUCTION JOINT DETAILS FOR PJCP. DETERMINE THE QUANTITY, LOCATION, AND SPACING OF THE UNDERSLAB GROUT PORTS. PROVIDE AT LEAST ONE GROUT PORT ON EACH CORNER OF THE PANEL AT 2.5'± 0.5' FROM THE EDGES OF THE PANEL, AND PROVIDE ADDITIONAL PORTS WITH NO MORE THAN 5' DISTANCE MEASURED ALONG THE EDGE OF THE PANEL AND BETWEEN EACH OTHER.
3. VERIFY ALL DIMENSIONS BEFORE PANEL FABRICATION.
4. ADJUST REINFORCEMENT BARS, LIFTING DEVICES, AND GROUT PORTS TO ACCOMMODATE DOWEL BARS, DOWEL BAR SLOTS, AND PRETENSIONING STRANDS.
5. DOWEL BAR SLOT OFFSET AND SPACING MUST MATCH OFFSET AND SPACING OF DOWELS IN ADJACENT PRECAST PAVEMENT.
6. PRECAST PANELS MAY BE TRIMMED 2" Max AT THE EDGES THAT ARE NOT DOWELED OR SLOTTED. IF PANEL DIMENSION IS REDUCED, THE 4" COVER MUST REMAIN.
7. DETERMINE THE TYPE AND FINAL LOCATION OF LIFTING DEVICES.
8. THE POSITIONS OF THE SLOTS AND DOWEL BARS SHOWN ARE BASED ON PLACEMENT OF THE PANELS IN THE DIRECTION OF TRAFFIC. THE POSITION OF THE SLOTS AND DOWEL BARS MAY BE REVERSED IF THE PANELS IS PLACED IN THE OPPOSITE DIRECTION OF TRAFFIC.
9. FOR SECTIONS D-D AND E-E, SEE PRECAST REPLACEMENT PANEL DETAILS IN CONSTRUCTION DETAILS FOR PJCP.
10. ADJUST L FROM 8' TO 15' TO CONFORM TO BRIDGES AND CHANGES IN PAVEMENT TYPES.
11. SPACE ½" DIAMETER PRETENSIONING STRANDS 12" C-C TO 15" C-C Max, ALTERNATING ABOVE #6 BAR AND BELOW #4 BAR. SEE PRECAST REPLACEMENT PANEL DETAILS IN CONSTRUCTION DETAILS FOR PJCP.
12. FOR WIDTH OF PANEL (W) SEE TYPICAL CROSS-SECTION. WIDTH OF PANEL MUST BE 6' Min TO 40' Max.

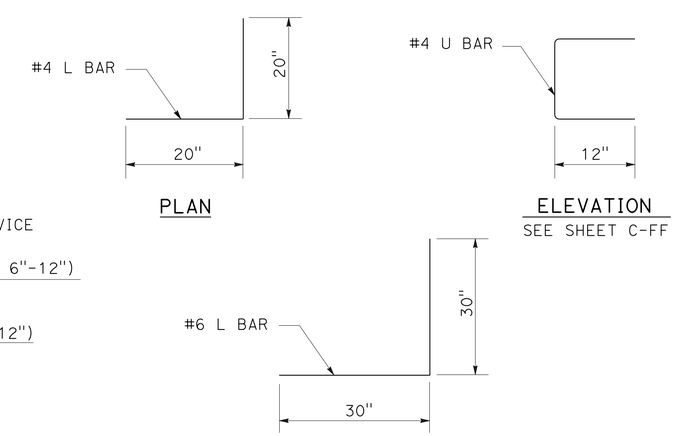

PRECAST REPLACEMENT PANEL

CONSTRUCTION DETAILS

PRECAST JOINTED CONCRETE PAVEMENT

NO SCALE

C-20

REVISED BY	DATE REVISED

CALCULATED-DESIGNED BY: WINNIE DEGUZMAN
CHECKED BY: CHARLIE TRUONG
FUNCTIONAL SUPERVISOR: KIRSTEN STAHL

STATE OF CALIFORNIA - DEPARTMENT OF TRANSPORTATION
Caltrans® DESIGN

LAST REVISION 09-19-13
DATE PLOTTED => 24-MAY-2014
TIME PLOTTED => 05:31

Dist	COUNTY	ROUTE	POST MILES TOTAL PROJECT	SHEET No.	TOTAL SHEETS
07	LA	101	1.8/8.4	29	183

M. Parvini 10-3-13
REGISTERED CIVIL ENGINEER DATE

2-24-14
PLANS APPROVAL DATE

REGISTERED PROFESSIONAL ENGINEER MEHDI PARVINI No. C63186 Exp. 6-30-14 CIVIL STATE OF CALIFORNIA

THE STATE OF CALIFORNIA OR ITS OFFICERS OR AGENTS SHALL NOT BE RESPONSIBLE FOR THE ACCURACY OR COMPLETENESS OF SCANNED COPIES OF THIS PLAN SHEET.

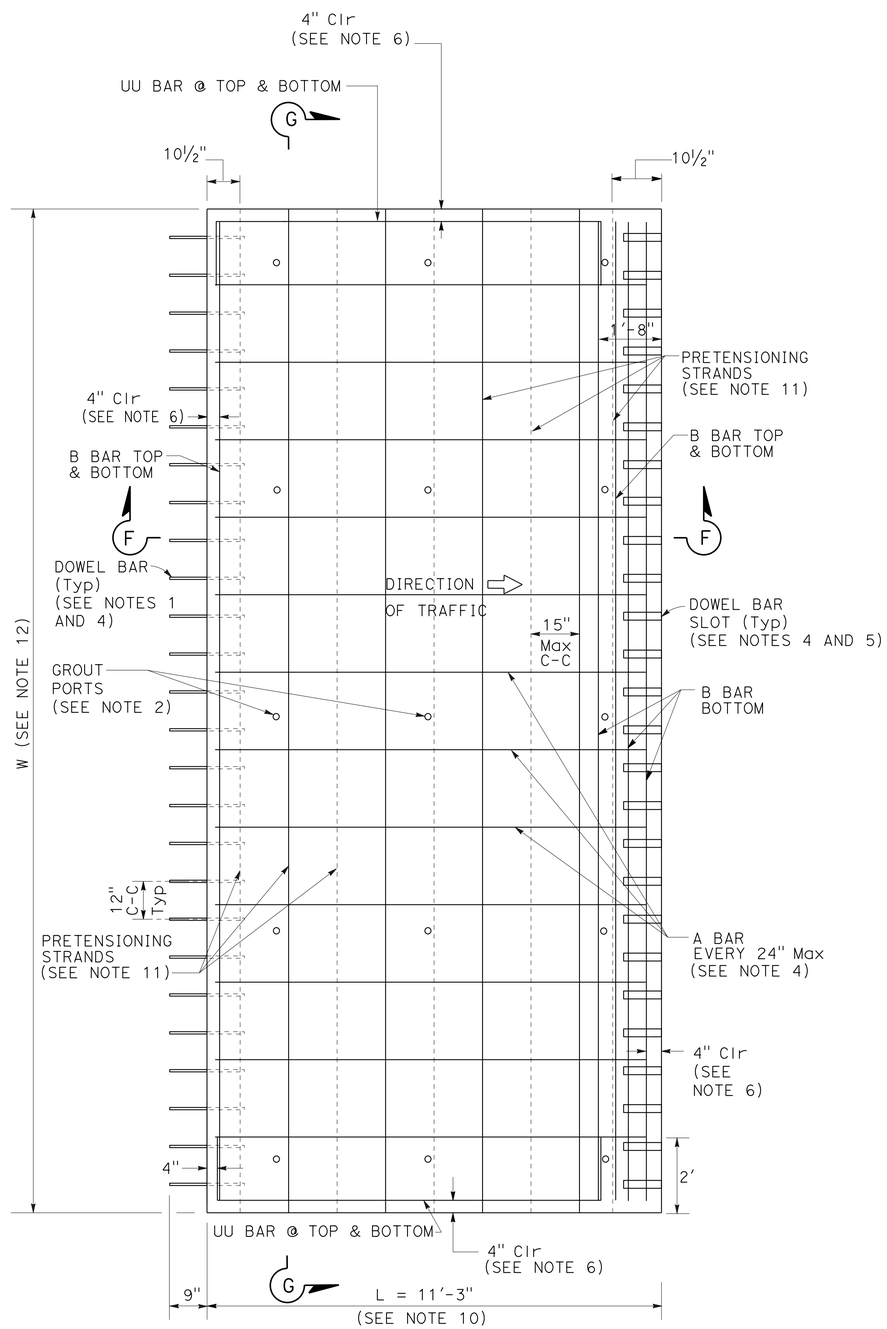

PLAN

LEGEND:

○ GROUT PORT

NOTES:

1. FOR DOWEL BARS AND JOINT DETAILS NOT SHOWN, SEE CONSTRUCTION JOINT DETAILS FOR PJCP.
2. FOR GROUT PORT DETAILS AND JOINT DETAILS, SEE PRECAST PRETENSIONED PANEL DETAILS IN CONSTRUCTION DETAILS FOR PJCP AND CONSTRUCTION JOINT DETAILS FOR PJCP. DETERMINE THE QUANTITY, LOCATION, AND SPACING OF THE UNDERSLAB GROUT PORTS. PROVIDE AT LEAST ONE GROUT PORT ON EACH CORNER OF THE PANEL AT 2.5′ ± 0.5′ FROM THE EDGES OF THE PANEL, AND PROVIDE ADDITIONAL PORTS WITH NO MORE THAN 5′ DISTANCE MEASURED ALONG THE EDGE OF THE PANEL AND BETWEEN EACH OTHER.
3. VERIFY ALL DIMENSIONS BEFORE PANEL FABRICATION.
4. ADJUST REINFORCEMENT BARS, LIFTING DEVICES, AND GROUT PORTS TO ACCOMMODATE DOWEL BARS, DOWEL BAR SLOTS, AND PRETENSIONING STRANDS.
5. DOWEL BAR SLOT OFFSET AND SPACING MUST MATCH OFFSET AND SPACING OF DOWELS IN ADJACENT PRECAST PAVEMENT.
6. PRECAST PANELS MAY BE TRIMMED 2" Max AT EDGES THAT ARE NOT DOWELED OR SLOTTED. IF PANEL DIMENSION IS REDUCED, THE 4" COVER MUST REMAIN.
7. DETERMINE THE TYPE, NUMBER, AND FINAL LOCATION OF LIFTING DEVICES.
8. THE POSITIONS OF THE SLOTS AND DOWEL BARS SHOWN ARE BASED ON PLACEMENT OF THE PANELS IN THE DIRECTION OF TRAFFIC. THE POSITION OF THE SLOTS AND DOWELS MAY BE REVERSED IF THE PANELS IS PLACED IN THE OPPOSITE DIRECTION OF TRAFFIC.
9. FOR SECTIONS F-F AND G-G, SEE PRECAST PRETENSIONED PANEL DETAILS IN CONSTRUCTION DETAILS FOR PJCP.
10. ADJUST L FROM 8′ TO 15′ TO CONFORM TO BRIDGES AND CHANGES IN PAVEMENT TYPES.
11. SPACE ½" DIAMETER PRETENSIONING STRANDS 12" C-C TO 15" C-C Max, ALTERNATING ABOVE AND BELOW A BAR. SEE PRECAST PRETENSIONED PANEL DETAILS IN CONSTRUCTION DETAILS FOR PJCP.
12. FOR WIDTH OF PANEL (W) SEE TYPICAL CROSS-SECTION. WIDTH OF PANEL MUST BE 6′ Min TO 40′ Max.

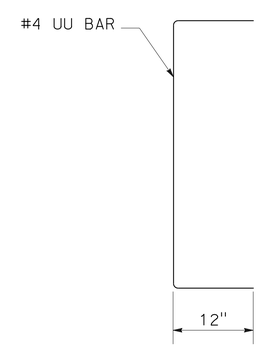

PLAN

10′ - 5"
A BAR #4
W - 8"
B BAR 6 #4 TYPE 1 8 #4 TYPE 2

PRECAST PRETENSION PANEL ALTERNATIVE

CONSTRUCTION DETAILS
PRECAST JOINTED CONCRETE PAVEMENT

NO SCALE

C-21

STATE OF CALIFORNIA - DEPARTMENT OF TRANSPORTATION
Caltrans® DESIGN
FUNCTIONAL SUPERVISOR: AMY FONG
CALCULATED-DESIGNED BY: MEHDI PARVINI
CHECKED BY: CHARLIE TRUONG
REVISED BY / DATE REVISED

LAST REVISION 11-20-13 | DATE PLOTTED => 24-MAY-2014 | TIME PLOTTED => 05:31

Dist	COUNTY	ROUTE	POST MILES TOTAL PROJECT	SHEET No.	TOTAL SHEETS
07	LA	101	1.8/8.4	30	183

REGISTERED CIVIL ENGINEER 10-3-13 DATE

2-24-14
PLANS APPROVAL DATE

REGISTERED PROFESSIONAL ENGINEER KIRSTEN R. STAHL No. C46857 Exp. 6-30-15 CIVIL STATE OF CALIFORNIA

THE STATE OF CALIFORNIA OR ITS OFFICERS OR AGENTS SHALL NOT BE RESPONSIBLE FOR THE ACCURACY OR COMPLETENESS OF SCANNED COPIES OF THIS PLAN SHEET.

LEGEND:

⊗ LIFTING DEVICE (SEE NOTE 4, 7)

○ 1¼" Dia GROUT PORT

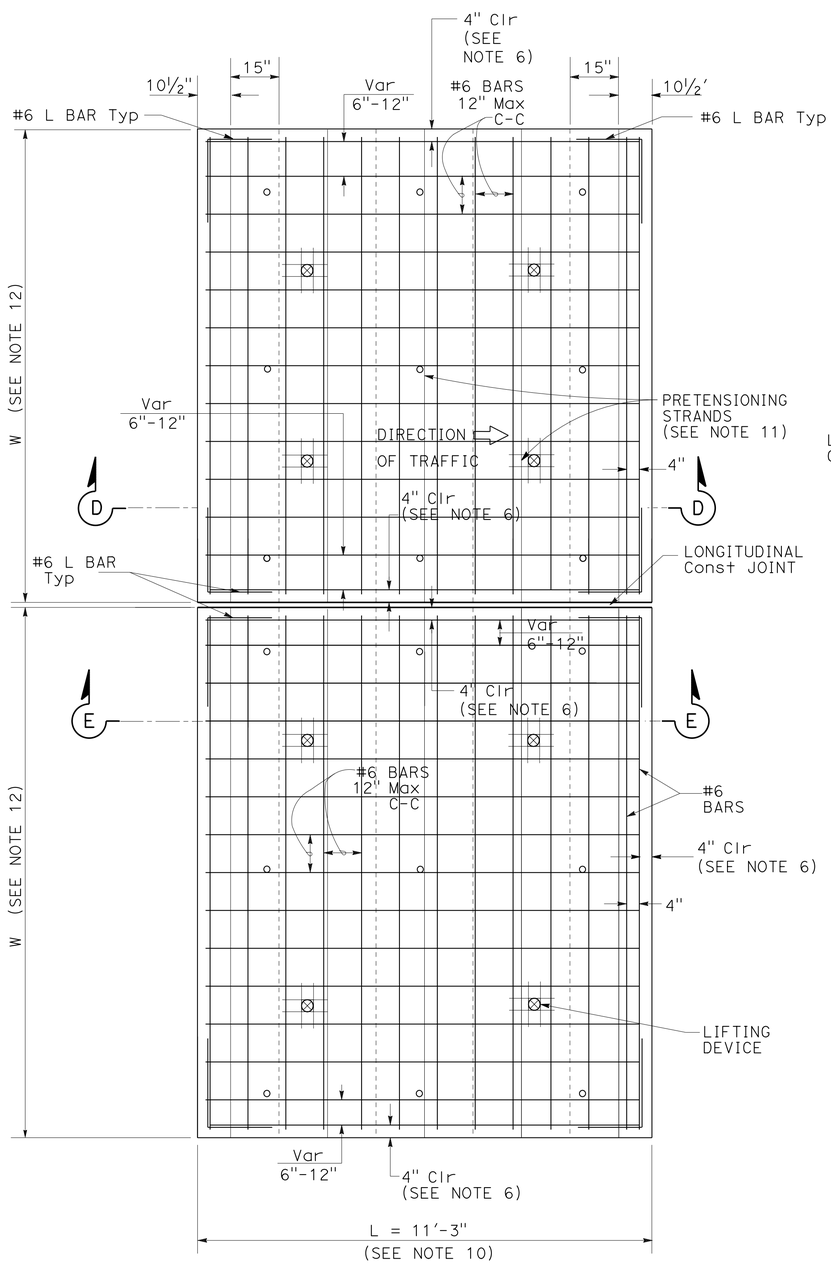

REBAR MAT (BOTTOM)

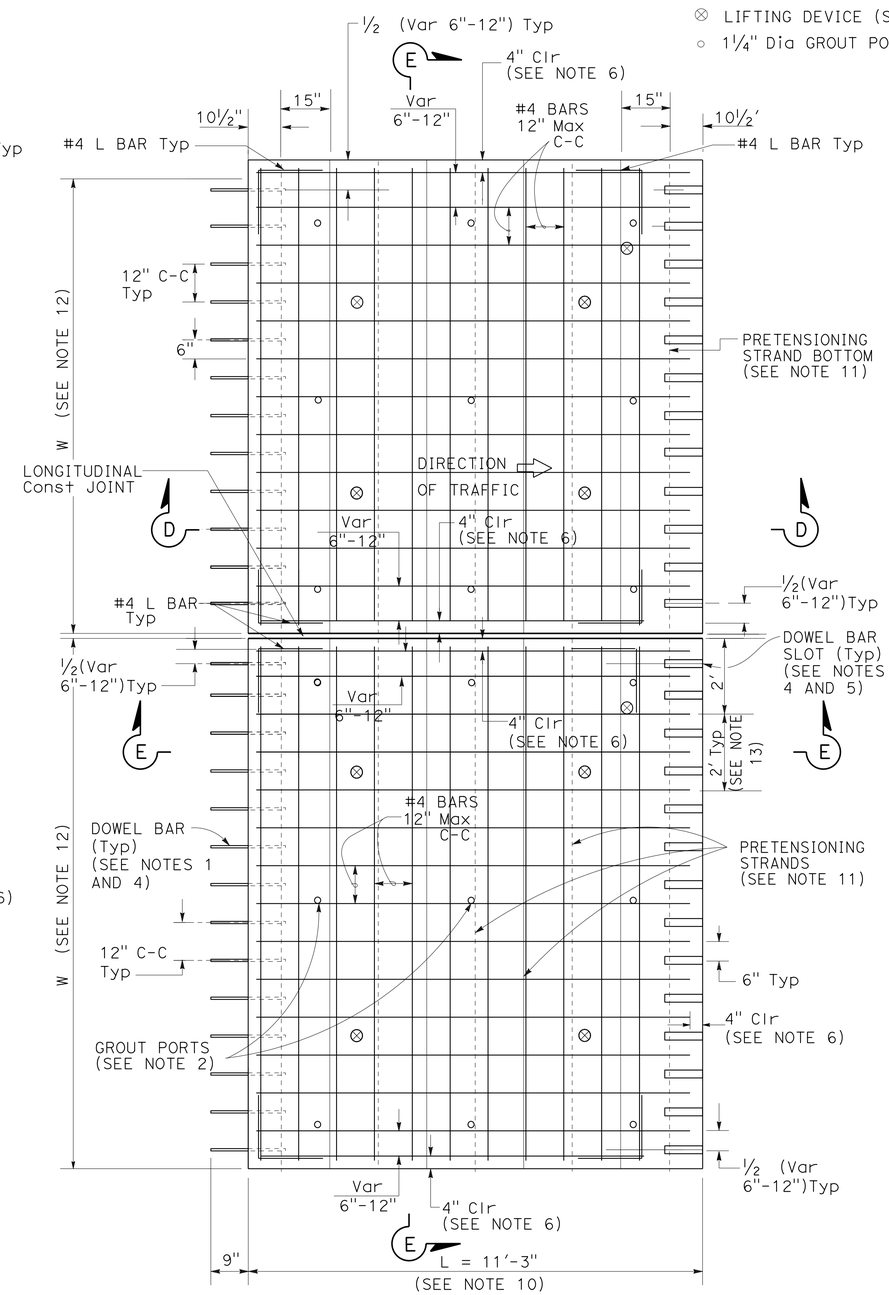

REBAR MAT (TOP)

NOTES:

1. FOR DOWEL BARS AND JOINT DETAILS NOT SHOWN, SEE CONSTRUCTION JOINT DETAILS FOR PJCP.
2. FOR GROUT PORT DETAILS AND JOINT DETAILS, SEE PRECAST REPLACEMENT PANEL DETAILS IN CONSTRUCTION DETAILS FOR PJCP AND CONSTRUCTION JOINT DETAILS FOR PJCP. DETERMINE THE QUANTITY, LOCATION, AND SPACING OF THE UNDERSLAB GROUT PORTS. PROVIDE AT LEAST ONE GROUT PORT ON EACH CORNER OF THE PANEL AT 2.5' ± 0.5' FROM THE EDGES OF THE PANEL, AND PROVIDE ADDITIONAL PORTS WITH NO MORE THAN 5' DISTANCE MEASURED ALONG THE EDGE OF THE PANEL AND BETWEEN EACH OTHER.
3. VERIFY ALL DIMENSIONS BEFORE PANEL FABRICATION.
4. ADJUST REINFORCEMENT BARS, LIFTING DEVICES, AND GROUT PORTS TO ACCOMMODATE DOWEL BARS, DOWEL BAR SLOTS, AND PRETENSIONING STRANDS.
5. DOWEL BAR SLOT OFFSET AND SPACING MUST MATCH OFFSET AND SPACING OF DOWELS IN ADJACENT PRECAST PAVEMENT.
6. PRECAST PANELS MAY BE TRIMMED 2" Max AT THE EDGES THAT ARE NOT DOWELED OR SLOTTED. IF PANEL DIMENSION IS REDUCED, THE 4" COVER MUST REMAIN.
7. DETERMINE THE TYPE AND FINAL LOCATION OF LIFTING DEVICES.
8. THE POSITIONS OF THE SLOTS AND DOWEL BARS SHOWN ARE BASED ON PLACEMENT OF THE PANELS IN THE DIRECTION OF TRAFFIC. THE POSITION OF THE SLOTS AND DOWEL BARS MAY BE REVERSED IF THE PANELS IS PLACED IN THE OPPOSITE DIRECTION OF TRAFFIC.
9. FOR SECTIONS D-D AND E-E, SEE PRECAST REPLACEMENT PANEL DETAILS IN CONSTRUCTION DETAILS FOR PJCP.
10. ADJUST L FROM 8' TO 15' TO CONFORM TO BRIDGES AND CHANGES IN PAVEMENT TYPES.
11. SPACE ½" DIAMETER PRETENSIONING STRANDS 12" C-C TO 15" C-C Max, ALTERNATING ABOVE #6 BAR AND BELOW #4 BAR. SEE PRECAST REPLACEMENT PANEL DETAILS IN CONSTRUCTION DETAILS FOR PJCP.
12. FOR WIDTH OF PANEL (W) SEE TYPICAL CROSS-SECTION. WIDTH OF PANEL MUST BE 6' Min TO 40' Max.

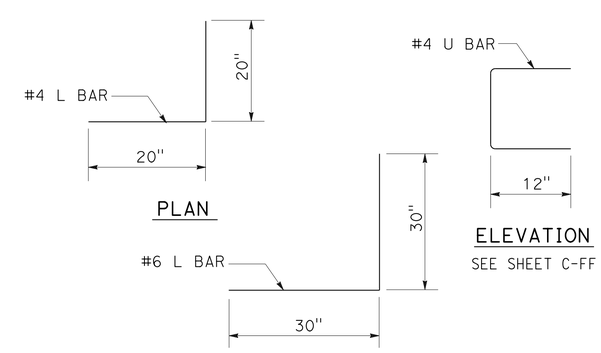

CONSTRUCTION DETAILS
PRECAST JOINTED CONCRETE PAVEMENT

NO SCALE

PRECAST REPLACEMENT PANEL ALTERNATIVE (LONGITUDINAL CONSTRUCTION JOINT)

C-22

STATE OF CALIFORNIA - DEPARTMENT OF TRANSPORTATION
Caltrans DESIGN

FUNCTIONAL SUPERVISOR: KIRSTEN STAHL
CALCULATED-DESIGNED BY: WINNIE DEGUZMAN
CHECKED BY: CHARLIE TRUONG
REVISED BY
DATE REVISED

LAST REVISION 09-19-13
DATE PLOTTED => 24-MAY-2014
TIME PLOTTED => 05:31

Dist	COUNTY	ROUTE	POST MILES TOTAL PROJECT	SHEET No.	TOTAL SHEETS
07	LA	101	1.8/8.4	31	31

M. Parvini 10-3-13
REGISTERED CIVIL ENGINEER DATE

2-24-14
PLANS APPROVAL DATE

REGISTERED PROFESSIONAL ENGINEER MEHDI PARVINI No. C63186 Exp. 6-30-14 CIVIL STATE OF CALIFORNIA

THE STATE OF CALIFORNIA OR ITS OFFICERS OR AGENTS SHALL NOT BE RESPONSIBLE FOR THE ACCURACY OR COMPLETENESS OF SCANNED COPIES OF THIS PLAN SHEET.

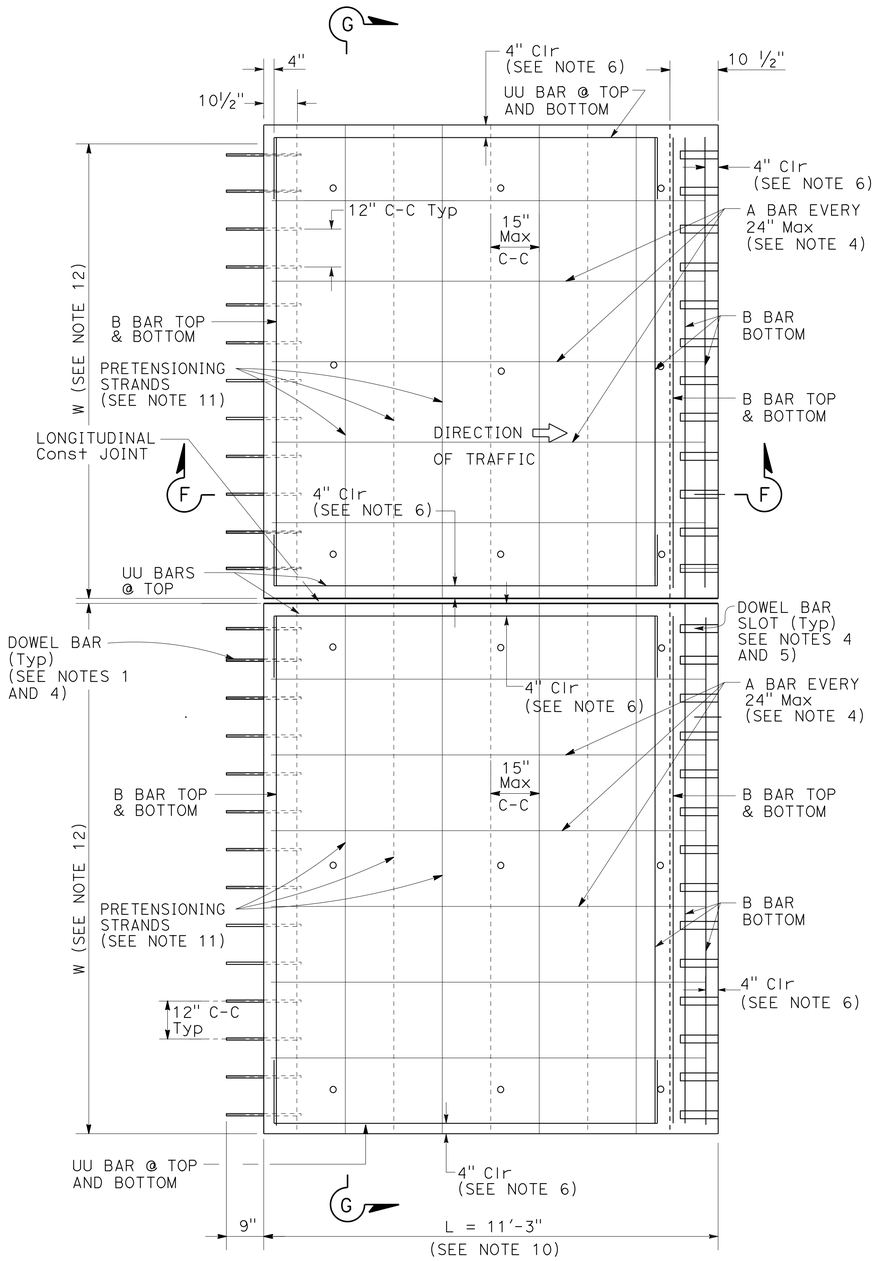

PLAN

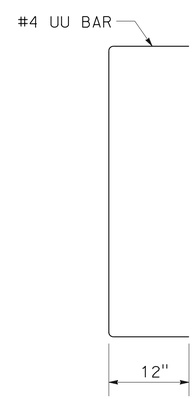

PLAN

10' - 5"
A BAR #4

W - 8"
B BAR 12 #4 TYPE 1
16 #4 TYPE 2

NOTES:

1. FOR DOWEL BARS AND JOINT DETAILS NOT SHOWN, SEE CONSTRUCTION JOINT DETAILS FOR PJCP, REVISED Std PLAN RSP P7 AND P10.
2. FOR GROUT PORT DETAILS AND JOINT DETAILS, SEE PRECAST PRETENSIONED PANEL DETAILS IN CONSTRUCTION DETAILS FOR PJCP AND CONSTRUCTION JOINT DETAILS FOR PJCP. DETERMINE THE QUANTITY, LOCATION, AND SPACING OF THE UNDERSLAB GROUT PORTS. PROVIDE AT LEAST ONE GROUT PORT ON EACH CORNER OF THE PANEL AT 2.5' ± 0.5' FROM THE EDGES OF THE PANEL, AND PROVIDE ADDITIONAL PORTS WITH NO MORE THAN 5' DISTANCE MEASURED ALONG THE EDGE OF THE PANEL AND BETWEEN EACH OTHER.
3. VERIFY ALL DIMENSIONS BEFORE PANEL FABRICATION.
4. ADJUST REINFORCEMENT BARS, LIFTING DEVICES, AND GROUT PORTS TO ACCOMMODATE DOWEL BARS, DOWEL BAR SLOTS, AND PRETENSIONING STRANDS.
5. DOWEL BAR SLOT OFFSET AND SPACING MUST MATCH OFFSET AND SPACING OF DOWELS IN ADJACENT PRECAST PAVEMENT.
6. PRECAST PANELS MAY BE TRIMMED 2" Max AT EDGES THAT ARE NOT DOWELED OR SLOTTED. IF PANEL DIMENSION IS REDUCED, THE 4" COVER MUST REMAIN.
7. DETERMINE THE TYPE, NUMBER, AND FINAL LOCATION OF LIFTING DEVICES.
8. THE POSITIONS OF THE SLOTS AND DOWELS SHOWN ARE BASED ON PLACEMENT OF THE PANELS IN THE DIRECTION OF TRAFFIC. THE POSITION OF THE SLOTS AND DOWELS MAY BE REVERSED IF THE PANELS IS PLACED IN THE OPPOSITE DIRECTION OF TRAFFIC.
9. FOR SECTIONS F-F AND G-G, SEE PRECAST PRETENSIONED PANEL DETAILS IN CONSTRUCTION DETAILS FOR PJCP.
10. ADJUST L FROM 8' TO 15' TO CONFORM TO BRIDGES AND CHANGES IN PAVEMENT TYPES.
11. SPACE ½" DIAMETER PRETENSIONING STRANDS 12" C-C TO 15" C-C Max, ALTERNATING ABOVE AND BELOW A BAR. SEE PRECAST PRETENSIONED PANEL DETAILS IN CONSTRUCTION DETAILS FOR PJCP.
12. FOR WIDTH OF PANEL (W) SEE TYPICAL CROSS-SECTION. WIDTH OF PANEL MUST BE 6' Min TO 40' Max.

CONSTRUCTION DETAILS

PRECAST JOINTED CONCRETE PAVEMENT

NO SCALE

PRECAST PRETENSION PANEL ALTERNATIVE (LONGITUDINAL CONSTRUCTION JOINT)

C-23

STATE OF CALIFORNIA - DEPARTMENT OF TRANSPORTATION
Caltrans
DESIGN

FUNCTIONAL SUPERVISOR: AMY FONG
CALCULATED-DESIGNED BY: MEHDI PARVINI
CHECKED BY: CHARLIE TRUONG
REVISED BY
DATE REVISED

LAST REVISION 09-19-13 | DATE PLOTTED => 24-MAY-2014 | TIME PLOTTED => 05:31

Dist	COUNTY	ROUTE	POST MILES TOTAL PROJECT	SHEET No.	TOTAL SHEETS
07	LA	101	1.8/8.4	32	183

REGISTERED CIVIL ENGINEER 10-3-13 DATE

2-24-14
PLANS APPROVAL DATE

REGISTERED PROFESSIONAL ENGINEER KIRSTEN R. STAHL No. C46857 Exp. 6-30-15 CIVIL STATE OF CALIFORNIA

THE STATE OF CALIFORNIA OR ITS OFFICERS OR AGENTS SHALL NOT BE RESPONSIBLE FOR THE ACCURACY OR COMPLETENESS OF SCANNED COPIES OF THIS PLAN SHEET.

NOTES:

1. FOR DETAILS NOT SHOWN, SEE REVISED STANDARD PLAN RSP P7, P10, AND P18.
2. VERIFY ALL DIMENSIONS BEFORE PANEL FABRICATION.
3. DOWEL BAR SLOT OFFSET AND SPACING MUST MATCH OFFSET AND SPACING OF DOWELS IN ADJACENT PRECAST PAVEMENT.
4. DETERMINE THE TYPE AND FINAL LOCATION OF LIFTING DEVICES.
5. PRETENSIONING STRANDS ARE ½" DIAMETER SPACED BETWEEN 12" C-C AND 15" C-C Max.

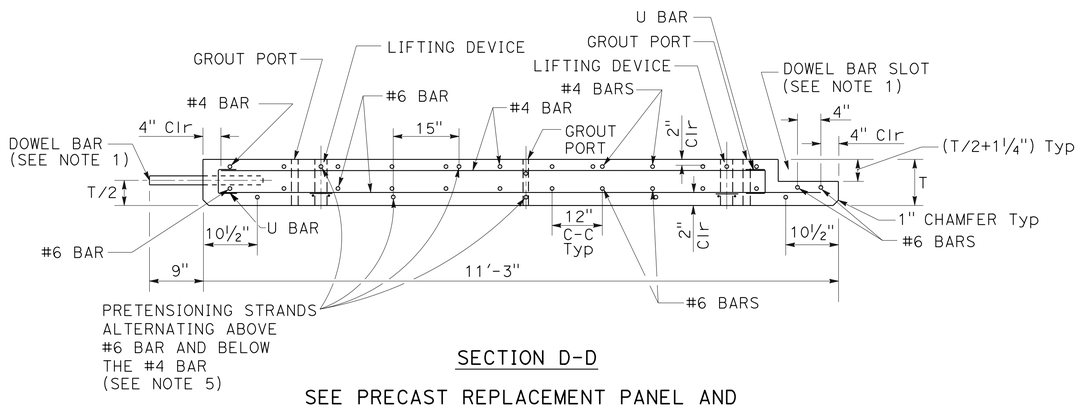

SECTION D-D

SEE PRECAST REPLACEMENT PANEL AND PRECAST REPLACEMENT PANEL ALTERNATIVE (LONGITUDINAL CONSTRUCTION JOINT)

TYPE 1 PANEL

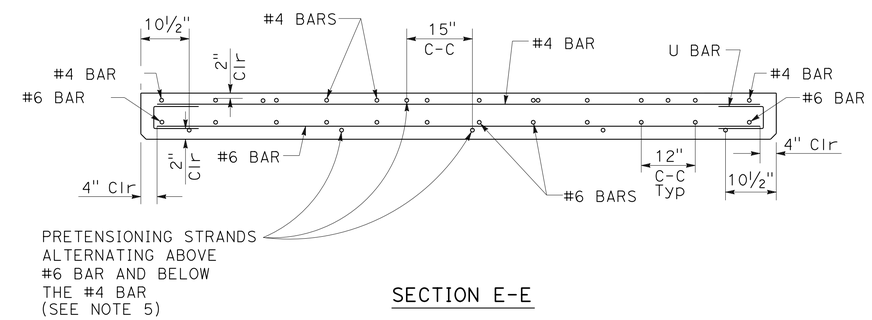

SECTION E-E

SEE PRECAST REPLACEMENT PANEL AND PRECAST REPLACEMENT PANEL ALTERNATIVE (LONGITUDINAL CONSTRUCTION JOINT)

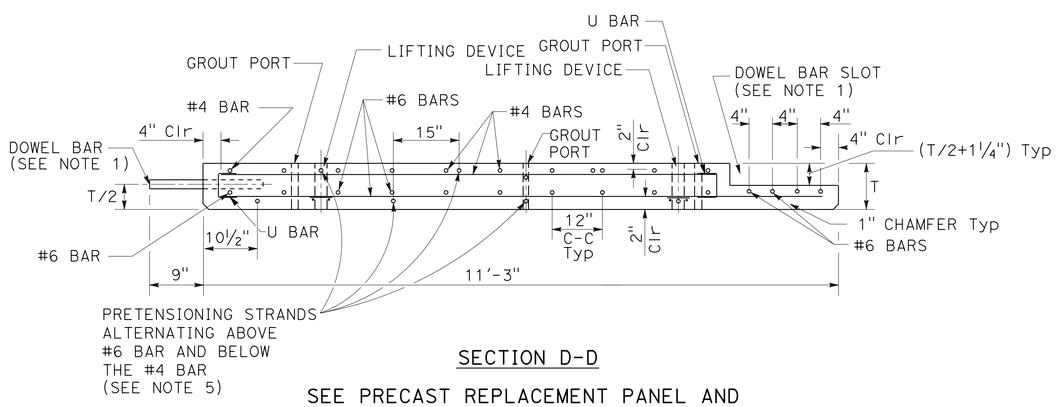

SECTION D-D

SEE PRECAST REPLACEMENT PANEL AND PRECAST REPLACEMENT PANEL ALTERNATIVE (LONGITUDINAL CONSTRUCTION JOINT)

TYPE 2 PANEL

(PLAN VIEW NOT SHOWN)

PRECAST REPLACEMENT PANEL DETAILS

CONSTRUCTION DETAILS

PRECAST JOINTED CONCRETE PAVEMENT

NO SCALE

C-24

STATE OF CALIFORNIA - DEPARTMENT OF TRANSPORTATION
Caltrans
DESIGN

FUNCTIONAL SUPERVISOR: KIRSTEN STAHL
CALCULATED-DESIGNED BY: WINNIE DEGUZMAN
CHECKED BY: CHARLIE TRUONG
REVISED BY
DATE REVISED

LAST REVISION 09-19-13
DATE PLOTTED => 24-MAY-2014
TIME PLOTTED => 05:31

Dist	COUNTY	ROUTE	POST MILES TOTAL PROJECT	SHEET No.	TOTAL SHEETS
07	LA	101	1.8/8.4	33	183

M. Parvini 10-3-13
REGISTERED CIVIL ENGINEER DATE

2-24-14
PLANS APPROVAL DATE

REGISTERED PROFESSIONAL ENGINEER MEHDI PARVINI No. C63186 Exp. 6-30-14 CIVIL STATE OF CALIFORNIA

THE STATE OF CALIFORNIA OR ITS OFFICERS OR AGENTS SHALL NOT BE RESPONSIBLE FOR THE ACCURACY OR COMPLETENESS OF SCANNED COPIES OF THIS PLAN SHEET.

NOTES:

1. FOR DETAILS NOT SHOWN, SEE REVISED STANDARD PLAN RSP P7, P10, AND P18.
2. VERIFY DIMENSIONS BEFORE PANEL FABRICATION.
3. DOWEL BAR SLOT OFFSET AND SPACING MUST MATCH OFFSET AND SPACING OF DOWELS IN ADJACENT PRECAST PAVEMENT.
4. DETERMINE THE TYPE, NUMBER, AND FINAL LOCATION OF LIFTING DEVICES.
5. PRETENSIONING STRANDS ARE ½" DIAMETER SPACED BETWEEN 12" C-C AND 15" C-C Max.

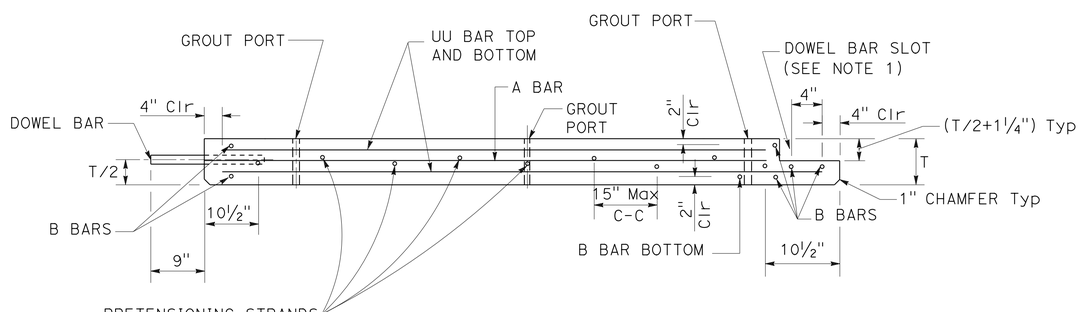

SECTION F-F

SEE PRECAST PRETENSION PANEL ALTERNATIVE AND PRECAST PRETENSION PANEL ALTERNATIVE (LONGITUDINAL CONSTRUCTION JOINT)

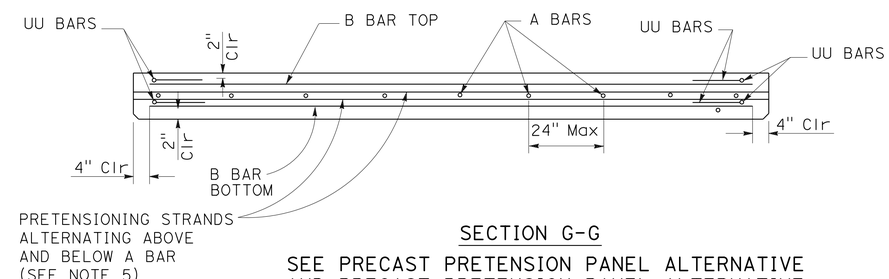

SECTION G-G

SEE PRECAST PRETENSION PANEL ALTERNATIVE AND PRECAST PRETENSION PANEL ALTERNATIVE (LONGITUDINAL CONSTRUCTION JOINT)

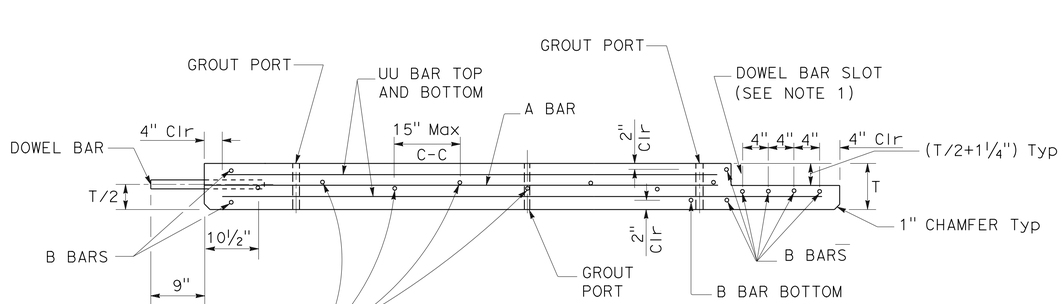

SECTION F-F

SEE PRECAST PRETENSION PANEL ALTERNATIVE AND PRECAST PRETENSION PANEL ALTERNATIVE (LONGITUDINAL CONSTRUCTION JOINT)

CONSTRUCTION DETAILS

PRECAST JOINTED CONCRETE PAVEMENT

NO SCALE

PRECAST PRETENSIONED PANEL DETAILS

C-25

REVISED BY	DATE REVISED

CALCULATED-DESIGNED BY: MEHDI PARVINI
CHECKED BY: CHARLIE TRUONG
FUNCTIONAL SUPERVISOR: AMY FONG

STATE OF CALIFORNIA - DEPARTMENT OF TRANSPORTATION
Caltrans® DESIGN

LAST REVISION 09-19-13
DATE PLOTTED => 24-MAY-2014
TIME PLOTTED => 05:31

Dist	COUNTY	ROUTE	POST MILES TOTAL PROJECT	SHEET No.	TOTAL SHEETS
07	LA	101	1.8/8.4	34	183

REGISTERED CIVIL ENGINEER 10-3-13 DATE

2-24-14
PLANS APPROVAL DATE

REGISTERED PROFESSIONAL ENGINEER KIRSTEN STAHL No. 46857 Exp. 6-30-15 CIVIL STATE OF CALIFORNIA

THE STATE OF CALIFORNIA OR ITS OFFICERS OR AGENTS SHALL NOT BE RESPONSIBLE FOR THE ACCURACY OR COMPLETENESS OF SCANNED COPIES OF THIS PLAN SHEET.

NOTES:

1. FOR DETAILS NOT SHOWN, SEE REVISED STANDARD PLAN RSP P7, P10, AND P18.
2. UNDERSLAB GROUT LAYER MUST NOT EXCEED ½".
3. DETERMINE WIDTH AND DEPTH OF COMPRESSION SEAL TO FIT JOINT.

ABBREVIATIONS:

PJCP PRECAST JOINTED CONCRETE PAVEMENT
× JOINT WIDTH

LEGEND:

- FOAM INSERT
- JOINT SEAL
- POLYESTER CONCRETE
- UNDERSLAB GROUT
- JOINT FILLER MATERIAL

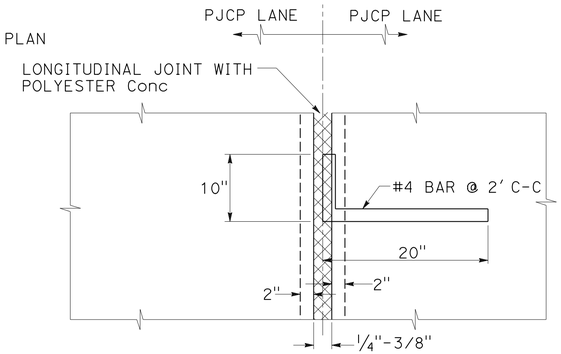

PLAN

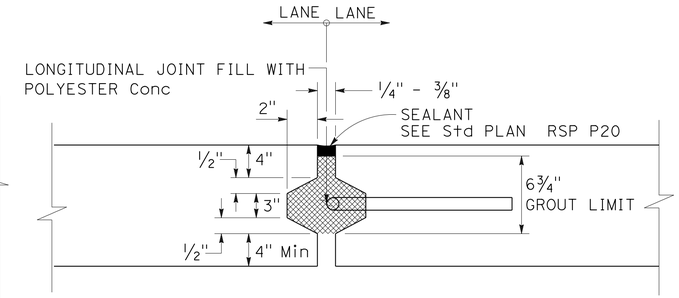

ELEVATION

POLYESTER CONCRETE AND DUAL KEYWAY AT LONGITUDINAL CONSTRUCTION JOINT

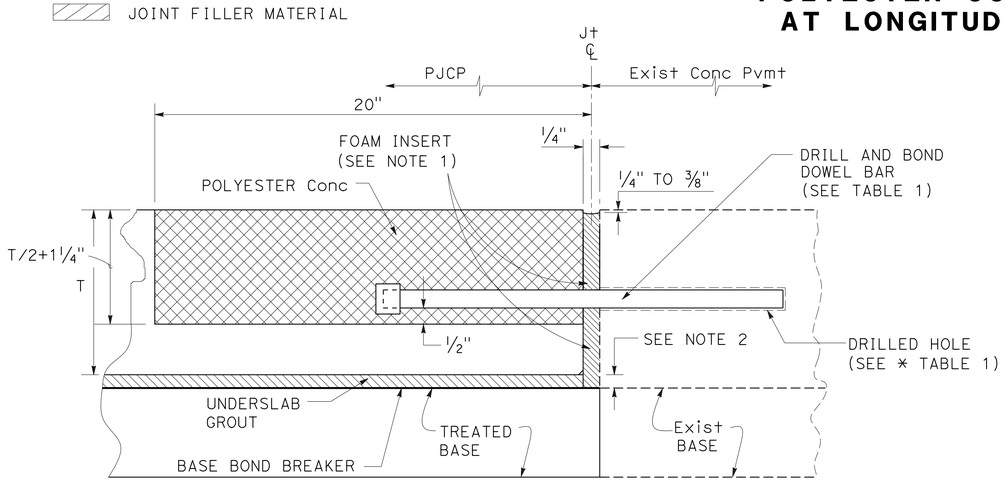

TYPE 2 PANEL

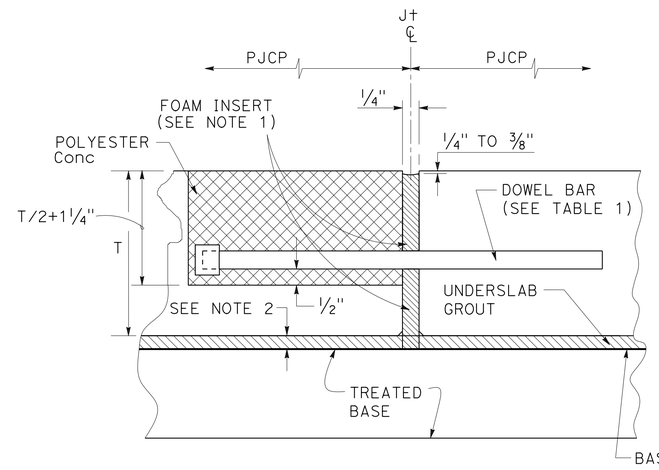

TYPE 1 PANEL

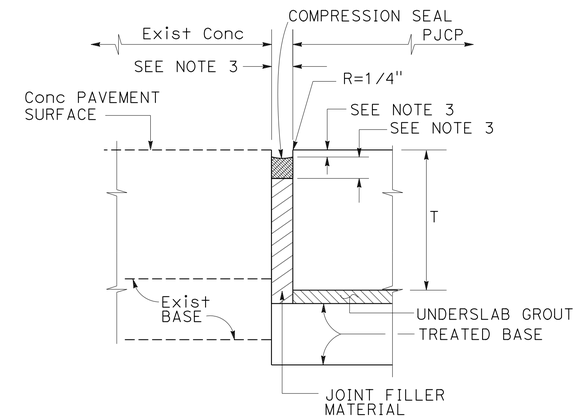

JOINT DETAIL

FOR JOINTS ¼" TO ¾" WIDE

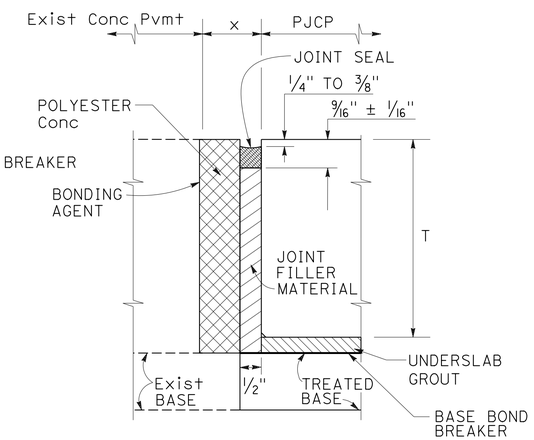

CLOSURE JOINT DETAIL

FOR JOINTS > ¾" TO 1½" WIDE

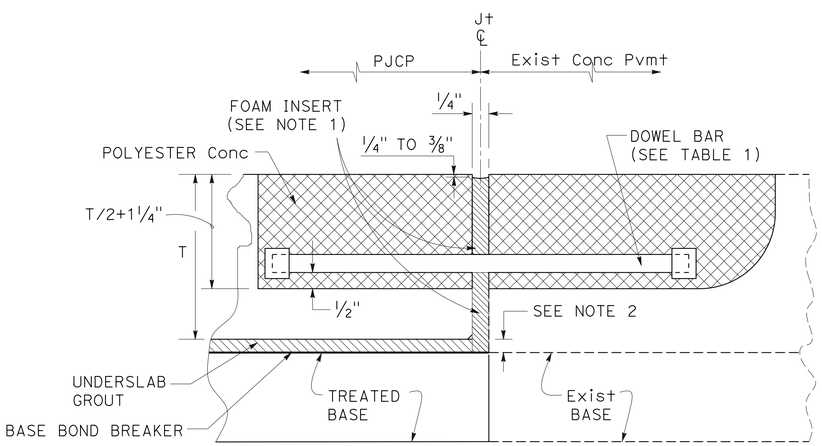

CONSTRUCTION JOINT DETAILS

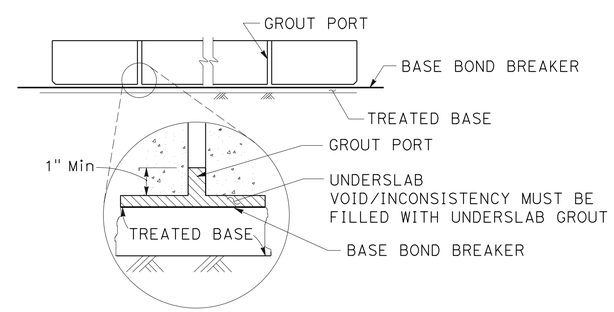

UNDERSLAB GROUT PORT AND POLYETHELENE SHEETING

CONSTRUCTION DETAILS

PRECAST JOINTED CONCRETE PAVEMENT (WIDENED LANE)

NO SCALE

C-26

REVISED BY	DATE REVISED
KIRSTEN STAHL	CHARLIE TRUONG
CALCULATED-DESIGNED BY	CHECKED BY
FUNCTIONAL SUPERVISOR	KIRSTEN STAHL

STATE OF CALIFORNIA - DEPARTMENT OF TRANSPORTATION
DESIGN
Caltrans

LAST REVISION 09-19-13 | DATE PLOTTED => 24-MAY-2014 | TIME PLOTTED => 05:31

Dist	COUNTY	ROUTE	POST MILES TOTAL PROJECT	SHEET No.	TOTAL SHEETS
07	LA	101	1.8/8.4	35	183

REGISTERED CIVIL ENGINEER 10-3-13 DATE

2-24-14
PLANS APPROVAL DATE

REGISTERED PROFESSIONAL ENGINEER KIRSTEN R. STAHL No. C46857 Exp. 6-30-15 CIVIL STATE OF CALIFORNIA

THE STATE OF CALIFORNIA OR ITS OFFICERS OR AGENTS SHALL NOT BE RESPONSIBLE FOR THE ACCURACY OR COMPLETENESS OF SCANNED COPIES OF THIS PLAN SHEET.

NOTES:

1. R IS DETERMINED BY THE ENGINEER.
2. VERIFY FIELD MEASUREMENTS BEFORE FABRICATING AND PLACING PRECAST PANELS AT THE CORRECT LOCATIONS AND DIMENSIONS.
3. RETROFIT DOWEL SLOTS IN EXISTING PAVEMENT MUST MATCH PRECAST DOWEL PLACEMENT.
4. FOR DIMENSIONS NOT SHOWN, VERIFY (d) WITH THE ENGINEER. FOR (d) NOT SHOWN, VERIFY DIMENSION WITH THE ENGINEER.
5. L= 11′-3". FOR W AND L NOT SHOWN, d = 6L-(6L(R-W)/R) d = INCHES, L, R, W = FEET

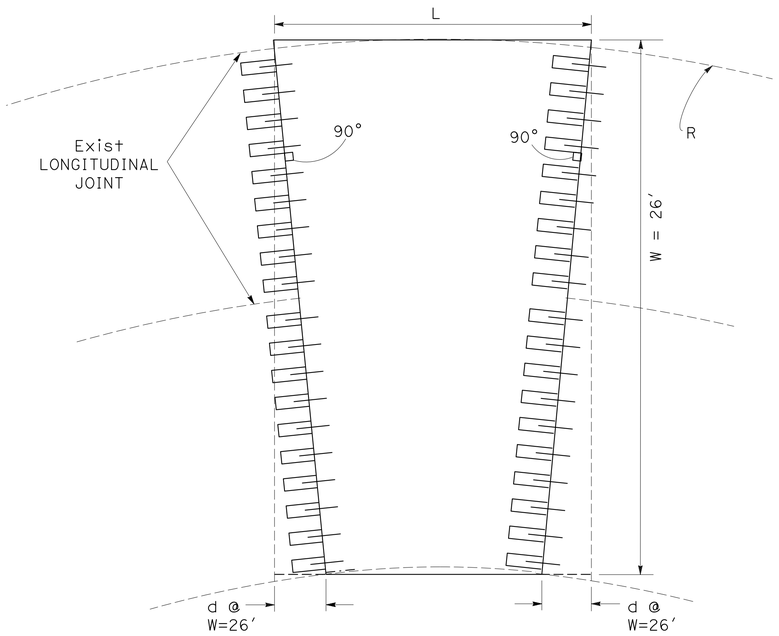

PRECAST REPLACEMENT PANEL
PRECAST PRETENSION PANEL ALTERNATIVE

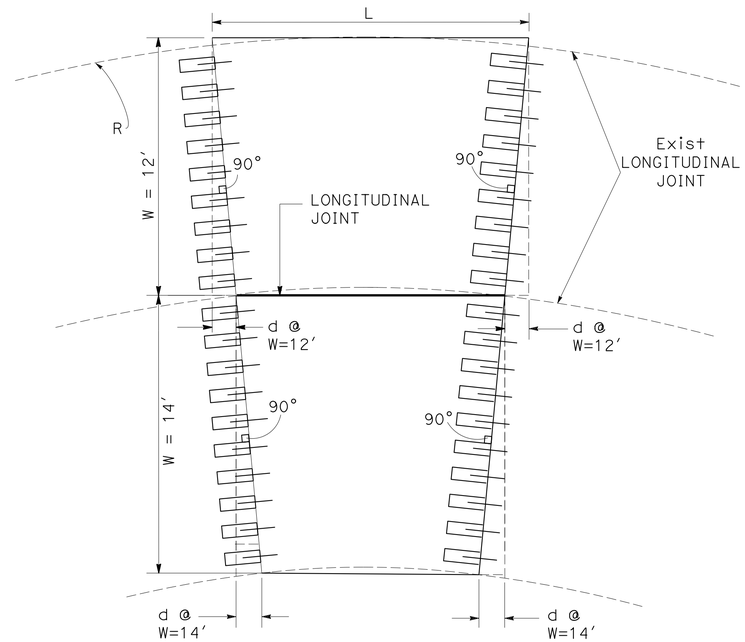

PRECAST REPLACEMENT PANEL ALTERNATIVE
(LONGITUDINAL CONSTRUCTION JOINT)

PRECAST PRETENSION PANEL ALTERNATIVE
(LONGITUDINAL CONSTRUCTION JOINT)

PANEL SKEW DIMENSIONS (d)

W	26′-6"	26′-0"	24′-0"	14′-0"	12′-6"	12′-0"
R	d"	d"	d"	d"	d"	d"
900′	1.99	1.95	1.80	1.05	0.94	0.90
1000′	1.79	1.76	1.62	0.94	0.84	0.81
1200′	1.49	1.46	1.35	0.79	0.70	0.67
1500′	1.19	1.17	1.08	0.63	0.56	0.54
1800′	0.99	0.97	0.90	0.53	0.47	0.45
2000′	0.89	0.88	0.81	0.47	0.42	0.41
2300′	0.78	0.76	0.70	0.41	0.37	0.35
2500′	0.72	0.70	0.65	0.38	0.34	0.32
3000′	0.60	0.58	0.54	0.31	0.28	0.27
3500′	0.51	0.50	0.46	0.27	0.24	0.23
4000′	0.45	0.44	0.41	0.24	0.21	0.20
4500′	0.40	0.39	0.36	0.21		
5000′	0.36	0.35	0.32			
6000′	0.30	0.29	0.27			
6500′	0.28	0.27	0.25			
7500′	0.24	0.23	0.22			
8500′	0.21	0.21				

SEE NOTES 4, 5

PRECAST JOINTED CONCRETE PAVEMENT
REPLACEMENT PANEL ON A CURVE

CONSTRUCTION DETAILS
PRECAST JOINTED CONCRETE PAVEMENT

NO SCALE

C-27

REVISED BY | DATE REVISED
KIRSTEN STAHL | CHARLIE TRUONG
CALCULATED-DESIGNED BY | CHECKED BY
FUNCTIONAL SUPERVISOR | KIRSTEN STAHL
STATE OF CALIFORNIA - DEPARTMENT OF TRANSPORTATION
Caltrans® DESIGN

LAST REVISION 00-00-00 | DATE PLOTTED => 24-MAY-2014 | TIME PLOTTED => 05:31

Dist	COUNTY	ROUTE	POST MILES TOTAL PROJECT	SHEET No.	TOTAL SHEETS
07	LA	101	1.8/8.4	36	183

LICENSED LANDSCAPE ARCHITECT

2-24-14
PLANS APPROVAL DATE

LICENSED LANDSCAPE ARCHITECT KATHLEEN LEDESMA No. 5888 Signature 12/31/15 Renewal Date 01/30/14 Date STATE OF CALIFORNIA

THE STATE OF CALIFORNIA OR ITS OFFICERS OR AGENTS SHALL NOT BE RESPONSIBLE FOR THE ACCURACY OR COMPLETENESS OF SCANNED COPIES OF THIS PLAN SHEET.

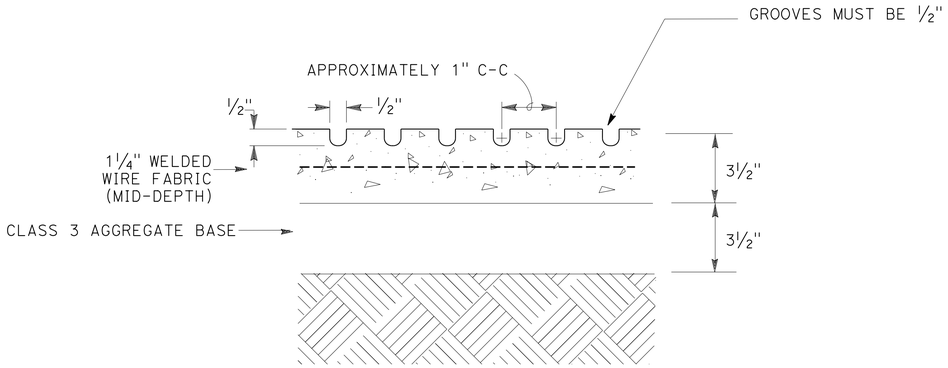

GROOVING DETAIL 'MISSION BELL'

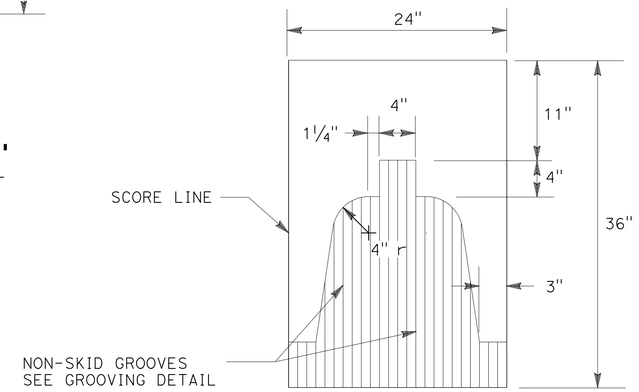

STAMP PATTERN 'MISSION BELL'

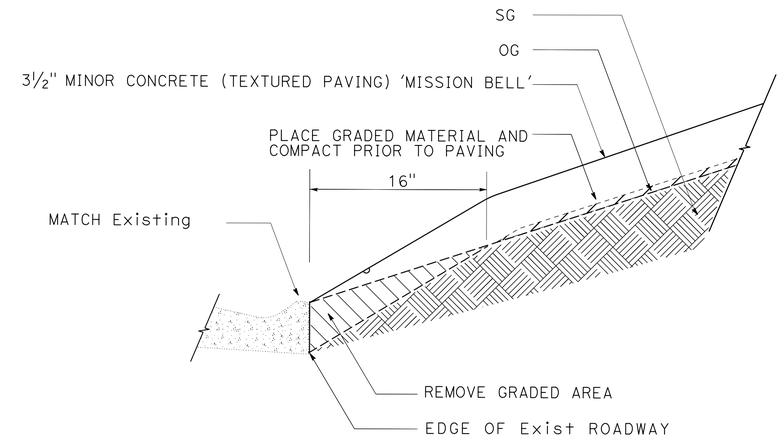

MINOR CONCRETE (TEXTURED PAVING) 'MISSION BELL' GRADING

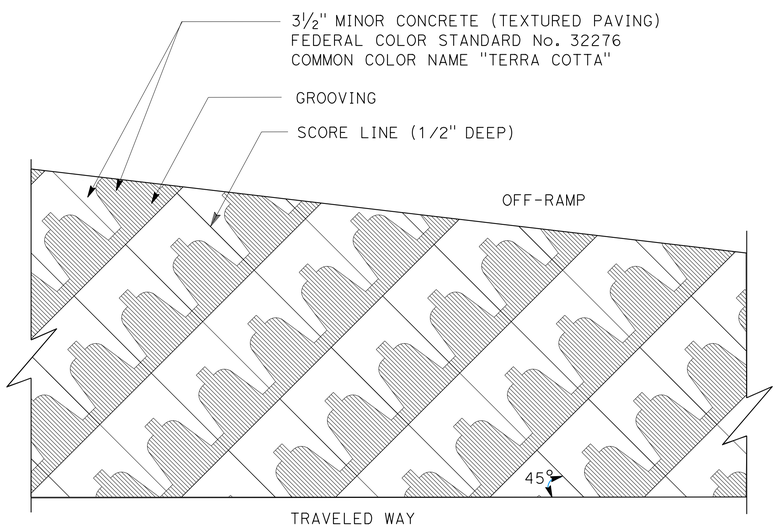

TYPICAL PAVEMENT LAYOUT

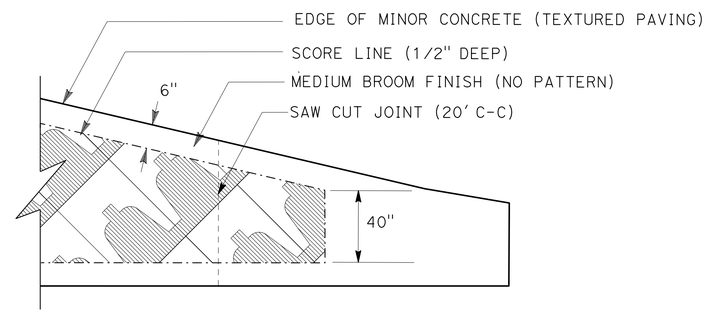

MINIMUM PATTERN DETAIL

MINOR CONCRETE (TEXTURED PAVING) 'MISSION BELL'

CONSTRUCTION DETAILS

NO SCALE

C-28

STATE OF CALIFORNIA - DEPARTMENT OF TRANSPORTATION
Caltrans® LANDSCAPE ARCHITECTURE

SENIOR LANDSCAPE ARCHITECT: PATTY WATANABE

CALCULATED-DESIGNED BY: KATHLEEN LEDESMA
CHECKED BY: TIRSIT KEBEDE

REVISED BY | DATE REVISED

LAST REVISION 00-00-00 | DATE PLOTTED => 24-MAY-2014 | TIME PLOTTED => 05:31

Dist	COUNTY	ROUTE	POST MILES TOTAL PROJECT	SHEET No.	TOTAL SHEETS
07	LA	101	1.8/8.4	37	183

LICENSED LANDSCAPE ARCHITECT

2-24-14
PLANS APPROVAL DATE

LICENSED LANDSCAPE ARCHITECT KATHLEEN LEDESMA No. 5888 Signature 12/31/15 Renewal Date 1/30/14 Date STATE OF CALIFORNIA

THE STATE OF CALIFORNIA OR ITS OFFICERS OR AGENTS SHALL NOT BE RESPONSIBLE FOR THE ACCURACY OR COMPLETENESS OF SCANNED COPIES OF THIS PLAN SHEET.

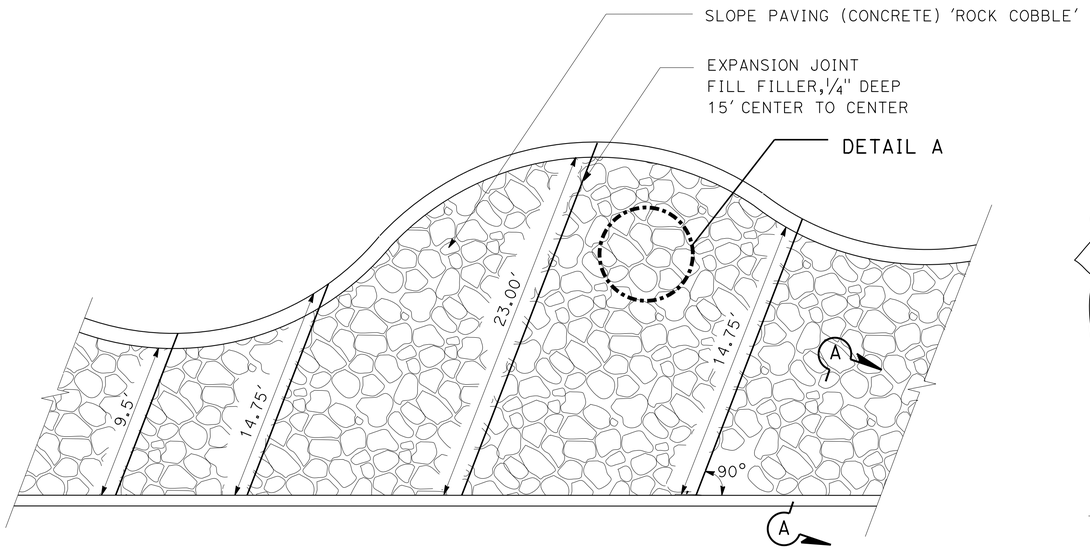

SLOPE PAVING (CONCRETE) 'ROCK COBBLE'
SLOPE PAVING LAYOUT

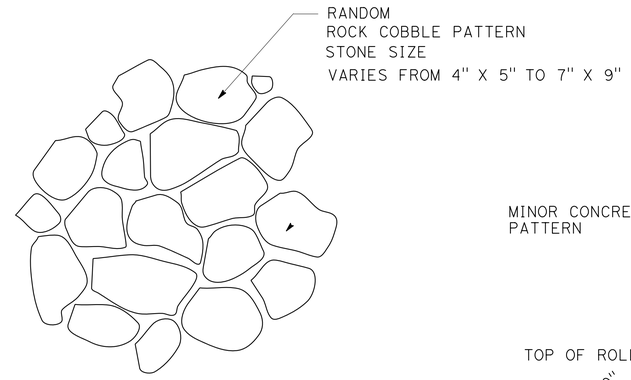

DETAIL A

STAMPED CONCRETE DETAIL

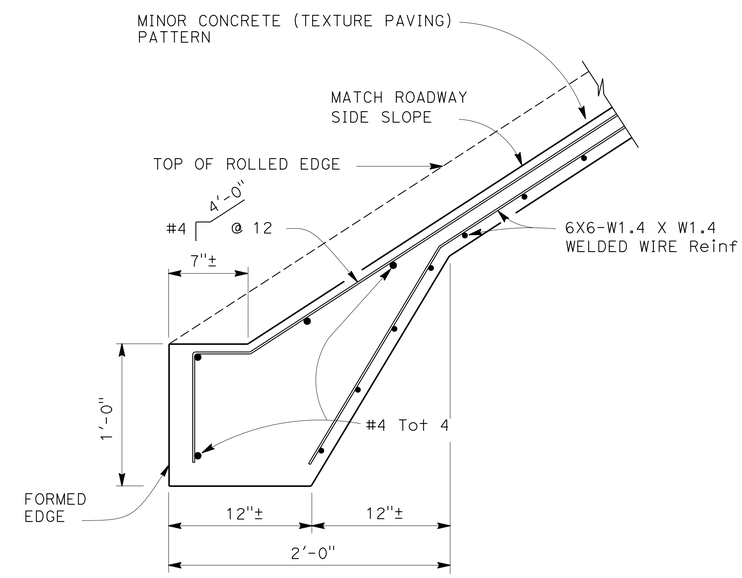

SLOPE PAVING (CONCRETE) 'ROCK COBBLE'
SECTION A-A

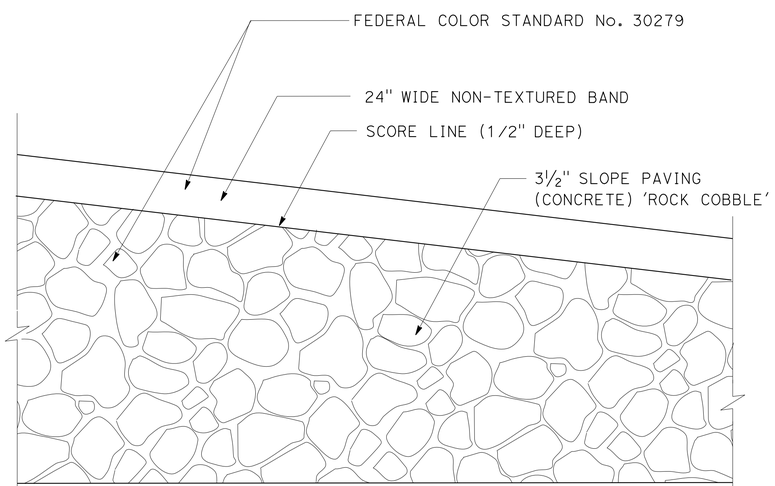

SLOPE PAVING (CONCRETE) 'ROCK COBBLE'
TYPICAL PAVEMENT LAYOUT

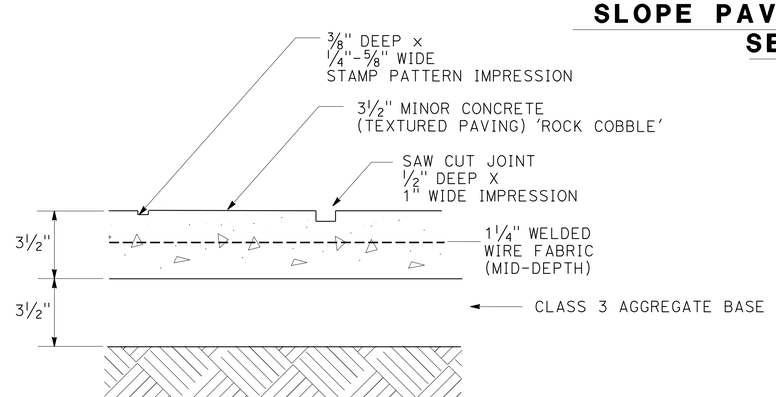

SLOPE PAVING (CONCRETE) 'ROCK COBBLE'
SECTION

CONSTRUCTION DETAILS

NO SCALE

C-29

STATE OF CALIFORNIA - DEPARTMENT OF TRANSPORTATION
Caltrans® LANDSCAPE ARCHITECTURE
SENIOR LANDSCAPE ARCHITECT: PATTY WATANABE
CALCULATED-DESIGNED BY: KATHLEEN LEDESMA
CHECKED BY: TIRSIT KEBEDE
REVISED BY
DATE REVISED

LAST REVISION 00-00-00
DATE PLOTTED => 24-MAY-2014
TIME PLOTTED => 05:31

Dist	COUNTY	ROUTE	POST MILES TOTAL PROJECT	SHEET No.	TOTAL SHEETS
07	LA	101	1.8/8.4	38	183

REGISTERED CIVIL ENGINEER 01-30-14 DATE

2-24-14
PLANS APPROVAL DATE

REGISTERED PROFESSIONAL ENGINEER ESTHER M. KIM No. 48363 Exp. 6/30/14 CIVIL STATE OF CALIFORNIA

THE STATE OF CALIFORNIA OR ITS OFFICERS OR AGENTS SHALL NOT BE RESPONSIBLE FOR THE ACCURACY OR COMPLETENESS OF SCANNED COPIES OF THIS PLAN SHEET.

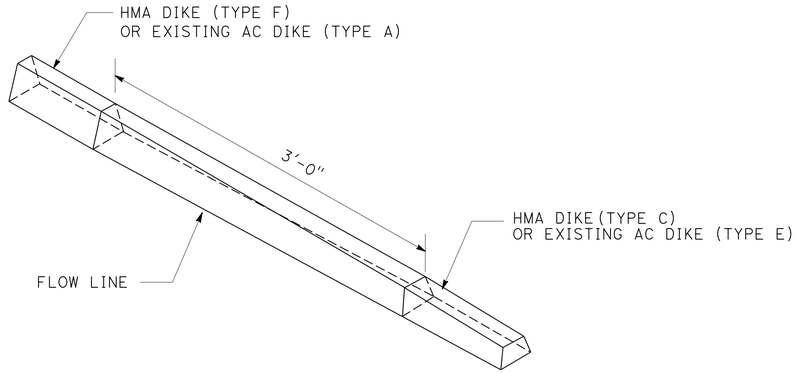

DETAIL D - HMA DIKE TRANSITION

EXISTING TYPE A TO TYPE F OR C
TYPE C TO TYPE F
EXISTING TYPE E TO TYPE F OR C

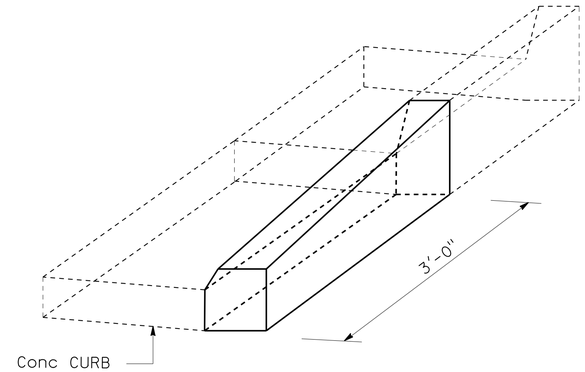

DETAIL E

CONCRETE CURB TRANSITION

NOTES:

1. HOLES IN WEAK POSTS OF TERMINAL SYSTEM (PER MANUFACTURER'S SPECIFICATIONS) MUST BE CONSTRUCTED ABOVE FINISHED GRADE.
2. FOR SECTION LOCATIONS, SEE SHEETS C-31 TO C-34.

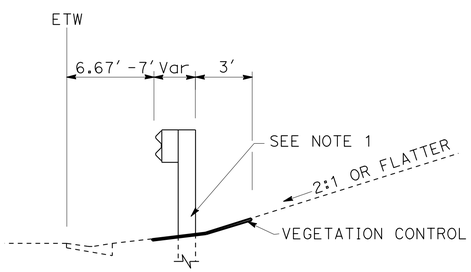

SECTION H-H

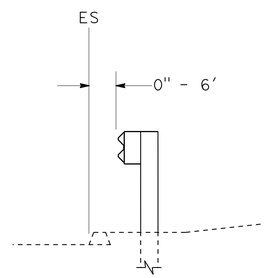

SECTION J-J

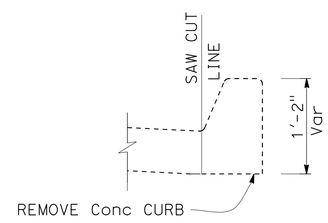

CONCRETE CURB (TYPE A2)

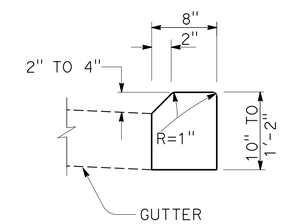

MINOR Conc (CURB)

LEGEND:

SHEET No. OR Std PLAN No.

DETAIL No.

DIRECTION OF TRAVEL

BPA	BEGIN PARABOLA
CAB	Conc ANCHOR BLOCK
EAA	END ANCHOR ASSEMBLY (TYPE SFT)
MTR	TRANSITION RAILING (TYPE WB-31)
TS	TERMINAL SYSTEM

(1) ROADWAY EXCAVATION

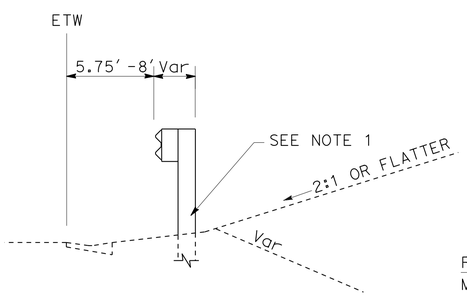

SECTION K-K

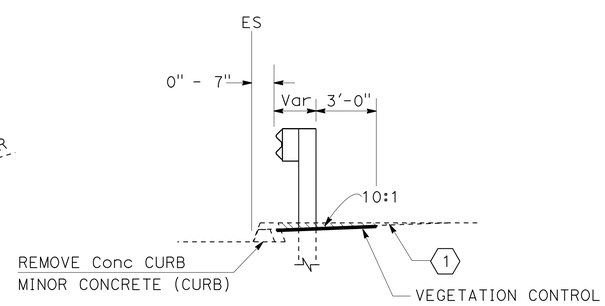

SECTION L-L

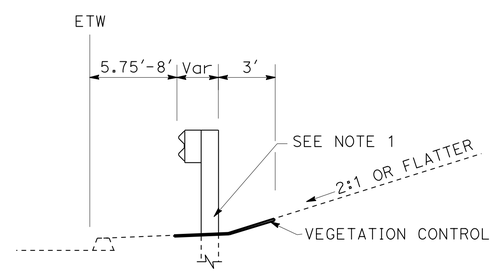

SECTION M-M

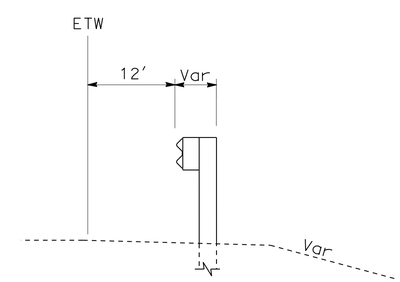

SECTION N-N

CONSTRUCTION DETAILS

NO SCALE

C-30

REVISED BY | DATE REVISED
JAMES M. CANALITA | ESTHER M. KIM
CALCULATED-DESIGNED BY | CHECKED BY
FUNCTIONAL SUPERVISOR
MOHAMMED CHOWDHURY

STATE OF CALIFORNIA - DEPARTMENT OF TRANSPORTATION
Caltrans® TRAFFIC DESIGN

S:\projects\295501\07-295501\729550ga030.dgn

LAST REVISION 00-00-00 | DATE PLOTTED => 24-MAY-2014 TIME PLOTTED => 05:31

Dist	COUNTY	ROUTE	POST MILES TOTAL PROJECT	SHEET No.	TOTAL SHEETS
07	LA	101	1.8/8.4	39	183

REGISTERED CIVIL ENGINEER 1-30-14 DATE

2-24-14
PLANS APPROVAL DATE

REGISTERED PROFESSIONAL ENGINEER ESTHER M. KIM No. 48363 Exp. 6/30/14 CIVIL STATE OF CALIFORNIA

THE STATE OF CALIFORNIA OR ITS OFFICERS OR AGENTS SHALL NOT BE RESPONSIBLE FOR THE ACCURACY OR COMPLETENESS OF SCANNED COPIES OF THIS PLAN SHEET.

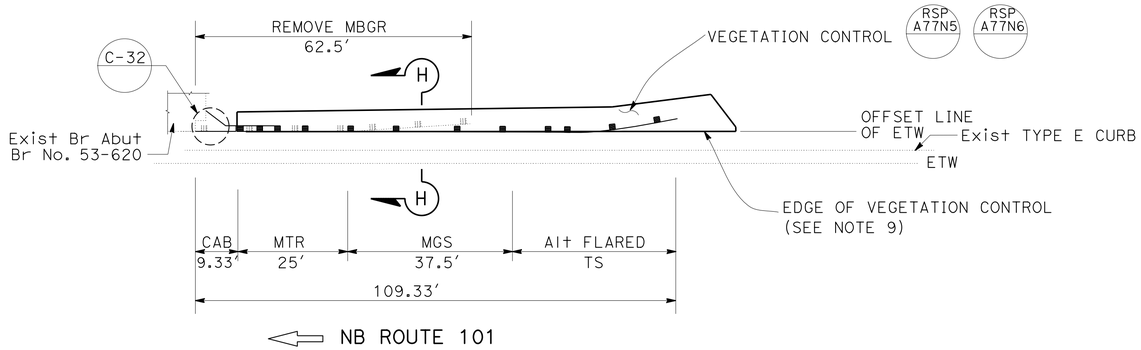

1 PM 2.06 (EDGEWARE Rd OC)

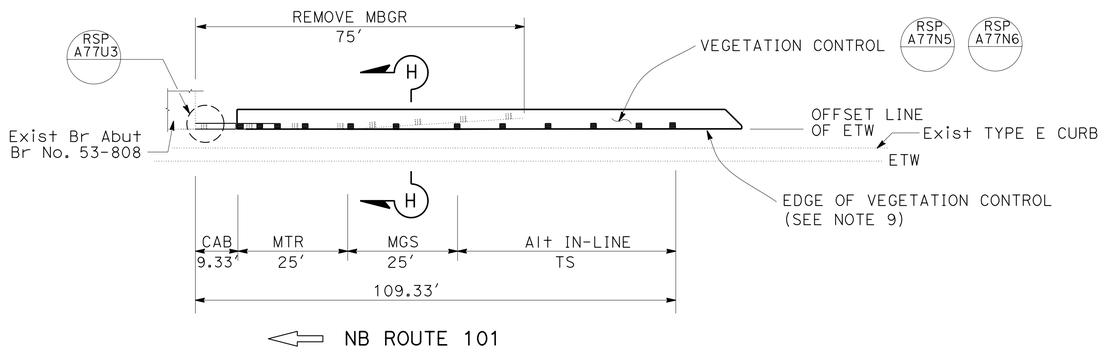

2 PM 2.59 (BELMONT Ave Ped OC)

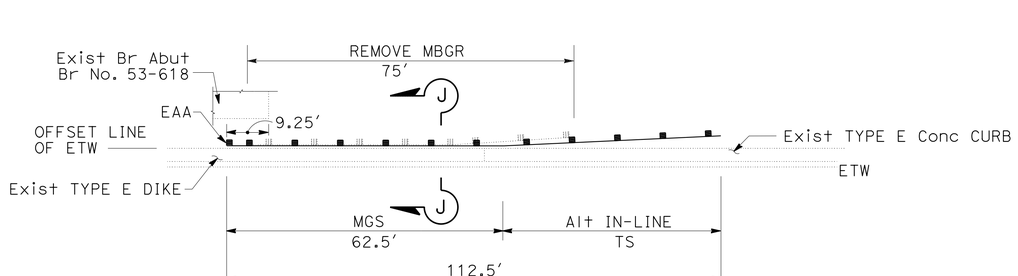

3 PM 2.71 (BONNIE BRAE St OC)

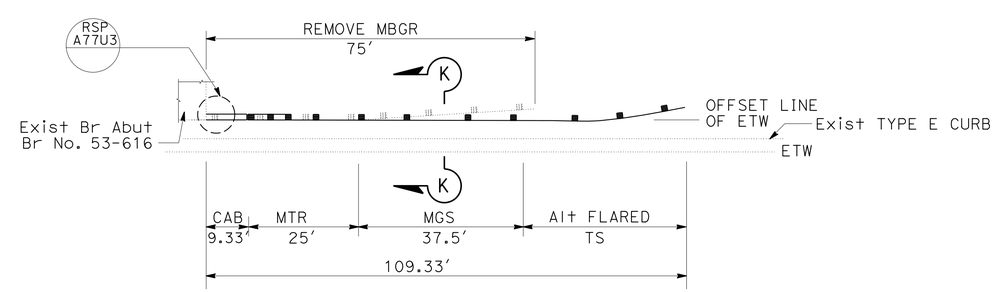

4 PM 3.01 (ROSEMONT Ave OC)

NOTES:

1. FOR SECTIONS, SEE SHEET C-30.
2. INSTALL GUARD RAIL DELINEATOR AT THE BEGINNING AND ENDS OF MGS.
3. R/W NOT SHOWN.
4. EXISTING UTILITY FACILITIES HAVE NOT BEEN PLOTTED ON THESE PLANS.
5. EXISTING DRAINAGE INLETS HAVE NOT BEEN PLOTTED ON THESE PLANS.
6. * HMA DIKE TRANSITION AND CONCRETE CURB TRANSITION, SEE SHEET C-30.
7. FOR DETAILS NOT SHOWN, SEE STANDARD PLANS AND REVISED STANDARD PLANS.
8. DIMENSIONS MUST BE VERIFIED IN THE FIELD BEFORE FABRICATING END CONNECTIONS TO CONFORM WITH EXISTING PAVED CONDITIONS.
9. VEGETATION CONTROL MUST BE CONSTRUCTED FLUSH WITH THE FRONT FACE OF RAILING.

CONSTRUCTION DETAILS

NO SCALE

C-31

REVISED BY | DATE REVISED
JAMES M. CANALITA | ESTHER M. KIM
CALCULATED-DESIGNED BY | CHECKED BY
FUNCTIONAL SUPERVISOR: MOHAMMED CHOWDHURY

STATE OF CALIFORNIA - DEPARTMENT OF TRANSPORTATION
Caltrans TRAFFIC DESIGN

S:\projects\295501\07-295501\729550ga031.dgn

LAST REVISION 00-00-00 | DATE PLOTTED => 24-MAY-2014 | TIME PLOTTED => 05:31

Dist	COUNTY	ROUTE	POST MILES TOTAL PROJECT	SHEET No.	TOTAL SHEETS
07	LA	101	1.8/8.4	40	183

REGISTERED CIVIL ENGINEER 1-30-14 DATE

2-24-14
PLANS APPROVAL DATE

REGISTERED PROFESSIONAL ENGINEER ESTHER M. KIM No. 48363 Exp. 6/30/14 CIVIL STATE OF CALIFORNIA

THE STATE OF CALIFORNIA OR ITS OFFICERS OR AGENTS SHALL NOT BE RESPONSIBLE FOR THE ACCURACY OR COMPLETENESS OF SCANNED COPIES OF THIS PLAN SHEET.

NOTE:

1. FOR NOTES, SEE SHEET C-31.

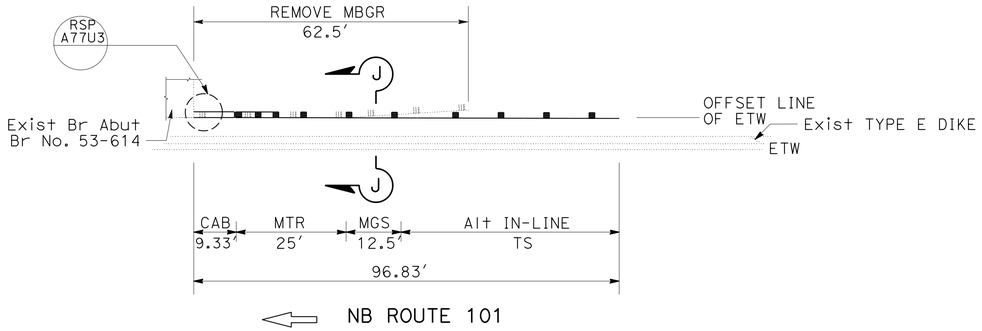

5 PM 3.34 (BENTON WAY OC)

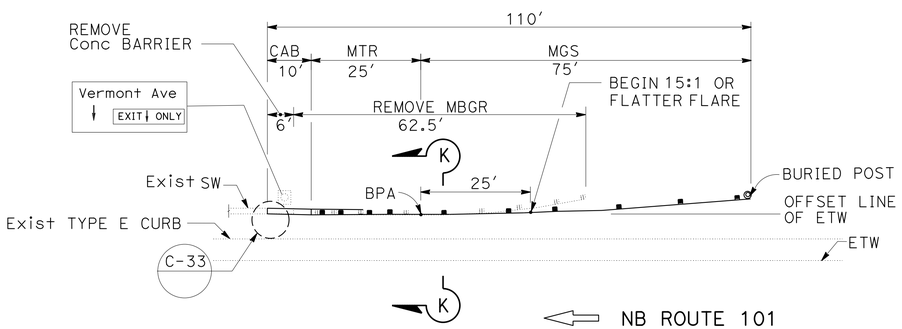

6 PM 4.29 (VERMONT Ave SOUNDWALL)

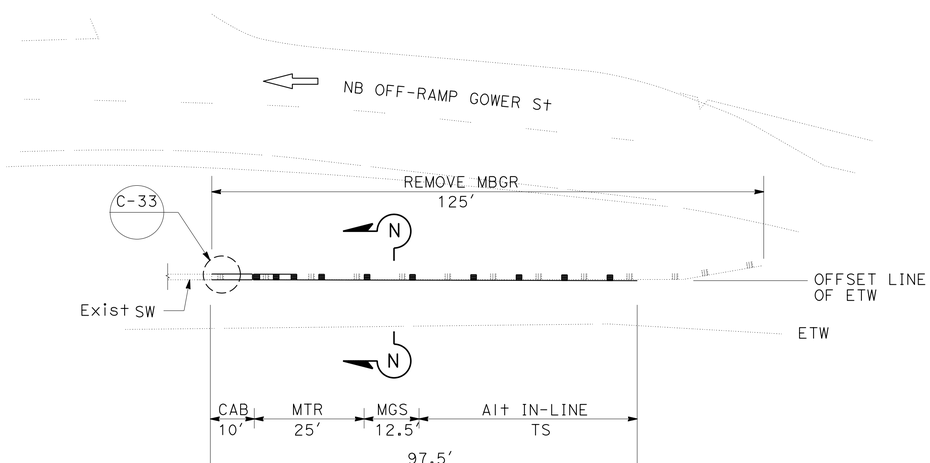

7 PM 6.81 (NB OFF-RAMP GOWER St @ GORE)

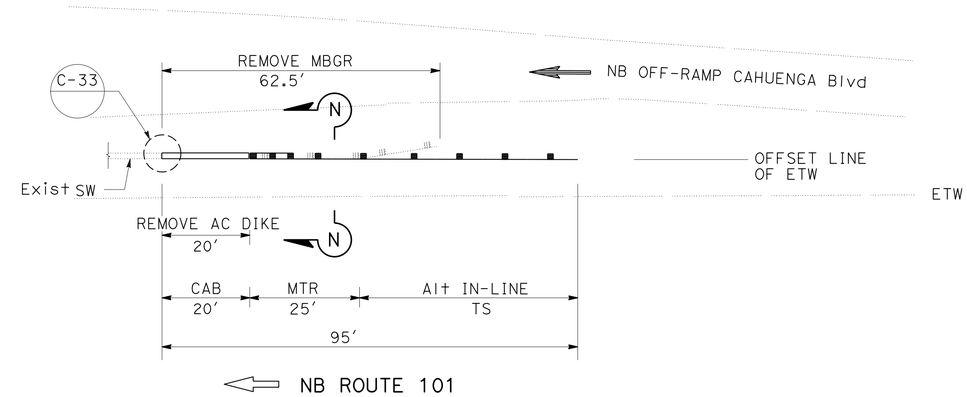

8 PM 7.39 (NB OFF-RAMP CAHUENGA Blvd @ GORE)

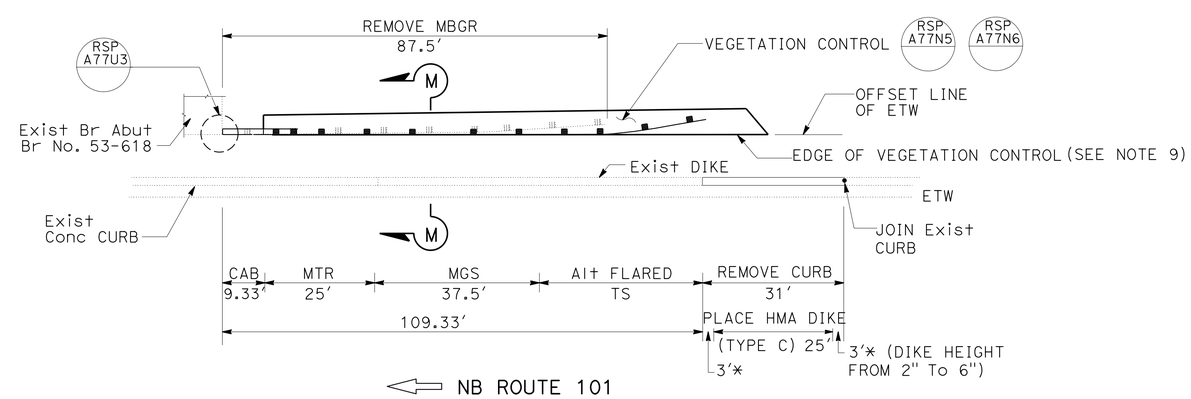

9 PM 2.71 (BONNIE BRAE St OC)

CONSTRUCTION DETAILS

NO SCALE

C-32

STATE OF CALIFORNIA - DEPARTMENT OF TRANSPORTATION
Caltrans TRAFFIC DESIGN

FUNCTIONAL SUPERVISOR: MOHAMMED CHOWDHURY
CALCULATED-DESIGNED BY: JAMES M. CANALITA
CHECKED BY: ESTHER M. KIM
REVISED BY
DATE REVISED

S:\projects\295501\07-295501\729550ga032.dgn

LAST REVISION 00-00-00
DATE PLOTTED => 24-MAY-2014
TIME PLOTTED => 05:31

Dist	COUNTY	ROUTE	POST MILES TOTAL PROJECT	SHEET No.	TOTAL SHEETS
07	LA	101	1.8/8.4	41	183

REGISTERED CIVIL ENGINEER 1-30-14 DATE

2-24-14
PLANS APPROVAL DATE

REGISTERED PROFESSIONAL ENGINEER ESTHER M. KIM No. 48363 Exp. 6/30/14 CIVIL STATE OF CALIFORNIA

THE STATE OF CALIFORNIA OR ITS OFFICERS OR AGENTS SHALL NOT BE RESPONSIBLE FOR THE ACCURACY OR COMPLETENESS OF SCANNED COPIES OF THIS PLAN SHEET.

NOTES:

1. FOR NOTES, SEE SHEET C-31.

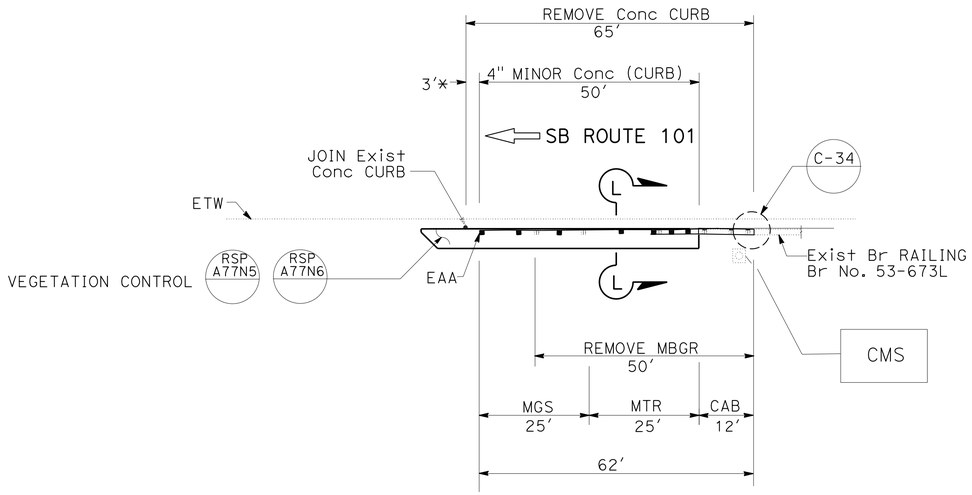

10 PM 4.79 (MELROSE Ave UC)

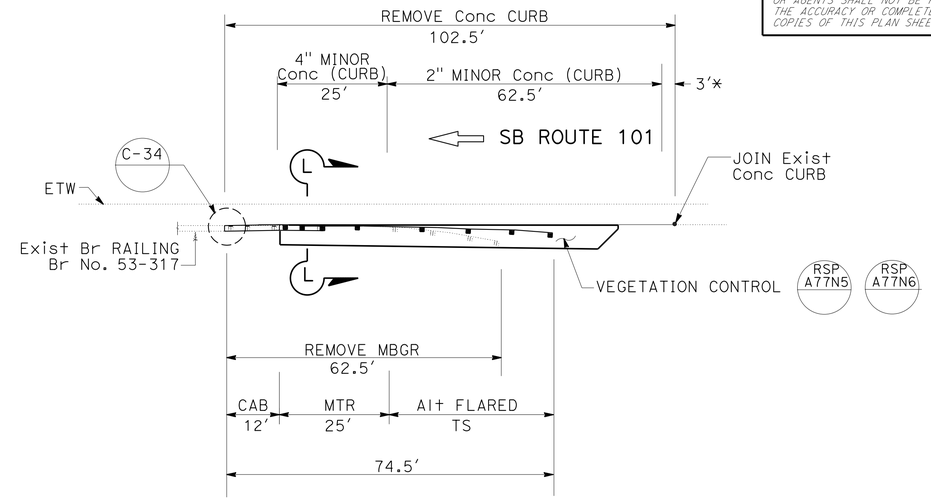

11 PM 4.79 (CLINTON St BRIDGE)

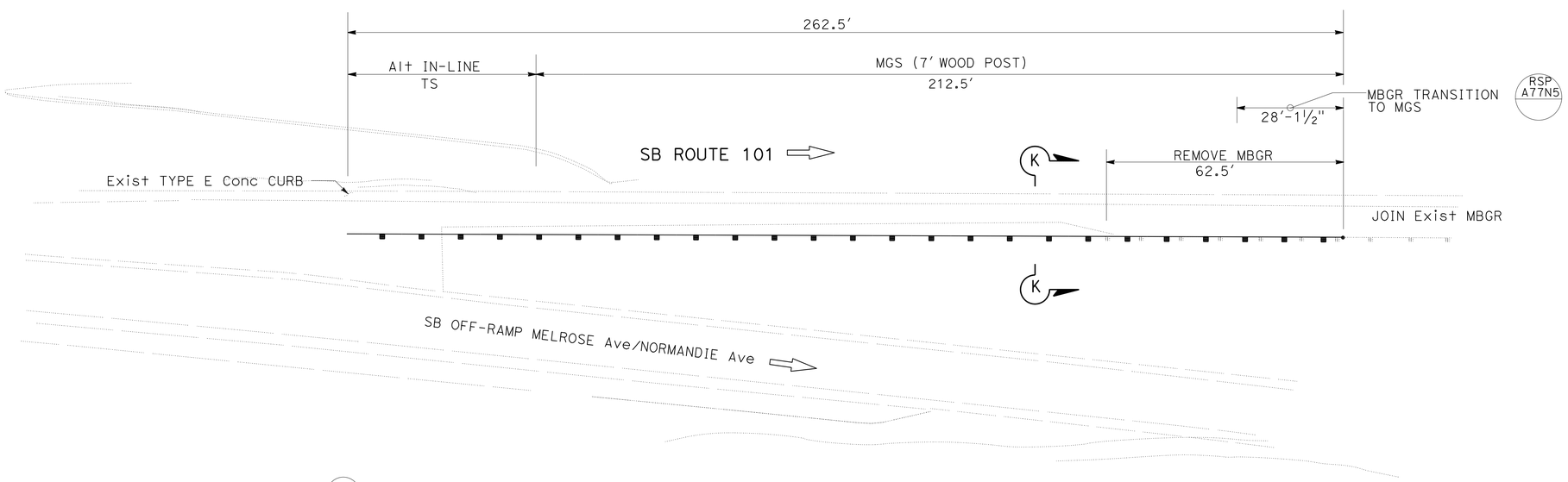

12 PM 5.16 (SB OFF-RAMP MELROSE Ave/NORMANDIE Ave @ GORE)

CONSTRUCTION DETAILS

NO SCALE

C-33

REVISED BY | DATE REVISED

JAMES M. CANALITA | ESTHER M. KIM

CALCULATED-DESIGNED BY | CHECKED BY

FUNCTIONAL SUPERVISOR: MOHAMMED CHOWDHURY

STATE OF CALIFORNIA - DEPARTMENT OF TRANSPORTATION

Caltrans TRAFFIC DESIGN

S:\projects\295501\07-295501\729550ga033.dgn

LAST REVISION 00-00-00 | DATE PLOTTED => 24-MAY-2014 | TIME PLOTTED => 05:31

Dist	COUNTY	ROUTE	POST MILES TOTAL PROJECT	SHEET No.	TOTAL SHEETS
07	LA	101	1.8/8.4	42	183

REGISTERED CIVIL ENGINEER 1-30-14 DATE

2-24-14
PLANS APPROVAL DATE

REGISTERED PROFESSIONAL ENGINEER ESTHER M. KIM No. 48363 Exp. 6/30/14 CIVIL STATE OF CALIFORNIA

THE STATE OF CALIFORNIA OR ITS OFFICERS OR AGENTS SHALL NOT BE RESPONSIBLE FOR THE ACCURACY OR COMPLETENESS OF SCANNED COPIES OF THIS PLAN SHEET.

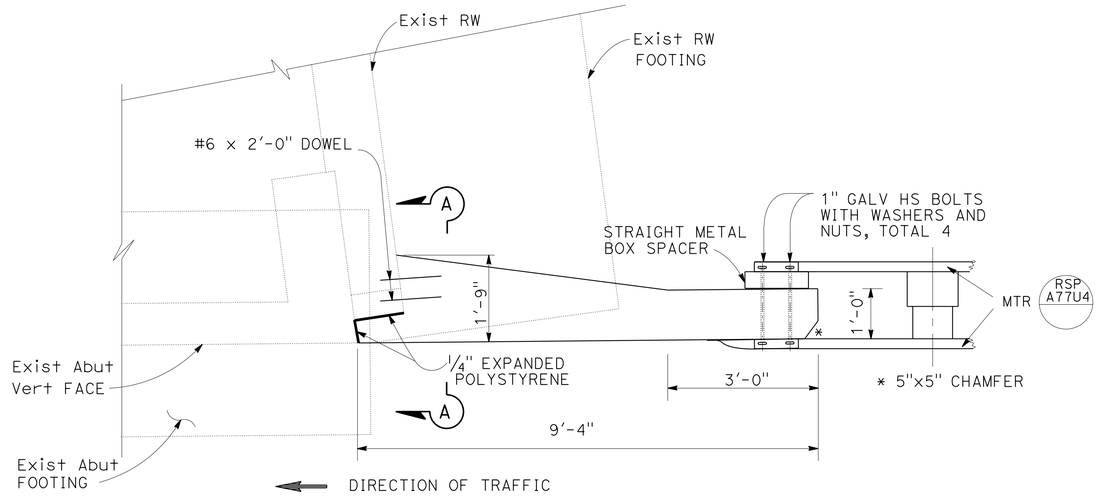

PLAN

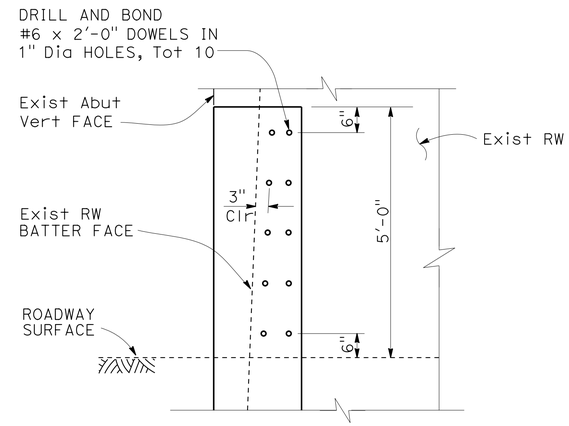

SECTION A-A

NOTES:

1. FOR NOTES, SEE SHEET C-31.
2. WHERE THE END OF THE RETAINING WALL FOOTING EXTENDS UNDER THE TRASITION CONCRETE ANCHOR BLOCK, PROVIDE 1" EXPANDED POLYSTYRENE MATERIAL BETWEEN RETAINING WALL FOOTING AND THE BASE OF CONCRETE ANCHOR BLOCK.

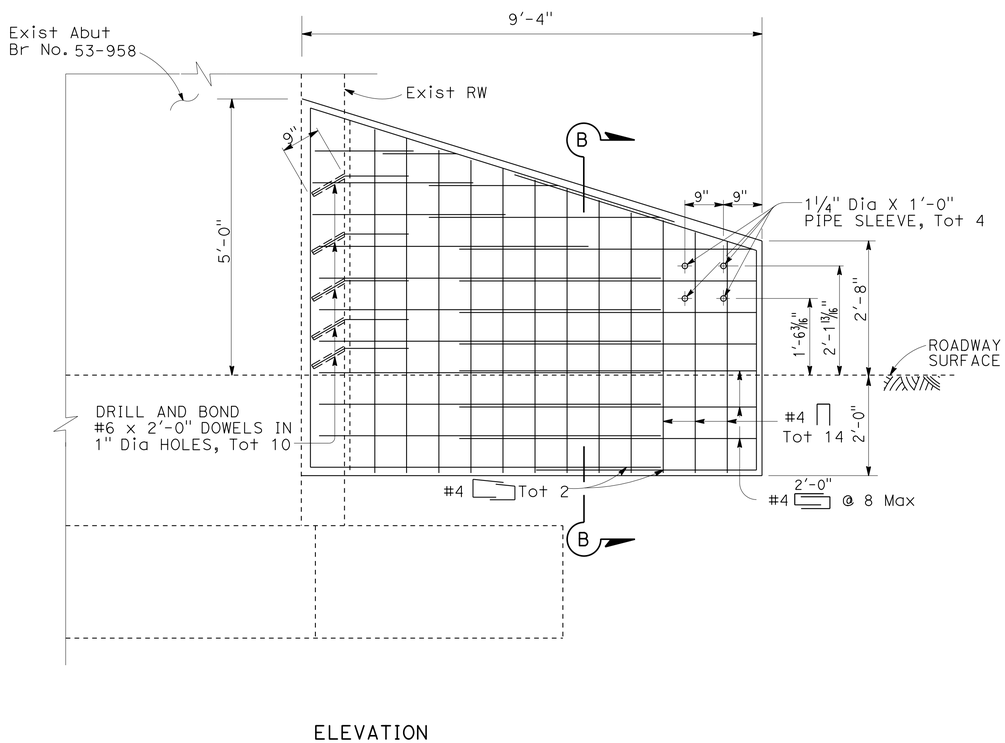

ELEVATION

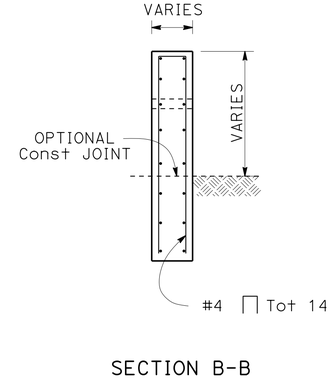

SECTION B-B

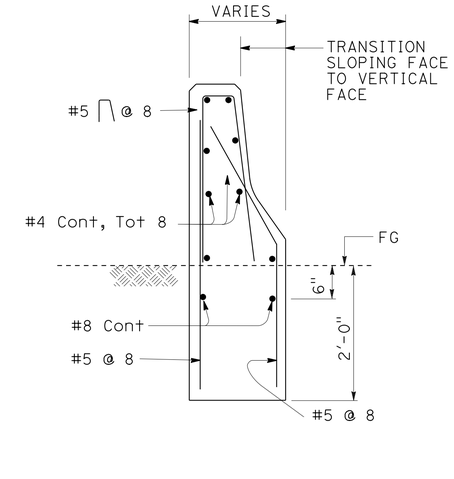

SECTION C-C

LOCATION 1

CONSTRUCTION DETAILS

NO SCALE

C-34

REVISED BY	DATE REVISED

CALCULATED-DESIGNED BY	CHECKED BY
JAMES M. CANALITA	ESTHER M. KIM

FUNCTIONAL SUPERVISOR: MOHAMMED CHOWDHURY

STATE OF CALIFORNIA - DEPARTMENT OF TRANSPORTATION
Caltrans® TRAFFIC DESIGN

S:\projects\295501\07-295501\729550ga034.dgn

LAST REVISION 00-00-00 | DATE PLOTTED => 24-MAY-2014 | TIME PLOTTED => 05:31

Dist	COUNTY	ROUTE	POST MILES TOTAL PROJECT	SHEET No.	TOTAL SHEETS
07	LA	101	1.8/8.4	43	183

REGISTERED CIVIL ENGINEER 11-14-14 DATE

2-24-14
PLANS APPROVAL DATE

REGISTERED PROFESSIONAL ENGINEER ESTHER M. KIM No. 48363 Exp. 6/30/14 CIVIL STATE OF CALIFORNIA

THE STATE OF CALIFORNIA OR ITS OFFICERS OR AGENTS SHALL NOT BE RESPONSIBLE FOR THE ACCURACY OR COMPLETENESS OF SCANNED COPIES OF THIS PLAN SHEET.

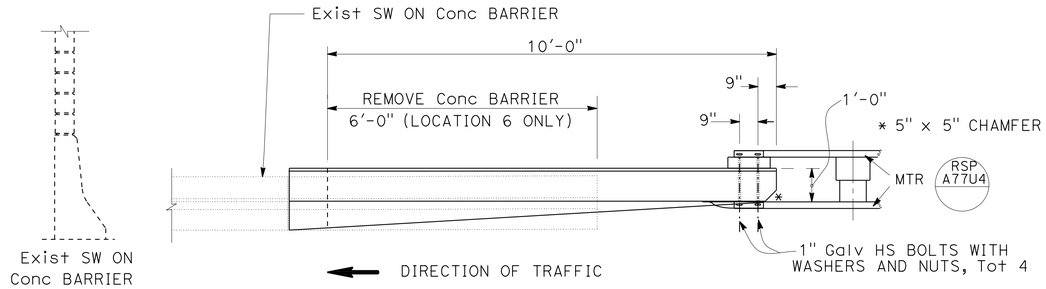

PLAN

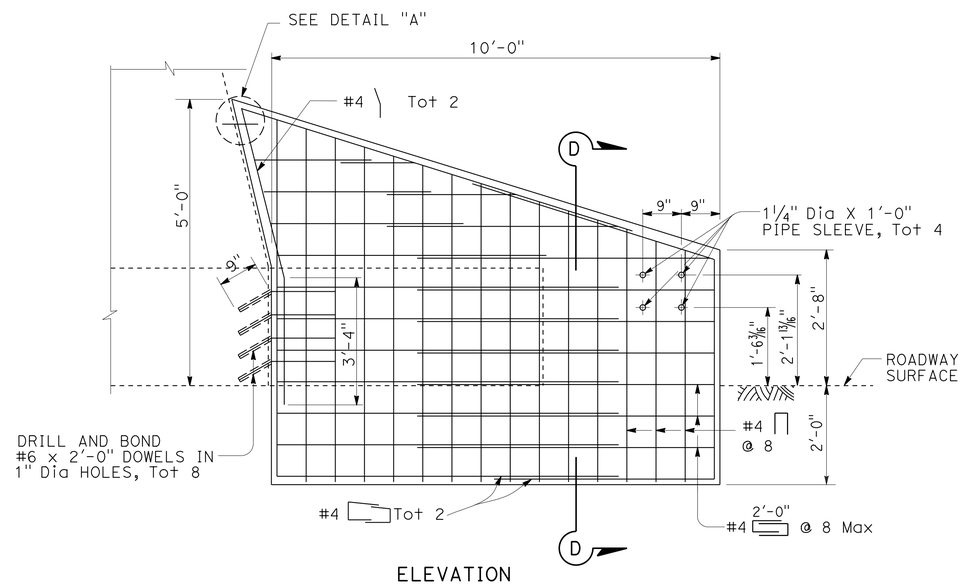

ELEVATION

LOCATION 6 7

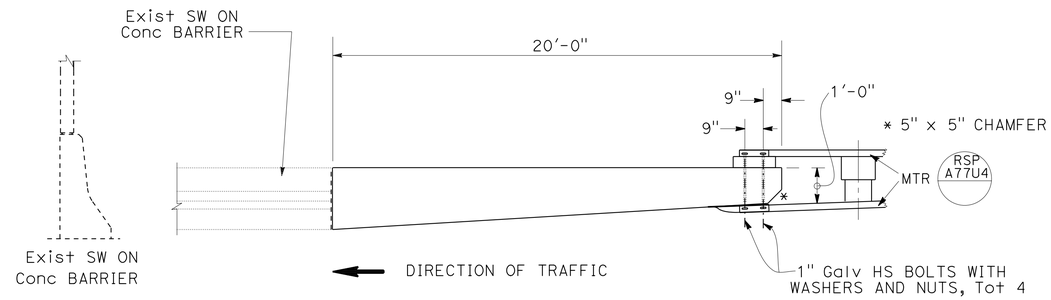

PLAN

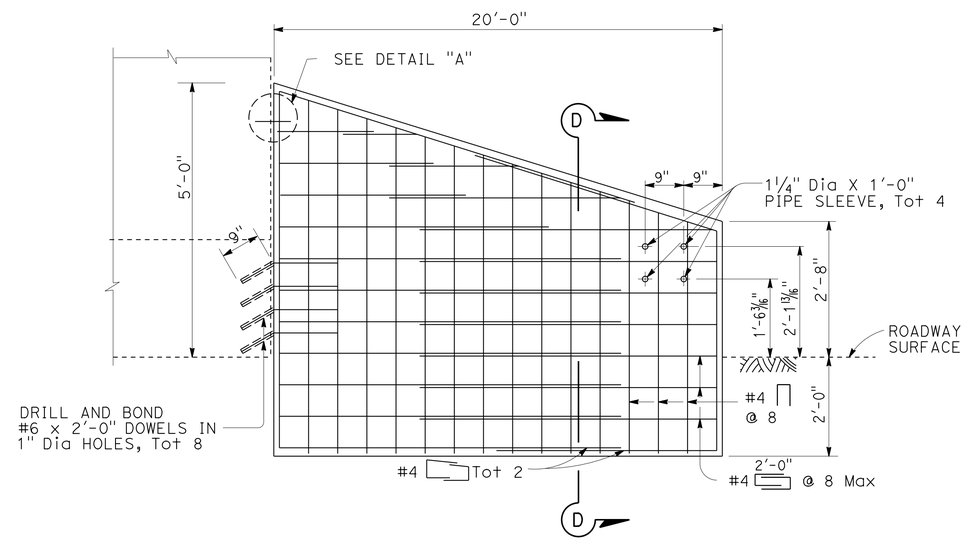

ELEVATION

LOCATION 8

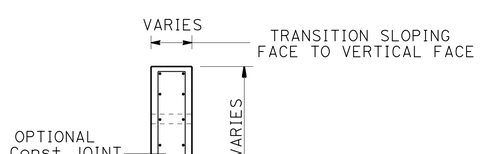

SECTION D-D

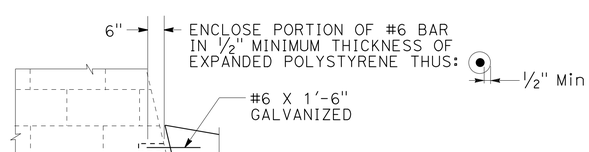

DETAIL A

CONSTRUCTION DETAILS

NO SCALE

C-35

STATE OF CALIFORNIA - DEPARTMENT OF TRANSPORTATION
Caltrans® TRAFFIC DESIGN

FUNCTIONAL SUPERVISOR: MOHAMMED CHOWDHURY
CALCULATED-DESIGNED BY: JAMES M. CANALITA
CHECKED BY: ESTHER M. KIM
REVISED BY
DATE REVISED

S:\projects\295501\07-295501\729550ga035.dgn

LAST REVISION 00-00-00
DATE PLOTTED => 24-MAY-2014
TIME PLOTTED => 05:31

Dist	COUNTY	ROUTE	POST MILES TOTAL PROJECT	SHEET No.	TOTAL SHEETS
07	LA	101	1.8/8.4	44	183

REGISTERED CIVIL ENGINEER 1-30-14 DATE

2-24-14
PLANS APPROVAL DATE

REGISTERED PROFESSIONAL ENGINEER ESTHER M. KIM No. 48363 Exp. 6/30/14 CIVIL STATE OF CALIFORNIA

THE STATE OF CALIFORNIA OR ITS OFFICERS OR AGENTS SHALL NOT BE RESPONSIBLE FOR THE ACCURACY OR COMPLETENESS OF SCANNED COPIES OF THIS PLAN SHEET.

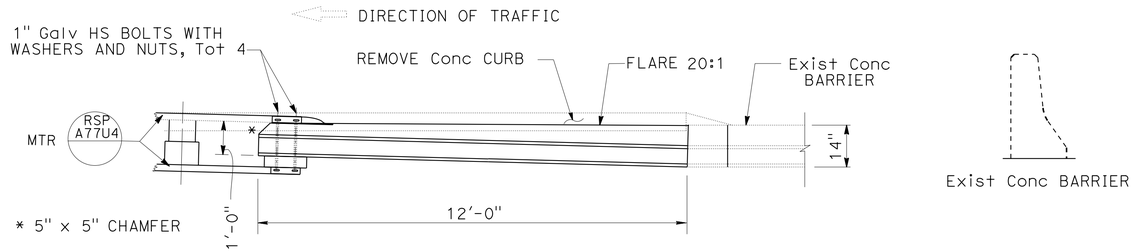

PLAN

LOCATION 10

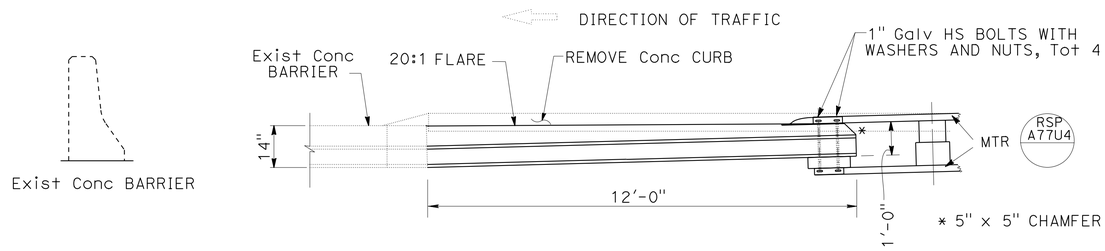

PLAN

LOCATION 11

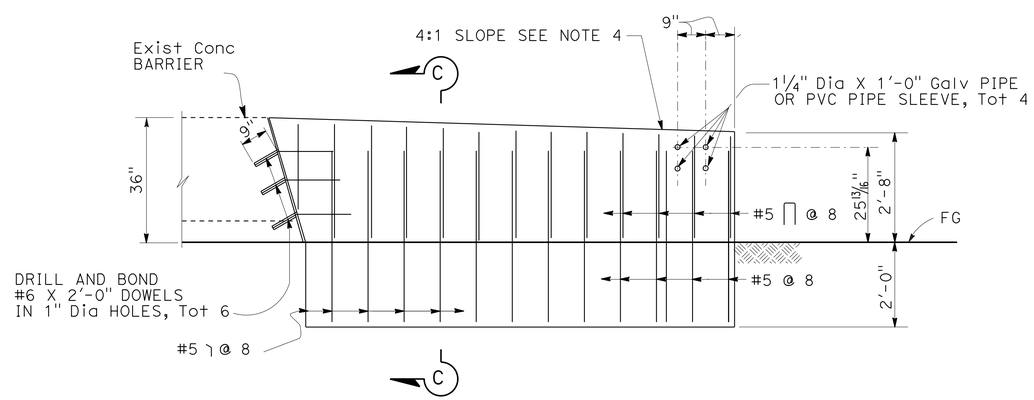

ELEVATION

LOCATION 11

MIRROR FOR LOCATION 10

NOTES:

1. FOR NOTES, SEE SHEET C-31.
2. FOR SECTION C-C, SEE SHEET C-34.

CONSTRUCTION DETAILS

NO SCALE

C-36

REVISED BY | DATE REVISED
JAMES M. CANALITA | ESTHER M. KIM
CALCULATED-DESIGNED BY | CHECKED BY
FUNCTIONAL SUPERVISOR
MOHAMMED CHOWDHURY

STATE OF CALIFORNIA - DEPARTMENT OF TRANSPORTATION
Caltrans® TRAFFIC DESIGN

S:\projects\295501\07-295501\729550ga036.dgn

LAST REVISION 00-00-00 | DATE PLOTTED => 24-MAY-2014 | TIME PLOTTED => 05:31

Dist	COUNTY	ROUTE	POST MILES TOTAL PROJECT	SHEET No.	TOTAL SHEETS
07	LA	101	1.8/8.4	45	183

REGISTERED CIVIL ENGINEER 1-30-14 DATE

2-24-14
PLANS APPROVAL DATE

REGISTERED PROFESSIONAL ENGINEER MICHAEL DUONG No. 73425 Exp. 12-31-14 CIVIL STATE OF CALIFORNIA

THE STATE OF CALIFORNIA OR ITS OFFICERS OR AGENTS SHALL NOT BE RESPONSIBLE FOR THE ACCURACY OR COMPLETENESS OF SCANNED COPIES OF THIS PLAN SHEET.

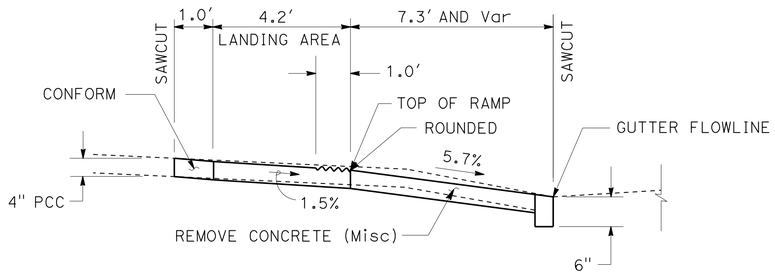

SECTION A-A

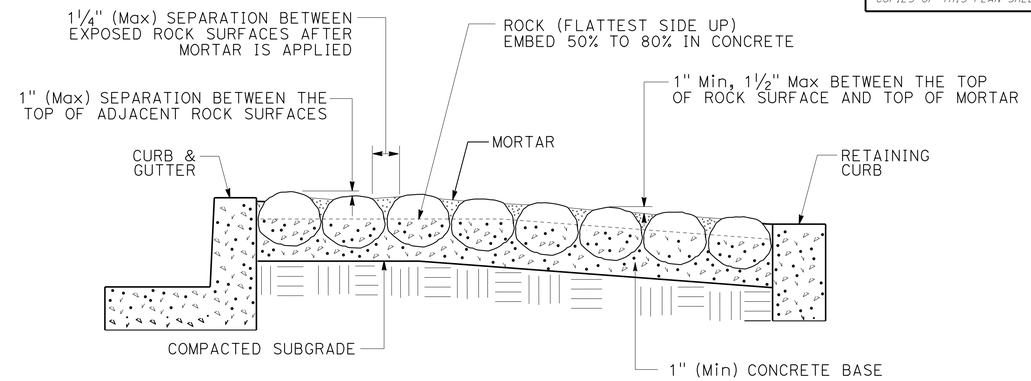

SECTION

ROCK BLANKET

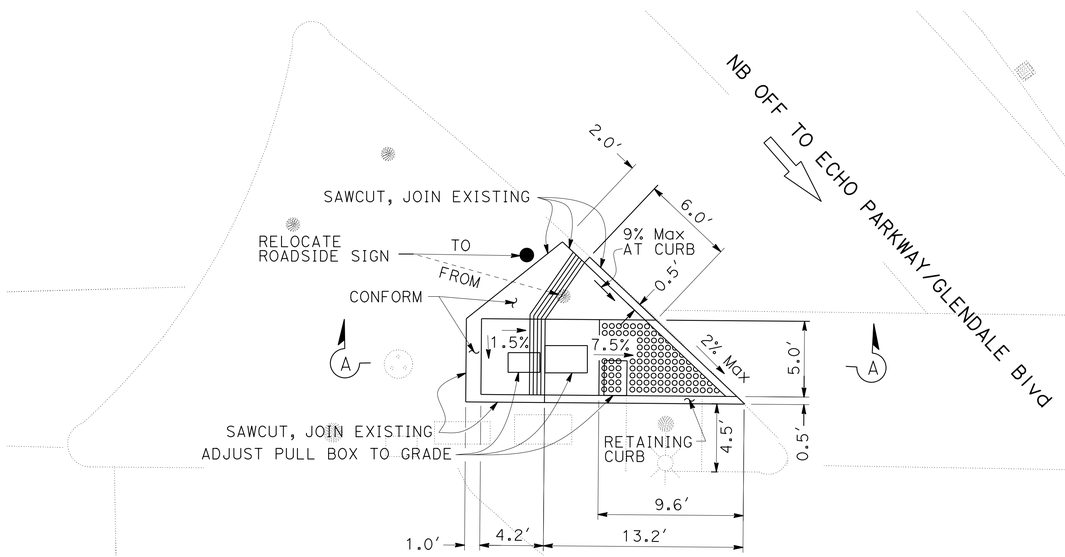

PLAN

CURB RAMP Loc 1CR
(CASE G MODIFIED)

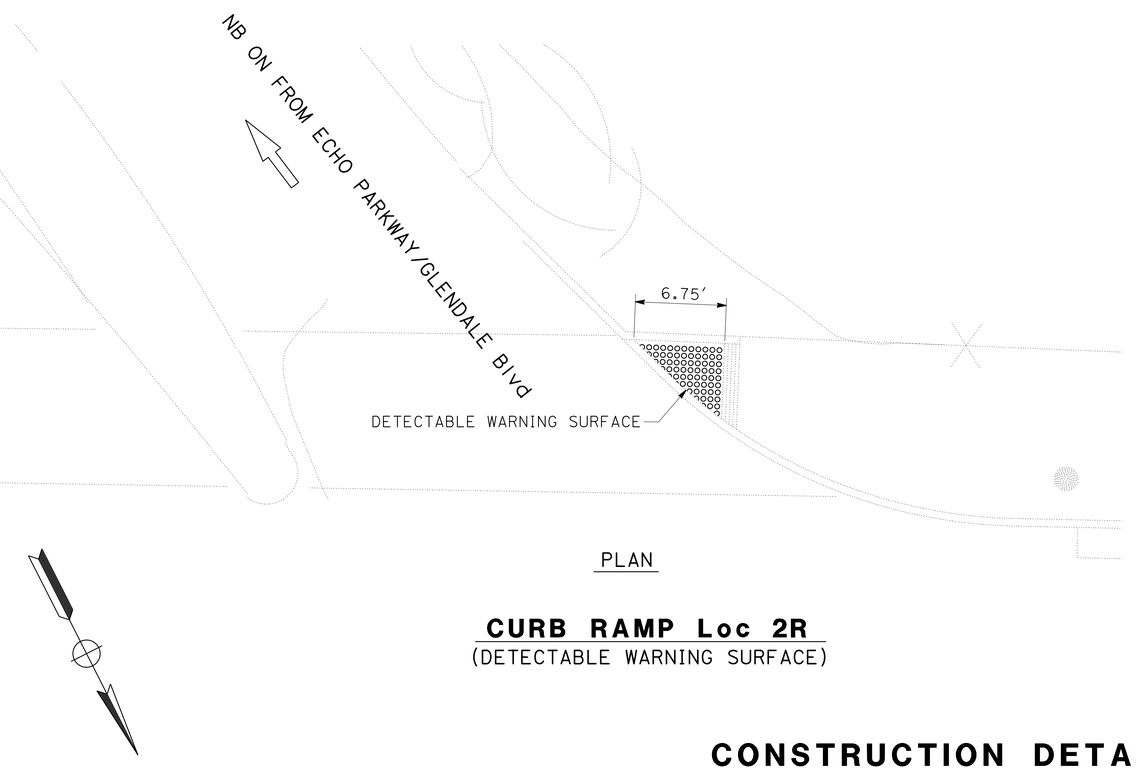

PLAN

CURB RAMP Loc 2R
(DETECTABLE WARNING SURFACE)

CONSTRUCTION DETAILS

NO SCALE

C-37

STATE OF CALIFORNIA - DEPARTMENT OF TRANSPORTATION
Caltrans MAINTENANCE ENGINEERING

FUNCTIONAL SUPERVISOR: KEVIN KWAN
CALCULATED-DESIGNED BY: MICHAEL DUONG
CHECKED BY: CHARLIE TRUONG
REVISED BY
DATE REVISED

LAST REVISION 00-00-00
DATE PLOTTED => 24-MAY-2014
TIME PLOTTED => 05:31

Dist	COUNTY	ROUTE	POST MILES TOTAL PROJECT	SHEET No.	TOTAL SHEETS
07	LA	101	1.8/8.4	46	183

REGISTERED CIVIL ENGINEER 1-30-14 DATE

2-24-14
PLANS APPROVAL DATE

REGISTERED PROFESSIONAL ENGINEER CHARLIE TRUONG No. 69881 Exp. 9-30-14 CIVIL STATE OF CALIFORNIA

THE STATE OF CALIFORNIA OR ITS OFFICERS OR AGENTS SHALL NOT BE RESPONSIBLE FOR THE ACCURACY OR COMPLETENESS OF SCANNED COPIES OF THIS PLAN SHEET.

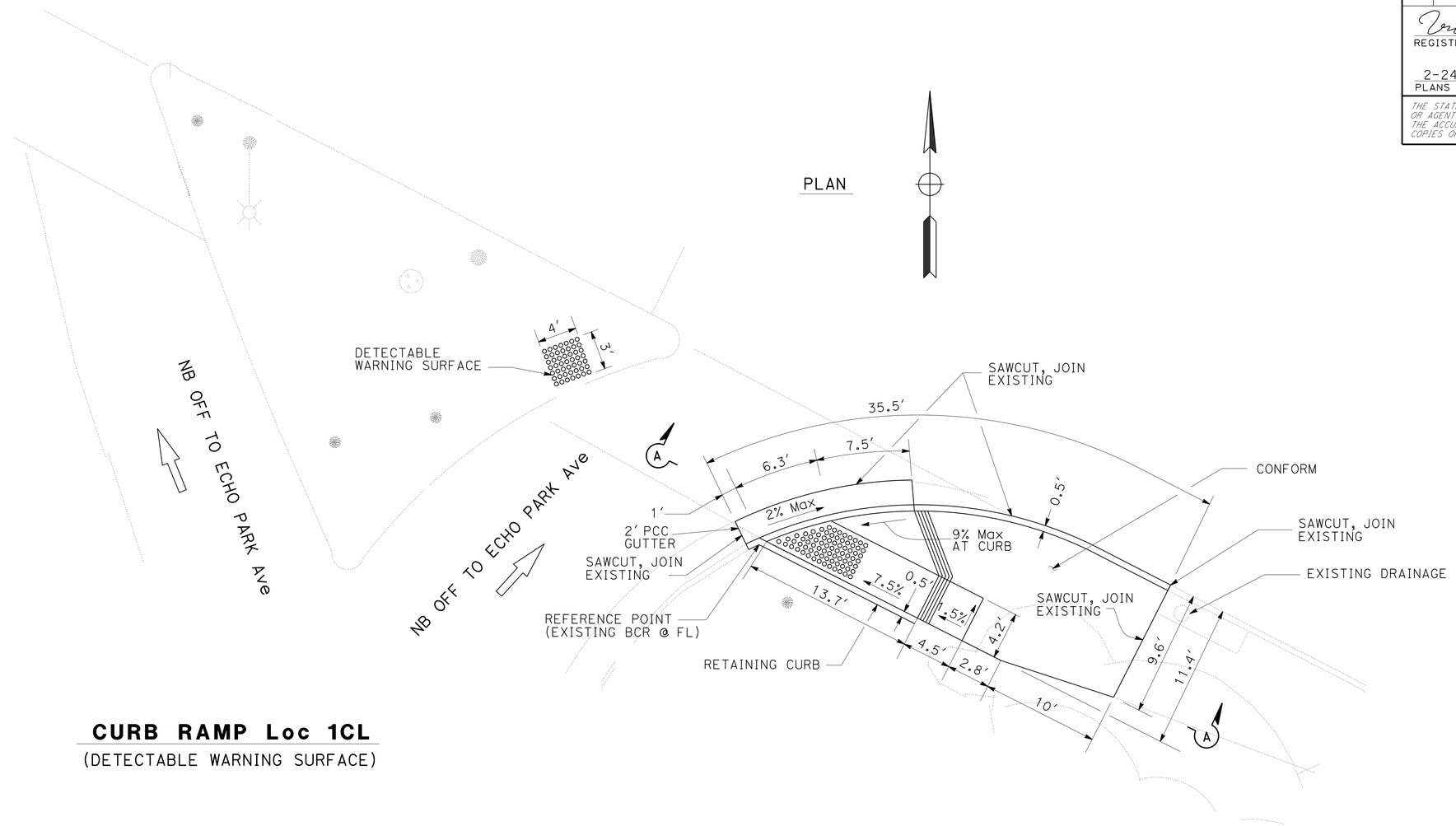

CURB RAMP Loc 1CL
(DETECTABLE WARNING SURFACE)

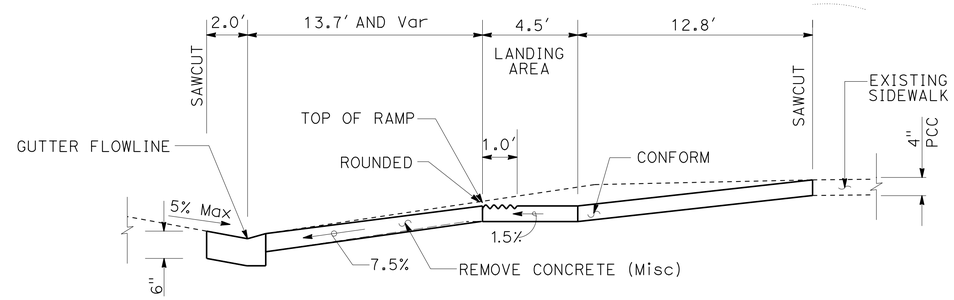

SECTION A-A

CURB RAMP Loc 1R
(CASE G)

CONSTRUCTION DETAILS
NO SCALE

C-38

STATE OF CALIFORNIA - DEPARTMENT OF TRANSPORTATION
Caltrans MAINTENANCE ENGINEERING

FUNCTIONAL SUPERVISOR: KEVIN KWAN

CALCULATED-DESIGNED BY: CHARLIE TRUONG
CHECKED BY: KEVIN KWAN

REVISED BY | DATE REVISED

LAST REVISION 00-00-00 | DATE PLOTTED => 24-MAY-2014 | TIME PLOTTED => 05:31

Dist	COUNTY	ROUTE	POST MILES TOTAL PROJECT	SHEET No.	TOTAL SHEETS
07	LA	101	1.8/8.4	47	183

REGISTERED CIVIL ENGINEER 1-30-14 DATE

2-24-14
PLANS APPROVAL DATE

REGISTERED PROFESSIONAL ENGINEER CHARLIE TRUONG No. 69881 Exp. 9-30-14 CIVIL STATE OF CALIFORNIA

THE STATE OF CALIFORNIA OR ITS OFFICERS OR AGENTS SHALL NOT BE RESPONSIBLE FOR THE ACCURACY OR COMPLETENESS OF SCANNED COPIES OF THIS PLAN SHEET.

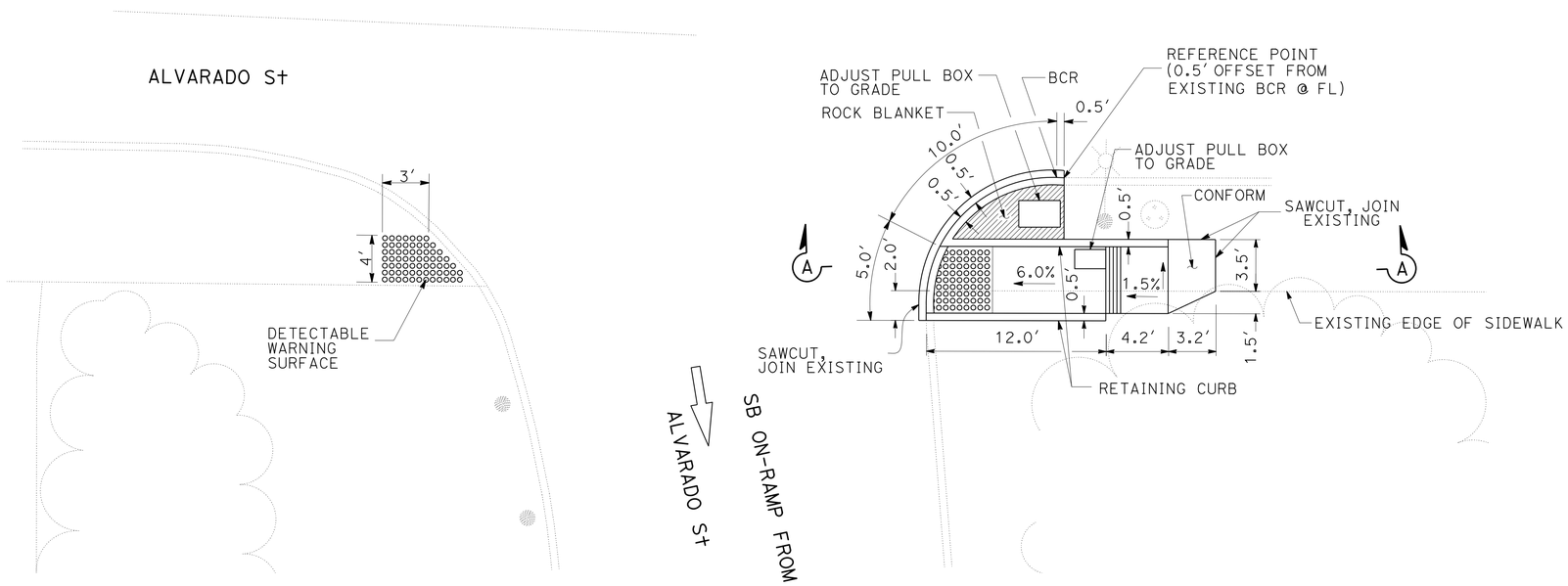

PLAN

CURB RAMP Loc 5R
(DETECTABLE WARNING SURFACE)

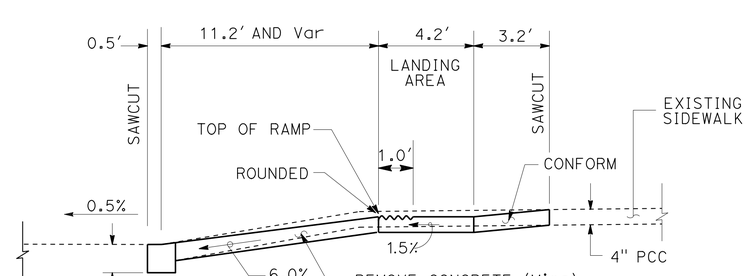

SECTION A-A

CURB RAMP Loc 5L
(CASE F)

CONSTRUCTION DETAILS

NO SCALE

C-39

STATE OF CALIFORNIA - DEPARTMENT OF TRANSPORTATION
Caltrans MAINTENANCE ENGINEERING

FUNCTIONAL SUPERVISOR: KEVIN KWAN
CALCULATED-DESIGNED BY: CHARLIE TRUONG
CHECKED BY: KEVIN KWAN
REVISED BY
DATE REVISED

LAST REVISION 00-00-00
DATE PLOTTED => 24-MAY-2014
TIME PLOTTED => 05:31

Dist	COUNTY	ROUTE	POST MILES TOTAL PROJECT	SHEET No.	TOTAL SHEETS
07	LA	101	1.8/8.4	48	183

REGISTERED CIVIL ENGINEER 1-30-14 DATE

2-24-14
PLANS APPROVAL DATE

REGISTERED PROFESSIONAL ENGINEER MICHAEL DUONG No. 73425 Exp. 12-31-14 CIVIL STATE OF CALIFORNIA

THE STATE OF CALIFORNIA OR ITS OFFICERS OR AGENTS SHALL NOT BE RESPONSIBLE FOR THE ACCURACY OR COMPLETENESS OF SCANNED COPIES OF THIS PLAN SHEET.

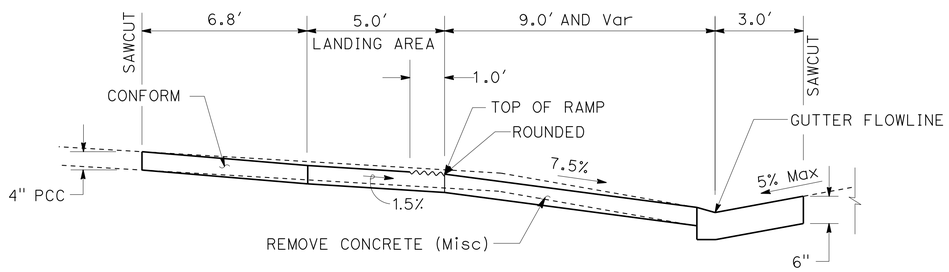

SECTION A-A

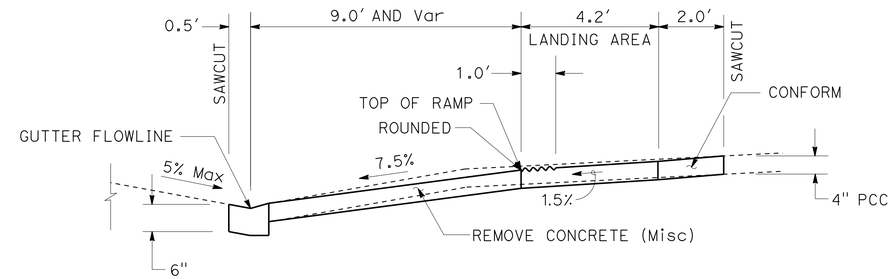

SECTION B-B

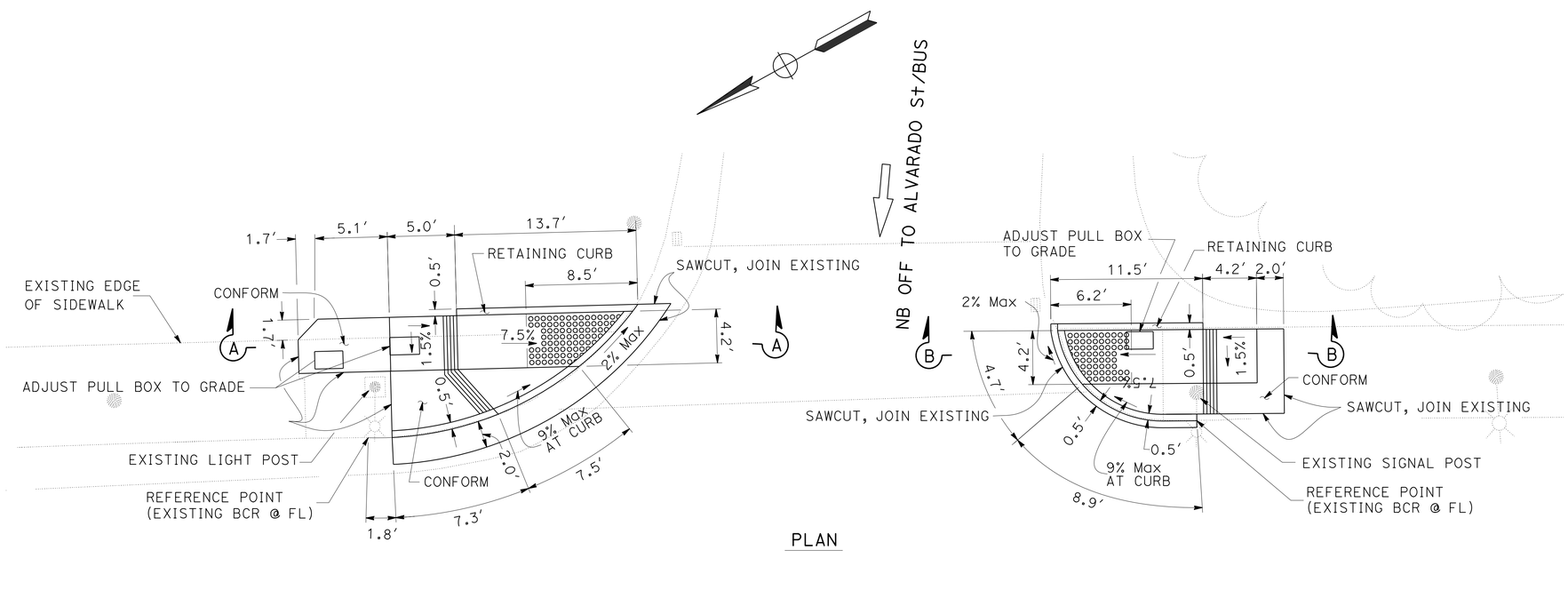

PLAN

CURB RAMP Loc 6R
(CASE G MODIFIED)

CURB RAMP Loc 6L
(CASE G MODIFIED)

CONSTRUCTION DETAILS
NO SCALE

C-40

STATE OF CALIFORNIA - DEPARTMENT OF TRANSPORTATION
Caltrans MAINTENANCE ENGINEERING

FUNCTIONAL SUPERVISOR: KEVIN KWAN
CALCULATED-DESIGNED BY: MICHAEL DUONG
CHECKED BY: CHARLIE TRUONG
REVISED BY
DATE REVISED

LAST REVISION 00-00-00
DATE PLOTTED => 24-MAY-2014
TIME PLOTTED => 05:31

Dist	COUNTY	ROUTE	POST MILES TOTAL PROJECT	SHEET No.	TOTAL SHEETS
07	LA	101	1.8/8.4	49	183

REGISTERED CIVIL ENGINEER 1-30-14 DATE

2-24-14
PLANS APPROVAL DATE

REGISTERED PROFESSIONAL ENGINEER CHARLIE TRUONG No. 69881 Exp. 9-30-14 CIVIL STATE OF CALIFORNIA

THE STATE OF CALIFORNIA OR ITS OFFICERS OR AGENTS SHALL NOT BE RESPONSIBLE FOR THE ACCURACY OR COMPLETENESS OF SCANNED COPIES OF THIS PLAN SHEET.

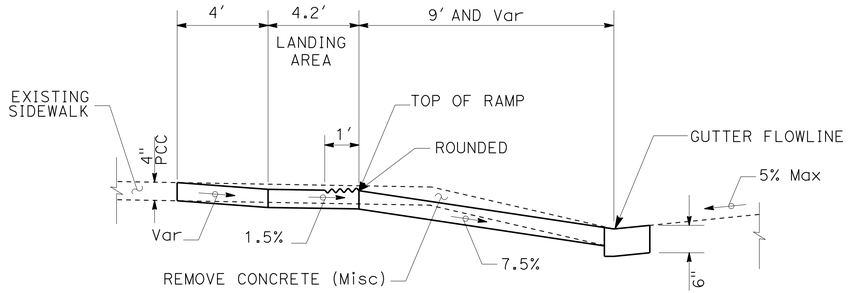

SECTION A-A

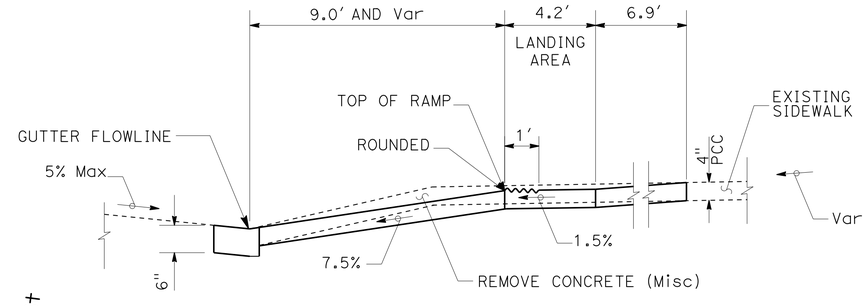

SECTION B-B

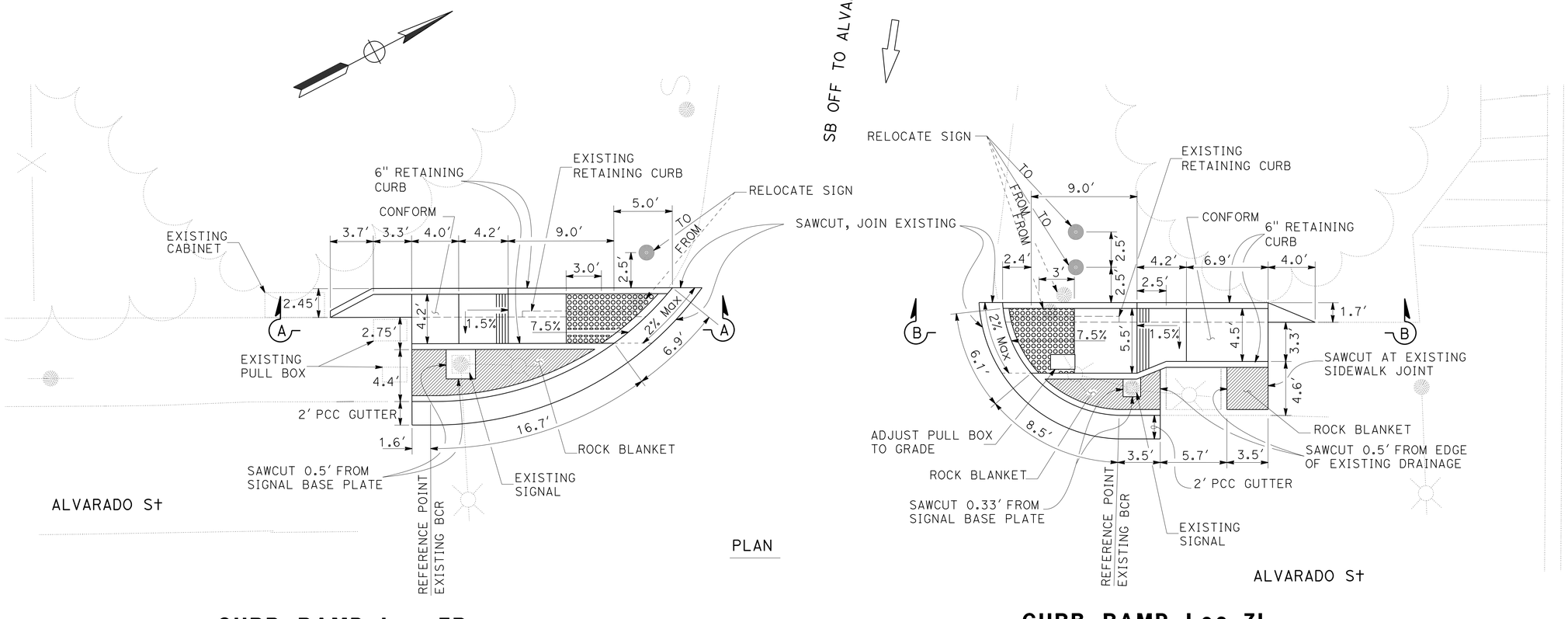

CURB RAMP Loc 7R
(CASE G MODIFIED)

CURB RAMP Loc 7L
(CASE F MODIFIED)

CONSTRUCTION DETAILS

NO SCALE

C-41

STATE OF CALIFORNIA - DEPARTMENT OF TRANSPORTATION
Caltrans MAINTENANCE ENGINEERING

FUNCTIONAL SUPERVISOR: KEVIN KWAN
CALCULATED-DESIGNED BY: QUAN HA
CHECKED BY: CHARLIE TRUONG
REVISED BY
DATE REVISED

LAST REVISION 00-00-00
DATE PLOTTED => 24-MAY-2014
TIME PLOTTED => 05:31

Dist	COUNTY	ROUTE	POST MILES TOTAL PROJECT	SHEET No.	TOTAL SHEETS
07	LA	101	1.8/8.4	50	183

REGISTERED CIVIL ENGINEER 1-30-14 DATE

2-24-14
PLANS APPROVAL DATE

REGISTERED PROFESSIONAL ENGINEER
CHARLIE TRUONG
No. 69881
Exp. 9-30-14
CIVIL
STATE OF CALIFORNIA

THE STATE OF CALIFORNIA OR ITS OFFICERS OR AGENTS SHALL NOT BE RESPONSIBLE FOR THE ACCURACY OR COMPLETENESS OF SCANNED COPIES OF THIS PLAN SHEET.

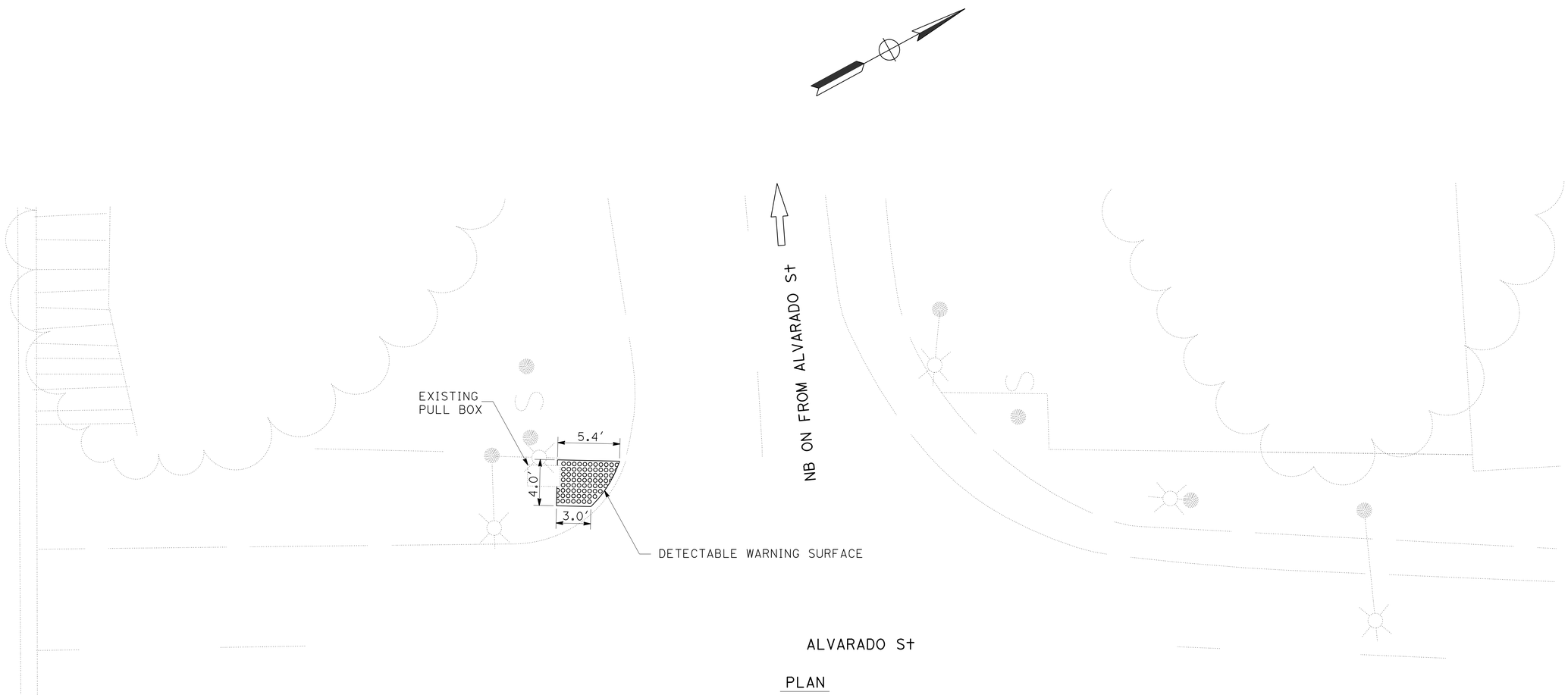

PLAN

CURB RAMP Loc 8L
(DETECTABLE WARNING SURFACE)

CONSTRUCTION DETAILS

NO SCALE

C-42

STATE OF CALIFORNIA - DEPARTMENT OF TRANSPORTATION
Caltrans MAINTENANCE ENGINEERING

FUNCTIONAL SUPERVISOR: KEVIN KWAN

CALCULATED-DESIGNED BY: QUAN HA
CHECKED BY: CHARLIE TRUONG

REVISED BY
DATE REVISED

LAST REVISION 00-00-00
DATE PLOTTED => 24-MAY-2014
TIME PLOTTED => 05:31

Dist	COUNTY	ROUTE	POST MILES TOTAL PROJECT	SHEET No.	TOTAL SHEETS
07	LA	101	1.8/8.4	51	183

REGISTERED CIVIL ENGINEER 1-30-14 DATE

2-24-14
PLANS APPROVAL DATE

REGISTERED PROFESSIONAL ENGINEER CHARLIE TRUONG No. 69881 Exp. 9-30-14 CIVIL STATE OF CALIFORNIA

THE STATE OF CALIFORNIA OR ITS OFFICERS OR AGENTS SHALL NOT BE RESPONSIBLE FOR THE ACCURACY OR COMPLETENESS OF SCANNED COPIES OF THIS PLAN SHEET.

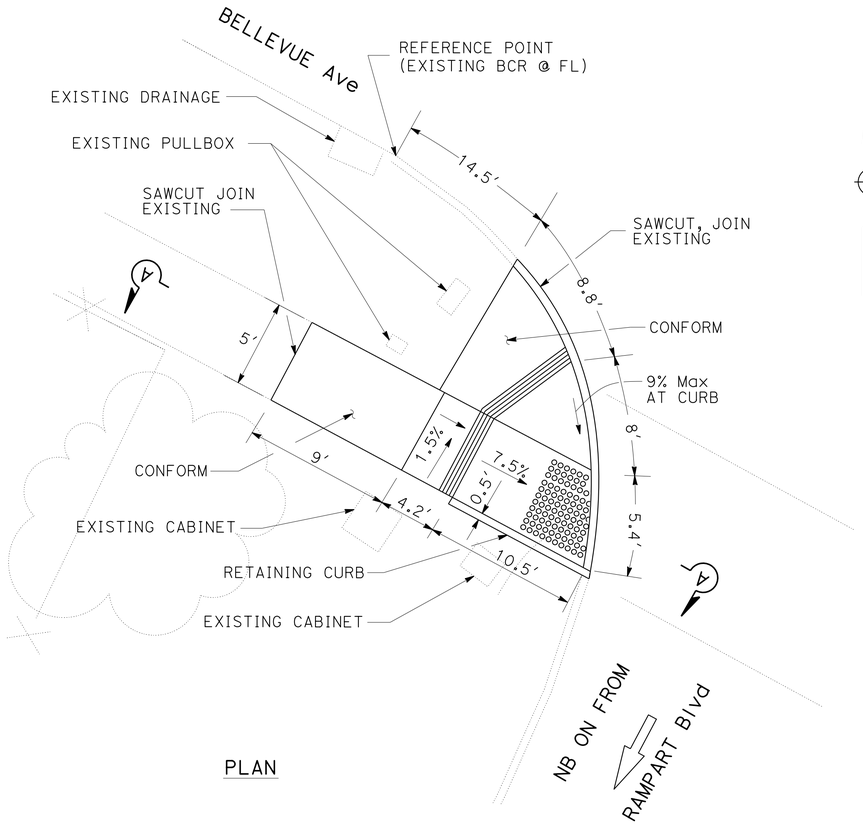

PLAN

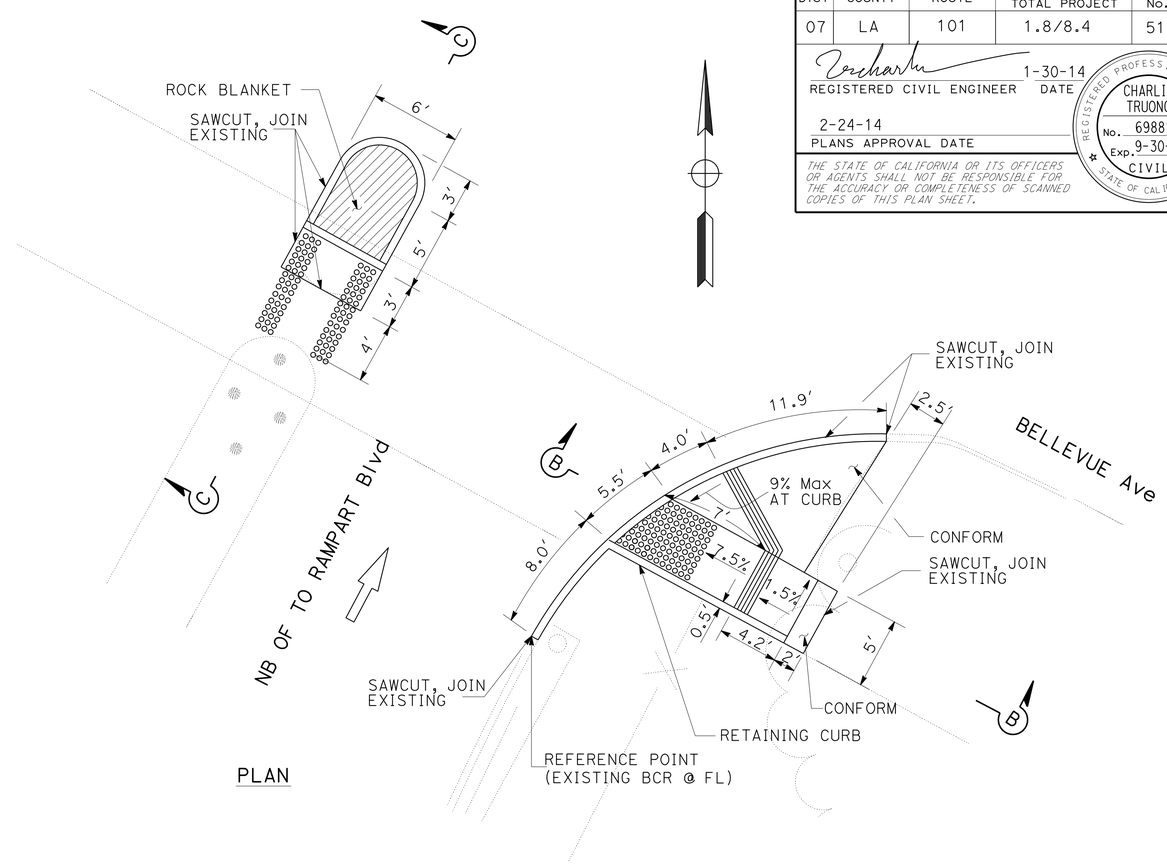

PLAN

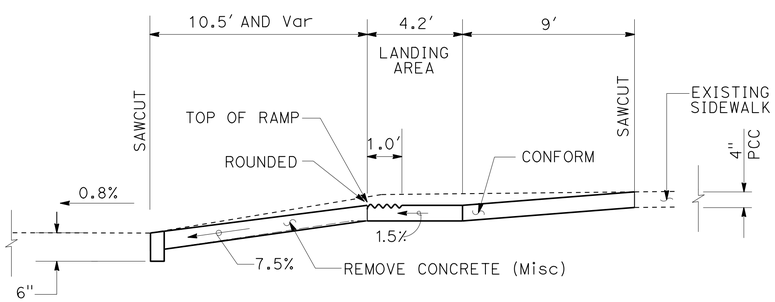

SECTION A-A

CURB RAMP Loc 11R

(CASE G)

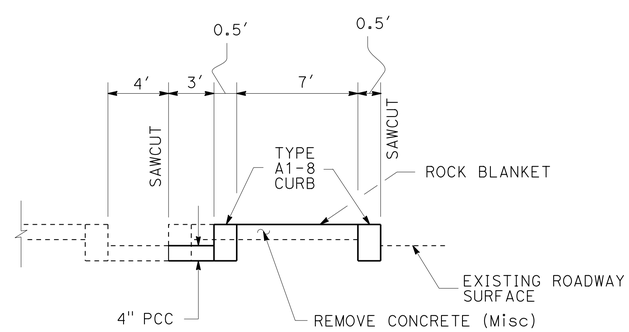

SECTION C-C

CURB RAMP Loc 9C

(TYPE A PASSAGEWAY)

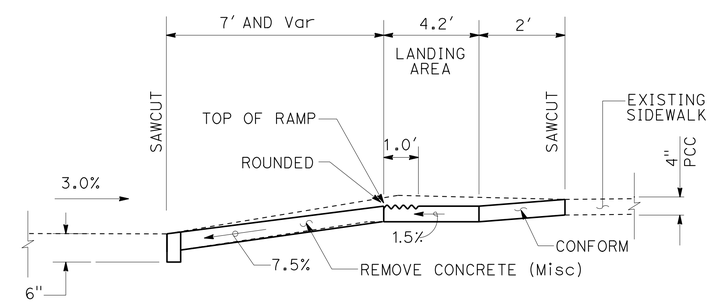

SECTION B-B

CURB RAMP Loc 9R

(CASE G)

CONSTRUCTION DETAILS

NO SCALE

C-43

STATE OF CALIFORNIA - DEPARTMENT OF TRANSPORTATION
Caltrans MAINTENANCE ENGINEERING

FUNCTIONAL SUPERVISOR: KEVIN KWAN
CALCULATED-DESIGNED BY: CHARLIE TRUONG
CHECKED BY: KEVIN KWAN
REVISED BY
DATE REVISED

LAST REVISION 00-00-00
DATE PLOTTED => 24-MAY-2014
TIME PLOTTED => 05:31

Dist	COUNTY	ROUTE	POST MILES TOTAL PROJECT	SHEET No.	TOTAL SHEETS
07	LA	101	1.8/8.4	52	183

REGISTERED CIVIL ENGINEER 1-30-14 DATE

2-24-14
PLANS APPROVAL DATE

REGISTERED PROFESSIONAL ENGINEER MICHAEL DUONG No. 73425 Exp. 12-31-14 CIVIL STATE OF CALIFORNIA

THE STATE OF CALIFORNIA OR ITS OFFICERS OR AGENTS SHALL NOT BE RESPONSIBLE FOR THE ACCURACY OR COMPLETENESS OF SCANNED COPIES OF THIS PLAN SHEET.

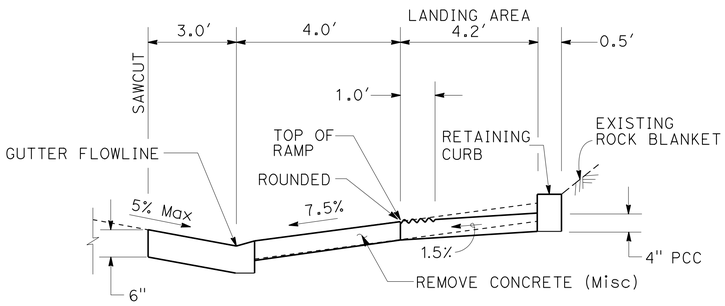

SECTION A-A

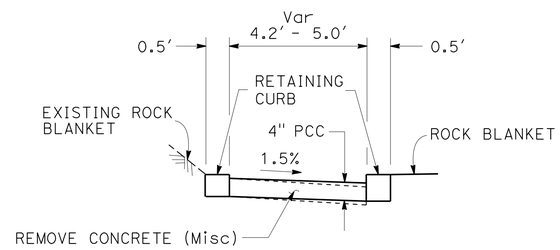

SECTION B-B

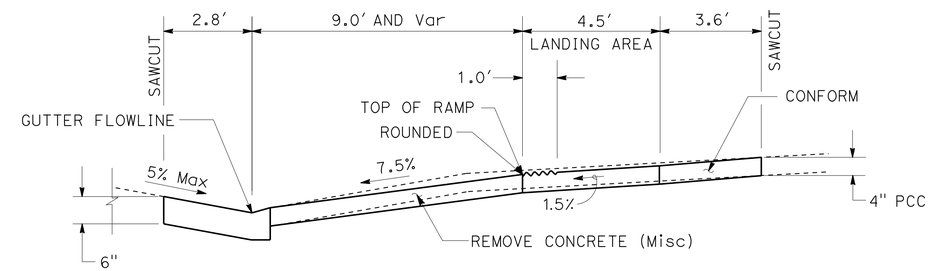

SECTION B-B

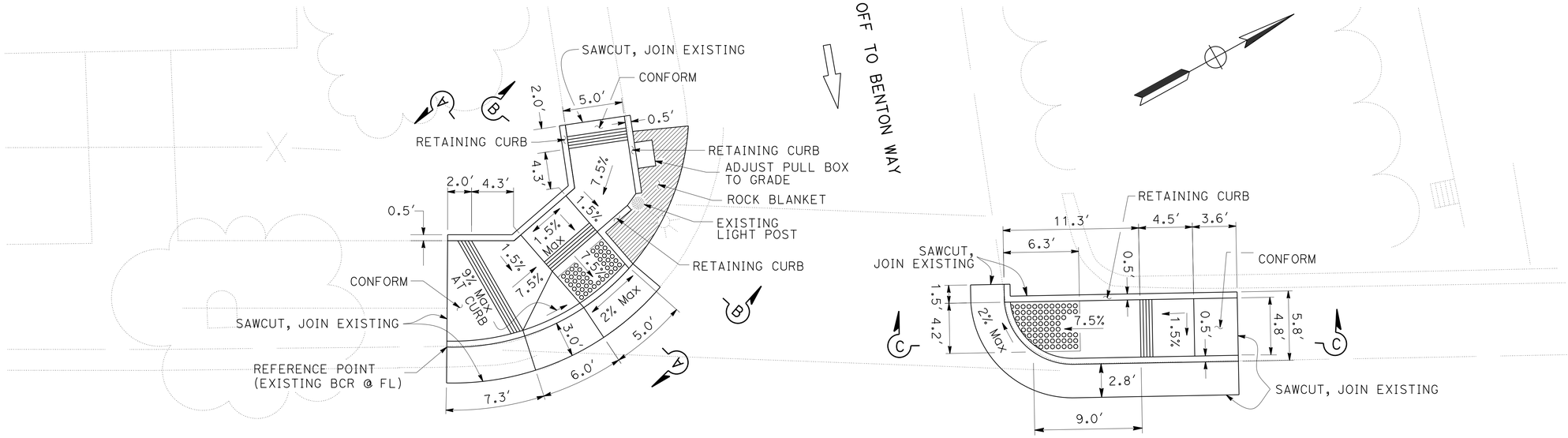

PLAN

CURB RAMP Loc 12R
(CASE B MODIFIED)

CURB RAMP Loc 12L
(CASE G MODIFIED)

CONSTRUCTION DETAILS

NO SCALE

C-44

STATE OF CALIFORNIA - DEPARTMENT OF TRANSPORTATION
Caltrans MAINTENANCE ENGINEERING

FUNCTIONAL SUPERVISOR: KEVIN KWAN
CALCULATED-DESIGNED BY: MICHAEL DUONG
CHECKED BY: CHALRLIE TRUONG
REVISED BY
DATE REVISED

LAST REVISION 00-00-00
DATE PLOTTED => 24-MAY-2014
TIME PLOTTED => 05:31

Dist	COUNTY	ROUTE	POST MILES TOTAL PROJECT	SHEET No.	TOTAL SHEETS
07	LA	101	1.8/8.4	53	183

REGISTERED CIVIL ENGINEER 1-30-14 DATE

2-24-14
PLANS APPROVAL DATE

REGISTERED PROFESSIONAL ENGINEER MICHAEL DUONG No. 73425 Exp. 12-31-14 CIVIL STATE OF CALIFORNIA

THE STATE OF CALIFORNIA OR ITS OFFICERS OR AGENTS SHALL NOT BE RESPONSIBLE FOR THE ACCURACY OR COMPLETENESS OF SCANNED COPIES OF THIS PLAN SHEET.

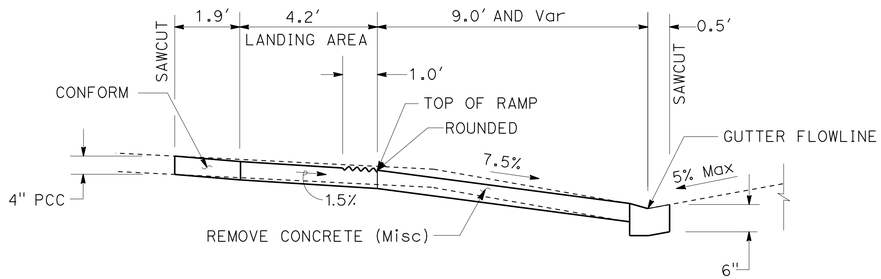

SECTION A-A

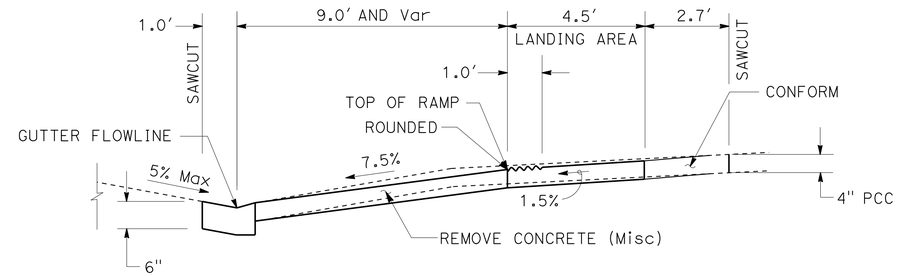

SECTION B-B

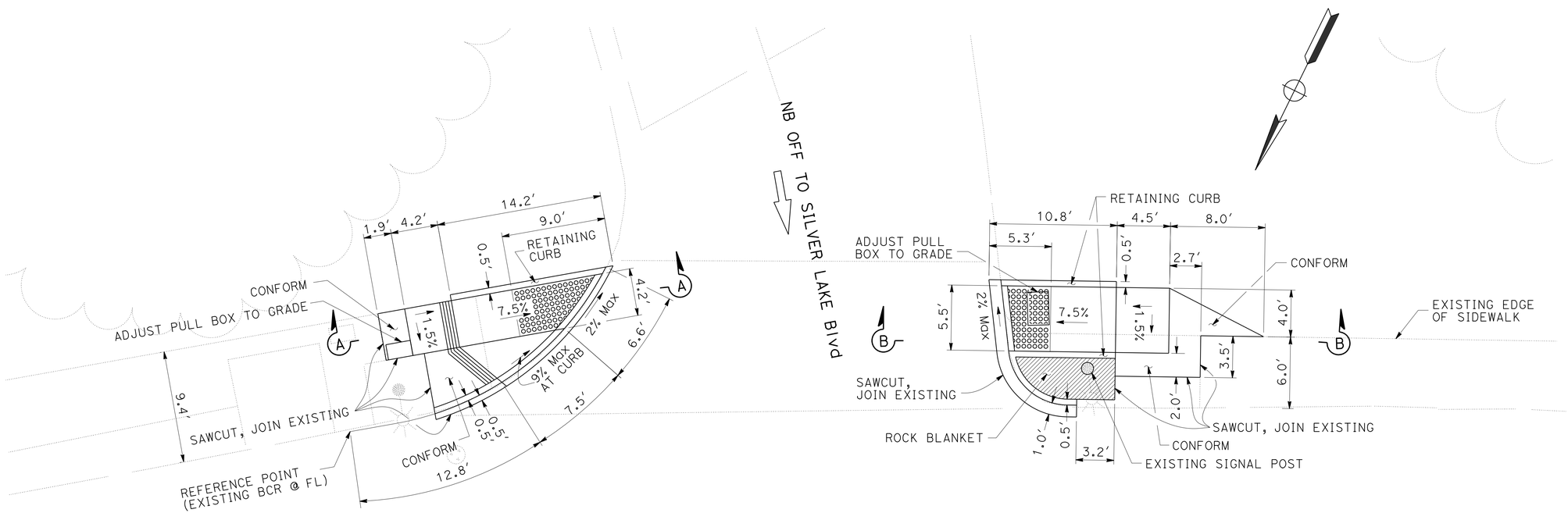

PLAN

CURB RAMP Loc 13R
(CASE G MODIFIED)

CURB RAMP Loc 13L
(CASE F MODIFIED)

CONSTRUCTION DETAILS

NO SCALE

C-45

STATE OF CALIFORNIA - DEPARTMENT OF TRANSPORTATION
Caltrans MAINTENANCE ENGINEERING

FUNCTIONAL SUPERVISOR: KEVIN KWAN
CALCULATED-DESIGNED BY: MICHAEL DUONG
CHECKED BY: CHARLIE TRUONG
REVISED BY / DATE REVISED

LAST REVISION 00-00-00 | DATE PLOTTED => 24-MAY-2014 | TIME PLOTTED => 05:31

Dist	COUNTY	ROUTE	POST MILES TOTAL PROJECT	SHEET No.	TOTAL SHEETS
07	LA	101	1.8/8.4	54	183

REGISTERED CIVIL ENGINEER 1-30-14 DATE

2-24-14
PLANS APPROVAL DATE

REGISTERED PROFESSIONAL ENGINEER MICHAEL DUONG No. 73425 Exp. 12-31-14 CIVIL STATE OF CALIFORNIA

THE STATE OF CALIFORNIA OR ITS OFFICERS OR AGENTS SHALL NOT BE RESPONSIBLE FOR THE ACCURACY OR COMPLETENESS OF SCANNED COPIES OF THIS PLAN SHEET.

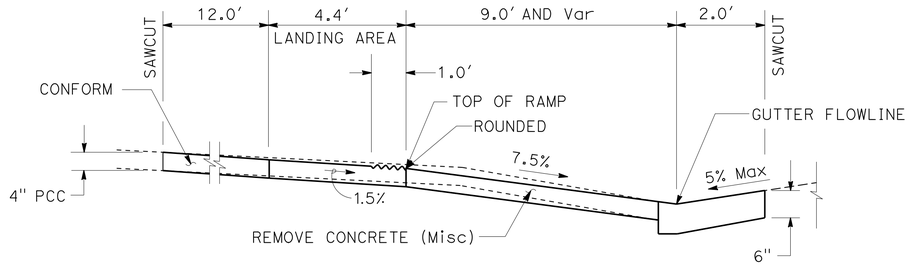

SECTION A-A

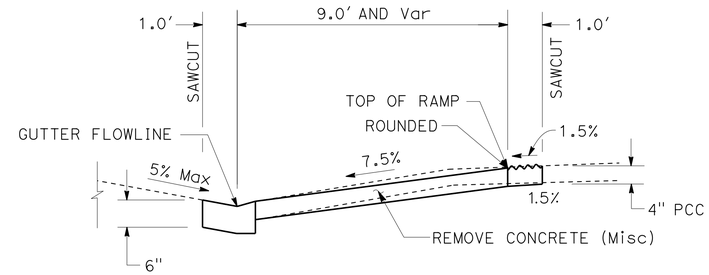

SECTION B-B

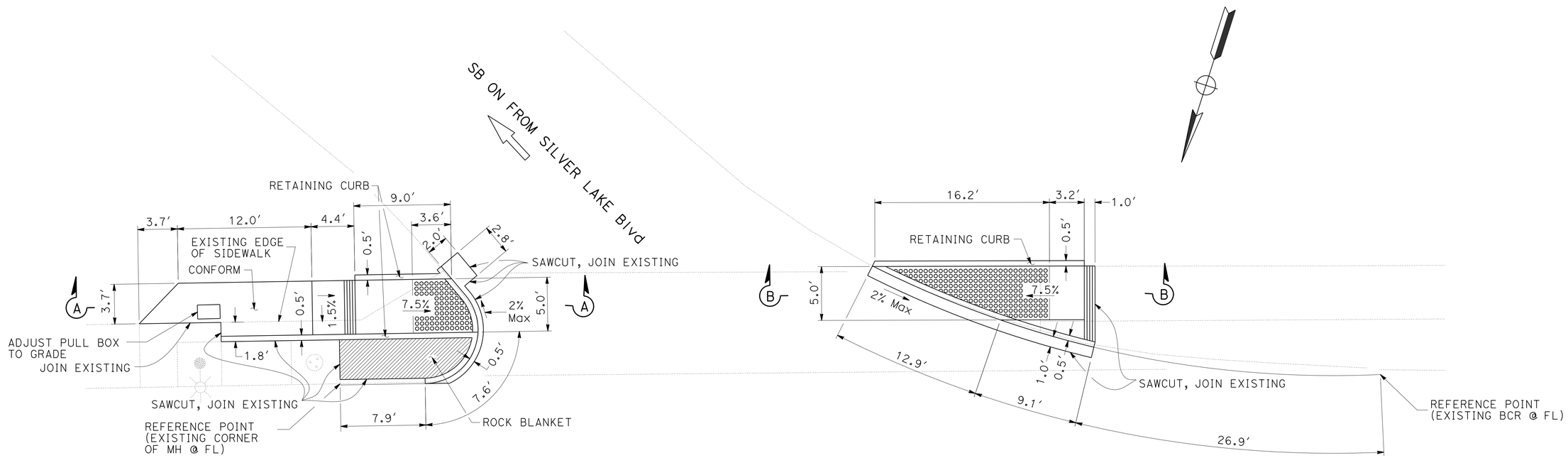

PLAN

CURB RAMP Loc 14L
(CASE F MODIFIED)

CURB RAMP Loc 14R
(CASE G MODIFIED)

CONSTRUCTION DETAILS

NO SCALE

C-46

STATE OF CALIFORNIA - DEPARTMENT OF TRANSPORTATION
Caltrans MAINTENANCE ENGINEERING

FUNCTIONAL SUPERVISOR: KEVIN KWAN
CALCULATED-DESIGNED BY: MICHAEL DUONG
CHECKED BY: CHARLIE TRUONG
REVISED BY / DATE REVISED

LAST REVISION 00-00-00 | DATE PLOTTED => 24-MAY-2014 | TIME PLOTTED => 05:31

Dist	COUNTY	ROUTE	POST MILES TOTAL PROJECT	SHEET No.	TOTAL SHEETS
07	LA	101	1.8/8.4	55	183

REGISTERED CIVIL ENGINEER 1-30-14 DATE

2-24-14
PLANS APPROVAL DATE

REGISTERED PROFESSIONAL ENGINEER MICHAEL DUONG No. 73425 Exp. 12-31-14 CIVIL STATE OF CALIFORNIA

THE STATE OF CALIFORNIA OR ITS OFFICERS OR AGENTS SHALL NOT BE RESPONSIBLE FOR THE ACCURACY OR COMPLETENESS OF SCANNED COPIES OF THIS PLAN SHEET.

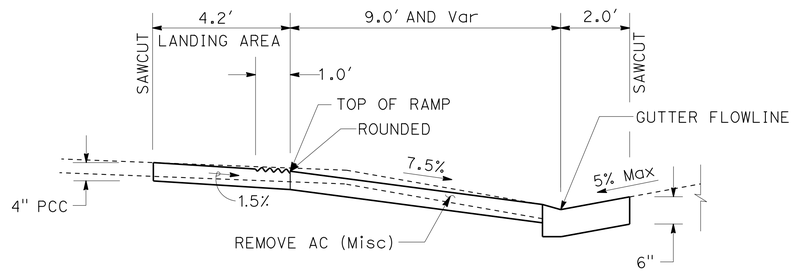

SECTION A-A

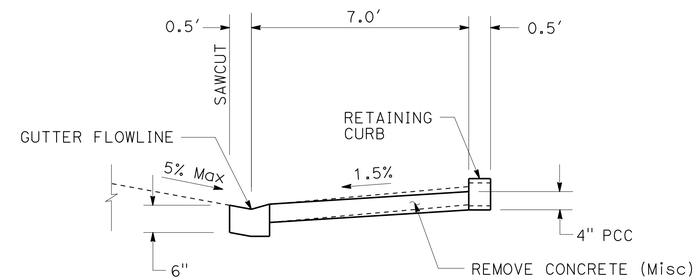

SECTION B-B

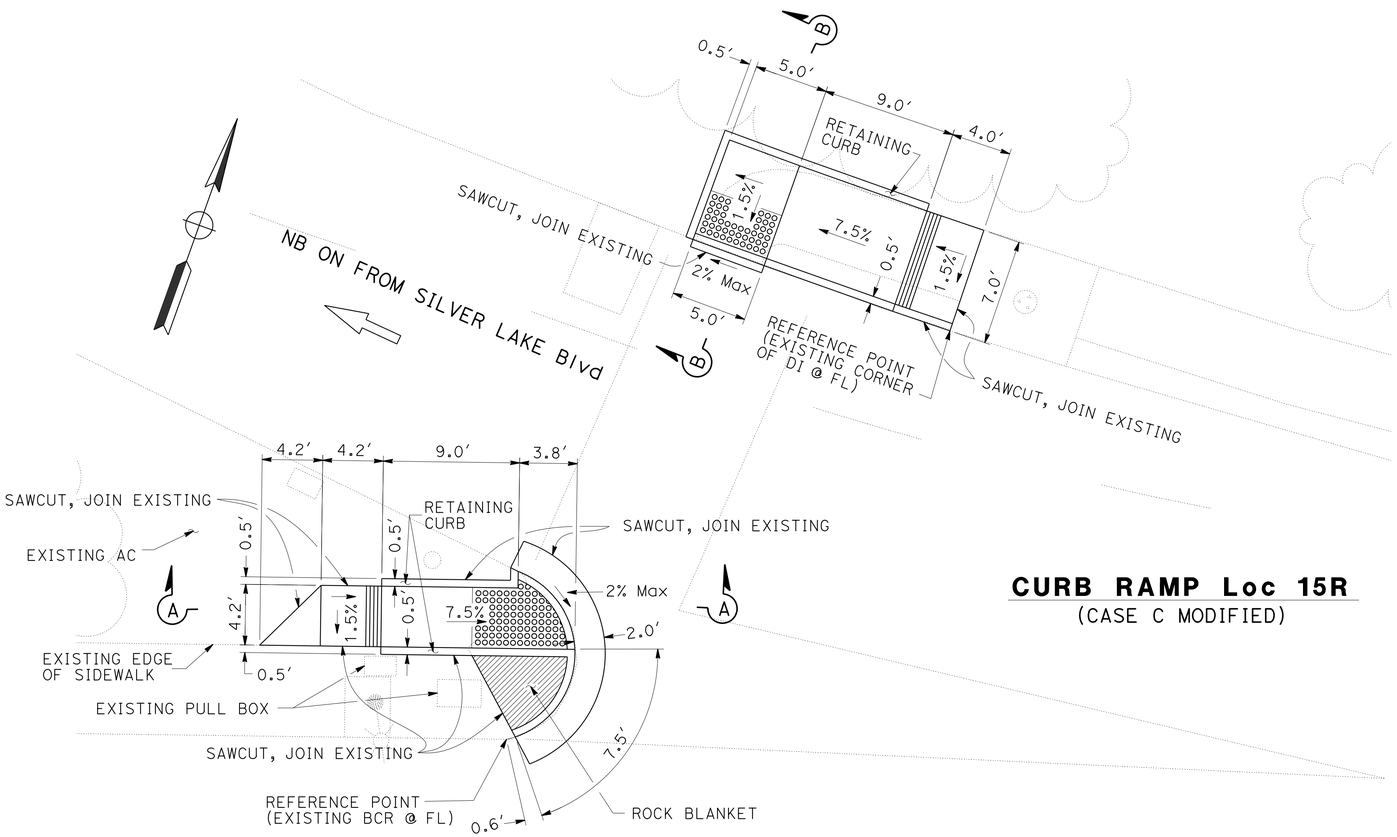

CURB RAMP Loc 15R
(CASE C MODIFIED)

CURB RAMP Loc 15L
(CASE F MODIFIED)

PLAN

CONSTRUCTION DETAILS

NO SCALE

C-47

STATE OF CALIFORNIA - DEPARTMENT OF TRANSPORTATION
Caltrans MAINTENANCE ENGINEERING

FUNCTIONAL SUPERVISOR: KEVIN KWAN
CALCULATED-DESIGNED BY: MICHAEL DUONG
CHECKED BY: CHARLIE TRUONG
REVISED BY
DATE REVISED

LAST REVISION 00-00-00 | DATE PLOTTED => 24-MAY-2014 | TIME PLOTTED => 05:31

Dist	COUNTY	ROUTE	POST MILES TOTAL PROJECT	SHEET No.	TOTAL SHEETS
07	LA	101	1.8/8.4	56	183

REGISTERED CIVIL ENGINEER 1-30-14 DATE

2-24-14
PLANS APPROVAL DATE

REGISTERED PROFESSIONAL ENGINEER CHARLIE TRUONG No. 69881 Exp. 9-30-14 CIVIL STATE OF CALIFORNIA

THE STATE OF CALIFORNIA OR ITS OFFICERS OR AGENTS SHALL NOT BE RESPONSIBLE FOR THE ACCURACY OR COMPLETENESS OF SCANNED COPIES OF THIS PLAN SHEET.

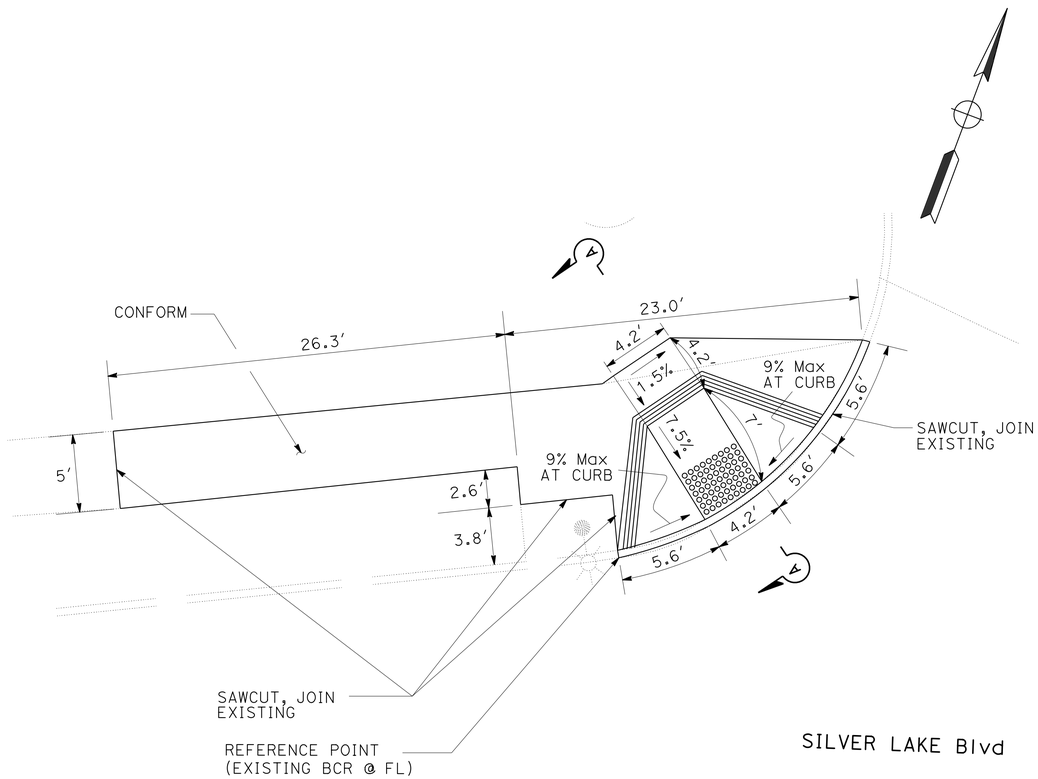

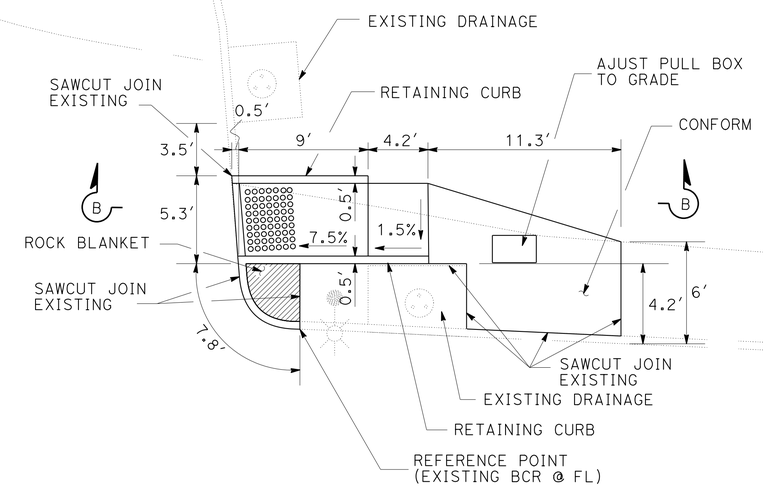

PLAN

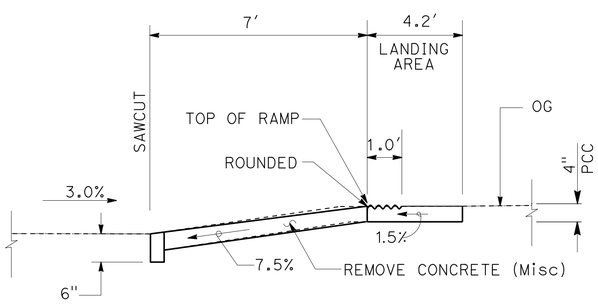

SECTION A-A

CURB RAMP Loc 16R

(CASE D)

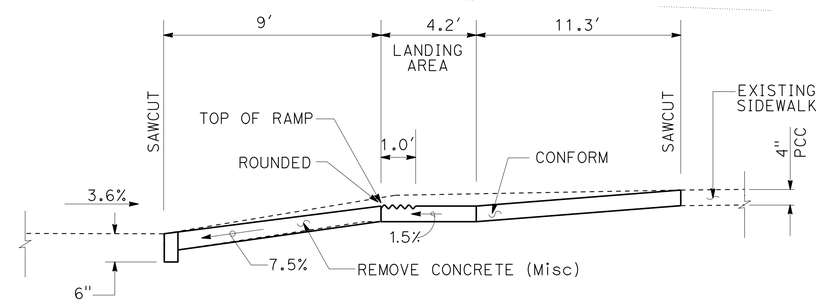

SECTION B-B

CURB RAMP Loc 16L

(CASE F Mod)

CONSTRUCTION DETAILS

NO SCALE

C-48

STATE OF CALIFORNIA - DEPARTMENT OF TRANSPORTATION
Caltrans MAINTENANCE ENGINEERING

FUNCTIONAL SUPERVISOR: KEVIN KWAN
CALCULATED-DESIGNED BY: CHARLIE TRUONG
CHECKED BY: KEVIN KWAN
REVISED BY
DATE REVISED

LAST REVISION 00-00-00
DATE PLOTTED => 24-MAY-2014
TIME PLOTTED => 05:31

Dist	COUNTY	ROUTE	POST MILES TOTAL PROJECT	SHEET No.	TOTAL SHEETS
07	LA	101	1.8/8.4	57	183

REGISTERED CIVIL ENGINEER 1-30-14 DATE

2-24-14
PLANS APPROVAL DATE

REGISTERED PROFESSIONAL ENGINEER MICHAEL DUONG No. 73425 Exp. 12-31-14 CIVIL STATE OF CALIFORNIA

THE STATE OF CALIFORNIA OR ITS OFFICERS OR AGENTS SHALL NOT BE RESPONSIBLE FOR THE ACCURACY OR COMPLETENESS OF SCANNED COPIES OF THIS PLAN SHEET.

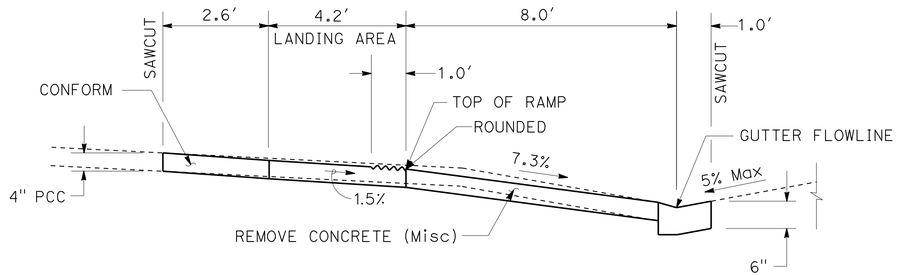

SECTION A-A

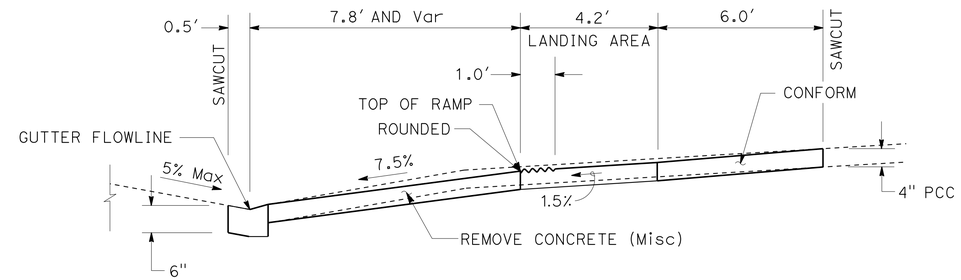

SECTION B-B

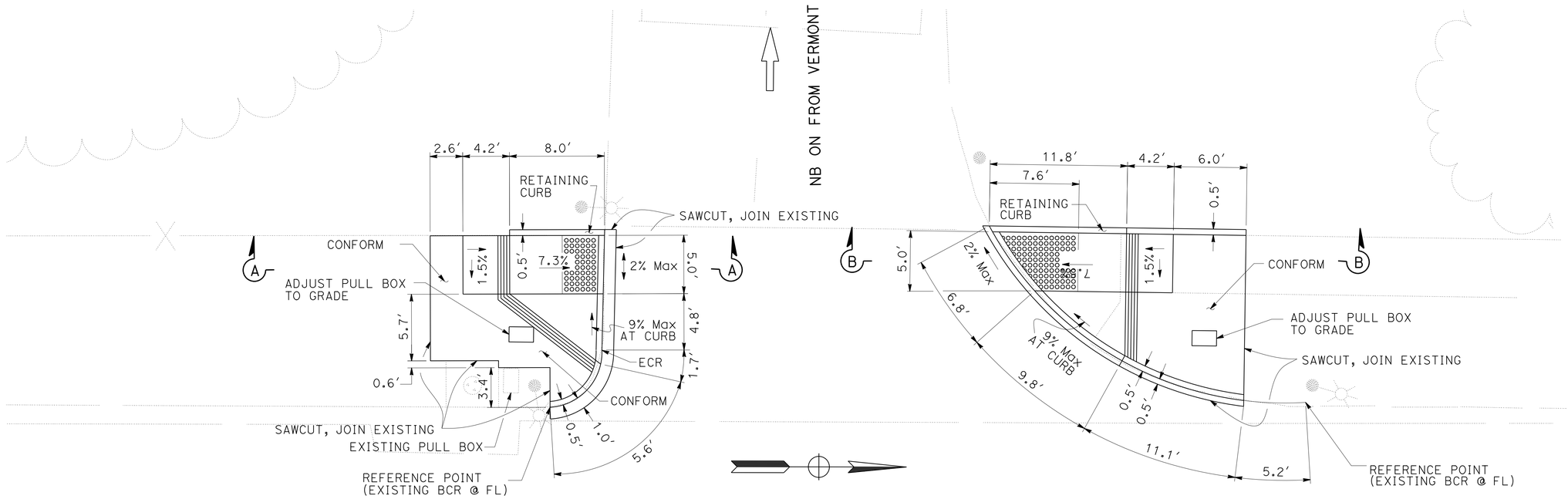

CURB RAMP Loc 20L
(CASE G MODIFIED)

PLAN

CURB RAMP Loc 20R
(CASE G MODIFIED)

CONSTRUCTION DETAILS

NO SCALE

C-49

STATE OF CALIFORNIA - DEPARTMENT OF TRANSPORTATION
Caltrans MAINTENANCE ENGINEERING

FUNCTIONAL SUPERVISOR: KEVIN KWAN
CALCULATED-DESIGNED BY: MICHAEL DUONG
CHECKED BY: CHARLIE TRUONG
REVISED BY / DATE REVISED

LAST REVISION 00-00-00 | DATE PLOTTED => 24-MAY-2014 | TIME PLOTTED => 05:31

Dist	COUNTY	ROUTE	POST MILES TOTAL PROJECT	SHEET No.	TOTAL SHEETS
07	LA	101	1.8/8.4	58	183

REGISTERED CIVIL ENGINEER 1-30-14 DATE

2-24-14
PLANS APPROVAL DATE

REGISTERED PROFESSIONAL ENGINEER MICHAEL DUONG No. 73425 Exp. 12-31-14 CIVIL STATE OF CALIFORNIA

THE STATE OF CALIFORNIA OR ITS OFFICERS OR AGENTS SHALL NOT BE RESPONSIBLE FOR THE ACCURACY OR COMPLETENESS OF SCANNED COPIES OF THIS PLAN SHEET.

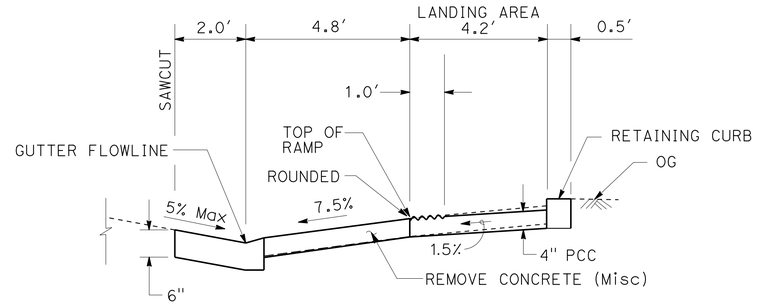

SECTION A-A

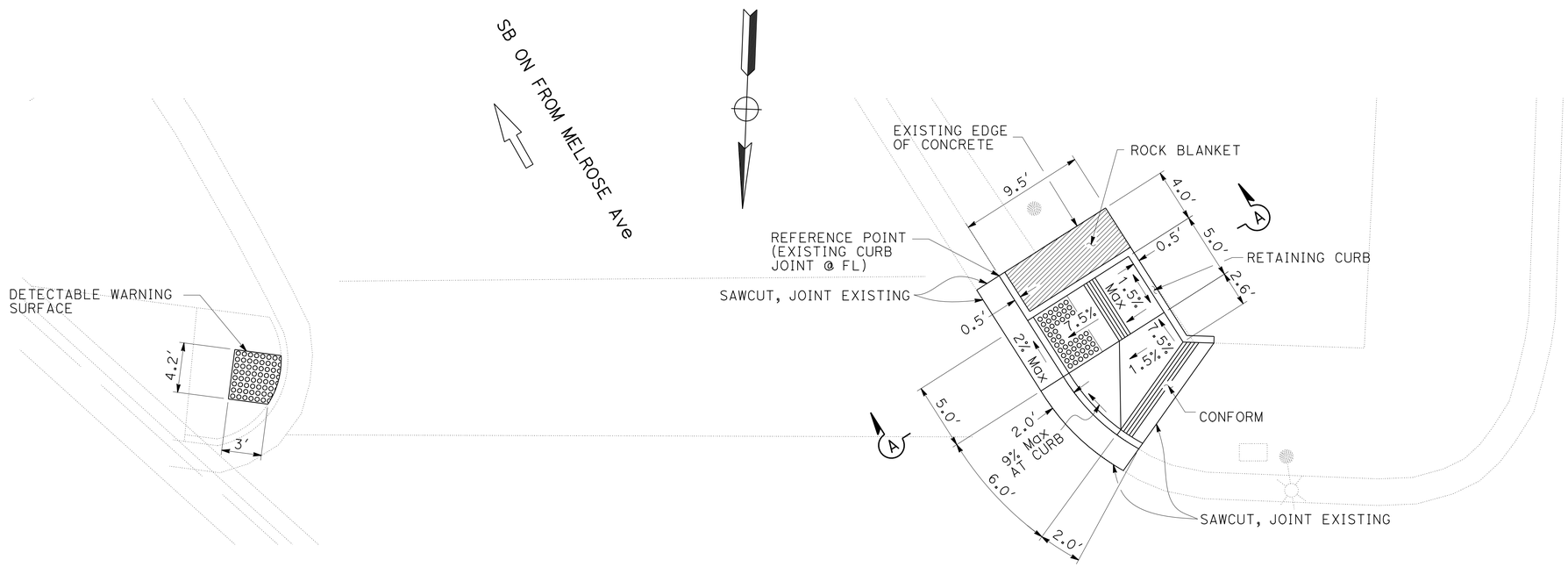

CURB RAMP Loc 21L
(DETECTABLE WARNING SURFACE)

CURB RAMP Loc 21R
(CASE B MODIFIED)

PLAN

CONSTRUCTION DETAILS

NO SCALE

C-50

REVISED BY	DATE REVISED

CALCULATED-DESIGNED BY	MICHAEL DUONG
CHECKED BY	CHARLIE TRUONG
FUNCTIONAL SUPERVISOR	KEVIN KWAN

STATE OF CALIFORNIA - DEPARTMENT OF TRANSPORTATION
Caltrans MAINTENANCE ENGINEERING

LAST REVISION 00-00-00 | DATE PLOTTED => 24-MAY-2014 | TIME PLOTTED => 05:31

Dist	COUNTY	ROUTE	POST MILES TOTAL PROJECT	SHEET No.	TOTAL SHEETS
07	LA	101	1.8/8.4	59	183

REGISTERED CIVIL ENGINEER 1-30-14 DATE

2-24-14
PLANS APPROVAL DATE

REGISTERED PROFESSIONAL ENGINEER MICHAEL DUONG No. 73425 Exp. 12-31-14 CIVIL STATE OF CALIFORNIA

THE STATE OF CALIFORNIA OR ITS OFFICERS OR AGENTS SHALL NOT BE RESPONSIBLE FOR THE ACCURACY OR COMPLETENESS OF SCANNED COPIES OF THIS PLAN SHEET.

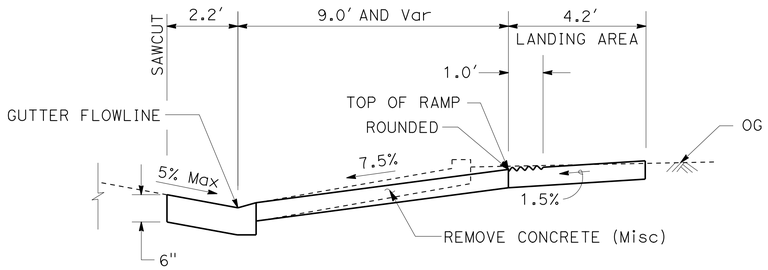

SECTION A-A

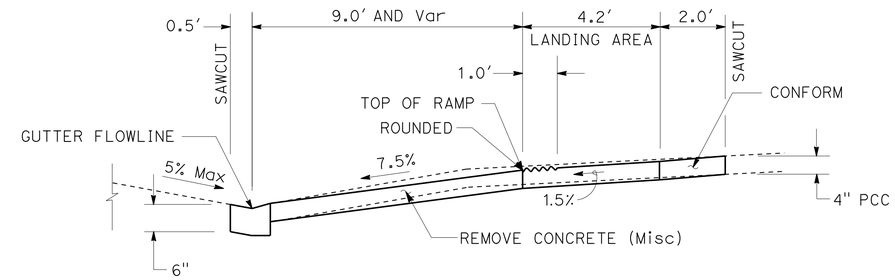

SECTION B-B

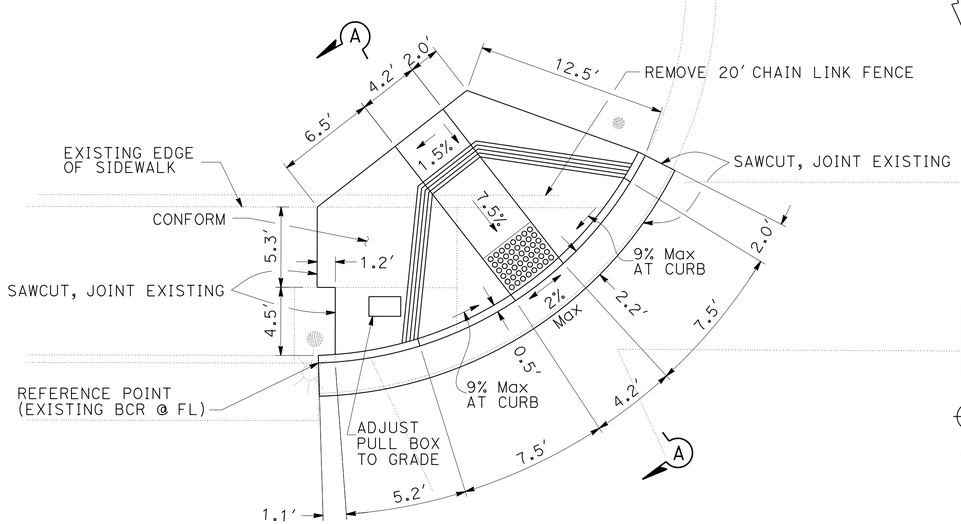

CURB RAMP Loc 22R
(CASE A)

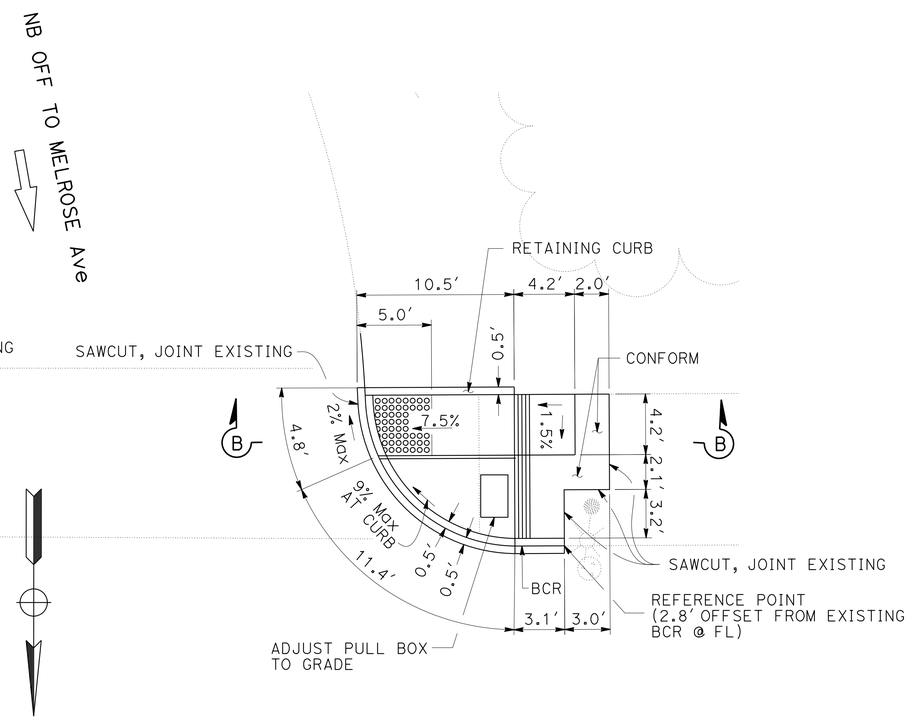

CURB RAMP Loc 22L
(CASE G MODIFIED)

PLAN

CONSTRUCTION DETAILS

NO SCALE

C-51

REVISED BY	DATE REVISED

CALCULATED-DESIGNED BY	MICHAEL DUONG
CHECKED BY	CHARLIE TRUONG
FUNCTIONAL SUPERVISOR	KEVIN KWAN

STATE OF CALIFORNIA - DEPARTMENT OF TRANSPORTATION
Caltrans MAINTENANCE ENGINEERING

LAST REVISION 00-00-00 | DATE PLOTTED => 24-MAY-2014 | TIME PLOTTED => 05:31

Dist	COUNTY	ROUTE	POST MILES TOTAL PROJECT	SHEET No.	TOTAL SHEETS
07	LA	101	1.8/8.4	60	183

REGISTERED CIVIL ENGINEER 1-30-14 DATE

2-24-14
PLANS APPROVAL DATE

REGISTERED PROFESSIONAL ENGINEER
CHARLIE TRUONG
No. 69881
Exp. 9-30-14
CIVIL
STATE OF CALIFORNIA

THE STATE OF CALIFORNIA OR ITS OFFICERS OR AGENTS SHALL NOT BE RESPONSIBLE FOR THE ACCURACY OR COMPLETENESS OF SCANNED COPIES OF THIS PLAN SHEET.

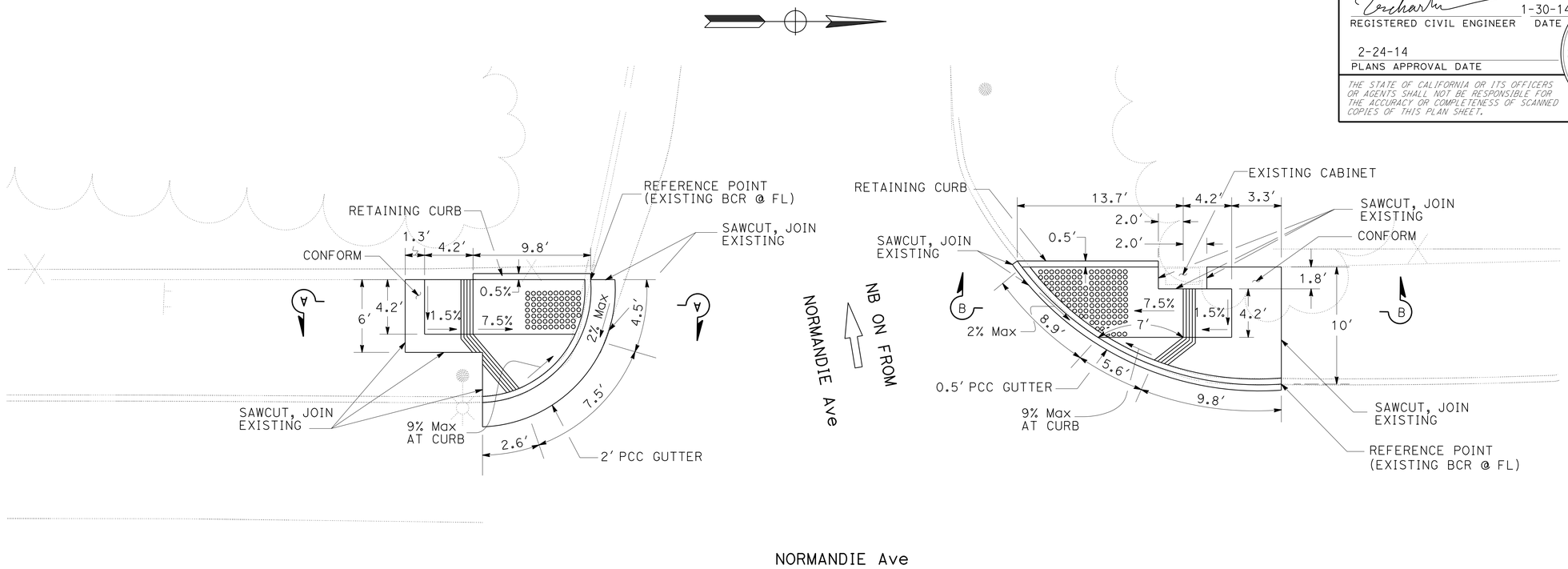

NORMANDIE Ave

PLAN

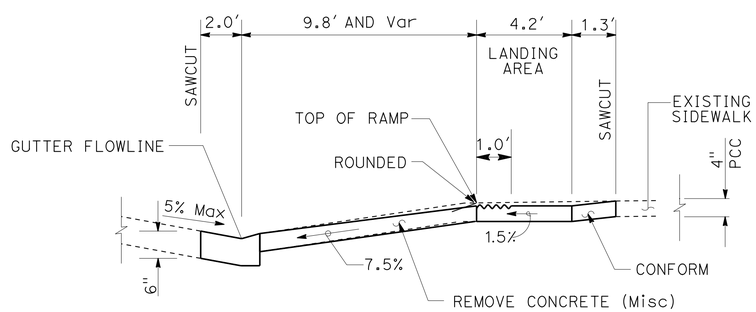

SECTION A-A

CURB RAMP Loc 23L

(CASE G MODIFIED)

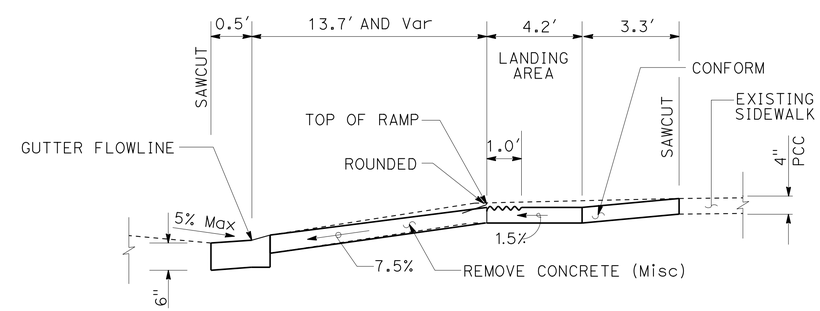

SECTION B-B

CURB RAMP Loc 23R

(CASE G MODIFIED)

CONSTRUCTION DETAILS

NO SCALE

C-52

STATE OF CALIFORNIA - DEPARTMENT OF TRANSPORTATION
Caltrans MAINTENANCE ENGINEERING

FUNCTIONAL SUPERVISOR: KEVIN KWAN
CALCULATED-DESIGNED BY: CHARLIE TRUONG
CHECKED BY: KEVIN KWAN
REVISED BY
DATE REVISED

LAST REVISION 00-00-00
DATE PLOTTED => 24-MAY-2014
TIME PLOTTED => 05:31

Dist	COUNTY	ROUTE	POST MILES TOTAL PROJECT	SHEET No.	TOTAL SHEETS
07	LA	101	1.8/8.4	61	183

REGISTERED CIVIL ENGINEER 1-30-14 DATE

2-24-14
PLANS APPROVAL DATE

REGISTERED PROFESSIONAL ENGINEER MICHAEL DUONG No. 73425 Exp. 12-31-14 CIVIL STATE OF CALIFORNIA

THE STATE OF CALIFORNIA OR ITS OFFICERS OR AGENTS SHALL NOT BE RESPONSIBLE FOR THE ACCURACY OR COMPLETENESS OF SCANNED COPIES OF THIS PLAN SHEET.

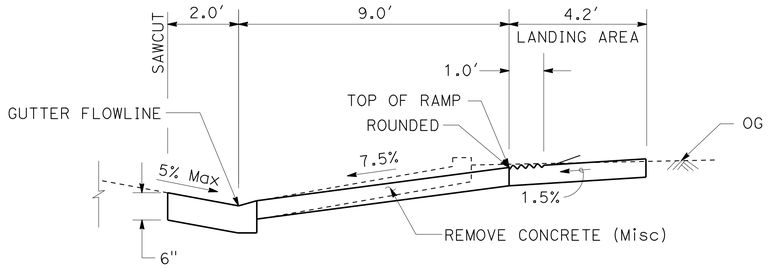

SECTION A-A

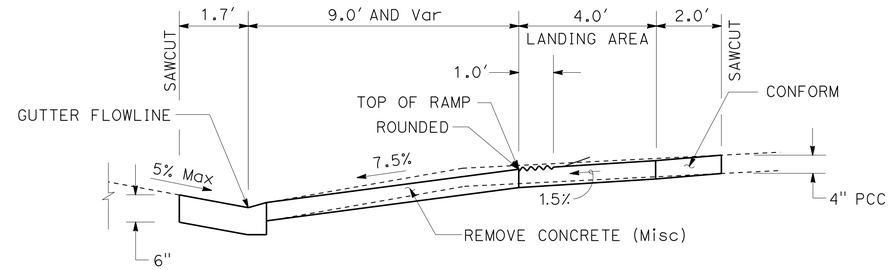

SECTION B-B

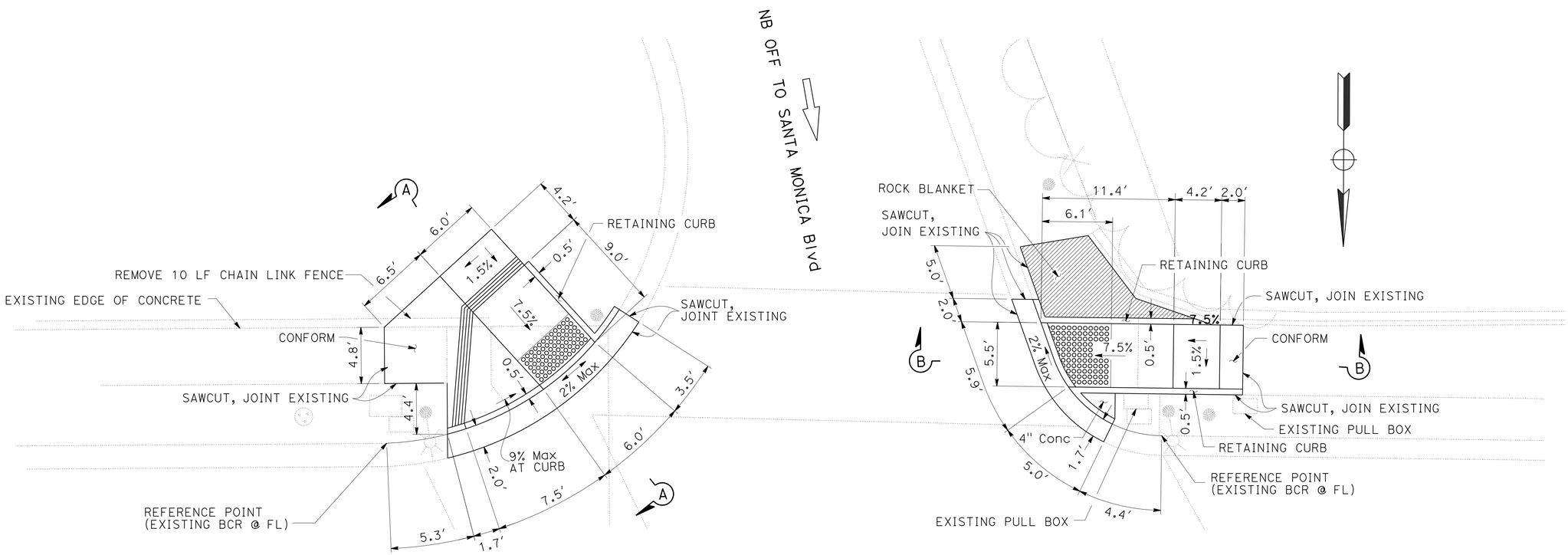

PLAN

CURB RAMP Loc 25R
(CASE G MODIFIED)

CURB RAMP Loc 25L
(CASE F MODIFIED)

CONSTRUCTION DETAILS

NO SCALE

C-53

STATE OF CALIFORNIA - DEPARTMENT OF TRANSPORTATION
Caltrans MAINTENANCE ENGINEERING

FUNCTIONAL SUPERVISOR: KEVIN KWAN
CALCULATED-DESIGNED BY: MICHAEL DUONG
CHECKED BY: CHARLIE TRUONG
REVISED BY / DATE REVISED

LAST REVISION 00-00-00 | DATE PLOTTED => 24-MAY-2014 | TIME PLOTTED => 05:31

Dist	COUNTY	ROUTE	POST MILES TOTAL PROJECT	SHEET No.	TOTAL SHEETS
07	LA	101	1.8/8.4	62	183

REGISTERED CIVIL ENGINEER 1-30-14 DATE

2-24-14
PLANS APPROVAL DATE

REGISTERED PROFESSIONAL ENGINEER MICHAEL DUONG No. 73425 Exp. 12-31-14 CIVIL STATE OF CALIFORNIA

THE STATE OF CALIFORNIA OR ITS OFFICERS OR AGENTS SHALL NOT BE RESPONSIBLE FOR THE ACCURACY OR COMPLETENESS OF SCANNED COPIES OF THIS PLAN SHEET.

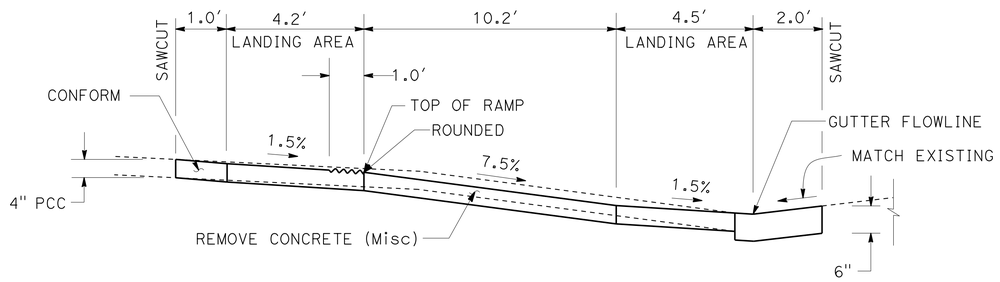

SECTION A-A

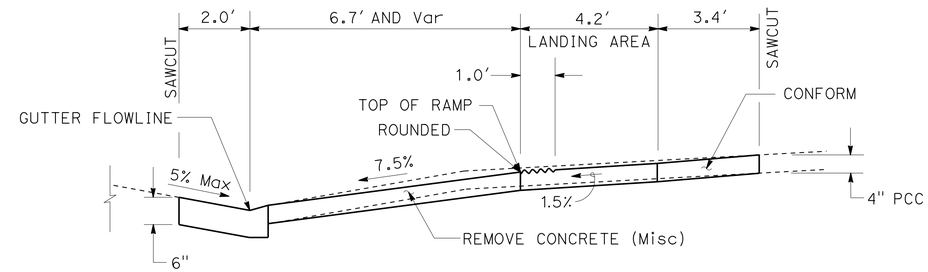

SECTION B-B

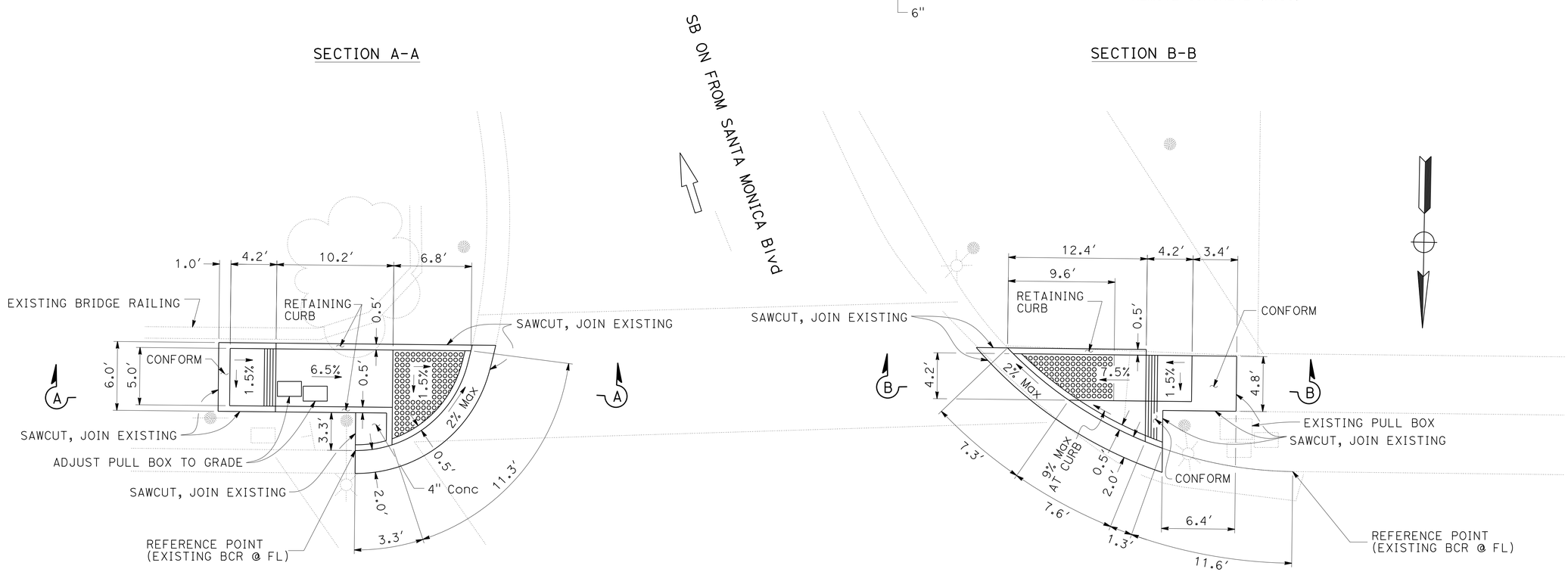

PLAN

CURB RAMP Loc 26L
(CASE F MODIFIED)

CURB RAMP Loc 26R
(CASE G MODIFIED)

CONSTRUCTION DETAILS

NO SCALE

C-54

STATE OF CALIFORNIA - DEPARTMENT OF TRANSPORTATION
Caltrans MAINTENANCE ENGINEERING

FUNCTIONAL SUPERVISOR: KEVIN KWAN
CALCULATED-DESIGNED BY: MICHAEL DUONG
CHECKED BY: CHARLIE TRUONG
REVISED BY
DATE REVISED

LAST REVISION 00-00-00
DATE PLOTTED => 24-MAY-2014
TIME PLOTTED => 05:31

Dist	COUNTY	ROUTE	POST MILES TOTAL PROJECT	SHEET No.	TOTAL SHEETS
07	LA	101	1.8/8.4	63	183

REGISTERED CIVIL ENGINEER 1-30-14 DATE

2-24-14
PLANS APPROVAL DATE

REGISTERED PROFESSIONAL ENGINEER MICHAEL DUONG No. 73425 Exp. 12-31-14 CIVIL STATE OF CALIFORNIA

THE STATE OF CALIFORNIA OR ITS OFFICERS OR AGENTS SHALL NOT BE RESPONSIBLE FOR THE ACCURACY OR COMPLETENESS OF SCANNED COPIES OF THIS PLAN SHEET.

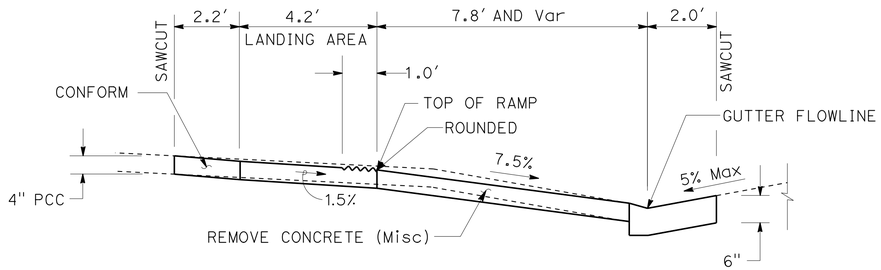

SECTION A-A

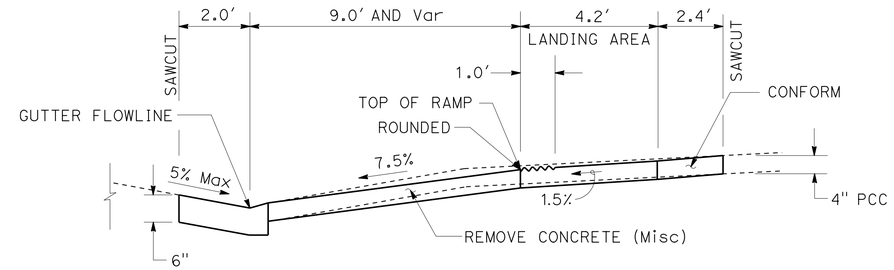

SECTION B-B

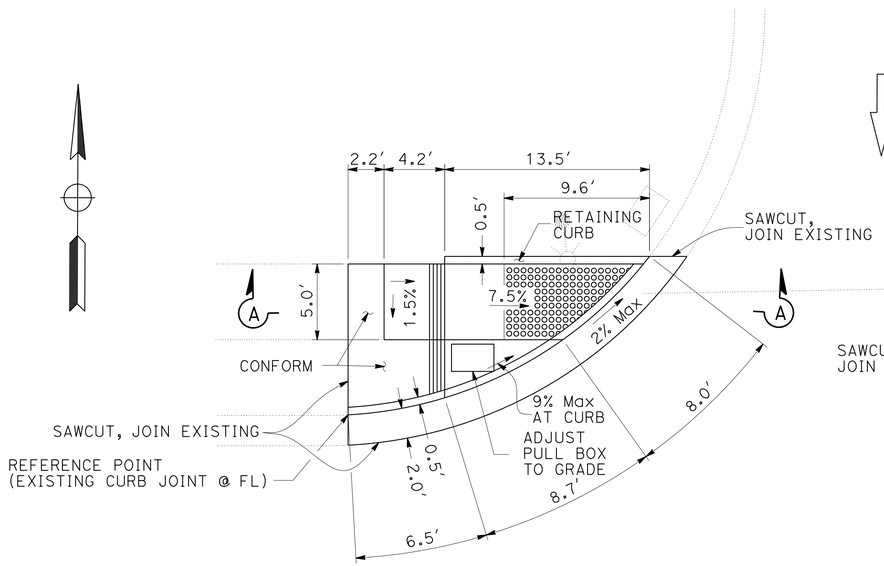

CURB RAMP Loc 27R
(CASE G MODIFIED)

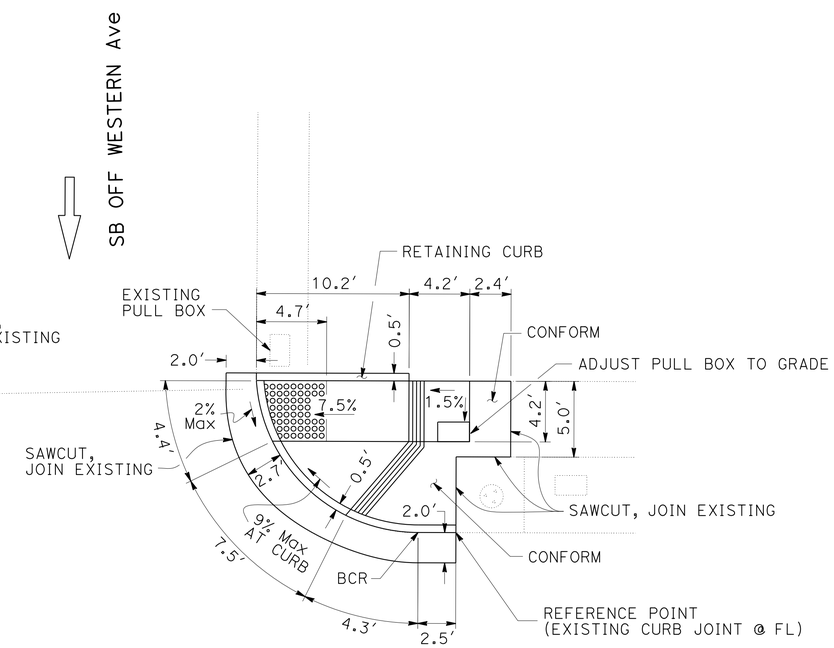

CURB RAMP Loc 27L
(CASE G MODIFIED)

PLAN

CONSTRUCTION DETAILS

NO SCALE

C-55

REVISED BY	DATE REVISED
MICHAEL DUONG	
CHARLIE TRUONG	
CALCULATED-DESIGNED BY	
CHECKED BY	
FUNCTIONAL SUPERVISOR	
KEVIN KWAN	

STATE OF CALIFORNIA - DEPARTMENT OF TRANSPORTATION
Caltrans MAINTENANCE ENGINEERING

LAST REVISION 00-00-00 | DATE PLOTTED => 24-MAY-2014 | TIME PLOTTED => 05:31

Dist	COUNTY	ROUTE	POST MILES TOTAL PROJECT	SHEET No.	TOTAL SHEETS
07	LA	101	1.8/8.4	64	183

REGISTERED CIVIL ENGINEER 1-30-14 DATE

2-24-14
PLANS APPROVAL DATE

REGISTERED PROFESSIONAL ENGINEER
MICHAEL DUONG
No. 73425
Exp. 12-31-14
CIVIL
STATE OF CALIFORNIA

THE STATE OF CALIFORNIA OR ITS OFFICERS OR AGENTS SHALL NOT BE RESPONSIBLE FOR THE ACCURACY OR COMPLETENESS OF SCANNED COPIES OF THIS PLAN SHEET.

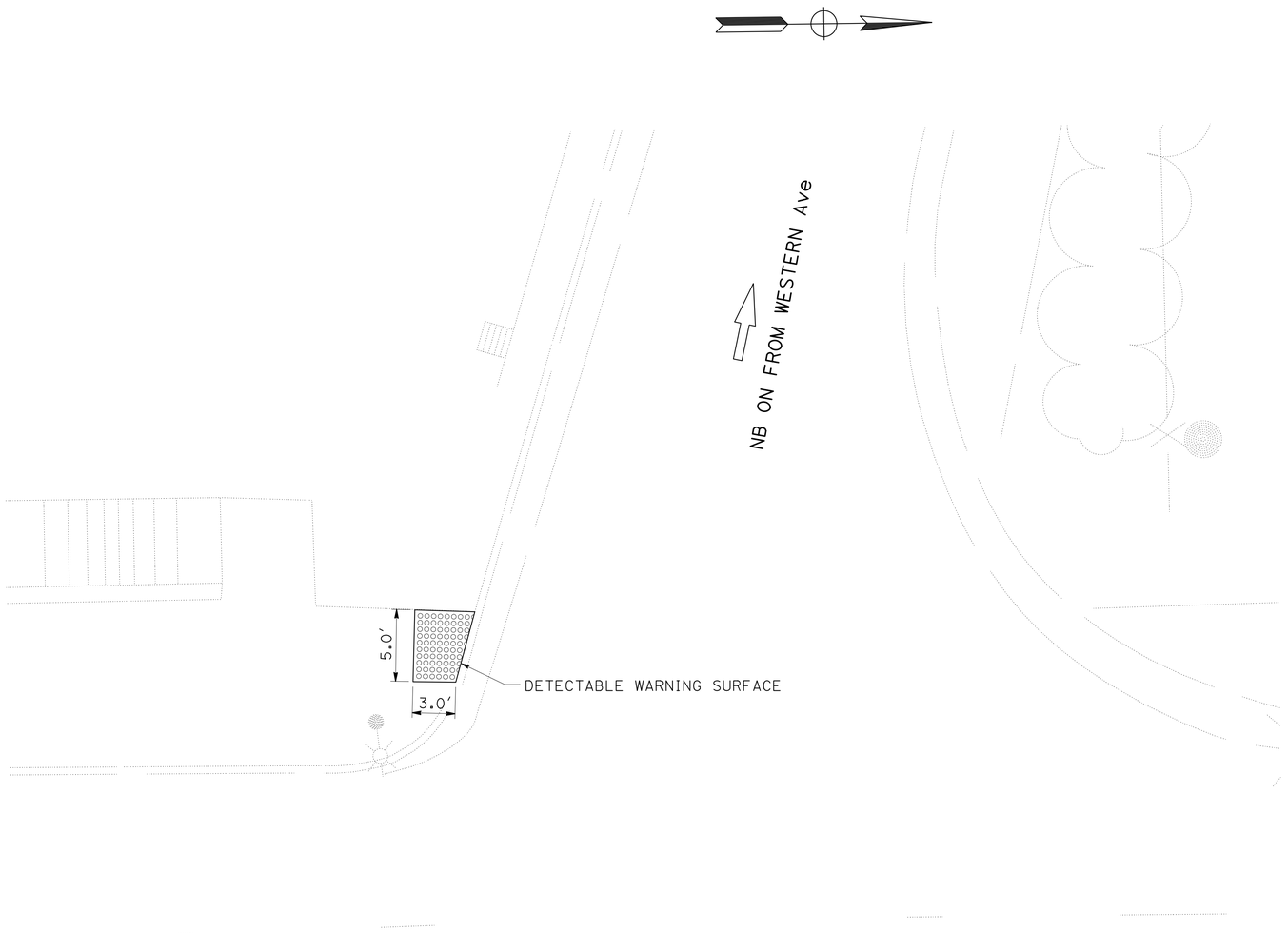

PLAN

CURB RAMP Loc 28L
(DETECTABLE WARNING SURFACE)

CONSTRUCTION DETAILS

NO SCALE

C-56

STATE OF CALIFORNIA - DEPARTMENT OF TRANSPORTATION
Caltrans MAINTENANCE ENGINEERING

FUNCTIONAL SUPERVISOR: KEVIN KWAN
CALCULATED-DESIGNED BY: MICHAEL DUONG
CHECKED BY: CHARLIE TRUONG
REVISED BY
DATE REVISED

LAST REVISION 00-00-00
DATE PLOTTED => 24-MAY-2014
TIME PLOTTED => 05:31

Dist	COUNTY	ROUTE	POST MILES TOTAL PROJECT	SHEET No.	TOTAL SHEETS
07	LA	101	1.8/8.4	65	183

REGISTERED CIVIL ENGINEER 1-30-14 DATE

2-24-14
PLANS APPROVAL DATE

REGISTERED PROFESSIONAL ENGINEER
CHARLIE TRUONG
No. 69881
Exp. 9-30-14
CIVIL
STATE OF CALIFORNIA

THE STATE OF CALIFORNIA OR ITS OFFICERS OR AGENTS SHALL NOT BE RESPONSIBLE FOR THE ACCURACY OR COMPLETENESS OF SCANNED COPIES OF THIS PLAN SHEET.

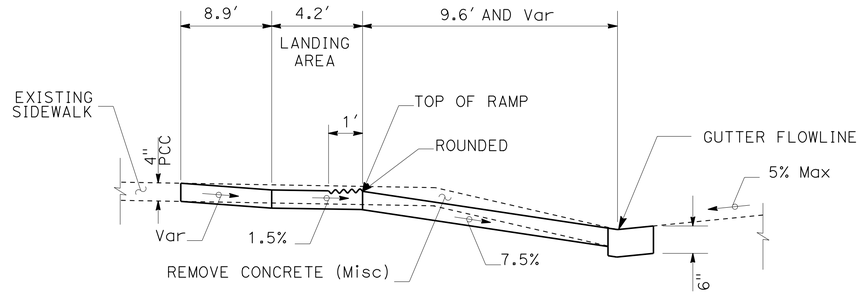

SECTION A-A

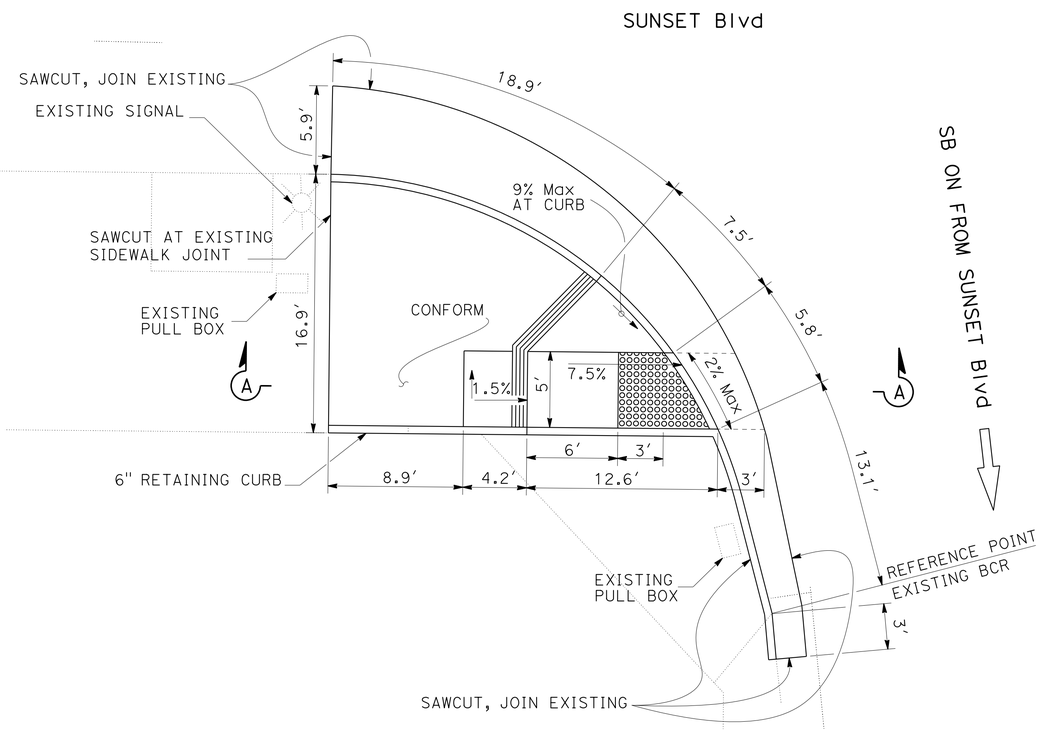

PLAN

CURB RAMP Loc 29R
(CASE G)

CONSTRUCTION DETAILS

NO SCALE

C-57

REVISED BY	DATE REVISED

CALCULATED-DESIGNED BY	CHECKED BY
QUAN HA	CHARLIE TRUONG

FUNCTIONAL SUPERVISOR
KEVIN KWAN

STATE OF CALIFORNIA - DEPARTMENT OF TRANSPORTATION
Caltrans MAINTENANCE ENGINEERING

LAST REVISION 00-00-00 | DATE PLOTTED => 24-MAY-2014 | TIME PLOTTED => 05:31

Dist	COUNTY	ROUTE	POST MILES TOTAL PROJECT	SHEET No.	TOTAL SHEETS
07	LA	101	1.8/8.4	66	183

REGISTERED CIVIL ENGINEER 1-30-14 DATE

2-24-14
PLANS APPROVAL DATE

REGISTERED PROFESSIONAL ENGINEER
CHARLIE TRUONG
No. 69881
Exp. 9-30-14
CIVIL
STATE OF CALIFORNIA

THE STATE OF CALIFORNIA OR ITS OFFICERS OR AGENTS SHALL NOT BE RESPONSIBLE FOR THE ACCURACY OR COMPLETENESS OF SCANNED COPIES OF THIS PLAN SHEET.

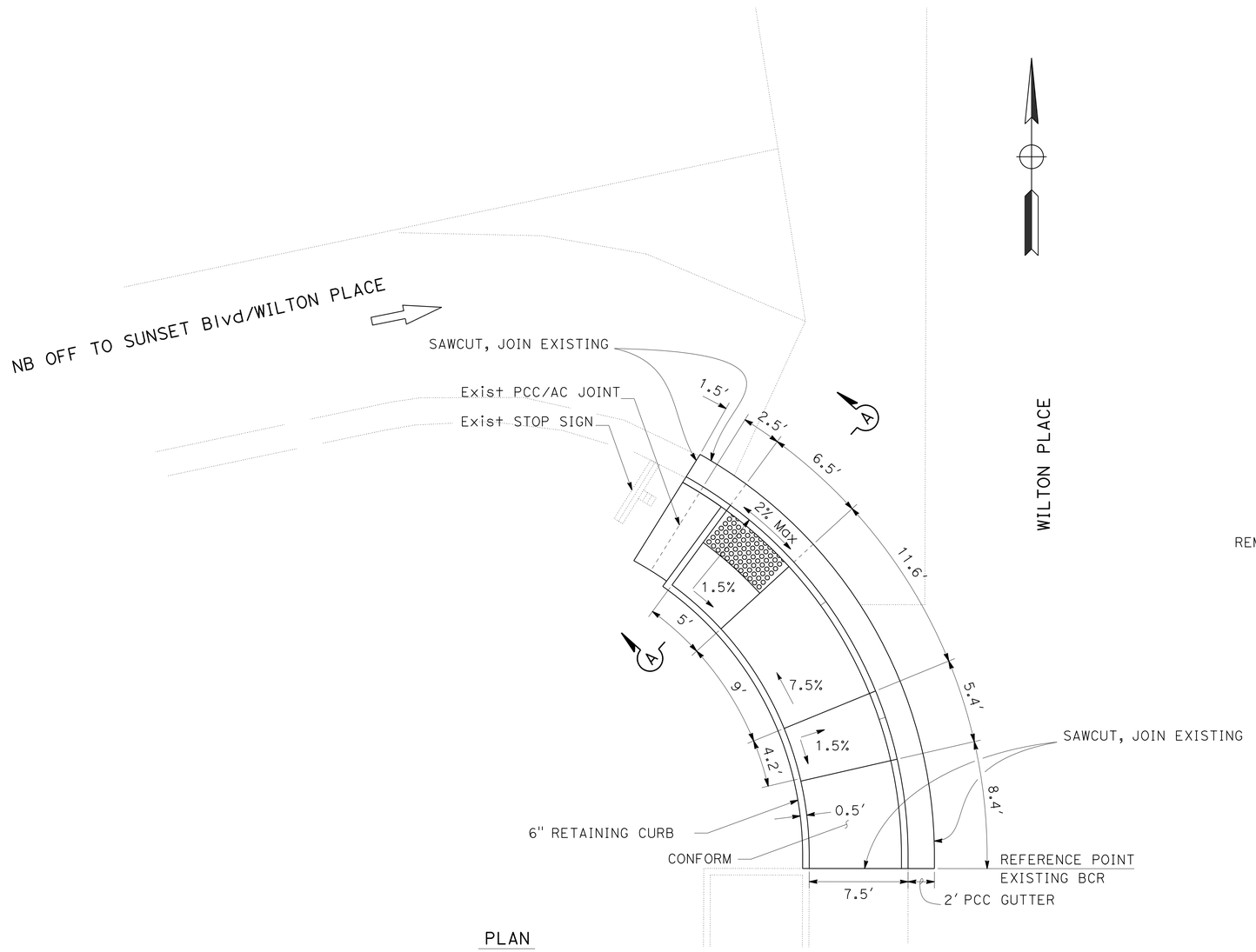

PLAN

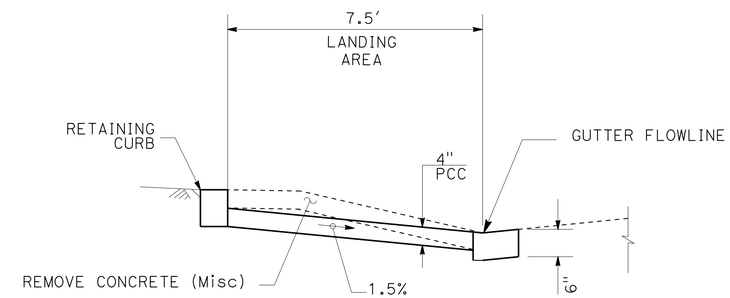

SECTION A-A

CURB RAMP Loc 30R1
(CASE C MODIFIED)

CONSTRUCTION DETAILS
NO SCALE

C-58

REVISED BY	DATE REVISED

CALCULATED-DESIGNED BY: QUAN HA
CHECKED BY: CHARLIE TRUONG
FUNCTIONAL SUPERVISOR: KEVIN KWAN

STATE OF CALIFORNIA - DEPARTMENT OF TRANSPORTATION
Caltrans MAINTENANCE ENGINEERING

LAST REVISION 00-00-00
DATE PLOTTED => 24-MAY-2014
TIME PLOTTED => 05:31

Dist	COUNTY	ROUTE	POST MILES TOTAL PROJECT	SHEET No.	TOTAL SHEETS
07	LA	101	1.8/8.4	67	183

REGISTERED CIVIL ENGINEER 1-30-14 DATE

2-24-14
PLANS APPROVAL DATE

REGISTERED PROFESSIONAL ENGINEER
CHARLIE TRUONG
No. 69881
Exp. 9-30-14
CIVIL
STATE OF CALIFORNIA

THE STATE OF CALIFORNIA OR ITS OFFICERS OR AGENTS SHALL NOT BE RESPONSIBLE FOR THE ACCURACY OR COMPLETENESS OF SCANNED COPIES OF THIS PLAN SHEET.

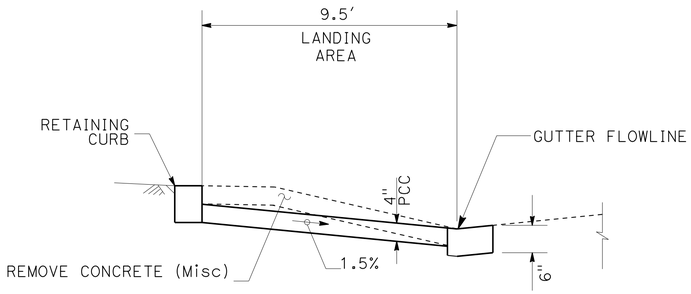

SECTION A-A

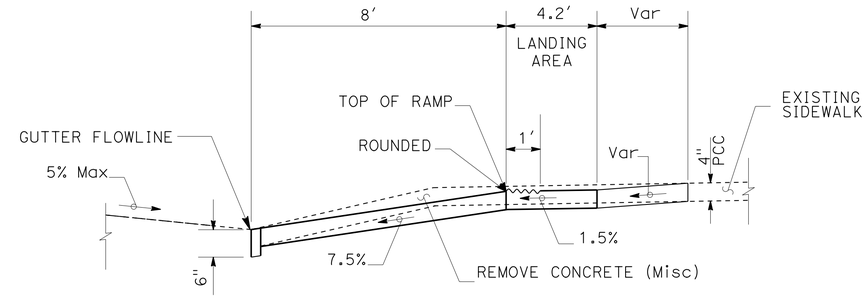

SECTION B-B

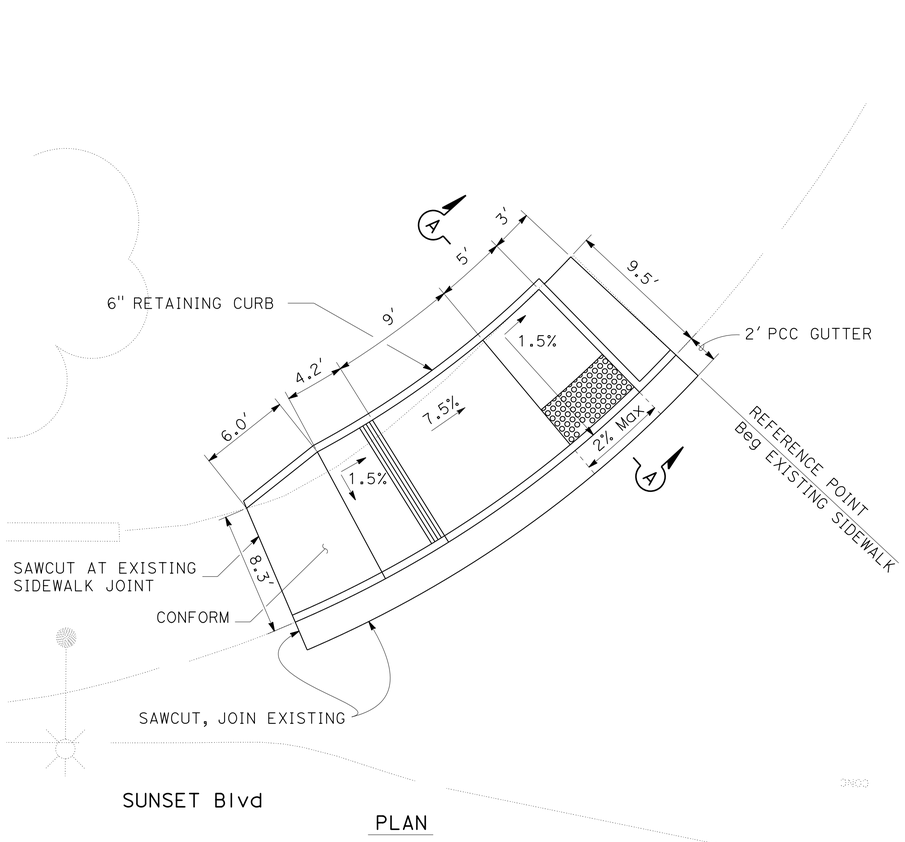

PLAN

CURB RAMP Loc 30R2
(CASE C MODIFIED)

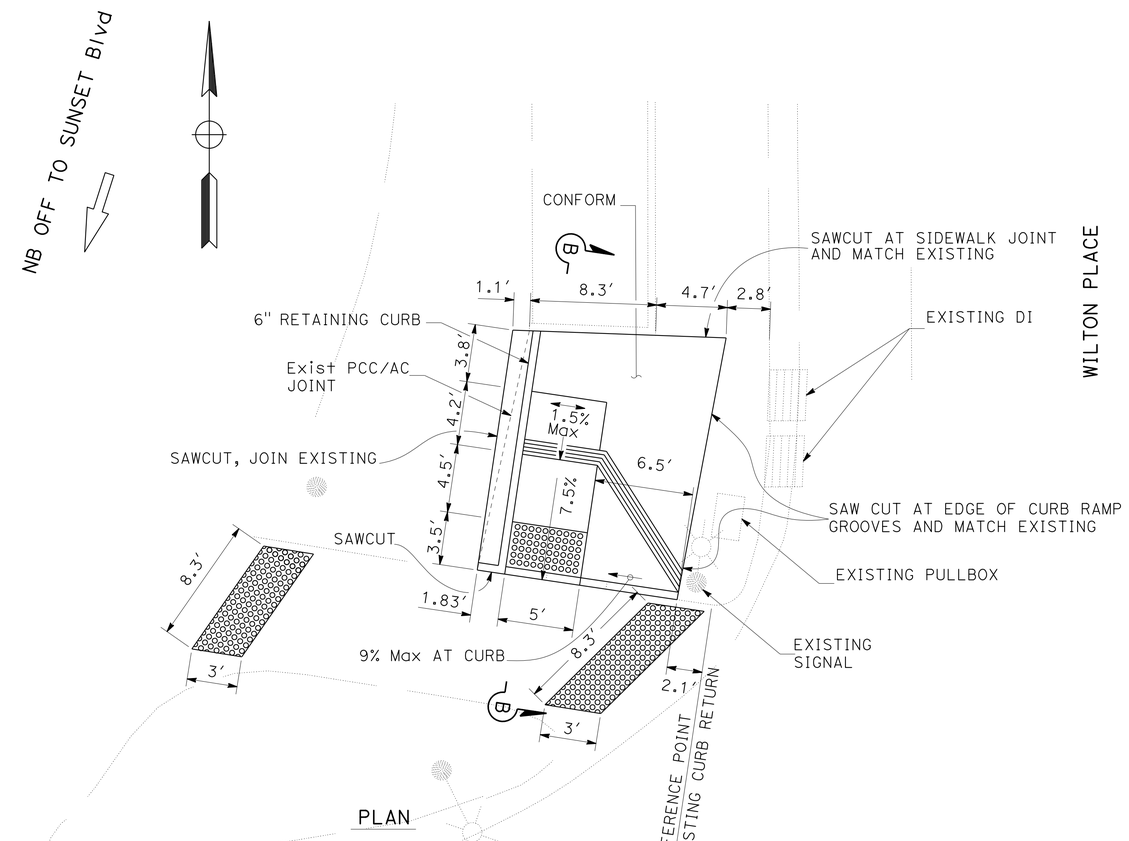

PLAN

CURB RAMP Loc 30L2
(CASE A)

CONSTRUCTION DETAILS

NO SCALE

C-59

STATE OF CALIFORNIA - DEPARTMENT OF TRANSPORTATION
Caltrans MAINTENANCE ENGINEERING

FUNCTIONAL SUPERVISOR: KEVIN KWAN
CALCULATED-DESIGNED BY: QUAN HA
CHECKED BY: CHARLIE TRUONG
REVISED BY
DATE REVISED

LAST REVISION 00-00-00 | DATE PLOTTED => 24-MAY-2014 | TIME PLOTTED => 05:31

Dist	COUNTY	ROUTE	POST MILES TOTAL PROJECT	SHEET No.	TOTAL SHEETS
07	LA	101	1.8/8.4	68	183

REGISTERED CIVIL ENGINEER 1-30-14 DATE

2-24-14
PLANS APPROVAL DATE

REGISTERED PROFESSIONAL ENGINEER CHARLIE TRUONG No. 69881 Exp. 9-30-14 CIVIL STATE OF CALIFORNIA

THE STATE OF CALIFORNIA OR ITS OFFICERS OR AGENTS SHALL NOT BE RESPONSIBLE FOR THE ACCURACY OR COMPLETENESS OF SCANNED COPIES OF THIS PLAN SHEET.

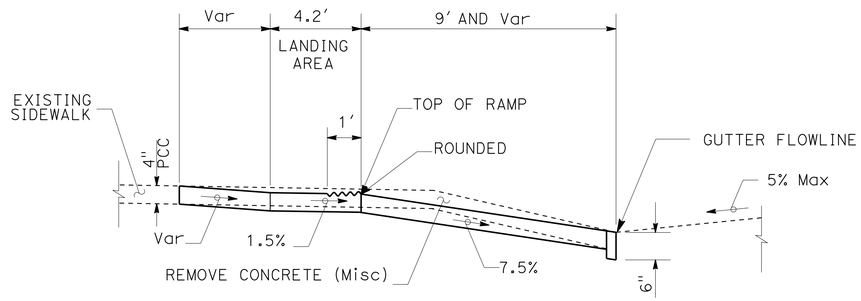

SECTION A-A

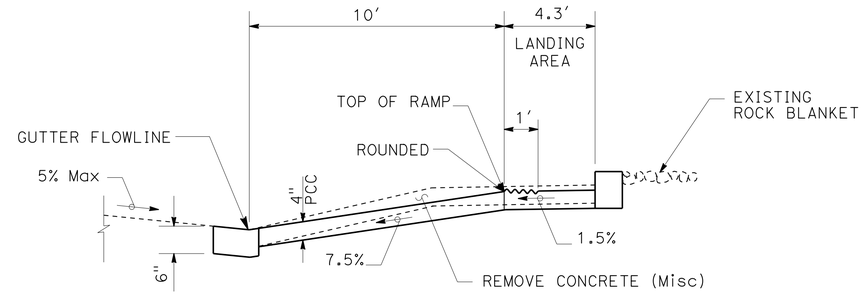

SECTION B-B

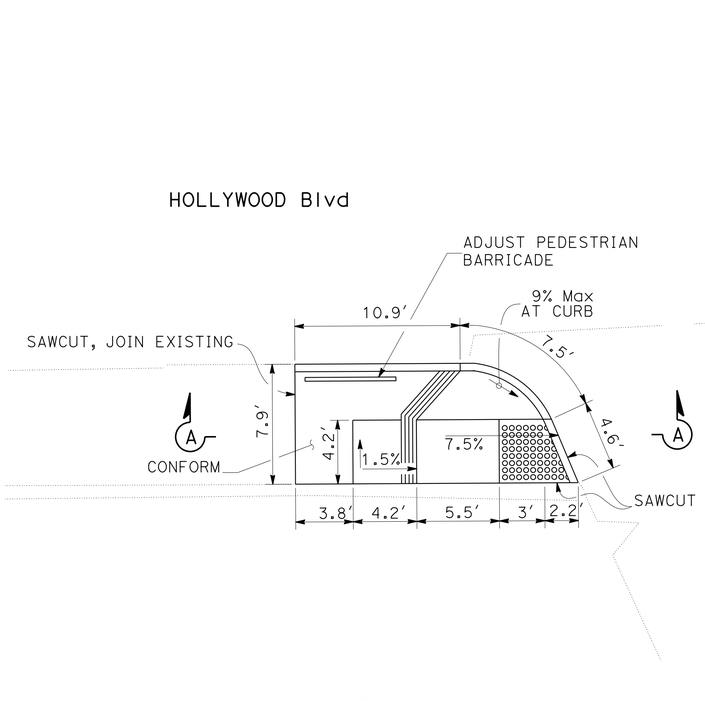

PLAN

CURB RAMP Loc 31L
(CASE G)

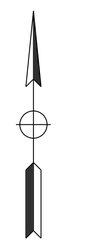

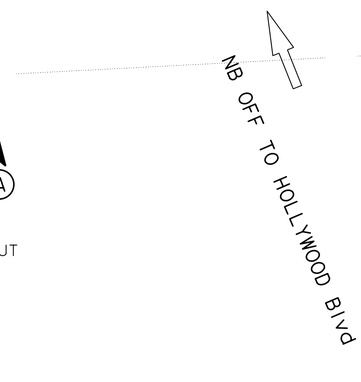

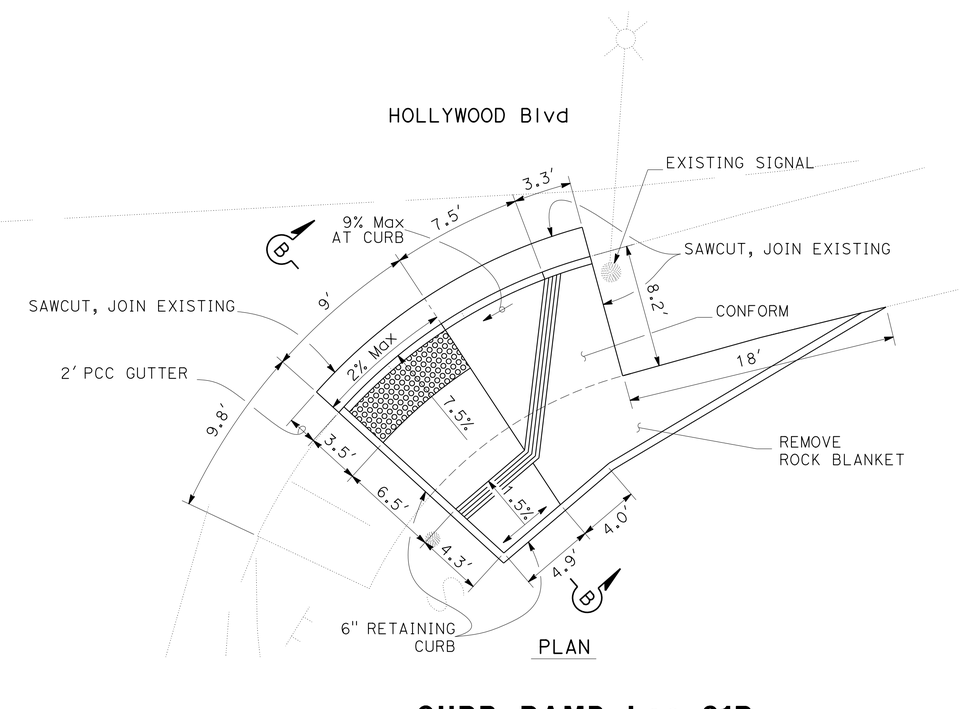

PLAN

CURB RAMP Loc 31R
(CASE G Mod)

CONSTRUCTION DETAILS

NO SCALE

C-60

STATE OF CALIFORNIA - DEPARTMENT OF TRANSPORTATION
Caltrans MAINTENANCE ENGINEERING

FUNCTIONAL SUPERVISOR: KEVIN KWAN
CALCULATED-DESIGNED BY: QUAN HA
CHECKED BY: CHARLIE TRUONG
REVISED BY
DATE REVISED

LAST REVISION 00-00-00
DATE PLOTTED => 24-MAY-2014
TIME PLOTTED => 05:31

Dist	COUNTY	ROUTE	POST MILES TOTAL PROJECT	SHEET No.	TOTAL SHEETS
07	LA	101	1.8/8.4	69	183

REGISTERED CIVIL ENGINEER 1-30-14 DATE

2-24-14
PLANS APPROVAL DATE

REGISTERED PROFESSIONAL ENGINEER
CHARLIE TRUONG
No. 69881
Exp. 9-30-14
CIVIL
STATE OF CALIFORNIA

THE STATE OF CALIFORNIA OR ITS OFFICERS OR AGENTS SHALL NOT BE RESPONSIBLE FOR THE ACCURACY OR COMPLETENESS OF SCANNED COPIES OF THIS PLAN SHEET.

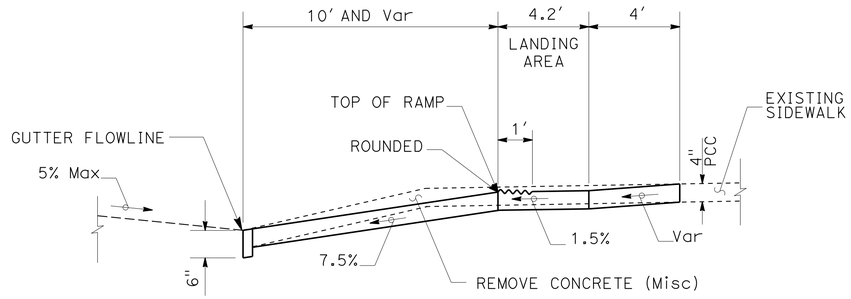

SECTION A-A

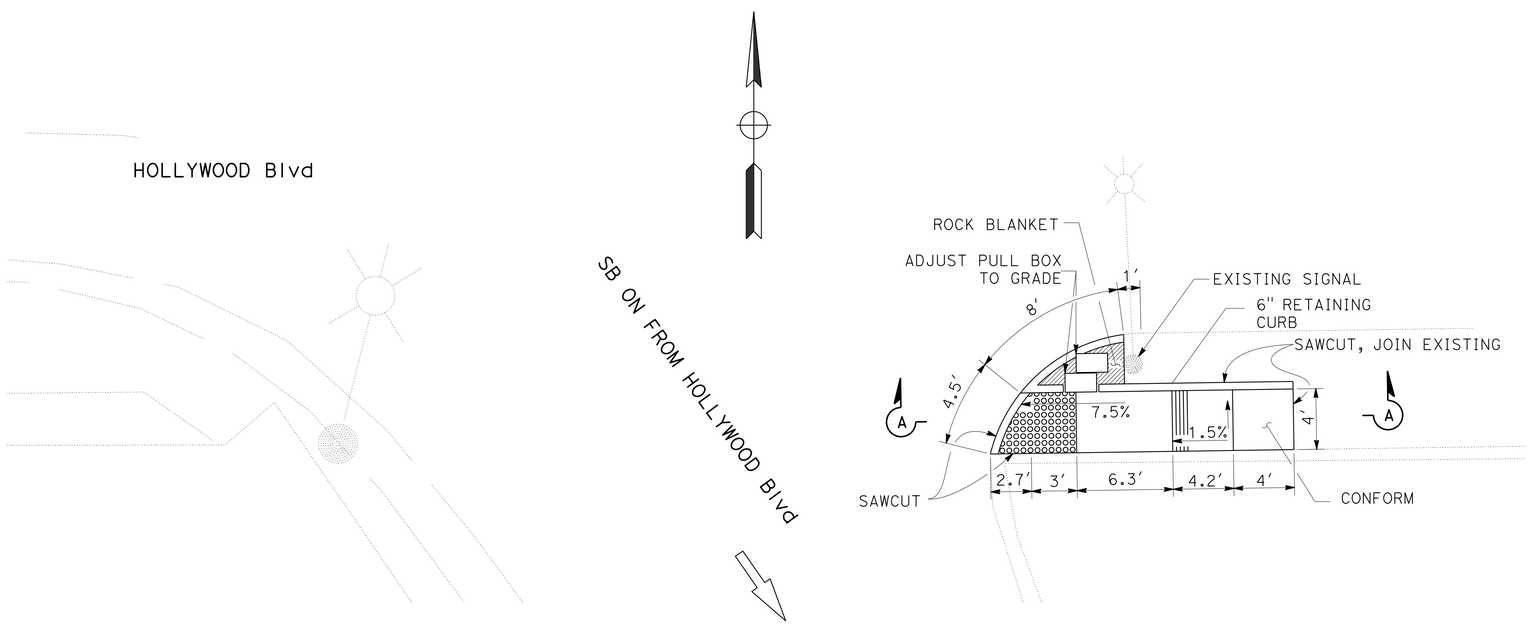

PLAN

CURB RAMP Loc 32L
(CASE F MODIFIED)

CONSTRUCTION DETAILS

NO SCALE

C-61

STATE OF CALIFORNIA - DEPARTMENT OF TRANSPORTATION
Caltrans MAINTENANCE ENGINEERING

FUNCTIONAL SUPERVISOR: KEVIN KWAN
CALCULATED-DESIGNED BY: QUAN HA
CHECKED BY: CHARLIE TRUONG
REVISED BY
DATE REVISED

LAST REVISION 00-00-00
DATE PLOTTED => 24-MAY-2014
TIME PLOTTED => 05:31

Dist	COUNTY	ROUTE	POST MILES TOTAL PROJECT	SHEET No.	TOTAL SHEETS
07	LA	101	1.8/8.4	70	183

REGISTERED CIVIL ENGINEER 1-30-14 DATE

2-24-14
PLANS APPROVAL DATE

REGISTERED PROFESSIONAL ENGINEER
CHARLIE TRUONG
No. 69881
Exp. 9-30-14
CIVIL
STATE OF CALIFORNIA

THE STATE OF CALIFORNIA OR ITS OFFICERS OR AGENTS SHALL NOT BE RESPONSIBLE FOR THE ACCURACY OR COMPLETENESS OF SCANNED COPIES OF THIS PLAN SHEET.

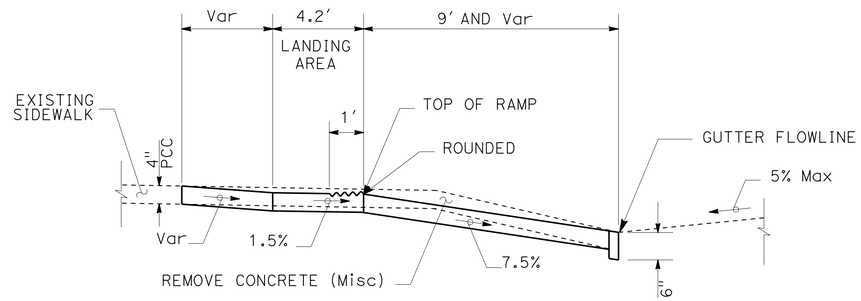

SECTION A-A

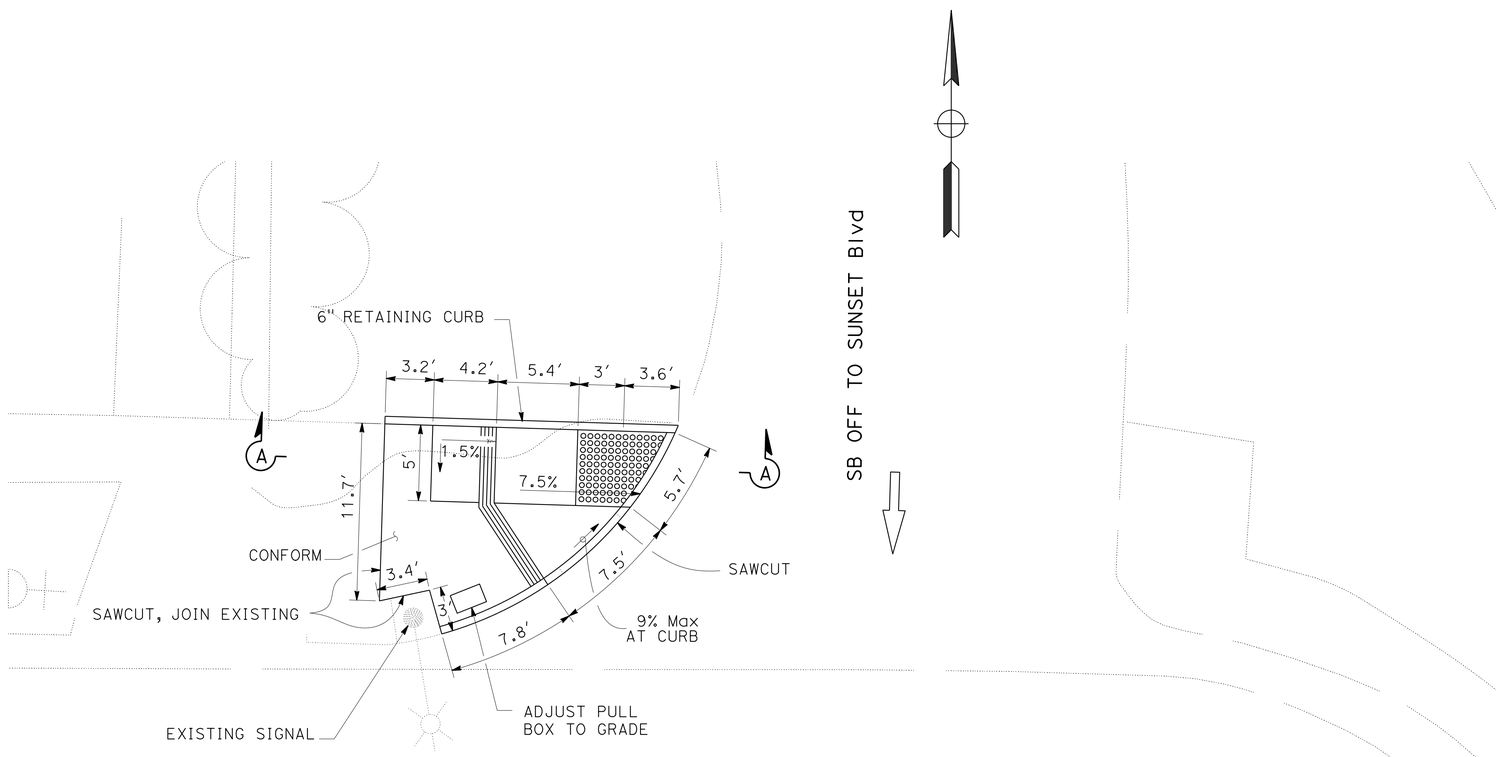

PLAN

CURB RAMP Loc 33R
(CASE G)

CONSTRUCTION DETAILS
NO SCALE

C-62

STATE OF CALIFORNIA - DEPARTMENT OF TRANSPORTATION
Caltrans MAINTENANCE ENGINEERING

FUNCTIONAL SUPERVISOR: KEVIN KWAN
CALCULATED-DESIGNED BY: QUAN HA
CHECKED BY: CHARLIE TRUONG
REVISED BY
DATE REVISED

LAST REVISION 00-00-00
DATE PLOTTED => 24-MAY-2014
TIME PLOTTED => 05:31

Dist	COUNTY	ROUTE	POST MILES TOTAL PROJECT	SHEET No.	TOTAL SHEETS
07	LA	101	1.8/8.4	71	183

REGISTERED CIVIL ENGINEER 1-30-14 DATE

2-24-14
PLANS APPROVAL DATE

REGISTERED PROFESSIONAL ENGINEER
CHARLIE TRUONG
No. 69881
Exp. 9-30-14
CIVIL
STATE OF CALIFORNIA

THE STATE OF CALIFORNIA OR ITS OFFICERS OR AGENTS SHALL NOT BE RESPONSIBLE FOR THE ACCURACY OR COMPLETENESS OF SCANNED COPIES OF THIS PLAN SHEET.

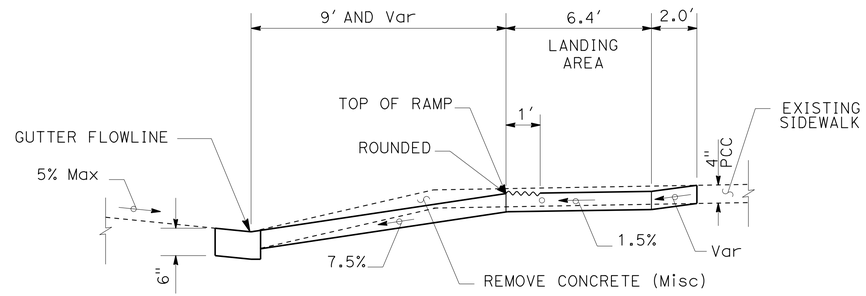

SECTION B-B

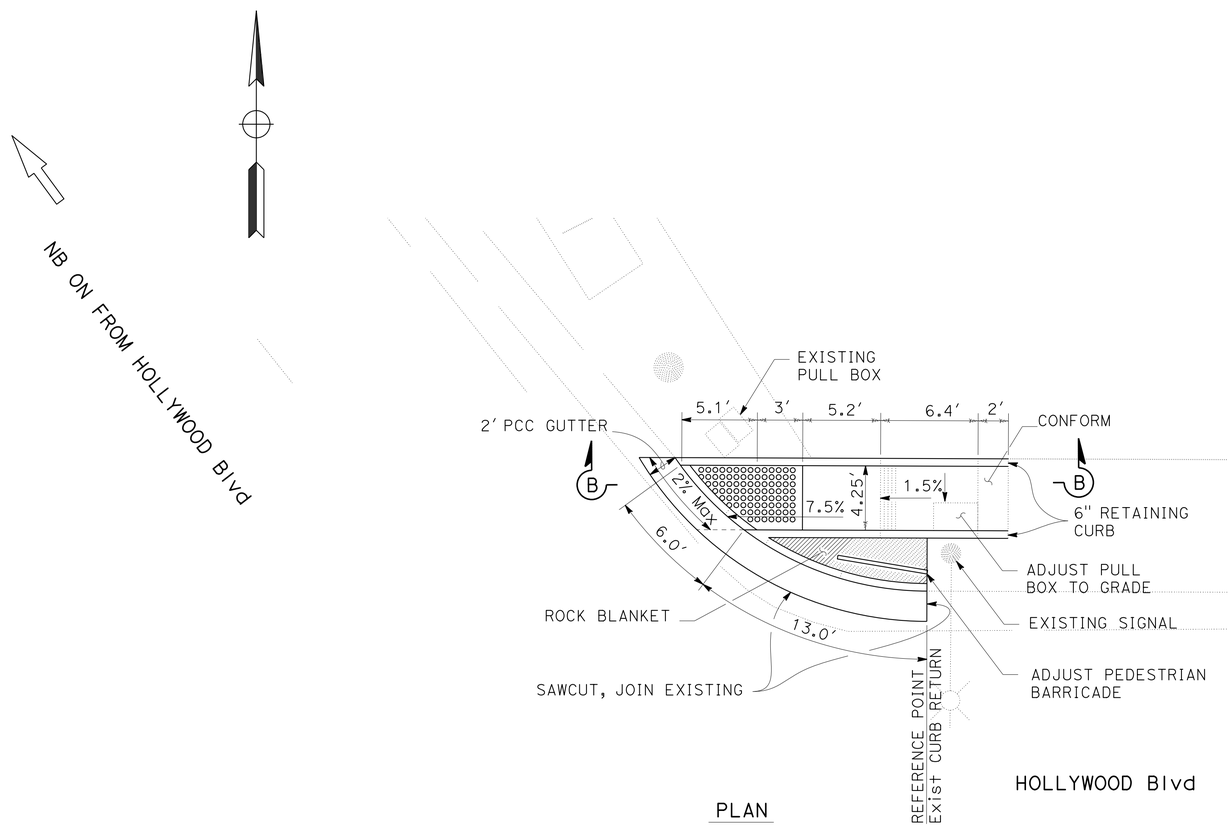

PLAN

CURB RAMP Loc 34R

(CASE F MODIFIED)

CONSTRUCTION DETAILS

NO SCALE

C-63

REVISED BY	DATE REVISED

CALCULATED-DESIGNED BY	CHECKED BY
QUAN HA	CHARLIE TRUONG

FUNCTIONAL SUPERVISOR: KEVIN KWAN

STATE OF CALIFORNIA - DEPARTMENT OF TRANSPORTATION
Caltrans MAINTENANCE ENGINEERING

LAST REVISION 00-00-00 | DATE PLOTTED => 24-MAY-2014 | TIME PLOTTED => 05:31

Dist	COUNTY	ROUTE	POST MILES TOTAL PROJECT	SHEET No.	TOTAL SHEETS
07	LA	101	1.8/8.4	72	183

REGISTERED CIVIL ENGINEER 1-30-14 DATE

2-24-14
PLANS APPROVAL DATE

REGISTERED PROFESSIONAL ENGINEER CHARLIE TRUONG No. 69881 Exp. 9-30-14 CIVIL STATE OF CALIFORNIA

THE STATE OF CALIFORNIA OR ITS OFFICERS OR AGENTS SHALL NOT BE RESPONSIBLE FOR THE ACCURACY OR COMPLETENESS OF SCANNED COPIES OF THIS PLAN SHEET.

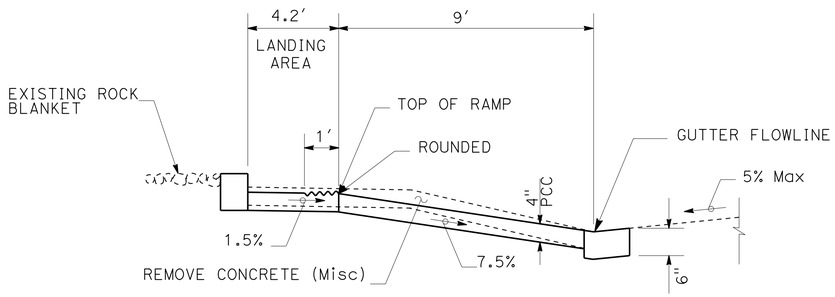

SECTION A-A

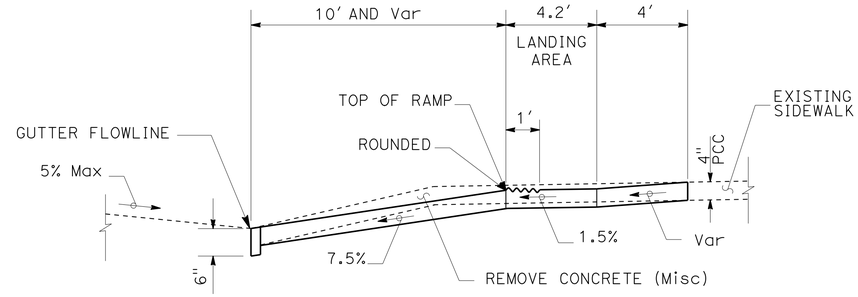

SECTION B-B

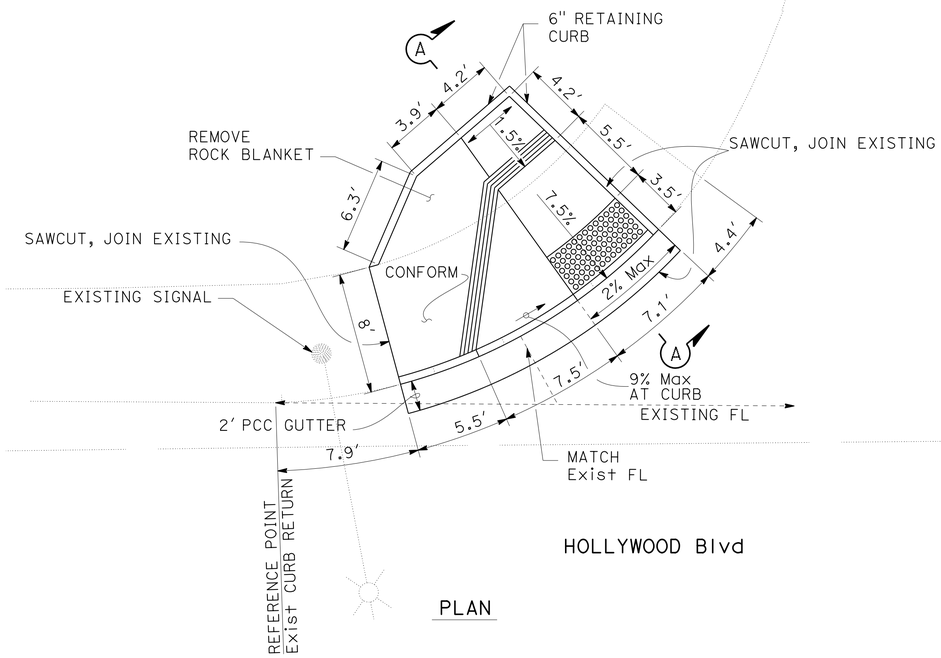

PLAN

CURB RAMP Loc 35R
(CASE G)

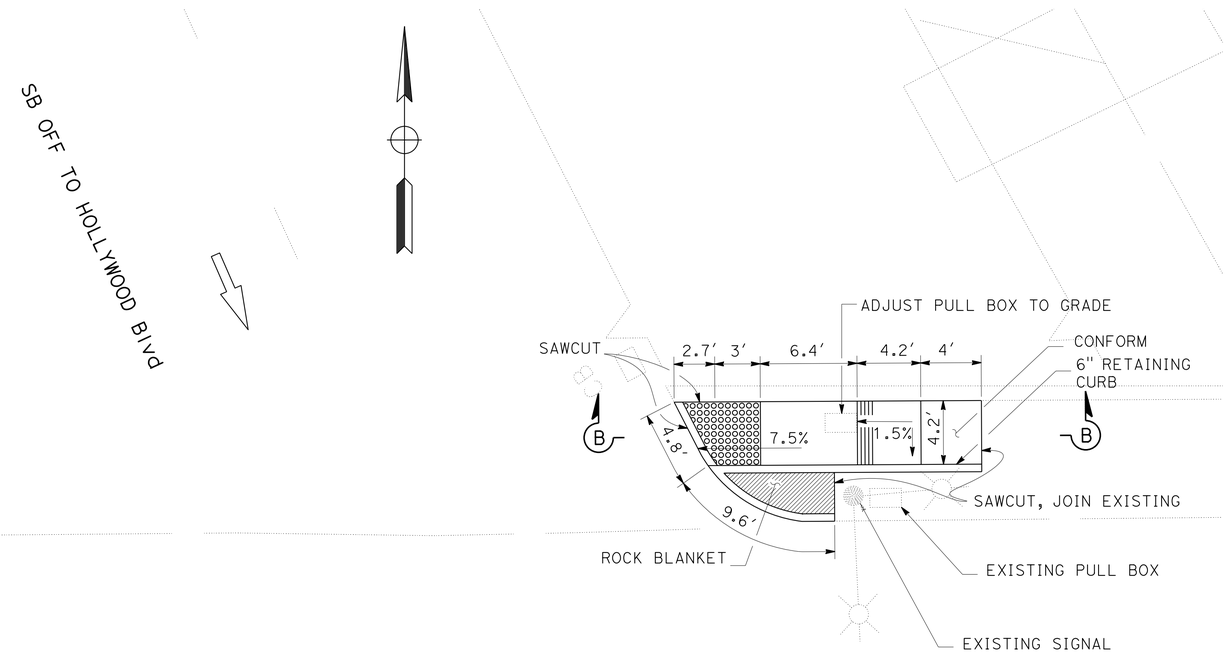

PLAN

CURB RAMP Loc 35L
(CASE F MODIFIED)

CONSTRUCTION DETAILS

NO SCALE

C-64

REVISED BY	DATE REVISED

CALCULATED-DESIGNED BY: QUAN HA
CHECKED BY: CHARLIE TRUONG
FUNCTIONAL SUPERVISOR: KEVIN KWAN

STATE OF CALIFORNIA - DEPARTMENT OF TRANSPORTATION
Caltrans MAINTENANCE ENGINEERING

LAST REVISION 00-00-00
DATE PLOTTED => 24-MAY-2014
TIME PLOTTED => 05:31

Dist	COUNTY	ROUTE	POST MILES TOTAL PROJECT	SHEET No.	TOTAL SHEETS
07	LA	101	1.8/8.4	73	183

REGISTERED CIVIL ENGINEER 1-30-14 DATE

2-24-14
PLANS APPROVAL DATE

REGISTERED PROFESSIONAL ENGINEER CHARLIE TRUONG No. 69881 Exp. 9-30-14 CIVIL STATE OF CALIFORNIA

THE STATE OF CALIFORNIA OR ITS OFFICERS OR AGENTS SHALL NOT BE RESPONSIBLE FOR THE ACCURACY OR COMPLETENESS OF SCANNED COPIES OF THIS PLAN SHEET.

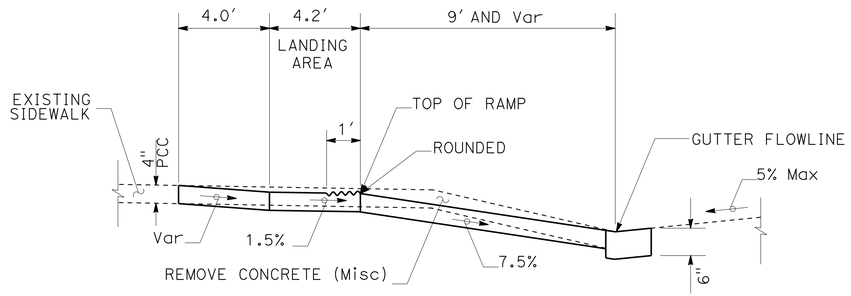

SECTION A-A

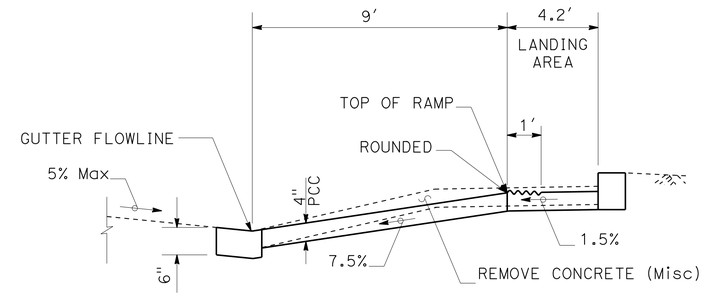

SECTION B-B

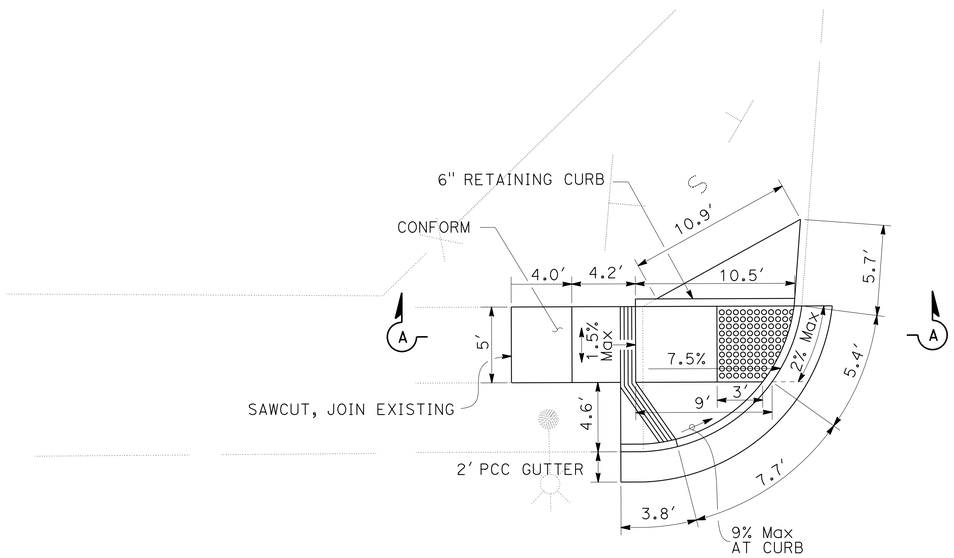

PLAN

CURB RAMP Loc 37L
(CASE A)

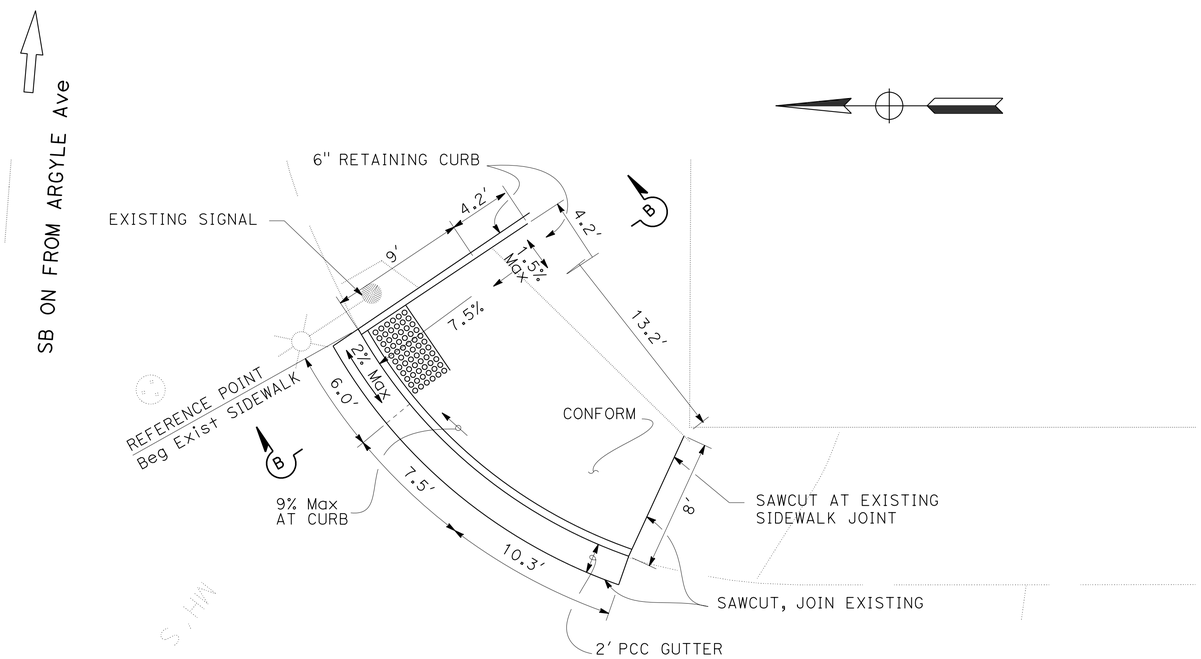

PLAN

CURB RAMP Loc 37R
(CASE G)

CONSTRUCTION DETAILS

NO SCALE

C-65

STATE OF CALIFORNIA - DEPARTMENT OF TRANSPORTATION
Caltrans MAINTENANCE ENGINEERING

FUNCTIONAL SUPERVISOR: KEVIN KWAN
CALCULATED-DESIGNED BY: QUAN HA
CHECKED BY: CHARLIE TRUONG
REVISED BY
DATE REVISED

LAST REVISION 00-00-00
DATE PLOTTED => 24-MAY-2014
TIME PLOTTED => 05:31

Dist	COUNTY	ROUTE	POST MILES TOTAL PROJECT	SHEET No.	TOTAL SHEETS
07	LA	101	1.8/8.4	74	183

REGISTERED CIVIL ENGINEER 1-30-14 DATE

2-24-14
PLANS APPROVAL DATE

REGISTERED PROFESSIONAL ENGINEER MICHAEL DUONG No. 73425 Exp. 12-31-14 CIVIL STATE OF CALIFORNIA

THE STATE OF CALIFORNIA OR ITS OFFICERS OR AGENTS SHALL NOT BE RESPONSIBLE FOR THE ACCURACY OR COMPLETENESS OF SCANNED COPIES OF THIS PLAN SHEET.

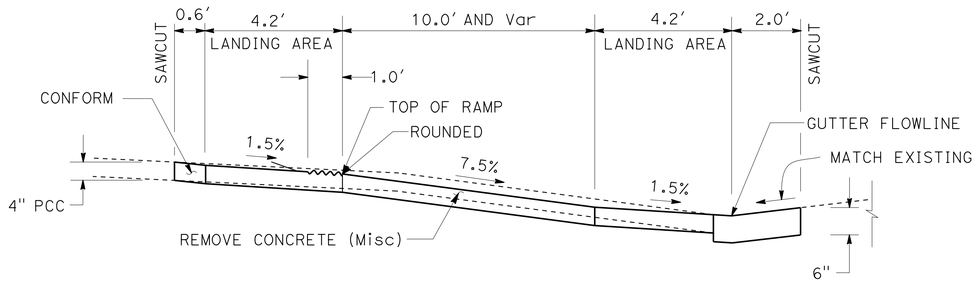

SECTION A-A

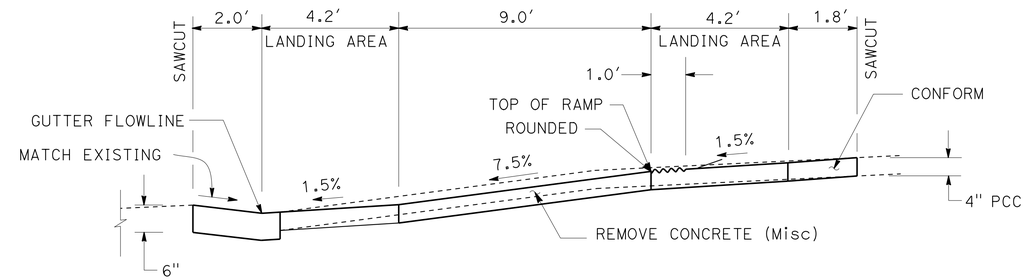

SECTION B-B

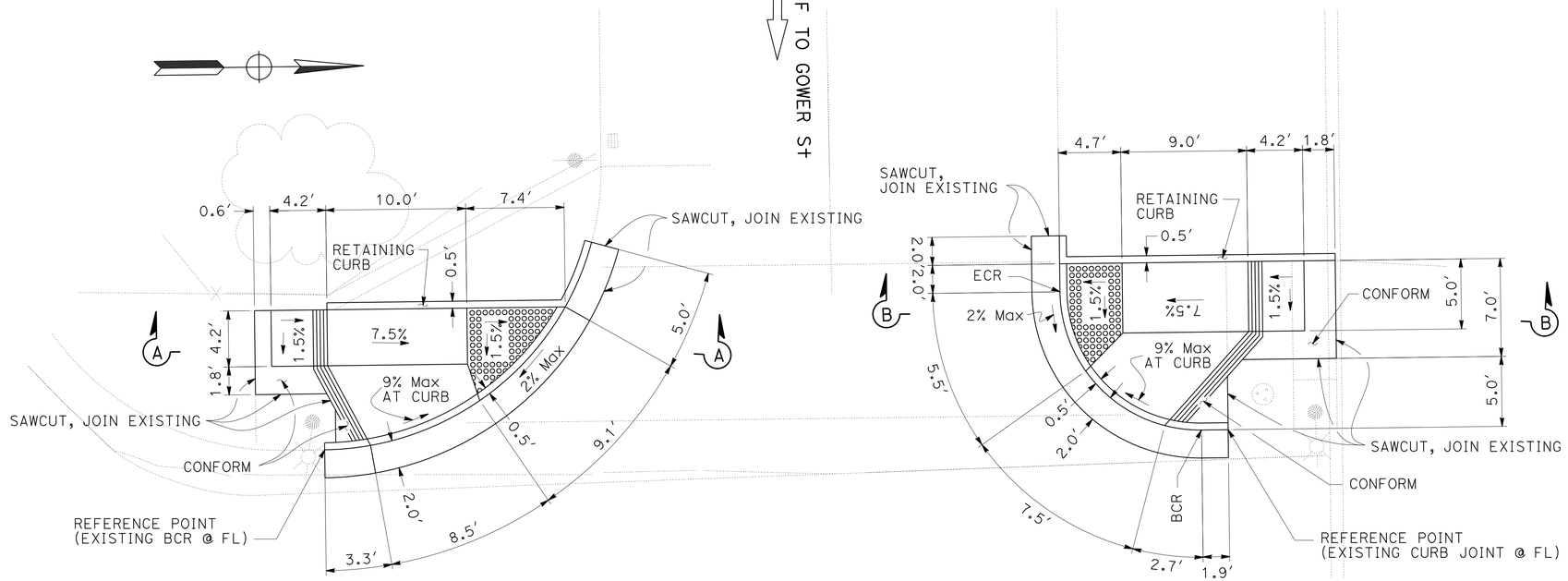

CURB RAMP Loc 38R
(CASE G MODIFIED)

PLAN

CURB RAMP Loc 38L
(CASE G MODIFIED)

CONSTRUCTION DETAILS
NO SCALE

C-66

REVISED BY	DATE REVISED
MICHAEL DUONG	
CHARLIE TRUONG	
CALCULATED-DESIGNED BY	
CHECKED BY	
FUNCTIONAL SUPERVISOR	
KEVIN KWAN	

STATE OF CALIFORNIA - DEPARTMENT OF TRANSPORTATION
Caltrans MAINTENANCE ENGINEERING

LAST REVISION 00-00-00 | DATE PLOTTED => 24-MAY-2014 | TIME PLOTTED => 05:31

Dist	COUNTY	ROUTE	POST MILES TOTAL PROJECT	SHEET No.	TOTAL SHEETS
07	LA	101	1.8/8.4	75	183

REGISTERED CIVIL ENGINEER 1-30-14 DATE

2-24-14
PLANS APPROVAL DATE

REGISTERED PROFESSIONAL ENGINEER CHARLIE TRUONG No. 69881 Exp. 9-30-14 CIVIL STATE OF CALIFORNIA

THE STATE OF CALIFORNIA OR ITS OFFICERS OR AGENTS SHALL NOT BE RESPONSIBLE FOR THE ACCURACY OR COMPLETENESS OF SCANNED COPIES OF THIS PLAN SHEET.

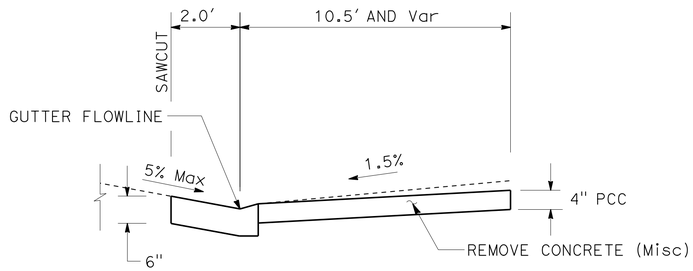

SECTION A-A

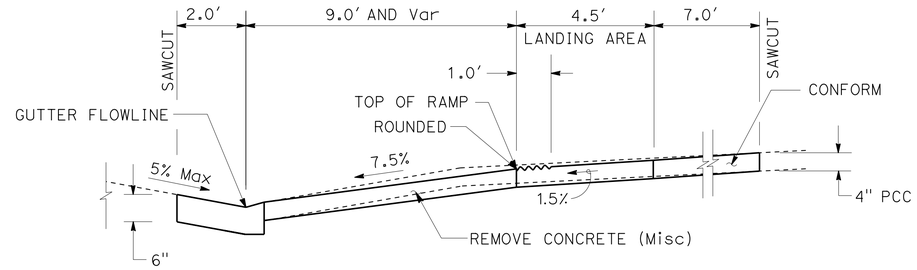

SECTION B-B

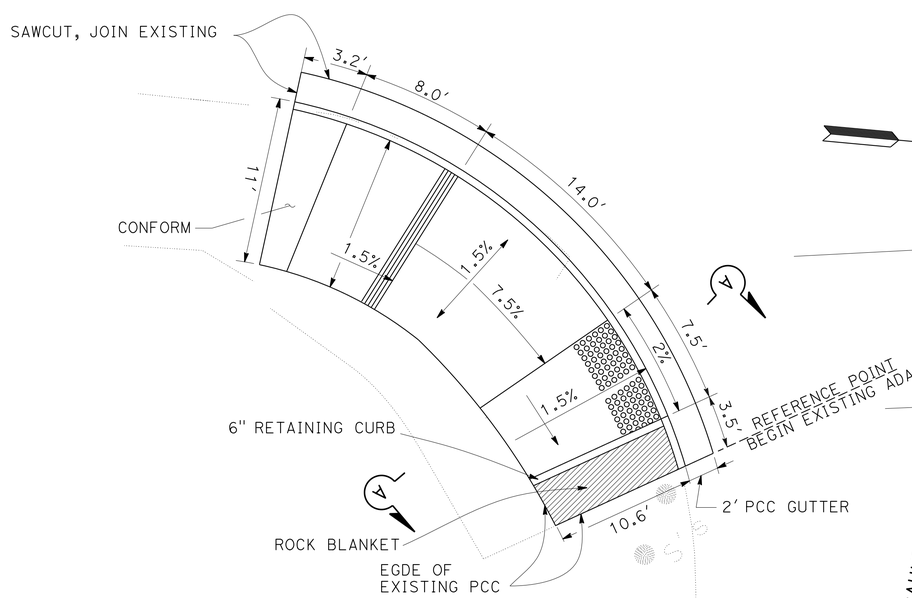

CURB RAMP Loc 40R
(CASE C MODIFIED)

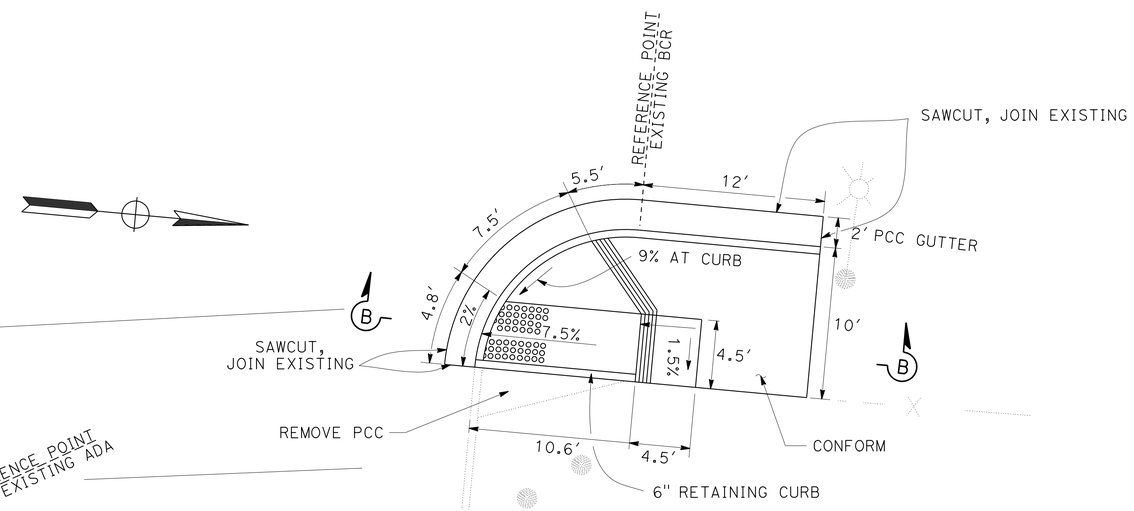

CURB RAMP Loc 40L
(CASE G)

SB ON FROM CAHUENGA Blvd

PLAN

CONSTRUCTION DETAILS

NO SCALE

C-67

HOALU NGUYEN	REVISED BY
CHARLIE TRUONG	DATE REVISED
CALCULATED-DESIGNED BY	
CHECKED BY	
FUNCTIONAL SUPERVISOR	
KEVIN KWAN	

STATE OF CALIFORNIA - DEPARTMENT OF TRANSPORTATION
Caltrans MAINTENANCE ENGINEERING

LAST REVISION 00-00-00 | DATE PLOTTED => 24-MAY-2014 | TIME PLOTTED => 05:31

Dist	COUNTY	ROUTE	POST MILES TOTAL PROJECT	SHEET No.	TOTAL SHEETS
07	LA	101	1.8/8.4	76	183

REGISTERED CIVIL ENGINEER 1-30-14 DATE

2-24-14
PLANS APPROVAL DATE

REGISTERED PROFESSIONAL ENGINEER CHARLIE TRUONG No. 69881 Exp. 9-30-14 CIVIL STATE OF CALIFORNIA

THE STATE OF CALIFORNIA OR ITS OFFICERS OR AGENTS SHALL NOT BE RESPONSIBLE FOR THE ACCURACY OR COMPLETENESS OF SCANNED COPIES OF THIS PLAN SHEET.

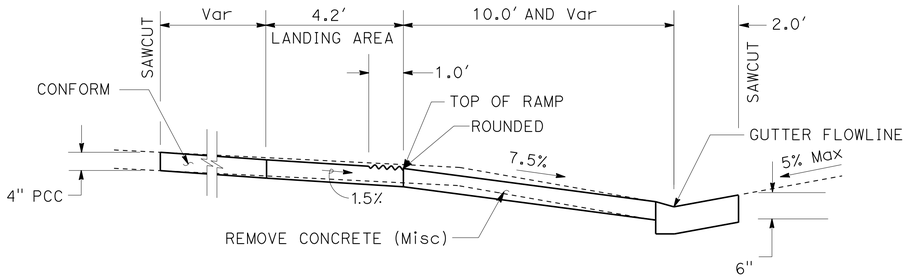

SECTION A-A

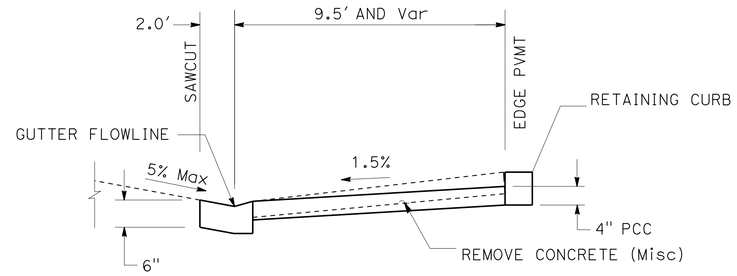

SECTION B-B

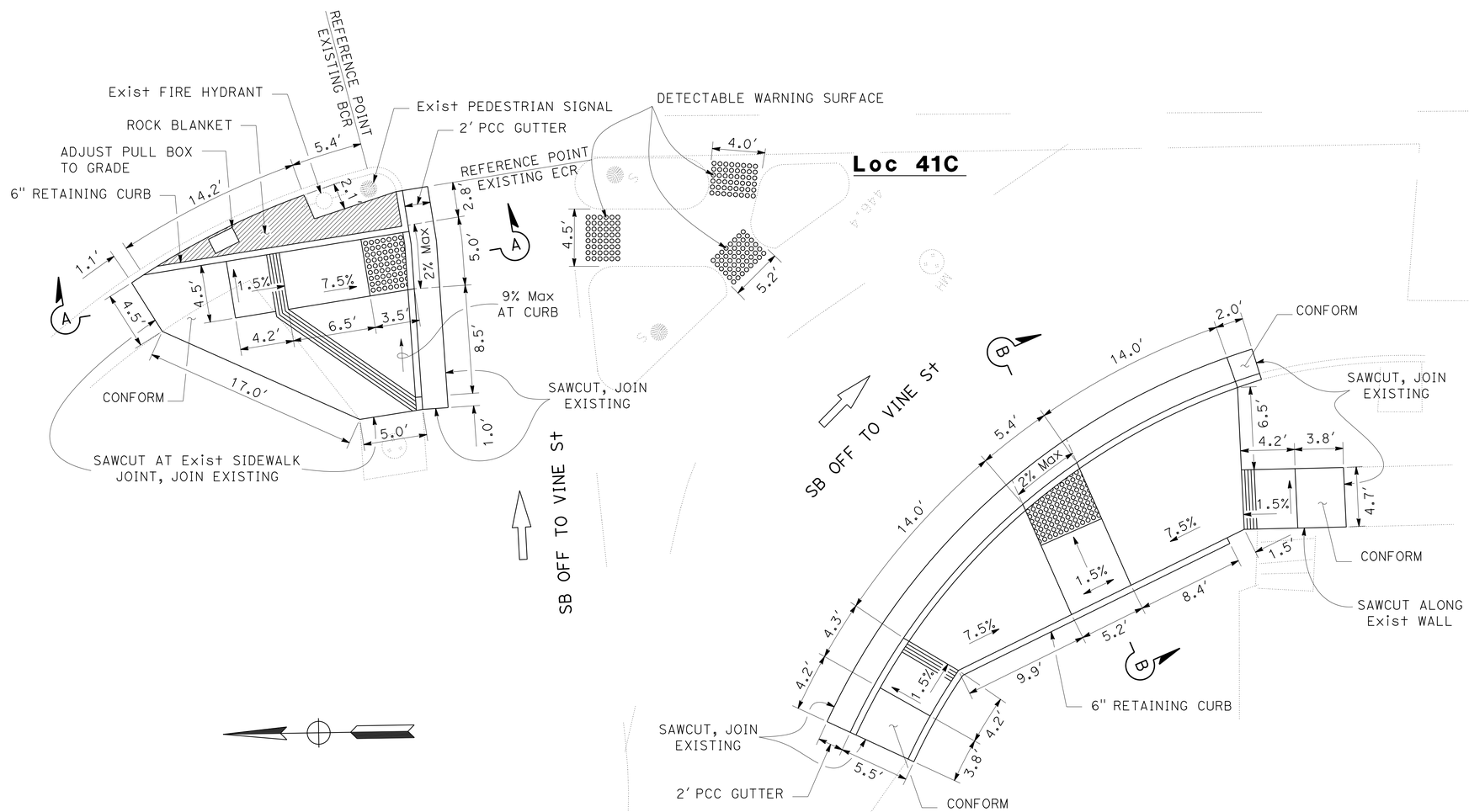

CURB RAMP Loc 41L
(CASE G MODIFIED)

PLAN

CURB RAMP Loc 41R
(CASE C MODIFIED)

CONSTRUCTION DETAILS

NO SCALE

C-68

STATE OF CALIFORNIA - DEPARTMENT OF TRANSPORTATION
Caltrans MAINTENANCE ENGINEERING

FUNCTIONAL SUPERVISOR: KEVIN KWAN
CALCULATED-DESIGNED BY: HOALU NGUYEN
CHECKED BY: CHARLIE TRUONG
REVISED BY
DATE REVISED

LAST REVISION 00-00-00
DATE PLOTTED => 24-MAY-2014
TIME PLOTTED => 05:31

Dist	COUNTY	ROUTE	POST MILES TOTAL PROJECT	SHEET No.	TOTAL SHEETS
07	LA	101	1.8/8.4	77	183

REGISTERED CIVIL ENGINEER 1-30-14 DATE

2-24-14
PLANS APPROVAL DATE

REGISTERED PROFESSIONAL ENGINEER
CHARLIE TRUONG
No. 69881
Exp. 9-30-14
CIVIL
STATE OF CALIFORNIA

THE STATE OF CALIFORNIA OR ITS OFFICERS OR AGENTS SHALL NOT BE RESPONSIBLE FOR THE ACCURACY OR COMPLETENESS OF SCANNED COPIES OF THIS PLAN SHEET.

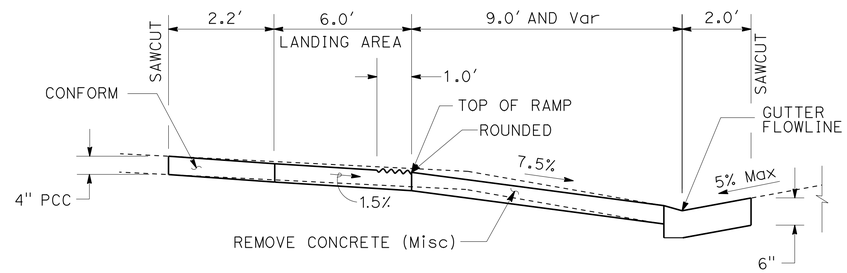

SECTION A-A

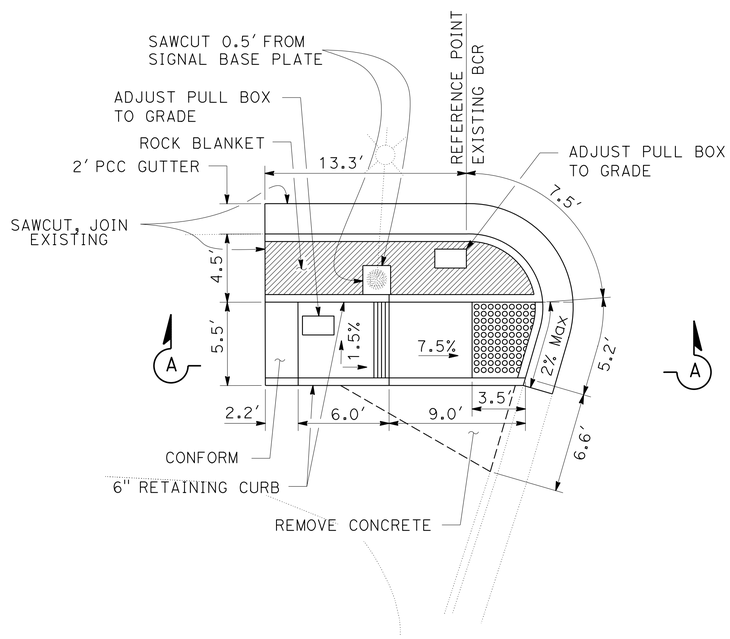

CURB RAMP Loc 42L
(CASE F MODIFIED)

PLAN

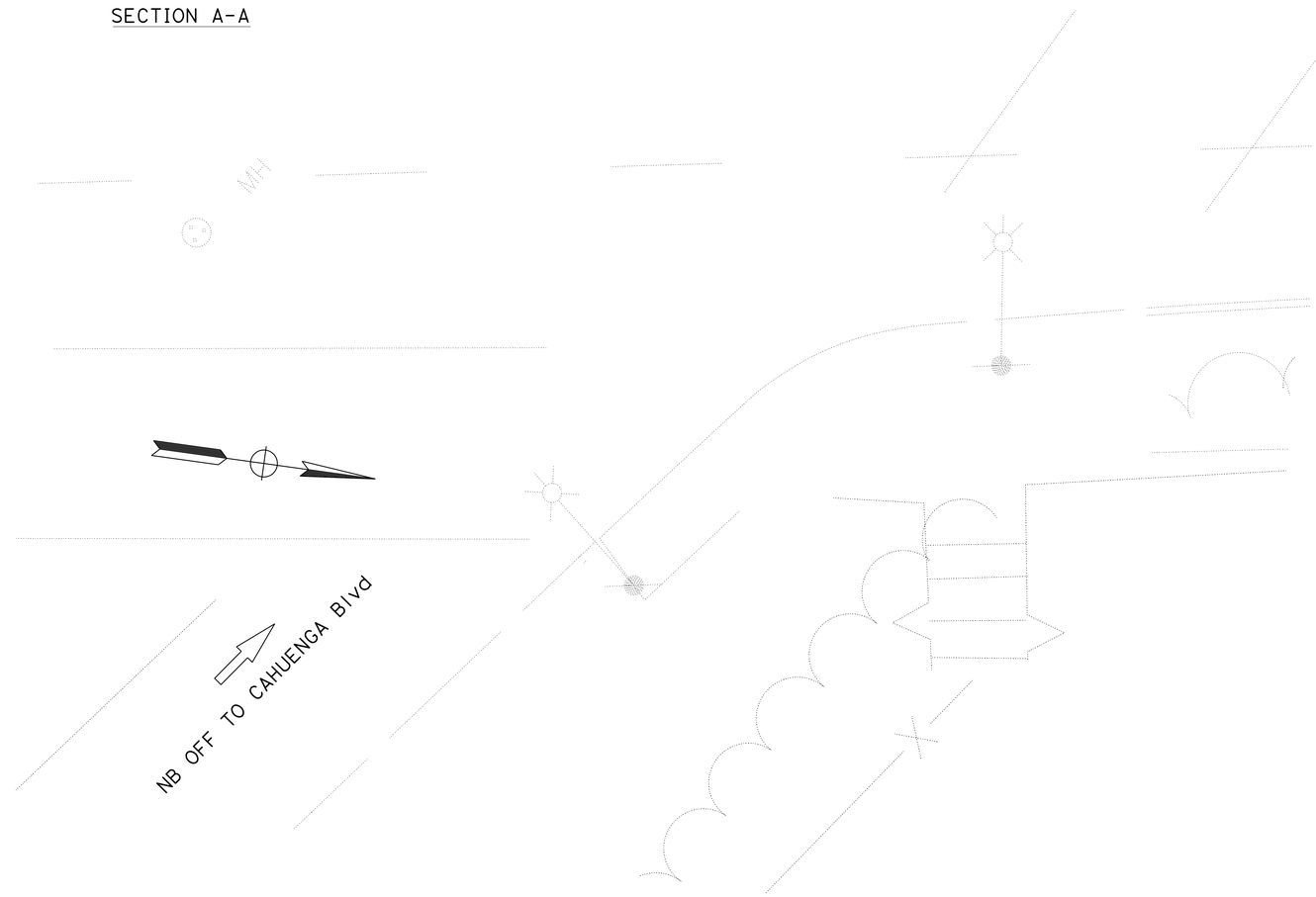

CONSTRUCTION DETAILS

NO SCALE

C-69

REVISED BY	DATE REVISED

CALCULATED-DESIGNED BY	HOALU NGUYEN
CHECKED BY	CHARLIE TRUONG
FUNCTIONAL SUPERVISOR	KEVIN KWAN

STATE OF CALIFORNIA - DEPARTMENT OF TRANSPORTATION
Caltrans MAINTENANCE ENGINEERING

LAST REVISION 00-00-00
DATE PLOTTED => 24-MAY-2014
TIME PLOTTED => 05:31

Dist	COUNTY	ROUTE	POST MILES TOTAL PROJECT	SHEET No.	TOTAL SHEETS
07	LA	101	1.8/8.4	78	183

REGISTERED CIVIL ENGINEER 1-30-14 DATE

2-24-14
PLANS APPROVAL DATE

REGISTERED PROFESSIONAL ENGINEER CHARLIE TRUONG No. 69881 Exp. 9-30-14 CIVIL STATE OF CALIFORNIA

THE STATE OF CALIFORNIA OR ITS OFFICERS OR AGENTS SHALL NOT BE RESPONSIBLE FOR THE ACCURACY OR COMPLETENESS OF SCANNED COPIES OF THIS PLAN SHEET.

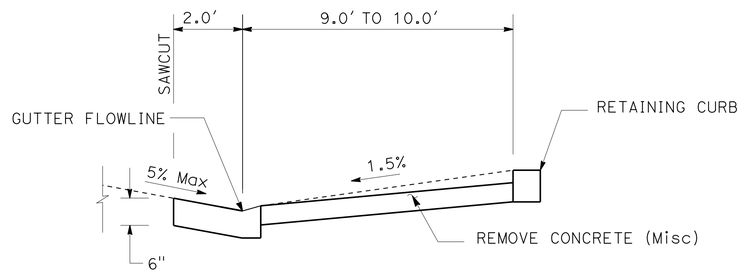

SECTION A-A

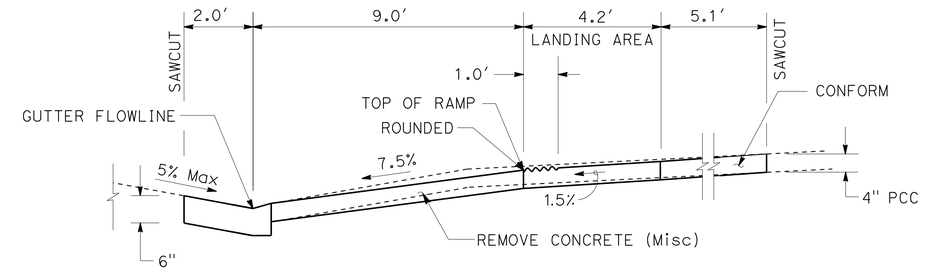

SECTION B-B

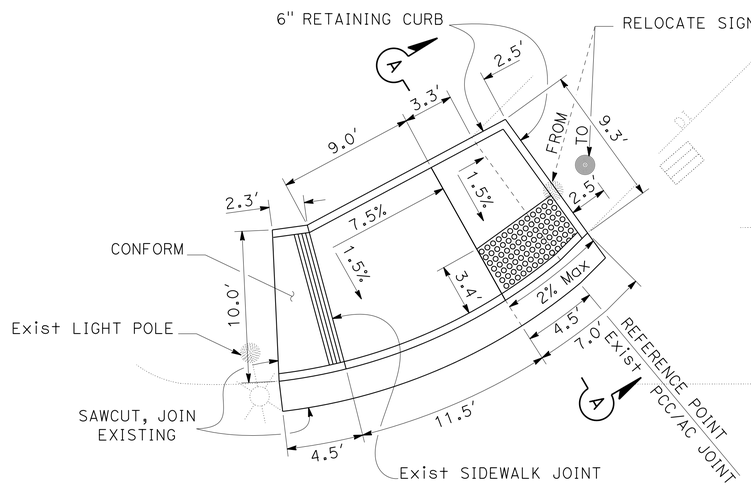

CURB RAMP Loc 43R
(CASE C MODIFIED)

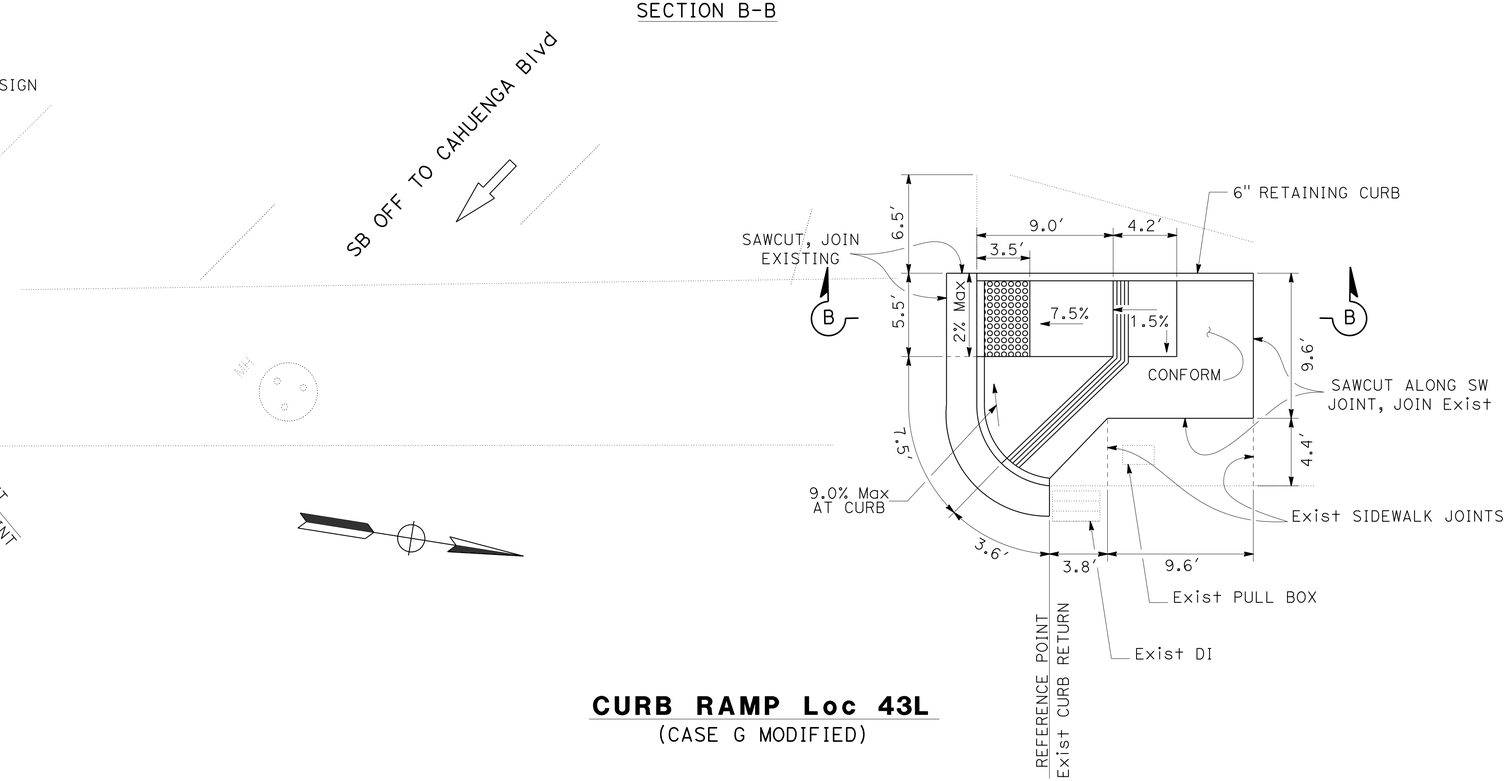

CURB RAMP Loc 43L
(CASE G MODIFIED)

CONSTRUCTION DETAILS

NO SCALE

C-70

REVISED BY	DATE REVISED

HOALU NGUYEN
CHARLIE TRUONG
CALCULATED-DESIGNED BY
CHECKED BY
FUNCTIONAL SUPERVISOR
KEVIN KWAN

STATE OF CALIFORNIA - DEPARTMENT OF TRANSPORTATION
Caltrans MAINTENANCE ENGINEERING

LAST REVISION 00-00-00
DATE PLOTTED => 24-MAY-2014
TIME PLOTTED => 05:32

Dist	COUNTY	ROUTE	POST MILES TOTAL PROJECT	SHEET No.	TOTAL SHEETS
07	LA	101	1.8/8.4	79	183

REGISTERED CIVIL ENGINEER 1-30-14 DATE

2-24-14
PLANS APPROVAL DATE

REGISTERED PROFESSIONAL ENGINEER
CHARLIE TRUONG
No. 69881
Exp. 9-30-14
CIVIL
STATE OF CALIFORNIA

THE STATE OF CALIFORNIA OR ITS OFFICERS OR AGENTS SHALL NOT BE RESPONSIBLE FOR THE ACCURACY OR COMPLETENESS OF SCANNED COPIES OF THIS PLAN SHEET.

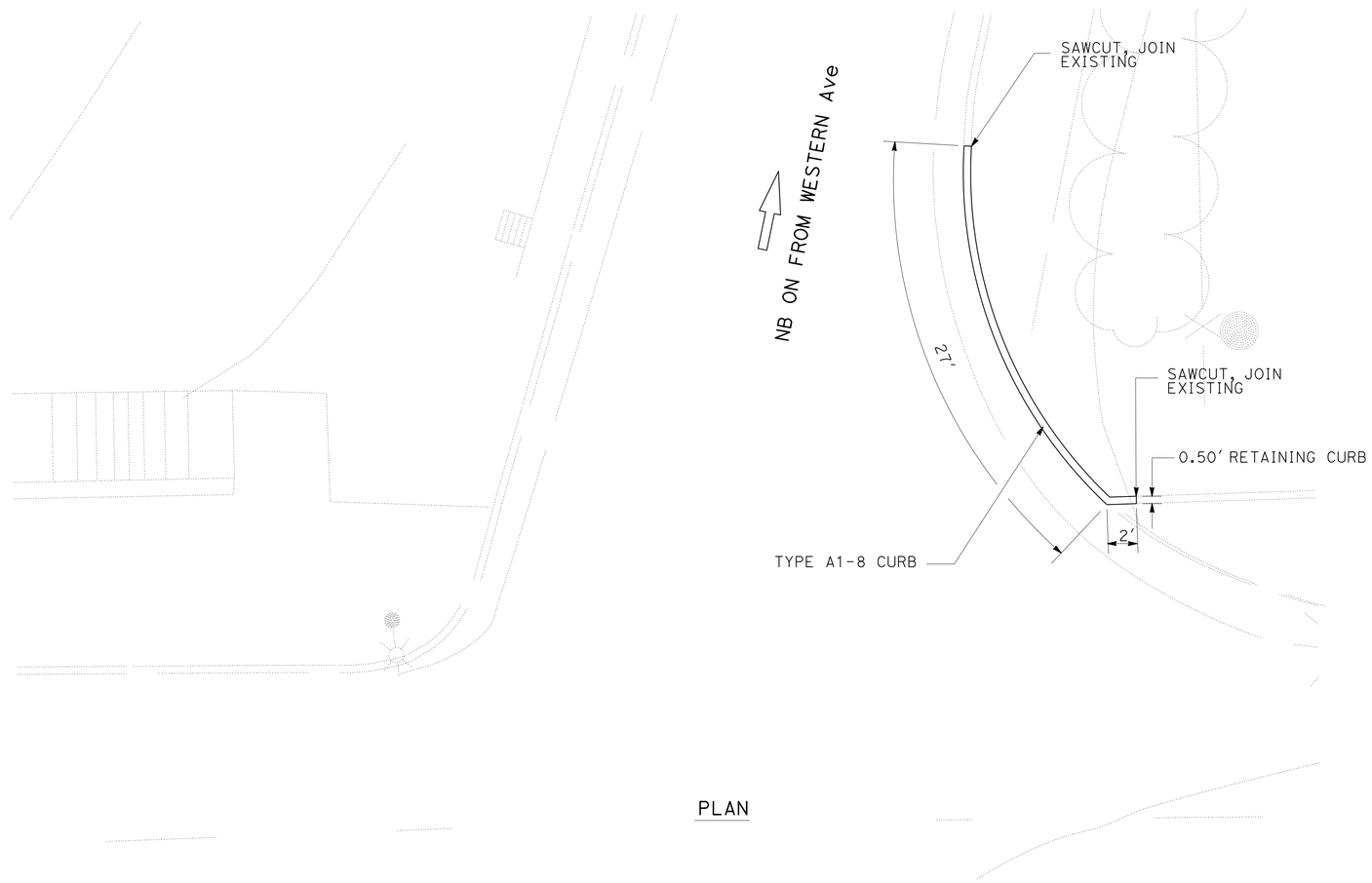

PLAN

CURB/DIKE Loc 1
NB ON-RAMP FROM WESTERN Ave

CONSTRUCTION DETAILS

NO SCALE

C-71

REVISED BY	DATE REVISED

CALCULATED-DESIGNED BY: CHARLIE TRUONG
CHECKED BY: KEVIN KWAN
FUNCTIONAL SUPERVISOR: KEVIN KWAN

STATE OF CALIFORNIA - DEPARTMENT OF TRANSPORTATION
Caltrans MAINTENANCE ENGINEERING

LAST REVISION 00-00-00
DATE PLOTTED => 24-MAY-2014
TIME PLOTTED => 05:32

Dist	COUNTY	ROUTE	POST MILES TOTAL PROJECT	SHEET No.	TOTAL SHEETS
07	LA	101	1.8/8.4	80	183

REGISTERED CIVIL ENGINEER 1-30-14 DATE

2-24-14
PLANS APPROVAL DATE

REGISTERED PROFESSIONAL ENGINEER CHARLIE TRUONG No. 69881 Exp. 9-30-14 CIVIL STATE OF CALIFORNIA

THE STATE OF CALIFORNIA OR ITS OFFICERS OR AGENTS SHALL NOT BE RESPONSIBLE FOR THE ACCURACY OR COMPLETENESS OF SCANNED COPIES OF THIS PLAN SHEET.

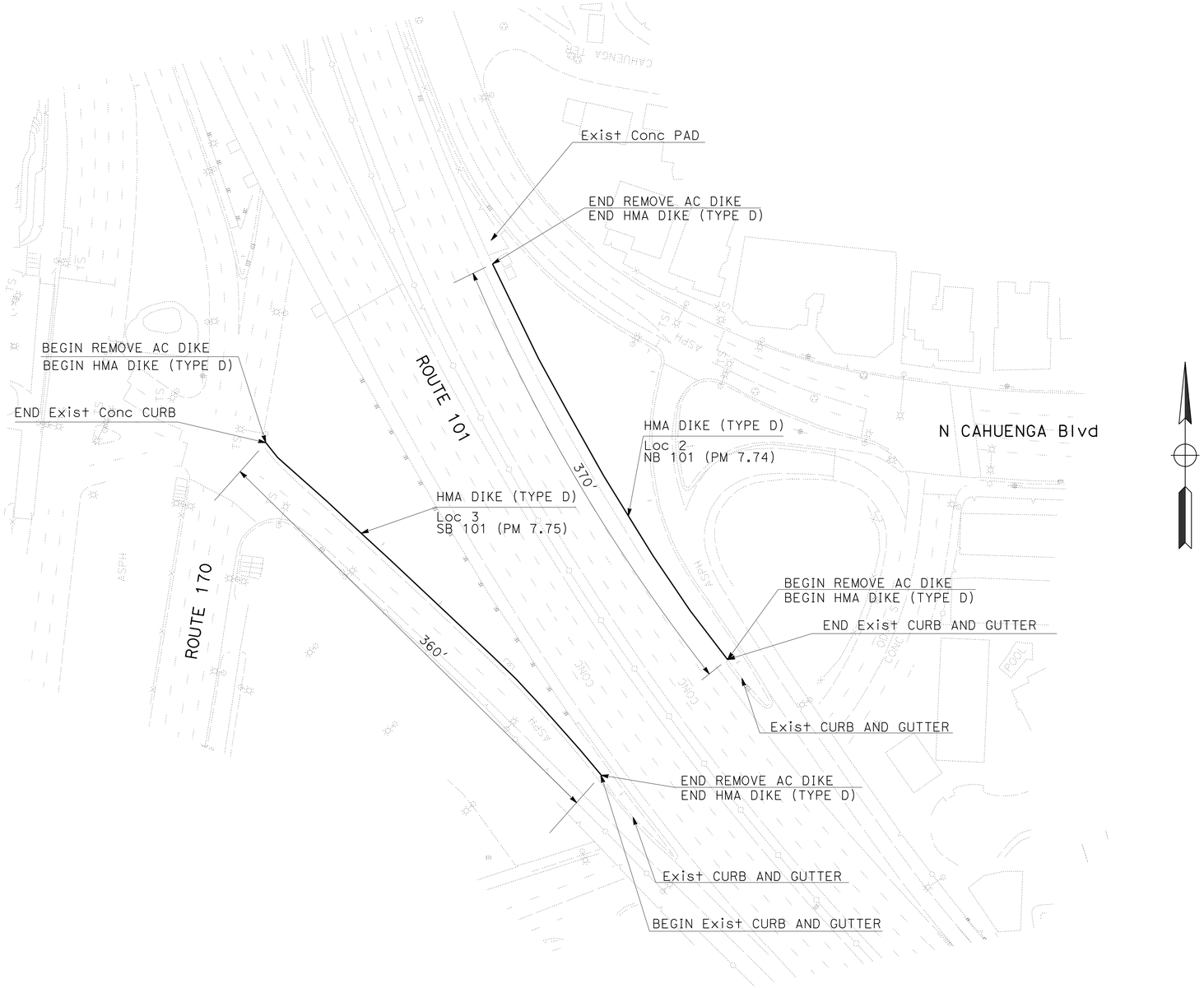

CURB/DIKE Loc 2 & 3

NB 101 - AT NORTH OF CAHUENGA Blvd OFF-RAMP
SB ON-RAMP FROM ROUTE 170

CONSTRUCTION DETAILS

NO SCALE

C-72

STATE OF CALIFORNIA - DEPARTMENT OF TRANSPORTATION
Caltrans MAINTENANCE ENGINEERING

FUNCTIONAL SUPERVISOR: HAMID SAADATNEJADI
CALCULATED-DESIGNED BY: CHARLIE TRUONG
CHECKED BY: KEVIN KWAN
REVISED BY
DATE REVISED

LAST REVISION 00-00-00
DATE PLOTTED => 24-MAY-2014
TIME PLOTTED => 05:32

Dist	COUNTY	ROUTE	POST MILES TOTAL PROJECT	SHEET No.	TOTAL SHEETS
07	LA	101	1.8/8.4	81	183

REGISTERED CIVIL ENGINEER 1-30-14 DATE

2-24-14
PLANS APPROVAL DATE

REGISTERED PROFESSIONAL ENGINEER CHARLIE TRUONG No. 69881 Exp. 9-30-14 CIVIL STATE OF CALIFORNIA

THE STATE OF CALIFORNIA OR ITS OFFICERS OR AGENTS SHALL NOT BE RESPONSIBLE FOR THE ACCURACY OR COMPLETENESS OF SCANNED COPIES OF THIS PLAN SHEET.

NOTES:

1. SIGNS LOCATIONS ARE APPROXIMATE, THE ENGINEER DETERMINES EXACT LOCATIONS.

CONSTRUCTION AREA SIGNS (STATIONARY MOUNTED)

SIGN NUMBER (#)	SIGN CODE	PANEL SIZE	SIGN MESSAGE	NUMBER OF POSTS AND SIZE	NUMBER OF SIGNS
1	W20-1	60" X 60"	ROAD WORK AHEAD	2 - 6" X 6"	3
2	W20-1	48" X 48"	ROAD WORK AHEAD	1 - 6" X 6"	21
3	G20-2	48" X 24"	END ROAD WORK	1 - 4" X 4"	28
4	C40 (CA)	144" X 60"	TRAFFIC FINES DOUBLED IN CONSTRUCTION ZONES	2 - 4" X 6"	7

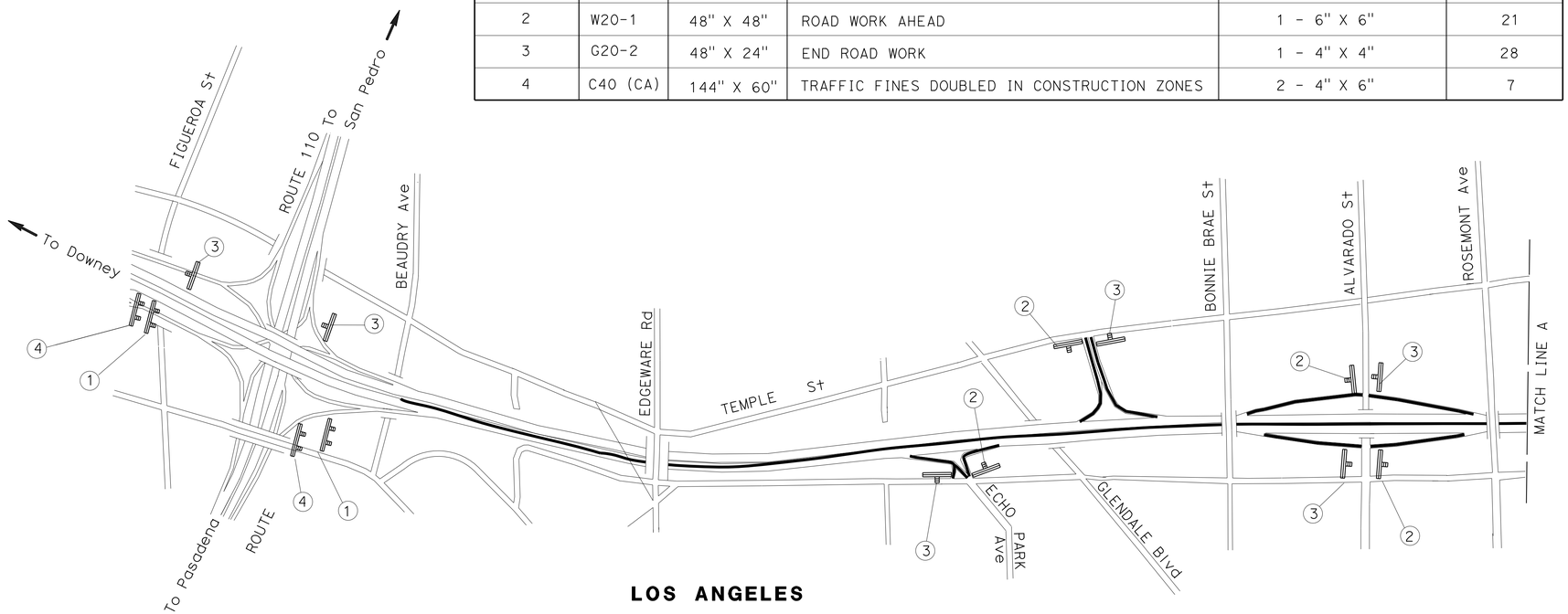

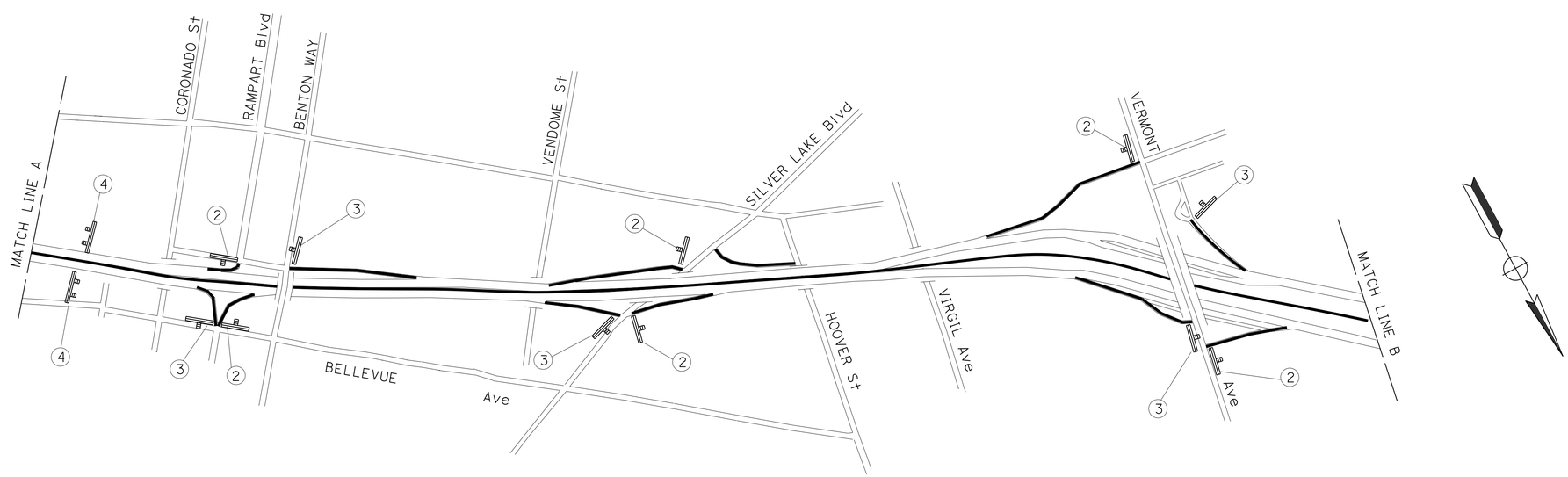

CONSTRUCTION AREA SIGNS

NO SCALE

CS-1

APPROVED FOR CONSTRUCTION AREA SIGN WORK ONLY

STATE OF CALIFORNIA - DEPARTMENT OF TRANSPORTATION
Caltrans MAINTENANCE ENGINEERING

FUNCTIONAL SUPERVISOR: KEVIN KWAN
CALCULATED-DESIGNED BY: ROXANA DIANATI
CHECKED BY: CHARLIE TRUONG
REVISED BY
DATE REVISED

LAST REVISION 00-00-00
DATE PLOTTED => 24-MAY-2014
TIME PLOTTED => 05:32

Dist	COUNTY	ROUTE	POST MILES TOTAL PROJECT	SHEET No.	TOTAL SHEETS
07	LA	101	1.8/8.4	82	183

REGISTERED CIVIL ENGINEER 1-30-14 DATE

2-24-14
PLANS APPROVAL DATE

REGISTERED PROFESSIONAL ENGINEER
CHARLIE TRUONG
No. 69881
Exp. 9-30-14
CIVIL
STATE OF CALIFORNIA

THE STATE OF CALIFORNIA OR ITS OFFICERS OR AGENTS SHALL NOT BE RESPONSIBLE FOR THE ACCURACY OR COMPLETENESS OF SCANNED COPIES OF THIS PLAN SHEET.

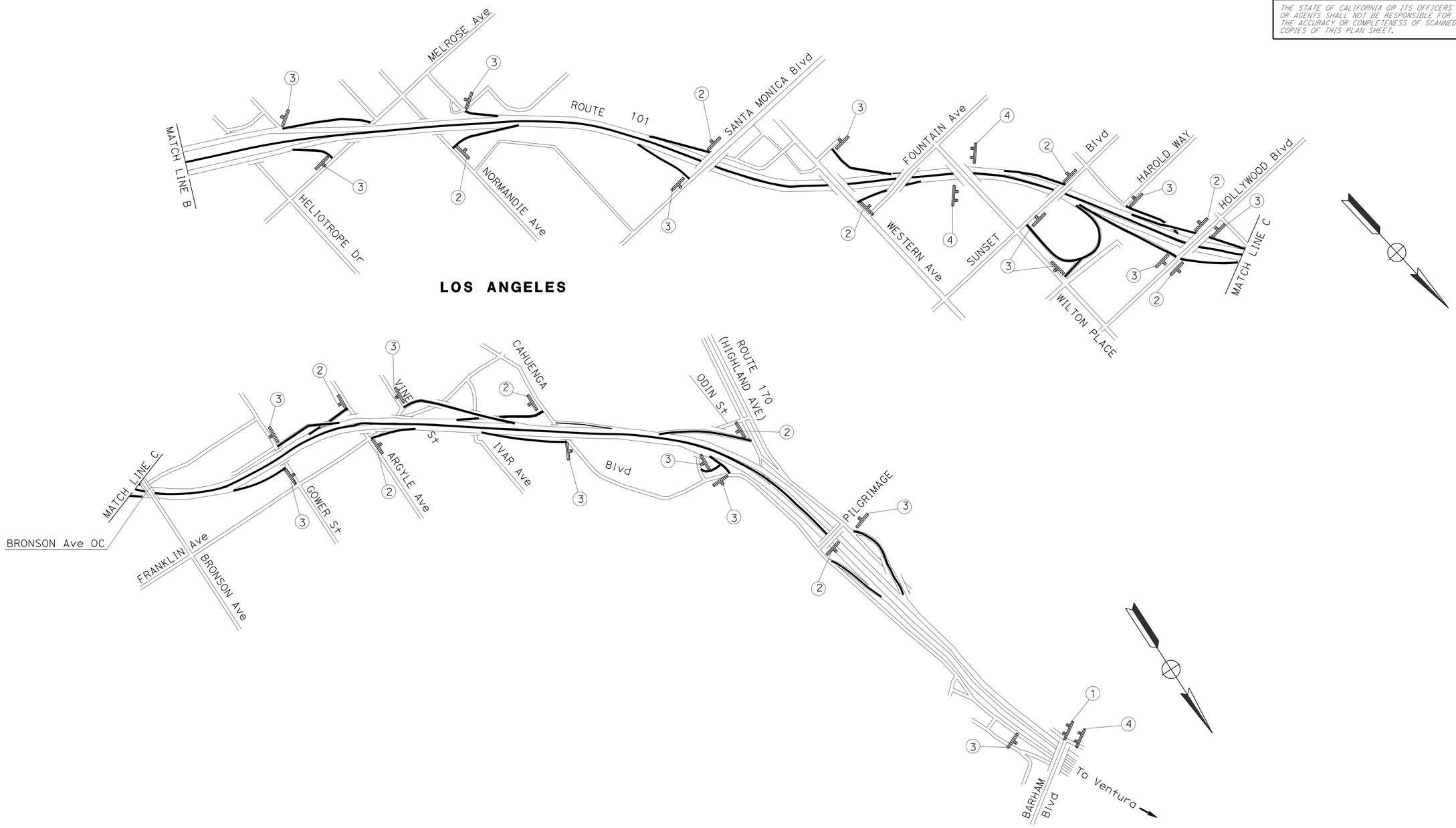

CONSTRUCTION AREA SIGNS

NO SCALE

CS-2

APPROVED FOR CONSTRUCTION AREA SIGN WORK ONLY

REVISED BY	DATE REVISED

CALCULATED-DESIGNED BY: ROXANA DIANATI
CHECKED BY: CHARLIE TRUONG
FUNCTIONAL SUPERVISOR: KEVIN KWAN

STATE OF CALIFORNIA - DEPARTMENT OF TRANSPORTATION
Caltrans MAINTENANCE ENGINEERING

LAST REVISION 00-00-00 | DATE PLOTTED => 24-MAY-2014 | TIME PLOTTED => 05:32

Dist	COUNTY	ROUTE	POST MILES TOTAL PROJECT	SHEET No.	TOTAL SHEETS
07	LA	101	1.8/8.4	83	183

REGISTERED CIVIL ENGINEER 09/05/13 DATE

2-24-14
PLANS APPROVAL DATE

REGISTERED PROFESSIONAL ENGINEER ALBERT K. YU No. 43220 Exp. 3/31/16 CIVIL STATE OF CALIFORNIA

THE STATE OF CALIFORNIA OR ITS OFFICERS OR AGENTS SHALL NOT BE RESPONSIBLE FOR THE ACCURACY OR COMPLETENESS OF SCANNED COPIES OF THIS PLAN SHEET.

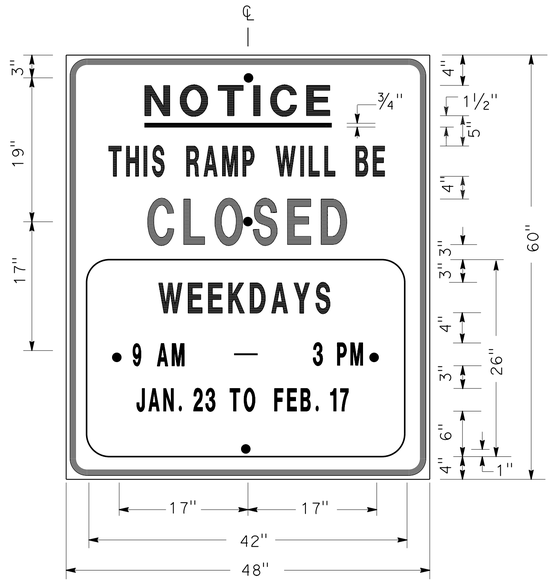

SIGN SP-1

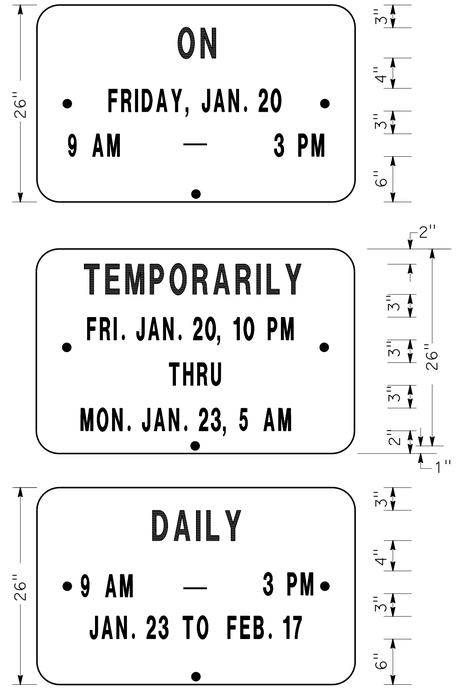

ALTERNATE OVERLAY PANELS (TYPICAL)

SPECIAL ADVANCE NOTICE PUBLICITY SIGN

NOTES: (SIGN SP-1)

1. LETTERS AND BORDER SHALL BE BLACK ON REFLECTORIZED ORANGE BACKGROUND.
2. BOLT HOLES SHALL BE 3/8" DIAMETER.
3. BASE MATERIAL SHALL BE ALUMINUM (MINIMUM 0.06").
4. SIGNS SHALL BE MOUNTED WITH BOTTOMS OF SIGNS A MINIMUM OF 7' ABOVE GROUND.

SIZE	BORDER WIDTH	MARGIN WIDTH	LETTER SIZE					CORNER RADIUS
			LINE 1	LINE 2*	LINE 3	LINE 4	LINE 5, 6, & 7*	
48"x60"	1 1/4"	3/4"	4E	4D	6E	4D		3"
42"x26"	OVERLAY						3D	1 1/2"
* CONDENSED SPACING IF NECESSARY								

SIGN SP-4

NOTES: (SIGN SP-4)

1. LETTERS - 6" SERIES C.
2. LETTERS AND BORDER SHALL BE BLACK ON REFLECTORIZED WHITE BACKGROUND.
3. BOLT HOLES SHALL BE 3/8" DIAMETER.
4. BASE MATERIAL SHALL BE ALUMINUM (MINIMUM 0.06").
5. SIGNS SHALL BE PLACED AT RAMP ENTRANCES IN ADDITION TO SIGNS POSTED IN ACCORDANCE WITH STANDARD PLAN RSP T14.

SPECIAL SIGN FOR ENTRANCE RAMP CLOSURES

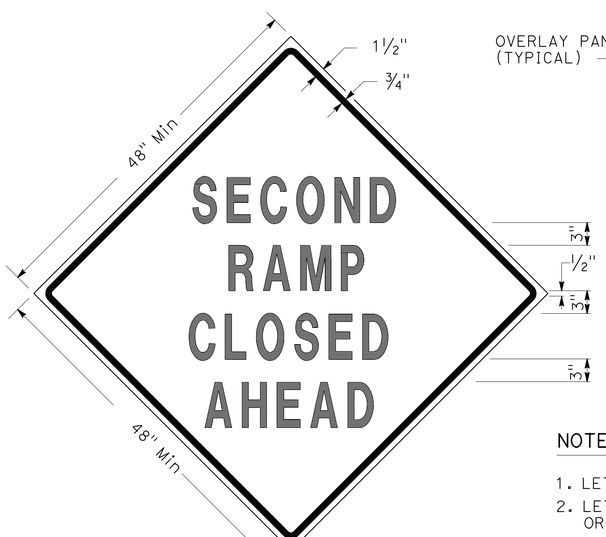

SIGN SP-3

SIGN SP-5

NOTES: (SIGNS SP-3 & SP-5)

1. LETTERS - 6" SERIES D.
2. LETTERS AND BORDER SHALL BE BLACK ON REFLECTORIZED ORANGE BACKGROUND.
3. BOLT HOLES SHALL BE 3/8" DIAMETER.
4. BASE MATERIAL SHALL BE ALUMINUM (MINIMUM 0.06").
5. SIGNS SHALL BE MOUNTED WITH BOTTOMS OF SIGNS A MINIMUM OF 7' ABOVE GROUND.
6. SIGN SP-5 SHALL BE USED IF THE OFF-RAMP TO BE CLOSED FOLLOWS A FREEWAY OFF-CONNECTOR.

SPECIAL SIGNS FOR EXIT RAMP CLOSURES

TRAFFIC HANDLING DETAILS
TRAFFIC CONTROL SYSTEM FOR RAMP CLOSURES, DETOUR SIGNS, AND MISCELLANEOUS DETAILS
SHEET 1 OF 2

NO SCALE

THD-1

STATE OF CALIFORNIA - DEPARTMENT OF TRANSPORTATION	Caltrans DTM
FUNCTIONAL SUPERVISOR	JOHN YANG
CALCULATED-DESIGNED BY	ALBERT K YU
CHECKED BY	JOCELYN C CHIANG
REVISED BY	JC
DATE REVISED	3/12

LAST REVISION 00-00-00 DATE PLOTTED => 24-MAY-2014 TIME PLOTTED => 05:32

Dist	COUNTY	ROUTE	POST MILES TOTAL PROJECT	SHEET No.	TOTAL SHEETS
07	LA	101	1.8/8.4	84	183

REGISTERED CIVIL ENGINEER 09/05/13 DATE

2-24-14
PLANS APPROVAL DATE

REGISTERED PROFESSIONAL ENGINEER ALBERT K. YU No. 43220 Exp. 3/31/16 CIVIL STATE OF CALIFORNIA

THE STATE OF CALIFORNIA OR ITS OFFICERS OR AGENTS SHALL NOT BE RESPONSIBLE FOR THE ACCURACY OR COMPLETENESS OF SCANNED COPIES OF THIS PLAN SHEET.

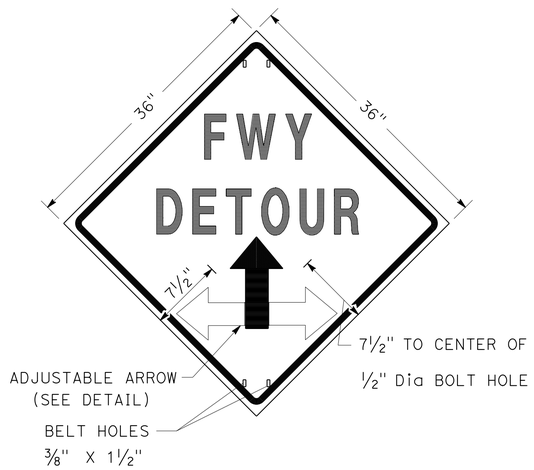

SIGN SP-2

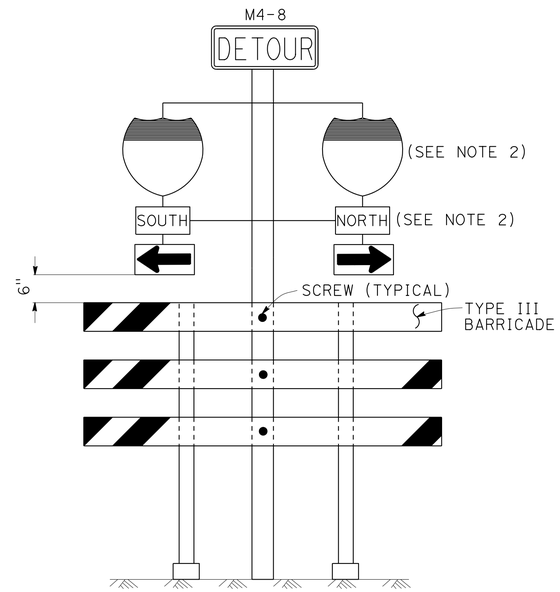

SIGN SP-6 (SEE NOTE 1)

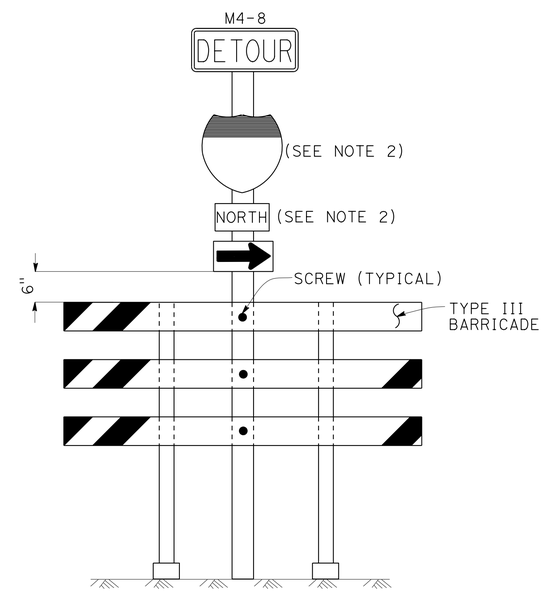

SIGN SP-7 (SEE NOTE 1)

NOTES: SIGN SP-2

1. LETTERS - 6" SERIES E.
2. LETTERS, BORDER AND ARROW - BLACK ON RETROREFLECTORIZED ORANGE BACKGROUND.
3. BASE MATERIAL FOR SIGNS AND ARROWS SHALL BE ALUMINUM (MINIMUM 0.06").
4. BELTS (LUGGAGE STRAPS) SHALL BE 1" WIDE BY 48" LONG, MADE OF COTTON OR POLYPROPYLENE WEB MATERIAL.
5. SIGNS SHALL BE MOUNTED WITH BOTTOMS OF SIGNS A MINIMUM OF 7' ABOVE GROUND EXCEPT AS OTHERWISE SHOWN ON OTHER TRAFFIC HANDLING DETAILS PLANS.

NOTES: (SIGNS SP-6 & SP-7)

1. IN LIEU OF PLACING SIGNS ON TYPE III BARRICADES, SIGNS, INCLUDING POSTS, MAY BE PLACED INTO THE GROUND OR FASTENED ONTO ELECTROLIERS.
2. USE APPROPRIATE ROUTE MARKER [G26-2(CA), G27-2(CA), G28-2(CA)] AND CARDINAL DIRECTION [NORTH (M3-1), SOUTH (M3-3), EAST (M3-2), WEST (M3-4)].

SPECIAL PORTABLE FREEWAY DETOUR SIGNS

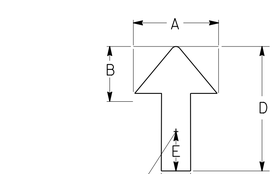

DIMENSIONS				
A	B	C	D	E
6"	3"	2"	8"	1"

ADJUSTABLE ARROW DETAIL

ABBREVIATION

(CA) CALIFORNIA CODE

TRAFFIC HANDLING DETAILS

TRAFFIC CONTROL SYSTEM FOR RAMP CLOSURES, DETOUR SIGNS, AND MISCELLANEOUS DETAILS

SHEET 2 OF 2

NO SCALE

THD-2

STATE OF CALIFORNIA - DEPARTMENT OF TRANSPORTATION
Caltrans® DTM

FUNCTIONAL SUPERVISOR: JOHN YANG
CALCULATED-DESIGNED BY: ALBERT K YU
CHECKED BY: JOCELYN C CHIANG
REVISED BY: JC
DATE REVISED: 3/12

LAST REVISION 00-00-00 | DATE PLOTTED => 24-MAY-2014 | TIME PLOTTED => 05:32

Dist	COUNTY	ROUTE	POST MILES TOTAL PROJECT	SHEET No.	TOTAL SHEETS
07	LA	101	1.8/8.4	85	183

REGISTERED CIVIL ENGINEER 09/05/13 DATE

2-24-14
PLANS APPROVAL DATE

REGISTERED PROFESSIONAL ENGINEER ALBERT K. YU No. 43220 Exp. 3/31/16 CIVIL STATE OF CALIFORNIA

THE STATE OF CALIFORNIA OR ITS OFFICERS OR AGENTS SHALL NOT BE RESPONSIBLE FOR THE ACCURACY OR COMPLETENESS OF SCANNED COPIES OF THIS PLAN SHEET.

LEGEND

- SIGN SP-2
- AND/OR — DESIGNATED DETOUR ROUTE
- DETOUR DIRECTION
- CONTROLLED INTERSECTION

NOTES:

1. SP-2 SIGNS MAY BE STRAPPED ON EXISTING ELECTROLIER, SIGNAL POST OR SIGN POST.
2. SP-2 SIGNS SHALL NOT BE INSTALLED ON BARRICADES EXCEPT AS OTHERWISE SHOWN.
3. SIGN LOCATIONS ARE APPROXIMATE. EXACT LOCATIONS WILL BE DETERMINED BY THE ENGINEER.
4. SP-2 SIGNS SHALL BE POSTED AT EACH CONTROLLED INTERSECTION (EXCEPT AT COMMERCIAL PROPERTY, RESIDENTIAL COMPLEX OR T-INTERSECTION FROM ONE-WAY STREET) ALONG THE DESIGNATED DETOUR ROUTE.
5. UNLESS OTHERWISE SHOWN ON OTHER THD PLANS, WHEN CONTROLLED INTERSECTIONS ALONG THE DESIGNATED DETOUR ROUTE ARE CLOSELY SPACED, PLACE SP-2 SIGNS AT CONTROLLED INTERSECTIONS AT A DISTANCE NOT TO EXCEED 1/4 MILE FROM THE PRECEDING DETOUR SIGN.
6. EXCEPT AS OTHERWISE SHOWN ON OTHER PLANS OR SPECIFIED IN THE SPECIAL PROVISIONS, SP-2 SIGNS SHALL BE PLACED AS SHOWN ON THIS PLAN.

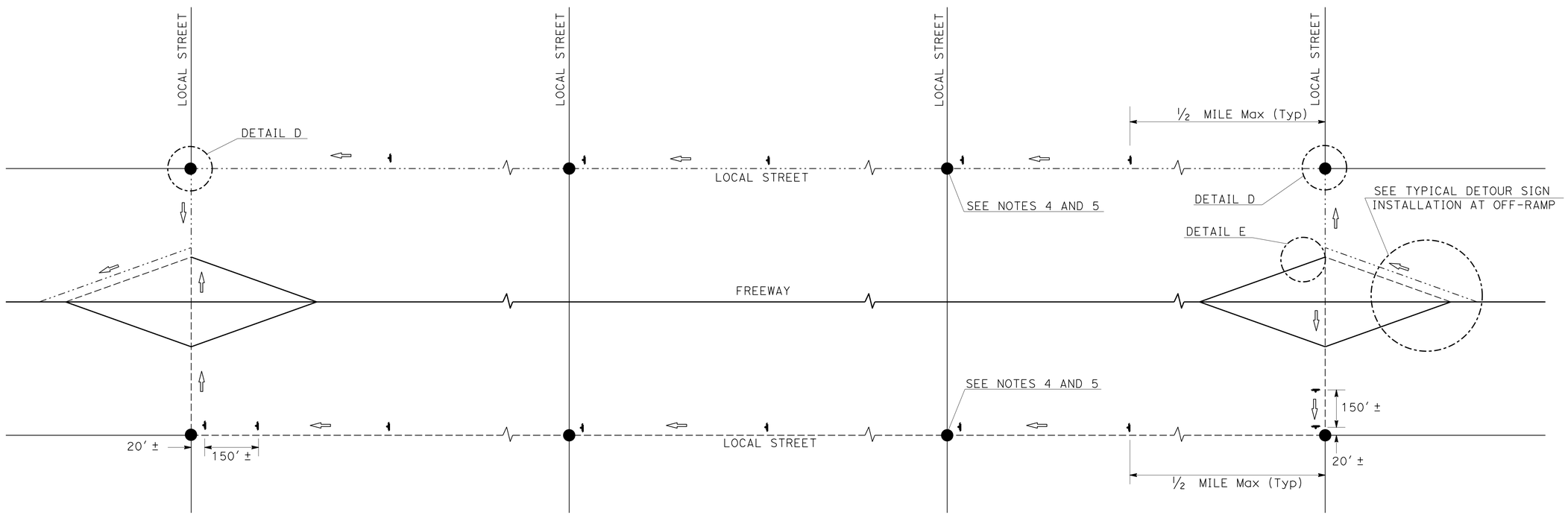

TYPICAL DETOUR SIGN INSTALLATION ALONG DESIGNATED DETOUR ROUTE

TRAFFIC HANDLING DETAILS

TRAFFIC CONTROL SYSTEM FOR DETOUR SIGN INSTALLATION ALONG DESIGNATED DETOUR ROUTE

SHEET 1 OF 2

NO SCALE

THD-3

STATE OF CALIFORNIA - DEPARTMENT OF TRANSPORTATION
Caltrans DTM

FUNCTIONAL SUPERVISOR: JOHN YANG
CALCULATED-DESIGNED BY: ALBERT K YU
CHECKED BY: JOCELYN C CHIANG
REVISED BY: JC
DATE REVISED: 3/12

LAST REVISION 00-00-00
DATE PLOTTED => 24-MAY-2014
TIME PLOTTED => 09:32

Dist	COUNTY	ROUTE	POST MILES TOTAL PROJECT	SHEET No.	TOTAL SHEETS
07	LA	101	1.8/8.4	86	183

REGISTERED CIVIL ENGINEER 09/05/13 DATE

2-24-14
PLANS APPROVAL DATE

REGISTERED PROFESSIONAL ENGINEER ALBERT K. YU No. 43220 Exp. 3/31/16 CIVIL STATE OF CALIFORNIA

THE STATE OF CALIFORNIA OR ITS OFFICERS OR AGENTS SHALL NOT BE RESPONSIBLE FOR THE ACCURACY OR COMPLETENESS OF SCANNED COPIES OF THIS PLAN SHEET.

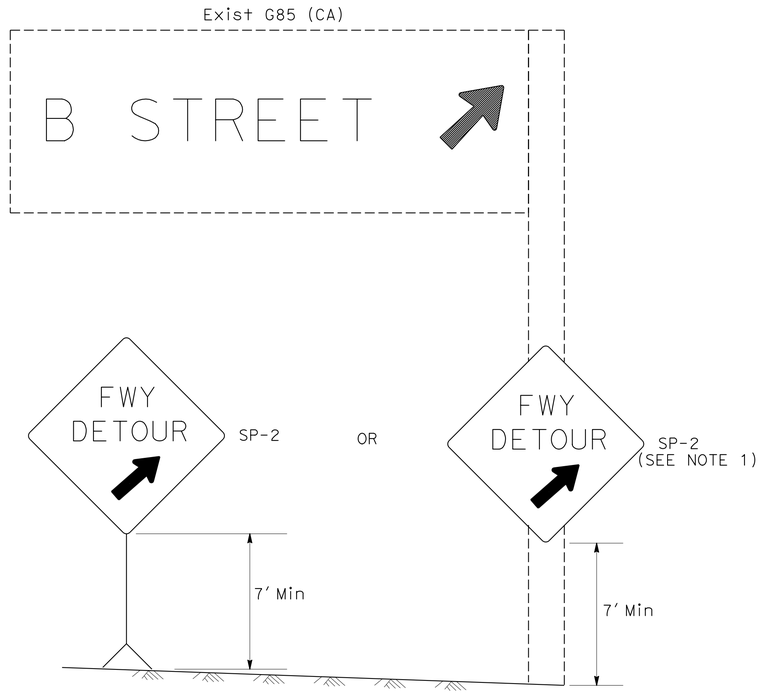

DETAIL A (SEE NOTE 3)

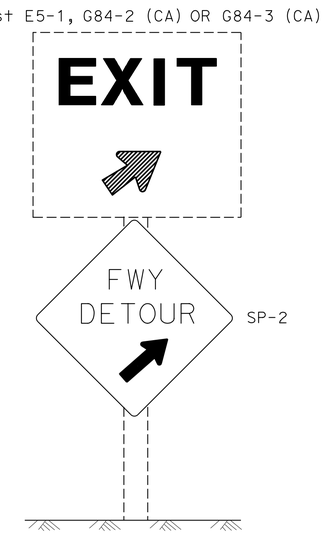

DETAIL B (SEE NOTE 3)

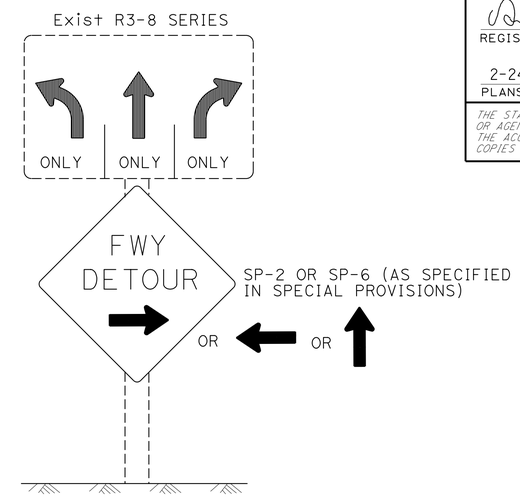

DETAIL C (SEE NOTES 4, 5, AND 6)

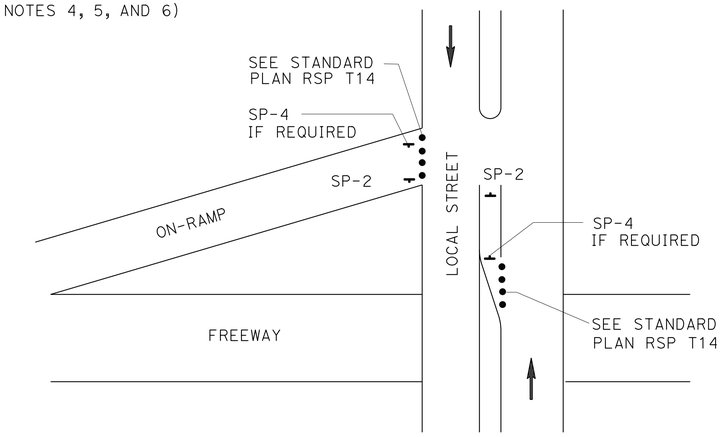

DETAIL E

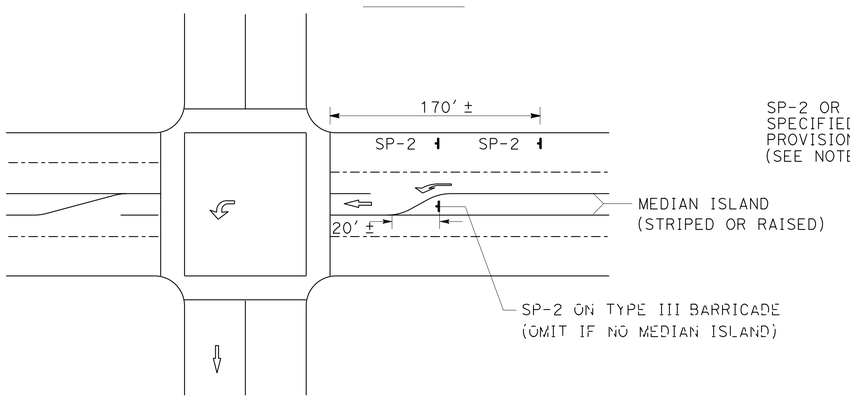

DETAIL D

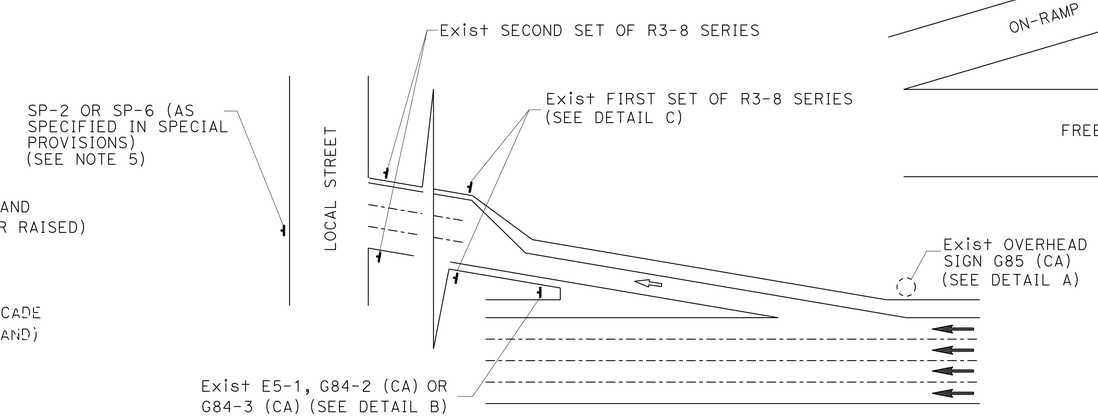

TYPICAL DETOUR SIGN INSTALLATION AT OFF-RAMP

LEGEND

- CONE
- PORTABLE SIGN
- DIRECTION OF TRAVEL
- DETOUR DIRECTION
- EXISTING OVERHEAD SIGN

NOTES: SIGN SP-2

1. SP-2 SIGNS MAY BE STRAPPED ON EXISTING ELECTROLIER, SIGNAL POST OR SIGN POST.
2. SP-2 SIGNS SHALL NOT BE INSTALLED ON BARRICADES EXCEPT AS OTHERWISE SHOWN.
3. OMIT DETAILS A AND B FOR FULL FREEWAY CLOSURES.
4. SEE TRAFFIC HANDLING DETAILS-TRAFFIC CONTROL SYSTEM FOR RAMP CLOSURES, DETOUR SIGNS, AND MISCELLANEOUS DETAILS PLAN SHEET 2 OF 2 FOR SP-6 SIGN DETAILS.
5. IF R3-8 SERIES SIGNS ARE NOT PRESENT AT THE OFF-RAMP, SP-2 OR SP-6 SIGNS SHALL BE FASTENED ONTO EXISTING ELECTROLIER, SIGNAL POST OR SIGN POST.
6. EXCEPT FOR DETAILS A & B, OMIT SP-2 SIGNS IF RAMP HAS MANDATORY SINGLE MOVE.

SIGN CODE LEGEND

XXYY-Y: FEDERAL SIGN CODE PER MANUAL ON UNIFORM TRAFFIC CONTROL DEVICES (MUTCD)

XXYY-Y (CA): CALIFORNIA SIGN CODE PER CALIFORNIA MUTCD

TRAFFIC HANDLING DETAILS
TRAFFIC CONTROL SYSTEM FOR DETOUR SIGN INSTALLATION ALONG DESIGNATED DETOUR ROUTE SHEET 2 OF 2

NO SCALE

THD-4

STATE OF CALIFORNIA - DEPARTMENT OF TRANSPORTATION
Caltrans DTM

FUNCTIONAL SUPERVISOR: JOHN YANG
CALCULATED-DESIGNED BY: ALBERT K YU
CHECKED BY: JOCELYN C CHIANG
REVISED BY: JC
DATE REVISED: 3/12

LAST REVISION DATE PLOTTED => 24-MAY-2014
TIME PLOTTED => 05:32

Dist	COUNTY	ROUTE	POST MILES TOTAL PROJECT	SHEET No.	TOTAL SHEETS
07	LA	101	1.8/8.4	87	183

REGISTERED CIVIL ENGINEER 09/05/13 DATE

2-24-14
PLANS APPROVAL DATE

REGISTERED PROFESSIONAL ENGINEER ALBERT K. YU No. 43220 Exp. 3/31/16 CIVIL STATE OF CALIFORNIA

THE STATE OF CALIFORNIA OR ITS OFFICERS OR AGENTS SHALL NOT BE RESPONSIBLE FOR THE ACCURACY OR COMPLETENESS OF SCANNED COPIES OF THIS PLAN SHEET.

NOTES:

1. LANE CLOSURES SHALL NOT BEGIN AT TOP OF CREST VERTICAL CURVE OR ON A HORIZONTAL CURVE.
2. PCMS SHALL BE ACTIVATED PRIOR TO TRAFFIC CONTROL ACTIVITIES ON THE LANE.
3. A MINIMUM SIGHT DISTANCE OF 1500′ SHALL BE PROVIDED IN ADVANCE OF PCMS.
4. VEHICLE-MOUNTED SIGN PANELS SHALL BE TYPE III OR IV RETROREFLECTORIZED SHEETING, BLACK ON WHITE OR BLACK ON ORANGE WITH 8" MINIMUM SERIES D LETTERS PER CALTRANS SIGN SPECIFICATIONS.

LEGEND

V1, V2	SHADOW VEHICLES
V3	WORK/APPLICATION VEHICLE
	PCMS
	DIRECTION OF TRAVEL
	CONSTRUCTION AREA SIGN

ABBREVIATIONS

FAS	FLASHING ARROW SIGN
IAV	IMPACT ATTENUATOR VEHICLE
CMS	CHANGEABLE MESSAGE SIGN
PCMS	PORTABLE CHANGEABLE MESSAGE SIGN
(CA)	CALIFORNIA CODE

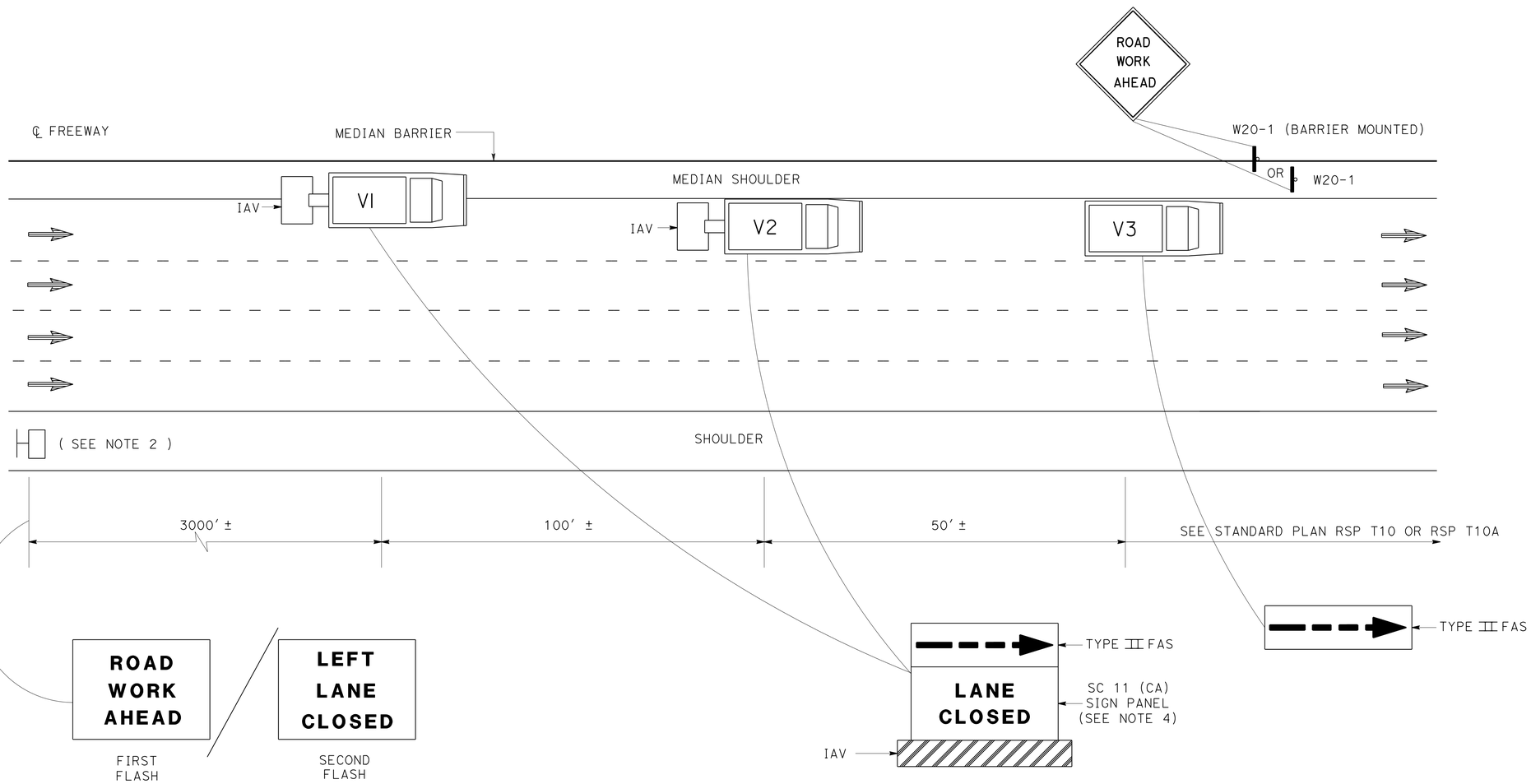

PCMS OR TRUCK MOUNTED CMS MESSAGE

TRAFFIC HANDLING DETAILS
TRAFFIC CONTROL SYSTEM
FOR MEDIAN SHOULDERS LESS THAN 8 FEET

NO SCALE

THD-5

STATE OF CALIFORNIA - DEPARTMENT OF TRANSPORTATION
Caltrans
DTM
FUNCTIONAL SUPERVISOR: JOHN YANG
CALCULATED-DESIGNED BY: ALBERT K YU
CHECKED BY: JOCELYN C CHIANG
REVISED BY: JC
DATE REVISED: 3/12

LAST REVISION 00-00-00
DATE PLOTTED => 24-MAY-2014
TIME PLOTTED => 05:32

Dist	COUNTY	ROUTE	POST MILES TOTAL PROJECT	SHEET No.	TOTAL SHEETS
07	LA	101	1.8/8.4	88	183

REGISTERED CIVIL ENGINEER 1-30-14 DATE

2-24-14
PLANS APPROVAL DATE

REGISTERED PROFESSIONAL ENGINEER
CHARLIE TRUONG
No. 69881
Exp. 9-30-14
CIVIL
STATE OF CALIFORNIA

THE STATE OF CALIFORNIA OR ITS OFFICERS OR AGENTS SHALL NOT BE RESPONSIBLE FOR THE ACCURACY OR COMPLETENESS OF SCANNED COPIES OF THIS PLAN SHEET.

MAINLINE PAVEMENT DELINEATION QUANTITIES

DIRECTION	LOCATION FROM	LOCATION TO	THERMOPLASTIC TRAFFIC STRIPE: 4" THERMOPLASTIC TRAFFIC STRIPE (BROKEN 36-12) DETAIL 13/14 (Mod)	THERMOPLASTIC TRAFFIC STRIPE: 4" THERMOPLASTIC TRAFFIC STRIPE DETAIL 25	THERMOPLASTIC TRAFFIC STRIPE: 4" THERMOPLASTIC TRAFFIC STRIPE DETAIL 27B	PAVEMENT MARKER: NON-REFLECTIVE TYPE A	PAVEMENT MARKER: RETRO-REFLECTIVE TYPE C/G	PAVEMENT MARKER: RETRO-REFLECTIVE TYPE H	REMOVE PAVEMENT MARKER
	PM	PM	LF	LF	LF	EA	EA	EA	EA
NB	1.8	8.0	98,208	32,736	32,736	8,188	2,048	683	10,919
SB	1.8	1.9	2,112	528	528	180	45	12	237
SB	1.9	8.0	96,624	32,208	32,208	8,056	2,015	672	10,743
SUBTOTAL			196,944	65,472	65,472	16,424	4,108	1,367	21,899
TOTAL			196,944	130,944		16,424	5,475		21,899

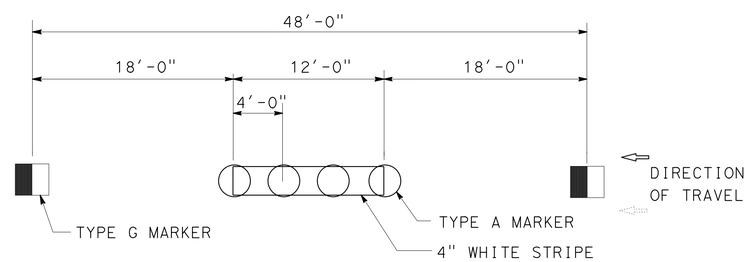

NOTE:

APPLY 4" WIDE THERMOPLASTIC TRAFFIC STRIPE ON TOP OF TYPE A NON-REFLECTIVE MARKERS.

DETAIL 13/14 (MODIFIED)

NO SCALE

PAVEMENT DELINEATION QUANTITIES

PDQ-1

REVISED BY | DATE REVISED
ROXANA DIANATI | CHARLIE TRUONG
CALCULATED-DESIGNED BY | CHECKED BY
FUNCTIONAL SUPERVISOR
KEVIN KWAN

STATE OF CALIFORNIA - DEPARTMENT OF TRANSPORTATION
Caltrans MAINTENANCE ENGINEERING

LAST REVISION | DATE PLOTTED => 24-MAY-2014 | TIME PLOTTED => 05:32

Dist	COUNTY	ROUTE	POST MILES TOTAL PROJECT	SHEET No.	TOTAL SHEETS
07	LA	101	1.8/8.4	89	183

REGISTERED CIVIL ENGINEER 1-30-14 DATE

2-24-14
PLANS APPROVAL DATE

REGISTERED PROFESSIONAL ENGINEER JEFFREY MILLER No. 69162 Exp. 6-30-14 CIVIL STATE OF CALIFORNIA

THE STATE OF CALIFORNIA OR ITS OFFICERS OR AGENTS SHALL NOT BE RESPONSIBLE FOR THE ACCURACY OR COMPLETENESS OF SCANNED COPIES OF THIS PLAN SHEET.

RAMP PAVEMENT DELINEATION QUANTITIES

Loc	PM	DESCRIPTION	THERMOPLATIC TRAFFIC STRIPE						THERMOPLATIC PAVEMENT MARKING															PAVEMENT MARKER		
			4" WHITE	4" WHITE	4" YELLOW	4" WHITE (BROKEN 17-7)	8" WHITE	8" WHITE (BROKEN 12-3)	TYPE I ARROW	TYPE IV ARROW	TYPE V ARROW	TYPE VII ARROW	TYPE VIII ARROW	12" WHITE PAVEMENT MARKING	12" YELLOW PAVEMENT MARKING	8" WHITE PAVEMENT MARKING	STOP	SIGNAL	AHEAD	CAR	POOL	ONLY	◇	TYPE H (RETRO REFLECTIVE)	TYPE G (RETRO REFLECTIVE)	TYPE C (RETRO REFLECTIVE)
			Det 27B		Det 25A	Det 8		Det 37																		
			LF	LF	LF	LF	LF	LF	SQFT	SQFT	SQFT	SQFT	SQFT	SQFT	SQFT	SQFT	SQFT	SQFT	SQFT	SQFT	SQFT	SQFT	SQFT	EA	EA	
1	2.37	NB OFF TO ECHO PARK Ave/ GLENDALE Blvd	530		250		200				66			120										19		
2	2.42	NB ON FROM ECHO PARK Ave/GLENDALE Blvd	375		275		100		25					50										16		
3	2.55	SB ON FROM BELMONT Ave/GLENDALE Blvd	475	75	475				62							50								20		
4	2.61	SB OFF TO BELMONT Ave/GLENDALE Blvd	525		300		225																	22		
5	2.73	SB ON FROM ALVARADO St/BUS	760	50	660	380	100		62					45		10								32		
6	2.74	NB OFF TO ALVARADO St/BUS	670	100	540	270	130				66	27		50										28		
7	2.96	SB OFF TO ALVARADO St/BUS	1,650	80	470	290	180	1,140			66		72	55										75	24	38
8	2.98	NB ON FROM ALVARADO St	360	100	180	60	180																	15		
9	3.25	NB OFF TO RAMPART Blvd/BENTON WAY	360		200		160				33		36	35			22		31					15		
10	3.25	SB ON FROM RAMPART Blvd/BENTON WAY	340		340				56															14		
11	3.31	NB ON FROM RAMPART Blvd/BENTON WAY	435		350		85		31					60		60								18		
12	3.44	SB OFF TO BENTON WAY	1,470	45	490	360	430	550			66	27		50			88		62					61	11	18
13	3.64	NB OFF TO SILVER LAKE Blvd	610	50	385	230	225				66			70						17	23	24	33	25		
14	3.69	SB ON FROM SILVER LAKE Blvd	800		700	475	100			30				70		10								33		
15	3.86	NB ON FROM SILVER LAKE Blvd	740		520	100	120		14					40		228								27		
16	3.92	SB OFF TO SILVER LAKE Blvd	1,170		380		470	320								132								49	7	11
17	4.14	SB ON FROM VERMONT Ave	120				120																	5		
18	4.29	NB OFF TO VERMONT Ave	875	75	305	595	300	270																36	6	9
19	4.48	SB OFF TO VERMONT Ave	770		400		370				33		72	90										32		
20	4.53	NB ON FROM VERMONT Ave	620	90	500	90	120		62					70		16								26		
21	4.74	SB ON FROM MELROSE Ave	600	50	600	180										26				17	23	24	33	25		
22	4.74	NB OFF TO MELROSE Ave	870		500	140	370				66		72	90										36		
23	5.11	NB ON FROM NORMANDIE Ave	1,810		390		100	1,320	31					60		8								75	28	44
24	5.16	SB OFF TO MELROSE Ave/NORMANDIE Ave	700		550		150				33			160										29		
		SUBTOTAL	17,635	715	9,760	3,170	4,235	3,600	343	30	495	54	252	1,115		540	110		93	34	46	48	66	733	75	120
		SHEET PDQ-2 TOTAL	28,110			3,170	4,235	3,600	3,226															778		

PAVEMENT DELINEATION QUANTITIES

PDQ-2

REVISED BY | DATE REVISED
JEFFREY MILLER | CHARLIE TRUONG
CALCULATED-DESIGNED BY | CHECKED BY
FUNCTIONAL SUPERVISOR | KEVIN KWAN

STATE OF CALIFORNIA - DEPARTMENT OF TRANSPORTATION
Caltrans MAINTENANCE ENGINEERING

LAST REVISION | DATE PLOTTED => 24-MAY-2014 | TIME PLOTTED => 05:32

Dist	COUNTY	ROUTE	POST MILES TOTAL PROJECT	SHEET No.	TOTAL SHEETS
07	LA	101	1.8/8.4	90	183

REGISTERED CIVIL ENGINEER 1-30-14 DATE

2-24-14
PLANS APPROVAL DATE

REGISTERED PROFESSIONAL ENGINEER JEFFREY MILLER No. 69162 Exp. 6-30-14 CIVIL STATE OF CALIFORNIA

THE STATE OF CALIFORNIA OR ITS OFFICERS OR AGENTS SHALL NOT BE RESPONSIBLE FOR THE ACCURACY OR COMPLETENESS OF SCANNED COPIES OF THIS PLAN SHEET.

RAMP PAVEMENT DELINEATION QUANTITIES

Loc	PM	DESCRIPTION	THERMOPLATIC TRAFFIC STRIPE						THERMOPLATIC PAVEMENT MARKING															PAVEMENT MARKER		
			4" WHITE	4" WHITE	4" YELLOW	4" WHITE (BROKEN 17-7)	8" WHITE	8" WHITE (BROKEN 12-3)	TYPE I ARROW	TYPE IV ARROW	TYPE V ARROW	TYPE VII ARROW	TYPE VIII ARROW	12" WHITE PAVEMENT MARKING	12" YELLOW PAVEMENT MARKING	8" WHITE PAVEMENT MARKING	STOP	SIGNAL	AHEAD	CAR	POOL	ONLY	◇	TYPE H (RETRO REFLECTIVE)	TYPE G (RETRO REFLECTIVE)	TYPE C (RETRO REFLECTIVE)
			Det 27B		Det 25A	Det 8	Det 36	Det 37																		
			LF	LF	LF	LF	LF	LF	SQFT	SQFT	SQFT	SQFT	SQFT	SQFT	SQFT	SQFT	SQFT	SQFT	SQFT	SQFT	SQFT	SQFT	SQFT	EA	EA	
25	5.45	NB OFF TO SANTA MONICA Blvd	780		420		360				99		72	70										33		
26	5.46	SB ON FROM SANTA MONICA Blvd	650		550	300	100		62					100		8								27		
27	5.88	SB OFF TO WESTERN Ave	730		530		200			30	66			70										30		
28	5.96	NB ON FROM WESTERN Ave	850		740		110		31					80		8								35		
29	6.10	SB ON FROM SUNSET Blvd	850	400	650		200		62						150	8								35		
30	6.26	NB OFF TO SUNSET Blvd/WILTON Pl	1,100	110	800		300				66				180	30	44		62					46		
31	6.37	NB OFF TO HOLLYWOOD Blvd	1,000	380	575	560	425				99		108	130				96	93					42		
32	6.37	SB ON FROM HOLLYWOOD Blvd	650	200	390	100	260									20				17	23	24	66	27		
33	6.46	SB OFF TO SUNSET Blvd	800	50	530	210	270				66			60			88		62					33		
34	6.58	NB ON FROM HOLLYWOOD Blvd	1,310	85	160	45	200	950								80								15	20	32
35	6.63	SB OFF TO HOLLYWOOD Blvd	710		510		200				66		72	120										30		
36	6.82	NB OFF TO GOWER St/BEACHWOOD Dr	190				190																	8		
37	6.95	SB ON FROM ARGYLE Ave	900		670	150	230							80		66								38		
38	7.06	SB OFF TO GOWER St	1,040	70	715	210	325				66		72	80		48	44							43		
39	7.21	NB ON FROM ARGYLE Ave/FRANKLIN Ave	1,830	120	480	165	290	1,060	62					70		72								32	22	35
40	7.28	SB ON FROM CAHUENGA Blvd	1,070	45	790	60	280		62					80		148								45		
41	7.37	SB OFF TO VINE St	1,400	60	1,100	940	300				66		72	70										58		
42	7.40	NB OFF TO CAHUENGA Blvd	700		90	260	290				66		72											16		
43	7.59	SB OFF TO CAHUENGA Blvd	720	280	520	400	200						108	160			66							30		
44	7.74	NB OFF TO HIGHLAND Ave	1,260		650		610						146											53		
45	7.75	SB ON FROM HIGHLAND Ave	1,920	70	490	370	110	1,320					54											25	28	44
46	7.96	NB ON FROM HIGHLAND Ave	1,500		1,440	1,320	60																	63		
47	8.17	NB ON FROM CAHUENGA Blvd	1,580		540		290	750	31															35	16	25
48	8.40	SB OFF TO CAHUENGA Blvd	1,810	200	1,350	1,200	460				99		70											75		
		SUBTOTAL	25,350	2,070	14,690	6,290	6,260	4,080	310	30	759		846	1,170	330	488	242	96	217	17	23	24	66	873	85	136
		SHEET PDQ-3 TOTAL	42,110			6,290	6,260	4,080	4,618															1,094		
		TOTAL FROM PDQ-2	28,110			3,170	4,235	3,600	3,226															778		
		TOTAL	70,220			9,460	10,495	7,680	7,884															1,872		

PAVEMENT DELINEATION QUANTITIES

PDQ-3

STATE OF CALIFORNIA - DEPARTMENT OF TRANSPORTATION
Caltrans MAINTENANCE ENGINEERING

FUNCTIONAL SUPERVISOR: KEVIN KWAN
CALCULATED-DESIGNED BY: JEFFREY MILLER
CHECKED BY: CHARLIE TRUONG
REVISED BY
DATE REVISED

LAST REVISION 00-00-00
DATE PLOTTED => 24-MAY-2014
TIME PLOTTED => 05:32

Dist	COUNTY	ROUTE	POST MILES TOTAL PROJECT	SHEET No.	TOTAL SHEETS
07	LA	101	1.8/8.4	91	183

REGISTERED CIVIL ENGINEER 1-30-14 DATE

2-24-14
PLANS APPROVAL DATE

REGISTERED PROFESSIONAL ENGINEER ESTHER M. KIM No. 48363 Exp. 6/30/14 CIVIL STATE OF CALIFORNIA

THE STATE OF CALIFORNIA OR ITS OFFICERS OR AGENTS SHALL NOT BE RESPONSIBLE FOR THE ACCURACY OR COMPLETENESS OF SCANNED COPIES OF THIS PLAN SHEET.

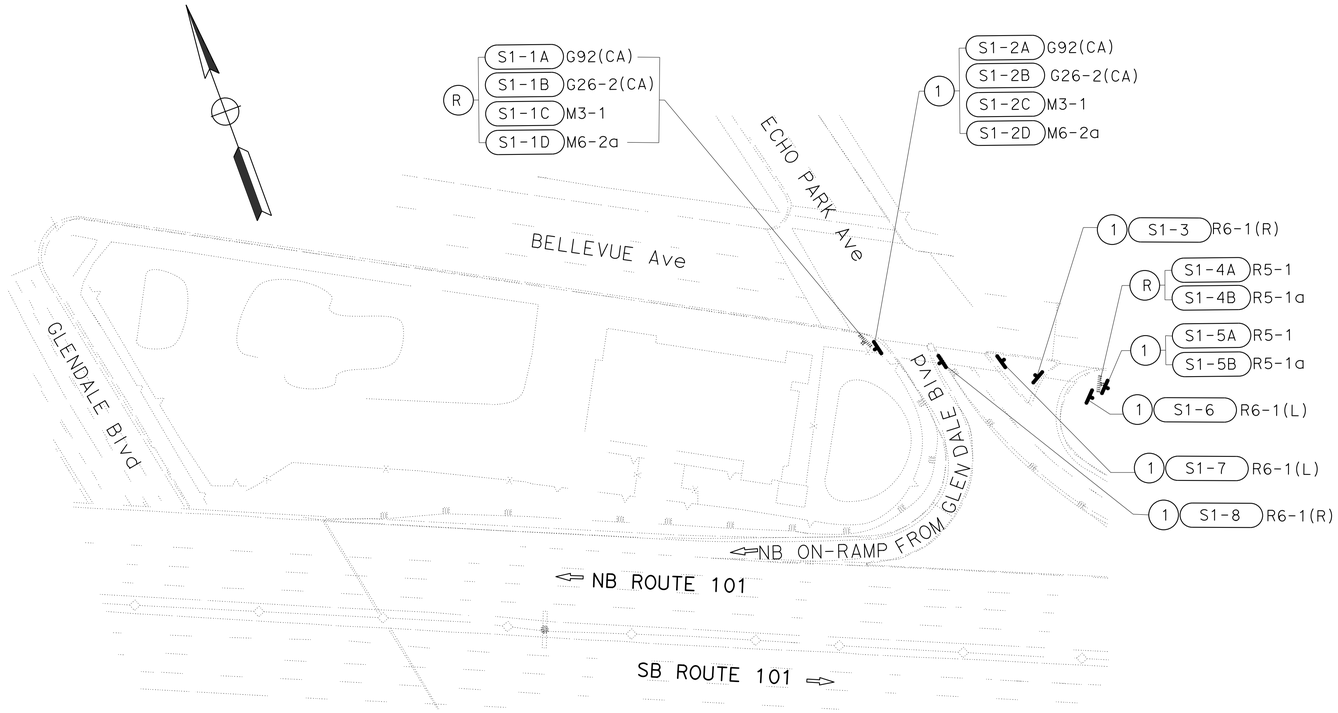

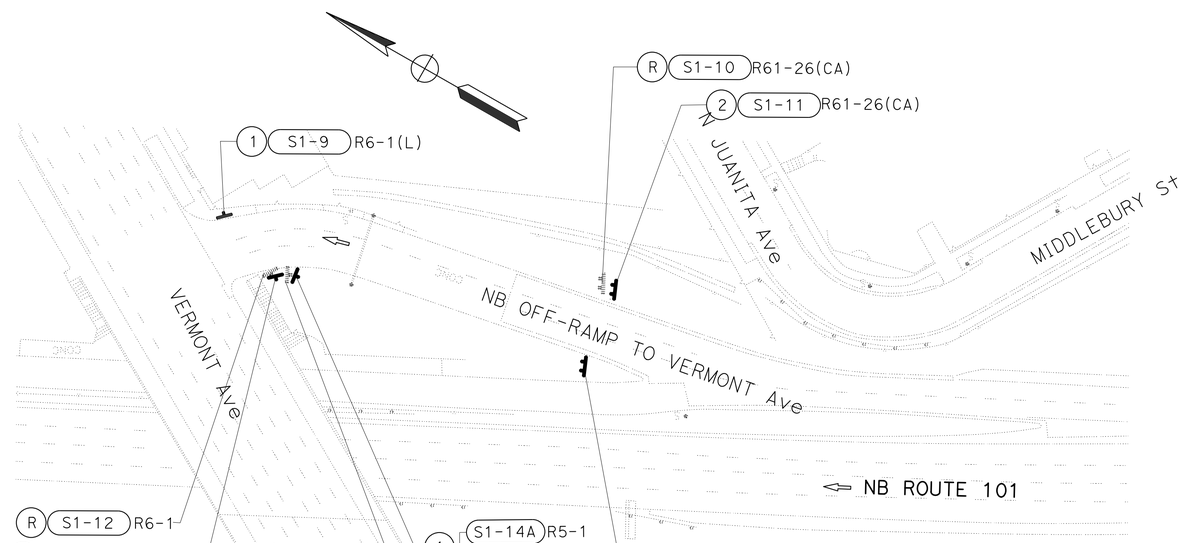

LEGEND:

- (1-1A) ROADSIDE SIGN IDENTIFICATION (WITH NUMBER & LETTER)
- (R) REMOVE ROADSIDE SIGN (WOOD POST)
- (RSS) REMOVE ROADSIDE SIGN (STRAP AND SADDLE BRACKET METHOD)
- (1) ROADSIDE SIGN - ONE POST
- (2) ROADSIDE SIGN - TWO POST
- (SS) INSTALL SIGN (STRAP AND SADDLE BRACKET METHOD)

SIGN CODE LEGEND:

XXYY-Y: FEDERAL SIGN CODE PER MANUAL ON UNIFORM TRAFFIC CONTROL DEVICES (MUTCD)

XXYY-Y (CA): CALIFORNIA SIGN CODE PER CALIFORNIA MUTCD

APPROVED FOR SIGN WORK ONLY

SIGN PLAN

SCALE: 1" = 50'

S-1

STATE OF CALIFORNIA - DEPARTMENT OF TRANSPORTATION
Caltrans® TRAFFIC DESIGN

FUNCTIONAL SUPERVISOR: MOHAMMED CHOWDHURY
CALCULATED-DESIGNED BY: JAMES CANALITA
CHECKED BY: ESTHER M. KIM
REVISED BY
DATE REVISED

LAST REVISION
DATE PLOTTED => 24-MAY-2014
TIME PLOTTED => 05:32

Dist	COUNTY	ROUTE	POST MILES TOTAL PROJECT	SHEET No.	TOTAL SHEETS
07	LA	101	1.8/8.4	92	183

REGISTERED CIVIL ENGINEER 1-30-14 DATE

2-24-14
PLANS APPROVAL DATE

REGISTERED PROFESSIONAL ENGINEER
ESTHER M. KIM
No. 48363
Exp. 6/30/14
CIVIL
STATE OF CALIFORNIA

THE STATE OF CALIFORNIA OR ITS OFFICERS OR AGENTS SHALL NOT BE RESPONSIBLE FOR THE ACCURACY OR COMPLETENESS OF SCANNED COPIES OF THIS PLAN SHEET.

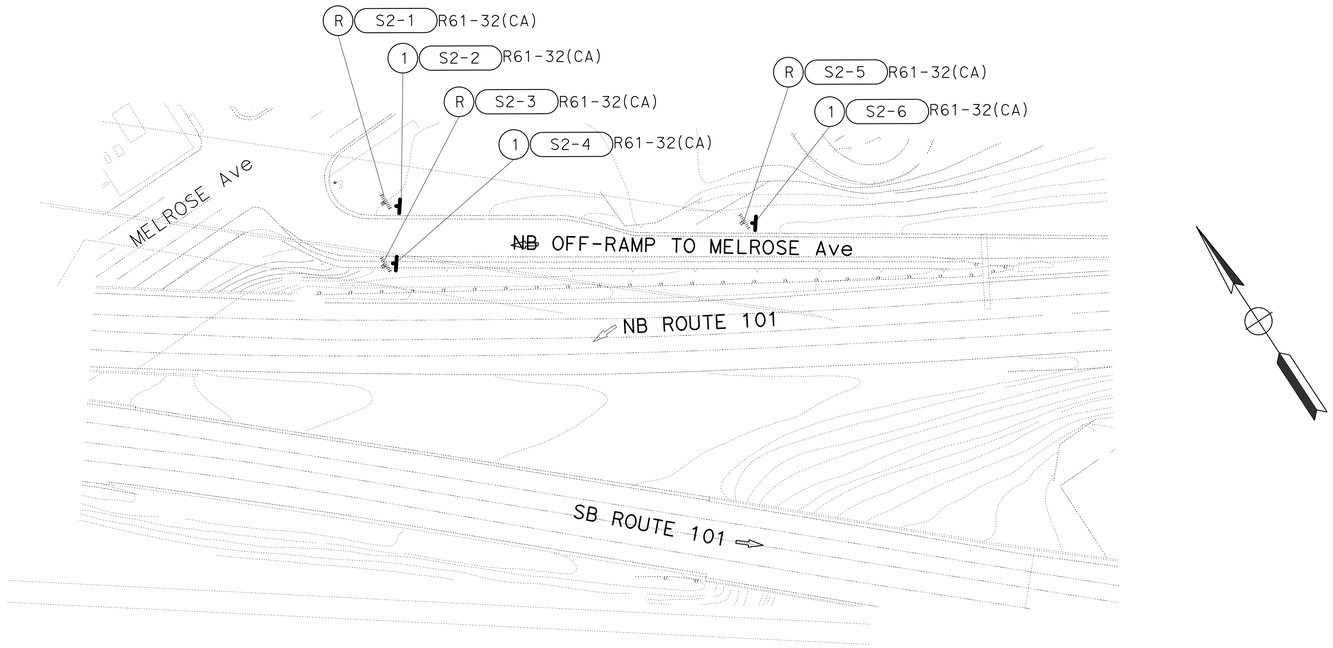

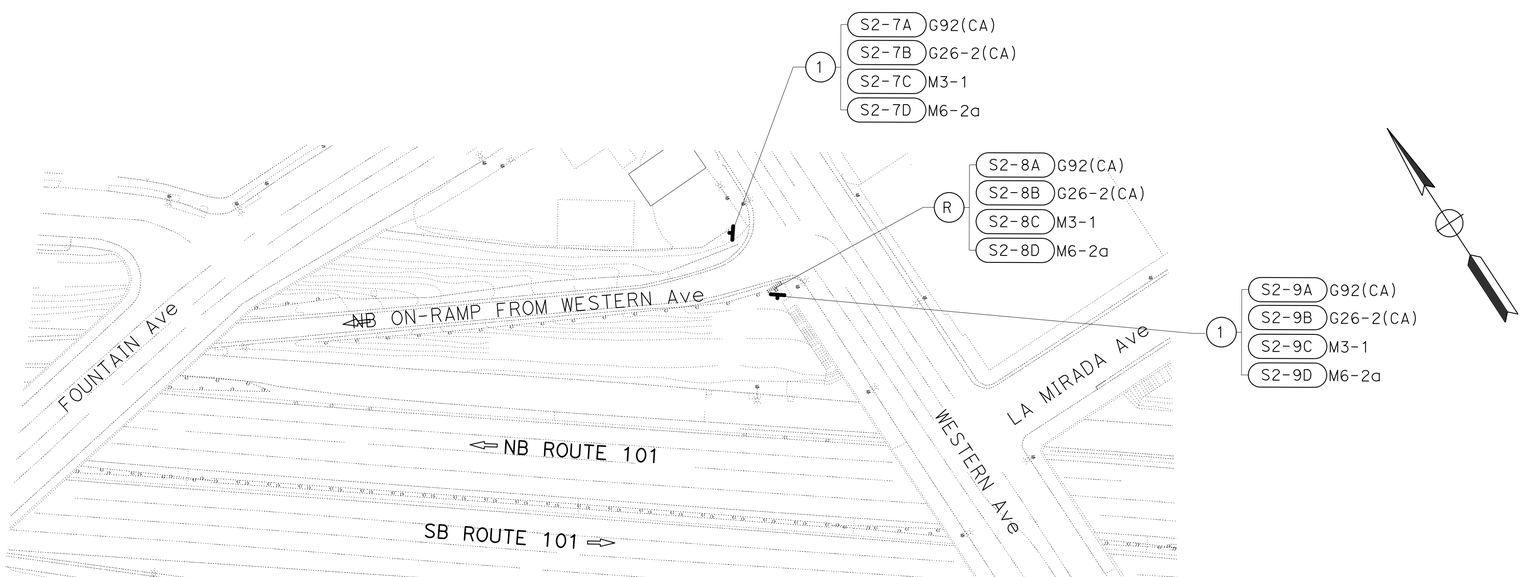

SIGN PLAN

SCALE: 1" = 50'

APPROVED FOR SIGN WORK ONLY

S-2

STATE OF CALIFORNIA - DEPARTMENT OF TRANSPORTATION
Caltrans® **TRAFFIC DESIGN**

FUNCTIONAL SUPERVISOR: MOHAMMED CHOWDHURY

CALCULATED-DESIGNED BY: JAMES CANALITA
CHECKED BY: ESTHER M. KIM

REVISED BY | DATE REVISED

LAST REVISION | DATE PLOTTED => 24-MAY-2014 | TIME PLOTTED => 05:32

Dist	COUNTY	ROUTE	POST MILES TOTAL PROJECT	SHEET No.	TOTAL SHEETS
07	LA	101	1.8/8.4	93	183

REGISTERED CIVIL ENGINEER 1-30-14 DATE

2-24-14
PLANS APPROVAL DATE

REGISTERED PROFESSIONAL ENGINEER
ESTHER M. KIM
No. 48363
Exp. 6/30/14
CIVIL
STATE OF CALIFORNIA

THE STATE OF CALIFORNIA OR ITS OFFICERS OR AGENTS SHALL NOT BE RESPONSIBLE FOR THE ACCURACY OR COMPLETENESS OF SCANNED COPIES OF THIS PLAN SHEET.

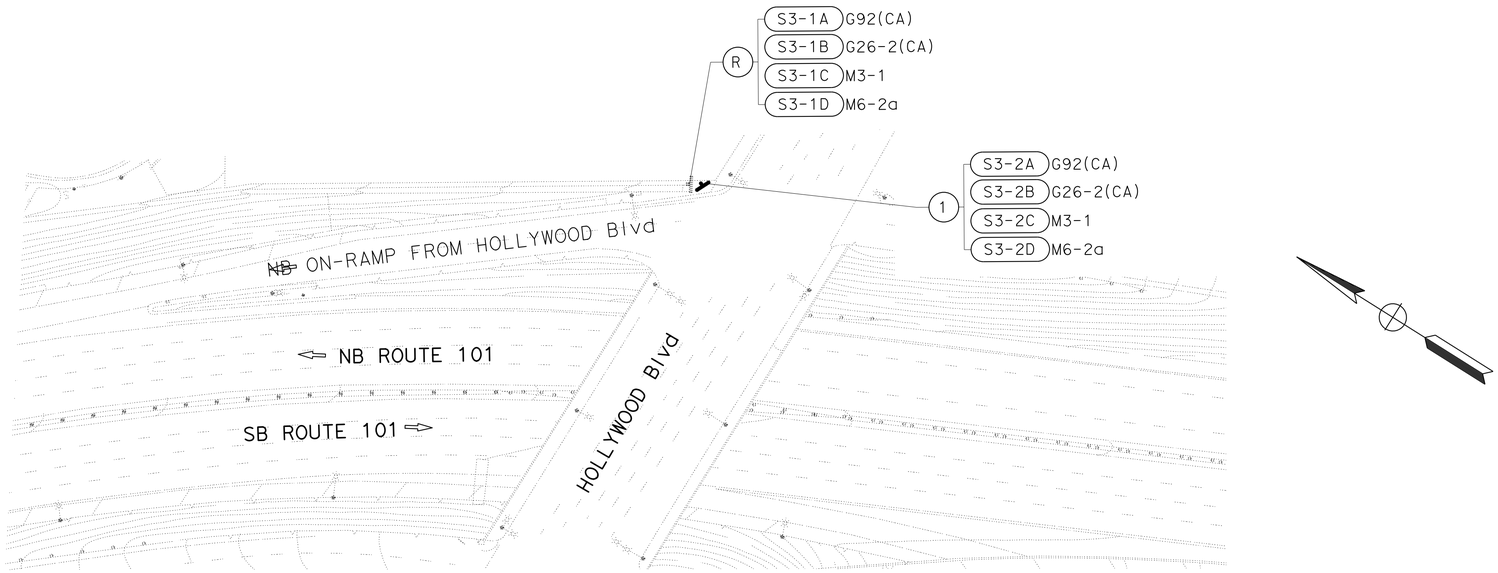

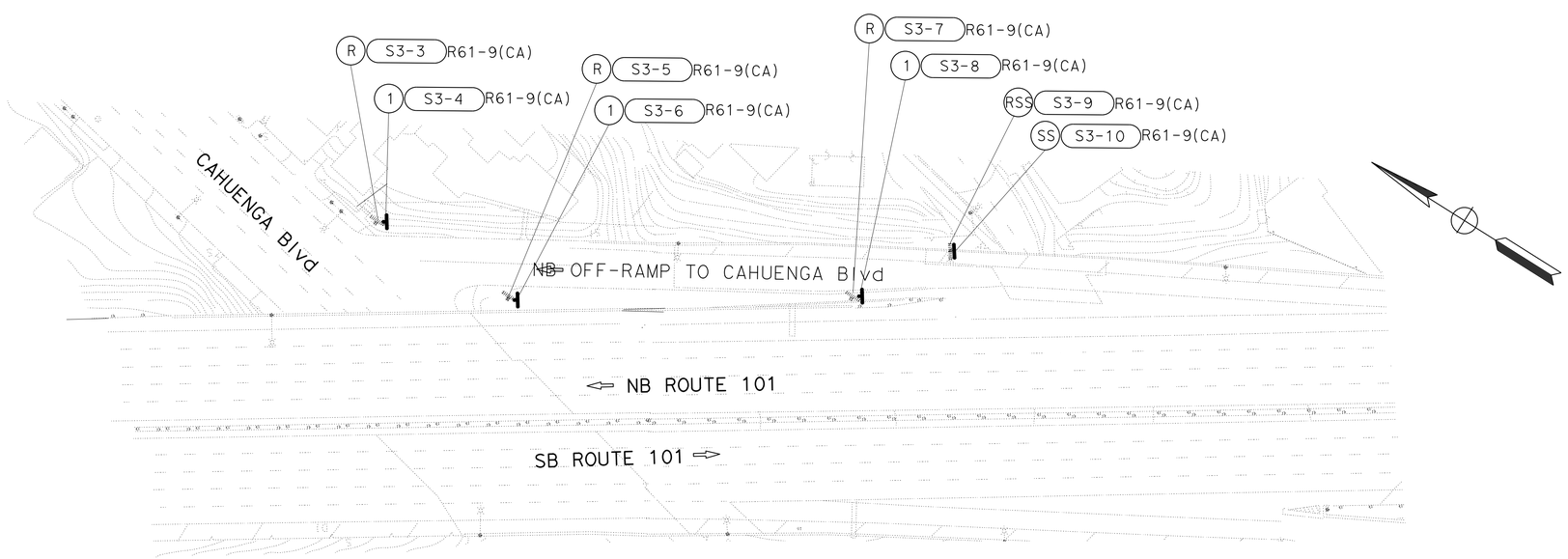

SIGN PLAN

SCALE: 1" = 50'

APPROVED FOR SIGN WORK ONLY

S-3

STATE OF CALIFORNIA - DEPARTMENT OF TRANSPORTATION
Caltrans® **TRAFFIC DESIGN**

FUNCTIONAL SUPERVISOR: MOHAMMED CHOWDHURY
CALCULATED-DESIGNED BY: JAMES CANALITA
CHECKED BY: ESTHER M. KIM
REVISED BY
DATE REVISED

LAST REVISION
DATE PLOTTED => 24-MAY-2014
TIME PLOTTED => 05:32

Dist	COUNTY	ROUTE	POST MILES TOTAL PROJECT	SHEET No.	TOTAL SHEETS
07	LA	101	1.8/8.4	94	183

REGISTERED CIVIL ENGINEER 1-30-14 DATE

2-24-14
PLANS APPROVAL DATE

REGISTERED PROFESSIONAL ENGINEER ESTHER M. KIM No. 48363 Exp. 6/30/14 CIVIL STATE OF CALIFORNIA

THE STATE OF CALIFORNIA OR ITS OFFICERS OR AGENTS SHALL NOT BE RESPONSIBLE FOR THE ACCURACY OR COMPLETENESS OF SCANNED COPIES OF THIS PLAN SHEET.

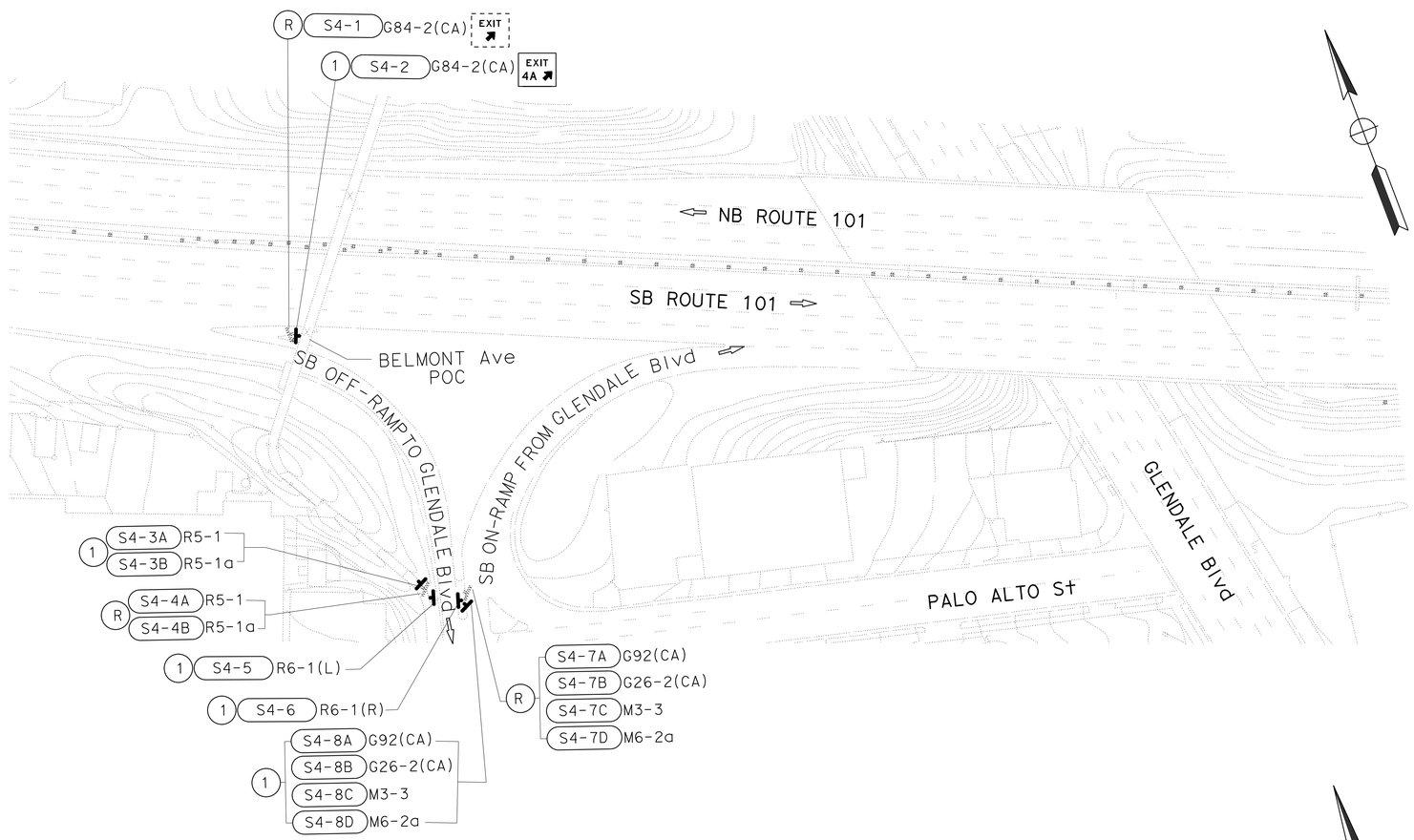

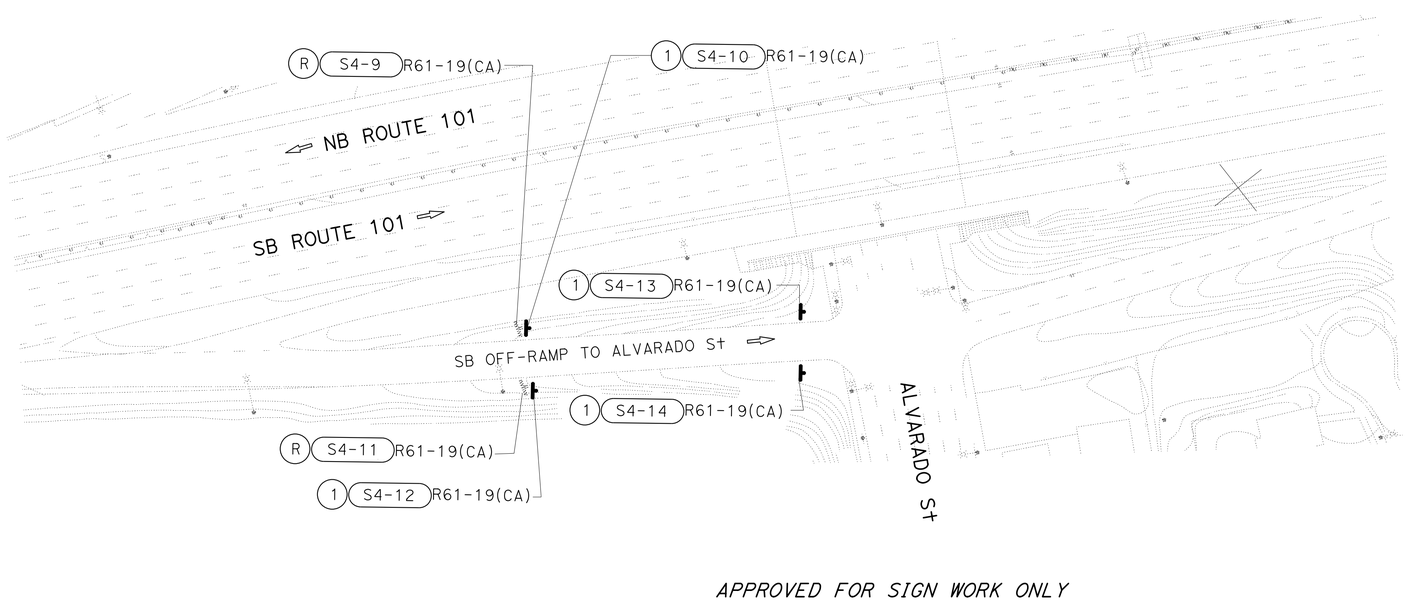

APPROVED FOR SIGN WORK ONLY

SIGN PLAN

SCALE: 1" = 50'

S-4

STATE OF CALIFORNIA - DEPARTMENT OF TRANSPORTATION
Caltrans® TRAFFIC DESIGN

FUNCTIONAL SUPERVISOR: MOHAMMED CHOWDHURY
CALCULATED-DESIGNED BY: JAMES CANALITA
CHECKED BY: ESTHER M. KIM
REVISED BY
DATE REVISED

LAST REVISION
DATE PLOTTED => 24-MAY-2014
TIME PLOTTED => 05:32

Dist	COUNTY	ROUTE	POST MILES TOTAL PROJECT	SHEET No.	TOTAL SHEETS
07	LA	101	1.8/8.4	95	183

REGISTERED CIVIL ENGINEER 1-30-14 DATE

2-24-14
PLANS APPROVAL DATE

REGISTERED PROFESSIONAL ENGINEER
ESTHER M. KIM
No. 48363
Exp. 6/30/14
CIVIL
STATE OF CALIFORNIA

THE STATE OF CALIFORNIA OR ITS OFFICERS OR AGENTS SHALL NOT BE RESPONSIBLE FOR THE ACCURACY OR COMPLETENESS OF SCANNED COPIES OF THIS PLAN SHEET.

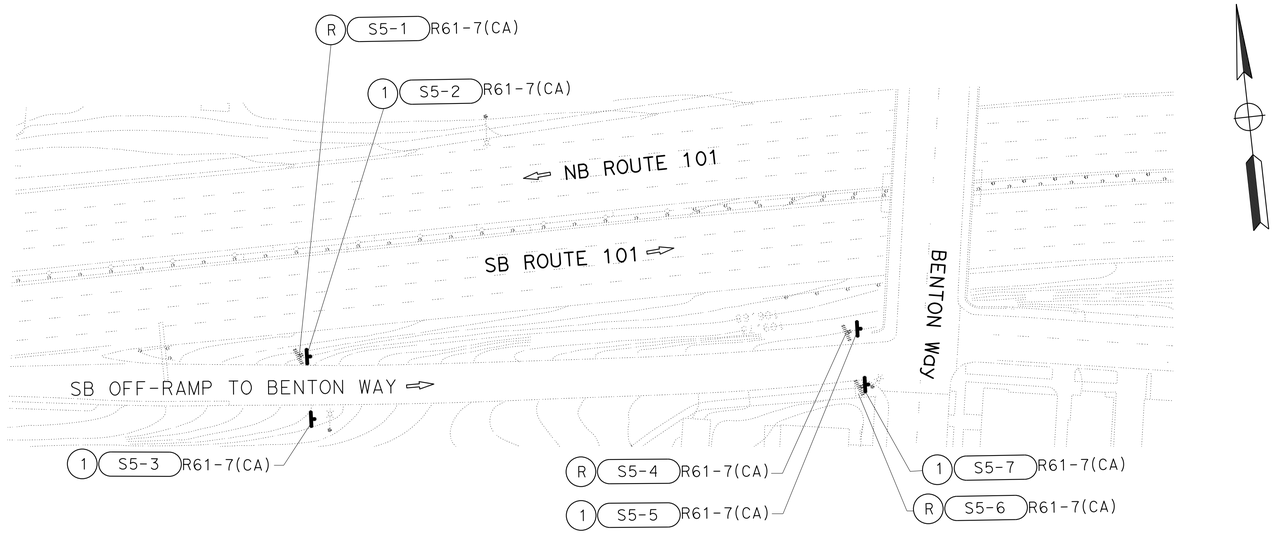

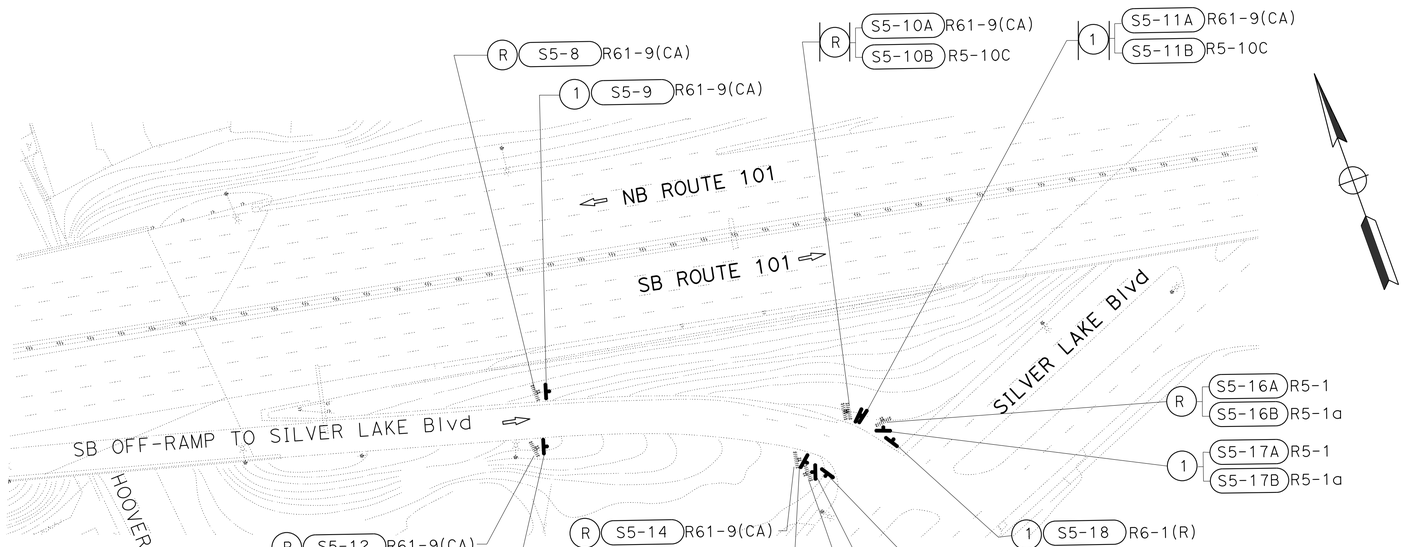

SIGN PLAN

SCALE: 1" = 50'

APPROVED FOR SIGN WORK ONLY

S-5

STATE OF CALIFORNIA - DEPARTMENT OF TRANSPORTATION
Caltrans® **TRAFFIC DESIGN**

FUNCTIONAL SUPERVISOR: MOHAMMED CHOWDHURY
CALCULATED-DESIGNED BY: JAMES CANALITA
CHECKED BY: ESTHER M. KIM
REVISED BY
DATE REVISED

LAST REVISION
DATE PLOTTED => 24-MAY-2014
TIME PLOTTED => 05:32

Dist	COUNTY	ROUTE	POST MILES TOTAL PROJECT	SHEET No.	TOTAL SHEETS
07	LA	101	1.8/8.4	96	183

REGISTERED CIVIL ENGINEER — DATE 1-30-14

2-24-14
PLANS APPROVAL DATE

REGISTERED PROFESSIONAL ENGINEER — ESTHER M. KIM — No. 48363 — Exp. 6/30/14 — CIVIL — STATE OF CALIFORNIA

THE STATE OF CALIFORNIA OR ITS OFFICERS OR AGENTS SHALL NOT BE RESPONSIBLE FOR THE ACCURACY OR COMPLETENESS OF SCANNED COPIES OF THIS PLAN SHEET.

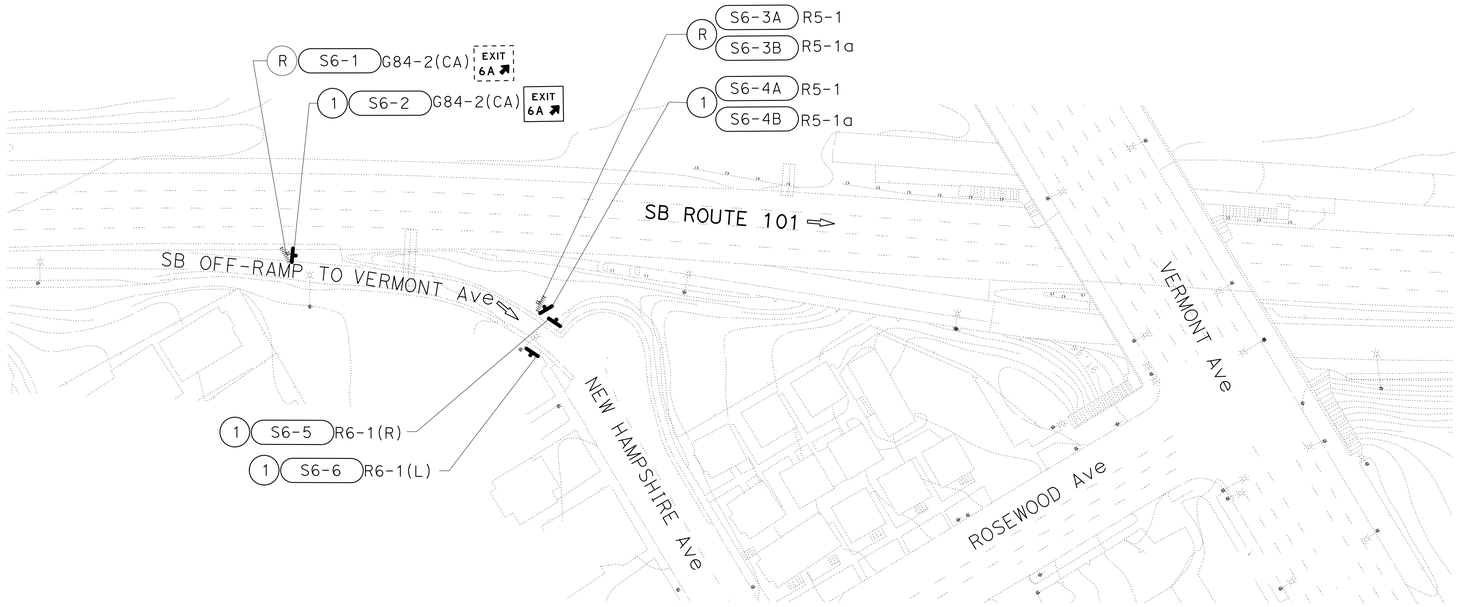

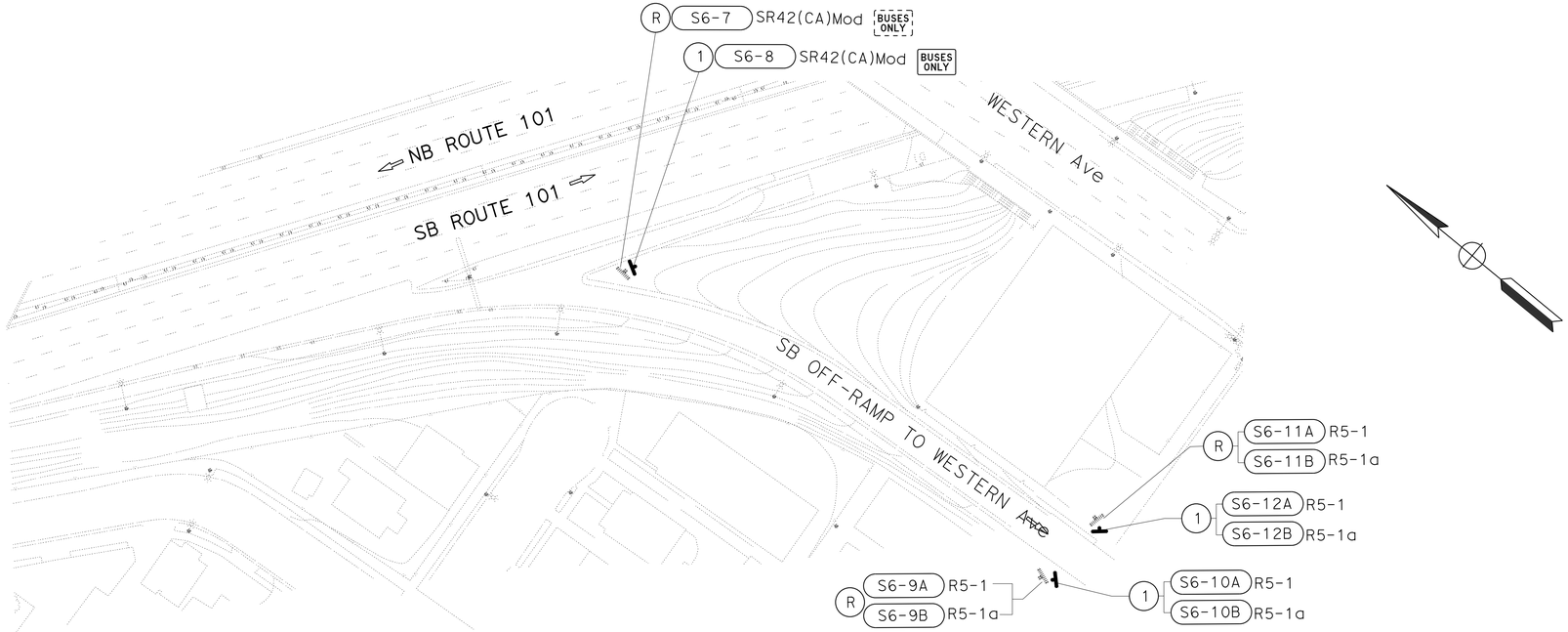

SIGN PLAN

SCALE: 1" = 50'

APPROVED FOR SIGN WORK ONLY

S-6

STATE OF CALIFORNIA - DEPARTMENT OF TRANSPORTATION
Caltrans® **TRAFFIC DESIGN**

FUNCTIONAL SUPERVISOR: MOHAMMED CHOWDHURY
CALCULATED-DESIGNED BY: JAMES CANALITA
CHECKED BY: ESTHER M. KIM
REVISED BY
DATE REVISED

LAST REVISION — DATE PLOTTED => 24-MAY-2014 — TIME PLOTTED => 09:32

Dist	COUNTY	ROUTE	POST MILES TOTAL PROJECT	SHEET No.	TOTAL SHEETS
07	LA	101	1.8/8.4	97	183

REGISTERED CIVIL ENGINEER 1-30-14 DATE

2-24-14
PLANS APPROVAL DATE

REGISTERED PROFESSIONAL ENGINEER
ESTHER M. KIM
No. 48363
Exp. 6/30/14
CIVIL
STATE OF CALIFORNIA

THE STATE OF CALIFORNIA OR ITS OFFICERS OR AGENTS SHALL NOT BE RESPONSIBLE FOR THE ACCURACY OR COMPLETENESS OF SCANNED COPIES OF THIS PLAN SHEET.

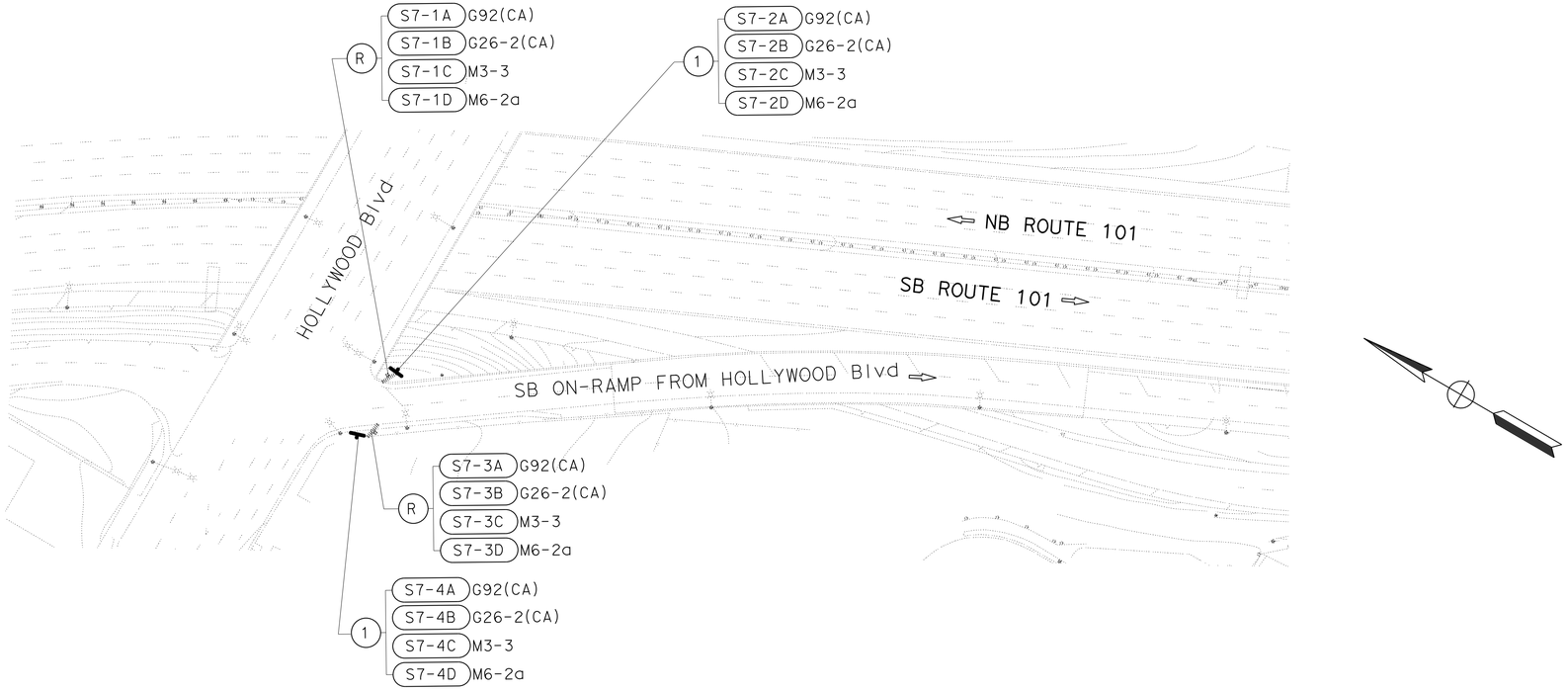

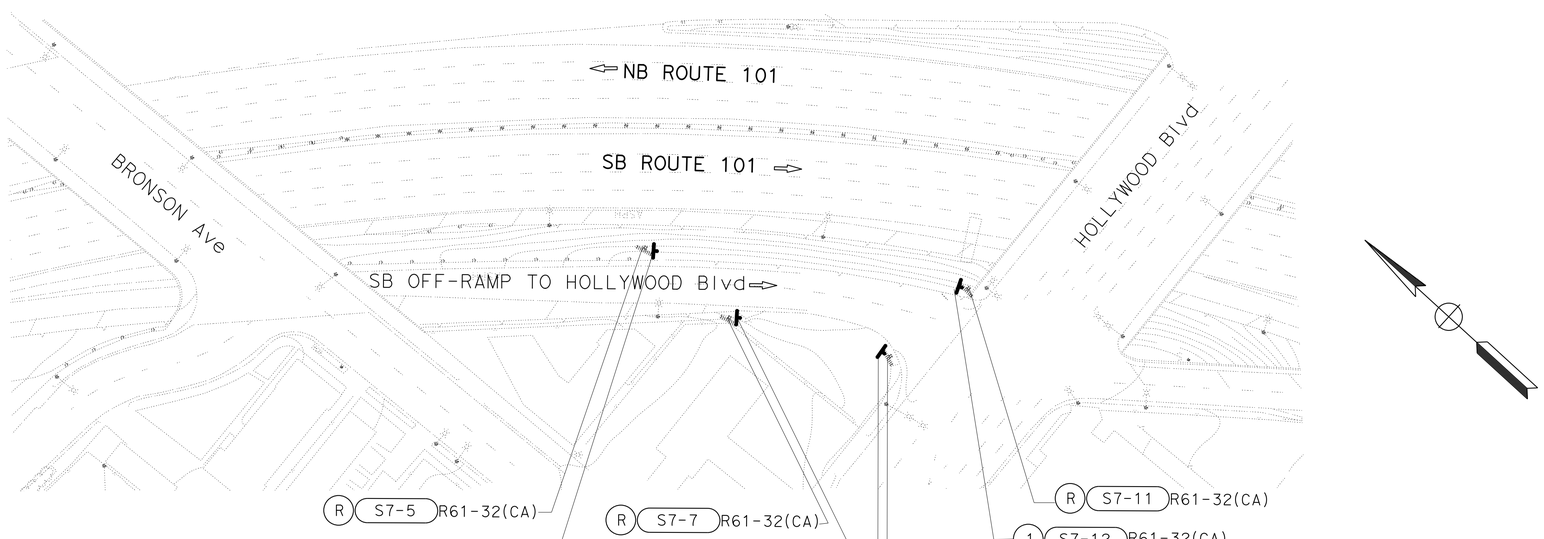

APPROVED FOR SIGN WORK ONLY

SIGN PLAN

SCALE: 1" = 50'

S-7

STATE OF CALIFORNIA - DEPARTMENT OF TRANSPORTATION
Caltrans® **TRAFFIC DESIGN**

FUNCTIONAL SUPERVISOR: MOHAMMED CHOWDHURY
CALCULATED-DESIGNED BY: JAMES CANALITA
CHECKED BY: ESTHER M. KIM
REVISED BY
DATE REVISED

LAST REVISION DATE PLOTTED => 24-MAY-2014
TIME PLOTTED => 05:32

Dist	COUNTY	ROUTE	POST MILES TOTAL PROJECT	SHEET No.	TOTAL SHEETS
07	LA	101	1.8/8.4	98	183

REGISTERED CIVIL ENGINEER — DATE 1-30-14

2-24-14
PLANS APPROVAL DATE

REGISTERED PROFESSIONAL ENGINEER — ESTHER M. KIM — No. 48363 — Exp. 6/30/14 — CIVIL — STATE OF CALIFORNIA

THE STATE OF CALIFORNIA OR ITS OFFICERS OR AGENTS SHALL NOT BE RESPONSIBLE FOR THE ACCURACY OR COMPLETENESS OF SCANNED COPIES OF THIS PLAN SHEET.

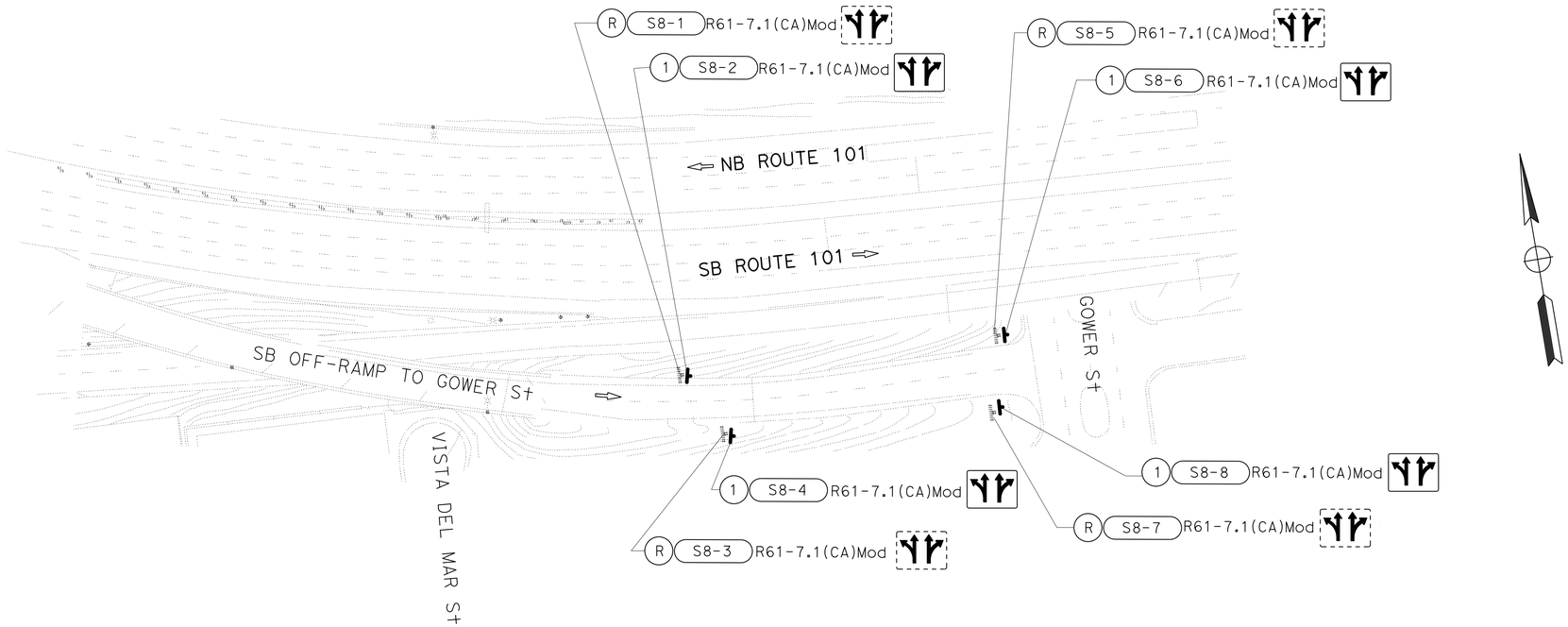

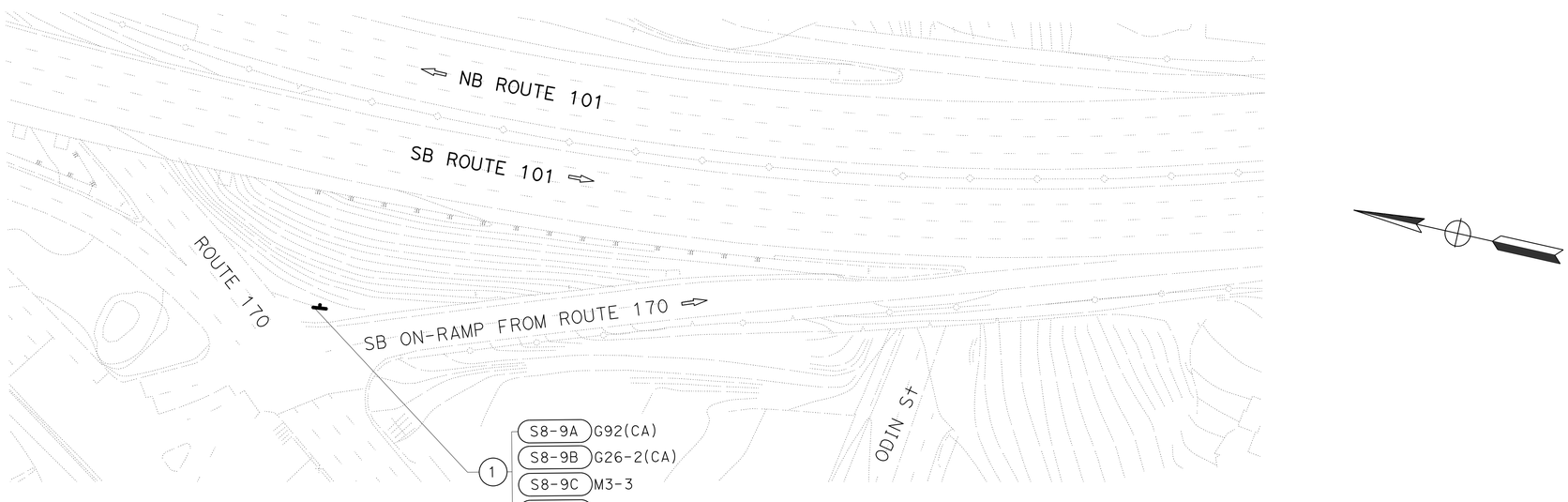

APPROVED FOR SIGN WORK ONLY

SIGN PLAN

SCALE: 1" = 50'

S-8

STATE OF CALIFORNIA - DEPARTMENT OF TRANSPORTATION
Caltrans® **TRAFFIC DESIGN**

FUNCTIONAL SUPERVISOR: MOHAMMED CHOWDHURY
CALCULATED-DESIGNED BY: JAMES CANALITA
CHECKED BY: ESTHER M. KIM
REVISED BY
DATE REVISED

LAST REVISION — DATE PLOTTED => 24-MAY-2014 — TIME PLOTTED => 05:32

Dist	COUNTY	ROUTE	POST MILES TOTAL PROJECT	SHEET No.	TOTAL SHEETS
07	LA	101	1.8/8.4	99	183

REGISTERED CIVIL ENGINEER 1-30-14 DATE

2-24-14
PLANS APPROVAL DATE

REGISTERED PROFESSIONAL ENGINEER
ESTHER M. KIM
No. 48363
Exp. 6/30/14
CIVIL
STATE OF CALIFORNIA

THE STATE OF CALIFORNIA OR ITS OFFICERS OR AGENTS SHALL NOT BE RESPONSIBLE FOR THE ACCURACY OR COMPLETENESS OF SCANNED COPIES OF THIS PLAN SHEET.

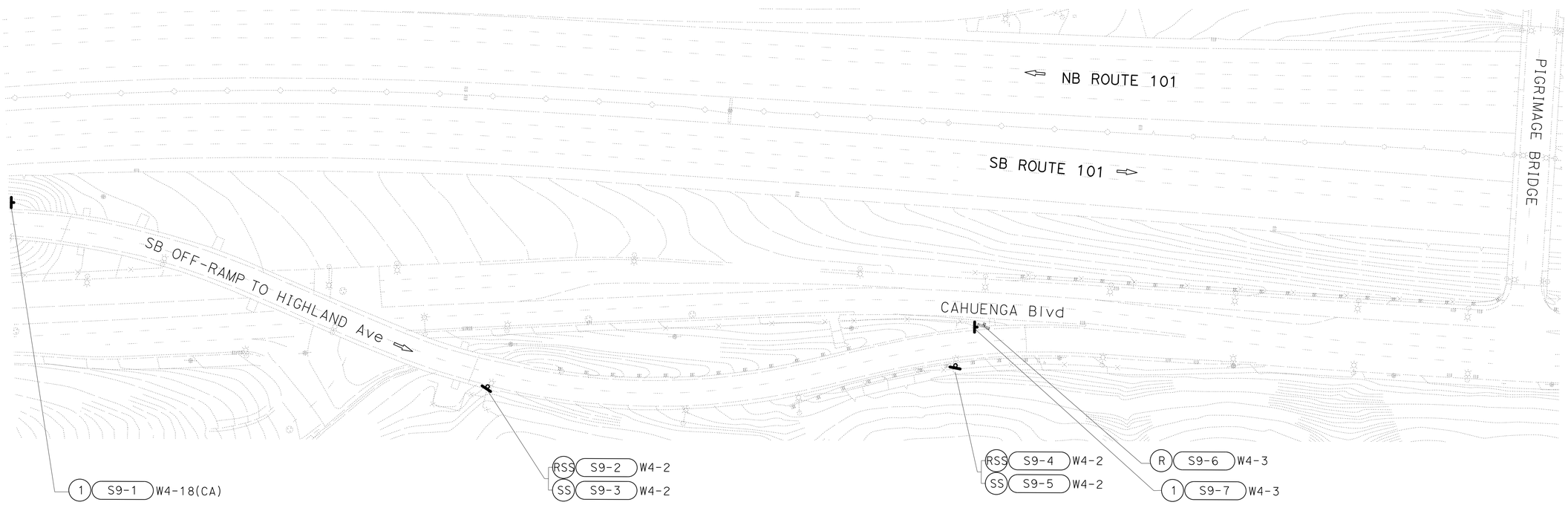

SIGN PLAN

SCALE: 1" = 50'

S-9

APPROVED FOR SIGN WORK ONLY

STATE OF CALIFORNIA - DEPARTMENT OF TRANSPORTATION
Caltrans TRAFFIC DESIGN

FUNCTIONAL SUPERVISOR: MOHAMMED CHOWDHURY
CALCULATED-DESIGNED BY: JAMES CANALITA
CHECKED BY: ESTHER M. KIM
REVISED BY
DATE REVISED

LAST REVISION
DATE PLOTTED => 24-MAY-2014
TIME PLOTTED => 05:32

Dist	COUNTY	ROUTE	POST MILES TOTAL PROJECT	SHEET No.	TOTAL SHEETS
07	LA	101	1.8/8.4	100	183

REGISTERED CIVIL ENGINEER 1-30-14 DATE

2-24-14
PLANS APPROVAL DATE

REGISTERED PROFESSIONAL ENGINEER ESTHER M. KIM No. 48363 Exp. 6/30/14 CIVIL STATE OF CALIFORNIA

THE STATE OF CALIFORNIA OR ITS OFFICERS OR AGENTS SHALL NOT BE RESPONSIBLE FOR THE ACCURACY OR COMPLETENESS OF SCANNED COPIES OF THIS PLAN SHEET.

G84-2(CA)

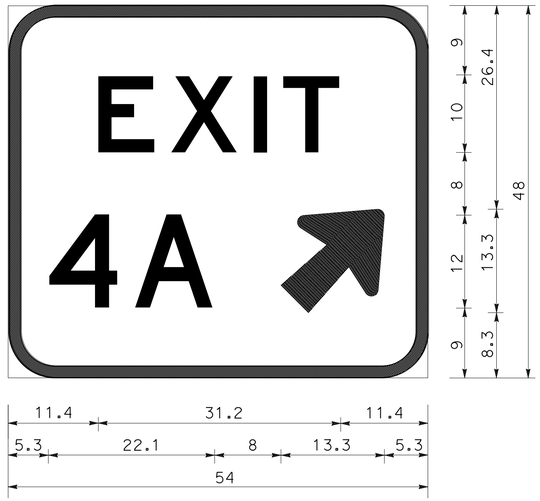

ALL DIMENSION IN INCH(ES)
6.0" RADIUS, 1.5" BORDER, WIHTE ON GREEN;
(EXIT) E; (4A) D; ARROW 10CAP-1L-16.0" 45°;

S4-2

G84-2(CA)

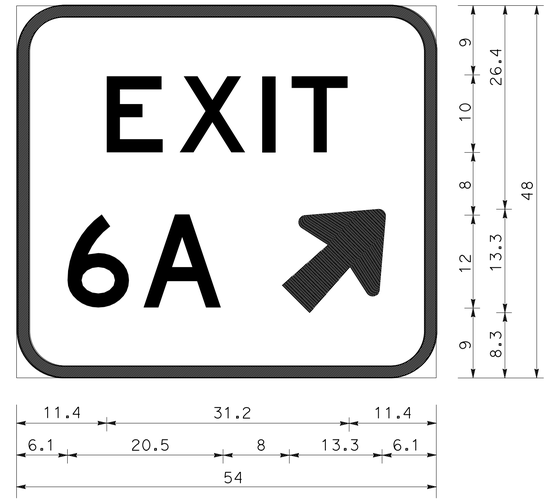

ALL DIMENSION IN INCH(ES)
6.0" RADIUS, 1.5" BORDER, WIHTE ON GREEN;
(EXIT) E; (6A) D; ARROW 10CAP-1L-16.0" 45°;

S6-2

SR42(CA)Mod

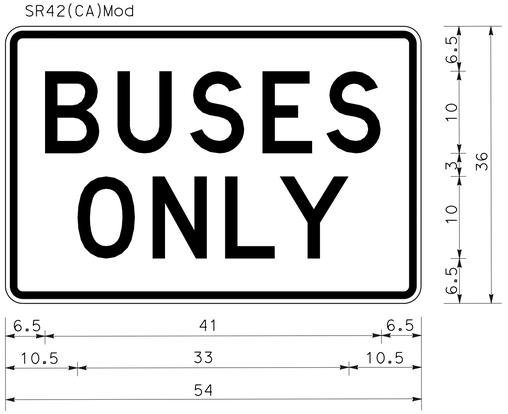

ALL DIMENSION IN INCH(ES)
2.25" RADIUS, 0.88" BORDER, 0.63" INDENT;
BLACK ON WHITE, (BUSES) D; (ONLY) D;

S6-8

R61-7.1(CA)Mod

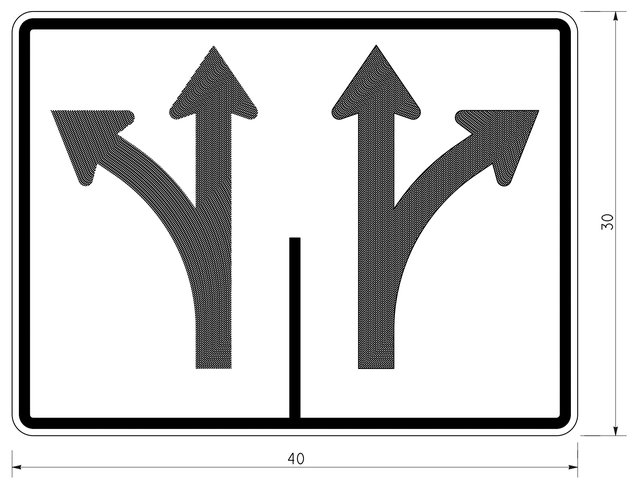

ALL DIMENSION IN INCH(ES)
1.50 RADIUS; 0.75" BORDER; 0.50" INDENT;
BLACK ARROWS ON WHITE;

S8-2 S8-4 S8-6 S8-8

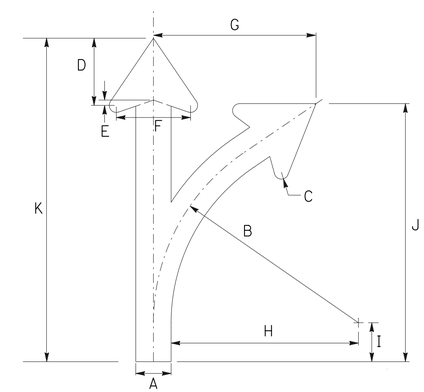

ARROW DETAIL

A	B	C	D	E	F	G	H	I	J	K
2½	14½	½R	4¾	⅜	5¼	11½	12⅞	2¾	18¼	22⅞

SIGN DETAILS
NO SCALE

APPROVED FOR SIGN WORK ONLY

SD-1

STATE OF CALIFORNIA - DEPARTMENT OF TRANSPORTATION
Caltrans® TRAFFIC DESIGN

FUNCTIONAL SUPERVISOR: MOHAMMED CHOWDHURY
CALCULATED-DESIGNED BY: JAMES CANALITA
CHECKED BY: ESTHER M. KIM
REVISED BY
DATE REVISED

LAST REVISION 00-00-00
DATE PLOTTED => 24-MAY-2014
TIME PLOTTED => 05:32