INDEX OF PLANS

SHEET No.	DESCRIPTION
1	TITLE AND LOCATION MAP
2-3	TYPICAL CROSS SECTIONS
4-5	LAYOUTS
6-19	CONSTRUCTION DETAILS
20	CONSTRUCTION AREA SIGNS
21-32	TRAFFIC HANDLING DETAILS
33-37	PAVEMENT DELINEATION DETAILS & QUANTITIES
38-42	SIGN DETAILS & QUANTITIES
43-45	SUMMARY OF QUANTITIES
46	LANDSCAPE DETAILS
47-66	ELECTRICAL PLANS
67-131	REVISED STANDARD PLANS

THE STANDARD PLANS LIST APPLICABLE TO THIS CONTRACT IS INCLUDED IN THE NOTICE TO BIDDERS AND SPECIAL PROVISIONS BOOK.

STATE OF CALIFORNIA
DEPARTMENT OF TRANSPORTATION

ACNHPI-010-1(821)E

Dist	COUNTY	ROUTE	POST MILES TOTAL PROJECT	SHEET No.	TOTAL SHEETS
07	LA	10	41.7/48.3	1	131

PROJECT PLANS FOR CONSTRUCTION ON
STATE HIGHWAY
IN LOS ANGELES COUNTY
IN POMONA, SAN DIMAS AND CLAREMONT
FROM 0.7 MILE WEST OF ROUTE 10/57 SEPARATION
TO SAN BERNARDINO COUNTY LINE

TO BE SUPPLEMENTED BY STANDARD PLANS DATED 2010

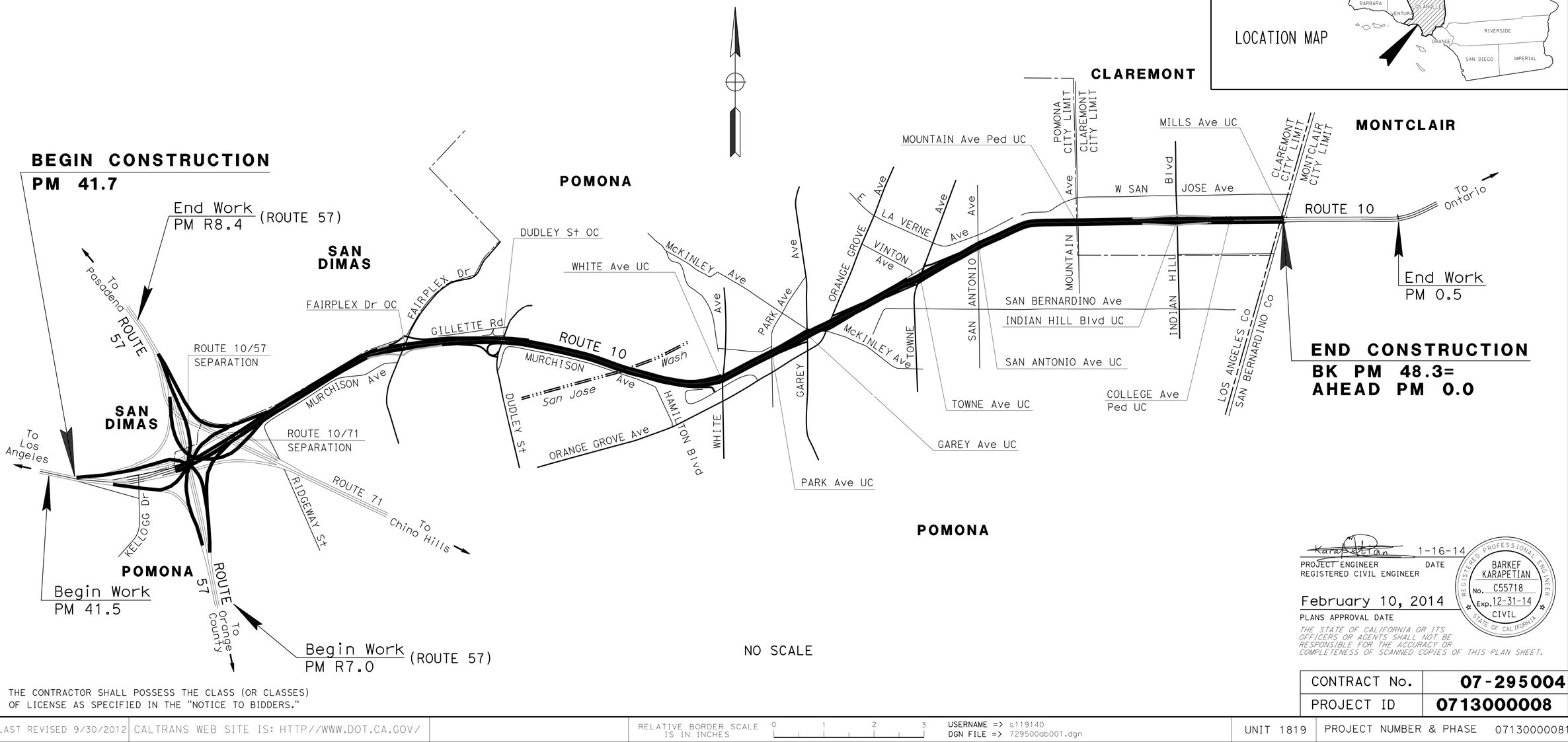

THE CONTRACTOR SHALL POSSESS THE CLASS (OR CLASSES) OF LICENSE AS SPECIFIED IN THE "NOTICE TO BIDDERS."

PROJECT MANAGER: JIWANJIT PALAHA

DESIGN ENGINEER: BARKEF KARAPETIAN

Karapetian 1-16-14
PROJECT ENGINEER DATE
REGISTERED CIVIL ENGINEER

February 10, 2014
PLANS APPROVAL DATE

REGISTERED PROFESSIONAL ENGINEER
BARKEF KARAPETIAN
No. C55718
Exp. 12-31-14
CIVIL
STATE OF CALIFORNIA

THE STATE OF CALIFORNIA OR ITS OFFICERS OR AGENTS SHALL NOT BE RESPONSIBLE FOR THE ACCURACY OR COMPLETENESS OF SCANNED COPIES OF THIS PLAN SHEET.

CONTRACT No.	07-295004
PROJECT ID	0713000008

LAST REVISION 00-00-00
DATE PLOTTED => 01-APR-2014
TIME PLOTTED => 12:29

BORDER LAST REVISED 9/30/2012 | CALTRANS WEB SITE IS: HTTP//WWW.DOT.CA.GOV/ | RELATIVE BORDER SCALE IS IN INCHES 0 1 2 3 | USERNAME => s119140 DGN FILE => 729500ab001.dgn | UNIT 1819 | PROJECT NUMBER & PHASE 07130000081

Dist	COUNTY	ROUTE	POST MILES TOTAL PROJECT	SHEET No.	TOTAL SHEETS
07	LA	10	41.7/48.3	2	131

Karakertian 1-16-14
REGISTERED CIVIL ENGINEER DATE

2-10-14
PLANS APPROVAL DATE

REGISTERED PROFESSIONAL ENGINEER
BARKEF KARAPETIAN
No. C55718
Exp. 12/31/14
CIVIL
STATE OF CALIFORNIA

THE STATE OF CALIFORNIA OR ITS OFFICERS OR AGENTS SHALL NOT BE RESPONSIBLE FOR THE ACCURACY OR COMPLETENESS OF SCANNED COPIES OF THIS PLAN SHEET.

NOTES:

1. DIMENSIONS OF THE PAVEMENT STRUCTURES (STRUCTURAL SECTIONS) ARE SUBJECT TO TOLERANCES SPECIFIED IN THE STANDARD SPECIFICATIONS.
2. FOR LOCATIONS OF CRASH CUSHIONS & MGS SEE LAYOUT PLANS & CONSTRUCTION DETAILS.
3. MATCH Exist SUPERELEVATIONS AND CROSS SLOPES OF LANES, SHOULDERS AND GORE AREAS (Typ).
4. FOR ACCURATE RIGHT OF WAY DATA, CONTACT RIGHT OF WAY ENGINEERING AT THE DISTRICT OFFICE.
5. SEE SHEET X-2 FOR BASE REPLACEMENT DETAILS.

ABBREVIATIONS:

HMA-SP	HOT MIX ASPHALT, SUPERPAVE (TYPE A)
RHMA-SP-G	RUBBERIZED HOT MIX ASPHALT, SUPERPAVE (GAP-GRADED)
SAMI-R	ASPHALT RUBBER STRESS ABSORBING MEMBRANE INTERLAYER (SAMI-R)
SB Co	SAN BERNARDINO COUNTY
RSC	RAPID STRENGTH CONCRETE

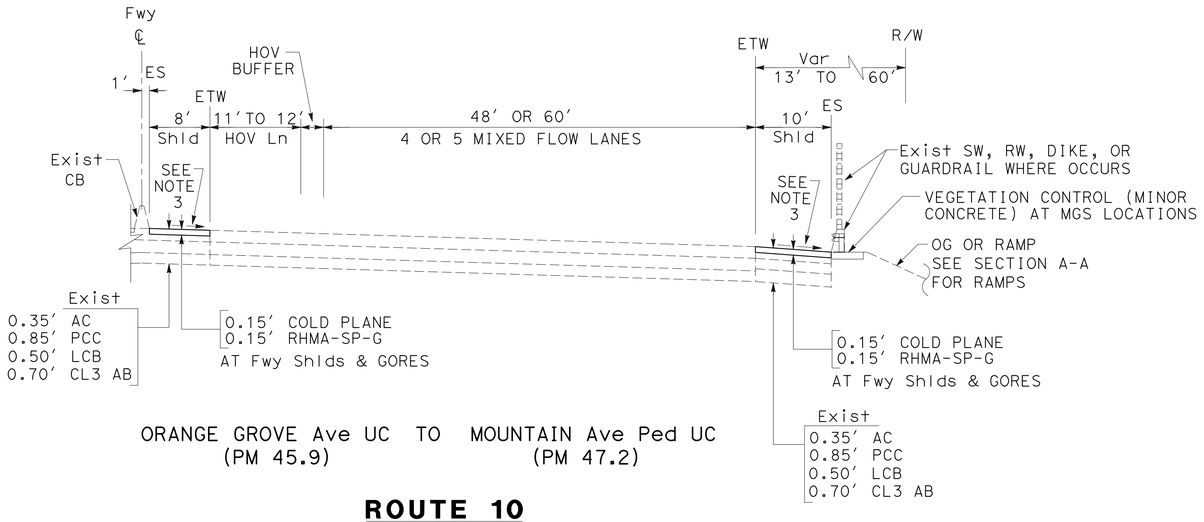

ORANGE GROVE Ave UC (PM 45.9) TO MOUNTAIN Ave Ped UC (PM 47.2)

ROUTE 10

WESTBOUND & EASTBOUND

PAVEMENT CLIMATE REGION

INLAND VALLEY

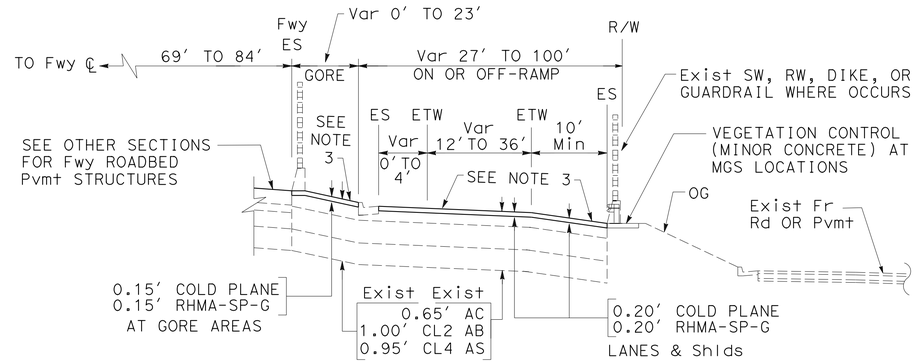

AT RAMP LOCATIONS WITHIN PROJECT LIMITS

SECTION A-A

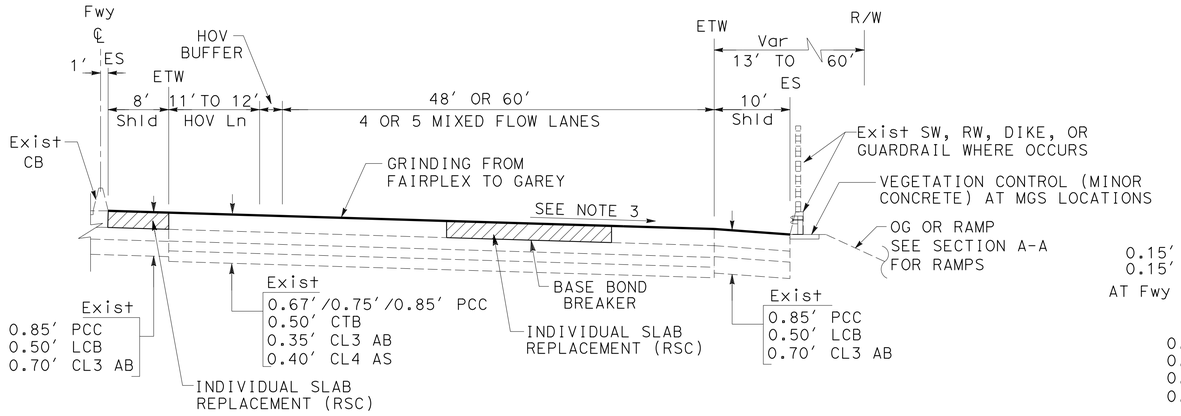

57/10 SEPARATION (PM 42.4) TO GAREY Ave UC (PM 45.7)

ROUTE 10

WESTBOUND & EASTBOUND

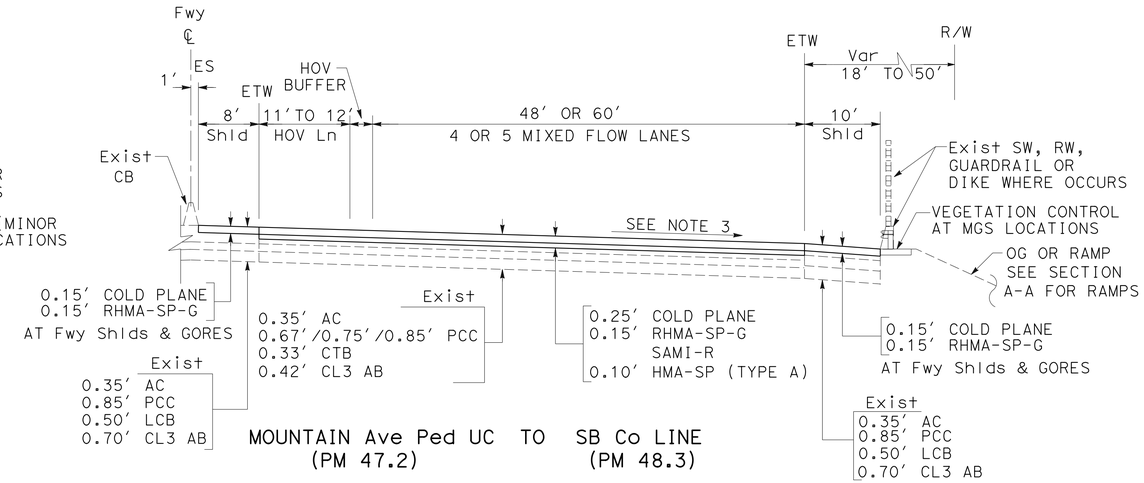

MOUNTAIN Ave Ped UC (PM 47.2) TO SB Co LINE (PM 48.3)

ROUTE 10

WESTBOUND & EASTBOUND

TYPICAL CROSS SECTIONS

NO SCALE

X-1

REVISED BY | DATE REVISED
RICHARD DOUGHERTY | BARKEF KARAPETIAN
CALCULATED-DESIGNED BY | CHECKED BY
FUNCTIONAL SUPERVISOR: REFUGIO DOMINGUEZ
STATE OF CALIFORNIA - DEPARTMENT OF TRANSPORTATION
DESIGN
Caltrans

LAST REVISION 00-00-00 | DATE PLOTTED => 01-APR-2014 | TIME PLOTTED => 12:29

BORDER LAST REVISED 7/2/2010 | USERNAME => s119140 | DGN FILE => 729500ca001.dgn | RELATIVE BORDER SCALE IS IN INCHES 0 1 2 3 | UNIT 1819 | PROJECT NUMBER & PHASE 07130000081

Dist	COUNTY	ROUTE	POST MILES TOTAL PROJECT	SHEET No.	TOTAL SHEETS
07	LA	10	41.7/48.3	3	131

Karakaetian 1-16-14
REGISTERED CIVIL ENGINEER DATE

2-10-14
PLANS APPROVAL DATE

REGISTERED PROFESSIONAL ENGINEER
BARKEF KARAPETIAN
No. C55718
Exp. 12/31/14
CIVIL
STATE OF CALIFORNIA

THE STATE OF CALIFORNIA OR ITS OFFICERS OR AGENTS SHALL NOT BE RESPONSIBLE FOR THE ACCURACY OR COMPLETENESS OF SCANNED COPIES OF THIS PLAN SHEET.

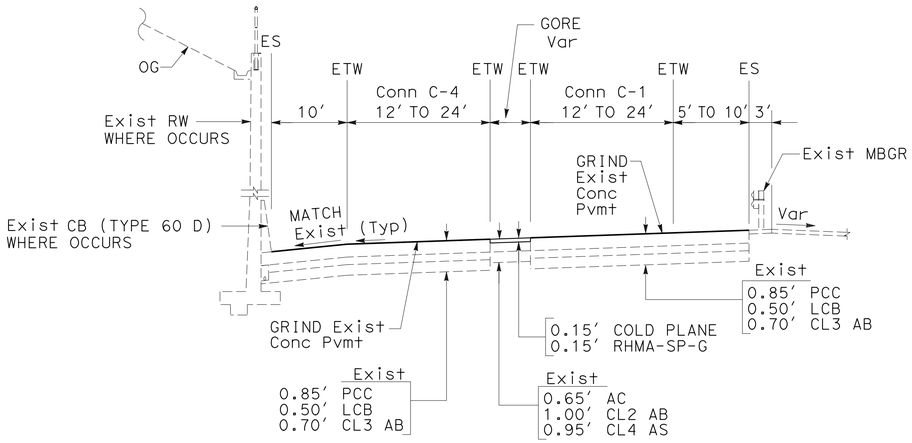

Conn C-1 & C-4: FROM WB10 JUNCTION TO C-1/C-4 CONNECTORS JUNCTION

CONNECTORS C-1 & C-4

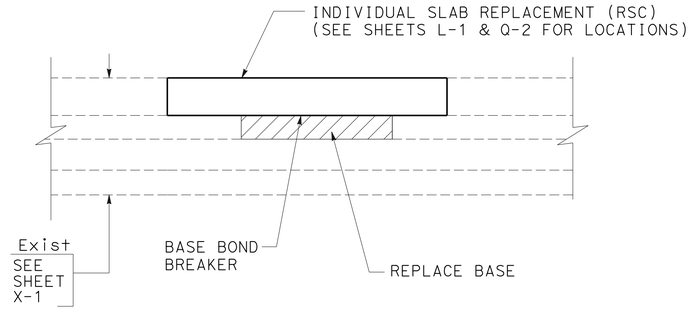

TYPICAL BASE REPLACEMENT UNDER CONCRETE SLAB

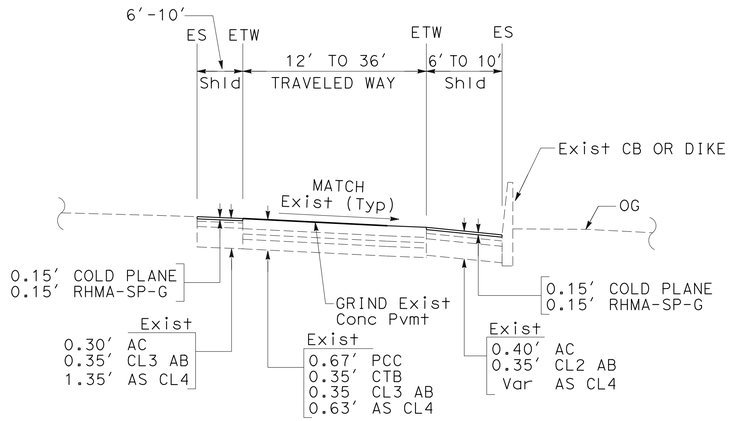

Conn C-1: FROM Conn C-4 JUNCTION TO MERGE WITH SB Rte 57
Conn C-4: FROM Conn C-1 JUNCTION TO MERGE WITH NB Rte 57
Conn C-2: FROM SB Rte 57 JUNCTION TO MERGE WITH EB Rte 10
Conn C-3: FROM NB Rte 57 JUNCTION TO MERGE WITH EB Rte 10
Conn B: FROM C-3 Conn JUNCTION TO MERGE WITH WB Rte 10
Conn G: FROM EB Rte 10 JUNCTION TO MERGE WITH C-4 Conn

CONNECTORS C-1, C-2, C-3, C-4, B & G

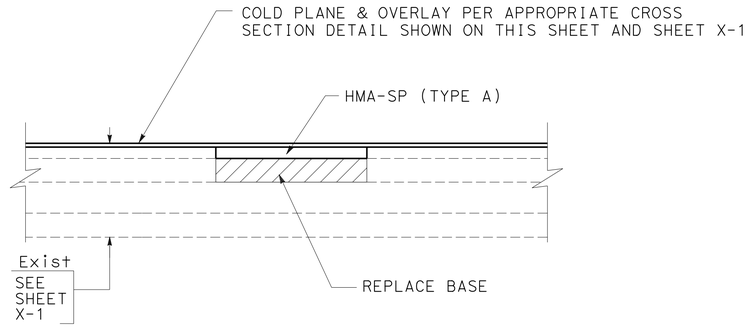

TYPICAL BASE REPLACEMENT UNDER AC PAVEMENT

TYPICAL CROSS SECTIONS

NO SCALE

X-2

REVISED BY | DATE REVISED
RICHARD DOUGHERTY | BARKEF KARAPETIAN
CALCULATED-DESIGNED BY | CHECKED BY
FUNCTIONAL SUPERVISOR: REFUGIO DOMINGUEZ

STATE OF CALIFORNIA - DEPARTMENT OF TRANSPORTATION
DESIGN

LAST REVISION 00-00-00 | DATE PLOTTED => 01-APR-2014 | TIME PLOTTED => 12:29

Dist	COUNTY	ROUTE	POST MILES TOTAL PROJECT	SHEET No.	TOTAL SHEETS
07	LA	10	41.7/48.3	4	131

Karapetian 1-16-14
REGISTERED CIVIL ENGINEER DATE

2-10-14
PLANS APPROVAL DATE

BARKEF KARAPETIAN No. C55718 Exp. 12/31/14 CIVIL — REGISTERED PROFESSIONAL ENGINEER — STATE OF CALIFORNIA

THE STATE OF CALIFORNIA OR ITS OFFICERS OR AGENTS SHALL NOT BE RESPONSIBLE FOR THE ACCURACY OR COMPLETENESS OF SCANNED COPIES OF THIS PLAN SHEET.

ABBREVIATIONS:

HMA-SP	HOT MIX ASPHALT, SUPERPAVE (TYPE A)
LA Co	LOS ANGELES COUNTY
RHMA-SP-G	RUBBERIZED HOT MIX ASPHALT SUPERPAVE (GAP-GRADED)
RSC	RAPID STRENGTH CONCRETE
SAMI-R	ASPHALT RUBBER STRESS ABSORBING MEMBRANE INTERLAYER (SAMI-R)
SB Co	SAN BERNARDINO COUNTY

LEGEND:

CRASH CUSHION

MIDWEST GUARDRAIL SYSTEM TRANSITION RAILING (TYPE WB-31)

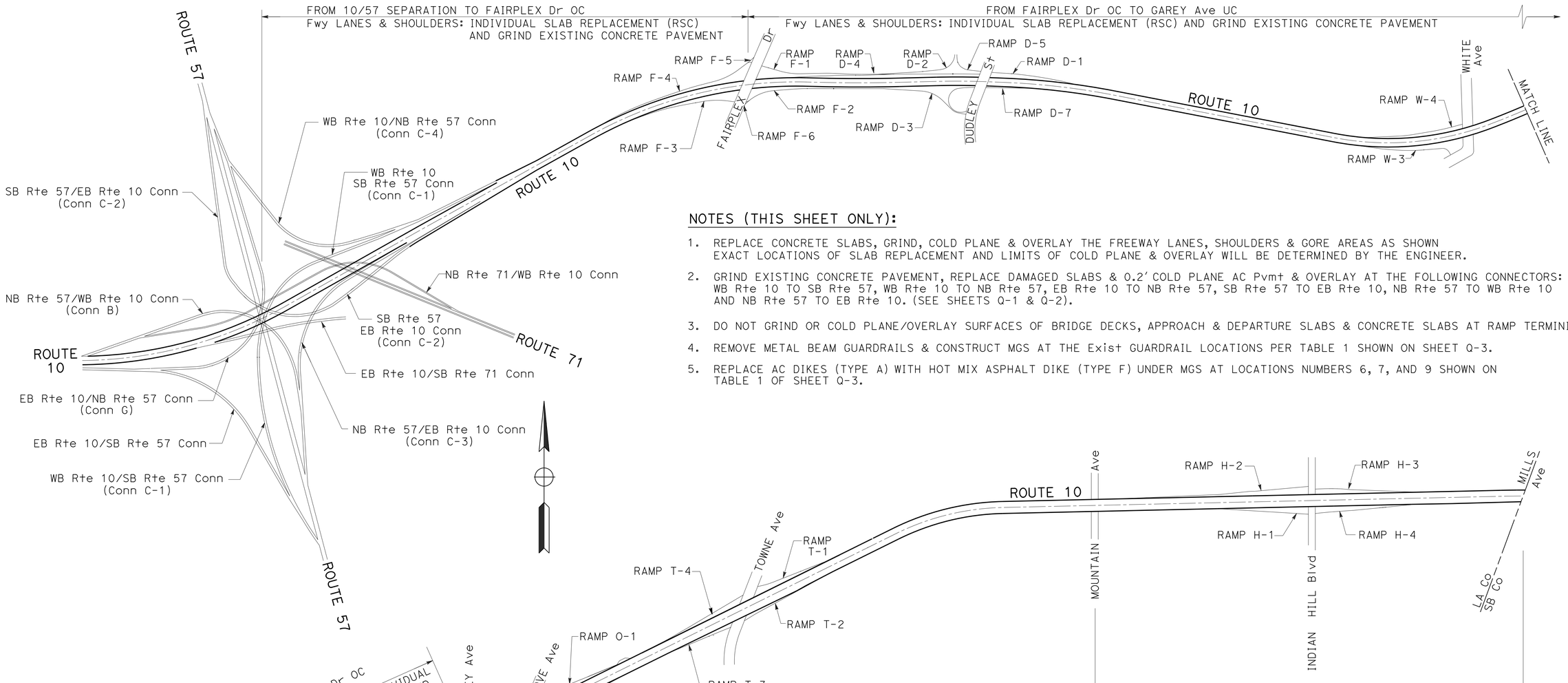

NOTES (THIS SHEET ONLY):

1. REPLACE CONCRETE SLABS, GRIND, COLD PLANE & OVERLAY THE FREEWAY LANES, SHOULDERS & GORE AREAS AS SHOWN EXACT LOCATIONS OF SLAB REPLACEMENT AND LIMITS OF COLD PLANE & OVERLAY WILL BE DETERMINED BY THE ENGINEER.
2. GRIND EXISTING CONCRETE PAVEMENT, REPLACE DAMAGED SLABS & 0.2' COLD PLANE AC Pvmt & OVERLAY AT THE FOLLOWING CONNECTORS: WB Rte 10 TO SB Rte 57, WB Rte 10 TO NB Rte 57, EB Rte 10 TO NB Rte 57, SB Rte 57 TO EB Rte 10, NB Rte 57 TO WB Rte 10 AND NB Rte 57 TO EB Rte 10. (SEE SHEETS Q-1 & Q-2).
3. DO NOT GRIND OR COLD PLANE/OVERLAY SURFACES OF BRIDGE DECKS, APPROACH & DEPARTURE SLABS & CONCRETE SLABS AT RAMP TERMINI.
4. REMOVE METAL BEAM GUARDRAILS & CONSTRUCT MGS AT THE Exist GUARDRAIL LOCATIONS PER TABLE 1 SHOWN ON SHEET Q-3.
5. REPLACE AC DIKES (TYPE A) WITH HOT MIX ASPHALT DIKE (TYPE F) UNDER MGS AT LOCATIONS NUMBERS 6, 7, AND 9 SHOWN ON TABLE 1 OF SHEET Q-3.

LAYOUT

SCALE: 1" = 650'

L-1

STATE OF CALIFORNIA - DEPARTMENT OF TRANSPORTATION — Caltrans® — DESIGN

FUNCTIONAL SUPERVISOR: REFUGIO DOMINGUEZ

CALCULATED-DESIGNED BY: RICHARD DOUGHERTY

CHECKED BY: BARKEF KARAPETIAN

REVISED BY | DATE REVISED

LAST REVISION: 00-00-00 | DATE PLOTTED => 01-APR-2014 | TIME PLOTTED => 12:29

BORDER LAST REVISED 7/2/2010

USERNAME => s119140
DGN FILE => 729500ea001.dgn

RELATIVE BORDER SCALE IS IN INCHES 0 1 2 3

UNIT 1819

PROJECT NUMBER & PHASE 07130000081

Dist	COUNTY	ROUTE	POST MILES TOTAL PROJECT	SHEET No.	TOTAL SHEETS
07	LA	10	41.7/48.3	5	131

REGISTERED CIVIL ENGINEER — DATE: 1-16-14

PLANS APPROVAL DATE: 2-10-14

BARKEF KARAPETIAN No. C55718 Exp. 12/31/14 CIVIL — REGISTERED PROFESSIONAL ENGINEER — STATE OF CALIFORNIA

THE STATE OF CALIFORNIA OR ITS OFFICERS OR AGENTS SHALL NOT BE RESPONSIBLE FOR THE ACCURACY OR COMPLETENESS OF SCANNED COPIES OF THIS PLAN SHEET.

NOTES (THIS SHEET ONLY):

1. REMOVE EXISTING CRASH CUSHIONS & INSTALL CRASH CUSHIONS PER TABLE 1 AT THE SAME LOCATION.
2. USE MIDWEST GUARDRAIL SYSTEM TRANSITION RAILING (TYPE WB-31) AT GUARDRAIL TO CB CONNECTIONS.

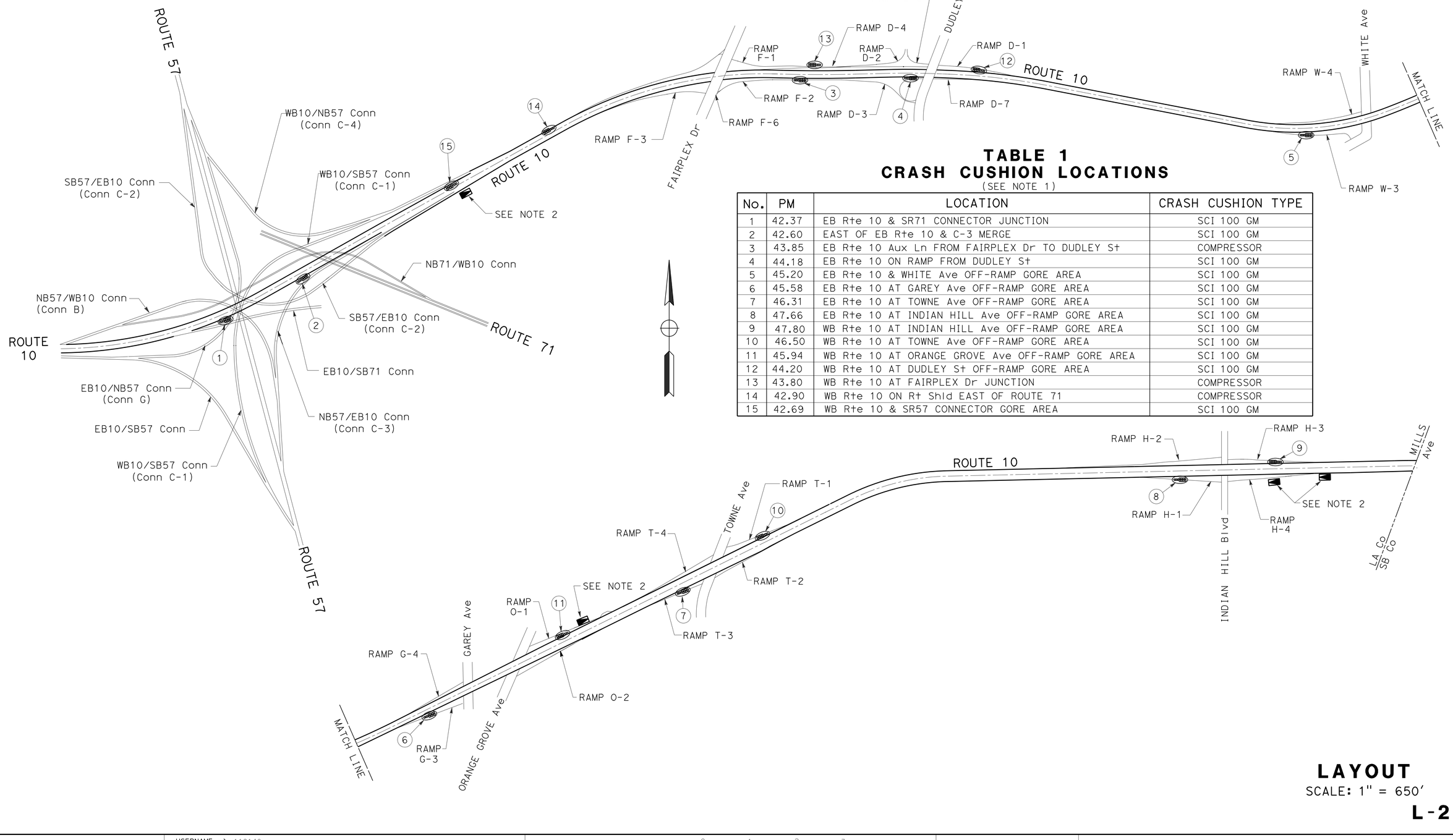

TABLE 1
CRASH CUSHION LOCATIONS
(SEE NOTE 1)

No.	PM	LOCATION	CRASH CUSHION TYPE
1	42.37	EB Rte 10 & SR71 CONNECTOR JUNCTION	SCI 100 GM
2	42.60	EAST OF EB Rte 10 & C-3 MERGE	SCI 100 GM
3	43.85	EB Rte 10 Aux Ln FROM FAIRPLEX Dr TO DUDLEY St	COMPRESSOR
4	44.18	EB Rte 10 ON RAMP FROM DUDLEY St	SCI 100 GM
5	45.20	EB Rte 10 & WHITE Ave OFF-RAMP GORE AREA	SCI 100 GM
6	45.58	EB Rte 10 AT GAREY Ave OFF-RAMP GORE AREA	SCI 100 GM
7	46.31	EB Rte 10 AT TOWNE Ave OFF-RAMP GORE AREA	SCI 100 GM
8	47.66	EB Rte 10 AT INDIAN HILL Ave OFF-RAMP GORE AREA	SCI 100 GM
9	47.80	WB Rte 10 AT INDIAN HILL Ave OFF-RAMP GORE AREA	SCI 100 GM
10	46.50	WB Rte 10 AT TOWNE Ave OFF-RAMP GORE AREA	SCI 100 GM
11	45.94	WB Rte 10 AT ORANGE GROVE Ave OFF-RAMP GORE AREA	SCI 100 GM
12	44.20	WB Rte 10 AT DUDLEY St OFF-RAMP GORE AREA	SCI 100 GM
13	43.80	WB Rte 10 AT FAIRPLEX Dr JUNCTION	COMPRESSOR
14	42.90	WB Rte 10 ON Rt Shld EAST OF ROUTE 71	COMPRESSOR
15	42.69	WB Rte 10 & SR57 CONNECTOR GORE AREA	SCI 100 GM

LAYOUT
SCALE: 1" = 650'

L-2

STATE OF CALIFORNIA - DEPARTMENT OF TRANSPORTATION — DESIGN

FUNCTIONAL SUPERVISOR: REFUGIO DOMINGUEZ

CALCULATED-DESIGNED BY: RICHARD DOUGHERTY | CHECKED BY: BARKEF KARAPETIAN

REVISED BY | DATE REVISED

LAST REVISION | DATE PLOTTED => 01-APR-2014 | TIME PLOTTED => 12:29 | 00-00-00 | 00-00-00

BORDER LAST REVISED 7/2/2010 | USERNAME => s119140 | DGN FILE => 729500ea002.dgn | RELATIVE BORDER SCALE IS IN INCHES 0 1 2 3 | UNIT 1819 | PROJECT NUMBER & PHASE 07130000081

Dist	COUNTY	ROUTE	POST MILES TOTAL PROJECT	SHEET No.	TOTAL SHEETS
07	LA	10	41.7/48.3	6	131

Karaketian 1-16-14
REGISTERED CIVIL ENGINEER DATE

2-10-14
PLANS APPROVAL DATE

REGISTERED PROFESSIONAL ENGINEER
BARKEF KARAPETIAN
No. C55718
Exp. 12/31/14
CIVIL
STATE OF CALIFORNIA

THE STATE OF CALIFORNIA OR ITS OFFICERS OR AGENTS SHALL NOT BE RESPONSIBLE FOR THE ACCURACY OR COMPLETENESS OF SCANNED COPIES OF THIS PLAN SHEET.

NOTES: (THIS SHEET ONLY):

1. FOR ACCURATE RIGHT OF WAY AND ACCESS DATA, CONTACT RIGHT OF WAY ENGINEERING AT THE DISTRICT OFFICE.
2. EXACT PAVING LIMITS WILL BE DETERMINED BY THE ENGINEER.

LEGEND:

- COLD PLANE & OVERLAY (RAMPS / Shlds)
- COLD PLANE & OVERLAY (GORE AREAS)
- CONCRETE SIDEWALK
- EXISTING IRRIGATION FACILITY
- NEW RISER SPRINKLER ASSEMBLY
- EXISTING ICC

ABBREVIATIONS:

RHMA-SP-G	RUBBERIZED HOT MIX ASPHALT, SUPERPAVE (GAP GRADED)
EQ	EQUAL

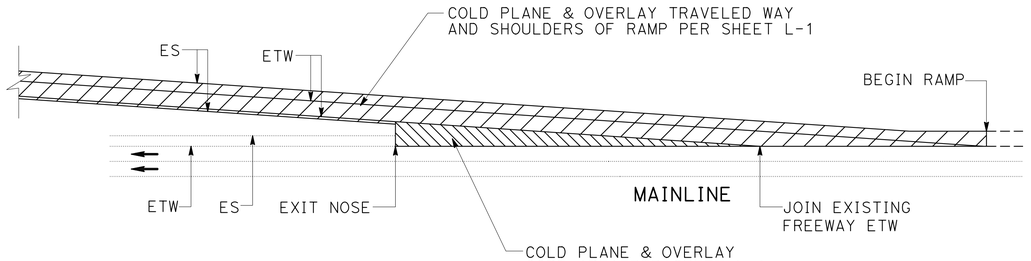

OFF-RAMP

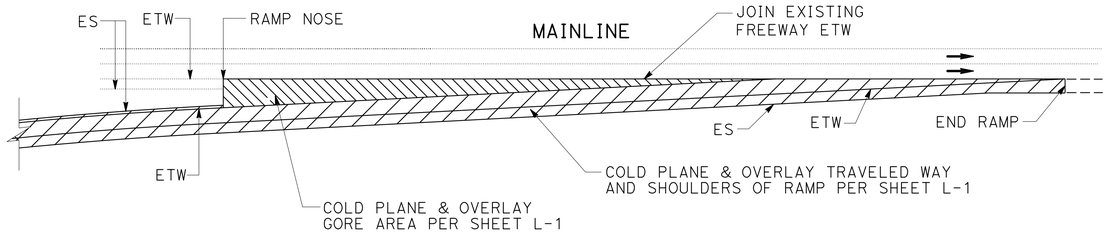

ON-RAMP

TYPICAL RAMP PAVING DETAILS

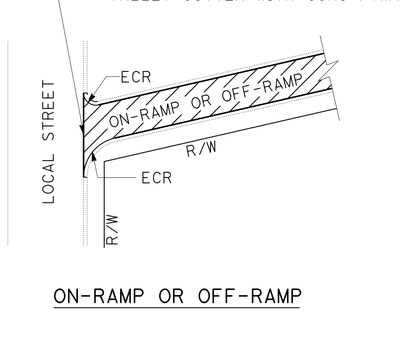

ON-RAMP OR OFF-RAMP

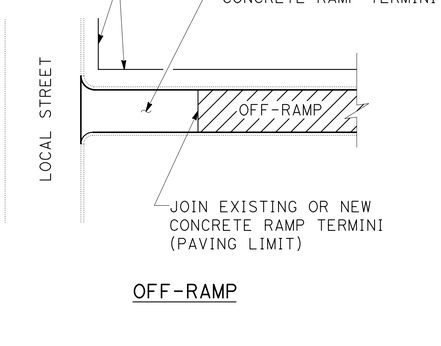

OFF-RAMP

CONSTRUCTION DETAILS

NO SCALE

C-1

MOHAMMAD MOHSENZADEH — CALCULATED-DESIGNED BY
BARKEF KARAPETIAN — CHECKED BY
REVISED BY — DATE REVISED
FUNCTIONAL SUPERVISOR: REFUGIO DOMINGUEZ
STATE OF CALIFORNIA - DEPARTMENT OF TRANSPORTATION — DESIGN
Caltrans

LAST REVISION: DATE PLOTTED => 01-APR-2014 | 00-00-00 | TIME PLOTTED => 12:29

BORDER LAST REVISED 7/2/2010 | USERNAME => s119140 | DGN FILE => 729500ga001.dgn | RELATIVE BORDER SCALE IS IN INCHES 0 1 2 3 | UNIT 1819 | PROJECT NUMBER & PHASE 07130000081

Dist	COUNTY	ROUTE	POST MILES TOTAL PROJECT	SHEET No.	TOTAL SHEETS
07	LA	10	41.7/48.3	7	131

Karapetian 1-16-14
REGISTERED CIVIL ENGINEER DATE

2-10-14
PLANS APPROVAL DATE

REGISTERED PROFESSIONAL ENGINEER
BARKEF KARAPETIAN
No. C55718
Exp. 12/31/14
CIVIL
STATE OF CALIFORNIA

THE STATE OF CALIFORNIA OR ITS OFFICERS OR AGENTS SHALL NOT BE RESPONSIBLE FOR THE ACCURACY OR COMPLETENESS OF SCANNED COPIES OF THIS PLAN SHEET.

NOTES (THIS SHEET ONLY):

1. COLD PLANE THE PLANNED THICKNESS OF Exist AC Pvmt.
2. REMOVE LOCALIZED FAILED AREAS AND PLACE SAME AC OR BASE MATERIAL & 95% COMPACTION AS APPLICABLE. (0.50' Min THICKNESS).
3. SEAL CRACKS GREATER THAN 1/4" WITH HOT APPLIED CRACK SEALANT.
4. REPLACE AC SURFACING WITH THE PLANNED THICKNESS OF RHMA-SP-G.

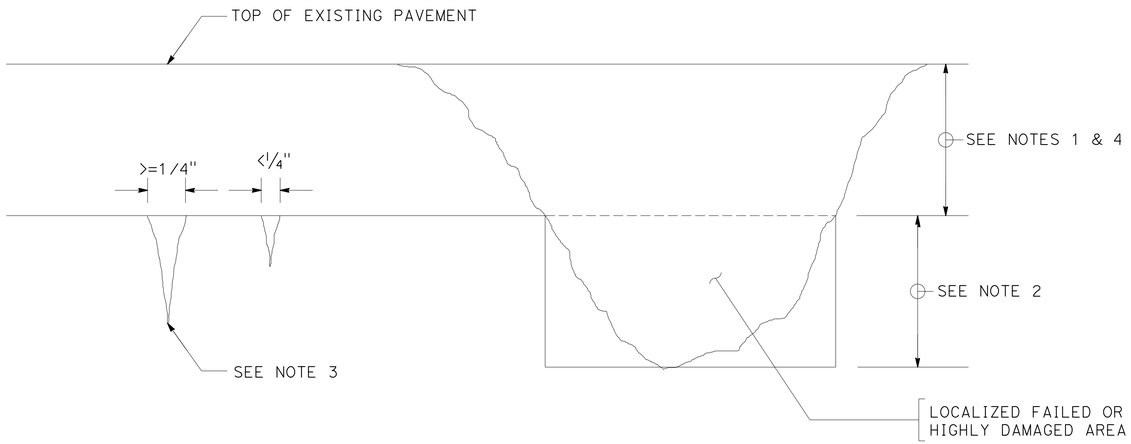

CRACKS TREATMENT AND REPAIR FAILED AREAS

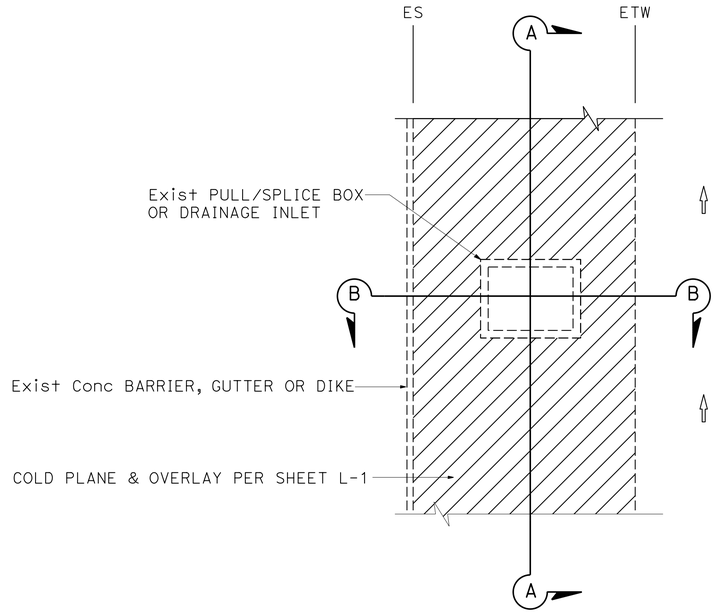

TYPICAL PAVEMENT REHAB DETAILS AROUND PULL/SPLICE BOXES OR DRAINAGE INLETS

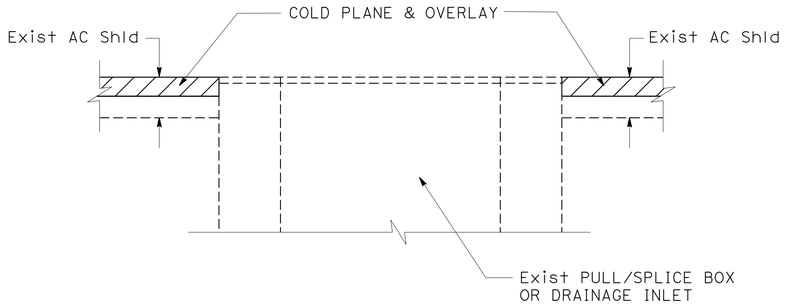

SECTION A-A

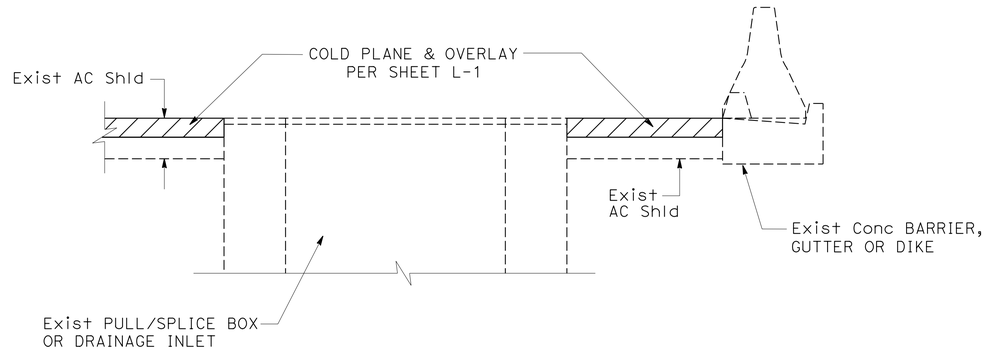

SECTION B-B

CONSTRUCTION DETAILS

NO SCALE

C-2

REVISED BY | DATE REVISED
MOHAMMAD MOHSENZADEH | BARKEF KARAPETIAN
CALCULATED-DESIGNED BY | CHECKED BY
FUNCTIONAL SUPERVISOR: REFUGIO DOMINGUEZ
STATE OF CALIFORNIA - DEPARTMENT OF TRANSPORTATION
DESIGN
Caltrans

LAST REVISION 00-00-00
DATE PLOTTED => 01-APR-2014
TIME PLOTTED => 12:29

BORDER LAST REVISED 7/2/2010
USERNAME => s119140
DGN FILE => 729500ga002.dgn
RELATIVE BORDER SCALE IS IN INCHES 0 1 2 3
UNIT 1819
PROJECT NUMBER & PHASE 07130000081

Dist	COUNTY	ROUTE	POST MILES TOTAL PROJECT	SHEET No.	TOTAL SHEETS
07	LA	10	41.7/48.3	8	131

Karapetian 1-16-14
REGISTERED CIVIL ENGINEER DATE

2-10-14
PLANS APPROVAL DATE

REGISTERED PROFESSIONAL ENGINEER
BARKEF KARAPETIAN
No. C55718
Exp. 12/31/14
CIVIL
STATE OF CALIFORNIA

THE STATE OF CALIFORNIA OR ITS OFFICERS OR AGENTS SHALL NOT BE RESPONSIBLE FOR THE ACCURACY OR COMPLETENESS OF SCANNED COPIES OF THIS PLAN SHEET.

NOTES (THIS SHEET ONLY):

1. REMOVE Exist 2' WIDE AC Pvmt AND CONSTRUCT Conc SW.
2. DETECTABLE WARNING SURFACE (Typ)
3. REMOVE IRRIGATION FACILITY.
4. RISER SPRINKLER ASSEMBLY

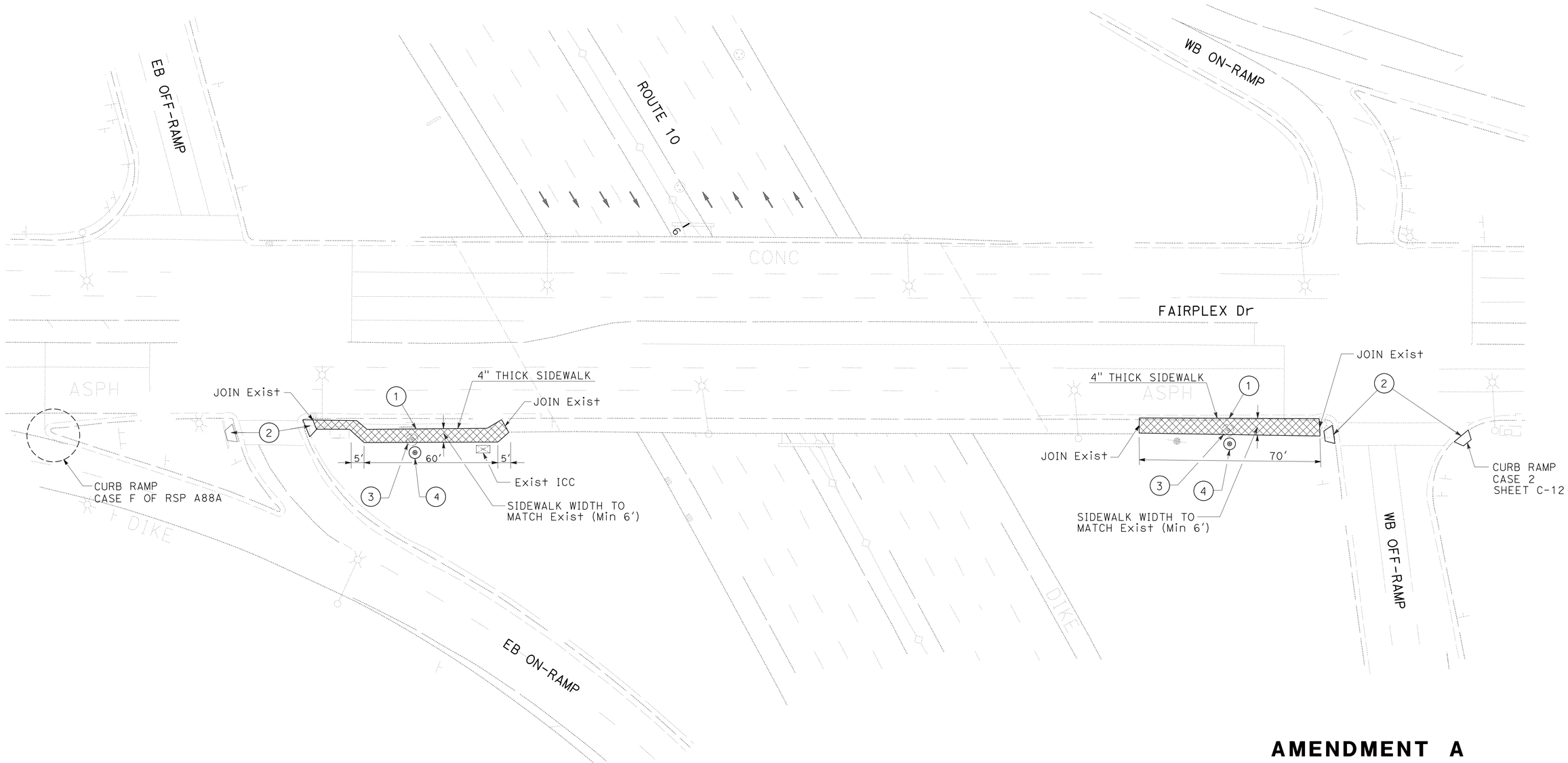

AMENDMENT A
CONSTRUCTION DETAILS

NO SCALE

C-3

REVISED BY | DATE REVISED
MOHAMMAD MOHSENZADEH | BARKEF KARAPETIAN
CALCULATED-DESIGNED BY | CHECKED BY
FUNCTIONAL SUPERVISOR: REFUGIO DOMINGUEZ
STATE OF CALIFORNIA - DEPARTMENT OF TRANSPORTATION
DESIGN

LAST REVISION 00-00-00 | DATE PLOTTED => 01-APR-2014 | TIME PLOTTED => 12:29

BORDER LAST REVISED 7/2/2010 | USERNAME => s119140 | DGN FILE => 729500ga003.dgn | RELATIVE BORDER SCALE IS IN INCHES 0 1 2 3 | UNIT 1819 | PROJECT NUMBER & PHASE 07130000081

Dist	COUNTY	ROUTE	POST MILES TOTAL PROJECT	SHEET No.	TOTAL SHEETS
07	LA	10	41.7/48.3	9	131

Karapetian 1-16-14
REGISTERED CIVIL ENGINEER DATE

2-10-14
PLANS APPROVAL DATE

REGISTERED PROFESSIONAL ENGINEER
BARKEF KARAPETIAN
No. C55718
Exp. 12/31/14
CIVIL
STATE OF CALIFORNIA

THE STATE OF CALIFORNIA OR ITS OFFICERS OR AGENTS SHALL NOT BE RESPONSIBLE FOR THE ACCURACY OR COMPLETENESS OF SCANNED COPIES OF THIS PLAN SHEET.

NOTES (THIS SHEET ONLY):

1. REMOVE AC Pvmt AND CONSTRUCT SIDEWALK.
2. REMOVE IRRIGATION FACILITY.
3. RISER SPRINKLER ASSEMBLY
4. FOR ACCURATE RIGHT OF WAY AND ACCESS DATA, CONTACT RIGHT OF WAY ENGINEERING AT THE DISTRICT OFFICE.

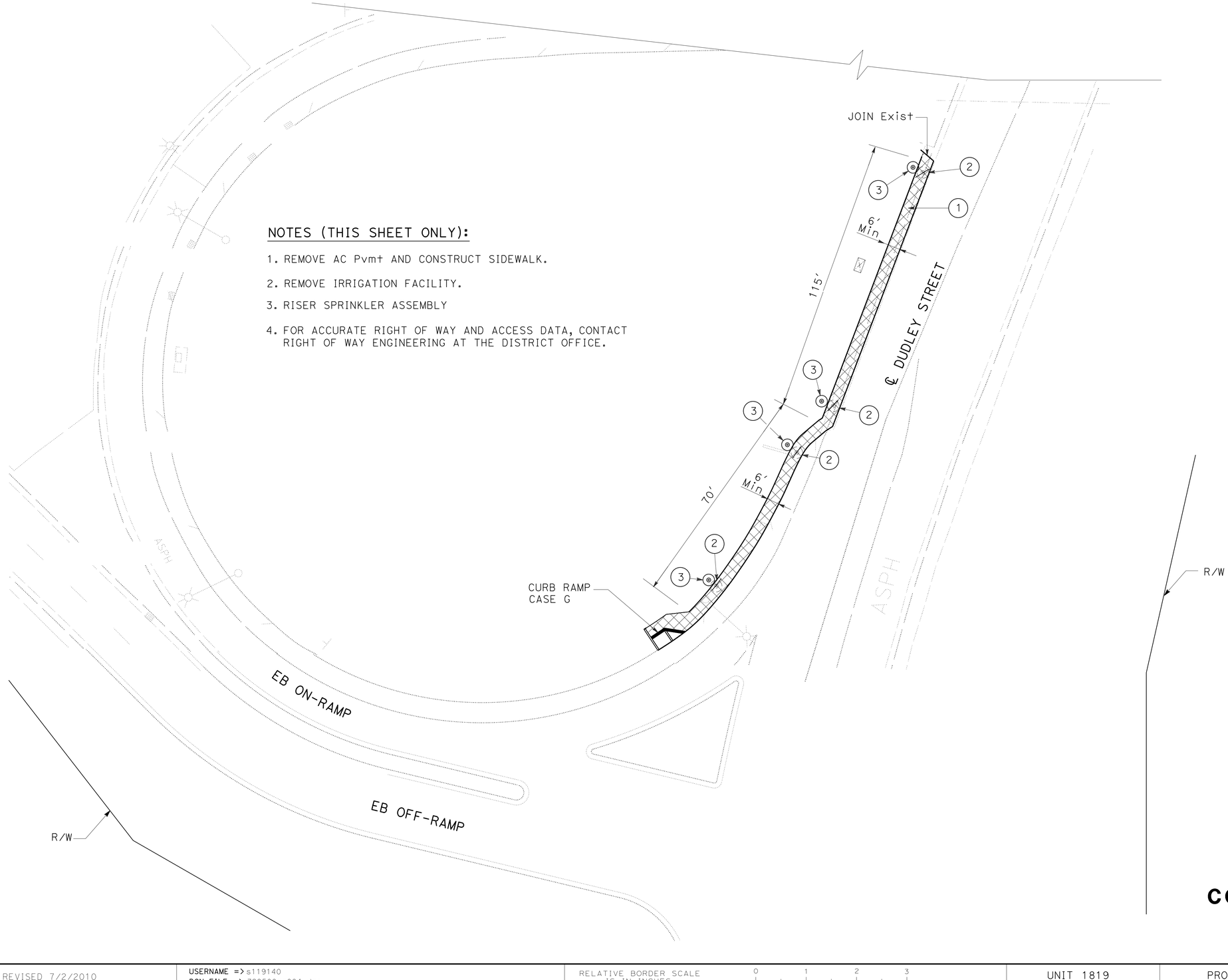

CONSTRUCTION DETAILS

NO SCALE

C-4

STATE OF CALIFORNIA - DEPARTMENT OF TRANSPORTATION
Caltrans®
DESIGN

FUNCTIONAL SUPERVISOR: REFUGIO DOMINGUEZ
CALCULATED-DESIGNED BY:
CHECKED BY:
MOHAMMAD MOHSENZADEH
BARKEF KARAPETIAN
REVISED BY
DATE REVISED

LAST REVISION 00-00-00
DATE PLOTTED => 01-APR-2014
TIME PLOTTED => 12:29

BORDER LAST REVISED 7/2/2010
USERNAME => s119140
DGN FILE => 729500ga004.dgn
RELATIVE BORDER SCALE IS IN INCHES 0 1 2 3
UNIT 1819
PROJECT NUMBER & PHASE 07130000081

Dist	COUNTY	ROUTE	POST MILES TOTAL PROJECT	SHEET No.	TOTAL SHEETS
07	LA	10	41.7/48.3	10	131

Karapetian 1-16-14
REGISTERED CIVIL ENGINEER DATE

2-10-14
PLANS APPROVAL DATE

REGISTERED PROFESSIONAL ENGINEER
BARKEF KARAPETIAN
No. C55718
Exp. 12/31/14
CIVIL
STATE OF CALIFORNIA

THE STATE OF CALIFORNIA OR ITS OFFICERS OR AGENTS SHALL NOT BE RESPONSIBLE FOR THE ACCURACY OR COMPLETENESS OF SCANNED COPIES OF THIS PLAN SHEET.

NOTES (THIS SHEET ONLY):

1. CURB RAMP MODIFIED CASE 2, SEE SHEET C-12.
2. FOR ACCURATE RIGHT OF WAY AND ACCESS DATA, CONTACT RIGHT OF WAY ENGINEERING AT THE DISTRICT OFFICE.

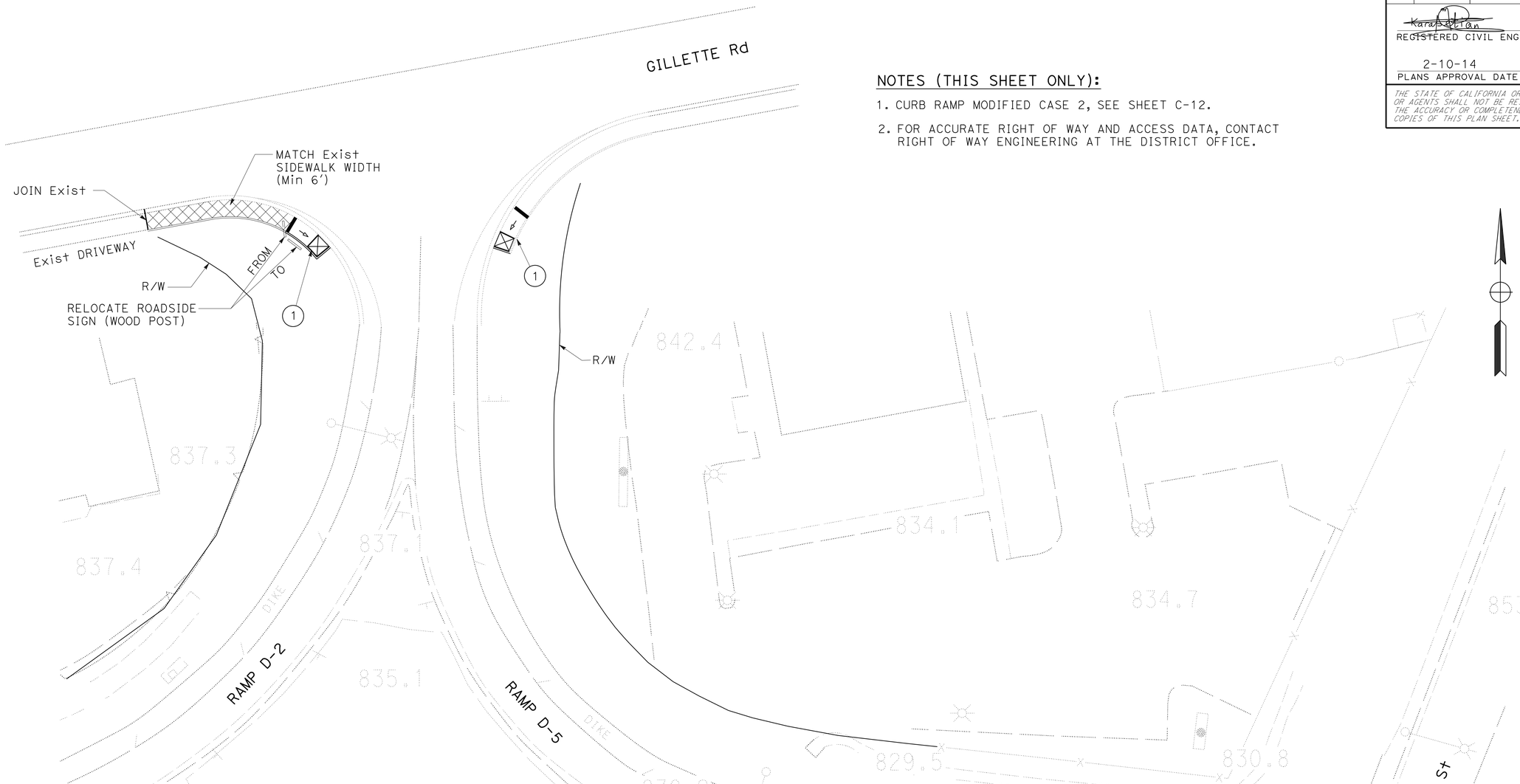

CONSTRUCTION DETAILS

NO SCALE

C-5

STATE OF CALIFORNIA - DEPARTMENT OF TRANSPORTATION
DESIGN
Caltrans®

FUNCTIONAL SUPERVISOR: REFUGIO DOMINGUEZ
CALCULATED-DESIGNED BY: MOHAMMAD MOHSENZADEH
CHECKED BY: BARKEF KARAPETIAN
REVISED BY
DATE REVISED

LAST REVISION 00-00-00
DATE PLOTTED => 01-APR-2014
TIME PLOTTED => 12:29

BORDER LAST REVISED 7/2/2010
USERNAME => s119140
DGN FILE => 729500ga005.dgn
RELATIVE BORDER SCALE IS IN INCHES 0 1 2 3
UNIT 1819
PROJECT NUMBER & PHASE 07130000081

Dist	COUNTY	ROUTE	POST MILES TOTAL PROJECT	SHEET No.	TOTAL SHEETS
07	LA	10	41.7/48.3	11	131

Karapetian 1-16-14
REGISTERED CIVIL ENGINEER DATE

2-10-14
PLANS APPROVAL DATE

REGISTERED PROFESSIONAL ENGINEER
BARKEF KARAPETIAN
No. C55718
Exp. 12/31/14
CIVIL
STATE OF CALIFORNIA

THE STATE OF CALIFORNIA OR ITS OFFICERS OR AGENTS SHALL NOT BE RESPONSIBLE FOR THE ACCURACY OR COMPLETENESS OF SCANNED COPIES OF THIS PLAN SHEET.

NOTE (THIS SHEET ONLY):

1. FOR ACCURATE RIGHT OF WAY AND ACCESS DATA, CONTACT RIGHT OF WAY ENGINEERING AT THE DISTRICT OFFICE.

CONSTRUCTION DETAILS

NO SCALE

C-6

STATE OF CALIFORNIA - DEPARTMENT OF TRANSPORTATION
DESIGN
FUNCTIONAL SUPERVISOR: REFUGIO DOMINGUEZ
CALCULATED-DESIGNED BY: MOHAMMAD MOHSENZADEH
CHECKED BY: BARKEF KARAPETIAN
REVISED BY
DATE REVISED

LAST REVISION 00-00-00
DATE PLOTTED => 01-APR-2014
TIME PLOTTED => 12:29

BORDER LAST REVISED 7/2/2010
USERNAME => s119140
DGN FILE => 729500ga006.dgn
RELATIVE BORDER SCALE IS IN INCHES 0 1 2 3
UNIT 1819
PROJECT NUMBER & PHASE 07130000081

Dist	COUNTY	ROUTE	POST MILES TOTAL PROJECT	SHEET No.	TOTAL SHEETS
07	LA	10	41.7/48.3	12	131

Karapetian 1-16-14
REGISTERED CIVIL ENGINEER DATE

2-10-14
PLANS APPROVAL DATE

REGISTERED PROFESSIONAL ENGINEER
BARKEF KARAPETIAN
No. C55718
Exp. 12/31/14
CIVIL
STATE OF CALIFORNIA

THE STATE OF CALIFORNIA OR ITS OFFICERS OR AGENTS SHALL NOT BE RESPONSIBLE FOR THE ACCURACY OR COMPLETENESS OF SCANNED COPIES OF THIS PLAN SHEET.

NOTE (THIS SHEET ONLY):

1. FOR ACCURATE RIGHT OF WAY AND ACCESS DATA, CONTACT RIGHT OF WAY ENGINEERING AT THE DISTRICT OFFICE.

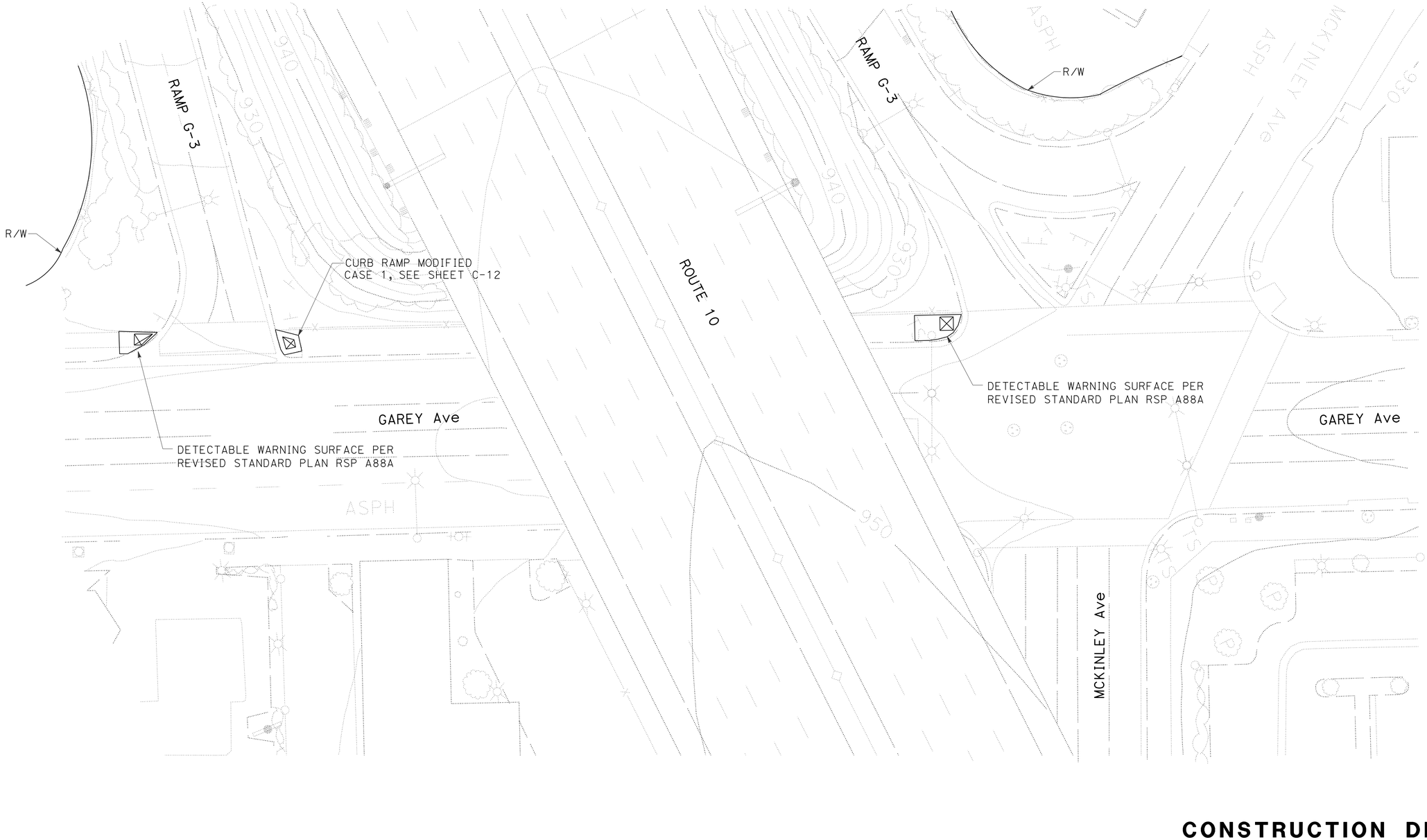

CONSTRUCTION DETAILS

NO SCALE

C-7

CALCULATED-DESIGNED BY: MOHAMMAD MOHSENZADEH
CHECKED BY: BARKEF KARAPETIAN
FUNCTIONAL SUPERVISOR: REFUGIO DOMINGUEZ
STATE OF CALIFORNIA - DEPARTMENT OF TRANSPORTATION
DESIGN

REVISED BY | DATE REVISED

LAST REVISION | DATE PLOTTED => 01-APR-2014
00-00-00 | TIME PLOTTED => 12:29

BORDER LAST REVISED 7/2/2010 | USERNAME => s119140 | DGN FILE => 729500ga007.dgn | RELATIVE BORDER SCALE IS IN INCHES 0 1 2 3 | UNIT 1819 | PROJECT NUMBER & PHASE 07130000081

Dist	COUNTY	ROUTE	POST MILES TOTAL PROJECT	SHEET No.	TOTAL SHEETS
07	LA	10	41.7/48.3	13	131

Karapetian 1-16-14
REGISTERED CIVIL ENGINEER DATE

2-10-14
PLANS APPROVAL DATE

REGISTERED PROFESSIONAL ENGINEER
BARKEF KARAPETIAN
No. C55718
Exp. 12/31/14
CIVIL
STATE OF CALIFORNIA

THE STATE OF CALIFORNIA OR ITS OFFICERS OR AGENTS SHALL NOT BE RESPONSIBLE FOR THE ACCURACY OR COMPLETENESS OF SCANNED COPIES OF THIS PLAN SHEET.

NOTE (THIS SHEET ONLY):

1. FOR ACCURATE RIGHT OF WAY AND ACCESS DATA, CONTACT RIGHT OF WAY ENGINEERING AT THE DISTRICT OFFICE.

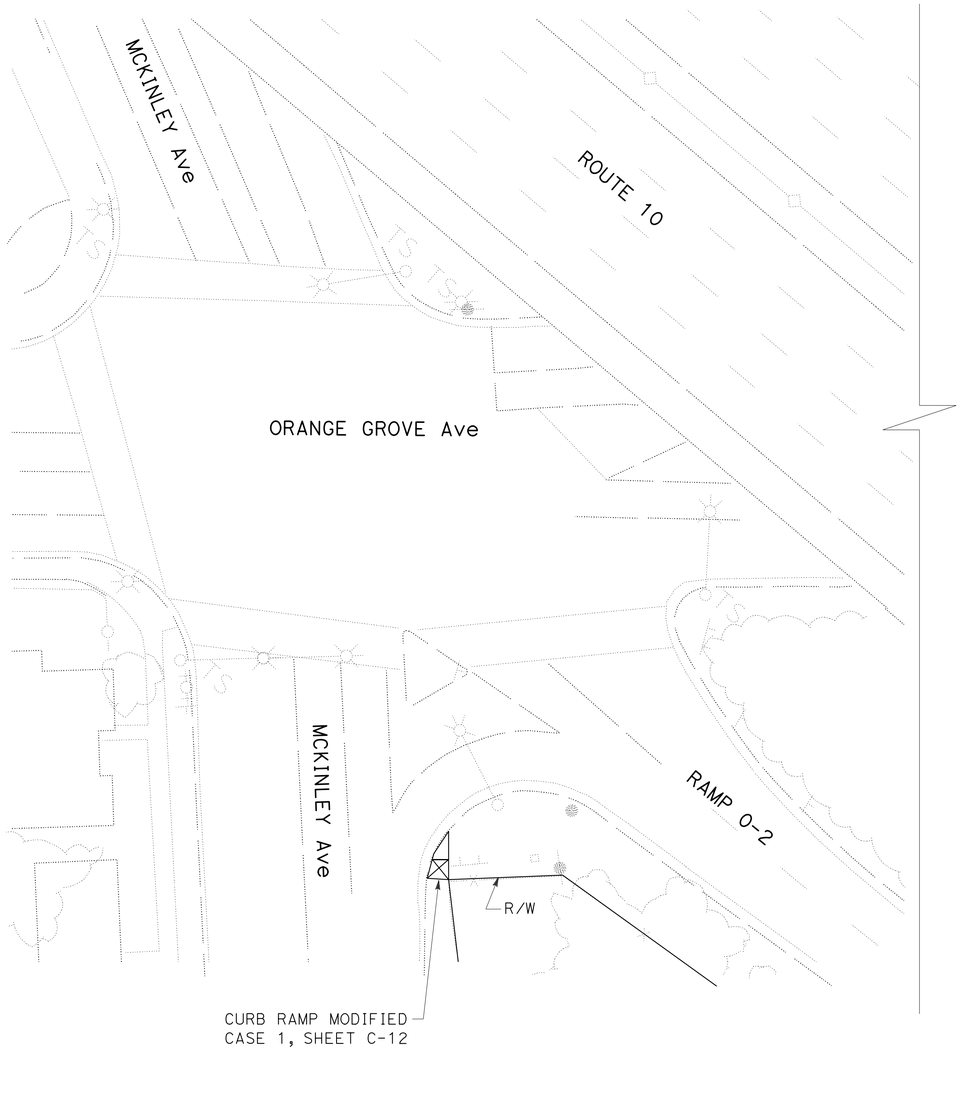

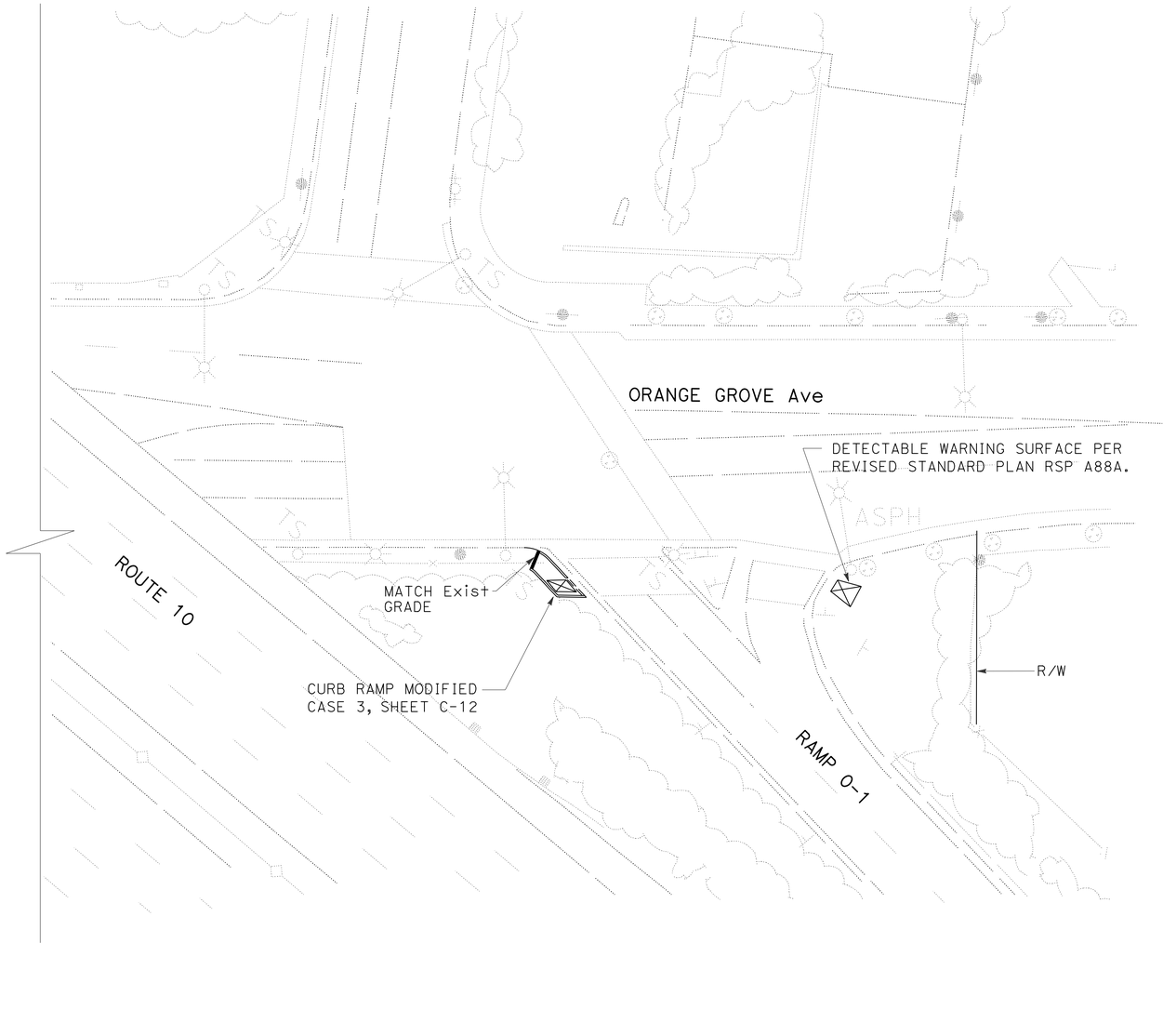

CONSTRUCTION DETAILS

NO SCALE

C-8

CALCULATED-DESIGNED BY: MOHAMMAD MOHSENZADEH
CHECKED BY: BARKEF KARAPETIAN
REVISED BY
DATE REVISED
FUNCTIONAL SUPERVISOR: REFUGIO DOMINGUEZ
STATE OF CALIFORNIA - DEPARTMENT OF TRANSPORTATION
DESIGN

LAST REVISION | DATE PLOTTED => 01-APR-2014
00-00-00 | TIME PLOTTED => 12:29

BORDER LAST REVISED 7/2/2010
USERNAME => s119140
DGN FILE => 729500ga008.dgn
RELATIVE BORDER SCALE IS IN INCHES 0 1 2 3
UNIT 1819
PROJECT NUMBER & PHASE 07130000081

Dist	COUNTY	ROUTE	POST MILES TOTAL PROJECT	SHEET No.	TOTAL SHEETS
07	LA	10	41.7/48.3	14	131

Karakettian 1-16-14
REGISTERED CIVIL ENGINEER DATE

2-10-14
PLANS APPROVAL DATE

REGISTERED PROFESSIONAL ENGINEER
BARKEF KARAPETIAN
No. C55718
Exp. 12/31/14
CIVIL
STATE OF CALIFORNIA

THE STATE OF CALIFORNIA OR ITS OFFICERS OR AGENTS SHALL NOT BE RESPONSIBLE FOR THE ACCURACY OR COMPLETENESS OF SCANNED COPIES OF THIS PLAN SHEET.

NOTE (THIS SHEET ONLY):

1. FOR ACCURATE RIGHT OF WAY AND ACCESS DATA, CONTACT RIGHT OF WAY ENGINEERING AT THE DISTRICT OFFICE

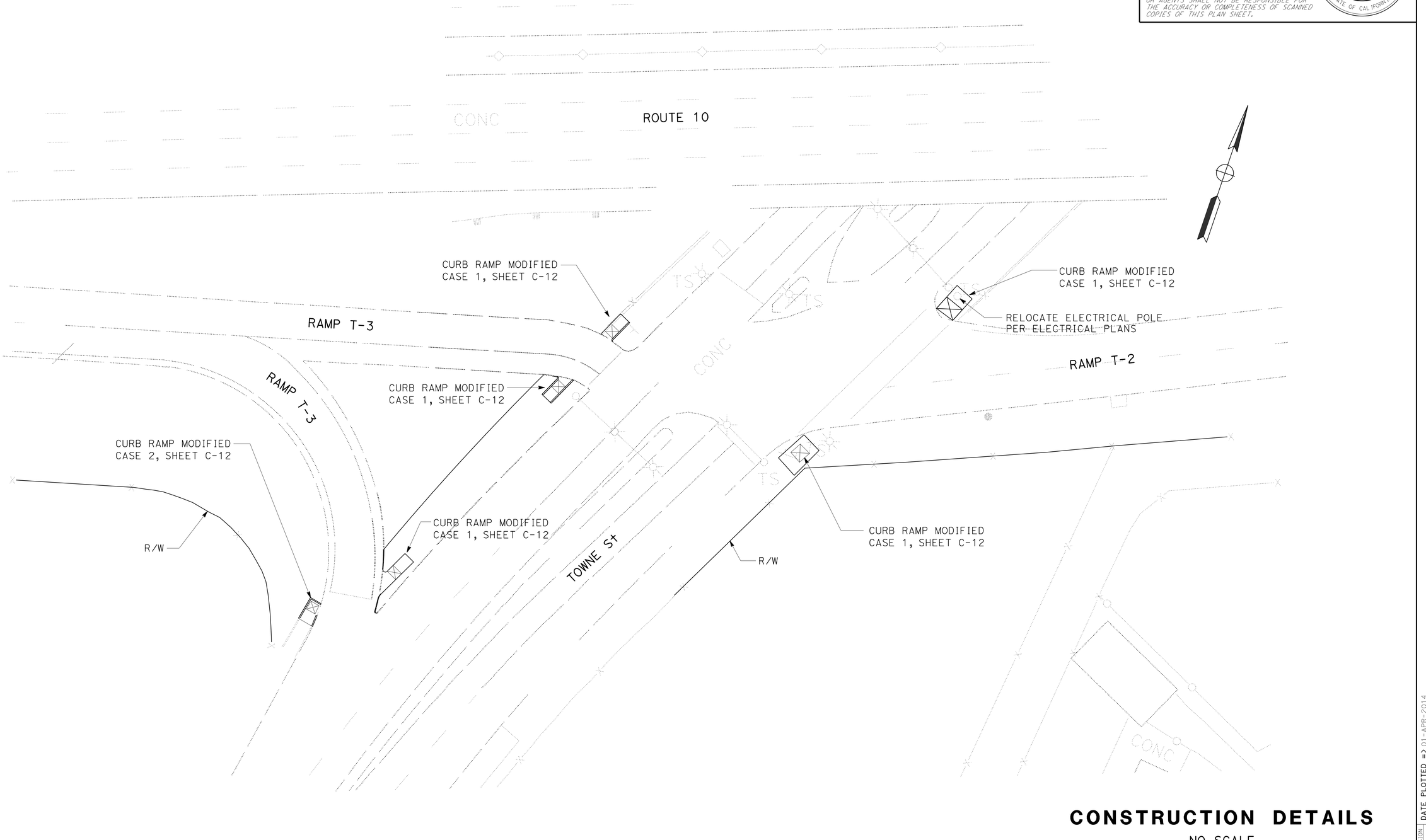

CONSTRUCTION DETAILS

NO SCALE

C-9

STATE OF CALIFORNIA - DEPARTMENT OF TRANSPORTATION
Caltrans
DESIGN

FUNCTIONAL SUPERVISOR: REFUGIO DOMINGUEZ
CALCULATED-DESIGNED BY: MOHAMMAD MOHSENZADEH
CHECKED BY: BARKEF KARAPETIAN
REVISED BY
DATE REVISED

LAST REVISION
DATE PLOTTED => 01-APR-2014
TIME PLOTTED => 12:29
00-00-00

BORDER LAST REVISED 7/2/2010
USERNAME => s119140
DGN FILE => 729500ga009.dgn
RELATIVE BORDER SCALE IS IN INCHES 0 1 2 3
UNIT 1819
PROJECT NUMBER & PHASE 07130000081

Dist	COUNTY	ROUTE	POST MILES TOTAL PROJECT	SHEET No.	TOTAL SHEETS
07	LA	10	41.7/48.3	15	131

Karapetian 1-16-14
REGISTERED CIVIL ENGINEER DATE

2-10-14
PLANS APPROVAL DATE

REGISTERED PROFESSIONAL ENGINEER
BARKEF KARAPETIAN
No. C55718
Exp. 12/31/14
CIVIL
STATE OF CALIFORNIA

THE STATE OF CALIFORNIA OR ITS OFFICERS OR AGENTS SHALL NOT BE RESPONSIBLE FOR THE ACCURACY OR COMPLETENESS OF SCANNED COPIES OF THIS PLAN SHEET.

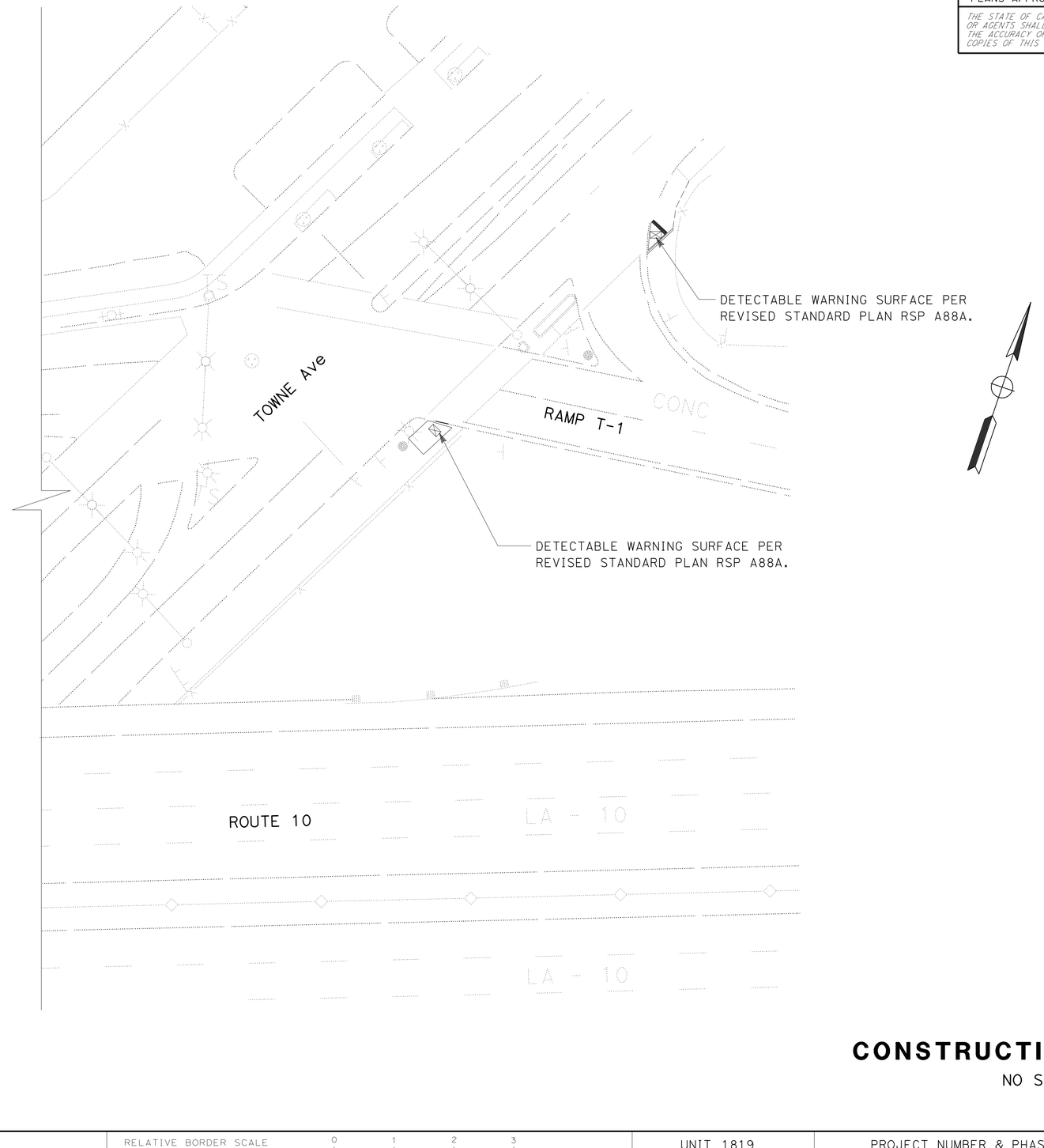

CONSTRUCTION DETAILS

NO SCALE

C-10

REVISED BY | DATE REVISED

CALCULATED-DESIGNED BY: MOHAMMAD MOHSENZADEH
CHECKED BY: BARKEF KARAPETIAN

FUNCTIONAL SUPERVISOR: REFUGIO DOMINGUEZ

STATE OF CALIFORNIA - DEPARTMENT OF TRANSPORTATION
Caltrans
DESIGN

LAST REVISION | DATE PLOTTED => 01-APR-2014
00-00-00 | TIME PLOTTED => 12:29

BORDER LAST REVISED 7/2/2010

USERNAME => s119140
DGN FILE => 729500ga010.dgn

RELATIVE BORDER SCALE IS IN INCHES 0 1 2 3

UNIT 1819

PROJECT NUMBER & PHASE 07130000081

Dist	COUNTY	ROUTE	POST MILES TOTAL PROJECT	SHEET No.	TOTAL SHEETS
07	LA	10	41.7/48.3	16	131

REGISTERED CIVIL ENGINEER — 1-16-14 DATE

2-10-14
PLANS APPROVAL DATE

BARKEF KARAPETIAN
No. C55718
Exp. 12/31/14
CIVIL
REGISTERED PROFESSIONAL ENGINEER
STATE OF CALIFORNIA

THE STATE OF CALIFORNIA OR ITS OFFICERS OR AGENTS SHALL NOT BE RESPONSIBLE FOR THE ACCURACY OR COMPLETENESS OF SCANNED COPIES OF THIS PLAN SHEET.

NOTE (THIS SHEET ONLY):

1. FOR ACCURATE RIGHT OF WAY AND ACCESS DATA, CONTACT RIGHT OF WAY ENGINEERING AT THE DISTRICT OFFICE

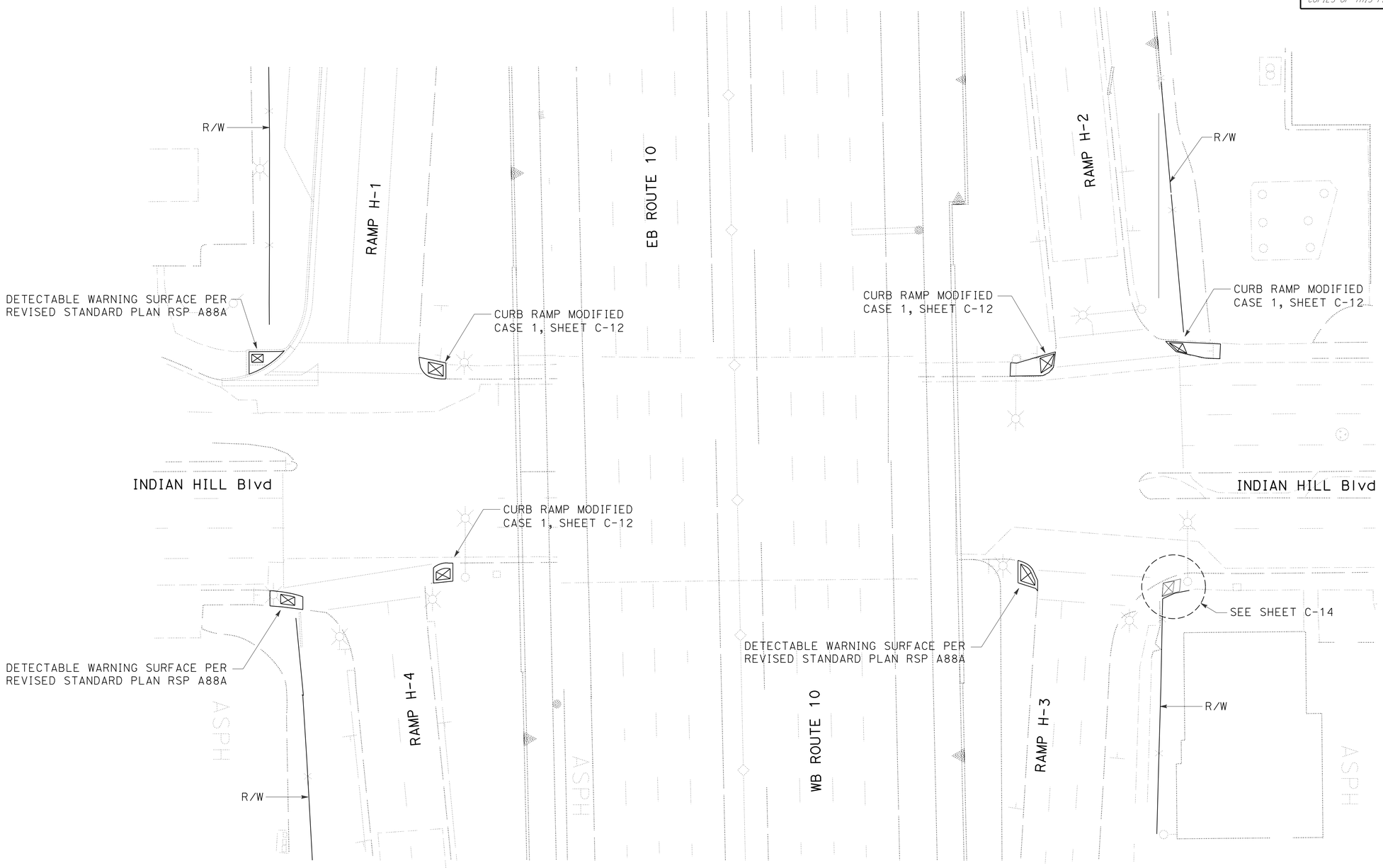

CONSTRUCTION DETAILS

NO SCALE

C-11

REVISED BY | DATE REVISED

CALCULATED-DESIGNED BY: MOHAMMAD MOHSENZADEH
CHECKED BY: BARKEF KARAPETIAN

FUNCTIONAL SUPERVISOR: REFUGIO DOMINGUEZ

STATE OF CALIFORNIA - DEPARTMENT OF TRANSPORTATION
DESIGN

LAST REVISION 00-00-00 | DATE PLOTTED => 01-APR-2014 | TIME PLOTTED => 12:29

BORDER LAST REVISED 7/2/2010 | USERNAME => s119140 | DGN FILE => 729500ga011.dgn | RELATIVE BORDER SCALE IS IN INCHES 0 1 2 3 | UNIT 1819 | PROJECT NUMBER & PHASE 07130000081

Dist	COUNTY	ROUTE	POST MILES TOTAL PROJECT	SHEET No.	TOTAL SHEETS
07	LA	10	41.7/48.3	17	131

Karapetian 1-16-14
REGISTERED CIVIL ENGINEER DATE

2-10-14
PLANS APPROVAL DATE

REGISTERED PROFESSIONAL ENGINEER BARKEF KARAPETIAN No. C55718 Exp. 12/31/14 CIVIL STATE OF CALIFORNIA

THE STATE OF CALIFORNIA OR ITS OFFICERS OR AGENTS SHALL NOT BE RESPONSIBLE FOR THE ACCURACY OR COMPLETENESS OF SCANNED COPIES OF THIS PLAN SHEET.

NOTES (THIS SHEET ONLY):

1. SEE REVISED STANDARD PLAN RSP A88A FOR ADDITIONAL NOTES, INFORMATION & CONDITIONS.
2. DETECTABLE WARNING SURFACE PER REVISED STANDARD PLAN RSP A88A.

CURB HEIGHT	X (Min)
6"	5'-8"
7"	6'-6"
8"	7'-6"
9"	8'-6"
10"	9'-3"

SW SLOPE-UP
(APPROACHING CURB RAMP)

CURB HEIGHT	X (Min)
6"	8'-4"
7"	9'-9"
8"	11'-4"
9"	12'-6"
10"	14'-0"

SW SLOPE-DOWN
(APPROACHING CURB RAMP)

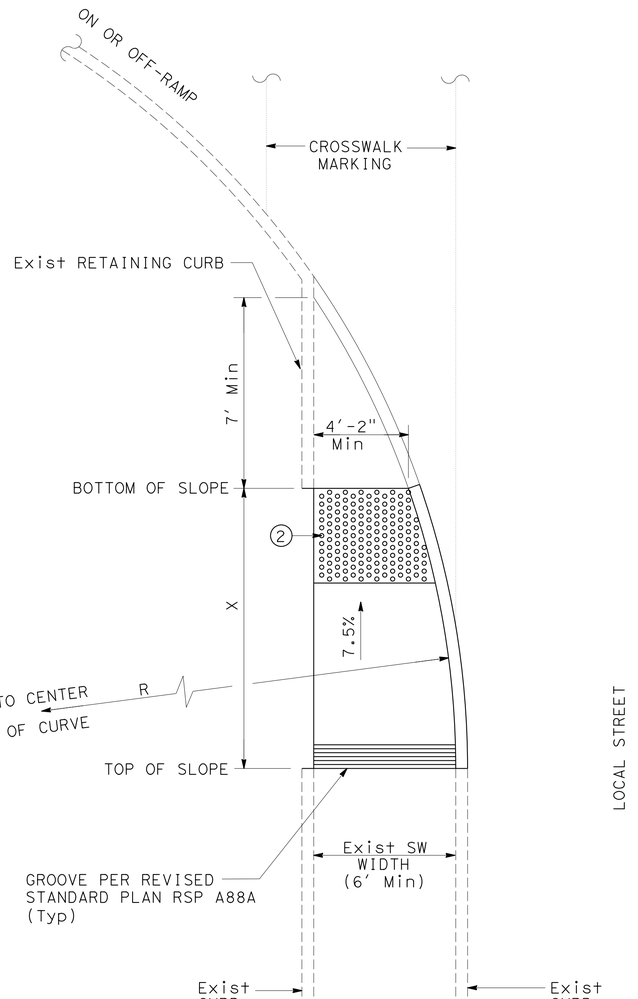

CURB RAMP
MODIFIED CASE 1

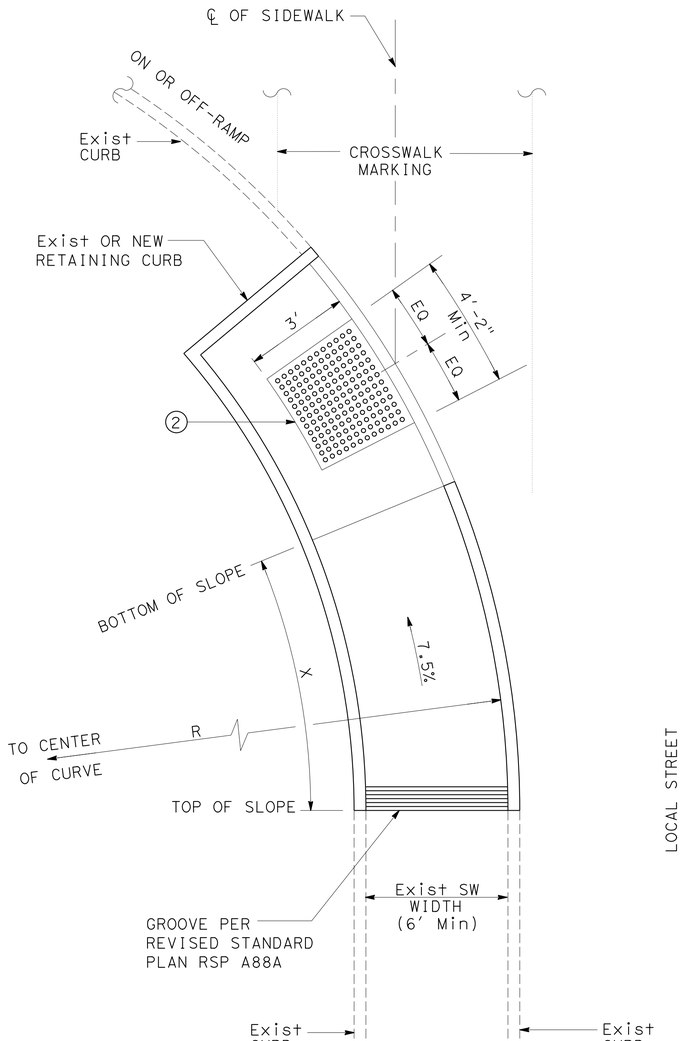

CURB RAMP
MODIFIED CASE 2

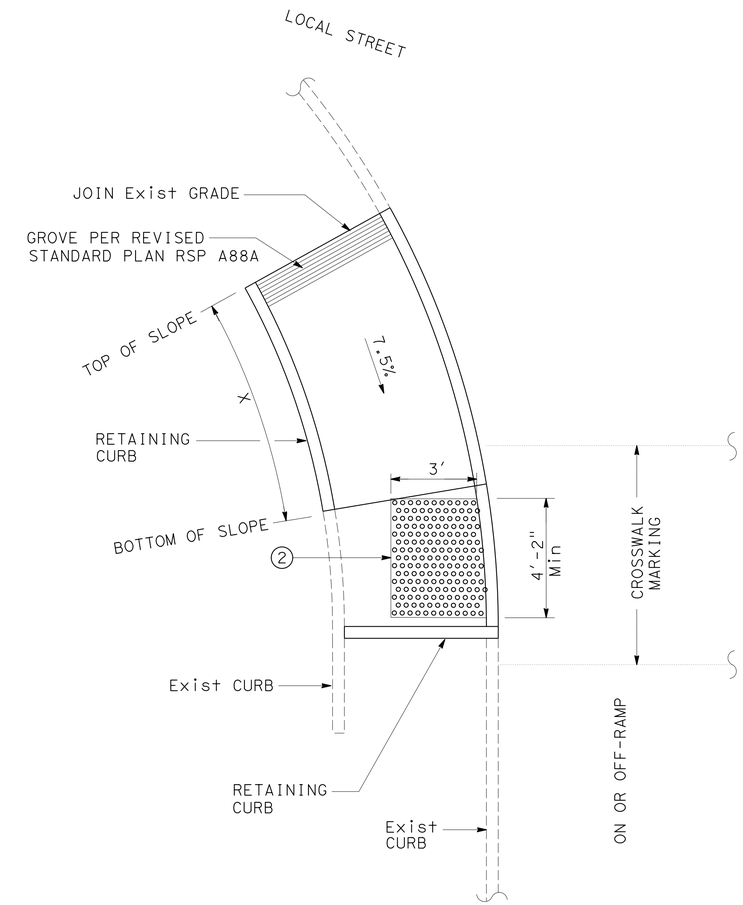

CURB RAMP
MODIFIED CASE 3

CONSTRUCTION DETAILS

NO SCALE

C-12

STATE OF CALIFORNIA - DEPARTMENT OF TRANSPORTATION
Caltrans
DESIGN

FUNCTIONAL SUPERVISOR: REFUGIO DOMINGUEZ
CALCULATED-DESIGNED BY: MOHAMMAD MOHSENZADEH
CHECKED BY: BARKEF KARAPETIAN
REVISED BY
DATE REVISED

LAST REVISION 00-00-00
DATE PLOTTED => 01-APR-2014
TIME PLOTTED => 12:29

Dist	COUNTY	ROUTE	POST MILES TOTAL PROJECT	SHEET No.	TOTAL SHEETS
07	LA	10	41.7/48.3	18	131

REGISTERED CIVIL ENGINEER 1-16-14 DATE

2-10-14
PLANS APPROVAL DATE

REGISTERED PROFESSIONAL ENGINEER BARKEF KARAPETIAN No. C55718 Exp. 12/31/14 CIVIL STATE OF CALIFORNIA

THE STATE OF CALIFORNIA OR ITS OFFICERS OR AGENTS SHALL NOT BE RESPONSIBLE FOR THE ACCURACY OR COMPLETENESS OF SCANNED COPIES OF THIS PLAN SHEET.

NOTES (THIS SHEET ONLY):

1. REMOVE MBGR & CONSTRUCT MGS AT THE SAME LOCATION & LENGTH. SEE SHEETS L-1 AND Q-3 FOR LOCATIONS OF MBGR TO REPLACE.
2. REMOVE CRASH CUSHION & INSTALL NEW CRASH CUSHIONS PER TABLE 1 ON SHEET L-2.

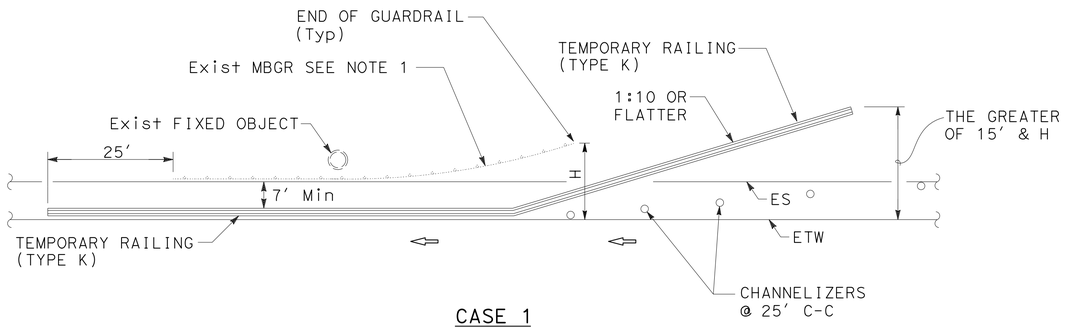

CASE 1

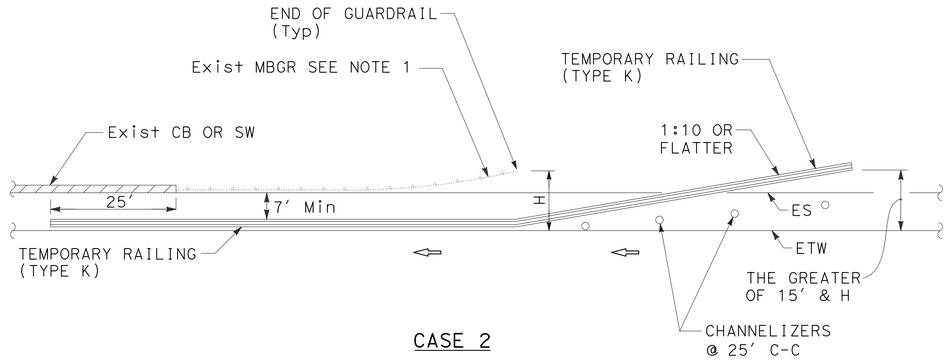

CASE 2

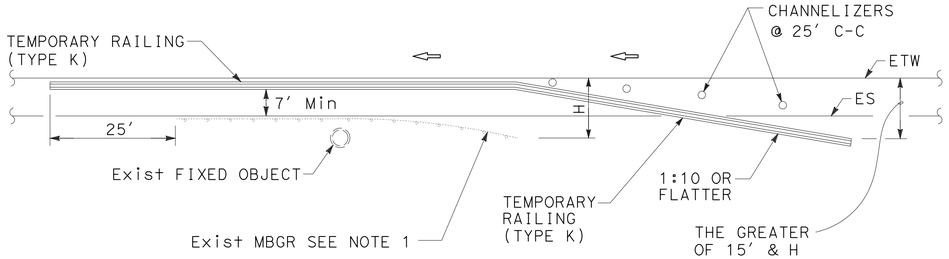

CASE 3

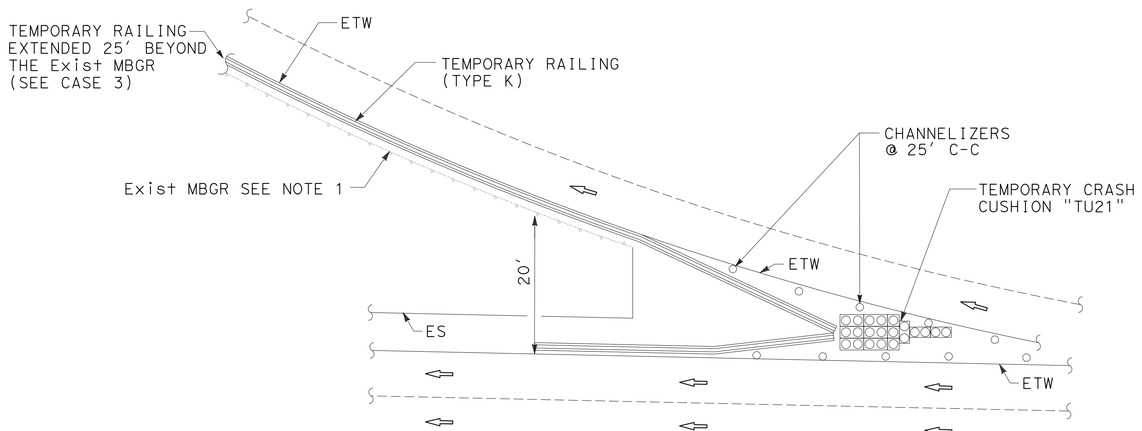

CASE 4

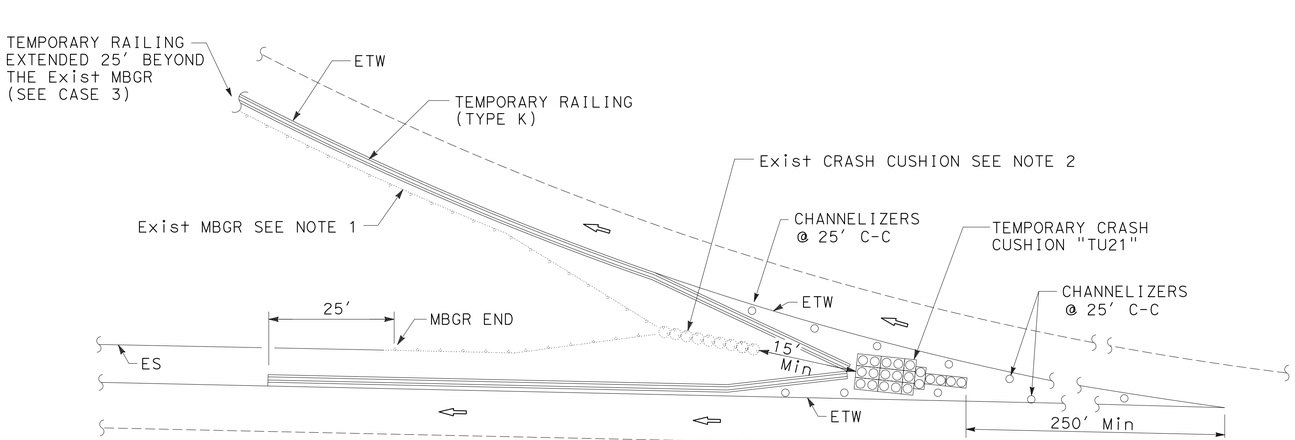

CASE 5

CONSTRUCTION DETAILS

NO SCALE

C-13

STATE OF CALIFORNIA - DEPARTMENT OF TRANSPORTATION
Caltrans DESIGN

FUNCTIONAL SUPERVISOR: REFUGIO DOMINGUEZ
CALCULATED-DESIGNED BY: MOHAMMAD MOHSENZADEH
CHECKED BY: BARKEF KARAPETIAN
REVISED BY
DATE REVISED

LAST REVISION 00-00-00
DATE PLOTTED => 01-APR-2014
TIME PLOTTED => 12:29

Dist	COUNTY	ROUTE	POST MILES TOTAL PROJECT	SHEET No.	TOTAL SHEETS
07	LA	10	41.7/48.3	19	131

Karabetian 1-16-14
REGISTERED CIVIL ENGINEER DATE

2-10-14
PLANS APPROVAL DATE

BARKEF KARAPETIAN No. C55718 Exp. 12/31/14 CIVIL — REGISTERED PROFESSIONAL ENGINEER — STATE OF CALIFORNIA

THE STATE OF CALIFORNIA OR ITS OFFICERS OR AGENTS SHALL NOT BE RESPONSIBLE FOR THE ACCURACY OR COMPLETENESS OF SCANNED COPIES OF THIS PLAN SHEET.

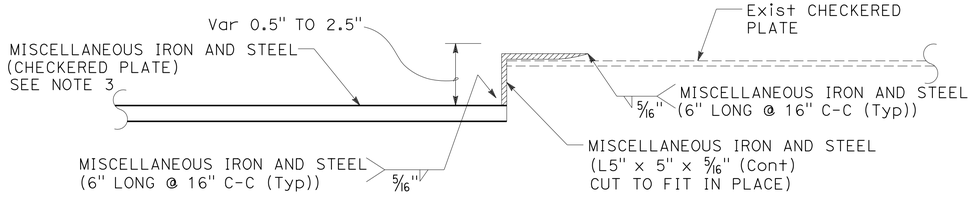

SECTION A

NOTES (THIS SHEET ONLY):

1. DETECTABLE WARNING SURFACE.
2. Conc CHANNEL WALLS MUST BE 6" THICK REINFORCED WITH ONE LAYER OF #4 @ 8" C-C EACH WAY.
3. CHECKERED PLATE, TUBE SECTIONS AND 5" x 5" x 5/16" STEEL ANGLE MUST BE HOT-DIP GALVANIZED.
4. SEE ELECTRICAL PLANS FOR Exist TRAFFIC LIGHT POLE RELOCATION.
5. AREA OF THE CHECKERED PLATE IS 42 SQUARE FEET.

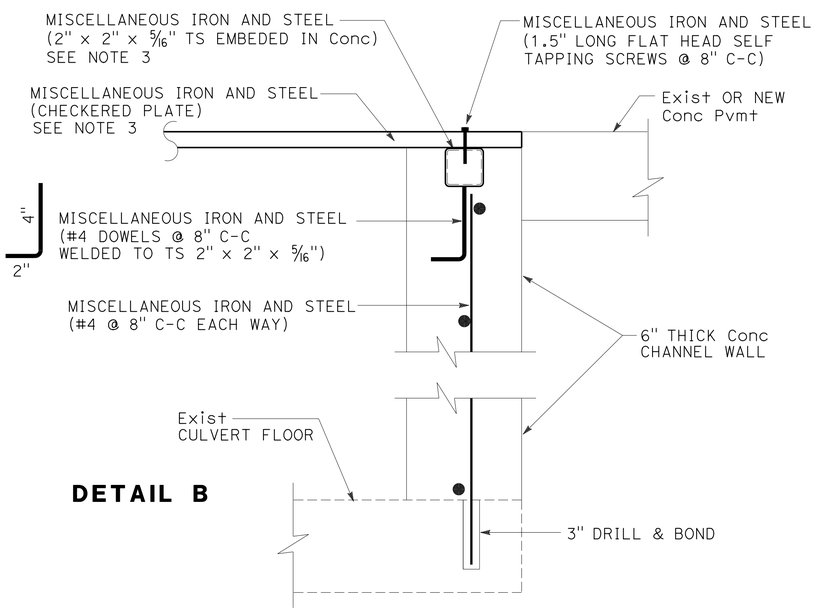

DETAIL B

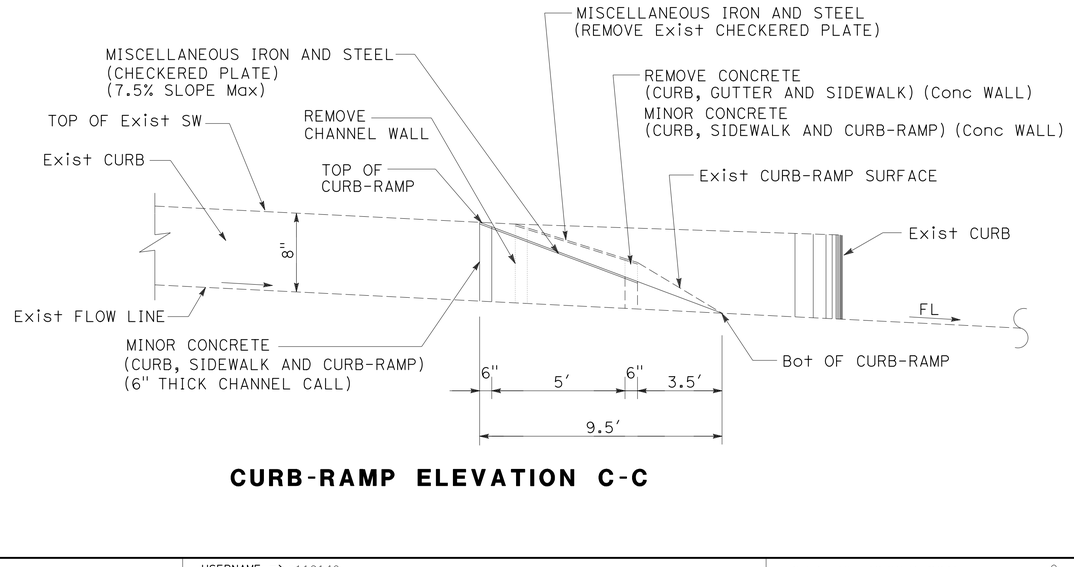

CURB-RAMP ELEVATION C-C

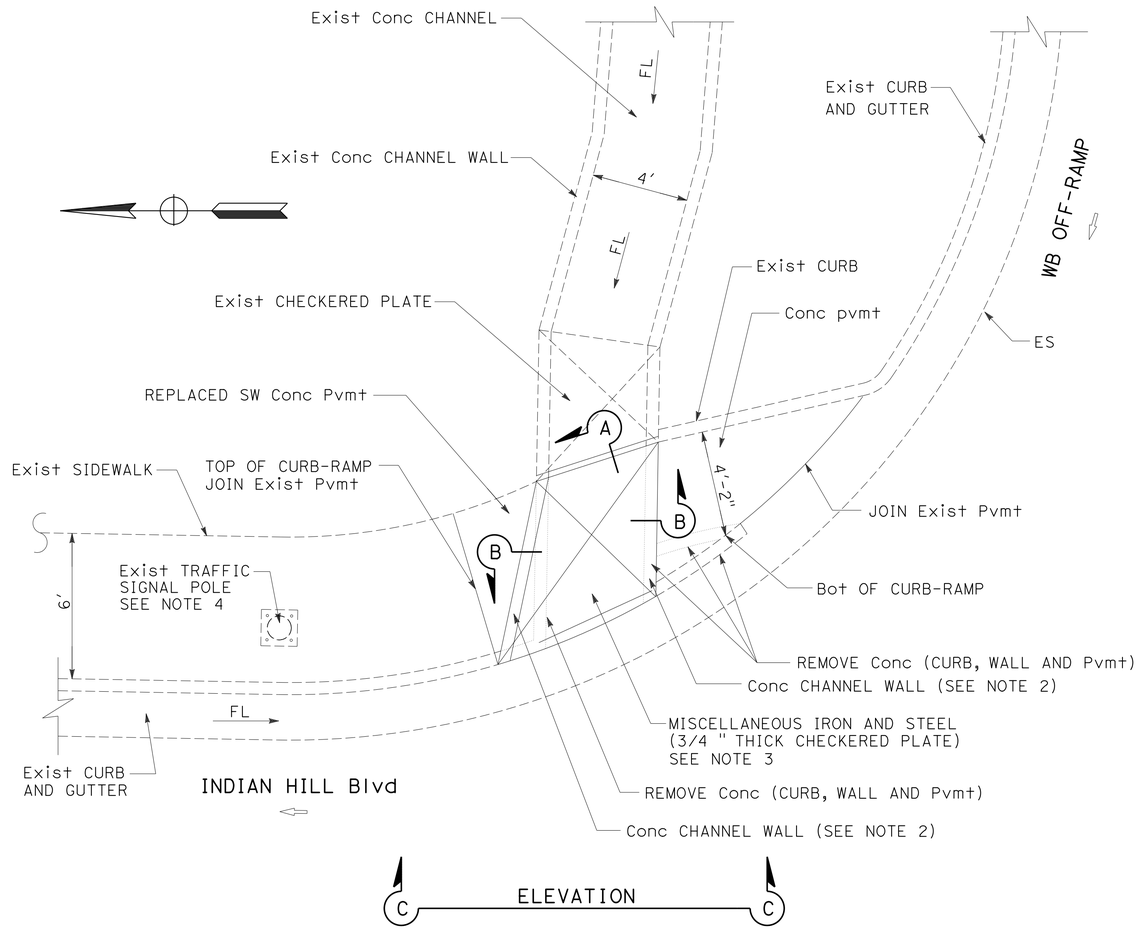

CURB-RAMP PLAN VIEW

CONSTRUCTION DETAILS

NO SCALE

C-14

STATE OF CALIFORNIA - DEPARTMENT OF TRANSPORTATION
DESIGN
FUNCTIONAL SUPERVISOR: REFUGIO DOMINGUEZ
CALCULATED-DESIGNED BY: MOHAMMAD MOHSENZADEH
CHECKED BY: BARKEF KARAPETIAN
REVISED BY | DATE REVISED

LAST REVISION DATE PLOTTED => 01-APR-2014
TIME PLOTTED => 12:29

BORDER LAST REVISED 7/2/2010
USERNAME => s119140
DGN FILE => 729500ga014.dgn
RELATIVE BORDER SCALE IS IN INCHES 0 1 2 3
UNIT 1819
PROJECT NUMBER & PHASE 07130000081

Dist	COUNTY	ROUTE	POST MILES TOTAL PROJECT	SHEET No.	TOTAL SHEETS
07	LA	10	41.7/48.3	20	131

REGISTERED CIVIL ENGINEER — 1-16-14 DATE

PLANS APPROVAL DATE — 2-10-14

REGISTERED PROFESSIONAL ENGINEER — BARKEF KARAPETIAN No. C55718 Exp. 12/31/14 CIVIL — STATE OF CALIFORNIA

THE STATE OF CALIFORNIA OR ITS OFFICERS OR AGENTS SHALL NOT BE RESPONSIBLE FOR THE ACCURACY OR COMPLETENESS OF SCANNED COPIES OF THIS PLAN SHEET.

NOTES:

1. LOCATION OF CONSTRUCTION AREA SIGNS ARE APPROXIMATE. EXACT LOCATIONS WILL BE DETERMINED BY THE ENGINEER.
2. FOR ADDITIONAL CONSTRUCTION AREA SIGNS SEE TRAFFIC HANDLING DETAILS.
3. COVER OR REMOVE CONFLICTING SIGNS.
4. CONSTRUCTION AREA SIGNS IN THE VICINITY OF RAMPS ARE NOT SHOWN ON THIS SHEET FOR CLARITY. USE DETAIL A TO INSTALL THE SIGNS AT RAMPS.

LEGEND:

SINGLE POST CAS

DOUBLE POST CAS

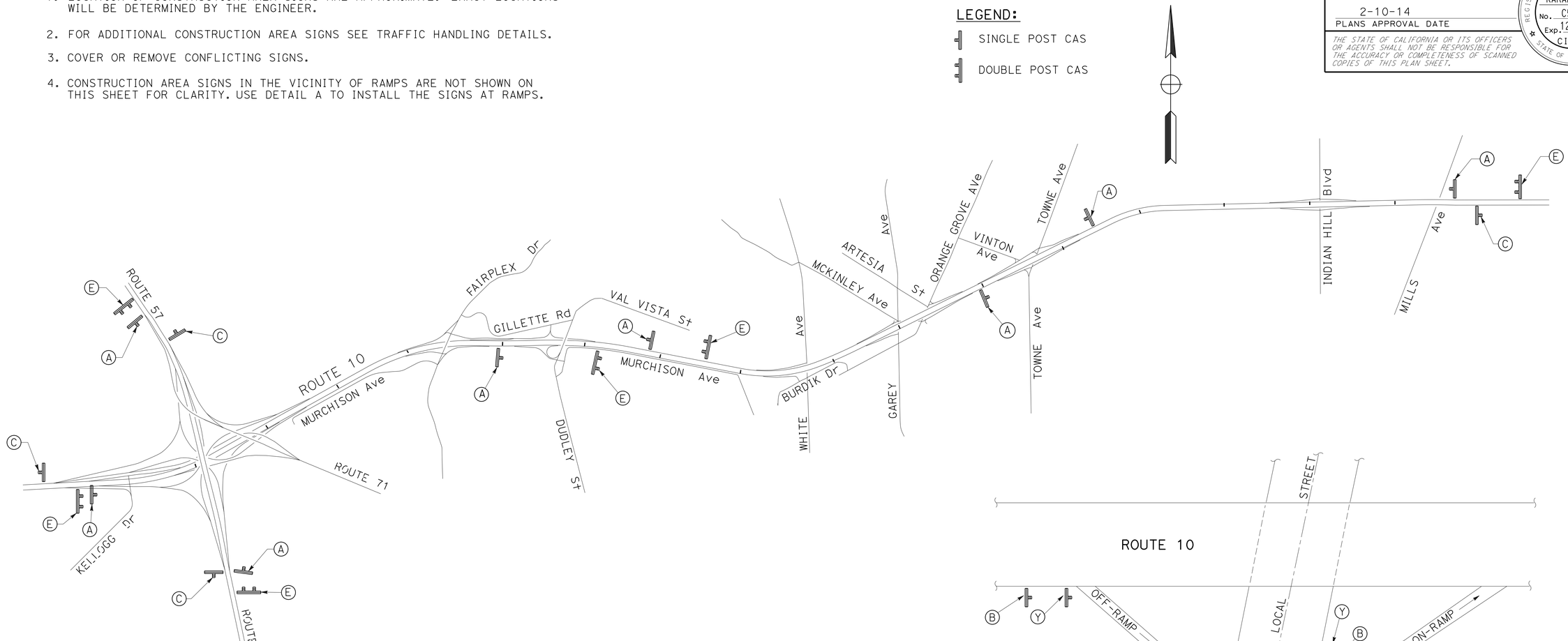

DETAIL A

TYPICAL CONSTRUCTION AREA SIGNS AT ON & OFF-RAMPS

STATIONARY MOUNTED CONSTRUCTION AREA SIGNS

SIGN No. (X)	SIGN CODE		PANEL SIZE	SIGN MESSAGE	NUMBER OF POSTS AND SIZE	NUMBER OF SIGNS	REMARKS
	FEDERAL	CALIFORNIA					
A	W20-1		48" x 48"	ROAD WORK AHEAD	1 - 6" x 6"	8	USED ON FREEWAY & CONNECTORS
B		C23(CA)	36" x 36"	RAMP WORK AHEAD	1 - 4" x 6"	33	USED ON LOCAL STREETS
C	G20-2		48" x 24"	END ROAD WORK	1 - 4" x 6"	4	USED ON FREEWAY & CONNECTORS
D	G20-2		36" x 18"	END ROAD WORK	1 - 4" x 6"	22	USED ON LOCAL STREETS
E		C40(CA)	144" x 60"	TRAFFIC FINES DOUBLED IN CONSTRUCTION ZONES	2 - 6" x 8"	6	
Y		SCG-3(CA)	48" x 48"	RAMP CLOSED		33	

APPROVED FOR CONSTRUCTION AREA SIGN WORK ONLY

CONSTRUCTION AREA SIGNS

NO SCALE

CS-1

STATE OF CALIFORNIA - DEPARTMENT OF TRANSPORTATION — DESIGN

FUNCTIONAL SUPERVISOR: REFUGIO DOMINGUEZ

CALCULATED-DESIGNED BY: RICHARD DOUGHERTY

CHECKED BY: BARKEF KARAPETIAN

REVISED BY | DATE REVISED

LAST REVISION — DATE PLOTTED => 01-APR-2014 — TIME PLOTTED => 12:29 — 00-00-00

BORDER LAST REVISED 7/2/2010

USERNAME => s119140
DGN FILE => 7295001a001.dgn

RELATIVE BORDER SCALE IS IN INCHES 0 1 2 3

UNIT 1819

PROJECT NUMBER & PHASE 07130000081

Dist	COUNTY	ROUTE	POST MILES TOTAL PROJECT	SHEET No.	TOTAL SHEETS
07	LA	10	41.7/48.3	21	131

REGISTERED CIVIL ENGINEER — 9-4-13 DATE

PLANS APPROVAL DATE — 2-10-14

REGISTERED PROFESSIONAL ENGINEER — BENJAMIN RAMOS — No. C 61340 — Exp. 6-30-15 — CIVIL — STATE OF CALIFORNIA

THE STATE OF CALIFORNIA OR ITS OFFICERS OR AGENTS SHALL NOT BE RESPONSIBLE FOR THE ACCURACY OR COMPLETENESS OF SCANNED COPIES OF THIS PLAN SHEET.

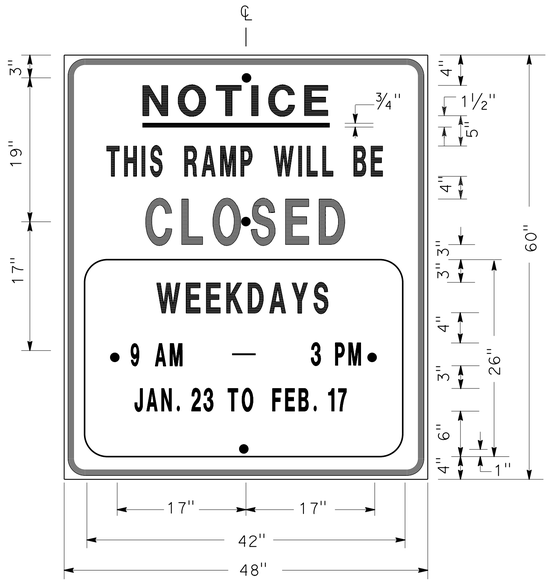

SIGN SP-1

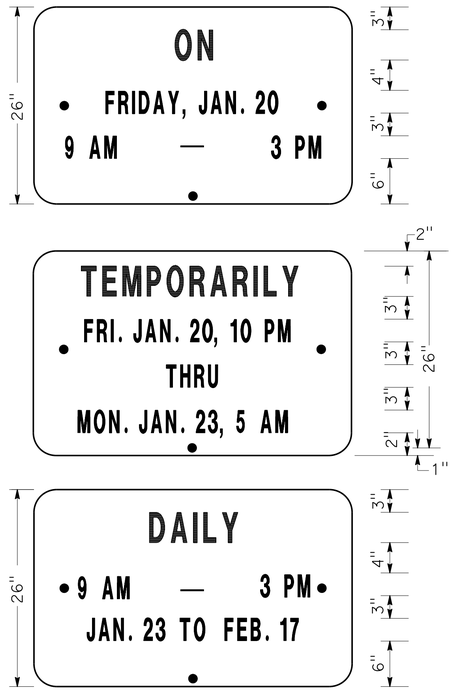

ALTERNATE OVERLAY PANELS (TYPICAL)

NOTES: (SIGN SP-1)

1. LETTERS AND BORDER SHALL BE BLACK ON REFLECTORIZED ORANGE BACKGROUND.
2. BOLT HOLES SHALL BE 3/8" DIAMETER.
3. BASE MATERIAL SHALL BE ALUMINUM (MINIMUM 0.06").
4. SIGNS SHALL BE MOUNTED WITH BOTTOMS OF SIGNS A MINIMUM OF 7' ABOVE GROUND.

SIZE	BORDER WIDTH	MARGIN WIDTH	LETTER SIZE					CORNER RADIUS
			LINE 1	LINE 2*	LINE 3	LINE 4	LINE 5, 6, & 7*	
48"x60"	1 1/4"	3/4"	4E	4D	6E	4D		3"
42"x26"	OVERLAY						3D	1 1/2"
* CONDENSED SPACING IF NECESSARY								

SPECIAL ADVANCE NOTICE PUBLICITY SIGN

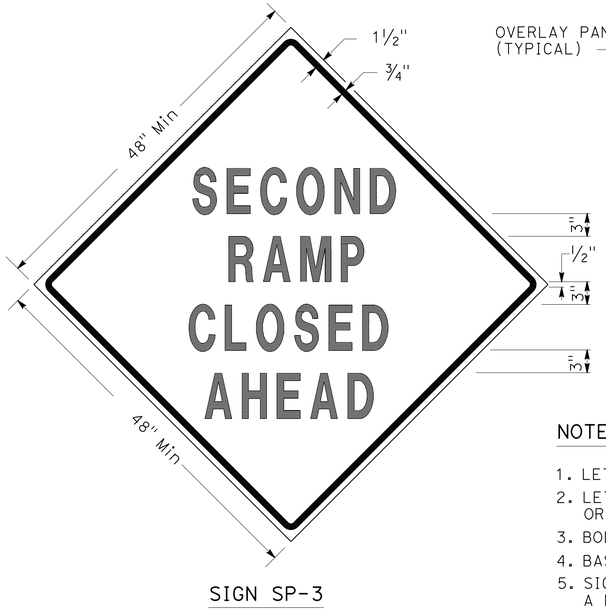

SIGN SP-3

SIGN SP-5

NOTES: (SIGNS SP-3 & SP-5)

1. LETTERS - 6" SERIES D.
2. LETTERS AND BORDER SHALL BE BLACK ON REFLECTORIZED ORANGE BACKGROUND.
3. BOLT HOLES SHALL BE 3/8" DIAMETER.
4. BASE MATERIAL SHALL BE ALUMINUM (MINIMUM 0.06").
5. SIGNS SHALL BE MOUNTED WITH BOTTOMS OF SIGNS A MINIMUM OF 7' ABOVE GROUND.
6. SIGN SP-5 SHALL BE USED IF THE OFF-RAMP TO BE CLOSED FOLLOWS A FREEWAY OFF-CONNECTOR.

SPECIAL SIGNS FOR EXIT RAMP CLOSURES

SIGN SP-4

NOTES: (SIGN SP-4)

1. LETTERS - 6" SERIES C.
2. LETTERS AND BORDER SHALL BE BLACK ON REFLECTORIZED WHITE BACKGROUND.
3. BOLT HOLES SHALL BE 3/8" DIAMETER.
4. BASE MATERIAL SHALL BE ALUMINUM (MINIMUM 0.06").
5. SIGNS SHALL BE PLACED AT RAMP ENTRANCES IN addition TO SIGNS POSTED IN ACCORDANCE WITH REVISED STANDARD PLAN RSP T14.

SPECIAL SIGN FOR ENTRANCE RAMP CLOSURES

TRAFFIC HANDLING DETAILS
TRAFFIC CONTROL SYSTEM FOR RAMP CLOSURES, DETOUR SIGNS, AND MISCELLANEOUS DETAILS
SHEET 1 OF 2

NO SCALE

THD-1

CALCULATED-DESIGNED BY	CHECKED BY	REVISED BY	DATE REVISED	FUNCTIONAL SUPERVISOR	STATE OF CALIFORNIA - DEPARTMENT OF TRANSPORTATION
ALBERT K YU	JOCELYN C CHIANG	JC	3/12	MARTIN OREGEL	DTM

LAST REVISION DATE PLOTTED => 01-APR-2014
00-00-00 TIME PLOTTED => 12:30

BORDER LAST REVISED 7/2/2010 | USERNAME => s119140 | DGN FILE => 729500me001.dgn | RELATIVE BORDER SCALE IS IN INCHES 0 1 2 3 | UNIT 1887 | PROJECT NUMBER & PHASE 07130000081

Dist	COUNTY	ROUTE	POST MILES TOTAL PROJECT	SHEET No.	TOTAL SHEETS
07	LA	10	41.7/48.3	22	131

REGISTERED CIVIL ENGINEER — 9-4-13 DATE

2-10-14
PLANS APPROVAL DATE

REGISTERED PROFESSIONAL ENGINEER
BENJAMIN RAMOS
No. C 61340
Exp. 6-30-15
CIVIL
STATE OF CALIFORNIA

THE STATE OF CALIFORNIA OR ITS OFFICERS OR AGENTS SHALL NOT BE RESPONSIBLE FOR THE ACCURACY OR COMPLETENESS OF SCANNED COPIES OF THIS PLAN SHEET.

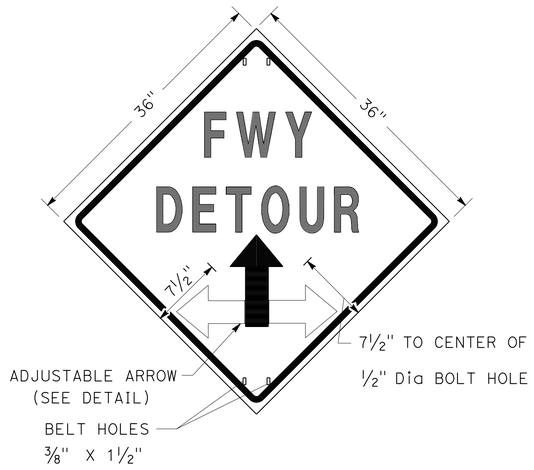

SIGN SP-2

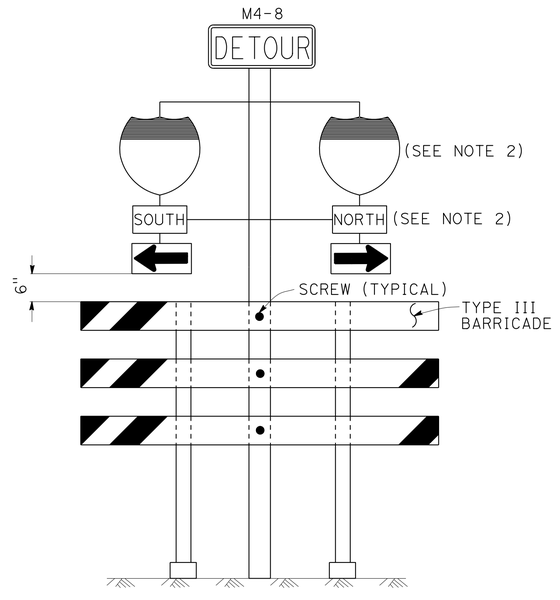

SIGN SP-6 (SEE NOTE 1)

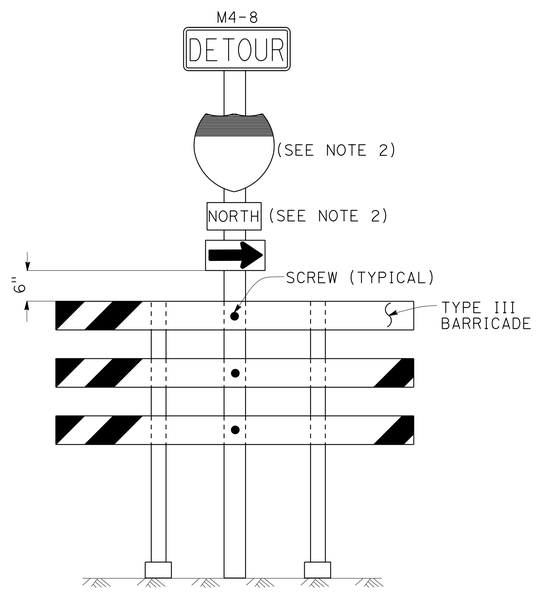

SIGN SP-7 (SEE NOTE 1)

NOTES: SIGN SP-2

1. LETTERS - 6" SERIES E.
2. LETTERS, BORDER AND ARROW - BLACK ON RETROREFLECTORIZED ORANGE BACKGROUND.
3. BASE MATERIAL FOR SIGNS AND ARROWS SHALL BE ALUMINUM (MINIMUM 0.06").
4. BELTS (LUGGAGE STRAPS) SHALL BE 1" WIDE BY 48" LONG, MADE OF COTTON OR POLYPROPYLENE WEB MATERIAL.
5. SIGNS SHALL BE MOUNTED WITH BOTTOMS OF SIGNS A MINIMUM OF 7' ABOVE GROUND EXCEPT AS OTHERWISE SHOWN ON OTHER TRAFFIC HANDLING DETAILS PLANS.

NOTES: SIGNS SP-6 & SP-7

1. IN LIEU OF PLACING SIGNS ON TYPE III BARRICADES, SIGNS, INCLUDING POSTS, MAY BE PLACED INTO THE GROUND OR FASTENED ONTO ELECTROLIERS.
2. USE APPROPRIATE ROUTE MARKER [G26-2(CA), G27-2(CA), G28-2(CA)] AND CARDINAL DIRECTION [NORTH (M3-1), SOUTH (M3-3), EAST (M3-2), WEST (M3-4)].

SPECIAL PORTABLE FREEWAY DETOUR SIGNS

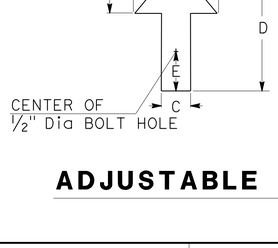

DIMENSIONS				
A	B	C	D	E
6"	3"	2"	8"	1"

ADJUSTABLE ARROW DETAIL

ABBREVIATION

(CA) CALIFORNIA CODE

TRAFFIC HANDLING DETAILS

TRAFFIC CONTROL SYSTEM FOR RAMP CLOSURES, DETOUR SIGNS, AND MISCELLANEOUS DETAILS

SHEET 2 OF 2

NO SCALE

THD-2

STATE OF CALIFORNIA - DEPARTMENT OF TRANSPORTATION
DTM
Caltrans®

FUNCTIONAL SUPERVISOR: MARTIN OREGEL

CALCULATED-DESIGNED BY: ALBERT K YU
CHECKED BY: JOCELYN C CHIANG

REVISED BY: JC
DATE REVISED: 3/12

LAST REVISION: DATE PLOTTED => 01-APR-2014
00-00-00 TIME PLOTTED => 12:30

BORDER LAST REVISED 7/2/2010

USERNAME => s119140
DGN FILE => 729500me002.dgn

RELATIVE BORDER SCALE IS IN INCHES 0 1 2 3

UNIT 1887

PROJECT NUMBER & PHASE 07130000081

Dist	COUNTY	ROUTE	POST MILES TOTAL PROJECT	SHEET No.	TOTAL SHEETS
07	LA	10	41.7/48.3	23	131

REGISTERED CIVIL ENGINEER — 9-4-13 DATE

PLANS APPROVAL DATE — 2-10-14

REGISTERED PROFESSIONAL ENGINEER — BENJAMIN RAMOS — No. C 61340 — Exp. 6-30-15 — CIVIL — STATE OF CALIFORNIA

THE STATE OF CALIFORNIA OR ITS OFFICERS OR AGENTS SHALL NOT BE RESPONSIBLE FOR THE ACCURACY OR COMPLETENESS OF SCANNED COPIES OF THIS PLAN SHEET.

LEGEND

- SIGN SP-2
- AND/OR — DESIGNATED DETOUR ROUTE
- DETOUR DIRECTION
- CONTROLLED INTERSECTION

NOTES:

1. SP-2 SIGNS MAY BE STRAPPED ON EXISTING ELECTROLIER, SIGNAL POST OR SIGN POST.
2. SP-2 SIGNS SHALL NOT BE INSTALLED ON BARRICADES EXCEPT AS OTHERWISE SHOWN.
3. SIGN LOCATIONS ARE APPROXIMATE. EXACT LOCATIONS WILL BE DETERMINED BY THE ENGINEER.
4. SP-2 SIGNS SHALL BE POSTED AT EACH CONTROLLED INTERSECTION (EXCEPT AT COMMERCIAL PROPERTY, RESIDENTIAL COMPLEX OR T-INTERSECTION FROM ONE-WAY STREET) ALONG THE DESIGNATED DETOUR ROUTE.
5. UNLESS OTHERWISE SHOWN ON OTHER THD PLANS, WHEN CONTROLLED INTERSECTIONS ALONG THE DESIGNATED DETOUR ROUTE ARE CLOSELY SPACED, PLACE SP-2 SIGNS AT CONTROLLED INTERSECTIONS AT A DISTANCE NOT TO EXCEED 1/4 MILE FROM THE PRECEDING DETOUR SIGN.
6. EXCEPT AS OTHERWISE SHOWN ON OTHER PLANS OR SPECIFIED IN THE SPECIAL PROVISIONS, SP-2 SIGNS SHALL BE PLACED AS SHOWN ON THIS PLAN.

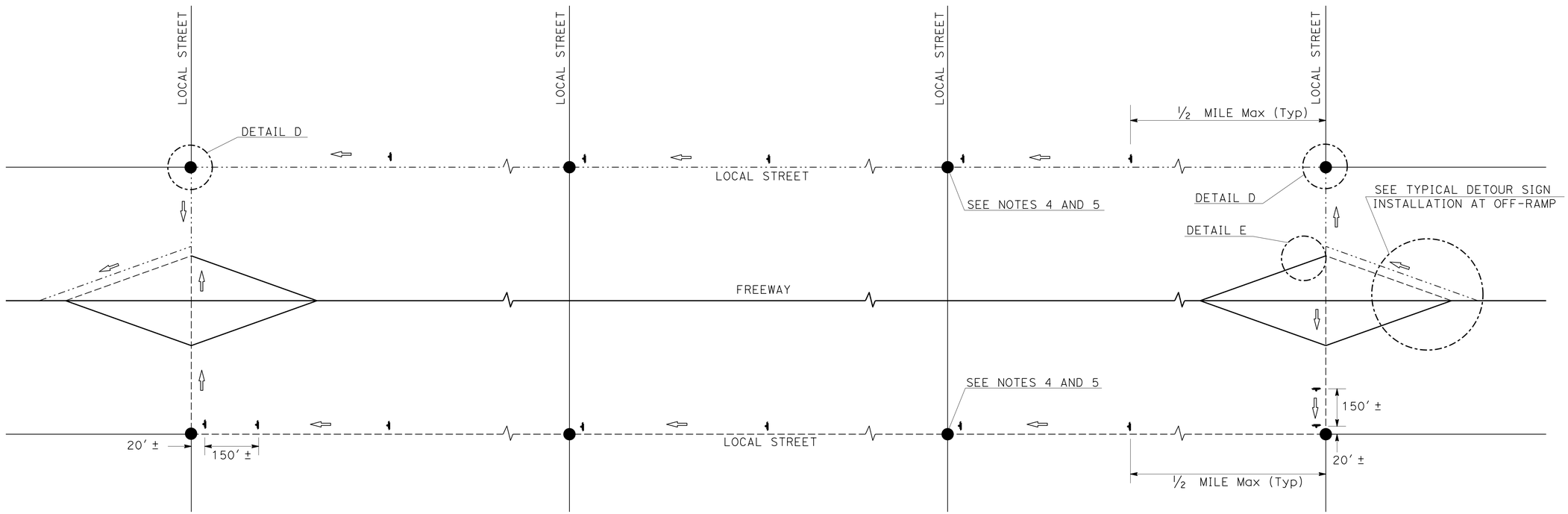

TYPICAL DETOUR SIGN INSTALLATION ALONG DESIGNATED DETOUR ROUTE

TRAFFIC HANDLING DETAILS

TRAFFIC CONTROL SYSTEM FOR DETOUR SIGN INSTALLATION ALONG DESIGNATED DETOUR ROUTE SHEET 1 OF 3

NO SCALE

THD-3

CALCULATED-DESIGNED BY: ALBERT K YU
CHECKED BY: JOCELYN C CHIANG
REVISED BY / DATE REVISED: JC / 3/12
FUNCTIONAL SUPERVISOR: MARTIN OREGEL
STATE OF CALIFORNIA - DEPARTMENT OF TRANSPORTATION — DTM — Caltrans

LAST REVISION: 00-00-00
DATE PLOTTED => 01-APR-2014
TIME PLOTTED => 12:30

Dist	COUNTY	ROUTE	POST MILES TOTAL PROJECT	SHEET No.	TOTAL SHEETS
07	LA	10	41.7/48.3	24	131

REGISTERED CIVIL ENGINEER — 9-4-13 DATE

BENJAMIN RAMOS No. C 61340 Exp. 6-30-15 CIVIL — REGISTERED PROFESSIONAL ENGINEER — STATE OF CALIFORNIA

2-10-14
PLANS APPROVAL DATE

THE STATE OF CALIFORNIA OR ITS OFFICERS OR AGENTS SHALL NOT BE RESPONSIBLE FOR THE ACCURACY OR COMPLETENESS OF SCANNED COPIES OF THIS PLAN SHEET.

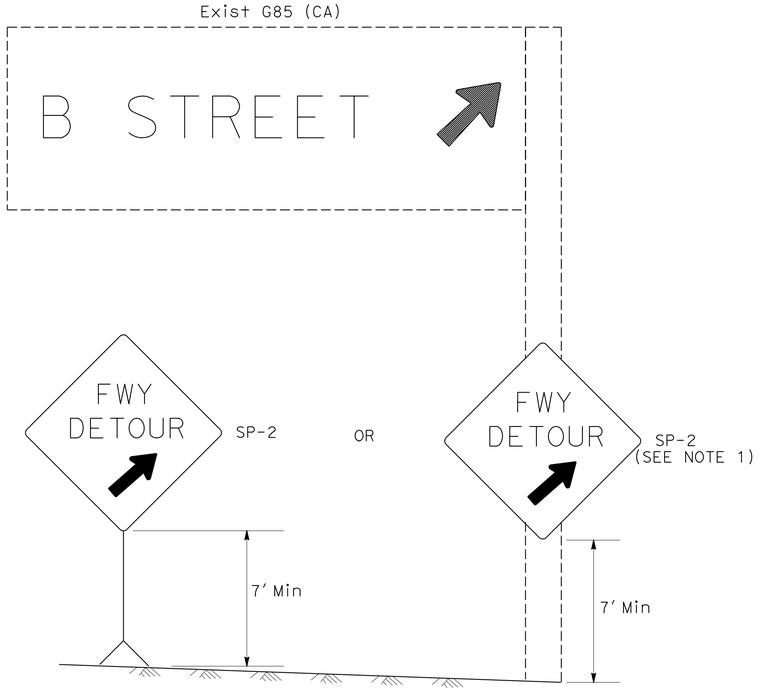

DETAIL A (SEE NOTE 3)

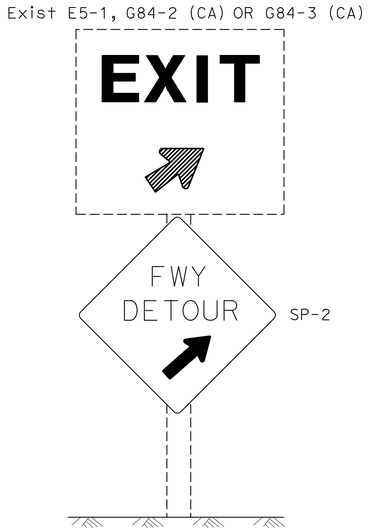

DETAIL B (SEE NOTE 3)

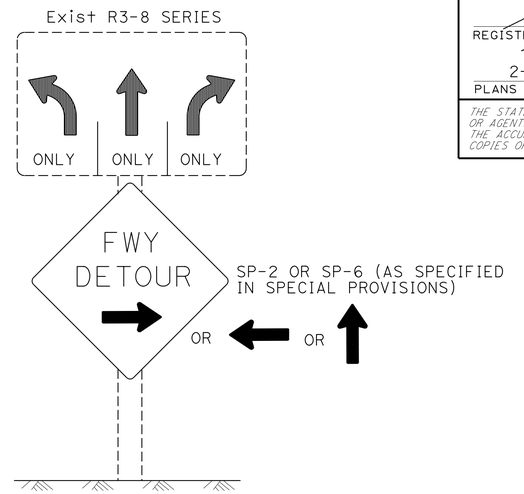

DETAIL C (SEE NOTES 4, 5, AND 6)

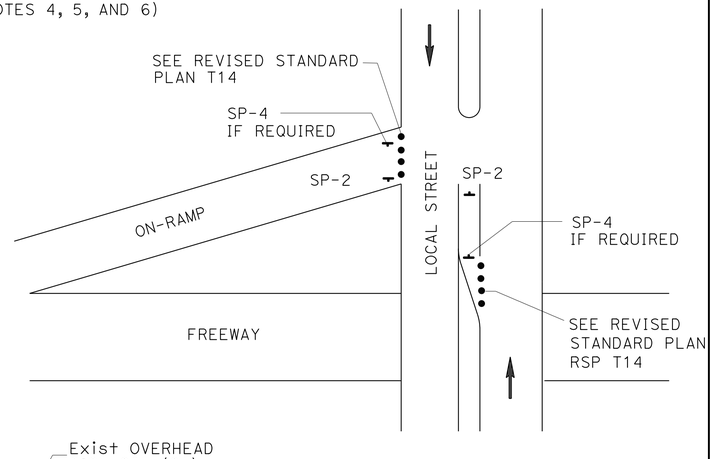

DETAIL E

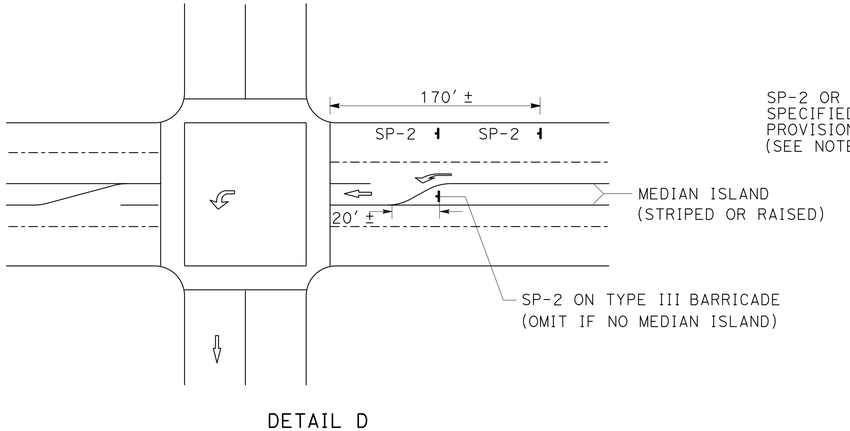

DETAIL D

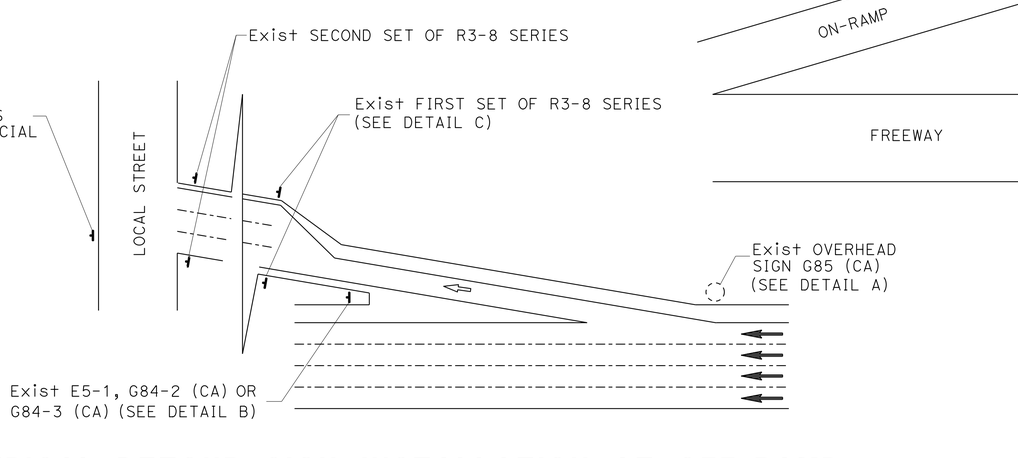

TYPICAL DETOUR SIGN INSTALLATION AT OFF-RAMP

LEGEND

- CONE
- PORTABLE SIGN
- DIRECTION OF TRAVEL
- DETOUR DIRECTION
- EXISTING OVERHEAD SIGN

NOTES: SIGN SP-2

1. SP-2 SIGNS MAY BE STRAPPED ON EXISTING ELECTROLIER, SIGNAL POST OR SIGN POST.
2. SP-2 SIGNS SHALL NOT BE INSTALLED ON BARRICADES EXCEPT AS OTHERWISE SHOWN.
3. OMIT DETAILS A AND B FOR FULL FREEWAY CLOSURES.
4. SEE TRAFFIC HANDLING DETAILS-TRAFFIC CONTROL SYSTEM FOR RAMP CLOSURES, DETOUR SIGNS, AND MISCELLANEOUS DETAILS PLAN SHEET 2 OF 2 FOR SP-6 SIGN DETAILS.
5. IF R3-8 SERIES SIGNS ARE NOT PRESENT AT THE OFF-RAMP, SP-2 OR SP-6 SIGNS SHALL BE FASTENED ONTO EXISTING ELECTROLIER, SIGNAL POST OR SIGN POST.
6. EXCEPT FOR DETAILS A & B, OMIT SP-2 SIGNS IF RAMP HAS MANDATORY SINGLE MOVE.

SIGN CODE LEGEND

XXYY-Y: FEDERAL SIGN CODE PER MANUAL ON UNIFORM TRAFFIC CONTROL DEVICES (MUTCD)

XXYY-Y (CA): CALIFORNIA SIGN CODE PER CALIFORNIA MUTCD

TRAFFIC HANDLING DETAILS
TRAFFIC CONTROL SYSTEM FOR DETOUR SIGN INSTALLATION ALONG DESIGNATED DETOUR ROUTE
SHEET 2 OF 3

NO SCALE

THD-4

CALCULATED-DESIGNED BY	CHECKED BY	REVISED BY	DATE REVISED
ALBERT K YU	JOCELYN C CHIANG	JC	3/12

FUNCTIONAL SUPERVISOR: MARTIN OREGEL

STATE OF CALIFORNIA - DEPARTMENT OF TRANSPORTATION — DTM — Caltrans®

LAST REVISION: DATE PLOTTED => 01-APR-2014 TIME PLOTTED => 12:30 — 00-00-00

Dist	COUNTY	ROUTE	POST MILES TOTAL PROJECT	SHEET No.	TOTAL SHEETS
07	LA	10	41.7/48.3	25	131

9-4-13
REGISTERED CIVIL ENGINEER DATE

2-10-14
PLANS APPROVAL DATE

REGISTERED PROFESSIONAL ENGINEER
BENJAMIN RAMOS
No. C 61340
Exp. 6-30-15
CIVIL
STATE OF CALIFORNIA

THE STATE OF CALIFORNIA OR ITS OFFICERS OR AGENTS SHALL NOT BE RESPONSIBLE FOR THE ACCURACY OR COMPLETENESS OF SCANNED COPIES OF THIS PLAN SHEET.

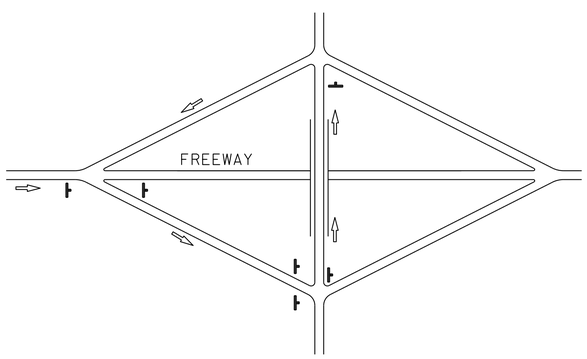

TYPE I

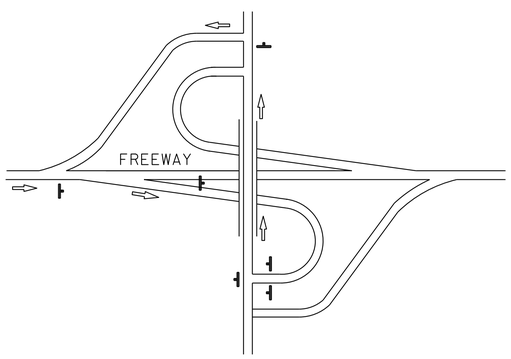

TYPE II

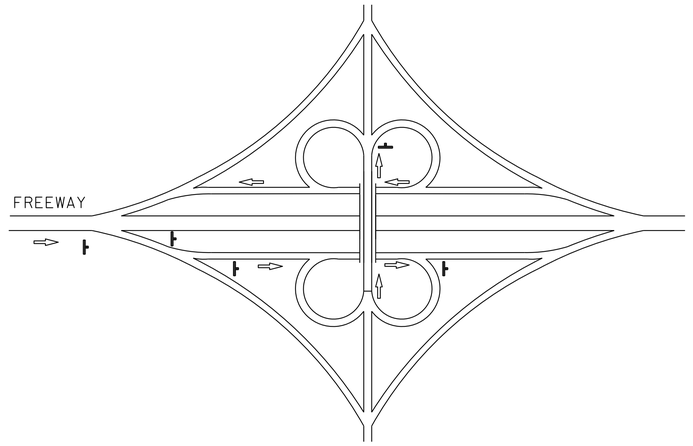

TYPE III

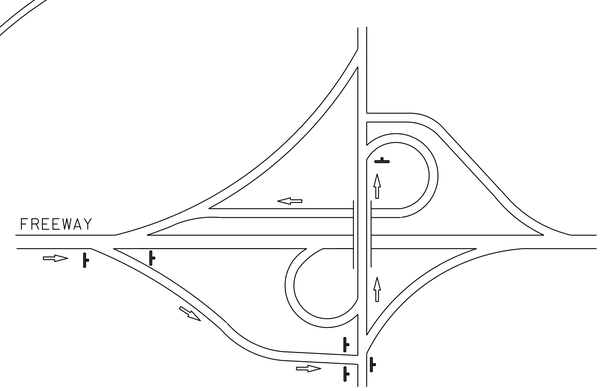

TYPE IV

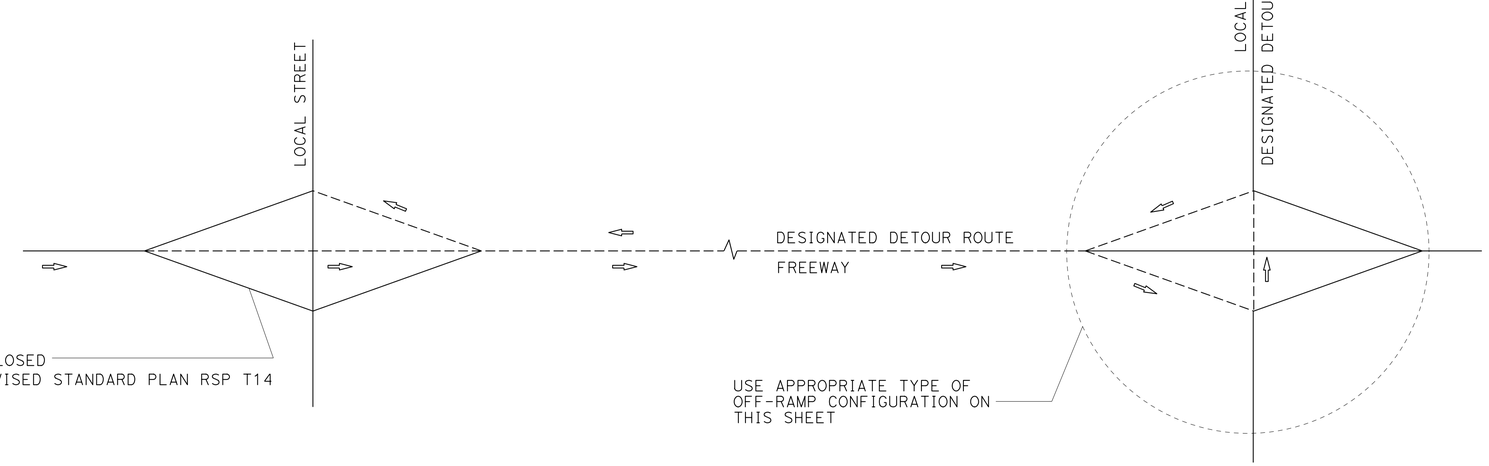

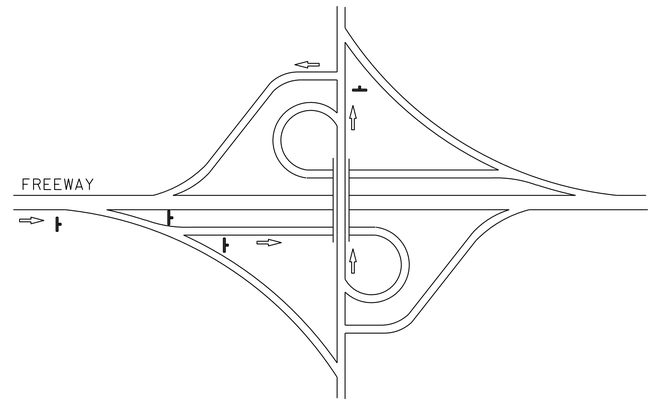

TYPE V

TYPE OF OFF-RAMP CONFIGURATION	MINIMUM No. OF SP-2
TYPE I	6
TYPE II	6
TYPE III	5
TYPE IV	6
TYPE V	4

TYPICAL DETOUR SIGN INSTALLATION FOR OFF-RAMP CLOSURE

NOTES:

SP-2 SIGNS SHALL BE DETERMINED BY THE ENGINEER.

2. SEE TRAFFIC HANDLING DETAILS-TRAFFIC CONTROL SYSTEM FOR RAMP CLOSURES, DETOUR SIGNS, AND MISCELLANEOUS DETAILS PLAN SHEET 2 OF 2 FOR SP-2 SIGN DETAILS.

LEGEND

- SIGN SP-2
- DETOUR DIRECTION
- DESIGNATED DETOUR ROUTE

TRAFFIC HANDLING DETAILS
TRAFFIC CONTROL SYSTEM FOR DETOUR SIGN INSTALLATION ALONG DESIGNATED DETOUR ROUTE
SHEET 3 OF 3

NO SCALE

THD-5

CALCULATED-DESIGNED BY			
CHECKED BY	ALBERT K YU JOCELYN C CHIANG	REVISED BY	JC
		DATE REVISED	3/12

FUNCTIONAL SUPERVISOR: MARTIN OREGEL

STATE OF CALIFORNIA - DEPARTMENT OF TRANSPORTATION
DTM
Caltrans

LAST REVISION | DATE PLOTTED => 01-APR-2014
00-00-00 | TIME PLOTTED => 12:30

BORDER LAST REVISED 7/2/2010 | USERNAME => s119140 | DGN FILE => 729500me005.dgn | RELATIVE BORDER SCALE IS IN INCHES 0 1 2 3 | UNIT 1887 | PROJECT NUMBER & PHASE 07130000081

Dist	COUNTY	ROUTE	POST MILES TOTAL PROJECT	SHEET No.	TOTAL SHEETS
07	LA	10	41.7/48.3	26	131

9-4-13
REGISTERED CIVIL ENGINEER DATE

BENJAMIN RAMOS
No. C 61340
Exp. 6-30-15
CIVIL
REGISTERED PROFESSIONAL ENGINEER
STATE OF CALIFORNIA

2-10-14
PLANS APPROVAL DATE

THE STATE OF CALIFORNIA OR ITS OFFICERS OR AGENTS SHALL NOT BE RESPONSIBLE FOR THE ACCURACY OR COMPLETENESS OF SCANNED COPIES OF THIS PLAN SHEET.

LEGEND

- CONE
- TRAFFIC PLASTIC DRUM
- FLASHING ARROW SIGN
- PORTABLE SIGN
- DIRECTION OF TRAVEL
- PCMS

ABBREVIATIONS

(CA) CALIFORNIA CODE

PCMS PORTABLE CHANGEABLE MESSAGE SIGN

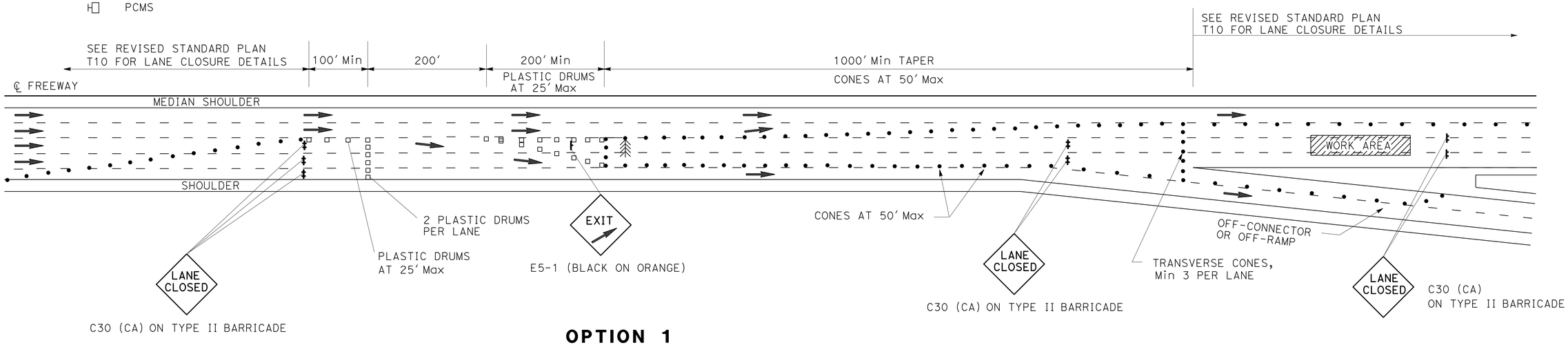

OPTION 1

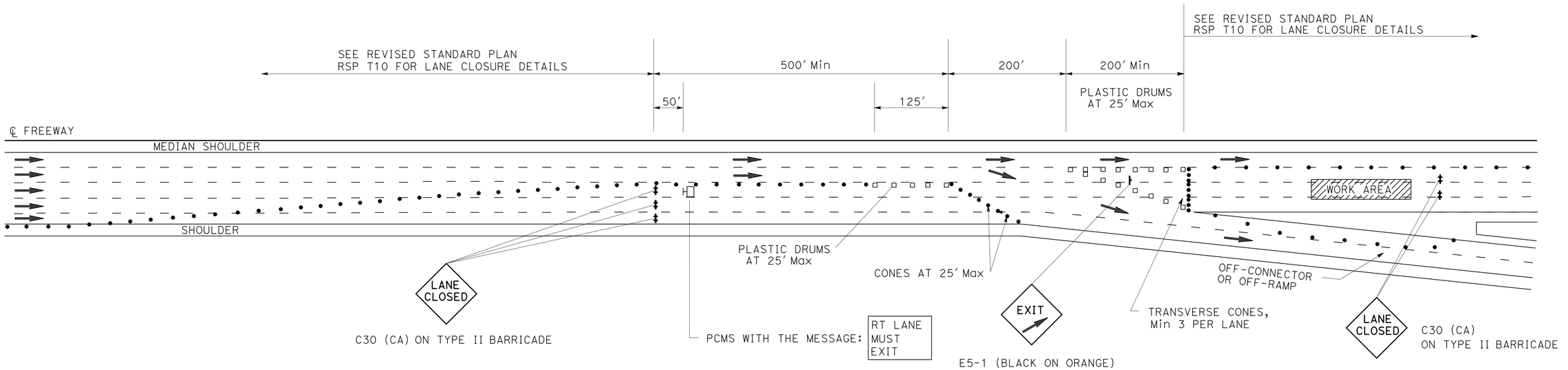

OPTION 2

TRAFFIC HANDLING DETAILS

TRAFFIC CONTROL SYSTEM FOR SLIP-RAMP AT OFF-CONNECTOR OR OFF-RAMP

NO SCALE

THD-6

STATE OF CALIFORNIA - DEPARTMENT OF TRANSPORTATION
DTM
Caltrans

FUNCTIONAL SUPERVISOR: MARTIN OREGEL
CALCULATED-DESIGNED BY: ALBERT K YU
CHECKED BY: JOCELYN C CHIANG
REVISED BY: JC
DATE REVISED: 3/12

LAST REVISION: 00-00-00
DATE PLOTTED => 01-APR-2014
TIME PLOTTED => 12:30

BORDER LAST REVISED 7/2/2010
USERNAME => s119140
DGN FILE => 729500me006.dgn
RELATIVE BORDER SCALE IS IN INCHES 0 1 2 3
UNIT 1887
PROJECT NUMBER & PHASE 07130000081

Dist	COUNTY	ROUTE	POST MILES TOTAL PROJECT	SHEET No.	TOTAL SHEETS
07	LA	10	41.7/48.3	27	131

REGISTERED CIVIL ENGINEER — DATE 9-4-13

PLANS APPROVAL DATE 2-10-14

REGISTERED PROFESSIONAL ENGINEER — BENJAMIN RAMOS — No. C 61340 — Exp. 6-30-15 — CIVIL — STATE OF CALIFORNIA

THE STATE OF CALIFORNIA OR ITS OFFICERS OR AGENTS SHALL NOT BE RESPONSIBLE FOR THE ACCURACY OR COMPLETENESS OF SCANNED COPIES OF THIS PLAN SHEET.

NOTES:

1. LANE CLOSURES SHALL NOT BE PLACED ON CREST VERTICAL CURVES OR ON HORIZONTAL CURVES.
2. PCMS SHALL BE ACTIVATED PRIOR TO TRAFFIC CONTROL ACTIVITIES ON THE LANE.
3. A MINIMUM SIGHT DISTANCE OF 1500' SHALL BE PROVIDED IN ADVANCE OF PCMS.
4. VEHICLE-MOUNTED SIGN PANELS SHALL BE TYPE III OR IV RETROREFLECTORIZED SHEETING, BLACK ON WHITE OR BLACK ON ORANGE WITH 8" MINIMUM SERIES D LETTERS PER CALTRANS SIGN SPECIFICATIONS.

LEGEND

V1, V2	SHADOW VEHICLES
V3	WORK/APPLICATION VEHICLE
	PCMS
	DIRECTION OF TRAVEL
	CONSTRUCTION AREA SIGN

ABBREVIATIONS

FAS	FLASHING ARROW SIGN
IAV	IMPACT ATTENUATOR VEHICLE
CMS	CHANGEABLE MESSAGE SIGN
PCMS	PORTABLE CHANGEABLE MESSAGE SIGN
(CA)	CALIFORNIA CODE

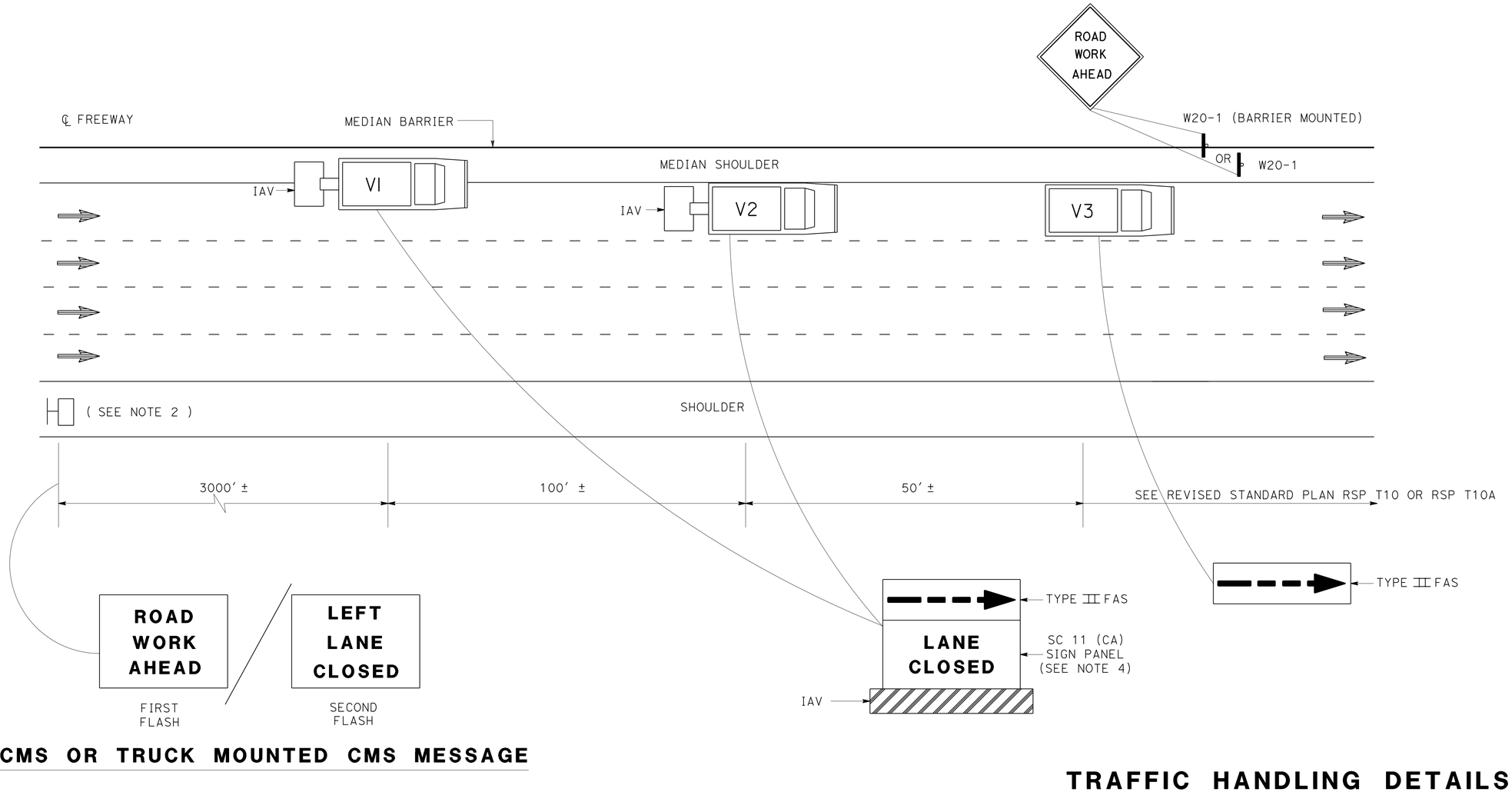

PCMS OR TRUCK MOUNTED CMS MESSAGE

TRAFFIC HANDLING DETAILS
TRAFFIC CONTROL SYSTEM FOR MEDIAN SHOULDERS LESS THAN 8 FEET

NO SCALE

THD-7

STATE OF CALIFORNIA - DEPARTMENT OF TRANSPORTATION — DTM

FUNCTIONAL SUPERVISOR: MARTIN OREGEL

CALCULATED-DESIGNED BY: ALBERT K YU

CHECKED BY: JOCELYN C CHIANG

REVISED BY: JC — DATE REVISED: 3/12

LAST REVISION — DATE PLOTTED => 01-APR-2014 — TIME PLOTTED => 12:30 — 00-00-00

BORDER LAST REVISED 7/2/2010 | USERNAME => s119140 | DGN FILE => 729500me007.dgn | RELATIVE BORDER SCALE IS IN INCHES 0 1 2 3 | UNIT 1887 | PROJECT NUMBER & PHASE 07130000081

Dist	COUNTY	ROUTE	POST MILES TOTAL PROJECT	SHEET No.	TOTAL SHEETS
07	LA	10	41.7/48.3	28	131

9-4-13
REGISTERED CIVIL ENGINEER DATE

2-10-14
PLANS APPROVAL DATE

REGISTERED PROFESSIONAL ENGINEER
BENJAMIN RAMOS
No. C 61340
Exp. 6-30-15
CIVIL
STATE OF CALIFORNIA

THE STATE OF CALIFORNIA OR ITS OFFICERS OR AGENTS SHALL NOT BE RESPONSIBLE FOR THE ACCURACY OR COMPLETENESS OF SCANNED COPIES OF THIS PLAN SHEET.

NOTES:

1. LANE CLOSURES SHALL NOT BE PLACED ON CREST VERTICAL CURVES OR ON HORIZONTAL CURVES.
2. PCMS SHALL BE ACTIVATED PRIOR TO TRAFFIC CONTROL ACTIVITIES ON THE HOV LANE.
3. A MINIMUM SIGHT DISTANCE OF 1500' SHALL BE PROVIDED IN ADVANCE OF PCMS.
4. VEHICLE-MOUNTED SIGN PANELS SHALL BE TYPE III OR IV RETROREFLECTORIZED SHEETING, BLACK ON WHITE OR BLACK ON ORANGE WITH 8" MINIMUM SERIES D LETTERS PER CALTRANS SIGN SPECIFICATIONS.
5. PLACE PCMS ON THE MEDIAN SHOULDER WHERE SUFFICIENT ROOM (SUCH AS CHP ENFORCEMENT AREAS) EXISTS.
6. ADVANCE WARNING SIGN INSTALLATIONS SHALL BE EQUIPPED WITH FLAGS FOR DAYTIME CLOSURES. TYPE B HIGH INTENSITY FLASHING WARNING LIGHTS SHALL BE USED ON SP-16 SIGN DURING NIGHT LANE CLOSURES. FLAGS AND WARNING LIGHTS SHALL BE ATTACHED TO SIGNS AS APPROVED BY THE ENGINEER.

LEGEND

V1, V2	SHADOW VEHICLES
V3	WORK/APPLICATION VEHICLE
	PCMS
	DIRECTION OF TRAVEL
	HOV LANE
	FLASHING BEACON

ABBREVIATIONS

FAS	FLASHING ARROW SIGN
IAV	IMPACT ATTENUATOR VEHICLE
CMS	CHANGEABLE MESSAGE SIGN
(CA)	CALIFORNIA CODE
PCMS	PORTABLE CHANGEABLE MESSAGE SIGN
HOV	HIGH OCCUPANCY VEHICLE
CHP	CALIFORNIA HIGHWAY PATROL

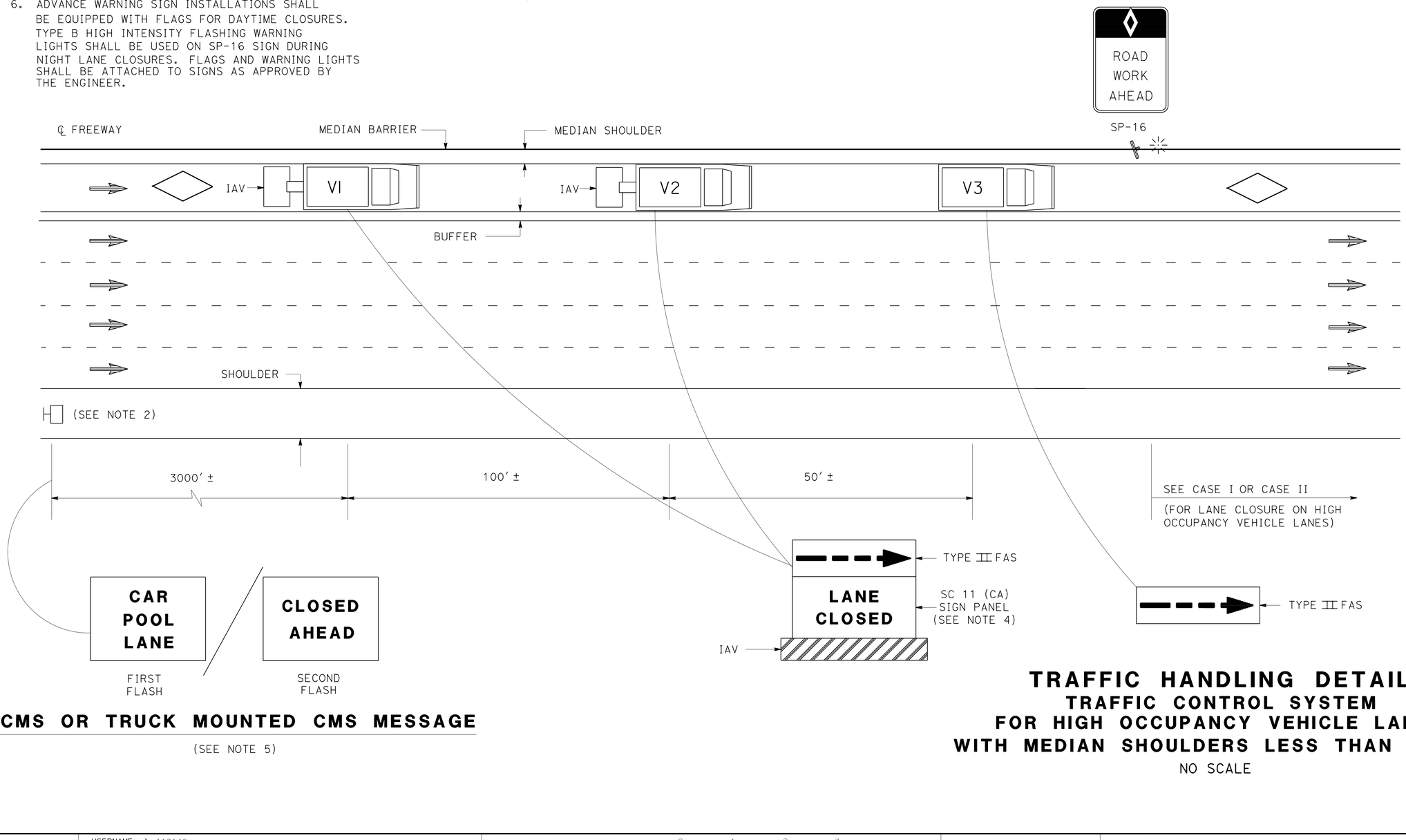

PCMS OR TRUCK MOUNTED CMS MESSAGE

(SEE NOTE 5)

TRAFFIC HANDLING DETAILS
TRAFFIC CONTROL SYSTEM FOR HIGH OCCUPANCY VEHICLE LANES WITH MEDIAN SHOULDERS LESS THAN 8 FEET

NO SCALE

THD-8

CALCULATED-DESIGNED BY	ALBERT K YU	JC	3/12
CHECKED BY	JOCELYN C CHIANG	REVISED BY	DATE REVISED
FUNCTIONAL SUPERVISOR	MARTIN OREGEL		

STATE OF CALIFORNIA - DEPARTMENT OF TRANSPORTATION
Caltrans®
DTM

LAST REVISION DATE PLOTTED => 01-APR-2014
00-00-00 TIME PLOTTED => 12:30

BORDER LAST REVISED 7/2/2010 | USERNAME => s119140 | DGN FILE => 729500me008.dgn | RELATIVE BORDER SCALE IS IN INCHES 0 1 2 3 | UNIT 1887 | PROJECT NUMBER & PHASE 07130000081

Dist	COUNTY	ROUTE	POST MILES TOTAL PROJECT	SHEET No.	TOTAL SHEETS
07	LA	10	41.7/48.3	29	131

REGISTERED CIVIL ENGINEER — 9-4-13 DATE

2-10-14 PLANS APPROVAL DATE

REGISTERED PROFESSIONAL ENGINEER — BENJAMIN RAMOS — No. C 61340 — Exp. 6-30-15 — CIVIL — STATE OF CALIFORNIA

THE STATE OF CALIFORNIA OR ITS OFFICERS OR AGENTS SHALL NOT BE RESPONSIBLE FOR THE ACCURACY OR COMPLETENESS OF SCANNED COPIES OF THIS PLAN SHEET.

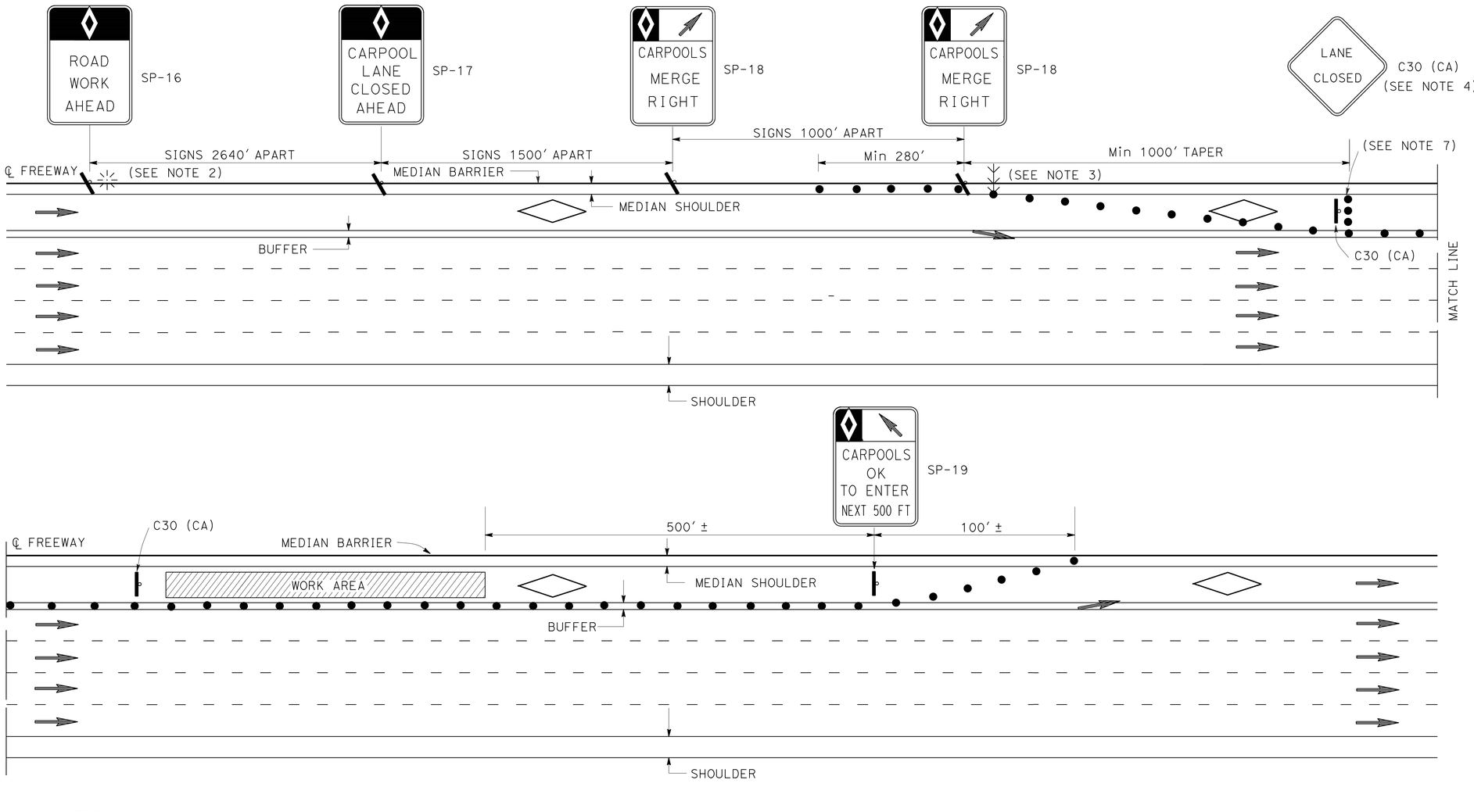

LEGEND

- CONE
- FLASHING BEACON
- HOV LANE
- FLASHING ARROW SIGN
- PORTABLE SIGN
- DIRECTION OF TRAVEL

ABBREVIATIONS

(CA)	CALIFORNIA CODE
HOV	HIGH OCCUPANCY VEHICLE

SIGN PANEL

SIZE (MIN)

SP-16	36" X 54"
SP-17	36" X 54"
SP-18	36" X 48"
SP-19	36" X 60"
C30 (CA)	30" X 30"
G20-2	48" X 24"

NOTES: (FOR CASE I AND CASE II)

1. AT LEAST ONE PERSON SHALL BE ASSIGNED TO FULL TIME MAINTENANCE OF TRAFFIC CONTROL DEVICES ON NIGHT LANE CLOSURES OR DAY-TIME CLOSURES EXCEEDING 1 MILE LENGTH, INCLUDING TAPERS.
2. ADVANCE WARNING SIGN INSTALLATIONS SHALL BE EQUIPPED WITH FLAGS FOR DAYTIME CLOSURES. TYPE B HIGH INTENSITY FLASHING WARNING LIGHTS SHALL BE USED ON SP-16 SIGN DURING NIGHT LANE CLOSURES. FLAGS AND WARNING LIGHTS SHALL BE ATTACHED TO SIGNS AS APPROVED BY THE ENGINEER.
3. THE FLASHING ARROW SIGN SHALL BE TYPE I.
4. PLACE C30 (CA) SIGNS EVERY 2000' THROUGHOUT THE LENGTH OF LANE CLOSURE.
5. A MINIMUM 1500' OF SIGHT DISTANCE SHALL BE PROVIDED WHERE POSSIBLE FOR VEHICLES APPROACHING THE FLASHING ARROW SIGN. LANE CLOSURES SHALL NOT BE PLACED ON CREST VERTICAL CURVES OR ON HORIZONTAL CURVES.
6. PORTABLE DELINEATORS PLACED AT ONE-HALF THE SPACING INDICATED FOR TRAFFIC CONES MAY BE USED INSTEAD OF CONES FOR DAYTIME CLOSURES.
7. A MINIMUM OF 3 CONES SHALL BE PLACED TRANSVERSELY ACROSS CLOSED LANES WHERE TAPERS END AND EVERY 2000'. TWO TYPE II BARRICADES MAY BE USED INSTEAD OF 3 CONES. THE ALIGNMENT OF CONES OR BARRICADES MAY BE SHIFTED FROM THE TRANSVERSE ALIGNMENT TO PROVIDE ACCESS TO WORK.
8. IF AN INGRESS/EGRESS AREA IS WITHIN 5250' UPSTREAM OR DOWNSTREAM OF THE WORK AREA, LANE CLOSURES SHALL BE EXTENDED TO THAT AREA AS SHOWN IN CASE II.
9. SIGNS SP-16, 17, 18, AND 19 MAY BE OVERLAID ON EXISTING CARPOOL SIGNS IN MEDIANS AS APPROVED BY THE ENGINEER.
10. SIGNS SP-16, 17, 18, AND C30 (CA) SHALL BE BLACK ON ORANGE BACKGROUND. SIGN SP-19 SHALL BE BLACK ON WHITE BACKGROUND. DIAMONDS ON SIGNS SHALL BE WHITE.
11. FOR CLOSURE OF LANE(S) ADJACENT TO HOV LANES, SEE CASE II.
12. THE MAXIMUM SPACING BETWEEN CONES SHALL BE APPROXIMATELY 50' IN TAPERS AND 100' ON TANGENTS.

TRAFFIC HANDLING DETAILS
TRAFFIC CONTROL SYSTEM FOR HIGH OCCUPANCY VEHICLE LANES AT NON-INGRESS/EGRESS AREAS
CASE I

NO SCALE

THD-9

CALCULATED-DESIGNED BY	JC	3/12	
CHECKED BY	ALBERT K YU		
	JOCELYN C CHIANG		
FUNCTIONAL SUPERVISOR	MARTIN OREGEL		
STATE OF CALIFORNIA - DEPARTMENT OF TRANSPORTATION	DTM		

LAST REVISION — DATE PLOTTED => 01-APR-2014 — TIME PLOTTED => 12:30 — 00-00-00

BORDER LAST REVISED 7/2/2010 | USERNAME => s119140 | DGN FILE => 729500me009.dgn | RELATIVE BORDER SCALE IS IN INCHES 0 1 2 3 | UNIT 1887 | PROJECT NUMBER & PHASE 07130000081

Dist	COUNTY	ROUTE	POST MILES TOTAL PROJECT	SHEET No.	TOTAL SHEETS
07	LA	10	41.7/48.3	30	131

REGISTERED CIVIL ENGINEER — 9-4-13 DATE

2-10-14 PLANS APPROVAL DATE

BENJAMIN RAMOS No. C 61340 Exp. 6-30-15 CIVIL — REGISTERED PROFESSIONAL ENGINEER — STATE OF CALIFORNIA

THE STATE OF CALIFORNIA OR ITS OFFICERS OR AGENTS SHALL NOT BE RESPONSIBLE FOR THE ACCURACY OR COMPLETENESS OF SCANNED COPIES OF THIS PLAN SHEET.

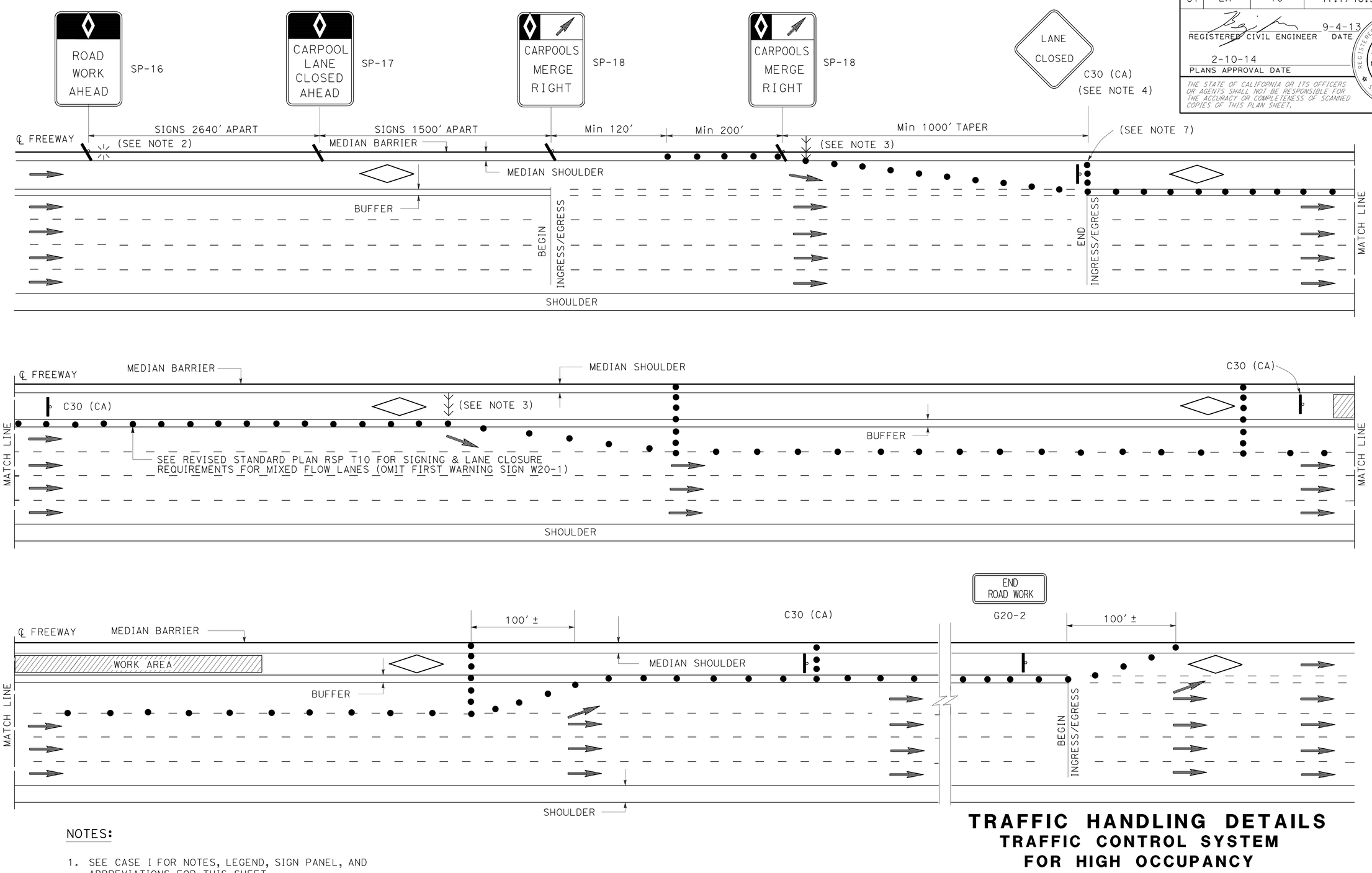

NOTES:

1. SEE CASE I FOR NOTES, LEGEND, SIGN PANEL, AND ABBREVIATIONS FOR THIS SHEET.
2. CLOSURES OF ONE MIXED FLOW TRAFFIC LANE ADJACENT TO HOV LANE SHOWN ON THIS SHEET. MULTIPLE MIXED FLOW LANE CLOSURES ARE SIMILAR.

TRAFFIC HANDLING DETAILS
TRAFFIC CONTROL SYSTEM FOR HIGH OCCUPANCY VEHICLE LANES AND ADJACENT FREEWAY LANES BETWEEN INGRESS/EGRESS AREAS
CASE II

NO SCALE

THD-10

REVISED BY	DATE REVISED
JC	3/12

CALCULATED-DESIGNED BY: ALBERT K YU
CHECKED BY: JOCELYN C CHIANG
FUNCTIONAL SUPERVISOR: MARTIN OREGEL

STATE OF CALIFORNIA - DEPARTMENT OF TRANSPORTATION
Caltrans® DTM

LAST REVISION: DATE PLOTTED => 01-APR-2014
00-00-00 TIME PLOTTED => 12:30

BORDER LAST REVISED 7/2/2010 | USERNAME => s119140 | DGN FILE => 729500me010.dgn | RELATIVE BORDER SCALE IS IN INCHES 0 1 2 3 | UNIT 1887 | PROJECT NUMBER & PHASE 07130000081

Dist	COUNTY	ROUTE	POST MILES TOTAL PROJECT	SHEET No.	TOTAL SHEETS
07	LA	10	41.7/48.3	31	131

REGISTERED CIVIL ENGINEER — 9-4-13 DATE

2-10-14
PLANS APPROVAL DATE

REGISTERED PROFESSIONAL ENGINEER
BENJAMIN RAMOS
No. C 61340
Exp. 6-30-15
CIVIL
STATE OF CALIFORNIA

THE STATE OF CALIFORNIA OR ITS OFFICERS OR AGENTS SHALL NOT BE RESPONSIBLE FOR THE ACCURACY OR COMPLETENESS OF SCANNED COPIES OF THIS PLAN SHEET.

NOTES:

1. EXACT LOCATION OF PCMS WILL BE DETERMINED BY THE ENGINEER TO PROVIDE ADEQUATE VISIBILITY.
2. PCMS MESSAGE DISPLAYED WILL BE APPROVED BY THE ENGINEER.
3. PCMS MESSAGE SHALL BE CHANGED AT THE BEGINNING OF CURE PERIOD TO REFLECT NUMBER OF CLOSED LANES.

ABBREVIATIONS

PCMS PORTABLE CHANGEABLE MESSAGE SIGN
(CA) CALIFORNIA CODE

LEGEND

- CONE
- PORTABLE SIGN
- DIRECTION OF TRAVEL
- PCMS

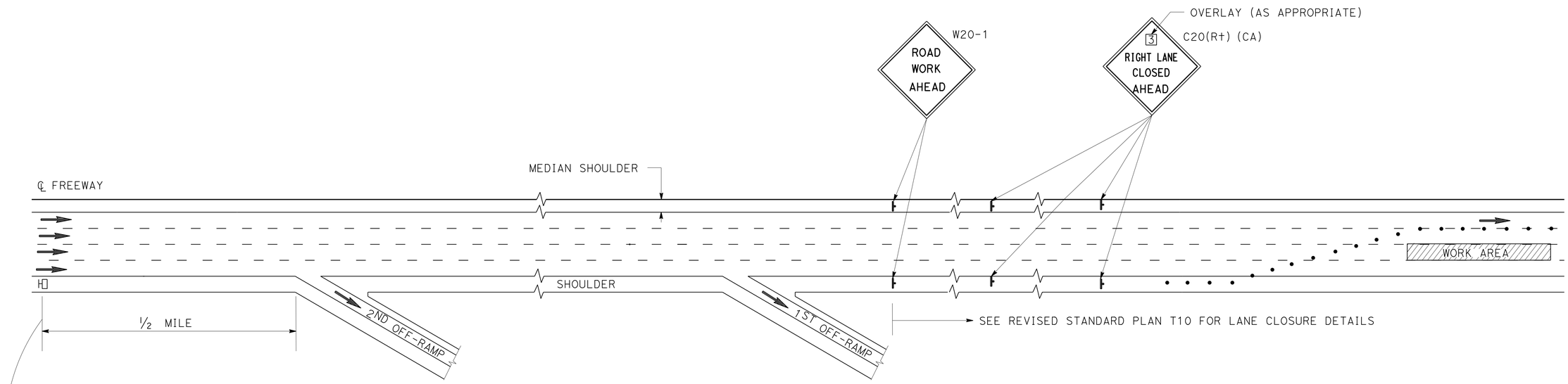

FIRST FLASH	X (NO OF LANES)RIGHT/LEFT	1ST LINE (TYPICAL)
	LANES	2ND LINE (TYPICAL)
	CLOSED	3RD LINE (TYPICAL)
SECOND FLASH	A ST	LIMIT OF CLOSURE (TYPICAL)
	TO	
	B DR	LIMIT OF CLOSURE (TYPICAL)

WORDING FORMAT FOR PCMS MESSAGE

TRAFFIC HANDLING DETAILS
TRAFFIC CONTROL SYSTEM FOR CONCRETE PAVEMENT AND APPROACH SLAB REPLACEMENT

NO SCALE

THD-11

CALCULATED-DESIGNED BY	
CHECKED BY	
REVISED BY	JC
DATE REVISED	3/12
ALBERT K YU	
JOCELYN C CHIANG	
FUNCTIONAL SUPERVISOR	MARTIN OREGEL
STATE OF CALIFORNIA - DEPARTMENT OF TRANSPORTATION	DTM
Caltrans®	

LAST REVISION DATE PLOTTED => 01-APR-2014
LAST REVISION TIME PLOTTED => 12:30
00-00-00

Dist	COUNTY	ROUTE	POST MILES TOTAL PROJECT	SHEET No.	TOTAL SHEETS
07	LA	10	41.7/48.3	32	131

REGISTERED CIVIL ENGINEER — DATE 9-4-13

PLANS APPROVAL DATE 2-10-14

REGISTERED PROFESSIONAL ENGINEER — BENJAMIN RAMOS — No. C 61340 — Exp. 6-30-15 — CIVIL — STATE OF CALIFORNIA

THE STATE OF CALIFORNIA OR ITS OFFICERS OR AGENTS SHALL NOT BE RESPONSIBLE FOR THE ACCURACY OR COMPLETENESS OF SCANNED COPIES OF THIS PLAN SHEET.

LEGEND:

- CONE
- PORTABLE SIGN
- DIRECTION OF TRAVEL
- PORTABLE CHANGEABLE MESSAGE SIGN (PCMS)
- HOV LANE
- FLASHING ARROW SIGN (FAS)
- FAS SUPPORT OR TRAILER

NOTES:

1. WORDING DISPLAYED ON PCMS WILL BE APPROVED BY THE ENGINEER.
2. EXACT LOCATIONS OF PCMS WILL BE DETERMINED BY THE ENGINEER.
3. CHANGE PCMS MESSAGE AT THE BEGINNING OF CURE PERIOD TO REFLECT NUMBER OF CLOSED LANES.

ABBREVIATIONS:

PCMS	PORTABLE CHANGEABLE MESSAGE SIGN
(CA)	CALIFORNIA CODE

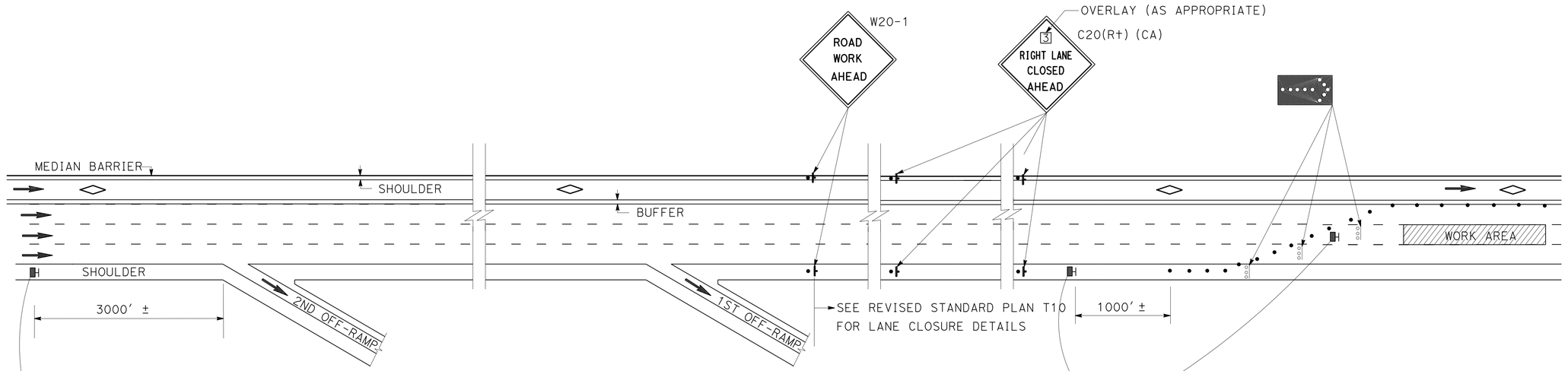

FIRST FLASH MESSAGE	X (NO OF LANES)RIGHT/LEFT	1ST LINE (TYPICAL)
	LANES	2ND LINE (TYPICAL)
	CLOSED	3RD LINE (TYPICAL)
SECOND FLASH MESSAGE	A ST	LIMIT OF CLOSURE (TYPICAL)
	TO	
	B DR	LIMIT OF CLOSURE (TYPICAL)

FIRST FLASH MESSAGE	ALL	1ST LINE (TYPICAL)
	TRAFFIC	2ND LINE (TYPICAL)
SECOND FLASH MESSAGE	OK USE	1ST LINE (TYPICAL)
	CARPOOL	2ND LINE (TYPICAL)
	LANE	3RD LINE (TYPICAL)

TRAFFIC HANDLING DETAILS
TRAFFIC CONTROL SYSTEM
WITH HIGH OCCUPANCY VEHICLE LANES
FOR PORTABLE CHANGEABLE MESSAGE SIGN LOCATIONS

NO SCALE

THD-12

CALCULATED-DESIGNED BY: JC 3/12
CHECKED BY: ALBERT K YU
REVISED BY / DATE REVISED
JOCELYN C CHIANG
FUNCTIONAL SUPERVISOR: MARTIN OREGEL
STATE OF CALIFORNIA - DEPARTMENT OF TRANSPORTATION
DTM
Caltrans

LAST REVISION — DATE PLOTTED => 01-APR-2014 — TIME PLOTTED => 12:30 — 00-00-00

BORDER LAST REVISED 7/2/2010 | USERNAME => s119140 | DGN FILE => 729500me012.dgn | RELATIVE BORDER SCALE IS IN INCHES 0 1 2 3 | UNIT 1887 | PROJECT NUMBER & PHASE 07130000081

Dist	COUNTY	ROUTE	POST MILES TOTAL PROJECT	SHEET No.	TOTAL SHEETS
07	LA	10	41.7/48.3	33	131

REGISTERED CIVIL ENGINEER — DATE 1/15/14

PLANS APPROVAL DATE 2-10-14

REGISTERED PROFESSIONAL ENGINEER — EDGAR HERRERA No. C67603 Exp. 6/30/15 CIVIL — STATE OF CALIFORNIA

THE STATE OF CALIFORNIA OR ITS OFFICERS OR AGENTS SHALL NOT BE RESPONSIBLE FOR THE ACCURACY OR COMPLETENESS OF SCANNED COPIES OF THIS PLAN SHEET.

NOTES:

1. USE TYPE C RED-CLEAR RETROREFLECTIVE MARKERS ON DETAIL D AT SEGMENTS WITHIN LIMITS OF DETAIL 14M.
2. USE TYPE C RED-CLEAR RETROREFLECTIVE MARKERS ON BUFFER STRIPES AT SEGMENTS WITHIN LIMITS OF DETAIL 14M.
3. USE TYPE HR RED-YELLOW RETROREFLECTIVE MARKERS ON DETAIL 25 AT SEGMENTS WITHIN LIMITS OF DETAIL 14M.

LEGENDS

- TYPE C PAVEMENT MARKER
- TYPE G PAVEMENT MARKER
- TYPE H PAVEMENT MARKER
- 4" YELLOW PAINT STRIPE
- 4" WHITE PAINT STRIPE
- 8" WHITE PAINT STRIPE
- DIRECTION OF TRAVEL

USE FOR TEMPORARY PAVEMENT DELINEATION

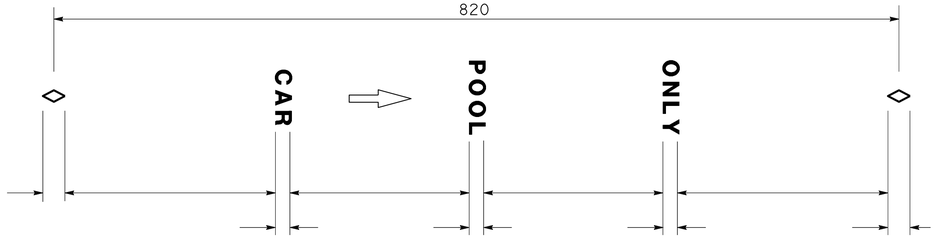

REPLACE "CAR POOL ONLY" WITH "HOV ONLY"

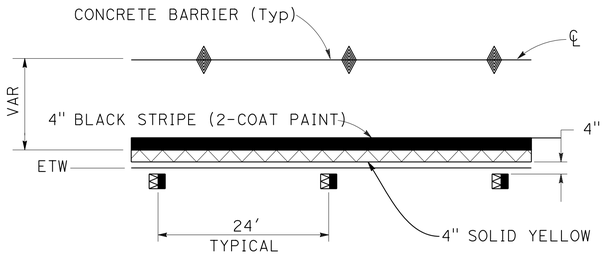

DETAIL 25M

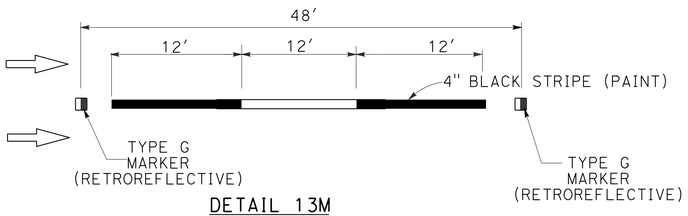

DETAIL 13M

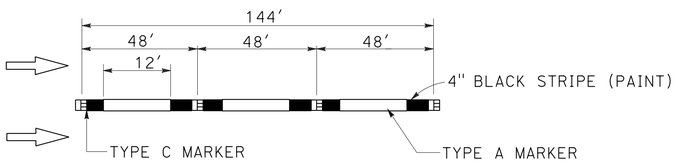

DETAIL 14M

DETAIL A

HOV LANE MARKING REPLACEMENT

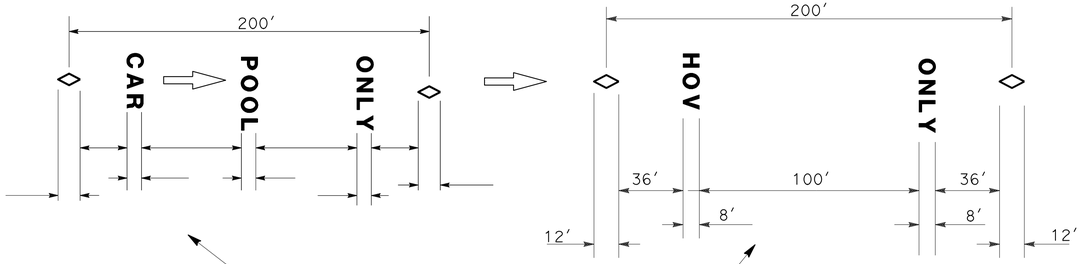

REPLACE "CAR POOL ONLY" WITH "HOV ONLY"

DETAIL B

INGRESS/EGRESS MARKING REPLACEMENT

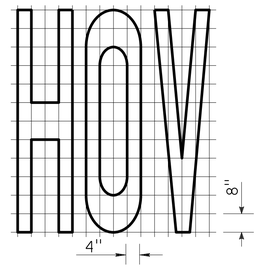

A=17.6 ft²

HOV PAVEMENT MARKING WORD DETAIL

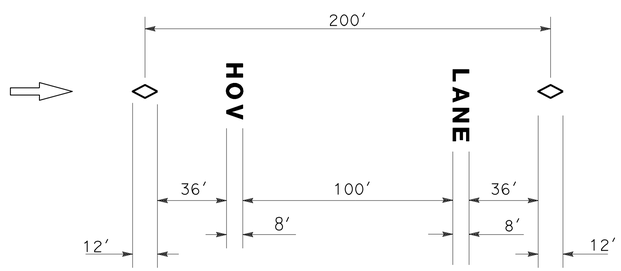

DETAIL C

RAMP INGRESS/EGRESS MARKING

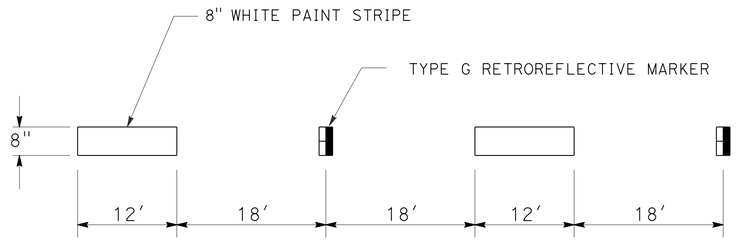

INGRESS/EGRESS STRIPING DETAIL

PAVEMENT DELINEATION DETAILS

NO SCALE

PDD-1

STATE OF CALIFORNIA - DEPARTMENT OF TRANSPORTATION — TRAFFIC DESIGN

FUNCTIONAL SUPERVISOR: GRISH BIGLARIAN

CALCULATED-DESIGNED BY: EUGENE BRAVO

CHECKED BY: EDGAR HERRERA

REVISED BY | DATE REVISED

LAST REVISION | DATE PLOTTED => 01-APR-2014 | 09-30-13 | TIME PLOTTED => 12:30

BORDER LAST REVISED 7/2/2010 | USERNAME => s119140 | DGN FILE => 729500nb001.dgn | RELATIVE BORDER SCALE IS IN INCHES 0 1 2 3 | UNIT 1877 | PROJECT NUMBER & PHASE 07130000081

Dist	COUNTY	ROUTE	POST MILES TOTAL PROJECT	SHEET No.	TOTAL SHEETS
07	LA	10	41.7/48.3	34	131

1/15/14
REGISTERED CIVIL ENGINEER DATE

2-10-14
PLANS APPROVAL DATE

REGISTERED PROFESSIONAL ENGINEER
EDGAR HERRERA
No. C67603
Exp. 6/30/15
CIVIL
STATE OF CALIFORNIA

THE STATE OF CALIFORNIA OR ITS OFFICERS OR AGENTS SHALL NOT BE RESPONSIBLE FOR THE ACCURACY OR COMPLETENESS OF SCANNED COPIES OF THIS PLAN SHEET.

NOTES:

1. USE TYPE C RED-CLEAR RETROREFLECTIVE MARKERS ON DETAIL D AT SEGMENTS WITHIN LIMITS OF DETAIL 14M.
2. USE TYPE C RED-CLEAR RETROREFLECTIVE MARKERS ON BUFFER STRIPES AT SEGMENTS WITHIN LIMITS OF DETAIL 14M.
3. USE TYPE HR RED-YELLOW RETROREFLECTIVE MARKERS ON DETAIL 25 AT SEGMENTS WITHIN LIMITS OF DETAIL 14M.

USE FOR TEMPORARY PAVEMENT DELINEATION

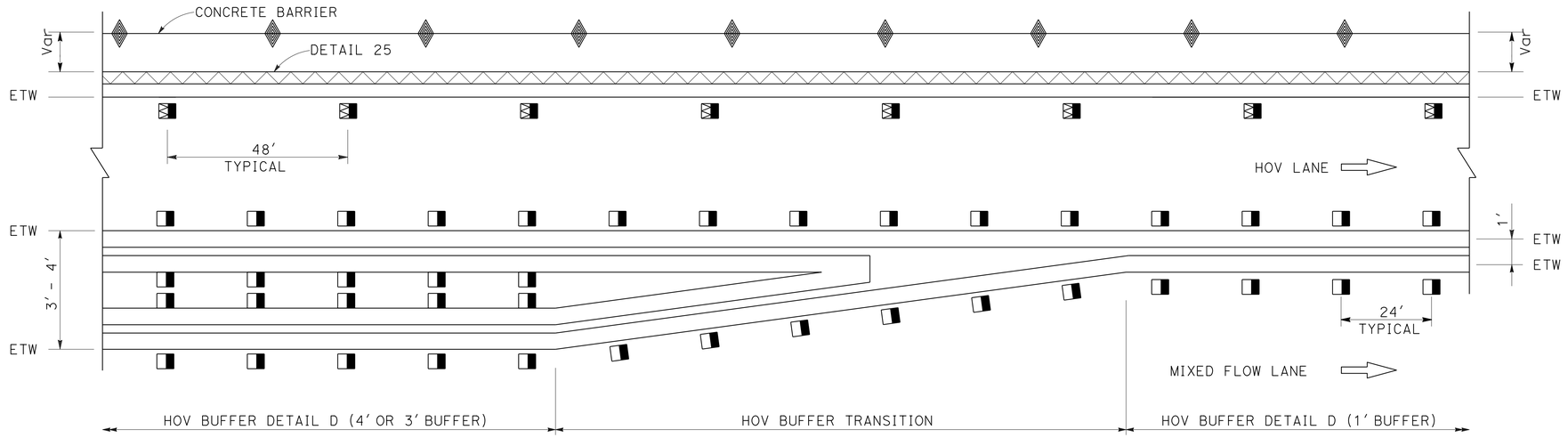

4′, 3′ TO 1′ BUFFER TRANSITION

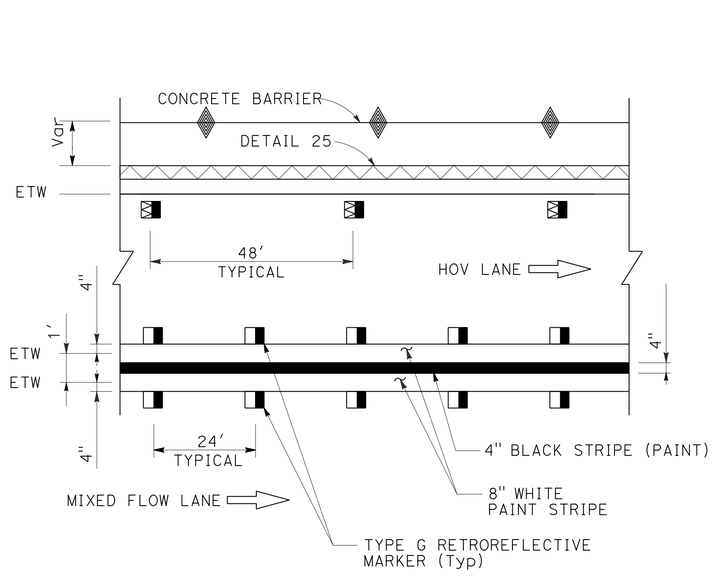

BUFFER STRIPING DETAIL
BUFFER WIDTH-1′

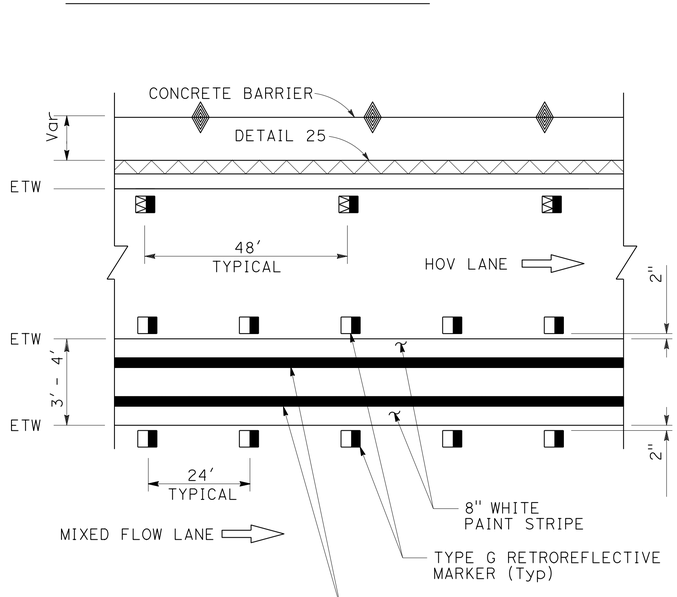

BUFFER STRIPING DETAIL
BUFFER WIDTH-3′, 4′

PAVEMENT DELINEATION DETAILS

NO SCALE

PDD-2

REVISED BY	DATE REVISED

CALCULATED-DESIGNED BY: EUGENE BRAVO
CHECKED BY: EDGAR HERRERA
FUNCTIONAL SUPERVISOR: GRISH BIGLARIAN

STATE OF CALIFORNIA - DEPARTMENT OF TRANSPORTATION
TRAFFIC DESIGN

LAST REVISION 09-30-13
DATE PLOTTED => 01-APR-2014
TIME PLOTTED => 12:30

BORDER LAST REVISED 7/2/2010
USERNAME => s119140
DGN FILE => 729500nb002.dgn
RELATIVE BORDER SCALE IS IN INCHES 0 1 2 3
UNIT 1877
PROJECT NUMBER & PHASE 07130000081

NOTES:

1. USE TYPE C RED-CLEAR RETROREFLECTIVE MARKERS ON DETAIL D AT SEGMENTS WITHIN LIMITS OF DETAIL 14M.
2. USE TYPE C RED-CLEAR RETROREFLECTIVE MARKERS ON BUFFER STRIPES AT SEGMENTS WITHIN LIMITS OF DETAIL 14M.
3. USE TYPE HR RED-YELLOW RETROREFLECTIVE MARKERS ON DETAIL 25 AT SEGMENTS WITHIN LIMITS OF DETAIL 14M.

LEGENDS

- TYPE A PAVEMENT MARKER
- TYPE AY PAVEMENT MARKER
- TYPE C PAVEMENT MARKER
- TYPE G PAVEMENT MARKER
- TYPE H PAVEMENT MARKER
- 4" YELLOW THERMOPLASTIC STRIPE
- 4" WHITE THERMOPLASTIC STRIPE
- 8" WHITE THERMOPLASTIC STRIPE
- DIRECTION OF TRAVEL

Dist	COUNTY	ROUTE	POST MILES TOTAL PROJECT	SHEET No.	TOTAL SHEETS
07	LA	10	41.7/48.3	35	131

Edgar Herrera 1/15/14
REGISTERED CIVIL ENGINEER DATE

2-10-14
PLANS APPROVAL DATE

REGISTERED PROFESSIONAL ENGINEER — EDGAR HERRERA — No. C67603 — Exp. 6/30/15 — CIVIL — STATE OF CALIFORNIA

THE STATE OF CALIFORNIA OR ITS OFFICERS OR AGENTS SHALL NOT BE RESPONSIBLE FOR THE ACCURACY OR COMPLETENESS OF SCANNED COPIES OF THIS PLAN SHEET.

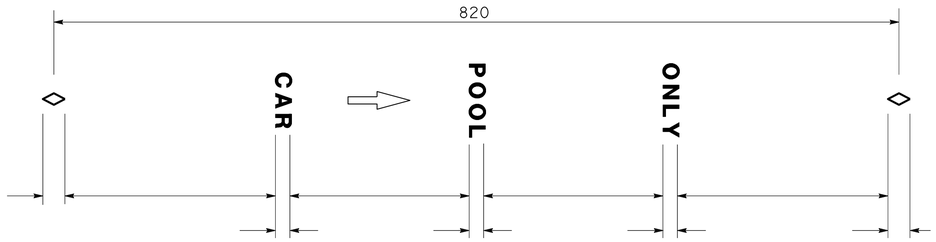

REPLACE "CAR POOL ONLY" WITH "HOV ONLY"

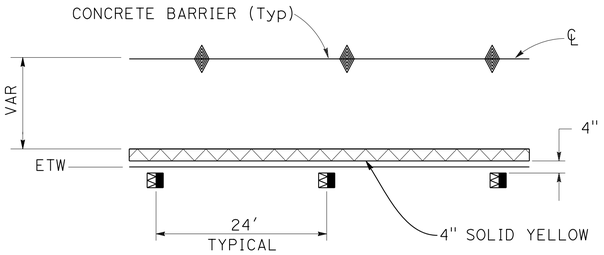

DETAIL 25M

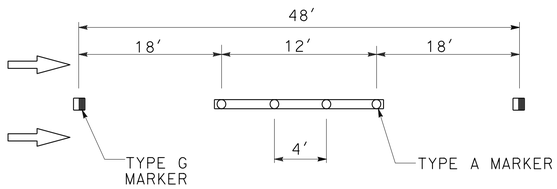

DETAIL 13M

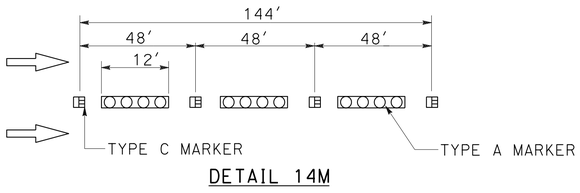

DETAIL 14M

DETAIL A

HOV LANE MARKING REPLACEMENT

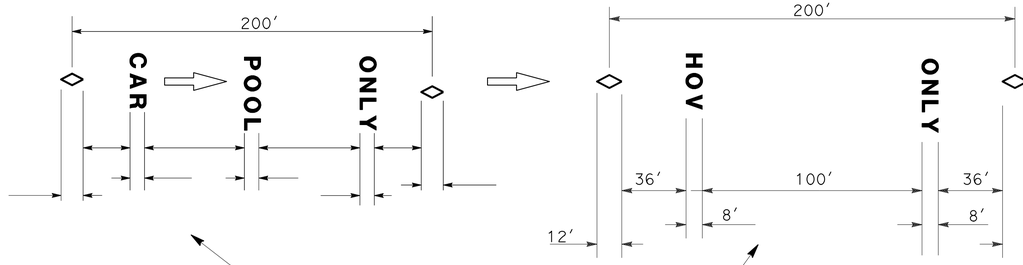

REPLACE "CAR POOL ONLY" WITH "HOV ONLY"

DETAIL B

INGRESS/EGRESS MARKING REPLACEMENT

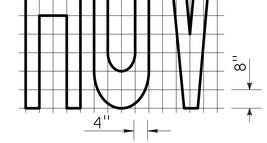

A=17.6 ft²

HOV PAVEMENT MARKING WORD DETAIL

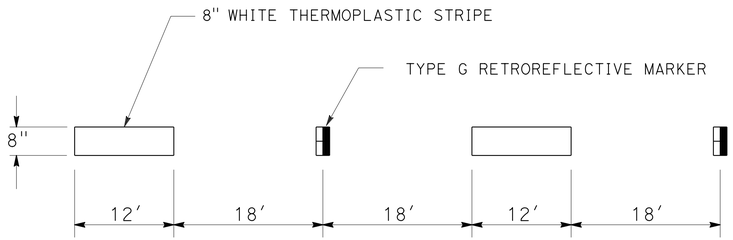

INGRESS/EGRESS STRIPING DETAIL

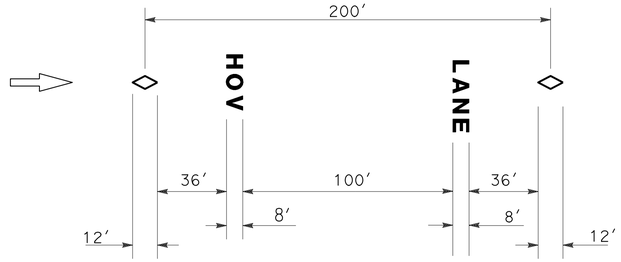

DETAIL C

RAMP INGRESS/EGRESS MARKING

PAVEMENT DELINEATION DETAILS

NO SCALE

PDD-3

STATE OF CALIFORNIA - DEPARTMENT OF TRANSPORTATION
Caltrans® TRAFFIC DESIGN
FUNCTIONAL SUPERVISOR: GRISH BIGLARIAN
CALCULATED-DESIGNED BY: EUGENE BRAVO
CHECKED BY: EDGAR HERRERA
REVISED BY / DATE REVISED

LAST REVISION: DATE PLOTTED => 01-APR-2014; TIME PLOTTED => 12:30; 09-30-13

BORDER LAST REVISED 7/2/2010 | USERNAME => s119140 | DGN FILE => 729500nb003.dgn | RELATIVE BORDER SCALE IS IN INCHES 0 1 2 3 | UNIT 1877 | PROJECT NUMBER & PHASE 07130000081

Dist	COUNTY	ROUTE	POST MILES TOTAL PROJECT	SHEET No.	TOTAL SHEETS
07	LA	10	41.7/48.3	36	131

REGISTERED CIVIL ENGINEER — DATE 1/15/14

PLANS APPROVAL DATE 2-10-14

REGISTERED PROFESSIONAL ENGINEER — EDGAR HERRERA No. C67603 Exp. 6/30/15 CIVIL — STATE OF CALIFORNIA

THE STATE OF CALIFORNIA OR ITS OFFICERS OR AGENTS SHALL NOT BE RESPONSIBLE FOR THE ACCURACY OR COMPLETENESS OF SCANNED COPIES OF THIS PLAN SHEET.

NOTES:

1. USE TYPE C RED-CLEAR RETROREFLECTIVE MARKERS ON DETAIL D AT SEGMENTS WITHIN LIMITS OF DETAIL 14M.
2. USE TYPE C RED-CLEAR RETROREFLECTIVE MARKERS ON BUFFER STRIPES AT SEGMENTS WITHIN LIMITS OF DETAIL 14M.
3. USE TYPE HR RED-YELLOW RETROREFLECTIVE MARKERS ON DETAIL 25 AT SEGMENTS WITHIN LIMITS OF DETAIL 14M.

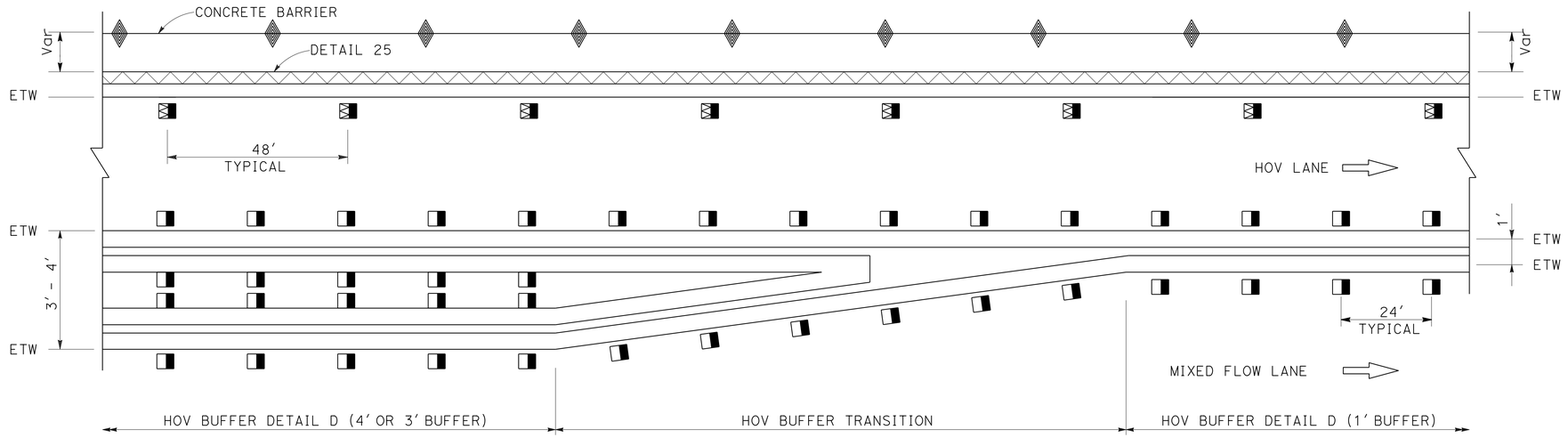

4′, 3′ TO 1′ BUFFER TRANSITION

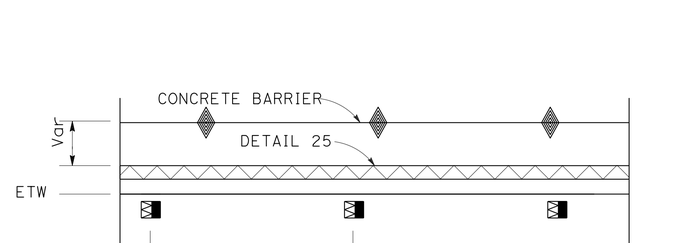

BUFFER STRIPING DETAIL
BUFFER WIDTH-1′

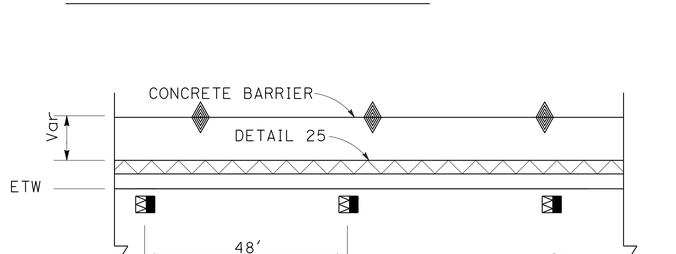

BUFFER STRIPING DETAIL
BUFFER WIDTH-3′, 4′

PAVEMENT DELINEATION DETAILS

NO SCALE

PDD-4

REVISED BY | DATE REVISED

CALCULATED-DESIGNED BY: EUGENE BRAVO
CHECKED BY: EDGAR HERRERA

FUNCTIONAL SUPERVISOR: GRISH BIGLARIAN

STATE OF CALIFORNIA - DEPARTMENT OF TRANSPORTATION
TRAFFIC DESIGN

LAST REVISION: 09-30-13
DATE PLOTTED => 01-APR-2014
TIME PLOTTED => 12:30

BORDER LAST REVISED 7/2/2010

USERNAME => s119140
DGN FILE => 729500nb004.dgn

RELATIVE BORDER SCALE IS IN INCHES 0 1 2 3

UNIT 1877 | PROJECT NUMBER & PHASE 07130000081

Dist	COUNTY	ROUTE	POST MILES TOTAL PROJECT	SHEET No.	TOTAL SHEETS
07	LA	10	41.7/48.3	37	131

1/15/14
REGISTERED CIVIL ENGINEER DATE

EDGAR HERRERA No. C67603 Exp. 6/30/15 CIVIL — REGISTERED PROFESSIONAL ENGINEER — STATE OF CALIFORNIA

2-10-14
PLANS APPROVAL DATE

THE STATE OF CALIFORNIA OR ITS OFFICERS OR AGENTS SHALL NOT BE RESPONSIBLE FOR THE ACCURACY OR COMPLETENESS OF SCANNED COPIES OF THIS PLAN SHEET.

POST MILE RANGE	PAINT TRAFFIC STRIPE (2-COAT)	THERMOPLASTIC TRAFFIC STRIPE														THERMOPLASTIC PAVEMENT MARKINGS						PAVEMENT MARKER				REMOVE THERMOPLASTIC TRAFFIC STRIPE	REMOVE PAVEMENT MARKER	REMOVE THERMOPLASTIC PAVEMENT MARKING
		4"	4"						8"															RETROREFLECTIVE					
	HOV BLACK STRIPE	DETAIL 8 (BROKEN 17' - 7')	DETAIL 9 (BROKEN 17' - 7')	DETAIL 13M (BROKEN 36' - 12')	DETAIL 14M (BROKEN 36' - 12')	DETAIL 25A SOLID YELLOW STRIPE	DETAIL 25 SOLID YELLOW STRIPE	DETAIL 27B SOLID WHITE STRIPE	HOV SOLID WHITE	DETAIL 36 SOLID WHITE	DETAIL 36A SOLID WHITE	DETAIL 38A SOLID WHITE	DETAIL 38B SOLID WHITE	DETAIL 37 (BROKEN 12 '- 3')	DETAIL D - HOV (BROKEN 36 '- 12')	ARROW	SYMBOL	WORDS	CROSSWALK/ LIMIT LINE	DIAGONALS WHITE STRIPE	CHEVRON WHITE STRIPE	TYPE A NON-REFLECTIVE	TYPE C	TYPE G	TYPE H			
	LF	LF	LF	LF	LF	LF	LF	LF	LF	LF	LF	LF	LF	LF	LF	SQFT	SQFT	SQFT	SQFT	SQFT	SQFT	EA	EA	EA	EA	LF	EA	SQFT
42.3/42.8	950	0	0	18,435	936	2,935	5,600	9,080	1,900	1,361	1,074	0	383	2,200	1,300	168	66	186	0	0	18	1,656	56	793	239	0	2,744	0
42.8/43.3	5,300	90	0	16,573	912	500	5,600	6,100	10,600	800	400	0	763	5,657	0	126	44	124	0	0	0	1,489	68	1,262	138	0	2,957	0
43.3/43.8	5,000	318	2,522	4,784	312	3,179	5,200	13,393	10,000	544	501	797	446	824	200	365	44	169	208	266	27	435	28	711	241	0	1,415	0
43.8/44.4	4,300	275	1,170	8,296	1,296	2,101	5,400	6,674	8,600	1,590	167	126	570	220	1,100	0	77	337	0	12	6	799	44	745	200	0	1,788	0
44.4/44.9	4,300	0	0	15,072	864	0	5,600	5,600	8,600	0	0	0	27	1,053	1,300	0	88	248	0	0	0	1,328	32	805	117	0	2,282	0
44.9/45.4	4,200	300	600	15,072	864	1,463	5,600	7,223	8,400	554	160	0	0	0	0	284	66	223	136	154	0	1,328	24	714	178	0	2,244	0
45.4/45.9	3,100	0	690	9,000	0	1,640	3,400	5,090	6,200	0	0	320	0	0	300	396	77	307	54	167	0	678	24	464	118	6,600	1,284	1,000
45.9/46.4	0	0	280	0	0	0	0	0	11,200	0	0	0	0	0	0	0	0	0	0	0	0	0	0	481	0	16,800	481	0
46.4/46.9	0	0	0	0	0	0	0	0	10,800	0	0	0	0	0	0	0	0	0	0	0	0	0	0	462	0	16,200	462	0
46.9/47.5	2,800	50	0	7,038	681	0	2,800	2,800	6,000	0	0	0	0	0	2,600	0	0	0	0	0	0	623	12	515	189	8,400	1,339	0
47.5/48.0	5,600	570	260	15,072	864	1,983	5,600	7,975	11,200	1,332	707	0	0	0	0	0	66	170	132	238	0	1,328	24	879	199	0	3,645	0
48.0/48.4	4,814	0	0	12,297	0	0	4,254	4,099	9,628	0	0	0	0	0	50	0	22	0	0	0	0	1,025	0	669	89	0	2,675	0
SUBTOTAL	40,364	1,603	5,522	121,639	6,729	13,801	49,054	68,034	103,128	6,181	3,009	1,243	2,189	9,954	6,850	1,339	550	1,764	530	837	51	10,689	312	8,500	1,708	48,000	23,316	1,000
TOTAL	40,364	7,125		128,368		130,889			115,750					9,954	6,850	5,070						10,689	10,520			48,000	23,316	1,000

PAVEMENT DELINEATION QUANTITIES

PDQ-1

CALCULATED-DESIGNED BY: SHAHAN PETROSSIAN
CHECKED BY: EDGAR HERRERA
FUNCTIONAL SUPERVISOR: GRISH BIGLARIAN
REVISED BY
DATE REVISED

STATE OF CALIFORNIA - DEPARTMENT OF TRANSPORTATION
Caltrans® TRAFFIC DESIGN

LAST REVISION | DATE PLOTTED => 01-APR-2014
09-30-13 | TIME PLOTTED => 12:30

BORDER LAST REVISED 7/2/2010 | USERNAME => s119140 | DGN FILE => 729500nc001.dgn | RELATIVE BORDER SCALE IS IN INCHES 0 1 2 3 | UNIT 1877 | PROJECT NUMBER & PHASE 07130000081

Dist	COUNTY	ROUTE	POST MILES TOTAL PROJECT	SHEET No.	TOTAL SHEETS
07	LA	10	41.7/48.3	38	131

REGISTERED CIVIL ENGINEER — 1/15/14 DATE

EDGAR HERRERA No. C67603 Exp. 6/30/15 CIVIL — REGISTERED PROFESSIONAL ENGINEER — STATE OF CALIFORNIA

2-10-14
PLANS APPROVAL DATE

THE STATE OF CALIFORNIA OR ITS OFFICERS OR AGENTS SHALL NOT BE RESPONSIBLE FOR THE ACCURACY OR COMPLETENESS OF SCANNED COPIES OF THIS PLAN SHEET.

G77(CA)

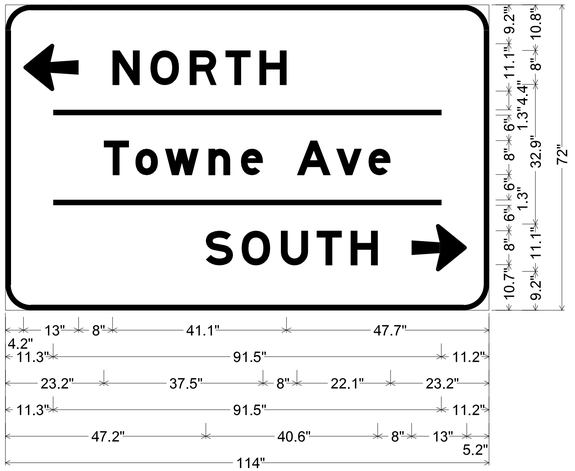

6.0" Radius, 1.3" Border, White on Green;
Arrow 5 - 13.0" 180°; [NORTH] E Mod; [Towne Ave] E Mod;
[SOUTH] E Mod; Arrow 5 - 13.0" 0°;

037

G87(CA)

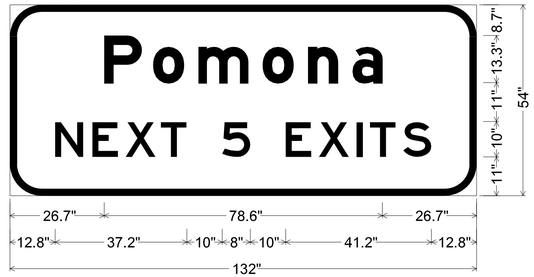

9.0" Radius, 2.0" Border, White on Green;
[Pomona] E Mod; [NEXT 5 EXITS] E;

005

R3-13(MOD)

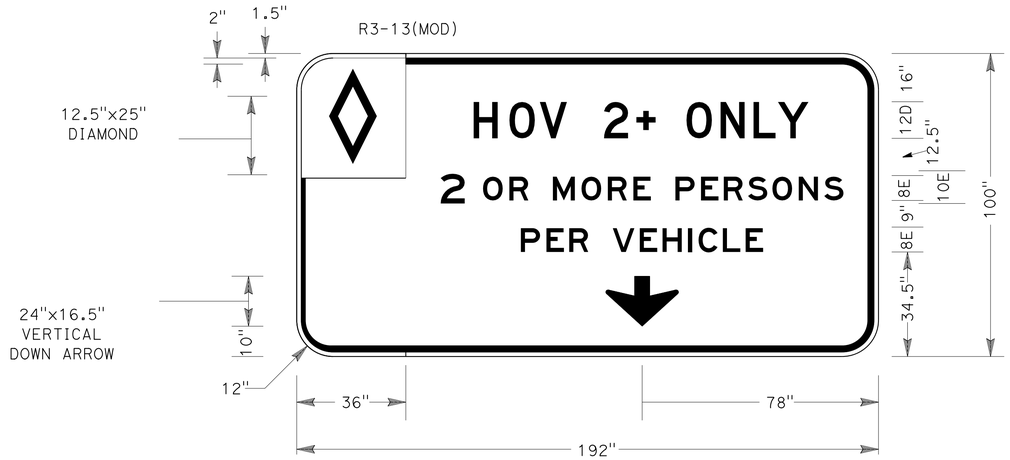

BLACK BORDER
WHITE DIAMOND
BLACK DIAMOND BACKGROUND
BLACK LEGEND, ARROW & WHITE BACKGROUND

1A FEBT @ PM 42.4
1B FWBT @ PM 44.0
1C FEBT @ PM 44.5
1D FWBT @ PM 45.9
1E FEBT @ PM 47.0
1F FWBT @ PM 47.2

SIGN DETAILS

NO SCALE

SD-1

CALCULATED-DESIGNED BY
CHECKED BY
REVISED BY
DATE REVISED
EUGENE BRAVO
EDGAR HERRERA
FUNCTIONAL SUPERVISOR
GRISH BIGLARIAN
STATE OF CALIFORNIA - DEPARTMENT OF TRANSPORTATION
Caltrans® TRAFFIC DESIGN

LAST REVISION 09-30-13
DATE PLOTTED => 01-APR-2014
TIME PLOTTED => 12:30

BORDER LAST REVISED 7/2/2010
USERNAME => s119140
DGN FILE => 729500ob001.dgn
RELATIVE BORDER SCALE IS IN INCHES 0 1 2 3
UNIT 1877
PROJECT NUMBER & PHASE 07130000081

Dist	COUNTY	ROUTE	POST MILES TOTAL PROJECT	SHEET No.	TOTAL SHEETS
07	LA	10	41.7/48.3	39	131

REGISTERED CIVIL ENGINEER — DATE 1/15/14

EDGAR HERRERA No. C67603 Exp. 6/30/15 CIVIL — REGISTERED PROFESSIONAL ENGINEER — STATE OF CALIFORNIA

2-10-14
PLANS APPROVAL DATE

THE STATE OF CALIFORNIA OR ITS OFFICERS OR AGENTS SHALL NOT BE RESPONSIBLE FOR THE ACCURACY OR COMPLETENESS OF SCANNED COPIES OF THIS PLAN SHEET.

REVISED BY | DATE REVISED
EUGENE BRAVO | EDGAR HERRERA
CALCULATED-DESIGNED BY | CHECKED BY
FUNCTIONAL SUPERVISOR: GRISH BIGLARIAN

STATE OF CALIFORNIA - DEPARTMENT OF TRANSPORTATION
TRAFFIC DESIGN

G86-8(CA)

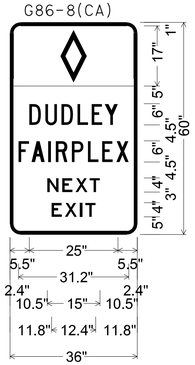

3.0" Radius, 1.0" Border, White on Green;
Rounded Rectangle 2.0" Radius Black;
[DUDLEY] C;
[FAIRPLEX] C;
[NEXT] E;
[EXIT] E;

036

G85-7(CA)

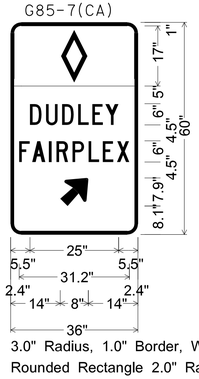

3.0" Radius, 1.0" Border, White on Green;
Rounded Rectangle 2.0" Radius Black;
[DUDLEY] C;
[FAIRPLEX] C;
Arrow 6UC-1L - 9.6" 45°;

034

G86-9(CA)

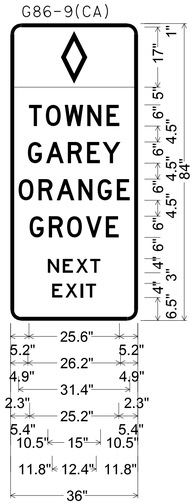

3.0" Radius, 1.0" Border, White on Green;
Rounded Rectangle 2.0" Radius Black;
[TOWNE] D;
[GAREY] D;
[ORANGE] D;
[GROVE] D;
[NEXT] E;
[EXIT] E;

051

G85-7(CA)

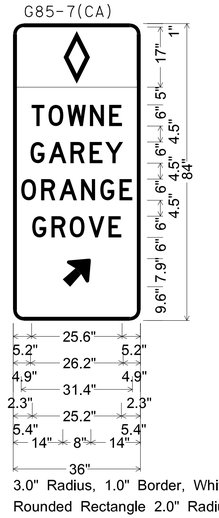

3.0" Radius, 1.0" Border, White on Green;
Rounded Rectangle 2.0" Radius Black;
[TOWNE] D;
[GAREY] D;
[ORANGE] D;
[GROVE] D;
Arrow 6UC-1L - 9.6" 45°;

048

G86-9(CA)

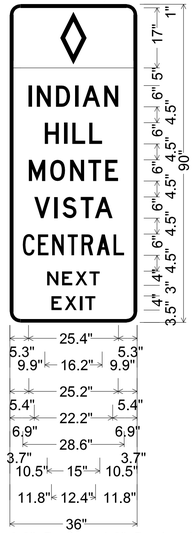

3.0" Radius, 1.0" Border, White on Green;
Rounded Rectangle 2.0" Radius Black;
[INDIAN] D;
[HILL] D;
[MONTE] D;
[VISTA] D;
[CENTRAL] C;
[NEXT] E;
[EXIT] E;

042

G85-7(CA)

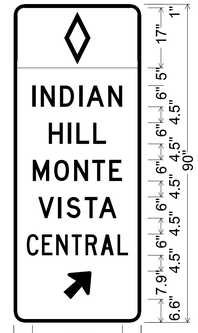

3.0" Radius, 1.0" Border, White on Green;
Rounded Rectangle 2.0" Radius Black;
[INDIAN] D;
[HILL] D;
[MONTE] D;
[VISTA] D;
[CENTRAL] C;
Arrow 6UC-1L - 9.6" 45°;

044

G86-9(CA)

3.0" Radius, 1.0" Border, White on Green;
Rounded Rectangle 2.0" Radius Black;
[WHITE] D;
[GAREY] D;
[TOWNE] D;
[NEXT] E;
[EXIT] E;

018

G85-7(CA)

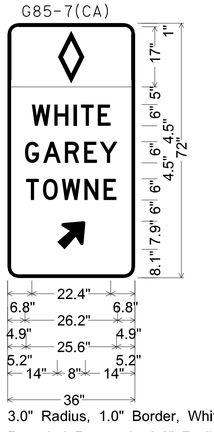

3.0" Radius, 1.0" Border, White on Green;
Rounded Rectangle 2.0" Radius Black;
[WHITE] D;
[GAREY] D;
[TOWNE] D;
Arrow 6UC-1L - 9.6" 45°;

022

G86-9(CA)

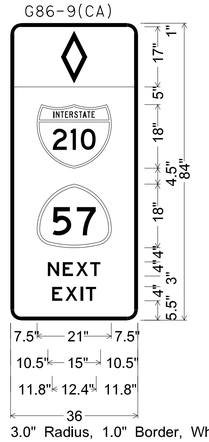

3.0" Radius, 1.0" Border, White on Green;
Rounded Rectangle 2.0" Radius Black;
[NEXT] E;
[EXIT] E;

019

G85-7(CA)

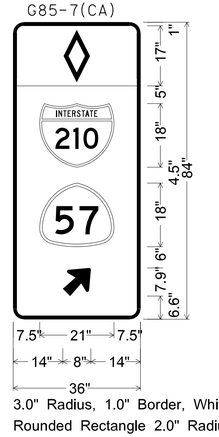

3.0" Radius, 1.0" Border, White on Green;
Rounded Rectangle 2.0" Radius Black;
Arrow 6UC-1L - 9.6" 45°;

017

SIGN DETAILS

NO SCALE

SD-2

LAST REVISION 09-30-13 | DATE PLOTTED => 01-APR-2014 | TIME PLOTTED => 12:30

BORDER LAST REVISED 7/2/2010 | USERNAME => s119140 | DGN FILE => 729500ob002.dgn | RELATIVE BORDER SCALE IS IN INCHES 0 1 2 3 | UNIT 1877 | PROJECT NUMBER & PHASE 07130000081

Dist	COUNTY	ROUTE	POST MILES TOTAL PROJECT	SHEET No.	TOTAL SHEETS
07	LA	10	41.7/48.3	40	131

REGISTERED CIVIL ENGINEER 1/15/14 DATE

2-10-14
PLANS APPROVAL DATE

REGISTERED PROFESSIONAL ENGINEER EDGAR HERRERA No. C67603 Exp. 6/30/15 CIVIL STATE OF CALIFORNIA

THE STATE OF CALIFORNIA OR ITS OFFICERS OR AGENTS SHALL NOT BE RESPONSIBLE FOR THE ACCURACY OR COMPLETENESS OF SCANNED COPIES OF THIS PLAN SHEET.

OVERHEAD SIGN QUANTITIES

SIGN No.	POST MILE	DIR	SIGN CODE	SIGN SIZE L X D	MATERIAL SUMMARY: SINGLE FACED	BACKGROUND: SHEETING COLOR	BACKGROUND: RETROREFLECTIVE ASTM TYPE	LEGEND: SHEETING COLOR	LEGEND: RETROREFLECTIVE ASTM TYPE	GRAFFITI FILM: PREMIUM	FURNISH: FURNISH LAMINATED PANEL SIGN (1"- TYPE A) SQFT	INSTALL: SIGN PANEL ON EXISTING FRAME SQFT	REMARKS
1A	42.4	FEBT	R3-13 (MOD)	192 x 100	X	WHITE	XI	BLACK	XI	X	133.3	133.3	HOV
1B	44.0	FWBT	R3-13 (MOD)	192 x 100	X	WHITE	XI	BLACK	XI	X	133.3	133.3	HOV
1C	44.5	FEBT	R3-13 (MOD)	192 x 100	X	WHITE	XI	BLACK	XI	X	133.3	133.3	HOV
1D	45.9	FWBT	R3-13 (MOD)	192 x 100	X	WHITE	XI	BLACK	XI	X	133.3	133.3	HOV
1E	47.0	FEBT	R3-13 (MOD)	192 x 100	X	WHITE	XI	BLACK	XI	X	133.3	133.3	HOV
1F	47.2	FWBT	R3-13 (MOD)	192 x 100	X	WHITE	XI	BLACK	XI	X	133.3	133.3	HOV
SHEET TOTAL											799.8	799.8	
PROJECT TOTAL											799.8	799.8	

LEGEND: B = BLACK ; Y = YELLOW ; R = RED ; W = WHITE ; G = GREEN ; BLU = BLUE ; BRW = BROWN ; PANTONE = PA

* = SEE STRUCTURE DETAILS SHEETS

SIGN QUANTITIES

SQ-1

STATE OF CALIFORNIA - DEPARTMENT OF TRANSPORTATION
Caltrans® TRAFFIC DESIGN

FUNCTIONAL SUPERVISOR: GRISH BIGLARIAN
CALCULATED-DESIGNED BY: EDGAR HERRERA
CHECKED BY: VINCENT NGUYEN
REVISED BY
DATE REVISED

LAST REVISION 09-30-13
DATE PLOTTED => 01-APR-2014
TIME PLOTTED => 12:30

Dist	COUNTY	ROUTE	POST MILES TOTAL PROJECT	SHEET No.	TOTAL SHEETS
07	LA	10	41.7/48.3	41	131

1/15/14
REGISTERED CIVIL ENGINEER DATE

2-10-14
PLANS APPROVAL DATE

REGISTERED PROFESSIONAL ENGINEER
EDGAR HERRERA
No. C67603
Exp. 6/30/15
CIVIL
STATE OF CALIFORNIA

THE STATE OF CALIFORNIA OR ITS OFFICERS OR AGENTS SHALL NOT BE RESPONSIBLE FOR THE ACCURACY OR COMPLETENESS OF SCANNED COPIES OF THIS PLAN SHEET.

ROADSIDE SIGNS

SIGN No	POST MILE	DIR	SIGN CODE	PANEL SIZE (in X in)	SIGN FACING MATERIAL								FURNISH SINGLE SHEET ALUMINUM SIGN (SQFT)				ROADSIDE SIGN (WOOD)	INSTALL SIGN (STRAP & SADDLE BRACKET METHOD)	INSTALL ROADSIDE SIGN PANEL ON EXISTING POST	REMARKS
					SINGLE FACED	DOUBLE FACED	BACKGROUND		LEGEND			GRAFFITI FILM PREMIUM	UNFRAMED ALUMINUM		FRAMED ALUMINUM		TWO POST			
							SHEETING COLOR	RETRO - REFLECTIVE ASTM TYPE	SHEETING COLOR	RETRO - REFLECTIVE ASTM TYPE	NON - REFLECTIVE		0.063"	0.080"	0.063"	0.080"	EA	EA	EA	
001	42.34	FEBT	R93-2(CA)	36" X 84"	X		W	III	B	III		X	21.0						1	
002	42.40	FEBT	SR50-2(CA)	36" X 78"	X		W	III	B	III		X	19.5						1	$341 FINE
003	42.58	FEBT	R86-2(CA)	36" X 66"	X		W	III	B	III		X	16.5						1	
004	42.73	FEBT	R93-2(CA)	36" X 84"	X		W	III	B	III		X	21.0						1	
005	42.79	FEBT	G87(CA)	132" X 54"	X		G	III	W	III		X				49.5	1			
006	42.87	FWBT	R84-1(CA)	36" X 60"	X		W	III	B	III		X	15.0						1	
007	43.10	FEBT	R86-2(CA)	36" X 66"	X		W	III	B	III		X	16.5						1	
008	43.17	FWBT	R93-2(CA)	36" X 84"	X		W	III	B	III		X	21.0						1	
009	43.26	FEBT	R93-2(CA)	36" X 84"	X		W	III	B	III		X	21.0						1	
010	43.31	FWBT	R86-2(CA)	36" X 66"	X		W	III	B	III		X	16.5						1	
011	43.36	FWBT	R84-2(CA)	36" X 66"	X		W	III	B	III		X	16.5						1	
012	43.65	FWBT	R93-2(CA)	36" X 84"	X		W	III	B	III		X	21.0						1	
013	43.75	FEBT	R86-2(CA)	36" X 66"	X		W	III	B	III		X	16.5						1	
014	43.80	FWBT	R86-2(CA)	36" X 66"	X		W	III	B	III		X	16.5						1	
015	43.90	FEBT	R93-2(CA)	36" X 84"	X		W	III	B	III		X	21.0						1	
016	43.91	FWBT	SR50-2(CA)	36" X 78"	X		W	III	B	III		X	19.5						1	$341 FINE
017	44.02	FWBT	G85-7(CA)	36" X 84"	X		G	III	W	III		X	21.0					1		ON OH SIGN POLE ON MEDIAN
018	44.27	FEBT	G86-9(CA)	36" X 72"	X		G	III	W	III		X	18.0						1	
019	44.27	FWBT	G86-9(CA)	36" X 84"	X		G	III	W	III		X	21.0						1	
020	44.33	FWBT	R93-2(CA)	36" X 84"	X		W	III	B	III		X	21.0						1	
021	44.48	FWBT	R86-2(CA)	36" X 66"	X		W	III	B	III		X	16.5						1	
022	44.02	FEBT	G85-7(CA)	36" X 72"	X		G	III	W	III		X	18.0					1		ON OH SIGN POLE ON MEDIAN
023	44.51	FEBT	SR50-2(CA)	36" X 78"	X		W	III	B	III		X	19.5						1	$341 FINE
024	44.74	FEBT	R86-2(CA)	36" X 66"	X		W	III	B	III		X	16.5						1	
025	44.90	FEBT	R93-2(CA)	36" X 84"	X		W	III	B	III		X	21.0						1	
026	44.98	FWBT	R93-2(CA)	36" X 84"	X		W	III	B	III		X	21.0						1	
027	45.13	FWBT	R86-2(CA)	36" X 66"	X		W	III	B	III		X	16.5						1	
028	45.21	FEBT	R86-2(CA)	36" X 66"	X		W	III	B	III		X	16.5						1	
	SUB TOTAL												505.5			49.5	1	2	25	

SIGN QUANTITIES
SQ-2

REVISED BY | DATE REVISED
CALCULATED-DESIGNED BY: EDGAR HERRERA
CHECKED BY: VINCENT NGUYEN
FUNCTIONAL SUPERVISOR: GRISH BIGLARIAN
STATE OF CALIFORNIA - DEPARTMENT OF TRANSPORTATION
Caltrans® TRAFFIC DESIGN

LAST REVISION | DATE PLOTTED => 01-APR-2014
09-30-13 | TIME PLOTTED => 12:30

BORDER LAST REVISED 7/2/2010
USERNAME => s119140
DGN FILE => 729500od002.dgn
RELATIVE BORDER SCALE IS IN INCHES 0 1 2 3
UNIT 1877
PROJECT NUMBER & PHASE 07130000081

Dist	COUNTY	ROUTE	POST MILES TOTAL PROJECT	SHEET No.	TOTAL SHEETS
07	LA	10	41.7/48.3	42	131

1/15/14
REGISTERED CIVIL ENGINEER DATE

2-10-14
PLANS APPROVAL DATE

REGISTERED PROFESSIONAL ENGINEER
EDGAR HERRERA
No. C67603
Exp. 6/30/15
CIVIL
STATE OF CALIFORNIA

THE STATE OF CALIFORNIA OR ITS OFFICERS OR AGENTS SHALL NOT BE RESPONSIBLE FOR THE ACCURACY OR COMPLETENESS OF SCANNED COPIES OF THIS PLAN SHEET.

ROADSIDE SIGNS

SIGN No	POST MILE	DIR	SIGN CODE	PANEL SIZE (in X in)	SIGN FACING MATERIAL								FURNISH SINGLE SHEET ALUMINUM SIGN (SQFT)				ROADSIDE SIGN (WOOD)	INSTALL SIGN (STRAP & SADDLE BRACKET METHOD)	INSTALL ROADSIDE SIGN PANEL ON EXISTING POST	REMARKS
					SINGLE FACED	DOUBLE FACED	BACKGROUND		LEGEND			GRAFFITI FILM PREMIUM	UNFRAMED ALUMINUM		FRAMED ALUMINUM		TWO POST			
							SHEETING COLOR	RETRO - REFLECTIVE ASTM TYPE	SHEETING COLOR	RETRO - REFLECTIVE ASTM TYPE	NON - REFLECTIVE		0.063"	0.080"	0.063"	0.080"	EA	EA	EA	
029	45.38	FEBT	R93-2(CA)	36" X 84"	X		W	III	B	III		X	21.0						1	
030	45.53	FWBT	R93-2(CA)	36" X 84"	X		W	III	B	III		X	21.0						1	
031	45.67	FWBT	R86-2(CA)	36" X 66"	X		W	III	B	III		X	16.5						1	
032	45.78	FWBT	SR50-2(CA)	36" X 78"	X		W	III	B	III		X	19.5						1	$341 FINE
033	45.87	FEBT	R86-2(CA)	36" X 66"	X		W	III	B	III		X	16.5						1	
034	45.90	FWBT	G85-7(CA)	36" X 60"	X		G	III	W	III		X	15.0					1		ON OH SIGN POLE ON MEDIAN
035	46.05	FWBT	R93-2(CA)	36" X 84"	X		W	III	B	III		X	21.0						1	
036	46.15	FWBT	G86-8(CA)	36" X 60"	X		G	III	W	III		X	15.0						1	
037	46.32	FEBT	G77(CA)	114" X 72"	X		G	III	W	III		X				57.0	1			
038	46.38	FWBT	R93-2(CA)	36" X 84"	X		W	III	B	III		X	21.0						1	
039	46.54	FEBT	R86-2(CA)	36" X 66"	X		W	III	B	III		X	16.5						1	
040	46.54	FEBT	R86-2(CA)	36" X 66"	X		W	III	B	III		X	16.5						1	
041	46.70	FEBT	R93-2(CA)	36" X 84"	X		W	III	B	III		X	21.0						1	
042	46.76	FEBT	G86-9(CA)	36" X 90"	X		G	III	W	III		X	22.5						1	
043	46.86	FWBT	R93-2(CA)	36" X 84"	X		W	III	B	III		X	21.0						1	
044	47.00	FEBT	G85-7(CA)	36" X 90"	X		G	III	W	III		X	22.5					1		ON OH SIGN POLE ON MEDIAN
045	47.00	FWBT	R86-2(CA)	36" X 66"	X		W	III	B	III		X	16.5					1		
046	47.12	FEBT	SR50-2(CA)	36" X 78"	X		W	III	B	III		X	19.5						1	$341 FINE, BACK TO BACK
047	47.12	FWBT	SR50-2(CA)	36" X 78"	X		W	III	B	III		X	19.5						1	
048	47.23	FWBT	G85-7(CA)	36" X 84"	X		G	III	W	III		X	21.0					1		ON OH SIGN POLE ON MEDIAN
049	47.23	FEBT	R86-2(CA)	36" X 66"	X		W	III	B	III		X	16.5						1	
050	47.39	FEBT	R93-2(CA)	36" X 84"	X		W	III	B	III		X	21.0						1	
051	47.52	FWBT	G86-9(CA)	36" X 84"	X		G	III	W	III		X	21.0						1	
052	47.71	FEBT	R86-2(CA)	36" X 66"	X		W	III	B	III		X	16.5						1	
053	47.73	FWBT	R93-2(CA)	36" X 84"	X		W	III	B	III		X	21.0						1	
054	47.89	FEBT	R93-2(CA)	36" X 84"	X		W	III	B	III		X	21.0						1	
055	47.98	FWBT	R93-2(CA)	36" X 84"	X		W	III	B	III		X	21.0						1	
	SUB TOTAL												501.0			57.0	1	4	22	
	GRAND TOTAL												1006.5			106.5	2	6	47	

SIGN QUANTITIES

SQ-3

STATE OF CALIFORNIA - DEPARTMENT OF TRANSPORTATION
TRAFFIC DESIGN
FUNCTIONAL SUPERVISOR: GRISH BIGLARIAN
CALCULATED-DESIGNED BY: EDGAR HERRERA
CHECKED BY: VINCENT NGUYEN
REVISED BY
DATE REVISED

LAST REVISION: DATE PLOTTED => 01-APR-2014
09-30-13 TIME PLOTTED => 12:30

Dist	COUNTY	ROUTE	POST MILES TOTAL PROJECT	SHEET No.	TOTAL SHEETS
07	LA	10	41.7/48.3	43	131

REGISTERED CIVIL ENGINEER — 1-16-14 DATE

2-10-14 PLANS APPROVAL DATE

BARKEF KARAPETIAN No. C55718 Exp. 12/31/14 CIVIL — REGISTERED PROFESSIONAL ENGINEER — STATE OF CALIFORNIA

THE STATE OF CALIFORNIA OR ITS OFFICERS OR AGENTS SHALL NOT BE RESPONSIBLE FOR THE ACCURACY OR COMPLETENESS OF SCANNED COPIES OF THIS PLAN SHEET.

SUMMARY OF ASPHALT PAVEMENT QUANTITIES

No.	Fwy ELEMENT	NAME AND LIMITS OF FACILITY	POST MILE LIMITS FROM	POST MILE LIMITS TO	COLD PLANE ASPHALT CONCRETE PAVEMENT SQYD	REPLACE BASE CY	TACK COAT TON	HOT MIX ASPHALT, SUPERPAVE (TYPE A) TON	ASPHALT RUBBER STRESS ABSORBING MEMBRANE INTERLAYER (SAMI-R) SQYD	RUBBERIZED HOT MIX ASPHALT, SUPERPAVE (GAP GRADED) TON
1	I-10 MAINLINE	MAINLINE Lt Shld, FROM ORANGE GROVE Ave TO SB Co LINE	45.86	48.28	22,407	90	18			2,118
2		MAINLINE Rt Shld, FROM ORANGE GROVE Ave TO SB Co LINE	45.86	48.28	26,906	108	22			2,543
3		HOV LANES, FROM MOUNTAIN Ave Ped UC TO SB Co LINE	47.25	48.28	15,895	63	13	1,001	15,895	1,502
4		MIXED FLOW LANES, FROM MOUNTAIN Ave Ped UC TO SB Co LINE	47.25	48.28	50,863	203	41	3,204	50,863	4,807
5	I-10 ON/OFF-RAMPS	WB ON-RAMP FROM FAIRPLEX Dr			5,500	28	4			693
6		EB OFF-RAMP TO FAIRPLEX Dr			2,250	11	2			284
7		EB ON-RAMP FROM FAIRPLEX Dr			4,100	20	3			517
8		WB OFF-RAMP TO FAIRPLEX Dr			1,500	8	1			189
9		WB ON-RAMP FROM DUDLEY St			10,700	54	9			1,348
10		EB OFF-RAMP TO DUDLEY St			2,550	13	2			321
11		EB ON-RAMP FROM DUDLEY St			3,150	16	3			397
12		WB OFF-RAMP TO DUDLEY St			3,200	16	3			403
13		WB ON-RAMP FROM WHITE Ave			3,000	15	2			378
14		EB OFF-RAMP TO WHITE Ave			2,590	13	2			326
15		WB ON-RAMP FROM GAREY Ave			3,730	19	3			470
16		EB OFF-RAMP TO GAREY Ave			1,870	9	1			236
17		EB ON-RAMP FROM ORANGE GROVE Ave			4,800	24	4			605
18		WB OFF-RAMP TO ORANGE GROVE Ave			1,915	10	2			241
19		WB ON-RAMP FROM TOWNE Ave			1,950	10	2			246
20		EB OFF-RAMP TO TOWNE Ave			1,680	8	1			212
21		EB ON-RAMP FROM TOWNE Ave			4,000	20	3			504
22		WB OFF-RAMP TO TOWNE Ave			2,200	11	2			277
23		WB ON-RAMP FROM INDIAN HILL Blvd			5,100	26	4			643
24		EB OFF-RAMP TO INDIAN HILL Blvd			2,600	13	2			328
25		EB ON-RAMP FROM INDIAN HILL Blvd			4,300	22	3			542
26		WB OFF-RAMP TO INDIAN HILL Blvd			1,980	10	2			249
27	GORES	11 OFF-RAMP GORES			3,800		3			359
28		11 ON-RAMP GORES			8,500		7			803
29	CONNECTORS	AREA OF LANE Lt Shld Rt Shld TOTAL								
30		WB10 TO SB57 Conn N/A + 2,500 + 2,600 = 5,100			5,100	26	3			643
31		WB10 TO NB57 Conn N/A + 1,700 + 5,600 = 7,300			7,300	37	6			920
32		EB10 TO NB57 Conn N/A + 1,400 + 1,400 = 2,800			2,800	14	2			353
33		SB57 TO EB10 Conn N/A + 1,620 + 1,890 = 3,510			3,510	20	3			442
34		NB57 TO WB10 Conn N/A + 2,600 + 2,600 = 5,200			5,200	26	4			655
35		NB57 TO EB10 Conn 3,600 + 1,700 + 5,600 = 10,900			10,900	55	9			1373
				TOTAL	237,846	1018	191	4,205	66,758	25,927

ABBREVIATIONS:

Aux AUXILIARY

SUMMARY OF QUANTITIES

Q-1

REVISED BY | DATE REVISED

CALCULATED-DESIGNED BY: MOHAMMAD MOHSENZADEH

CHECKED BY: BARKEF KARAPETIAN

FUNCTIONAL SUPERVISOR: REFUGIO DOMINGUEZ

STATE OF CALIFORNIA - DEPARTMENT OF TRANSPORTATION

DESIGN

Caltrans

LAST REVISION | DATE PLOTTED => 01-APR-2014 | TIME PLOTTED => 12:30 | 00-00-00

BORDER LAST REVISED 7/2/2010

USERNAME => s119140
DGN FILE => 729500pq001.dgn

RELATIVE BORDER SCALE IS IN INCHES 0 1 2 3

UNIT 1819

PROJECT NUMBER & PHASE 07130000081

Dist	COUNTY	ROUTE	POST MILES TOTAL PROJECT	SHEET No.	TOTAL SHEETS
07	LA	10	41.7/48.3	44	131

Karapetian 1-16-14
REGISTERED CIVIL ENGINEER DATE

2-10-14
PLANS APPROVAL DATE

REGISTERED PROFESSIONAL ENGINEER
BARKEF KARAPETIAN
No. C55718
Exp. 12/31/14
CIVIL
STATE OF CALIFORNIA

THE STATE OF CALIFORNIA OR ITS OFFICERS OR AGENTS SHALL NOT BE RESPONSIBLE FOR THE ACCURACY OR COMPLETENESS OF SCANNED COPIES OF THIS PLAN SHEET.

GRINDING QUANTITIES

No.		LOCATION AND LIMITS OF GRINDING	GRIND Exist CONCRETE PAVEMENT	SPALL REPAIR (POLYESTER CONCRETE)
			SQYD	SQYD
1	MAINLINE	Lt Shlds, FROM FAIRPLEX Dr TO GAREY Ave	19,279	6
2	MAINLINE	Rt Shlds, FROM FAIRPLEX Dr TO GAREY Ave	23,369	7
3	MAINLINE	HOV LANES, FROM FAIRPLEX Dr TO GAREY Ave	35,053	11
4	MAINLINE	MIXED FLOW LANES, FROM FAIRPLEX Dr TO GAREY Ave	109,834	33
5	MAINLINE	EB AUXILIARY Ln FROM FAIRPLEX Dr TO DUDLEY St	1,120	1
6	CONNECTORS	C-1, FROM WB10 JUNCTION TO MERGE WITH SB57	9,220	3
7	CONNECTORS	C-4, FROM C-1 JUNCTION TO MERGE WITH NB57	3,600	1
8	CONNECTORS	G, FROM EB10 JUNCTION TO MERGE WITH C-4 Conn	4,930	1
9	CONNECTORS	C-2, FROM SB57 JUNCTION TO MERGE WITH EB10	11,120	3
10	CONNECTORS	B, FROM NB57 JUNCTION TO MERGE WITH WB10	9,000	3
11	CONNECTORS	C-3, FROM Conn B JUNCTION TO MERGE WITH EB10	7,200	3
		TOTAL	233,725	72

SLAB REPLACEMENT QUANTITIES

No.	LOCATION/LIMITS OF CONCRETE SLAB REPLACEMENT	NUMBER OF SLABS						INDIVIDUAL SLAB REPLACEMENT (RSC)	(N) BASE BOND BREAKER	REPLACE BASE	DRILL AND BOND (DOWEL BAR)
		LANE NUMBER					TOTAL				
		1	2	3	4	Aux		CY	SQYD	CY	EA
1	EB Rte 10, FROM Rte 57 Sep TO FAIRPLEX Dr	5	1	1	60	10	77	370	1,460	8	1,240
2	EB Rte 10, FROM FAIRPLEX Dr TO DUDLEY St	5	1	1	10	-	17	82	325	2	272
3	EB Rte 10, FROM DUDLEY St TO WHITE Ave	5	1	1	15	-	22	105	420	3	352
4	EB Rte 10, FROM WHITE Ave TO GAREY Ave	5	1	1	10	-	17	82	325	2	272
5	WB Rte 10, FROM GAREY Ave TO WHITE Ave	5	1	1	10	-	17	82	325	3	272
6	WB Rte 10, FROM WHITE Ave TO DUDLEY St	5	1	1	10	-	17	82	325	2	272
7	WB Rte 10, FROM DUDLEY Ave TO FAIRPLEX Dr	5	1	1	10	-	17	82	325	3	272
8	WB Rte 10, FROM FAIRPLEX Dr TO Rte 57 Sep	5	1	1	10	-	17	82	325	2	272
9	Conn C-1 (WB Rte 10 TO SB Rte 57 Conn)	10	-	-	-	-	10	45	180	1	160
10	Conn C-4 (WB Rte 10 TO NB Rte 57 Conn)	10	-	-	-	-	10	45	180	1	160
11	Conn G (EB Ret 10 TO NB Rte 57 Conn)	10	-	-	-	-	10	45	180	1	160
12	Conn C-2 (SB Rte 57 TO EB Rte 10 Conn)	5	-	-	-	-	5	25	100	40	80
13	Conn B (NB Rte 57 TO WB Rte 10 Conn)	5	-	-	-	-	5	25	100	1	80
14	Conn C-3 (NB Rte 57 TO EB Rte 10 Conn)	5	-	-	-	-	5	25	100	1	80
	TOTAL						246	1,177	4,670	70	3,944

(N): NOT A PAY ITEM. FOR INFORMATION ONLY.

SUMMARY OF QUANTITIES

Q-2

REVISED BY	DATE REVISED

CALCULATED-DESIGNED BY: MOHAMMAD MOHSENZADEH
CHECKED BY: BARKEF KARAPETIAN
FUNCTIONAL SUPERVISOR: REFUGIO DOMINGUEZ
STATE OF CALIFORNIA - DEPARTMENT OF TRANSPORTATION
Caltrans®
DESIGN

LAST REVISION DATE PLOTTED => 01-APR-2014
00-00-00 TIME PLOTTED => 12:30

BORDER LAST REVISED 7/2/2010
USERNAME => s119140
DGN FILE => 729500pq002.dgn
RELATIVE BORDER SCALE IS IN INCHES 0 1 2 3
UNIT 1819
PROJECT NUMBER & PHASE 07130000081

Dist	COUNTY	ROUTE	POST MILES TOTAL PROJECT	SHEET No.	TOTAL SHEETS
07	LA	10	41.7/48.3	45	131

Karapetian 1-16-14
REGISTERED CIVIL ENGINEER DATE

2-10-14
PLANS APPROVAL DATE

REGISTERED PROFESSIONAL ENGINEER
BARKEF KARAPETIAN
No. C55718
Exp. 12/31/14
CIVIL
STATE OF CALIFORNIA

THE STATE OF CALIFORNIA OR ITS OFFICERS OR AGENTS SHALL NOT BE RESPONSIBLE FOR THE ACCURACY OR COMPLETENESS OF SCANNED COPIES OF THIS PLAN SHEET.

TABLE 1
MIDWEST GUARDRAIL SYSTEM RELATED QUANTITIES
(SEE NOTES 4 & 5 ON SHEET L-1))

No.	PM	LOCATION	REMOVE GUARDRAIL (LF)	MIDWEST GUARDRAIL SYSTEM (LF)	CASE No. SHEET C-13	ALTERNATIVE TERMINAL SYSTEM		END ANCHOR ASSEMBLY (TYPE SFT) (EA)	TRANSITION RAILING (TYPE WB-31) (EA)	END CAP (TYPE TC) (EA)
						IN-LINE (EA)	FLARED (EA)			
1	42.45	EB Rte 10 & Rte 71 CONNECTOR JUNCTION	862	850	5			2		
2	42.58	WB Rte 10 TO SB Rte 57 Conn	1,262	1,225	SIMILAR TO 3			1		
3	42.59	WEST OF EB Rte 10 & Conn C-3 MERGE	62	25	1		1	1		
4	42.72	WEST OF EB Rte 10 & Conn C-2 MERGE	87	50	3		1	1		
5	42.88	EAST OF EB Rte 10 & Conn C-2 MERGE	87	25	2	1		1	1	1
6	43.48	Rt SIDE OF EB Rte 10 OFF RAMP TO FAIRPLEX	637	600	1		1	1		
7	43.54	Lt SIDE OF EB Rte 10 OFF RAMP TO FAIRPLEX	502	465	4	1		1		
8	43.61	WB Rte 10 ON-RAMP FROM FAIRPLEX (RAMP F-4)	502	465	3		1	1		
9	43.68	EB Rte 10 ON-RAMP FROM FAIRPLEX (RAMP F-2)	237	200	1	1		1		
10	43.74	LEFT SIDE OF WB Rte 10 OFF-RAMP TO FAIRPLEX	157	120	3			1		
11	43.89	WB Rte 10 Aux Ln FROM FAIRPLEX TO DUDLEY	150	113	1		1	1		
12	43.96	WB Rte 10 Aux Ln FROM FAIRPLEX TO DUDLEY	117	80	1		1	1		
13	46.01	WB Rte 10 OFF-RAMP TO ORANGE GROVE (RAMP O-1)	227	165	1		1	N/A	1	1
14	47.85	EB Rte 10 ON-RAMP FROM INDIAN HILL (RAMP H-4)	107	45	1		1	N/A	1	1
15	47.98	EB Rte 10 ON-RAMP FROM INDIAN HILL (RAMP H-4)	167	105	1		1	N/A	1	1
16	42.69	Rt SIDE OF Conn C-2 BEFORE MERGING EB Rte 10	120	83	1		1	1		
		TOTAL	5,283	4,616		3	10	14	4	4

NOTES: (THIS SHEET ONLY):

1. MIDWEST GUARDRAIL SYSTEMS MUST BE CONSTRUCTED AT THE Exist LOCATIONS AND LAYOUTS AS THE EXISTING GUARDRAIL.

SUMMARY OF QUANTITIES

No.	DESCRIPTION OF WORK ITEM	SHEET ID & No.	LOCATION	QUANTITY	UNIT
1	TEMPORARY DRAINAGE INLET PROTECTION	-	MAINLINE & RAMPS	160	EA
2	REMOVE CRASH CUSHION	L-2		15	EA
3	CRASH CUSHION SCI 100 GM	L-2		12	EA
4	CRASH CUSHION COMPRESSOR	L-2		3	EA
5	MINOR CONCRETE (CURB, SIDEWALK AND CURB RAMP)	C-3 TO C-11	CURB RAMP LOCATIONS	51	CY
6	TEMPORARY CRASH CUSHION MODULE	L-1	EB10/SR71 JUNCTION, AND AT EB Rte 10 FAIRPLEX OFF-RAMP	42	EA
7	TEMPORARY RAILING (TYPE K)	L-2 & C-13		6,000	LF
8	REMOVE ASPHALT CONCRETE DIKE	L-1	SEE NOTE 5 ON SHEET L-1	1,265	LF
9	PLACE HOT MIX ASPHALT DIKE (TYPE F)	L-1	SEE NOTE 5 ON SHEET L-1	1,265	LF
10	REMOVE ASPHALT CONCRETE PAVEMENT (SQFT)	C-3 & C-4	SIDEWALKS ALONG FAIRPLEX & DUDLEY OC BRIDGES	540	SQFT
11	RELOCATE ROADSIDE SIGN (WOOD POST)	C-5	WB ON-RAMP FROM DUDLEY	1	EA
12	REMOVE CONCRETE (CURB, GUTTER AND SIDEWALK)	C-3 TO C-11	AT CURB RAMPS AND SIDEWALKS	21	CY
13	DETECTABLE WARNING SURFACE	C-3 TO C-11	AT CURB RAMPS	420	SQFT
14	REPLACE BASE	Q-1 & Q-2		1,088	CY
15	TREATED WOOD WASTE	L-1	GUARDRAIL POSTS	62,000	LB
16	VEGETATION CONTROL (MINOR CONCRETE)	L-1	ALONG MIDWEST GUARDRAIL SYSTEM	2,000	SQYD
17	REMOVE YELLOW THERMOPLASTIC TRAFFIC STRIPE (HAZARDOUS WASTE)	L-1	EB & WB HOV BUFFERS FROM GAREY Ave UC TO MOUNTAIN Ave Ped UC	28,900	LF
18	CRACK TREATMENT	L-1	Conc pvmt FROM 10/57 SEPARATION TO GAREY Ave UC	36	LNMI
19	RISER SPRINKLER ASSEMBLY	C-3 & C-4	ON FAIRPLEX Dr & DUDLEY St	6	EA
20	MISCELLANEOUS IRON AND STEEL	C-14	AT INDIAN HILL Blvd & WB OFF-RAMP INTERSECTION	1,300	LB
21	CHANNELIZER (SURFACE MOUNTED)	C-13	AT MBGR REMOVAL & MGS CONSTRUCTION LOCATIONS	136	EA

SUMMARY OF QUANTITIES

Q-3

REVISED BY | DATE REVISED
MOHAMMAD MOHSENZADEH | BARKEF KARAPETIAN
CALCULATED-DESIGNED BY | CHECKED
FUNCTIONAL SUPERVISOR: REFUGIO DOMINGUEZ
STATE OF CALIFORNIA - DEPARTMENT OF TRANSPORTATION
Caltrans®
DESIGN

LAST REVISION 00-00-00 | DATE PLOTTED => 01-APR-2014 | TIME PLOTTED => 12:30

BORDER LAST REVISED 7/2/2010 | USERNAME => s119140 | DGN FILE => 729500pa003.dgn | RELATIVE BORDER SCALE IS IN INCHES 0 1 2 3 | UNIT 1819 | PROJECT NUMBER & PHASE 07130000081

Dist	COUNTY	ROUTE	POST MILES TOTAL PROJECT	SHEET No.	TOTAL SHEETS
07	LA	10	41.7/48.3	46	131

LICENSED LANDSCAPE ARCHITECT

2-10-14
PLANS APPROVAL DATE

LICENSED LANDSCAPE ARCHITECT
GENE KIMMEL
NO. 5704
Signature
10-31-14
Renewal Date
01-16-14
Date
STATE OF CALIFORNIA

THE STATE OF CALIFORNIA OR ITS OFFICERS OR AGENTS SHALL NOT BE RESPONSIBLE FOR THE ACCURACY OR COMPLETENESS OF SCANNED COPIES OF THIS PLAN SHEET.

IRRIGATION LEGEND

SYMBOL	DESCRIPTION	SPRAY PATTERN	OPERATING PRESSURE (psi)	PRESSURE COMPENSATING	PLUS/MINUS 5% DISCHARGE GALLONS PER MINUTE (GPM)	PLUS/MINUS 5% DISCHARGE GALLONS PER HOUR (GPH)	PLUS/MINUS 5% RADIUS (ft)	PLUS/MINUS 5% WIDTH x LENGTH (ft)	FLOW SHUTOFF DEVICE	SPRINKLER ASSEMBLY RISER ④ TYPE	RISER MATERIAL PLASTIC	RISER MATERIAL GALVANIZED	RISER SIZE (IPS INCH)	RISER HEIGHT (INCH)	POP-UP TYPE	POP-UP INLET CONNECTION (NPT INCH)	POP-UP SPRINKLER PROTECTOR (TYPE)	TREE WELL HEIGHT (INCH)	REMARKS
◎	RISER SPRINKLER ASSEMBLY	P	35	—	1.8	—	36′	—	—	VI	X	—	¾"	18"	—	—	—	—	

X IN BOX DENOTES REQUIREMENT

APPLICABLE WHEN CIRCLED BELOW:

1 - SEE SPECIAL PROVISIONS.
2 - IF A PRESSURE COMPENSATING DEVICE IS SPECIFIED, THE DISCHARGE AND RADII SHOWN REFLECT ITS USE.
3 - VINYL-COATED CAST IRON HOUSING.
④ - SWING JOINTS REQUIRED ADJACENT TO SHOULDERS, CURBS, SIDEWALKS, AND DIKES.
5 - UNLESS OTHERWISE SHOWN ON PLANS.

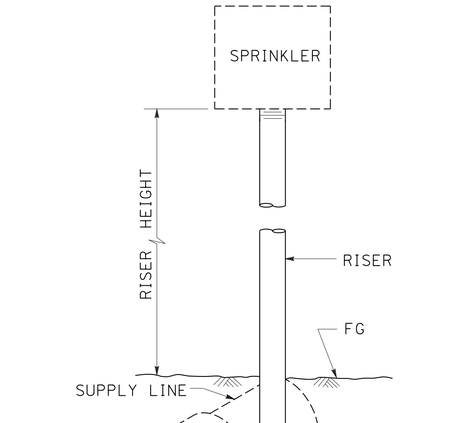

ELEVATION

RISER SPRINKLER ASSEMBLY TYPE VI

LANDSCAPE DETAILS

LD-1

CALCULATED-DESIGNED BY	CHECKED BY	SENIOR LANDSCAPE ARCHITECT	REVISED BY	DATE REVISED
RICH KESTER	GENE KIMMEL	PATTY WATANABE		

STATE OF CALIFORNIA - DEPARTMENT OF TRANSPORTATION
Caltrans® LANDSCAPE ARCHITECTURE

LAST REVISION DATE PLOTTED => 01-APR-2014
00-00-00 TIME PLOTTED => 12:30

BORDER LAST REVISED 7/2/2010 | USERNAME => s119140 | DGN FILE => 729500sy001.dgn | RELATIVE BORDER SCALE IS IN INCHES 0 1 2 3 | UNIT 0000 | PROJECT NUMBER & PHASE 07130000081

Dist	COUNTY	ROUTE	POST MILES TOTAL PROJECT	SHEET No.	TOTAL SHEETS
07	LA	10	41.7/48.3	47	131

1/17/14
REGISTERED ELECT ENGINEER DATE

2-10-14
PLANS APPROVAL DATE

REGISTERED PROFESSIONAL ENGINEER
C. BURCIAGA
No. E015302
Exp. 3/31/15
ELECT
STATE OF CALIFORNIA

THE STATE OF CALIFORNIA OR ITS OFFICERS OR AGENTS SHALL NOT BE RESPONSIBLE FOR THE ACCURACY OR COMPLETENESS OF SCANNED COPIES OF THIS PLAN SHEET.

NOTES: (SHEETS E-1 TO E-6)

1. NEW STUBOUTS SHALL BE 2". ABANDON EXISTING STUBOUTS.
2. PRIOR TO CONSTRUCTION, THE CONTRACTOR MUST LOCATE EXISTING INDUCTIVE LOOP DETECTORS.
3. NEW INDUCTIVE LOOP DETECTORS MUST BE SPLICED TO EXISTING DLC IN ADJACENT PULL BOX.
4. TAG EXISTING DLC IN ADJACENT PULL BOX AND AT CONTROLLER CABINET.

MODIFY TRAFFIC MONITORING STATION (ROUTE 10)

Approx PM	LOCATION	SEE DETAIL "A" THIS SHEET FOR TYPICAL LOCATION OF LOOP DETECTORS										No. OF STUBOUTS (REPLACE)
		1	2	3	4	5	6	7	8	9	10	
44.72	WEST OF CLEVELAND St Ped UC	X	X	X	X	X	X	X	X	X	X	2
45.27	WEST OF WHITE Ave St UC	X	X	X	X	X	X	X	X	X	X	2
46.98	200' WEST OF MOUNTAIN Ave PUC	X	X	X	X	X	X	X	X	X	X	2
47.30	MOUNTAIN Ave PUC	X	X	X	X	X	X	X	X	X	X	2
48.21	WEST OF MILLS Ave UC	X	X	X	X	X	X	X	X	X	X	2

X - INSTALL TYPE E INDUCTIVE LOOP DETECTOR. ABANDON EXISTING INDUCTIVE LOOP DETECTOR AT SAME LOCATION.

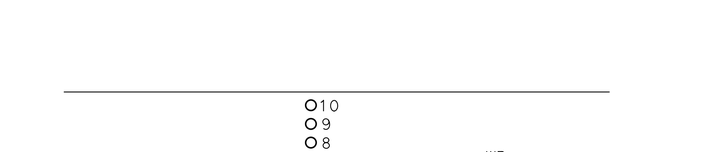

DETAIL "A"

TYPICAL LOOP DETECTOR INSTALLATION FOR MAINLINE

QUINCIE TRAN — CALCULATED-DESIGNED BY
CECILIO BURCIAGA — CHECKED BY
YI TSAU — FUNCTIONAL SUPERVISOR
STATE OF CALIFORNIA - DEPARTMENT OF TRANSPORTATION
Caltrans® TRAFFIC DESIGN
REVISED BY — DATE REVISED

MODIFY TRAFFIC MONITORING STATION

NO SCALE

E-1

LAST REVISION 10-22-13
DATE PLOTTED => 01-APR-2014
TIME PLOTTED => 12:30

BORDER LAST REVISED 7/2/2010
USERNAME => s119140
DGN FILE => 729500ua001.dgn
RELATIVE BORDER SCALE IS IN INCHES 0 1 2 3
UNIT 1880
PROJECT NUMBER & PHASE 07130000081

Dist	COUNTY	ROUTE	POST MILES TOTAL PROJECT	SHEET No.	TOTAL SHEETS
07	LA	10	41.7/48.3	48	131

1/17/14
REGISTERED ELECT ENGINEER DATE

2-10-14
PLANS APPROVAL DATE

REGISTERED PROFESSIONAL ENGINEER
C. BURCIAGA
No. E015302
Exp. 3/31/15
ELECT
STATE OF CALIFORNIA

THE STATE OF CALIFORNIA OR ITS OFFICERS OR AGENTS SHALL NOT BE RESPONSIBLE FOR THE ACCURACY OR COMPLETENESS OF SCANNED COPIES OF THIS PLAN SHEET.

NOTE: (THIS SHEET ONLY)

1. SEE SHEET E-1 FOR NOTES.

MODIFY TRAFFIC MONITORING STATION (Rte 10 & Rte 57 Conn)

Approx PM	LOCATION	SEE DETAIL "B" THIS SHEET FOR TYPICAL LOCATION OF LOOP DETECTORS															No. OF STUBOUTS (REPLACE)
		1	2	3	4	5	6	7	8	9	10	11	12	13	14	15	
42.45	EB10/NB57 Conn	X	X														2
42.45	WB10/SB57 Conn			X	X												2
42.45	NB57/WB10 Conn					X	X										2
42.45	NB57/EB10 Conn							X	X								2
42.45	SB57/EB10 Conn									X	X	X	X				4
42.45	WB10/NB57 Conn													X	X	X	3

X - INSTALL TYPE E INDUCTIVE LOOP DETECTOR. ABANDON EXISTING INDUCTIVE LOOP DETECTOR AT SAME LOCATION.

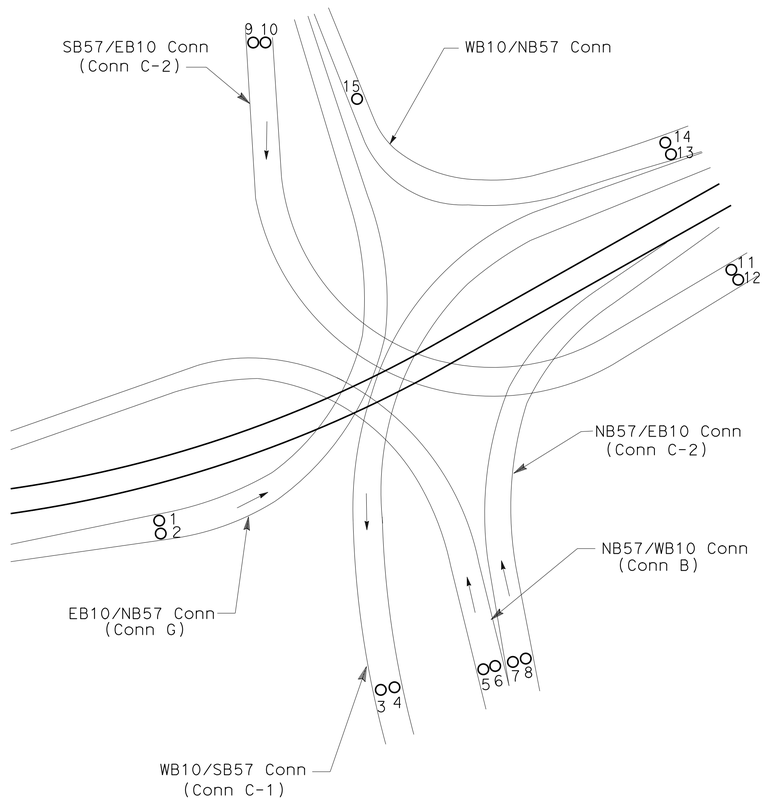

DETAIL "B"

MODIFY TRAFFIC MONITORING STATION

NO SCALE

E-2

STATE OF CALIFORNIA - DEPARTMENT OF TRANSPORTATION
TRAFFIC DESIGN
FUNCTIONAL SUPERVISOR: YI TSAU
CALCULATED-DESIGNED BY: QUINCIE TRAN
CHECKED BY: CECILIO BURCIAGA
REVISED BY
DATE REVISED

LAST REVISION 10-22-13 | DATE PLOTTED => 01-APR-2014 | TIME PLOTTED => 12:30

BORDER LAST REVISED 7/2/2010 | USERNAME => s119140 | DGN FILE => 729500ua002.dgn | RELATIVE BORDER SCALE IS IN INCHES 0 1 2 3 | UNIT 1880 | PROJECT NUMBER & PHASE 07130000081

Dist	COUNTY	ROUTE	POST MILES TOTAL PROJECT	SHEET No.	TOTAL SHEETS
07	LA	10	41.7/48.3	49	131

1/17/14
REGISTERED ELECT ENGINEER DATE

2-10-14
PLANS APPROVAL DATE

REGISTERED PROFESSIONAL ENGINEER
C. BURCIAGA
No. E015302
Exp. 3/31/15
ELECT
STATE OF CALIFORNIA

THE STATE OF CALIFORNIA OR ITS OFFICERS OR AGENTS SHALL NOT BE RESPONSIBLE FOR THE ACCURACY OR COMPLETENESS OF SCANNED COPIES OF THIS PLAN SHEET.

NOTE: (THIS SHEET ONLY)

1. SEE SHEET E-1 FOR NOTES.

MODIFY RAMP METERING SYSTEM (ROUTE 10)

Approx PM	LOCATION	SEE DETAIL "C" THIS SHEET FOR TYPICAL LOCATION OF LOOP DETECTORS												No. OF STUBOUTS (REPLACE)
		1	2	3	4	5	6	7	8	9	10	11	12	
43.75	EAST OF FAIRPLEX Dr OC	X	X	X	X	X								1
44.13	WEST OF DUDLEY St OC	X	X	X	X	X	X	X	X	X	X	X	X	4
45.24	WEST OF WHITE Ave UC	X	X	X	X	X	X	X	X	X	X			2
45.67	WEST OF GAREY Ave UC	X	X	X	X	X	X	X	X	X	X			2
46.05	EAST OF ORANGE GROVE Ave UC	X	X	X	X	X	X	X	X	X	X			2
46.33	WEST OF TOWN Ave UC						X	X	X	X	X			1
46.54	EAST OF TOWN Ave UC	X	X	X	X	X	X	X	X	X	X			2
47.66	WEST OF INDIAN HILL Blvd UC						X	X	X	X	X			1
47.88	EAST OF INDIAN HILL Blvd UC	X	X	X	X	X								1

X - INSTALL TYPE E INDUCTIVE LOOP DETECTOR. ABANDON EXISTING INDUCTIVE LOOP DETECTOR AT SAME LOCATION.

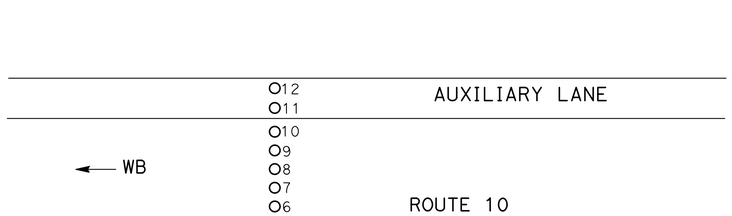

DETAIL "C"

TYPICAL LOOP DETECTOR INSTALLATION
FOR MAINLINE

MODIFY RAMP METERING SYSTEM
NO SCALE

E-3

QUINCIE TRAN — CALCULATED-DESIGNED BY
CECILIO BURCIAGA — CHECKED BY
YI TSAU — FUNCTIONAL SUPERVISOR
REVISED BY — DATE REVISED

STATE OF CALIFORNIA - DEPARTMENT OF TRANSPORTATION
Caltrans® TRAFFIC DESIGN

LAST REVISION 10-22-13
DATE PLOTTED => 01-APR-2014
TIME PLOTTED => 12:30

BORDER LAST REVISED 7/2/2010
USERNAME => s119140
DGN FILE => 729500ua003.dgn
RELATIVE BORDER SCALE IS IN INCHES 0 1 2 3
UNIT 1880
PROJECT NUMBER & PHASE 07130000081

NOTE: (THIS SHEET ONLY)

1. SEE SHEET E-1 FOR NOTES.

Dist	COUNTY	ROUTE	POST MILES TOTAL PROJECT	SHEET No.	TOTAL SHEETS
07	LA	10	41.7/48.3	50	131

1/17/14
REGISTERED ELECT ENGINEER DATE

2-10-14
PLANS APPROVAL DATE

REGISTERED PROFESSIONAL ENGINEER
C. BURCIAGA
No. E015302
Exp. 3/31/15
ELECT
STATE OF CALIFORNIA

THE STATE OF CALIFORNIA OR ITS OFFICERS OR AGENTS SHALL NOT BE RESPONSIBLE FOR THE ACCURACY OR COMPLETENESS OF SCANNED COPIES OF THIS PLAN SHEET.

MODIFY RAMP METERING SYSTEM (ROUTE 10)

Approx PM	LOCATION	SEE DETAIL "D" THIS SHEET FOR TYPICAL LOCATION OF LOOP DETECTORS																											No. OF STUBOUTS (REPLACE)
		1	2	3	4	5	6	7	8	9	10	11	12	13	14	15	16	17	18	19	20	21	22	23	24	25	26	27	
43.60	FAIRPLEX Dr OC	X	X	X	X	X	X	X	X	X	X	X	X	X	X	X	X	X	X	X	X	X	X	X	X	X	X		11
44.13	DUDLEY St OC	X					X	X	X	X		X		X	X					X	X	X	X		X	X		X	9
45.24	WEST OF WHITE Ave UC	X		X			X	X	X	X	X	X														X			6
45.67	WEST OF GAREY Ave UC	X	X	X	X	X	X	X	X	X	X	X														X			5
46.05	EAST OF ORANGE GROVE Ave UC												X		X	X	X	X	X	X	X	X	X	X	X				5
46.33	TOWN Ave UC	X	X	X	X	X	X	X	X	X	X	X	X		X	X	X	X	X	X	X	X	X	X	X	X			11
47.66	INDIAN HILL Blvd UC	X	X	X	X	X	X	X	X	X	X	X	X		X	X	X	X	X	X	X	X	X	X	X	X			11

X - INSTALL TYPE E INDUCTIVE LOOP DETECTOR. ABANDON EXISTING INDUCTIVE LOOP DETECTOR AT SAME LOCATION.

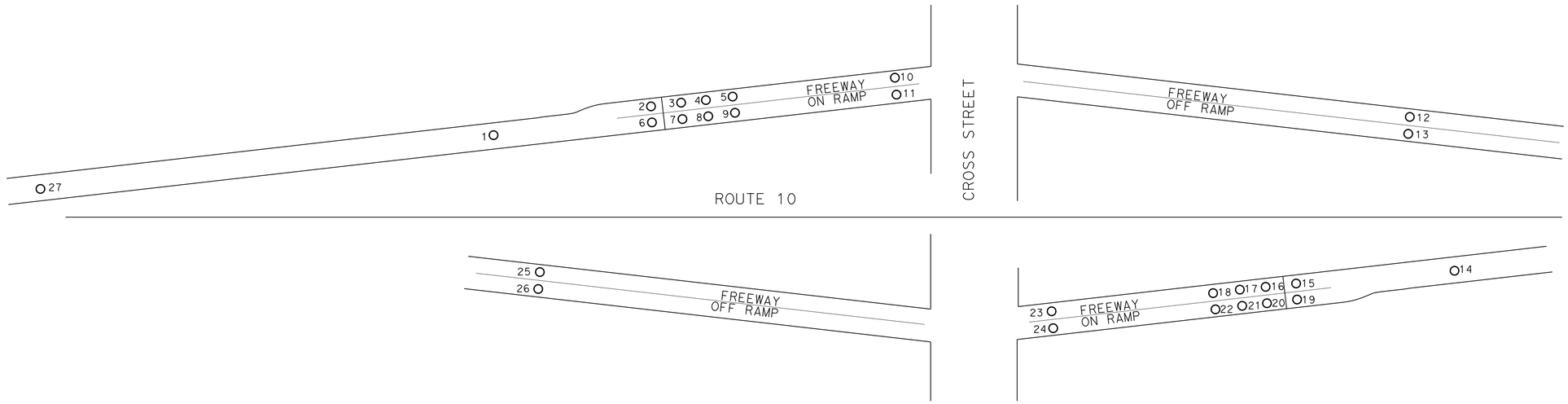

DETAIL "D"

TYPICAL LOOP DETECTOR INSTALLATION
FOR ON AND OFF RAMPS

MODIFY RAMP METERING SYSTEM

NO SCALE

E-4

REVISED BY | DATE REVISED
QUINCIE TRAN | CECILIO BURCIAGA
CALCULATED-DESIGNED BY | CHECKED BY
FUNCTIONAL SUPERVISOR: YI TSAU
STATE OF CALIFORNIA - DEPARTMENT OF TRANSPORTATION
Caltrans® TRAFFIC DESIGN

LAST REVISION 10-22-13 | DATE PLOTTED => 01-APR-2014 | TIME PLOTTED => 12:30

BORDER LAST REVISED 7/2/2010 | USERNAME => s119140 | DGN FILE => 729500ua004.dgn | RELATIVE BORDER SCALE IS IN INCHES 0 1 2 3 | UNIT 1880 | PROJECT NUMBER & PHASE 07130000081

Dist	COUNTY	ROUTE	POST MILES TOTAL PROJECT	SHEET No.	TOTAL SHEETS
07	LA	10	41.7/48.3	51	131

1/17/14
REGISTERED ELECT ENGINEER DATE

2-10-14
PLANS APPROVAL DATE

REGISTERED PROFESSIONAL ENGINEER
C. BURCIAGA
No. E015302
Exp. 3/31/15
ELECT
STATE OF CALIFORNIA

THE STATE OF CALIFORNIA OR ITS OFFICERS OR AGENTS SHALL NOT BE RESPONSIBLE FOR THE ACCURACY OR COMPLETENESS OF SCANNED COPIES OF THIS PLAN SHEET.

NOTE: (THIS SHEET ONLY)

1. SEE SHEET E-1 FOR NOTES.

MODIFY SIGNAL (ROUTE 10)

Approx PM	LOCATION	SEE DETAIL "E" THIS SHEET FOR TYPICAL LOCATION OF LOOP DETECTORS				No. OF STUBOUTS (REPLACE)
		1	2	3		
47.66	EB OFF RAMP TO INDIAN HILL Blvd UC	X	X	X		1
47.88	WB OFF RAMP TO INDIAN HILL Blvd UC	X	X	X		1

X - INSTALL TYPE E INDUCTIVE LOOP DETECTOR. ABANDON EXISTING INDUCTIVE LOOP DETECTOR AT SAME LOCATION.

DETAIL "E"

TYPICAL LOOP DETECTOR INSTALLATION
FOR OFF RAMPS

REVISED BY | DATE REVISED
QUINCIE TRAN | CECILIO BURCIAGA
CALCULATED-DESIGNED BY | CHECKED BY
FUNCTIONAL SUPERVISOR: YI TSAU
STATE OF CALIFORNIA - DEPARTMENT OF TRANSPORTATION
Caltrans® TRAFFIC DESIGN

MODIFY SIGNAL

NO SCALE

E-5

LAST REVISION | DATE PLOTTED => 01-APR-2014
10-22-13 | TIME PLOTTED => 12:30

BORDER LAST REVISED 7/2/2010 | USERNAME => s119140 | DGN FILE => 729500ua005.dgn | RELATIVE BORDER SCALE IS IN INCHES 0 1 2 3 | UNIT 1880 | PROJECT NUMBER & PHASE 07130000081

Dist	COUNTY	ROUTE	POST MILES TOTAL PROJECT	SHEET No.	TOTAL SHEETS
07	LA	10	41.7/48.3	52	131

1/17/14
REGISTERED ELECT ENGINEER DATE

2-10-14
PLANS APPROVAL DATE

REGISTERED PROFESSIONAL ENGINEER
C. BURCIAGA
No. E015302
Exp. 3/31/15
ELECT
STATE OF CALIFORNIA

THE STATE OF CALIFORNIA OR ITS OFFICERS OR AGENTS SHALL NOT BE RESPONSIBLE FOR THE ACCURACY OR COMPLETENESS OF SCANNED COPIES OF THIS PLAN SHEET.

NOTE: (THIS SHEET ONLY)

1. SEE SHEET E-1 FOR NOTES.

LEGEND: (THIS SHEET ONLY)

[1] INSTALL 10 LOOP DETECTORS AND 20 PIEZO-ELECTRIC AXLE SENSORS. SEE SHEET E-12 FOR INSTALLATION DETAILS.

[2] [AB] LOOP DETECTORS AND AXLE SENSORS.

[3] Exist 3"C, 10 AXLE SENSOR LEAD IN CABLE, AND 5 DLC TO REMAIN.

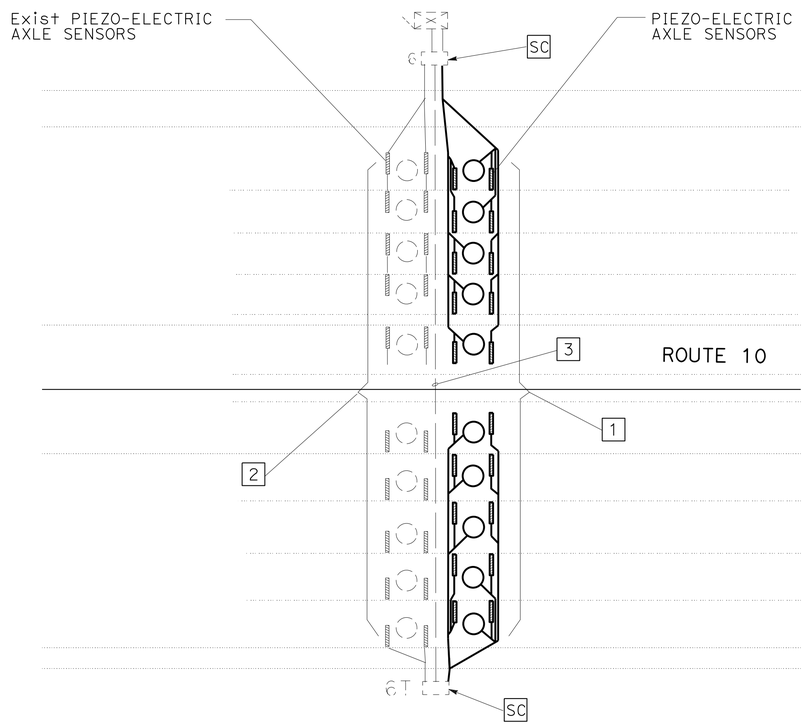

MOUNTAIN Ave PUC
Approx PM 47.30

MODIFY AUTOMATIC VEHICLE CLASSIFICATION STATION

NO SCALE

E-6

REVISED BY | DATE REVISED
QUINCIE TRAN | CECILIO BURCIAGA
CALCULATED-DESIGNED BY | CHECKED BY
FUNCTIONAL SUPERVISOR: YI TSAU

STATE OF CALIFORNIA - DEPARTMENT OF TRANSPORTATION
Caltrans® TRAFFIC DESIGN

LAST REVISION | DATE PLOTTED => 01-APR-2014
10-28-13 | TIME PLOTTED => 12:30

BORDER LAST REVISED 7/2/2010 | USERNAME => s119140 | DGN FILE => 729500ua006.dgn | RELATIVE BORDER SCALE IS IN INCHES 0 1 2 3 | UNIT 1880 | PROJECT NUMBER & PHASE 07130000081

Dist	COUNTY	ROUTE	POST MILES TOTAL PROJECT	SHEET No.	TOTAL SHEETS
07	LA	10	41.7/48.3	53	131

1/17/14
REGISTERED ELECT ENGINEER DATE

2-10-14
PLANS APPROVAL DATE

REGISTERED PROFESSIONAL ENGINEER
C. BURCIAGA
No. E015302
Exp. 3/31/15
ELECT
STATE OF CALIFORNIA

THE STATE OF CALIFORNIA OR ITS OFFICERS OR AGENTS SHALL NOT BE RESPONSIBLE FOR THE ACCURACY OR COMPLETENESS OF SCANNED COPIES OF THIS PLAN SHEET.

NOTES: (SHEETS E-7 TO E-11)

1. FOR ACCURATE RIGHT OF WAY DATA, CONTACT RIGHT OF WAY ENGINEERING AT THE DISTRICT OFFICE.
2. THE CONTRACTOR MUST RE-CONFIGURE DETECTION ZONES TO TEMPORARY PAVEMENT DELINEATION DURING STAGE CONSTRUCTION, OR AS DIRECTED BY THE ENGINEER.

LEGEND: (SHEETS E-7 TO E-11)

1. Exist RM MODEL 170E CONTROLLER ASSEMBLY. INSTALL MVDS EQUIPMENT. (SEE DETAIL 'A' ON E-13 FOR DETAILS)
2. INSTALL WOOD POLE WITH 1½"C RISER AND MVDS UNIT. (SEE SES-1 AND DETAIL 'B' ON SHEET E-13 FOR DETAILS)
3. INSTALL 1½"C TYPE 3, 1 MVDS CABLE AND 1#8(G).
4. ADD 1 MVDS CABLE.
5. INSTALL DEPARTMENT-FURNISHED MODEL 170E CONTROLLER ASSEMBLY WITH MODEL 334 CONTROLLER CABINET. INSTALL MVDS EQUIPMENT AND WIRELESS DATA SERVICE SYSTEM. (SEE DETAIL 'C' ON SHEET E-13 & E-14 FOR DETAILS)
6. INSTALL WOOD POLE WITH 1½"C RISER, 1 SOLAR PANEL, MVDS UNIT. (SEE SES-1 AND DETAIL 'B' ON SHEET E-13 FOR DETAILS)

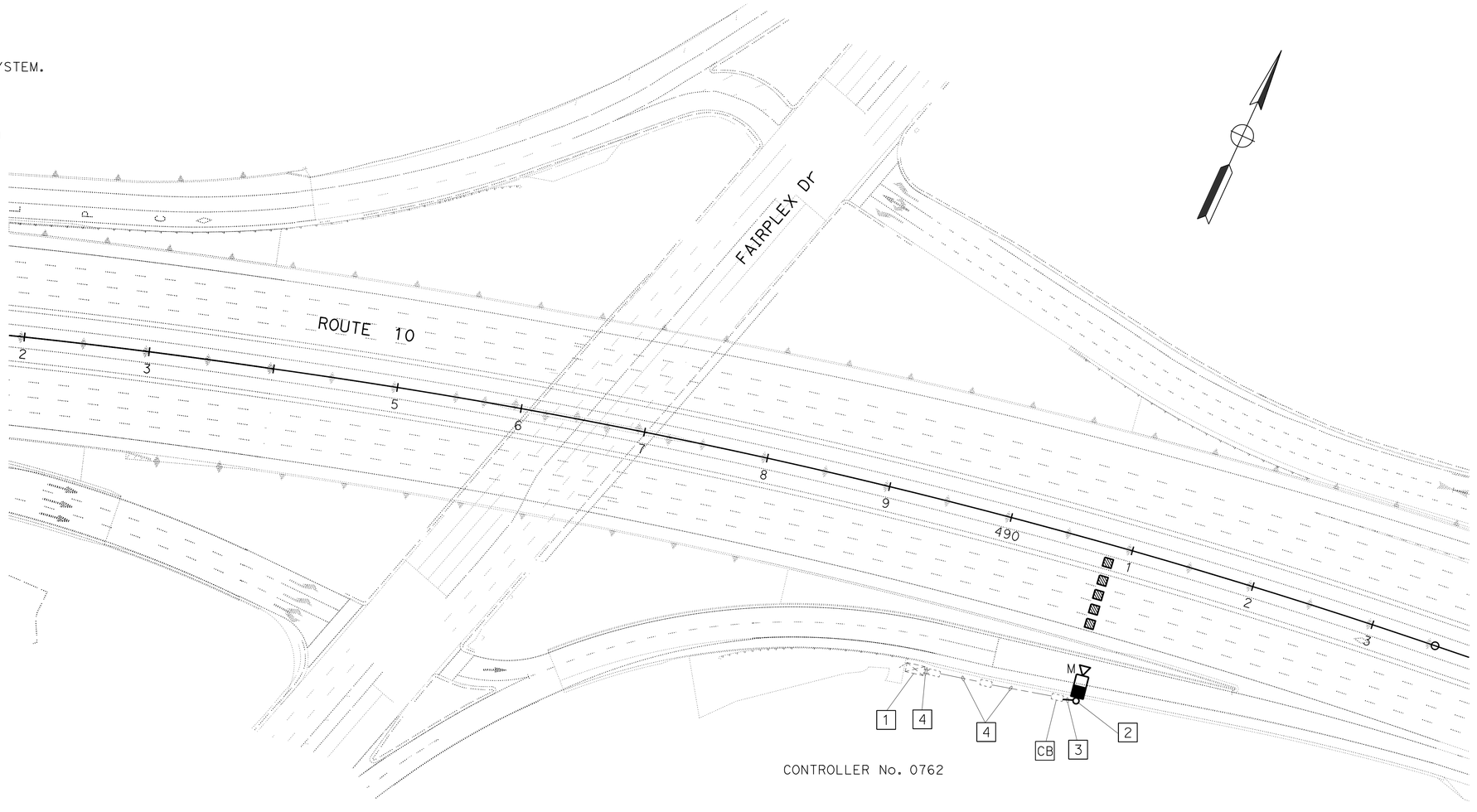

CONTROLLER No. 0762

TEMPORARY MICROWAVE VEHICLE DETECTION SYSTEM

SCALE: 1" = 50"

E-7

APPROVED FOR ELECTRICAL WORK ONLY

STATE OF CALIFORNIA - DEPARTMENT OF TRANSPORTATION
Caltrans® TRAFFIC DESIGN
FUNCTIONAL SUPERVISOR: YI TSAU
CALCULATED-DESIGNED BY: QUINCIE TRAN
CHECKED BY: CECILIO BURCIAGA
REVISED BY / DATE REVISED

LAST REVISION DATE PLOTTED => 01-APR-2014
TIME PLOTTED => 12:30
11-25-13

BORDER LAST REVISED 7/2/2010 | USERNAME => s119140 | DGN FILE => 729500ua007.dgn | RELATIVE BORDER SCALE IS IN INCHES 0 1 2 3 | UNIT 1880 | PROJECT NUMBER & PHASE 07130000081

NOTE: (THIS SHEET ONLY)

1. FOR NOTES AND LEGEND SEE SHEET E-7.

Dist	COUNTY	ROUTE	POST MILES TOTAL PROJECT	SHEET No.	TOTAL SHEETS
07	LA	10	41.7/48.3	54	131

REGISTERED ELECT ENGINEER — DATE 1/17/14

2-10-14
PLANS APPROVAL DATE

REGISTERED PROFESSIONAL ENGINEER
C. BURCIAGA
No. E015302
Exp. 3/31/15
ELECT
STATE OF CALIFORNIA

THE STATE OF CALIFORNIA OR ITS OFFICERS OR AGENTS SHALL NOT BE RESPONSIBLE FOR THE ACCURACY OR COMPLETENESS OF SCANNED COPIES OF THIS PLAN SHEET.

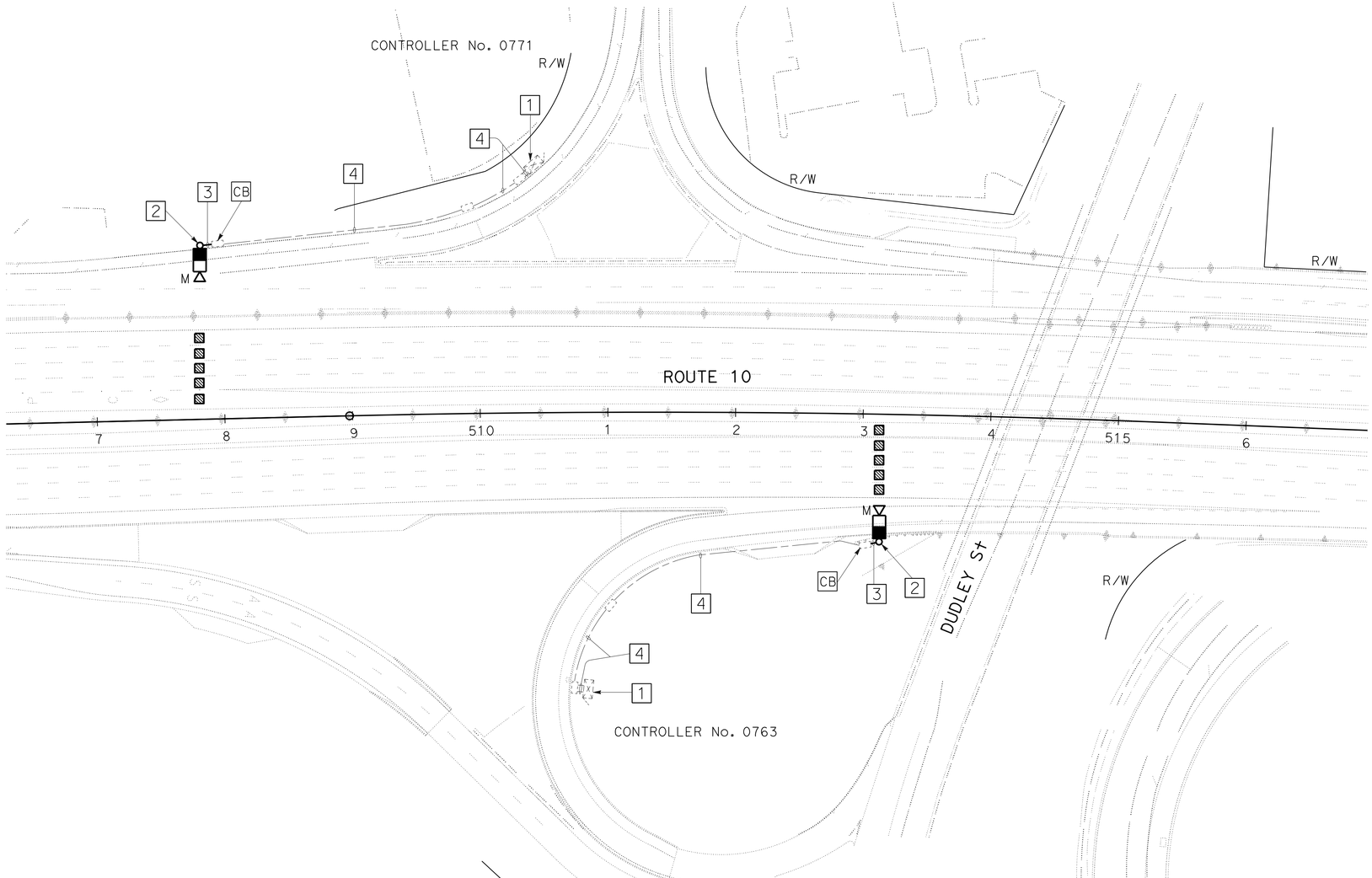

APPROVED FOR ELECTRICAL WORK ONLY

TEMPORARY MICROWAVE VEHICLE DETECTION SYSTEM

SCALE: 1" = 50"

E-8

STATE OF CALIFORNIA - DEPARTMENT OF TRANSPORTATION
Caltrans® TRAFFIC DESIGN

FUNCTIONAL SUPERVISOR: YI TSAU
CALCULATED-DESIGNED BY: QUINCIE TRAN
CHECKED BY: CECILIO BURCIAGA
REVISED BY
DATE REVISED

LAST REVISION: 10-22-13
DATE PLOTTED => 01-APR-2014
TIME PLOTTED => 12:30

BORDER LAST REVISED 7/2/2010
USERNAME => s119140
DGN FILE => 729500ua008.dgn
RELATIVE BORDER SCALE IS IN INCHES 0 1 2 3
UNIT 1880
PROJECT NUMBER & PHASE 07130000081

NOTE: (THIS SHEET ONLY)

1. FOR NOTES AND LEGEND SEE SHEET E-7.

Dist	COUNTY	ROUTE	POST MILES TOTAL PROJECT	SHEET No.	TOTAL SHEETS
07	LA	10	41.7/48.3	55	131

REGISTERED ELECT ENGINEER — DATE 1/17/14

PLANS APPROVAL DATE 2-10-14

REGISTERED PROFESSIONAL ENGINEER
C. BURCIAGA
No. E015302
Exp. 3/31/15
ELECT
STATE OF CALIFORNIA

THE STATE OF CALIFORNIA OR ITS OFFICERS OR AGENTS SHALL NOT BE RESPONSIBLE FOR THE ACCURACY OR COMPLETENESS OF SCANNED COPIES OF THIS PLAN SHEET.

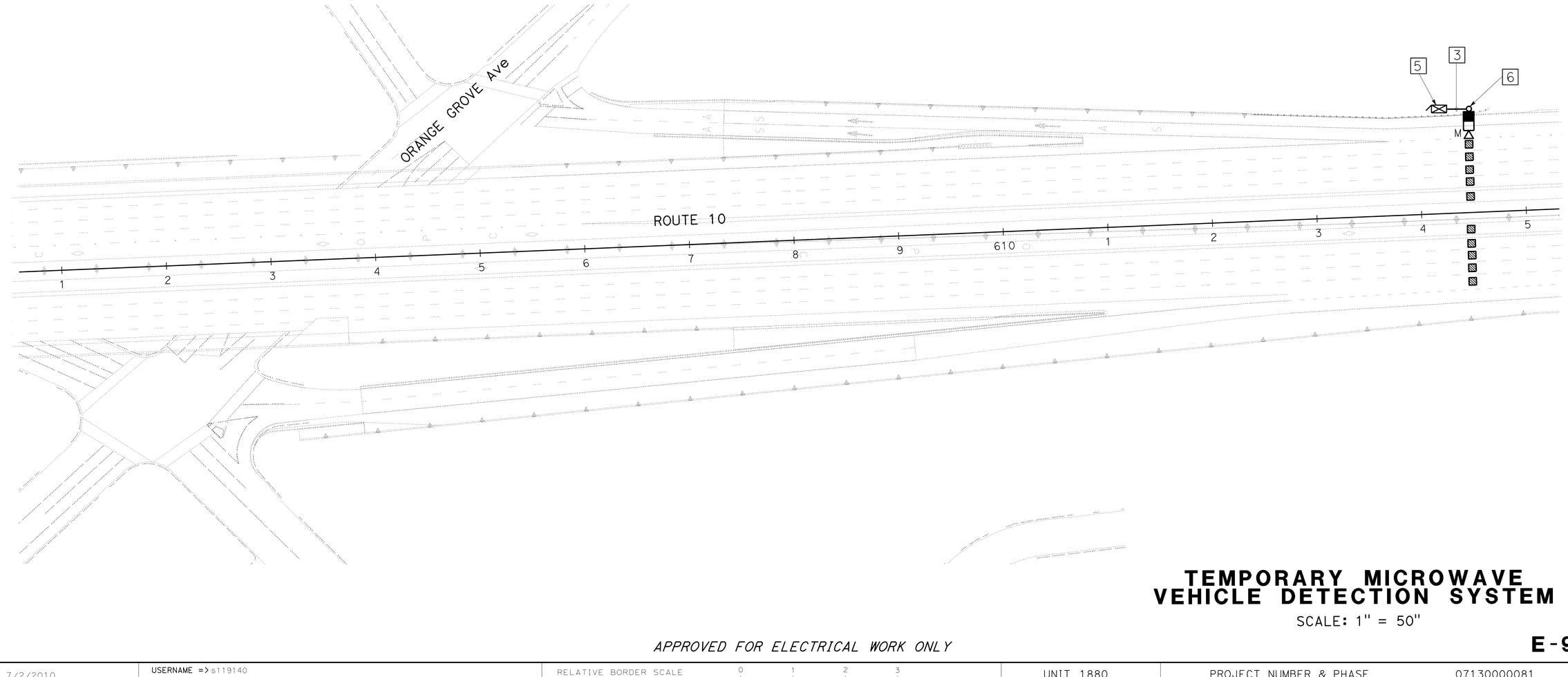

TEMPORARY MICROWAVE VEHICLE DETECTION SYSTEM

SCALE: 1" = 50"

APPROVED FOR ELECTRICAL WORK ONLY

E-9

CALCULATED-DESIGNED BY	REVISED BY
CHECKED BY	DATE REVISED
QUINCIE TRAN	
CECILIO BURCIAGA	

FUNCTIONAL SUPERVISOR: YI TSAU

STATE OF CALIFORNIA - DEPARTMENT OF TRANSPORTATION

Caltrans® TRAFFIC DESIGN

LAST REVISION | DATE PLOTTED => 01-APR-2014
10-22-13 | TIME PLOTTED => 12:30

BORDER LAST REVISED 7/2/2010

USERNAME => s119140
DGN FILE => 729500ua009.dgn

RELATIVE BORDER SCALE IS IN INCHES 0 1 2 3

UNIT 1880

PROJECT NUMBER & PHASE 07130000081

NOTE: (THIS SHEET ONLY)

1. FOR NOTES AND LEGEND SEE SHEET E-7.

Dist	COUNTY	ROUTE	POST MILES TOTAL PROJECT	SHEET No.	TOTAL SHEETS
07	LA	10	41.7/48.3	56	131

1/17/14
REGISTERED ELECT ENGINEER DATE

2-10-14
PLANS APPROVAL DATE

REGISTERED PROFESSIONAL ENGINEER
C. BURCIAGA
No. E015302
Exp. 3/31/15
ELECT
STATE OF CALIFORNIA

THE STATE OF CALIFORNIA OR ITS OFFICERS OR AGENTS SHALL NOT BE RESPONSIBLE FOR THE ACCURACY OR COMPLETENESS OF SCANNED COPIES OF THIS PLAN SHEET.

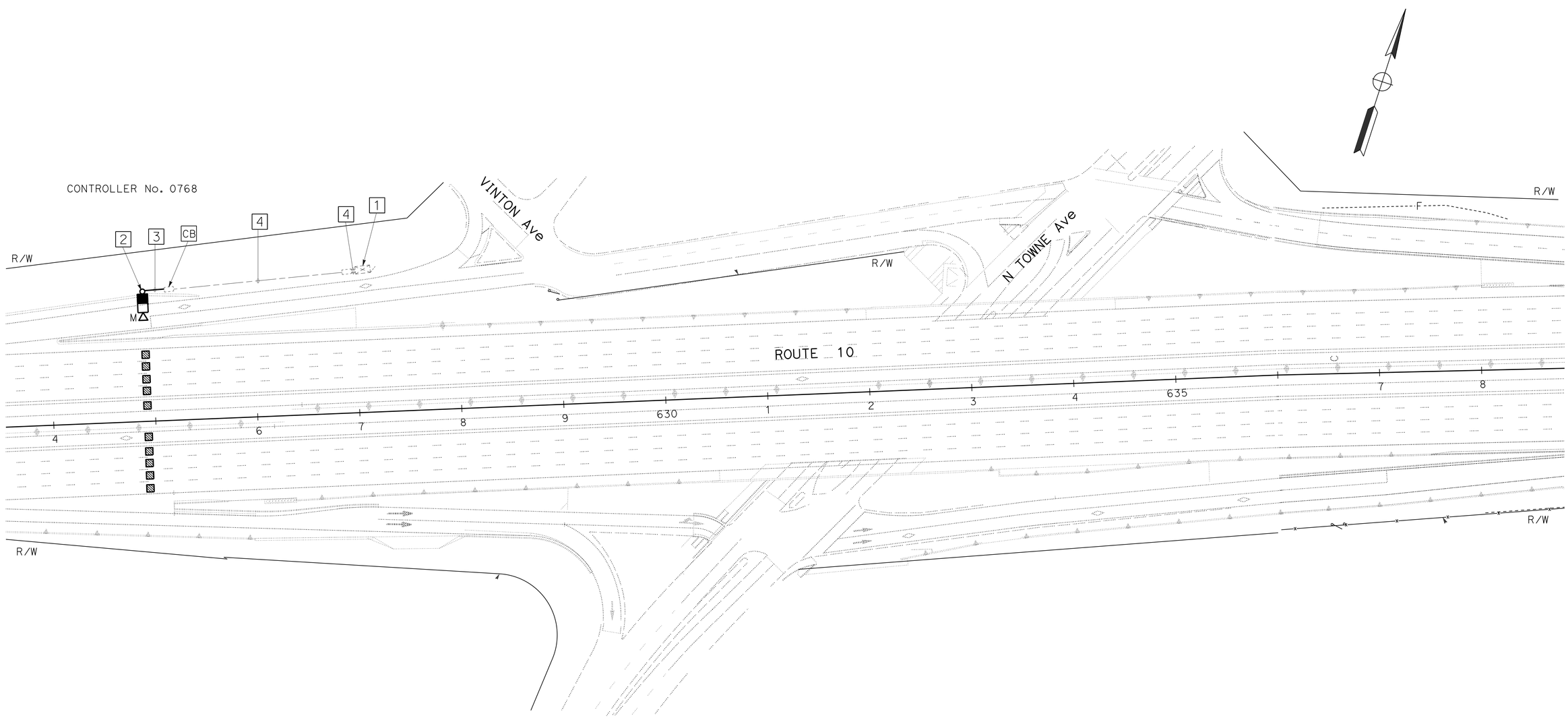

TEMPORARY MICROWAVE VEHICLE DETECTION SYSTEM

SCALE: 1" = 50"

APPROVED FOR ELECTRICAL WORK ONLY

E-10

STATE OF CALIFORNIA - DEPARTMENT OF TRANSPORTATION
TRAFFIC DESIGN
FUNCTIONAL SUPERVISOR: YI TSAU
CALCULATED-DESIGNED BY: QUINCIE TRAN
CHECKED BY: CECILIO BURCIAGA
REVISED BY
DATE REVISED

LAST REVISION 10-22-13
DATE PLOTTED => 01-APR-2014
TIME PLOTTED => 12:30

BORDER LAST REVISED 7/2/2010
USERNAME => s119140
DGN FILE => 729500ua010.dgn
RELATIVE BORDER SCALE IS IN INCHES 0 1 2 3
UNIT 1880
PROJECT NUMBER & PHASE 07130000081

Dist	COUNTY	ROUTE	POST MILES TOTAL PROJECT	SHEET No.	TOTAL SHEETS
07	LA	10	41.7/48.3	57	131

REGISTERED ELECT ENGINEER — DATE 1/17/14

PLANS APPROVAL DATE 2-10-14

REGISTERED PROFESSIONAL ENGINEER — C. BURCIAGA No. E015302 Exp. 3/31/15 ELECT — STATE OF CALIFORNIA

THE STATE OF CALIFORNIA OR ITS OFFICERS OR AGENTS SHALL NOT BE RESPONSIBLE FOR THE ACCURACY OR COMPLETENESS OF SCANNED COPIES OF THIS PLAN SHEET.

NOTE: (THIS SHEET ONLY)

1. SEE NOTES AND LEGEND ON SHEET E-7.

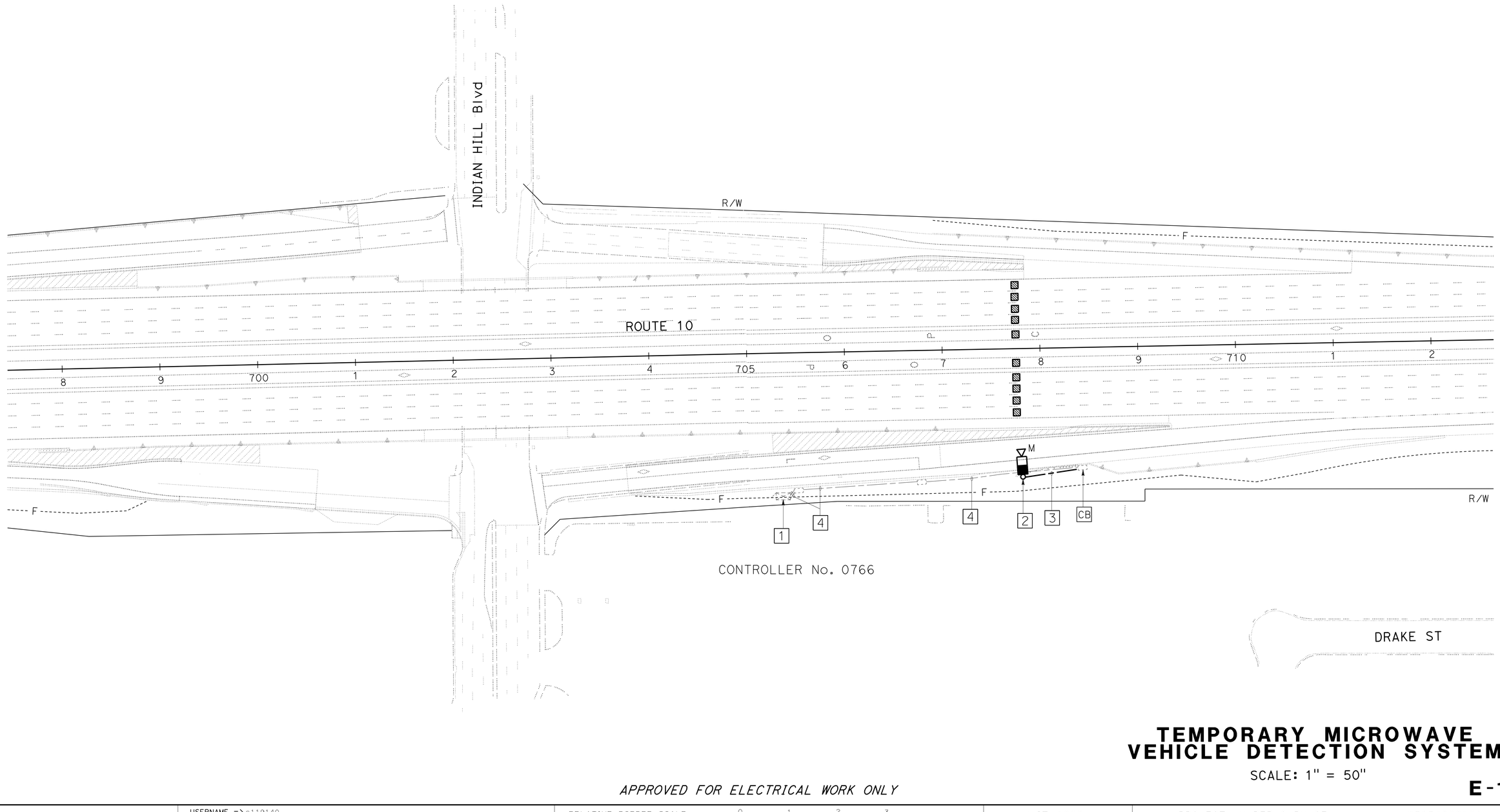

APPROVED FOR ELECTRICAL WORK ONLY

TEMPORARY MICROWAVE VEHICLE DETECTION SYSTEM

SCALE: 1" = 50"

E-11

REVISED BY	DATE REVISED

CALCULATED-DESIGNED BY: QUINCIE TRAN
CHECKED BY: CECILIO BURCIAGA

FUNCTIONAL SUPERVISOR: YI TSAU

STATE OF CALIFORNIA - DEPARTMENT OF TRANSPORTATION
Caltrans® **TRAFFIC DESIGN**

LAST REVISION: DATE PLOTTED => 01-APR-2014, TIME PLOTTED => 12:30
10-22-13

BORDER LAST REVISED 7/2/2010

USERNAME => s119140
DGN FILE => 729500ua011.dgn

RELATIVE BORDER SCALE IS IN INCHES 0 1 2 3

UNIT 1880

PROJECT NUMBER & PHASE 07130000081

Dist	COUNTY	ROUTE	POST MILES TOTAL PROJECT	SHEET No.	TOTAL SHEETS
07	LA	10	41.7/48.3	58	131

REGISTERED ELECT ENGINEER — DATE 1/17/14

PLANS APPROVAL DATE 2-10-14

REGISTERED PROFESSIONAL ENGINEER — C. BURCIAGA No. E015302 Exp. 3/31/15 ELECT — STATE OF CALIFORNIA

THE STATE OF CALIFORNIA OR ITS OFFICERS OR AGENTS SHALL NOT BE RESPONSIBLE FOR THE ACCURACY OR COMPLETENESS OF SCANNED COPIES OF THIS PLAN SHEET.

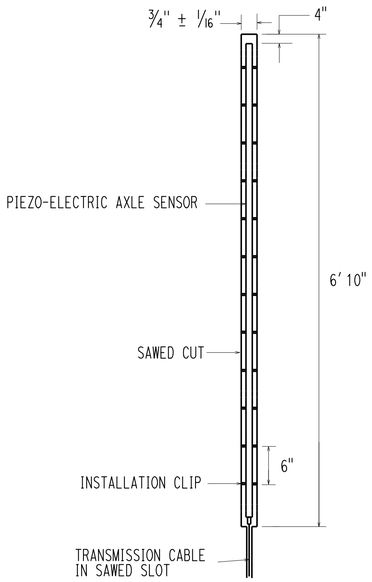

DETAIL A

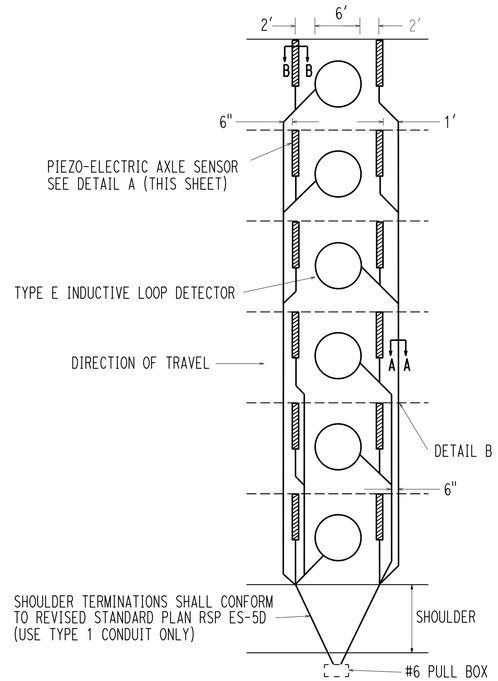

TYPICAL AXLE SENSOR INSTALLATION

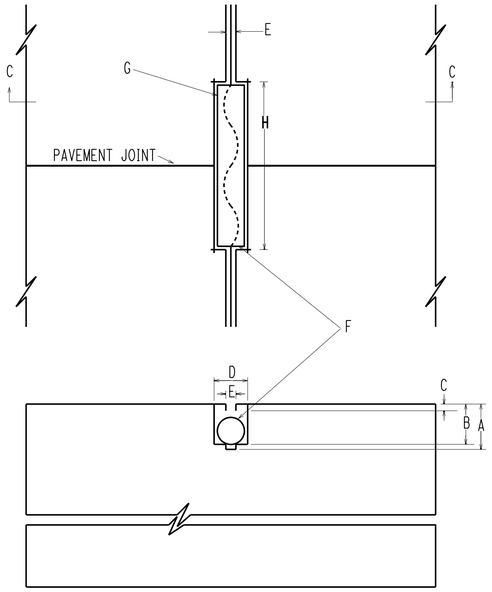

SECTION C-C

DETAIL B (TYPICAL LEAD-IN AT PAVEMENT JOINT)

NOTES: (FOR DETAIL B THIS SHEET)

A. SAW CUT DEPTH TO ACCOMODATE SPECIFIED NUMBER OF CONDUCTORS WITH A MINIMUM OF 1" FROM TOP OF WIRE TO PAVEMENT SURFACE (3-1/4" Max).

B. SLOT SAW-CUT DEPTH TO ACCOMODATE 1" TYPE 3 CONDUIT WITH 1/2" MINIMUM FROM TOP OF CONDUIT TO PAVEMENT SURFACE.

C. 1/2" MINIMUM BETWEEN TOP OF CONDUIT AND PAVEMENT SURFACE.

D. SAW-CUT WIDTH TO ACCOMODATE 1" TYPE 3 CONDUIT WITH 1/8" CLEARANCE.

E. SAW-CUT 1/2" WIDE.

F. 1" TYPE 3 CONDUIT, 6" LONG. PLUG BOTH ENDS WITH CAULKING COMPOUND TO KEEP OUT EPOXY.

G. CONDUCTORS WITH 1/2" MINIMUM SLACK INSIDE CONDUIT.

H. SAW-CUT LENGTH OF SLOT 1/8" LONGER THAN CONDUIT.

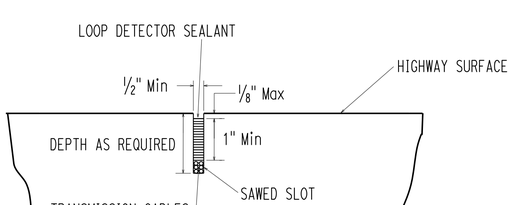

SECTION A-A

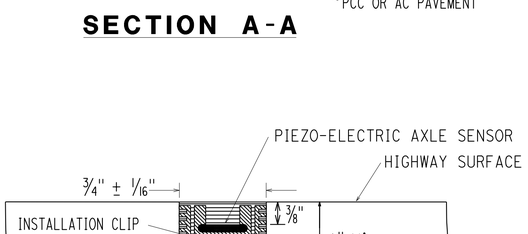

SECTION B-B

AXLE SENSOR INSTALLATION PROCEDURE

1. MARK THE POSITION OF THE AXLE SENSORS AS DIRECTED BY THE ENGINEER. AXLE SENSOR CHANNELS MUST BE PERPENDICULAR TO TRAFFIC.
2. MARK THE POSITION OF THE LOOP DETECTORS. THE DETECTORS SHALL BE CENTERED IN THE LANE AND BETWEEN THE AXLE SENSORS.
3. MARK THE HOME RUN CUTS AS SHOWN IN THE AXLE SENSOR INSTALLATION DETAIL.
4. USING A CONCRETE SAW CUT THE AXLE SENSOR CHANNELS 3/4" WIDE BY 1" DEEP IN A SINGLE PASS. CUTS SHALL BE STRAIGHT AND TRUE.
5. CUT THE LOOP DETECTORS AND HOME RUNS IN ACCORDANCE WITH CALTRANS SPECIFICATIONS.
6. DRILL 1/2" HOLES, 1" DEEP, AT A 45 DEGREE ANGLE AT THE BOTTOM CORNERS OF EACH AXLE SENSOR CHANNEL. HOLES SHALL BE 1' APART AND ON ALTERNATING SIDES OF THE CHANNEL.
7. WASH OUT THE CHANNELS AND ALL SAW CUTS THOROUGHLY WITH HIGH PRESSURE WATER. DRY COMPLETELY WITH AN AIR COMPRESSOR. IN PCC PAVEMENT ONLY, WIPE OUT THE CHANNELS WITH LACQUER THINNER AND CLEAN COTTON RAGS.
8. PLACE 4" DUCT TAPE STRIPS ON THE PAVEMENT AROUND THE CHANNELS.
9. ENSURE THAT EACH SENSOR IS STRAIGHT AND FLAT. BEND EACH END DOWN SLIGHTLY AND PLACE THE INSTALLATION CLIPS ON THE SENSOR.
10. BLOCK OFF THE CABLE END OF THE CHANNEL WITH DUCT SEAL TO PREVENT THE GROUT FLOWING OUT OF THE CHANNEL.
11. INSERT SENSOR EPOXY CARTRIDGE INTO CAULKING GUN. ATTACH STATIC MIXING TUBE ONTO CARTRIDGE.
12. WHILE WEARING PROTECTIVE GLOVES, HALF FILL THE CHANNEL WITH SENSOR EPOXY. ENSURE THAT THE BOTTOM OF THE CHANNEL IS COMPLETELY COVERED, AND THAT THE HOLES DRILLED IN STEP 6 ARE FILLED.
13. PLACE THE SENSOR IN THE CHANNEL WITH THE BRASS ELEMENT 3/8" BELOW THE ROAD SURFACE, WITH NO VOIDS BENEATH THE SENSOR.
14. COMPLETELY FILL THE CHANNEL WITH SENSOR EPOXY. SMOOTH OUT THE EPOXY ON TOP OF THE SENSOR TO ROAD LEVEL, WITH NO TROUGH ON TOP.
15. WHEN SENSOR EPOXY HAS BEGUN TO SET, REMOVE THE DUCT TAPE FROM THE PAVEMENT. REMOVE THE DUCT SEAL FROM THE END OF THE CHANNEL.
16. INSTALL THE LOOP DETECTORS AS PER CALTRANS SPECIFICATIONS.
17. INSTALL ALL LEAD-IN CABLES IN THE HOME RUN SLOTS, INSTALLING TYPE 3 CONDUIT AT THE EXPANSION JOINT CROSSINGS. PULL CABLES THROUGH STUB-OUT CONDUIT AND COIL IN PULL BOX.
18. SEAL ALL SAW CUTS. ELASTOMERIC SEALANT ONLY SHALL BE USED IN ALL CUTS CONTAINING SCREENED TRANSMISSION CABLE.
19. REMOVE ANY HIGH SPOTS IN THE SENSOR EPOXY WITH A HAND GRINDER.
20. CLEAN UP THE SITE. WHEN ALL SEALANTS ARE COMPLETELY CURED, LANES MAY BE OPENED TO TRAFFIC.

MODIFY AUTOMATIC VEHICLE CLASSIFICATION STATION (DETAILS)

NO SCALE

E-12

CALCULATED-DESIGNED BY	QUINCIE TRAN	REVISED BY	
CHECKED BY	CECILIO BURCIAGA	DATE REVISED	
FUNCTIONAL SUPERVISOR	YI TSAU		

STATE OF CALIFORNIA - DEPARTMENT OF TRANSPORTATION
Caltrans® TRAFFIC DESIGN

LAST REVISION 10-28-13
DATE PLOTTED => 01-APR-2014
TIME PLOTTED => 12:30

Dist	COUNTY	ROUTE	POST MILES TOTAL PROJECT	SHEET No.	TOTAL SHEETS
07	LA	10	41.7/48.3	59	131

1/17/14
REGISTERED ELECTRICAL ENGINEER DATE

2-10-14
PLANS APPROVAL DATE

C. BURCIAGA No. E015302 Exp. 3/31/15 ELECT — REGISTERED PROFESSIONAL ENGINEER — STATE OF CALIFORNIA

THE STATE OF CALIFORNIA OR ITS OFFICERS OR AGENTS SHALL NOT BE RESPONSIBLE FOR THE ACCURACY OR COMPLETENESS OF SCANNED COPIES OF THIS PLAN SHEET.

WIRE USAGE IN MVDS CABLE

MS CONNECTOR PIN ID	WIRE NUMBER	PAIR NUMBER	FUNCTION
A	1	1	DETECTOR #1
B	2	1	DETECTOR #1 RETURN
C	3	2	DETECTOR #2
D	4	2	DETECTOR #2 RETURN
E	5	3	DETECTOR #3
F	6	3	DETECTOR #3 RETURN
G	7	4	DETECTOR #4
H	8	4	DETECTOR #4 RETURN
J	9	5	DETECTOR #5
K	10	5	DETECTOR #5 RETURN
L	11	6	DETECTOR #6
M	12	6	DETECTOR #6 RETURN
N	13	7	DETECTOR #7
P	14	7	DETECTOR #7 RETURN
R	15	8	DETECTOR #8
S	16	8	DETECTOR #8 RETURN
T	17	9	RS232 RX (RECEIVE)
U	18	9	RS232 G (RECEIVE GROUND)
V	19	10	RS232 TX (TRANSMIT)
W	20	10	RS232 G (TRANSMIT GROUND)
f	21	11	12-24 VOLTS AC/DC POWER
g	22	11	12-24 VOLTS AC/DC POWER

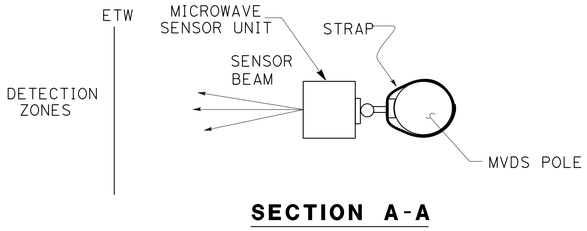

SECTION A-A

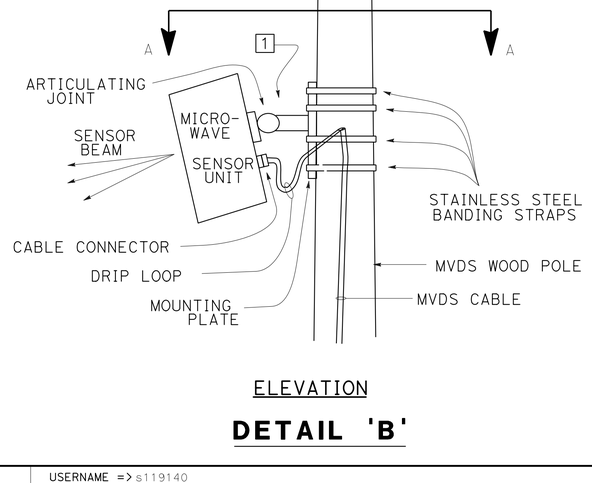

ELEVATION

DETAIL 'B'

NOTES: (THIS SHEET ONLY)

1. MOUNTING PLATE, ARTICULATING JOINT AND MICROWAVE SENSOR UNIT ASSEMBLY CONNECTIONS PER MANUFACTURER'S RECOMMENDATION.
A. SURGE PROTECTOR(S)

MVDS = MICROWAVE VEHICLE DETECTION SYSTEM
MTA = MVDS TERMINATION ASSEMBLY
PDA = POWER DISTRIBUTION ASSEMBLY

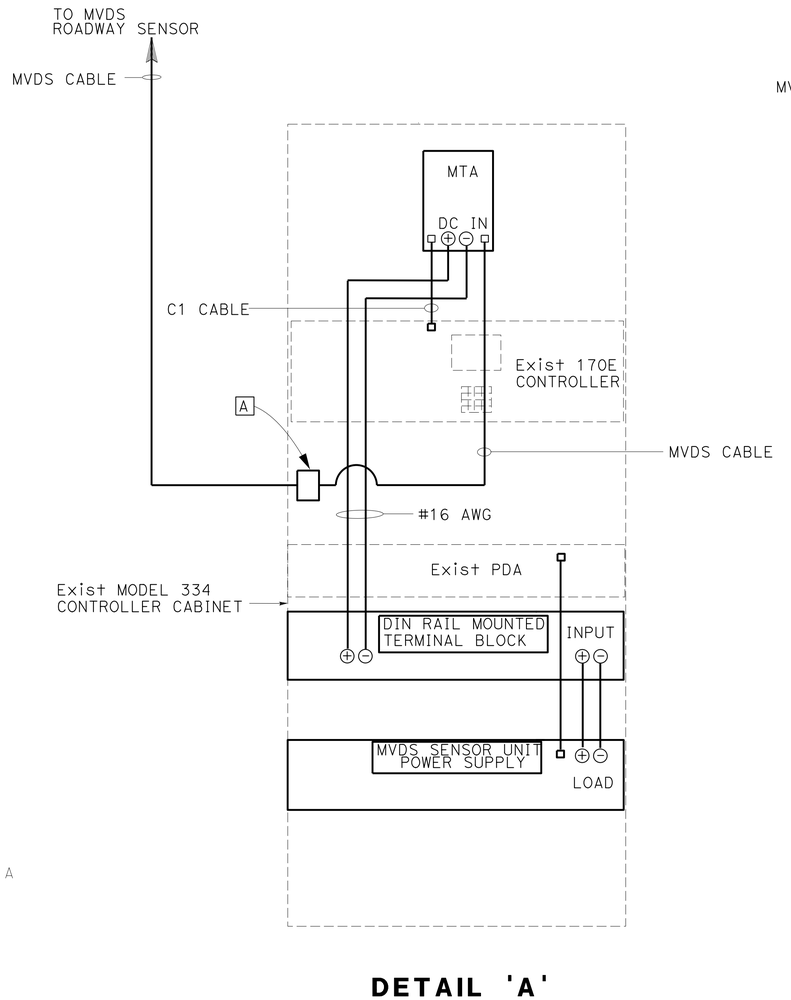

DETAIL 'A'

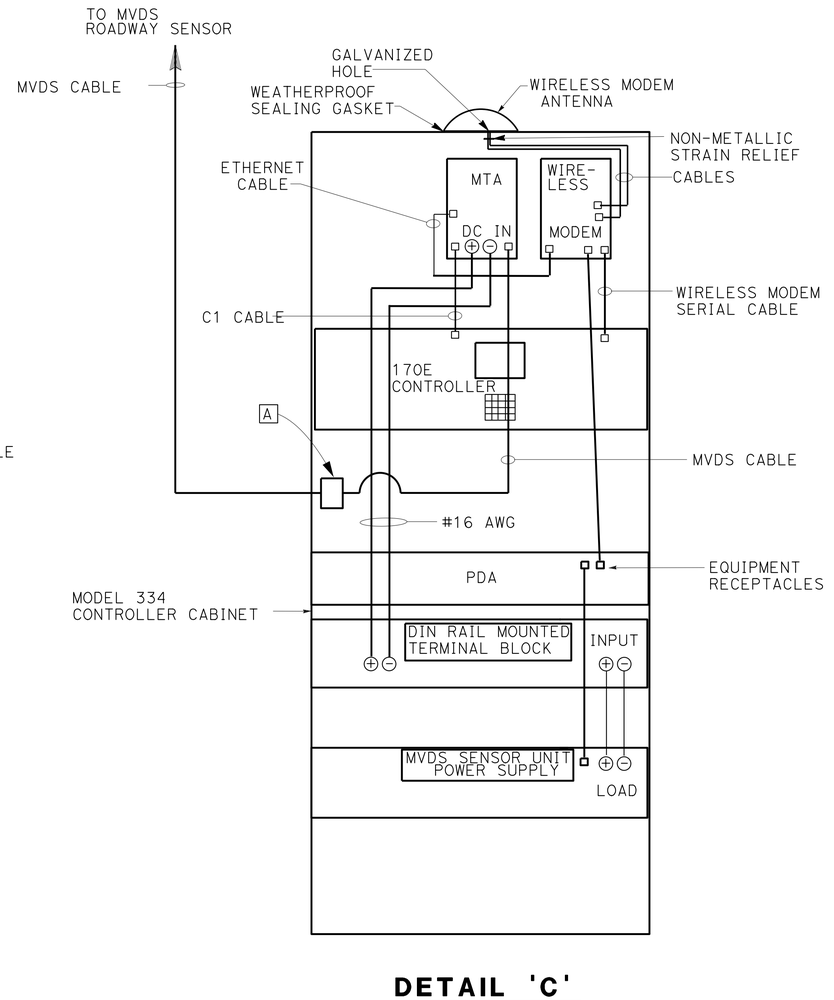

DETAIL 'C'

TEMPORARY MICROWAVE VEHICLE DETECTION SYSTEM
(DETAILS)

NO SCALE

E-13

REVISED BY | DATE REVISED
QUINCIE TRAN | CECILIO BURCIAGA
CALCULATED-DESIGNED BY | CHECKED BY
FUNCTIONAL SUPERVISOR: YI TSAU
STATE OF CALIFORNIA - DEPARTMENT OF TRANSPORTATION
Caltrans® TRAFFIC DESIGN

LAST REVISION: DATE PLOTTED => 01-APR-2014 TIME PLOTTED => 12:30

Dist	COUNTY	ROUTE	POST MILES TOTAL PROJECT	SHEET No.	TOTAL SHEETS
07	LA	10	41.7/48.3	60	131

REGISTERED ELECTRICAL ENGINEER — 1/17/14 DATE

C. BURCIAGA No. E015302 Exp. 3/31/15 ELECT — REGISTERED PROFESSIONAL ENGINEER — STATE OF CALIFORNIA

2-10-14
PLANS APPROVAL DATE

THE STATE OF CALIFORNIA OR ITS OFFICERS OR AGENTS SHALL NOT BE RESPONSIBLE FOR THE ACCURACY OR COMPLETENESS OF SCANNED COPIES OF THIS PLAN SHEET.

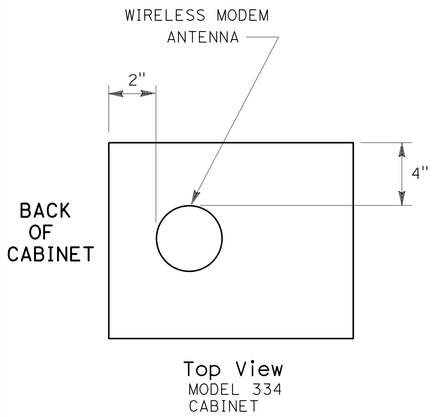

Top View
MODEL 334
CABINET

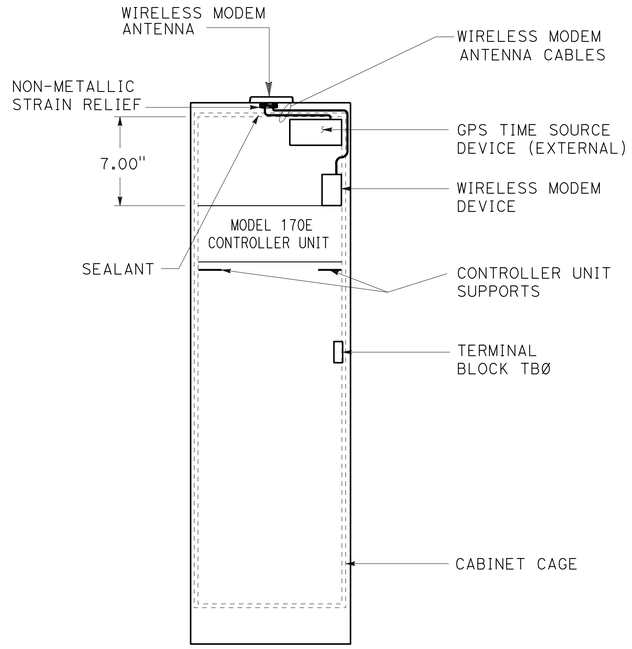

Back View
MODEL 334
CONTROLLER CABINET

WIRELESS MODEM DEVICE AND WIRELESS MODEM ANTENNA PLACEMENT DETAIL

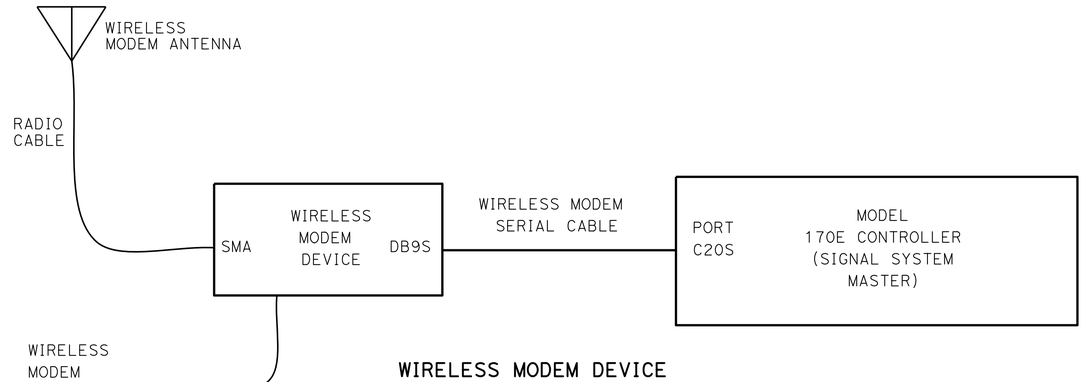

WIRELESS MODEM DEVICE CONNECTION DETAIL

WIRELESS CONNECTIVITY DETAIL

LEGEND: (THIS SHEET ONLY)

AC	ALTERNATING CURRENT
V(ac)	VOLTS ALTERNATING CURRENT
PDA	POWER DISTRIBUTION ASSEMBLY
CTNET	CALTRANS TRAFFIC SIGNAL NETWORK.
LARTMC	LOS ANGELES REGIONAL TRANSPORTATION MANAGEMENT CENTER
IP	INTERNET PROTOCOL
GPS	GLOBAL POSITIONING SYSTEM
DB9S	SERIES D SUBMINIATURE CONNECTOR, E SIZE SHELL, 9 PIN SOCKET
TNC	THREADED NEILL-CONCELMAN
SMA	SUBMINIATURE VERSION A
BNC	BAYONET NEILL-CONCELMAN

ELECTRICAL DETAILS
(WIRELESS DATA SERVICE SYSTEM)

NO SCALE

E-14

REVISED BY | DATE REVISED
QUINCIE TRAN | CECILIO BURCIAGA
CALCULATED-DESIGNED BY | CHECKED BY
FUNCTIONAL SUPERVISOR: YI TSAU

STATE OF CALIFORNIA - DEPARTMENT OF TRANSPORTATION
Caltrans® TRAFFIC DESIGN

LAST REVISION 10-22-13 | DATE PLOTTED => 01-APR-2014 | TIME PLOTTED => 12:30

BORDER LAST REVISED 7/2/2010 | USERNAME => s119140 | DGN FILE => 729500ua014.dgn | RELATIVE BORDER SCALE IS IN INCHES 0 1 2 3 | UNIT 1880 | PROJECT NUMBER & PHASE 07130000081

Dist	COUNTY	ROUTE	POST MILES TOTAL PROJECT	SHEET No.	TOTAL SHEETS
07	LA	10	41.7/48.3	61	131

1/17/14
REGISTERED ELECTRICAL ENGINEER DATE

2-10-14
PLANS APPROVAL DATE

REGISTERED PROFESSIONAL ENGINEER
C. BURCIAGA
No. E015302
Exp. 3/31/15
ELECT
STATE OF CALIFORNIA

THE STATE OF CALIFORNIA OR ITS OFFICERS OR AGENTS SHALL NOT BE RESPONSIBLE FOR THE ACCURACY OR COMPLETENESS OF SCANNED COPIES OF THIS PLAN SHEET.

NOTES: (THIS SHEET ONLY)

1. FOR ACCURATE RIGHT OF WAY DATA, CONTACT RIGHT OF WAY ENGINEERING AT THE DISTRICT OFFICE.
2. AB ALL LOOP DETECTORS.
3. NEW TRAFFIC SIGNAL SYSTEM MUST BE INSTALLED AND FUNCTIONING BEFORE REMOVING EXISTING TRAFFIC SIGNAL SYSTEM.

LEGEND: (THIS SHEET ONLY)

1 COIL 7#14 SIC FROM CONTROLLER CABINET TO BE REUSED IN NEW CONDUIT, SEE SHEET E-17.

Exist PHASE DIAGRAM

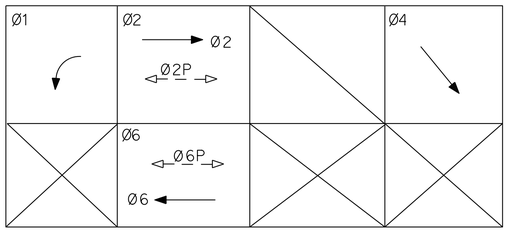

Exist CONDUIT AND CONDUCTOR SCHEDULE

CABLE SCHEDULE		CONDUIT RUN NUMBER AND SIZE	
AWG OR CABLE	CONDUCTOR RUN	1	2
28CSC	C1, C2	1	3
#10	LUMINAIRES	2	-
#8	SIGNAL SERVICE	-	2
DLC	Ø1	1	1
	Ø2	-	4
	Ø4	1	1
	Ø6	4	4
TOTAL		5	9
7#14	SIC	-	1
CONDUIT		3"	2-3"

Exist POLE AND EQUIPMENT SCHEDULE

No.	STANDARD			VEH SIG MTG		PED SIG	PPB		HPS LUMINAIRE
	TYPE	SMA	LMA	MAST ARM	POLE	MTG	Ø	ARROW	
A	19-4-70	30′	12′	2-MAS	SV-2-TA	SP-1-T	2	←	200 W
B	19-2-70	15′	12′	MAS	SV-1-T	-	2	←	200 W
C	15	-	12′	-	SV-4-TA	SP-1-T	-	-	200 W
D	24-4-70	35′	12′	2-MAS	SV-2-TA	SP-1-T	6	←	200 W
E	1-A (7′)	-	-	-	-	TP-1-T	6	→	-
F	1-A	-	-	-	SV-2-TA	-	-	-	-

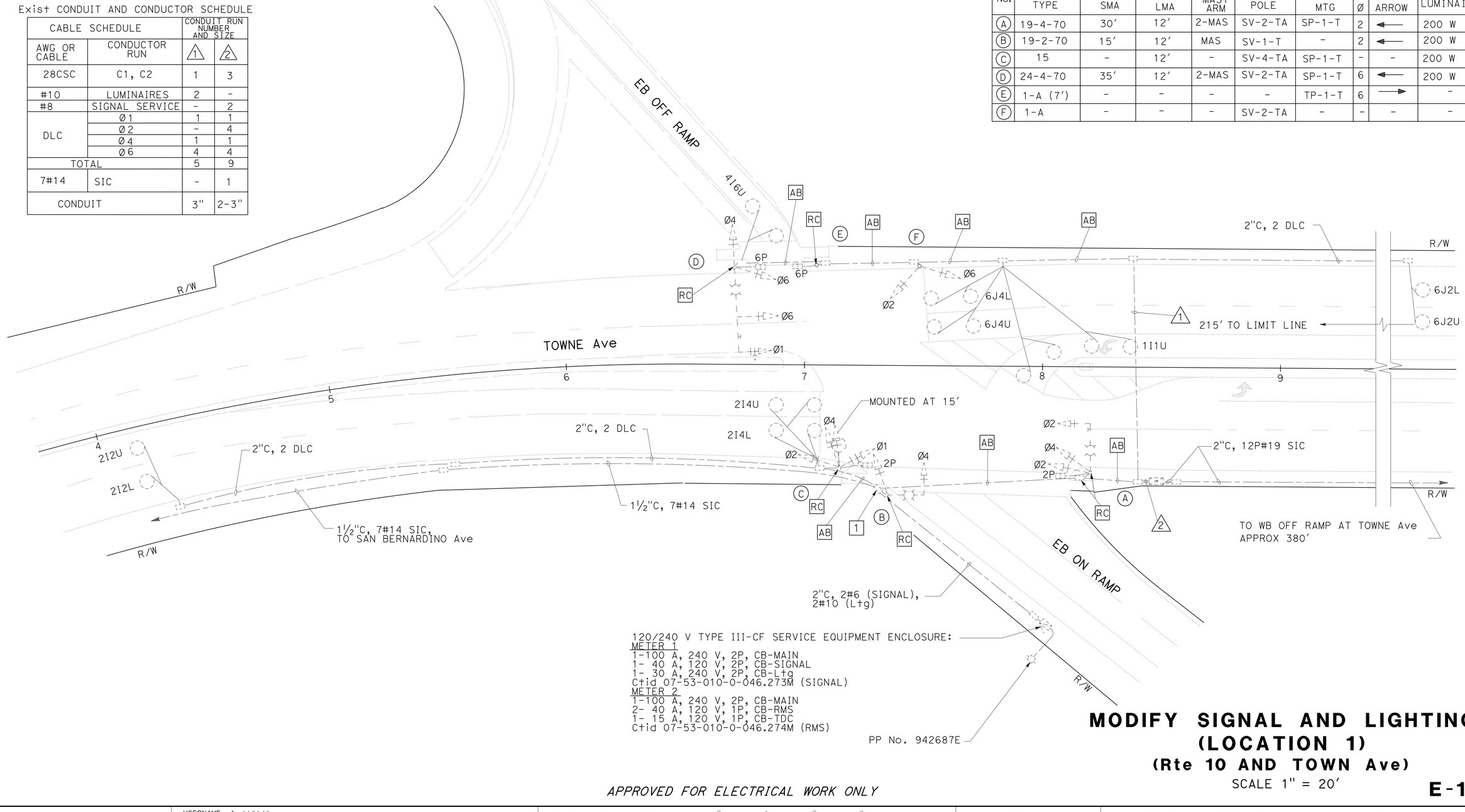

120/240 V TYPE III-CF SERVICE EQUIPMENT ENCLOSURE:
METER 1
1-100 A, 240 V, 2P, CB-MAIN
1- 40 A, 120 V, 2P, CB-SIGNAL
1- 30 A, 240 V, 2P, CB-Ltg
Ctid 07-53-010-0-046.273M (SIGNAL)
METER 2
1-100 A, 240 V, 2P, CB-MAIN
2- 40 A, 120 V, 1P, CB-RMS
1- 15 A, 120 V, 1P, CB-TDC
Ctid 07-53-010-0-046.274M (RMS)

PP No. 942687E

MODIFY SIGNAL AND LIGHTING (LOCATION 1)

(Rte 10 AND TOWN Ave)

SCALE 1" = 20′

E-15

APPROVED FOR ELECTRICAL WORK ONLY

REVISED BY | DATE REVISED
QUINCIE TRAN | CECILIO BURCIAGA
CALCULATED-DESIGNED BY | CHECKED BY
FUNCTIONAL SUPERVISOR: YI TSAU
STATE OF CALIFORNIA - DEPARTMENT OF TRANSPORTATION
Caltrans® TRAFFIC DESIGN

LAST REVISION | DATE PLOTTED => 01-APR-2014
01-22-14 | TIME PLOTTED => 12:30

BORDER LAST REVISED 7/2/2010 | USERNAME => s119140 | DGN FILE => 729500ua015.dgn | RELATIVE BORDER SCALE IS IN INCHES 0 1 2 3 | UNIT 1880 | PROJECT NUMBER & PHASE 07130000081

Dist	COUNTY	ROUTE	POST MILES TOTAL PROJECT	SHEET No.	TOTAL SHEETS
07	LA	10	41.7/48.3	62	131

REGISTERED ELECTRICAL ENGINEER — 1/17/14 DATE

C. BURCIAGA No. E015302 Exp. 3/31/15 ELECT — REGISTERED PROFESSIONAL ENGINEER — STATE OF CALIFORNIA

2-10-14
PLANS APPROVAL DATE

THE STATE OF CALIFORNIA OR ITS OFFICERS OR AGENTS SHALL NOT BE RESPONSIBLE FOR THE ACCURACY OR COMPLETENESS OF SCANNED COPIES OF THIS PLAN SHEET.

NOTES: (THIS SHEET ONLY)

1. FOR ACCURATE RIGHT OF WAY DATA, CONTACT RIGHT OF WAY ENGINEERING AT THE DISTRICT OFFICE.
2. NEW TRAFFIC SIGNAL SYSTEM MUST BE INSTALLED AND FUNCTIONING BEFORE REMOVING EXISTING TRAFFIC SIGNAL SYSTEM.
3. ALL NEW PULL BOXES MUST BE TAMPER RESISTANT TYPE.

CONDUIT AND CONDUCTOR SCHEDULE

CABLE SCHEDULE		CONDUIT RUN NUMBER AND SIZE					
AWG OR CABLE	CONDUCTOR RUN	1	2	3	4	5	6
28CSC	C1	1	1	1	1	1	1
	C2	1	1	1	1	1	1
#10	LUMINAIRE	-	2	2	2	2	2
	ISSNS	-	2	-	2	2	2
#8	EGC	1	1	1	1	1	1
#6	SIGNAL SERVICE	2	2	-	-	-	-
DLC	Ø1	1	-	-	-	1	1
	Ø2	4	-	4	-	-	-
	Ø4	1	-	-	1	1	1
	Ø6	4	-	-	-	2	4
TOTAL		10	-	4	1	4	6
7#14	SIC	1 (E)	-	-	-	-	-
CONDUIT		2-3"(E)	3"	3"	3"	3"	3"(E)

(E) - EXISTING

Exist PHASE DIAGRAM

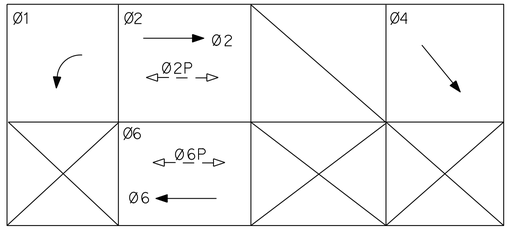

POLE AND EQUIPMENT SCHEDULE

No.	STANDARD TYPE	SMA	LMA	VEH SIG MTG MAST ARM	POLE	PED SIG MTG	APS Ø	APS ARROW	LED LUMINAIRE	IISNS
(A)	24A-4-100	35′	12′	2-MAS	SV-2-TA	SP-1-T	2	←	235 W	(10) EAST→
(B)	17A-2-100	15′	12′	MAS	SV-1-T	-	2	←	235 W	TOWNE Ave
(C)	21TS	-	12′	-	SV-3-TA	SP-1-T	-	-	235 W	-
(D)	29A-5-100	35′	12′	2-MAS	SV-2-TA	SP-1-T	6	←	235 W	← (10) EAST
(E)	1-A (7′)	-	-	-	-	TP-1-T	6	→	-	-
(F)	1-A (E)	-	-	-	SV-2-TA(E)	-	-	-	-	-

(E) - EXISTING

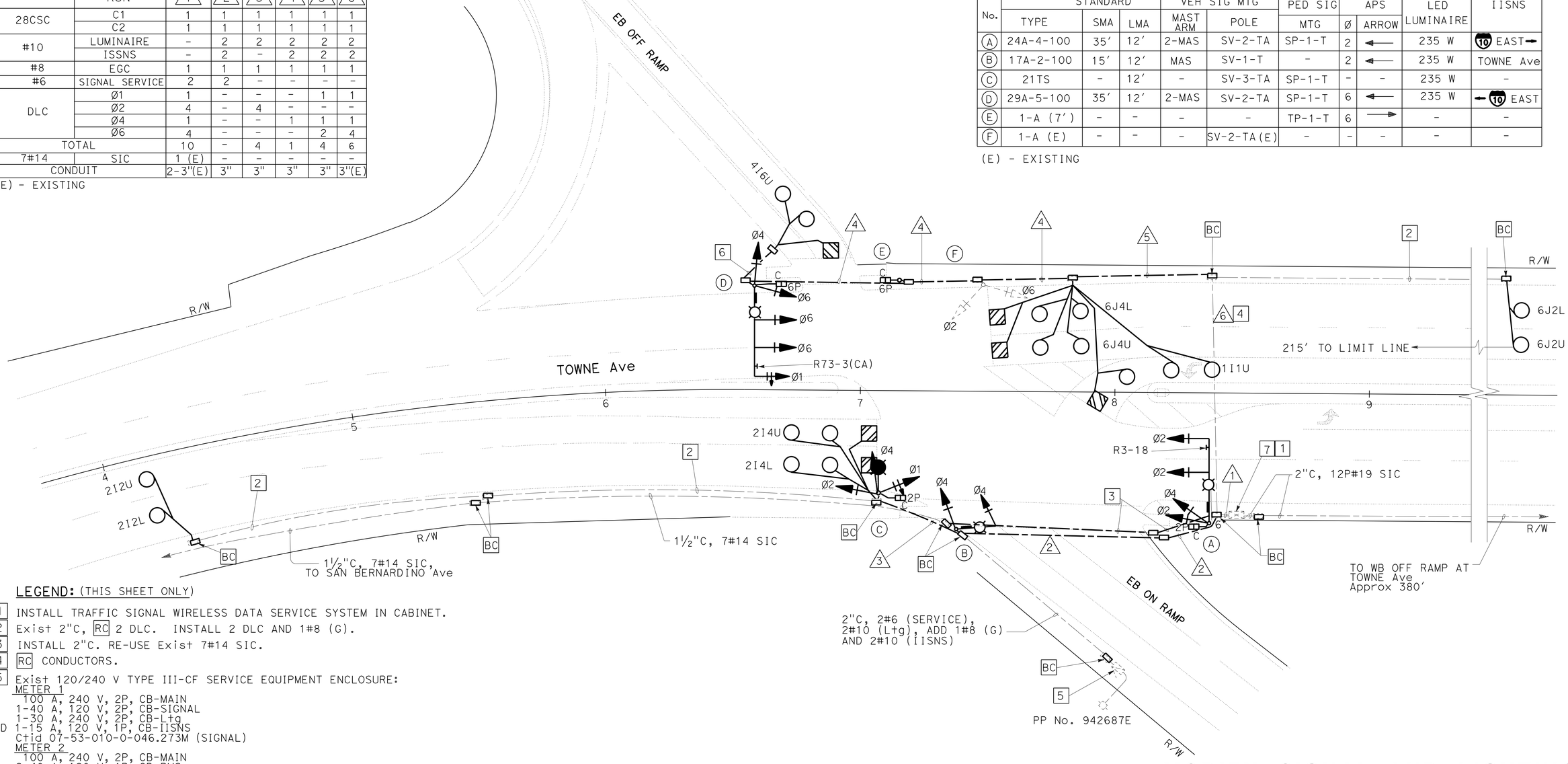

LEGEND: (THIS SHEET ONLY)

1. INSTALL TRAFFIC SIGNAL WIRELESS DATA SERVICE SYSTEM IN CABINET.
2. Exist 2"C, RC 2 DLC. INSTALL 2 DLC AND 1#8 (G).
3. INSTALL 2"C. RE-USE Exist 7#14 SIC.
4. RC CONDUCTORS.
5. Exist 120/240 V TYPE III-CF SERVICE EQUIPMENT ENCLOSURE:
   METER 1
   100 A, 240 V, 2P, CB-MAIN
   1-40 A, 120 V, 2P, CB-SIGNAL
   1-30 A, 240 V, 2P, CB-Ltg
   ADD 1-15 A, 120 V, 1P, CB-IISNS
   Ctid 07-53-010-0-046.273M (SIGNAL)
   METER 2
   100 A, 240 V, 2P, CB-MAIN
   2-40 A, 120 V, 1P, CB-RMS
   1-15 A, 120 V, 1P, CB-TDC
   Ctid 07-53-010-0-046.274M (RMS)
6. INSTALL 2"C, 1 DLC.
7. INSTALL DEPARTMENT-FURNISHED MODEL 2070 CONTROLLER UNIT WITH MODEL 2070-7G UNIVERSAL TIME BASE MODULE, MODEL 2070-6B MODEM AND C2 MODEM HARNESS.

RS Exist MODEL 170 CONTROLLER UNIT.

APPROVED FOR ELECTRICAL WORK ONLY

MODIFY SIGNAL AND LIGHTING (LOCATION 1)

(Rte 10 AND TOWN Ave)

SCALE 1" = 20′

E-16

LAST REVISION | DATE PLOTTED => 01-APR-2014
01-21-14 | TIME PLOTTED => 12:30

STATE OF CALIFORNIA - DEPARTMENT OF TRANSPORTATION
Caltrans® TRAFFIC DESIGN
FUNCTIONAL SUPERVISOR: YI TSAU
CALCULATED-DESIGNED BY: CECILIO BURCIAGA
CHECKED BY: QUINCIE TRAN
REVISED BY | DATE REVISED

BORDER LAST REVISED 7/2/2010 | USERNAME => s119140 | DGN FILE => 729500ua016.dgn | RELATIVE BORDER SCALE IS IN INCHES 0 1 2 3 | UNIT 1880 | PROJECT NUMBER & PHASE 07130000081

Dist	COUNTY	ROUTE	POST MILES TOTAL PROJECT	SHEET No.	TOTAL SHEETS
07	LA	10	41.7/48.3	63	131

REGISTERED ELECTRICAL ENGINEER — 1/17/14

2-10-14
PLANS APPROVAL DATE

REGISTERED PROFESSIONAL ENGINEER — C. BURCIAGA No. E015302 Exp. 3/31/15 ELECT — STATE OF CALIFORNIA

THE STATE OF CALIFORNIA OR ITS OFFICERS OR AGENTS SHALL NOT BE RESPONSIBLE FOR THE ACCURACY OR COMPLETENESS OF SCANNED COPIES OF THIS PLAN SHEET.

NOTES: (THIS SHEET ONLY)

1. FOR ACCURATE RIGHT OF WAY DATA, CONTACT RIGHT OF WAY ENGINEERING AT THE DISTRICT OFFICE.
2. NEW TRAFFIC SIGNAL SYSTEM TO BE INSTALLED AND FUNCTIONING BEFORE REMOVING EXISTING TRAFFIC SIGNAL SYSTEM.
3. [AB] ALL LOOP DETECTORS.

LEGEND (THIS SHEET ONLY)

[1] Exist 120/240 V TYPE III-CF SERVICE
CIRCUIT BREAKERS:
METER 1
2- 40 A, 120 V,1P TRAFFIC SIGNAL
1- 30 A, 120 V,1P LIGHTING(UNMETERED)
1- 30 A, 120 V, 1P CCTV
Ctid No. 07-53-010-0-047.740
METER 2
2- 40 A, 120 V, 1P RAMP METERING
1- 15 A, 120 V, 1P TELEPHONE
1- 15 A, 120 V, 1P IRRIGATION
Ctid No. 07-53-010-0-047.750

[2] Exist 2"C, 12P#19 SIC, 1 DLC TO EB RAMPS.

[3] Exist 2"C, 3 DLC.

[4] Exist 2"C, 4 DLC.

[5] Exist 2"C, 12P#19 SIC, 1 DLC.

[6] Exist 2"C, 5#4, 2#8.

[7] Exist 2"C, 3#4 TO EB RAMPS.

[8] Exist 2"C, 12P#19 SIC TO EB RAMPS CONTROLLER CABINET.

[9] 3#4(FOR EB RAMPS SERVICE) TO REMAIN AFTER NEW SIGNAL IS INSTALLED.
[RC] OTHER CONDUCTORS AND CABLE.

Exist PHASE DIAGRAM

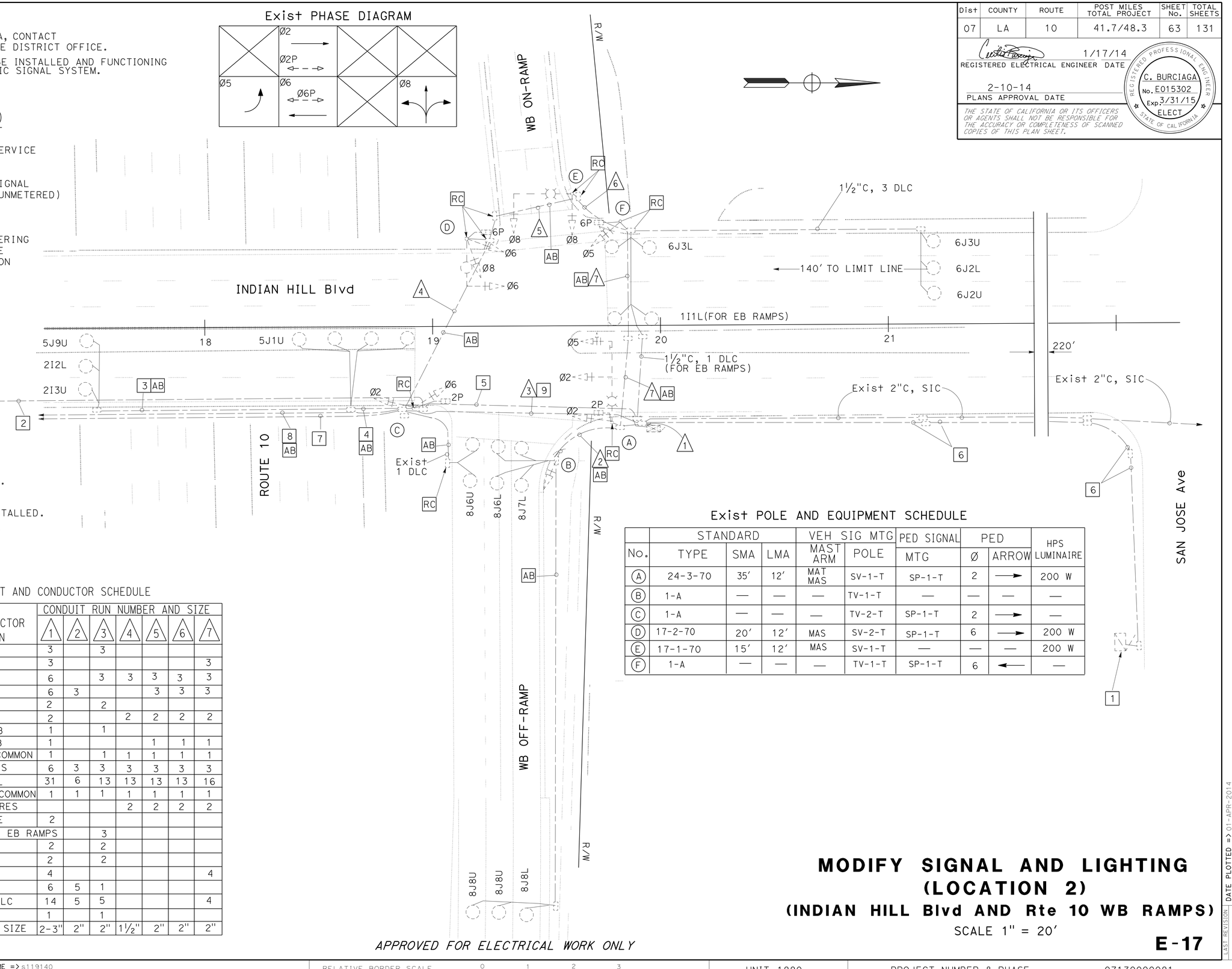

Exist CONDUIT AND CONDUCTOR SCHEDULE

AWG OR CABLE	CONDUCTOR RUN	CONDUIT RUN NUMBER AND SIZE 1	2	3	4	5	6	7
#14	Ø2	3		3				
	Ø5	3						3
	Ø6	6		3	3	3	3	3
	Ø8	6	3			3	3	3
	Ø2P	2		2				
	Ø6P	2			2	2	2	2
	Ø2PPB	1		1				
	Ø6PPB	1				1	1	1
	PPB COMMON	1		1	1	1	1	1
	SPARES	6	3	3	3	3	3	3
	TOTAL	31	6	13	13	13	13	16
#10	SIGNAL COMMON	1	1	1	1	1	1	1
#8	LUMINAIRES				2	2	2	2
#4	SERVICE	2						
#4	SERVICE EB RAMPS			3				
DLC	Ø2	2		2				
	Ø5	2		2				
	Ø6	4						4
	Ø8	6	5	1				
	TOTAL DLC	14	5	5				4
12P#19 SIC		1		1				
CONDUIT SIZE		2-3"	2"	2"	1½"	2"	2"	2"

Exist POLE AND EQUIPMENT SCHEDULE

No.	STANDARD TYPE	SMA	LMA	VEH SIG MTG MAST ARM	POLE	PED SIGNAL MTG	PED Ø	PED ARROW	HPS LUMINAIRE
(A)	24-3-70	35'	12'	MAT MAS	SV-1-T	SP-1-T	2	→	200 W
(B)	1-A	—	—	—	TV-1-T	—	—	—	—
(C)	1-A	—	—	—	TV-2-T	SP-1-T	2	→	—
(D)	17-2-70	20'	12'	MAS	SV-2-T	SP-1-T	6	→	200 W
(E)	17-1-70	15'	12'	MAS	SV-1-T	—	—	—	200 W
(F)	1-A	—	—	—	TV-1-T	SP-1-T	6	←	—

APPROVED FOR ELECTRICAL WORK ONLY

MODIFY SIGNAL AND LIGHTING (LOCATION 2)

(INDIAN HILL Blvd AND Rte 10 WB RAMPS)

SCALE 1" = 20'

E-17

LAST REVISION DATE PLOTTED => 01-APR-2014
TIME PLOTTED => 12:30

STATE OF CALIFORNIA - DEPARTMENT OF TRANSPORTATION
TRAFFIC DESIGN
FUNCTIONAL SUPERVISOR: YI TSAU
CALCULATED-DESIGNED BY: CECILIO BURCIAGA
CHECKED BY: QUINCIE TRAN
REVISED BY / DATE REVISED

BORDER LAST REVISED 7/2/2010 | USERNAME => s119140 | DGN FILE => 729500ua017.dgn | RELATIVE BORDER SCALE IS IN INCHES 0 1 2 3 | UNIT 1880 | PROJECT NUMBER & PHASE 07130000081

Dist	COUNTY	ROUTE	POST MILES TOTAL PROJECT	SHEET No.	TOTAL SHEETS
07	LA	10	41.7/48.3	64	131

REGISTERED ELECTRICAL ENGINEER — 1/17/14 DATE

C. BURCIAGA No. E015302 Exp. 3/31/15 ELECT — REGISTERED PROFESSIONAL ENGINEER — STATE OF CALIFORNIA

2-10-14
PLANS APPROVAL DATE

THE STATE OF CALIFORNIA OR ITS OFFICERS OR AGENTS SHALL NOT BE RESPONSIBLE FOR THE ACCURACY OR COMPLETENESS OF SCANNED COPIES OF THIS PLAN SHEET.

REVISED BY | DATE REVISED
QUINCIE TRAN | CECILIO BURCIAGA
CALCULATED-DESIGNED BY | CHECKED BY
FUNCTIONAL SUPERVISOR | YI TSAU

STATE OF CALIFORNIA - DEPARTMENT OF TRANSPORTATION
Caltrans® TRAFFIC DESIGN

NOTES: (THIS SHEET ONLY)

1. FOR ACCURATE RIGHT OF WAY DATA, CONTACT RIGHT OF WAY ENGINEERING AT THE DISTRICT OFFICE.
2. NEW TRAFFIC SIGNAL SYSTEM TO BE INSTALLED AND FUNCTIONING BEFORE REMOVING EXISTING TRAFFIC SIGNAL SYSTEM.
3. ALL NEW PULL BOXES MUST BE TAMPER RESISTANT TYPE.

PHASE DIAGRAM

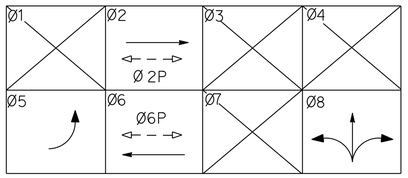

LEGEND: (THIS SHEET ONLY)

1. Exist 120/240 V TYPE III-CF SERVICE CIRCUIT BREAKERS:
   METER 1
   2- 40 A, 120 V,1P TRAFFIC SIGNAL
   1- 30 A, 120 V,1P LIGHTING(UNMETERED)
   1- 30 A, 120 V, 1P CCTV
   Ctid No. 07-53-010-0-047.740
   METER 2
   2- 40 A, 120 V, 1P RAMP METERING
   1- 15 A, 120 V, 1P TELEPHONE
   1- 15 A, 120 V, 1P IRRIGATION
   Ctid No. 07-53-010-0-047.750
2. Exist 2"C,12P#19 SIC 2 DLC, TO EB RAMPS. ADD 12P#19 SIC STARTING FROM EB RAMPS TRAFFIC SIGNAL CABINET.
3. Exist 2"C,3#4 TO EB RAMPS CONTROLLER CABINET.
4. Exist 2"C, 2-12PR#19 SIC. ADD 12P#19 SIC FROM EB RAMPS TRAFFIC SIGNAL CABINET.
5. Exist 2"C,5#4, 2#8. ADD 1#8 (G).
6. 2"C, 12CSC, 2#8(L+g), 1#8 (G).
7. INSTALL 2"C, 4 DLC.
8. INSTALL DEPARTMENT-FURNISHED MODEL 2070 CONTROLLER UNIT WITH MODEL 2070-7G UNIVERSAL TIME BASE MODULE, MODEL 2070-6B MODEM AND C2 MODEM HARNESS.
   RS Exist MODEL 170E CONTROLLER UNIT.
9. INSTALL TRAFFIC SIGNAL WIRELESS DATA SERVICE SYSTEM IN CABINET.
10. RC PULL BOX AND INSTALL TAMPER RESISTANT PULL BOX.

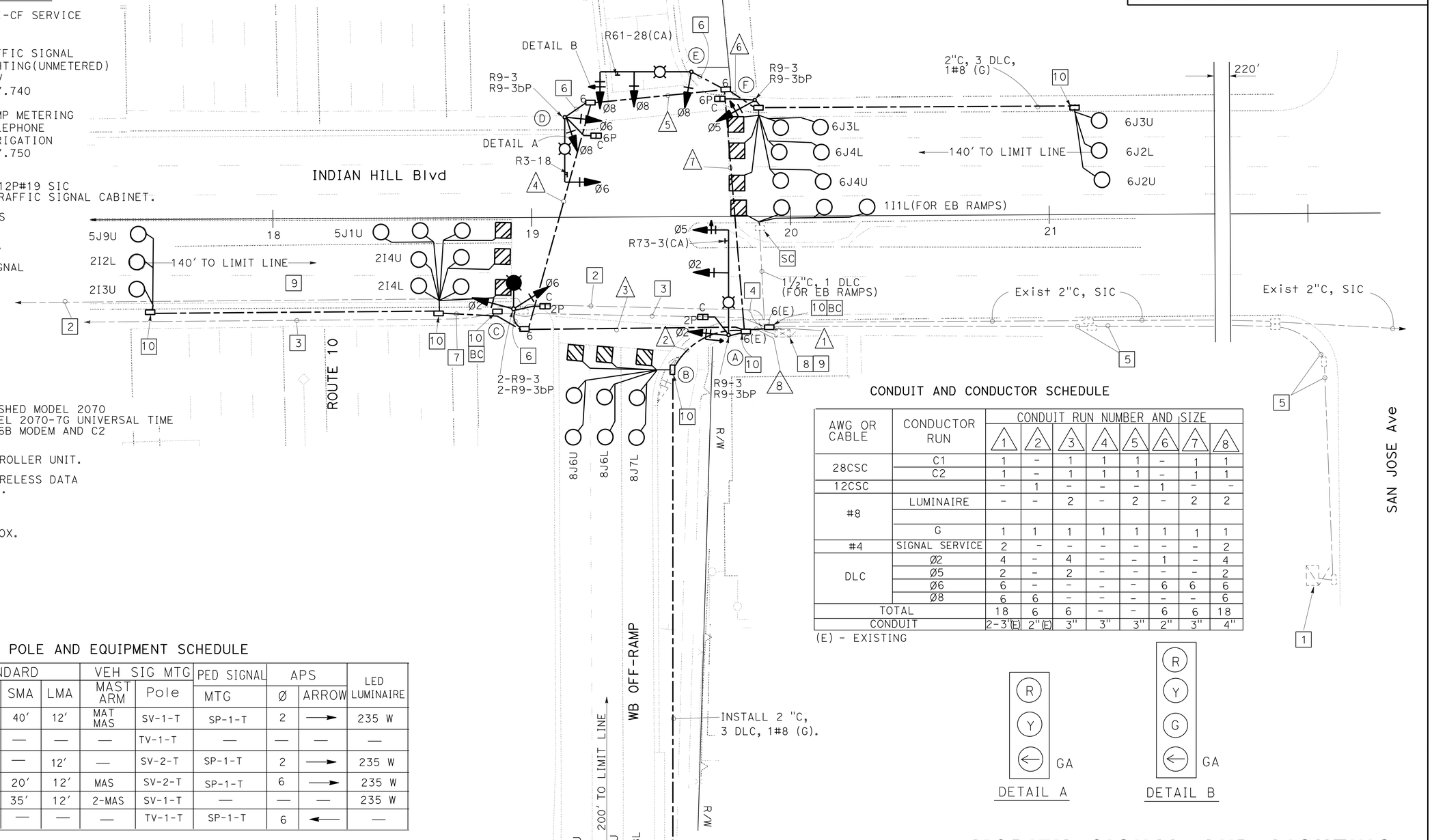

CONDUIT AND CONDUCTOR SCHEDULE

AWG OR CABLE	CONDUCTOR RUN	CONDUIT RUN NUMBER AND SIZE 1	2	3	4	5	6	7	8
28CSC	C1	1	–	1	1	1	–	1	1
	C2	1	–	1	1	1	–	1	1
12CSC		–	1	–	–	–	1	–	–
#8	LUMINAIRE	–	–	2	–	2	–	2	2
	G	1	1	1	1	1	1	1	1
#4	SIGNAL SERVICE	2	–	–	–	–	–	–	2
DLC	Ø2	4	–	4	–	–	1	–	4
	Ø5	2	–	2	–	–	–	–	2
	Ø6	6	–	–	–	–	6	6	6
	Ø8	6	6	–	–	–	–	–	6
TOTAL		18	6	6	–	–	6	6	18
CONDUIT		2-3"(E)	2"(E)	3"	3"	3"	2"	3"	4"

(E) - EXISTING

POLE AND EQUIPMENT SCHEDULE

No.	STANDARD TYPE	SMA	LMA	VEH SIG MTG MAST ARM	VEH SIG MTG Pole	PED SIGNAL MTG	APS Ø	APS ARROW	LED LUMINAIRE
A	26A-4-100	40'	12'	MAT MAS	SV-1-T	SP-1-T	2	→	235 W
B	1-A (E)	—	—	—	TV-1-T	—	—	—	—
C	21TS	—	12'	—	SV-2-T	SP-1-T	2	→	235 W
D	17-3-100	20'	12'	MAS	SV-2-T	SP-1-T	6	→	235 W
E	24A-4-100	35'	12'	2-MAS	SV-1-T	—	—	—	235 W
F	1-A	—	—	—	TV-1-T	SP-1-T	6	←	—

(E) - EXISTING

MODIFY SIGNAL AND LIGHTING (LOCATION 2)

(INDIAN HILL Blvd AND Rte 10 WB RAMPS)

SCALE 1" = 20'

APPROVED FOR ELECTRICAL WORK ONLY

E-18

LAST REVISION: DATE PLOTTED => 01-APR-2014
01-20-14 TIME PLOTTED => 12:30

BORDER LAST REVISED 7/2/2010 | USERNAME => s119140 DGN FILE => 729500ua018.dgn | RELATIVE BORDER SCALE IS IN INCHES 0 1 2 3 | UNIT 1880 | PROJECT NUMBER & PHASE 07130000081

Dist	COUNTY	ROUTE	POST MILES TOTAL PROJECT	SHEET No.	TOTAL SHEETS
07	LA	10	41.7/48.3	65	131

1/17/14
REGISTERED ELECT ENGINEER DATE

2-10-14
PLANS APPROVAL DATE

REGISTERED PROFESSIONAL ENGINEER
C. BURCIAGA
No. E015302
Exp. 3/31/15
ELECT
STATE OF CALIFORNIA

THE STATE OF CALIFORNIA OR ITS OFFICERS OR AGENTS SHALL NOT BE RESPONSIBLE FOR THE ACCURACY OR COMPLETENESS OF SCANNED COPIES OF THIS PLAN SHEET.

NOTE: (THIS SHEET ONLY)

(N) - NOT A SEPARATE PAY ITEM, FOR INFORMATION ONLY.

MODIFY TRAFFIC MONITORING STATION

SHEET No.	STUBOUT EA (N)	LOOP DETECTOR EA (N)
E-1	10	50
E-2	15	15
TOTAL	25	65

MODIFY RAMP METERING SYSTEM

SHEET No.	STUBOUT EA (N)	LOOP DETECTOR EA (N)
E-3	16	72
E-4	122	58
TOTAL	138	130

MODIFY SIGNAL

SHEET No.	STUBOUT EA (N)	LOOP DETECTOR EA (N)
E-5	2	6

MODIFY AUTOMATIC VEHICLE CLASSIFICATION STATION

SHEET No.	STUBOUT EA (N)	LOOP DETECTOR EA (N)	PIEZO-ELECTRIC EA (N)
E-6	2	10	20

TEMPORARY MICROWAVE VEHICLE DETECTION SYSTEM

SHEET No.	MVDS UNIT EA (N)	SOLAR PANEL EA (N)	170E CONTROLLER ASSEMBLY EA (N)	WIRELESS DATA EA (N)	No. 8 (G) LF (N)	MVDS CABLE LF (N)	1½"C TYPE 3 LF (N)	1½"C RISER LF (N)	MVDS EQUIPMENT EA (N)	WOOD POLE EA (N)
E-7	1	-	-	-	4	130	4	30	1	1
E-8	2	-	-	-	6	650	6	60	2	2
E-9	1	1	1	1	10	10	10	30	1	1
E-10	1	-	-	-	20	230	20	30	1	1
E-11	1	-	-	-	60	400	60	30	1	1
TOTAL	6	1	1	1	100	1420	100	180	6	6

ELECTRICAL QUANTITIES

E-19

REVISED BY | DATE REVISED
QUINCIE TRAN | CECILIO BURCIAGA
CALCULATED-DESIGNED BY | CHECKED BY
FUNCTIONAL SUPERVISOR: YI TSAU
STATE OF CALIFORNIA - DEPARTMENT OF TRANSPORTATION
Caltrans® TRAFFIC DESIGN

LAST REVISION 01-16-14 | DATE PLOTTED => 01-APR-2014 | TIME PLOTTED => 12:30

BORDER LAST REVISED 7/2/2010 | USERNAME => s119140 | DGN FILE => 729500ua019.dgn | RELATIVE BORDER SCALE IS IN INCHES 0 1 2 3 | UNIT 1880 | PROJECT NUMBER & PHASE 07130000081

NOTE: (THIS SHEET ONLY)

1. NOT A SEPARATE PAY ITEM, FOR INFORMATION ONLY.

Dist	COUNTY	ROUTE	POST MILES TOTAL PROJECT	SHEET No.	TOTAL SHEETS
07	LA	10	41.7/48.3	66	131

1/17/14
REGISTERED ELECTRICAL ENGINEER DATE

2-10-14
PLANS APPROVAL DATE

REGISTERED PROFESSIONAL ENGINEER
C. BURCIAGA
No. E015302
Exp. 3/31/15
ELECT
STATE OF CALIFORNIA

THE STATE OF CALIFORNIA OR ITS OFFICERS OR AGENTS SHALL NOT BE RESPONSIBLE FOR THE ACCURACY OR COMPLETENESS OF SCANNED COPIES OF THIS PLAN SHEET.

MODIFY SIGNAL AND LIGHTING (LOCATION 1)

SHEET No.	VEHICLE SIGNAL HEAD EA (N)	TRAFFIC SIGNAL POLE + LUMINAIRE EA (N)	TYPE 21TS POLE EA (N)	PED SIGNAL HEAD EA (N)	APS EA (N)	LOOP DETECTOR EA (N)	No. 5 PB EA (N)	No. 6 PB EA (N)	2"C LF (N)	3"C LF (N)	#10 LF (N)	#8 LF (N)	#8(G) LF (N)	28CSC LF (N)	DLC LF (N)
E-16	14	3	1	4	4	23	16	1	130	325	964	370	1034	820	2300
TOTAL	14	3	1	4	4	23	16	1	130	325	964	370	1034	820	2300

MODIFY SIGNAL AND LIGHTING (LOCATION 2)

SHEET No.	VEHICLE SIGNAL HEAD EA (N)	TRAFFIC SIGNAL POLE + LUMINAIRE EA (N)	TYPE 21TS POLE EA (N)	PED SIGNAL HEAD EA (N)	APS EA (N)	LOOP DETECTOR EA (N)	No. 5 PB EA (N)	No. 6 PB EA (N)	2"C LF (N)	3"C LF (N)	#10 LF (N)	#8 LF (N)	#8(G) LF (N)	28CSC LF (N)	DLC LF (N)
E-18	14	3	1	4	4	38	6	5	500	330	2000	1300	1034	1040	3200
TOTAL	14	3	1	4	4	38	6	5	500	330	2000	1300	1034	1040	3200

REVISED BY | DATE REVISED
QUINCIE TRAN | CECILIO BURCIAGA
CALCULATED-DESIGNED BY | CHECKED BY
FUNCTIONAL SUPERVISOR | YI TSAU
STATE OF CALIFORNIA - DEPARTMENT OF TRANSPORTATION
Caltrans® TRAFFIC DESIGN

ELECTRICAL QUANTITIES

E-20

LAST REVISION 01-20-14 | DATE PLOTTED => 01-APR-2014 | TIME PLOTTED => 12:30

BORDER LAST REVISED 7/2/2010 | USERNAME => s119140 | DGN FILE => 729500ua020.dgn | RELATIVE BORDER SCALE IS IN INCHES 0 1 2 3 | UNIT 1880 | PROJECT NUMBER & PHASE 07130000081

M

Maint	MAINTENANCE
Max	MAXIMUM
MB	METAL BEAM
MBB	METAL BEAM BARRIER
MBGR	METAL BEAM GUARD RAILING
Med	MEDIAN
MGS	MIDWEST GUARDRAIL SYSTEM
MH	MANHOLE
Min	MINIMUM
Misc	MISCELLANEOUS
Misc I & S	MISCELLANEOUS IRON AND STEEL
Mkr	MARKER
Mod	MODIFIED, MODIFY
Mon	MONUMENT
MP	METAL PLATE
MPGR	METAL PLATE GUARD RAILING
MR	MOVEMENT RATING
MSE	MECHANICALLY STABILIZED EMBANKMENT
Mt	MOUNTAIN, MOUNT
Mtl	MATERIAL
MVP	MAINTENANCE VEHICLE PULLOUT

N

N	NORTH
NB	NORTHBOUND
No.	NUMBER (MUST HAVE PERIOD)
Nos.	NUMBERS (MUST HAVE PERIOD)
NPS	NOMINAL PIPE SIZE
NS	NEAR SIDE
NSP	NEW STANDARD PLAN
NTS	NOT TO SCALE

O

Oblr	OBLITERATE
OC	OVERCROSSING
OD	OUTSIDE DIAMETER
OF	OUTSIDE FACE
OG	ORIGINAL GROUND
OGAC	OPEN GRADED ASPHALT CONCRETE
OGFC	OPEN GRADED FRICTION COURSE
OH	OVERHEAD
OHWM	ORDINARY HIGH WATER MARK
O-O	OUT TO OUT
Opp	OPPOSITE
OSD	OVERSIDE DRAIN

P

P	PAGE
PAP	PERFORATED ALUMINUM PIPE
PB	PULL BOX
PC	POINT OF CURVATURE, PRECAST
PCC	POINT OF COMPOUND CURVE, PORTLAND CEMENT CONCRETE
PCMS	PORTABLE CHANGEABLE MESSAGE SIGN
PCP	PERFORATED CONCRETE PIPE, PRESTRESSED CONCRETE PIPE
PCVC	POINT OF COMPOUND VERTICAL CURVE
PEC	PERMIT TO ENTER AND CONSTRUCT
Ped	PEDESTRIAN
Ped OC	PEDESTRIAN OVERCROSSING
Ped UC	PEDESTRIAN UNDERCROSSING
Perm Mtl	PERMEABLE MATERIAL

P continued

PG	PROFILE GRADE
PI	POINT OF INTERSECTION
PJP	PARTIAL JOINT PENETRATION
Pkwy	PARKWAY
℄,PL	PLATE
P/L	PROPERTY LINE
PM	POST MILE, TIME FROM NOON TO MIDNIGHT
PN	PAVING NOTCH
POC	POINT OF HORIZONTAL CURVE
POT	POINT OF TANGENT
POVC	POINT OF VERTICAL CURVE
PP	PIPE PILE, PLASTIC PIPE, POWER POLE
PPL	PREFORMED PERMEABLE LINER
PPP	PERFORATED PLASTIC PIPE
PRC	POINT OF REVERSE CURVE
PRF	PAVEMENT REINFORCING FABRIC
PRVC	POINT OF REVERSE VERTICAL CURVE
PS&E	PLANS, SPECIFICATIONS AND ESTIMATES
PS, P/S	PRESTRESSED
PSP	PERFORATED STEEL PIPE
PT	POINT OF TANGENCY
PVC	POLYVINYL CHLORIDE
Pvmt	PAVEMENT

Q

Qty	QUANTITY

R

R	RADIUS
R & D	REMOVE AND DISPOSE
R & S	REMOVE AND SALVAGE
R/C	RATE OF CHANGE
RCA	REINFORCED CONCRETE ARCH
RCB	REINFORCED CONCRETE BOX
RCP	REINFORCED CONCRETE PIPE
RCPA	REINFORCED CONCRETE PIPE ARCH
Rd	ROAD
Reinf	REINFORCED, REINFORCEMENT, REINFORCING
Rel	RELOCATE
Repl	REPLACEMENT
Ret	RETAINING
Rev	REVISED, REVISION
Rdwy	ROADWAY
RHMA	RUBBERIZED HOT MIX ASPHALT
Riv	RIVER
RM	ROAD-MIXED
RP	RADIUS POINT, REFERENCE POINT
RR	RAILROAD
RSP	ROCK SLOPE PROTECTION, REVISED STANDARD PLAN
Rt	RIGHT
Rte	ROUTE
RW	REDWOOD, RETAINING WALL
R/W	RIGHT OF WAY
Rwy	RAILWAY

S

S	SOUTH, SUPPLEMENT
SAE	STRUCTURE APPROACH EMBANKMENT
Salv	SALVAGE
SAPP	STRUCTURAL ALUMINUM PLATE PIPE
SB	SOUTHBOUND
SC	SAND CUSHION
SCSP	SLOTTED CORRUGATED STEEL PIPE
SD	STORM DRAIN
Sec	SECOND, SECTION
Sep	SEPARATION
SG	SUBGRADE
Shld	SHOULDER
Sht	SHEET
Sim	SIMILAR
℄	STATION LINE
SM	SELECTED MATERIAL
Spec	SPECIAL, SPECIFICATIONS
SPP	SLOTTED PLASTIC PIPE
SS	SLOPE STAKE
SSBM	STRAP AND SADDLE BRACKET METHOD
SSD	STRUCTURAL SECTION DRAIN
SSPA	STRUCTURAL STEEL PLATE ARCH
SSPP	STRUCTURAL STEEL PLATE PIPE
SSPPA	STRUCTURAL STEEL PLATE PIPE ARCH
SSRP	STEEL SPIRAL RIB PIPE
St	STREET
Sta	STATION
STBB	SINGLE THRIE BEAM BARRIER
Std	STANDARD
Str	STRUCTURE
Surf	SURFACING
SW	SIDEWALK, SOUND WALL
Swr	SEWER
Sym	SYMMETRICAL
S4S	SURFACE 4 SIDES

T

T	SEMI-TANGENT
Tan	TANGENT
TBB	THRIE BEAM BARRIER
Tbr	TIMBER
TC	TOP OF CURB
TCB	TRAFFIC CONTROL BOX
TCE	TEMPORARY CONSTRUCTION EASEMENT
Tel	TELEPHONE
Temp	TEMPORARY
TG	TOP OF GRADE
Tot	TOTAL
TP	TELEPHONE POLE
TPB	TREATED PERMEABLE BASE
TPM	TREATED PERMEABLE MATERIAL
Trans	TRANSITION

T continued

TS	TRANSVERSE, TRAFFIC SIGNAL, TUBULAR STEEL
Typ	TYPICAL

U

UC	UNDERCROSSING
UD	UNDERDRAIN
UG	UNDERGROUND
UON	UNLESS OTHERWISE NOTED
UP	UNDERPASS

V

V	VALVE, DESIGN SPEED
Var	VARIABLE, VARIES
VC	VERTICAL CURVE
VCP	VITRIFIED CLAY PIPE
Vert	VERTICAL
Via	VIADUCT
Vol	VOLUME

W

W	WEST, WIDTH
WB	WESTBOUND
WH	WEEP HOLE
WM	WIRE MESH
WS	WATER SURFACE
WSP	WELDED STEEL PIPE
Wt	WEIGHT
WV	WATER VALVE
WW	WINGWALL
WWLOL	WINGWALL LAYOUT LINE

X

X Sec	CROSS SECTION
Xing	CROSSING

Y

Yr	YEAR
Yrs	YEARS

Dist	COUNTY	ROUTE	POST MILES TOTAL PROJECT	SHEET No.	TOTAL SHEETS
07	LA	10	41.7/48.3	67	131

Grace M. Tsushima
REGISTERED CIVIL ENGINEER

July 19, 2013
PLANS APPROVAL DATE

REGISTERED PROFESSIONAL ENGINEER — Grace M. Tsushima — No. C49814 — Exp. 9-30-14 — CIVIL — STATE OF CALIFORNIA

THE STATE OF CALIFORNIA OR ITS OFFICERS OR AGENTS SHALL NOT BE RESPONSIBLE FOR THE ACCURACY OR COMPLETENESS OF SCANNED COPIES OF THIS PLAN SHEET.

TO ACCOMPANY PLANS DATED 2-10-14

UNIT OF MEASUREMENT SYMBOLS:

Some of the symbols used in the project plan quantity tables and in the Bid Item List are:

TABLE A

SYMBOL USED	DEFINITIONS
ACRE	ACRE
CF	CUBIC FOOT
CY	CUBIC YARD
EA	EACH
GAL	GALLON
LB	POUND
LF	LINEAR FOOT
SQFT	SQUARE FOOT
SQYD	SQUARE YARD
STA	100 FEET
TAB	TABLET
TON	2,000 POUNDS

Some of the symbols used in the plans other than in the project plan quantity tables are:

TABLE B

SYMBOL USED	DEFINITIONS
ksi	KIPS PER SQUARE INCH
ksf	KIPS PER SQUARE FOOT
psi	POUNDS PER SQUARE INCH
psf	POUNDS PER SQUARE FOOT
lb/ft^3, pcf	POUNDS PER CUBIC FOOT
tsf	TONS PER SQUARE FOOT
mph, MPH *	MILES PER HOUR
ø	NOMINAL DIAMETER
oz	OUNCE
lb	POUND
kip	1,000 POUNDS
cal	CALORIE
ft	FOOT OR FEET
gal	GALLON

* For use on a sign panel only

STATE OF CALIFORNIA
DEPARTMENT OF TRANSPORTATION

ABBREVIATIONS (SHEET 2 OF 2)

NO SCALE

RSP A10B DATED JULY 19, 2013 SUPERSEDES STANDARD PLAN A10B DATED MAY 20, 2011 - PAGE 2 OF THE STANDARD PLANS BOOK DATED 2010.

REVISED STANDARD PLAN RSP A10B

2010 REVISED STANDARD PLAN RSP A10B

6-7-13

Dist	COUNTY	ROUTE	POST MILES TOTAL PROJECT	SHEET No.	TOTAL SHEETS
07	LA	10	41.7/48.3	68	131

Roberta L. McLaughlin
REGISTERED CIVIL ENGINEER

July 19, 2013
PLANS APPROVAL DATE

REGISTERED PROFESSIONAL ENGINEER
Roberta L. McLaughlin
No. C40375
Exp. 3-31-15
CIVIL
STATE OF CALIFORNIA

THE STATE OF CALIFORNIA OR ITS OFFICERS OR AGENTS SHALL NOT BE RESPONSIBLE FOR THE ACCURACY OR COMPLETENESS OF SCANNED COPIES OF THIS PLAN SHEET.

TO ACCOMPANY PLANS DATED 2-10-14

EXIT RAMP NEUTRAL AREA (GORE) TREATMENT

DETAIL 36

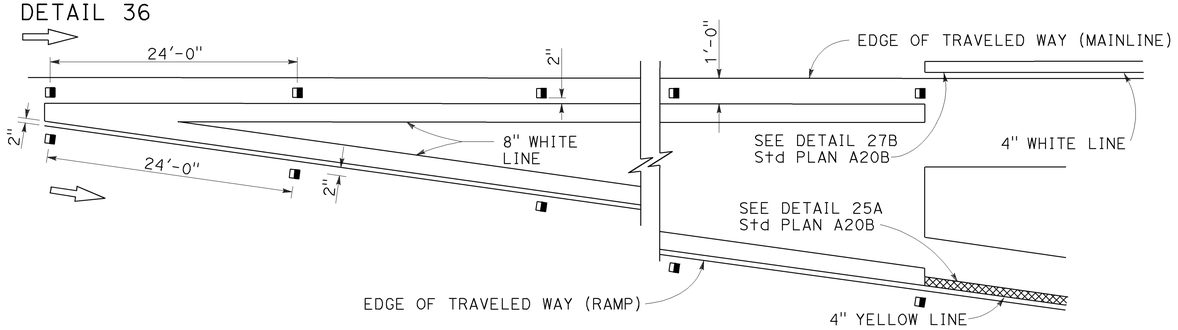

ENTRANCE RAMP NEUTRAL AREA (MERGE) TREATMENT

DETAIL 36A

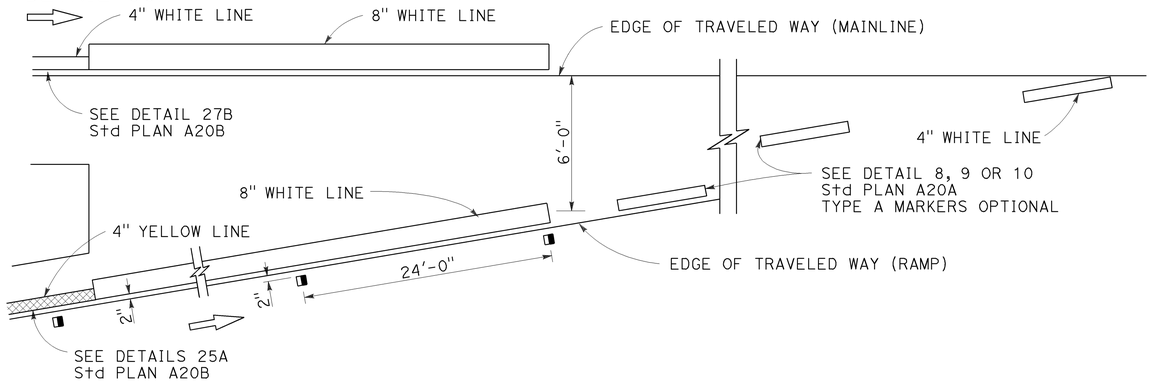

ENTRANCE RAMP NEUTRAL AREA (ACCELERATION LANE) TREATMENT

DETAIL 36B

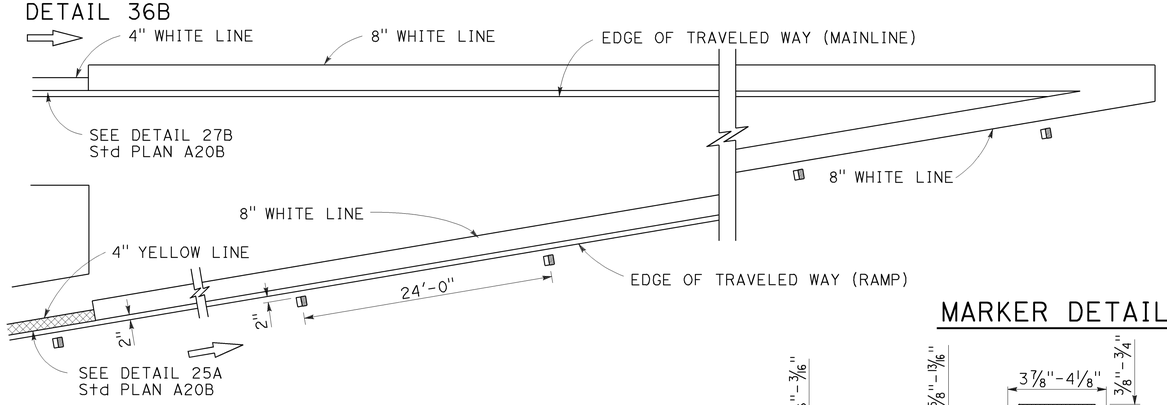

LANE DROP AT EXIT RAMPS

DETAIL 37

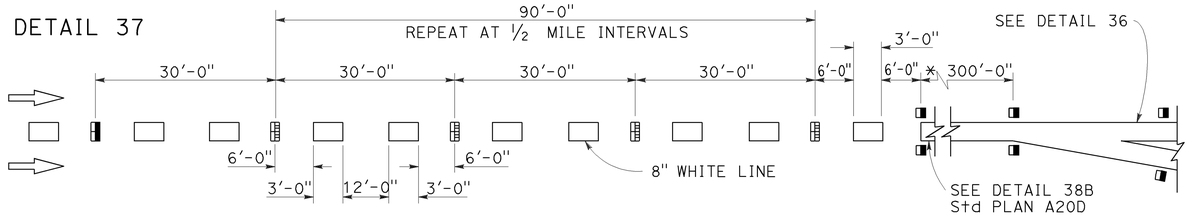

DETAIL 37A

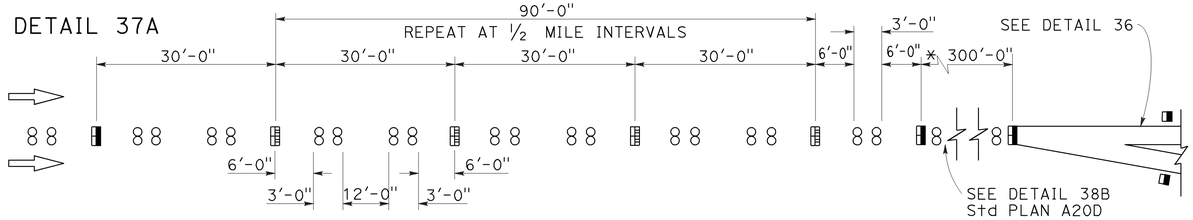

* The solid channelizing line shown may be omitted on short auxiliary lanes where weaving length is critical.

LANE DROP AT INTERSECTIONS

DETAIL 37B

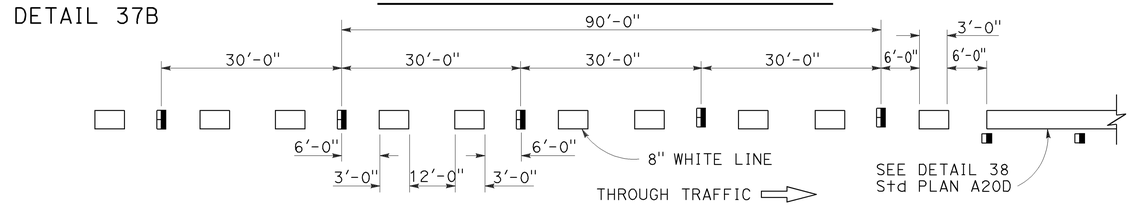

DETAIL 37C

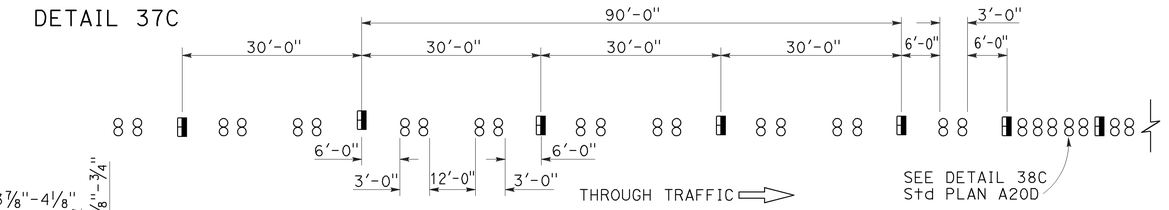

MARKER DETAILS

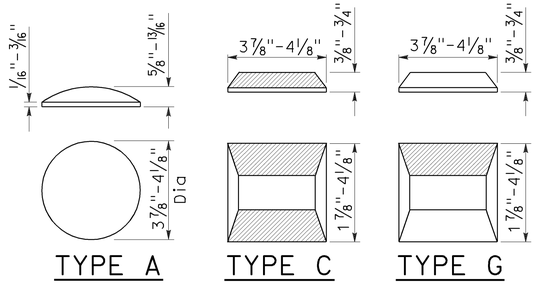

LEGEND:

MARKERS

- ○ TYPE A WHITE NON-REFLECTIVE
- ▣ TYPE C RED-CLEAR RETROREFLECTIVE
- ◨ TYPE G ONE-WAY CLEAR RETROREFLECTIVE

STATE OF CALIFORNIA
DEPARTMENT OF TRANSPORTATION

PAVEMENT MARKERS AND TRAFFIC LINE TYPICAL DETAILS

NO SCALE

RSP A20C DATED JULY 19, 2013 SUPERSEDES STANDARD PLAN A20C
DATED MAY 20, 2011 - PAGE 11 OF THE STANDARD PLANS BOOK DATED 2010.

REVISED STANDARD PLAN RSP A20C

2010 REVISED STANDARD PLAN RSP A20C

4-29-13

Dist	COUNTY	ROUTE	POST MILES TOTAL PROJECT	SHEET No.	TOTAL SHEETS
07	LA	10	41.7/48.3	69	131

Roberta L. McLaughlin
REGISTERED CIVIL ENGINEER

April 20, 2012
PLANS APPROVAL DATE

REGISTERED PROFESSIONAL ENGINEER
Roberta L. McLaughlin
No. C40375
Exp. 3-31-13
CIVIL
STATE OF CALIFORNIA

THE STATE OF CALIFORNIA OR ITS OFFICERS OR AGENTS SHALL NOT BE RESPONSIBLE FOR THE ACCURACY OR COMPLETENESS OF SCANNED COPIES OF THIS PLAN SHEET.

TO ACCOMPANY PLANS DATED 2-10-14

2010 REVISED STANDARD PLAN RSP A24A

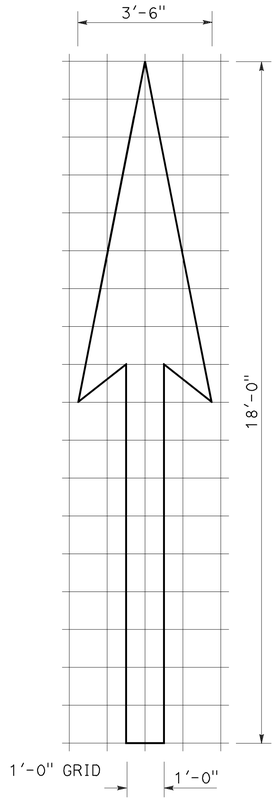

A=25 ft²

TYPE I 18'-0" ARROW

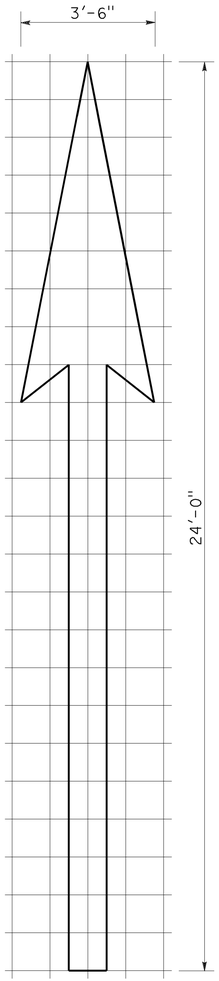

A=31 ft²

TYPE I 24'-0" ARROW

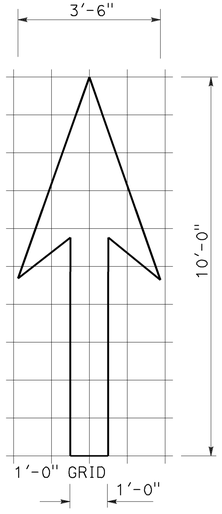

A=14 ft²

TYPE I 10'-0" ARROW

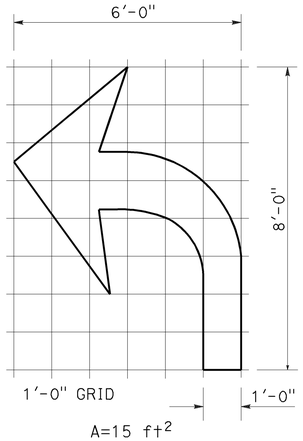

A=15 ft²

TYPE IV (L) ARROW

(For Type IV (R) arrow, use mirror image)

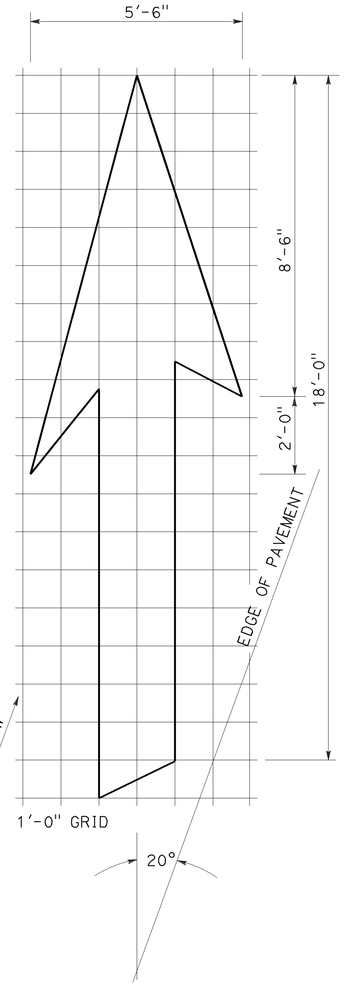

A=42 ft²

TYPE VI ARROW

Right lane drop arrow (For left lane, use mirror image)

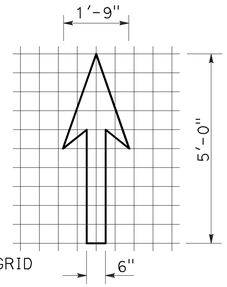

A=3.5 ft²

BIKE LANE ARROW

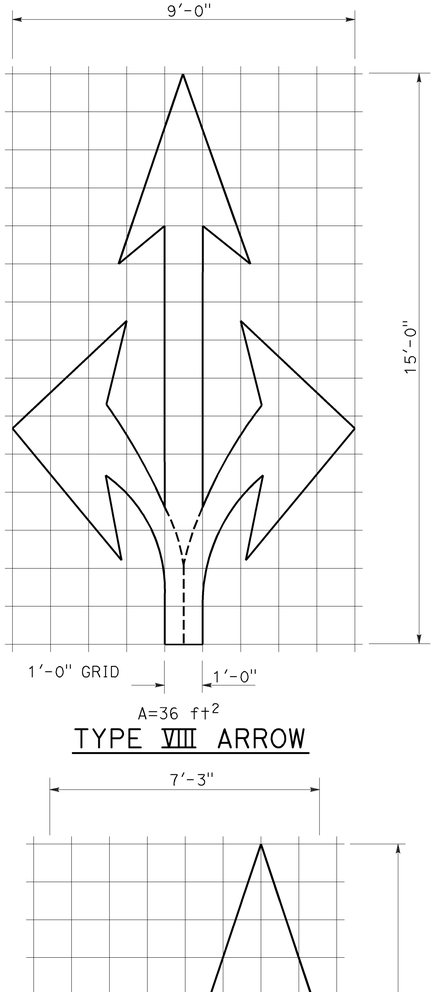

A=36 ft²

TYPE VIII ARROW

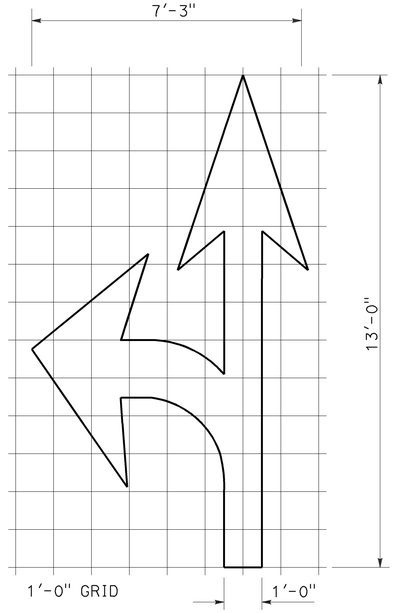

A=27 ft²

TYPE VII (L) ARROW

(For Type VII (R) arrow, use mirror image)

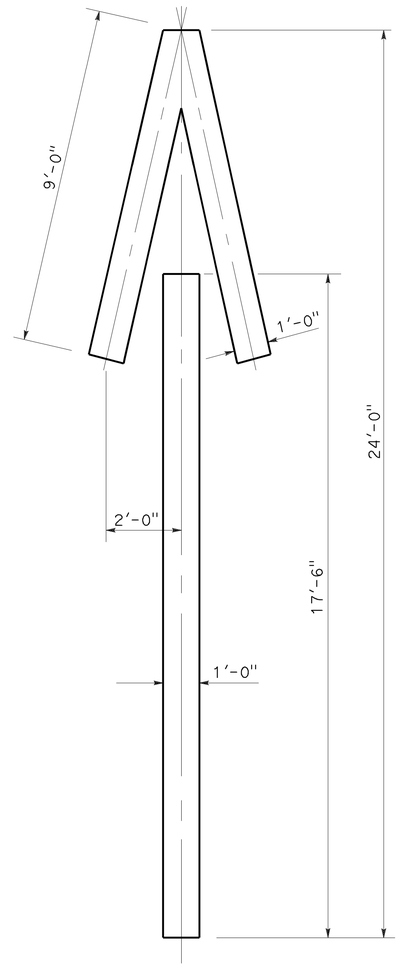

A=33 ft²

TYPE V ARROW

NOTE:
Minor variations in dimensions may be accepted by the Engineer.

STATE OF CALIFORNIA
DEPARTMENT OF TRANSPORTATION

PAVEMENT MARKINGS ARROWS

NO SCALE

RSP A24A DATED APRIL 20, 2012 SUPERSEDES STANDARD PLAN A24A DATED MAY 20, 2011 - PAGE 13 OF THE STANDARD PLANS BOOK DATED 2010.

REVISED STANDARD PLAN RSP A24A

3-14-12

Dist	COUNTY	ROUTE	POST MILES TOTAL PROJECT	SHEET No.	TOTAL SHEETS
07	LA	10	41.7/48.3	70	131

Roberta L. McLaughlin
REGISTERED CIVIL ENGINEER

October 19, 2012
PLANS APPROVAL DATE

REGISTERED PROFESSIONAL ENGINEER
Roberta L. McLaughlin
No. C40375
Exp. 3-31-13
CIVIL
STATE OF CALIFORNIA

THE STATE OF CALIFORNIA OR ITS OFFICERS OR AGENTS SHALL NOT BE RESPONSIBLE FOR THE ACCURACY OR COMPLETENESS OF SCANNED COPIES OF THIS PLAN SHEET.

NOTE: TO ACCOMPANY PLANS DATED 2-10-14

Minor variations in dimensions may be accepted by the Engineer.

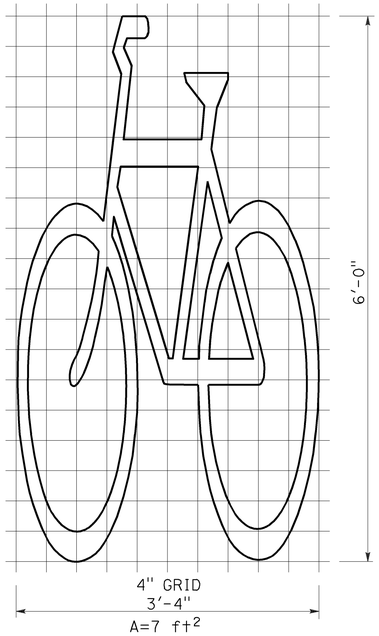

BIKE LANE SYMBOL WITHOUT PERSON

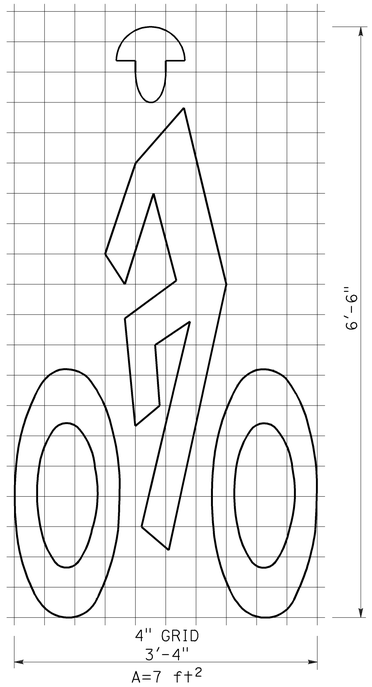

BIKE LANE SYMBOL WITH PERSON

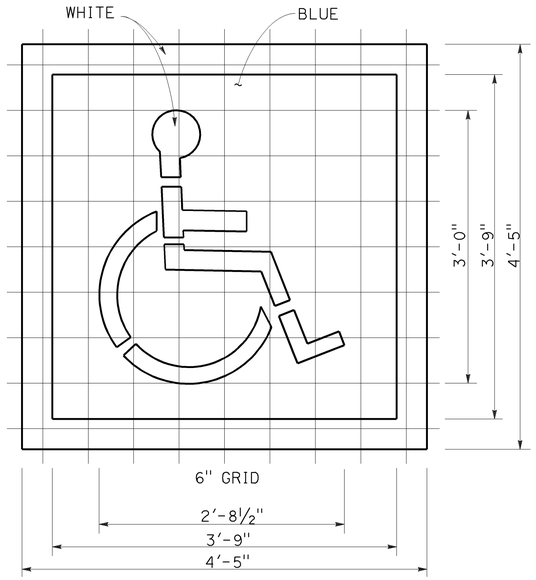

INTERNATIONAL SYMBOL OF ACCESSIBILITY (ISA) MARKING

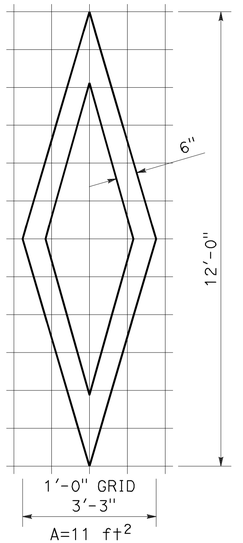

DIAMOND SYMBOL

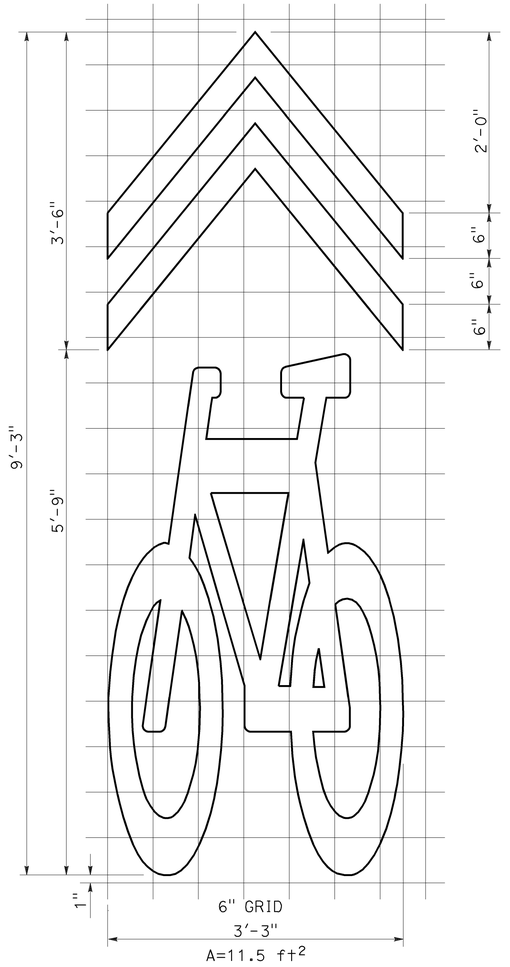

SHARED ROADWAY BICYCLE MARKING

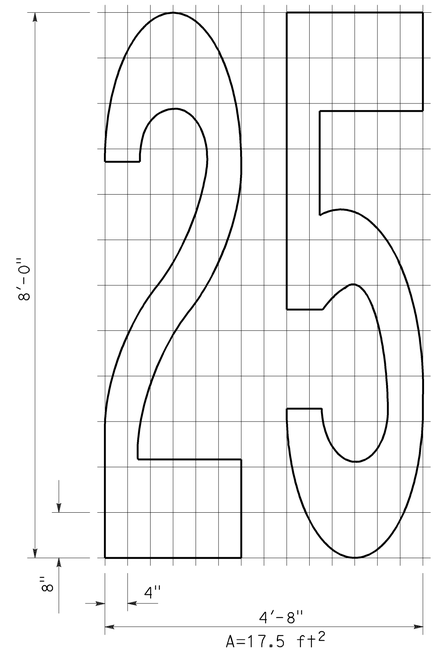

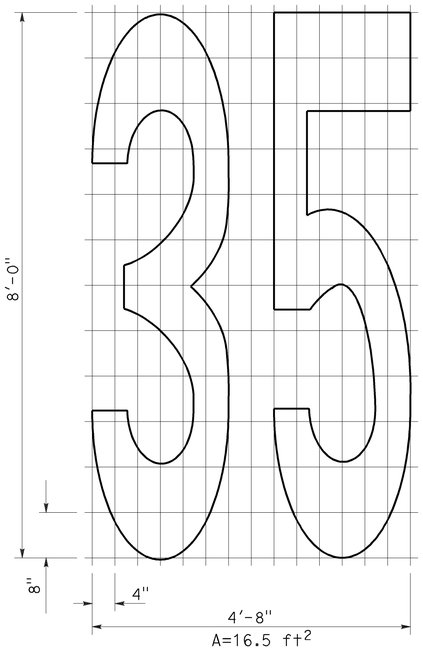

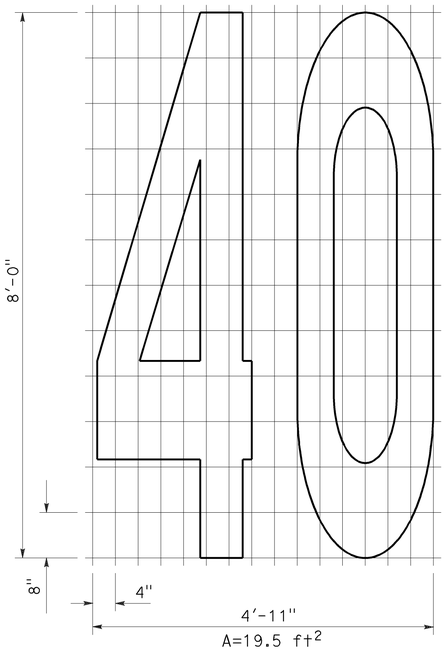

NUMERALS

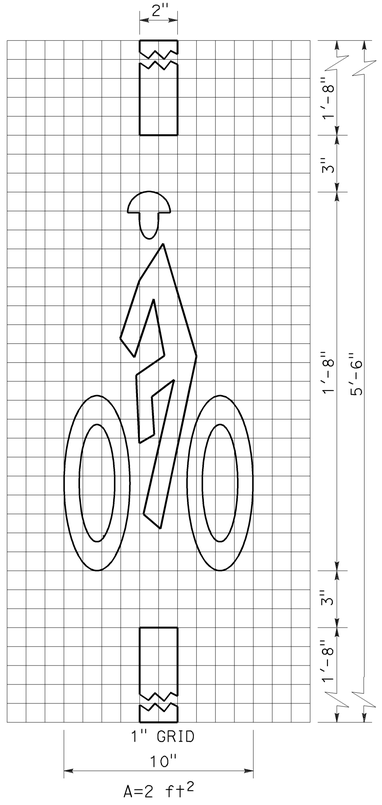

BICYCLE LOOP DETECTOR SYMBOL

STATE OF CALIFORNIA
DEPARTMENT OF TRANSPORTATION

PAVEMENT MARKINGS SYMBOLS AND NUMERALS

NO SCALE

RSP A24C DATED OCTOBER 19, 2012 SUPERSEDES STANDARD PLAN A24C DATED MAY 20, 2011 - PAGE 15 OF THE STANDARD PLANS BOOK DATED 2010.

REVISED STANDARD PLAN RSP A24C

2010 REVISED STANDARD PLAN RSP A24C

6-28-12

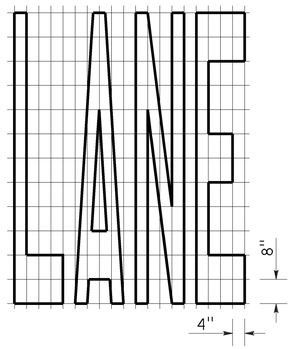

A=24 ft²

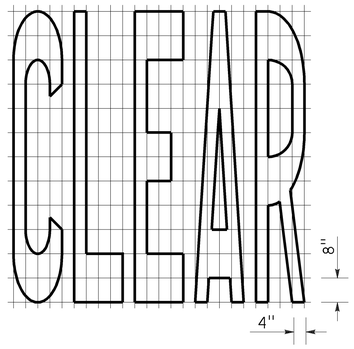

A=27 ft²

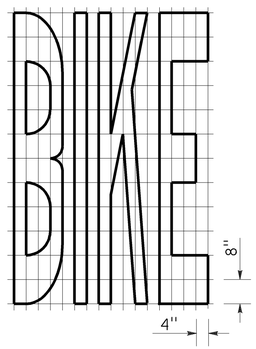

A=21 ft²

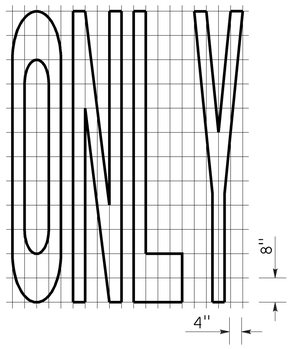

A=22 ft²

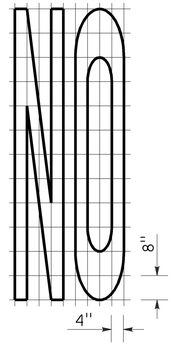

A=14 ft²

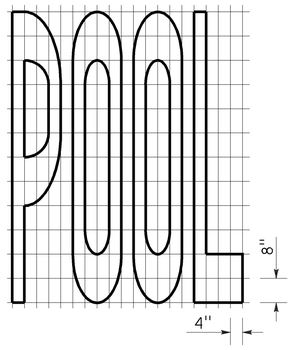

A=23 ft²

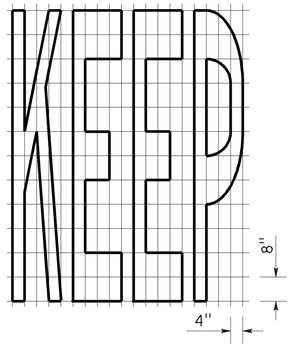

A=24 ft²

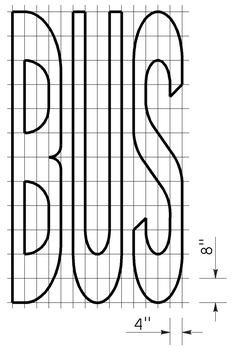

A=20 ft²

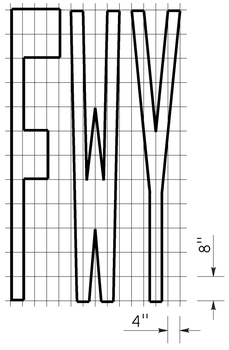

A=16 ft²

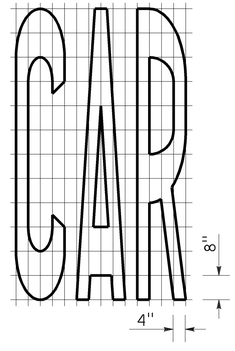

A=17 ft²

Dist	COUNTY	ROUTE	POST MILES TOTAL PROJECT	SHEET No.	TOTAL SHEETS
07	LA	10	41.7/48.3	71	131

Roberta L. McLaughlin
REGISTERED CIVIL ENGINEER

July 20, 2012
PLANS APPROVAL DATE

REGISTERED PROFESSIONAL ENGINEER
Roberta L. McLaughlin
No. C40375
Exp. 3-31-13
CIVIL
STATE OF CALIFORNIA

THE STATE OF CALIFORNIA OR ITS OFFICERS OR AGENTS SHALL NOT BE RESPONSIBLE FOR THE ACCURACY OR COMPLETENESS OF SCANNED COPIES OF THIS PLAN SHEET.

TO ACCOMPANY PLANS DATED 2-10-14

WORD MARKINGS			
ITEM	ft²	ITEM	ft²
LANE	24	NO	14
POOL	23	BIKE	21
CAR	17	BUS	20
CLEAR	27	ONLY	22
KEEP	24	FWY	16

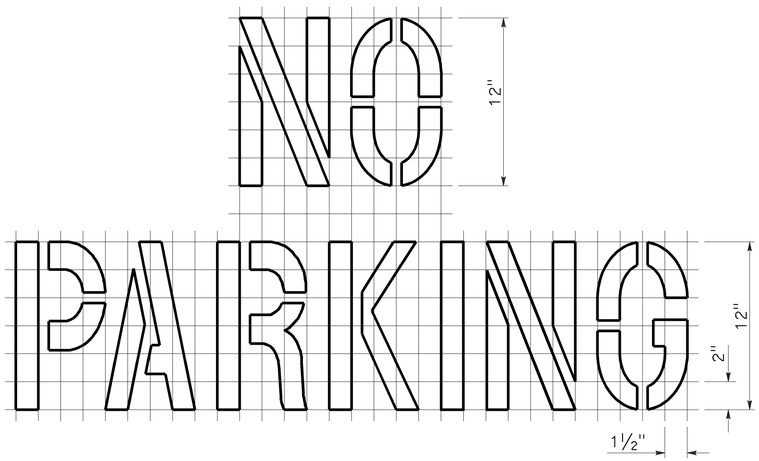

A=2 ft²
See Notes 6 and 7

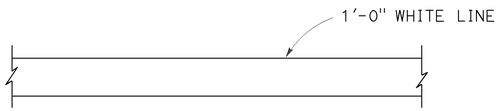

LIMIT LINE (STOP LINE)

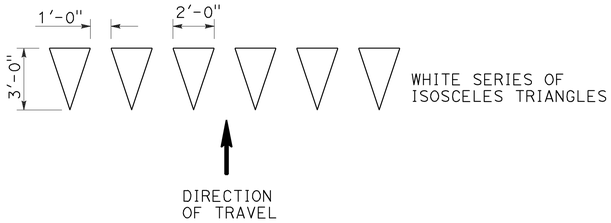

YIELD LINE

NOTES:

1. If a message consists of more than one word, it should read "UP", i.e., the first word should be nearest the driver.
2. The space between words should be at least four times the height of the characters for low speed roads, but not more than ten times the height of the characters. The space may be reduced appropriately where there is limited space because of local conditions.
3. Minor variations in dimensions may be accepted by the Engineer.
4. Portions of a letter, number or symbol may be separated by connecting segments not to exceed 2" in width.
5. The words "NO PARKING" pavement marking is to be used for parking facilities. For typical locations of markings, see Standard Plans A90A and A90B.
6. The words "NO PARKING", shall be painted in white letters no less than 1'-0" high on a contrasting background and located so that it is visible to traffic enforcement officials.

STATE OF CALIFORNIA
DEPARTMENT OF TRANSPORTATION

PAVEMENT MARKINGS
WORDS, LIMIT AND YIELD LINES

NO SCALE

RSP A24E DATED JULY 20, 2012 SUPERSEDES STANDARD PLAN A24E
DATED MAY 20, 2011 - PAGE 17 OF THE STANDARD PLANS BOOK DATED 2010.

REVISED STANDARD PLAN RSP A24E

2010 REVISED STANDARD PLAN RSP A24E

6-12-12

Dist	COUNTY	ROUTE	POST MILES TOTAL PROJECT	SHEET No.	TOTAL SHEETS
07	LA	10	41.7/48.3	72	131

Roberta L. McLaughlin
REGISTERED CIVIL ENGINEER

July 20, 2012
PLANS APPROVAL DATE

REGISTERED PROFESSIONAL ENGINEER
Roberta L. McLaughlin
No. C40375
Exp. 3-31-13
CIVIL
STATE OF CALIFORNIA

THE STATE OF CALIFORNIA OR ITS OFFICERS OR AGENTS SHALL NOT BE RESPONSIBLE FOR THE ACCURACY OR COMPLETENESS OF SCANNED COPIES OF THIS PLAN SHEET.

TO ACCOMPANY PLANS DATED 2-10-14

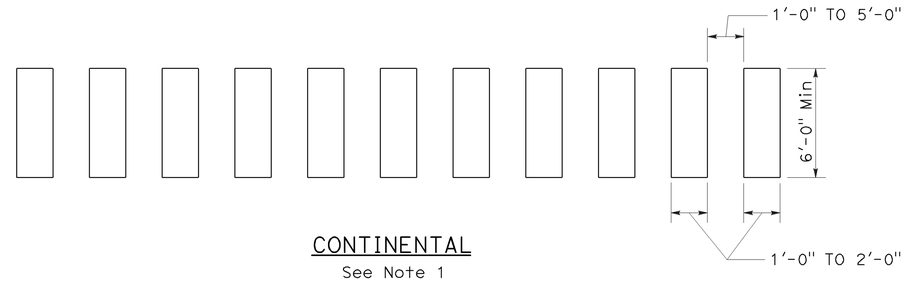

CONTINENTAL
See Note 1

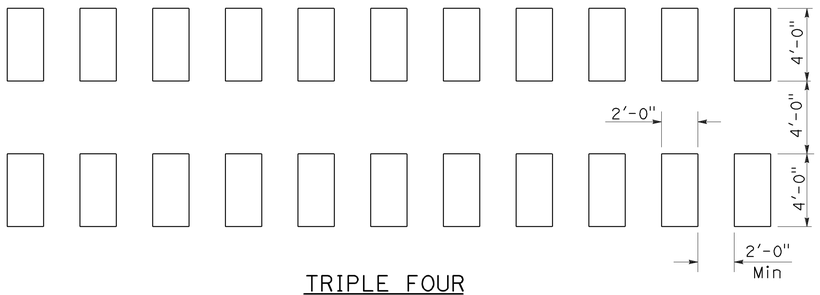

TRIPLE FOUR
See Note 1

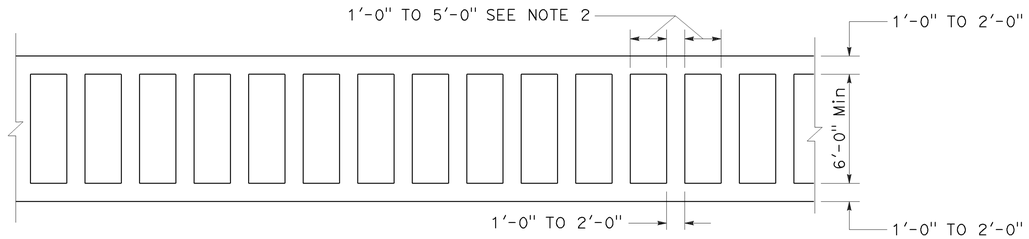

LADDER

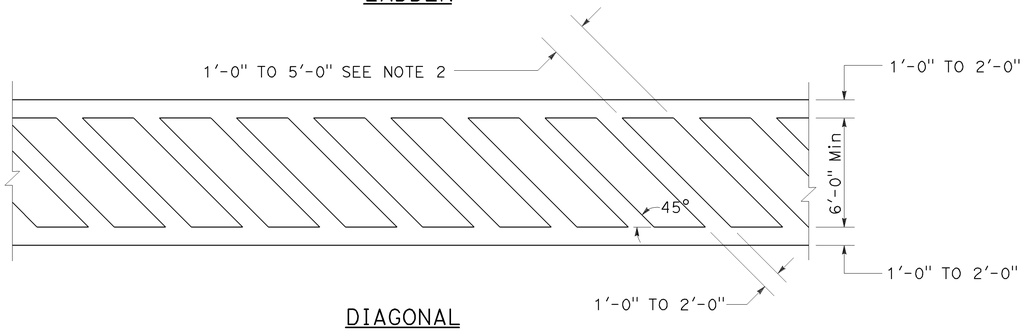

DIAGONAL

HIGHER VISIBILITY CROSSWALKS

NOTES:

1. Spaces between markings should be placed in wheel tracks of each lane.
2. Spacings not to exceed 2.5 times width of longitudinal line.
3. All crosswalk markings must be white except for those near schools must be yellow.

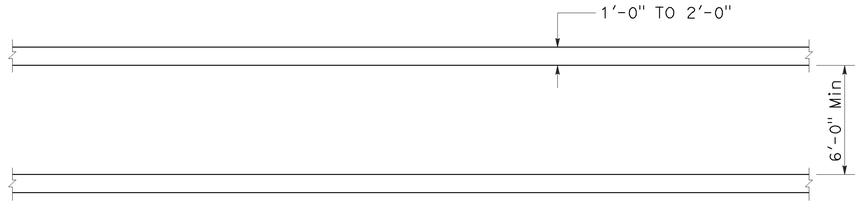

BASIC

STATE OF CALIFORNIA
DEPARTMENT OF TRANSPORTATION

PAVEMENT MARKINGS CROSSWALKS

NO SCALE

RSP A24F DATED JULY 20, 2012 SUPPLEMENTS THE STANDARD PLANS BOOK DATED 2010.

REVISED STANDARD PLAN RSP A24F

2010 REVISED STANDARD PLAN RSP A24F

6-28-12

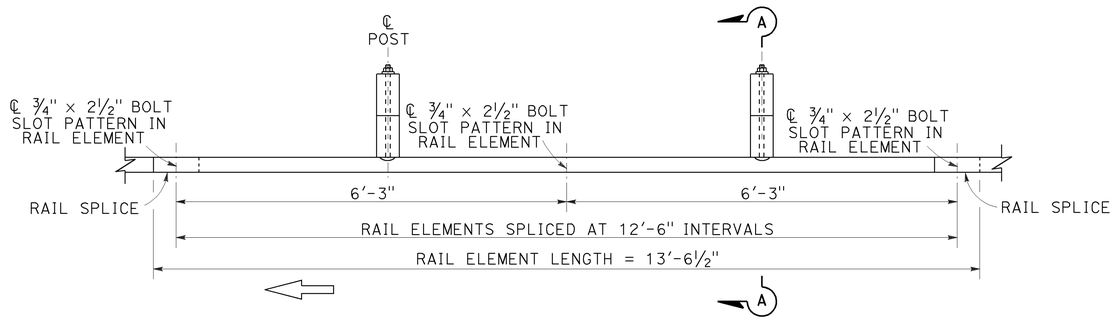

PLAN

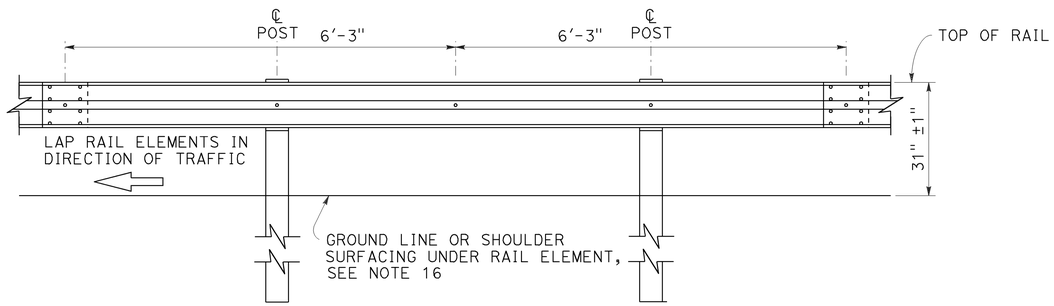

ELEVATION

MIDWEST GUARDRAIL SYSTEM WITH WOOD POST AND BLOCKS

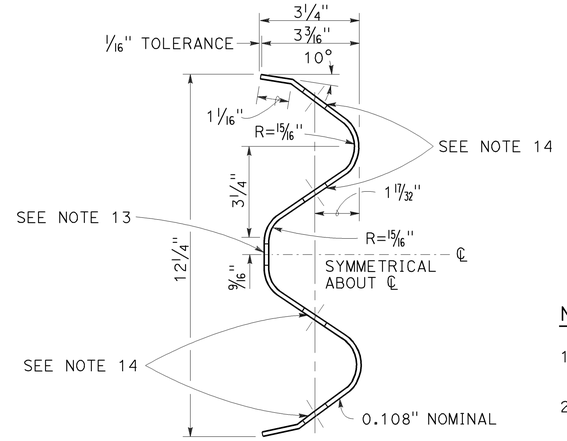

SECTION THRU RAIL ELEMENT

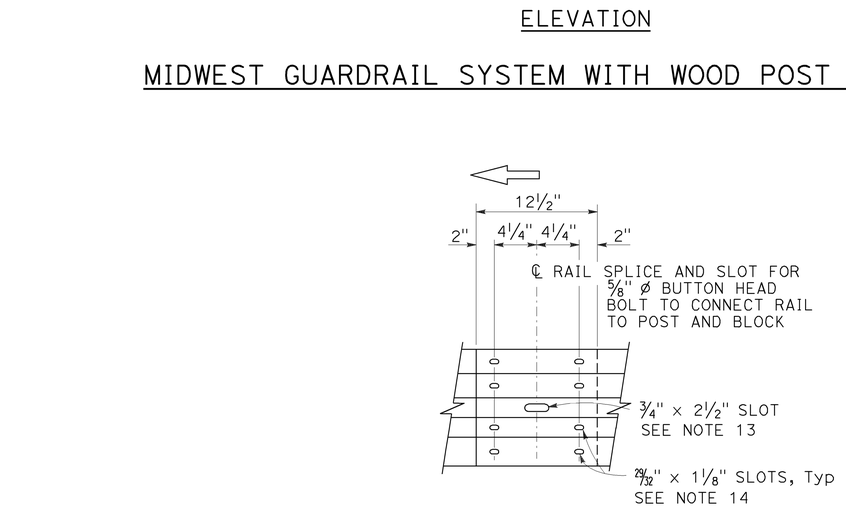

ELEVATION

RAIL ELEMENT SPLICE DETAIL

a) Connect the over lapped end of the rail elements with ⅝" ø × 1⅜" button head oval shoulder splice bolts inserted into the 29/32" × 1⅛" slots and bolted together with ⅝" ø recessed hex nuts. Recess of hex nut points toward rail element. A total of 8 bolts and nuts are to be used at each rail splice connection.

b) The ends of the rail elements are to be overlapped in the direction of traffic (see details).

c) Where end cap is to be attached to the end of a rail element, a total of 4 of the above described splice bolts and nuts are to be used.

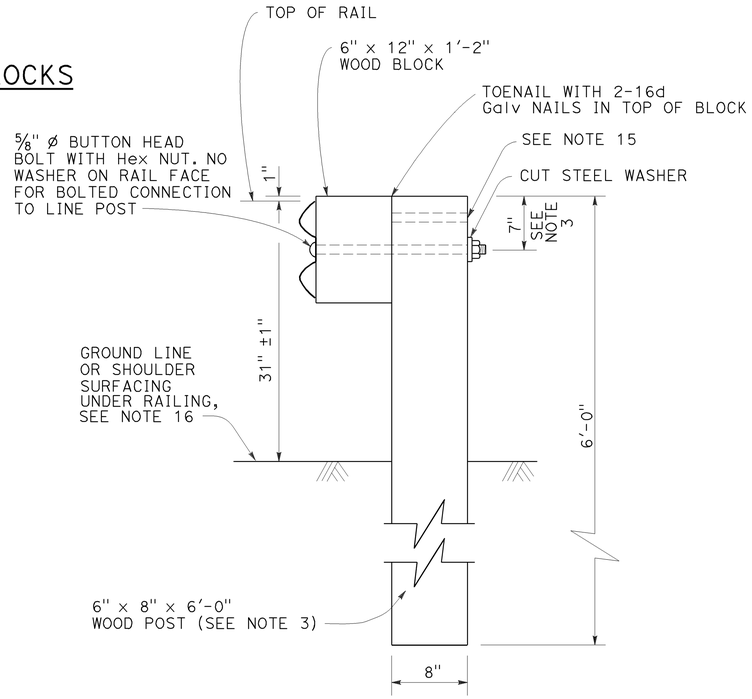

SECTION A-A

TYPICAL WOOD LINE POST INSTALLATION

See Note 4

NOTES:

1. For details of steel post installations, see Revised Standard Plan RSP A77L2.
2. For details of standard hardware used to construct MGS, see Revised Standard Plan RSP A77M1.
3. For details of wood posts and wood blocks used to construct MGS, see Revised Standard Plan RSP A77N1.
4. For additional installation details, see Revised Standard Plan RSP A77N3.
5. MGS post spacing to be 6'-3" center to center, except as otherwise noted.
6. For MGS typical layouts, see the A77P, A77Q and A77R Series of Standard Plans.
7. If railing is connected to terminal system end treatment, use 31" height terminal system end treatment.
8. For MGS end anchor details, see Revised Standard Plans RSP A77S1 and RSP A77T2.
9. For details of MGS transition to bridge railing, see Revised Standard Plan RSP A77U4.
10. For additional details of MSG connection to bridge railing, see Revised Standard Plans RSP A77U1, RSP A77U2 and RSP A77V1.
11. For MGS connection details to abutments and walls, see Revised Standard Plan RSP A77U3.
12. For typical MGS delineation and dike positioning details, see Revised Standard Plan RSP A77N4.
13. Slotted hole for bolted connection of rail element to block and post. See "Section Thru Rail Element".
14. Slotted holes for splice bolts to overlap ends of rail element. See "Section Thru Rail Element".
15. Additional hole in uppermost portion of line post is for potential future adjustments of railing height. See Revised Standard Plan RSP A77N1.
16. Install posts in soil.

Dist	COUNTY	ROUTE	POST MILES TOTAL PROJECT	SHEET No.	TOTAL SHEETS
07	LA	10	41.7/48.3	73	131

Randell D. Hiatt
REGISTERED CIVIL ENGINEER

July 19, 2013
PLANS APPROVAL DATE

REGISTERED PROFESSIONAL ENGINEER — Randell D. Hiatt — No. C50200 — Exp. 6-30-15 — CIVIL — STATE OF CALIFORNIA

THE STATE OF CALIFORNIA OR ITS OFFICERS OR AGENTS SHALL NOT BE RESPONSIBLE FOR THE ACCURACY OR COMPLETENESS OF SCANNED COPIES OF THIS PLAN SHEET.

TO ACCOMPANY PLANS DATED 2-10-14

STATE OF CALIFORNIA
DEPARTMENT OF TRANSPORTATION

MIDWEST GUARDRAIL SYSTEM STANDARD RAILING SECTION (WOOD POST WITH WOOD BLOCK)

NO SCALE

RSP A77L1 DATED JULY 19, 2013 SUPPLEMENTS STANDARD PLANS BOOK DATED 2010.

REVISED STANDARD PLAN RSP A77L1

2010 REVISED STANDARD PLAN RSP A77L1

7-3-13

Dist	COUNTY	ROUTE	POST MILES TOTAL PROJECT	SHEET No.	TOTAL SHEETS
07	LA	10	41.7/48.3	74	131

Randell D. Hiatt
REGISTERED CIVIL ENGINEER

July 19, 2013
PLANS APPROVAL DATE

REGISTERED PROFESSIONAL ENGINEER
Randell D. Hiatt
No. C50200
Exp. 6-30-15
CIVIL
STATE OF CALIFORNIA

THE STATE OF CALIFORNIA OR ITS OFFICERS OR AGENTS SHALL NOT BE RESPONSIBLE FOR THE ACCURACY OR COMPLETENESS OF SCANNED COPIES OF THIS PLAN SHEET.

TO ACCOMPANY PLANS DATED 2-10-14

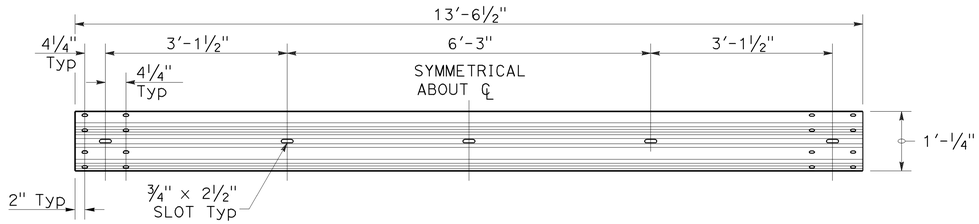

TYPICAL RAIL ELEMENT

NOTE:

1. Slotted holes for splice bolts to overlap ends of rail element.

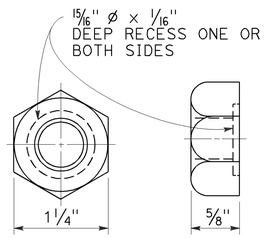

⅝" ø RECESS NUT

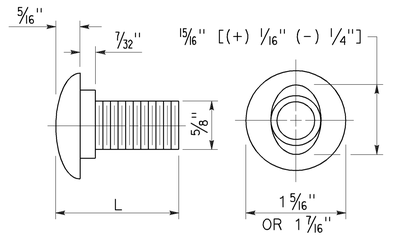

⅝" ø BUTTON HEAD BOLT

BUTTON HEAD BOLT

L	THREAD LENGTH
1⅜"	FULL THREAD LENGTH
2"	FULL THREAD LENGTH
10"	4" Min THREAD LENGTH
18"	4" Min THREAD LENGTH
20"	4" Min THREAD LENGTH
22"	4" Min THREAD LENGTH
26"	4" Min THREAD LENGTH
36"	4" Min THREAD LENGTH
** 2¾"	2" Min THREAD LENGTH
** 19"	4" Min THREAD LENGTH

** For nested rail applications.

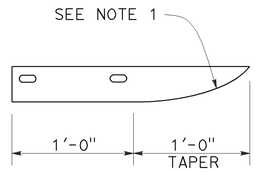

PLAN

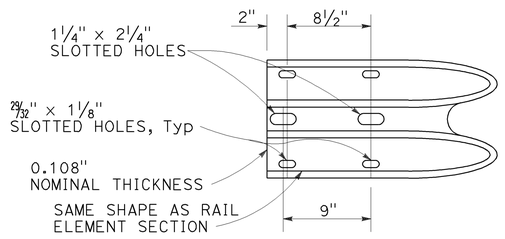

ELEVATION

END CAP (TYPE A)

STATE OF CALIFORNIA
DEPARTMENT OF TRANSPORTATION

MIDWEST GUARDRAIL SYSTEM STANDARD HARDWARE

NO SCALE

RSP A77M1 DATED JULY 19, 2013 SUPPLEMENTS THE STANDARD PLANS BOOK DATED 2010.

REVISED STANDARD PLAN RSP A77M1

2010 REVISED STANDARD PLAN RSP A77M1

7-3-13

Dist	COUNTY	ROUTE	POST MILES TOTAL PROJECT	SHEET No.	TOTAL SHEETS
07	LA	10	41.7/48.3	75	131

Randell D. Hiatt
REGISTERED CIVIL ENGINEER

July 19, 2013
PLANS APPROVAL DATE

REGISTERED PROFESSIONAL ENGINEER
Randell D. Hiatt
No. C50200
Exp. 6-30-15
CIVIL
STATE OF CALIFORNIA

THE STATE OF CALIFORNIA OR ITS OFFICERS OR AGENTS SHALL NOT BE RESPONSIBLE FOR THE ACCURACY OR COMPLETENESS OF SCANNED COPIES OF THIS PLAN SHEET.

TO ACCOMPANY PLANS DATED 2-10-14

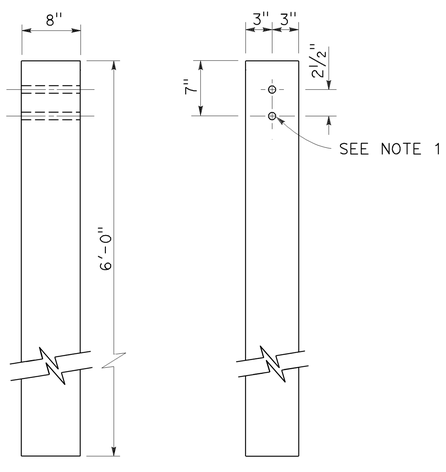

SIDE FRONT

6" x 8" WOOD POST
See Note 3

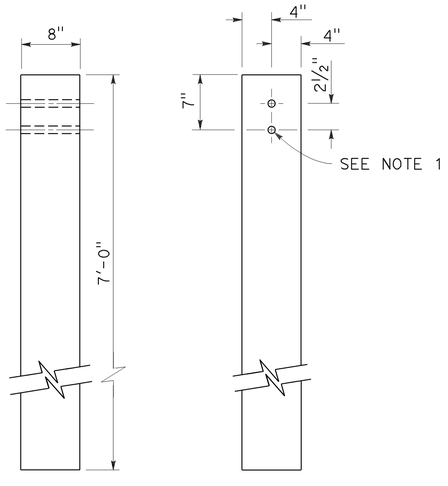

SIDE FRONT

8" x 8" WOOD POST
See Note 4

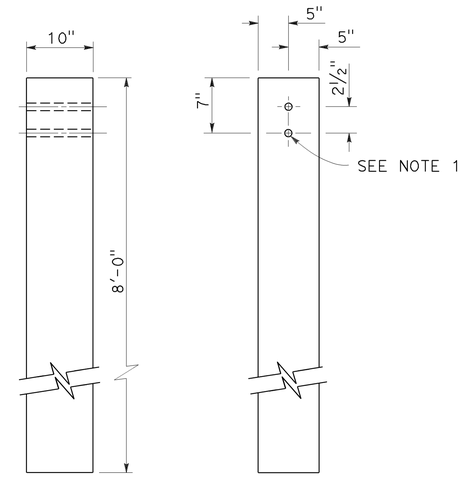

SIDE FRONT

10" x 10" WOOD POST
See Note 5

NOTES:

1. All holes in wood posts and blocks shall be ¾" Dia ± 1/16".
2. Dimensions shown for wood post are nominal.
3. This post and block combination used for standard line post sections of MGS.
4. This post and 8" x 12" block combination used for line post sections of MGS on narrow roadways.
5. This post and 8" x 12" block combination is typically used where strengthened line post sections of MGS are warranted to shield fixed objects.
6. See Revised Standard Plan RSP A77L3 for use of 6" x 8" and 8" x 8" wood blocks.

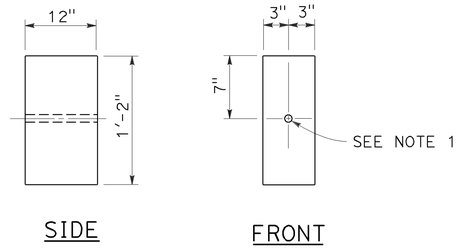

SIDE FRONT

6" x 12" WOOD BLOCK
See Note 3

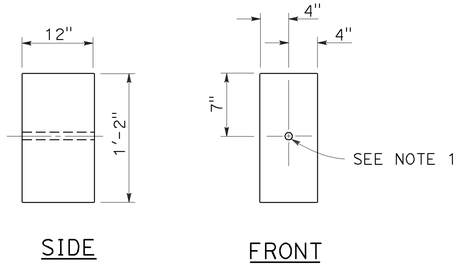

SIDE FRONT

8" x 12" WOOD BLOCK

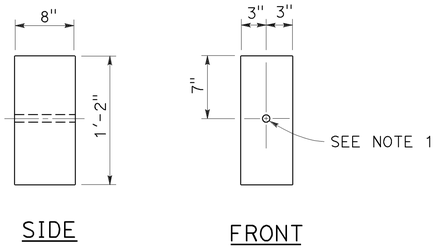

SIDE FRONT

6" x 8" WOOD BLOCK
Only for use with metal beam guard rail see Note 6

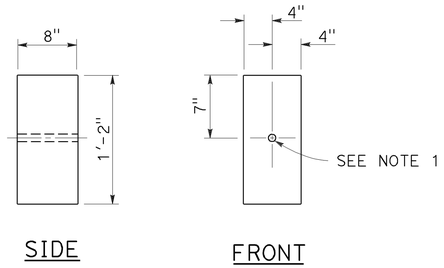

SIDE FRONT

8" x 8" WOOD BLOCK
Only for use with metal beam guard rail see Note 6

STATE OF CALIFORNIA
DEPARTMENT OF TRANSPORTATION

MIDWEST GUARDRAIL SYSTEM WOOD POST AND WOOD BLOCK DETAILS

NO SCALE

RSP A77N1 DATED JULY 19, 2013 SUPPLEMENTS THE STANDARD PLANS BOOK DATED 2010.

REVISED STANDARD PLAN RSP A77N1

2010 REVISED STANDARD PLAN RSP A77N1

7-3-13

Dist	COUNTY	ROUTE	POST MILES TOTAL PROJECT	SHEET No.	TOTAL SHEETS
07	LA	10	41.7/48.3	76	131

Randell D. Hiatt
REGISTERED CIVIL ENGINEER

November 15, 2013
PLANS APPROVAL DATE

REGISTERED PROFESSIONAL ENGINEER
Randell D. Hiatt
No. C50200
Exp. 6-30-15
CIVIL
STATE OF CALIFORNIA

THE STATE OF CALIFORNIA OR ITS OFFICERS OR AGENTS SHALL NOT BE RESPONSIBLE FOR THE ACCURACY OR COMPLETENESS OF SCANNED COPIES OF THIS PLAN SHEET.

TO ACCOMPANY PLANS DATED 2-10-14

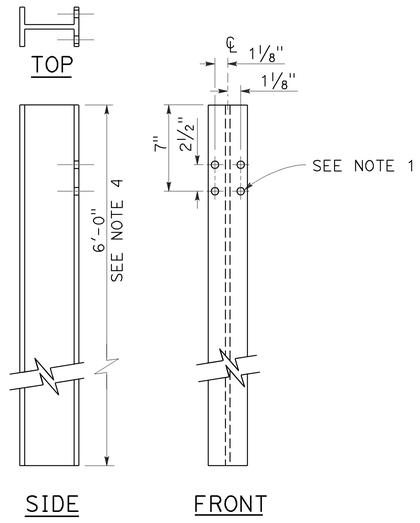

W6 x 9 OR W6 x 8.5
STEEL POST
See Note 4

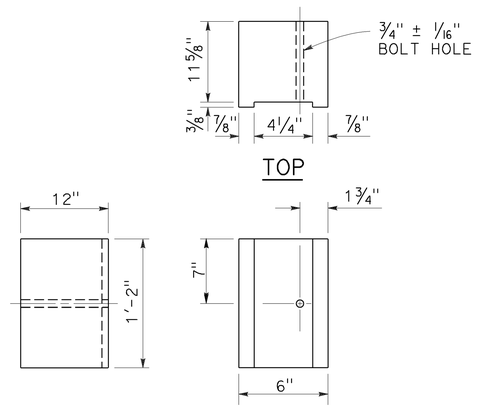

6" x 12"
NOTCHED WOOD BLOCK
See Notes 2 and 3

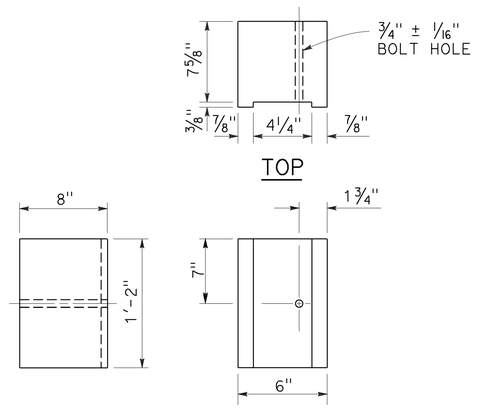

6" x 8"
NOTCHED WOOD BLOCK
Only for use with metal beam guard railing. See Note 5

NOTES:

1. All holes in steel post shall be 13/16" Dia maximum.
2. Dimensions shown for wood block are nominal.
3. Notched face of block faces steel post.
4. 6'-0" length posts to be used for typical roadway installation. See Revised Standard Plan RSP A77N3.
5. See Revised Standard Plan RSP A77L3 for use of 6" x 8" and 8" x 8" notched wood blocks.
6. This post and 8" x 12" block combination to be used for line post sections of MGS on narrow roadways and where strengthened line post sections of MGS are warranted to shield fixed objects.

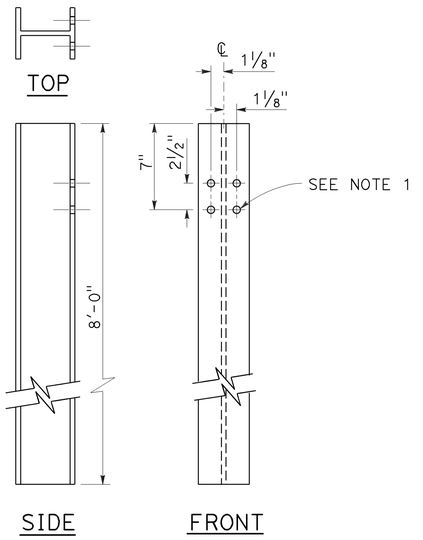

W6 x 15
STEEL POST
See Note 6

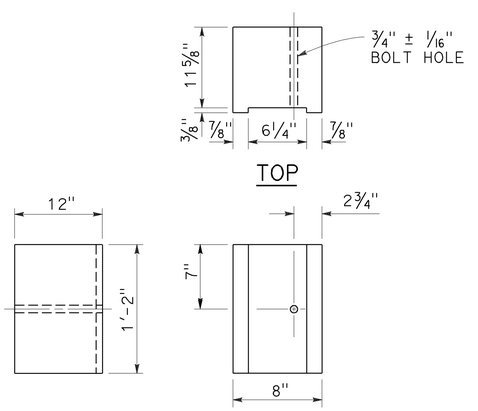

8" x 12"
NOTCHED WOOD BLOCK
See Notes 2 and 3

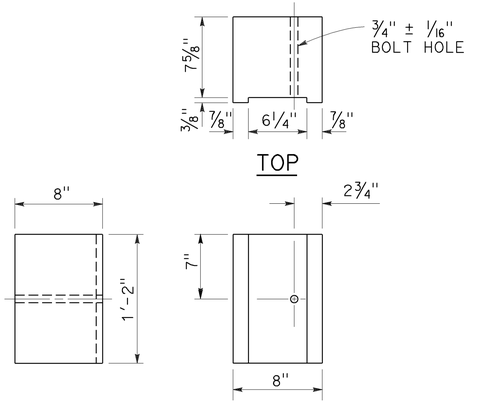

8" x 8"
NOTCHED WOOD BLOCK
Only for use with metal beam guard railing. See Note 5

STATE OF CALIFORNIA
DEPARTMENT OF TRANSPORTATION

MIDWEST GUARDRAIL SYSTEM STEEL POST AND NOTCHED WOOD BLOCK DETAILS

NO SCALE

RSP A77N2 DATED NOVEMBER 15, 2013 SUPERSEDES RSP A77N2
DATED JULY 19, 2013 THAT SUPPLEMENTS THE STANDARD PLANS BOOK DATED 2010.

REVISED STANDARD PLAN RSP A77N2

2010 REVISED STANDARD PLAN RSP A77N2

10-29-13

Dist	COUNTY	ROUTE	POST MILES TOTAL PROJECT	SHEET No.	TOTAL SHEETS
07	LA	10	41.7/48.3	77	131

Randell D. Hiatt
REGISTERED CIVIL ENGINEER

November 15, 2013
PLANS APPROVAL DATE

REGISTERED PROFESSIONAL ENGINEER — Randell D. Hiatt — No. C50200 — Exp. 6-30-15 — CIVIL — STATE OF CALIFORNIA

THE STATE OF CALIFORNIA OR ITS OFFICERS OR AGENTS SHALL NOT BE RESPONSIBLE FOR THE ACCURACY OR COMPLETENESS OF SCANNED COPIES OF THIS PLAN SHEET.

TO ACCOMPANY PLANS DATED 2-10-14

2010 REVISED STANDARD PLAN RSP A77N3

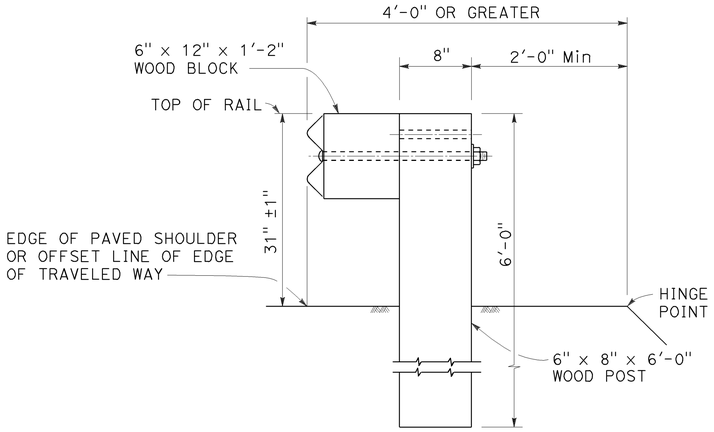

DETAIL A

TYPICAL ROADWAY INSTALLATION

See Note 1

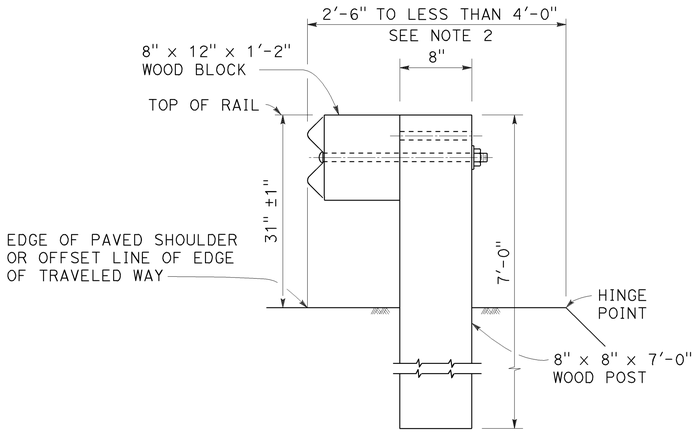

DETAIL B

NARROW ROADWAY INSTALLATION

See Note 1

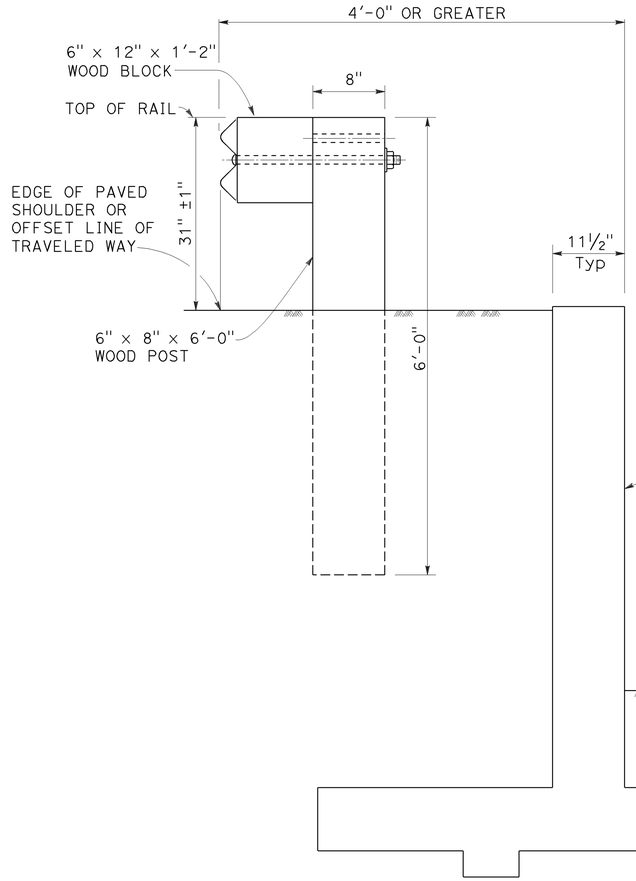

DETAIL C

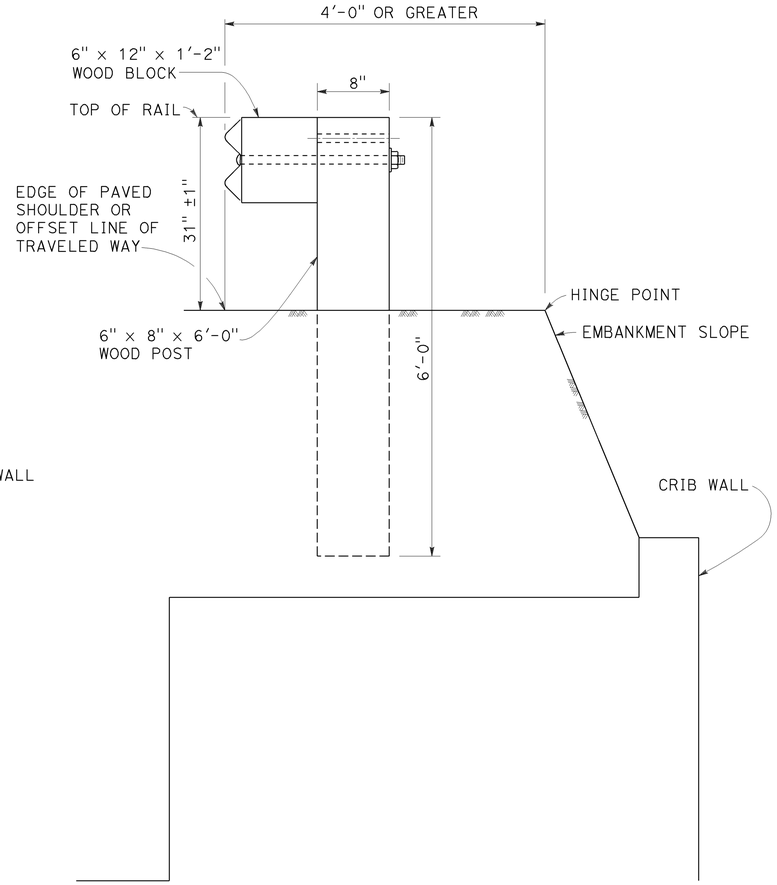

DETAIL D

POST EMBEDMENT

INSTALLATION AT EARTH RETAINING WALLS

NOTES:

1. These installation details also applicable to steel line post installations. For Detail A, C, and D, where steel line post installations are constructed, W6 x 8.5 or W6 x 9 steel post, 6'-0" in length, with 6" x 12" x 1'-2" notched wood blocks or notched recycled plastic blocks are to be used in place of the size of wood post and wood block shown. For Detail B, where steel line post installations are constructed, W6 x 15 steel post, 8'-0" in length, with 8" x 12" x 1'-2" notched wood blocks or notched recycled plastic blocks are to be used in place of the size of wood post and wood block shown. For additional installation details, see Revised Standard Plan RSP A77L1 and RSP A77L2.
2. Where the distance between the face of the rail and the hinge point is less than 2'-6", see the Project Plans for special details.
3. For dike positioning with MGS installations, see Revised Standard Plan RSP A77N4.

STATE OF CALIFORNIA
DEPARTMENT OF TRANSPORTATION

MIDWEST GUARDRAIL SYSTEM TYPICAL LINE POST EMBEDMENT AND HINGE POINT OFFSET DETAILS

NO SCALE

RSP A77N3 DATED NOVEMBER 15, 2013 SUPERSEDES RSP A77N3 DATED JULY 19, 2013 THAT SUPPLEMENTS THE STANDARD PLANS BOOK DATED 2010.

REVISED STANDARD PLAN RSP A77N3

10-29-13

Dist	COUNTY	ROUTE	POST MILES TOTAL PROJECT	SHEET No.	TOTAL SHEETS
07	LA	10	41.7/48.3	78	131

Randell D. Hiatt
REGISTERED CIVIL ENGINEER

July 19, 2013
PLANS APPROVAL DATE

REGISTERED PROFESSIONAL ENGINEER
Randell D. Hiatt
No. C50200
Exp. 6-30-15
CIVIL
STATE OF CALIFORNIA

THE STATE OF CALIFORNIA OR ITS OFFICERS OR AGENTS SHALL NOT BE RESPONSIBLE FOR THE ACCURACY OR COMPLETENESS OF SCANNED COPIES OF THIS PLAN SHEET.

TO ACCOMPANY PLANS DATED 2-10-14

NOTES:

1. When necessary to place dike more than 7" in front of face of MGS, only Type C dike may be used. For dike details, see Revised Standard Plan RSP A87B.
2. For standard railing post embedment, see Revised Standard Plan RSP A77N3.
3. MGS delineation to be used where shown on the Project Plans.
4. When dike or curb is placed under MGS, the maximum height of the dike or curb shall be 6". Mountable dike should not be used. For dike and curb details, see Revised Standard Plans RSP A87A and RSP A87B.
5. For details of typical distance between the face of rail and hinge point, see Revised Standard Plan RSP A77N3.
6. For steel line posts, use 1/4 - 20 self-tapping screws in 0.22" diameter holes or 1/4" bolts in 9/32" diameter holes.

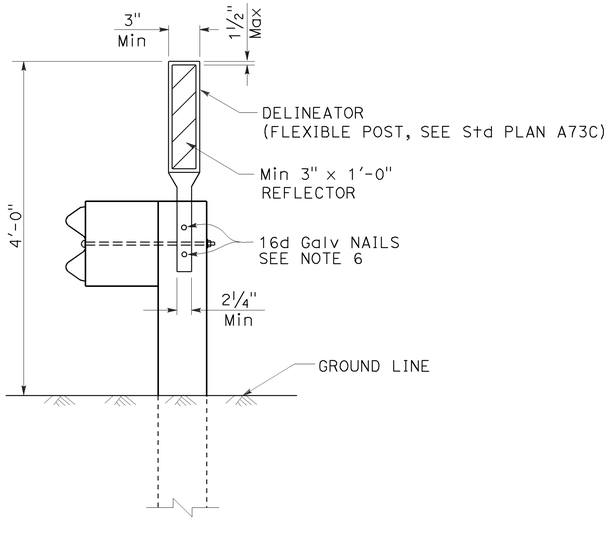

MGS DELINEATION

See Note 3

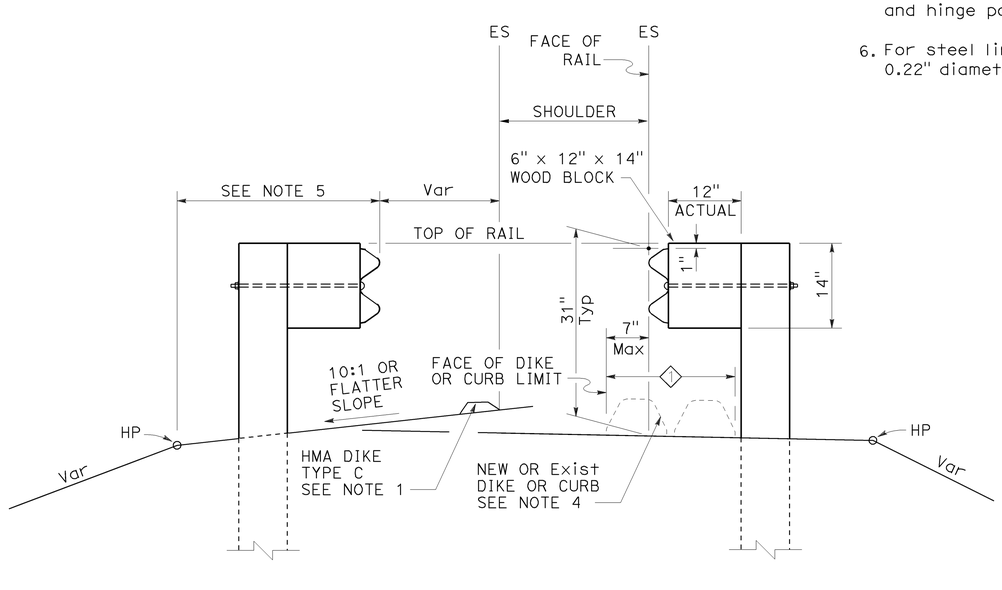

DIKE POSITIONING

See Note 1

◇1 PERMISSIBLE DIKE OR CURB PLACEMENT AREA

STATE OF CALIFORNIA
DEPARTMENT OF TRANSPORTATION

MIDWEST GUARDRAIL SYSTEM TYPICAL RAILING DELINEATION AND DIKE POSITIONING DETAILS

NO SCALE

RSP A77N4 DATED JULY 19, 2013 SUPPLEMENTS THE STANDARD PLANS BOOK DATED 2010.

REVISED STANDARD PLAN RSP A77N4

2010 REVISED STANDARD PLAN RSP A77N4

7-10-13

Dist	COUNTY	ROUTE	POST MILES TOTAL PROJECT	SHEET No.	TOTAL SHEETS
07	LA	10	41.7/48.3	79	131

Randell D. Hiatt
REGISTERED CIVIL ENGINEER

July 19, 2013
PLANS APPROVAL DATE

REGISTERED PROFESSIONAL ENGINEER
Randell D. Hiatt
No. C50200
Exp. 6-30-15
CIVIL
STATE OF CALIFORNIA

THE STATE OF CALIFORNIA OR ITS OFFICERS OR AGENTS SHALL NOT BE RESPONSIBLE FOR THE ACCURACY OR COMPLETENESS OF SCANNED COPIES OF THIS PLAN SHEET.

TO ACCOMPANY PLANS DATED 2-10-14

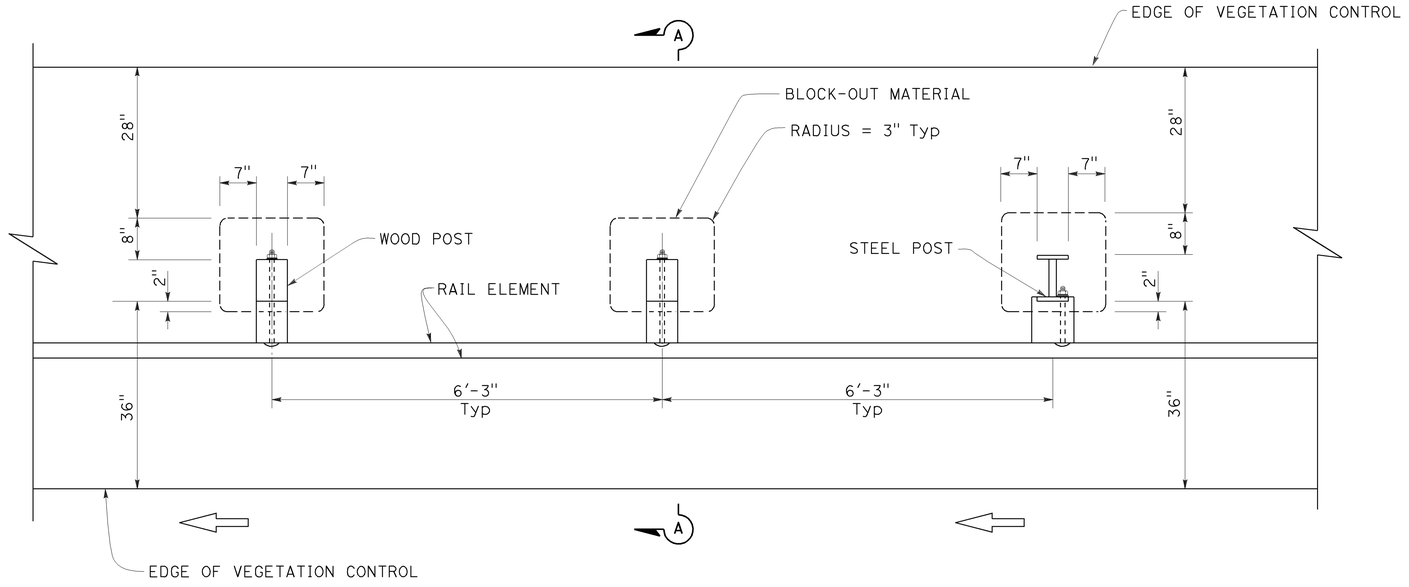

PLAN

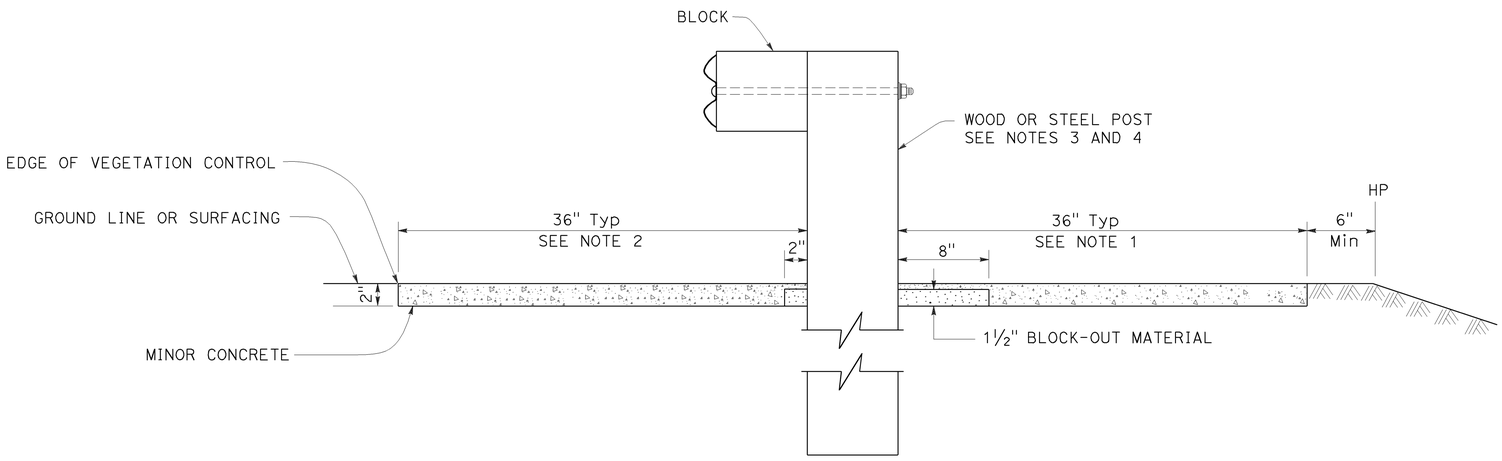

SECTION A-A

NOTES:

1. Where the distance between back of post and hinge point is less than 42", construct vegetation control to 6" from hinge point while maintaining the 8" block-out at back of post. If the 8" block-out at back of post can not be maintained, construct vegetation control flush with the back edge of post.
2. Where dike is constructed under railing, construct vegetation control to back edge of dike. Where paved shoulder is constructed within 36" in front of the post, construct vegetation control to the edge of paved shoulder.
3. For wood post sizes, see Revised Standard Plan RSP A77N1.
4. For steel post sizes, see Revised Standard Plan RSP A77N2.
5. For details not shown, see Revised Standard Plans RSP A77L1 and RSP A77L2.

STATE OF CALIFORNIA
DEPARTMENT OF TRANSPORTATION

MIDWEST GUARDRAIL SYSTEM
TYPICAL VEGETATION CONTROL
STANDARD RAILING SECTION

NO SCALE

RSP A77N5 DATED JULY 19, 2013 SUPPLEMENTS THE STANDARD PLANS BOOK DATED 2010.

REVISED STANDARD PLAN RSP A77N5

2010 REVISED STANDARD PLAN RSP A77N5

7-3-13

Dist	COUNTY	ROUTE	POST MILES TOTAL PROJECT	SHEET No.	TOTAL SHEETS
07	LA	10	41.7/48.3	80	131

Randell D. Hiatt
REGISTERED CIVIL ENGINEER

July 19, 2013
PLANS APPROVAL DATE

REGISTERED PROFESSIONAL ENGINEER
Randell D. Hiatt
No. C50200
Exp. 6-30-15
CIVIL
STATE OF CALIFORNIA

THE STATE OF CALIFORNIA OR ITS OFFICERS OR AGENTS SHALL NOT BE RESPONSIBLE FOR THE ACCURACY OR COMPLETENESS OF SCANNED COPIES OF THIS PLAN SHEET.

TO ACCOMPANY PLANS DATED 2-10-14

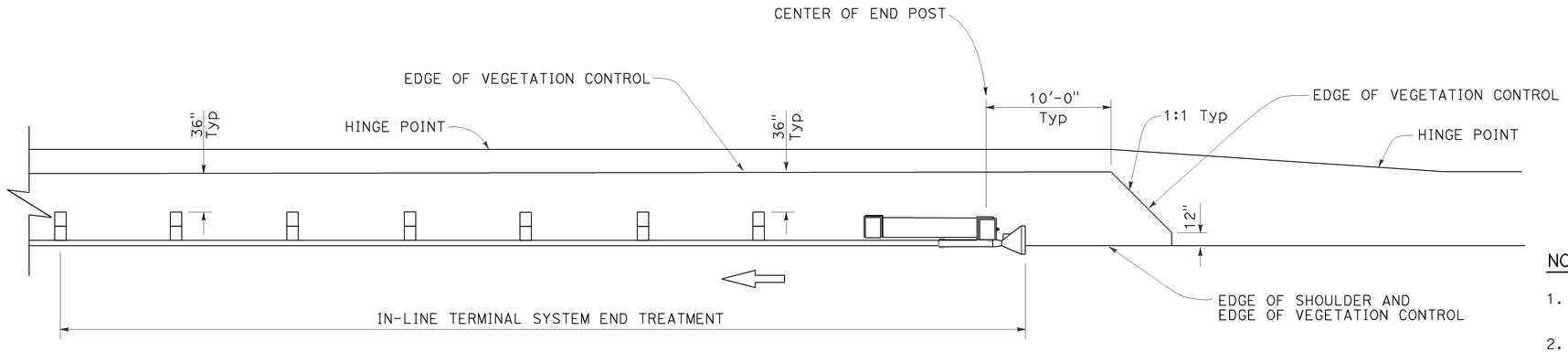

PLAN

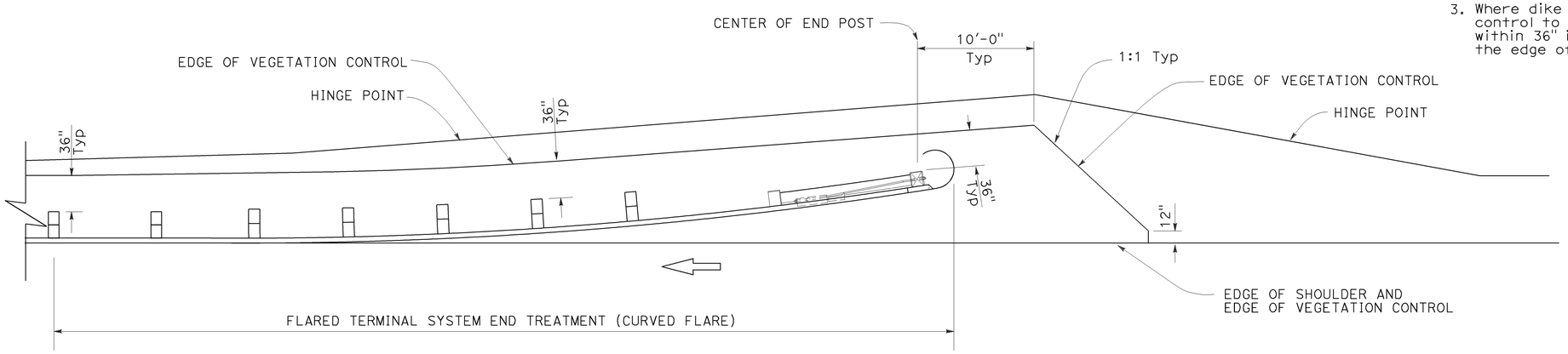

PLAN

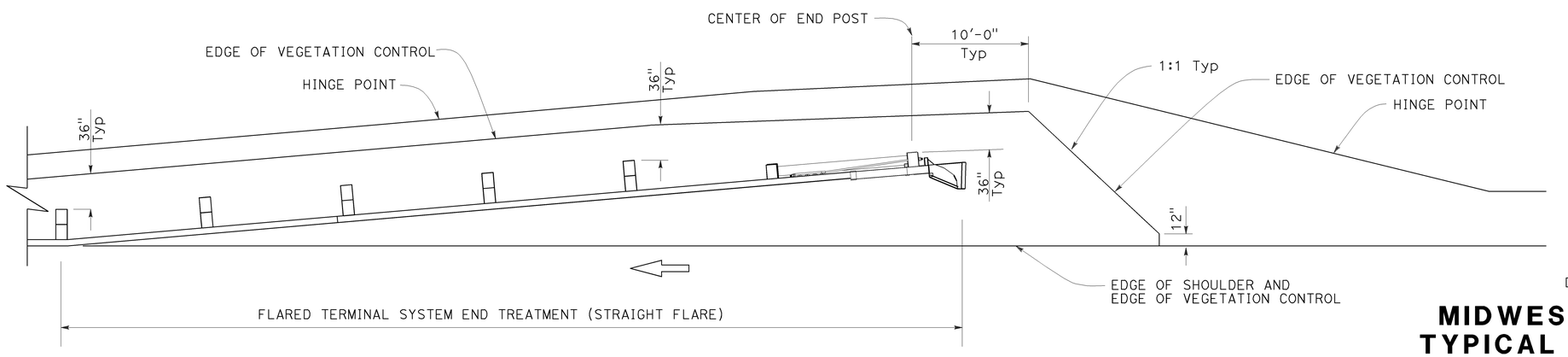

PLAN

NOTES:

1. See Revised Standard Plan RSP A77N5 for additional vegetation control details.
2. Where the distance between back of post and hinge point is less than 42", construct vegetation control to 6" from hinge point while maintaining the 8" block-out at back of post. If the 8" block-out at back of post can not be maintained, construct vegetation control flush with the back edge of post.
3. Where dike is constructed under railing, construct vegetation control to back edge of dike. Where paved shoulder is constructed within 36" in front of the post, construct vegetation control to the edge of paved shoulder.

STATE OF CALIFORNIA
DEPARTMENT OF TRANSPORTATION

MIDWEST GUARDRAIL SYSTEM TYPICAL VEGETATION CONTROL FOR TERMINAL SYSTEM END TREATMENTS

NO SCALE

RSP A77N6 DATED JULY 19, 2013 SUPPLEMENTS THE STANDARD PLANS BOOK DATED 2010.

REVISED STANDARD PLAN RSP A77N6

2010 REVISED STANDARD PLAN RSP A77N6

6-12-13

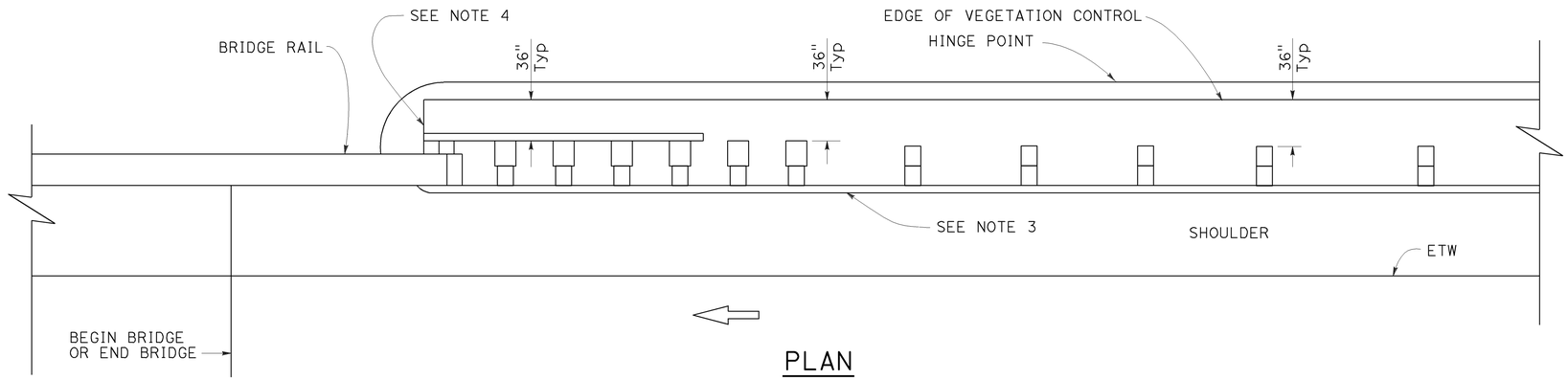

PLAN

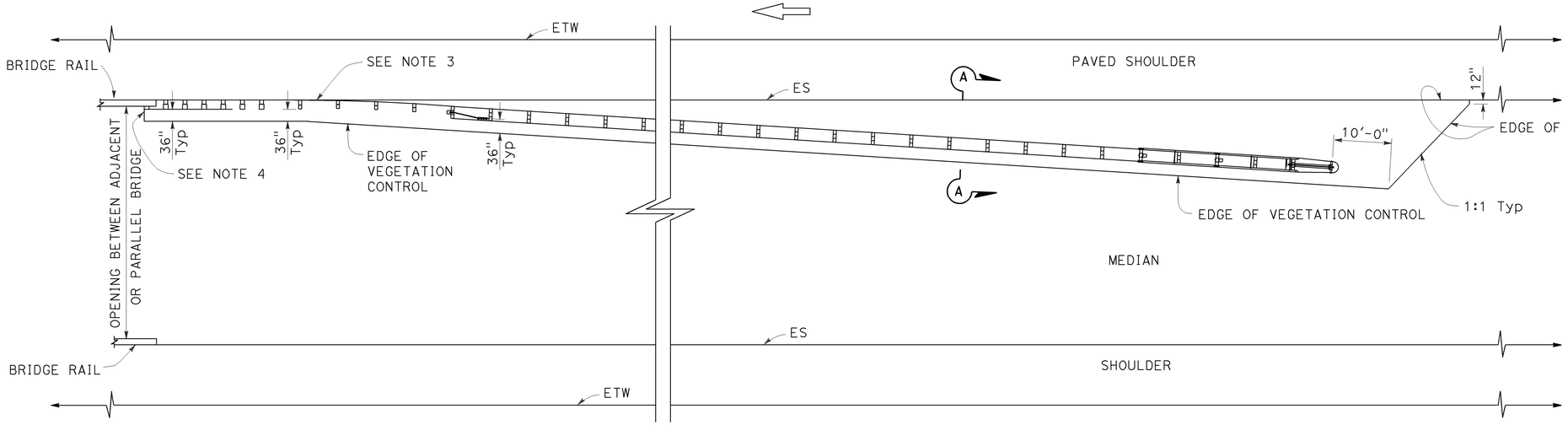

PLAN

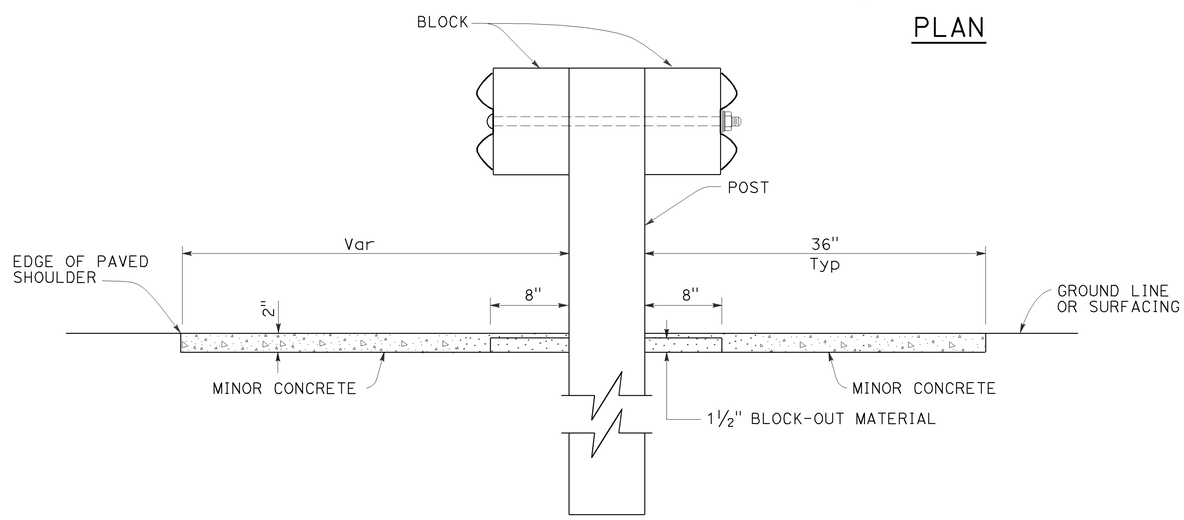

SECTION A-A

NOTES:

1. See Revised Standard Plan RSP A77N5 for additional vegetation control details.
2. Where the distance between back of post and hinge point is less than 42", construct vegetation control to 6" from hinge point while maintaining the 8" block-out at back of post. If the 8" block-out at back of post can not be maintained, construct vegetation control flush with the back edge of post.
3. Where dike is constructed under railing, construct vegetation control to back edge of dike. Where paved shoulder is constructed within 36" in front of the post, construct vegetation control to the edge of paved shoulder.
4. End vegetation control at end of backside rail element.

STATE OF CALIFORNIA
DEPARTMENT OF TRANSPORTATION

MIDWEST GUARDRAIL SYSTEM TYPICAL VEGETATION CONTROL AT STRUCTURE APPROACH

NO SCALE

RSP A77N7 DATED JULY 19, 2013 SUPPLEMENTS THE STANDARD PLANS BOOK DATED 2010.

REVISED STANDARD PLAN RSP A77N7

Dist	COUNTY	ROUTE	POST MILES TOTAL PROJECT	SHEET No.	TOTAL SHEETS
07	LA	10	41.7/48.3	81	131

Randell D. Hiatt
REGISTERED CIVIL ENGINEER

July 19, 2013
PLANS APPROVAL DATE

REGISTERED PROFESSIONAL ENGINEER
Randell D. Hiatt
No. C50200
Exp. 6-30-15
CIVIL
STATE OF CALIFORNIA

THE STATE OF CALIFORNIA OR ITS OFFICERS OR AGENTS SHALL NOT BE RESPONSIBLE FOR THE ACCURACY OR COMPLETENESS OF SCANNED COPIES OF THIS PLAN SHEET.

TO ACCOMPANY PLANS DATED 2-10-14

2010 REVISED STANDARD PLAN RSP A77N7

6-12-13

Dist	COUNTY	ROUTE	POST MILES TOTAL PROJECT	SHEET No.	TOTAL SHEETS
07	LA	10	41.7/48.3	82	131

Randell D. Hiatt
REGISTERED CIVIL ENGINEER

July 19, 2013
PLANS APPROVAL DATE

REGISTERED PROFESSIONAL ENGINEER
Randell D. Hiatt
No. C50200
Exp. 6-30-15
CIVIL
STATE OF CALIFORNIA

THE STATE OF CALIFORNIA OR ITS OFFICERS OR AGENTS SHALL NOT BE RESPONSIBLE FOR THE ACCURACY OR COMPLETENESS OF SCANNED COPIES OF THIS PLAN SHEET.

TO ACCOMPANY PLANS DATED 2-10-14

NOTES:

1. See Revised Standard Plan RSP A77N5 for additional vegetation control details.
2. Where the distance between back of post and hinge point is less than 42", construct vegetation control to 6" from hinge point while maintaining the 8" block-out at back of post. If the 8" block-out at back of post can not be maintained, construct vegetation control flush with the back edge of post.
3. Where dike is constructed under railing, construct vegetation control to back edge of dike. Where paved shoulder is constructed within 36" in front of the post, construct vegetation control to the edge of paved shoulder.

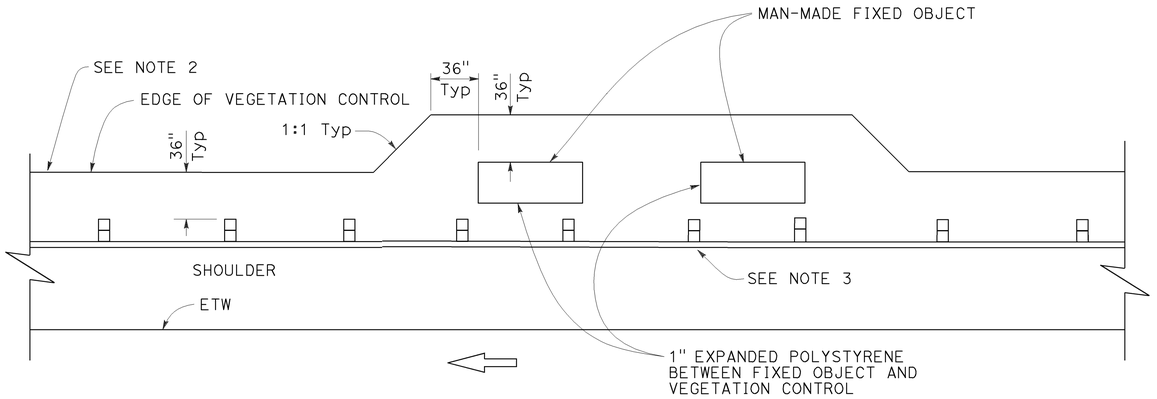

PLAN

Fixed object(s) on shoulder

STATE OF CALIFORNIA
DEPARTMENT OF TRANSPORTATION

MIDWEST GUARDRAIL SYSTEM
TYPICAL VEGETATION CONTROL AT FIXED OBJECT

NO SCALE

RSP A77N8 DATED JULY 19, 2013 SUPPLEMENTS THE STANDARD PLANS BOOK DATED 2010.

REVISED STANDARD PLAN RSP A77N8

2010 REVISED STANDARD PLAN RSP A77N8

6-12-13

NOTES:

1. See Revised Standard Plan RSP A77N5 for additional vegetation control details.

2. Where dike is constructed under railing, construct vegetation control to back edge of dike. Where paved shoulder is constructed within 36" in front of the post, construct vegetation control to the edge of paved shoulder.

Dist	COUNTY	ROUTE	POST MILES TOTAL PROJECT	SHEET No.	TOTAL SHEETS
07	LA	10	41.7/48.3	83	131

Randell D. Hiatt
REGISTERED CIVIL ENGINEER

July 19, 2013
PLANS APPROVAL DATE

REGISTERED PROFESSIONAL ENGINEER
Randell D. Hiatt
No. C50200
Exp. 6-30-15
CIVIL
STATE OF CALIFORNIA

THE STATE OF CALIFORNIA OR ITS OFFICERS OR AGENTS SHALL NOT BE RESPONSIBLE FOR THE ACCURACY OR COMPLETENESS OF SCANNED COPIES OF THIS PLAN SHEET.

TO ACCOMPANY PLANS DATED 2-10-14

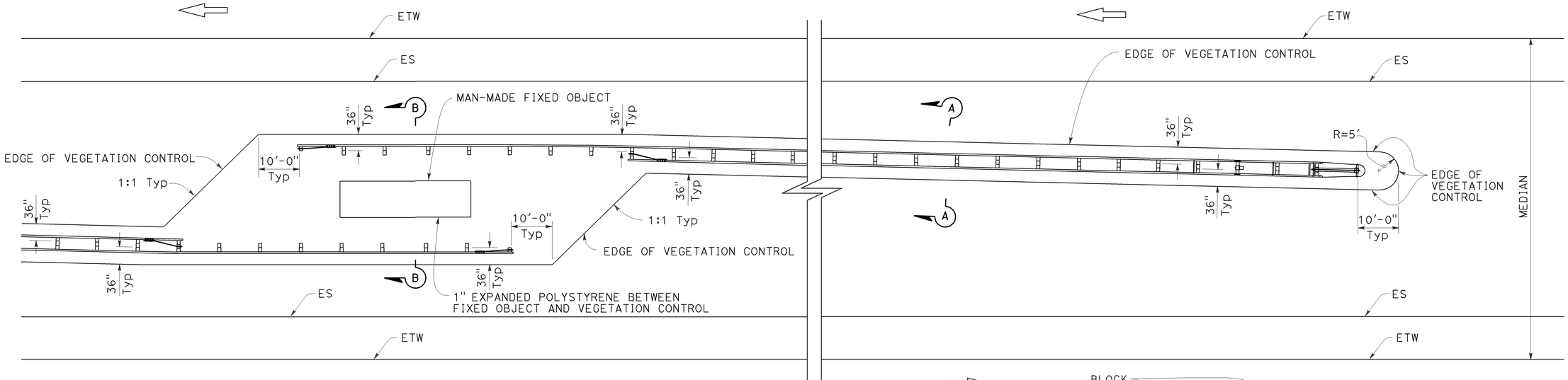

PLAN

Fixed object(s) in median

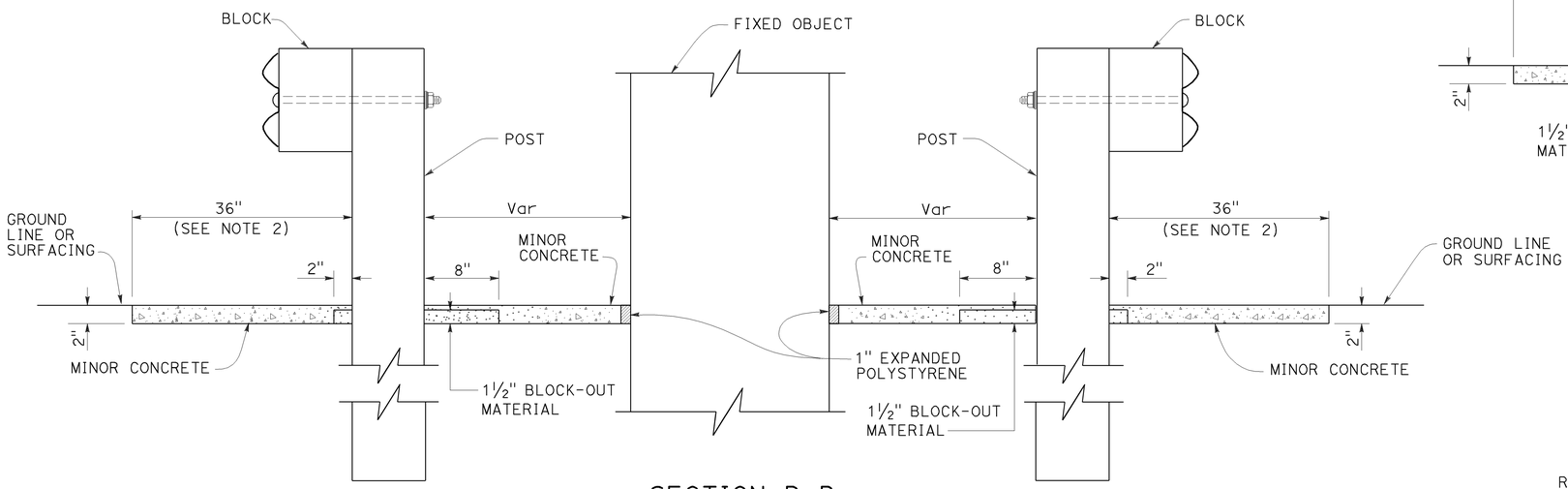

SECTION B-B

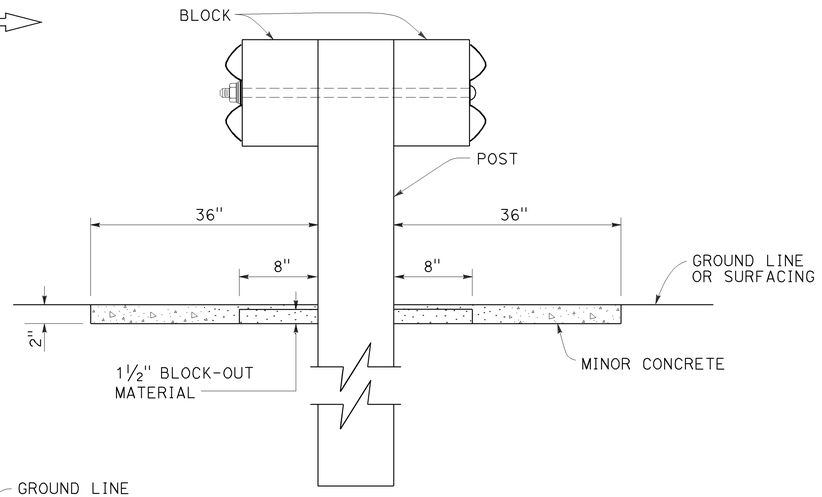

SECTION A-A

STATE OF CALIFORNIA
DEPARTMENT OF TRANSPORTATION

MIDWEST GUARDRAIL SYSTEM TYPICAL VEGETATION CONTROL AT FIXED OBJECT

NO SCALE

RSP A77N9 DATED JULY 19, 2013 SUPPLEMENTS THE STANDARD PLANS BOOK DATED 2010.

REVISED STANDARD PLAN RSP A77N9

2010 REVISED STANDARD PLAN RSP A77N9

6-12-13

NOTES:

1. See Revised Standard Plan RSP A77N5 for additional vegetation control details.
2. Where dike is constructed under railing, construct vegetation control to back edge of dike. Where paved shoulder is constructed within 36" in front of the post, construct vegetation control to the edge of paved shoulder.

Dist	COUNTY	ROUTE	POST MILES TOTAL PROJECT	SHEET No.	TOTAL SHEETS
07	LA	10	41.7/48.3	84	131

Randell D. Hiatt
REGISTERED CIVIL ENGINEER

July 19, 2013
PLANS APPROVAL DATE

REGISTERED PROFESSIONAL ENGINEER — Randell D. Hiatt — No. C50200 — Exp. 6-30-15 — CIVIL — STATE OF CALIFORNIA

THE STATE OF CALIFORNIA OR ITS OFFICERS OR AGENTS SHALL NOT BE RESPONSIBLE FOR THE ACCURACY OR COMPLETENESS OF SCANNED COPIES OF THIS PLAN SHEET.

TO ACCOMPANY PLANS DATED 2-10-14

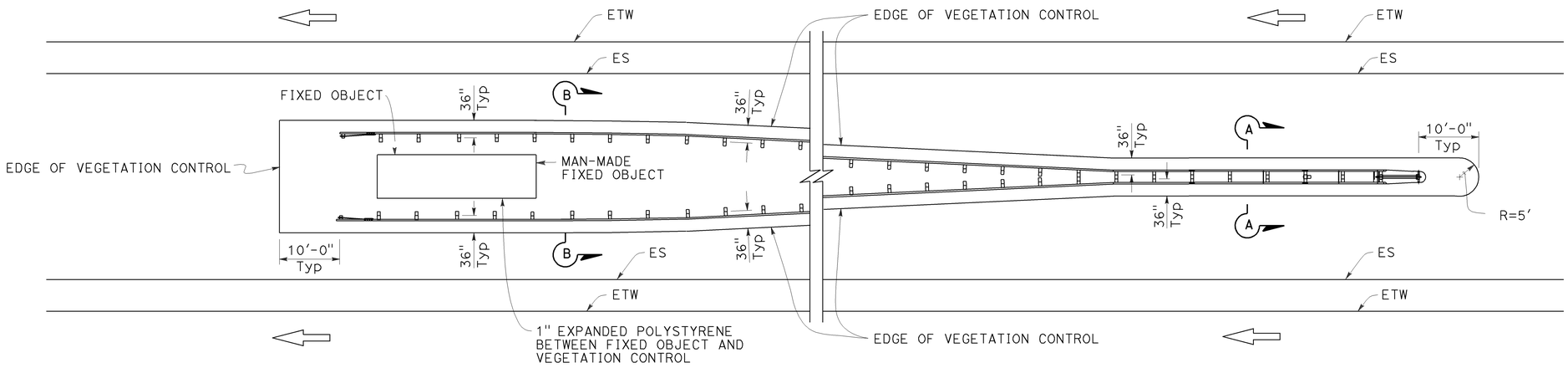

PLAN

Fixed object(s) between separate roadbeds
(One-Way Traffic)

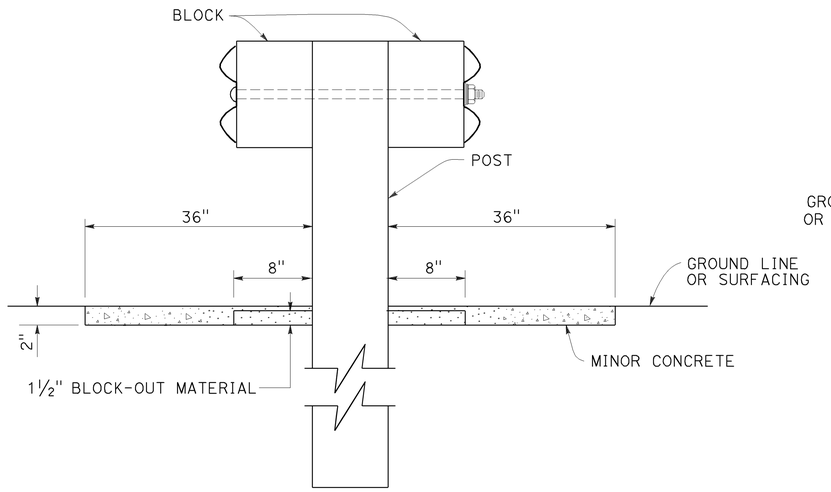

SECTION A-A

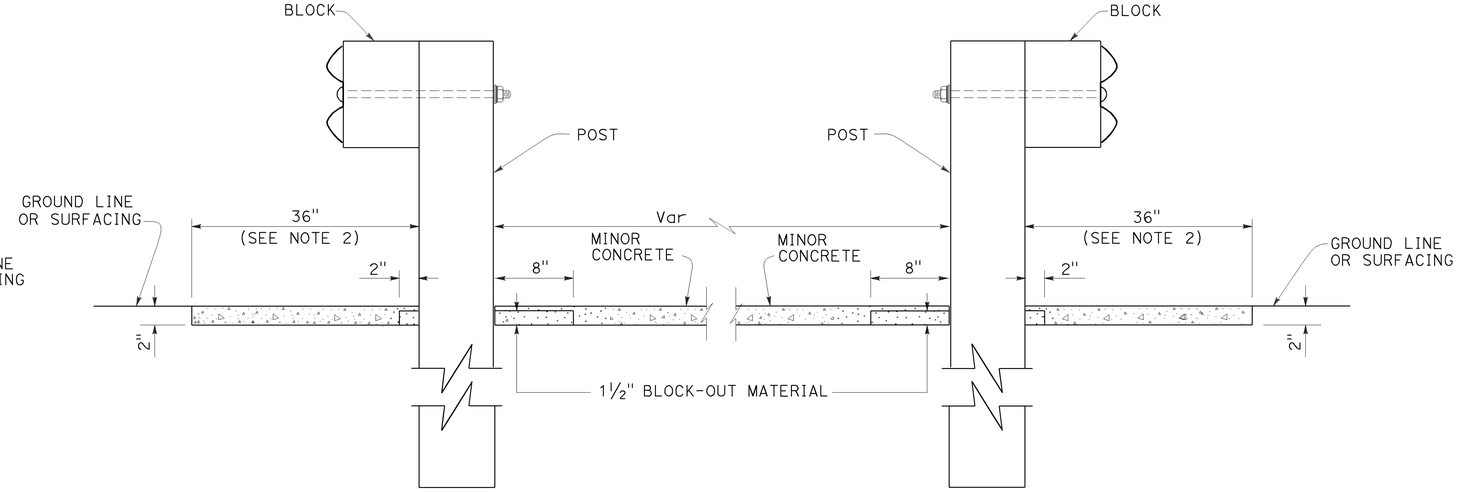

SECTION B-B

STATE OF CALIFORNIA
DEPARTMENT OF TRANSPORTATION

MIDWEST GUARDRAIL SYSTEM TYPICAL VEGETATION CONTROL AT FIXED OBJECT

NO SCALE

RSP A77N10 DATED JULY 19, 2013 SUPPLEMENTS THE STANDARD PLANS BOOK DATED 2010.

REVISED STANDARD PLAN RSP A77N10

2010 REVISED STANDARD PLAN RSP A77N10

6-12-13

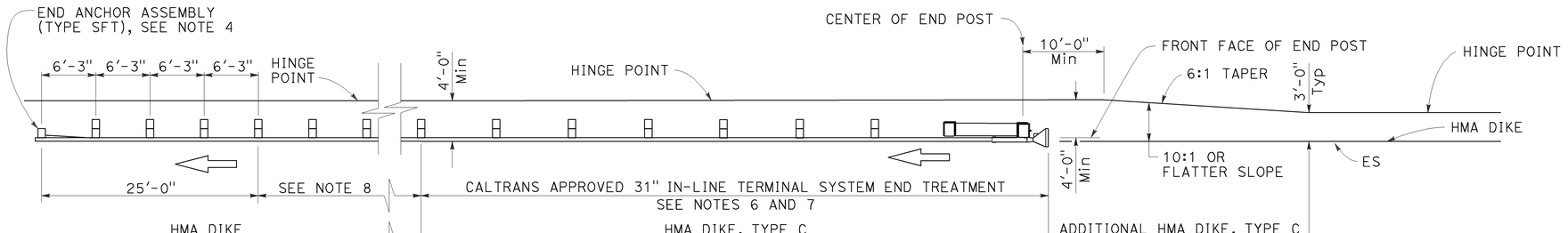

TYPE 11A LAYOUT

(Embankment MGS installation with 31" in-line end treatment at traffic approach end of railing) see Note 5

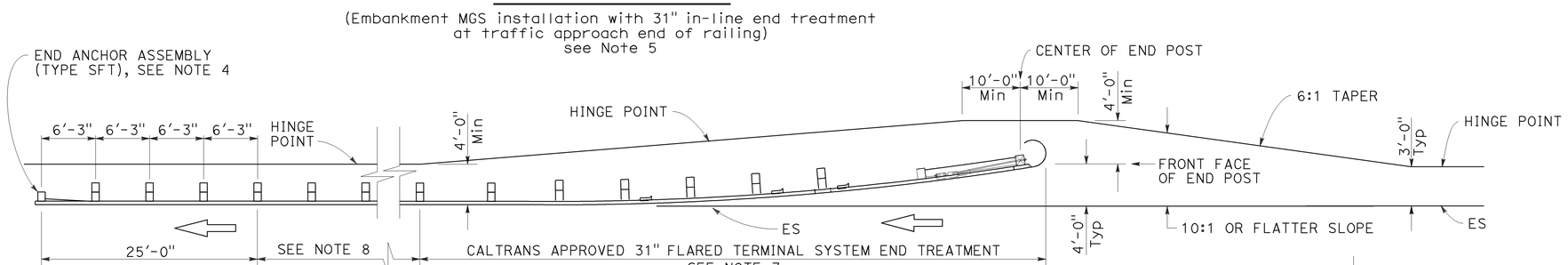

TYPE 11B LAYOUT

(Embankment MGS installation with 31" flared end treatment at traffic approach end of railing) see Note 5

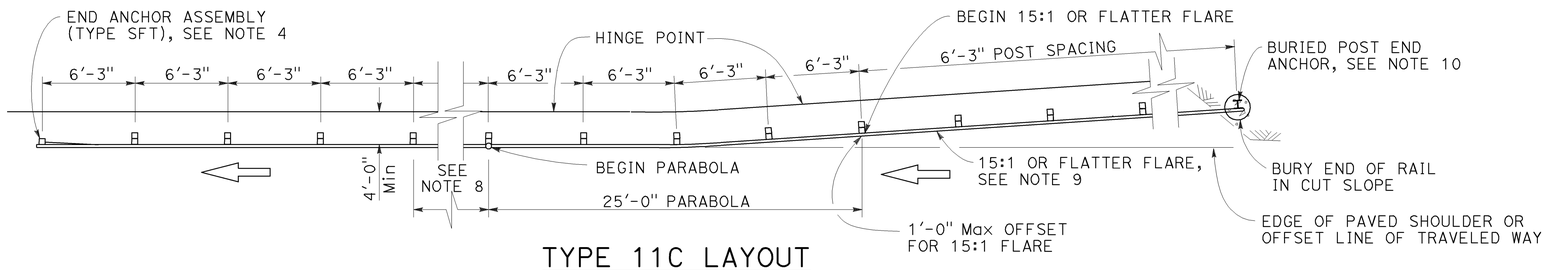

TYPE 11C LAYOUT

(Embankment MGS installation with buried end anchor treatment at traffic approach end of railing) see Notes 5 and 11

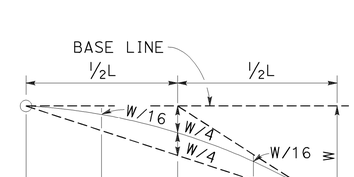

TYPICAL PARABOLIC LAYOUT

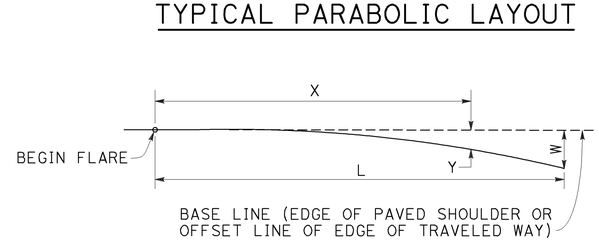

$Y = \frac{WX^2}{L^2}$

Y = OFFSET FROM BASE LINE
W = MAXIMUM OFFSET
X = DISTANCE ALONG BASE LINE
L = LENGTH OF FLARE

PARABOLIC FLARE OFFSETS

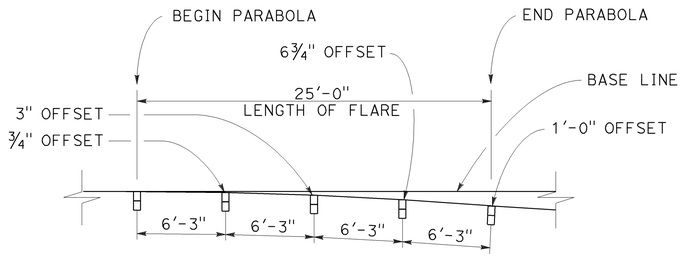

TYPICAL FLARE OFFSETS FOR 1 FOOT Max END OFFSET

NOTES:

1. Line post, blocks and hardware to be used are shown on Revised Standard Plans RSP A77L1, RSP A77L2, RSP A77M1, RSP A77N1 and RSP A77N2.
2. MGS post spacing to be 6'-3" center to center, except as otherwise noted.
3. Except as noted, line posts are 6" x 8" x 6'-0" wood with 6" x 12" x 1'-2" wood blocks. W6 x 8.5 or W6 x 9 steel posts, 6'-0" in length, with 6" x 12" x 1'-2" notched wood blocks or recycled plastic blocks may be used for 6" x 8" x 6'-0" wood post with 6" x 12" x 1'-2" wood blocks where applicable and when specified.
4. For End Anchor Assembly (Type SFT) details, see Revised Standard Plan RSP A77S1.
5. Layout Types 11A, 11B or 11C are typically used where MGS is recommended to shield embankment slopes and a crashworthy end treatment is required for only one direction of traffic.
6. 31" in-line terminal system end treatments are used where site conditions will not accommodate a flared end treatment.
7. The type of 31" terminal system end treatment to be used will be shown on the Project Plans.
8. Dependent on site conditions (embankment height and side slope), construction of additional MGS (length equal to multiples of 12'-6" with 6'-3" post spacing) may be advisable.
9. The 15:1 or flatter flare used with buried end anchors is based on the edge of the paved shoulder or offset line of edge of the traveled way. The length of MGS within the 15:1 or flatter flare is based on site conditions and should be a length equal to multiples of 12'-6".
10. For details of the buried post end anchor used with Type 11C Layout, see Revised Standard Plan RSP A77T2.
11. Where placement of dike is required with MGS installations, see Revised Standard Plan RSP A77N4 for dike positioning details.

Dist	COUNTY	ROUTE	POST MILES TOTAL PROJECT	SHEET No.	TOTAL SHEETS
07	LA	10	41.7/48.3	85	131

Randell D. Hiatt
REGISTERED CIVIL ENGINEER

November 15, 2013
PLANS APPROVAL DATE

REGISTERED PROFESSIONAL ENGINEER
Randell D. Hiatt
No. C50200
Exp. 6-30-15
CIVIL
STATE OF CALIFORNIA

THE STATE OF CALIFORNIA OR ITS OFFICERS OR AGENTS SHALL NOT BE RESPONSIBLE FOR THE ACCURACY OR COMPLETENESS OF SCANNED COPIES OF THIS PLAN SHEET.

TO ACCOMPANY PLANS DATED 2-10-14

STATE OF CALIFORNIA
DEPARTMENT OF TRANSPORTATION

MIDWEST GUARDRAIL SYSTEM TYPICAL LAYOUTS FOR EMBANKMENTS

NO SCALE

RSP A77P1 DATED NOVEMBER 15, 2013 SUPERSEDES RSP A77P1 DATED JULY 19, 2013 THAT SUPPLEMENTS THE STANDARD PLANS BOOK DATED 2010.

REVISED STANDARD PLAN RSP A77P1

2010 REVISED STANDARD PLAN RSP A77P1

10-4-13

Dist	COUNTY	ROUTE	POST MILES TOTAL PROJECT	SHEET No.	TOTAL SHEETS
07	LA	10	41.7/48.3	86	131

Randell D. Hiatt
REGISTERED CIVIL ENGINEER

July 19, 2013
PLANS APPROVAL DATE

REGISTERED PROFESSIONAL ENGINEER
Randell D. Hiatt
No. C50200
Exp. 6-30-15
CIVIL
STATE OF CALIFORNIA

THE STATE OF CALIFORNIA OR ITS OFFICERS OR AGENTS SHALL NOT BE RESPONSIBLE FOR THE ACCURACY OR COMPLETENESS OF SCANNED COPIES OF THIS PLAN SHEET.

TO ACCOMPANY PLANS DATED 2-10-14

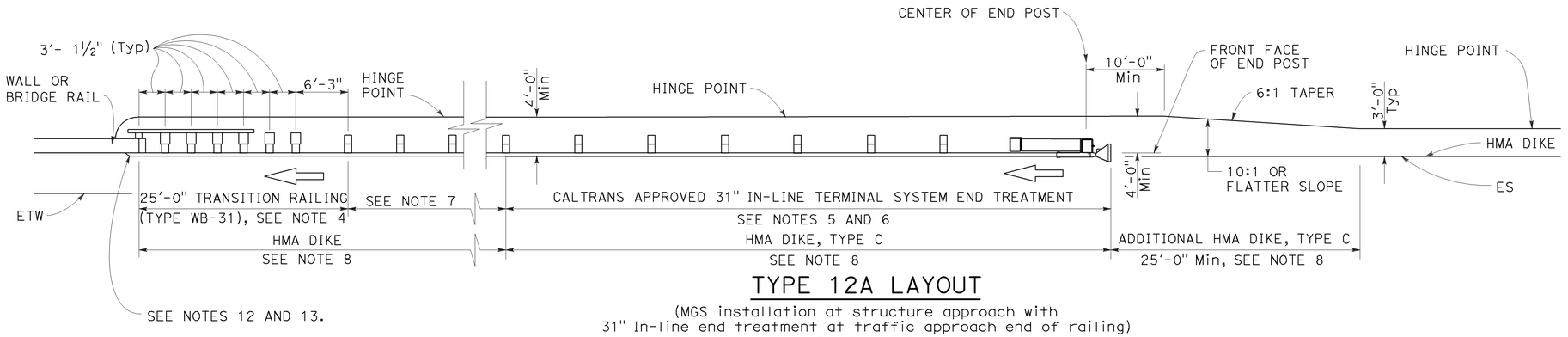

TYPE 12A LAYOUT

(MGS installation at structure approach with
31" In-line end treatment at traffic approach end of railing)
See Notes 9

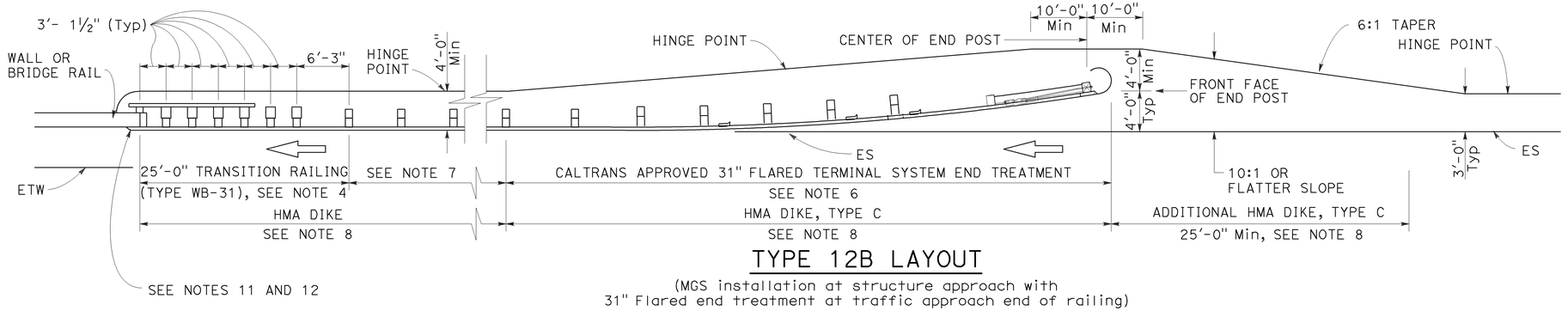

TYPE 12B LAYOUT

(MGS installation at structure approach with
31" Flared end treatment at traffic approach end of railing)
See Notes 9

NOTES:

1. Line post, blocks and hardware to be used are shown on Revised Standard Plans RSP A77L1, RSP A77L2, RSP A77M1, RSP A77N1 and RSP A77N2.
2. MGS post spacing to be 6'-3" center to center, except as otherwise noted.
3. Except as noted, line posts are 6" x 8" x 6'-0" wood with 6" x 12" x 1'-2" wood blocks. W6 x 8.5 or W6 x 9 steel posts, 6'-0" in length, with 6" x 12" x 1'-2" notched wood blocks or plastic blocks may be used for 6" x 8" x 6'-0" wood posts with 6" x 12" x 1'-2" wood blocks where applicable and when specified.
4. For Transition Railing (Type WB-31) details for Types 12A and 12B Layouts, see Revised Standard Plan RSP A77U4.
5. 31" in-line terminal system end treatments are used where site conditions will not accommodate a 31" flared end treatment.
6. The type 31" of terminal system end treatment to be used will be shown on the Project Plans.
7. Dependent on site conditions (embankment height, side slopes, or other fixed objects), it may be advisable to construct additional guard railing (a length equal to multiples of 12'-6" with 6'-3" post spacing) between the transition railing and end treatment. A 12.5 degree angle of departure can be drawn on the Project Plans from the edge of traveled way through the outer most point of the fixed object to determine the additional length of railing needed.
8. Where placement of dike is required with guard railing installations, see Revised Standard Plan RSP A77N4 for dike positioning details.
9. Type 12A or Type 12B Layouts are typically used:
   a. To the right of approaching traffic, at the end of a structure, on two-lane conventional highway where the roadbed width across the structure is less than 40 feet.
   b. To the left of approaching traffic, at the end of a structure, on two-lane conventional highway where the roadbed width across the structure is less than 40 feet.
   c. To the right of approaching traffic at the end of each structure on multilane freeways or expressways with separate adjacent or parallel bridges.
   d. To the right of approaching traffic at the end of the structure on multilane freeways or expressways with decked median on the bridge.
10. See Revised Standard Plan RSP A77Q3 for typical layout used left of approaching traffic at the ends of each structure on multilane freeways or expressways with separate adjacent or parallel bridges.
11. For additional details of typical connections to bridge rail, see Connection Detail AA on Revised Standard Plans RSP A77U1 and RSP A77U2 and Connection Detail FF on Revised Standard Plans RSP A77V1 and RSP A77V2.
12. For additional details of a typical connection to walls or abutments, see Revised Standard Plan RSP A77U3.

STATE OF CALIFORNIA
DEPARTMENT OF TRANSPORTATION

MIDWEST GUARDRAIL SYSTEM TYPICAL LAYOUTS FOR STRUCTURE APPROACH

NO SCALE

RSP A77Q1 DATED JULY 19, 2013 SUPPLEMENTS THE STANDARD PLANS BOOK DATED 2010.

REVISED STANDARD PLAN RSP A77Q1

2010 REVISED STANDARD PLAN RSP A77Q1

6-19-13

Dist	COUNTY	ROUTE	POST MILES TOTAL PROJECT	SHEET No.	TOTAL SHEETS
07	LA	10	41.7/48.3	87	131

Randell D. Hiatt
REGISTERED CIVIL ENGINEER

July 19, 2013
PLANS APPROVAL DATE

REGISTERED PROFESSIONAL ENGINEER — Randell D. Hiatt — No. C50200 — Exp. 6-30-15 — CIVIL — STATE OF CALIFORNIA

THE STATE OF CALIFORNIA OR ITS OFFICERS OR AGENTS SHALL NOT BE RESPONSIBLE FOR THE ACCURACY OR COMPLETENESS OF SCANNED COPIES OF THIS PLAN SHEET.

TO ACCOMPANY PLANS DATED 2-10-14

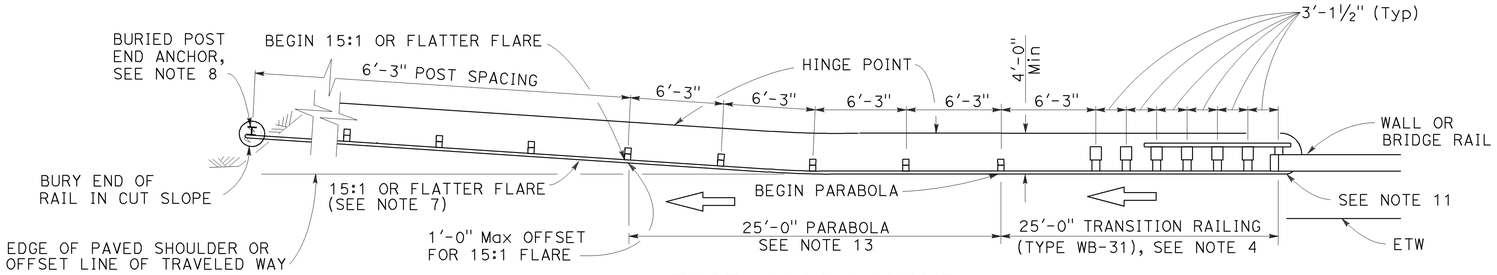

TYPE 12CC LAYOUT

(MGS installation at structure departure with a
Buried end anchor treatment at trailing end of railing)
See Notes 9 and 10

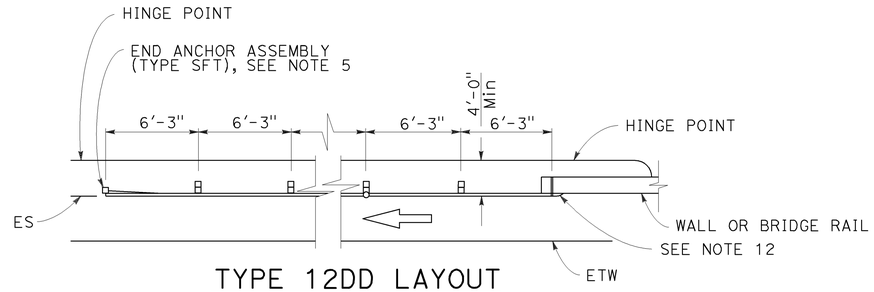

TYPE 12DD LAYOUT

(MGS installation at structure departure
With end anchor assembly at trailing end of railing)
See Notes 6 and 9

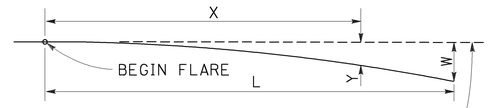

BASE LINE (EDGE OF PAVED SHOULDER OR OFFSET LINE OF EDGE OF TRAVELED WAY)

$$Y = \frac{WX^2}{L^2}$$

Y = OFFSET FROM BASE LINE
W = MAXIMUM OFFSET
X = DISTANCE ALONG BASE LINE
L = LENGTH OF FLARE

PARABOLIC FLARE OFFSETS

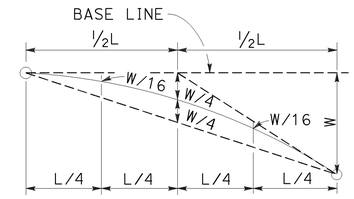

TYPICAL PARABOLIC LAYOUT

NOTES:

1. Line post, blocks and hardware to be used are shown on Revised Standard Plans RSP A77L1, RSP A77L2, RSP A77M1, RSP A77N1 and RSP A77N2.
2. MSG post spacing to be 6'-3" center to center, except as otherwise noted.
3. Except as noted, line posts are 6" x 8" x 6'-0" wood with 6" x 12" x 1'-2" wood blocks. W6 x 8.5 or W6 x 9 steel posts, 6'-0" in length, with 6" x 12" x 1'-2" notched wood blocks or notched recycled plastic blocks may be used for 6" x 8" x 6'-0" wood line posts with 6" x 12" x 1'-2" wood blocks where applicable and when specified.
4. For Transition Railing (Type WB-31) details for Type 12CC Layout, see Revised Standard Plan RSP A77U4.
5. For details of End Anchor Assembly (Type SFT) used with Type 12DD Layout, see Revised Standard Plan RSP A77S1.
6. Type 12DD layout is typically used to the right of traffic departing a structure on two-way conventional highways where the roadbed width across the structure is equal to or greater than 40 feet and MGS is recommended (embankment height, side slopes, other fixed objects). Length of railing to be equal to multiples of 12'-6". For MGS connection details to bridge rail, see Revised Standard Plans RSP A77U1 and RSP A77V1. For MGS connection details to wall, see Revised Standard Plan RSP A77U3.
7. The 15:1 or flatter flare for Type 12CC Layout is based on the edge of the paved shoulder or offset line of edge of the traveled way. The length of MGS within the 15:1 or flatter flare is based on site conditions and should be a length equal to multiples of 12'-6".
8. For details of the buried post end anchor used with Type 12CC Layout, see Revised Standard Plan RSP A77T2.
9. Where placement of dike is required with MGS installations, see Revised Standard Plan RSP A77N4 for dike positioning details.
10. Type 12CC Layout is typically used to the right of traffic departing a structure on two-way conventional highways where the roadbed width across the structure is less than 40 feet.
11. For additional details of a typical connection to bridge rail for Layout Type 12CC, see Connection Detail CC on Revised Standard Plan RSP A77U2 and Connection Detail HH on Revised Standard Plan RSP A77V2.
12. For additional details of a typical connection to bridge rail for Layout Type 12DD, see Connection Detail BB on Revised Standard Plan RSP A77U1 and Connection Detail GG on Revised Standard Plan RSP A77V1.
13. For typical flare offsets for 25'-0" length parabola with maximum offset of 1'-0", see Revised Standard Plan RSP A77P1.

STATE OF CALIFORNIA
DEPARTMENT OF TRANSPORTATION

MIDWEST GUARDRAIL SYSTEM TYPICAL LAYOUTS FOR STRUCTURE DEPARTURE

NO SCALE

RSP A77Q5 DATED JULY 19, 2013 SUPPLEMENTS THE STANDARD PLANS BOOK DATED 2010.

REVISED STANDARD PLAN RSP A77Q5

2010 REVISED STANDARD PLAN RSP A77Q5

6-20-13

Dist	COUNTY	ROUTE	POST MILES TOTAL PROJECT	SHEET No.	TOTAL SHEETS
07	LA	10	41.7/48.3	88	131

Randell D. Hiatt
REGISTERED CIVIL ENGINEER

July 19, 2013
PLANS APPROVAL DATE

REGISTERED PROFESSIONAL ENGINEER — Randell D. Hiatt — No. C50200 — Exp. 6-30-15 — CIVIL — STATE OF CALIFORNIA

THE STATE OF CALIFORNIA OR ITS OFFICERS OR AGENTS SHALL NOT BE RESPONSIBLE FOR THE ACCURACY OR COMPLETENESS OF SCANNED COPIES OF THIS PLAN SHEET.

TO ACCOMPANY PLANS DATED 2-10-14

NOTES:

1. Line post, blocks and hardware to be used are shown on Revised Standard Plans RSP A77L1, RSP A77L2, RSP A77M1, RSP A77N1 and RSP A77N2.
2. MGS post spacing to be 6'-3" center to center, except as otherwise noted.
3. Except as noted, line posts are 6" x 8" x 6'-0" wood with 6" x 12" x 1'-2" wood blocks. W6 x 8.5 or W6 x 9 steel posts, 6'-0" in length, with 6" x 12" x 1'-2" notched wood blocks or notched recycled plastic blocks may be used for 6" x 8" x 6'-0" wood line posts with 6" x 12" x 1'-2" wood blocks where applicable and when specified.
4. A 4'-0" minimum clearance is required between the face of the railing and the face of a fixed object located directly behind MGS section with post spacing of 6'-3". Construct MGS as shown in the detail "Strengthened Midwest Guardrail System Sections for Fixed Object" on this plan, where the clearance between the face of the railing and the face of a fixed object is less than 4'-0", but not less than 3'-0". Where the clearance is less than 3'-0", a concrete wall or barrier should be constructed to shield the fixed object(s).
5. For End Anchor Assembly (Type SFT) details, see Standard Plan RSP A77S1.
6. Type of crash cushion to be used will be shown on the Project Plans.
7. Type 15A layout is typically used on multilane freeways or expressways to shield fixed objects in the area between separated one-way roadbeds.
8. For typical flare offsets for 25'-0" length parabola with maximum offset of 1'-0", see Revised Standard Plan RSP A77P1.
9. The 15:1 or flatter flare is measured off of the edge of the traveled way.
10. W6 x 15 steel post, 8'-0" in length, with 8" x 12" x 1'-2" notched wood block or notched recycled plastic blocks may be used in place of the 10" x 10" x 8'-0" wood post with 8" x 12" x 1'-2" wood block shown in the detail "Strengthened Midwest Guardrail System Sections for Fixed Object".

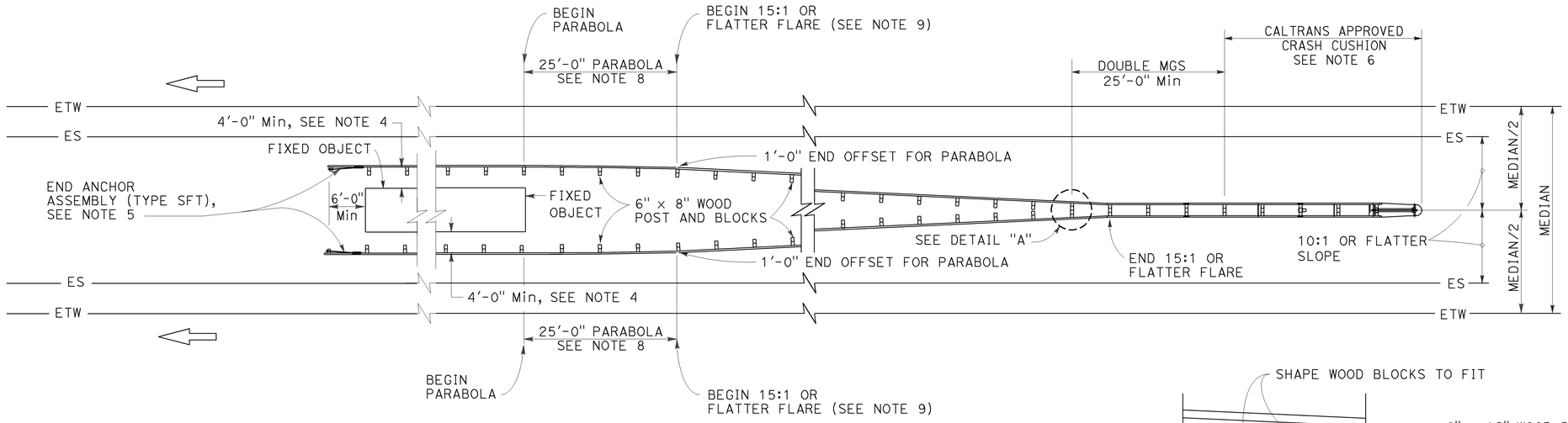

TYPE 15A LAYOUT

See Note 7

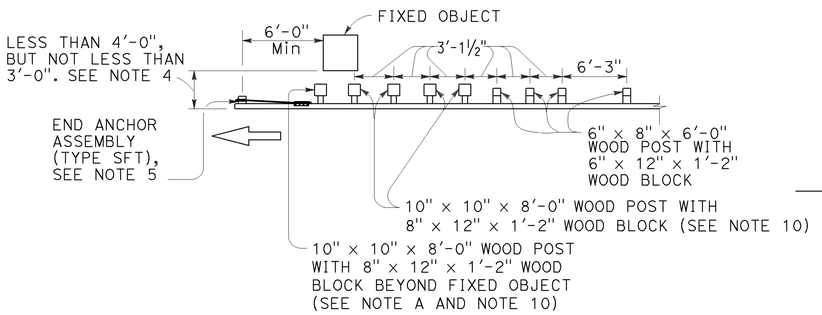

NOTE A: For a series of fixed objects (bridge columns, overhead sign supports, etc.) additional 10" x 10" x 8'-0" wood post with 8" x 12" x 1'-2" wood blocks at 3'-1½" center to center spacing are to be used between fixed objects.

STRENGTHENED MIDWEST GUARDRAIL SYSTEM SECTIONS FOR FIXED OBJECT

Use strengthened MGS sections with Type 15A layout where minimum clearance between the face of the MGS and the fixed object(s) is less than 4'-0", but not less than 3'-0". See Note 4.

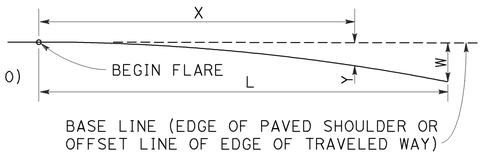

$$Y = \frac{WX^2}{L^2}$$

Y = OFFSET FROM BASE LINE
W = MAXIMUM OFFSET
X = DISTANCE ALONG BASE LINE
L = LENGTH OF FLARE

PARABOLIC FLARE OFFSETS

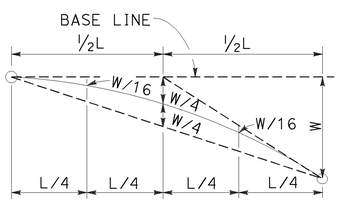

TYPICAL PARABOLIC LAYOUT

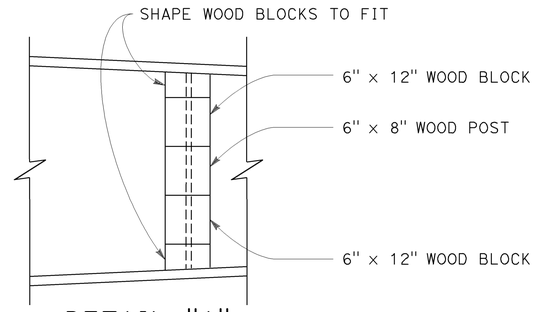

DETAIL "A"

STATE OF CALIFORNIA
DEPARTMENT OF TRANSPORTATION

MIDWEST GUARDRAIL SYSTEM TYPICAL LAYOUTS FOR FIXED OBJECTS BETWEEN SEPARATE ROADBEDS (ONE-WAY TRAFFIC)

NO SCALE

RSP A77R2 DATED JULY 19, 2013 SUPPLEMENTS THE STANDARD PLANS BOOK DATED 2010.

REVISED STANDARD PLAN RSP A77R2

2010 REVISED STANDARD PLAN RSP A77R2

6-20-13

Dist	COUNTY	ROUTE	POST MILES TOTAL PROJECT	SHEET No.	TOTAL SHEETS
07	LA	10	41.7/48.3	89	131

Randell D. Hiatt
REGISTERED CIVIL ENGINEER

July 19, 2013
PLANS APPROVAL DATE

REGISTERED PROFESSIONAL ENGINEER — Randell D. Hiatt — No. C50200 — Exp. 6-30-15 — CIVIL — STATE OF CALIFORNIA

THE STATE OF CALIFORNIA OR ITS OFFICERS OR AGENTS SHALL NOT BE RESPONSIBLE FOR THE ACCURACY OR COMPLETENESS OF SCANNED COPIES OF THIS PLAN SHEET.

TO ACCOMPANY PLANS DATED 2-10-14

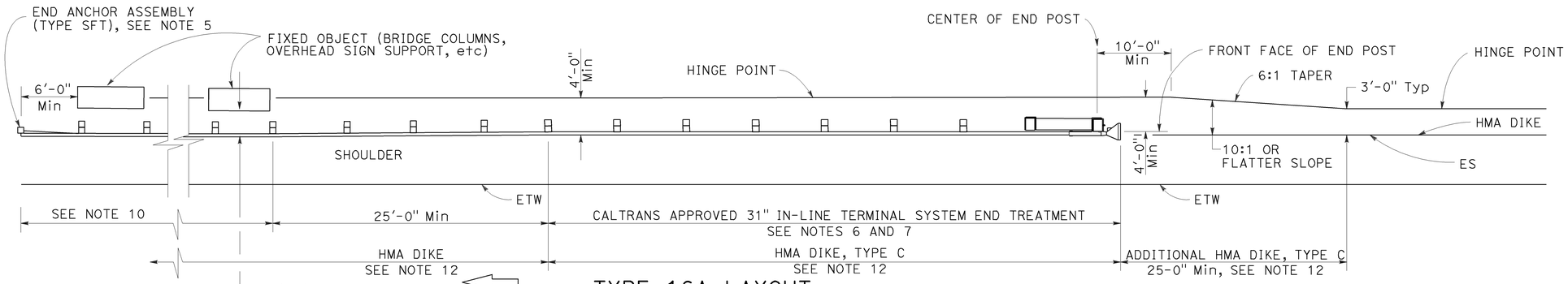

TYPE 16A LAYOUT

(MGS installation at roadside fixed object or objects with 31" in-line end treatment at traffic approach end of railing)
See Notes 11 and 12

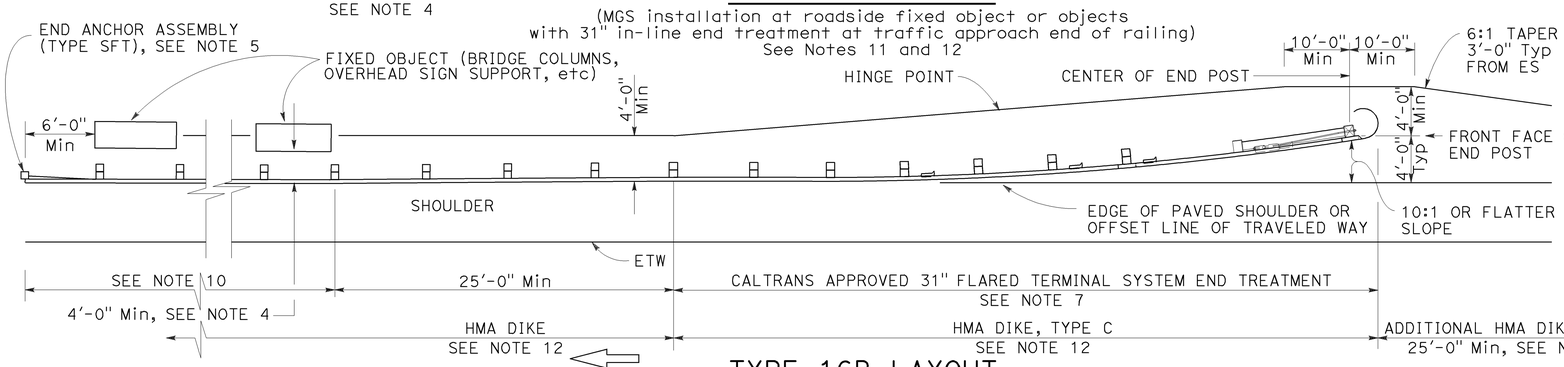

TYPE 16B LAYOUT

(MGS installation at roadside fixed object or objects with 31' flared end treatment at traffic approach end of railing)
See Notes 11 and 12

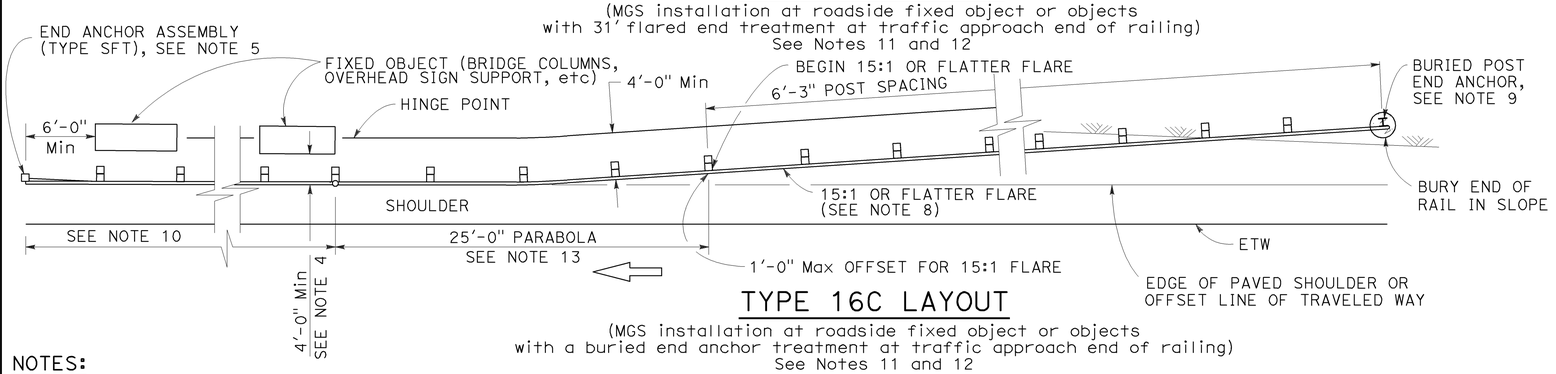

TYPE 16C LAYOUT

(MGS installation at roadside fixed object or objects with a buried end anchor treatment at traffic approach end of railing)
See Notes 11 and 12

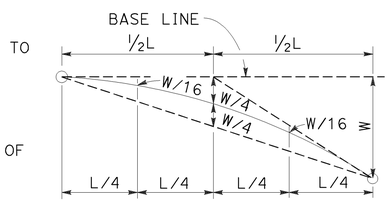

TYPICAL PARABOLIC LAYOUT

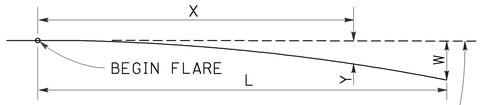

BASE LINE (EDGE OF PAVED SHOULDER OR OFFSET LINE OF EDGE OF TRAVELED WAY)

$$Y = \frac{WX^2}{L^2}$$

Y = OFFSET FROM BASE LINE
W = MAXIMUM OFFSET
X = DISTANCE ALONG BASE LINE
L = LENGTH OF FLARE

PARABOLIC FLARE OFFSETS

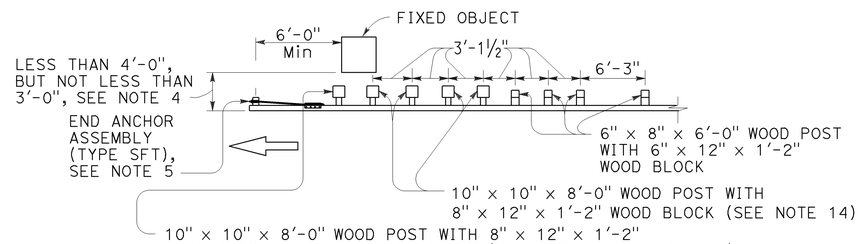

NOTE A: For a series of fixed objects (bridge columns, overhead sign supports, etc.) additional 10" x 10" x 8'-0" wood post with 8" x 12" x 1'-2" wood blocks at 3'-1½" center to center spacing are to be used between fixed objects.

STRENGTHENED MIDWEST GUARDRAIL SYSTEM SECTIONS FOR FIXED OBJECT

Use strengthened MGS sections with Types 16A, 16B or 16C layouts where minimum clearance between the face of the railing and fixed object(s) is less than 4'-0", but not less than 3'-0". See Note 4

NOTES:

1. Line post, blocks and hardware to be used are shown on Revised Standard Plans RSP A77L1, RSP A77L2, RSP A77M1, RSP A77N1 and RSP A77N2.
2. MGS post spacing to be 6'-3" center to center, except as otherwise noted.
3. Except as noted, line posts are 6" x 8" x 6'-0" wood with 6" x 12" x 1'-2" wood blocks. W6 x 8.5 or W6 x 9 steel posts, 6'-0" in length, with 6" x 12" x 1'-2" notched wood blocks or notched recycled plastic blocks may be used for 6" x 8" x 6'-0" wood line posts with 6" x 12" x 1'-2" wood blocks where applicable and when specified.
4. A 4'-0" minimum clearance is required between the face of the railing and the face of a fixed object located directly behind MGS sections with post spacing of 6'-3". Construct MGS as shown in the detail "Strengthened Midwest Guardrail System Sections for Fixed Object" on this plan, where the clearance between the face of the railing and the face of a fixed object is less than 4'-0", but not less than 3'-0". Where the clearance is less than 3'-0", a concrete wall or barrier should be constructed to shield the fixed object(s).
5. For End Anchor Assembly (Type SFT) details, see Revised Standard Plan RSP A77S1.
6. 31" in-line terminal system end treatments are used where site conditions will not accommodate a 31" flared end treatment.
7. The type of 31" terminal system to be used will be shown on the Project Plans.
8. The 15:1 or flatter flare used with Type 16C Layout is based on the edge of the paved shoulder or offset line of edge of the traveled way. The length of MGS within the 15:1 or flatter flare is based on site conditions and should be a length equal to multiples of 12'-6".
9. For details of the Buried Post End Anchor used with Type 16C Layout, see Revised Standard Plan RSP A77T2.
10. As site conditions dictate, construct additional MGS to shield fixed object(s). Additional MGS length equal to multiples of 12'-6". Post spacing at 6'-3" except as specified in Note 4.
11. Layout Types 16A, 16B or 16C are typically used where MGS is recommended to shield roadside fixed object(s) and a crashworthy 31" end treatment is required for only one direction of traffic.
12. Where placement of dike is required with MGS, see Revised Standard Plan RSP A77N4 for dike positioning details.
13. For typical flare offsets for 25'-0" length parabola with maximum offset of 1'-0", see Revised Standard Plan RSP A77P1.
14. W6 x 15 steel post, 8'-0" in length, with 8" x 12" x 1'-2" notched wood block or notched recycled plastic blocks may be used in place of the 10" x 10" x 8'-0" wood post with 8" x 12" x 1'-2" wood block shown in the detail "Strengthened Midwest Guardrail System Sections for Fixed Object".

STATE OF CALIFORNIA
DEPARTMENT OF TRANSPORTATION

MIDWEST GUARDRAIL SYSTEM TYPICAL LAYOUTS FOR ROADSIDE FIXED OBJECTS

NO SCALE

RSP A77R3 DATED JULY 19, 2013 SUPPLEMENTS THE STANDARD PLANS BOOK DATED 2010.

REVISED STANDARD PLAN RSP A77R3

2010 REVISED STANDARD PLAN RSP A77R3

6-20-13

Dist	COUNTY	ROUTE	POST MILES TOTAL PROJECT	SHEET No.	TOTAL SHEETS
07	LA	10	41.7/48.3	90	131

Randell D. Hiatt
REGISTERED CIVIL ENGINEER

November 15, 2013
PLANS APPROVAL DATE

THE STATE OF CALIFORNIA OR ITS OFFICERS OR AGENTS SHALL NOT BE RESPONSIBLE FOR THE ACCURACY OR COMPLETENESS OF SCANNED COPIES OF THIS PLAN SHEET.

REGISTERED PROFESSIONAL ENGINEER — Randell D. Hiatt — No. C50200 — Exp. 6-30-15 — CIVIL — STATE OF CALIFORNIA

TO ACCOMPANY PLANS DATED 2-10-14

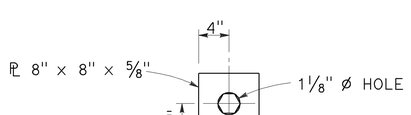

DETAIL "A"
CABLE CONNECTION
END PLATE

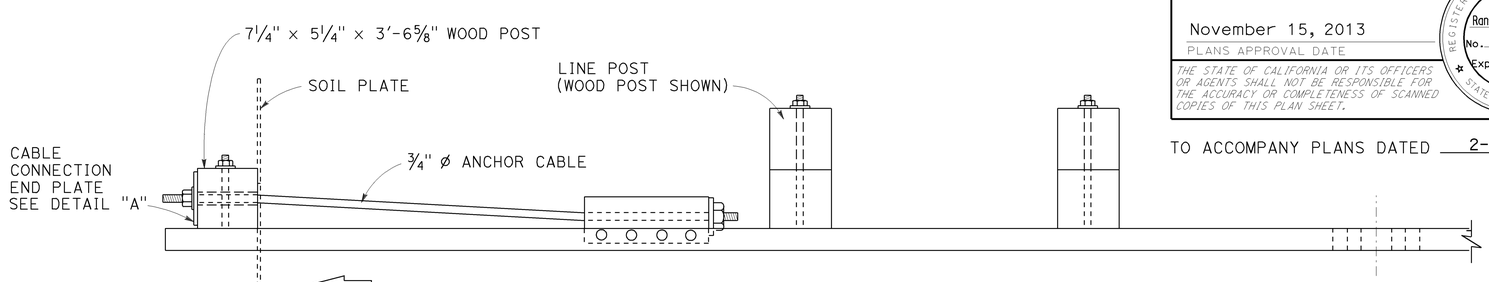

PLAN

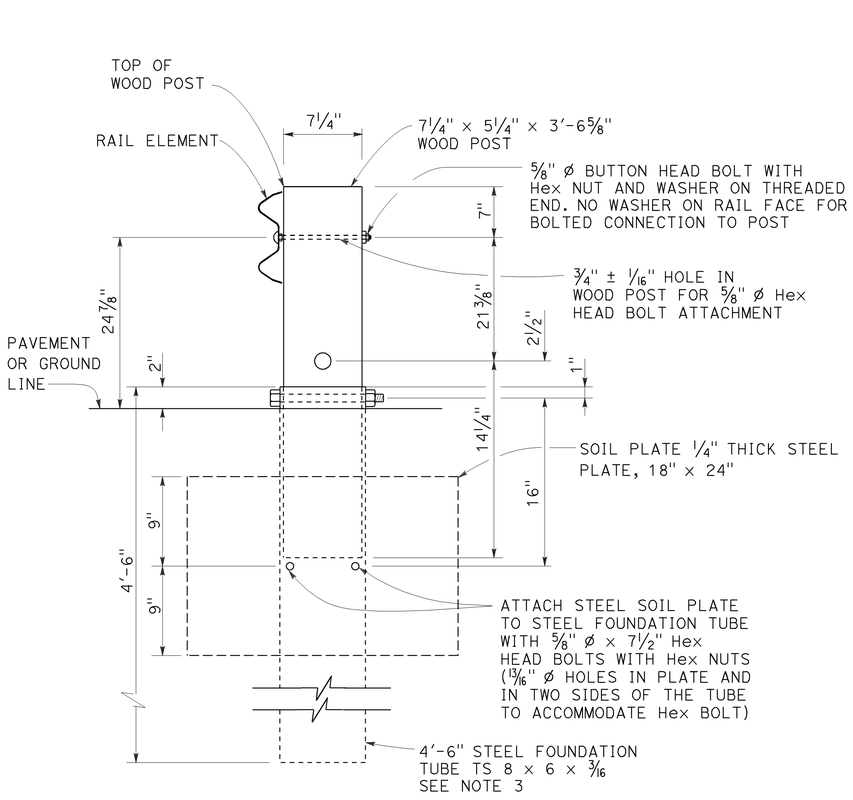

SECTION A-A

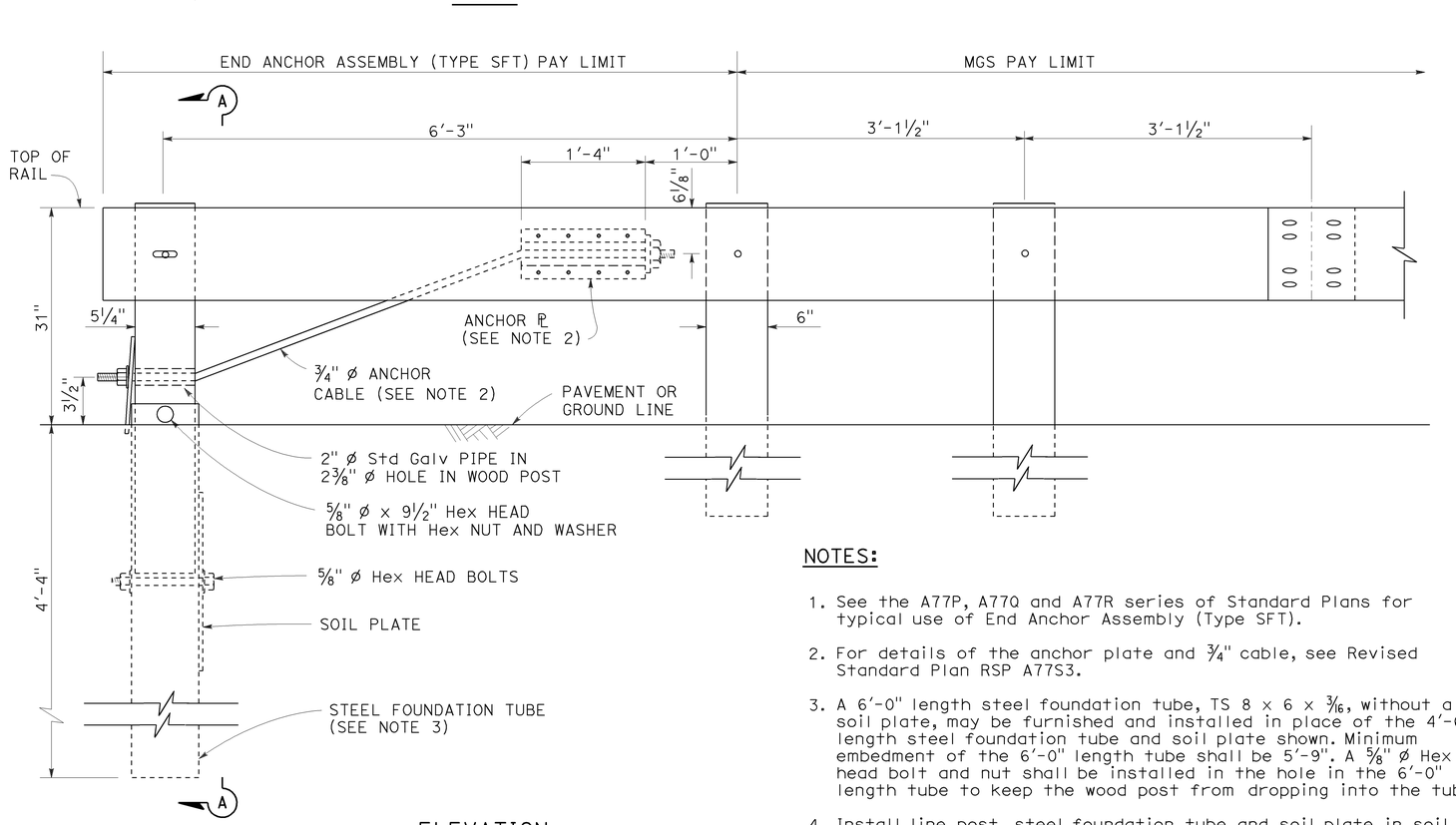

ELEVATION

END ANCHOR
ASSEMBLY (TYPE SFT)
See Note 1

NOTES:

1. See the A77P, A77Q and A77R series of Standard Plans for typical use of End Anchor Assembly (Type SFT).
2. For details of the anchor plate and 3/4" cable, see Revised Standard Plan RSP A77S3.
3. A 6'-0" length steel foundation tube, TS 8 x 6 x 3/16, without a soil plate, may be furnished and installed in place of the 4'-6" length steel foundation tube and soil plate shown. Minimum embedment of the 6'-0" length tube shall be 5'-9". A 5/8" ø Hex head bolt and nut shall be installed in the hole in the 6'-0" length tube to keep the wood post from dropping into the tube.
4. Install line post, steel foundation tube and soil plate in soil.

STATE OF CALIFORNIA
DEPARTMENT OF TRANSPORTATION

MIDWEST GUARDRAIL SYSTEM
END ANCHOR ASSEMBLY
(TYPE SFT)

NO SCALE

RSP A77S1 DATED NOVEMBER 15, 2013 SUPERSEDES RSP A77S1
DATED JULY 19, 2013 THAT SUPPLEMENTS THE STANDARD PLANS BOOK DATED 2010.

REVISED STANDARD PLAN RSP A77S1

2010 REVISED STANDARD PLAN RSP A77S1

10-4-13

Dist	COUNTY	ROUTE	POST MILES TOTAL PROJECT	SHEET No.	TOTAL SHEETS
07	LA	10	41.7/48.3	91	131

Randell D. Hiatt
REGISTERED CIVIL ENGINEER

November 15, 2013
PLANS APPROVAL DATE

REGISTERED PROFESSIONAL ENGINEER — Randell D. Hiatt — No. C50200 — Exp. 6-30-15 — CIVIL — STATE OF CALIFORNIA

THE STATE OF CALIFORNIA OR ITS OFFICERS OR AGENTS SHALL NOT BE RESPONSIBLE FOR THE ACCURACY OR COMPLETENESS OF SCANNED COPIES OF THIS PLAN SHEET.

TO ACCOMPANY PLANS DATED 2-10-14

NOTE:

See Revised Standard Plans RSP A77S1, RSP A77S2 and RSP A77T1 for typical use of anchor cable and anchor plate.

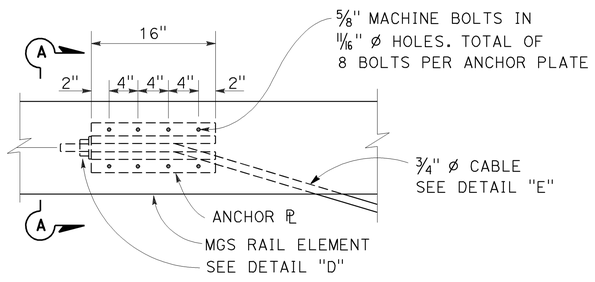

ANCHOR PLATE DETAIL

(MGS shown, TBB similar)

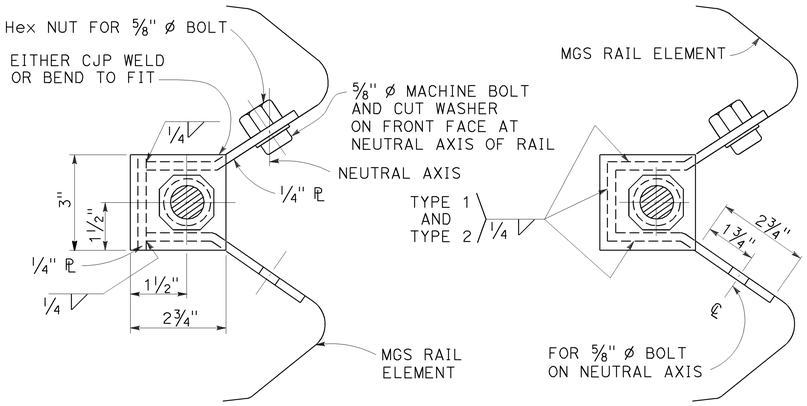

NOTE:

Dimensioning applies to both types.

SECTION A-A
(ALTERNATIVE TYPE 1)

SECTION A-A
(ALTERNATIVE TYPE 2)

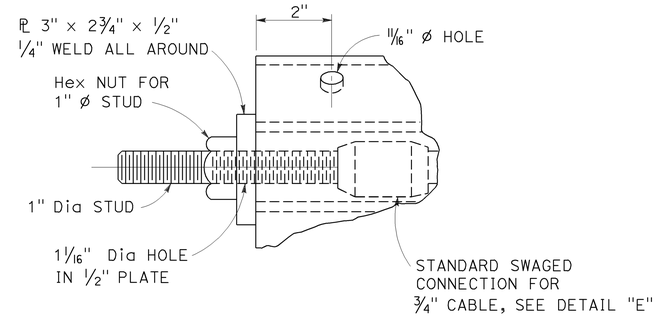

DETAIL "D"

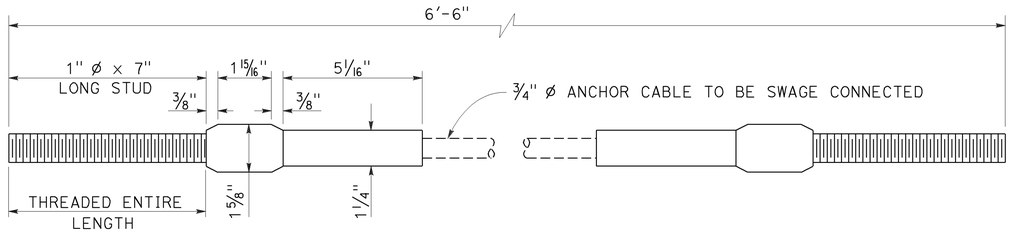

ANCHOR CABLE WITH SWAGED FITTING AND STUD
DETAIL "E"

STATE OF CALIFORNIA
DEPARTMENT OF TRANSPORTATION

METAL RAILING ANCHOR CABLE AND ANCHOR PLATE DETAILS

NO SCALE

RSP A77S3 DATED NOVEMBER 15, 2013 SUPERSEDES RSP A77S3
DATED JULY 19, 2013 THAT SUPPLEMENTS THE STANDARD PLANS BOOK DATED 2010.

REVISED STANDARD PLAN RSP A77S3

2010 REVISED STANDARD PLAN RSP A77S3

10-4-13

Dist	COUNTY	ROUTE	POST MILES TOTAL PROJECT	SHEET No.	TOTAL SHEETS
07	LA	10	41.7/48.3	92	131

Randell D. Hiatt
REGISTERED CIVIL ENGINEER

November 15, 2013
PLANS APPROVAL DATE

REGISTERED PROFESSIONAL ENGINEER — Randell D. Hiatt — No. C50200 — Exp. 6-30-15 — CIVIL — STATE OF CALIFORNIA

THE STATE OF CALIFORNIA OR ITS OFFICERS OR AGENTS SHALL NOT BE RESPONSIBLE FOR THE ACCURACY OR COMPLETENESS OF SCANNED COPIES OF THIS PLAN SHEET.

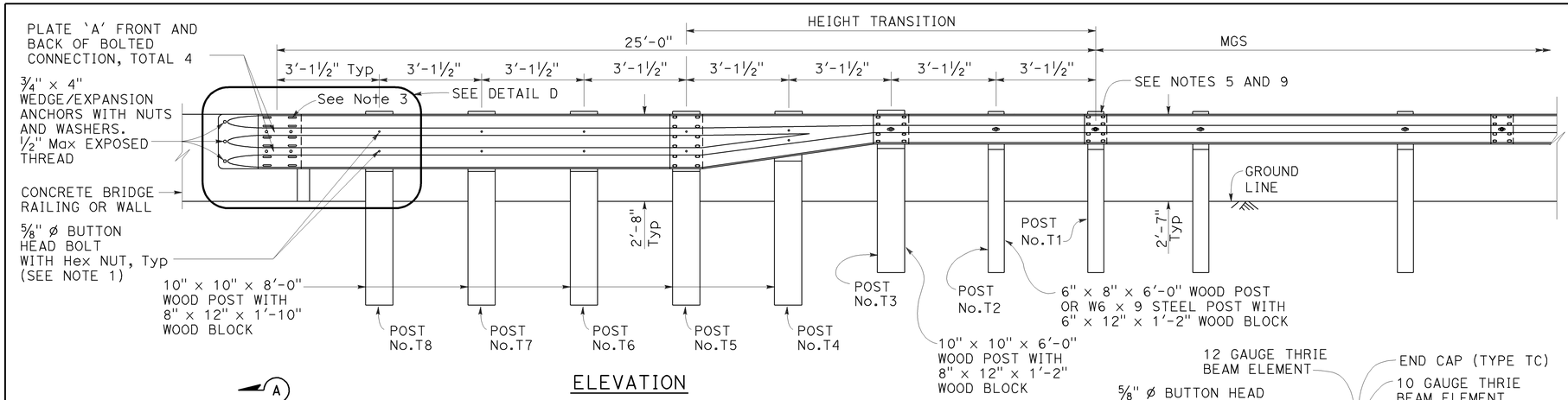

ELEVATION

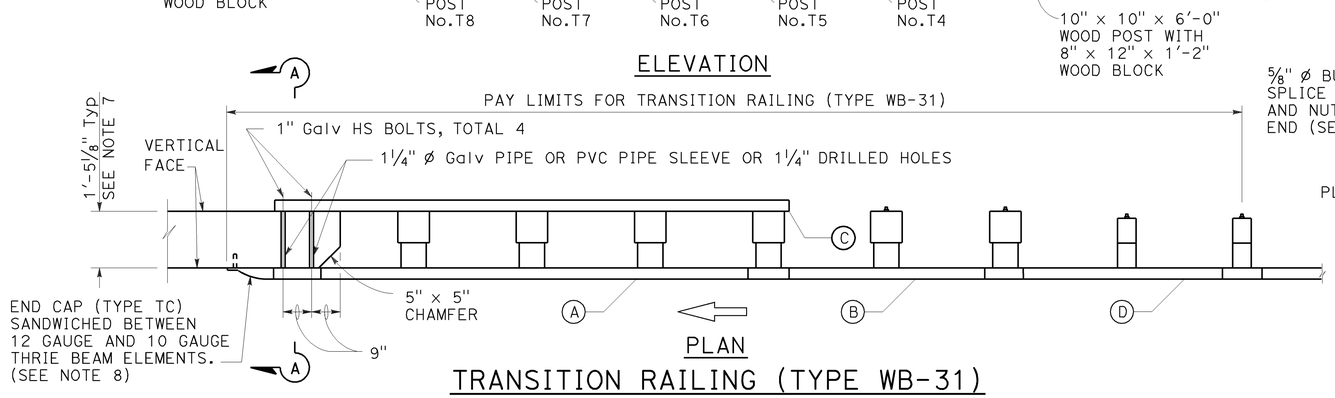

PLAN

TRANSITION RAILING (TYPE WB-31)

(No Blockout Attachment)

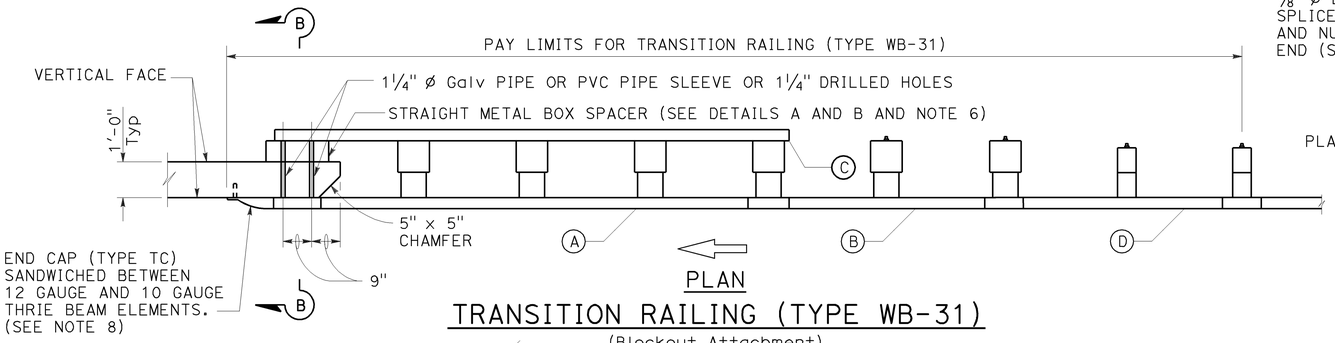

PLAN

TRANSITION RAILING (TYPE WB-31)

(Blockout Attachment)

LEGEND:

- (A) NESTED THRIE BEAM ELEMENTS (ONE 12 GAUGE ELEMENT NESTED OVER ONE 10 GAUGE ELEMENT).
- (B) ONE ASYMMETRICAL 10 GAUGE "W" BEAM TO THRIE BEAM ELEMENT.
- (C) ONE 12 GAUGE THRIE BEAM ELEMENT.
- (D) ONE 10 GAUGE "W" BEAM RAIL ELEMENT (7'-3½"LENGTH)

10 GAUGE = 0.138" THICK
12 GAUGE = 0.108" THICK

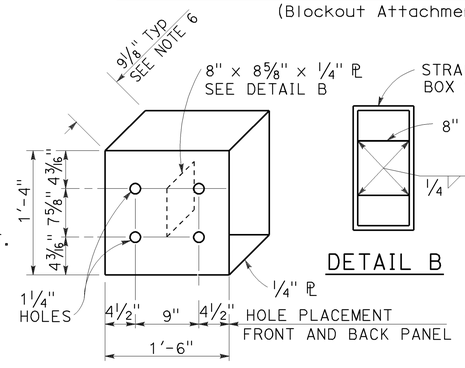

DETAIL A

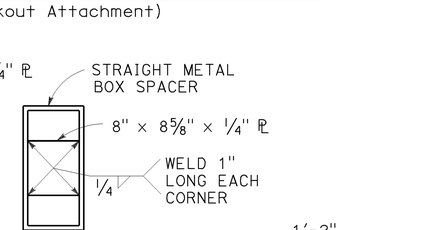

DETAIL B

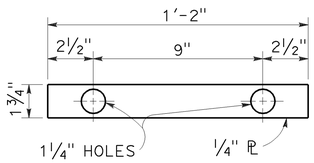

DETAIL C

STRAIGHT METAL BOX SPACER

PLATE 'A'

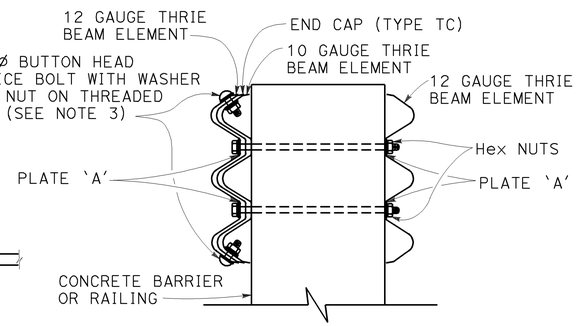

SECTION A-A

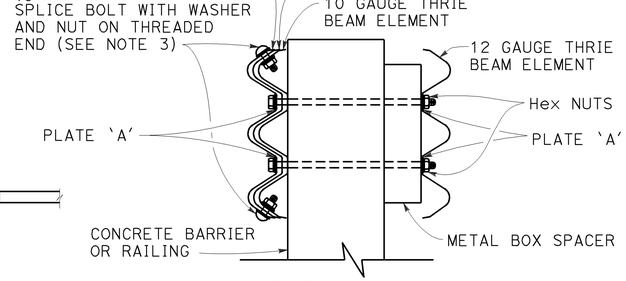

SECTION B-B

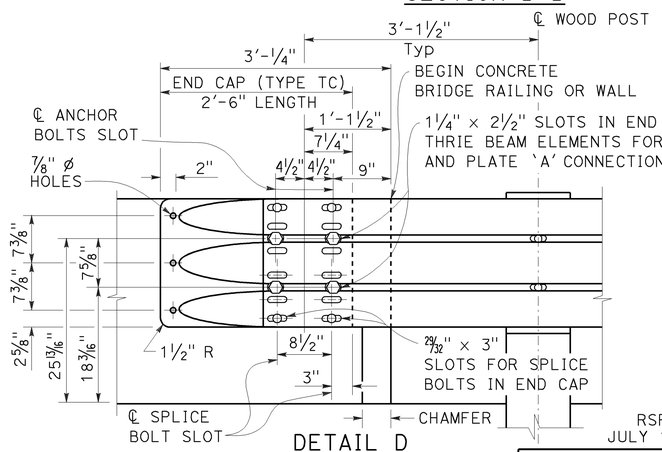

DETAIL D

NOTES:

TO ACCOMPANY PLANS DATED 2-10-14

1. Use ⅝" ø Button head bolts and hex nuts for connections to posts. No washer on rail face for bolted connections to post.
2. The nested rail elements, end cap, and 'W' beam to thrie beam element may be spliced together prior to bolting the elements to the wood post and concrete barrier or railing.
3. Exterior splice bolt holes for rail element splices at Post No. T5 and the connection to the concrete barrier or railing shall be the standard 29/32" x 1⅛" slot size. Interior splice bolt holes at these locations may be increased up to 1¼" ø. Only the top 4 and the bottom 4 splice bolts with washers and nuts are required for rail splices at Post No. T5 and the connection to the concrete barrier or railing.
4. The top elevation of Posts No. T2 through No. T7 shall not project more than 1" above the top elevation of the rail element.
5. Typically, the railing connected to Transition Railing (Type WB-31) will be either standard railing section of MGS with height transition ratio of 150:1 or a Caltrans approved 31" end treatment attached to Post No. T1.
6. The depth of the metal box spacer varies from the 9⅛" to 1½" and is dependent on the width of the concrete railing or wall. The combined dimension for the depth of the metal box spacer plus the width of railing or wall is typically 21⅛". Where the space between the backside of the concrete railing or wall and the rear thrie beam element is less than 1½", metal plates similar to Plate 'A' are to be used as spacers.
7. Where the width of the concrete railing or wall is greater than 17⅛", wood blocks are to be used to fill the space created between the backside of Posts No. T5 through No. T8 and the rear thrie beam element. These wood blocks shall be 8" in width and 1'-2" in length. The dimension between the front thrie beam element and the rear thrie beam element is to match the width of the concrete railing or wall.
8. End cap may be installed over 12 gauge and 10 gauge thrie beam elements where transition railing is installed on the departure end of bridge railing.
9. Conform standard railing section height to 31" at Post No. T1 using height transition ratio of 150:1.

STATE OF CALIFORNIA
DEPARTMENT OF TRANSPORTATION

MIDWEST GUARDRAIL SYSTEM TRANSITION RAILING (TYPE WB-31)

NO SCALE

RSP A77U4 DATED NOVEMBER 15, 2013 SUPERSEDES RSP A77U4 DATED JULY 19, 2013 THAT SUPPLEMENTS THE STANDARD PLANS BOOK DATED 2010.

REVISED STANDARD PLAN RSP A77U4

2010 REVISED STANDARD PLAN RSP A77U4

10-4-13

Dist	COUNTY	ROUTE	POST MILES TOTAL PROJECT	SHEET No.	TOTAL SHEETS
07	LA	10	41.7/48.3	93	131

REGISTERED CIVIL ENGINEER

July 19, 2013
PLANS APPROVAL DATE

REGISTERED PROFESSIONAL ENGINEER
Michael Janzen
No. 44788
Exp. 03-31-14
CIVIL
STATE OF CALIFORNIA

THE STATE OF CALIFORNIA OR ITS OFFICERS OR AGENTS SHALL NOT BE RESPONSIBLE FOR THE ACCURACY OR COMPLETENESS OF SCANNED COPIES OF THIS PLAN SHEET.

TO ACCOMPANY PLANS DATED 2-10-14

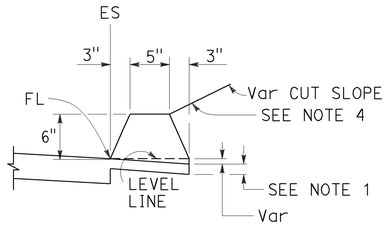

TYPE A
See Note 3

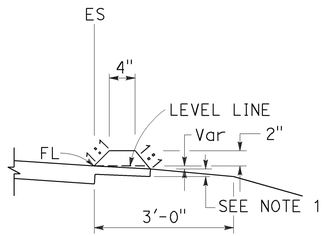

TYPE C

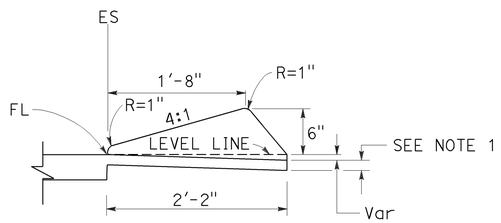

TYPE D

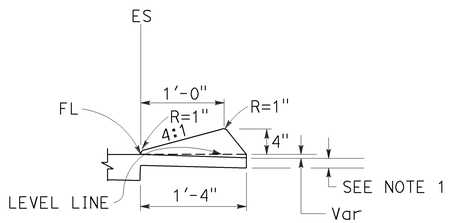

TYPE E

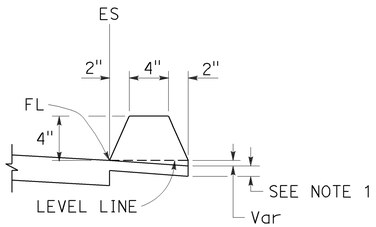

TYPE F
See Note 5

DIKES

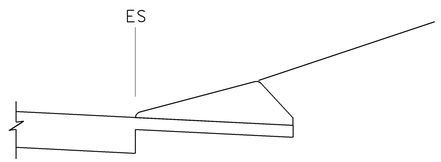

CASE C-1
Cut Slope

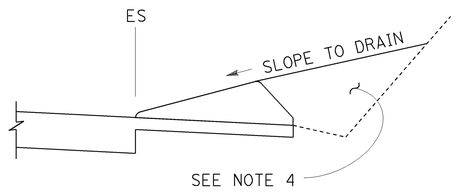

CASE C-2
Cut Slope

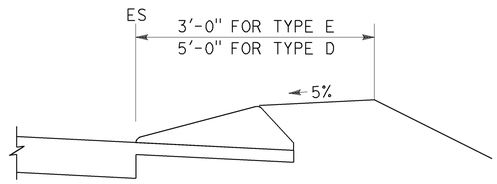

CASE F

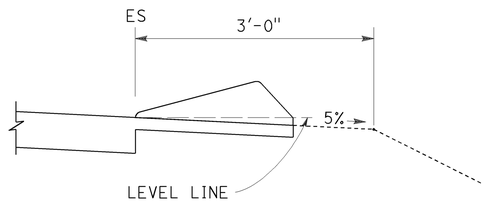

CASE R
See Note 2

TYPE D AND E BACKFILL DETAILS

NOTES:

1. For HMA shoulders only, extend top layer of HMA placed on the shoulder under dike with no joint at the ES. For projects with OGFC shoulders, do not extend OGFC under dike. See project plans for modified dike detail.
2. Case R applies to retrofit only projects where restrictive conditions do not provide enough width for Case F backfill.
3. Type A dike only to be used where restrictive slope conditions do not provide enough width to use Type D or Type E dike.
4. Fill and compact with excavated material to top of dike.
5. Use Type F dike, where dike is required with guard railing installations. See Revised Standard Plan RSP A77N4 for dike positioning details.

DIKE QUANTITIES

TYPE	CUBIC YARDS PER LINEAR FOOT
A	0.0135
C	0.0038
D	0.0293
E	0.0130
F	0.0066

Quantities based on 5% cross slope.

STATE OF CALIFORNIA
DEPARTMENT OF TRANSPORTATION

HOT MIX ASPHALT DIKES

NO SCALE

RSP A87B DATED JULY 19, 2013 SUPERSEDES STANDARD PLAN A87B
DATED MAY 20, 2011 - PAGE 120 OF THE STANDARD PLANS BOOK DATED 2010.

REVISED STANDARD PLAN RSP A87B

2010 REVISED STANDARD PLAN RSP A87B

6-27-13

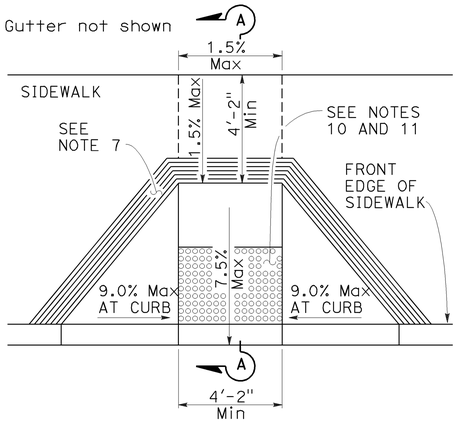

CASE A

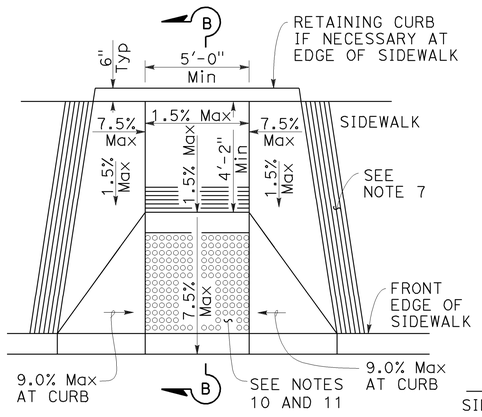

CASE B

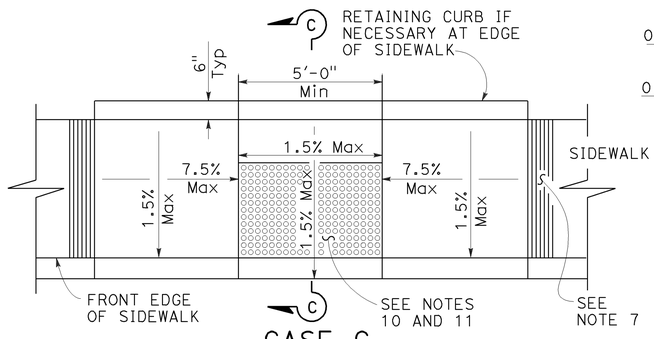

CASE C

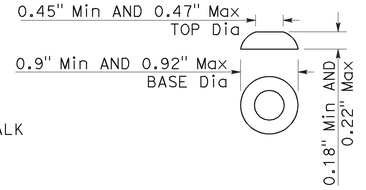

RAISED TRUNCATED DOME

Dist	COUNTY	ROUTE	POST MILES TOTAL PROJECT	SHEET No.	TOTAL SHEETS
07	LA	10	41.7/48.3	94	131

REGISTERED CIVIL ENGINEER

July 19, 2013
PLANS APPROVAL DATE

Hector David Cordova No. C41957 Exp. 3-31-14 CIVIL — REGISTERED PROFESSIONAL ENGINEER — STATE OF CALIFORNIA

THE STATE OF CALIFORNIA OR ITS OFFICERS OR AGENTS SHALL NOT BE RESPONSIBLE FOR THE ACCURACY OR COMPLETENESS OF SCANNED COPIES OF THIS PLAN SHEET.

TO ACCOMPANY PLANS DATED 2-10-14

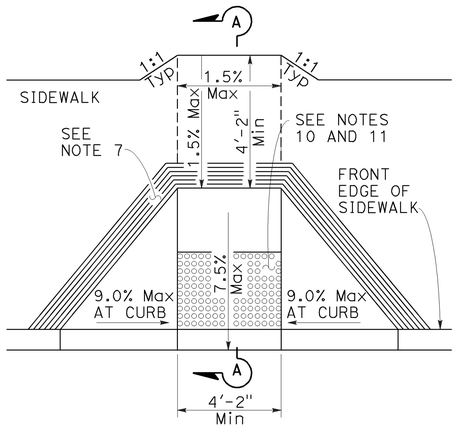

CASE D

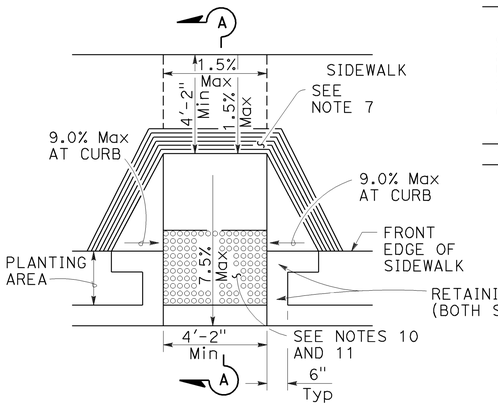

CASE E

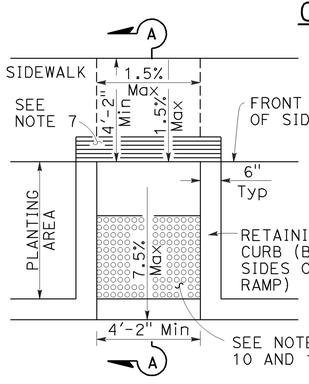

CASE F

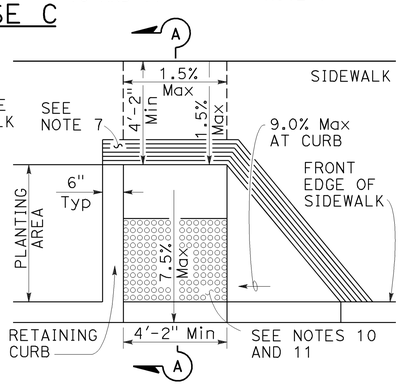

CASE G
See Note 4

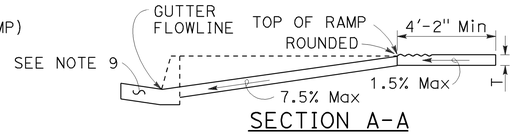

SECTION A-A

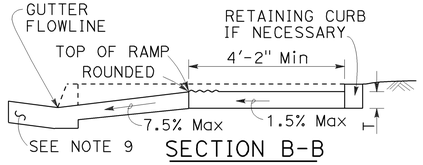

SECTION B-B

Depress entire sidewalk as required

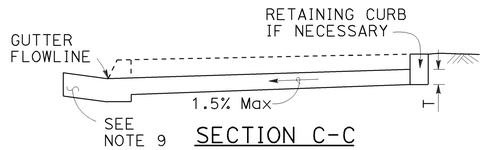

SECTION C-C

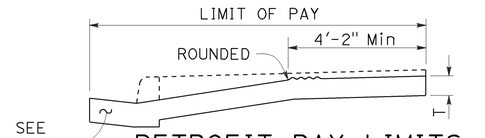

RETROFIT PAY LIMITS
Existing curb and sidewalk

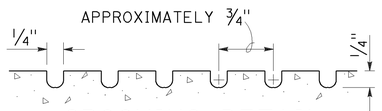

GROOVING DETAIL

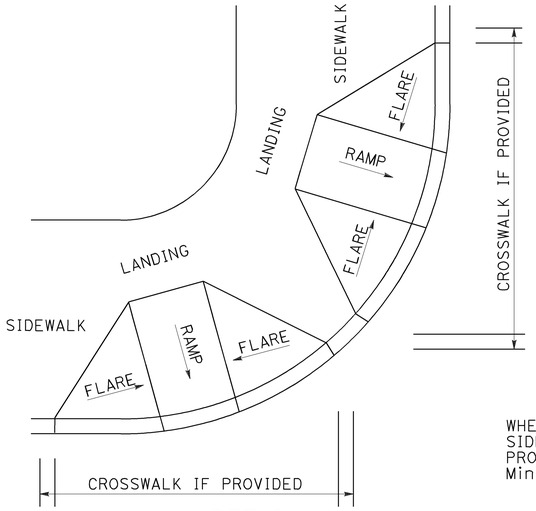

DETAIL A

TYPICAL TWO-RAMP CORNER INSTALLATION

See Note 1

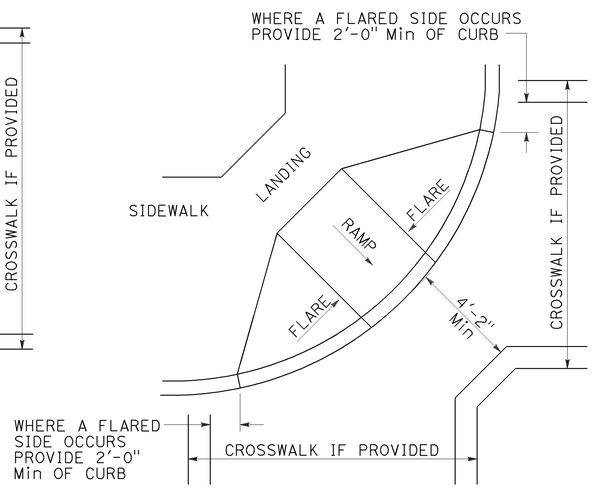

DETAIL B

TYPICAL ONE-RAMP CORNER INSTALLATION

See Notes 1 and 3

NOTES:

1. As site conditions dictate, Case A through Case G curb ramps may be used for corner installations similar to those shown in Detail A and Detail B. The case of curb ramps used in Detail A do not have to be the same. Case A through Case G curb ramps also may be used at mid block locations, as site conditions dictate.
2. If distance from curb to back of sidewalk is too short to accommodate ramp and 4'-2" platform (landing) as shown in Case A, the sidewalk may be depressed longitudinally as in Case B, or C or may be widened as in Case D.
3. When ramp is located in center of curb return, crosswalk configuration must be similar to that shown for Detail B.
4. As site conditions dictate, the retaining curb side and the flared side of the Case G ramp shall be constructed in reversed position.
5. If located on a curve, the sides of the ramp need not be parallel, but the minimum width of the ramp shall be 4'-2".
6. Side slope of ramp flares vary uniformly from a maximum of 9.0% at curb to conform with longitudinal sidewalk slope adjacent to top of the ramp, except in Case C and Case F.
7. The curb ramp shall be outlined, as shown, with a 1'-0" wide border with 1/4" grooves approximately 3/4" on center. See grooving detail.
8. Transitions from ramps and landing to walks, gutters or streets shall be flush (no lip) and free of abrupt changes.
9. Counter slopes of adjoining gutters and road surfaces immediately adjacent to and within 24 inches of the curb ramp shall not be steeper than 1:20 (5.0%). Gutter pan slope shall not exceed 1" of depth for each 2'-0" of width.
10. Curb ramps shall have a detectable warning surface that extends the full width and 3'-0" depth of the ramp. Detectable Warning Surfaces shall conform to the details on this plan and the requirements in the Standard Specifications.
11. The edge of the detectable warning surface nearest the street shall be between 6" and 8" from the gutter flowline.
12. Sidewalk and ramp thickness, "T", shall be 3½" minimum.
13. Utility pull boxes, manholes, vaults and all other utility facilities within the boundaries of the curb ramp will be relocated or adjusted to grade by the owner prior to, or in conjunction with, curb ramp construction.
14. Detectable warning surface may have to be cut to allow removal of utility covers while maintaining full detectable warning width and depth.

RAISED TRUNCATED DOME PATTERN (IN-LINE)

DETECTABLE WARNING SURFACE

See Note 10

STATE OF CALIFORNIA
DEPARTMENT OF TRANSPORTATION

CURB RAMP DETAILS

NO SCALE

RSP A88A DATED JULY 19, 2013 SUPERSEDES STANDARD PLAN A88A
DATED MAY 20, 2011 - PAGE 121 OF THE STANDARD PLANS BOOK DATED 2010.

REVISED STANDARD PLAN RSP A88A

2010 REVISED STANDARD PLAN RSP A88A

7-8-13

Gutter not shown

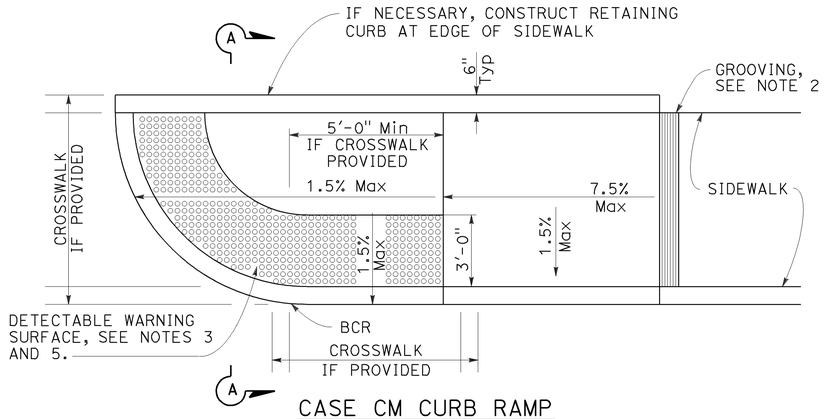

CASE CM CURB RAMP

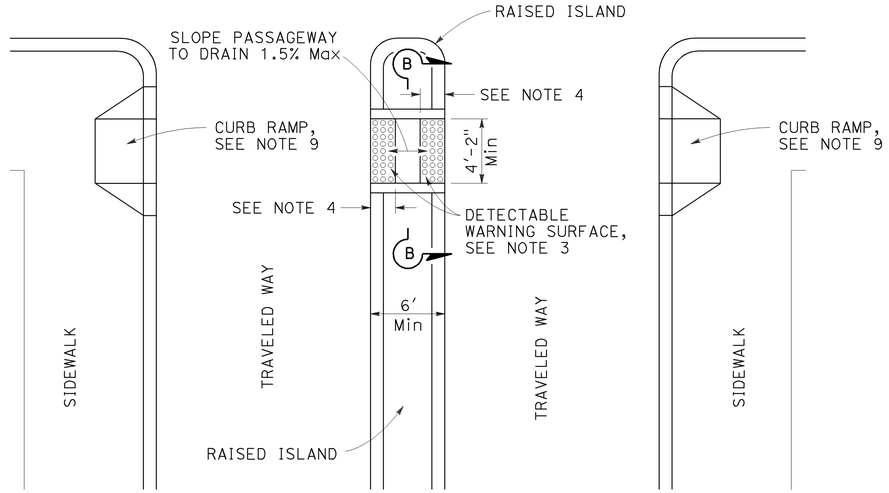

TYPE A PASSAGEWAY

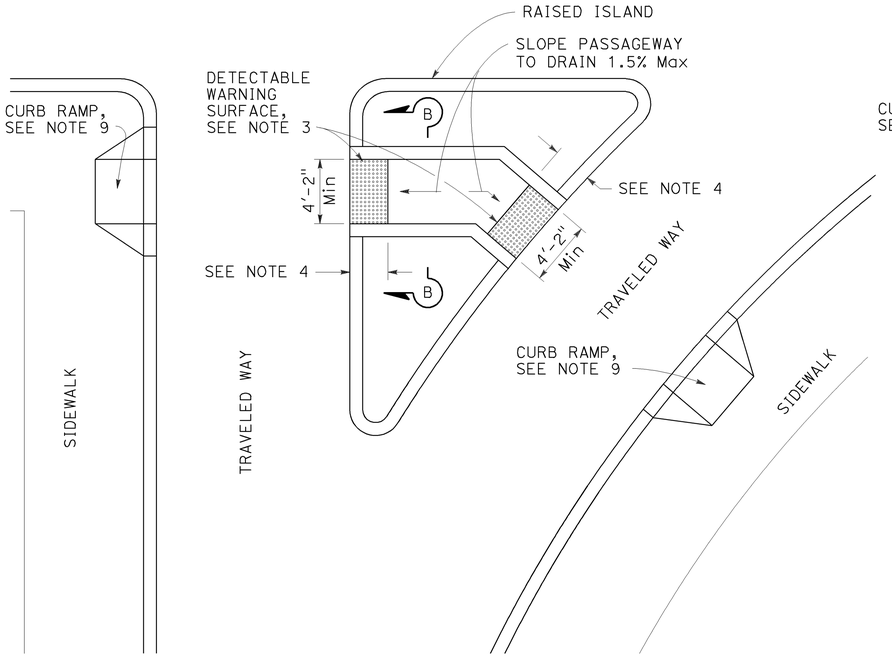

TYPE B PASSAGEWAY

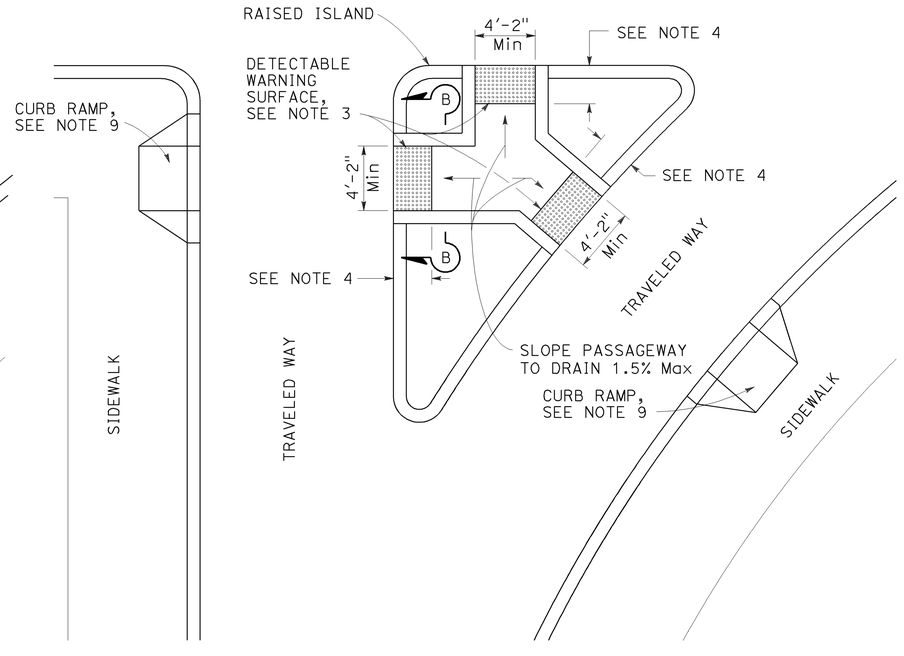

TYPE C PASSAGEWAY

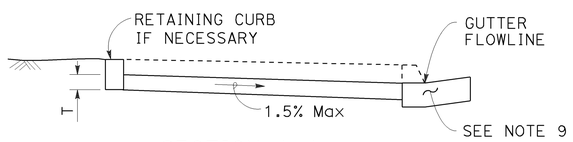

SECTION A-A

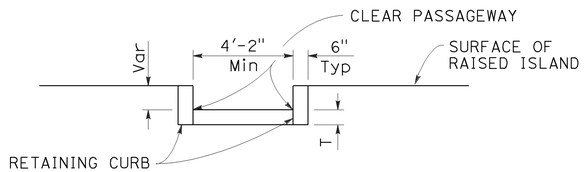

SECTION B-B

Dist	COUNTY	ROUTE	POST MILES TOTAL PROJECT	SHEET No.	TOTAL SHEETS
07	LA	10	41.7/48.3	95	131

REGISTERED CIVIL ENGINEER

July 19, 2013
PLANS APPROVAL DATE

REGISTERED PROFESSIONAL ENGINEER — Hector David Cordova — No. C41957 — Exp. 3-31-14 — CIVIL — STATE OF CALIFORNIA

THE STATE OF CALIFORNIA OR ITS OFFICERS OR AGENTS SHALL NOT BE RESPONSIBLE FOR THE ACCURACY OR COMPLETENESS OF SCANNED COPIES OF THIS PLAN SHEET.

TO ACCOMPANY PLANS DATED 2-10-14

NOTES:

1. Sidewalk, ramp and passageway thickness, "T", shall be 3½" minimum.
2. For details of grooving used with Case CM curb ramp, see Revised Standard Plan RSP A88A.
3. For details of detectable warning surfaces, see Revised Standard Plan RSP A88A.
4. Where an island passageway length is greater than or equal to 6'-0", but less than 8'-0", each detectable warning surface shall extend the full width and 2'-0" depth of the passageway length. Where an island passageway length is greater than or equal to 8'-0", each detectable warning surface shall extend the full width and 3'-0" depth of the passageway length.
5. For Case CM curb ramp, the edge of the detectable warning surface nearest the street shall be between 6" and 8" from the gutter flowline.
6. Transitions from ramps to walks, gutters or streets shall be flush (no lip) and free of abrupt changes.
7. Utility pull boxes, manholes, vaults and all other utility facilities within the boundaries of the curb ramp will be relocated or adjusted to grade by the owner prior to, or in conjunction with, curb ramp construction.
8. Detectable warning surface may have to be cut to allow removal of utility covers while maintaining full detectable warning width and depth.
9. For additional curb ramp details, see Revised Standard Plan RSP A88A.

STATE OF CALIFORNIA
DEPARTMENT OF TRANSPORTATION

CURB RAMP AND ISLAND PASSAGEWAY DETAILS

NO SCALE

RSP A88B DATED JULY 19, 2013 SUPERSEDES STANDARD PLAN A88B DATED MAY 20, 2011 - PAGE 122 OF THE STANDARD PLANS BOOK DATED 2010.

REVISED STANDARD PLAN RSP A88B

2010 REVISED STANDARD PLAN RSP A88B

6-25-13

Dist	COUNTY	ROUTE	POST MILES TOTAL PROJECT	SHEET No.	TOTAL SHEETS
07	LA	10	41.7/48.3	96	131

William K. Farnbach
REGISTERED CIVIL ENGINEER

July 19, 2013
PLANS APPROVAL DATE

REGISTERED PROFESSIONAL ENGINEER — William K. Farnbach — No. C49042 — Exp. 9-30-14 — CIVIL — STATE OF CALIFORNIA

THE STATE OF CALIFORNIA OR ITS OFFICERS OR AGENTS SHALL NOT BE RESPONSIBLE FOR THE ACCURACY OR COMPLETENESS OF SCANNED COPIES OF THIS PLAN SHEET.

TO ACCOMPANY PLANS DATED 2-10-14

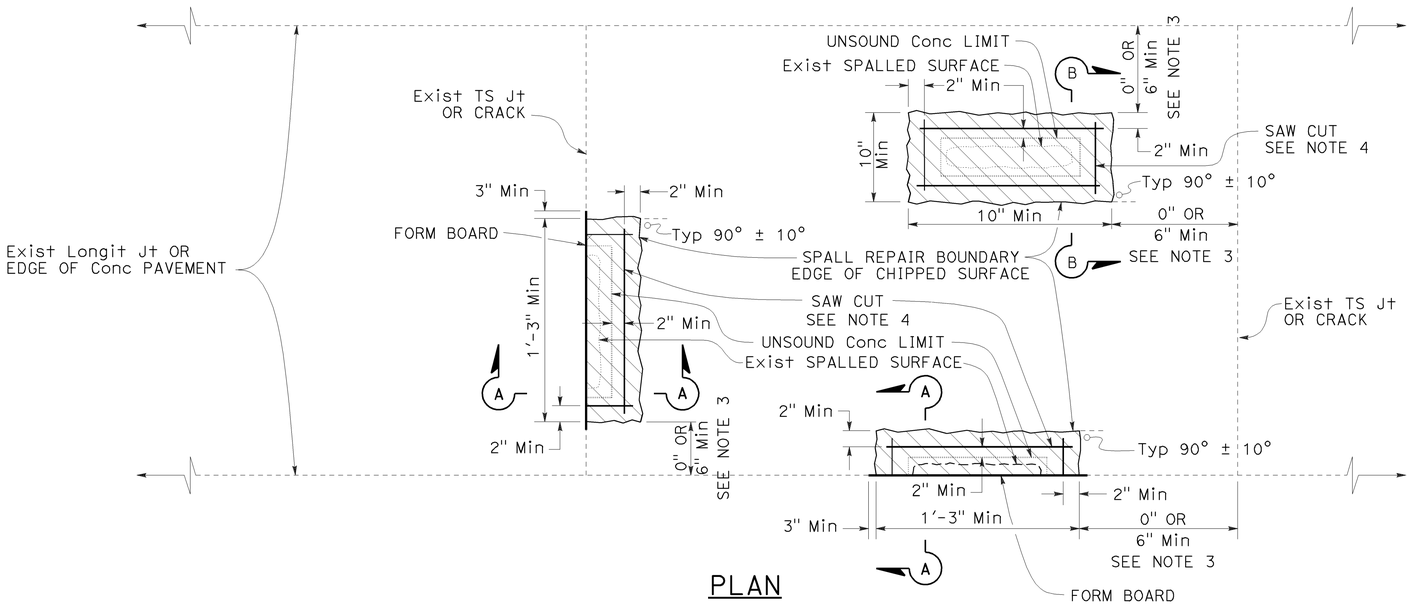

PLAN

LEGEND

SPALL REPAIR

NOTES:

1. See Project Plans for spall repair locations.
2. Combine spall repair areas closer than 2' apart.
3. If the spall repair area is less than 6" from a joint, extend the repair to the joint.
4. Cut at least 2" beyond the rectangular limits of unsound concrete determined by the Engineer. Determine the saw cut depth using the following table:

Conc MATERIAL	SAW CUT DEPTH	
	Min	Max
FAST-SETTING	2"	3½"
POLYESTER	1½"	3½"

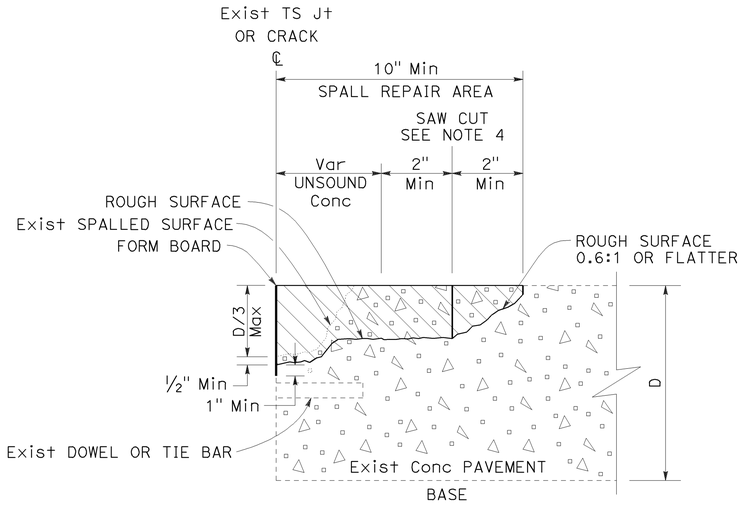

SECTION A-A

JOINT, CRACK, OR EDGE OF CONCRETE PAVEMENT REPAIR

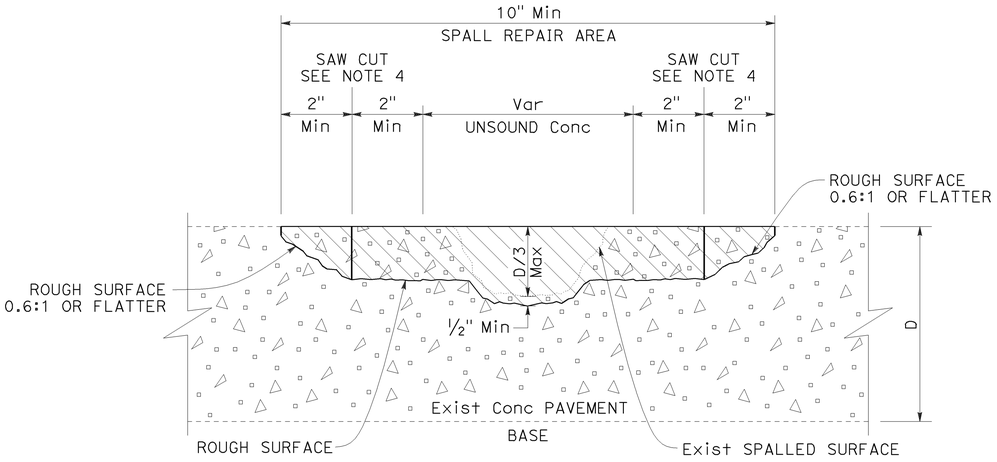

SECTION B-B

MISCELLANEOUS SPALL REPAIR

STATE OF CALIFORNIA
DEPARTMENT OF TRANSPORTATION

SPALL REPAIR

NO SCALE

RSP P6 DATED JULY 19, 2013 SUPPLEMENTS THE STANDARD PLANS BOOK DATED 2010.

REVISED STANDARD PLAN RSP P6

2010 REVISED STANDARD PLAN RSP P6

5-31-13

Dist	COUNTY	ROUTE	POST MILES TOTAL PROJECT	SHEET No.	TOTAL SHEETS
07	LA	10	41.7/48.3	97	131

William K. Farnbach
REGISTERED CIVIL ENGINEER

July 19, 2013
PLANS APPROVAL DATE

REGISTERED PROFESSIONAL ENGINEER — William K. Farnbach — No. C49042 — Exp. 9-30-14 — CIVIL — STATE OF CALIFORNIA

THE STATE OF CALIFORNIA OR ITS OFFICERS OR AGENTS SHALL NOT BE RESPONSIBLE FOR THE ACCURACY OR COMPLETENESS OF SCANNED COPIES OF THIS PLAN SHEET.

TO ACCOMPANY PLANS DATED 2-10-14

NOTES:

1. Details for skewed joints also apply to perpendicular joints.
2. Use 1′-6" ± ¼" long dowel bars with a 1¼" diameter except 1" diameter dowel bars may be used if D < 0.70′.
3. Caulk existing transverse joint at bottom and sides of the dowel bar slot prior to placing dowel bar and foam insert.
4. Foam insert thickness must match width of existing transverse joint or crack.

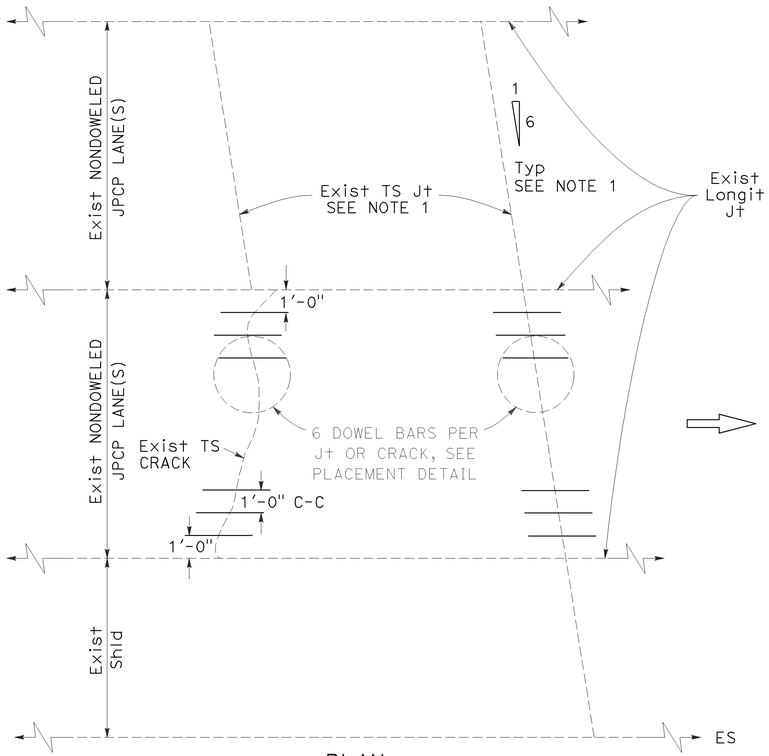

PLAN

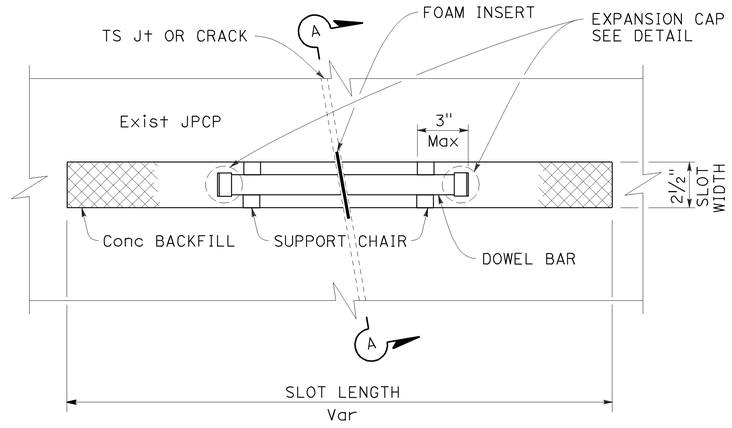

PLAN

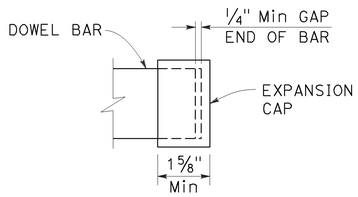

EXPANSION CAP DETAIL

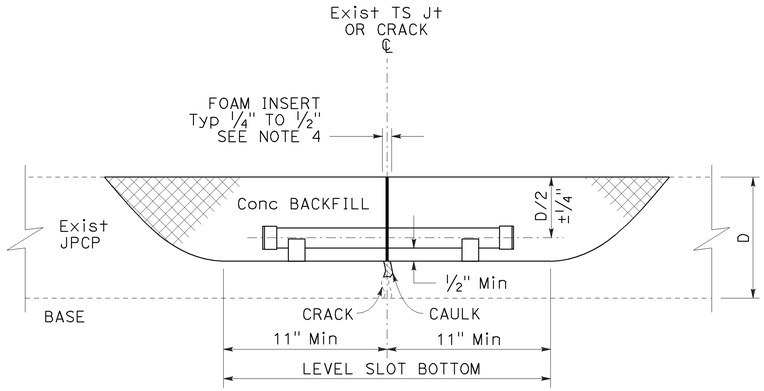

ELEVATION

DOWEL BAR PLACEMENT DETAIL

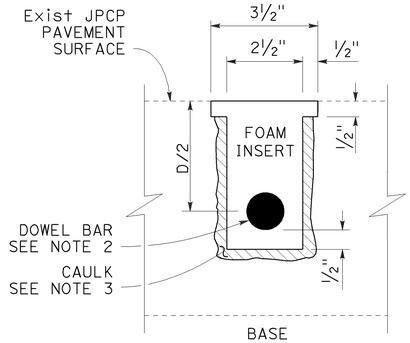

SECTION A-A

STATE OF CALIFORNIA
DEPARTMENT OF TRANSPORTATION

DOWEL BAR RETROFIT

NO SCALE

RSP P7 DATED JULY 19, 2013 SUPERSEDES STANDARD PLAN P7
DATED MAY 20, 2011 - PAGE 129 OF THE STANDARD PLANS BOOK DATED 2010.

REVISED STANDARD PLAN RSP P7

2010 REVISED STANDARD PLAN RSP P7

6-17-13

Dist	COUNTY	ROUTE	POST MILES TOTAL PROJECT	SHEET No.	TOTAL SHEETS
07	LA	10	41.7/48.3	98	131

William K. Farnbach
REGISTERED CIVIL ENGINEER

July 19, 2013
PLANS APPROVAL DATE

REGISTERED PROFESSIONAL ENGINEER — William K. Farnbach — No. C49042 — Exp. 9-30-14 — CIVIL — STATE OF CALIFORNIA

THE STATE OF CALIFORNIA OR ITS OFFICERS OR AGENTS SHALL NOT BE RESPONSIBLE FOR THE ACCURACY OR COMPLETENESS OF SCANNED COPIES OF THIS PLAN SHEET.

TO ACCOMPANY PLANS DATED 2-10-14

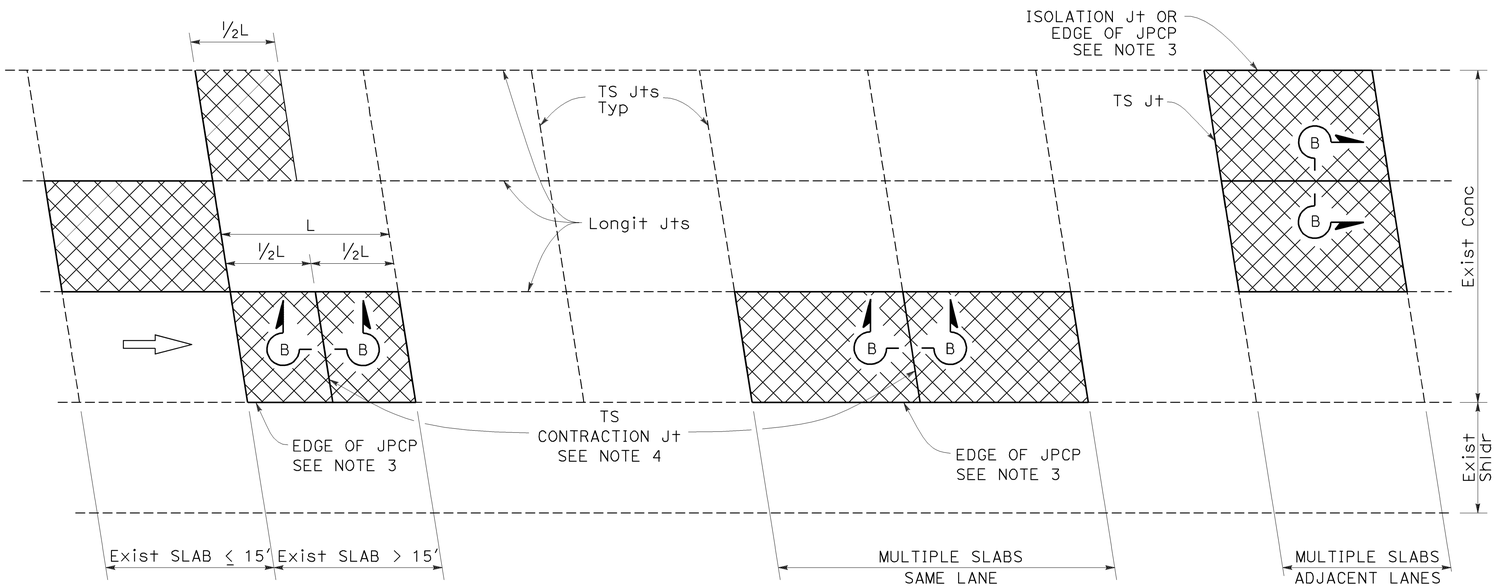

PLAN

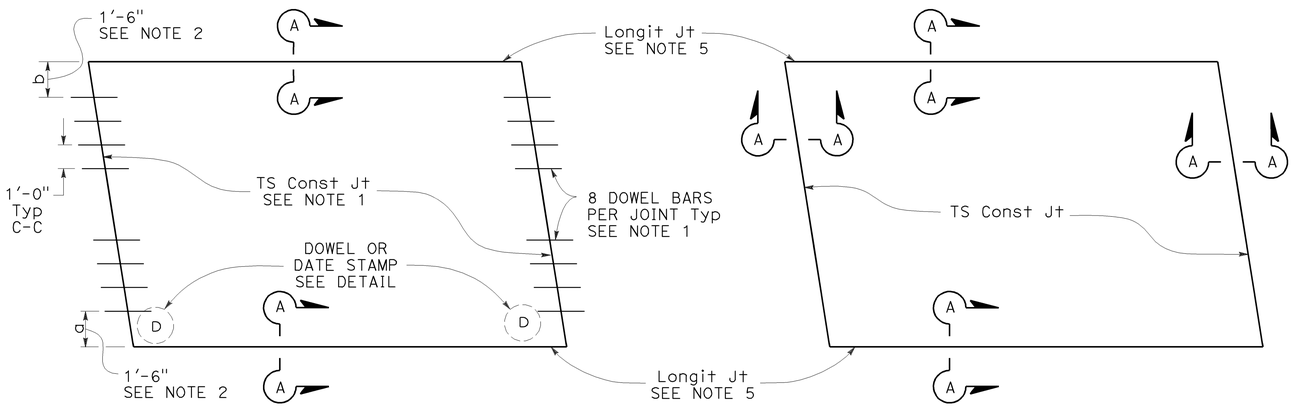

TYPE I
See Design Note 1

TYPE II
See Design Note 2

SLAB LAYOUT

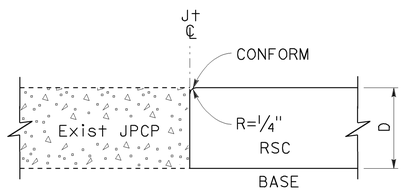

SECTION A-A

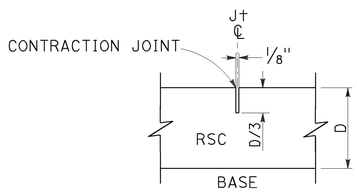

SECTION B-B

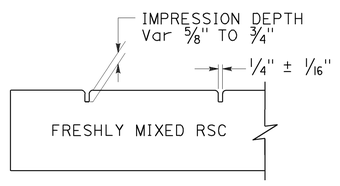

SECTION C-C

LEGEND:

RSC RAPID STRENGTH CONCRETE

INDIVIDUAL SLAB REPLACEMENT WITH RSC

NOTES:

1. For details not shown, see Revised Standard Plan RSP P10.
2. Where the existing outside shoulder is asphalt concrete pavement, "a" = 1'-0" and "b" = 2'-0".
3. Use side forms where edge of RSC pavement is adjacent to asphalt concrete.
4. Transverse contraction joint to match skew of existing joint. Omit dowel bars.
5. Do not place tie bars at longitudinal joints.

DESIGN NOTES:

1. For concrete slab repair with at least 5 years design life.
2. For short term repairs < 5 yrs design life or for slab replacements with cracking and seating.

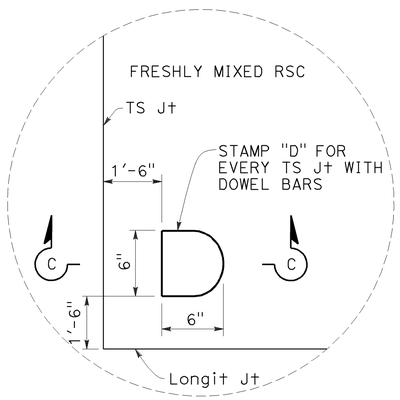

DOWEL STAMP DETAIL

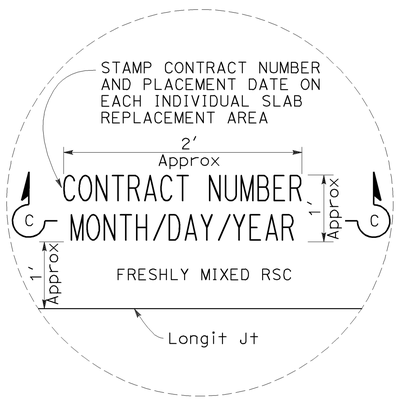

DATE STAMP DETAIL

STATE OF CALIFORNIA
DEPARTMENT OF TRANSPORTATION

INDIVIDUAL SLAB REPLACEMENT WITH RAPID STRENGTH CONCRETE

NO SCALE

RSP P8 DATED JULY 19, 2013 SUPERSEDES RSP P8 DATED APRIL 20, 2012 AND STANDARD PLAN P8 DATED MAY 20, 2011 - PAGE 130 OF THE STANDARD PLANS BOOK DATED 2010.

REVISED STANDARD PLAN RSP P8

2010 REVISED STANDARD PLAN RSP P8

5-31-13

Dist	COUNTY	ROUTE	POST MILES TOTAL PROJECT	SHEET No.	TOTAL SHEETS
07	LA	10	41.7/48.3	99	131

William K. Farnbach
REGISTERED CIVIL ENGINEER

July 19, 2013
PLANS APPROVAL DATE

REGISTERED PROFESSIONAL ENGINEER — William K. Farnbach — No. C49042 — Exp. 9-30-14 — CIVIL — STATE OF CALIFORNIA

THE STATE OF CALIFORNIA OR ITS OFFICERS OR AGENTS SHALL NOT BE RESPONSIBLE FOR THE ACCURACY OR COMPLETENESS OF SCANNED COPIES OF THIS PLAN SHEET.

TO ACCOMPANY PLANS DATED 2-10-14

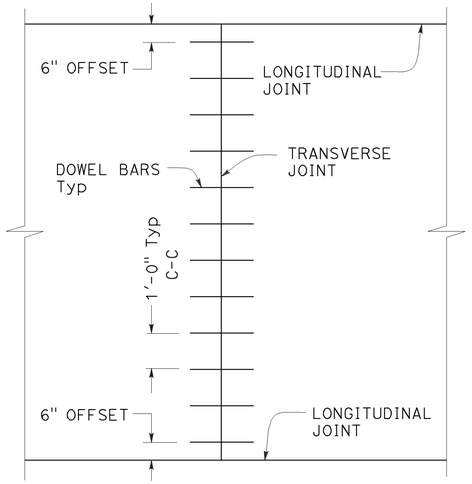

TRANSVERSE JOINT DOWEL BAR LAYOUT

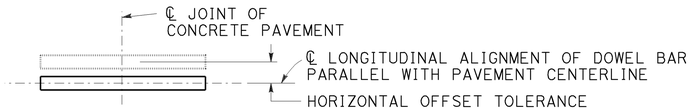

PLAN

HORIZONTAL OFFSET TOLERANCE

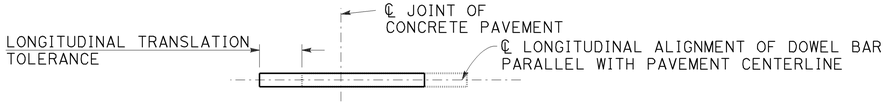

PLAN

LONGITUDINAL TRANSLATION TOLERANCE

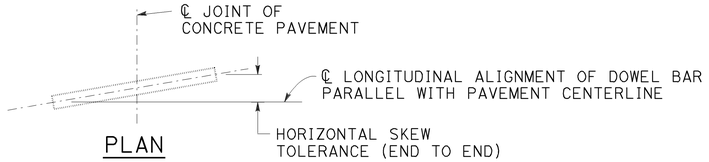

PLAN

HORIZONTAL SKEW TOLERANCE

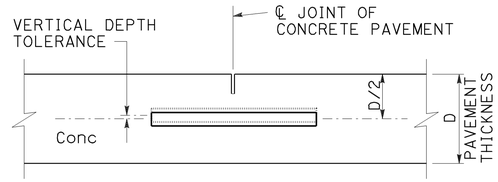

ELEVATION

VERTICAL DEPTH TOLERANCE

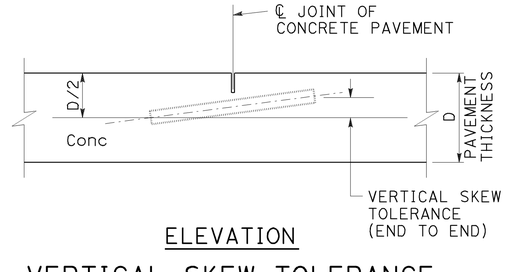

ELEVATION

VERTICAL SKEW TOLERANCE

NOTES:

1. See Revised Standard Plan RSP P1 for typical dowel bar placement and locations.
2. Where fresh concrete pavement is placed against new concrete or existing concrete pavement, rounding the corner of the existing concrete pavement is not required.
3. May also use ¾" Dia dowel bars 2'-4" ± ¼" in length. Center the length of dowel bars at the centerline of longitudinal joint.

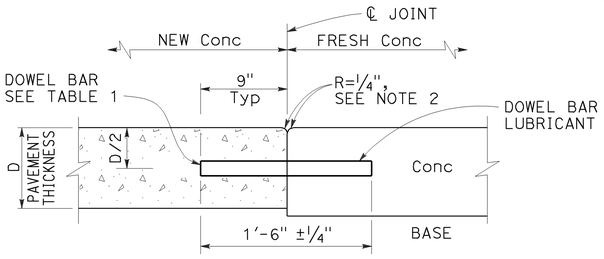

TRANSVERSE CONSTRUCTION JOINT DETAIL

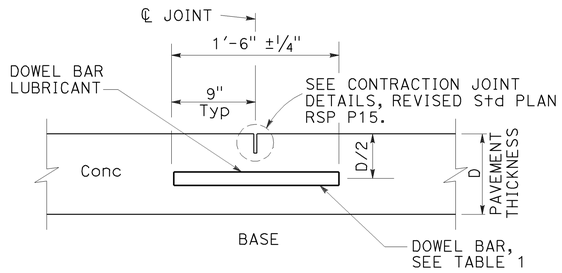

TRANSVERSE CONTRACTION JOINT

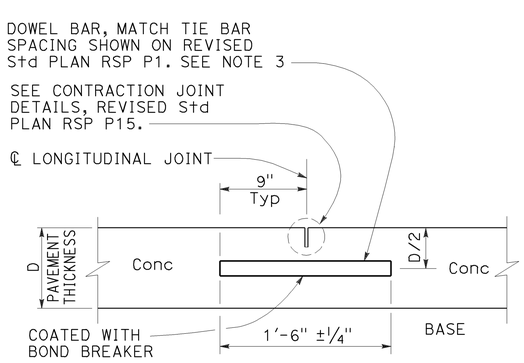

LONGITUDINAL CONTRACTION JOINT WITH DOWEL BARS

See Revised Std Plan RSP P18

TABLE 1

DOWEL BAR DIAMETER TABLE			
PAVEMENT THICKNESS	0.65'	> 0.65' - 0.85'	> 0.85'
MINIMUM DOWEL * BAR DIAMETER	1"	1¼"	1½"

* The drilled hole diameter must be ⅛" to 3/16" larger than the bar diameter.

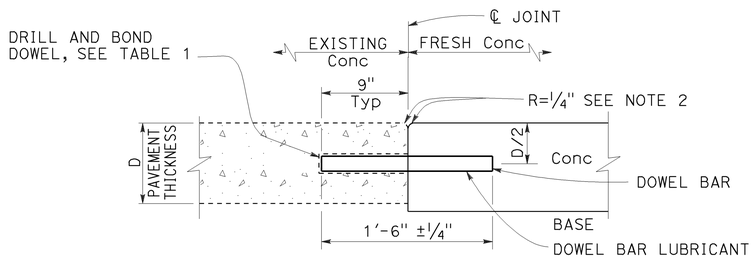

TRANSVERSE CONSTRUCTION JOINT FOR EXISTING CONCRETE PAVEMENT

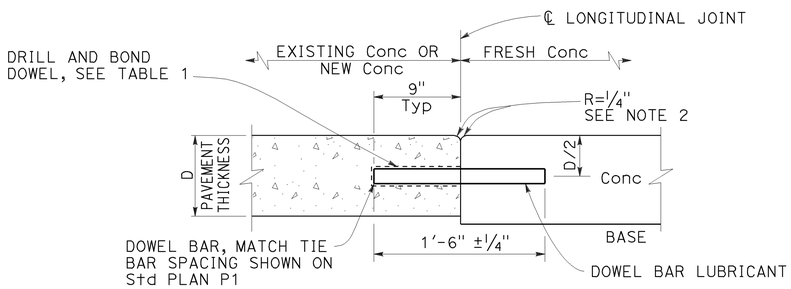

LONGITUDINAL CONSTRUCTION JOINT WITH DOWEL BARS

See Revised Std Plan RSP P18

STATE OF CALIFORNIA
DEPARTMENT OF TRANSPORTATION

CONCRETE PAVEMENT DOWEL BAR DETAILS

NO SCALE

RSP P10 DATED JULY 19, 2013 SUPERSEDES RSP P10 DATED APRIL 20, 2012 AND STANDARD PLAN P10 DATED MAY 20, 2011 - PAGE 131 OF THE STANDARD PLANS BOOK DATED 2010.

REVISED STANDARD PLAN RSP P10

2010 REVISED STANDARD PLAN RSP P10

5-31-13

Dist	COUNTY	ROUTE	POST MILES TOTAL PROJECT	SHEET No.	TOTAL SHEETS
07	LA	10	41.7/48.3	100	131

William K. Farnbach
REGISTERED CIVIL ENGINEER

July 19, 2013
PLANS APPROVAL DATE

REGISTERED PROFESSIONAL ENGINEER
William K. Farnbach
No. C49042
Exp. 9-30-14
CIVIL
STATE OF CALIFORNIA

THE STATE OF CALIFORNIA OR ITS OFFICERS OR AGENTS SHALL NOT BE RESPONSIBLE FOR THE ACCURACY OR COMPLETENESS OF SCANNED COPIES OF THIS PLAN SHEET.

TO ACCOMPANY PLANS DATED 2-10-14

2010 REVISED STANDARD PLAN RSP P20

NOTES:

1. Details do not apply to isolation joints and longitudinal construction joints.
2. Tie bars, dowel bars, and bar reinforcement are not shown.
3. Depths are measured from the final concrete pavement surface elevation after any grinding.

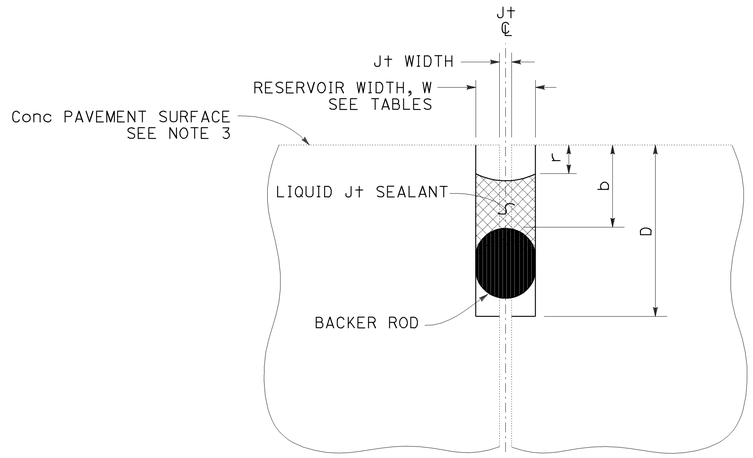

LIQUID JOINT SEALANT

RESERVOIR WIDTH W ±1/16"	LIQUID JOINT SEALANT DIMENSIONS					
	BACKER ROD NOMINAL Dia *	DEPTHS (ASPHALT RUBBER) **		DEPTHS (SILICONE)		
		RESERVOIR D ± 1/4"	BACKER ROD b ± 1/16"	RESERVOIR D ± 1/4"	BACKER ROD b ± 1/16"	RECESS r ± 1/16"
1/4"	3/8"	1 3/4"	7/8"	1 3/8"	1/2"	1/4"
3/8"	1/2"	1 7/8"	7/8"	1 1/2"	1/2"	1/4"
1/2"	3/4"	2"	7/8"	1 3/4"	9/16"	5/16"
5/8"	7/8"	2 1/4"	1"	2"	5/8"	5/16"
3/4"	1"	2 3/4"	1 1/8"	2 1/4"	3/4"	3/8"
7/8"	1 1/4"	3"	1 1/4"	2 1/2"	13/16"	3/8"
1"	1 1/2"	3 1/4"	1 3/8"	2 5/8"	7/8"	3/8"
1 1/8"	1 1/2"	3 1/2"	1 1/2"	2 13/16"	1"	1/2"

* Larger diameter backer rods may be substituted according to manufacturer recommendations if reservoir depth is increased equivalently.

** Asphalt rubber sealant recess depth "r" varies from 1/4" to 3/8"

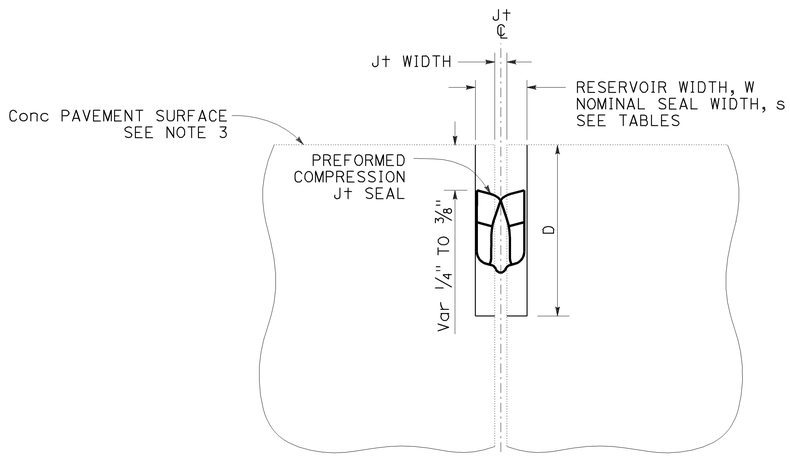

PREFORMED COMPRESSION JOINT SEAL

RESERVOIR WIDTH W ±1/16"	PREFORMED COMPRESSION JOINT SEAL DIMENSIONS	
	NOMINAL SEAL WIDTH s	RESERVOIR DEPTH D ± 1/4"
1/4"	7/16"	1 1/4"
3/8"	11/16"	1 7/16"
1/2"	13/16"	1 11/16"
5/8"	1"	1 7/8"
3/4"	1 1/4"	2 1/8"
7/8"	1 5/8"	2 5/8"
1"	1 5/8"	2 5/8"
1 1/8"	2"	2 7/8"

Const SEASON	Min RESERVOIR WIDTH * W ± 1/16"
WINTER	1/4"
SPRING	3/8"
SUMMER	
FALL	

* Minimum reservoir width for replace joint seal = existing joint width + 1/8"

STATE OF CALIFORNIA
DEPARTMENT OF TRANSPORTATION

JOINT SEALS

NO SCALE

RSP P20 DATED JULY 19, 2013 SUPERSEDES STANDARD PLAN P20
DATED MAY 20, 2011 - PAGE 136 OF THE STANDARD PLANS BOOK DATED 2010.

REVISED STANDARD PLAN RSP P20

6-17-13