Dist	COUNTY	ROUTE	POST MILES TOTAL PROJECT	SHEET No.	TOTAL SHEETS
07	LA	210	R6.8/R7.1	1	30

HSNHPIG-210-1(818)E

STATE OF CALIFORNIA
DEPARTMENT OF TRANSPORTATION

PROJECT PLANS FOR CONSTRUCTION ON
STATE HIGHWAY

IN LOS ANGELES COUNTY AT LAKE VIEW TERRACE FROM 0.2 MILE EAST OF VAN NUYS BOULEVARD UNDERCROSSING TO 0.1 MILE WEST OF TERRA BELLA STREET UNDERCROSSING

TO BE SUPPLEMENTED BY STANDARD PLANS DATED 2010

INDEX OF PLANS

SHEET No.	DESCRIPTION
1	TITLE AND LOCATION MAP
2-3	LAYOUTS
4-5	PROFILE
6-7	CONSTRUCTION DETAILS
8-9	UTILITY PLANS
10	CONSTRUCTION AREA SIGNS
11-13	TRAFFIC HANDLING PLANS AND DETAILS
14	TRAFFIC HANDLING QUANTITIES
15	SUMMARY OF QUANTITIES
16-18	EROSION CONTROL PLANS
19-24	ELECTRICAL PLANS
25-27	LOG OF TEST BORINGS
28-30	REVISED STANDARD PLANS

THE STANDARD PLANS LIST APPLICABLE TO THIS CONTRACT IS INCLUDED IN THE NOTICE TO BIDDERS AND SPECIAL PROVISIONS BOOK.

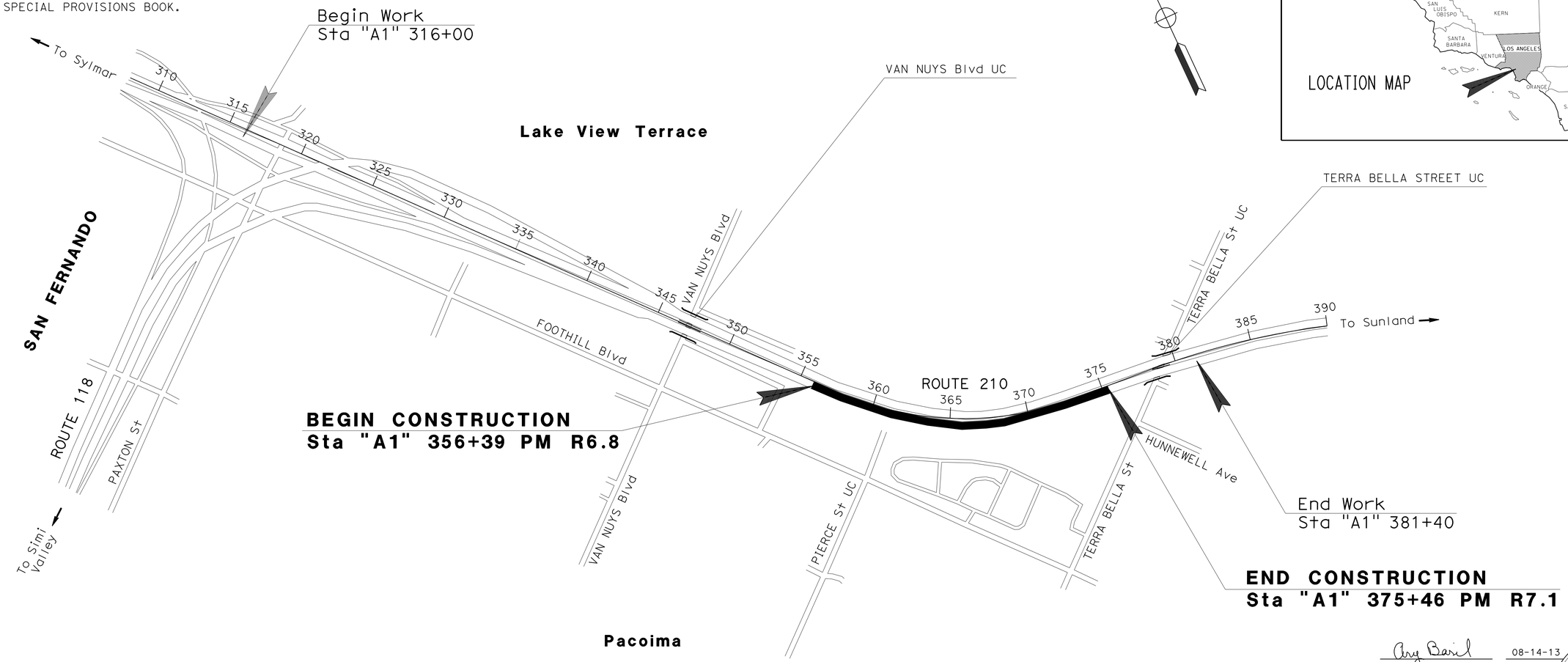

PROJECT MANAGER: ADEL N GIRGIS

DESIGN ENGINEER: AREG BASIL

Areg Basil 08-14-13
PROJECT ENGINEER REGISTERED CIVIL ENGINEER — DATE

REGISTERED PROFESSIONAL ENGINEER — AREG BASIL No. C53079 Exp. 06-30-15 CIVIL — STATE OF CALIFORNIA

AUGUST 19, 2013
PLANS APPROVAL DATE

THE STATE OF CALIFORNIA OR ITS OFFICERS OR AGENTS SHALL NOT BE RESPONSIBLE FOR THE ACCURACY OR COMPLETENESS OF SCANNED COPIES OF THIS PLAN SHEET.

THE CONTRACTOR SHALL POSSESS THE CLASS (OR CLASSES) OF LICENSE AS SPECIFIED IN THE "NOTICE TO BIDDERS."

NO SCALE

CONTRACT No.	07-290904
PROJECT ID	0712000067

LAST REVISION 00-00-00 — DATE PLOTTED => 30-AUG-2013 TIME PLOTTED => 10:14

Dist	COUNTY	ROUTE	POST MILES TOTAL PROJECT	SHEET No.	TOTAL SHEETS
07	LA	210	R6.8/R7.1	2	30

REGISTERED CIVIL ENGINEER 8/14/13 DATE

8-19-13
PLANS APPROVAL DATE

REGISTERED PROFESSIONAL ENGINEER AREG BASIL No. C53079 Exp. 6/30/15 CIVIL STATE OF CALIFORNIA

THE STATE OF CALIFORNIA OR ITS OFFICERS OR AGENTS SHALL NOT BE RESPONSIBLE FOR THE ACCURACY OR COMPLETENESS OF SCANNED COPIES OF THIS PLAN SHEET.

NOTES:

1. FOR ACCURATE RIGHT OF WAY DATA, CONTACT RIGHT OF WAY ENGINEERING AT THE DISTRICT OFFICE.
2. DIMENSIONS OF THE PAVEMENT STRUCTURES (STRUCTURAL SECTIONS) ARE SUBJECTE TO TOLERANCES SPECIFIED IN THE STANDARD SPECIFICATION.

CURVE DATA

No.	R	Δ	T	L
①	2000′	44°38′56"	821.26′	1558.55′
②	2073′	43°48′42"	833.59′	1585.14′

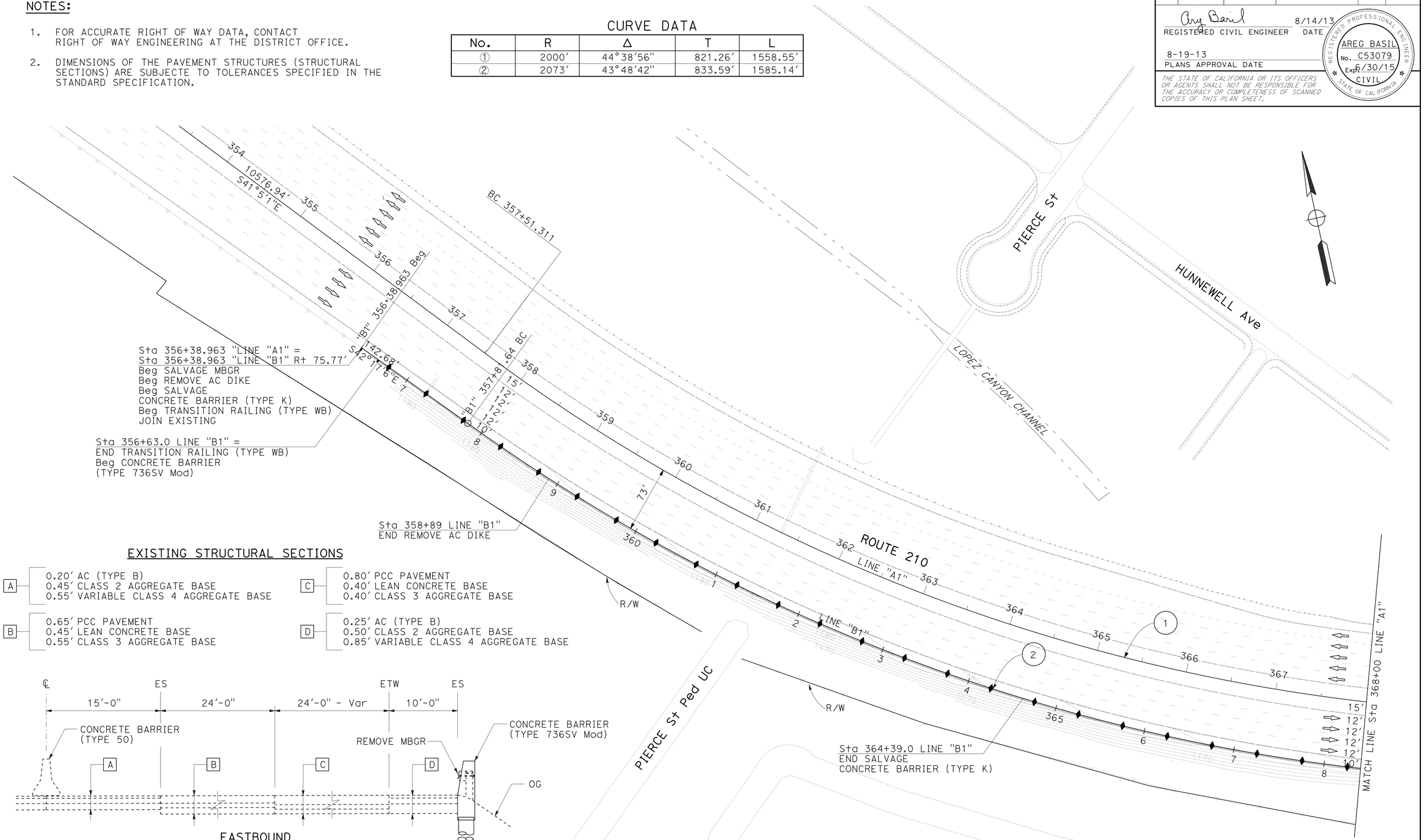

EXISTING STRUCTURAL SECTIONS

A
- 0.20′ AC (TYPE B)
- 0.45′ CLASS 2 AGGREGATE BASE
- 0.55′ VARIABLE CLASS 4 AGGREGATE BASE

B
- 0.65′ PCC PAVEMENT
- 0.45′ LEAN CONCRETE BASE
- 0.55′ CLASS 3 AGGREGATE BASE

C
- 0.80′ PCC PAVEMENT
- 0.40′ LEAN CONCRETE BASE
- 0.40′ CLASS 3 AGGREGATE BASE

D
- 0.25′ AC (TYPE B)
- 0.50′ CLASS 2 AGGREGATE BASE
- 0.85′ VARIABLE CLASS 4 AGGREGATE BASE

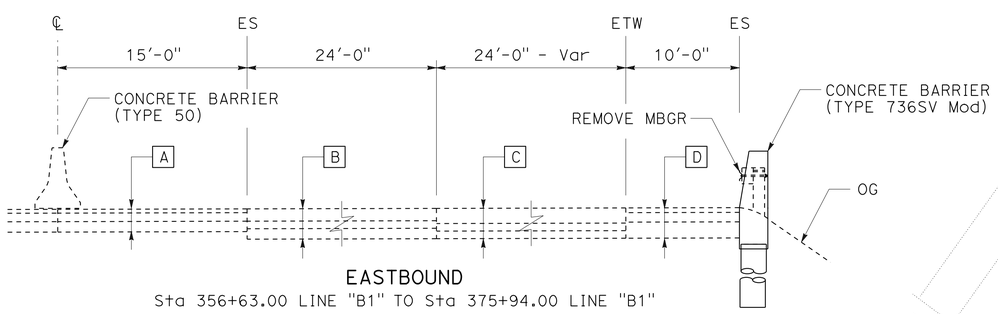

EASTBOUND
Sta 356+63.00 LINE "B1" TO Sta 375+94.00 LINE "B1"

TYPICAL CROSS SECTION
NO SCALE

LAYOUT
SCALE 1" = 50′

L-1

STATE OF CALIFORNIA - DEPARTMENT OF TRANSPORTATION
Caltrans® TRAFFIC DESIGN

FUNCTIONAL SUPERVISOR: GRISH BIGLARIAN
CALCULATED-DESIGNED BY: AREG BASIL
CHECKED BY: EUGENE BRAVO
REVISED BY / DATE REVISED

LAST REVISION 00-00-00
DATE PLOTTED => 30-AUG-2013
TIME PLOTTED => 10:14

Dist	COUNTY	ROUTE	POST MILES TOTAL PROJECT	SHEET No.	TOTAL SHEETS
07	LA	210	R6.8/R7.1	3	30

REGISTERED CIVIL ENGINEER 8/14/13 DATE

8-19-13
PLANS APPROVAL DATE

REGISTERED PROFESSIONAL ENGINEER AREG BASIL No. C53079 Exp. 6/30/15 CIVIL STATE OF CALIFORNIA

THE STATE OF CALIFORNIA OR ITS OFFICERS OR AGENTS SHALL NOT BE RESPONSIBLE FOR THE ACCURACY OR COMPLETENESS OF SCANNED COPIES OF THIS PLAN SHEET.

NOTE:

FOR ACCURATE RIGHT OF WAY DATA, CONTACT RIGHT OF WAY ENGINEERING AT THE DISTRICT OFFICE.

CURVE DATA

No.	R	Δ	T	L
1	2000′	44°38′56"	821.26′	1558.55′
2	2073′	43°48′42"	833.59′	1585.14′

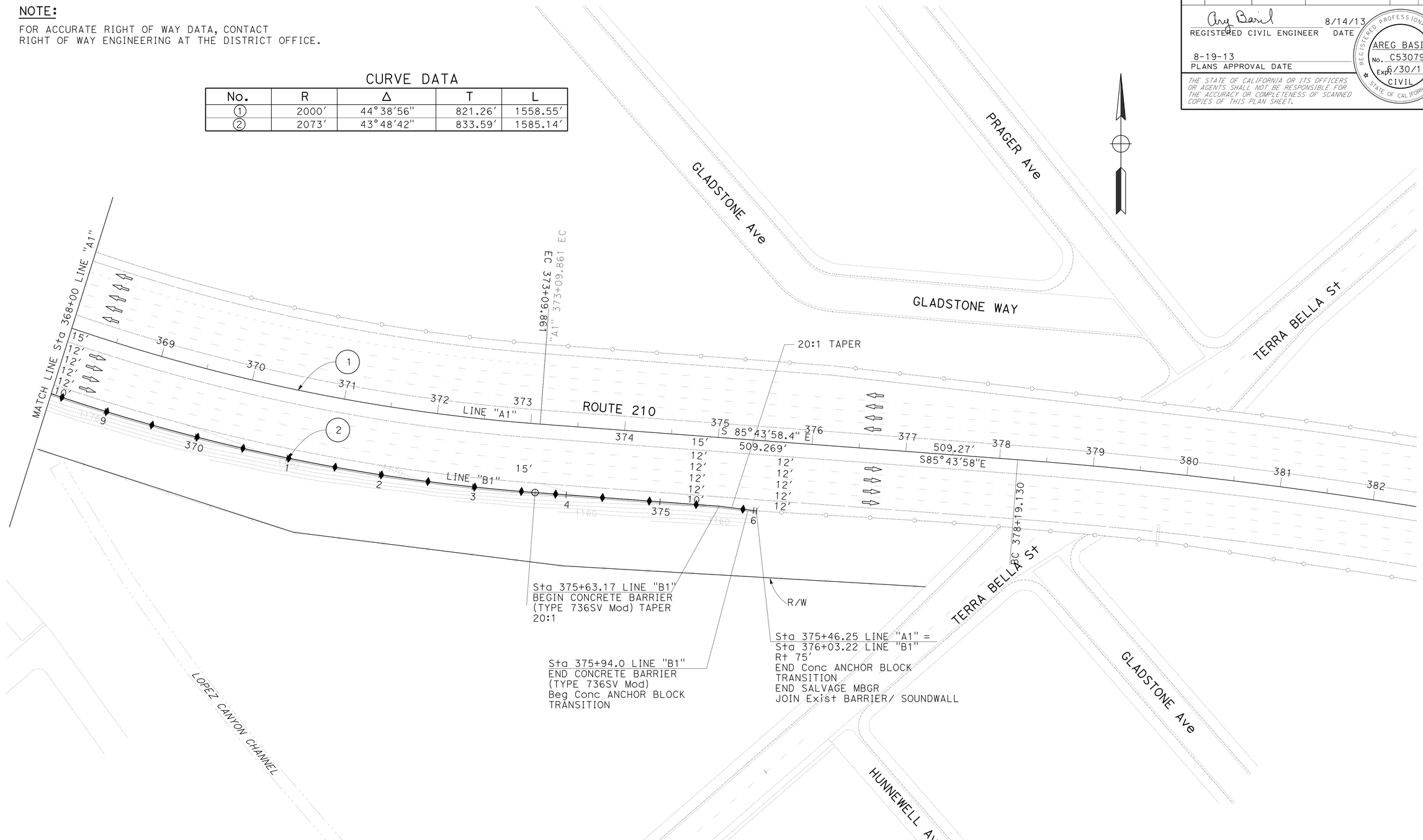

LAYOUT

SCALE 1" = 50′

L-2

STATE OF CALIFORNIA - DEPARTMENT OF TRANSPORTATION

Caltrans® **TRAFFIC DESIGN**

FUNCTIONAL SUPERVISOR: GRISH BIGLARIAN

CALCULATED-DESIGNED BY: AREG BASIL

CHECKED BY: EUGENE BRAVO

REVISED BY

DATE REVISED

LAST REVISION 00-00-00

DATE PLOTTED => 30-AUG-2013

TIME PLOTTED => 10:14

Dist	COUNTY	ROUTE	POST MILES TOTAL PROJECT	SHEET No.	TOTAL SHEETS
07	LA	210	R6.8/R7.1	4	30

REGISTERED CIVIL ENGINEER — DATE 8/14/13

8-19-13
PLANS APPROVAL DATE

REGISTERED PROFESSIONAL ENGINEER — AREG BASIL No. C53079 Exp. 6/30/15 CIVIL — STATE OF CALIFORNIA

THE STATE OF CALIFORNIA OR ITS OFFICERS OR AGENTS SHALL NOT BE RESPONSIBLE FOR THE ACCURACY OR COMPLETENESS OF SCANNED COPIES OF THIS PLAN SHEET.

BENCH MARKS:
HORIZONTAL DATUM - CCS 83
VERTICAL DATUM - NAVD 88
ZONE 5

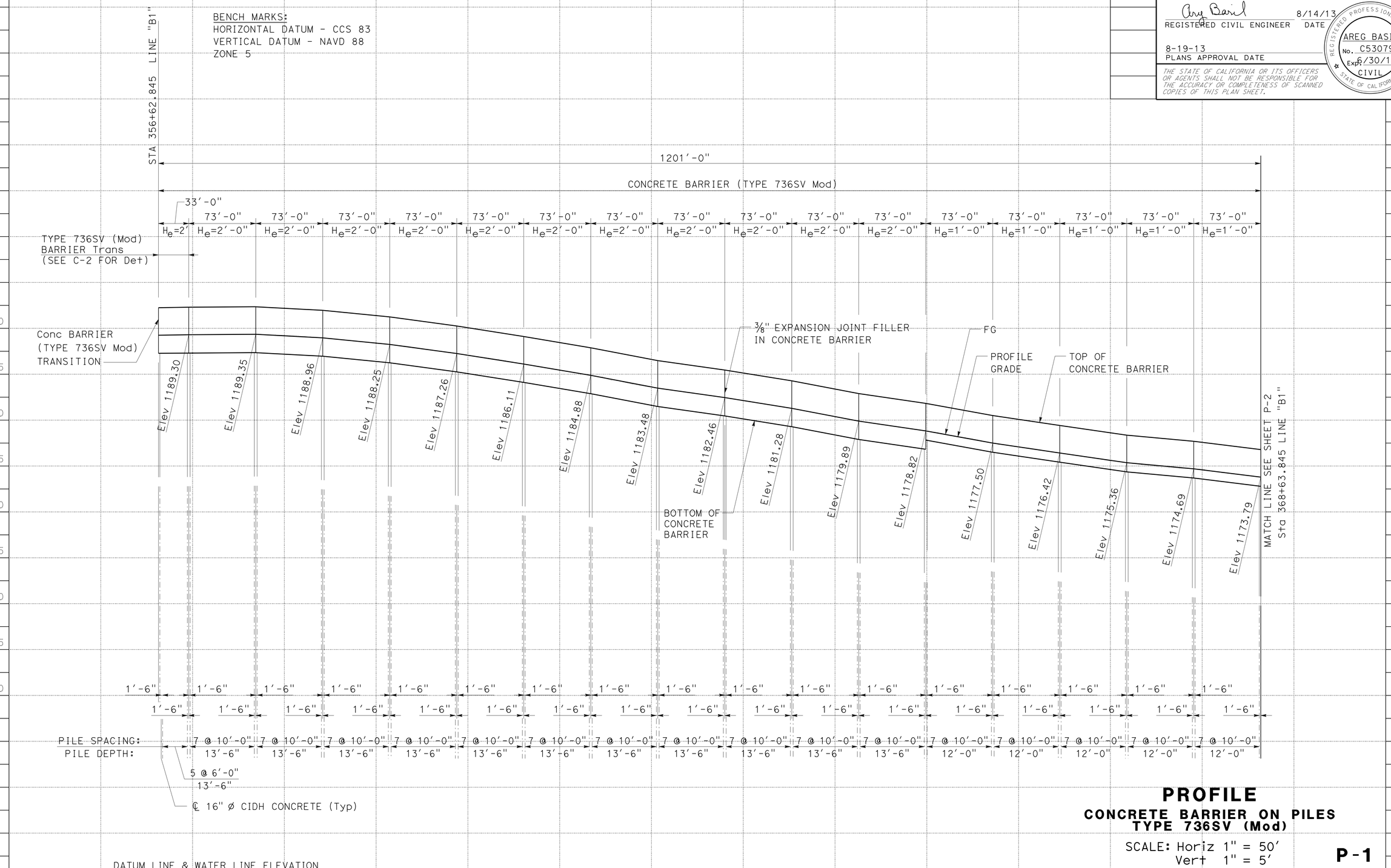

PROFILE

CONCRETE BARRIER ON PILES TYPE 736SV (Mod)

SCALE: Horiz 1" = 50'
Vert 1" = 5'

P-1

STATION	356+00	357+00	358+00	359+00	360+00	361+00	362+00	363+00	364+00	365+00	366+00	367+00	368+00	TOTAL
Exc														
Emb														

STATE OF CALIFORNIA - DEPARTMENT OF TRANSPORTATION
Caltrans® TRAFFIC DESIGN

FUNCTIONAL SUPERVISOR: GRISH BIGLARIAN
CALCULATED-DESIGNED BY: AREG BASIL
CHECKED BY: EUGENE BRAVO
REVISED BY
DATE REVISED

LAST REVISION 00-00-00
DATE PLOTTED => 30-AUG-2013
TIME PLOTTED => 10:14

Dist	COUNTY	ROUTE	POST MILES TOTAL PROJECT	SHEET No.	TOTAL SHEETS
07	LA	210	R6.8/R7.1	5	30

REGISTERED CIVIL ENGINEER — DATE 8/14/13

8-19-13
PLANS APPROVAL DATE

REGISTERED PROFESSIONAL ENGINEER — AREG BASIL No. C53079 Exp. 6/30/15 CIVIL — STATE OF CALIFORNIA

THE STATE OF CALIFORNIA OR ITS OFFICERS OR AGENTS SHALL NOT BE RESPONSIBLE FOR THE ACCURACY OR COMPLETENESS OF SCANNED COPIES OF THIS PLAN SHEET.

BENCH MARKS:
HORIZONTAL DATUM - CCS 83
VERTICAL DATUM - NAVD 88
ZONE 5

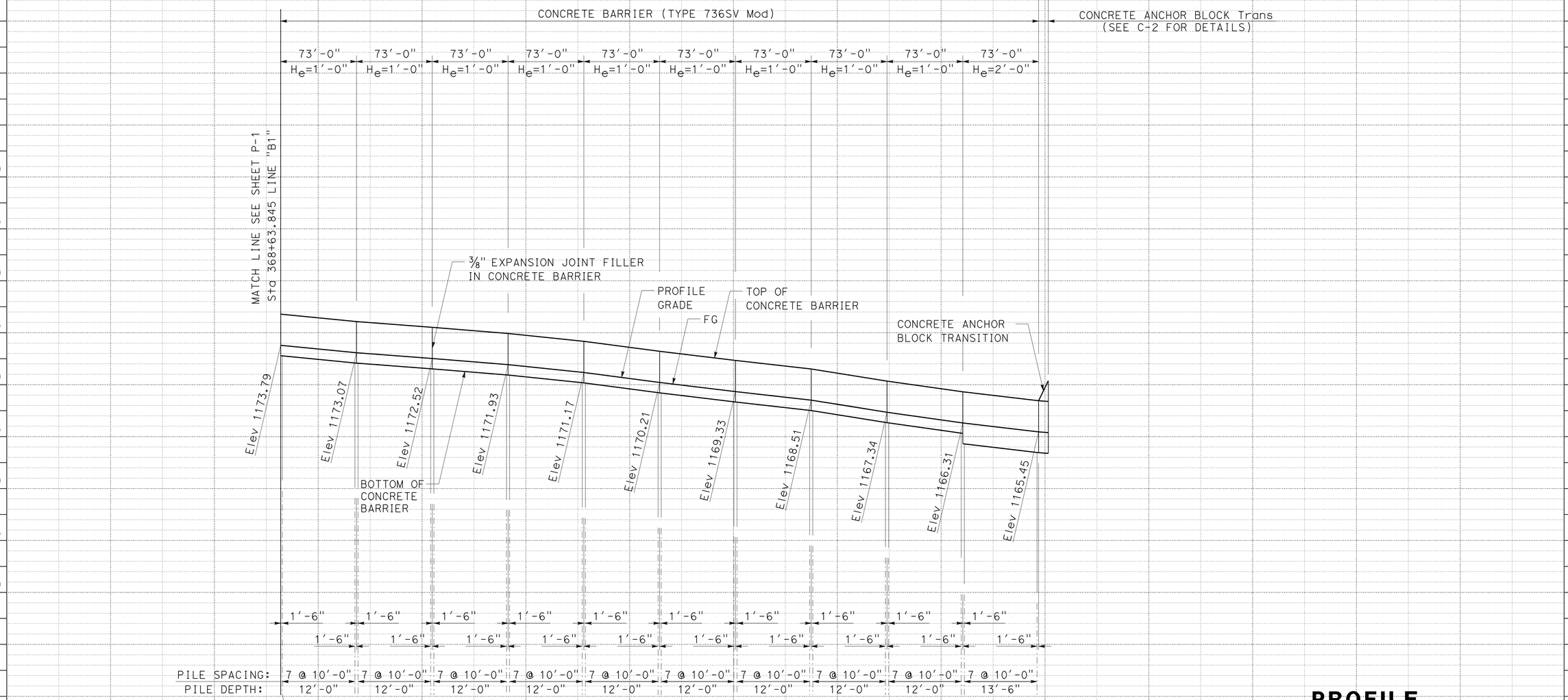

PROFILE

CONCRETE BARRIER ON PILES TYPE 736SV (Mod)

SCALE: Horiz 1" = 50'
Vert 1" = 5'

P-2

STATE OF CALIFORNIA - DEPARTMENT OF TRANSPORTATION
Caltrans® TRAFFIC DESIGN

FUNCTIONAL SUPERVISOR: GRISH BIGLARIAN
CALCULATED-DESIGNED BY: AREG BASIL
CHECKED BY: EUGENE BRAVO
REVISED BY / DATE REVISED

LAST REVISION 00-00-00 — DATE PLOTTED => 30-AUG-2013 — TIME PLOTTED => 10:14

Dist	COUNTY	ROUTE	POST MILES TOTAL PROJECT	SHEET No.	TOTAL SHEETS
07	LA	210	R6.8/R7.1	6	30

REGISTERED CIVIL ENGINEER — DATE 8/14/13

PLANS APPROVAL DATE

REGISTERED PROFESSIONAL ENGINEER — AREG BASIL No. C53079 Exp. 6/30/15 CIVIL — STATE OF CALIFORNIA

THE STATE OF CALIFORNIA OR ITS OFFICERS OR AGENTS SHALL NOT BE RESPONSIBLE FOR THE ACCURACY OR COMPLETENESS OF SCANNED COPIES OF THIS PLAN SHEET.

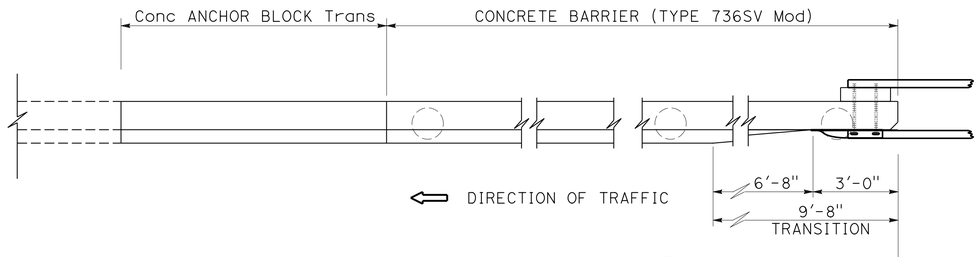

PLAN

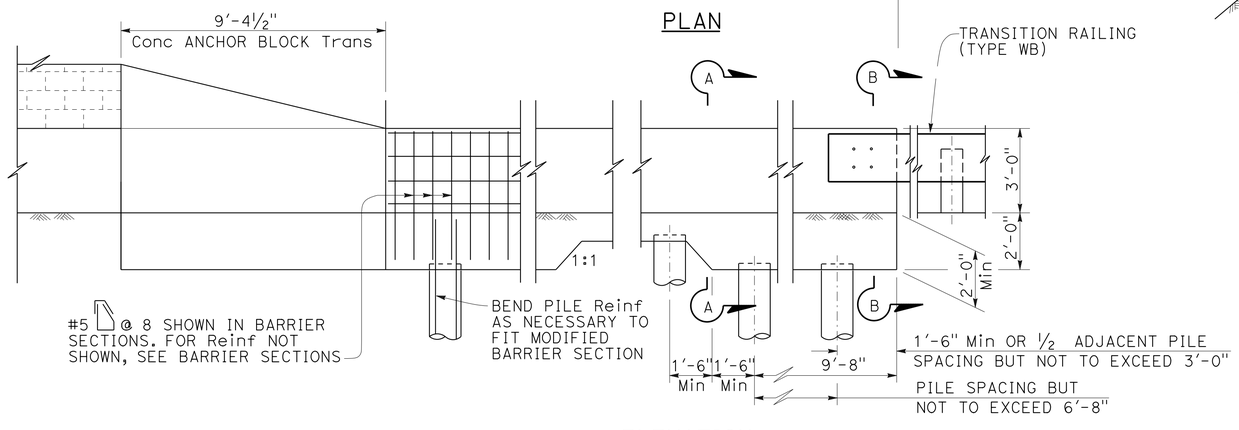

ELEVATION

METAL BEAM GUARDRAIL ANCHORAGE

FOR DETAILS NOT SHOWN, SEE STANDARD PLAN B11-56.

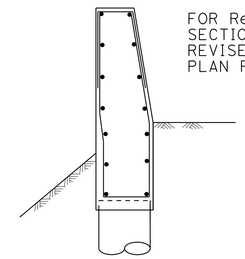

SECTION A-A

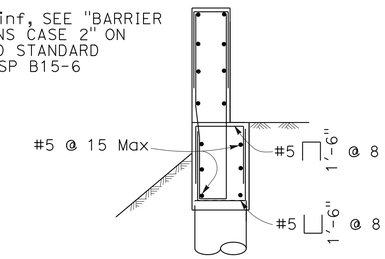

SECTION B-B

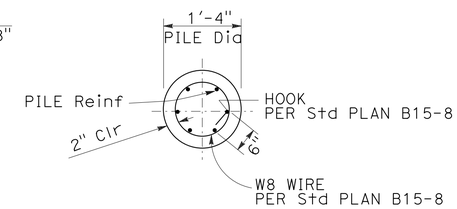

SECTION C-C

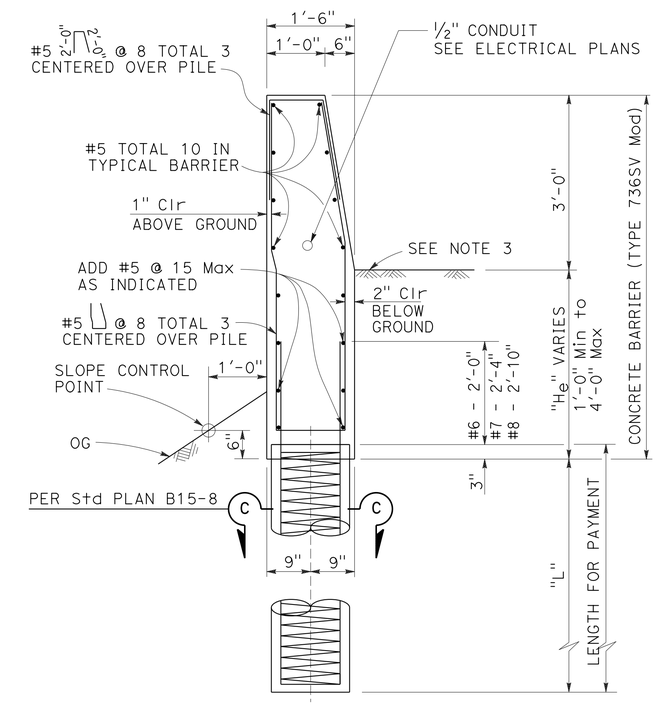

CONCRETE BARRIER (TYPE 736SV Mod) SECTION

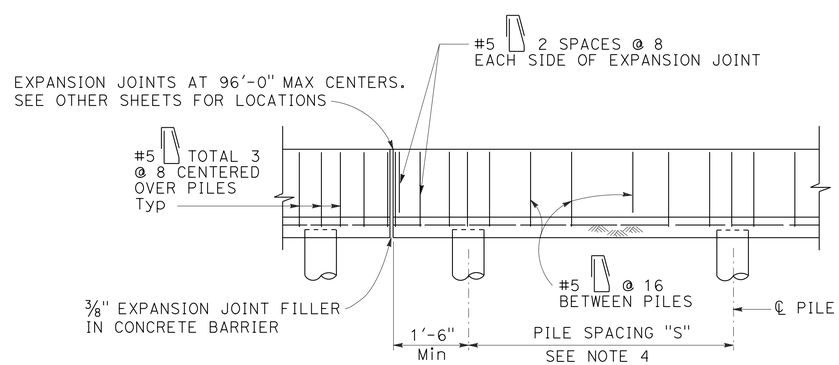

PARTIAL ELEVATIONS

NOTES:

1. DETAILS SHOWN ARE PRIMARILY TO CONFORM DESIGN OF SOUND WALLS TO TYPE 736S AND TYPE 736SV CONCRETE BARRIERS. FOR SOUND WALL DETAILS CONFORMING WITH BARRIERS SEE REVISED STANDARD PLAN RSP B15-6, AND STANDARD PLANS B15-7 AND B15-8.
2. FOR DETAILS AND SECTIONS NOT SHOWN, SEE REVISED STANDARD PLAN RSP B15-6 AND STANDARD PLANS B15-7 AND B15-8 .
3. SLOPE GROUND AT TRAFFIC SIDE OF BARRIER TO DRAIN. MAXIMUM SLOPE ±10%. SEE Std PLAN B11-56, NOTE 3.
4. PILE SPACING MAY BE VARIED, BUT MUST NOT EXCEED THE TABULAR VALUES. SEE STANDARD PLAN B15-8.
5. FOR CASE 1 - GROUND LINE TO BE AT THE SAME ELEVATION ON BOTH SIDES OF THE BARRIER. BARRIER MUST NOT BE USED TO RETAIN EARTH.
6. FOR CONCRETE ANCHOR BLOCK AND CONNECTION DETAILS, SEE "CONNECTION DETAIL DD" ON STANDARD PLAN A77J3.
7. FOR CONCRETE BARRIER (TYPE 736SV MOD) AND PILE DETAILS, SEE STANDARD PLANS B11-56, B15-7 AND B15-8 AND REVISED STANDARD PLAN RSP B15-6.

CONSTRUCTION DETAIL

NO SCALE

C-1

STATE OF CALIFORNIA - DEPARTMENT OF TRANSPORTATION
Caltrans® TRAFFIC DESIGN

FUNCTIONAL SUPERVISOR: GRISH BIGLARIAN
CALCULATED-DESIGNED BY: EUGENE BRAVO
CHECKED BY: AREG BASIL
REVISED BY
DATE REVISED

LAST REVISION 00-00-00 | DATE PLOTTED => 01-OCT-2013 | TIME PLOTTED => 10:52

Dist	COUNTY	ROUTE	POST MILES TOTAL PROJECT	SHEET No.	TOTAL SHEETS
07	LA	210	R6.8/R7.1	7	30

REGISTERED CIVIL ENGINEER 8/14/13 DATE

8-19-13
PLANS APPROVAL DATE

REGISTERED PROFESSIONAL ENGINEER AREG BASIL No. C53079 Exp. 6/30/15 CIVIL STATE OF CALIFORNIA

THE STATE OF CALIFORNIA OR ITS OFFICERS OR AGENTS SHALL NOT BE RESPONSIBLE FOR THE ACCURACY OR COMPLETENESS OF SCANNED COPIES OF THIS PLAN SHEET.

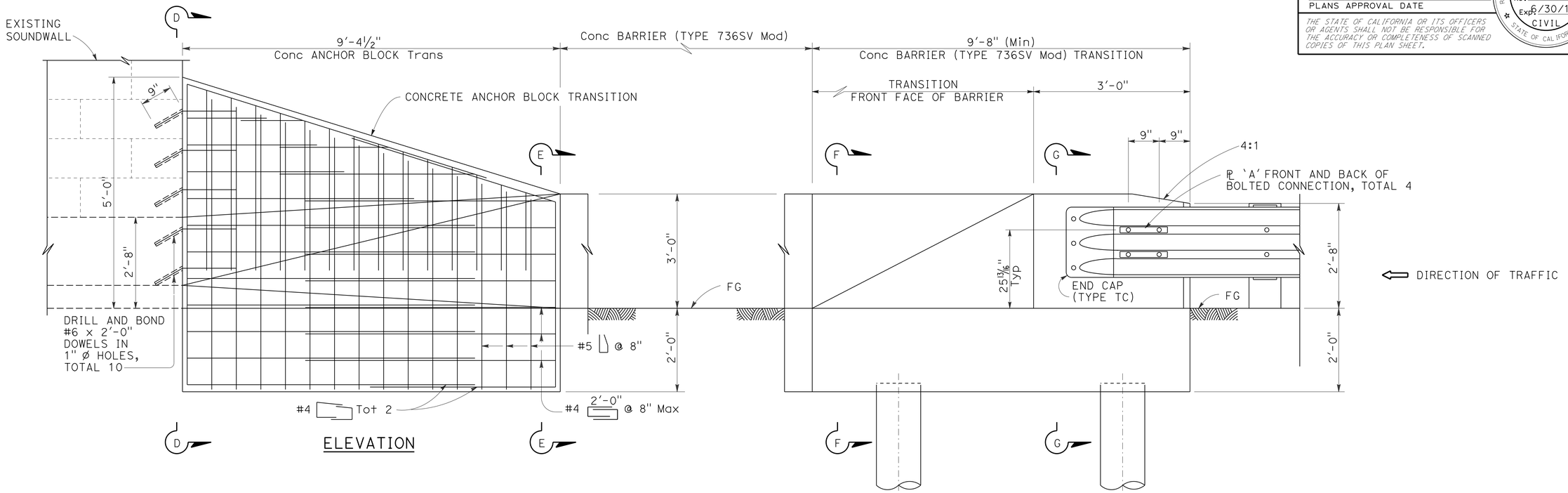

ELEVATION

ANCHOR BLOCKS FOR TRANSITION CONNECTION

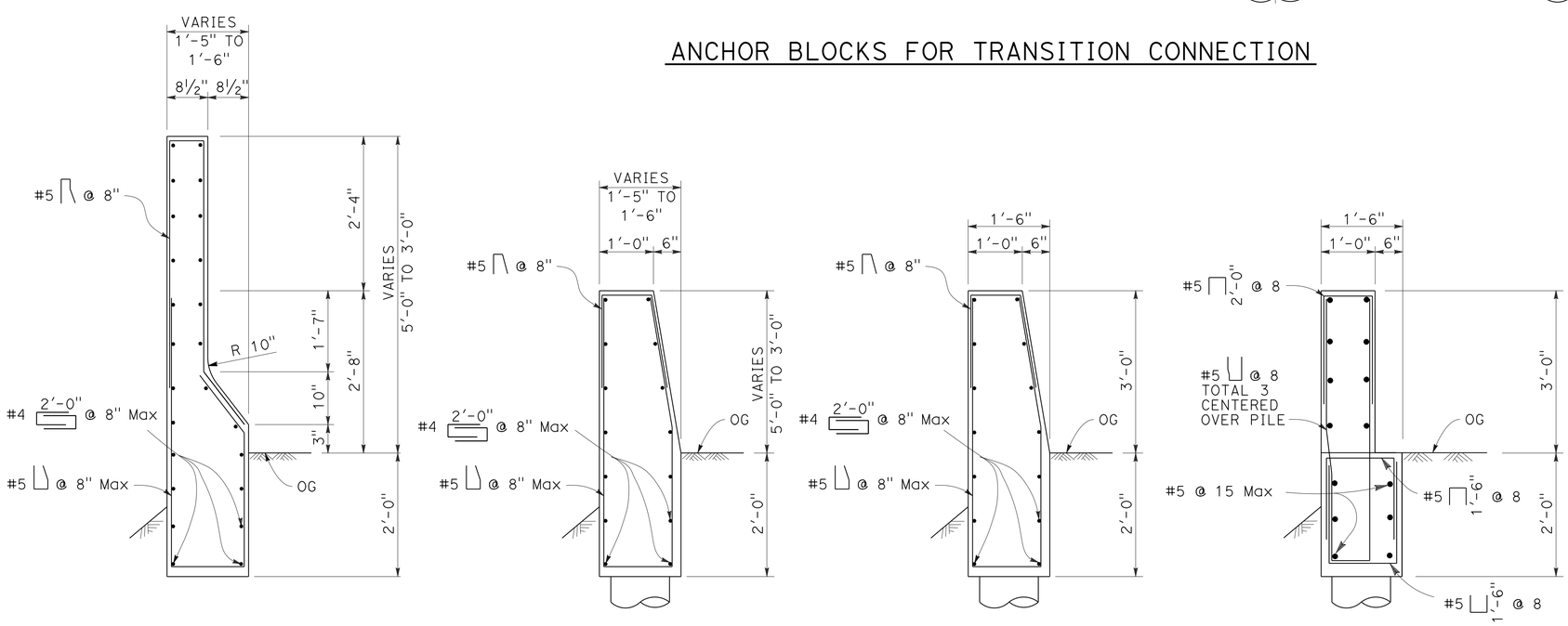

SECTION D-D SECTION E-E SECTION F-F SECTION G-G

NOTES:

1. THESE CONNECTION DETAILS APPLY TO ABUTMENTS AND WALLS.
2. ADDITIONAL DETAILS OF POSTS, BLOCKS AND HARDWARE ARE SHOWN ON STANDARD PLANS A77B1, A77C1 AND A77C2.
3. DIRECTION OF ADJACENT TRAFFIC INDICATED BY ⇦ .
4. FOR ADDITIONAL DETAILS OF TRANSITION RAILING (TYPE WB), SEE STANDARD PLAN A77J4 TRANSITION RAILING (TYPE WB) TRANSITIONS THE 12 GAUGE W-BEAM STANDARD RAILING SECTION OF GUARD RAILING TO A HEAVIER GAGE NESTED THRIE BEAM RAILING SECTION WHICH IS CONNECTED TO THE CONCRETE ANCHOR BLOCK.
5. FOR TYPICAL USE OF CONNECTION DETAILS DD, SEE LAYOUT TYPES 12A AND 12B ON STANDARD PLAN A77F1 AND LAYOUT TYPES 12C AND 12D ON STANDARD PLAN A77F2.
6. FOR TYPICAL USE OF CONNECTION DETAIL EE, SEE LAYOUT TYPE 12D ON STANDARD PLAN A77F2 AND LAYOUT TYPE 12DD ON STANDARD PLAN A77F5.

CONCRETE BARRIER (TYPE 736SV Mod) ANCHOR BLOCK TRANSITION

CONSTRUCTION DETAIL

NO SCALE

C-2

STATE OF CALIFORNIA - DEPARTMENT OF TRANSPORTATION
Caltrans® TRAFFIC DESIGN

FUNCTIONAL SUPERVISOR: GRISH BIGLARIAN
CALCULATED-DESIGNED BY: AREG BASIL
CHECKED BY: EUGENE BRAVO
REVISED BY / DATE REVISED

LAST REVISION 00-00-00 | DATE PLOTTED => 30-AUG-2013 | TIME PLOTTED => 10:14

Dist	COUNTY	ROUTE	POST MILES TOTAL PROJECT	SHEET No.	TOTAL SHEETS
07	LA	210	R6.8/R7.1	8	30

REGISTERED CIVIL ENGINEER 8/14/13 DATE

8-19-13
PLANS APPROVAL DATE

REGISTERED PROFESSIONAL ENGINEER PARVIZ YEGANEH No. C53797 Exp. 6/30/15 CIVIL STATE OF CALIFORNIA

THE STATE OF CALIFORNIA OR ITS OFFICERS OR AGENTS SHALL NOT BE RESPONSIBLE FOR THE ACCURACY OR COMPLETENESS OF SCANNED COPIES OF THIS PLAN SHEET.

NOTES:

1. FOR ACCURATE RIGHT OF WAY DATA, CONTACT RIGHT OF WAY ENGINEERING AT DISTRICT OFFICE.

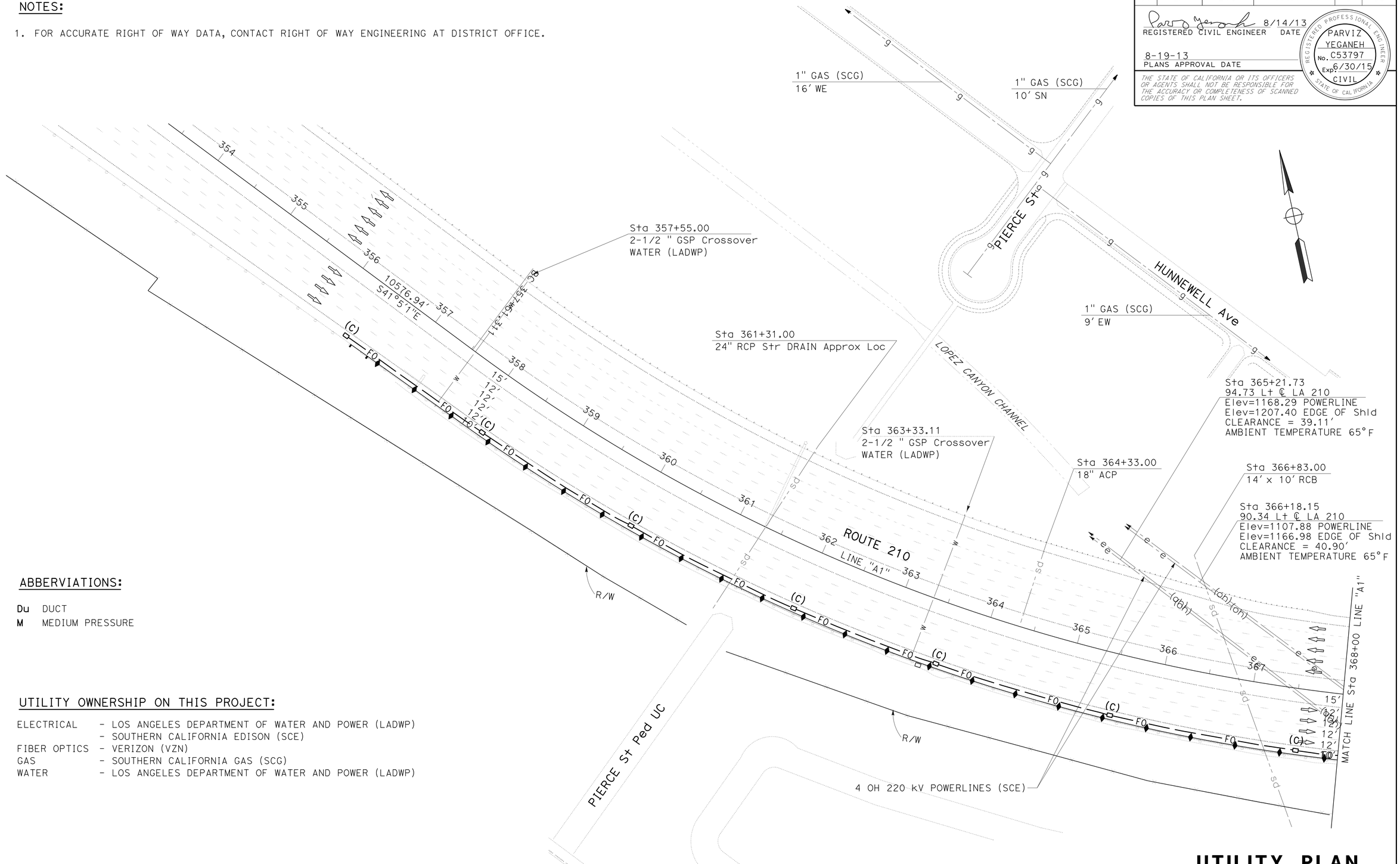

ABBERVIATIONS:

Du DUCT
M MEDIUM PRESSURE

UTILITY OWNERSHIP ON THIS PROJECT:

ELECTRICAL	- LOS ANGELES DEPARTMENT OF WATER AND POWER (LADWP)
	- SOUTHERN CALIFORNIA EDISON (SCE)
FIBER OPTICS	- VERIZON (VZN)
GAS	- SOUTHERN CALIFORNIA GAS (SCG)
WATER	- LOS ANGELES DEPARTMENT OF WATER AND POWER (LADWP)

UTILITY PLAN

SCALE 1" = 50'

APPROVED FOR UTILITY INFORMATION ONLY

U-1

STATE OF CALIFORNIA - DEPARTMENT OF TRANSPORTATION
Caltrans
DESIGN A
FUNCTIONAL SUPERVISOR: CELINA AVILES
CALCULATED-DESIGNED BY: EUGENE BRAVO
CHECKED BY: PARVIZ YEGANEH
REVISED BY
DATE REVISED

LAST REVISION 00-00-00
DATE PLOTTED => 30-AUG-2013
TIME PLOTTED => 10:14

Dist	COUNTY	ROUTE	POST MILES TOTAL PROJECT	SHEET No.	TOTAL SHEETS
07	LA	210	R6.8/R7.1	9	30

REGISTERED CIVIL ENGINEER 8/14/13 DATE

8-19-13
PLANS APPROVAL DATE

PARVIZ YEGANEH No. C53797 Exp. 6/30/15 CIVIL — REGISTERED PROFESSIONAL ENGINEER — STATE OF CALIFORNIA

THE STATE OF CALIFORNIA OR ITS OFFICERS OR AGENTS SHALL NOT BE RESPONSIBLE FOR THE ACCURACY OR COMPLETENESS OF SCANNED COPIES OF THIS PLAN SHEET.

NOTES:

1. FOR ACCURATE RIGHT OF WAY DATA, CONTACT RIGHT OF WAY ENGINEERING AT DISTRICT OFFICE.

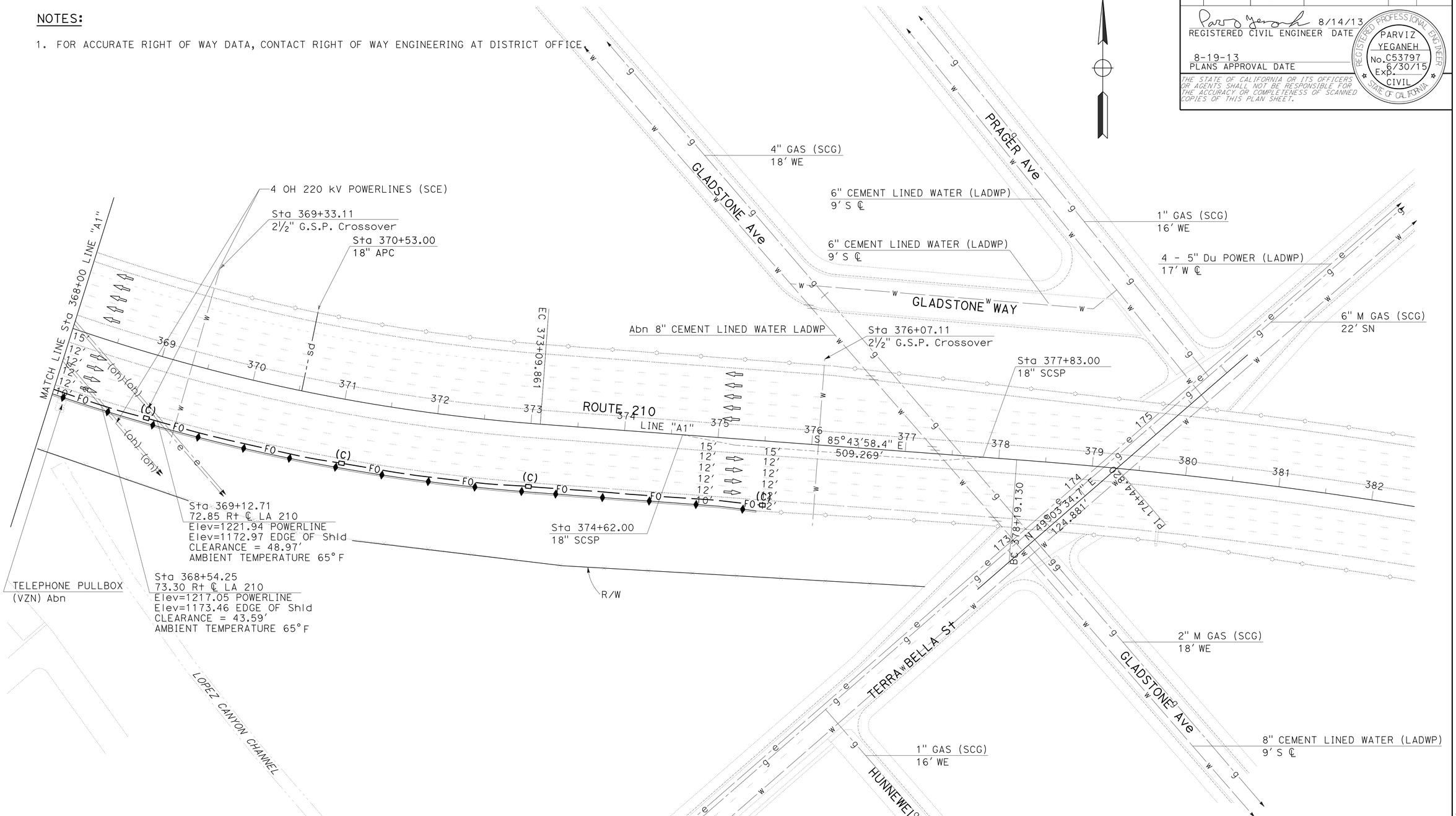

UTILITY PLAN

SCALE 1" = 50'

APPROVED FOR UTILITY INFORMATION ONLY

U-2

STATE OF CALIFORNIA - DEPARTMENT OF TRANSPORTATION
Caltrans
DESIGN A
FUNCTIONAL SUPERVISOR: CELINA AVILES
CALCULATED-DESIGNED BY: EUGENE BRAVO
CHECKED BY: PARVIZ YEGANEH
REVISED BY
DATE REVISED

LAST REVISION 00-00-00
DATE PLOTTED => 8-AUG-2013
TIME PLOTTED => 13:14

BORDER LAST REVISED 7/2/2010 | USERNAME => X15484 | DGN FILE => 729090ka02.dgn | RELATIVE BORDER SCALE IS IN INCHES 0 1 2 3 | UNIT 1877 | PROJECT NUMBER & PHASE 07120000671

Dist	COUNTY	ROUTE	POST MILES TOTAL PROJECT	SHEET No.	TOTAL SHEETS
07	LA	210	R6.8/R7.1	10	30

REGISTERED CIVIL ENGINEER 8/14/13 DATE

8-19-13
PLANS APPROVAL DATE

REGISTERED PROFESSIONAL ENGINEER AREG BASIL No. C53079 Exp. 6/30/15 CIVIL STATE OF CALIFORNIA

THE STATE OF CALIFORNIA OR ITS OFFICERS OR AGENTS SHALL NOT BE RESPONSIBLE FOR THE ACCURACY OR COMPLETENESS OF SCANNED COPIES OF THIS PLAN SHEET.

NOTES:

1. LOCATIONS OF CONSTRUCTION AREA SIGNS ARE APPROXIMATE. EXACT LOCATIONS WILL BE DETERMINED BY THE ENGINEER.
2. "TRAFFIC FINES DOUBLED IN CONSTRUCTION ZONES" SIGNS MUST BE PLACED APPROXIMATELY 500 FEET IN ADVANCE OF "ROAD WORK AHEAD" SIGNS OR AS DETERMINED BY THE ENGINEER.

STATIONARY MOUNTED CONSTRUCTION AREA SIGNS

SIGN NUMBER	SIGN CODE	PANEL SIZE	SIGN MESSAGE	NUMBER OF POSTS AND SIZE	No. OF SIGNS
A	W20-1	48" x 48"	ROAD WORK AHEAD	1 - 6" X 6"	2
B	G20-2	48" X 24"	END ROAD WORK	1 - 4" X 6"	1
C	C40(CA)	144" X 60"	TRAFFIC FINES DOUBLED IN CONSTRUCTION ZONES	2 - 6" X 8"	2

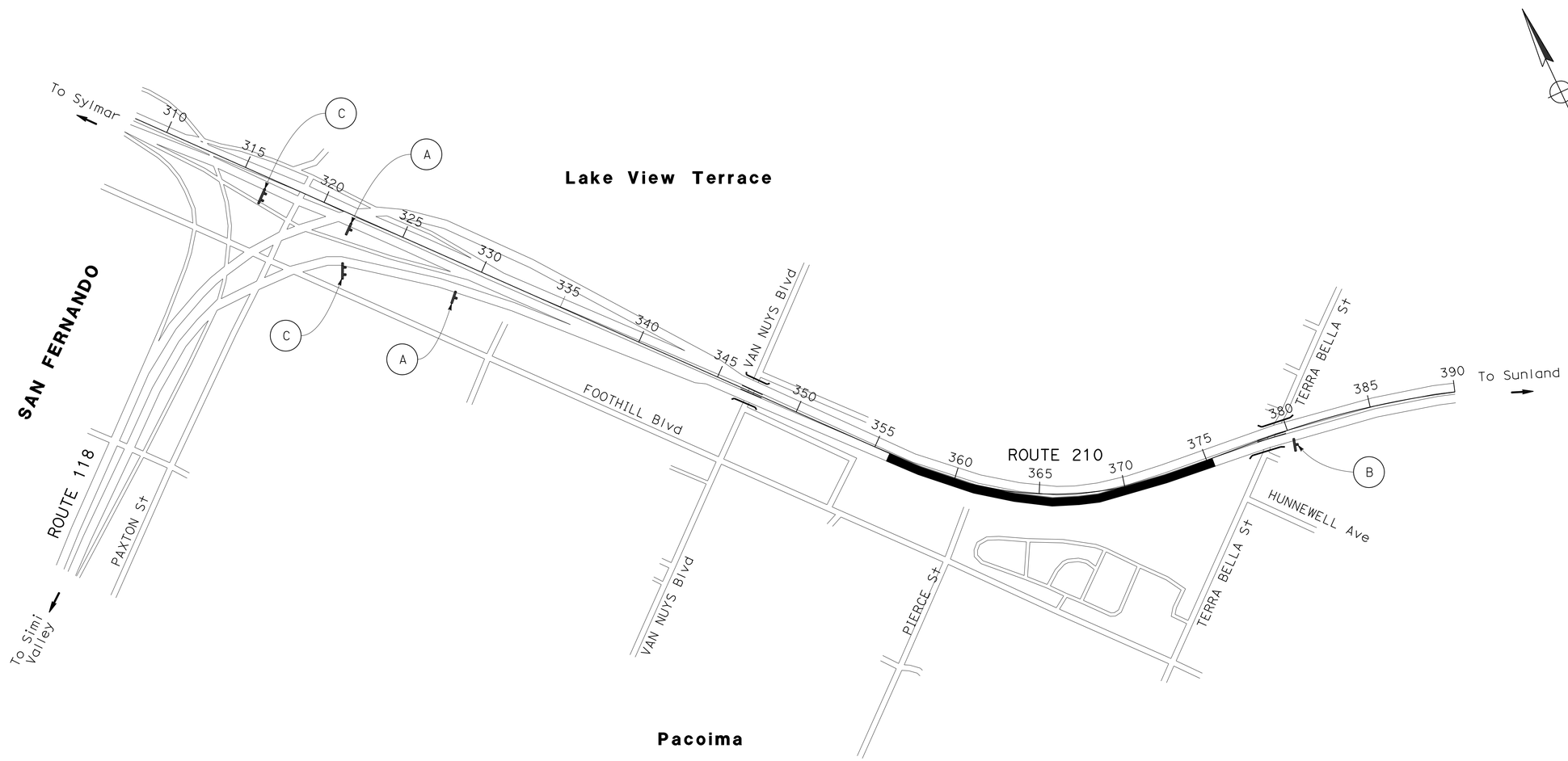

CONSTRUCTION AREA SIGNS

NO SCALE

APPROVED FOR CONSTRUCTION AREA SIGN WORK ONLY

CS-1

STATE OF CALIFORNIA - DEPARTMENT OF TRANSPORTATION
Caltrans® **TRAFFIC DESIGN**
FUNCTIONAL SUPERVISOR: GRISH BIGLARIAN
CALCULATED-DESIGNED BY: AREG BASIL
CHECKED BY: EUGENE BRAVO
REVISED BY
DATE REVISED

LAST REVISION 00-00-00
DATE PLOTTED => 30-AUG-2013
TIME PLOTTED => 10:14

Dist	COUNTY	ROUTE	POST MILES TOTAL PROJECT	SHEET No.	TOTAL SHEETS
07	LA	210	R6.8/R7.1	11	30

REGISTERED CIVIL ENGINEER — DATE 8/14/13

8-19-13
PLANS APPROVAL DATE

REGISTERED PROFESSIONAL ENGINEER — AREG BASIL No. C53079 Exp. 6/30/15 CIVIL — STATE OF CALIFORNIA

THE STATE OF CALIFORNIA OR ITS OFFICERS OR AGENTS SHALL NOT BE RESPONSIBLE FOR THE ACCURACY OR COMPLETENESS OF SCANNED COPIES OF THIS PLAN SHEET.

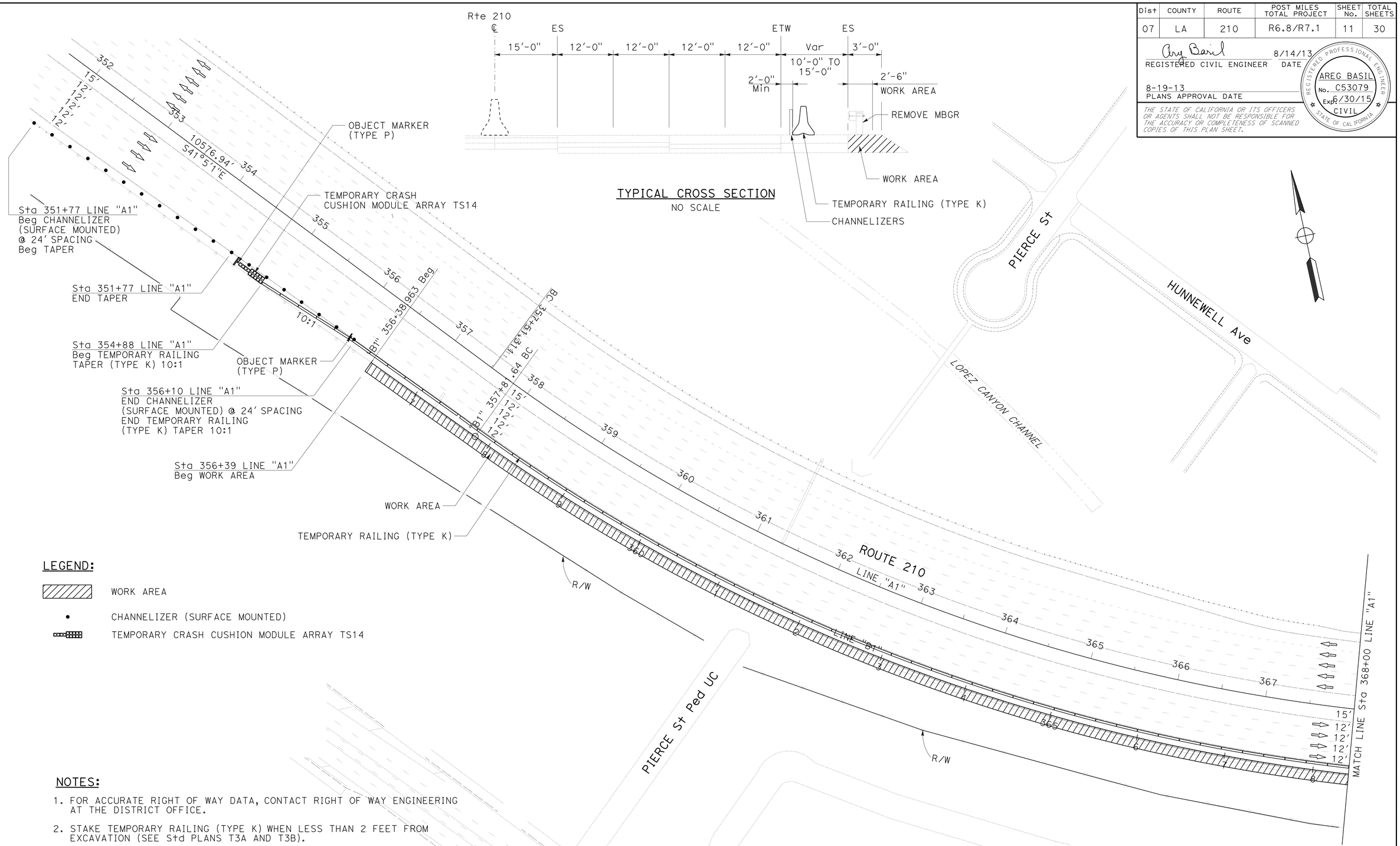

TRAFFIC HANDLING PLAN

SCALE 1" = 50'

APPROVED FOR TRAFFIC HANDLING WORK ONLY

TH-1

STATE OF CALIFORNIA - DEPARTMENT OF TRANSPORTATION
Caltrans® **TRAFFIC DESIGN**

FUNCTIONAL SUPERVISOR: GRISH BIGLARIAN
CALCULATED-DESIGNED BY: AREG BASIL
CHECKED BY: EUGENE BRAVO
REVISED BY
DATE REVISED

LAST REVISION 00-00-00
DATE PLOTTED => 30-AUG-2013
TIME PLOTTED => 10:14

Dist	COUNTY	ROUTE	POST MILES TOTAL PROJECT	SHEET No.	TOTAL SHEETS
07	LA	210	R6.8/R7.1	12	30

REGISTERED CIVIL ENGINEER — DATE 8/14/13

8-19-13
PLANS APPROVAL DATE

REGISTERED PROFESSIONAL ENGINEER — AREG BASIL No. C53079 Exp. 6/30/15 CIVIL — STATE OF CALIFORNIA

THE STATE OF CALIFORNIA OR ITS OFFICERS OR AGENTS SHALL NOT BE RESPONSIBLE FOR THE ACCURACY OR COMPLETENESS OF SCANNED COPIES OF THIS PLAN SHEET.

NOTE:

FOR ACCURATE RIGHT OF WAY DATA, CONTACT RIGHT OF WAY ENGINEERING AT THE DISTRICT OFFICE.

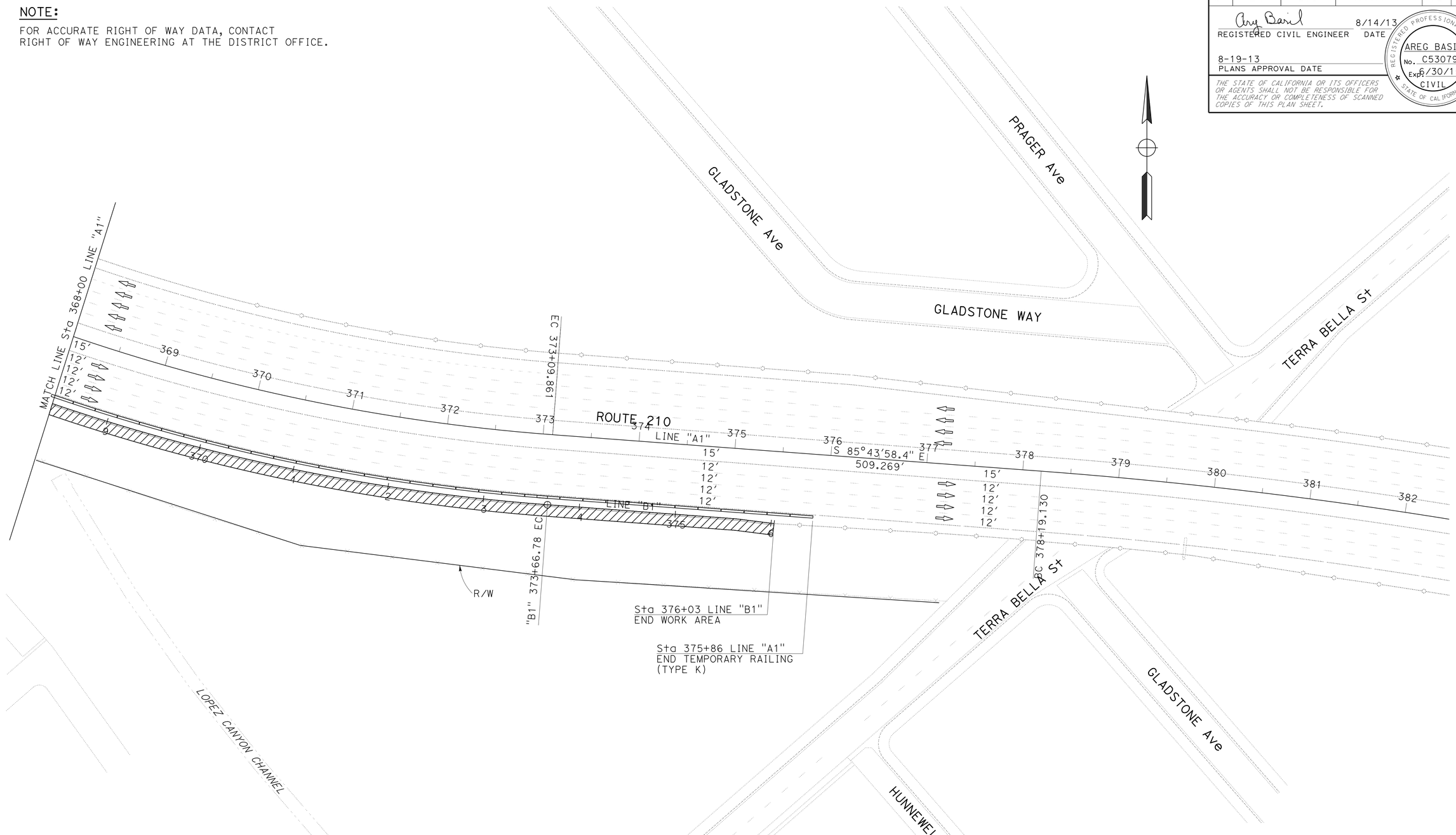

TRAFFIC HANDLING PLAN

SCALE 1" = 50'

TH-2

APPROVED FOR TRAFFIC HANDLING WORK ONLY

STATE OF CALIFORNIA - DEPARTMENT OF TRANSPORTATION

Caltrans® **TRAFFIC DESIGN**

FUNCTIONAL SUPERVISOR: GRISH BIGLARIAN

CALCULATED-DESIGNED BY: AREG BASIL

CHECKED BY: EUGENE BRAVO

REVISED BY

DATE REVISED

LAST REVISION 00-00-00

DATE PLOTTED => 30-AUG-2013

TIME PLOTTED => 10:14

Dist	COUNTY	ROUTE	POST MILES TOTAL PROJECT	SHEET No.	TOTAL SHEETS
07	LA	210	R6.8/R7.1	13	30

REGISTERED CIVIL ENGINEER DATE 8/14/13

8-19-13
PLANS APPROVAL DATE

REGISTERED PROFESSIONAL ENGINEER
AREG BASIL
No. C53079
Exp. 6/30/15
CIVIL
STATE OF CALIFORNIA

THE STATE OF CALIFORNIA OR ITS OFFICERS OR AGENTS SHALL NOT BE RESPONSIBLE FOR THE ACCURACY OR COMPLETENESS OF SCANNED COPIES OF THIS PLAN SHEET.

NOTES:

1. CHANNELIZERS (SURFACE MOUNTED) MUST BE MAINTAINED THROUGHOUT THE ENTIRE CLOSURE PERIOD.
2. EXACT LOCATIONS AND POSITIONS OF ROADSIDE SIGNS WILL BE DETERMINED BY THE ENGINEER.

LEGEND:

⇨ DIRECTION OF TRAVEL

● CHANNELIZER (SURFACE MOUNTED)

▨ WORK AREA

SIGN CODE	PANEL SIZE	SIGN MESSAGE	No. OF POSTS AND SIZE	No. OF SIGNS
W21-5	48" X 48"	SHOULDER WORK	1- 6" x 6"	1
W21-5bR	48" X 48"	RIGHT SHOULDER CLOSED AHEAD	1- 6" x 6"	1
C30A(CA)	48" X 48"	SHOULDER CLOSED	1- 6" x 6"	1

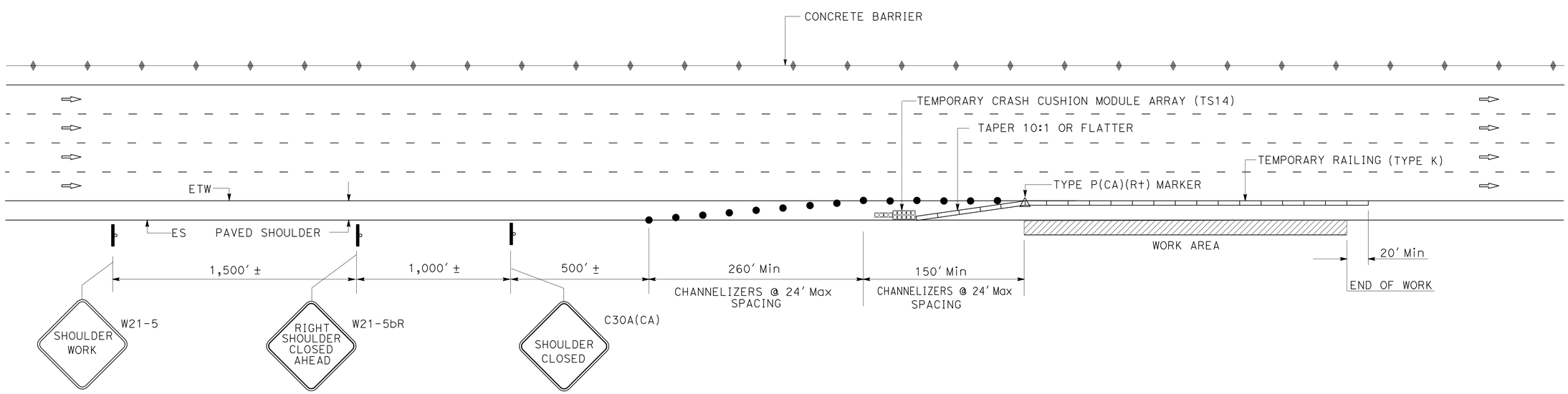

TRAFFIC HANDLING DETAILS
TYPICAL SHOULDER CLOSURES
WITH TEMPORARY RAILING (TYPE K)

NO SCALE

THD-1

STATE OF CALIFORNIA - DEPARTMENT OF TRANSPORTATION
Caltrans®
TRAFFIC DESIGN

FUNCTIONAL SUPERVISOR: GRISH BIGLARIAN

CALCULATED-DESIGNED BY: AREG BASIL
CHECKED BY: EUGENE BRAVO

REVISED BY
DATE REVISED

LAST REVISED DATE PLOTTED => 14-AUG-2013
TIME PLOTTED => 9:14

00-00-00

BORDER LAST REVISED 7/2/2010

USERNAME => 15484
DGN FILE => 729090me01.dgn

RELATIVE BORDER SCALE IS IN INCHES 0 1 2 3

UNIT 1877

PROJECT NUMBER & PHASE 07120000671

Dist	COUNTY	ROUTE	POST MILES TOTAL PROJECT	SHEET No.	TOTAL SHEETS
07	LA	210	R6.8/R7.1	14	30

REGISTERED CIVIL ENGINEER 8/14/13 DATE

8-19-13
PLANS APPROVAL DATE

REGISTERED PROFESSIONAL ENGINEER
AREG BASIL
No. C53079
Exp. 6/30/15
CIVIL
STATE OF CALIFORNIA

THE STATE OF CALIFORNIA OR ITS OFFICERS OR AGENTS SHALL NOT BE RESPONSIBLE FOR THE ACCURACY OR COMPLETENESS OF SCANNED COPIES OF THIS PLAN SHEET.

TRAFFIC HANDLING QUANTITIES

SHEET No.	STATION FROM	STATION TO	DIRECTION	TEMPORARY CHANNELIZER (SURFACE MOUNTED) EA	TEMPORARY RAILING (TYPE K) LF	TEMPORARY CRASH CUSHION MODULE (ARRAY TS14) EA	(N) OBJECT MARKER TYPE P EA
TH-1		354+88 LINE "A1"	EB			14	
TH-1	351+77 LINE "A1"	356+10 LINE "A1"	EB	19			2
TH-1	354+88 LINE "A1"	368+00 LINE "A1"	EB		1,320		
TH-2	368+00 LINE "A1"	375+86 LINE "A1"	EB		780		
TOTAL				19	2,100	14	2

(N) - NOT A SEPARATE PAY ITEM, FOR INFORMATION ONLY

REVISED BY | DATE REVISED
AREG BASIL | EUGENE BRAVO
CALCULATED-DESIGNED BY | CHECKED BY
FUNCTIONAL SUPERVISOR: GRISH BIGLARIAN
STATE OF CALIFORNIA - DEPARTMENT OF TRANSPORTATION
Caltrans® TRAFFIC DESIGN

TRAFFIC HANDLING QUANTITIES

THQ-1

LAST REVISION 00-00-00 | DATE PLOTTED => 30-AUG-2013 | TIME PLOTTED => 10:14

Dist	COUNTY	ROUTE	POST MILES TOTAL PROJECT	SHEET No.	TOTAL SHEETS
07	LA	210	R6.8/R7.1	15	30

REGISTERED CIVIL ENGINEER 8/14/13 DATE

8-19-13
PLANS APPROVAL DATE

REGISTERED PROFESSIONAL ENGINEER AREG BASIL No. C53079 Exp. 6/30/15 CIVIL STATE OF CALIFORNIA

THE STATE OF CALIFORNIA OR ITS OFFICERS OR AGENTS SHALL NOT BE RESPONSIBLE FOR THE ACCURACY OR COMPLETENESS OF SCANNED COPIES OF THIS PLAN SHEET.

ROADWAY QUANTITIES

SHEET No.	STATION FROM	STATION TO	SALVAGE METAL BEAM GUARD RAILING	REMOVE ASPHALT CONCRETE DIKE	TRANSITION RAILING (TYPE WB)	CONCRETE BARRIER (TYPE 736SV MODIFIED)	16" CAST IN DRILL HOLE CONCRETE PILING	END CAP (TYPE TC)	TEMPORARY DRAINAGE INLET PROTECTION	SALVAGE CONCRETE BARRIER (TYPE K)
	FROM	TO	LF	LF	EA	LF	LF	EA	EA	LF
L-1	356+38.96 "A1"	358+89.00 "A1"		250.0						
L-1	356+38.96 "B1"	368+40.41 "B1"	1,201.5						4	
L-1	356+38.96 "B1"	364+39.00 "B1"								800
L-1	356+63.00 "B1"	368+40.41 "B1"				1,117.4				
L-1	356+38.96 "B1"	356+63.00 "B1"			1			1		
L-2	368+40.41 "B1"	376+03.22 "B1"	762.8							
L-2	368+40.41 "B1"	375+94.00 "B1"				754				
P-1	356+62.85 "B1"	368+63.84 "B1"					1,749			
P-2	368+63.84 "B1"	376+03.22 "B1"					972			
TOTAL			1,964.3	250.0	1	1,880.0	2,721	1	4	800

SUMMARY OF QUANTITIES

NO SCALE

Q-1

STATE OF CALIFORNIA - DEPARTMENT OF TRANSPORTATION
Caltrans TRAFFIC DESIGN

FUNCTIONAL SUPERVISOR: GRISH BIGLARIAN
CALCULATED-DESIGNED BY: AREG BASIL
CHECKED BY: EUGENE BRAVO
REVISED BY
DATE REVISED

LAST REVISION 00-00-00
DATE PLOTTED => 30-AUG-2013
TIME PLOTTED => 10:14

Dist	COUNTY	ROUTE	POST MILES TOTAL PROJECT	SHEET No.	TOTAL SHEETS
07	LA	210	R6.8/R7.1	16	30

LICENSED LANDSCAPE ARCHITECT

8-19-13
PLANS APPROVAL DATE

LICENSED LANDSCAPE ARCHITECT
KATHLEEN LEDESMA
No. 5888
Registration
12/31/13
Renewal Date
6/26/13
Date
STATE OF CALIFORNIA

THE STATE OF CALIFORNIA OR ITS OFFICERS OR AGENTS SHALL NOT BE RESPONSIBLE FOR THE ACCURACY OR COMPLETENESS OF SCANNED COPIES OF THIS PLAN SHEET.

SEED MIX

SEED	BOTANICAL NAME (COMMON NAME)	PERCENT GERMINATION (MINIMUM)	POUNDS PURE LIVE SEED PER ACRE (SLOPE MEASUREMENT)
MIX 1	ARISTIDA PURPUREA[1] (PURPLE THREE-AWN)	30	4.0
	ARTEMISIA CALIFORNICA[1] (CALIFORNIA SAGEBRUSH)	25	0.5
	ERIOGONUM FASCICULATUM[1] (CALIFORNIA BUCKWHEAT)	5	1.0
	BROMUS CARINATUS[1] (CALIFORNIA BROME)	30	6.0
	MIMULUS LONGIFLORUS[1] (STICKY MONKEYFLOWER)	25	0.1
	ESCHSCHOLZIA CALIFORNICA[1] (CALIFORNIA POPPY)	35	2.0
	LUPINUS SUCCULENTUS[1] (ARROYO LUPINE)	45	3.0
	NASSELLA PULCHRA[1] (PURPLE NEEDLEGRASS)	35	6.0
	VULPIA MICROSTACHYS[1] (THREE WEEK FESCUE)	40	4.0

[1] SEED PRODUCED IN CALIFORNIA ONLY.

HYDROSEED

SEQUENCE	ITEM	MATERIAL		APPLICATION RATE
		DESCRIPTION	TYPE	
STEP 1	HYDROSEED	SEED	MIX 1	26 LB/ACRE
		FERTILIZER	TIME RELEASE	800 LB/ACRE
		FIBER	WOOD	2000 LB/ACRE
		TACKIFIER	GUAR	150 LB/ACRE

EROSION CONTROL QUANTITIES

SHEET	LOCATION	DESCRIPTION	HYDROSEED
			SQFT
EC-1	LOCATION 1	HYDROSEED	14,510
EC-2	LOCATION 2	HYDROSEED	9,160
		TOTAL	23,670

EROSION CONTROL LEGEND

ECL-1

STATE OF CALIFORNIA - DEPARTMENT OF TRANSPORTATION
Caltrans® LANDSCAPE ARCHITECTURE

SENIOR LANDSCAPE ARCHITECT: PATTY WATANABE
CALCULATED-DESIGNED BY: KATHLEEN LEDESMA
CHECKED BY: KEITH SELLERS
REVISED BY
DATE REVISED

LAST REVISION 07-24-12
DATE PLOTTED => 30-AUG-2013
TIME PLOTTED => 10:14

Dist	COUNTY	ROUTE	POST MILES TOTAL PROJECT	SHEET No.	TOTAL SHEETS
07	LA	210	R6.8/R7.1	17	30

LICENSED LANDSCAPE ARCHITECT

8-19-13
PLANS APPROVAL DATE

LICENSED LANDSCAPE ARCHITECT
KATHLEEN LEDESMA
No. 5888
Signature
12/31/13
Renewal Date
6/26/13
Date
STATE OF CALIFORNIA

THE STATE OF CALIFORNIA OR ITS OFFICERS OR AGENTS SHALL NOT BE RESPONSIBLE FOR THE ACCURACY OR COMPLETENESS OF SCANNED COPIES OF THIS PLAN SHEET.

NOTE:

1. FOR ACCURATE RIGHT OF WAY DATA, CONTACT RIGHT OF WAY ENGINEERING AT THE DISTRICT OFFICE.

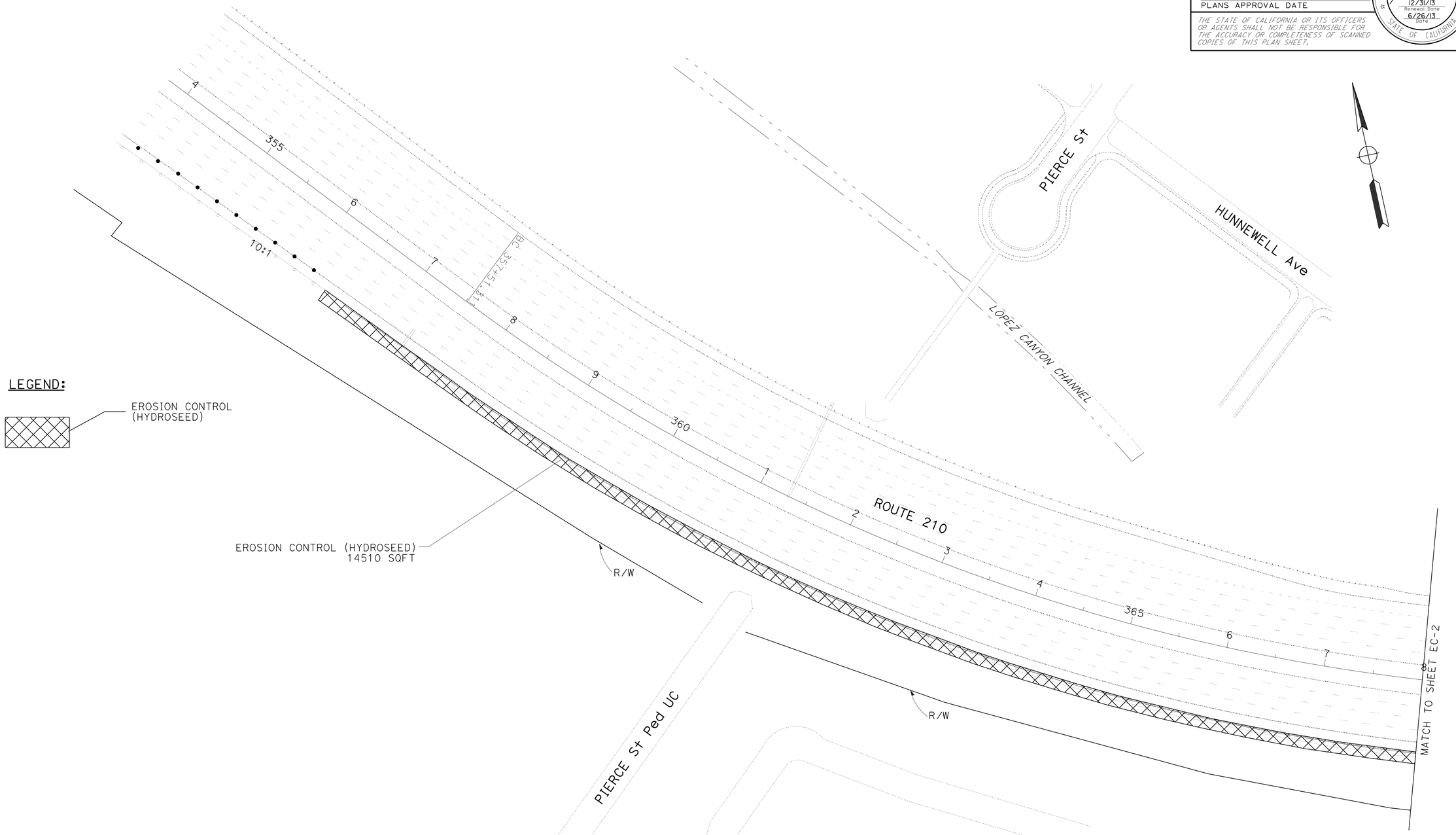

APPROVED FOR EROSION CONTROL WORK ONLY

EROSION CONTROL PLAN

SCALE 1" = 50'

EC-1

STATE OF CALIFORNIA - DEPARTMENT OF TRANSPORTATION
Caltrans® LANDSCAPE ARCHITECTURE

SENIOR LANDSCAPE ARCHITECT: PATTY WATANABE
CALCULATED-DESIGNED BY: KATHLEEN LEDESMA
CHECKED BY: KEITH SELLERS
REVISED BY
DATE REVISED

LAST REVISION 07-24-12
DATE PLOTTED => 30-AUG-2013
TIME PLOTTED => 10:14

Dist	COUNTY	ROUTE	POST MILES TOTAL PROJECT	SHEET No.	TOTAL SHEETS
07	LA	210	R6.8/R7.1	18	30

LICENSED LANDSCAPE ARCHITECT

8-19-13
PLANS APPROVAL DATE

LICENSED LANDSCAPE ARCHITECT
KATHLEEN LEDESMA
No. 5888
Expiration Date
12/31/13
Renewal Date
6/26/13
Date
STATE OF CALIFORNIA

THE STATE OF CALIFORNIA OR ITS OFFICERS OR AGENTS SHALL NOT BE RESPONSIBLE FOR THE ACCURACY OR COMPLETENESS OF SCANNED COPIES OF THIS PLAN SHEET.

NOTE:

1. FOR ACCURATE RIGHT OF WAY DATA, CONTACT RIGHT OF WAY ENGINEERING AT THE DISTRICT OFFICE.

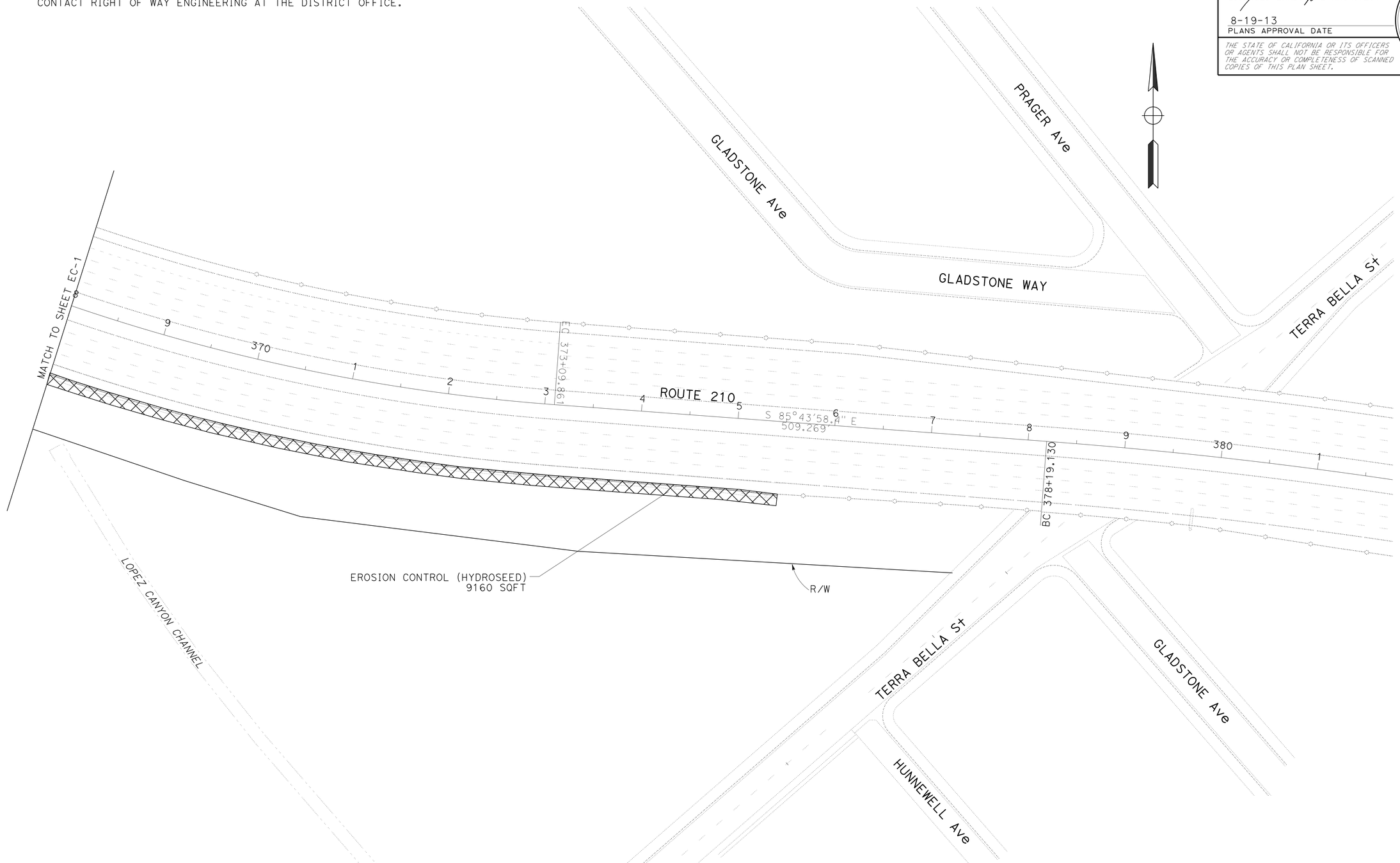

APPROVED FOR EROSION CONTROL WORK ONLY

EROSION CONTROL PLAN

SCALE 1" = 50'

EC-2

STATE OF CALIFORNIA - DEPARTMENT OF TRANSPORTATION
Caltrans® LANDSCAPE ARCHITECTURE

SENIOR LANDSCAPE ARCHITECT: PATTY WATANABE
CALCULATED-DESIGNED BY: KATHLEEN LEDESMA
CHECKED BY: KEITH SELLERS
REVISED BY
DATE REVISED

LAST REVISION 07-24-12
DATE PLOTTED => 30-AUG-2013
TIME PLOTTED => 10:14

Dist	COUNTY	ROUTE	POST MILES TOTAL PROJECT	SHEET No.	TOTAL SHEETS
07	LA	210	R6.8/R7.1	19	30

REGISTERED ELECTRICAL ENGINEER 6/3/13 DATE

8-19-13
PLANS APPROVAL DATE

REGISTERED PROFESSIONAL ENGINEER CECILIO BURCIAGA No. E015302 Exp. 3-31-15 ELECTRICAL STATE OF CALIFORNIA

THE STATE OF CALIFORNIA OR ITS OFFICERS OR AGENTS SHALL NOT BE RESPONSIBLE FOR THE ACCURACY OR COMPLETENESS OF SCANNED COPIES OF THIS PLAN SHEET.

LEGEND: (THIS SHEET ONLY)

1 INSTALL 1½"C, 2#8 (SIGN), 1#8 (G) IN CONCRETE BARRIER.

2 EXISTING 1½"C. RC CONDUCTORS. INSTALL 2#8 (SIGN), 1#8 (G).

NOTE:

FOR ACCURATE RIGHT OF WAY AND ACCESS DATA, CONTACT RIGHT OF WAY ENGINEERING AT DISTRICT OFFICE.

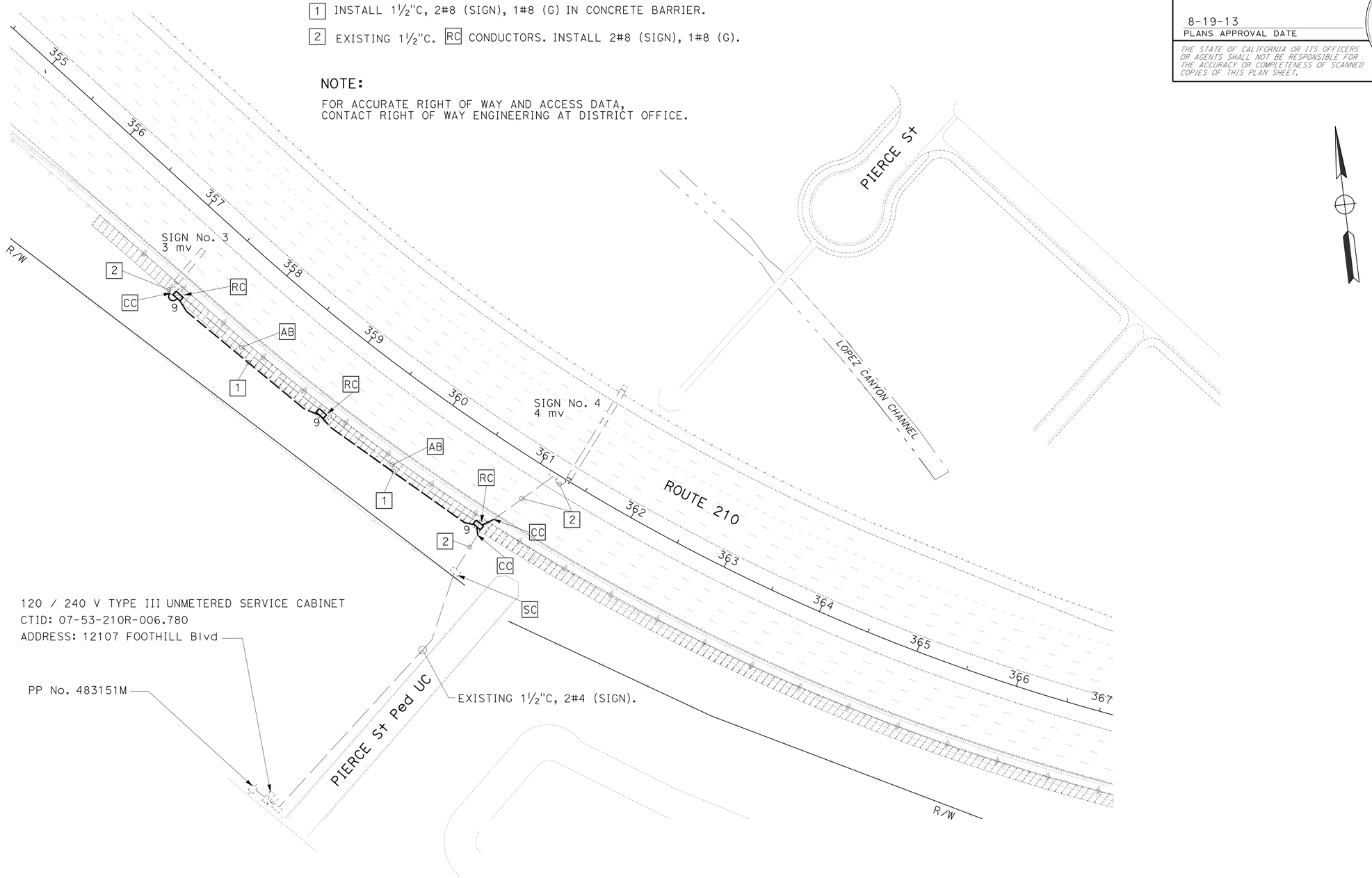

MODIFY LIGHTING AND SIGN ILLUMINATION

SCALE: 1" = 50'

APPROVED FOR ELECTRICAL WORK ONLY

E-1

STATE OF CALIFORNIA - DEPARTMENT OF TRANSPORTATION
Caltrans® **TRAFFIC DESIGN**

FUNCTIONAL SUPERVISOR: YI TSAU
CALCULATED-DESIGNED BY: LUKE SUN
CHECKED BY: CECILIO BURCIAGA
REVISED BY
DATE REVISED

LAST REVISION 11-01-10 | DATE PLOTTED => 30-AUG-2013 | TIME PLOTTED => 10:14

Dist	COUNTY	ROUTE	POST MILES TOTAL PROJECT	SHEET No.	TOTAL SHEETS
07	LA	210	R6.8/R7.1	20	30

Jacqueline C Tan 6/3/13
REGISTERED ELECTRICAL ENGINEER DATE

8-19-13
PLANS APPROVAL DATE

REGISTERED PROFESSIONAL ENGINEER
JACQUELINE C. TAN
No. E015611
Exp. 12/31/13
ELECTRICAL
STATE OF CALIFORNIA

THE STATE OF CALIFORNIA OR ITS OFFICERS OR AGENTS SHALL NOT BE RESPONSIBLE FOR THE ACCURACY OR COMPLETENESS OF SCANNED COPIES OF THIS PLAN SHEET.

NOTE:

FOR ACCURATE RIGHT OF WAY DATA, CONTACT RIGHT OF WAY ENGINEERING AT THE DISTRICT OFFICE.

LEGEND (FOR SHEETS E-2 AND E-3):

1. INSTALL CONDUITS IN PAVEMENT. SEE SHEET E-5 FOR DETAILS.
2. RC COMMUNICATION CONDUITS.
3. EXISTING COMMUNICATION CONDUITS TO REMAIN.

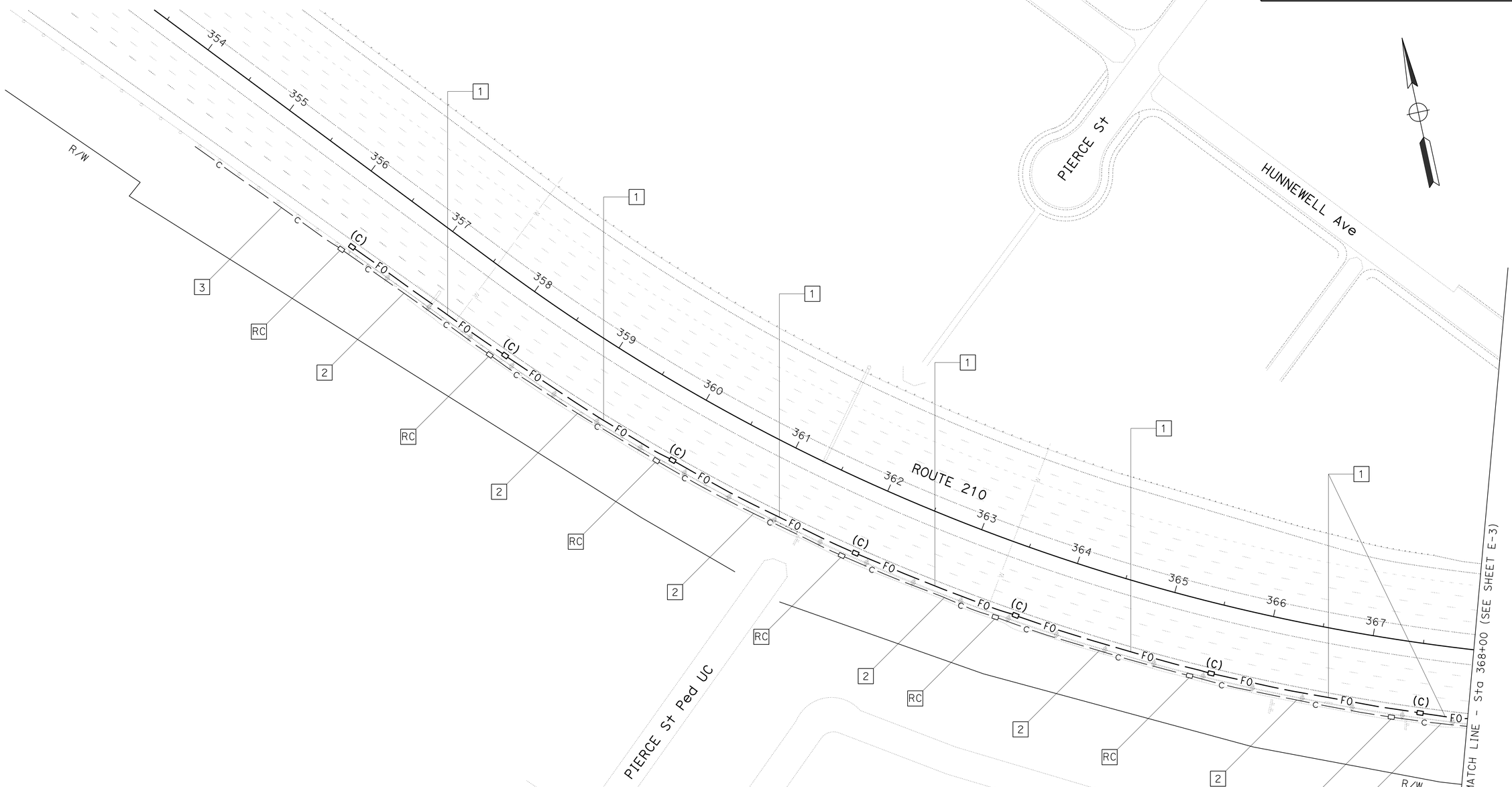

COMMUNICATION SYSTEM

SCALE 1" = 50'

APPROVED FOR ELECTRICAL WORK ONLY

E-2

STATE OF CALIFORNIA - DEPARTMENT OF TRANSPORTATION
Caltrans
OFFICE OF ITS

FUNCTIONAL SUPERVISOR: JACKIE TAN
CALCULATED-DESIGNED BY: TUYEN NGO
CHECKED BY: JACKIE TAN
REVISED BY
DATE REVISED

LAST REVISION 04-04-13
DATE PLOTTED => 30-AUG-2013
TIME PLOTTED => 10:14

Dist	COUNTY	ROUTE	POST MILES TOTAL PROJECT	SHEET No.	TOTAL SHEETS
07	LA	210	R6.8/R7.1	21	30

REGISTERED ELECTRICAL ENGINEER 6/3/13 DATE

8-19-13
PLANS APPROVAL DATE

REGISTERED PROFESSIONAL ENGINEER JACQUELINE C. TAN No. E015611 Exp. 12/31/13 ELECTRICAL STATE OF CALIFORNIA

THE STATE OF CALIFORNIA OR ITS OFFICERS OR AGENTS SHALL NOT BE RESPONSIBLE FOR THE ACCURACY OR COMPLETENESS OF SCANNED COPIES OF THIS PLAN SHEET.

NOTE:

FOR ACCURATE RIGHT OF WAY DATA, CONTACT RIGHT OF WAY ENGINEERING AT THE DISTRICT OFFICE.

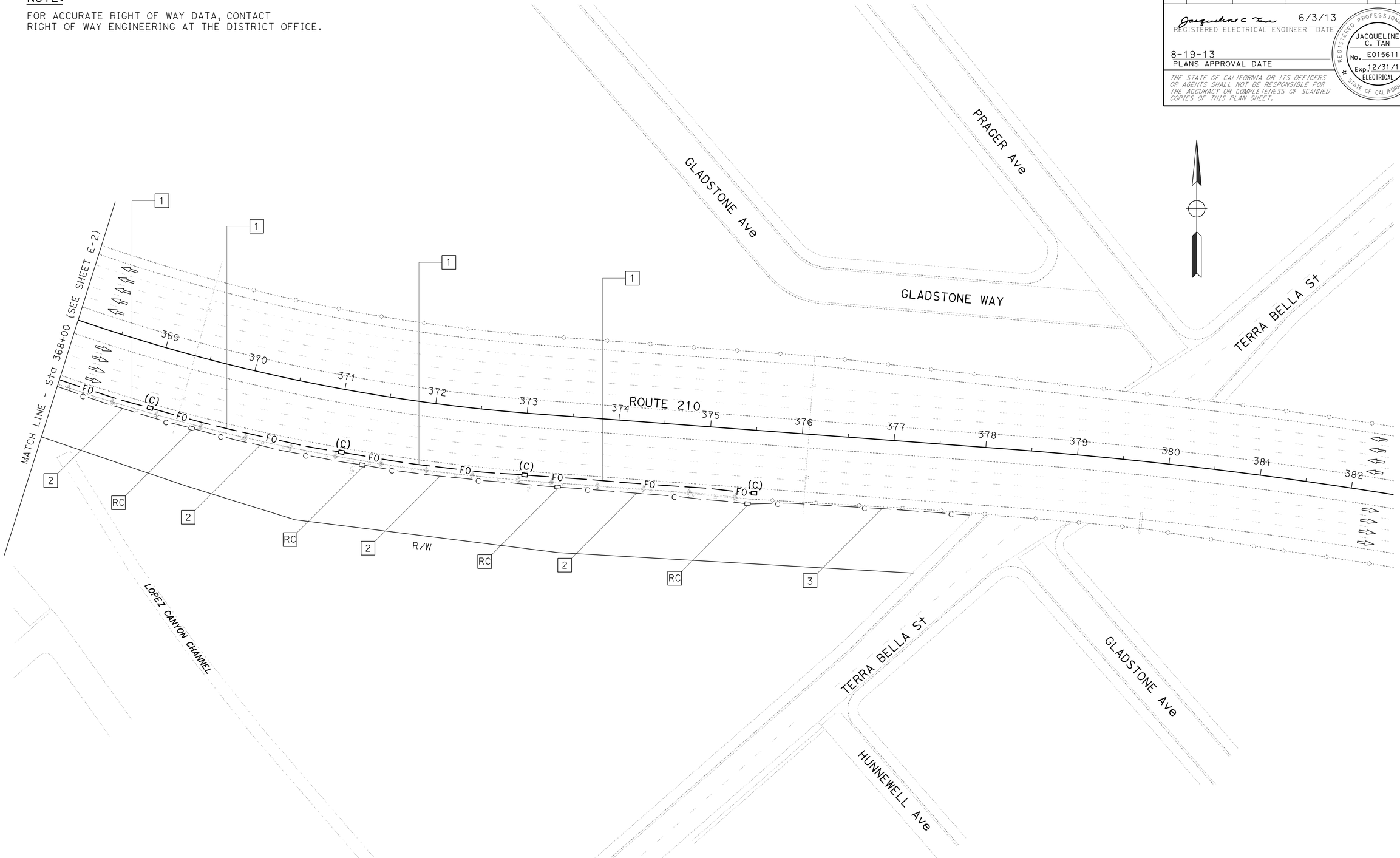

COMMUNICATION SYSTEM

SCALE 1" = 50'

E-3

APPROVED FOR ELECTRICAL WORK ONLY

STATE OF CALIFORNIA - DEPARTMENT OF TRANSPORTATION
Caltrans
OFFICE OF ITS

FUNCTIONAL SUPERVISOR: JACKIE TAN
CALCULATED-DESIGNED BY: TUYEN NGO
CHECKED BY: JACKIE TAN
REVISED BY
DATE REVISED

LAST REVISION 04-04-13
DATE PLOTTED => 30-AUG-2013
TIME PLOTTED => 10:14

Dist	COUNTY	ROUTE	POST MILES TOTAL PROJECT	SHEET No.	TOTAL SHEETS
07	LA	210	R6.8/R7.1	22	30

Jacqueline C Tan 6/3/13
REGISTERED ELECTRICAL ENGINEER DATE

8-19-13
PLANS APPROVAL DATE

REGISTERED PROFESSIONAL ENGINEER JACQUELINE C. TAN No. E015611 Exp. 12/31/13 ELECTRICAL STATE OF CALIFORNIA

THE STATE OF CALIFORNIA OR ITS OFFICERS OR AGENTS SHALL NOT BE RESPONSIBLE FOR THE ACCURACY OR COMPLETENESS OF SCANNED COPIES OF THIS PLAN SHEET.

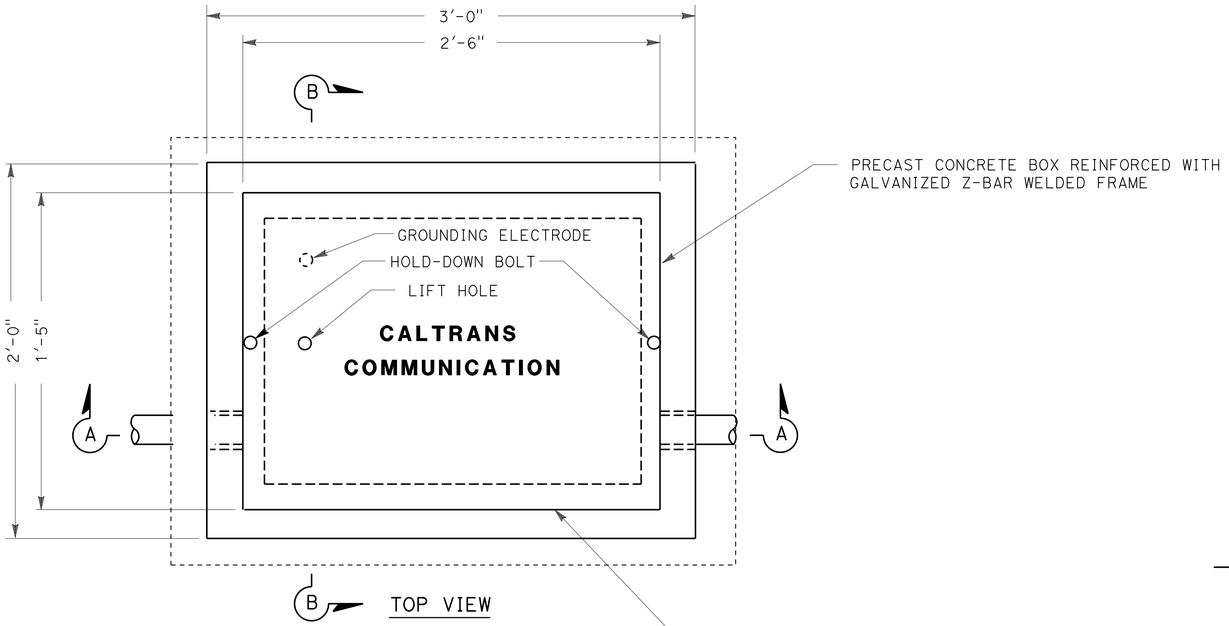

TOP VIEW

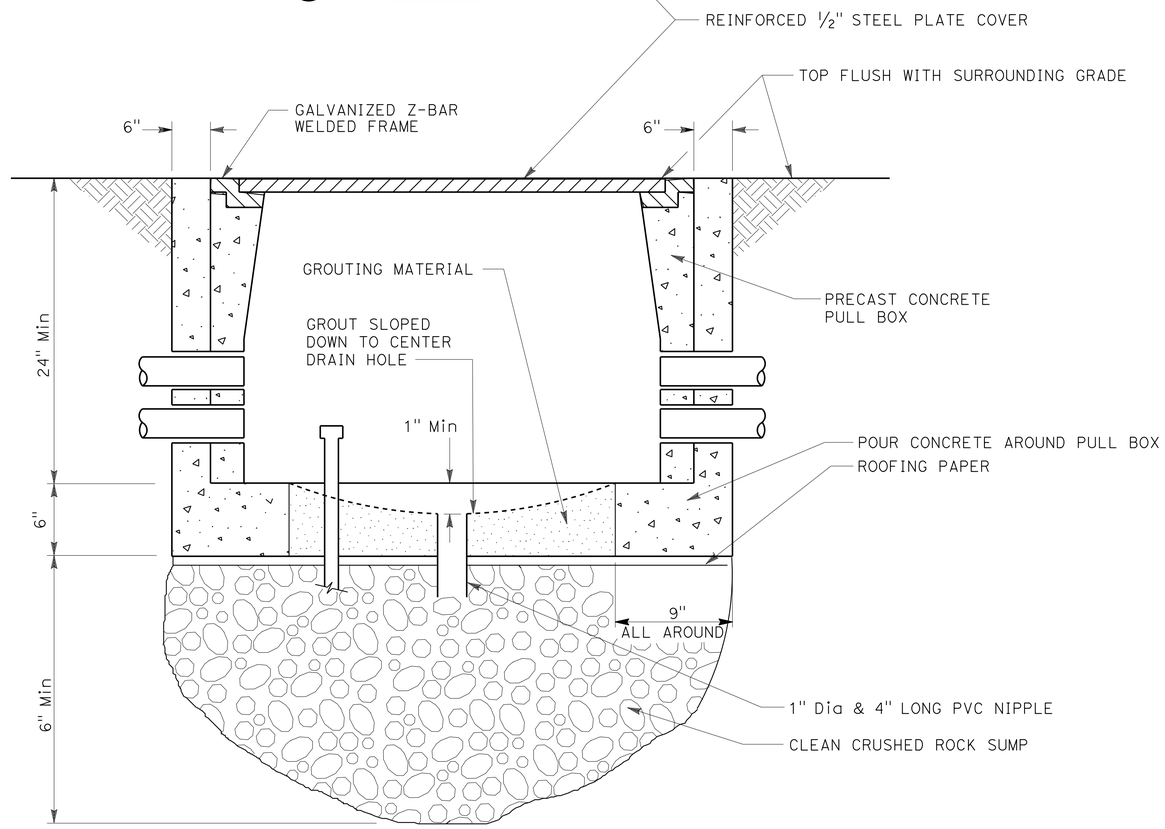

SECTION A-A

NOTES: (THIS SHEET ONLY)

1. FOR DETAILS NOT SHOWN SEE STD PLAN RSP ES-8A.
2. CONDUITS SHOWN ARE FOR EXAMPLE ONLY. ADDITIONAL CONDUITS MAY BE REQUIRED AS SHOWN ON THE PLAN SHEETS.
3. SEE SPECIAL PROVISIONS REGARDING HOLDDOWN BOLTS FOR TRAFFIC RATE COVERS.

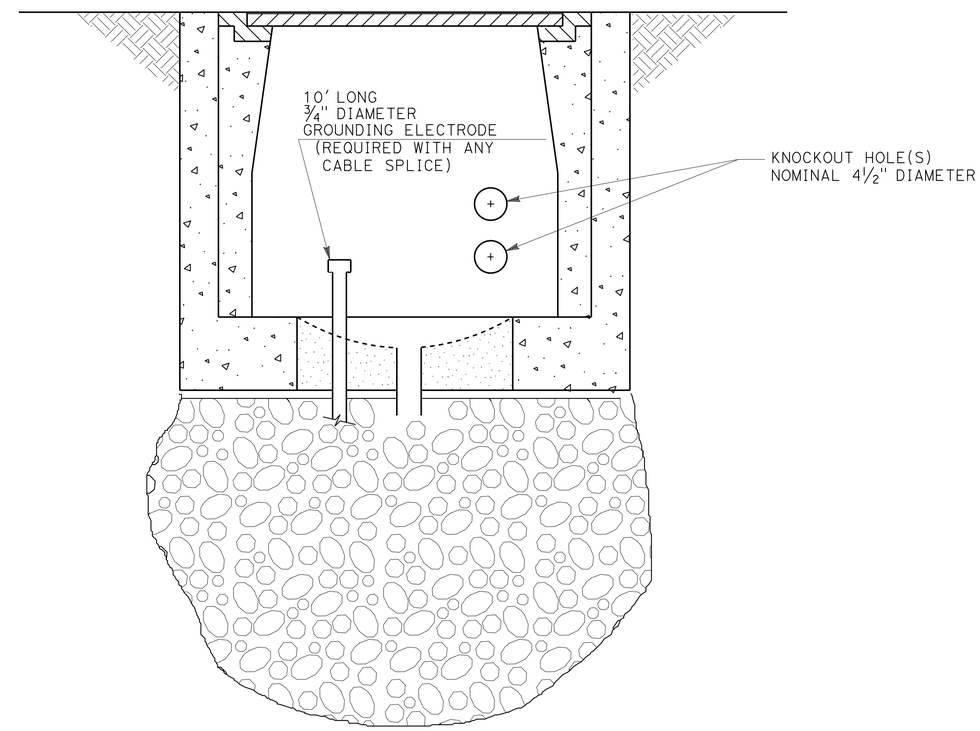

SECTION B-B

ELECTRICAL DETAILS

NO SCALE

E-4

STATE OF CALIFORNIA - DEPARTMENT OF TRANSPORTATION
Caltrans
OFFICE OF ITS

FUNCTIONAL SUPERVISOR: JACKIE TAN
CALCULATED-DESIGNED BY: TUYEN NGO
CHECKED BY: JACKIE TAN
REVISED BY
DATE REVISED

LAST REVISION 04-04-13
DATE PLOTTED => 30-AUG-2013
TIME PLOTTED => 10:14

Dist	COUNTY	ROUTE	POST MILES TOTAL PROJECT	SHEET No.	TOTAL SHEETS
07	LA	210	R6.8/R7.1	23	30

REGISTERED ELECTRICAL ENGINEER 6/3/13 DATE

8-19-13
PLANS APPROVAL DATE

REGISTERED PROFESSIONAL ENGINEER JACQUELINE C. TAN No. E015611 Exp. 12/31/13 ELECTRICAL STATE OF CALIFORNIA

THE STATE OF CALIFORNIA OR ITS OFFICERS OR AGENTS SHALL NOT BE RESPONSIBLE FOR THE ACCURACY OR COMPLETENESS OF SCANNED COPIES OF THIS PLAN SHEET.

NOTES: (THIS SHEET ONLY)

1. REPLACE AC DIKE IN KIND, AS NECESSARY.
2. TRENCH TO BE CENTERED IN SHOULDER OR AS DIRECTED BY ENGINEER.
3. MAINTAIN 24" MINIMUM COVER AND BACKFILL TRENCH WITH SLURRY CEMENT BETWEEN PULL BOX AND PAVED SHOULDER.
4. 24" MINIMUM COVER MAY BE REDUCED TO 9" MINIMUM COVER IF NEEDED TO CLEAR A STORM DRAIN OR OTHER FIXED OBJECT AS DIRECTED BY RESIDENT ENGINEER.
5. PROVIDE MINIMUM 4'-11" CLEARANCE BETWEEN ANY CONDUIT AND EXISTING STRUCTURE FOUNDATIONS.
6. ANCHOR/RESTRAIN TOP CONDUIT FROM FLOATING DURING SLURRY CEMENT BACKFILL.
7. CONDUITS MUST BE INSTALLED IN NEW ASPHALT PAVEMENT AFTER AGGREGATE BASE IS PLACED AND COMPACTED.

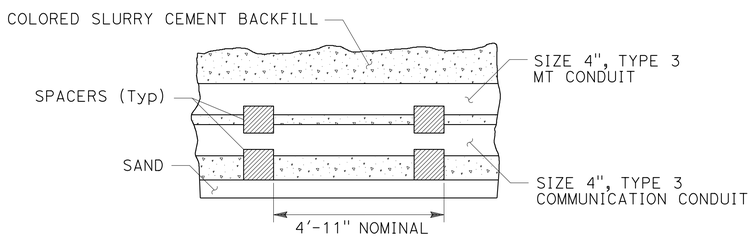

CONDUIT SPACER PLACEMENT (SIDE VIEW)

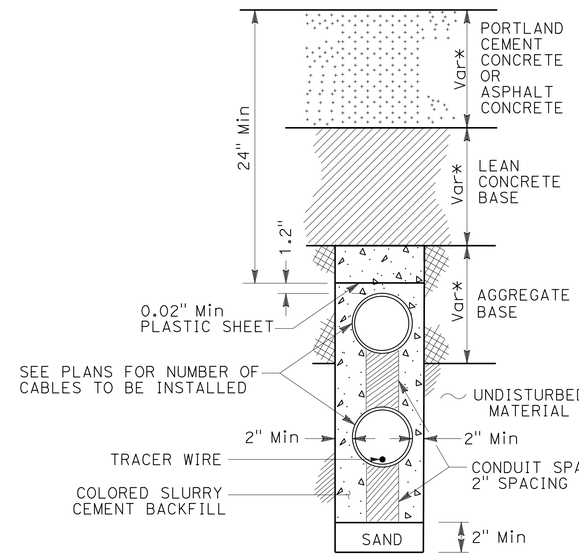

NEW PAVEMENT (PCC or ASPHALT)
WITH TYPE 3 COMMUNICATION CONDUIT(S)

(* PAVEMENT THICKNESS, SEE TYPICAL CROSS SECTION PLANS)

ELECTRICAL DETAILS

NO SCALE

E-5

REVISED BY	DATE REVISED
TUYEN NGO	JACKIE TAN
CALCULATED-DESIGNED BY	CHECKED BY
FUNCTIONAL SUPERVISOR	JACKIE TAN

STATE OF CALIFORNIA - DEPARTMENT OF TRANSPORTATION
Caltrans
OFFICE OF ITS

LAST REVISION 04-04-13 | DATE PLOTTED => 30-AUG-2013 | TIME PLOTTED => 10:14

Dist	COUNTY	ROUTE	POST MILES TOTAL PROJECT	SHEET No.	TOTAL SHEETS
07	LA	210	R6.8/R7.1	24	30

Jacqueline C Tan 6/3/13
REGISTERED ELECTRICAL ENGINEER DATE

8-19-13
PLANS APPROVAL DATE

REGISTERED PROFESSIONAL ENGINEER
JACQUELINE C.TAN
No. E015611
Exp. 12/31/13
ELECTRICAL
STATE OF CALIFORNIA

THE STATE OF CALIFORNIA OR ITS OFFICERS OR AGENTS SHALL NOT BE RESPONSIBLE FOR THE ACCURACY OR COMPLETENESS OF SCANNED COPIES OF THIS PLAN SHEET.

MODIFY LIGHTING AND SIGN ILLUMINATION

SHEET No.	REMOVE PULL POX (N)	INSTALL 1½"C (N)	INSTALL PULL BOX (N) TYPE #9	INSTALL #8 (N)
	EA	LF	EA	LF
E-1	3	380	3	2200

COMMUNICATION SYSTEM

SHEET No.	REMOVE COMMUNICATION PULL BOX (N)	INSTALL COMMUNICATION PULL BOX (N)	INSTALL 2-4C (N)
	EA	EA	LF
E-2	7	7	1,200
E-3	4	4	800

(N) NOT A SEPARATE PAY ITEM, FOR INFORMATION ONLY.

ELECTRICAL QUANTITIES

E-6

REVISED BY | DATE REVISED
TUYEN NGO | JACKIE TAN
CALCULATED-DESIGNED BY | CHECKED BY
FUNCTIONAL SUPERVISOR
JACKIE TAN

STATE OF CALIFORNIA - DEPARTMENT OF TRANSPORTATION
Caltrans
OFFICE OF ITS

LAST REVISION 00-00-00 | DATE PLOTTED => 30-AUG-2013 | TIME PLOTTED => 10:14

DIST	COUNTY	ROUTE	POST MILES TOTAL PROJECT	SHEET No.	TOTAL SHEETS
07	LA	210	R6.8/R7.1	25	30

Kristopher Barker 5-20-13
CERTIFIED ENGINEERING GEOLOGIST DATE

PLANS APPROVAL DATE

The State of California or its officers or agents shall not be responsible for the accuracy or completeness of electronic copies of this plan sheet.

PROFESSIONAL GEOLOGIST Kristopher Barker No. 2383 Exp. 8-31-13 CERTIFIED ENGINEERING GEOLOGIST STATE OF CALIFORNIA

This LOTB sheet was prepared in accordance with the Caltrans Soil & Rock Logging, Classification, & Presentation Manual (2010 Edition).

See 2010 Standard Plans A10F and A10G for Soil Legend, and A10H for Rock Legend.

BENCH MARK

PRHV1:
Fd. Cotton Spindle & washer flush in AC of EB the Rte 210 fwy shoulder,8.92 ft. from EP and 18.0 ft. east of the sign "OSBORN ST.¾ WHEATLAND AVE. 2½ SUNLAND BLVD. 4"
N 1924291.95
E 6441237.56
Elev 1189.31

PRHV2:
Fd. Cotton Spindle & washer flush in AC of EB the Rte 210 fwy shoulder,8.99 ft. from EP and ± 156.0 ft. east of the sign "GLENDAL 9 LA CANADA FLINTRIDGE 12 PASADENA19"
N 1923586.67
E 6442644.77
Elev 1168.58

PRHV5:
Fd. 1" IP w/ CT yellow plug flush in dirt EB of the Rte 210 fwy, ± 3.2 ft. From ES and ± 3.4 ft west of the sign "AUTO WITH TRAILERS / TRUCKS 55 MAXIMUM RADAR ENFORCED"
N 1923997.42
E 64411545.56
Elev 1183.54

PRHV6:
Fd. 1" IP w/ CT red plug flush in dirt. EB of the Rte 210 fwy, ± 3.3 ft. From ES and ± 2.5 ft west of the sign "NATIONAL FOREST & HANSEN DAM RECREATION AREA NEXT EXIT"
N 1923737.19
E 6441998.07
Elev 1175.63

PRHV 7:
Fd. 2X2 Hub w/ Tag flush in dirt EB of the Rte 210 fwy, ± 3.3 ft. From ES and ± 3.0 ft west of the sign "GLENDALE 9 LA CANADA FLINTRIDGE 12 PASADENA 19"
N 1923601.50
E 6442478.33
Elev 1169.87

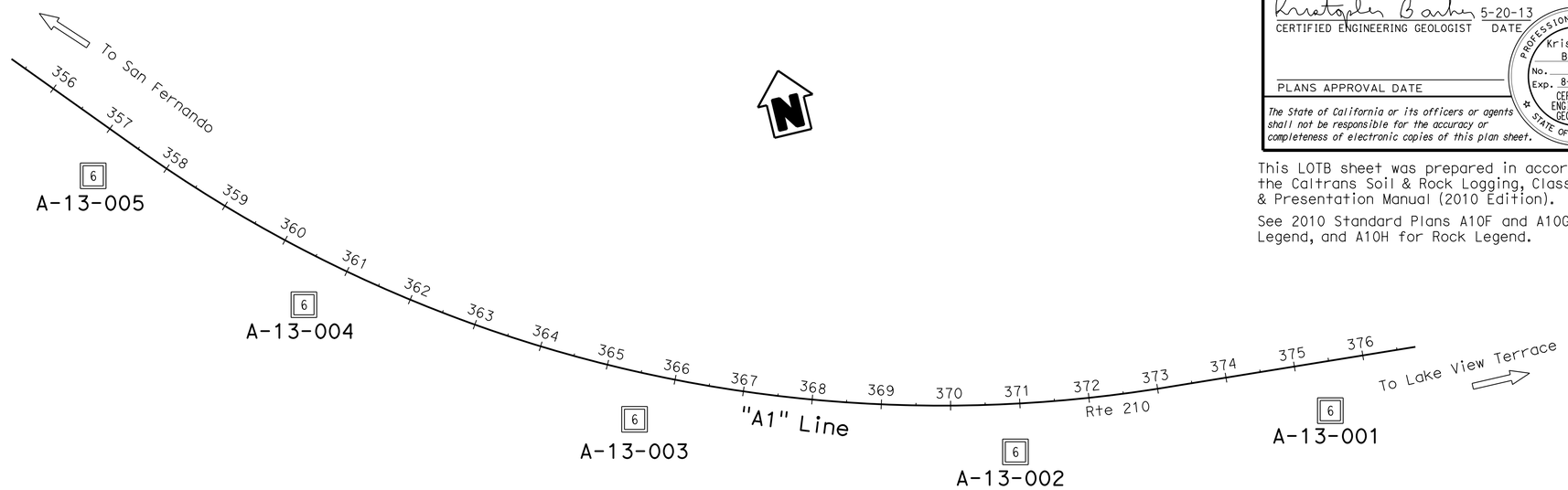

PLAN
1" = 100'

Note: No ground water encountered during field investigation.

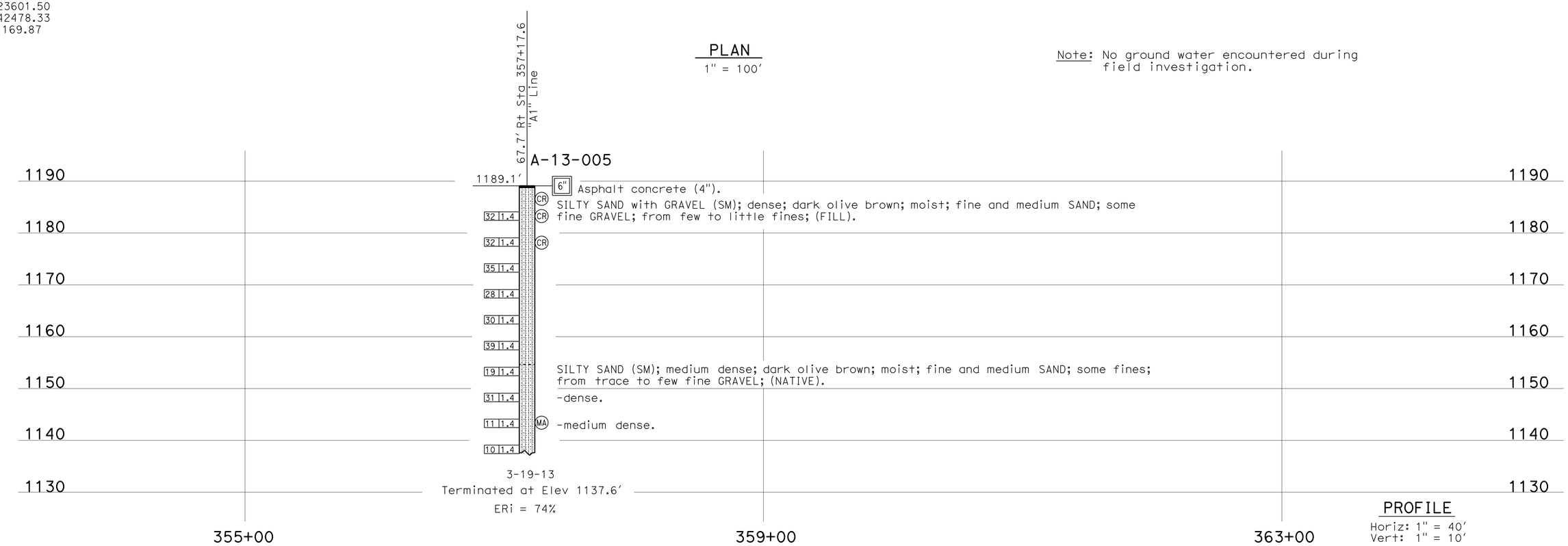

PROFILE
Horiz: 1" = 40'
Vert: 1" = 10'

ENGINEERING SERVICES	MATERIALS AND GEOTECHNICAL SERVICES	STATE OF CALIFORNIA DEPARTMENT OF TRANSPORTATION	DIVISION OF ENGINEERING SERVICES STRUCTURE DESIGN	BRIDGE NO.	CONCRETE BARRIER
FUNCTIONAL SUPERVISOR	DRAWN BY: F. Nguyen	FIELD INVESTIGATION BY:	DESIGN BRANCH X	POST MILE	LOG OF TEST BORINGS 1 OF 3
NAME: S. Karimi	CHECKED BY: M. Ahmed	K. Barker		R6.8/R7.2	

OGS CIVIL LOG OF TEST BORINGS SHEET

ORIGINAL SCALE IN INCHES FOR REDUCED PLANS 0 1 2 3

UNIT: 3643
PROJECT NUMBER & PHASE: 07120000671 CONTRACT NO.: 07-290901

DISREGARD PRINTS BEARING EARLIER REVISION DATES

REVISION DATES 05-03-13 05-15-13 SHEET X OF X

FILE => concretebarrier1of3.dgn

USERNAME => s113484 DATE PLOTTED => 30-AUG-2013 TIME PLOTTED => 10:14

DIST	COUNTY	ROUTE	POST MILES TOTAL PROJECT	SHEET No.	TOTAL SHEETS
07	LA	210	R6.8/R7.1	26	30

Kristopher Barker 5-20-13
CERTIFIED ENGINEERING GEOLOGIST DATE

PROFESSIONAL GEOLOGIST Kristopher Barker No. 2383 Exp. 8-31-13 CERTIFIED ENGINEERING GEOLOGIST STATE OF CALIFORNIA

PLANS APPROVAL DATE

The State of California or its officers or agents shall not be responsible for the accuracy or completeness of electronic copies of this plan sheet.

This LOTB sheet was prepared in accordance with the Caltrans Soil & Rock Logging, Classification, & Presentation Manual (2010 Edition).

See 2010 Standard Plans A10F and A10G for Soil Legend, and A10H for Rock Legend.

FOR PLAN VIEW, SEE
"LOG OF TEST BORINGS 1 OF 3"

Note: No ground water encountered during field investigation.

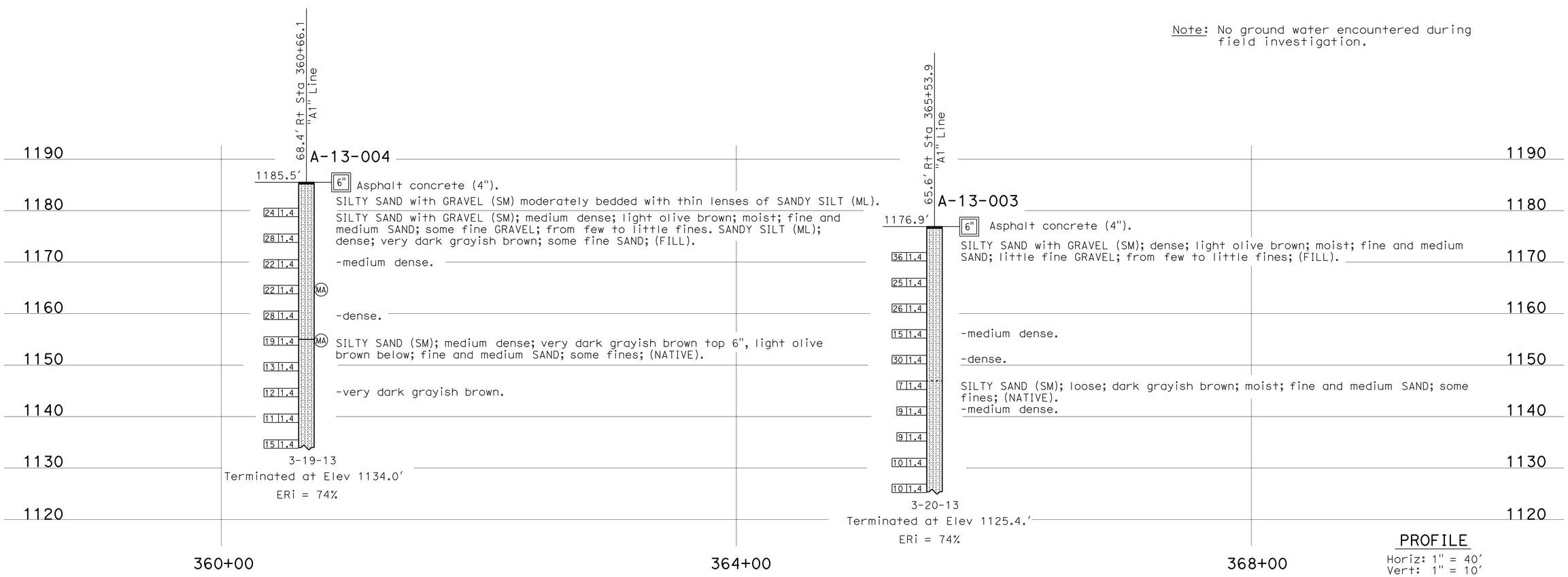

PROFILE
Horiz: 1" = 40'
Vert: 1" = 10'

ENGINEERING SERVICES	MATERIALS AND GEOTECHNICAL SERVICES	STATE OF CALIFORNIA DEPARTMENT OF TRANSPORTATION	DIVISION OF ENGINEERING SERVICES STRUCTURE DESIGN DESIGN BRANCH X	BRIDGE NO. / POST MILE R6.8/R7.2	CONCRETE BARRIER LOG OF TEST BORINGS 2 OF 3
FUNCTIONAL SUPERVISOR NAME: S. Karimi	DRAWN BY: F. Nguyen CHECKED BY: M. Ahmed	FIELD INVESTIGATION BY: K. Barker			

OGS CIVIL LOG OF TEST BORINGS SHEET

ORIGINAL SCALE IN INCHES FOR REDUCED PLANS 0 1 2 3

UNIT: 3643
PROJECT NUMBER & PHASE: 07120000671
CONTRACT NO.: 07-290901

DISREGARD PRINTS BEARING EARLIER REVISION DATES

REVISION DATES: ~~05-03-13~~ 05-15-13 | SHEET X | OF X

FILE => concretebarrier2of3.dgn

USERNAME => s115484 DATE PLOTTED => 30-AUG-2013 TIME PLOTTED => 10:14

DIST	COUNTY	ROUTE	POST MILES TOTAL PROJECT	SHEET No.	TOTAL SHEETS
07	LA	210	R6.8/R7.1	27	30

Kristopher Barker 5-20-13
CERTIFIED ENGINEERING GEOLOGIST DATE

PROFESSIONAL GEOLOGIST Kristopher Barker No. 2383 Exp. 8-31-13 CERTIFIED ENGINEERING GEOLOGIST STATE OF CALIFORNIA

PLANS APPROVAL DATE

The State of California or its officers or agents shall not be responsible for the accuracy or completeness of electronic copies of this plan sheet.

This LOTB sheet was prepared in accordance with the Caltrans Soil & Rock Logging, Classification, & Presentation Manual (2010 Edition).

See 2010 Standard Plans A10F and A10G for Soil Legend, and A10H for Rock Legend.

FOR PLAN VIEW, SEE
"LOG OF TEST BORINGS 1 OF 3"

Note: No ground water encountered during field investigation.

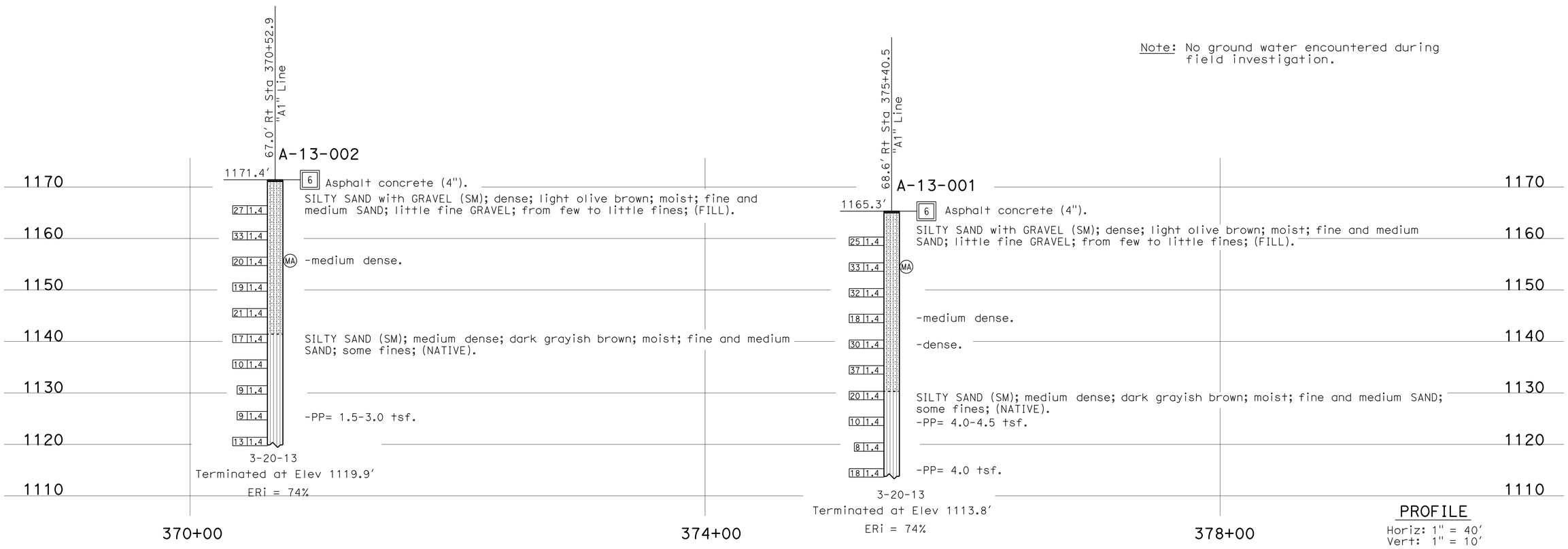

PROFILE
Horiz: 1" = 40'
Vert: 1" = 10'

ENGINEERING SERVICES	MATERIALS AND GEOTECHNICAL SERVICES	STATE OF CALIFORNIA DEPARTMENT OF TRANSPORTATION	DIVISION OF ENGINEERING SERVICES STRUCTURE DESIGN DESIGN BRANCH X	BRIDGE NO. / POST MILE R6.8/R7.2	CONCRETE BARRIER
FUNCTIONAL SUPERVISOR NAME: S. Karimi	DRAWN BY: F. Nguyen / CHECKED BY: M. Ahmed	FIELD INVESTIGATION BY: K. Barker			LOG OF TEST BORINGS 3 OF 3

OGS CIVIL LOG OF TEST BORINGS SHEET

ORIGINAL SCALE IN INCHES FOR REDUCED PLANS 0 1 2 3

UNIT: 3643
PROJECT NUMBER & PHASE: 07120000671 CONTRACT NO.: 07-290901

DISREGARD PRINTS BEARING EARLIER REVISION DATES → REVISION DATES 05-07-13 05-15-13 SHEET X OF X

FILE => concretebarrier3of3.dgn

USERNAME => s115484 DATE PLOTTED => 30-AUG-2013 TIME PLOTTED => 10:14

Dist	COUNTY	ROUTE	POST MILES TOTAL PROJECT	SHEET No.	TOTAL SHEETS
07	LA	210	R6.8/R7.1	28	30

REGISTERED CIVIL ENGINEER

April 19, 2013
PLANS APPROVAL DATE

REGISTERED PROFESSIONAL ENGINEER Gurinderpal Bhullar No. C48815 Exp. 9-30-14 CIVIL STATE OF CALIFORNIA

THE STATE OF CALIFORNIA OR ITS OFFICERS OR AGENTS SHALL NOT BE RESPONSIBLE FOR THE ACCURACY OR COMPLETENESS OF SCANNED COPIES OF THIS PLAN SHEET.

TO ACCOMPANY PLANS DATED 8-19-13

NOTES:

See Revised Standard Plan RSP T9 for tables.

Use cone spacing X for taper segment, Y for tangent segment or Z for conflict situations, as approriate, per Table 1, unless X, Y, or Z cone spacing is shown on this sheet.

Unless otherwise specified in the special provisions, all temporary warning signs shall have black legend on fluorescent orange background.

California codes are designated by (CA). Otherwise, Federal (MUTCD) codes are shown.

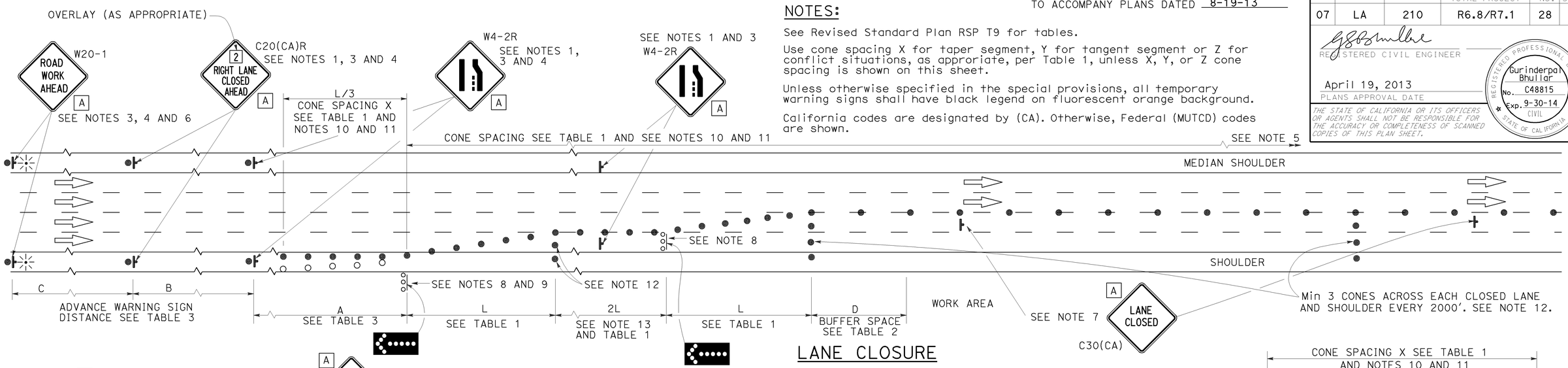

LANE CLOSURE

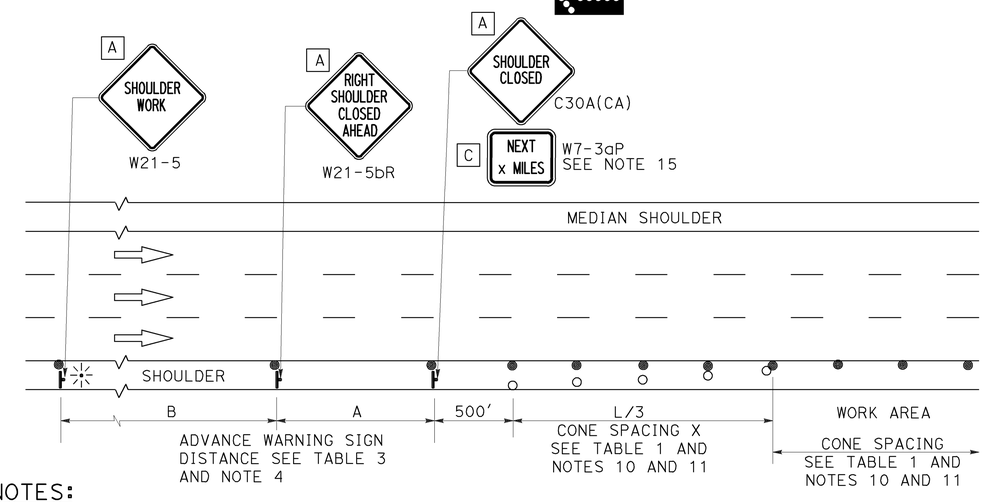

SHOULDER CLOSURE

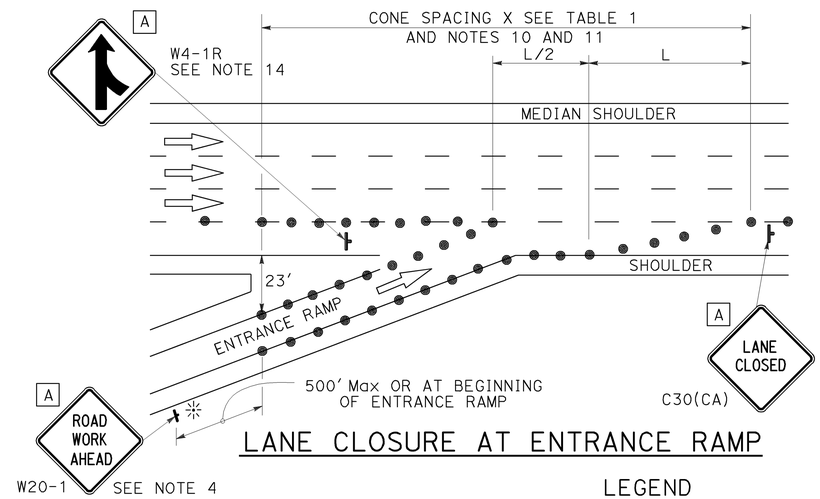

LANE CLOSURE AT ENTRANCE RAMP

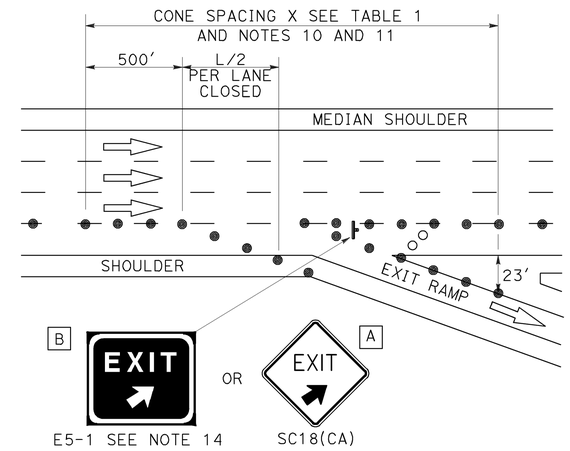

LANE CLOSURE AT EXIT RAMP

NOTES:

1. Median lane closures shall conform to the details as shown except that C20(CA)L and W4-2L signs shall be used.
2. At least one person shall be assigned to provide full time maintenance of traffic control devices for lane closures.
3. Duplicate sign installations are not required:
   a) On opposite shoulder if at least one-half of the available lanes remain open to traffic.
   b) In the median if the width of the median shoulder is less than 8' and the outside lanes are to be closed.
4. Each advance warning sign on each side of the roadway shall be equipped with at least two flags for daytime closure. Each flag shall be at least 16" x 16" in size and shall be orange or fluorescent red-orange in color. Flashing beacons shall be placed at the locations indicated for lane closure during hours of darkness.
5. A G20-2 "END ROAD WORK" sign, with minimum size of 48" x 24" as appropriate, shall be placed at the end of the lane closure unless the end of work area is obvious or ends within a larger project's limits.
6. If the W20-1 sign would follow within 2000' of a stationary W20-1 or G20-1 "ROAD WORK NEXT _____ MILES", use a C20(CA) sign for the first advance warning sign.
7. Place a C30(CA) sign every 2000' throughout length of lane closure.
8. One flashing arrow sign for each lane closed. The flashing arrow signs shall be Type I.
9. A minimum 1500' of sight distance shall be provided where possible for vehicles approaching the first flashing arrow sign. Lane closures shall not begin at top of crest vertical curve or on a horizontal curve.
10. All cones used for lane closures during the hours of darkness shall be fitted with retroreflective bands (or sleeves) as specified in the specifications.
11. Portable delineators, placed at one-half the spacing indicated for traffic cones may be used instead of cones for daytime closures only.
12. Unless otherwise specified in the special provisions, a minimum of 3 cones shall be placed transversely across each closed lane and shoulder at each location where a taper across a traffic lane ends and every 2000' as shown on the "Lane Closure" detail. Two Type II barricades may be used instead of the 3 cones. The transverse alignment of the cones or barricades on the closed shoulder may be shifted from the transverse alignment to provide access to the work.
13. Unless otherwise specified in the special provisions, the 2L tangent shown along lane lines shall be used between the L tapers required for each closed traffic lane.
14. Unless otherwise specified in the special provisions, the E5-1 or SC18(CA) and W4-1 signs shall be used as shown.
15. A W7-3aP "NEXT____ MILES" plaque must be used if theshoulder closure extends beyond the distance that can be perceived by road users.

LEGEND

- TRAFFIC CONE
- TRAFFIC CONE (OPTIONAL TAPER)
- TEMPORARY TRAFFIC CONTROL SIGN
- FLASHING ARROW SIGN (FAS)
- FAS SUPPORT OR TRAILER
- PORTABLE FLASHING BEACON

SIGN PANEL SIZE (Min)

A	48" x 48"
B	72" x 60"
C	36" x 30"

STATE OF CALIFORNIA
DEPARTMENT OF TRANSPORTATION

TRAFFIC CONTROL SYSTEM FOR LANE CLOSURE ON FREEWAYS AND EXPRESSWAYS

NO SCALE

RSP T10 DATED APRIL 19, 2013 SUPERSEDES STANDARD PLAN T10 DATED MAY 20, 2011 - PAGE 237 OF THE STANDARD PLANS BOOK DATED 2010.

REVISED STANDARD PLAN RSP T10

2010 REVISED STANDARD PLAN RSP T10

12-18-12

Dist	COUNTY	ROUTE	POST MILES TOTAL PROJECT	SHEET No.	TOTAL SHEETS
07	LA	210	R6.8/R7.1	29	30

REGISTERED CIVIL ENGINEER

October 19, 2012
PLANS APPROVAL DATE

REGISTERED PROFESSIONAL ENGINEER Tillat Satter No. C42892 Exp. 3-31-14 CIVIL STATE OF CALIFORNIA

THE STATE OF CALIFORNIA OR ITS OFFICERS OR AGENTS SHALL NOT BE RESPONSIBLE FOR THE ACCURACY OR COMPLETENESS OF SCANNED COPIES OF THIS PLAN SHEET.

TO ACCOMPANY PLANS DATED 8-19-13

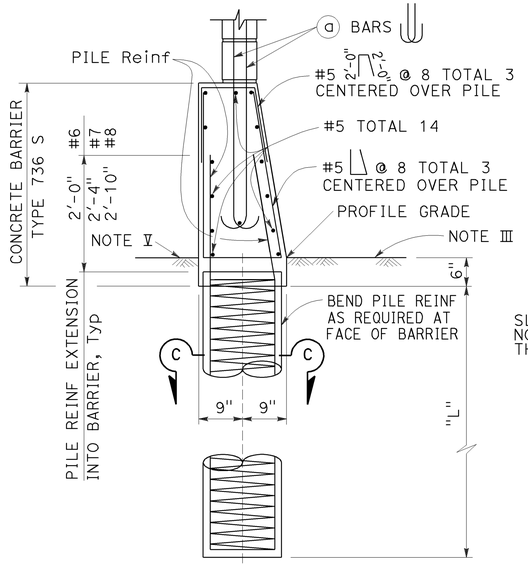

CASE 1

For details not shown, See Case 2.
Level ground ±10% on both sides of barrier.

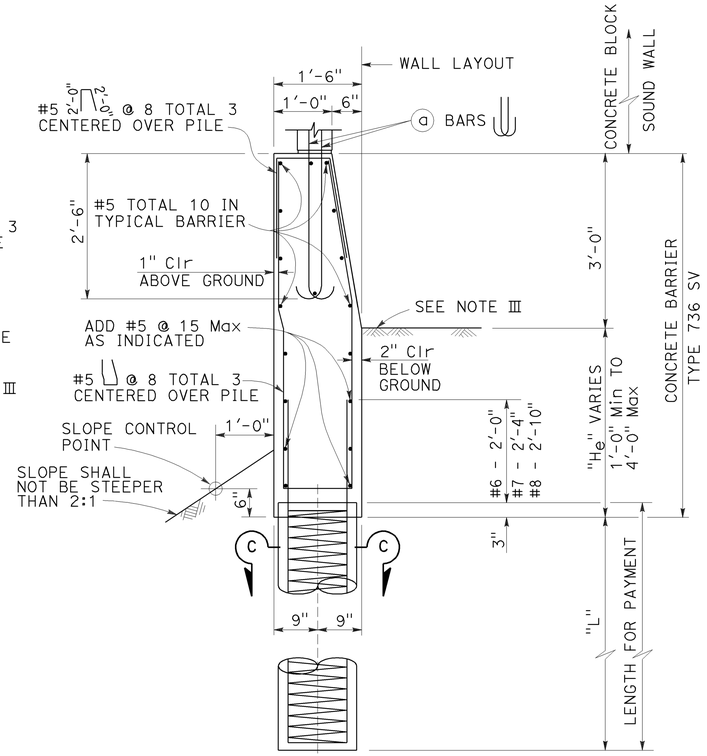

CASE 2

For details not shown, See Case 1.
Level ground ±10% at the traffic side of barrier and sloping ground on the opposite side.

BARRIER SECTIONS

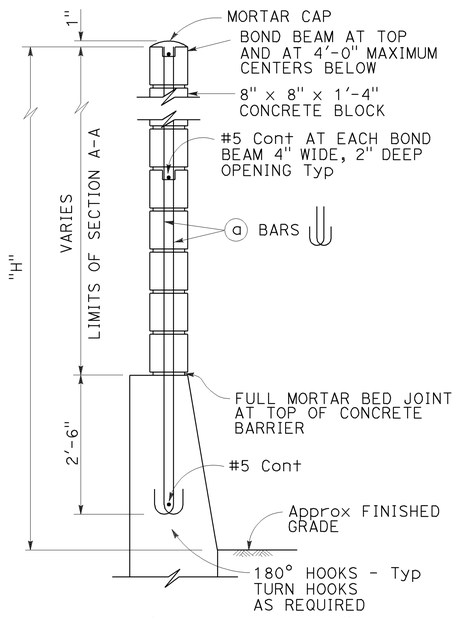

H=6'-4" THRU H=10'-4"

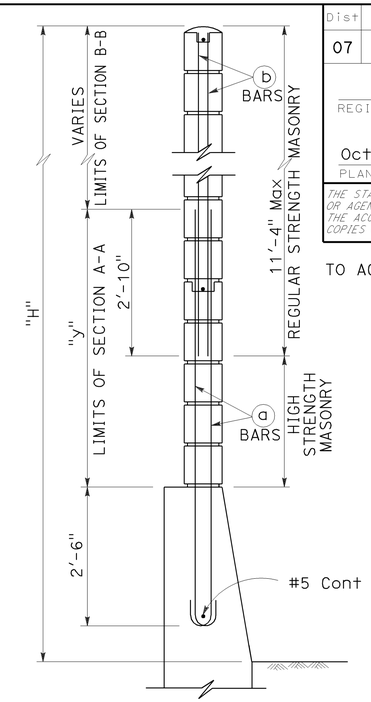

H=12'-4" THRU H=16'-4"

For details not shown, see H=6'-4" thru H=10'-4".

TYPICAL SECTIONS

See Standard Plan B15-8 for pile details.

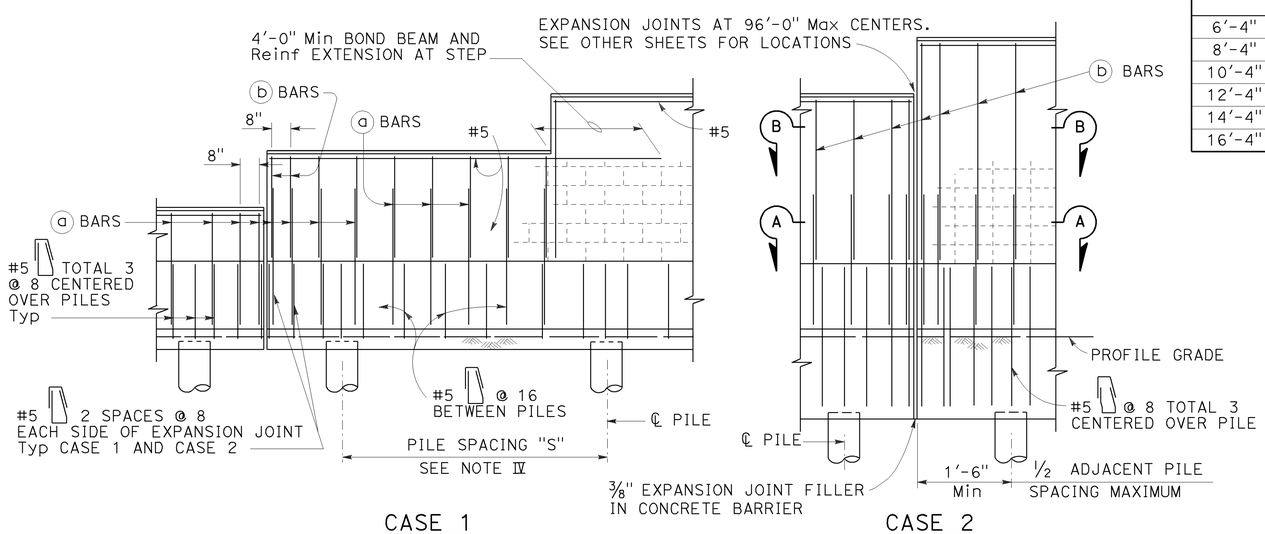

CASE 1

For details not shown, See Case 2.

CASE 2

For details not shown, See Case 1.

PARTIAL ELEVATIONS

SOUND WALL REINFORCEMENT TABLE

MAXIMUM H	(a) BARS @ 1'-4" Max	(b) BARS @ 1'-4" Max	"y"	f'm (psi)	COMPRESSIVE STRENGTH OF CMU (psi)	H
6'-4"	#4	---	---	1500	1900	6'-4"
8'-4"	#4	---	---	1500	1900	8'-4"
10'-4"	#4	---	---	1500	1900	10'-4"
12'-4"	#5	#4	5'-0"	1500	1900	12'-4"
14'-4"	#6	#4	7'-0"	1500	1900	14'-4"
16'-4"	#6	#4	9'-0"	2500	3750	16'-4"

NOTES I THROUGH VI:

I. Details shown are primarily to conform design of sound walls to Type 736S and Type 736 SV Concrete Barriers. For sound wall details conforming with barriers see Standard Plans B15-7 and B15-8.

II. For details and sections not shown, see Standard Plans B15-7 and B15-8.

III. Slope ground at traffic side of barrier to drain. Maximum slope ±10%. See Std Plan B11-56, Note 3.

IV. Pile spacing may be varied, but shall not exceed the tabular values. See Standard Plan B15-8.

V. For Case 1 - ground line to be at the same elevation on both sides of the barrier. Barrier shall not be used to retain earth.

VI. See Standard Plan B15-9 for other details.

NOTES A THROUGH F:

A. For type of block, type of block bond, and joint finish, see other sheets.

B. When blocks are laid in stacked bond, ladder type, galvanized joint reinforcement shall be provided. A minimum of 2-9 gauge wires continuous at 4'-0" maximum to be used. Locate reinforcement in joints that are at the approximate midpoint between bond beams.

C. Horizontal joints shall be tooled concave or may be weathered. Vertical joints shall be tooled concave or may be raked.

D. For intermediate wall heights (H), or barrier depths (H_e), that are between the values given, use the tabular information for the next higher (H) or (H_e).

E. Concrete to be used for the barrier shall contain not less than 590 pounds of cementitious material per cubic yard.

F. Masonry strengths are listed in the "SOUND WALL REINFORCEMENT TABLE".

STATE OF CALIFORNIA
DEPARTMENT OF TRANSPORTATION

SOUND WALL MASONRY BLOCK ON TYPE 736S/SV BARRIER DETAILS (1)

NO SCALE

RSP B15-6 DATED OCTOBER 19, 2012 SUPERSEDES STANDARD PLAN B15-6 DATED MAY 20, 2011 - PAGE 320 OF THE STANDARD PLANS BOOK DATED 2010.

REVISED STANDARD PLAN RSP B15-6

2010 REVISED STANDARD PLAN RSP B15-6

DIST	COUNTY	ROUTE	POST MILES TOTAL PROJECT	SHEET NO.	TOTAL SHEETS
07	LA	210	R6.8/R7.1	30	30

Theresa Gabriel
REGISTERED ELECTRICAL ENGINEER

July 19, 2013
PLANS APPROVAL DATE

REGISTERED PROFESSIONAL ENGINEER Theresa Aziz Gabriel No. E15129 Exp. 6-30-14 ELECTRICAL STATE OF CALIFORNIA

THE STATE OF CALIFORNIA OR ITS OFFICERS OR AGENTS SHALL NOT BE RESPONSIBLE FOR THE ACCURACY OR COMPLETENESS OF SCANNED COPIES OF THIS PLAN SHEET.

TO ACCOMPANY PLANS DATED 8-19-13

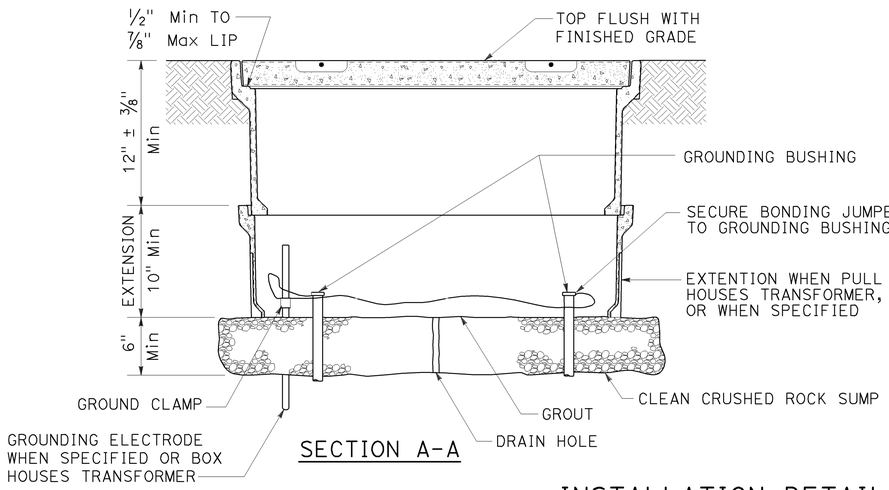

SECTION A-A

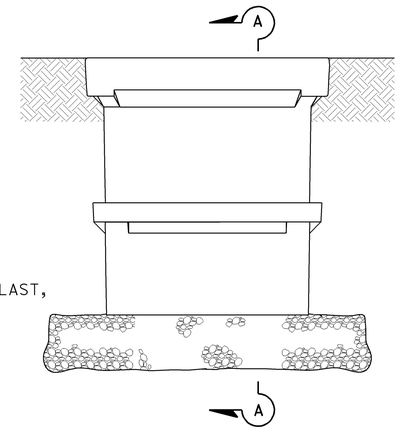

SIDE VIEW

INSTALLATION DETAILS

DETAIL A

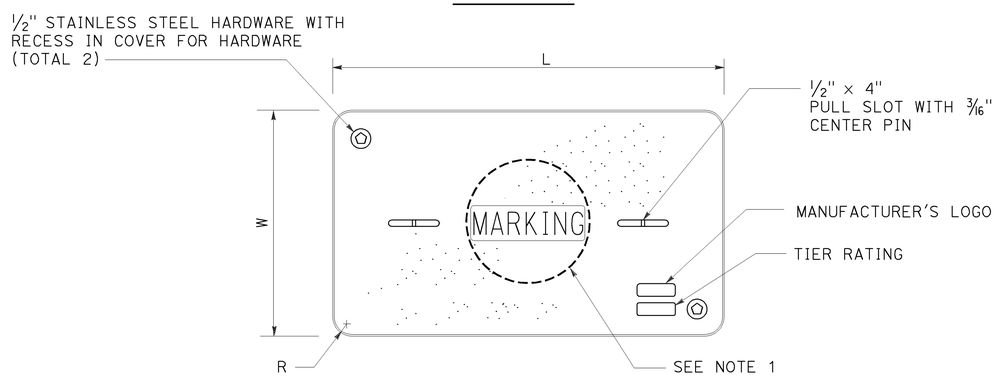

COVER TOP VIEW

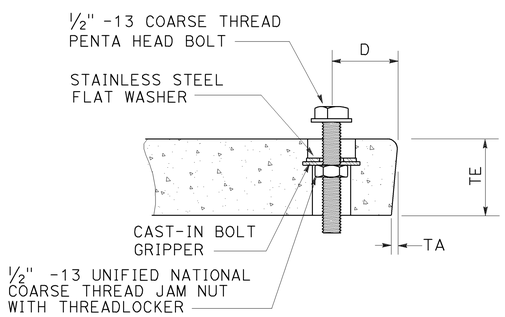

TYPICAL COVER CAPTIVE BOLT

OR SIMILAR

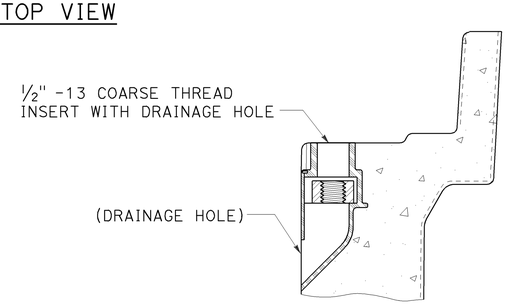

TYPICAL THREADED INSERT

OR SIMILAR

DIMENSION TABLE										
PULL BOX	PULL BOX			COVER						
	MINIMUM DEPTH BOX	MINIMUM DEPTH EXTENSION	MAXIMUM WEIGHT	L	W	R	TE	TA	D	MAXIMUM WEIGHT
No. 3½	12"	N/A	40 lb	1′ - 3⅜"	10⅛"	1⅜"	2"	⅛"	1¾"	30 lb
No. 5	12"	10"	55 lb	1′ - 11¼"	1′ - 1¾"	1⅜"	2"	⅛"	1¾"	60 lb
No. 6	12"	10"	70 lb	2′ - 6½"	1′ - 5½"	1⅜"	2"	⅛"	2"	85 lb

NOTES:

1. Pull box covers shall be marked as follows: "SERVICE" Service circuits between service point and service disconnect; "SPRINKLER-CONTROL" sprinkler control circuits, 50 V or less; "CALTRANS" on all pull boxes, except pull boxes marked "SPRINKLER-CONTROL"; and "TELEPHONE" Telephone service;

   A) No. 3½ pull box.
      1) "SIGNAL" - Traffic signal circuits with or without lighting or sign lighting circuits.
      2) "LIGHTING" - Lighting or sign lighting circuits where voltage is under 600 V.

   B) No. 5, 6, 9 or 9A pull box.
      1) "TRAFFIC SIGNAL" - Traffic signal circuits with or without lighting or sign lighting circuits.
      2) "LIGHTING" - Lighting or sign lighting circuits where voltage is under 600 V.
      3) "LIGHTING-HIGH VOLTAGE" - Lighting or sign lighting circuits where voltage is above 600 V.
      4) "IRRIGATION" - Circuits to irrigation controller 120 V or more.
      5) "RAMP METER" - Ramp meter circuits.
      6) "COUNT STATION" - Count or speed monitor circuits.
      7) "COMMUNICATIONS" - Communication circuits.
      8) "TOS COMMUNICATIONS" - TOS communication line.
      9) "TOS POWER" - TOS power.
      10) "TDC POWER" - Telephone demarcation cabinet power.
      11) "CCTV" - Closed circuit television circuits.
      12) "TMS" - Traffic monitoring station circuits.
      13) "CMS" - Changeable message sign circuits.
      14) "HAR" - Highway advisory radio circuits.
      15) "BOOSTER PUMP" - Booster pump circuit.

2. The nominal dimensions of the opening in which the cover sets shall be the same as the cover dimensions except the length and width dimensions shall be ⅛" greater.

3. Covers and boxes shall be interchangeable with California standard male and female gages. When interchanged with a standard male or female gage, the top surfaces shall be flush within ⅛". Top outside radius of covers and pull boxes shall have a ⅛" radius.

4. Pull box extension may be another pull box as long as the bottom edge of the pull box can fit into the cover opening.

5. All dimensions for the cover for non-traffic pull box are nominal values.

STATE OF CALIFORNIA
DEPARTMENT OF TRANSPORTATION

ELECTRICAL SYSTEMS (NON-TRAFFIC PULL BOX)

NO SCALE

RSP ES-8A DATED JULY 19, 2013 SUPERSEDES RSP ES-8A DATED JANUARY 20, 2012 THAT SUPPLEMENTS THE STANDARD PLANS BOOK DATED 2010.

REVISED STANDARD PLAN RSP ES-8A

2010 REVISED STANDARD PLAN RSP ES-8A

7-15-13