Dist	COUNTY	ROUTE	POST MILES TOTAL PROJECT	SHEET No.	TOTAL SHEETS
07	LA	210	R16.1/R25.8	801	927

William K. Farnbach
REGISTERED CIVIL ENGINEER

July 19, 2013
PLANS APPROVAL DATE

REGISTERED PROFESSIONAL ENGINEER
William K. Farnbach
No. C49042
Exp. 9-30-14
CIVIL
STATE OF CALIFORNIA

THE STATE OF CALIFORNIA OR ITS OFFICERS OR AGENTS SHALL NOT BE RESPONSIBLE FOR THE ACCURACY OR COMPLETENESS OF SCANNED COPIES OF THIS PLAN SHEET.

TO ACCOMPANY PLANS DATED 5-12-14

NOTES:

1. For longitudinal bar size, spacing and clearances, see Table 1 on Revised Standard Plan RSP P4.
2. The length of lap splices for bar reinforcement must be at least 25".
3. For tie bars in longitudinal construction joint, see Revised Standard Plan RSP P16.
4. Place additional longitudinal bars parallel to and in the same plane as the longitudinal bars.
5. Place additional longitudinal bars symmetrically about longitudinal construction joint.

ABBREVIATION

D = Thickness of CRCP

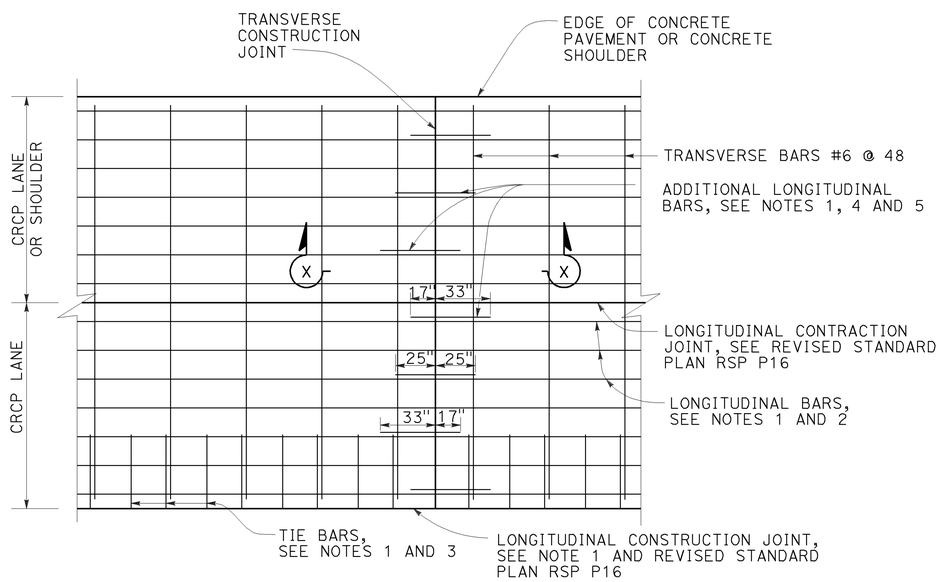

DETAIL A

Additional longitudinal bars at transverse construction joint

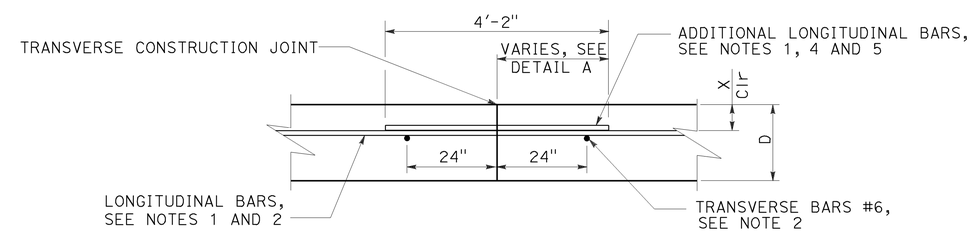

SECTION X-X

TRANSVERSE CONSTRUCTION JOINT

STATE OF CALIFORNIA
DEPARTMENT OF TRANSPORTATION

CONTINUOUSLY REINFORCED CONCRETE PAVEMENT TRANSVERSE CONSTRUCTION JOINT

NO SCALE

RSP P14 DATED JULY 19, 2013 SUPPLEMENTS THE STANDARD PLANS BOOK DATED 2010.

REVISED STANDARD PLAN RSP P14

2010 REVISED STANDARD PLAN RSP P14

5-31-13

Dist	COUNTY	ROUTE	POST MILES TOTAL PROJECT	SHEET No.	TOTAL SHEETS
07	LA	210	R16.1/R25.8	802	927

William K. Farnbach
REGISTERED CIVIL ENGINEER

July 19, 2013
PLANS APPROVAL DATE

REGISTERED PROFESSIONAL ENGINEER
William K. Farnbach
No. C49042
Exp. 9-30-14
CIVIL
STATE OF CALIFORNIA

THE STATE OF CALIFORNIA OR ITS OFFICERS OR AGENTS SHALL NOT BE RESPONSIBLE FOR THE ACCURACY OR COMPLETENESS OF SCANNED COPIES OF THIS PLAN SHEET.

TO ACCOMPANY PLANS DATED 5-12-14

2010 REVISED STANDARD PLAN RSP P15

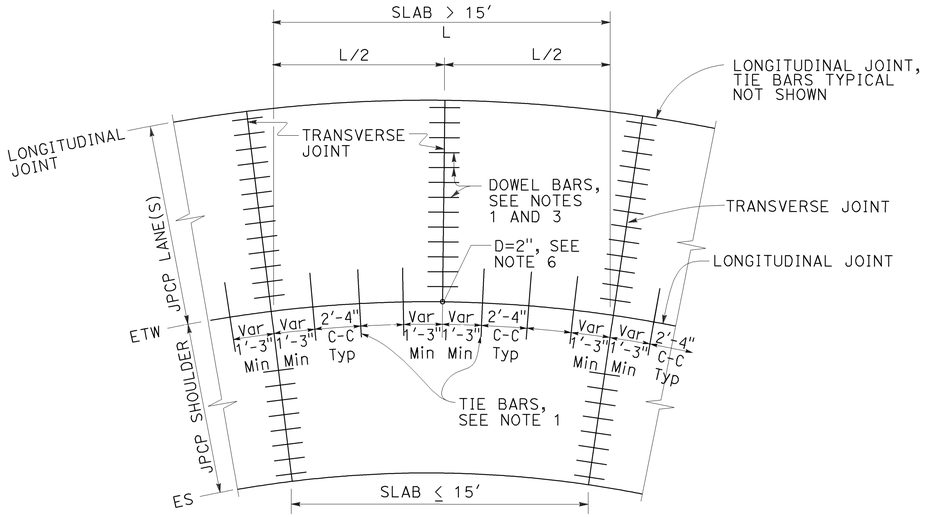

TIE BAR LAYOUT IN CURVED LANES

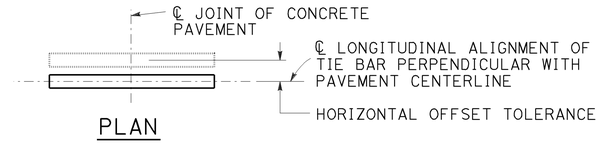

PLAN

HORIZONTAL OFFSET TOLERANCE

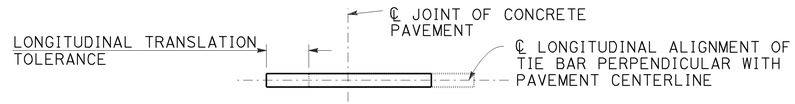

PLAN

LONGITUDINAL TRANSLATION TOLERANCE

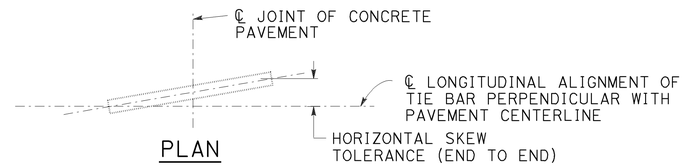

PLAN

HORIZONTAL SKEW TOLERANCE

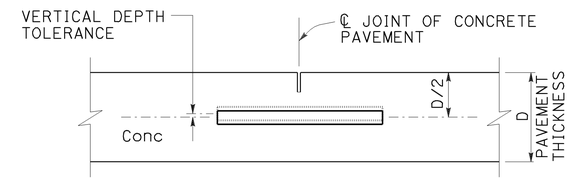

ELEVATION

VERTICAL DEPTH TOLERANCE

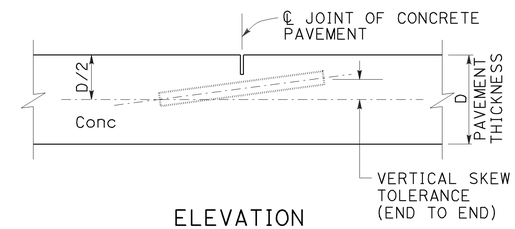

ELEVATION

VERTICAL SKEW TOLERANCE

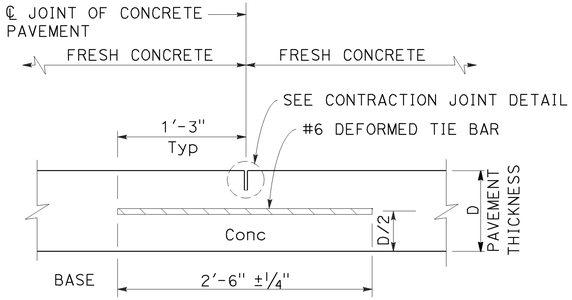

LONGITUDINAL CONTRACTION JOINT

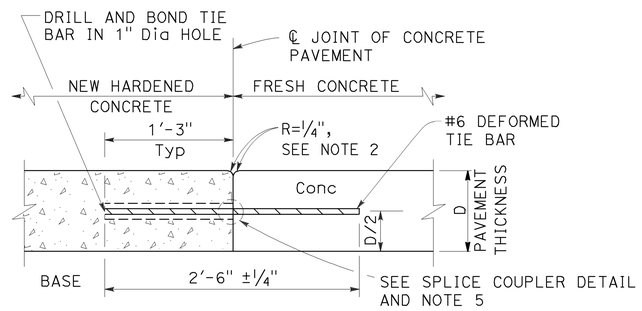

LONGITUDINAL CONSTRUCTION JOINT

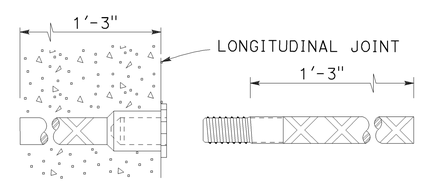

ALTERNATIVE SPLICE COUPLER

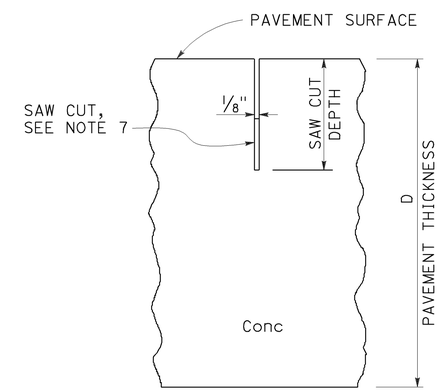

CONTRACTION JOINT DETAIL

NOTES:

1. See Revised Standard Plan RSP P1 for typical dowel bar and tie bar placement and locations.
2. Where new pavement is placed against existing concrete pavement, rounding the corner is not required.
3. For dowel bar sizes, See Revised Standard Plan RSP P10.
4. Tie bar details apply to inside widenings.
5. Use either drill and bond or splice couplers.
6. Full depth drilled hole. Fill hole with filler material.
7. The bottom of the saw cut must be at least 0.5" clear of any dowel bar, tie bar and bar reinforcement.

STATE OF CALIFORNIA
DEPARTMENT OF TRANSPORTATION

CONCRETE PAVEMENT-TIE BAR DETAILS

NO SCALE

RSP P15 DATED JULY 19, 2013 SUPPLEMENTS THE STANDARD PLANS BOOK DATED 2010.

REVISED STANDARD PLAN RSP P15

5-31-13

Dist	COUNTY	ROUTE	POST MILES TOTAL PROJECT	SHEET No.	TOTAL SHEETS
07	LA	210	R16.1/R25.8	803	927

William K. Farnbach
REGISTERED CIVIL ENGINEER

July 19, 2013
PLANS APPROVAL DATE

REGISTERED PROFESSIONAL ENGINEER William K. Farnbach No. C49042 Exp. 9-30-14 CIVIL STATE OF CALIFORNIA

THE STATE OF CALIFORNIA OR ITS OFFICERS OR AGENTS SHALL NOT BE RESPONSIBLE FOR THE ACCURACY OR COMPLETENESS OF SCANNED COPIES OF THIS PLAN SHEET.

TO ACCOMPANY PLANS DATED 5-12-14

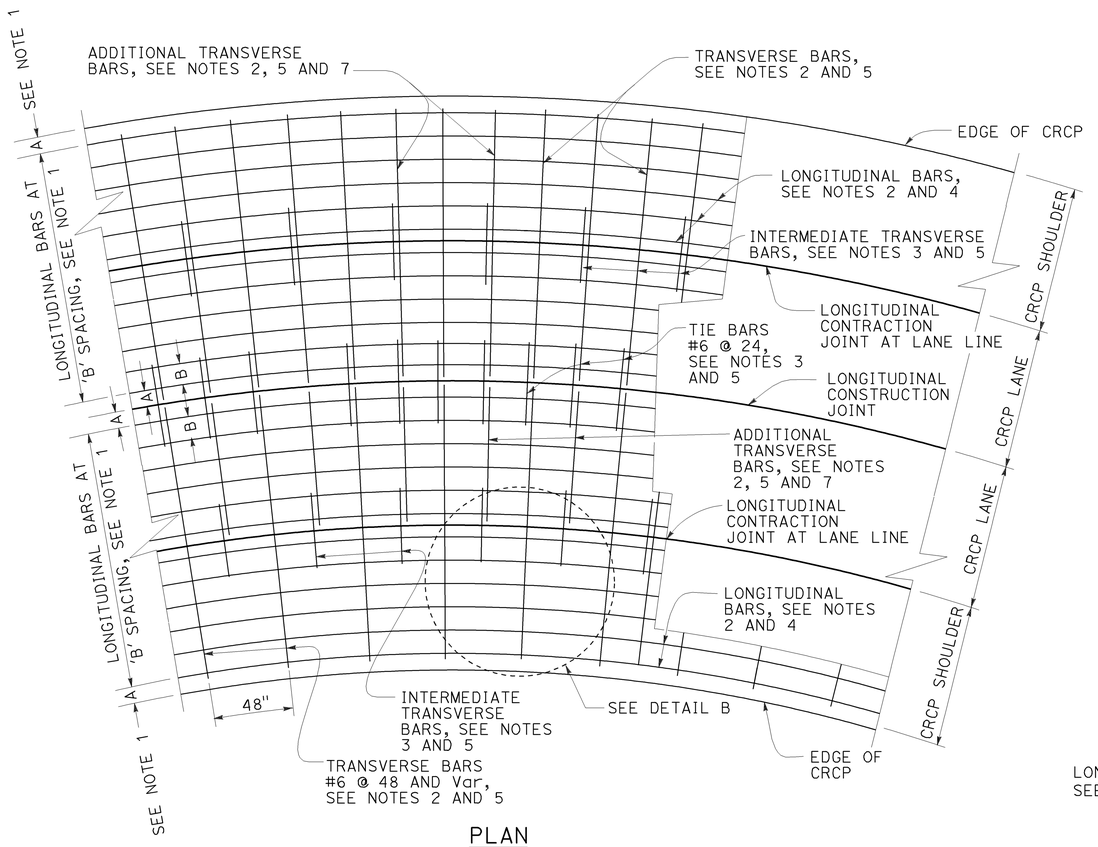

PLAN

CURVED LANES

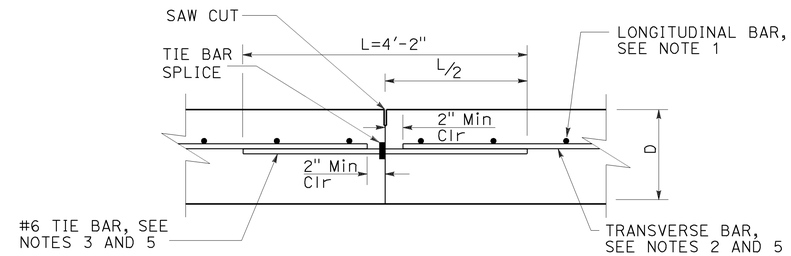

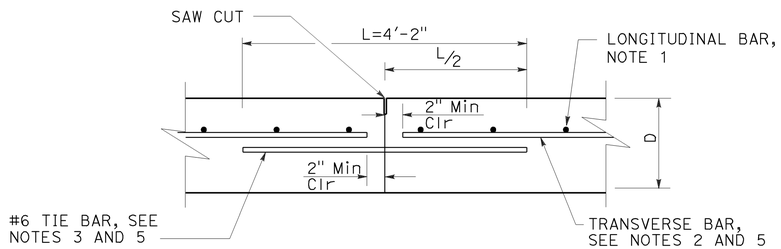

ALTERNATE

LONGITUDINAL CONSTRUCTION JOINT

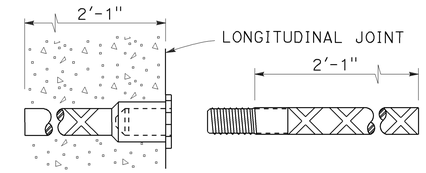

TIE BAR SPLICE COUPLER DETAIL

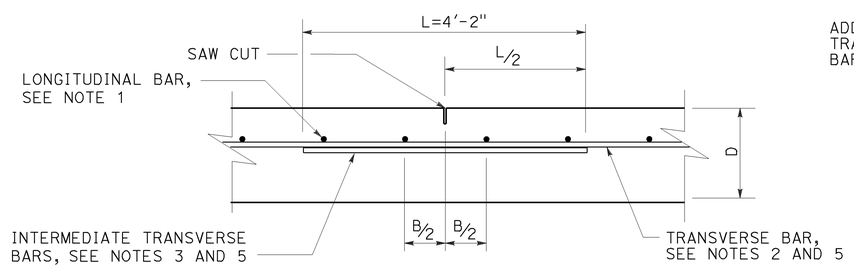

LONGITUDINAL CONTRACTION JOINT

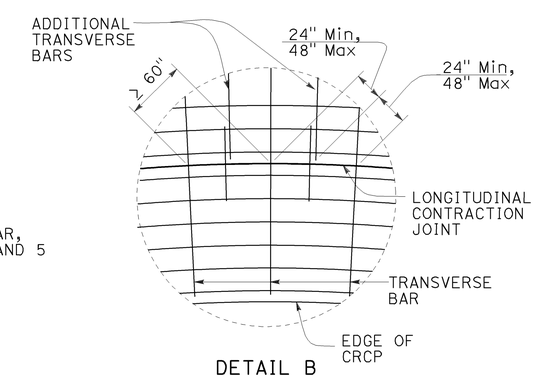

DETAIL B

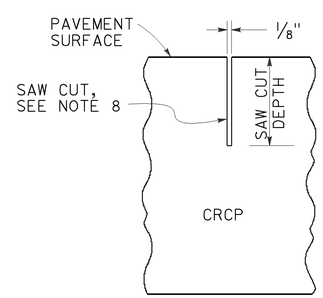

CONTRACTION JOINT SAW CUT DETAIL

NOTES:

1. For longitudinal bar spacing and clearances, see Table 1 on Revised Standard Plan RSP P4.
2. The length of lap splices for bar reinforcement must be at least 25".
3. Place tie bars and intermediate transverse bars parallel to and in the same plane as the transverse bars.
4. Place longitudinal bars parallel to roadway curvature.
5. Place transverse bars, additional transverse bars, tie bars and intermediate transverse bars perpendicular to the pavement curvature.
6. For additional longitudinal bars detail, see Detail A on Revised Standard Plans RSP P14.
7. Place additional transverse bars where required, see Detail B.
8. The bottom of the saw cut must be at least 0.5" clear of any dowel bar, tie bar and bar reinforcement.

ABBREVIATION:

D = Thickness of CRCP

STATE OF CALIFORNIA
DEPARTMENT OF TRANSPORTATION

CONTINUOUSLY REINFORCED CONCRETE PAVEMENT TIE BARS AND JOINT DETAILS

NO SCALE

RSP P16 DATED JULY 19, 2013 SUPPLEMENTS THE STANDARD PLANS BOOK DATED 2010.

REVISED STANDARD PLAN RSP P16

2010 REVISED STANDARD PLAN RSP P16

5-31-13

Dist	COUNTY	ROUTE	POST MILES TOTAL PROJECT	SHEET No.	TOTAL SHEETS
07	LA	210	R16.1/R25.8	804	927

William K. Farnbach
REGISTERED CIVIL ENGINEER

July 19, 2013
PLANS APPROVAL DATE

REGISTERED PROFESSIONAL ENGINEER William K. Farnbach No. C49042 Exp. 9-30-14 CIVIL STATE OF CALIFORNIA

THE STATE OF CALIFORNIA OR ITS OFFICERS OR AGENTS SHALL NOT BE RESPONSIBLE FOR THE ACCURACY OR COMPLETENESS OF SCANNED COPIES OF THIS PLAN SHEET.

TO ACCOMPANY PLANS DATED 5-12-14

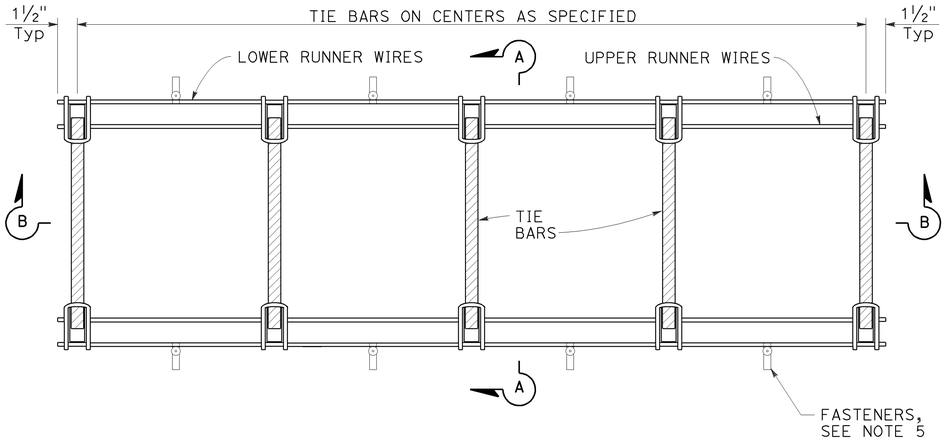

PLAN

TIE BAR BASKET

(Tie bars at longitudinal joint)
See Note 1

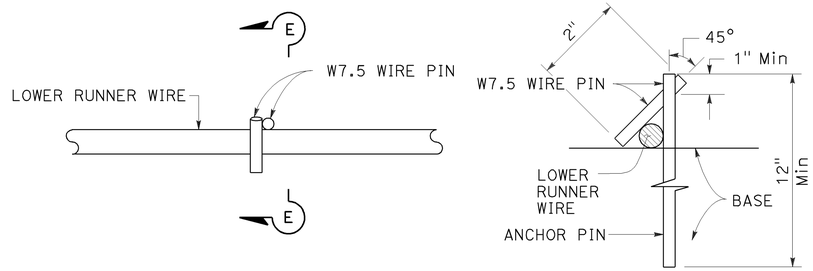

PLAN

SECTION E-E

ANCHOR PIN DETAIL

See Note 5

NOTES:

1. "U" frame shape assembly shown. Use either "U" frame shape or "A" frame shape.
2. Wire sizes shown are the minimum required.
3. All wire intersections must be resistance welded.
4. Weld may be at top or bottom of tie bars.
5. Use anchor pins where soil or granular base is used.

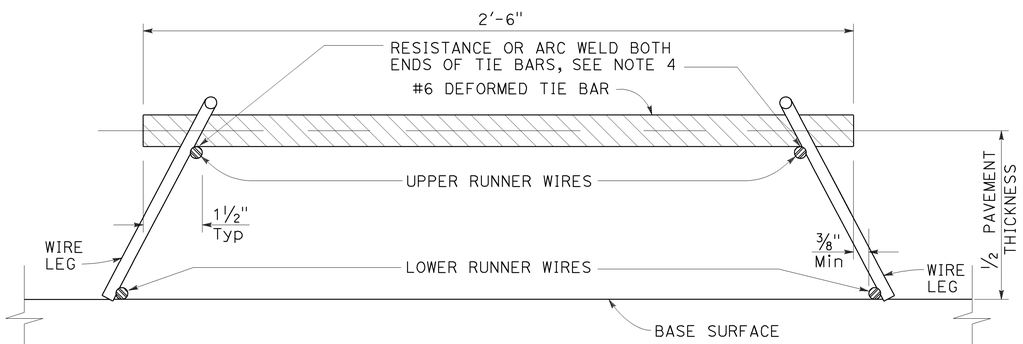

SECTION A-A

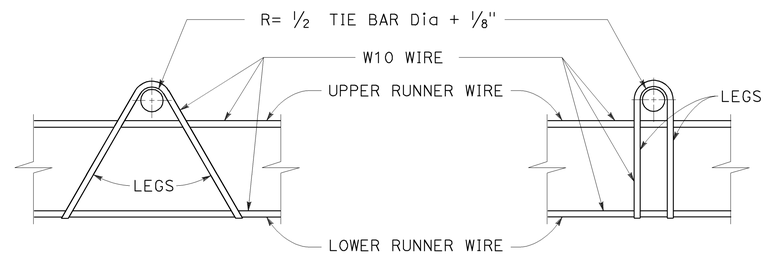

"A" SHAPE

"U" SHAPE

ASSEMBLY FRAME DETAILS

See Note 1

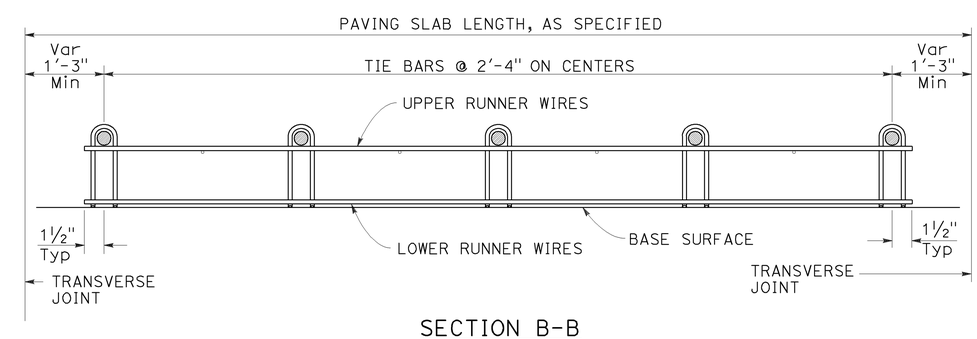

SECTION B-B

See Note 1

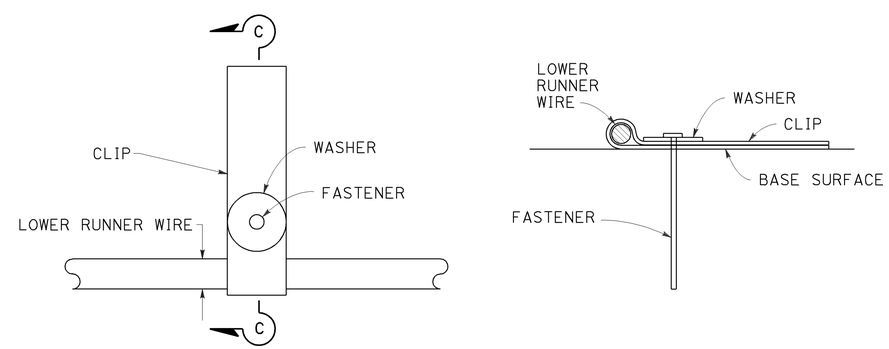

PLAN

SECTION C-C

FASTENER DETAIL

STATE OF CALIFORNIA
DEPARTMENT OF TRANSPORTATION

CONCRETE PAVEMENT TIE BAR BASKET DETAILS

NO SCALE

RSP P17 DATED JULY 19, 2013 SUPERSEDES STANDARD PLAN P17
DATED MAY 20, 2011 - PAGE 134 OF THE STANDARD PLANS BOOK DATED 2010.

REVISED STANDARD PLAN RSP P17

2010 REVISED STANDARD PLAN RSP P17

5-31-13

Dist	COUNTY	ROUTE	POST MILES TOTAL PROJECT	SHEET No.	TOTAL SHEETS
07	LA	210	R16.1/R25.8	805	927

William K. Farnbach
REGISTERED CIVIL ENGINEER

July 19, 2013
PLANS APPROVAL DATE

REGISTERED PROFESSIONAL ENGINEER William K. Farnbach No. C49042 Exp. 9-30-14 CIVIL STATE OF CALIFORNIA

THE STATE OF CALIFORNIA OR ITS OFFICERS OR AGENTS SHALL NOT BE RESPONSIBLE FOR THE ACCURACY OR COMPLETENESS OF SCANNED COPIES OF THIS PLAN SHEET.

TO ACCOMPANY PLANS DATED 5-12-14

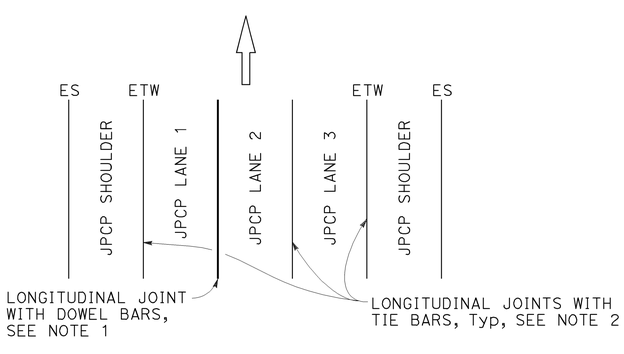

3 LANES WITH CONCRETE SHOULDERS
PLAN

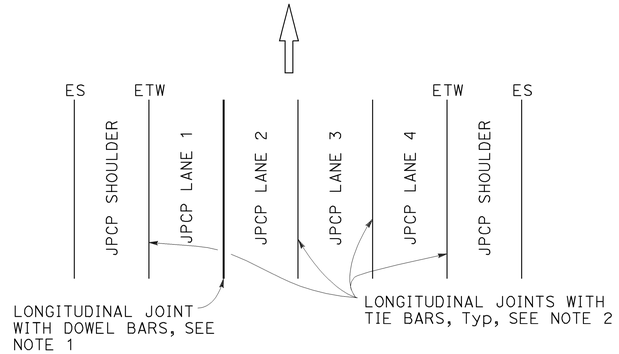

4 LANES WITH CONCRETE SHOULDERS
PLAN

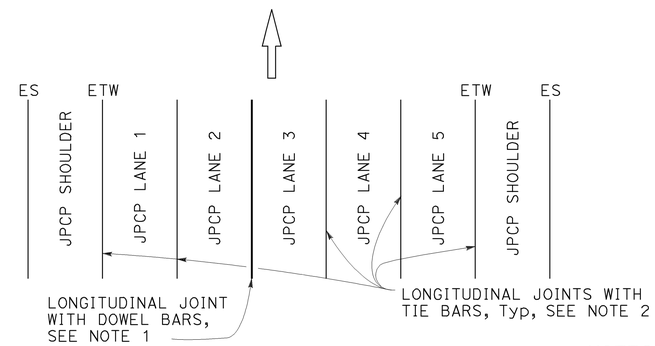

5 LANES WITH CONCRETE SHOULDERS
PLAN

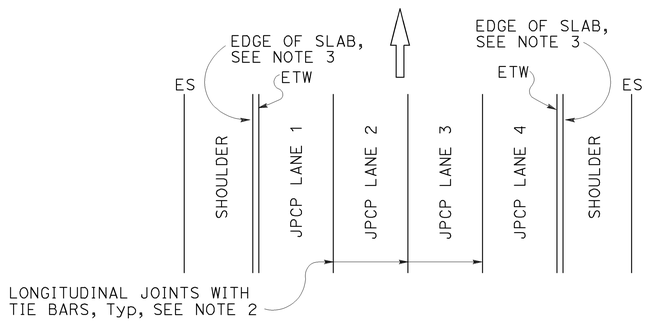

4 LANES OR LESS WITH AC SHOULDERS
PLAN

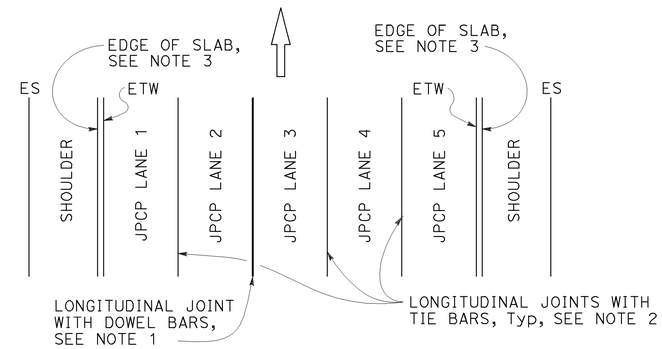

5 LANES WITH AC SHOULDERS
PLAN

NEW CONSTRUCTION

Location of Longitudinal Joints
For JPCP

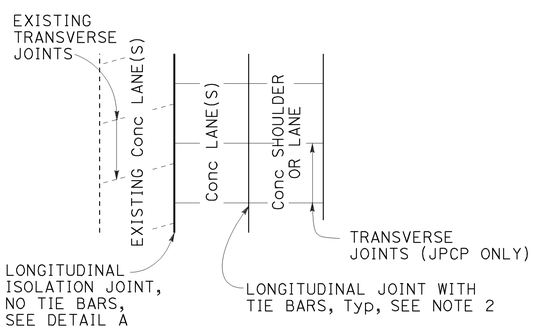

CASE 1
PLAN

Transverse Joints do not align between new and existing.

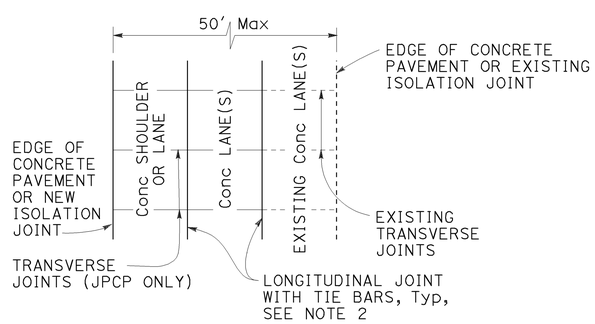

CASE 2
PLAN

Transverse Joints align between new and existing.
(For JPCP only)

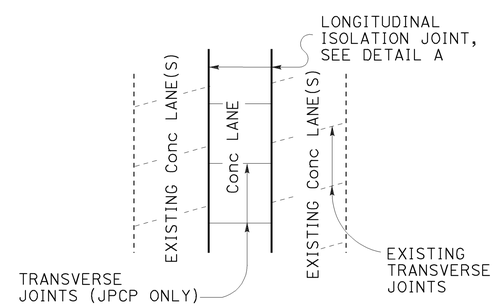

CASE 3 (INTERIOR LANE REPLACEMENT)
PLAN

Transverse Joints do not align between new and existing.

LANE/SHOULDER ADDITION OR RECONSTRUCTION

For JPCP and CRCP

NOTES:

1. See Revised Standard Plan RSP P10 for longitudinal joint with dowel bars.
2. See Revised Standard Plan RSP P15 for longitudinal joint with tie bars.
3. S= Reservoir depth.
   S= 7/8" ± 1/16" for asphalt rubber seals
   S= 9/16" ± 1/16" for silicone seals
   Preformed compression seals must be 13/16" wide and S= 1 11/16" ± 1/16"

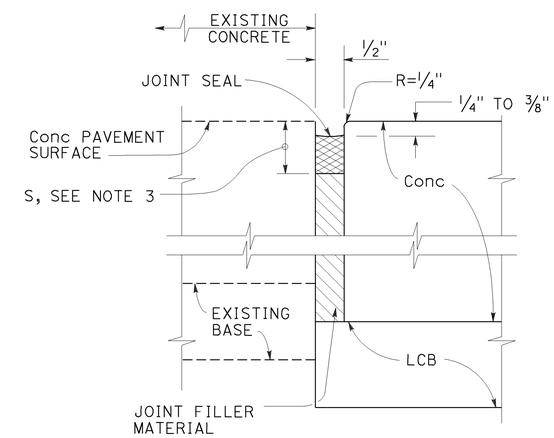

DETAIL "A"

ISOLATION JOINT

STATE OF CALIFORNIA
DEPARTMENT OF TRANSPORTATION

CONCRETE PAVEMENT LANE SCHEMATICS AND ISOLATION JOINT DETAIL

NO SCALE

RSP P18 DATED JULY 19, 2013 SUPERSEDES RSP P18 DATED APRIL 20, 2012 AND STANDARD PLAN P18 DATED MAY 20, 2011 - PAGE 135 OF THE STANDARD PLANS BOOK DATED 2010.

REVISED STANDARD PLAN RSP P18

2010 REVISED STANDARD PLAN RSP P18

5-31-13

Dist	COUNTY	ROUTE	POST MILES TOTAL PROJECT	SHEET No.	TOTAL SHEETS
07	LA	210	R16.1/R25.8	806	927

William K. Farnbach
REGISTERED CIVIL ENGINEER

July 19, 2013
PLANS APPROVAL DATE

REGISTERED PROFESSIONAL ENGINEER
William K. Farnbach
No. C49042
Exp. 9-30-14
CIVIL
STATE OF CALIFORNIA

THE STATE OF CALIFORNIA OR ITS OFFICERS OR AGENTS SHALL NOT BE RESPONSIBLE FOR THE ACCURACY OR COMPLETENESS OF SCANNED COPIES OF THIS PLAN SHEET.

TO ACCOMPANY PLANS DATED 5-12-14

2010 REVISED STANDARD PLAN RSP P20

NOTES:

1. Details do not apply to isolation joints and longitudinal construction joints.
2. Tie bars, dowel bars, and bar reinforcement are not shown.
3. Depths are measured from the final concrete pavement surface elevation after any grinding.

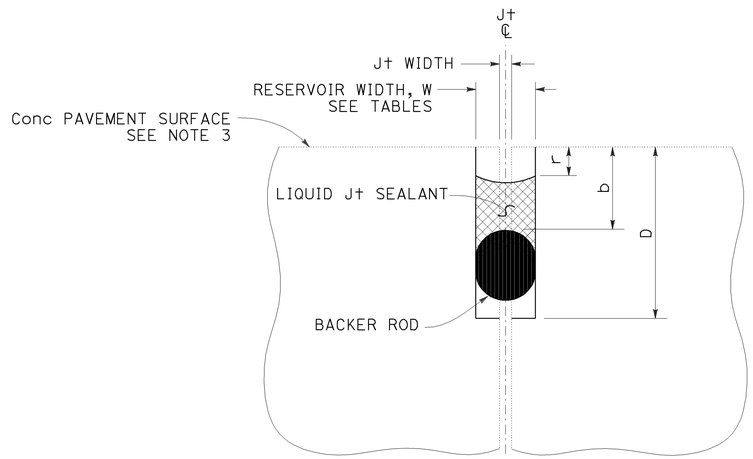

LIQUID JOINT SEALANT

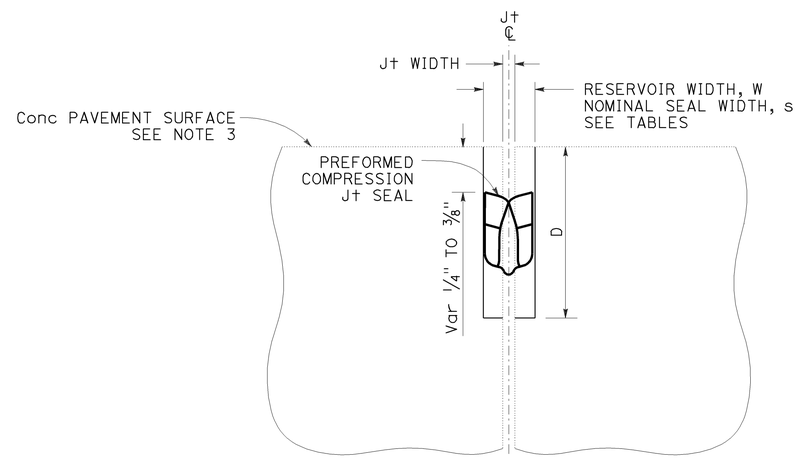

PREFORMED COMPRESSION JOINT SEAL

Const SEASON	Min RESERVOIR WIDTH * W ± 1/16"
WINTER	1/4"
SPRING	3/8"
SUMMER	
FALL	

* Minimum reservoir width for replace joint seal = existing joint width + 1/8"

RESERVOIR WIDTH W ±1/16"	LIQUID JOINT SEALANT DIMENSIONS					
	BACKER ROD NOMINAL Dia *	DEPTHS (ASPHALT RUBBER) **		DEPTHS (SILICONE)		
		RESERVOIR D ± 1/4"	BACKER ROD b ± 1/16"	RESERVOIR D ± 1/4"	BACKER ROD b ± 1/16"	RECESS r ± 1/16"
1/4"	3/8"	1 3/4"	7/8"	1 3/8"	1/2"	1/4"
3/8"	1/2"	1 7/8"	7/8"	1 1/2"	1/2"	1/4"
1/2"	3/4"	2"	7/8"	1 3/4"	9/16"	5/16"
5/8"	7/8"	2 1/4"	1"	2"	5/8"	5/16"
3/4"	1"	2 3/4"	1 1/8"	2 1/4"	3/4"	3/8"
7/8"	1 1/4"	3"	1 1/4"	2 1/2"	13/16"	3/8"
1"	1 1/2"	3 1/4"	1 3/8"	2 5/8"	7/8"	3/8"
1 1/8"	1 1/2"	3 1/2"	1 1/2"	2 13/16"	1"	1/2"

* Larger diameter backer rods may be substituted according to manufacturer recommendations if reservoir depth is increased equivalently.

** Asphalt rubber sealant recess depth "r" varies from 1/4" to 3/8"

RESERVOIR WIDTH W ±1/16"	PREFORMED COMPRESSION JOINT SEAL DIMENSIONS	
	NOMINAL SEAL WIDTH s	RESERVOIR DEPTH D ± 1/4"
1/4"	7/16"	1 1/4"
3/8"	11/16"	1 7/16"
1/2"	13/16"	1 11/16"
5/8"	1"	1 7/8"
3/4"	1 1/4"	2 1/8"
7/8"	1 5/8"	2 5/8"
1"	1 5/8"	2 5/8"
1 1/8"	2"	2 7/8"

STATE OF CALIFORNIA
DEPARTMENT OF TRANSPORTATION

JOINT SEALS

NO SCALE

RSP P20 DATED JULY 19, 2013 SUPERSEDES STANDARD PLAN P20
DATED MAY 20, 2011 - PAGE 136 OF THE STANDARD PLANS BOOK DATED 2010.

REVISED STANDARD PLAN RSP P20

DIST	COUNTY	ROUTE	POST MILES TOTAL PROJECT	SHEET No.	TOTAL SHEETS
07	LA	210	R16.1/R25.8	807	927

REGISTERED CIVIL ENGINEER

November 15, 2013
PLANS APPROVAL DATE

REGISTERED PROFESSIONAL ENGINEER Cornelis M. Hakim No. C55610 Exp. 12-31-14 CIVIL STATE OF CALIFORNIA

THE STATE OF CALIFORNIA OR ITS OFFICERS OR AGENTS SHALL NOT BE RESPONSIBLE FOR THE ACCURACY OR COMPLETENESS OF SCANNED COPIES OF THIS PLAN SHEET.

TO ACCOMPANY PLANS DATED 5-12-14

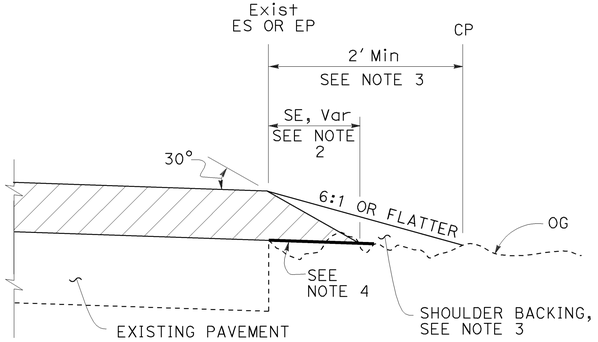

CASE A
Safety Edge

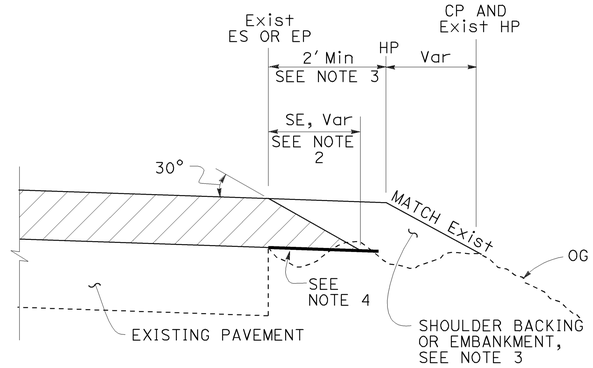

CASE B
Safety Edge

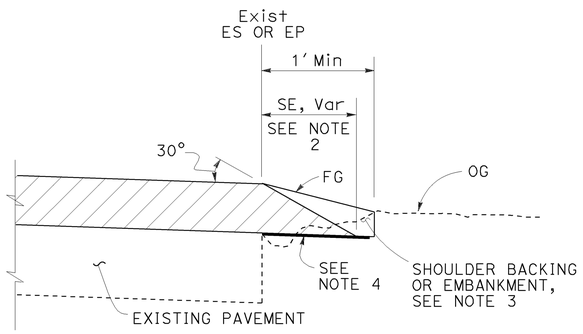

CASE C
Safety Edge

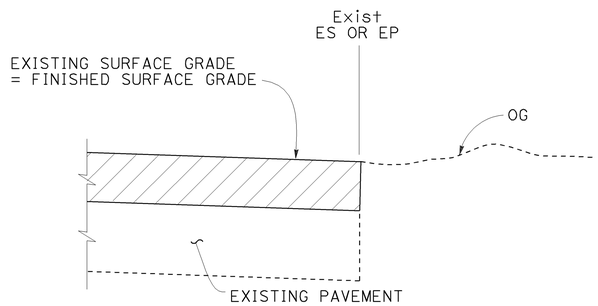

CASE D
Vertical Edge

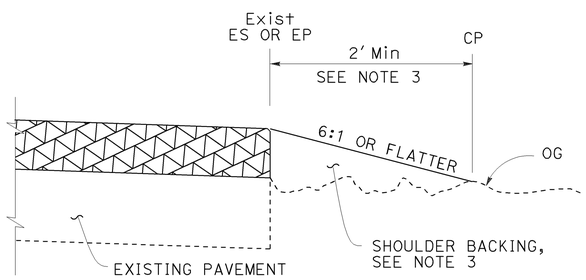

CASE E
Vertical Edge

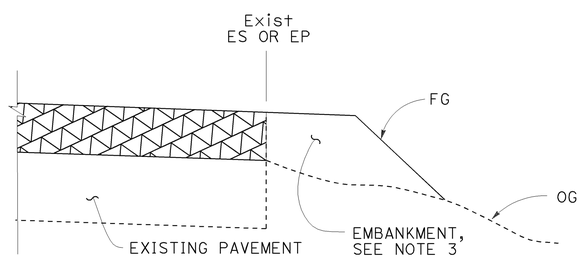

CASE F
Vertical Edge
* See Table A and Revised Std Plan RSP P74

LEGEND:

- HMA OVERLAY
- HMA OR CONCRETE OVERLAY
- CONCRETE OVERLAY

ABBREVIATIONS:

SE SAFETY EDGE
TT TOTAL THICKNESS OF SE

TABLE A
EDGE TREATMENT FOR VARIOUS OVERLAY THICKNESS AND CONDITIONS

	OVERLAY THICKNESS	
FIELD CONDITION	LESS THAN 0.15′	0.15′ OR MORE
Exist SLOPE 6:1 OR FLATTER	CASE E	CASE A
Exist SLOPE 3:1 TO 6:1	CASE E	CASE B
Exist SLOPE STEEPER THAN 3:1	CASE F	CASE F
CUT SECTION (REPLACE, COLD PLANE, MILL PAVEMENT)	CASE D	CASE C

ADDITIONAL HMA OR CONCRETE QUANTITIES FOR SE/SIDE/MILE

TYPICAL CROSS SECTION	TT	TOTAL ADDITIONAL MATERIAL FOR SE/SIDE/MILE		
		HMA (TON)	CONCRETE (CY)*	CONCRETE (CY)**
TT	0.15′	NA	NA	NA
	0.20′	13.7	NA	NA
	0.30′	30.9	NA	NA
	0.40′	54.9	NA	NA
	0.45′	69.4	NA	NA
TT 0.43′	0.50′	84.2	NA	NA
	0.60′	113.9	NA	NA
	0.70′	143.6	70.9	94.2
	0.80′	173.3	85.6	112.2
	0.90′	203.0	100.3	130.2
	1.00′	232.7	114.9	148.2
	1.10′	262.4	129.6	166.2
	1.20′	292.1	144.3	184.2

* For Detail "A"
** For Optional Detail "A"

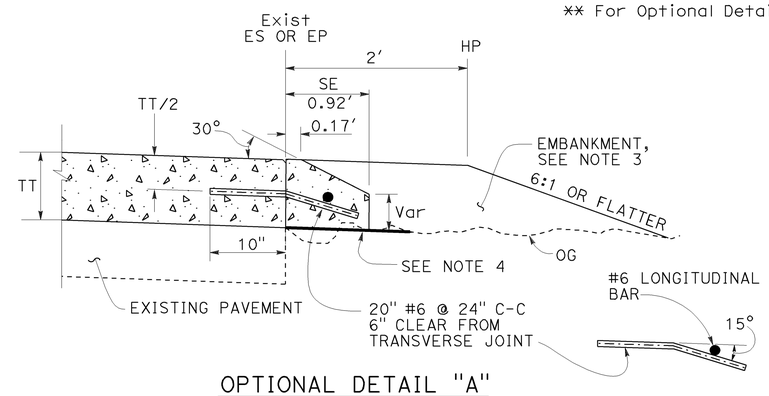

OPTIONAL DETAIL "A"
For concrete overlay
See Note 5

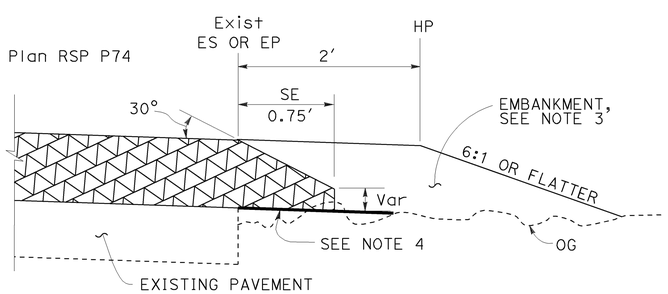

DETAIL "A"
For HMA overlay thickness more than 0.43′ or concrete overlay

NOTES:

1. For limits of safety edge and vertical edge treatments, see Revised Standard Plan RSP P74.
2. Details shown for HMA overlay thickness less than 0.43′. See Detail "A" for HMA overlay thickness more than 0.43′ or concrete overlay.
3. For locations and limits of shoulder backing or embankment see project plans.
4. Grade existing ground to place safety edge. 1′ minimum width
5. Safety edge transverse joint must match overlay transverse joint. End of #6 longitudinal bar must be 2" ±½" clear from transverse joint.
6. Safety edge is not needed in the area of MGS, barrier, right turn lane and acceleration lane. See Revised Standard Plan RSP P74.

STATE OF CALIFORNIA
DEPARTMENT OF TRANSPORTATION

PAVEMENT EDGE TREATMENTS-OVERLAYS

NO SCALE

RSP P75 DATED NOVEMBER 15, 2013 SUPERSEDES RSP P75 DATED JANUARY 20, 2012 THAT SUPPLEMENTS THE STANDARD PLANS BOOK DATED 2010.

REVISED STANDARD PLAN RSP P75

2010 REVISED STANDARD PLAN RSP P75

10-4-13

DIST	COUNTY	ROUTE	POST MILES TOTAL PROJECT	SHEET No.	TOTAL SHEETS
07	LA	210	R16.1/R25.8	808	927

REGISTERED CIVIL ENGINEER

November 15, 2013
PLANS APPROVAL DATE

REGISTERED PROFESSIONAL ENGINEER Cornelis M. Hakim No. C55610 Exp. 12-31-14 CIVIL STATE OF CALIFORNIA

THE STATE OF CALIFORNIA OR ITS OFFICERS OR AGENTS SHALL NOT BE RESPONSIBLE FOR THE ACCURACY OR COMPLETENESS OF SCANNED COPIES OF THIS PLAN SHEET.

TO ACCOMPANY PLANS DATED 5-12-14

LEGEND:

- HMA PAVEMENT
- HMA OR CONCRETE PAVEMENT
- CONCRETE PAVEMENT

ABBREVIATIONS:

SE SAFETY EDGE
TT TOTAL THICKNESS OF SE
HW HINGE WIDTH, DISTANCE FROM ES OR EP TO HP

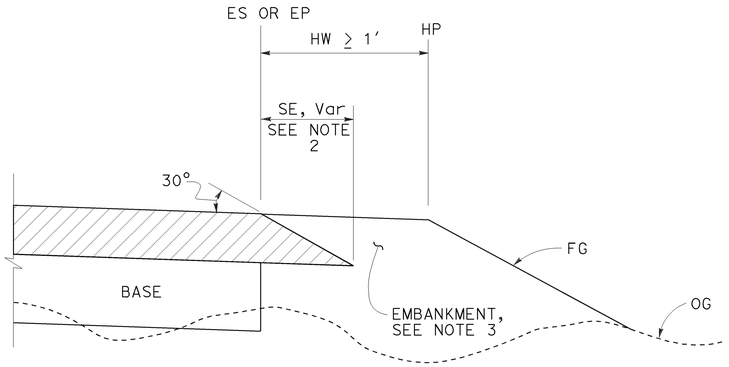

CASE K
Safety Edge - Fill Section, HW ≥ 1′

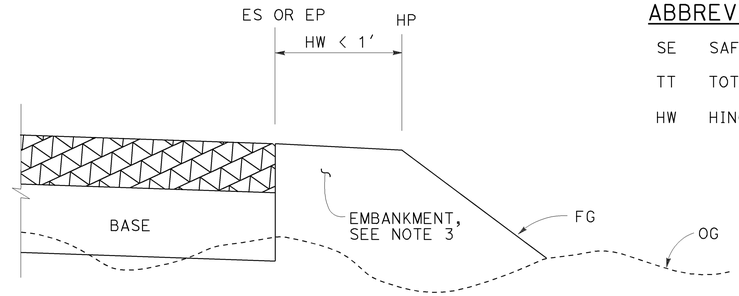

CASE L
Vertical Edge - Fill Section, HW < 1′

FILL SECTION

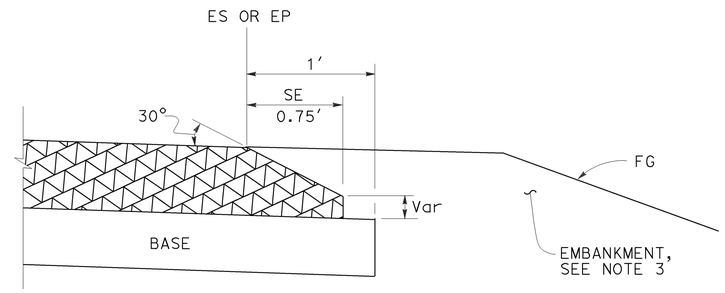

DETAIL "B"
For HMA pavement thickness more than 0.43′ or concrete pavement

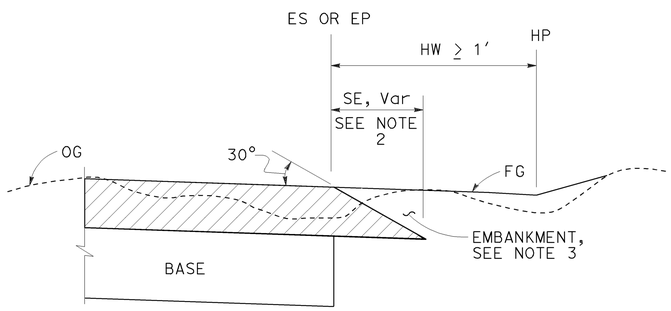

CASE M
Safety Edge - Cut Section, HW ≥ 1′

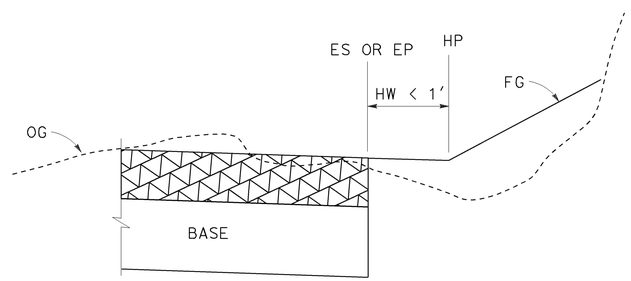

CASE N
Vertical Edge - Cut Section, HW < 1′

CUT SECTION

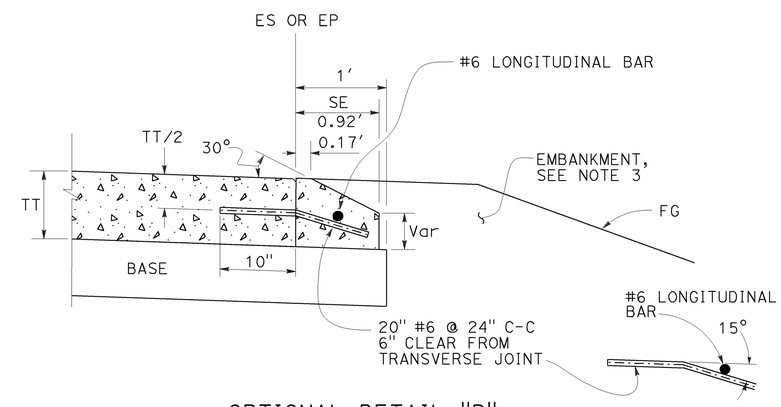

OPTIONAL DETAIL "B"
For concrete pavement
See Note 4

NOTES:

1. For limits of safety edge and vertical edge treatments, see Revised Standard Plan RSP P74
2. Details shown for HMA pavement thickness less than 0.43′. See Detail "B" for HMA pavement thickness more than 0.43′ or concrete pavement.
3. For locations and limits of embankment see project plans.
4. Safety edge transverse joint must match pavement transverse joint. End of #6 longitudinal bar must be 2" ±½" clear from transverse joint.
5. Safety edge is not needed in the area of MGS, barrier, right turn lane and acceleration lane. See Revised Standard Plan RSP P74.

STATE OF CALIFORNIA
DEPARTMENT OF TRANSPORTATION

PAVEMENT EDGE TREATMENTS-NEW CONSTRUCTION

NO SCALE

RSP P76 DATED NOVEMBER 15, 2013 SUPERSEDES RSP P76 DATED JANUARY 20, 2012 THAT SUPPLEMENTS THE STANDARD PLANS BOOK DATED 2010.

REVISED STANDARD PLAN RSP P76

2010 REVISED STANDARD PLAN RSP P76

10-4-13

TO ACCOMPANY PLANS DATED 5-12-14

Dist	COUNTY	ROUTE	POST MILES TOTAL PROJECT	SHEET No.	TOTAL SHEETS
07	LA	210	R16.1/R25.8	809	927

REGISTERED CIVIL ENGINEER

October 19, 2012
PLANS APPROVAL DATE

REGISTERED PROFESSIONAL ENGINEER Glenn DeCou No. C34547 Exp. 9-30-13 CIVIL STATE OF CALIFORNIA

THE STATE OF CALIFORNIA OR ITS OFFICERS OR AGENTS SHALL NOT BE RESPONSIBLE FOR THE ACCURACY OR COMPLETENESS OF SCANNED COPIES OF THIS PLAN SHEET.

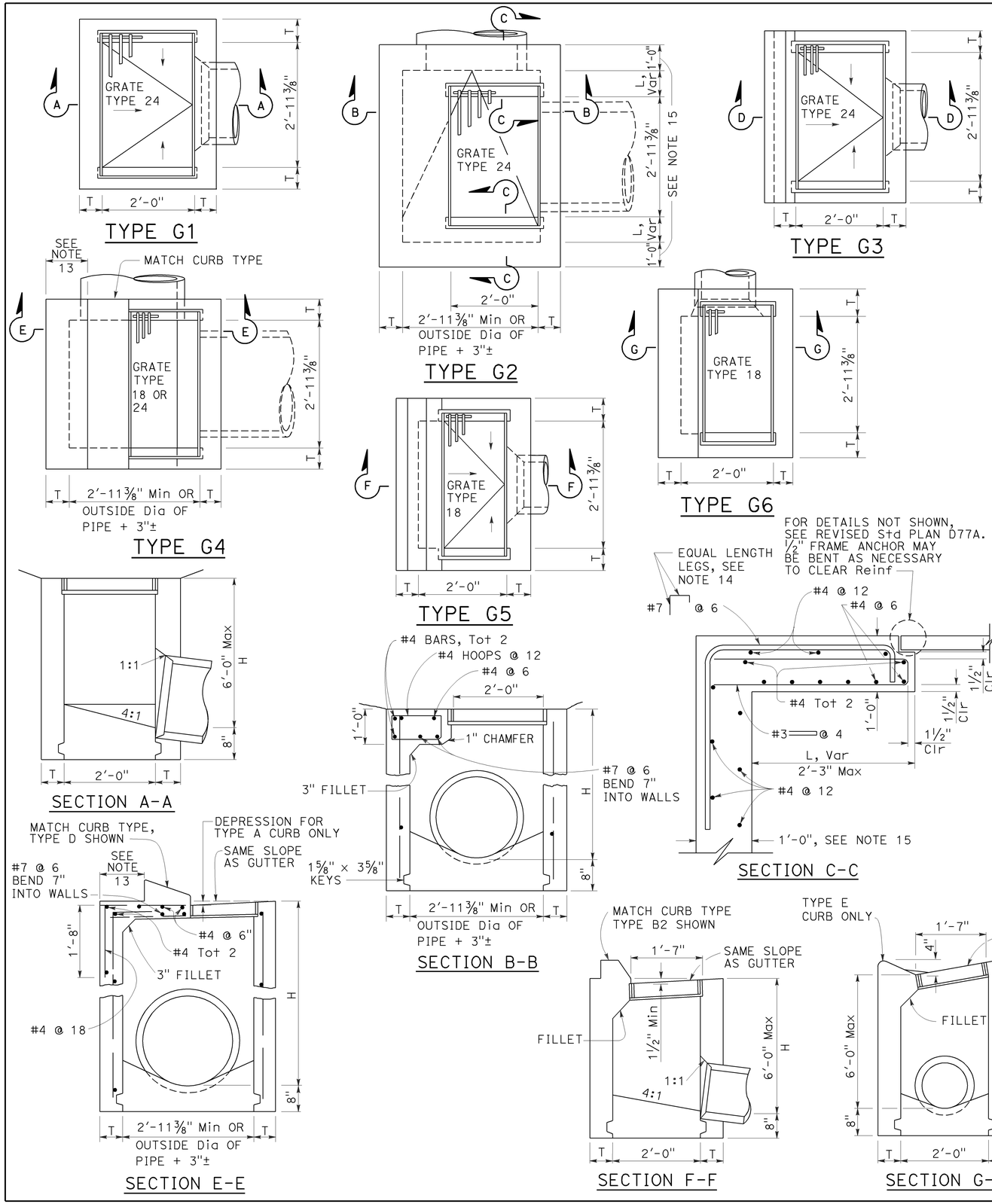

NOTES:

1. "H" is the difference in elevation between the outlet pipe flow line and the normal gutter grade line undepressed.
2. For "T" wall thickness, see Table A below.
3. Wall reinforcing not required when "H" is 8'-0" or less and the unsupported width or length is 7'-0" or less. Walls exceeding these limits shall be reinforced with #4 bars @ 1'-6" ± centers placed 1½" clear to inside of box unless otherwise shown.
4. Inlet bottom reinforcing not required. See Standard Plan D74C for alternative reinforced bottom and alternative half round bottom.
5. Steps-None required where "H" is less than 2'-6". Where "H" is 2'-6" or more, install steps with lowest rung 1'-0" above the floor and highest rung not more than 6" below top of inlet. The distance between steps shall not exceed 1'-0" and shall be uniform throughout the length of the wall. Place steps in the wall without an opening. Steps inserts may be substituted for the bar steps. Step inserts shall comply with State Industrial Safety requirements. See Standard Plan D74C for step details.
6. Details shown apply to both metal and concrete pipe.
7. Pipe(s) can be placed in any wall.
8. Curb section shall match adjacent curb.
9. Basin floors shall have wood trowel finish and a minimum slope of 12:3 from all directions toward outlet pipe.
10. Set inlet so that grate bars are parallel to direction of principal surface flow.
11. See Revised Standard Plans D77A and D77B for grate and frame details and weights of miscellaneous iron and steel.
12. See Standard Plan D78A for gutter depression details.
13. This dimenison will vary with different grates, curbs types, box width and wall thickness.
14. Bar may be rotated as necessary to clear opening. Where "L" is 6" or less, bar may be omitted.
15. Where "L" is 6" or less, wall thickness shall be as shown in Table A.
16. Cast-in-place inlets to be formed around all pipes/stubs intersecting the inlet, and concrete poured in one continuous operation. Precast inlets shall have mortared connections conforming to details for Type GCP Inlet shown on Standard Plan D75B. See Standard Specifications for mortar composition.

TABLE A

CONCRETE QUANTITIES				
TYPE	H=3'-0" TO 8'-0" (T=6")		H=8'-1" TO 20'-0" (T=8")	
	H=3'-0" (CY)	ADDITIONAL PCC PER FOOT (CY)	H=8'-1" (CY)	ADDITIONAL PCC PER FOOT (CY)
G-1	0.95	0.220	See Note A	SEE NOTE A
G-2*	1.31	0.255	3.50	0.357
G-3	1.03	0.220	See Note A	SEE NOTE A
G-4* (TYPE 24)	1.27	0.255	3.48	0.357
G-4* (TYPE 18)	1.30	0.255	3.50	0.357
G-5	1.02	0.220	SEE NOTE A	SEE NOTE A
G-6	1.04	0.220	SEE NOTE A	SEE NOTE A

TABLE BASED ON 8" FLOOR SLAB. NO DEDUCTIONS ARE TO BE MADE TO THESE QUANTITIES BECAUSE OF PIPE OPENINGS, DIFFERENT FLOOR ALTERNATIVES OR DIFFERENT CURB TYPES. * QUANTITIES FOR TYPE G-2 AND G-4 INLETS BASED ON THE MINIMUM INTERIOR DIMENSIONS.

NOTE A:

Maximum allowable height 6'-0".

STATE OF CALIFORNIA
DEPARTMENT OF TRANSPORTATION

DRAINAGE INLETS

NO SCALE

RSP D73 DATED OCTOBER 19, 2012 SUPERSEDES STANDARD PLAN D73 DATED MAY 20, 2011 - PAGE 156 OF THE STANDARD PLANS BOOK DATED 2010.

REVISED STANDARD PLAN RSP D73

2010 REVISED STANDARD PLAN RSP D73

7-19-12

Dist	COUNTY	ROUTE	POST MILES TOTAL PROJECT	SHEET No.	TOTAL SHEETS
07	LA	210	R16.1/R25.8	810	927

Raymond Don Tsztoo
REGISTERED CIVIL ENGINEER

April 19, 2013
PLANS APPROVAL DATE

REGISTERED PROFESSIONAL ENGINEER Raymond Don Tsztoo No. C37332 Exp. 6-30-14 CIVIL STATE OF CALIFORNIA

THE STATE OF CALIFORNIA OR ITS OFFICERS OR AGENTS SHALL NOT BE RESPONSIBLE FOR THE ACCURACY OR COMPLETENESS OF SCANNED COPIES OF THIS PLAN SHEET.

TO ACCOMPANY PLANS DATED 5-12-14

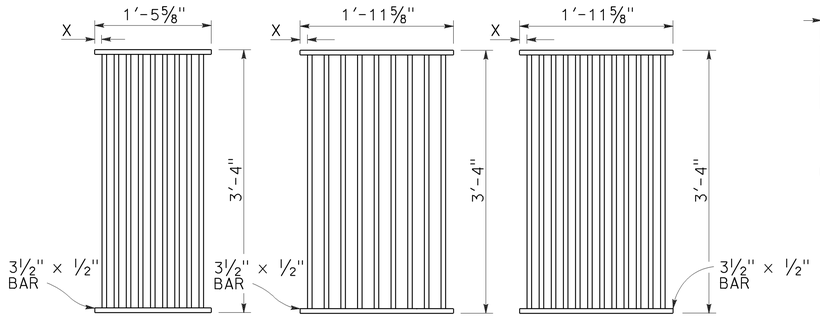

TYPE 18-9

1⅜" Clear spacing. Use within the roadbed on highways where bicycles and pedestrians are excluded.

TYPE 24-9

2" Clear spacing. Use in locations off the roadbed on all types of highways.

TYPE 24-12

1⅜" Clear spacing. Use within the roadbed on highways where bicycles and pedestrians are excluded.

RECTANGULAR GRATE DETAILS

(See table below)

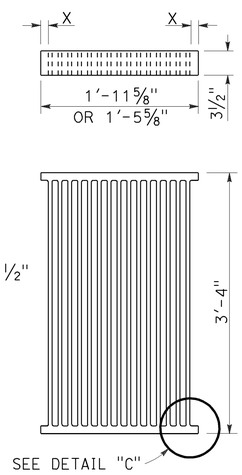

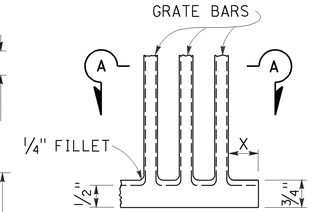

DETAIL "C"

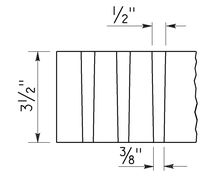

SECTION A-A

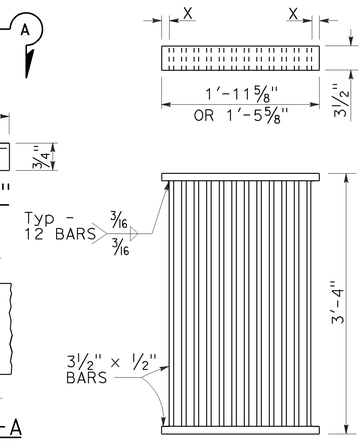

ALTERNATIVE CAST DUCTILE IRON GRATE OR CAST CARBON STEEL GRATE

ALTERNATIVE WELDED GRATE

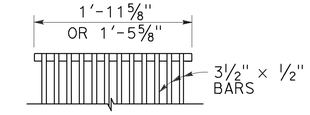

CAST END BLOCK

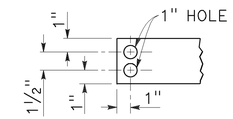

END OF BAR

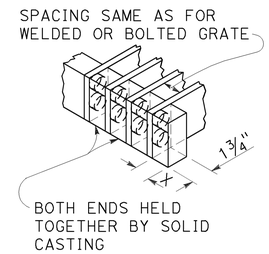

ALTERNATIVE CAST DUCTILE IRON OR CAST CARBON STEEL END BLOCK GRATE

NOTES:

1. Grate type numbers refer to approximate width of grate in inches and number of bars, respectively.
2. Contractor has the option of using cast ductile iron, cast carbon steel, welded, bolted, or cast end block grate.
3. Rounded top of bars optional on all grates.
4. Pipe inlets with a grate shall be placed so that bars parallel direction of principle surface flow.
5. Complete joint penetration butt welds may be substituted for the fillet welds on all anchors.
6. Standard square, hexagon, round or equivalent headed anchors may be substituted for the right angle hooks on the anchors shown on this plan.
7. Grate and frame weights are based on welded grates (weights of face angles, steps, protection bars, etc. are not included).
8. Connect chain to grate and frame only at locations shown on the plans. When chain is required, do not use cast ductile iron grates.

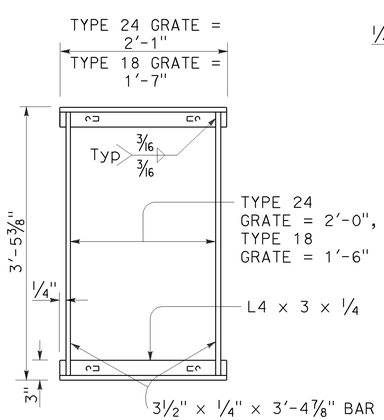

TYPICAL FRAME

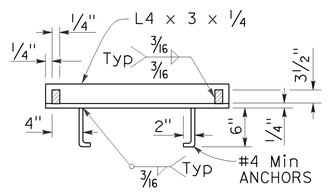

CROSS SECTION

(Thru frame)

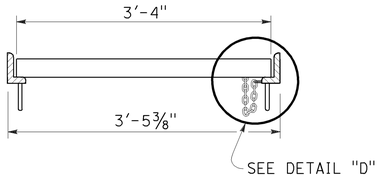

LONGITUDINAL SECTION

(Thru frame and grate)

RECTANGULAR FRAME DETAILS

(For all rectangular grates)

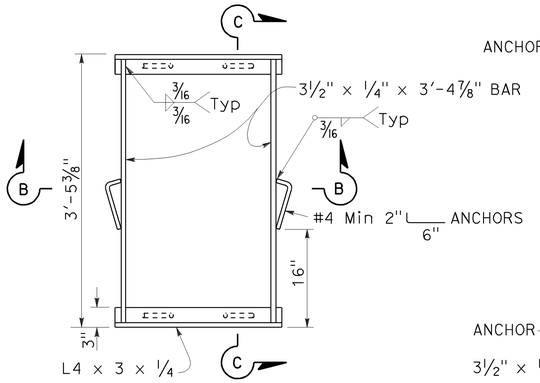

TYPICAL FRAME

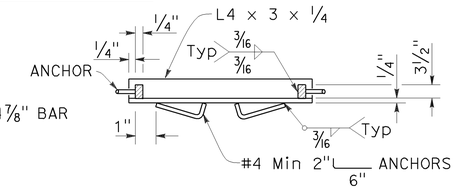

SECTION B-B

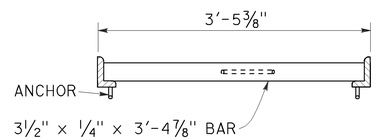

SECTION C-C

ALTERNATIVE ANCHOR FOR RECTANGULAR FRAME

(For details not shown, See Rectangular Frame Details)

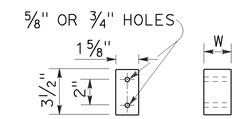

BAR SPACER

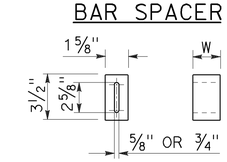

ALTERNATIVE SPACER

W = 1⅜" or 2"

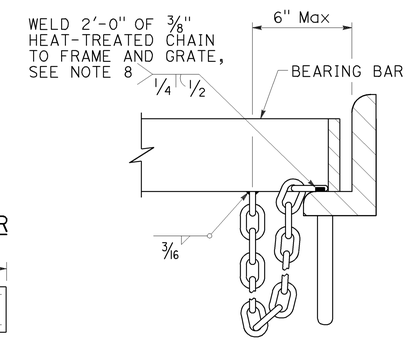

DETAIL "D"

(Steel grates only)

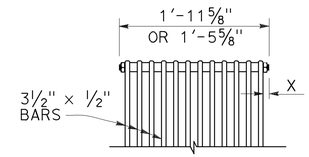

BOLTED END BLOCK

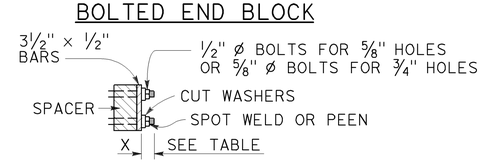

BOLTING DETAIL

ALTERNATIVE BOLTED GRATE

GRATE BAR SPACING TABLE

TYPE	No. OF BARS	CLEAR BAR SPACING	X
18-9	9	1⅜"	1 1/16"
24-9	9	2"	1 9/16"
24-12	12	1⅜"	1¼"

INLET TYPE	COVER TYPE	WEIGHT LB
OS	PLATE	174
OL-7	PLATE	170
OL-10	PLATE	170
OL-14	PLATE	170
OL-21	PLATE	170
OCP	PLATE	112
OCPI	PLATE	112
OCPI	REDWOOD	42
OMP	PLATE	177
OMPI	PLATE	177

INLET TYPE	GRATE TYPE	No. OF GRATES	WEIGHT LB
GDO	24-12	2	634
GOL-7	24-12	1	326
GOL-10	24-12	1	326
GO,G1,G2,G3,G4 (TYPE 24)	24-9	1	263
	24-12	1	326
G4 (TYPE 18),G5,G6	18-9	1	249
GT1	18-9	2	498
GT2	18-9	2	498
GT3	24-12	2	652
GT4	24-12	2	652
TRASH RACK			22
GRATE CHAIN			3

BASIS FOR Misc IRON & STEEL FINAL PAY WEIGHTS FOR DRAINAGE INLETS

(See Note 7)

STATE OF CALIFORNIA
DEPARTMENT OF TRANSPORTATION

GRATE DETAILS No. 1

NO SCALE

RSP D77A DATED APRIL 19, 2013 SUPERSEDES RSP D77A DATED JULY 20, 2012 AND STANDARD PLAN D77A DATED MAY 20, 2011 - PAGE 164 OF THE STANDARD PLANS BOOK DATED 2010.

REVISED STANDARD PLAN RSP D77A

2010 REVISED STANDARD PLAN RSP D77A

4-4-13

Dist	COUNTY	ROUTE	POST MILES TOTAL PROJECT	SHEET No.	TOTAL SHEETS
07	LA	210	R16.1/R25.8	811	927

LICENSED LANDSCAPE ARCHITECT

July 19, 2013
PLANS APPROVAL DATE

THE STATE OF CALIFORNIA OR ITS OFFICERS OR AGENTS SHALL NOT BE RESPONSIBLE FOR THE ACCURACY OR COMPLETENESS OF SCANNED COPIES OF THIS PLAN SHEET.

LICENSED LANDSCAPE ARCHITECT — Gregory A. Balzer — 2516 — 02-28-15 Renewal Date — 7-19-13 Date — STATE OF CALIFORNIA

TO ACCOMPANY PLANS DATED 5-12-14

A

AB	AGGREGATE BASE
ABS	ACRYLONITRILE-BUTADIENE-STYRENE
AC	ASPHALT CONCRETE
ACC	ARMOR-CLAD CONDUCTORS
Adj	ADJACENT/ADJUSTABLE
AIC	AUXILIARY IRRIGATION CONTROLLER
Alt	ALTERNATIVE
AMEND	AMENDMENT
ARV	AIR RELEASE VALVE
AUTO	AUTOMATIC
AUX	AUXILIARY
AVB	ATMOSPHERIC VACUUM BREAKER

B

B&B	BALLED AND BURLAPPED
B/B	BRASS/BRONZE
B/B/PL	BRASS/BRONZE/PLASTIC
B/PL	BRASS/PLASTIC
BFM	BONDED FIBER MATRIX
Bit Ctd	BITUMINOUS COATED
BP	BOOSTER PUMP
BPA	BACKFLOW PREVENTER ASSEMBLY
BPE	BACKFLOW PREVENTER ENCLOSURE
BV	BALL VALVE

C

C	CONDUIT
CAP	CORRUGATED ALUMINUM PIPE
CARV	COMBINATION AIR RELEASE VALVE
CB	COUPLING BAND
CCA	CAM COUPLER ASSEMBLY
CEC	CONTROLLER ENCLOSURE CABINET
CHDPE	CORRUGATED HIGH DENSITY POLYETHYLENE
CL	CHAIN LINK
CNC	CONTROL AND NEUTRAL CONDUCTORS
Conc	CONCRETE
CP	COPPER PIPE
CS	COMPOST SOCK
CSP	CORRUGATED STEEL PIPE
CST	CENTER STRIP
CV	CHECK VALVE

D

Dia	DIAMETER
DIP	DUCTILE IRON PIPE
DIT	DRIP IRRIGATION TUBING
DG	DECOMPOSED GRANITE
DN	DIAMETER NOMINAL
DVA	DRIP VALVE ASSEMBLY

E

EC	EROSION CONTROL
ECTC	EROSION CONTROL TECHNOLOGY COUNCIL
Elect	ELECTRIC/ELECTRICAL
Elev	ELEVATION
ELL	ELBOW
ENCL	ENCLOSURE
EP	EDGE OF PAVEMENT
ES	EDGE OF SHOULDER
EST	END STRIP
ESTB	ESTABLISHMENT
ETW	EDGE OF TRAVELED WAY

F

F	FULL CIRCLE
F/P	FULL/PART CIRCLE
FCV	FLOW CONTROL VALVE
FERT	FERTILIZER
FG	FINISHED GRADE
FH	FLEXIBLE HOSE
FIPT	FEMALE IRON PIPE THREAD
FIS	FERTILIZER INJECTOR SYSTEM
FL	FLOW LINE
FR	FIBER ROLL
FS	FLOW SENSOR
FSC	FLOW SENSOR CABLE
FV	FLUSH VALVE

G

Galv	GALVANIZED
GARV	GARDEN VALVE
GARVA	GARDEN VALVE ASSEMBLY
GM	GRAVEL MULCH
GPH	GALLONS PER HOUR
GPM	GALLONS PER MINUTE
GSP	GALVANIZED STEEL PIPE
GV	GATE VALVE

H

H	HALF CIRCLE
HDPE	HIGH DENSITY POLYETHYLENE
HP	HORSEPOWER/HINGE POINT
HPL	HIGH PRESSURE LINE
Hwy	HIGHWAY

I

IC	IRRIGATION CONTROLLER
ICC	IRRIGATION CONTROLLER(S) IN CONTROLLER ENCLOSURE CABINET
ID	INSIDE DIAMETER
IFS	IRRIGATION FILTRATION SYSTEM
IPS	IRON PIPE SIZE
IPT	IRON PIPE THREAD
Irr	IRRIGATION

L

L	LENGTH

M

Max	MAXIMUM
MBGR	METAL BEAM GUARD RAILING
MCV	MANUAL CONTROL VALVE
MIC	MASTER IRRIGATION CONTROLLER
Min	MINIMUM
MIPT	MALE IRON PIPE THREAD
Misc	MISCELLANEOUS
Mtl	MATERIAL
MVP	MAINTENANCE VEHICLE PULLOUT

N

NCN	NO COMMON NAME
NL	NOZZLE LINE
No.	NUMBER
NPT	NATIONAL PIPE THREAD

O

O/C	ON CENTER
OD	OUTSIDE DIAMETER
OL	OVERLAP

P

P	PART CIRCLE
PB	PULL BOX
PCC	PORTLAND CEMENT CONCRETE
PE	POLYETHYLENE
Pkt	PACKET
PL	PLASTIC
PLS	PURE LIVE SEED
PLT	PLANT/PLANTING
PLT ESTB	PLANT ESTABLISHMENT
PM	POST MILE
PR	PRESSURE RATED
PRLV	PRESSURE RELIEF VALVE
PRV	PRESSURE REGULATING VALVE
PVC	POLYVINYL CHLORIDE
Pvmt	PAVEMENT

Q

Q	QUARTER CIRCLE
QCV	QUICK COUPLING VALVE

R

R	RADIUS
RCP	REINFORCED CONCRETE PIPE
RCV	REMOTE CONTROL VALVE
RCVM	REMOTE CONTROL VALVE (MASTER)
RCVMF	REMOTE CONTROL VALVE (MASTER) W/FLOW SENSOR
RCVP	REMOTE CONTROL VALVE W/PRESSURE REGULATOR
RCW	RECYCLED WATER
RECP	ROLLED EROSION CONTROL PRODUCT
REQ	REQUIRED
RICS	REMOTE IRRIGATION CONTROL SYSTEM
R/W	RIGHT OF WAY

S

S	SLIP
SCH	SCHEDULE
SF	STATE-FURNISHED
Shld	SHOULDER
Sq	SQUARE
SST	SIDE STRIP
Sta	STATION
Std	STANDARD
SW	SIDEWALK/SOUND WALL

T

T	THIRD CIRCLE/THREAD
TLS	TRUCK LOADING STANDPIPE
TQ	THREE QUARTER CIRCLE
TRM	TURF REINFORCEMENT MAT
TT	TWO-THIRDS CIRCLE
TWSA	TREE WELL SPRINKLER ASSEMBLY
Typ	TYPICAL

U

UG	UNDERGROUND

W

W	WIDTH
W/	WITH
WM	WATER METER
WS	WYE STRAINER
WSA	WYE STRAINER ASSEMBLY
WSP	WELDED STEEL PIPE
WWM	WELDED WIRE MESH

NOTE:
For additional abbreviations, see Standard Plans A10A and A10B.

STATE OF CALIFORNIA
DEPARTMENT OF TRANSPORTATION

LANDSCAPE AND EROSION CONTROL ABBREVIATIONS

NO SCALE

RSP H1 DATED JULY 19, 2013 SUPERSEDES STANDARD PLAN H1 DATED MAY 20, 2011 - PAGE 218 OF THE STANDARD PLANS BOOK DATED 2010.

REVISED STANDARD PLAN RSP H1

2010 REVISED STANDARD PLAN RSP H1

6-28-13

Dist	COUNTY	ROUTE	POST MILES TOTAL PROJECT	SHEET No.	TOTAL SHEETS
07	LA	210	R16.1/R25.8	812	927

Gregory A. Balzer
LICENSED LANDSCAPE ARCHITECT

November 15, 2013
PLANS APPROVAL DATE

LICENSED LANDSCAPE ARCHITECT
Gregory A. Balzer 2576
Signature
2-28-15
Renewal Date
11-15-13
Date
STATE OF CALIFORNIA

THE STATE OF CALIFORNIA OR ITS OFFICERS OR AGENTS SHALL NOT BE RESPONSIBLE FOR THE ACCURACY OR COMPLETENESS OF SCANNED COPIES OF THIS PLAN SHEET.

TO ACCOMPANY PLANS DATED 5-12-14

EXISTING	NEW	ITEM DESCRIPTION
		WATER METER (WM)
		BACKFLOW PREVENTER ASSEMBLY (BPA)
		BACKFLOW PREVENTER ENCLOSURE (BPE)
		BOOSTER PUMP (BP)
		TRUCK LOADING STANDPIPE (TLS)
FS	FS	FLOW SENSOR (FS)
X		MASTER IRRIGATION CONTROLLER (MIC)
		AUXILIARY IRRIGATION CONTROLLER (AIC)
		IRRIGATION CONTROLLER (IC) IRRIGATION CONTROLLER (IC) (BATTERY) IRRIGATION CONTROLLER (IC) (SOLAR) IRRIGATION CONTROLLER (IC) (TWO WIRE) IRRIGATION CONTROLLER(S) IN CONTROLLER ENCLOSURE CABINET (ICC)
acc	ACC	ARMOR-CLAD CONDUCTORS (ACC)
cnc	CNC	CONTROL AND NEUTRAL CONDUCTORS (CNC)
		IRRIGATION CONDUIT
		EXTEND IRRIGATION CONDUIT
dip	DIP	DUCTILE IRON PIPE (SUPPLY LINE) (MAIN) (DIP)
		GALVANIZED STEEL PIPE (SUPPLY LINE) (MAIN) (GSP)
		GALVANIZED STEEL PIPE (SUPPLY LINE) (LATERAL) (GSP)
		PLASTIC PIPE (SUPPLY LINE) (MAIN)
		PLASTIC PIPE (SUPPLY LINE) (LATERAL)
cp	CP	COPPER PIPE (SUPPLY LINE)
dit	DIT	DRIP IRRIGATION TUBING
		REMOTE CONTROL VALVE (RCV) REMOTE CONTROL VALVE (MASTER) (RCVM) REMOTE CONTROL VALVE (MASTER) W/FLOW METER (RCVMF)
P	P	REMOTE CONTROL VALVE W/PRESSURE REGULATOR (RCVP)
		EXISTING MANUAL CONTROL VALVE (MCV)
		DRIP VALVE ASSEMBLY (DVA)
		WYE STRAINER ASSEMBLY (WSA)

EXISTING	NEW	ITEM DESCRIPTION
		GATE VALVE (GV)
		BALL VALVE (BV)
		QUICK COUPLING VALVE (QCV)
		CAM COUPLER ASSEMBLY (CCA)
		GARDEN VALVE ASSEMBLY (GARVA)
		PRESSURE REGULATING VALVE (PRV)
		PRESSURE RELIEF VALVE (PRLV)
		FLOW CONTROL VALVE (FCV)
		COMBINATION AIR RELEASE VALVE (CARV)
		CHECK VALVE (CV)
		FLUSH VALVE (FV)
		EXISTING NOZZLE LINE W/TURNING UNION
		EXISTING IRRIGATION SYSTEM
		EXISTING IRRIGATION SYSTEM TO BE REMOVED
		CHAIN LINK GATE
		QUICK COUPLING VALVE W/SPRINKLER PROTECTOR
3	3	SPRINKLER W/SPRINKLER PROTECTOR
	C	CONNECT TO EXISTING SYSTEM
		CAP
		CAP EXISTING
	\\\FR\\\	FIBER ROLL
	\\\CS\\\	COMPOST SOCK

RCV SIZE
IRRIGATION CONTROLLER
CONTROLLER STATION
VALVE IN PARALLEL (IF APPLICABLE)
GPM
QUANTITY OF SPRINKLERS (WHEN SHOWN)

* 2½"-A-2b-40-60

VALVE CODE

* VALVE CODES FOR EXISTING VALVES ARE SHOWN IN A DASHED ENCLOSURE.

STATE OF CALIFORNIA
DEPARTMENT OF TRANSPORTATION

LANDSCAPE AND EROSION CONTROL SYMBOLS

NO SCALE

RSP H2 DATED NOVEMBER 15, 2013 SUPERSEDES RSP H2 DATED JULY 19, 2013 AND STANDARD PLAN H2 DATED MAY 20, 2011 - PAGE 219 OF THE STANDARD PLANS BOOK DATED 2010.

REVISED STANDARD PLAN RSP H2

2010 REVISED STANDARD PLAN RSP H2

10-9-13

Dist	COUNTY	ROUTE	POST MILES TOTAL PROJECT	SHEET No.	TOTAL SHEETS
07	LA	210	R16.1/R25.8	813	927

Gregory A. Balzer
LICENSED LANDSCAPE ARCHITECT

July 19, 2013
PLANS APPROVAL DATE

LICENSED LANDSCAPE ARCHITECT
Gregory A. Balzer 2576
Signature
2-28-15
Renewal Date
7-19-13
Date
STATE OF CALIFORNIA

THE STATE OF CALIFORNIA OR ITS OFFICERS OR AGENTS SHALL NOT BE RESPONSIBLE FOR THE ACCURACY OR COMPLETENESS OF SCANNED COPIES OF THIS PLAN SHEET.

TO ACCOMPANY PLANS DATED 5-12-14

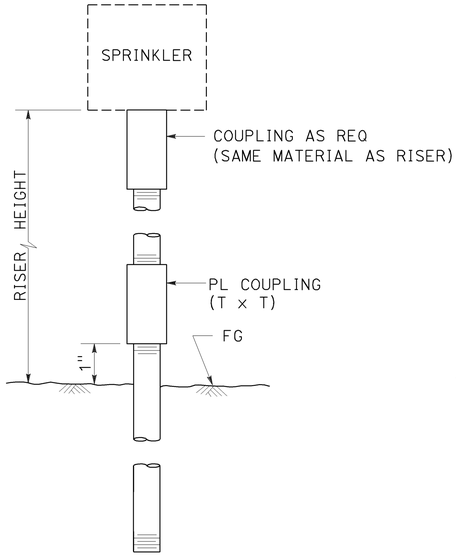

ELEVATION

RISER SPRINKLER ASSEMBLY TYPE I

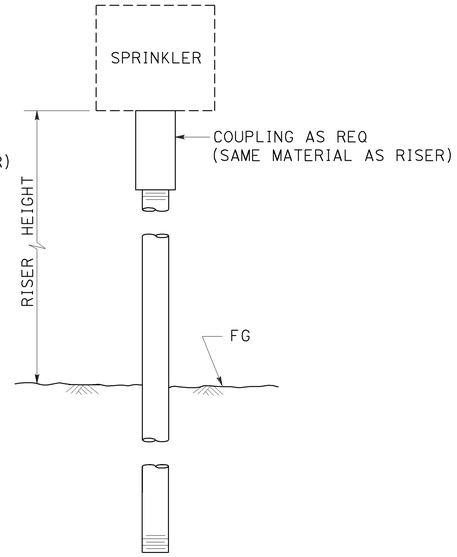

ELEVATION

RISER SPRINKLER ASSEMBLY TYPE II

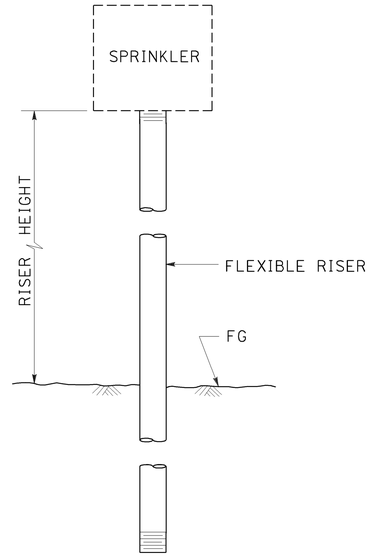

ELEVATION

RISER SPRINKLER ASSEMBLY TYPE III

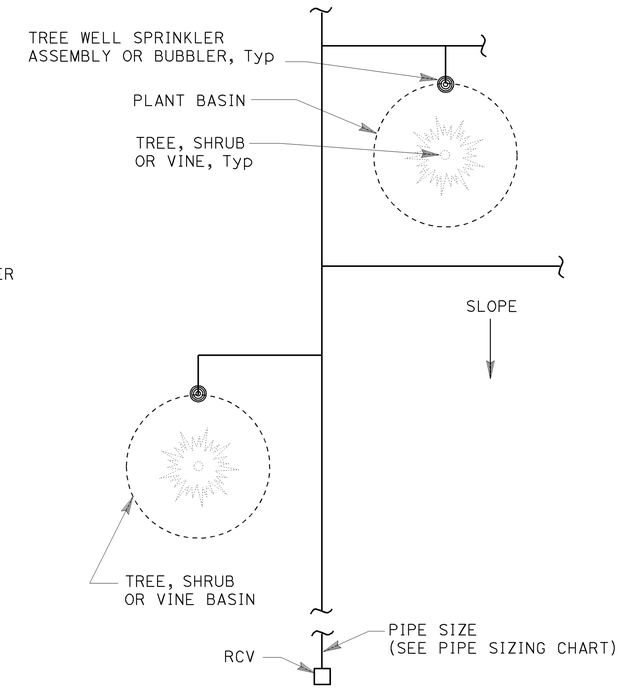

PLAN

NOTES:

1. Install tree well sprinkler assembly on up-hill side of plant when on slope.
2. Install bubbler within basin.

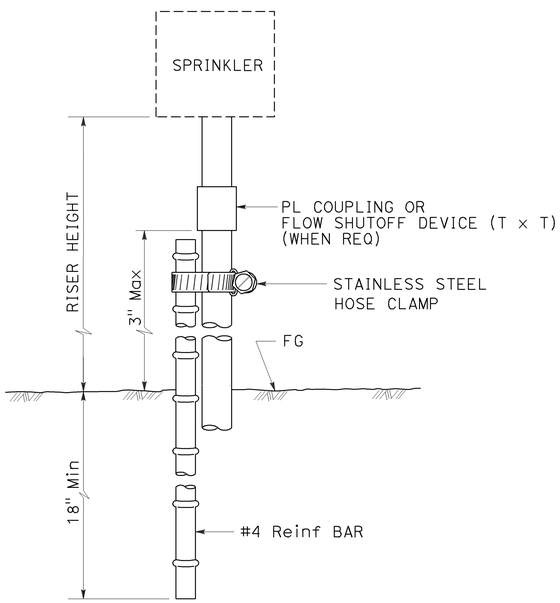

ELEVATION

RISER SPRINKLER ASSEMBLY TYPE IV

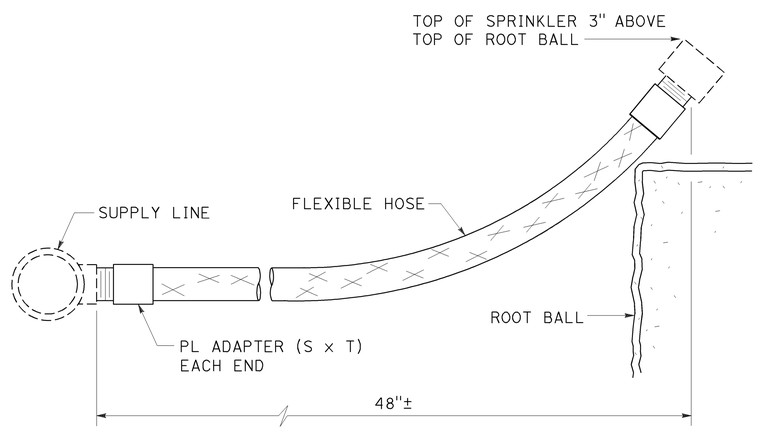

ELEVATION

RISER SPRINKLER ASSEMBLY TYPE V

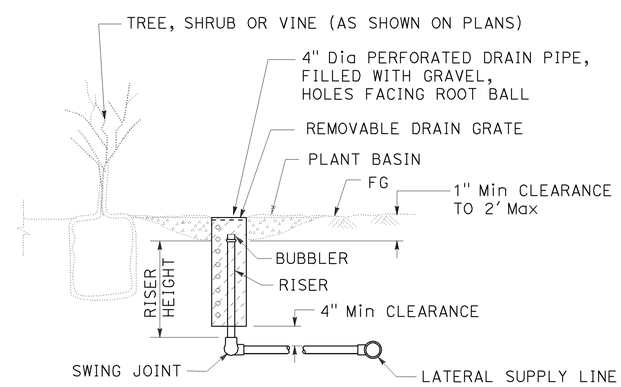

SECTION

TREE WELL SPRINKLER ASSEMBLY

STATE OF CALIFORNIA
DEPARTMENT OF TRANSPORTATION

LANDSCAPE DETAILS

NO SCALE

RSP H5 DATED JULY 19, 2013 SUPERSEDES STANDARD PLAN H5
DATED MAY 20, 2011 - PAGE 222 OF THE STANDARD PLANS BOOK DATED 2010.

REVISED STANDARD PLAN RSP H5

2010 REVISED STANDARD PLAN RSP H5

6-28-13

Dist	COUNTY	ROUTE	POST MILES TOTAL PROJECT	SHEET No.	TOTAL SHEETS
07	LA	210	R16.1/R25.8	814	927

Gregory A. Balzer
LICENSED LANDSCAPE ARCHITECT

July 19, 2013
PLANS APPROVAL DATE

LICENSED LANDSCAPE ARCHITECT
Gregory A. Balzer 2576
Signature
2-28-15
Renewal Date
7-19-13
Date
STATE OF CALIFORNIA

THE STATE OF CALIFORNIA OR ITS OFFICERS OR AGENTS SHALL NOT BE RESPONSIBLE FOR THE ACCURACY OR COMPLETENESS OF SCANNED COPIES OF THIS PLAN SHEET.

TO ACCOMPANY PLANS DATED 5-12-14

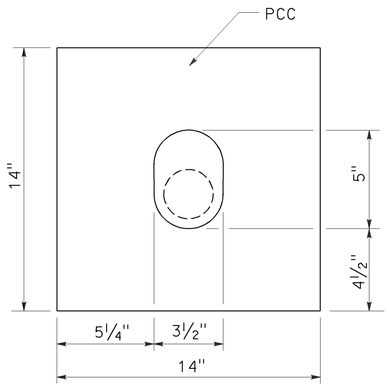

PLAN

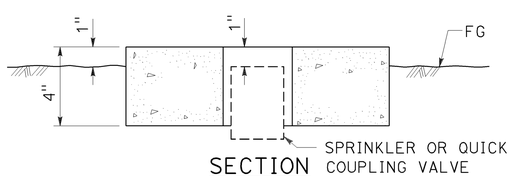

SECTION
SPRINKLER PROTECTOR TYPE I

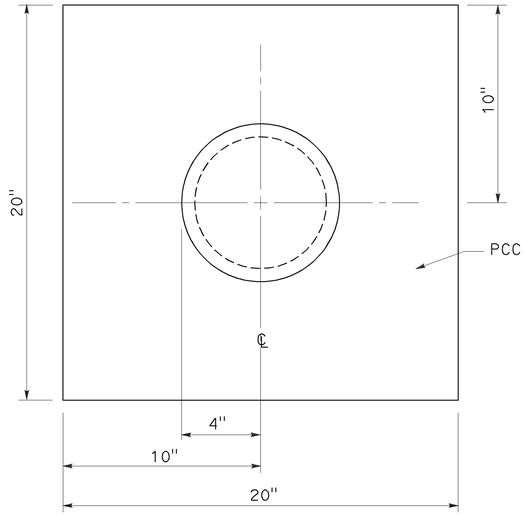

PLAN

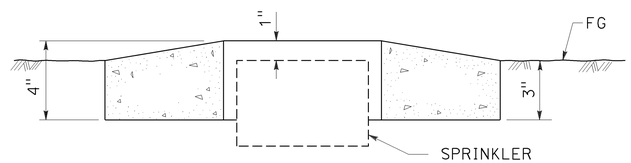

SECTION
SPRINKLER PROTECTOR TYPE II

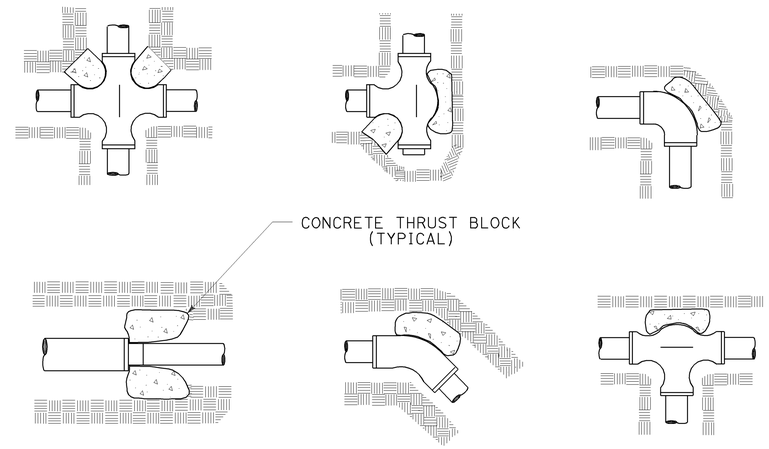

TYPICAL THRUST BLOCKS

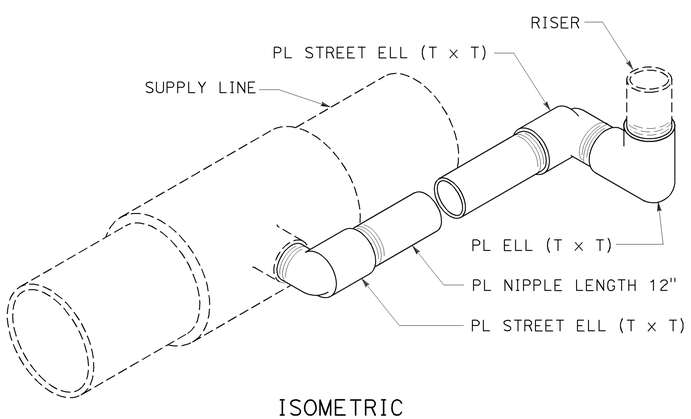

ISOMETRIC
POP-UP SPRINKLER ASSEMBLY TYPE I

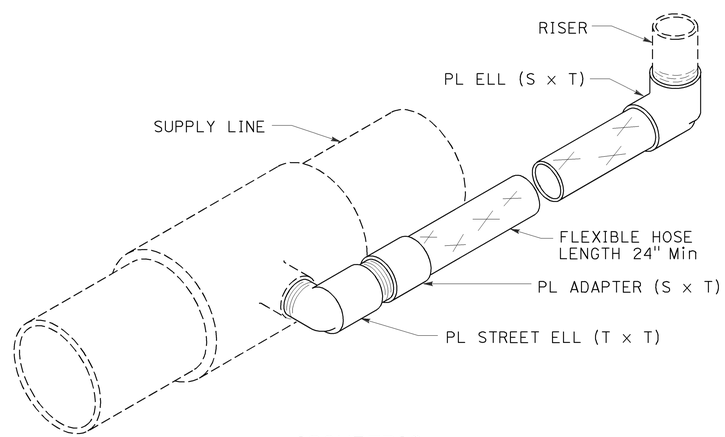

ISOMETRIC
POP-UP SPRINKLER ASSEMBLY TYPE II

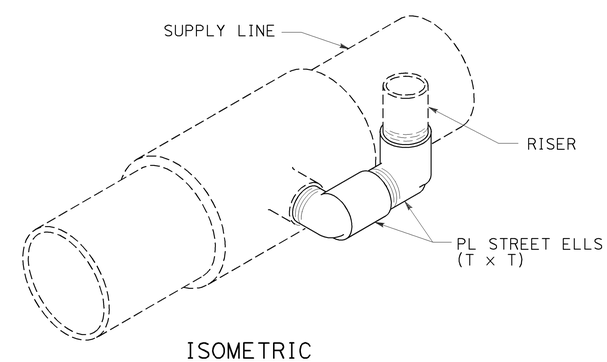

ISOMETRIC
POP-UP SPRINKLER ASSEMBLY TYPE III

STATE OF CALIFORNIA
DEPARTMENT OF TRANSPORTATION

LANDSCAPE DETAILS

NO SCALE

RSP H6 DATED JULY 19, 2013 SUPERSEDES STANDARD PLAN H6
DATED MAY 20, 2011 - PAGE 223 OF THE STANDARD PLANS BOOK DATED 2010.

REVISED STANDARD PLAN RSP H6

2010 REVISED STANDARD PLAN RSP H6

6-28-13

Dist	COUNTY	ROUTE	POST MILES TOTAL PROJECT	SHEET No.	TOTAL SHEETS
07	LA	210	R16.1/R25.8	815	927

Gregory A. Balzer
LICENSED LANDSCAPE ARCHITECT

July 19, 2013
PLANS APPROVAL DATE

LICENSED LANDSCAPE ARCHITECT
Gregory A. Balzer 2576
Signature
2-28-15
Renewal Date
7-19-13
Date
STATE OF CALIFORNIA

THE STATE OF CALIFORNIA OR ITS OFFICERS OR AGENTS SHALL NOT BE RESPONSIBLE FOR THE ACCURACY OR COMPLETENESS OF SCANNED COPIES OF THIS PLAN SHEET.

TO ACCOMPANY PLANS DATED 5-12-14

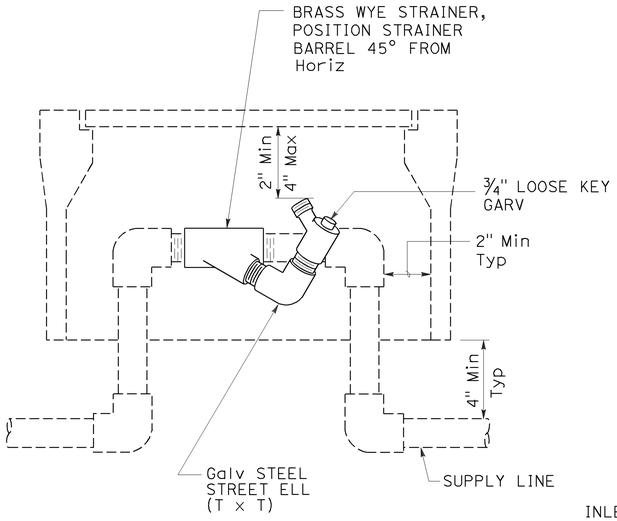

ELEVATION
WYE STRAINER ASSEMBLY

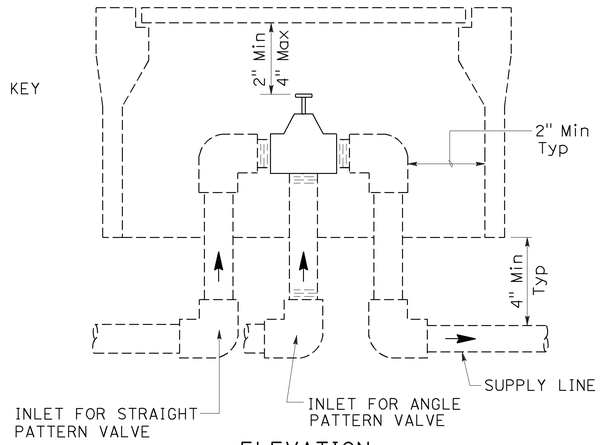

ELEVATION
VALVE

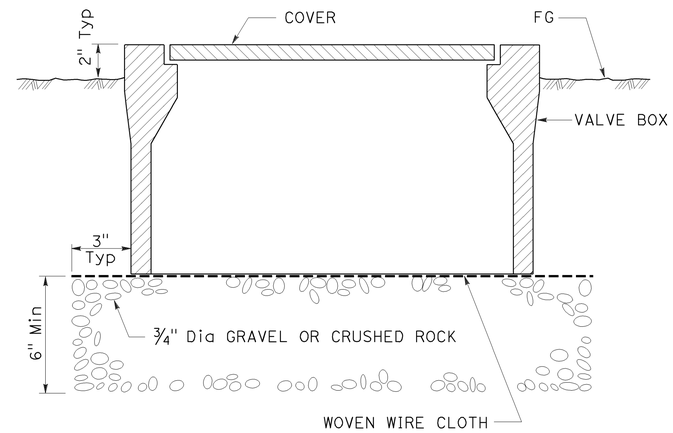

SECTION
VALVE BOX

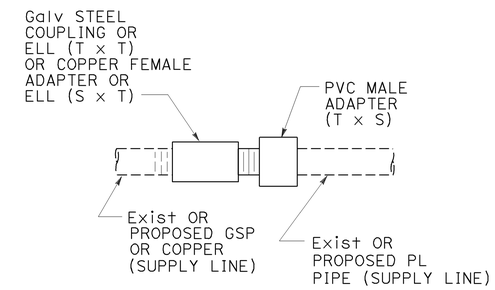

GALVANIZED OR COPPER PIPE
CONNECTION TO PLASTIC PIPE

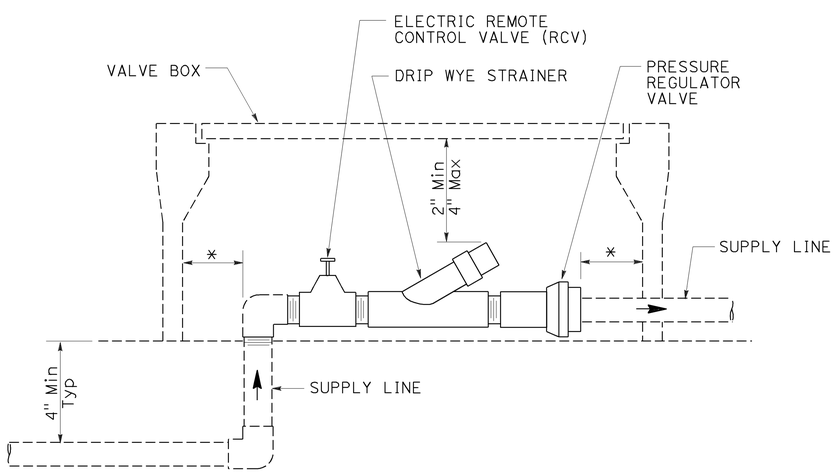

* 2" CLEARANCE ON ALL SIDES

ELEVATION
DRIP VALVE ASSEMBLY

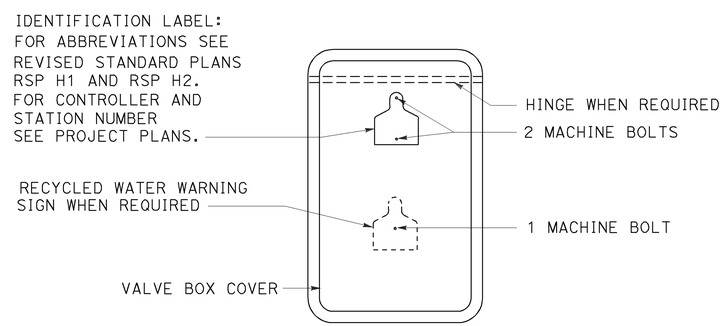

PLAN

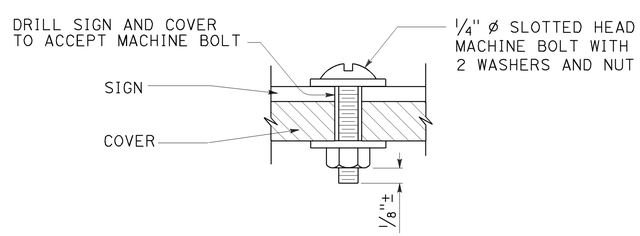

SECTION
VALVE BOX IDENTIFICATION

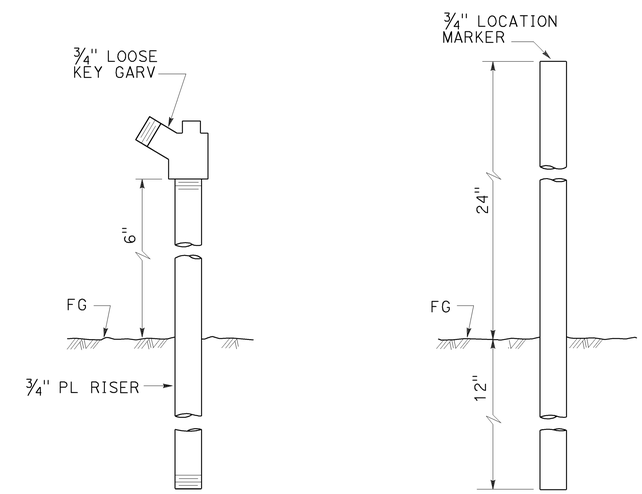

ELEVATION
GARDEN VALVE ASSEMBLY

ELEVATION
LOCATION MARKER

GARDEN VALVE ASSEMBLY

STATE OF CALIFORNIA
DEPARTMENT OF TRANSPORTATION

LANDSCAPE DETAILS

NO SCALE

RSP H7 DATED JULY 19, 2013 SUPERSEDES STANDARD PLAN H7
DATED MAY 20, 2011 - PAGE 224 OF THE STANDARD PLANS BOOK DATED 2010.

REVISED STANDARD PLAN RSP H7

2010 REVISED STANDARD PLAN RSP H7

6-20-13

Dist	COUNTY	ROUTE	POST MILES TOTAL PROJECT	SHEET No.	TOTAL SHEETS
07	LA	210	R16.1/R25.8	816	927

Gregory A. Balzer
LICENSED LANDSCAPE ARCHITECT

July 19, 2013
PLANS APPROVAL DATE

LICENSED LANDSCAPE ARCHITECT
Gregory A. Balzer 2576
Signature
2-28-15
Renewal Date
7-19-13
Date
STATE OF CALIFORNIA

THE STATE OF CALIFORNIA OR ITS OFFICERS OR AGENTS SHALL NOT BE RESPONSIBLE FOR THE ACCURACY OR COMPLETENESS OF SCANNED COPIES OF THIS PLAN SHEET.

TO ACCOMPANY PLANS DATED 5-12-14

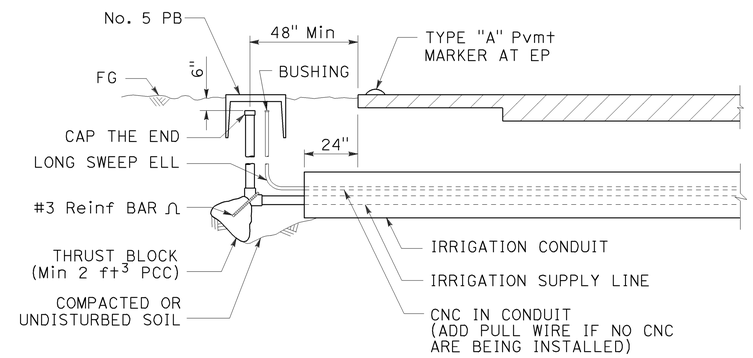

SECTION

IRRIGATION CONDUIT

UNDER TRAVELED WAY

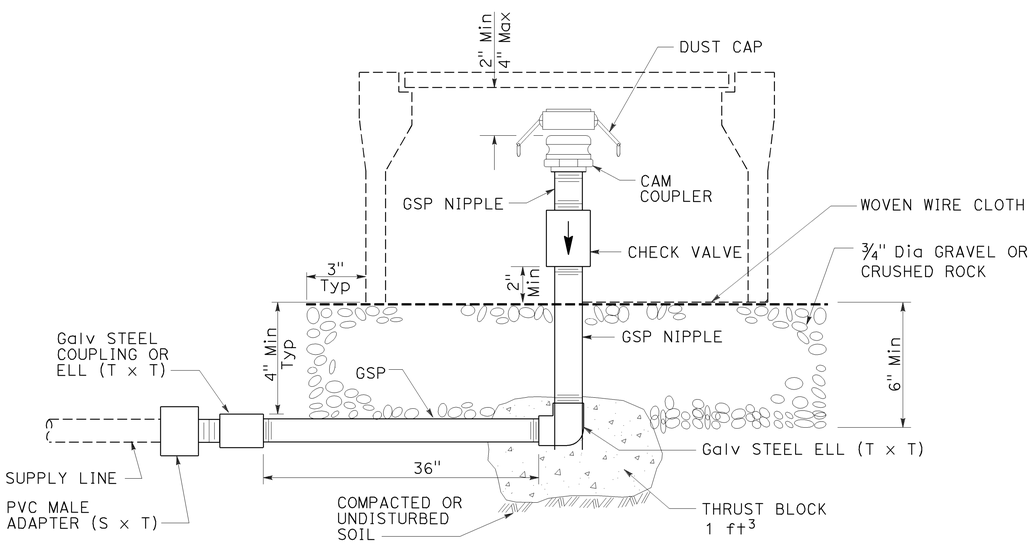

ELEVATION

CAM COUPLER ASSEMBLY

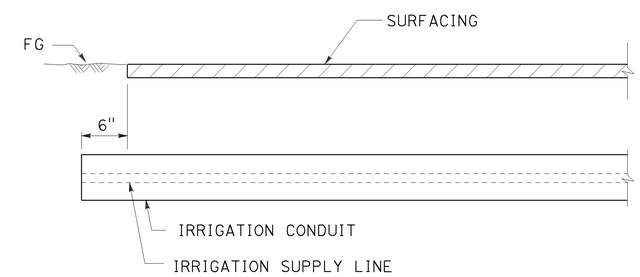

SECTION

IRRIGATION CONDUIT

UNDER SIDEWALKS, DRIVEWAYS AND PATHS

STATE OF CALIFORNIA
DEPARTMENT OF TRANSPORTATION

LANDSCAPE DETAILS

NO SCALE

RSP H9 DATED JULY 19, 2013 SUPERSEDES STANDARD PLAN H9
DATED MAY 20, 2011 - PAGE 226 OF THE STANDARD PLANS BOOK DATED 2010.

REVISED STANDARD PLAN RSP H9

2010 REVISED STANDARD PLAN RSP H9

6-28-13

Dist	COUNTY	ROUTE	POST MILES TOTAL PROJECT	SHEET No.	TOTAL SHEETS
07	LA	210	R16.1/R25.8	817	927

Gregory A. Balzer
LICENSED LANDSCAPE ARCHITECT

July 19, 2013
PLANS APPROVAL DATE

LICENSED LANDSCAPE ARCHITECT
Gregory A. Balzer 2576
Signature
2-28-15
Renewal Date
7-19-13
Date
STATE OF CALIFORNIA

THE STATE OF CALIFORNIA OR ITS OFFICERS OR AGENTS SHALL NOT BE RESPONSIBLE FOR THE ACCURACY OR COMPLETENESS OF SCANNED COPIES OF THIS PLAN SHEET.

TO ACCOMPANY PLANS DATED 5-12-14

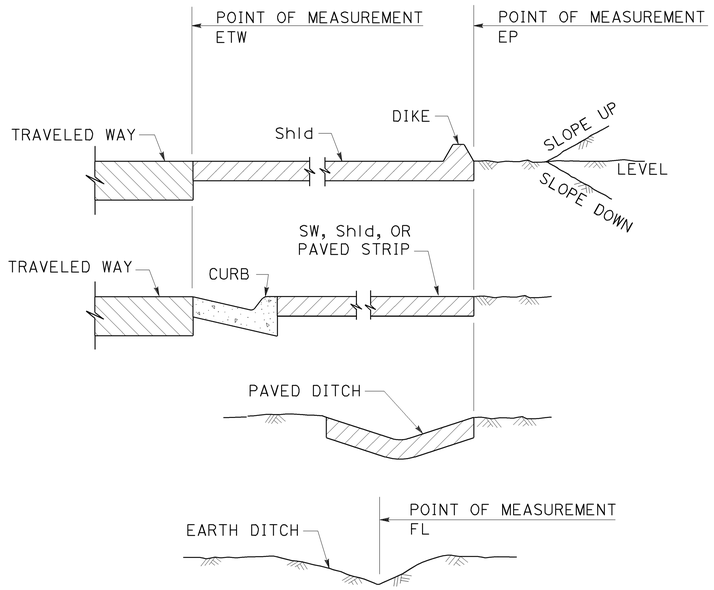

SECTION
POINTS OF MEASUREMENT

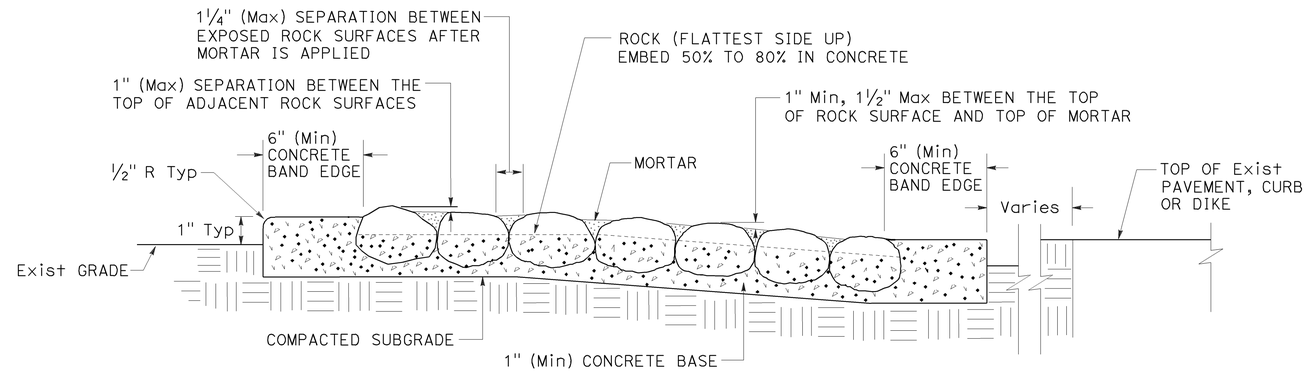

SECTION
ROCK BLANKET

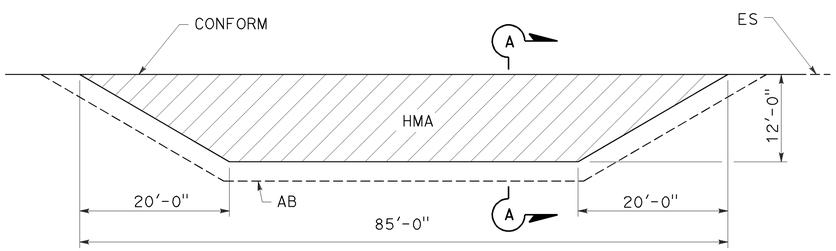

PLAN

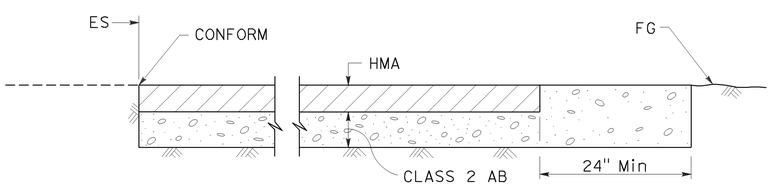

SECTION A-A
MAINTENANCE VEHICLE PULLOUT

STATE OF CALIFORNIA
DEPARTMENT OF TRANSPORTATION

LANDSCAPE DETAILS

NO SCALE

RSP H9A DATED JULY 19, 2013 SUPPLEMENTS THE STANDARD PLANS BOOK DATED 2010.

REVISED STANDARD PLAN RSP H9A

2010 REVISED STANDARD PLAN RSP H9A

6-21-13

Dist	COUNTY	ROUTE	POST MILES TOTAL PROJECT	SHEET No.	TOTAL SHEETS
07	LA	210	R16.1/R25.8	818	927

REGISTERED CIVIL ENGINEER

July 19, 2013
PLANS APPROVAL DATE

REGISTERED PROFESSIONAL ENGINEER
Gurinderpal Bhullar
No. C48815
Exp. 9-30-14
CIVIL
STATE OF CALIFORNIA

THE STATE OF CALIFORNIA OR ITS OFFICERS OR AGENTS SHALL NOT BE RESPONSIBLE FOR THE ACCURACY OR COMPLETENESS OF SCANNED COPIES OF THIS PLAN SHEET.

TO ACCOMPANY PLANS DATED 5-12-14

2010 REVISED STANDARD PLAN RSP T9

TABLE 1

TAPER LENGTH CRITERIA AND CHANNELIZING DEVICE SPACING

SPEED (S)	MINIMUM TAPER LENGTH * FOR WIDTH OF OFFSET 12 FEET (W)				MAXIMUM CHANNELIZING DEVICE SPACING		
					X	Y	Z **
	TANGENT 2L	MERGING L	SHIFTING L/2	SHOULDER L/3	TAPER	TANGENT	CONFLICT
mph	ft	ft	ft	ft	ft	ft	ft
20	160	80	40	27	20	40	10
25	250	125	63	42	25	50	12
30	360	180	90	60	30	60	15
35	490	245	123	82	35	70	17
40	640	320	160	107	40	80	20
45	1080	540	270	180	45	90	22
50	1200	600	300	200	50	100	25
55	1320	660	330	220	55	110	27
60	1440	720	360	240	60	120	30
65	1560	780	390	260	65	130	32
70	1680	840	420	280	70	140	35

* - For other offsets, use the following merging taper length formula for L:
For speed of 40 mph or less, $L = WS^2/60$
For speed of 45 mph or more, $L = WS$

Where: L = Taper length in feet
W = Width of offset in feet
S = Posted speed limit, off-peak 85th-percentile speed prior to work starting, or the anticipated operating speed in mph

** - Use for taper and tangent sections where there are no pavement markings or where there is a conflict between existing pavement markings and channelizers (CA).

TABLE 2

LONGITUDINAL BUFFER SPACE AND FLAGGER STATION SPACING

SPEED *	Min D **	DOWNGRADE Min D ***		
		-3%	-6%	-9%
mph	ft	ft	ft	ft
20	115	116	120	126
25	155	158	165	173
30	200	205	215	227
35	250	257	271	287
40	305	315	333	354
45	360	378	400	427
50	425	446	474	507
55	495	520	553	593
60	570	598	638	686
65	645	682	728	785
70	730	771	825	891

* - Speed is posted speed limit, off-peak 85th-percentile speed prior to work starting, or the anticipated operating speed in mph

** - Longitudinal buffer space or flagger station spacing

*** - Use on sustained downgrade steeper than -3 percent and longer than 1 mile.

TABLE 3

ADVANCE WARNING SIGN SPACING

ROAD TYPE	DISTANCE BETWEEN SIGNS *		
	A	B	C
	ft	ft	ft
URBAN - 25 mph OR LESS	100	100	100
URBAN - MORE THAN 25 mph TO 40 mph	250	250	250
URBAN - MORE THAN 40 mph	350	350	350
RURAL	500	500	500
EXPRESSWAY / FREEWAY	1000	1500	2640

* - The distances are approximate, are intended for guidance purposes only, and should be applied with engineering judgment. These distances should be adjusted by the Engineer for field conditions, if necessary, by increasing or decreasing the recommmended distances.

STATE OF CALIFORNIA
DEPARTMENT OF TRANSPORTATION

TRAFFIC CONTROL SYSTEM TABLES FOR LANE AND RAMP CLOSURES

NO SCALE

RSP T9 DATED JULY 19, 2013 SUPERSEDES RSP T9 DATED APRIL 19, 2013 THAT SUPPLEMENTS THE STANDARD PLANS BOOK DATED 2010.

REVISED STANDARD PLAN RSP T9

TO ACCOMPANY PLANS DATED 5-12-14

Dist	COUNTY	ROUTE	POST MILES TOTAL PROJECT	SHEET No.	TOTAL SHEETS
07	LA	210	R16.1/R25.8	819	927

REGISTERED CIVIL ENGINEER

April 19, 2013
PLANS APPROVAL DATE

REGISTERED PROFESSIONAL ENGINEER Gurinderpal Bhullar No. C48815 Exp. 9-30-14 CIVIL STATE OF CALIFORNIA

THE STATE OF CALIFORNIA OR ITS OFFICERS OR AGENTS SHALL NOT BE RESPONSIBLE FOR THE ACCURACY OR COMPLETENESS OF SCANNED COPIES OF THIS PLAN SHEET.

NOTES:

See Revised Standard Plan RSP T9 for tables.

Use cone spacing X for taper segment, Y for tangent segment or Z for conflict situations, as approriate, per Table 1, unless X, Y, or Z cone spacing is shown on this sheet.

Unless otherwise specified in the special provisions, all temporary warning signs shall have black legend on fluorescent orange background.

California codes are designated by (CA). Otherwise, Federal (MUTCD) codes are shown.

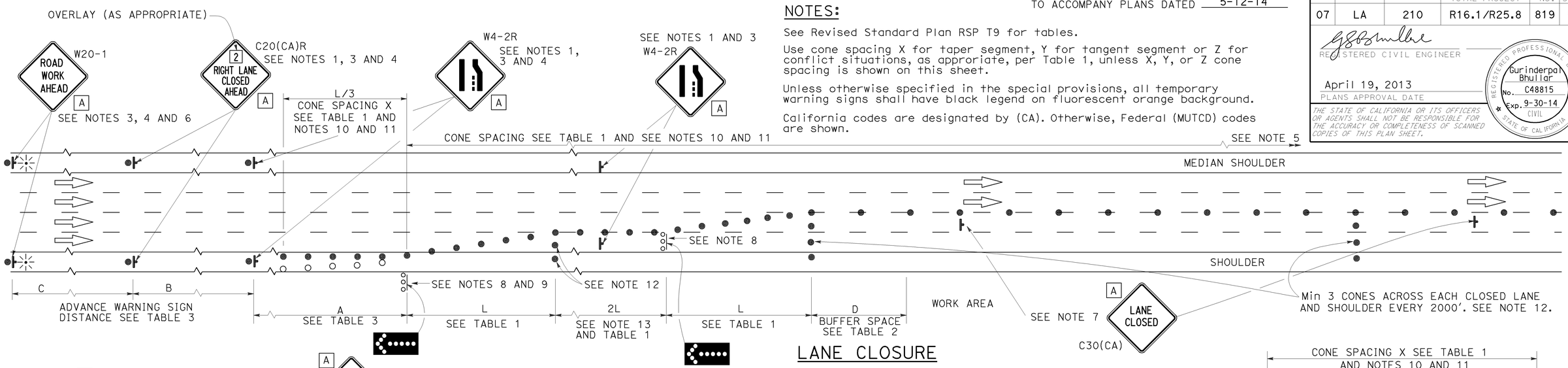

LANE CLOSURE

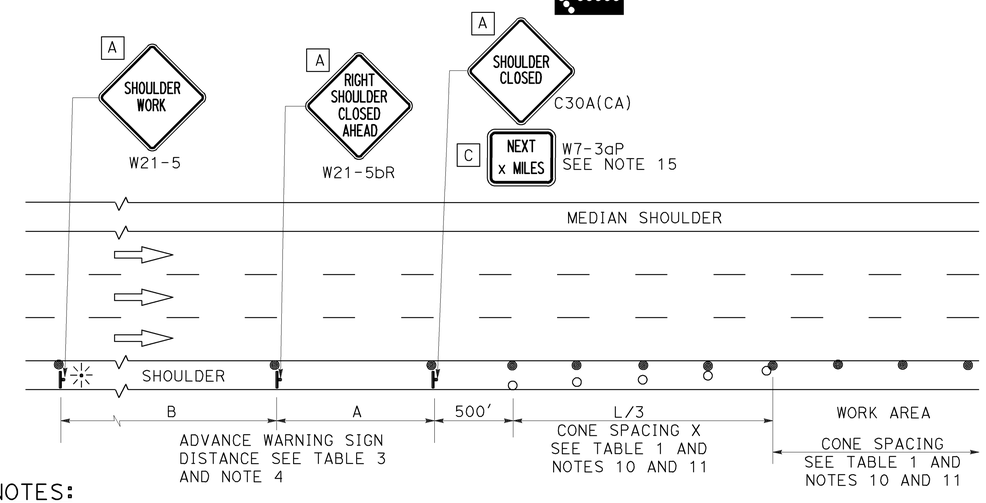

SHOULDER CLOSURE

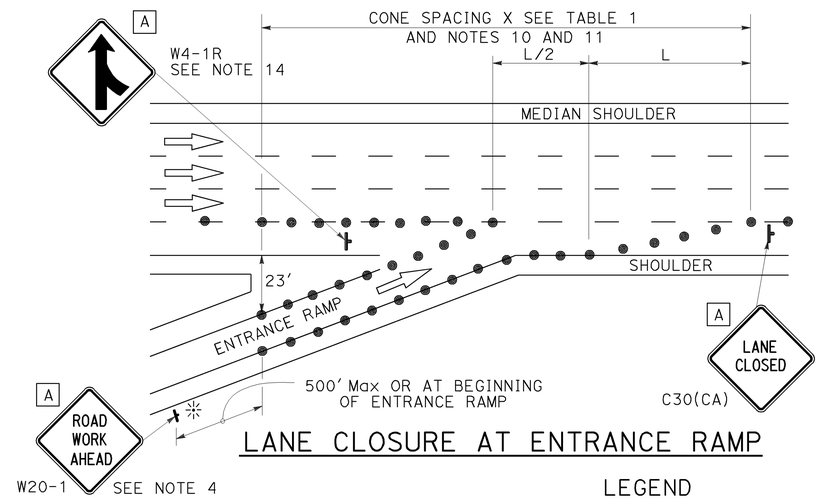

LANE CLOSURE AT ENTRANCE RAMP

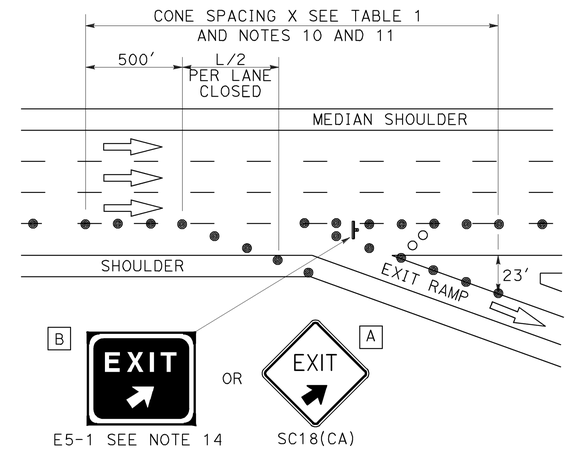

LANE CLOSURE AT EXIT RAMP

NOTES:

1. Median lane closures shall conform to the details as shown except that C20(CA)L and W4-2L signs shall be used.
2. At least one person shall be assigned to provide full time maintenance of traffic control devices for lane closures.
3. Duplicate sign installations are not required:
   a) On opposite shoulder if at least one-half of the available lanes remain open to traffic.
   b) In the median if the width of the median shoulder is less than 8' and the outside lanes are to be closed.
4. Each advance warning sign on each side of the roadway shall be equipped with at least two flags for daytime closure. Each flag shall be at least 16" x 16" in size and shall be orange or fluorescent red-orange in color. Flashing beacons shall be placed at the locations indicated for lane closure during hours of darkness.
5. A G20-2 "END ROAD WORK" sign, with minimum size of 48" x 24" as appropriate, shall be placed at the end of the lane closure unless the end of work area is obvious or ends within a larger project's limits.
6. If the W20-1 sign would follow within 2000' of a stationary W20-1 or G20-1 "ROAD WORK NEXT _____ MILES", use a C20(CA) sign for the first advance warning sign.
7. Place a C30(CA) sign every 2000' throughout length of lane closure.
8. One flashing arrow sign for each lane closed. The flashing arrow signs shall be Type I.
9. A minimum 1500' of sight distance shall be provided where possible for vehicles approaching the first flashing arrow sign. Lane closures shall not begin at top of crest vertical curve or on a horizontal curve.
10. All cones used for lane closures during the hours of darkness shall be fitted with retroreflective bands (or sleeves) as specified in the specifications.
11. Portable delineators, placed at one-half the spacing indicated for traffic cones may be used instead of cones for daytime closures only.
12. Unless otherwise specified in the special provisions, a minimum of 3 cones shall be placed transversely across each closed lane and shoulder at each location where a taper across a traffic lane ends and every 2000' as shown on the "Lane Closure" detail. Two Type II barricades may be used instead of the 3 cones. The transverse alignment of the cones or barricades on the closed shoulder may be shifted from the transverse alignment to provide access to the work.
13. Unless otherwise specified in the special provisions, the 2L tangent shown along lane lines shall be used between the L tapers required for each closed traffic lane.
14. Unless otherwise specified in the special provisions, the E5-1 or SC18(CA) and W4-1 signs shall be used as shown.
15. A W7-3aP "NEXT____ MILES" plaque must be used if theshoulder closure extends beyond the distance that can be perceived by road users.

LEGEND

- TRAFFIC CONE
- TRAFFIC CONE (OPTIONAL TAPER)
- TEMPORARY TRAFFIC CONTROL SIGN
- FLASHING ARROW SIGN (FAS)
- FAS SUPPORT OR TRAILER
- PORTABLE FLASHING BEACON

SIGN PANEL SIZE (Min)

A	48" x 48"
B	72" x 60"
C	36" x 30"

STATE OF CALIFORNIA
DEPARTMENT OF TRANSPORTATION

TRAFFIC CONTROL SYSTEM FOR LANE CLOSURE ON FREEWAYS AND EXPRESSWAYS

NO SCALE

RSP T10 DATED APRIL 19, 2013 SUPERSEDES STANDARD PLAN T10 DATED MAY 20, 2011 - PAGE 237 OF THE STANDARD PLANS BOOK DATED 2010.

REVISED STANDARD PLAN RSP T10

2010 REVISED STANDARD PLAN RSP T10

12-18-12

TO ACCOMPANY PLANS DATED 5-12-14

Dist	COUNTY	ROUTE	POST MILES TOTAL PROJECT	SHEET No.	TOTAL SHEETS
07	LA	210	R16.1/R25.8	820	927

REGISTERED CIVIL ENGINEER

April 19, 2013
PLANS APPROVAL DATE

REGISTERED PROFESSIONAL ENGINEER Gurinderpal Bhullar No. C48815 Exp. 9-30-14 CIVIL STATE OF CALIFORNIA

THE STATE OF CALIFORNIA OR ITS OFFICERS OR AGENTS SHALL NOT BE RESPONSIBLE FOR THE ACCURACY OR COMPLETENESS OF SCANNED COPIES OF THIS PLAN SHEET.

NOTES: See Revised Standard Plan RSP T9 for tables.

Use cone spacing X for taper segment, Y for tangent segment or Z for conflict situations, as approriate, per Table 1, unless X, Y, or Z cone spacing is shown on this sheet.

Unless otherwise specified in the special provisions, all temporary warning signs shall have black legend on fluorescent orange background.

California codes are designated by (CA). Otherwise, Federal (MUTCD) codes are shown.

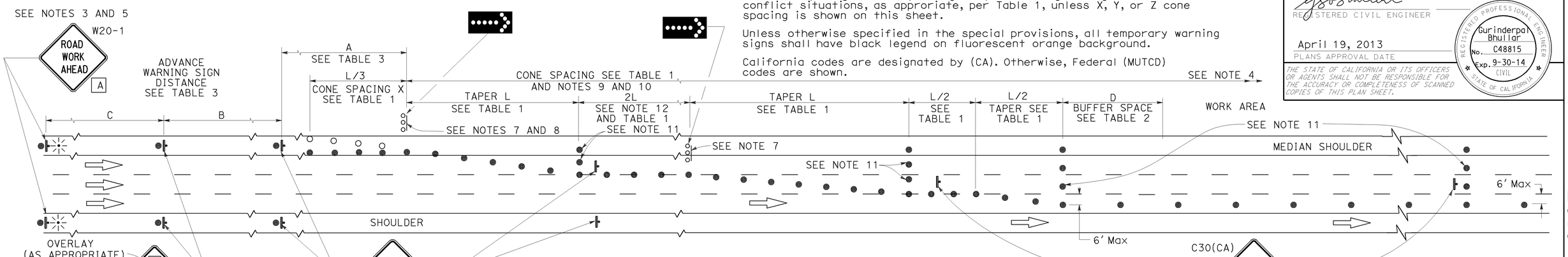

LANE CLOSURE WITH PARTIAL SHOULDER USE

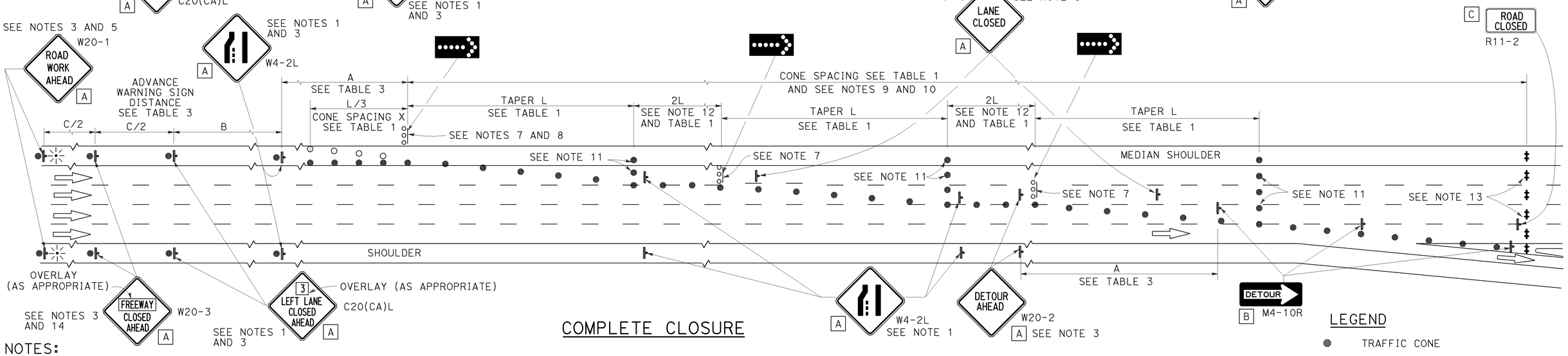

COMPLETE CLOSURE

NOTES:

1. Lane closures on the right side using partial median shoulder as a traffic lane shall conform to the details as shown except that C20(CA)R and W4-2R signs shall be used.
2. At least one person shall be assigned to provide full time maintenance of traffic control devices for lane closures.
3. Each advance warning sign on each side of the roadway shall be equipped with at least two flags for daytime closure. Each flag shall be at least 16" X 16" in size and shall be orange or fluorescent red-orange in color. Flashing beacons shall be placed at the locations indicated for lane closure during hours of darkness.
4. A G20-2 "END ROAD WORK" sign, with minimum size of 48" x 24" as appropriate, shall be placed at the end of the lane closure unless the end of work area is obvious or ends within a larger project's limits.
5. If the W20-1 sign would follow within 2000' of a stationary W20-1 or G20-1 "ROAD WORK NEXT ___ MILES", use a C20(CA) sign for the first advance warning sign.
6. Place a C30(CA) sign every 2000' throughout length of lane closure.
7. One flashing arrow sign for each lane closed. The flashing arrow signs shall be Type I.
8. A minimum 1500' of sight distance shall be provided where possible for vehicles approaching the first flashing arrow sign. Lane closures shall not begin at the top of crest vertical curve or on a horizontal curve.
9. All cones used for lane closures during the hours of darkness shall be fitted with retroreflective bands (or sleeves) as specified in the specifications.
10. Portable delineators, placed at one-half the spacing indicated for traffic cones, may be used instead of cones for daytime closures only.
11. Unless otherwise specified in the special provisions, a minimum of 3 cones shall be placed transversely across each closed lane and shoulder at each location where a taper across a traffic lane ends and every 2000' as shown on the "Lane Closure With Partial Shoulder Use" detail. Two Type II barricades may be used instead of the 3 cones. The transverse alignment of the cones or barricades on the closed shoulder may be shifted from the transverse alignment to provide access to the work.
12. Unless otherwise specified in the special provisions, the 2L tangent shown along lane lines shall be used between the L tapers required for each closed traffic lane.
13. A minimum of Two Type II or III barricades shall be placed across each closed lane and shoulder at the location shown and every 2000' within the complete closure area. Within the complete closure area, the transverse alignment of the barricades on the closed shoulder may be shifted from the transverse alignment to provide access to the work.
14. When specified in the special provisions, a W20-2 "DETOUR AHEAD" sign is to be used in place of the W20-3 "FREEWAY CLOSED AHEAD" sign.

SIGN PANEL SIZE (Min)

A	48" x 48"
B	48" x 18"
C	48" x 30"

LEGEND

- TRAFFIC CONE
- TRAFFIC CONE (OPTIONAL TAPER)
- TEMPORARY TRAFFIC CONTROL SIGN
- FLASHING ARROW SIGN (FAS)
- FAS SUPPORT OR TRAILER
- PORTABLE FLASHING BEACON

STATE OF CALIFORNIA
DEPARTMENT OF TRANSPORTATION

TRAFFIC CONTROL SYSTEM FOR LANE CLOSURES ON FREEWAYS AND EXPRESSWAYS

NO SCALE

RSP T10A DATED APRIL 19, 2013 SUPERSEDES STANDARD PLAN T10A DATED MAY 20, 2011 - PAGE 238 OF THE STANDARD PLANS BOOK DATED 2010.

REVISED STANDARD PLAN RSP T10A

2010 REVISED STANDARD PLAN RSP T10A

12-18-12

Dist	COUNTY	ROUTE	POST MILES TOTAL PROJECT	SHEET No.	TOTAL SHEETS
07	LA	210	R16.1/R25.8	821	927

REGISTERED CIVIL ENGINEER

April 19, 2013
PLANS APPROVAL DATE

REGISTERED PROFESSIONAL ENGINEER Gurinderpal Bhullar No. C48815 Exp. 9-30-14 CIVIL STATE OF CALIFORNIA

THE STATE OF CALIFORNIA OR ITS OFFICERS OR AGENTS SHALL NOT BE RESPONSIBLE FOR THE ACCURACY OR COMPLETENESS OF SCANNED COPIES OF THIS PLAN SHEET.

TO ACCOMPANY PLANS DATED 5-12-14

TYPICAL RAMP CLOSURES

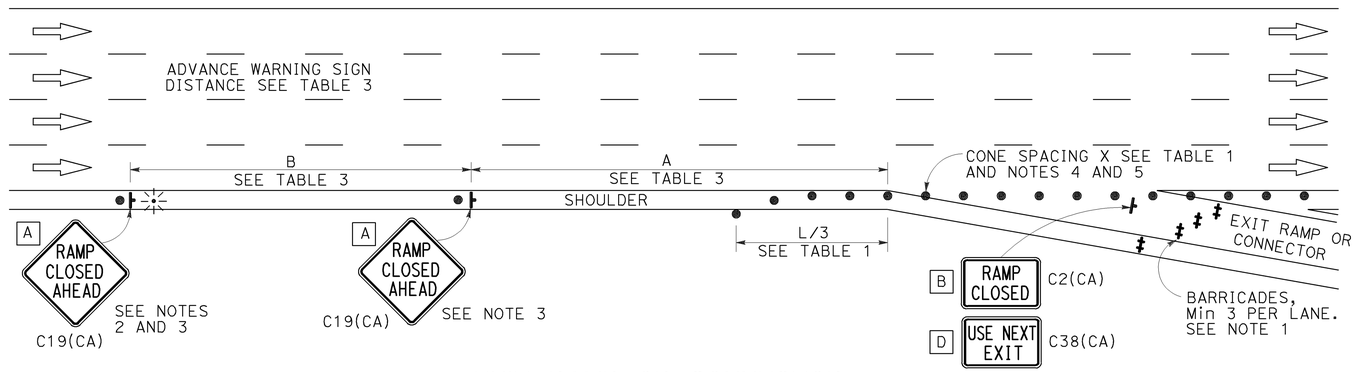

EXIT RAMP OR CONNECTOR

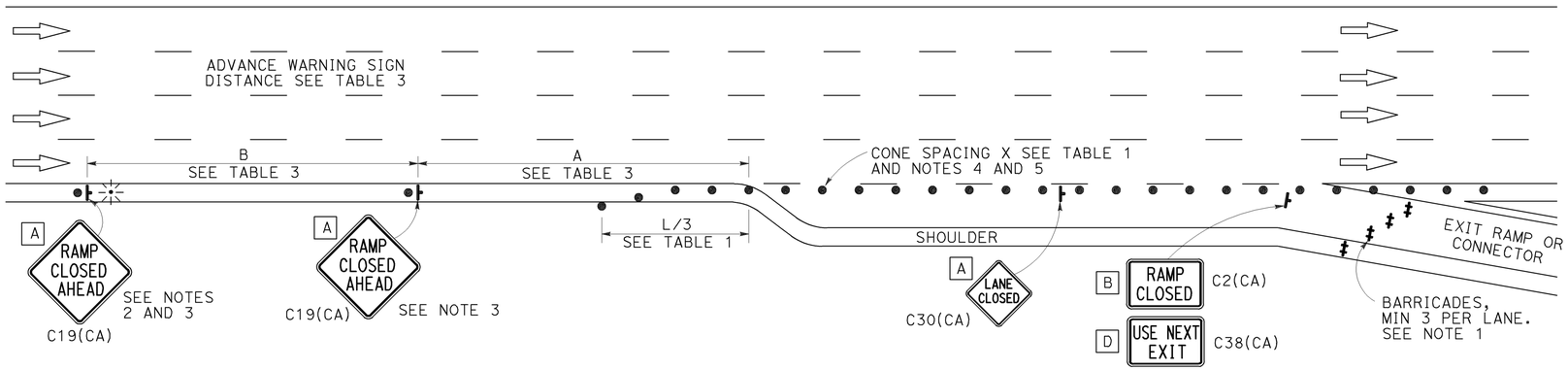

EXIT RAMP OR CONNECTOR WITH ADDITIONAL LANE

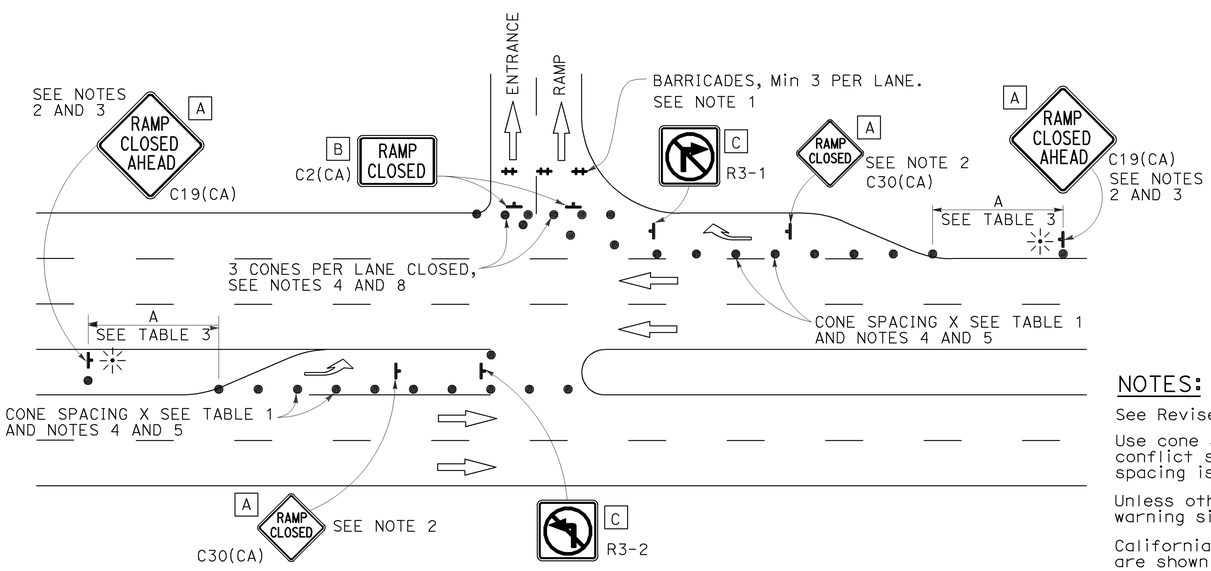

ENTRANCE RAMP WITH TURNING POCKETS

SIGN PANEL SIZE (Min)

- A 48" × 48"
- B 48" × 30"
- C 36" × 36"
- D 48" × 36"

LEGEND

- TRAFFIC CONE
- TEMPORARY TRAFFIC CONTROL SIGN
- BARRICADES
- PORTABLE FLASHING BEACON

NOTES:

1. Barricades shall be Type I, II, or III for closures lasting one week or less and Type III for closures lasting longer than one week.
2. In addition to placing the C19(CA) "RAMP CLOSED AHEAD" and C30(CA) "RAMP CLOSED" signs, black on orange overlay plates with the word "CLOSED" may be mounted, as directed by the Engineer, on all guide signs that refer to the closed ramp. The letter size on the overlay shall be the same as the guide sign.
3. Each advance C19(CA) "RAMP CLOSED AHEAD" sign shall be equipped with at least two flags for daytime closure. Each flag shall be at least 16" × 16" in size and shall be orange or fluorescent red-orange in color. A flashing beacon shall be placed on top of the first C19(CA) sign during hours of darkness.
4. All cones used for ramp closures during the hours of darkness shall be fitted with retroreflective bands (or sleeves) as specified in the specifications.
5. Portable delineators, placed at one-half the spacing indicated for traffic cones, may be used instead of cones for daytime ramp closures only.
6. At least one person shall be assigned to provide full time maintenance of traffic control devices, unless otherwise directed by the Engineer.
7. The existing "EXIT" signs shall be covered during ramp closures.
8. A minimum of 3 cones shall be placed transversely across each closed lane and shoulder.

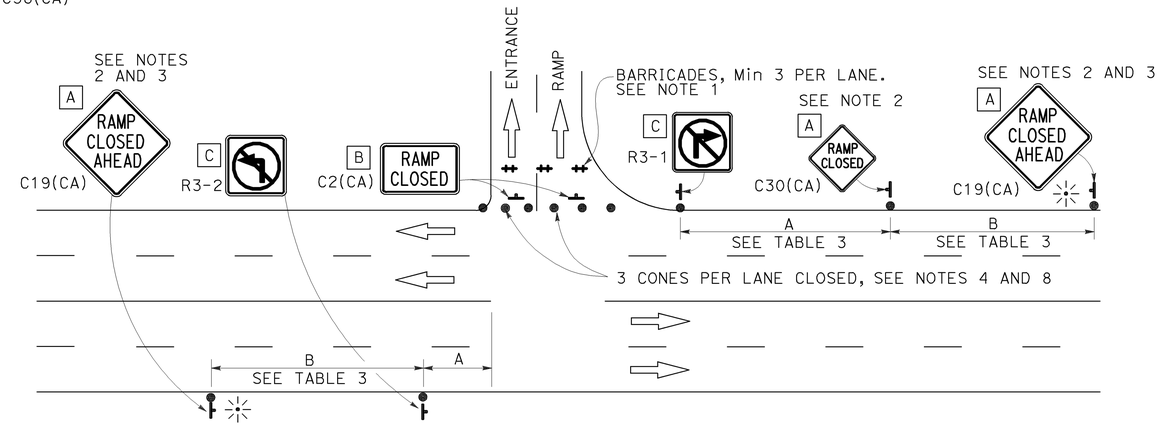

ENTRANCE RAMP WITHOUT TURNING POCKETS

NOTES:

See Revised Standard Plan RSP T9 for tables.

Use cone spacing X for taper segment, Y for tangent segment or Z for conflict situations, as approriate, per Table 1, unless X, Y, or Z cone spacing is shown on this sheet.

Unless otherwise specified in the special provisions, all temporary warning signs shall have black legend on fluorescent orange background.

California codes are designated by (CA). Otherwise, Federal (MUTCD) codes are shown.

STATE OF CALIFORNIA
DEPARTMENT OF TRANSPORTATION

TRAFFIC CONTROL SYSTEM FOR RAMP CLOSURE

NO SCALE

RSP T14 DATED APRIL 19, 2013 SUPERSEDES STANDARD PLAN T14
DATED MAY 20, 2011 - PAGE 242 OF THE STANDARD PLANS BOOK DATED 2010.

REVISED STANDARD PLAN RSP T14

2010 REVISED STANDARD PLAN RSP T14

12-18-12

Dist	COUNTY	ROUTE	POST MILES TOTAL PROJECT	SHEET No.	TOTAL SHEETS
07	LA	210	R16.1/R25.8	822	927

REGISTERED CIVIL ENGINEER

April 20, 2012
PLANS APPROVAL DATE

REGISTERED PROFESSIONAL ENGINEER Gary Wang No. C58298 Exp. 6-30-12 CIVIL STATE OF CALIFORNIA

THE STATE OF CALIFORNIA OR ITS OFFICERS OR AGENTS SHALL NOT BE RESPONSIBLE FOR THE ACCURACY OR COMPLETENESS OF SCANNED COPIES OF THIS PLAN SHEET.

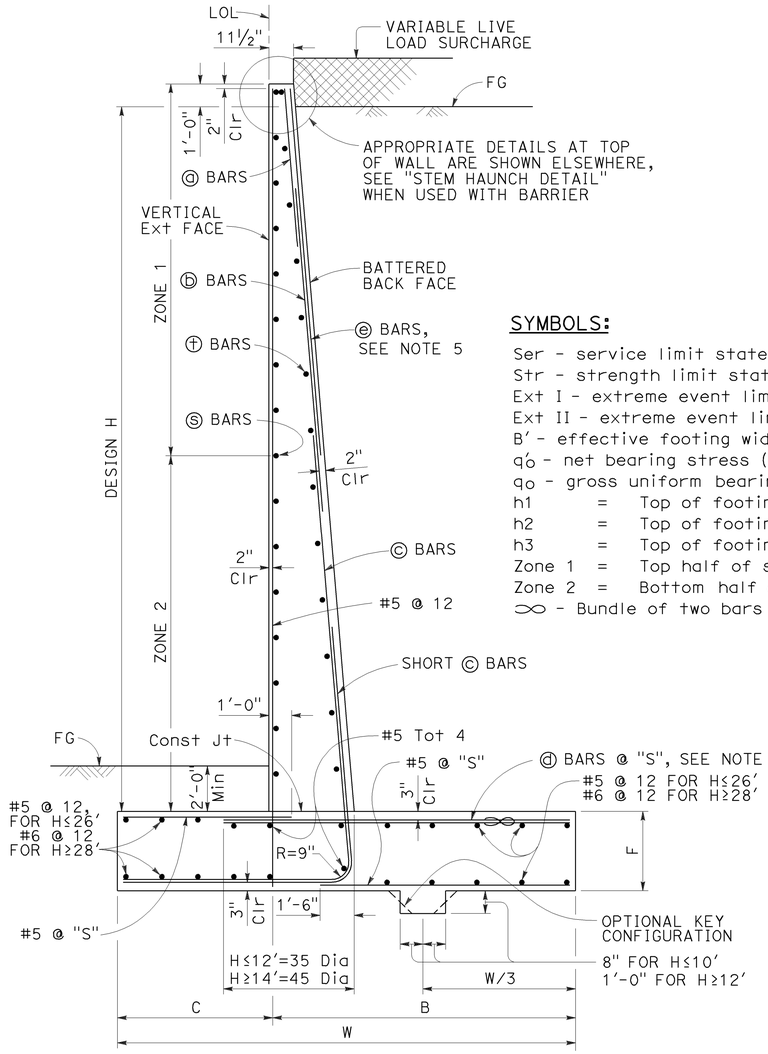

TYPICAL SECTION

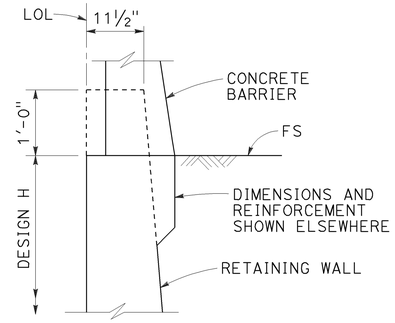

STEM HAUNCH DETAIL

SYMBOLS:

Ser - service limit state I
Str - strength limit state I
Ext I - extreme event limit state I
Ext II - extreme event limit state II
B' - effective footing width (ft)
q'_o - net bearing stress (ksf), OG assumed to be FG at toe
q_o - gross uniform bearing stress (ksf)
h1 = Top of footing to top of short ⓒ bar
h2 = Top of footing to top of ⓒ bar
h3 = Top of footing to top of ⓑ bar
Zone 1 = Top half of stem height
Zone 2 = Bottom half of stem height
∞ - Bundle of two bars

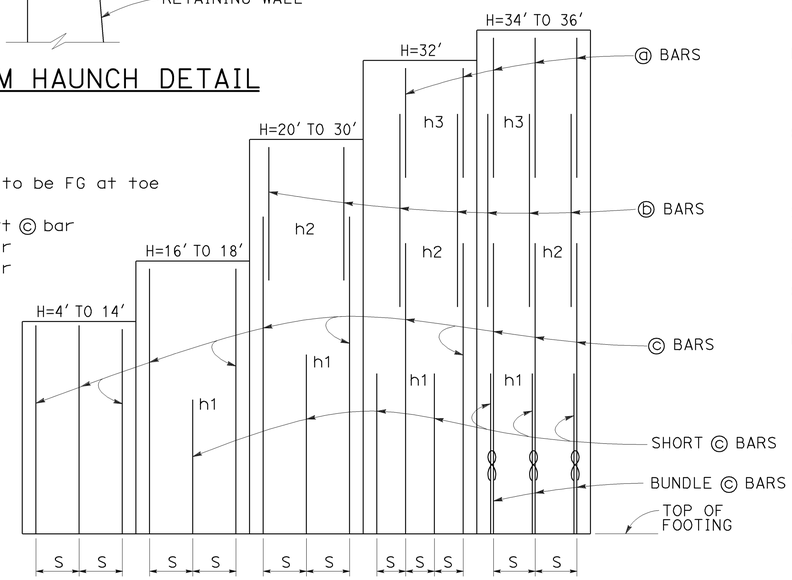

ELEVATION

DESIGN CONDITIONS:

Design H may be exceeded by 6" before going to the next size. Special footing design is required where foundation material is incapable of supporting bearing stress listed in the table.

DESIGN NOTES:

TO ACCOMPANY PLANS DATED 5-12-14

DESIGN: AASHTO LRFD Bridge Design Specifications, 4th Edition with California Amendments

LS: Varied surcharge on level ground surface

DC: Stem Architectural Treatment of thickness up to 6" of concrete (75 psf) considered

CT: 54 kip transverse force applied at He = 32", distributed over 10 feet at the top of wall and 1 : 1 distribution down and outward. Distribution below footing taken no less than 40'.

SEISMIC: $k_h = 0.2$, $k_v = 0.0$

SOIL: $\phi = 34°$, $\gamma = 120$ pcf

REINFORCED CONCRETE: f'c = 3,600 psi
fy = 60,000 psi

LOAD COMBINATIONS AND LIMIT STATES:

Service I	Q = 1.00DC+1.00EV+1.00EH+1.00LS
Strength I	Q = αDC+βEV+ηEH+1.75LS
Extreme I	Q = 1.00DC+1.00EV+1.00EH+1.00EQD+1.00EQE
Extreme II	Q = 1.00DC+1.00EV+1.00EH+1.00CT

Where:

Q:	Force Effects
α:	1.25 or 0.90, Whichever Controls Design
β:	1.35 or 1.00, Whichever Controls Design
η:	1.50 or 0.90, Whichever Controls Design
DC:	Dead Load of Structure Components
EH:	Horizontal Earth Fill Pressure
EV:	Vertical Earth Pressure from Earth Fill Weight
LS:	Live Load Surcharge
EQE:	Seismic Earth Pressure
EQD:	Soil and Structural and Nonstructural Components Inertia
CT:	Vehicular Collision Force

TABLE OF REINFORCING STEEL, DIMENSIONS AND DATA

DESIGN H	4'	6'	8'	10'	12'	14'	16'	18'	20'	22'	24'	26'	28'	30'	32'	34'	36'
W	6'-10"	7'-0"	7'-3"	7'-7"	8'-4"	9'-7"	10'-9"	12'-0"	13'-3"	14'-6"	15'-9"	17'-1"	18'-5"	19'-10"	21'-2"	22'-7"	24'-0"
C	2'-2"	2'-3"	2'-3"	2'-4"	2'-6"	3'-0"	3'-6"	4'-0"	4'-6"	5'-0"	5'-5"	6'-0"	6'-6"	7'-2"	7'-8"	8'-2"	9'-0"
B	4'-8"	4'-9"	5'-0"	5'-3"	5'-10"	6'-7"	7'-3"	8'-0"	8'-9"	9'-6"	10'-4"	11'-1"	11'-11"	12'-8"	13'-6"	14'-5"	15'-0"
F	1'-4"	1'-4"	1'-4"	1'-4"	1'-6"	1'-8"	1'-8"	1'-9"	1'-9"	1'-11"	2'-2"	2'-5"	2'-10"	3'-3"	3'-6"	4'-0"	4'-3"
BATTER	½: 12	½: 12	½: 12	½: 12	½: 12	½: 12	½: 12	½: 12	½: 12	½: 12	⅝: 12	⅝: 12	¾: 12	⅞: 12	1 : 12	1 : 12	1 : 12
SPACING "S"	9"	9"	9"	9"	9"	7"	6"	5"	6"	6"	6"	6"	6"	6"	6"	10"	8"
ⓐ BARS	-	-	-	-	-	-	-	-	-	-	-	-	-	-	#7	#7	#6
ⓑ BARS	-	-	-	-	-	-	-	-	#7	#7	#7	#7	#7	#7	#9	#9	#8
ⓒ BARS	#6	#6	#6	#6	#6	#6	#7	#7	#8	#9	#9	#10	#10	#10	#11	#11	#11
ⓓ BARS	#5	#5	#6	#6	#6	#6	#9	#8	#8	#9	#9	#10	#10	#10	#11	#11	#11
h1	-	-	-	-	-	-	5'-9"	5'-10"	8'-0"	9'-0"	10'-1"	11'-0"	12'-1"	13'-0"	13'-0"	12'-7"	11'-6"
h2	-	-	-	-	-	-	-	-	10'-5"	13'-0"	14'-7"	17'-6"	19'-0"	20'-5"	19'-0"	18'-0"	20'-2"
h3	-	-	-	-	-	-	-	-	-	-	-	-	-	-	21'-2"	21'-10"	24'-0"
ZONE 1 ⓢ BARS	#5 @ 18	#5 @ 18	#5 @ 18	#5 @ 18	#5 @ 18	#5 @ 18	#5 @ 18	#5 @ 18	#5 @ 18	#5 @ 18	#5 @ 12	#5 @ 12	#5 @ 12	#5 @ 12	#5 @ 12	#5 @ 12	#5 @ 12
ZONE 2 ⓢ BARS	#5 @ 18	#5 @ 18	#5 @ 18	#5 @ 18	#5 @ 18	#5 @ 18	#5 @ 12	#5 @ 12	#5 @ 12	#5 @ 12	#5 @ 12	#5 @ 12	#6 @ 12	#6 @ 12	#6 @ 12	#7 @ 12	#7 @ 12
ZONE 1 ⓣ BARS	#4 @ 18	#4 @ 18	#4 @ 18	#4 @ 18	#4 @ 18	#4 @ 18	#4 @ 18	#4 @ 18	#4 @ 18	#4 @ 18	#4 @ 12	#4 @ 12	#4 @ 18	#4 @ 12	#4 @ 12	#4 @ 12	#4 @ 12
ZONE 2 ⓣ BARS	#4 @ 18	#4 @ 18	#4 @ 18	#4 @ 18	#4 @ 18	#4 @ 18	#4 @ 18	#4 @ 18	#4 @ 18	#4 @ 18	#4 @ 12	#4 @ 12	#4 @ 12	#4 @ 12	#5 @ 12	#5 @ 12	#5 @ 12
Ser: B', q'_o	6.8, 0.7	6.5, 1.0	6.2, 1.3	6.0, 1.6	6.3, 2.0	7.5, 2.1	8.6, 2.2	9.8, 2.3	11.0, 2.4	12.1, 2.5	13.2, 2.8	14.4, 2.9	15.5, 3.1	16.8, 3.3	18.0, 3.5	19.2, 3.7	20.6, 3.7
Str: B', q_o	6.6, 1.6	5.0, 1.8	3.6, 2.3	3.0, 3.3	3.2, 4.0	4.3, 3.8	5.3, 3.7	6.4, 3.7	7.4, 3.8	8.2, 4.1	9.0, 4.4	9.9, 4.6	10.7, 4.9	11.7, 5.2	12.6, 5.4	13.6, 5.8	14.6, 5.9
Ext I: B', q_o	5.2, 1.1	4.7, 1.5	3.9, 2.2	3.1, 3.4	2.8, 4.8	3.2, 5.3	3.6, 5.7	4.1, 6.1	4.6, 6.4	5.0, 6.9	5.3, 7.6	5.8, 8.1	6.1, 8.9	6.7, 9.4	7.1, 10.0	7.5, 10.7	8.2, 10.9
Ext II: B', q_o	2.6, 2.2	2.7, 2.6	2.8, 3.1	2.9, 3.6	3.7, 3.6	5.2, 3.3	6.7, 3.1	8.3, 3.0	9.8, 3.0	11.2, 3.1	12.5, 3.2	13.9, 3.4	15.2, 3.6	16.7, 3.8	18.0, 4.0	19.3, 4.2	20.8, 4.3

NOTES:

1. For details not shown and drainage notes see RSP B3-5
2. For wall stem joint details see B0-3/3-3 and B0-3/3-4
3. At ⓒ bars:
   H ≤ 6', no splices are allowed within 1'-8" above the top of footing.
   H > 6', no splices are allowed within H/4 above the top of footing.
4. Bundle ⓓ bars for H = 34' & 36'.
5. Provide #6 @ 10" x 15'-0" ⓔ bars over a distance of 8'-0" measured from all expansion joints, begin wall and end wall locations. For H ≤ 14', hook ⓔ bar into footing and reduce bar length as needed to maintain Min Clr cover.

STATE OF CALIFORNIA
DEPARTMENT OF TRANSPORTATION

RETAINING WALL TYPE 1 (CASE 1)

NO SCALE

RSP B3-1A DATED APRIL 20, 2012 SUPPLEMENTS THE STANDARD PLANS BOOK DATED 2010.

REVISED STANDARD PLAN RSP B3-1A

2010 REVISED STANDARD PLAN RSP B3-1A

2-22-12

Dist	COUNTY	ROUTE	POST MILES TOTAL PROJECT	SHEET No.	TOTAL SHEETS
07	LA	210	R16.1/R25.8	823	927

REGISTERED CIVIL ENGINEER

April 20, 2012
PLANS APPROVAL DATE

REGISTERED PROFESSIONAL ENGINEER Gary Wang No. C58298 Exp. 6-30-12 CIVIL STATE OF CALIFORNIA

THE STATE OF CALIFORNIA OR ITS OFFICERS OR AGENTS SHALL NOT BE RESPONSIBLE FOR THE ACCURACY OR COMPLETENESS OF SCANNED COPIES OF THIS PLAN SHEET.

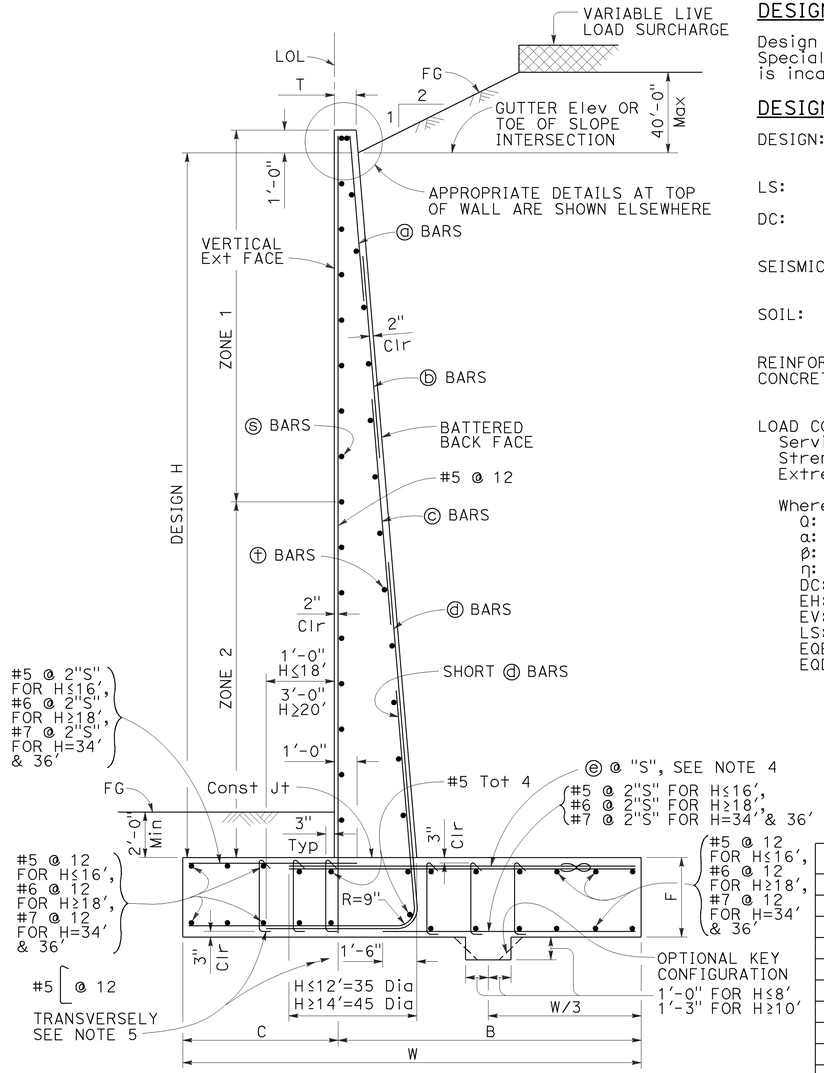

TYPICAL SECTION

DESIGN CONDITIONS:

Design H may be exceeded by 6" before going to the next size. Special footing design is required where foundation material is incapable of supporting bearing stress listed in the table.

DESIGN NOTES:

DESIGN: AASHTO LRFD Bridge Design Specifications, 4th Edition with California Amendments

LS: Varied surcharge on level ground surface

DC: Stem Architectural Treatment of thickness up to 6" of concrete (75 psf) considered

SEISMIC: $k_h = 0.2$
$k_v = 0.0$

SOIL: $\phi = 34°$
$\gamma = 120$ pcf

REINFORCED CONCRETE: $f'c = 3{,}600$ psi
$fy = 60{,}000$ psi

LOAD COMBINATIONS AND LIMIT STATES:

Service I	$Q = 1.00DC+1.00EV+1.00EH+1.00LS$
Strength I	$Q = \alpha DC+\beta EV+\eta EH+1.75LS$
Extreme I	$Q = 1.00DC+1.00EV+1.00EH+1.00EQD+1.00EQE$

Where:

Q:	Force Effects
α:	1.25 or 0.90, Whichever Controls Design
β:	1.35 or 1.00, Whichever Controls Design
η:	1.50 or 0.90, Whichever Controls Design
DC:	Dead Load of Structure Components
EH:	Horizontal Earth Fill Pressure
EV:	Vertical Earth Pressure from Earth Fill Weight
LS:	Live Load Surcharge
EQE:	Seismic Earth Pressure
EQD:	Soil and Structural and Nonstructural Components Inertia

SYMBOLS:

TO ACCOMPANY PLANS DATED 5-12-14

Ser - service limit state I
Str - strength limit state I
Ext - extreme event limit state I
B' - effective footing width (ft)
q_o' - net bearing stress (ksf), OG assumed to be FG at toe
q_o - gross uniform bearing stress (ksf)
h1 = Top of footing to top of short ⓓ bar
h2 = Top of footing to top of ⓓ bar
h3 = Top of footing to top of ⓒ bar
h4 = Top of footing to top of ⓑ bar
Zone 1 = Top half of stem height
Zone 2 = Bottom half of stem height
∞ - Bundle of two bars

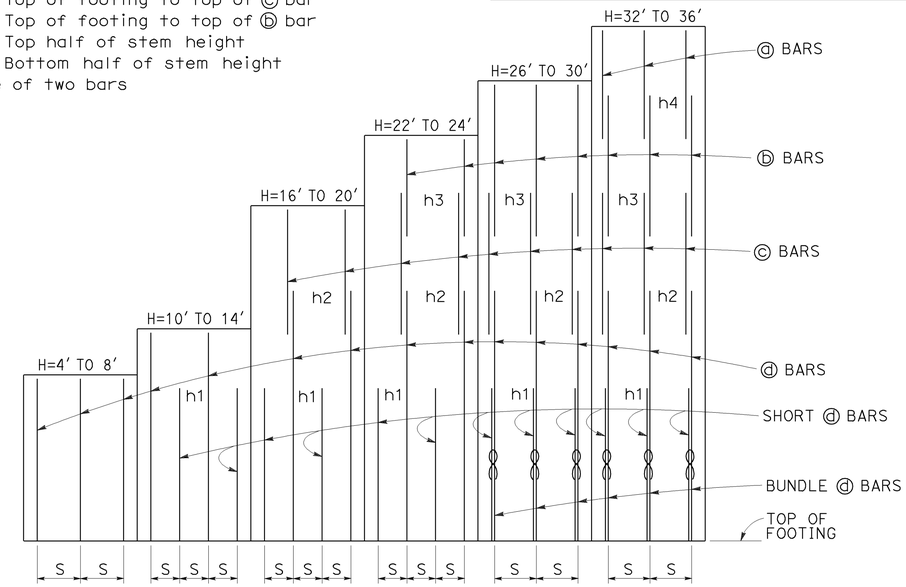

ELEVATION

NOTES:

1. For details not shown and drainage notes see RSP B3-5
2. For wall stem joint details see B0-3 3-3 and B0-3 3-4
3. At ⓓ and short ⓓ bars:
   H ≤ 6', no splices are allowed within 1'-8" above the top of footing.
   H > 6', no splices are allowed within H/4 above the top of footing.
4. Bundle ⓔ bars for H ≥ 26'.
5. Hook stirrups around & space with alternating transverse reinforcement at 2 x "S".

TABLE OF REINFORCING STEEL, DIMENSIONS AND DATA

DESIGN H	4'	6'	8'	10'	12'	14'	16'	18'	20'	22'	24'	26'	28'	30'	32'	34'	36'
W	6'-0"	7'-6"	9'-6"	11'-0"	12'-6"	15'-6"	17'-3"	19'-6"	21'-9"	23'-6"	26'-0"	28'-1"	30'-3"	31'-6"	33'-0"	34'-8"	35'-11"
C	2'-0"	2'-6"	3'-3"	3'-6"	4'-3"	5'-0"	5'-3"	5'-9"	6'-9"	7'-3"	8'-3"	8'-9"	9'-0"	9'-6"	10'-0"	10'-10"	11'-3"
B	4'-0"	5'-0"	6'-3"	7'-6"	8'-3"	10'-6"	12'-0"	13'-9"	15'-0"	16'-3"	17'-9"	19'-4"	21'-3"	22'-0"	23'-0"	23'-10"	24'-8"
F	1'-6"	1'-6"	2'-0"	2'-3"	2'-6"	2'-8"	2'-10"	3'-0"	3'-4"	3'-6"	3'-6"	3'-7"	3'-7"	3'-9"	3'-9"	4'-0"	4'-4"
T	11½"	11½"	11½"	11½"	11½"	11½"	11½"	11½"	11½"	11½"	11½"	11½"	1'-2"	1'-5"	1'-10"	2'-3"	2'-9"
BATTER	½: 12	½: 12	½: 12	½: 12	½: 12	⅝: 12	⅝: 12	¾: 12	⅞: 12	1 : 12	1⅛: 12	1⅛: 12	1⅛: 12	1⅛: 12	1⅛: 12	1⅛: 12	1⅛: 12
SPACING "S"	16"	12"	10"	7"	7"	7"	7"	7"	7"	6"	6"	10"	8"	7"	7"	7"	7"
ⓐ BARS	-	-	-	-	-	-	-	-	-	-	-	-	-	-	#5	#5	#5
ⓑ BARS	-	-	-	-	-	-	-	-	-	#5	#5	#5	#5	#5	#7	#7	#7
ⓒ BARS	-	-	-	-	-	-	#6	#6	#6	#7	#8	#8	#8	#8	#9	#9	#9
ⓓ BARS	#5	#5	#6	#6	#7	#8	#9	#10	#10	#10	#11	#11	#11	#11	#11	#11	#11
ⓔ BARS	#5	#5	#6	#6	#7	#8	#9	#10	#10	#10	#11	#11	#11	#11	#11	#11	#11
h1	-	-	-	5'-3"	6'-4"	7'-6"	8'-9"	9'-9"	11'-0"	11'-3"	11'-6"	10'-3"	11'-9"	12'-3"	12'-6"	13'-3"	13'-8"
h2	-	-	-	-	-	-	12'-8"	15'-6"	17'-0"	16'-6"	17'-3"	18'-0"	17'-6"	17'-4"	14'-10"	15'-9"	16'-4"
h3	-	-	-	-	-	-	-	-	-	18'-9"	21'-3"	21'-3"	22'-4"	22'-8"	18'-0"	18'-6"	19'-6"
h4	-	-	-	-	-	-	-	-	-	-	-	-	-	-	26'-3"	27'-4"	28'-6"
No. of Toe Stirrups	0	0	0	0	0	0	0	0	0	0	0	5	5	6	7	8	9
No. of Heel Stirrups	0	0	0	0	0	0	0	0	4	6	7	8	10	10	11	11	11
ZONE 1 ⓢ BARS	#5 @ 18	#5 @ 18	#5 @ 18	#5 @ 18	#5 @ 18	#5 @ 18	#5 @ 18	#5 @ 18	#5 @ 12	#5 @ 12	#5 @ 12	#5 @ 12	#5 @ 12	#6 @ 12	#6 @ 12	#6 @ 10	#6 @ 10
ZONE 2 ⓢ BARS	#5 @ 18	#5 @ 18	#5 @ 18	#5 @ 18	#5 @ 18	#5 @ 12	#5 @ 12	#5 @ 12	#5 @ 12	#6 @ 12	#6 @ 12	#7 @ 12	#7 @ 12	#7 @ 12	#7 @ 12	#7 @ 10	#7 @ 10
ZONE 1 ⓣ BARS	#4 @ 18	#4 @ 18	#4 @ 18	#4 @ 18	#4 @ 18	#4 @ 18	#4 @ 18	#4 @ 18	#4 @ 18	#4 @ 18	#4 @ 18	#4 @ 12	#4 @ 12	#4 @ 12	#5 @ 12	#5 @ 12	#5 @ 12
ZONE 2 ⓣ BARS	#4 @ 18	#4 @ 18	#4 @ 18	#4 @ 18	#4 @ 18	#4 @ 12	#4 @ 12	#4 @ 12	#4 @ 12	#4 @ 12	#4 @ 12	#5 @ 12	#5 @ 12	#5 @ 12	#6 @ 12	#6 @ 12	#6 @ 12
Ser: B', q_o'	4.0, 0.9	5.5, 1.0	9.3, 1.0	10.9, 1.3	12.3, 1.5	14.8, 1.9	16.6, 2.1	18.7, 2.4	20.6, 2.7	22.3, 3.0	24.2, 3.3	26.1, 3.5	28.2, 3.9	29.6, 4.0	31.1, 4.2	32.7, 4.4	34.1, 4.6
Str: B', q_o	2.2, 2.2	3.5, 2.2	5.1, 2.3	6.3, 2.6	7.6, 2.7	12.9, 3.1	14.3, 3.6	16.5, 3.9	19.4, 4.5	20.7, 4.8	22.5, 5.2	24.3, 5.6	26.2, 6.0	27.5, 6.3	28.8, 6.6	30.3, 6.9	31.8, 7.2
Ext: B', q_o	2.3, 3.4	2.7, 4.4	3.6, 5.0	3.8, 6.5	4.5, 7.0	7.0, 6.1	7.6, 6.9	9.3, 7.0	11.0, 7.1	11.8, 7.6	14.1, 7.4	15.6, 7.7	17.1, 8.0	17.2, 8.7	18.1, 9.0	19.0, 9.4	19.4, 10.0

STATE OF CALIFORNIA
DEPARTMENT OF TRANSPORTATION

RETAINING WALL TYPE 1 (CASE 2)

NO SCALE

RSP B3-1B DATED APRIL 20, 2012 SUPPLEMENTS THE STANDARD PLANS BOOK DATED 2010.

REVISED STANDARD PLAN RSP B3-1B

2010 REVISED STANDARD PLAN RSP B3-1B

3-30-12

Dist	COUNTY	ROUTE	POST MILES TOTAL PROJECT	SHEET No.	TOTAL SHEETS
07	LA	210	R16.1/R25.8	824	927

TO ACCOMPANY PLANS DATED 5-12-14

Gary Wang
REGISTERED CIVIL ENGINEER

April 20, 2012
PLANS APPROVAL DATE

REGISTERED PROFESSIONAL ENGINEER Gary Wang No. C58298 Exp. 6-30-12 CIVIL STATE OF CALIFORNIA

THE STATE OF CALIFORNIA OR ITS OFFICERS OR AGENTS SHALL NOT BE RESPONSIBLE FOR THE ACCURACY OR COMPLETENESS OF SCANNED COPIES OF THIS PLAN SHEET.

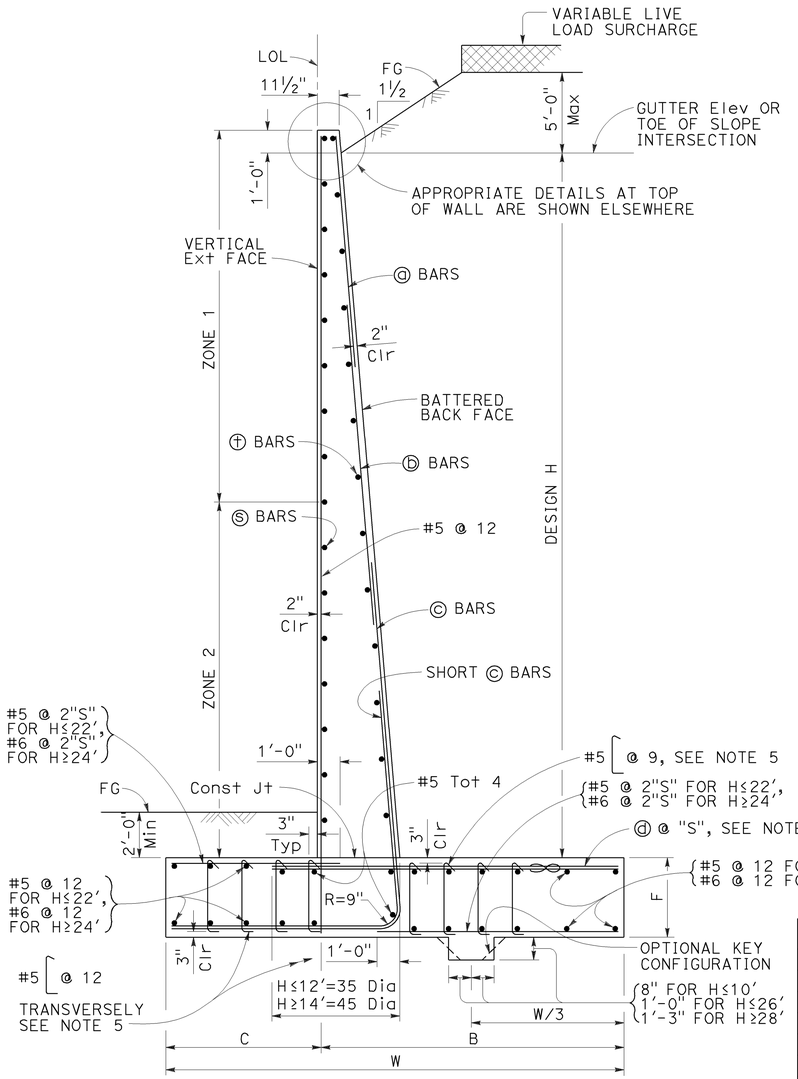

TYPICAL SECTION

DESIGN CONDITIONS:

Design H may be exceeded by 6" before going to the next size. Special footing design is required where foundation material is incapable of supporting bearing stress listed in the table.

DESIGN NOTES:

DESIGN: AASHTO LRFD Bridge Design Specifications, 4th Edition with California Amendments

LS: Varied surcharge on level ground surface

DC: Stem Architectural Treatment of thickness up to 6" of concrete (75 psf) considered

SEISMIC: $k_h = 0.2$, $k_v = 0.0$

SOIL: $\phi = 34°$, $\gamma = 120$ pcf

REINFORCED CONCRETE: $f'c = 3{,}600$ psi, $fy = 60{,}000$ psi

LOAD COMBINATIONS AND LIMIT STATES:

Service I $Q = 1.00DC+1.00EV+1.00EH+1.00LS$
Strength I $Q = \alpha DC+\phi EV+\eta EH+1.75LS$
Extreme I $Q = 1.00DC+1.00EV+1.00EH+1.00EQD+1.00EQE$

Where:

- Q: Force Effects
- α: 1.25 or 0.90, Whichever Controls Design
- ϕ: 1.35 or 1.00, Whichever Controls Design
- η: 1.50 or 0.90, Whichever Controls Design
- DC: Dead Load of Structure Components
- EH: Horizontal Earth Fill Pressure
- EV: Vertical Earth Pressure from Earth Fill Weight
- LS: Live Load Surcharge
- EQE: Seismic Earth Pressure
- EQD: Soil and Structural and Nonstructural Components Inertia

SYMBOLS:

Ser - service limit state I
Str - strength limit state I
Ext - extreme event limit state I
B' - effective footing width (ft)
q'_o - net bearing stress (ksf), OG assumed to be FG at toe
q_o - gross uniform bearing stress (ksf)
h1 = Top of footing to top of short ⓒ bar
h2 = Top of footing to top of ⓒ bar
h3 = Top of footing to top of ⓑ bar
Zone 1 = Top half of stem height
Zone 2 = Bottom half of stem height
∞ - Bundle of two bars

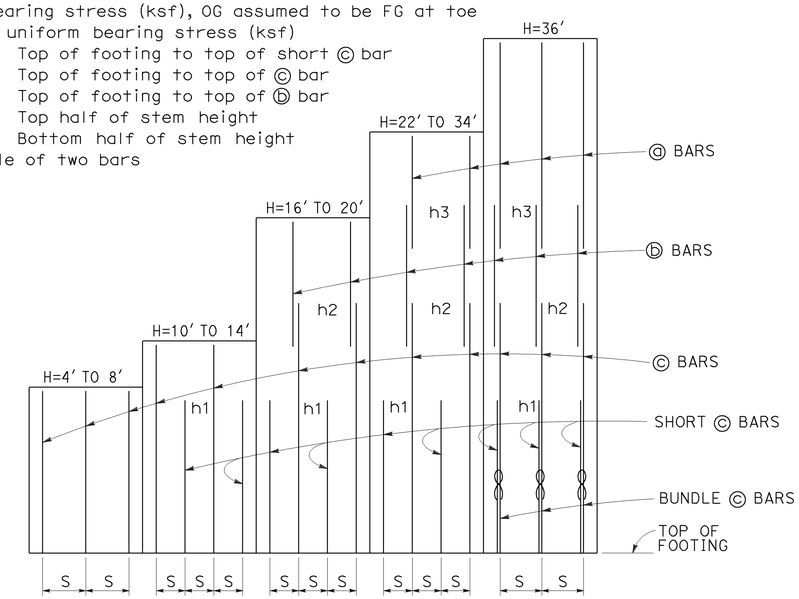

ELEVATION

TABLE OF REINFORCING STEEL, DIMENSIONS AND DATA

DESIGN H	4'	6'	8'	10'	12'	14'	16'	18'	20'	22'	24'	26'	28'	30'	32'	34'	36'
W	6'-5"	7'-3"	8'-3"	9'-3"	10'-8"	12'-6"	13'-9"	15'-1"	16'-6"	17'-10"	19'-3"	20'-4"	21'-5"	22'-8"	23'-11"	25'-1"	26'-4"
C	2'-2"	2'-6"	3'-0"	3'-6"	3'-8"	3'-11"	4'-0"	4'-7"	5'-3"	6'-0"	7'-0"	7'-9"	8'-3"	8'-8"	9'-0"	9'-6"	9'-10"
B	4'-3"	4'-9"	5'-3"	5'-9"	7'-0"	8'-7"	9'-9"	10'-6"	11'-3"	11'-10"	12'-3"	12'-7"	13'-2"	14'-0"	14'-11"	15'-7"	16'-6"
F	1'-4"	1'-4"	1'-4"	1'-6"	1'-6"	1'-6"	1'-8"	2'-0"	2'-4"	2'-9"	3'-2"	3'-0"	3'-0"	3'-0"	3'-3"	3'-3"	3'-3"
BATTER	½: 12	½: 12	½: 12	½: 12	½: 12	½: 12	½: 12	½: 12	½: 12	½: 12	⅝: 12	¾: 12	1 : 12	1 : 12	1⅛: 12	1⅛: 12	1⅛: 12
SPACING "S"	16"	16"	16"	8"	8"	7"	7"	7"	6"	6"	7"	7"	7"	6"	6"	6"	8"
ⓐ BARS	-	-	-	-	-	-	-	-	-	#5	#5	#5	#5	#5	#5	#6	#6
ⓑ BARS	-	-	-	-	-	-	#5	#5	#5	#7	#7	#7	#8	#8	#8	#9	#9
ⓒ BARS	#5	#5	#6	#5	#6	#6	#7	#8	#8	#9	#10	#10	#10	#10	#10	#11	#11
ⓓ BARS	#5	#5	#6	#5	#6	#8	#9	#9	#9	#10	#11	#9	#9	#9	#10	#10	#9
h1	-	-	-	4'-2"	4'-7"	6'-2"	7'-3"	8'-6"	8'-8"	9'-8"	11'-0"	12'-2"	14'-0"	13'-0"	15'-10"	14'-6"	12'-0"
h2	-	-	-	-	-	-	10'-6"	12'-9"	14'-2"	13'-8"	17'-0"	18'-6"	17'-10"	18'-9"	20'-3"	21'-0"	17'-0"
h3	-	-	-	-	-	-	-	-	-	15'-6"	17'-9"	19'-6"	21'-8"	23'-0"	24'-8"	25'-6"	24'-8"
No. of Toe Stirrups	0	0	0	0	0	0	0	0	0	0	0	6	6	7	7	7	8
No. of Heel Stirrups	0	0	0	0	0	0	0	0	0	0	0	6	6	6	6	6	6
ZONE 1 ⓢ BARS	#5 @ 18	#5 @ 18	#5 @ 18	#5 @ 18	#5 @ 18	#5 @ 18	#5 @ 18	#5 @ 18	#5 @ 18	#5 @ 18	#5 @ 18	#5 @ 12	#5 @ 12	#5 @ 12	#5 @ 12	#5 @ 12	#5 @ 12
ZONE 2 ⓢ BARS	#5 @ 18	#5 @ 18	#5 @ 18	#5 @ 18	#5 @ 18	#5 @ 18	#5 @ 12	#5 @ 12	#5 @ 12	#5 @ 12	#5 @ 12	#6 @ 12	#6 @ 12	#6 @ 12	#7 @ 12	#7 @ 12	#7 @ 12
ZONE 1 ⓣ BARS	#4 @ 18	#4 @ 18	#4 @ 18	#4 @ 18	#4 @ 18	#4 @ 18	#4 @ 18	#4 @ 18	#4 @ 18	#4 @ 18	#4 @ 18	#4 @ 18	#4 @ 12	#4 @ 12	#4 @ 12	#4 @ 12	#4 @ 12
ZONE 2 ⓣ BARS	#4 @ 18	#4 @ 18	#4 @ 18	#4 @ 18	#4 @ 18	#4 @ 18	#4 @ 18	#4 @ 18	#4 @ 18	#4 @ 18	#4 @ 12	#4 @ 12	#5 @ 12	#5 @ 12	#5 @ 12	#5 @ 12	#5 @ 12
Ser: B', q'_o	4.3, 0.8	4.9, 1.1	5.6, 1.3	7.1, 1.5	8.0, 1.8	9.3, 2.1	10.6, 2.3	11.9, 2.5	13.3, 2.6	14.6, 2.8	15.9, 2.9	17.0, 3.0	18.0, 3.1	19.3, 3.3	20.4, 3.5	21.5, 3.7	22.7, 3.9
Str: B', q_o	2.4, 2.2	2.4, 2.7	2.7, 3.2	3.0, 3.7	4.3, 3.8	5.9, 3.8	7.0, 4.1	7.9, 4.3	9.0, 4.5	9.9, 4.7	10.8, 4.9	11.6, 5.0	12.3, 5.2	13.3, 5.4	14.2, 5.7	15.0, 5.9	16.0, 6.1
Ext: B', q_o	4.1, 1.5	3.9, 2.1	3.8, 2.8	3.5, 3.9	3.6, 4.9	4.2, 5.5	4.6, 6.3	5.0, 7.0	5.6, 7.4	6.0, 8.0	6.5, 8.4	6.9, 8.6	7.2, 9.2	7.7, 9.6	8.1, 10.4	8.4, 10.9	8.9, 11.3

NOTES:

1. For details not shown and drainage notes see RSP B3-5
2. For wall stem joint details see B0-3 / 3-3 and B0-3 / 3-4
3. At ⓒ bars:
   H ≤ 6', no splices are allowed within 1'-8" above the top of footing.
   H > 6', no splices are allowed within H/4 above the top of footing.
4. Bundle ⓓ bars for H = 36'.
5. Hook stirrups around & space with alternating transverse reinforcement at 2 x "S".

RSP B3-1C DATED APRIL 20, 2012 SUPPLEMENTS THE STANDARD PLANS BOOK DATED 2010.

STATE OF CALIFORNIA
DEPARTMENT OF TRANSPORTATION

RETAINING WALL TYPE 1 (CASE 3)

NO SCALE

REVISED STANDARD PLAN RSP B3-1C

2010 REVISED STANDARD PLAN RSP B3-1C

3-30-12

Dist	COUNTY	ROUTE	POST MILES TOTAL PROJECT	SHEET No.	TOTAL SHEETS
07	LA	210	R16.1/R25.8	825	927

REGISTERED CIVIL ENGINEER

October 21, 2011
PLANS APPROVAL DATE

REGISTERED PROFESSIONAL ENGINEER Tillat Satter No. C42892 Exp. 3-31-12 CIVIL STATE OF CALIFORNIA

THE STATE OF CALIFORNIA OR ITS OFFICERS OR AGENTS SHALL NOT BE RESPONSIBLE FOR THE ACCURACY OR COMPLETENESS OF SCANNED COPIES OF THIS PLAN SHEET.

TO ACCOMPANY PLANS DATED 5-12-14

2010 REVISED STANDARD PLAN RSP B11-47

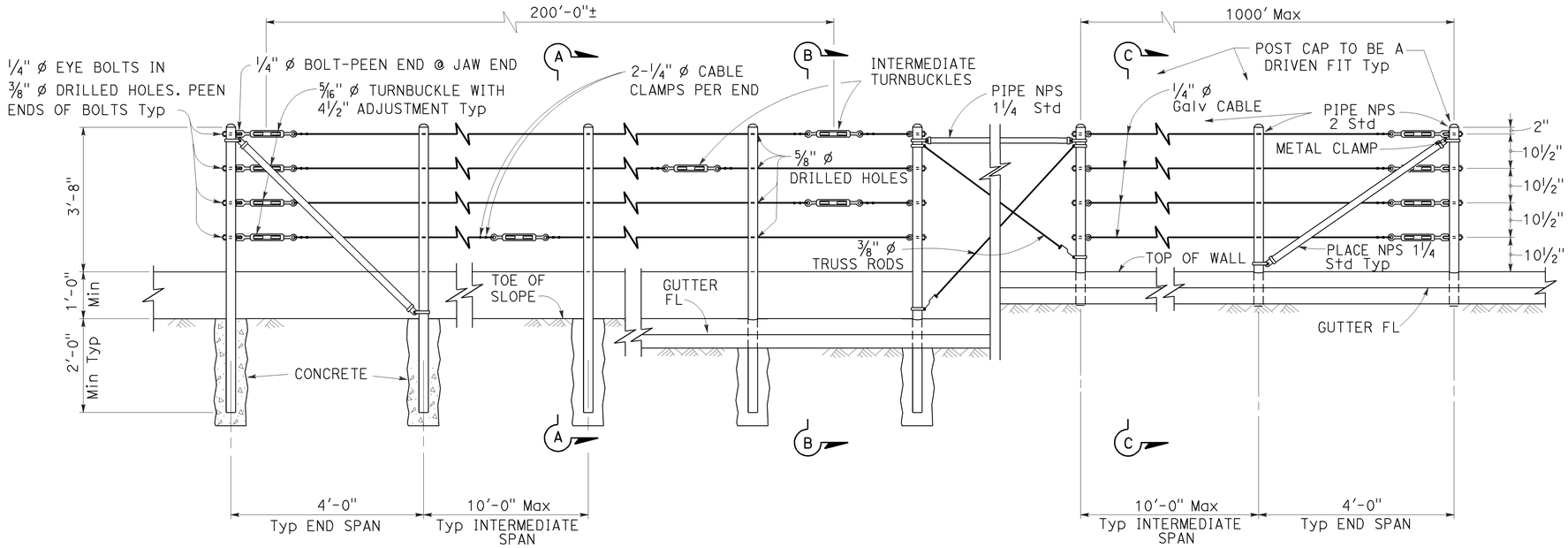

EXISTING WALL (WITHOUT GUTTER)
Existing

RETAINING WALL (WITH GUTTER)
Existing

RETAINING WALL (WITH GUTTER)
New construction

ELEVATION

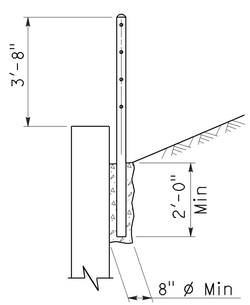

SECTION A-A
Existing

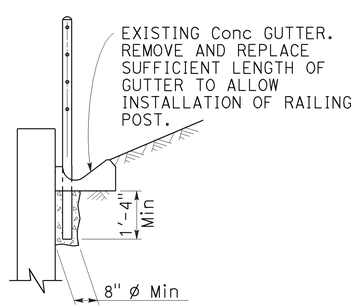

SECTION B-B
Existing

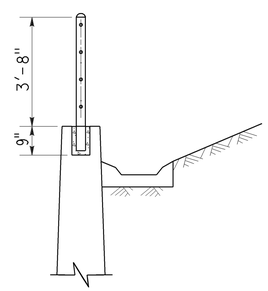

SECTION C-C
New construction

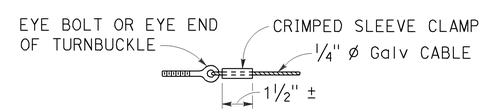

ALTERNATIVE CABLE CONNECTION

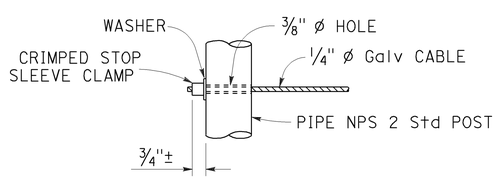

ALTERNATIVE DEAD END ANCHORAGE

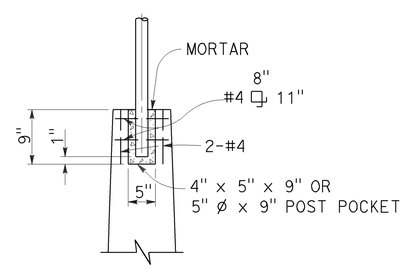

POST POCKET

NOTES:

1. Maximum distance between turnbuckles shall be 200'-0"±.
2. Intermediate turnbuckles to be placed in adjacent spans.
3. Cable shall not be spliced between intermediate turnbuckles and end posts.
4. Posts to be vertical.
5. Alignment of holes in posts may vary to conform to slope of top of retaining wall.
6. The Contractor shall verify all dependent dimensions in the field before ordering or fabricating any material.
7. Line posts shall be braced horizontally and trussed diagonally in both directions at intervals not to exceed 1000'.
8. Post pockets to be centered in top of wall.
9. Typical end spans, braced in both directions, shall be constructed at changes in line where the angle of deflection is 15° or more.
10. Provide thimbles at all cable loops.

STATE OF CALIFORNIA
DEPARTMENT OF TRANSPORTATION

CABLE RAILING

NO SCALE

RSP B11-47 DATED OCTOBER 21, 2011 SUPERSEDES STANDARD PLAN B11-47 DATED MAY 20, 2011 - PAGE 293 OF THE STANDARD PLANS BOOK DATED 2010.

REVISED STANDARD PLAN RSP B11-47

9-14-11

Dist	COUNTY	ROUTE	POST MILES TOTAL PROJECT	SHEET No.	TOTAL SHEETS
07	LA	210	R16.1/R25.8	826	927

REGISTERED CIVIL ENGINEER

November 15, 2013
PLANS APPROVAL DATE

REGISTERED PROFESSIONAL ENGINEER — Tillat Satter — No. C42892 — Exp. 3-31-14 — CIVIL — STATE OF CALIFORNIA

THE STATE OF CALIFORNIA OR ITS OFFICERS OR AGENTS SHALL NOT BE RESPONSIBLE FOR THE ACCURACY OR COMPLETENESS OF SCANNED COPIES OF THIS PLAN SHEET.

TO ACCOMPANY PLANS DATED 5-12-14

2010 REVISED STANDARD PLAN RSP B11-56

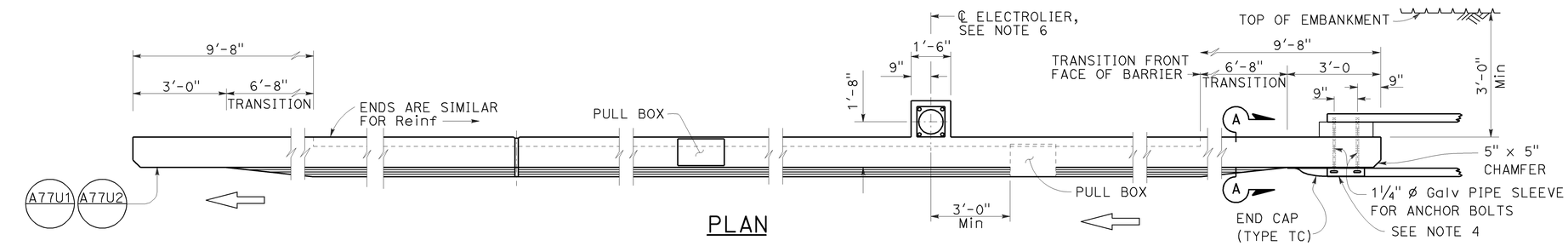

PLAN

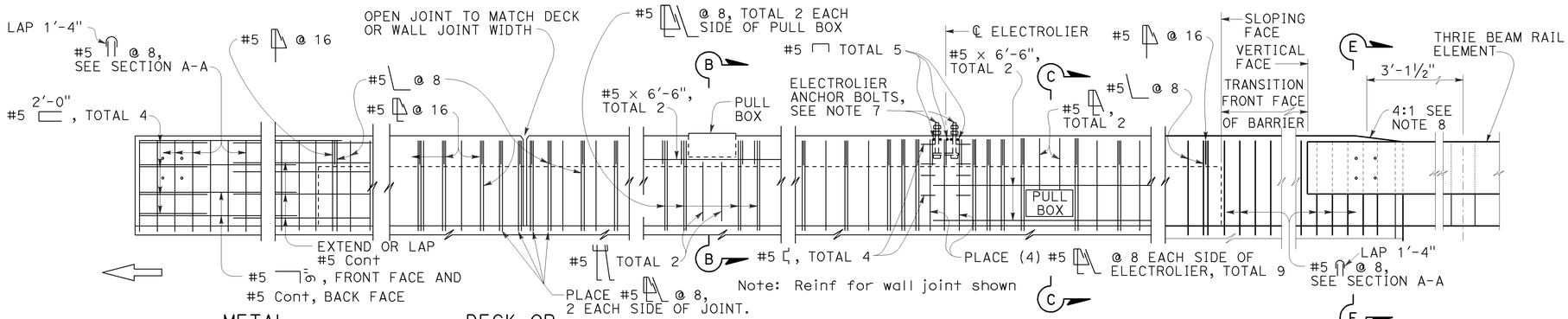

ELEVATION

NOTES:

1. Walls are to be backfilled before barrier is placed.
2. Clearance to reinforcing steel in barrier to be 1", except as noted. Longitudinal reinforcement to stop at all expansion joints.
3. Dimensions may vary with roadway cross slope and with certain thickness of surfacing. See Project Plans.
4. For typical metal railing connection details not shown, see Revised Standard Plans RSP A77U1 and RSP A77U2.
5. See Standard Plans ES-9A, ES-9B, ES-9C, ES-9D and ES-9E for electrical details. The maximum number of conduits in the barrier is limited to two 2" conduits along with one 3" conduit. When a 3" conduit is used, it is restricted to the base of the barrier.
6. For electrolier mounting details, See Standard Plans ES-6A and ES-6B.
7. Minimum concrete edge distance, to the reinforcing shown, shall be maintained. Edge distance may be adjusted to accommodate increase in concrete cover for architectual treatment.
8. Taper the top of the end of the bridge railing at 4:1 to match the top elevation of the thrie beam rail element.

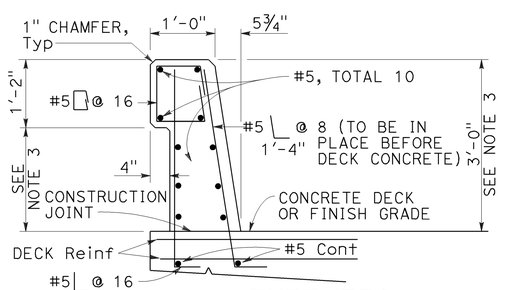

TYPE 736

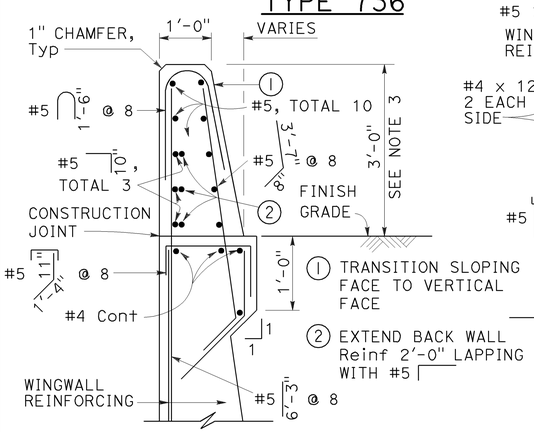

SECTION A-A

Details shown for barrier anchorage to Type 736A. Anchorgae for barrier Types 736 and 736B are similar to their respective details.

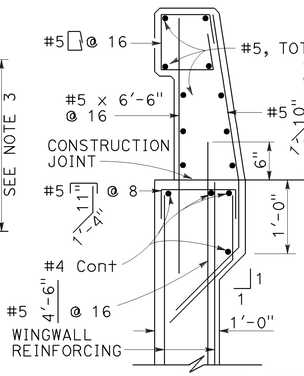

TYPE 736A

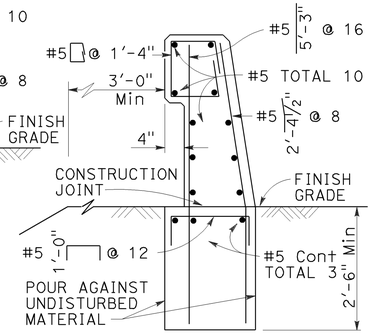

TYPE 736B

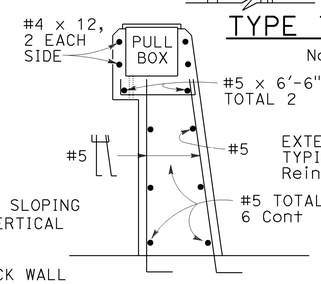

SECTION B-B

Note: Types 736A & 736B are similar to Type 736 except as noted

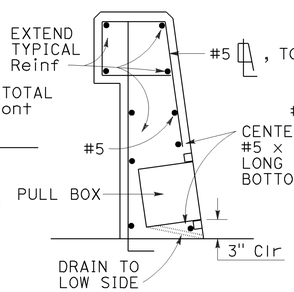

SECTION C-C

See Notes

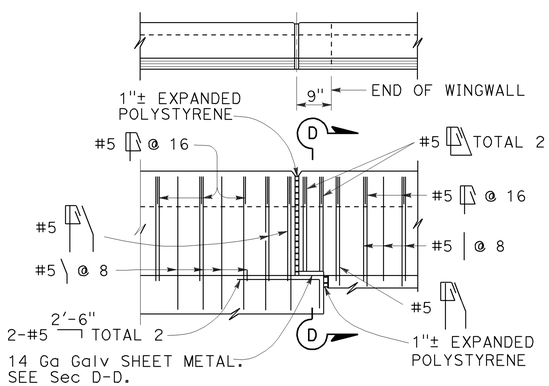

TYPE 736A TYPE 736B

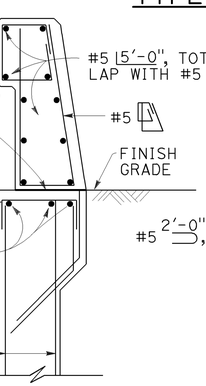

SECTION D-D

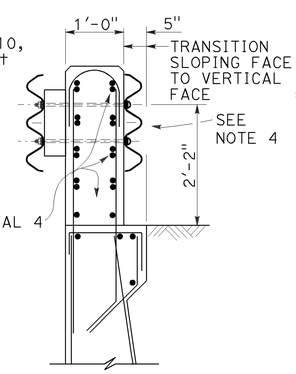

SECTION E-E

See Notes

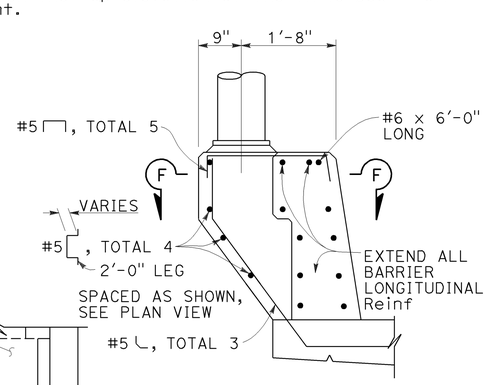

PEDESTAL ELEVATION

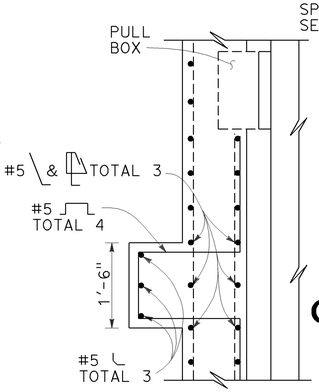

SECTION F-F

STATE OF CALIFORNIA
DEPARTMENT OF TRANSPORTATION

CONCRETE BARRIER TYPE 736

NO SCALE

RSP B11-56 DATED NOVEMBER 15, 2013 SUPERSEDES RSP B11-56 DATED JULY 19, 2013 AND STANDARD PLAN B11-56 DATED MAY 20, 2011 - PAGE 298 OF THE STANDARD PLANS BOOK DATED 2010.

REVISED STANDARD PLAN RSP B11-56

10-4-13

Dist	COUNTY	ROUTE	POST MILES TOTAL PROJECT	SHEET No.	TOTAL SHEETS
07	LA	210	R16.1/R25.8	827	927

REGISTERED CIVIL ENGINEER

July 19, 2013
PLANS APPROVAL DATE

REGISTERED PROFESSIONAL ENGINEER
Stanley P. Johnson
No. C57793
Exp. 3-31-14
CIVIL
STATE OF CALIFORNIA

THE STATE OF CALIFORNIA OR ITS OFFICERS OR AGENTS SHALL NOT BE RESPONSIBLE FOR THE ACCURACY OR COMPLETENESS OF SCANNED COPIES OF THIS PLAN SHEET.

TO ACCOMPANY PLANS DATED 5-12-14

INSTRUCTIONS TO FABRICATOR

PROJECT PLANS SHOW:

1. Sign structure location.
2. Length of structure frame.
3. Panel size and locations on structure.
4. Walkway length for two post signs.
5. Post type and height to bottom of frame.
6. Base plate elevation.
7. Footing elevation or location of pile foundation.
8. Photoelectric unit location if required.

REFER TO THE FOLLOWING STANDARD PLANS FOR DETAILS NOT SHOWN ON PROJECT PLANS:

Sheet No.	SHEET NAME
S1	Overhead Signs-Truss, Instructions and Examples
S2	Overhead Signs-Truss, Single Post Type, Post Types II to IX
S3	Overhead Signs-Truss, Single Post Type, Base Plate and Anchorage Details
S4	Overhead Signs-Truss, Single Post Type, Structural Frame Members Details No. 1
S5	Overhead Signs-Truss, Single Post Type, Structural Frame Members Details No. 2
S6	Overhead Signs-Truss, Gusset Plate Details
S8	Overhead Signs-Truss, Single Post Type, Round Pedestal Pile Foundation
S9	Overhead Signs-Truss, Two Post Type, Post Types I-S through VII-S
S10	Overhead Signs-Truss, Two Post Type, Base Plate and Anchorage Details
S11	Overhead Signs-Truss, Two Post Type, Structural Frame Members
S12	Overhead Signs-Truss, Structural Frame Details
S13	Overhead Signs-Truss, Frame Juncture Details
S15	Overhead Signs-Truss, Two Post Type, Round Pedestal Pile Foundation
S16	Overhead Signs, Walkway Details No. 1
S17	Overhead Signs, Walkway Details No. 2
S17A	Overhead Signs, Walkway Details No. 3
S18	Overhead Signs, Walkway Safety Railing Details
S19	Overhead Signs-Truss, Sign Mounting Details, Laminated Panel-Type A
S20	Overhead Signs, Steel Frames, Removable Sign Panel Frames
S21	Overhead Signs, Removable Sign Panel Frames, Mounting Details
S22	Overhead Signs-Truss, Removable Sign Panel Frames, 9'-2" and 10'-0" Sign Panels

WALKWAY BRACKETS:

Space all walkway brackets maintaining uniform spacing where possible. Maximum spacing shall not exceed 5'-6".

LIGHTING FIXTURE SUPPORTS:

Where distance from walkway bracket to end of sign panel exceeds 1'-4", extend lighting fixture supports to next walkway bracket. See Example No. 2.

WALKWAY AND SAFETY RAILING:

Walkway to be continuous for entire length of frame for single post signs. For two post signs, see Project Plans. Safety railing to protect entire walkway, but continuous for no more than 11'-0" in one unit.

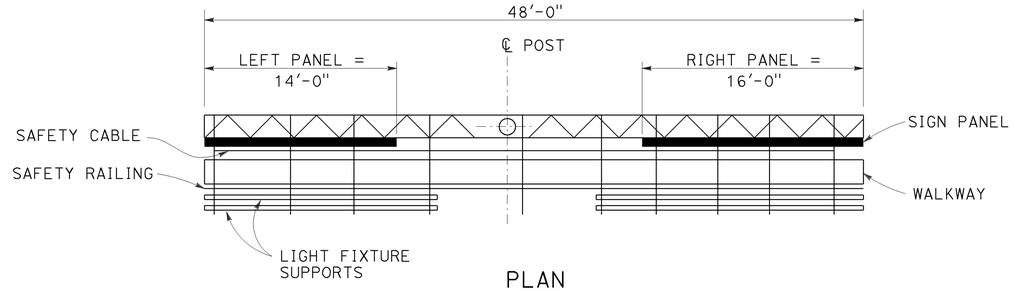

PLAN

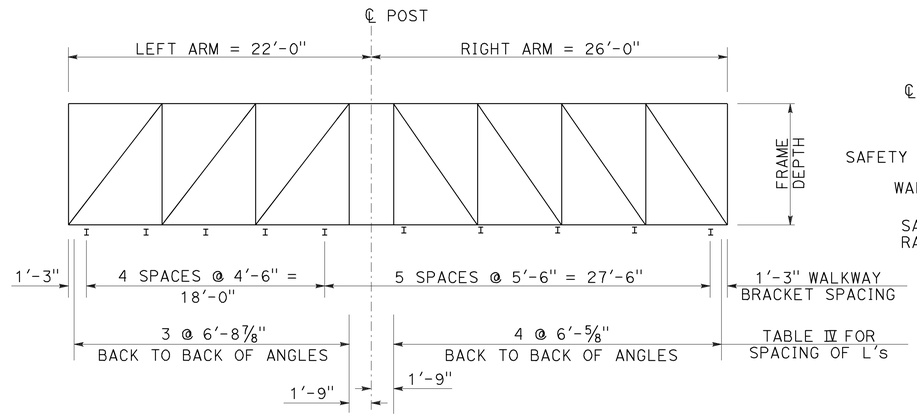

ELEVATION

UNBALANCED SINGLE POST TYPE

Example No. 1

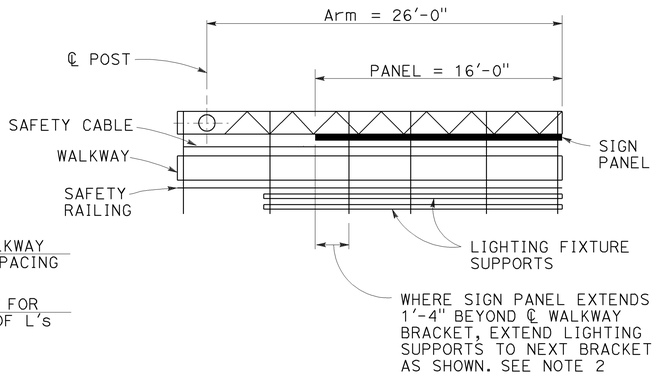

PLAN

CANTILEVER SINGLE POST TYPE

Example No. 2

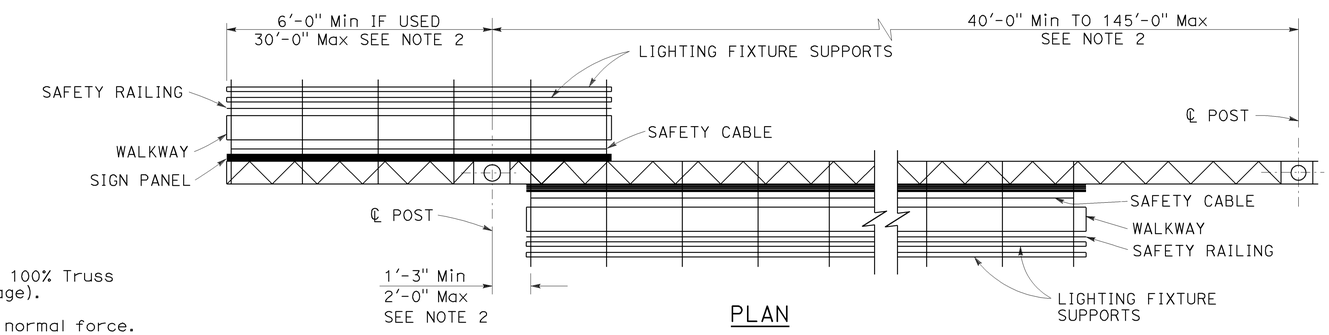

PLAN

TWO POST TYPE WITH CANTILEVER (PART DOUBLE-FACED)

Example No. 3

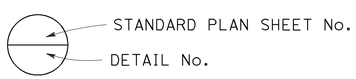

NOTES:

1. Signs are shown and dimensioned looking in the direction of traffic. Double faced signs are shown and dimensioned looking ahead along stationing.
2. Mandatory dimension limit.

GENERAL NOTES:

LOADING:

WIND LOADING:

Normal to face of sign: 40.3 psf on 100% Truss surface area (i.e. 100% panel coverage).

Transverse to face of sign: 20% of normal force.

WALKWAY LOADING:

Dead load +500 LB concentrated live load.

UNIT STRESSES:

STRUCTURAL STEEL: fy = 36,000 psi
REINFORCED CONCRETE: fy = 60,000 psi
f'c = 3600 psi
FOOTING SOIL PRESSURE: 2.5 ksf (spread footing)

MINIMUM CLEARANCE

Vertical roadway clearance 18'-0" (bottom of walkway system)

WELDING:

All welding continuous unless otherwise noted on the plans.

STATE OF CALIFORNIA
DEPARTMENT OF TRANSPORTATION

OVERHEAD SIGNS-TRUSS INSTRUCTIONS AND EXAMPLES

NO SCALE

RSP S1 DATED JULY 19, 2013 SUPERSEDES STANDARD PLAN S1 DATED MAY 20, 2011 - PAGE 334 OF THE STANDARD PLANS BOOK DATED 2010.

REVISED STANDARD PLAN RSP S1

2010 REVISED STANDARD PLAN RSP S1

7-11-13

Dist	COUNTY	ROUTE	POST MILES TOTAL PROJECT	SHEET No.	TOTAL SHEETS
07	LA	210	R16.1/R25.8	828	927

REGISTERED CIVIL ENGINEER

July 19, 2013
PLANS APPROVAL DATE

REGISTERED PROFESSIONAL ENGINEER Stanley P. Johnson No. C57793 Exp. 3-31-14 CIVIL STATE OF CALIFORNIA

THE STATE OF CALIFORNIA OR ITS OFFICERS OR AGENTS SHALL NOT BE RESPONSIBLE FOR THE ACCURACY OR COMPLETENESS OF SCANNED COPIES OF THIS PLAN SHEET.

TO ACCOMPANY PLANS DATED 5-12-14

TABLE XV

POST TYPE	PIPE NPS	PIPE THICKNESS	CAP PLATE SIZE FOR CHORD L's 5 x 5	CAP PLATE SIZE FOR CHORD L's 6 x 6	ROUND PEDESTAL PEDESTAL SIZE Dia	ROUND PEDESTAL VERTICAL ⌋-BARS EQUALLY SPACED TOTAL	ROUND PEDESTAL VERTICAL ⌋-BARS BAR SIZE	ROUND PEDESTAL SPIRAL BAR SIZE	ROUND PEDESTAL SPIRAL PITCH	SQUARE PEDESTAL PEDESTAL SIZE SQUARE	SQUARE PEDESTAL VERTICAL ⌋-BARS EQUALLY SPACED TOTAL	SQUARE PEDESTAL VERTICAL ⌋-BARS BAR SIZE	SQUARE PEDESTAL VERTICAL ⌋-BARS # OF BARS EA FACE	SQUARE PEDESTAL HOOP BAR SIZE	SQUARE PEDESTAL HOOP SPACING	SPREAD FOOTING (SEE NOTE 2)	SPREAD FOOTING REINFORCEMENT WIDTH TOP	SPREAD FOOTING REINFORCEMENT WIDTH BOTTOM	SPREAD FOOTING REINFORCEMENT LONGITUDINAL TOP	SPREAD FOOTING REINFORCEMENT LONGITUDINAL BOTTOM	SPREAD FOOTING REINFORCEMENT FOOTING STIRRUPS
II	14	1/2"	2'-0" x 2'-0" x 1"	2'-2" x 2'-2" x 1"	5'-3"	16	#10	#5	3 1/2"	5'-3"	16	#10	5	#5	3 1/2"	12'-0" x 14'-0" x 2'-6"	14-#6	14-#7	13-#9	13-#9	#5 @ 12
III	16		2'-2" x 2'-2" x 1"	2'-4" x 2'-4" x 1"												12'-0" x 14'-0" x 2'-6"	15-#6	15-#7			
IV	18		2'-4" x 2'-4" x 1"	2'-6" x 2'-6" x 1"												12'-0" x 14'-0" x 2'-6"	15-#6	15-#7			
V	20		2'-6" x 2'-6" x 1"	2'-8" x 2'-8" x 1"												13'-0" x 14'-0" x 2'-6"	15-#6	15-#7	14-#9	14-#9	
VI	24		2'-10" x 2'-10" x 1"	3'-0" x 3'-0" x 1"	5'-9"		#11			5'-9"		#11				13'-0" x 16'-0" x 2'-6"	17-#7	17-#7		14-#11	
VII	24	3/4"														13'-0" x 17'-0" x 2'-6"	18-#7	18-#7			
VIII	24	31/32"														13'-0" x 18'-0" x 2'-6"	19-#7	19-#7			
IX	24	31/32"														13'-0" x 18'-0" x 2'-6"	19-#7	19-#7			

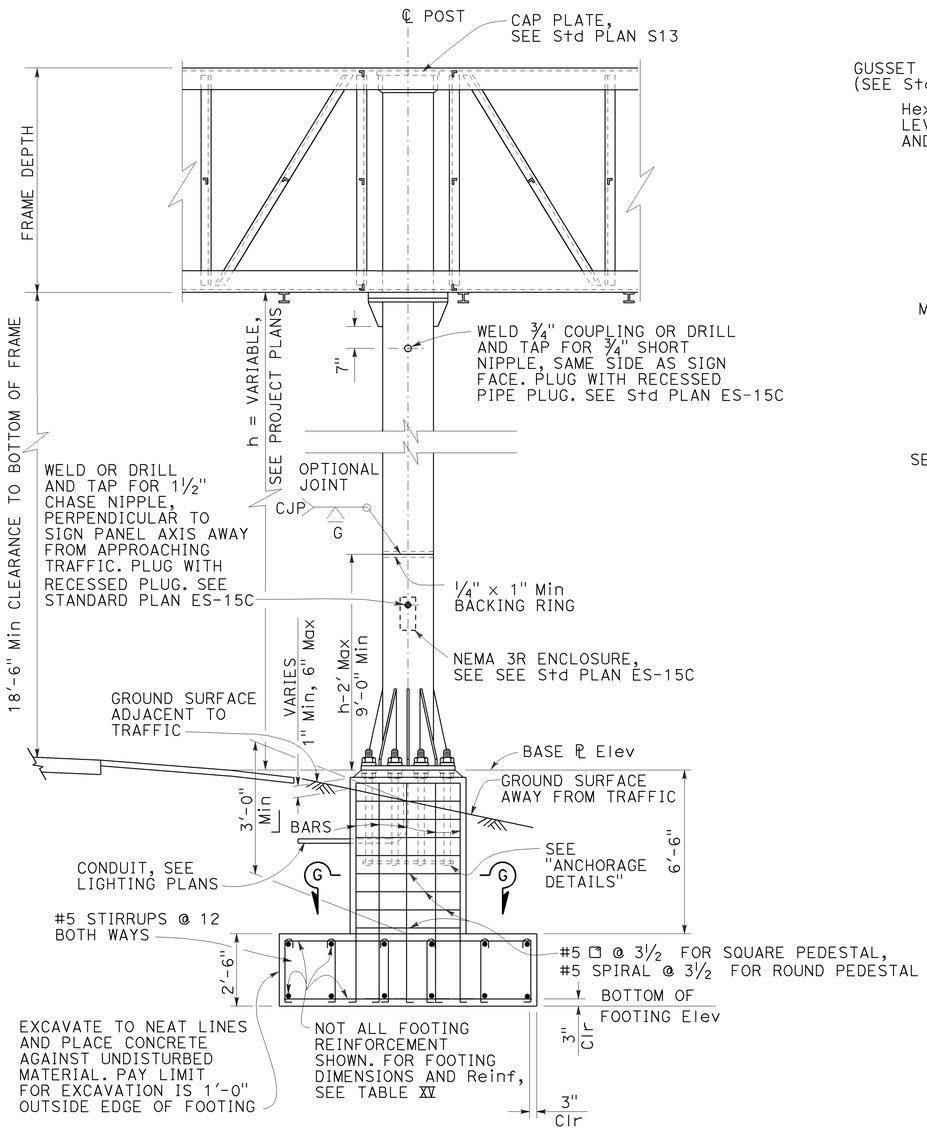

ELEVATION
See Note 5

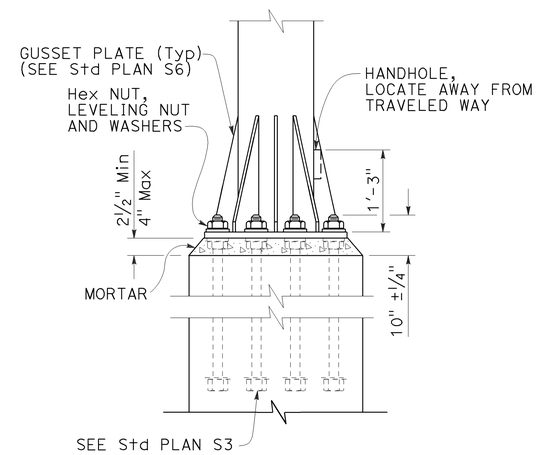

ELEVATION

ANCHORAGE DETAILS

NOTES:

1. For "General Notes", see Revised Standard Plan RSP S1.
2. Longer side of footing (longitudinal) shall be normal to axis of sign.
3. Backfill shall be in place prior to erection of post.
4. Thread upper 10" of anchor bolts and galvanize upper 1'-0".
5. Spread footing with square pedestal foundation shown, use Pile Foundation when shown on the Project Plans. For pile foundation details, see Standard Plan S8.
6. Anchor plates may be retained with hexagon nut or formed head as alternatives to details shown.
7. On single post sign structures, the post shall be raked out of plumb, with the use of the leveling nuts to make the bottom of the sign frame level.
8. At final position of post all top and bottom nuts shall be tightened against base plate.
9. When foundation is located on a steep slope with exposed face of concrete adjacent to traffic, see "Detail C" on Standard Plan S8, as applicable.
10. Slope protection required when indicated on the Project Plans.

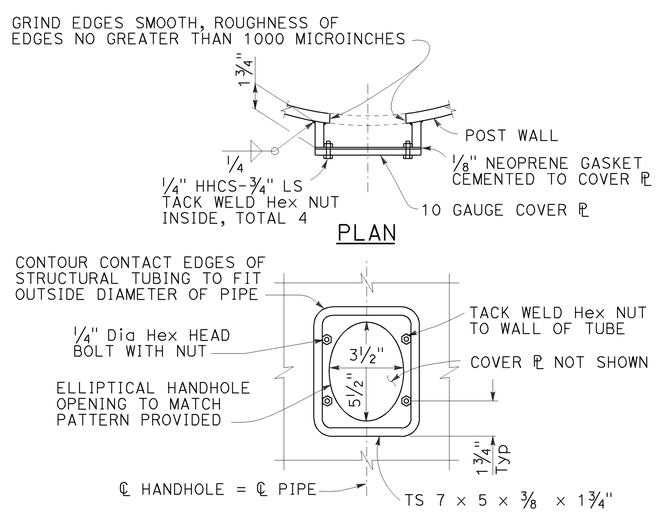

ELEVATION

TYPICAL DETAILS OF HANDHOLE AND COVER

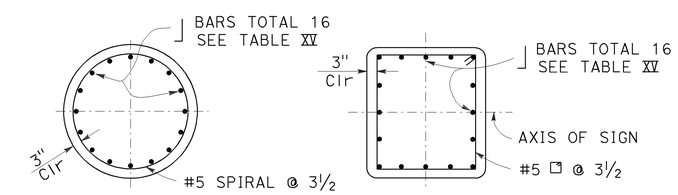

SECTION G-G
ROUND PEDESTAL

SECTION G-G
SQUARE PEDESTAL

STATE OF CALIFORNIA
DEPARTMENT OF TRANSPORTATION

OVERHEAD SIGNS-TRUSS SINGLE POST TYPE POST TYPES II THROUGH IX

NO SCALE

RSP S2 DATED JULY 19, 2013 SUPERSEDES STANDARD PLAN S2
DATED MAY 20, 2011 - PAGE 335 OF THE STANDARD PLANS BOOK DATED 2010.

REVISED STANDARD PLAN RSP S2

2010 REVISED STANDARD PLAN RSP S2

7-11-13

Dist	COUNTY	ROUTE	POST MILES TOTAL PROJECT	SHEET No.	TOTAL SHEETS
07	LA	210	R16.1/R25.8	829	927

Theresa Gabriel
REGISTERED ELECTRICAL ENGINEER

July 19, 2013
PLANS APPROVAL DATE

REGISTERED PROFESSIONAL ENGINEER Theresa Aziz Gabriel No. E15129 Exp. 6-30-14 ELECTRICAL STATE OF CALIFORNIA

THE STATE OF CALIFORNIA OR ITS OFFICERS OR AGENTS SHALL NOT BE RESPONSIBLE FOR THE ACCURACY OR COMPLETENESS OF SCANNED COPIES OF THIS PLAN SHEET.

TO ACCOMPANY PLANS DATED 5-12-14

LEGEND:

AB	ABANDON. IF APPLIED TO CONDUIT, REMOVE CONDUCTORS
BC	INSTALL PULL BOX IN EXISTING CONDUIT RUN
BP	PEDESTRIAN BARRICADE, TYPE AS INDICATED ON PLAN
CB	INSTALL CONDUIT INTO EXISTING PULL BOX
CC	CONNECT NEW AND EXISTING CONDUIT. REMOVE EXISTING CONDUCTORS AND INSTALL CONDUCTORS AS INDICATED
CF	CONDUIT TO REMAIN FOR FUTURE USE. REMOVE CONDUCTORS. INSTALL PULL TAPE
DH	DETECTOR HANDHOLE
FA	FOUNDATION TO BE ABANDONED
IS	INSTALL SIGN ON SIGNAL MAST ARM
NS	NO SLIP BASE ON STANDARD
PEC	PHOTOELECTRIC CONTROL
PEU	PHOTOELECTRIC UNIT
RC	EQUIPMENT OR MATERIAL TO BE REMOVED AND BECOME THE PROPERTY OF THE CONTRACTOR
RE	REMOVE ELECTROLIER, FUSES AND BALLAST. TAPE ENDS OF CONDUCTORS
RL	RELOCATE EQUIPMENT
RR	REMOVE AND REUSE EQUIPMENT
RS	REMOVE AND SALVAGE EQUIPMENT
SC	SPLICE NEW TO EXISTING CONDUCTORS
SD	SERVICE DISCONNECT
TSP	TELEPHONE SERVICE POINT

ABBREVIATIONS

APS	ACCESSIBLE PEDESTRIAN SIGNAL
BBS	BATTERY BACKUP SYSTEM
BC	BOLT CIRCLE
BPB	BICYCLE PUSH BUTTON
C	CONDUIT
CB	CIRCUIT BREAKER
CCTV	CLOSED CIRCUIT TELEVISION
Ckt	CIRCUIT
CMS	CHANGEABLE MESSAGE SIGN
Ctid	CALTRANS IDENTIFICATION
Comm	COMMUNICATION
DLC	LOOP DETECTOR LEAD-IN CABLE
EMS	EXTINGUISHABLE MESSAGE SIGN
EVUC	EMERGENCY VEHICLE UNIT CABLE
EVUD	EMERGENCY VEHICLE UNIT DETECTOR
FB	FLASHING BEACON
FBCA	FLASHING BEACON CONTROL ASSEMBLY
FBS	FLASHING BEACON WITH SLIP BASE
FO	FIBER OPTIC
G	EQUIPMENT GROUNDING CONDUCTOR
GB	GROUND BUS
GFCI	GROUND FAULT CIRCUIT INTERRUPTER
HAR	HIGHWAY ADVISORY RADIO
Hex	HEXAGONAL
HPS	HIGH PRESSURE SODIUM
IISNS	INTERNALLY ILLUMINATED STREET NAME SIGN
ISL	INDUCTION SIGN LIGHTING
LED	LIGHT EMITTING DIODE
LMA	LUMINAIRE MAST ARM
LPS	LOW PRESSURE SODIUM
Ltg	LIGHTING
Lum	LUMINAIRE
M	METERED
MAT	MAST ARM MOUNTING TOP ATTACHMENT
MAS	MAST ARM MOUNTING SIDE ATTACHMENT
M/M	MULTIPLE TO MULTIPLE TRANSFORMER
Mtg	MOUNTING
MV	MERCURY VAPOR LIGHTING FIXTURE
MVDS	MICROWAVE VEHICLE DETECTION SYSTEM
N	NEUTRAL (GROUNDED CONDUCTOR)
NB	NEUTRAL BUS
NC	NORMALLY CLOSE
NO	NORMALLY OPEN
P	CIRCUIT BREAKER'S POLE
PB	PULL BOX
PBA	PUSH BUTTON ASSEMBLY
PEC	PHOTOELECTRIC CONTROL
Ped	PEDESTRIAN
PEU	PHOTOELECTRIC UNIT
PT	CONDUIT WITH PULL TAPE
RE	RELOCATED EQUIPMENT
RM	RAMP METERING
RWIS	ROADSIDE WEATHER INFORMATION SYSTEM
SB	SLIP BASE
SIC	SIGNAL INTERCONNECT CABLE
Sig	SIGNAL
SMA	SIGNAL MAST ARM
SNS	STREET NAME SIGN
SP	SERVICE POINT
TDC	TELEPHONE DEMARCATION CABINET
TMS	TRAFFIC MONITORING STATION
TOS	TRAFFIC OPERATIONS SYSTEM
Veh	VEHICLE
VIVDS	VIDEO IMAGE VEHICLE DETECTION SYSTEM
WIM	WEIGH-IN-MOTION
Xfmr	TRANSFORMER

SOFFIT AND WALL MOUNTED LUMINAIRES

PENDANT, 70 W HPS UNLESS OTHERWISE SPECIFIED

FLUSH, 70 W HPS UNLESS OTHERWISE SPECIFIED

WALL SURFACE, 70 W HPS UNLESS OTHERWISE SPECIFIED

EXISTING SOFFIT OR WALL LUMINAIRE TO REMAIN UNMODIFIED

EXISTING SOFFIT OR WALL LUMINAIRE TO BE MODIFIED AS SPECIFIED

NOTE:

Arrow indicates "street side" of luminaire.

MISCELLANEOUS ELECTROLIERS

NEW	EXISTING	
		LUMINAIRE ON WOOD POLE
		NON-STANDARD ELECTROLIER (SEE PROJECT NOTES OR PROJECT PLANS)
		CITY ELECTROLIER
		ELECTROLIER FOUNDATION (FUTURE INSTALLATION)

NOTES:

1. HPS luminaires shall be 310 W HPS when installed on Type 21, 21D, 30, 31 and 32 Standards, unless otherwise specified. HPS luminaires shall be 200 W when installed on other type standards or poles, unless otherwise specified.
2. LED luminaires shall be 235 W when installed on Type 21, 21D, 30, 31 and 32 Standards, unless otherwise specified. LED luminaires shall be 165 W when installed on other type standards or poles, unless otherwise specified.
3. Luminaires shall be the cutoff type, ANSI Type III medium cutoff lighting distribution, unless otherwise specified.

STANDARD ELECTROLIER

NEW	EXISTING	STANDARD TYPE
		15
		15D
		15 STRUCTURE
		15D STRUCTURE
		21
		21D
		21 STRUCTURE
		21D STRUCTURE
		30
		31
		32

COMMONLY USED SYMBOLS FOR UNITED STATES CUSTOMARY UNITS OF MEASUREMENT:

SYMBOL USED	DEFINITIONS
Ω	OHMS
min	MINUTE
s	SECOND
bps	BITS PER SECOND
Bps	BYTES PER SECOND
A	AMPERE
V	VOLT
V(dc)	VOLT (DIRECT CURRENT)
V(ac)	VOLT (ALTERNATING CURRENT)
FC	FOOT - CANDLE
W	WATTS
VA	VOLT-AMPERE
M	MEGA
k	KILO
m	MILLI
μ	MICRO
P	PICO
Hz	HERTZ

STATE OF CALIFORNIA
DEPARTMENT OF TRANSPORTATION

ELECTRICAL SYSTEMS (LEGEND AND ABBREVIATIONS)

NO SCALE

RSP ES-1A DATED JULY 19, 2013 SUPERSEDES STANDARD PLAN ES-1A DATED MAY 20, 2011 - PAGE 425 OF THE STANDARD PLANS BOOK DATED 2010.

REVISED STANDARD PLAN RSP ES-1A

2010 REVISED STANDARD PLAN RSP ES-1A

Dist	COUNTY	ROUTE	POST MILES TOTAL PROJECT	SHEET No.	TOTAL SHEETS
07	LA	210	R16.1/R25.8	830	927

Theresa Gabriel
REGISTERED ELECTRICAL ENGINEER

July 19, 2013
PLANS APPROVAL DATE

REGISTERED PROFESSIONAL ENGINEER
Theresa Aziz Gabriel
No. E15129
Exp. 6-30-14
ELECTRICAL
STATE OF CALIFORNIA

THE STATE OF CALIFORNIA OR ITS OFFICERS OR AGENTS SHALL NOT BE RESPONSIBLE FOR THE ACCURACY OR COMPLETENESS OF SCANNED COPIES OF THIS PLAN SHEET.

TO ACCOMPANY PLANS DATED 5-12-14

CONDUIT

NEW	EXISTING	
		LIGHTING CONDUIT, UNLESS OTHERWISE INDICATED OR NOTED
		TRAFFIC SIGNAL CONDUIT
C	c	COMMUNICATION CONDUIT
T	t	TELEPHONE CONDUIT
F	f	FIRE ALARM CONDUIT
FO	fo	FIBER OPTIC CONDUIT
		CONDUIT TERMINATION
R	r	CONDUIT RISER ATTACHED TO THE STRUCTURE OR SERVICE POLE

SERVICE EQUIPMENT

NEW	EXISTING	
OH	oh	OVERHEAD LINES
U	U	WOOD POLE, "U" INDICATES UTILITY OWNED
		POLE GUY WITH ANCHOR
		UTILITY TRANSFORMER - GROUND MOUNTED
III	III	SERVICE EQUIPMENT ENCLOSURE TYPE. DOOR INDICATES FRONT OF ENCLOSURE
T	t	TELEPHONE DEMARCATION CABINET

POLE-MOUNTED SERVICE DESIGNATION

TYPE H SERVICE, 28'-10" — TYPE OF INSTALLATION AND POLE HEIGHT ABOVE GRADE

FLASHING BEACON

NEW	EXISTING	
R	R	FLASHING BEACON (ONE VEHICLE SIGNAL HEAD WITH BACKPLATE AND VISOR) "R" INDICATES RED INDICATION, "Y" INDICATES YELLOW INDICATION
Y Y	Y Y	FLASHING BEACON WITH TYPE 15-FBS STANDARD AND A SIGN.
R R	R R	FLASHING BEACON WITH TYPES 9, 9A OR 9B SIGN UNLESS OTHERWISE SPECIFIED OR INDICATED

SIGNAL EQUIPMENT

NEW	EXISTING	
C	C	PEDESTRIAN SIGNAL HEAD "C" INDICATES COUNTDOWN PEDESTRIAN HEAD
		PUSH BUTTON ASSEMBLY POST
		PEDESTRIAN BARRICADE
		VEHICLE SIGNAL HEAD (WITH BACKPLATE AND 3-SECTIONS: RED, YELLOW AND GREEN)
		VEHICLE SIGNAL HEAD WITH ANGLE VISOR
PV	PV	MODIFICATIONS OF BASIC SYMBOL: "L" INDICATES ALL NON-ARROW SECTIONS LOUVERED "LG" INDICATES LOUVERED GREEN SECTION ONLY "PV" INDICATES ALL 12" SECTIONS PROGRAMMED VISIBILITY "8" INDICATES ALL 8" SECTIONS (ONLY WHEN SPECIFIED)
		VEHICLE SIGNAL HEAD CONSISTING OF RED, YELLOW AND GREEN LEFT ARROW SECTIONS
		VEHICLE SIGNAL HEAD CONSISTING OF RED AND YELLOW SECTIONS WITH AN UP GREEN ARROW SECTION
		VEHICLE SIGNAL HEAD (5 SECTION) CONSISTING OF RED, YELLOW AND GREEN SECTIONS WITH YELLOW AND GREEN RIGHT ARROW SECTIONS
		TYPE 15TS STANDARD WITH VEHICLE SIGNAL HEAD AND LUMINAIRE
		TYPE 21TS STANDARD WITH VEHICLE SIGNAL HEAD AND LUMINAIRE
		STANDARD WITH LUMINAIRE AND SIGNAL MAST ARMS AND ATTACHED VEHICLE SIGNAL HEADS
		TYPE 1 STANDARD WITH ATTACHED VEHICLE SIGNAL HEADS
		STANDARD WITH A SIGNAL MAST ARM, ATTACHED VEHICLE SIGNAL HEADS AND INTERNALLY ILLUMINATED STREET NAME SIGN
		CONTROLLER ASSEMBLY. DOOR INDICATES FRONT OF CABINET

SIGNAL EQUIPMENT Cont

NEW	EXISTING	
		GUARD POST
		TYPE 1 STANDARD WITH RAMP METERING SIGN
		OPTICAL DETECTOR FOR THE EMERGENCY VEHICLE DETECTION SYSTEM

NOTES:

1. All signal sections shall be 12" unless shown otherwise.
2. Signal heads shall be provided with backplates unless shown otherwise.

ILLUMINATED OVERHEAD SIGN

NEW	EXISTING	
		SINGLE POST, SINGLE ILLUMINATED SIGN, BALANCED BUTTERFLY
		SINGLE POST, DOUBLE ILLUMINATED SIGN, BALANCED BUTTERFLY
		SINGLE POST, SINGLE ILLUMINATED SIGN, FULL CANTILEVER
		DOUBLE POST, SINGLE ILLUMINATED SIGN
		SINGLE ILLUMINATED SIGN MOUNTED ON STRUCTURE
		DOUBLE POST, SINGLE ILLUMINATED SIGN WITH ELECTROLIER

STATE OF CALIFORNIA
DEPARTMENT OF TRANSPORTATION

ELECTRICAL SYSTEMS (LEGEND AND ABBREVIATIONS)

NO SCALE

RSP ES-1B DATED JULY 19, 2013 SUPERSEDES STANDARD PLAN ES-1B DATED MAY 20, 2011 - PAGE 426 OF THE STANDARD PLANS BOOK DATED 2010.

REVISED STANDARD PLAN RSP ES-1B

2010 REVISED STANDARD PLAN RSP ES-1B

7-15-13

Dist	COUNTY	ROUTE	POST MILES TOTAL PROJECT	SHEET No.	TOTAL SHEETS
07	LA	210	R16.1/R25.8	831	927

Theresa Gabriel
REGISTERED ELECTRICAL ENGINEER

July 19, 2013
PLANS APPROVAL DATE

REGISTERED PROFESSIONAL ENGINEER
Theresa Aziz Gabriel
No. E15129
Exp. 6-30-14
ELECTRICAL
STATE OF CALIFORNIA

THE STATE OF CALIFORNIA OR ITS OFFICERS OR AGENTS SHALL NOT BE RESPONSIBLE FOR THE ACCURACY OR COMPLETENESS OF SCANNED COPIES OF THIS PLAN SHEET.

TO ACCOMPANY PLANS DATED 5-12-14

EQUIPMENT IDENTIFICATION

ILLUMINATED SIGN IDENTIFICATION NUMBER:

SIGN No. 12345
10 ISL SCI 1.0

- SIGN NUMBER - PLACE ON POST OR STRUCTURE
- TRANSFORMER RATING (kVA)
- LIGHTING CONTROL TYPE
- NUMBER AND TYPE OF FIXTURES

DO NOT PLACE ON STANDARD OR STRUCTURE

ELECTROLIER OR EQUIPMENT IDENTIFICATION NUMBER:

12345 - 15'-0"

- MAST ARM LENGTH, IF SHOWN. DO NOT PLACE ON STANDARD OR STRUCTURE
- EQUIPMENT NUMBER - PLACE ON STANDARD OR STRUCTURE. EXISTING EQUIPMENT NUMBERS ARE SHOWN IN PARENTHESIS

CONDUIT AND CONDUCTOR IDENTIFICATION:

1½"C, 2#10, 15#14, 2 DLC, 12P#18

- PAIR
- NUMBER AND SIZE OF CONDUCTORS AND CABLES
- SIZE OF CONDUIT IN INCHES

ø1, ø2, ø2P, etc.	TRAFFIC PHASE IDENTIFICATION FOR SIGNAL FACES, DETECTORS AND PHASE DIAGRAMS
1 2 3	LEGEND NUMBERS
A B C	EQUIPMENT, SIGNAL POLES, INSTALLATION OR ITEMS
1 2 3	CONDUIT RUN NUMBERS

SIGNAL AND LIGHTING STANDARD (TYPICAL DESIGNATION):

19A - 3 - 100

- WIND VELOCITY = 100 mph
- CASE 3 ARM LOADING
- STANDARD TYPE
- STANDARD PLAN SHEET NUMBER
- DETAIL, NUMBER, SECTION, TYPE OR ELEVATION

MISCELLANEOUS EQUIPMENT

NEW	EXISTING	
CMS	cms	CHANGEABLE MESSAGE SIGN
		CLOSED CIRCUIT TELEVISION CAMERA
		HIGHWAY ADVISORY RADIO POLE AND ANTENNA
EMS	ems	EXTINGUISHABLE MESSAGE SIGN
M V	m v	DETECTION DEVICE M = MICROWAVE SENSOR V = VIDEO IMAGE SENSOR

WIRING DIAGRAM LEGEND

----	EXTERNAL CONDUCTOR
	CONDUCTOR OR BUS
	TIE POINT
	CONTACTOR COIL
	CONTACTOR, NO CONTACT
	TERMINAL BLOCKS
	CONTACTOR, NC CONTACT
	ENCLOSURE BOND
	GROUNDING ELECTRODE
	CIRCUIT BREAKER
	RECEPTACLE

PULL BOXES

NEW	EXISTING	
		PULL BOX, No. 5 UNLESS OTHERWISE INDICATED OR NOTED
3	9A(21)	PULL BOX, ADDITIONAL DESIGNATIONS OR DESCRIPTIONS

3 No. 3½ PULL BOX
5 No. 5 PULL BOX
6 No. 6 PULL BOX
7 No. 7 (CEILING PULL BOX)
8 No. 8 (PENDANT SOFFIT PULL BOX)
9 No. 9 PULL BOX
9A No. 9A PULL BOX

(C) COMMUNICATIONS PULL BOX
(E) PULL BOX WITH EXTENSION
(S) SPRINKLER CONTROL PULL BOX
(21) ANCHOR BOLTS AND CONDUIT FOR FUTURE INSTALLATION OF TYPE 21 STANDARD
(T) TRAFFIC PULL BOX

VEHICLE DETECTORS

5 J 9 U

- VEHICLE DETECTOR DESIGNATION
- U = UPPER
  L = LOWER
- SLOT NUMBER IN INPUT FILE
- INPUT FILE (I OR J)
- PHASE

NEW	EXISTING	
		TYPE A DETECTOR LOOP. OUTLINE OF SAWCUT SHOWN
		TYPE B DETECTOR LOOP. OUTLINE OF SAWCUT SHOWN
		TYPE C DETECTOR LOOP. OUTLINE OF SAWCUT SHOWN
		TYPE D DETECTOR LOOP. OUTLINE OF SAWCUT SHOWN
		TYPE E DETECTOR LOOP. OUTLINE OF SAWCUT SHOWN
		TYPE Q DETECTOR LOOP. OUTLINE OF SAWCUT SHOWN
		MAGNETIC DETECTOR
DH	dh	DETECTOR HANDHOLE
		MICROWAVE OR VIDEO DETECTION ZONE

STATE OF CALIFORNIA
DEPARTMENT OF TRANSPORTATION

ELECTRICAL SYSTEMS (LEGEND AND ABBREVIATIONS)

NO SCALE

RSP ES-1C DATED JULY 19, 2013 SUPERSEDES STANDARD PLAN ES-1C DATED MAY 20, 2011 - PAGE 427 OF THE STANDARD PLANS BOOK DATED 2010.

REVISED STANDARD PLAN RSP ES-1C

2010 REVISED STANDARD PLAN RSP ES-1C

Dist	COUNTY	ROUTE	POST MILES TOTAL PROJECT	SHEET No.	TOTAL SHEETS
07	LA	210	R16.1/R25.8	832	927

Theresa Gabriel
REGISTERED ELECTRICAL ENGINEER

July 19, 2013
PLANS APPROVAL DATE

REGISTERED PROFESSIONAL ENGINEER Theresa Aziz Gabriel No. E15129 Exp. 6-30-14 ELECTRICAL STATE OF CALIFORNIA

THE STATE OF CALIFORNIA OR ITS OFFICERS OR AGENTS SHALL NOT BE RESPONSIBLE FOR THE ACCURACY OR COMPLETENESS OF SCANNED COPIES OF THIS PLAN SHEET.

TO ACCOMPANY PLANS DATED 5-12-14

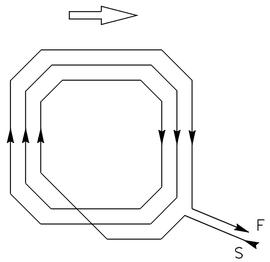

WINDING DETAIL

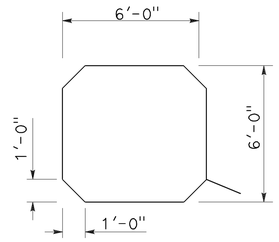

SAWCUT DETAIL

TYPE A LOOP DETECTOR CONFIGURATION

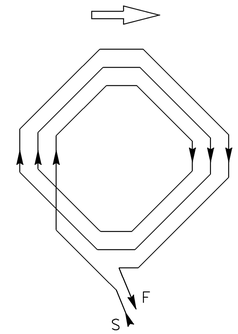

WINDING DETAIL

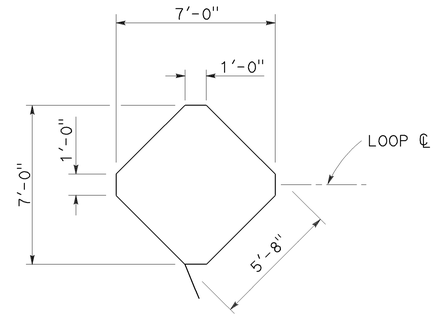

SAWCUT DETAIL

TYPE B LOOP DETECTOR CONFIGURATION

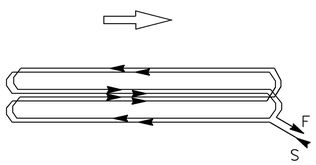

WINDING DETAIL

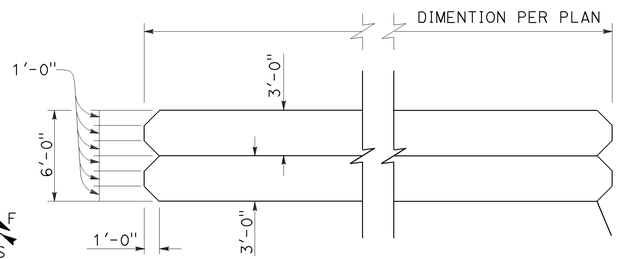

SAWCUT DETAIL

TYPE C LOOP DETECTOR CONFIGURATION

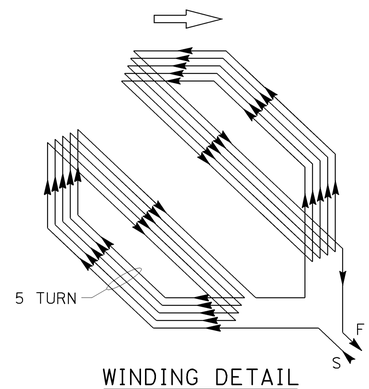

WINDING DETAIL

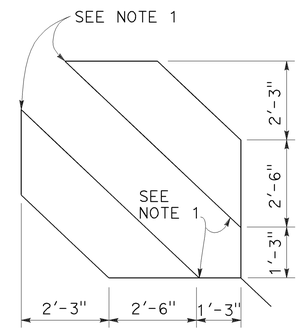

SAWCUT DETAIL

TYPE D LOOP DETECTOR CONFIGURATION

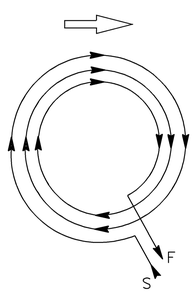

WINDING DETAIL

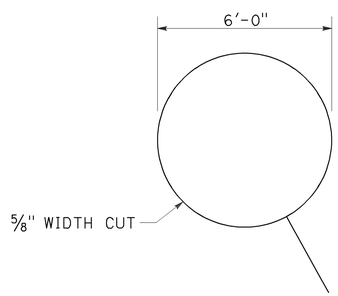

SAWCUT DETAIL

TYPE E LOOP DETECTOR CONFIGURATION

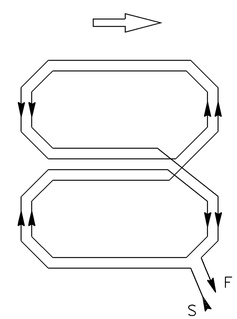

WINDING DETAIL

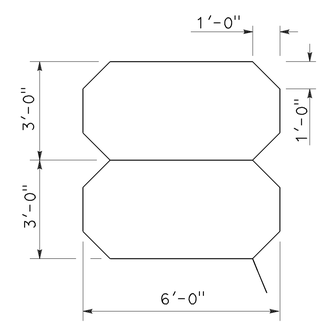

SAWCUT DETAIL

TYPE Q LOOP DETECTOR CONFIGURATION

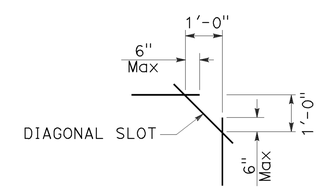

PLAN VIEW OF DIAGONAL SLOT AT CORNERS

NOTES:

1. Round corners of acute angle sawcuts to prevent damage to conductors.
2. Typical distance separating loops from edge to edge is 10' for Type A, B, D and E installation in single lane.

STATE OF CALIFORNIA
DEPARTMENT OF TRANSPORTATION

ELECTRICAL SYSTEMS (DETECTORS)

NO SCALE

RSP ES-5B DATED JULY 19, 2013 SUPERSEDES STANDARD PLAN ES-5B DATED MAY 20, 2011 - PAGE 449 OF THE STANDARD PLANS BOOK DATED 2010.

REVISED STANDARD PLAN RSP ES-5B

2010 REVISED STANDARD PLAN RSP ES-5B

7-9-13

Dist	COUNTY	ROUTE	POST MILES TOTAL PROJECT	SHEET No.	TOTAL SHEETS
07	LA	210	R16.1/R25.8	833	927

Theresa Gabriel
REGISTERED ELECTRICAL ENGINEER

July 19, 2013
PLANS APPROVAL DATE

REGISTERED PROFESSIONAL ENGINEER Theresa Aziz Gabriel No. E15129 Exp. 6-30-14 ELECTRICAL STATE OF CALIFORNIA

THE STATE OF CALIFORNIA OR ITS OFFICERS OR AGENTS SHALL NOT BE RESPONSIBLE FOR THE ACCURACY OR COMPLETENESS OF SCANNED COPIES OF THIS PLAN SHEET.

TO ACCOMPANY PLANS DATED 5-12-14

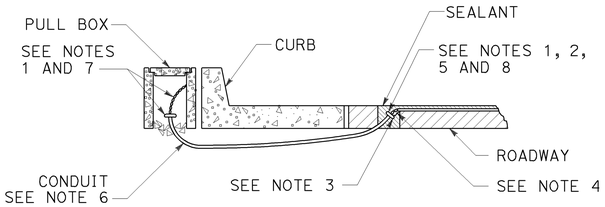

TYPE A
CURB TERMINATION DETAIL

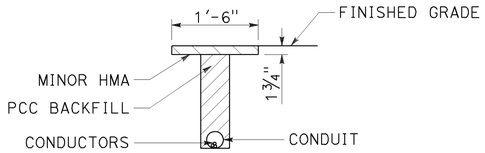

"T" TRENCH
DETAIL T

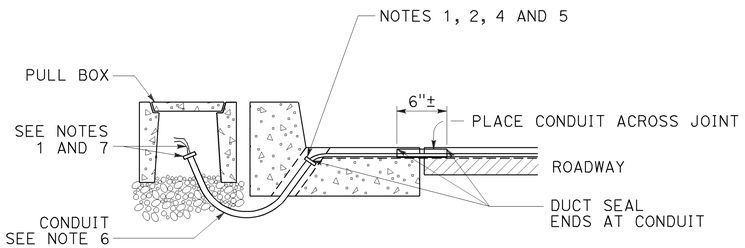

CROSS SECTION

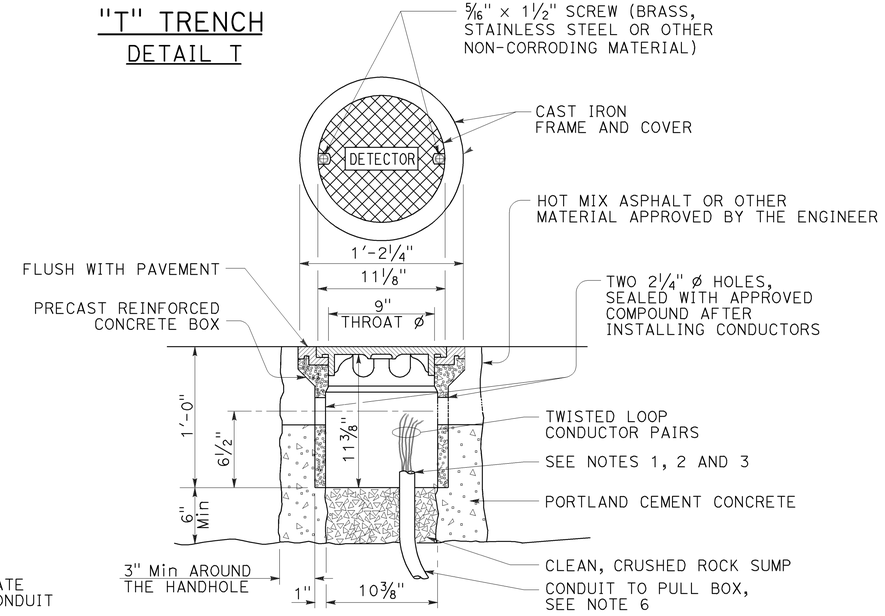

DETECTOR HANDHOLE DETAIL

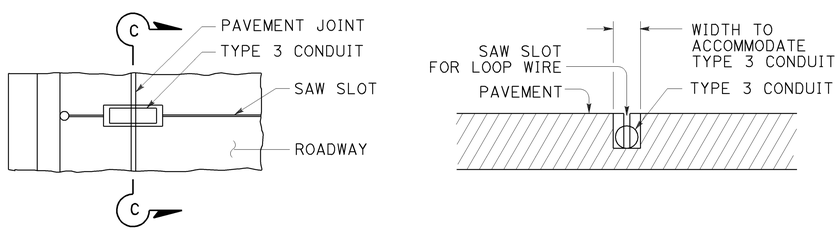

PLAN VIEW

SECTION C-C

TYPE B
CURB TERMINATION DETAIL

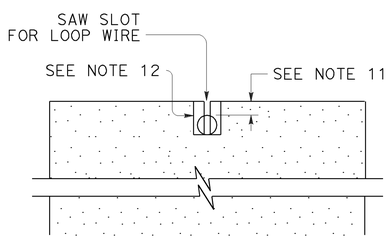

SECTION A-A

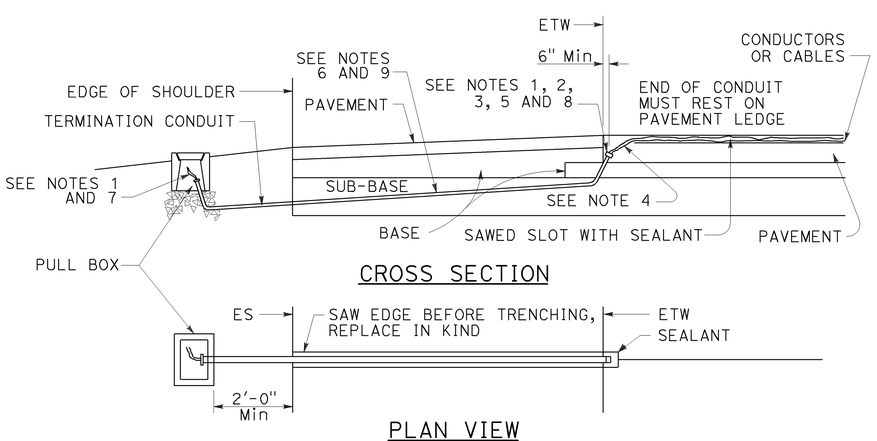

CROSS SECTION

PLAN VIEW

SHOULDER TERMINATION DETAILS

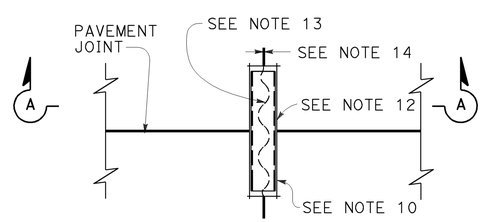

PLAN VIEW

TYPICAL LOOP LEAD-IN DETAIL
AT PAVEMENT JOINT

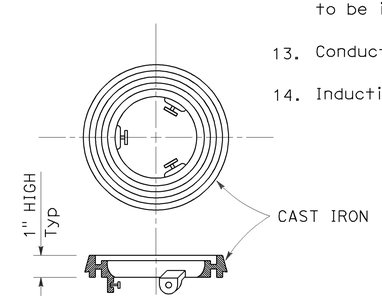

LOCKING GRADE RING

NOTES:

1. Bushing shall be used at end of conduit.
2. Tape detector conductors or cables 3" each side of bushings.
3. Install duct seal compound to each end of termination conduit before installing sealant.
4. Round all sharp edges where detector conductors or cables have to pass.
5. End of conduit shall be 3⅛" below roadway surface.
6.

Conduit size	Loop conductors
1"C minimum	1 to 2 pairs
1½"C minimum	3 to 4 pairs
2"C minimum	5 or more pairs

7. Splice detector conductors or cables to detector lead-in-cable.
8. Location of detector handhole when shown on plans.
9. When the shoulder and traveled way are paved with the same material and there is no joint between them, the conduit shall extend only 2'-0" into the shoulder pavement.
10. ¾"C, Type 3 conduit 6" long minimum, plug both ends with duct compound to keep out sealant.
11. ½" Minimum between top of conduit and pavement surface.
12. Sawcut shall not exceed 1" in width and ⅛" longer than conduit to be installed.
13. Conductors with ½" minimum slack inside conduit.
14. Inductive loop detector saw slot.

STATE OF CALIFORNIA
DEPARTMENT OF TRANSPORTATION

ELECTRICAL SYSTEMS (CURB TERMINATION AND HANDHOLE)

NO SCALE

RSP ES-5D DATED JULY 19, 2013 SUPERSEDES STANDARD PLAN ES-5D DATED MAY 20, 2011 - PAGE 451 OF THE STANDARD PLANS BOOK DATED 2010.

REVISED STANDARD PLAN RSP ES-5D

2010 REVISED STANDARD PLAN RSP ES-5D

7-9-13

DIST	COUNTY	ROUTE	POST MILES TOTAL PROJECT	SHEET NO.	TOTAL SHEETS
07	LA	210	R16.1/R25.8	834	927

Theresa Gabriel
REGISTERED ELECTRICAL ENGINEER

July 19, 2013
PLANS APPROVAL DATE

REGISTERED PROFESSIONAL ENGINEER Theresa Aziz Gabriel No. E15129 Exp. 6-30-14 ELECTRICAL STATE OF CALIFORNIA

THE STATE OF CALIFORNIA OR ITS OFFICERS OR AGENTS SHALL NOT BE RESPONSIBLE FOR THE ACCURACY OR COMPLETENESS OF SCANNED COPIES OF THIS PLAN SHEET.

TO ACCOMPANY PLANS DATED 5-12-14

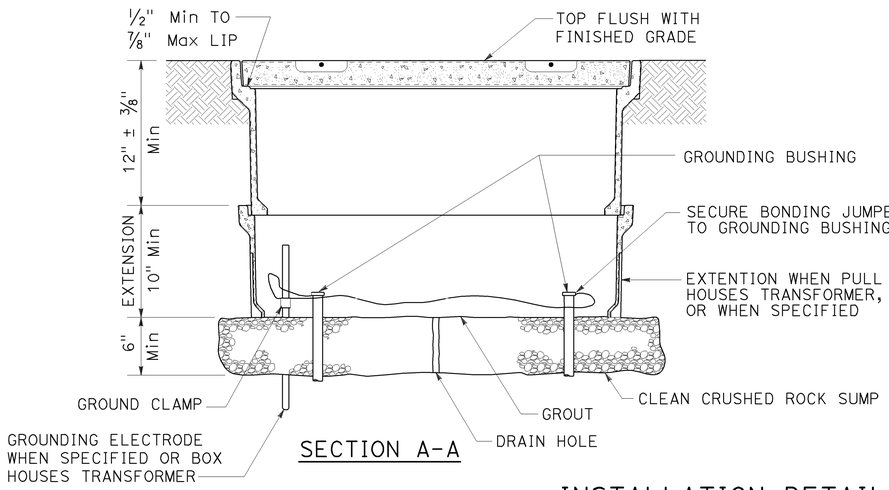

SECTION A-A

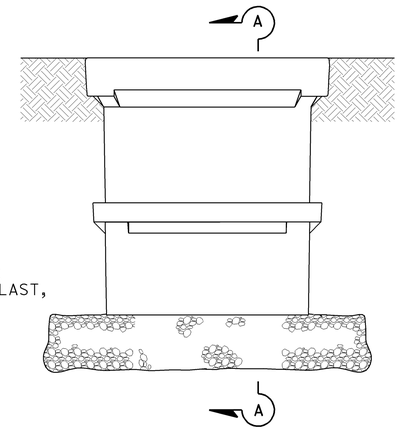

SIDE VIEW

INSTALLATION DETAILS

DETAIL A

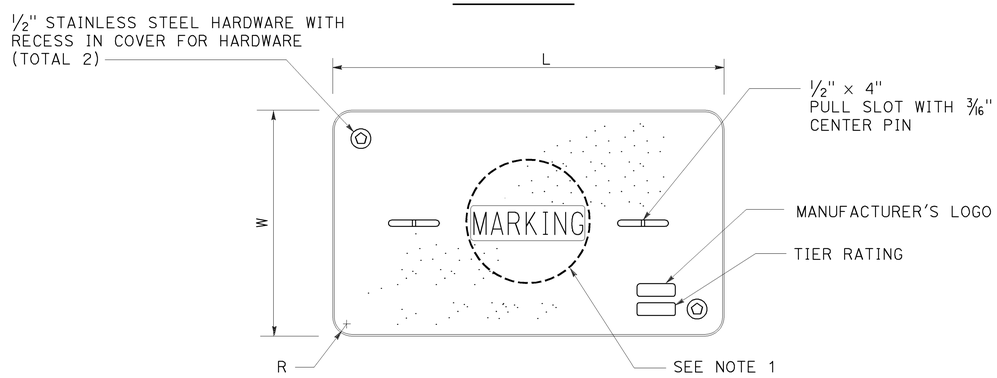

COVER TOP VIEW

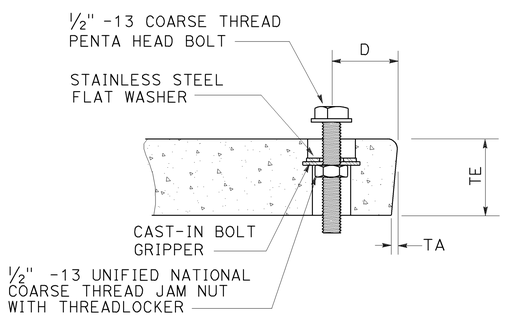

TYPICAL COVER CAPTIVE BOLT

OR SIMILAR

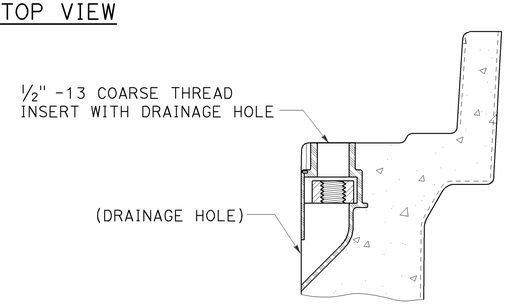

TYPICAL THREADED INSERT

OR SIMILAR

DIMENSION TABLE

PULL BOX	PULL BOX			COVER						
	MINIMUM DEPTH BOX	MINIMUM DEPTH EXTENSION	MAXIMUM WEIGHT	L	W	R	TE	TA	D	MAXIMUM WEIGHT
No. 3½	12"	N/A	40 lb	1′ - 3⅜"	10⅛"	1⅜"	2"	⅛"	1¾"	30 lb
No. 5	12"	10"	55 lb	1′ - 11¼"	1′ - 1¾"	1⅜"	2"	⅛"	1¾"	60 lb
No. 6	12"	10"	70 lb	2′ - 6½"	1′ - 5½"	1⅜"	2"	⅛"	2"	85 lb

NOTES:

1. Pull box covers shall be marked as follows: "SERVICE" Service circuits between service point and service disconnect; "SPRINKLER-CONTROL" sprinkler control circuits, 50 V or less; "CALTRANS" on all pull boxes, except pull boxes marked "SPRINKLER-CONTROL"; and "TELEPHONE" Telephone service;

   A) No. 3½ pull box.
      1) "SIGNAL" - Traffic signal circuits with or without lighting or sign lighting circuits.
      2) "LIGHTING" - Lighting or sign lighting circuits where voltage is under 600 V.

   B) No. 5, 6, 9 or 9A pull box.
      1) "TRAFFIC SIGNAL" - Traffic signal circuits with or without lighting or sign lighting circuits.
      2) "LIGHTING" - Lighting or sign lighting circuits where voltage is under 600 V.
      3) "LIGHTING-HIGH VOLTAGE" - Lighting or sign lighting circuits where voltage is above 600 V.
      4) "IRRIGATION" - Circuits to irrigation controller 120 V or more.
      5) "RAMP METER" - Ramp meter circuits.
      6) "COUNT STATION" - Count or speed monitor circuits.
      7) "COMMUNICATIONS" - Communication circuits.
      8) "TOS COMMUNICATIONS" - TOS communication line.
      9) "TOS POWER" - TOS power.
      10) "TDC POWER" - Telephone demarcation cabinet power.
      11) "CCTV" - Closed circuit television circuits.
      12) "TMS" - Traffic monitoring station circuits.
      13) "CMS" - Changeable message sign circuits.
      14) "HAR" - Highway advisory radio circuits.
      15) "BOOSTER PUMP" - Booster pump circuit.

2. The nominal dimensions of the opening in which the cover sets shall be the same as the cover dimensions except the length and width dimensions shall be ⅛" greater.

3. Covers and boxes shall be interchangeable with California standard male and female gages. When interchanged with a standard male or female gage, the top surfaces shall be flush within ⅛". Top outside radius of covers and pull boxes shall have a ⅛" radius.

4. Pull box extension may be another pull box as long as the bottom edge of the pull box can fit into the cover opening.

5. All dimensions for the cover for non-traffic pull box are nominal values.

STATE OF CALIFORNIA
DEPARTMENT OF TRANSPORTATION

ELECTRICAL SYSTEMS (NON-TRAFFIC PULL BOX)

NO SCALE

RSP ES-8A DATED JULY 19, 2013 SUPERSEDES RSP ES-8A DATED JANUARY 20, 2012 THAT SUPPLEMENTS THE STANDARD PLANS BOOK DATED 2010.

REVISED STANDARD PLAN RSP ES-8A

2010 REVISED STANDARD PLAN RSP ES-8A

7-15-13

DIST	COUNTY	ROUTE	POST MILES TOTAL PROJECT	SHEET NO.	TOTAL SHEETS
07	LA	210	R16.1/R25.8	835	927

Theresa Gabriel
REGISTERED ELECTRICAL ENGINEER

July 19, 2013
PLANS APPROVAL DATE

REGISTERED PROFESSIONAL ENGINEER
Theresa Aziz Gabriel
No. E15129
Exp. 6-30-14
ELECTRICAL
STATE OF CALIFORNIA

THE STATE OF CALIFORNIA OR ITS OFFICERS OR AGENTS SHALL NOT BE RESPONSIBLE FOR THE ACCURACY OR COMPLETENESS OF SCANNED COPIES OF THIS PLAN SHEET.

TO ACCOMPANY PLANS DATED 5-12-14

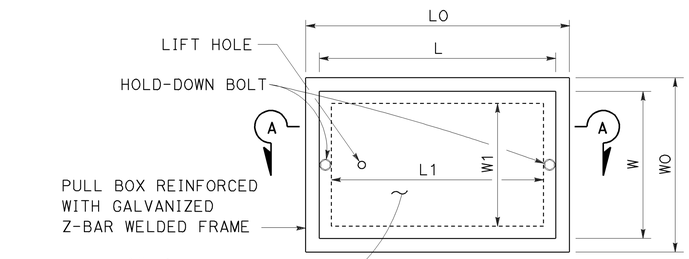

TOP VIEW

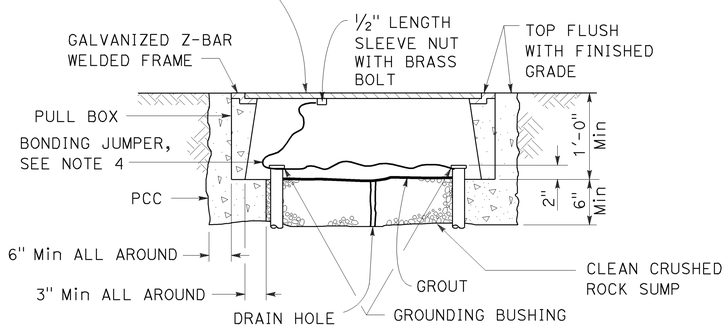

SECTION A-A

No. 3½(T), No. 5(T) AND No. 6(T) TRAFFIC PULL BOX

NOTES:

1. Traffic pull box shall be provided with steel cover and special concrete footing. Steel cover shall have embossed non-skid pattern.
2. Steel reinforcing shall be as regularly used in the standard products of the respective manufacturer.
3. Pull box covers shall be marked as follows: "SERVICE" Service circuits between service point and service disconnect; "SPRINKLER-CONTROL" Sprinkler control circuits, 50 V or less; "CALTRANS" On all pull boxes, except pull boxes marked "SPRINKLER-CONTROL"; and "TELEPHONE" Telephone service.
   - A) No. 3½(T) pull box.
     - 1) "SIGNAL" - Traffic signal circuits with or without lighting or sign lighting circuits.
     - 2) "LIGHTING" - Lighting or sign lighting circuits where voltage is under 600 V.
   - B) No. 5(T) or 6(T) pull box.
     - 1) "TRAFFIC SIGNAL" - Traffic signal circuits with or without lighting or sign lighting circuits.
     - 2) "LIGHTING" - Lighting or sign lighting circuits where voltage is under 600 V.
     - 3) "LIGHTING-HIGH VOLTAGE" - Lighting or sign lighting circuits where voltage is above 600 V.
     - 4) "IRRIGATION" - Circuits to irrigation controller 120 V or more.
     - 5) "RAMP METER" - Ramp meter circuits.
     - 6) "COUNT STATION" - Count or speed monitor circuits.
     - 7) "COMMUNICATION" - Communication circuits.
     - 8) "TOS COMMUNICATIONS" - TOS communications line.
     - 9) "TOS POWER" - TOS power.
     - 10) "TDC POWER" - Telephone demarcation cabinet power.
     - 11) "CCTV" - Closed circuit television circuits.
     - 12) "TMS" - Traffic monitoring station circuits.
     - 13) "CMS" - Changeable message sign circuits.
     - 14) "HAR" - Highway advisory radio circuits.
     - 15) "BOOSTER PUMP" - Booster pump circuit.
4. Bonding jumper for metal covers shall be 3' long, minimum.
5. The nominal dimensions of the opening in which the cover sets shall be the same as the cover dimensions except the length and width dimensions shall be ⅛" greater.
6. Covers and boxes shall be interchangeable with California standard male and female gages. When interchanged with a standard male or female gage, the top surfaces shall be flush within ⅛".

DIMENSION TABLE

PULL BOX	PULL BOX						COVER				
	MINIMUM * THICKNESS	MINIMUM DEPTH BOX AND EXTENSION	WO	LO	L1	W1	L **	W **	R	EDGE THICKNESS	EDGE TAPER
No. 3½(T)	1½"	1'-0"	1'-5"± 1"	1'-8⅞"±	1'-2½"±	10⅝"± 1"	1'-8"±	1'-1¾"±	0"	½"	NONE
No. 5(T)	1¾"	1'-0"	1'-11½"± 1"	2'-5½"±	1'-7"±	1'-1"± 1"	2'-3"±	1'-4"±	0"	½"	NONE
No. 6(T)	2"	1'-0"	2'-6"± 1"	2'-11½"±	1'-11½"±	1'-5"± 1"	2'-9"±	1'-8"±	0"	½"	NONE

* EXCLUDING CONDUIT WEB ** TOP DIMENSION

STATE OF CALIFORNIA
DEPARTMENT OF TRANSPORTATION

ELECTRICAL SYSTEMS (TRAFFIC PULL BOX)

NO SCALE

RSP ES-8B DATED JULY 19, 2013 SUPERSEDES RSP ES-8B DATED JANUARY 20, 2012 THAT SUPPLEMENTS THE STANDARD PLANS BOOK DATED 2010.

REVISED STANDARD PLAN RSP ES-8B

2010 REVISED STANDARD PLAN RSP ES-8B

7-15-13

Dist	COUNTY	ROUTE	POST MILES TOTAL PROJECT	SHEET No.	TOTAL SHEETS
07	LA	210	R16.1/R25.8	836	927

Theresa Gabriel
REGISTERED ELECTRICAL ENGINEER

July 19, 2013
PLANS APPROVAL DATE

REGISTERED PROFESSIONAL ENGINEER
Theresa Aziz Gabriel
No. E15129
Exp. 6-30-14
ELECTRICAL
STATE OF CALIFORNIA

THE STATE OF CALIFORNIA OR ITS OFFICERS OR AGENTS SHALL NOT BE RESPONSIBLE FOR THE ACCURACY OR COMPLETENESS OF SCANNED COPIES OF THIS PLAN SHEET.

TO ACCOMPANY PLANS DATED 5-12-14

2010 REVISED STANDARD PLAN RSP ES-10A

ISOFOOTCANDLE CURVE - MINIMUM

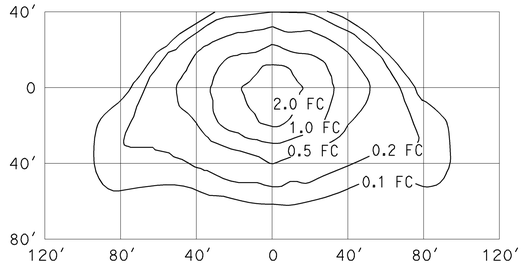

TYPE III MEDIUM CUTOFF

Cutoff Luminaire
34′ Mounting Height
Lamp operated at 22,000 lm
200-W high pressure sodium lamp
ANSI Designation S66

ISOFOOTCANDLE CURVE - MINIMUM

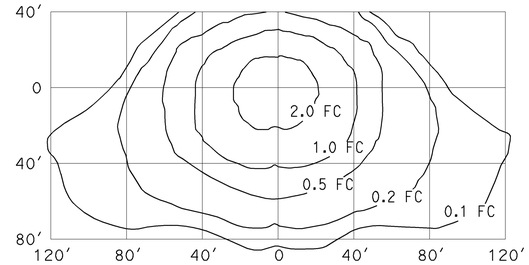

TYPE III MEDIUM CUTOFF

Cutoff Luminaire
40′ Mounting Height
Lamp operated at 37,000 lm
310-W high pressure sodium lamp
ANSI Designation S67

ISOFOOTCANDLE CURVE - MINIMUM

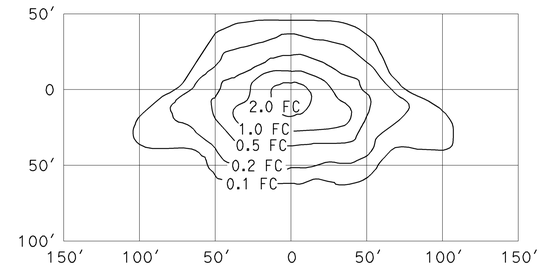

TYPE III MEDIUM CUTOFF

Cutoff Luminaire
30′ Mounting Height
Lamp operated at 16,000 lm
150-W high pressure sodium lamp
ANSI Designation S55

ISOFOOTCANDLE CURVE - MINIMUM

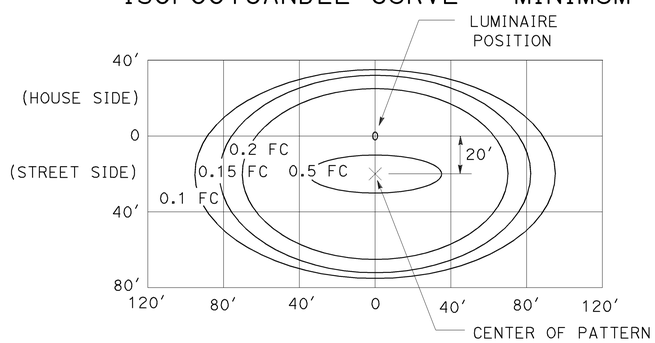

LED LUMINAIRE ROADWAY 1

165-W at 34′ Mounting Height

ISOFOOTCANDLE CURVE - MINIMUM

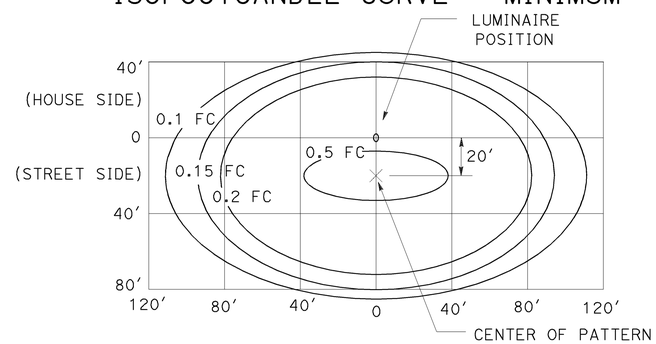

LED LUMINAIRE ROADWAY 2

235-W at 40′ Mounting Height

ISOFOOTCANDLE CURVE - MINIMUM

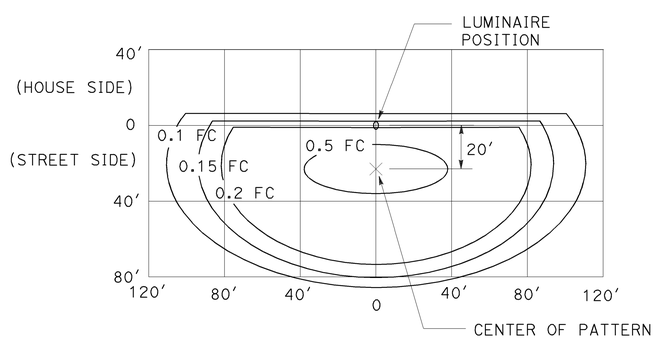

LED LUMINAIRE ROADWAY 3

235-W at 40′ Mounting Height
with back side control

ISOFOOTCANDLE CURVE - MINIMUM

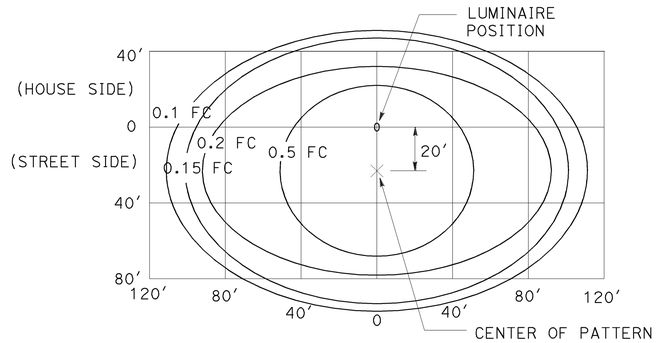

LED LUMINAIRE ROADWAY 4

300-W at 40′ Mounting Height

ISOFOOTCANDLE CURVE - MINIMUM

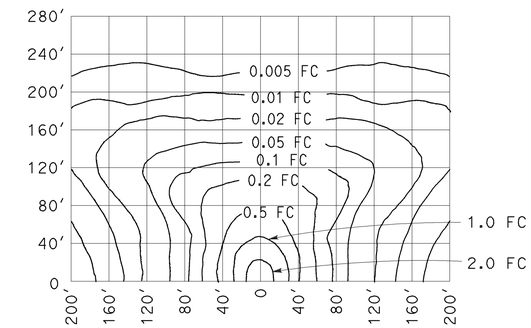

LOW PRESSURE SODIUM LUMINAIRE

40′ Mounting Height
Lamp operated at 33,000 lm
180-W low pressure sodium lamp

STATE OF CALIFORNIA
DEPARTMENT OF TRANSPORTATION

ELECTRICAL SYSTEMS (ISOFOOTCANDLE DIAGRAMS)

NO SCALE

RSP ES-10A DATED JULY 19, 2013 SUPERSEDES RSP ES-10A DATED JULY 20, 2012 THAT SUPPLEMENTS THE STANDARD PLANS BOOK DATED 2010.

REVISED STANDARD PLAN RSP ES-10A

Dist	COUNTY	ROUTE	POST MILES TOTAL PROJECT	SHEET No.	TOTAL SHEETS
07	LA	210	R16.1/R25.8	837	927

REGISTERED ELECTRICAL ENGINEER

July 20, 2012
PLANS APPROVAL DATE

REGISTERED PROFESSIONAL ENGINEER
Jeffery G. McRae
No. E14512
Exp. 6-30-14
ELECTRICAL
STATE OF CALIFORNIA

THE STATE OF CALIFORNIA OR ITS OFFICERS OR AGENTS SHALL NOT BE RESPONSIBLE FOR THE ACCURACY OR COMPLETENESS OF SCANNED COPIES OF THIS PLAN SHEET.

TO ACCOMPANY PLANS DATED 5-12-14

ISOFOOTCANDLE CURVE - MINIMUM

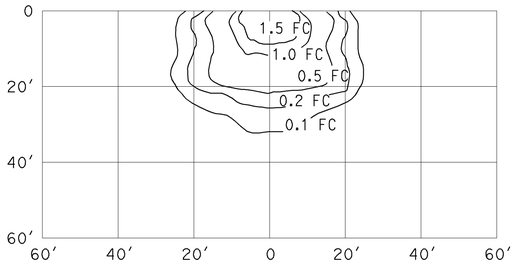

WALL LUMINAIRE
15′ Mounting Height
Lamp operated at 5,800 lm
70-W high pressure sodium lamp
ANSI Designation S62

ISOFOOTCANDLE CURVE - MINIMUM

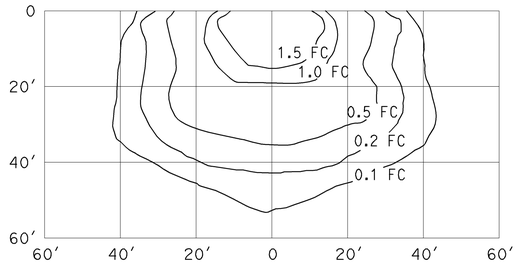

WALL LUMINAIRE
15′ Mounting Height
Lamp operated at 9,500 lm
100-W high pressure sodium lamp
ANSI Designation S54

ISOFOOTCANDLE CURVE - MINIMUM

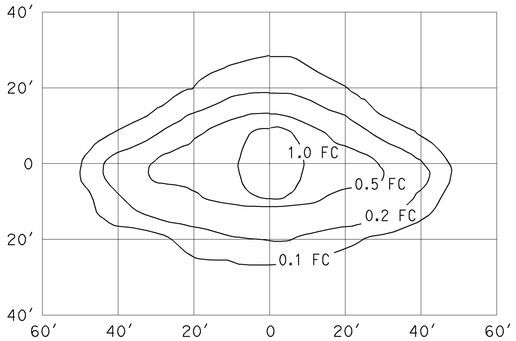

PENDANT SOFFIT LUMINAIRE
TYPE III SHORT
17′ Mounting Height
Lamp operated at 5,800 lm
70-W high pressure sodium lamp
ANSI Designation S62

ISOFOOTCANDLE CURVE - MINIMUM

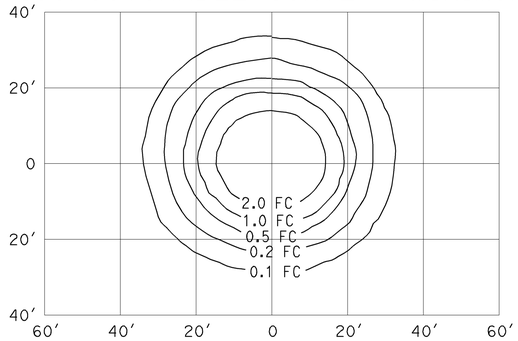

PENDANT SOFFIT LUMINAIRE
17′ Mounting Height
Lamp operated at 5,800 lm
70-W high pressure sodium lamp
ANSI Designation S62

ISOFOOTCANDLE CURVE - MINIMUM

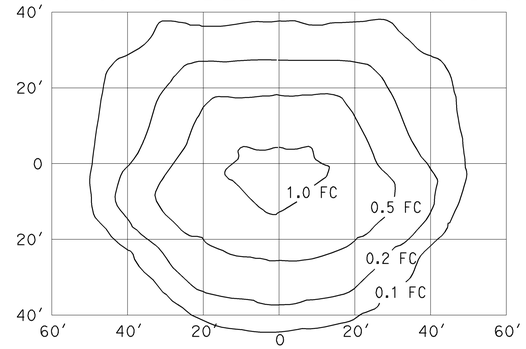

FLUSH SOFFIT LUMINAIRE
17′ Mounting Height
Lamp operated at 5,800 lm
70-W high pressure sodium lamp
ANSI Designation S62

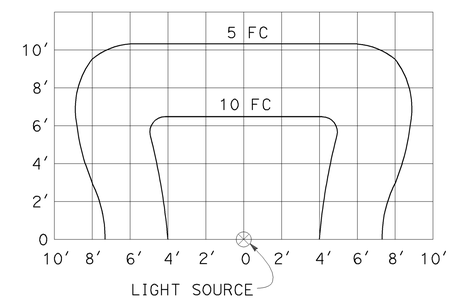

SIGN LIGHTING FIXTURE
ISOFOOTCANDLE DIAGRAM

NOTES:

1. Curves represent the minimum footcandle (FC) of initial illumination on a 10′-0" x 20′-0" panel.
2. The FC shown are with the fixture attached to the light fixture mounting channel which places the center of the source 4′-8" in front of panel and 1′-0" below the bottom edge.
3. Applicable lamp: 85-W fluorescent phosphor coated induction lamp.

STATE OF CALIFORNIA
DEPARTMENT OF TRANSPORTATION

ELECTRICAL SYSTEMS (ISOFOOTCANDLE DIAGRAMS)

NO SCALE

RSP ES-10B DATED JULY 20, 2012 SUPPLEMENTS THE STANDARD PLANS BOOK DATED 2010.

REVISED STANDARD PLAN RSP ES-10B

2010 REVISED STANDARD PLAN RSP ES-10B

Dist	COUNTY	ROUTE	POST MILES TOTAL PROJECT	SHEET No.	TOTAL SHEETS
07	LA	210	R16.1/R25.8	838	927

REGISTERED CIVIL ENGINEER

July 19, 2013
PLANS APPROVAL DATE

REGISTERED PROFESSIONAL ENGINEER
Stanley P. Johnson
No. C57793
Exp. 3-31-14
CIVIL
STATE OF CALIFORNIA

THE STATE OF CALIFORNIA OR ITS OFFICERS OR AGENTS SHALL NOT BE RESPONSIBLE FOR THE ACCURACY OR COMPLETENESS OF SCANNED COPIES OF THIS PLAN SHEET.

TO ACCOMPANY PLANS DATED 5-12-14

STANDARD TYPE	SETBACK (DIMENSION A)
32	30'-0" (Min)
31	20'-0" (Min)
15, 15D, 15-SB, 21, 21D, 30	ARM LENGTH (Min)

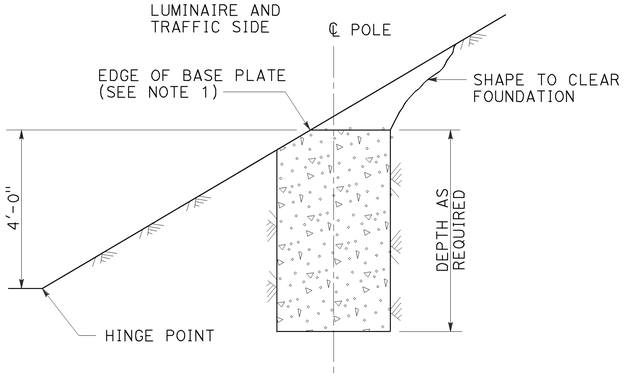

CUT SLOPES
STEEPER THAN 4:1,
LESS THAN 2:1
DETAIL A-1
See Note 2 and 3

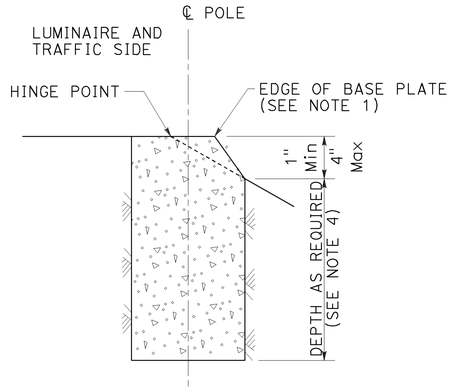

FILL SLOPES
STEEPER THAN 4:1,
LESS THAN 2:1
DETAIL A-2
See Note 2 and 3

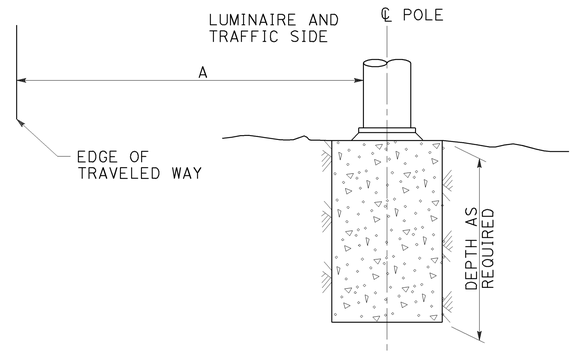

FLAT SECTIONS, CUT OR FILL SLOPES
4:1 OR FLATTER
DETAIL A-3
See Note 2

FOUNDATIONS ADJACENT TO ALL ROADWAYS EXCEPT
IN SIDEWALK, MEDIAN AND ISLAND AREAS
DETAIL A

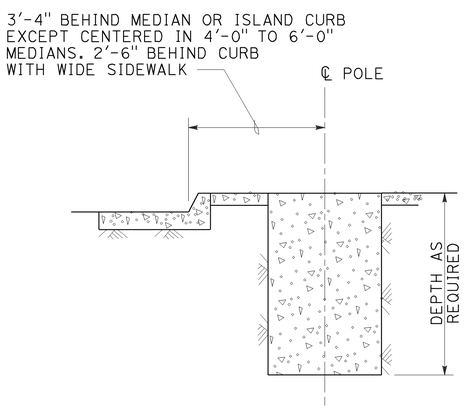

MEDIAN, ISLAND
OR WIDE SIDEWALK
DETAIL B-1
7' Wide and wider

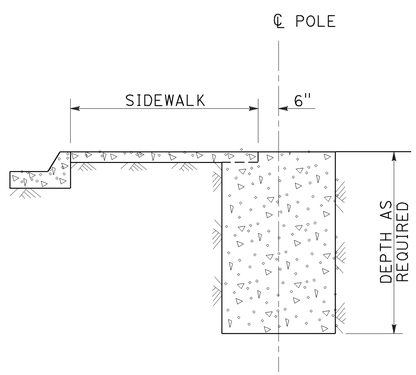

NARROW SIDEWALK
DETAIL B-2
Less than 7' wide

FOUNDATIONS IN SIDEWALK, MEDIAN AND ISLAND AREAS
DETAIL B

NOTES:

1. Where a portion of the foundation is above grade, the top edges shall have a 1" chamfer.
2. Slopes shall be horizontal to vertical ratio (Horizontal : Vertical).
3. Horizontal setbacks on cut and fill slopes steeper than 4:1 shall not exceed the distance shown for flat sections.
4. CIDH embedment depth shall be increased beyond standard depths by the diameter of the CIDH.

STATE OF CALIFORNIA
DEPARTMENT OF TRANSPORTATION

ELECTRICAL SYSTEMS (FOUNDATION INSTALLATIONS)

NO SCALE

RSP ES-11 DATED JULY 19, 2013 SUPERSEDES STANDARD PLAN ES-11
DATED MAY 20, 2011 - PAGE 488 OF THE STANDARD PLANS BOOK DATED 2010.

REVISED STANDARD PLAN RSP ES-11

2010 REVISED STANDARD PLAN RSP ES-11

7-9-13

DIST	COUNTY	ROUTE	POST MILES TOTAL PROJECT	SHEET No.	TOTAL SHEETS
07	LA	210	R16.1/R25.8	839	927

Andrew Rittenhouse 1-24-14
REGISTERED CIVIL ENGINEER DATE

5-12-14
PLANS APPROVAL DATE

REGISTERED PROFESSIONAL ENGINEER Andrew P Rittenhouse No. C61006 Exp. 12-31-14 CIVIL STATE OF CALIFORNIA

The State of California or its officers or agents shall not be responsible for the accuracy or completeness of scanned copies of this plan sheet.

Notes:

1. Indicates Replace Joint Seals, see "MISCELLANEOUS DETAILS NO. 1" sheet.
2. Indicates Begin Removal of Concrete Barrier Type 60A and Begin Concrete Barrier Type 60A (Mod 1).
3. Indicates End Removal of Concrete Barrier Type 60A and Begin Removal of Concrete Barrier Type 60.
4. Existing Concrete Barrier, see "ROADWAY PLANS".
5. Remove Guard Rail Anchor Block.
6. Concrete Barrier Type 736B see "ROADWAY PLANS".
7. Construct Concrete Barrier (Transition), see "MIDWEST GUARDRAIL SYSTEM CONNECTION-TYPE 9" sheet.
8. MGS, see "ROADWAY PLANS".
9. Indicates End Removal of Concrete Barrier Type 60 and End Concrete Barrier Type 60A (Mod 1).
10. Indicates Begin Removal of Concrete Barrier Type 60 and Begin Concrete Barrier Type 60A (Mod 1).
11. Indicates End Removal of Concrete Barrier Type 60 and Begin Removal of Concrete Barrier Type 60A.

Legend:

- Indicates Structure Approach Slab Type R(30D)
- Indicates Limits of Bridge Deck Modifications, see "STRUCTURE DETAILS" sheets.
- ± Indicates Dependant Dimensions (dimensions which are controlled or constrained by field dimensions).
- (A) - (I) See Limits of Existing Roadway Removal Longitudinal Sections on "MISCELLANEOUS DETAILS NO. 1" sheet.

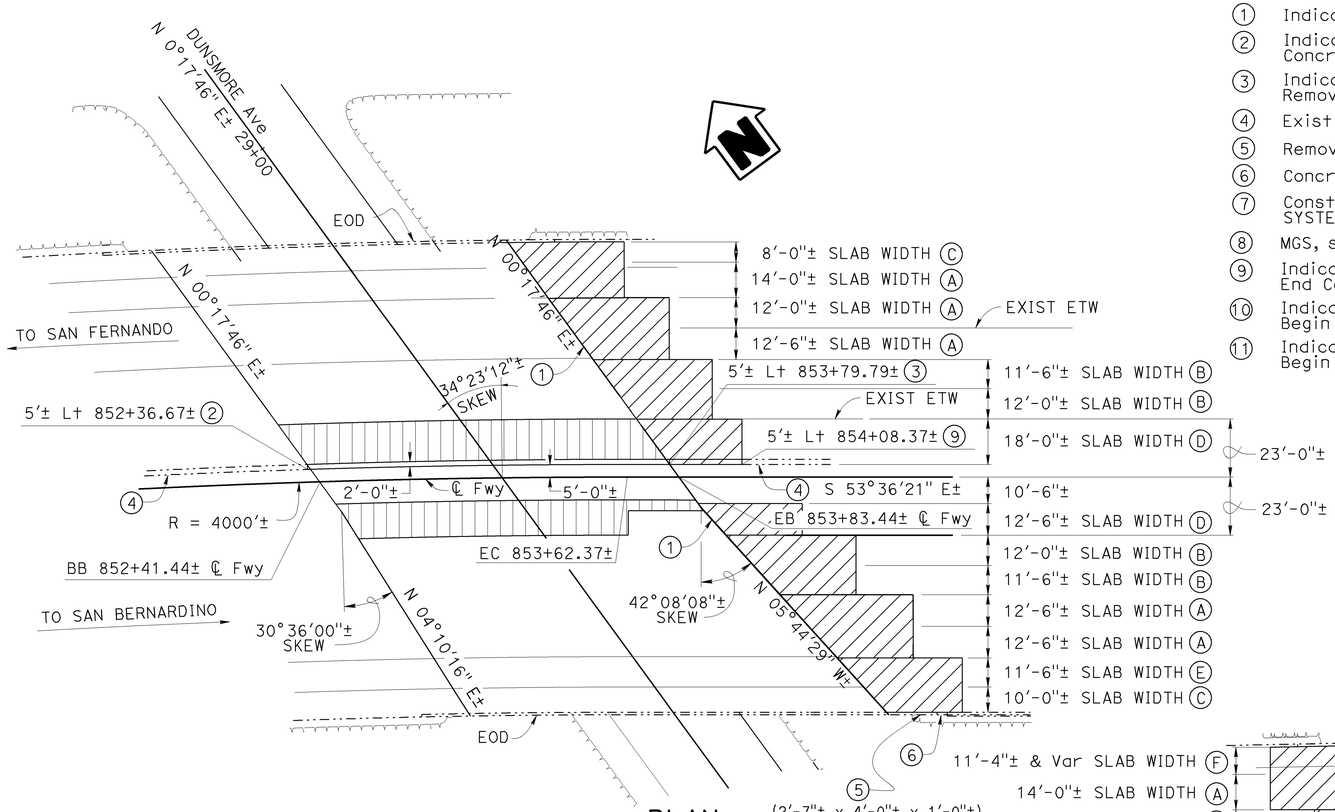

PLAN
1" = 30'

DUNSMORE AVENUE UNDERCROSSING
Br # 53-2282, PM 16.16

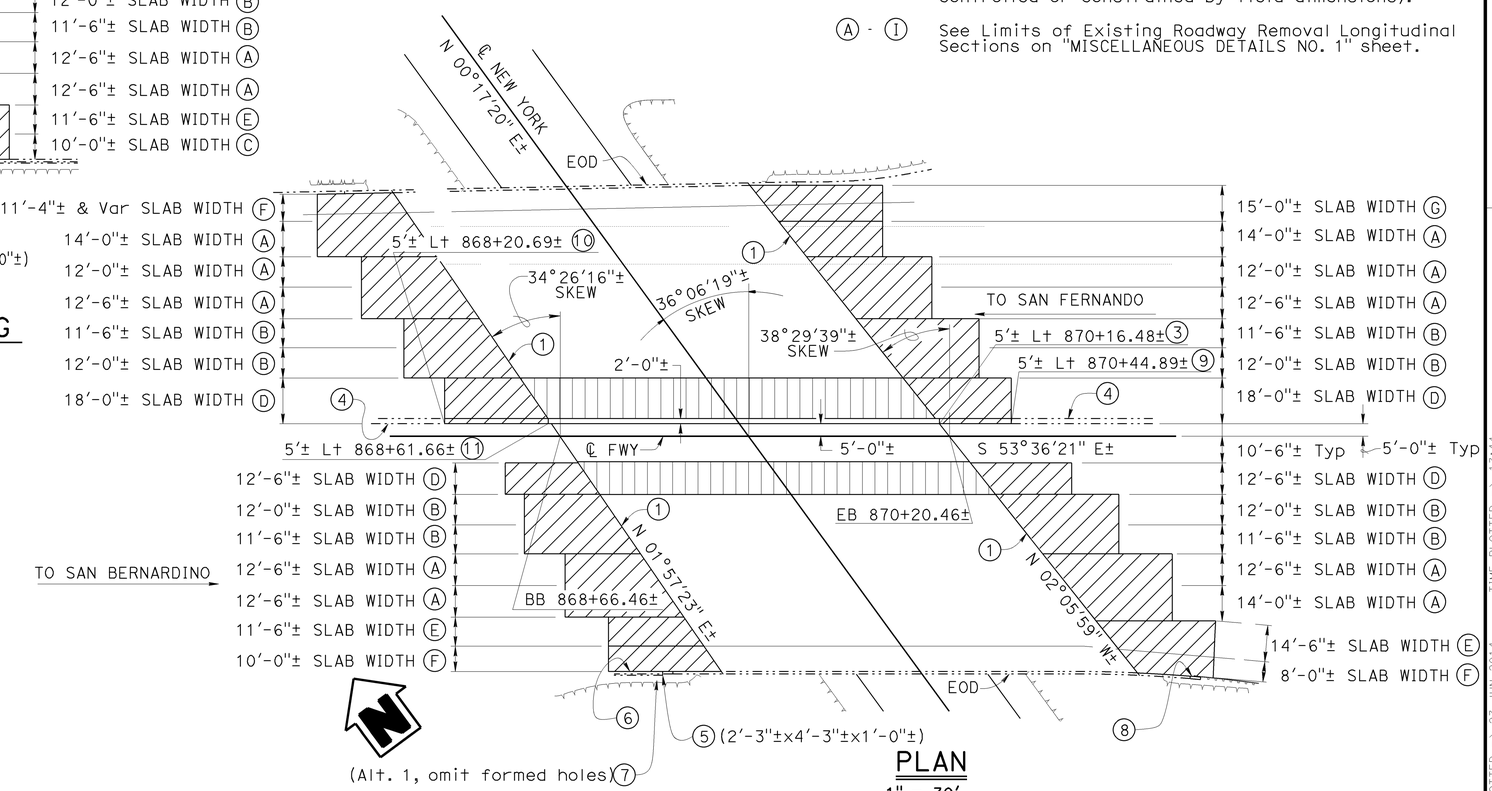

PLAN
1" = 30'

NEW YORK AVENUE UNDERCROSSING
Br # 53-2308, PM 16.47

NOTE:
THE CONTRACTOR SHALL VERIFY ALL CONTROLLING FIELD DIMENSIONS BEFORE ORDERING OR FABRICATING ANY MATERIAL.

Traci Menard
DESIGN ENGINEER

	BY	CHECKED
DESIGN	A. Rittenhouse	T. Menard
DETAILS	S. Cholda	D. Azzam
QUANTITIES	T. Sanderson	J. Szabo

LOAD & RESISTANCE FACTOR DESIGN — LIVE LOADING: HL93 W/"LOW-BOY"; PERMIT DESIGN VEHICLE

	BY	CHECKED
LAYOUT	A. Rittenhouse	T. Menard
SPECIFICATIONS	Tanya Kershell	PLANS AND SPECS COMPARED Tanya Kershell

ORIGINAL SCALE IN INCHES FOR REDUCED PLANS 0 1 2 3

STATE OF CALIFORNIA
DEPARTMENT OF TRANSPORTATION

DIVISION OF ENGINEERING SERVICES
STRUCTURE DESIGN
DESIGN BRANCH 15

BRIDGE NO. AS SHOWN
POST MILE AS SHOWN

ROUTE 210 IMPROVEMENTS
GENERAL PLAN NO. 1

UNIT: 3604
PROJECT NUMBER & PHASE: 07140000851
CONTRACT NO.: 07-2881U4

DISREGARD PRINTS BEARING EARLIER REVISION DATES

REVISION DATES: 8-16-13 2-18-14 01-14-14 01-05-14

SHEET 1 OF 19

USERNAME => s132486 DATE PLOTTED => 23-JUN-2014 TIME PLOTTED => 13:44

STRUCTURES DESIGN GENERAL PLAN SHEET (ENGLISH) (REV.09-01-10)

FILE => 2881u4-a-gp1.dgn

DIST	COUNTY	ROUTE	POST MILES TOTAL PROJECT	SHEET No.	TOTAL SHEETS
07	LA	210	R16.1/R25.8	840	927

Andrew Rittenhouse 1-24-14
REGISTERED CIVIL ENGINEER DATE

5-12-14
PLANS APPROVAL DATE

REGISTERED PROFESSIONAL ENGINEER Andrew P Rittenhouse No. C61006 Exp. 12-31-14 CIVIL STATE OF CALIFORNIA

The State of California or its officers or agents shall not be responsible for the accuracy or completeness of scanned copies of this plan sheet.

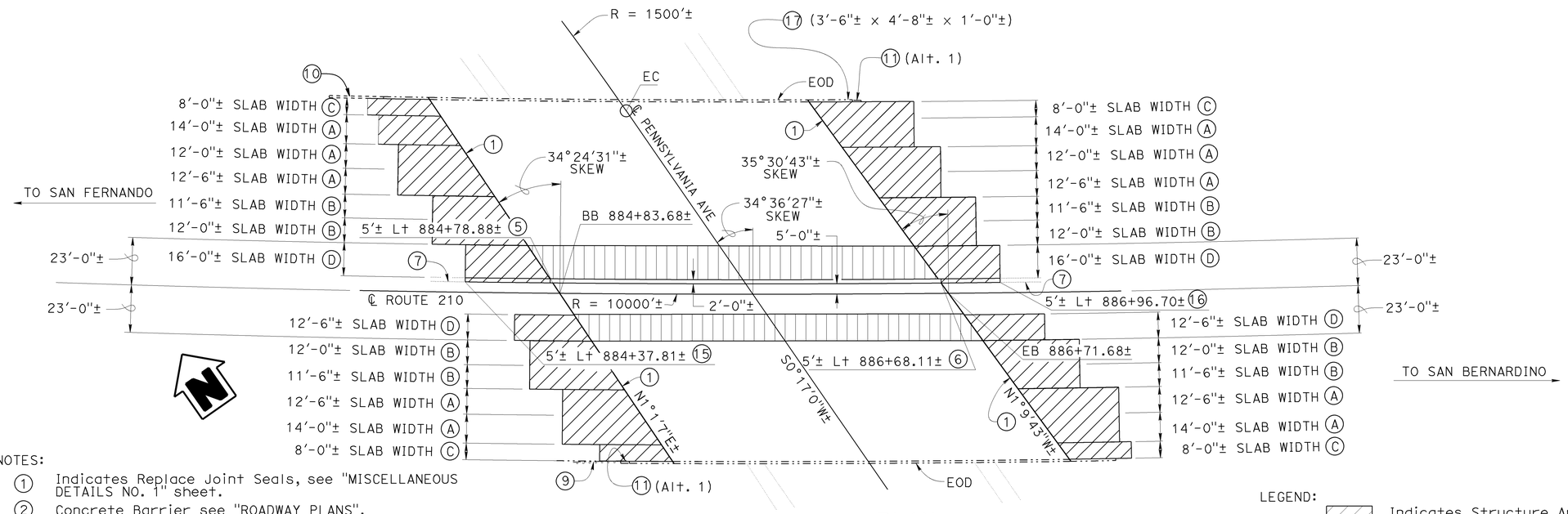

PLAN

1" = 30'-0"

PENNSYLVANIA AVENUE UNDERCROSSING

BRIDGE NUMBER 53-2310, PM 16.77

NOTES:

1. Indicates Replace Joint Seals, see "MISCELLANEOUS DETAILS NO. 1" sheet.
2. Concrete Barrier see "ROADWAY PLANS".
3. Indicates Begin Removal of Concrete Barrier Type 50 and Begin Concrete Barrier Type 60A (Mod).
4. Indicates End Removal of Concrete Barrier Type 50, Begin Removal of Concrete Barrier Type 50A and Begin Refinish Bridge Deck (2'-0" Width).
5. Indicates End Removal of Concrete Barrier Type 60 and Begin Removal of Concrete Barrier Type 60A.
6. Indicates End Removal of Concrete Barrier Type 60A and Begin Removal of Concrete Barrier Type 60.
7. Existing Concrete Barrier see "ROADWAY PLANS".
8. Note not used.
9. Remove existing Bridge Approach Guard Railing Type 8 (L = 50'±).
10. Concrete Barrier Type 736B, see "ROADWAY PLANS".
11. Construct Concrete Barrier (Transition), see "MIDWEST GUARDRAIL SYSTEM CONNECTION-TYPE 9" sheet.
12. MGS, see "ROADWAY PLANS".
13. Indicates End Removal of Concrete Barrier Type 50A, End Refinish Bridge Deck (2'-0" Width), and Begin Removal of Concrete Barrier Type 50.
14. Indicates End Removal of Concrete Barrier Type 50 and End Concrete Barrier Type 60A (Mod).
15. Indicates Begin Removal of Concrete Barrier Type 60 and Begin Concrete Barrier Type 60A (Mod 1).
16. Indicates End Removal of Concrete Barrier Type 60 and End Concrete Barrier Type 60A (Mod 1).
17. Remove Guard Rail Anchor Block.

LEGEND:

- Indicates Structure Approach Slab Type R(30D)
- Indicates Limits of Bridge Deck Modifications, see "STRUCTURE DETAILS" sheets.
- ± Indicates Dependant Dimensions (dimensions which are controlled or constrained by field dimensions).
- * Slab length to end at existing DI, separated by 1/2" Exp Jt Filler. See "MISCELLANEOUS DETAILS NO. 1" sheet.
- (A) - (I) See Limits of Existing Roadway Removal Longitudinal Sections on "MISCELLANEOUS DETAILS NO. 1" sheet.

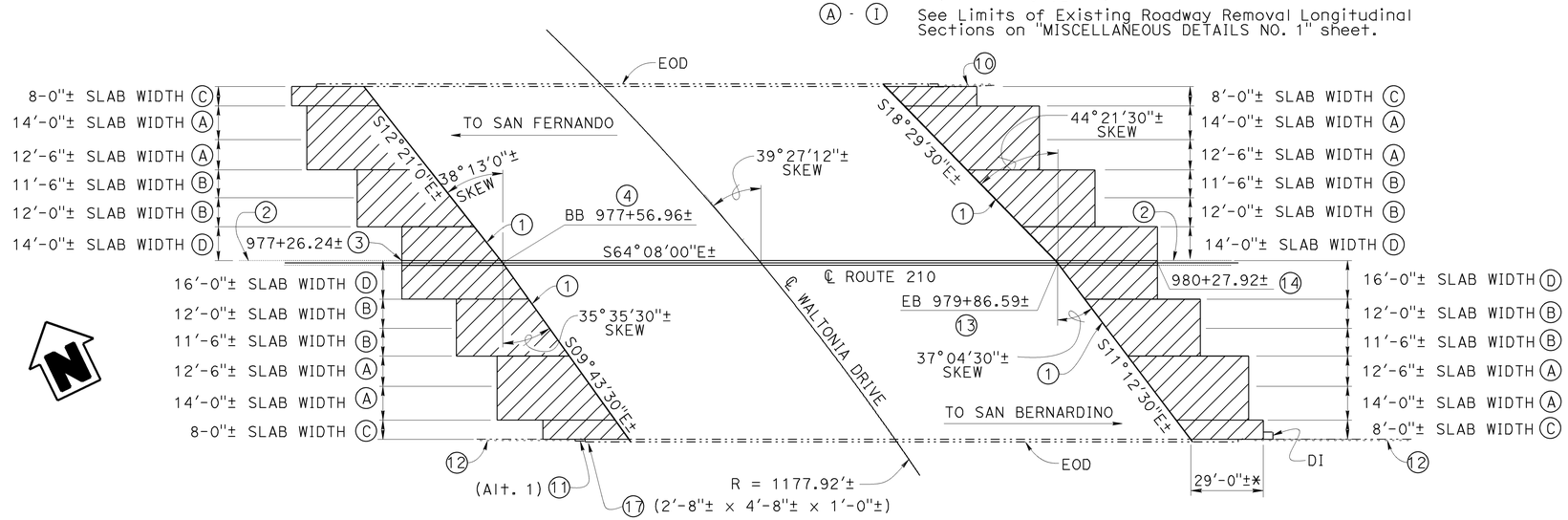

PLAN

1" = 30'-0"

WALTONIA DRIVE UNDERCROSSING

BRIDGE NUMBER 53-2219, PM 18.53

NOTE:
THE CONTRACTOR SHALL VERIFY ALL CONTROLLING FIELD DIMENSIONS BEFORE ORDERING OR FABRICATING ANY MATERIAL.

Traci Menard DESIGN ENGINEER	DESIGN	BY A. Rittenhouse	CHECKED Traci Menard	LOAD & RESISTANCE FACTOR DESIGN	LIVE LOADING: HL93 W/"LOW-BOY"; PERMIT DESIGN VEHICLE
	DETAILS	BY Herman Mauroschadt	CHECKED D. Azzam	LAYOUT BY A. Rittenhouse	CHECKED T. Menard
	QUANTITIES	BY T. Sanderson	CHECKED J. Szabo	SPECIFICATIONS BY Tanya Kershell	PLANS AND SPECS COMPARED Tanya Kershell

STATE OF CALIFORNIA
DEPARTMENT OF TRANSPORTATION

DIVISION OF ENGINEERING SERVICES
STRUCTURE DESIGN
DESIGN BRANCH 15

BRIDGE NO. AS SHOWN
POST MILE AS SHOWN

ROUTE 210 IMPROVEMENT
GENERAL PLAN NO. 2

ORIGINAL SCALE IN INCHES FOR REDUCED PLANS 0 1 2 3

UNIT: 3604
PROJECT NUMBER & PHASE: 07140000851
CONTRACT NO.: 07-2881U4

DISREGARD PRINTS BEARING EARLIER REVISION DATES

REVISION DATES: 07-26-13 2-18-14 01-24-14 01-06-14

SHEET 2 OF 19

STRUCTURES DESIGN GENERAL PLAN SHEET (ENGLISH) (REV.09-01-10)

FILE => 2881u4-b-gp2.dgn

USERNAME => s132286 DATE PLOTTED => 23-JUN-2014 TIME PLOTTED => 13:44

DIST	COUNTY	ROUTE	POST MILES TOTAL PROJECT	SHEET No.	TOTAL SHEETS
07	LA	210	R16.1/R25.8	841	927

Andrew Rittenhouse 1-24-14
REGISTERED CIVIL ENGINEER DATE

5-12-14
PLANS APPROVAL DATE

REGISTERED PROFESSIONAL ENGINEER
Andrew P Rittenhouse
No. C61006
Exp. 12-31-14
CIVIL
STATE OF CALIFORNIA

The State of California or its officers or agents shall not be responsible for the accuracy or completeness of scanned copies of this plan sheet.

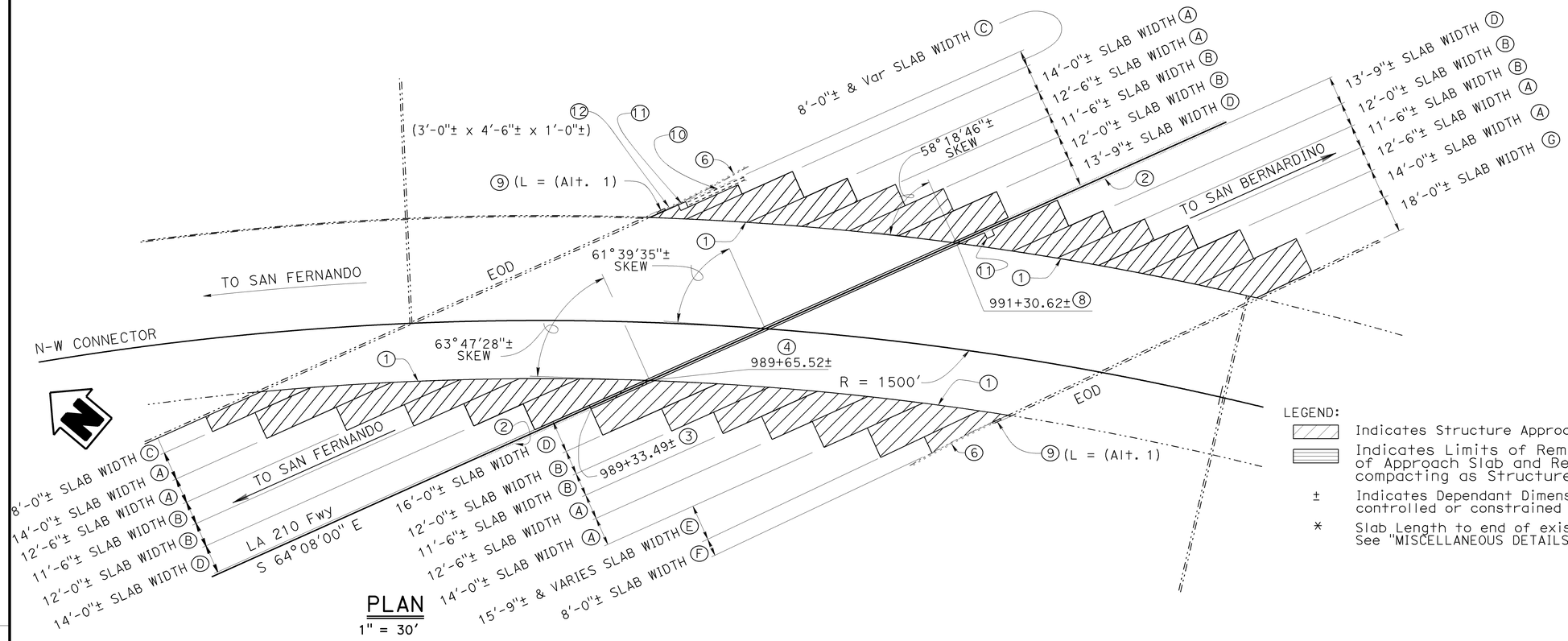

LEGEND:

- Indicates Structure Approach Slab Type R(30D).
- Indicates Limits of Remove Embankment Material to 4'-0" below bottom of Approach Slab and Replace, compacting as Structure Backfill (Bridge).
- ± Indicates Dependant Dimensions (dimensions which are controlled or constrained by field dimensions).
- * Slab Length to end of existing DI, separated by ½" Expansion Joint Filler. See "MISCELLANEOUS DETAILS NO. 1" sheet.

PLAN
1" = 30'

WEST CONNECTOR UNDERCROSSING
Br # 53-2191G, PM 18.76

NOTES:

1. Indicates Replace Joint Seals, see "MISCELLANEOUS DETAILS NO. 1" sheet
2. Concrete Barrier see "ROADWAY PLANS"
3. Indicates Begin Removal of Concrete Barrier Type 50 and Begin Concrete Barrier Type 60A (Mod).
4. Indicates End Removal of Concrete Barrier Type 50, Begin Removal of Concrete Barrier Type 50A and Begin Refinish Bridge Deck (2'-0" Width).
5. Cleanout or DI. See "ROADWAY PLANS" and "MISCELLANEOUS DETAILS NO. 1" sheet.
6. MGS, see "ROADWAY PLANS".
7. Concrete Barrier Type 736B, see "ROADWAY PLANS".
8. Indicates End Removal of Concrete Barrier Type 50A, End Refinish Bridge Deck, End Concrete Barrier Type 60A (Mod), and Begin Concrete Barrier Type 60W (Mod) - see "ROADWAY PLANS".
9. Construct Concrete Barrier (Transition), see "MIDWEST GUARDRAIL SYSTEM CONNECTION-TYPE 9" sheet.
10. 18" SCSP. See "ROADWAY PLANS" and "MISCELLANEOUS DETAILS NO. 1" sheet.
11. Cleanout. See "ROADWAY PLANS" and "MISCELLANEOUS DETAILS NO. 1" sheet.
12. Remove Guard Rail Anchor Block.

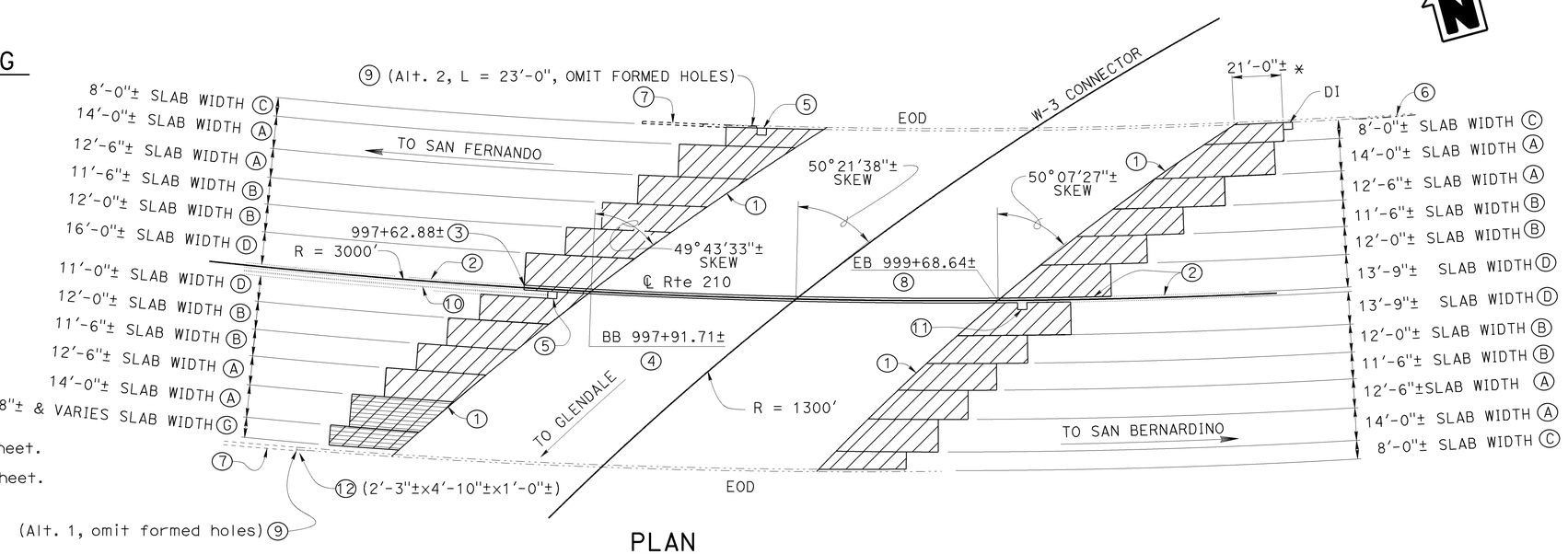

PLAN
1" = 30'

EAST CONNECTOR UNDERCROSSING
Br # 53-2199, PM 18.91

NOTE:
THE CONTRACTOR SHALL VERIFY ALL CONTROLLING FIELD DIMENSIONS BEFORE ORDERING OR FABRICATING ANY MATERIAL.

Traci Menard DESIGN ENGINEER	DESIGN	BY A. Rittenhouse	CHECKED D. Azzam	LOAD & RESISTANCE FACTOR DESIGN	LIVE LOADING: HL93 W/"LOW-BOY"; PERMIT DESIGN VEHICLE
	DETAILS	BY S. Cholda	CHECKED D. Azzam	LAYOUT	BY A. Rittenhouse / CHECKED T. Menard
	QUANTITIES	BY T. Sanderson	CHECKED J. Szabo	SPECIFICATIONS	BY Tanya Kershell / PLANS AND SPECS COMPARED Tanya Kershell

STATE OF CALIFORNIA
DEPARTMENT OF TRANSPORTATION

DIVISION OF ENGINEERING SERVICES
STRUCTURE DESIGN
DESIGN BRANCH 15

BRIDGE NO. AS SHOWN
POST MILE AS SHOWN

ROUTE 210 IMPROVEMENT
GENERAL PLAN NO. 3

ORIGINAL SCALE IN INCHES FOR REDUCED PLANS 0 1 2 3

UNIT: 3604
PROJECT NUMBER & PHASE: 07140000851
CONTRACT NO.: 07-2881U4

DISREGARD PRINTS BEARING EARLIER REVISION DATES

REVISION DATES: 08-09-13 2-18-14 01-14-14 12-27-13

SHEET 3 OF 19

DIST	COUNTY	ROUTE	POST MILES TOTAL PROJECT	SHEET No.	TOTAL SHEETS
07	LA	210	R16.1/R25.8	842	927

Andrew Rittenhouse 1-24-14
REGISTERED CIVIL ENGINEER DATE

5-12-14
PLANS APPROVAL DATE

REGISTERED PROFESSIONAL ENGINEER Andrew P Rittenhouse No. C61006 Exp. 12-31-14 CIVIL STATE OF CALIFORNIA

The State of California or its officers or agents shall not be responsible for the accuracy or completeness of scanned copies of this plan sheet.

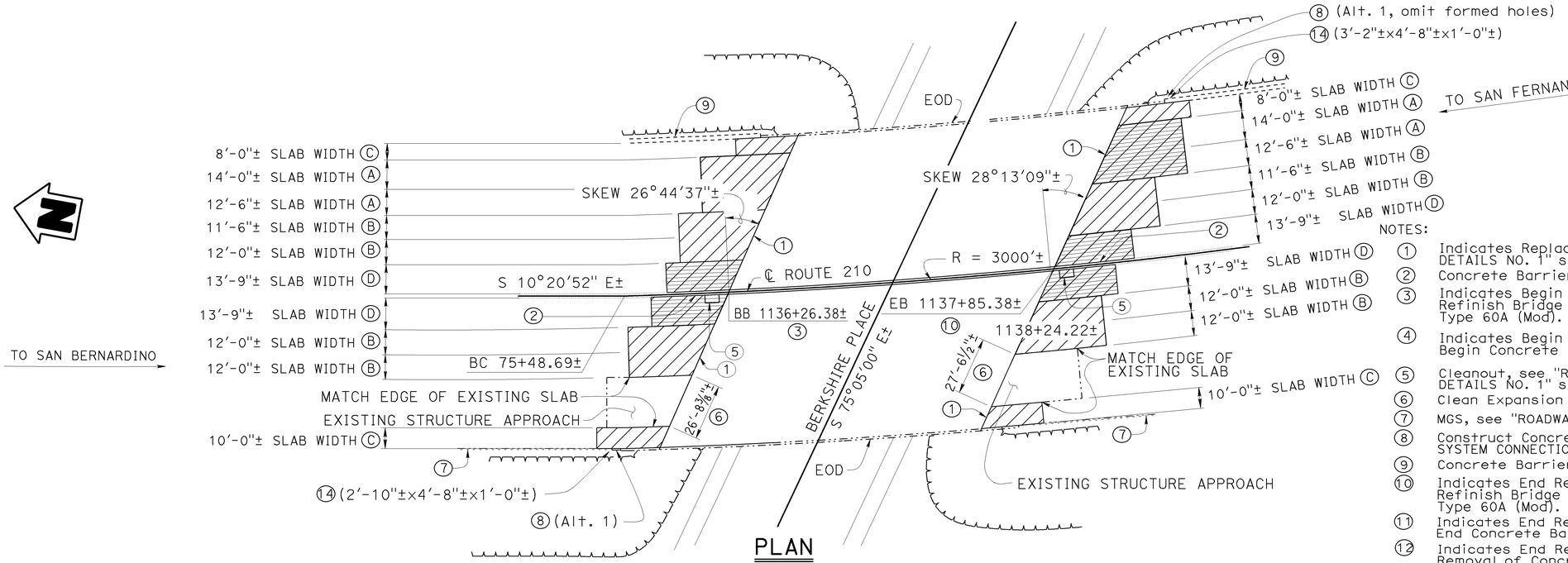

PLAN
1" = 30'

BERKSHIRE PLACE UNDERCROSSING
Br # 53-0734, PM 21.53

NOTES:

1. Indicates Replace Joint Seals, see "MISCELLANEOUS DETAILS NO. 1" sheet.
2. Concrete Barrier see "ROADWAY PLANS"
3. Indicates Begin Removal of Concrete Barrier Type 50A, Begin Refinish Bridge Deck (2'-0" width) and Begin Concrete Barrier Type 60A (Mod).
4. Indicates Begin Removal of Concrete Barrier Type 50 and Begin Concrete Barrier Type 60A (Mod).
5. Cleanout, see "ROADWAY PLANS" and "MISCELLANEOUS DETAILS NO. 1" sheet.
6. Clean Expansion Joint.
7. MGS, see "ROADWAY PLANS".
8. Construct Concrete Barrier (Transition), see "MIDWEST GUARDRAIL SYSTEM CONNECTION-TYPE 9" sheet.
9. Concrete Barrier Type 736B, see "ROADWAY PLANS".
10. Indicates End Removal of Concrete Barrier Type 50A, End Refinish Bridge Deck (2'-0" Width), and End Concrete Barrier Type 60A (Mod).
11. Indicates End Removal of Concrete Barrier Type 50 and End Concrete Barrier Type 60A (Mod).
12. Indicates End Removal of Concrete Barrier Type 50, Begin Removal of Concrete Barrier Type 50A, and Begin Refinish Bridge Deck (2'-0" width).
13. Indicates End Removal of Concrete Barrier Type 50A End Refinish Bridge Deck (2'-0" width), and Begin Removal of Cocrete Barrier Type 50.
14. Remove Guard Rail Anchor Block.

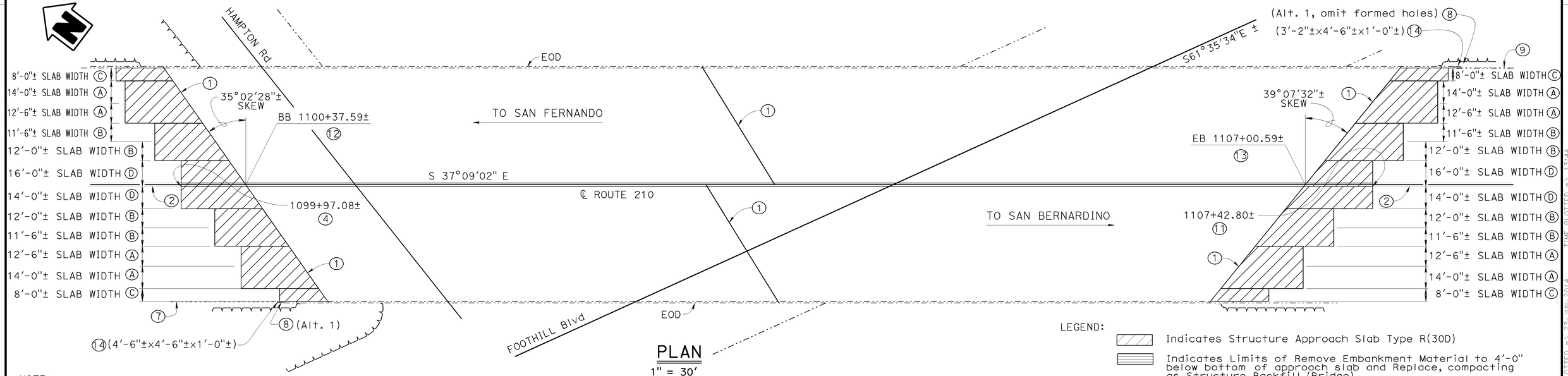

PLAN
1" = 30'

HAMPTON FOOTHILL UNDERCROSSING
Br # 53-2202, PM 20.85

NOTE:
THE CONTRACTOR SHALL VERIFY ALL CONTROLLING FIELD DIMENSIONS BEFORE ORDERING OR FABRICATING ANY MATERIAL.

LEGEND:

- Indicates Structure Approach Slab Type R(30D)
- Indicates Limits of Remove Embankment Material to 4'-0" below bottom of approach slab and Replace, compacting as Structure Backfill (Bridge).
- ± Indicates Dependant Dimensions (dimensions which are controlled or constrained by field dimensions).

Traci Menard
DESIGN ENGINEER

	BY	CHECKED
DESIGN	A. Rittenhouse	D. Azzam
DETAILS	S. Cholda	D. Azzam
QUANTITIES	T. Sanderson	J. Szabo

LOAD & RESISTANCE FACTOR DESIGN — LIVE LOADING: HL93 W/"LOW-BOY": PERMIT DESIGN VEHICLE

	BY	CHECKED
LAYOUT	A. Rittenhouse	Traci Menard
SPECIFICATIONS	Tanya Kershell	PLANS AND SPECS COMPARED Tanya Kershell

ORIGINAL SCALE IN INCHES FOR REDUCED PLANS 0 1 2 3

STATE OF CALIFORNIA
DEPARTMENT OF TRANSPORTATION

DIVISION OF ENGINEERING SERVICES
STRUCTURE DESIGN
DESIGN BRANCH 15

BRIDGE NO. AS SHOWN
POST MILE AS SHOWN

ROUTE 210 IMPROVEMENTS
GENERAL PLAN NO. 4

UNIT: 3604
PROJECT NUMBER & PHASE: 07140000851
CONTRACT NO.: 07-2881U4

DISREGARD PRINTS BEARING EARLIER REVISION DATES
REVISION DATES: 8-15-13 2-18-14 01-14-14 01-06-13

SHEET 4 OF 19

USERNAME => s132486 DATE PLOTTED => 23-JUN-2014 TIME PLOTTED => 13:44

Notes:

1. Indicates Replace Joint Seals, see "MISCELLANEOUS DETAILS NO. 1" sheet.
2. Concrete Barrier see "ROADWAY PLANS"
3. Indicates Begin Removal of Concrete Barrier Type 50 and Begin Concrete Barrier Type 60A (Mod).
4. Indicates End Removal of Concrete Barrier Type 50, Begin Removal of Concrete Barrier Type 50A, and Begin Refinish Bridge Deck (2 ft width).
5. DI or Cleanout. See "ROADWAY PLANS" and "MISCELLANEOUS DETAILS NO. 1" sheet.
6. Remove Guard Rail Anchor Block.
7. Concrete Barrier Type 736B, see "ROADWAY PLANS".
8. Construct Concrete Barrier (Transition), see "MIDWEST GUARDRAIL SYSTEM CONNECTION-TYPE 9" sheet.
9. Indicates End Removal of Concrete Barrier Type 50A, End Refinish Bridge Deck (2 ft width), and Begin Removal of Concrete Barrier Type 50, .
10. Indicates End Removal of Concrete Barrier Type 50 and End Concrete Barrier Type 60A (Mod).
11. Indicates Begin Removal of Concrete Barrier Type 50A, Begin Refinish Bridge Deck (2'-0" width), and Begin Concrete Barrier Type 60A (Mod).
12. Indicates End Removal of Concrete Barrier Type 50A, End Refinish Bridge Deck (2'-0" width), and End Concrete Barrier Type 60A (Mod).

DIST	COUNTY	ROUTE	POST MILES TOTAL PROJECT	SHEET No.	TOTAL SHEETS
07	LA	210	R16.1/R25.8	843	927

Andrew Rittenhouse 1-24-14
REGISTERED CIVIL ENGINEER DATE

5-12-14
PLANS APPROVAL DATE

REGISTERED PROFESSIONAL ENGINEER Andrew P Rittenhouse No. C61006 Exp. 12-31-14 CIVIL STATE OF CALIFORNIA

The State of California or its officers or agents shall not be responsible for the accuracy or completeness of scanned copies of this plan sheet.

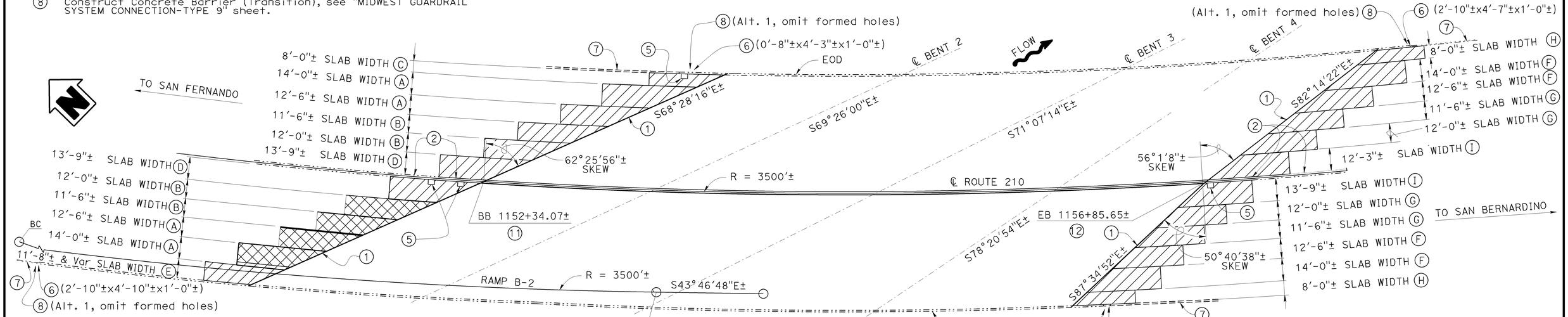

Legend:

- Indicates Structure Approach Slab Type R(30S)
- Indicates Existing Structure Approach Slab to be removed. Average Existing Slab thickness = 1'-3". Maximum Existing Slab thickness = 2'-0".
- ± Indicates Dependant Dimensions (dimensions which are controlled or constrained by field dimensions).
- Ⓐ - Ⓘ See Limits of Existing Roadway Removal Longitudinal Sections on "MISCELLANEOUS DETAILS NO. 1" sheet.

PLAN

1" = 30'-0"

FLINT CANYON WASH BRIDGE

BRIDGE NUMBER 53-0579, PM 21.84

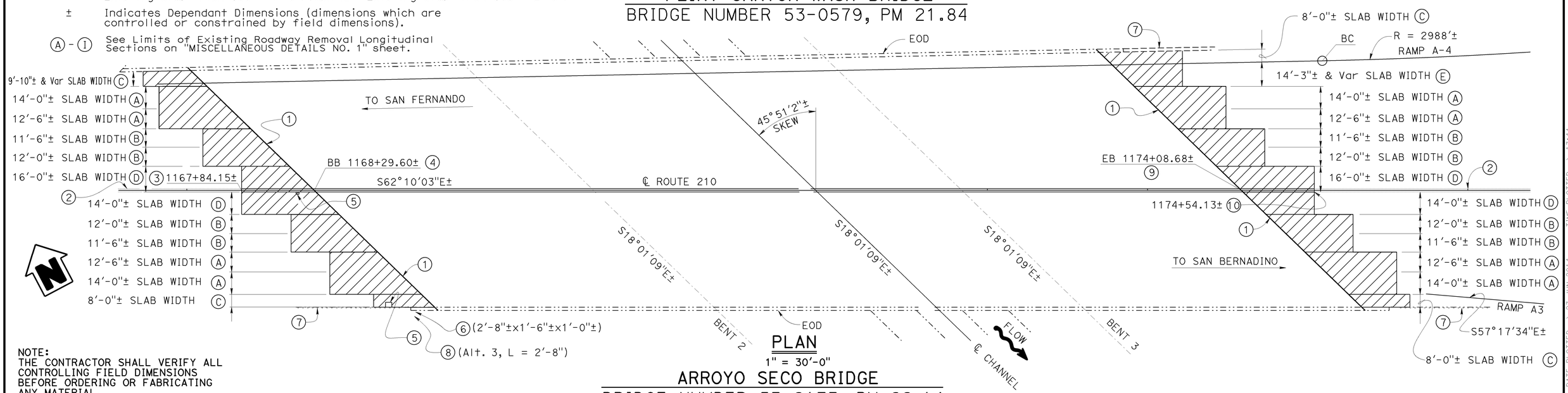

NOTE:
THE CONTRACTOR SHALL VERIFY ALL CONTROLLING FIELD DIMENSIONS BEFORE ORDERING OR FABRICATING ANY MATERIAL.

PLAN

1" = 30'-0"

ARROYO SECO BRIDGE

BRIDGE NUMBER 53-2173, PM 22.14

Traci Menard DESIGN ENGINEER	DESIGN	BY A. Rittenhouse	CHECKED D. Azzam	LOAD & RESISTANCE FACTOR DESIGN	LIVE LOADING: HL93 W/"LOW-BOY"; PERMIT DESIGN VEHICLE
	DETAILS	BY Herman Mauroschadt	CHECKED D. Azzam	LAYOUT BY A. Rittenhouse	CHECKED Traci Menard
	QUANTITIES	BY T. Sanderson	CHECKED J. Szabo	SPECIFICATIONS BY Tanya Kershell	PLANS AND SPECS COMPARED Tanya Kershell

ORIGINAL SCALE IN INCHES FOR REDUCED PLANS 0 1 2 3

STATE OF CALIFORNIA
DEPARTMENT OF TRANSPORTATION

DIVISION OF ENGINEERING SERVICES
STRUCTURE DESIGN
DESIGN BRANCH 15

BRIDGE NO. AS SHOWN
POST MILE AS SHOWN

ROUTE 210 IMPROVEMENTS
GENERAL PLAN NO. 5

UNIT: 3604
PROJECT NUMBER & PHASE: 07140000851
CONTRACT NO.: 07-2881U4

DISREGARD PRINTS BEARING EARLIER REVISION DATES → 08-09-13 01-06-14 2-18-14 01-14-14

SHEET 5 OF 19

USERNAME => s132486 DATE PLOTTED => 23-JUN-2014 TIME PLOTTED => 13:44

DIST	COUNTY	ROUTE	POST MILES TOTAL PROJECT	SHEET No.	TOTAL SHEETS
07	LA	210	R16.1/R25.8	844	927

Andrew Rittenhouse 1-24-14
REGISTERED CIVIL ENGINEER DATE

5-12-14
PLANS APPROVAL DATE

REGISTERED PROFESSIONAL ENGINEER Andrew P Rittenhouse No. C61006 Exp. 12-31-14 CIVIL STATE OF CALIFORNIA

The State of California or its officers or agents shall not be responsible for the accuracy or completeness of scanned copies of this plan sheet.

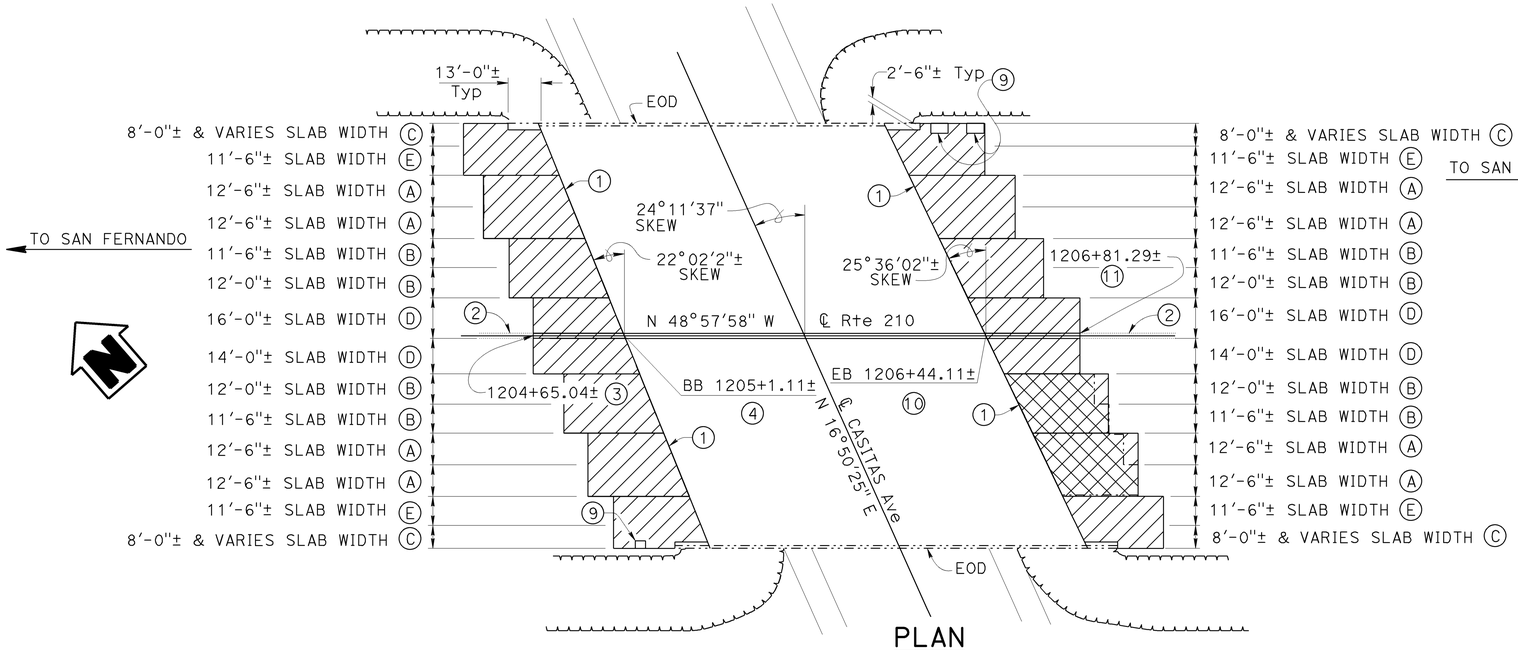

PLAN
1" = 30'

CASITAS AVENUE UNDERCROSSING
Br # 53-2154, PM 22.84

NOTES:

1. Indicates Replace Joint Seals, see "MISCELLANEOUS DETAILS NO. 1" sheet.
2. Concrete Barrier see "ROADWAY PLANS"
3. Indicates Begin Removal of Concrete Barrier Type 50 and Begin Concrete Barrier Type 60A (Mod).
4. Indicates End Removal of Concrete Barrier Type 50, Begin Removal of Concrete Barrier Type 50A, and Begin Refinish Bridge Deck (2 ft width).
5. Note not used.
6. MGS, see "ROADWAY PLANS".
7. Concrete Barrier Type 736B see "ROADWAY PLANS".
8. Existing Concrete Barrier Type 60.
9. Cleanout, DI or PB. See "ROADWAY PLANS" and "MISCELLANEOUS DETAILS NO. 1" sheet.
10. Indicates End Removal of Concrete Barrier Type 50A, End Refinish Bridge Deck (2 ft width), and Begin Removal of Concrete Barrier Type 50.
11. Indicates End Removal of Concrete Barrier Type 50 and End Concrete Barrier Type 60A (Mod).
12. Construct Concrete Barrier (Transition), see "MIDWEST GUARDRAIL SYSTEM CONNECTION-TYPE 9" sheet.
13. Indicates Begin Removal of Concrete Barrier Type 50A, Begin Refinish Bridge Deck (2'-0" width), and Begin Concrete Barrier Type 60A (Mod).
14. Indicates End Removal of Concrete Barrier Type 50A, End Refinish Bridge Deck (2'-0" width), and End Concrete Barrier Type 60A (Mod).
15. Remove Guard Rail Anchor Block.

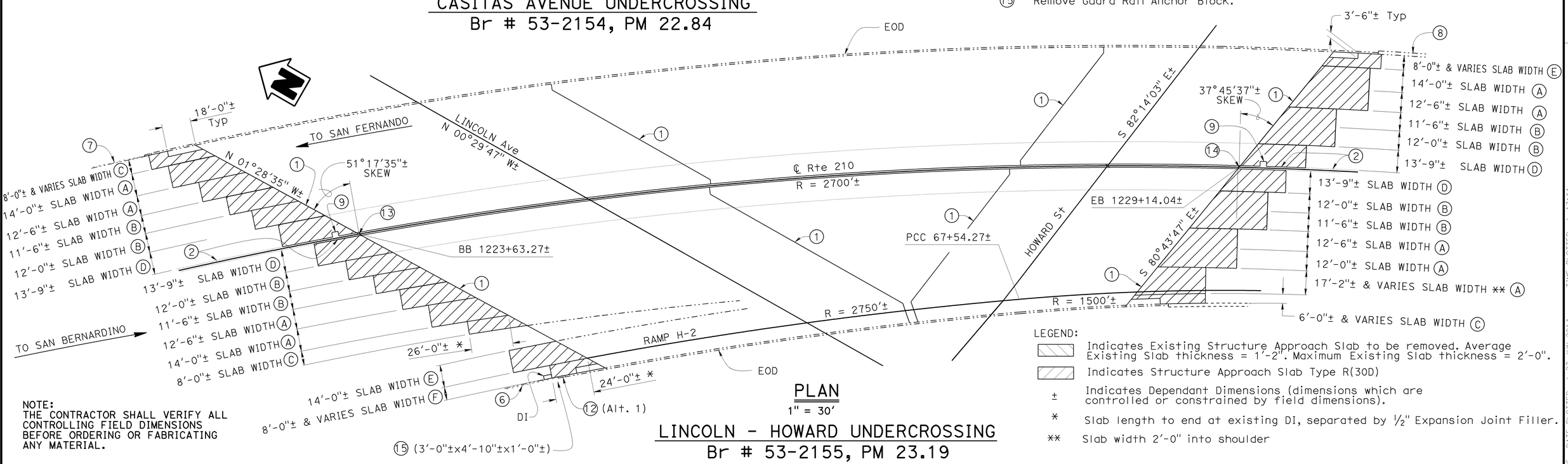

NOTE:
THE CONTRACTOR SHALL VERIFY ALL CONTROLLING FIELD DIMENSIONS BEFORE ORDERING OR FABRICATING ANY MATERIAL.

PLAN
1" = 30'

LINCOLN - HOWARD UNDERCROSSING
Br # 53-2155, PM 23.19

LEGEND:

- Indicates Existing Structure Approach Slab to be removed. Average Existing Slab thickness = 1'-2". Maximum Existing Slab thickness = 2'-0".
- Indicates Structure Approach Slab Type R(30D)
- ± Indicates Dependant Dimensions (dimensions which are controlled or constrained by field dimensions).
- * Slab length to end at existing DI, separated by ½" Expansion Joint Filler.
- ** Slab width 2'-0" into shoulder

Traci Menard DESIGN ENGINEER	DESIGN	BY A. Rittenhouse	CHECKED D. Azzam	LOAD & RESISTANCE FACTOR DESIGN	LIVE LOADING: HL93 W/"LOW-BOY"; PERMIT DESIGN VEHICLE
	DETAILS	BY S. Cholda	CHECKED D. Azzam	LAYOUT: BY A. Rittenhouse	CHECKED Traci Menard
	QUANTITIES	BY T. Sanderson	CHECKED J. Szabo	SPECIFICATIONS: BY Tanya Kershell	PLANS AND SPECS COMPARED Tanya Kershell

ORIGINAL SCALE IN INCHES FOR REDUCED PLANS 0 1 2 3

STATE OF CALIFORNIA
DEPARTMENT OF TRANSPORTATION

DIVISION OF ENGINEERING SERVICES
STRUCTURE DESIGN
DESIGN BRANCH 15

BRIDGE NO. AS SHOWN
POST MILE AS SHOWN

ROUTE 210 IMPROVEMENTS
GENERAL PLAN NO. 6

UNIT: 3604
PROJECT NUMBER & PHASE: 07140000851
CONTRACT NO.: 07-2881U4

DISREGARD PRINTS BEARING EARLIER REVISION DATES

REVISION DATES: 08-15-13 01-14-14 2-18-14 01-06-14

SHEET 6 OF 19

USERNAME => s132286 DATE PLOTTED => 23-JUN-2014 TIME PLOTTED => 13:44

FILE => 2881u4-f-gp6.dgn

STRUCTURES DESIGN GENERAL PLAN SHEET (ENGLISH) (REV.09-01-10)

DIST	COUNTY	ROUTE	POST MILES TOTAL PROJECT	SHEET No.	TOTAL SHEETS
07	LA	210	R16.1/R25.8	845	927

Andrew Rittenhouse 1-24-14
REGISTERED CIVIL ENGINEER DATE

5-12-14
PLANS APPROVAL DATE

REGISTERED PROFESSIONAL ENGINEER
Andrew P Rittenhouse
No. C61006
Exp. 12-31-14
CIVIL
STATE OF CALIFORNIA

The State of California or its officers or agents shall not be responsible for the accuracy or completeness of scanned copies of this plan sheet.

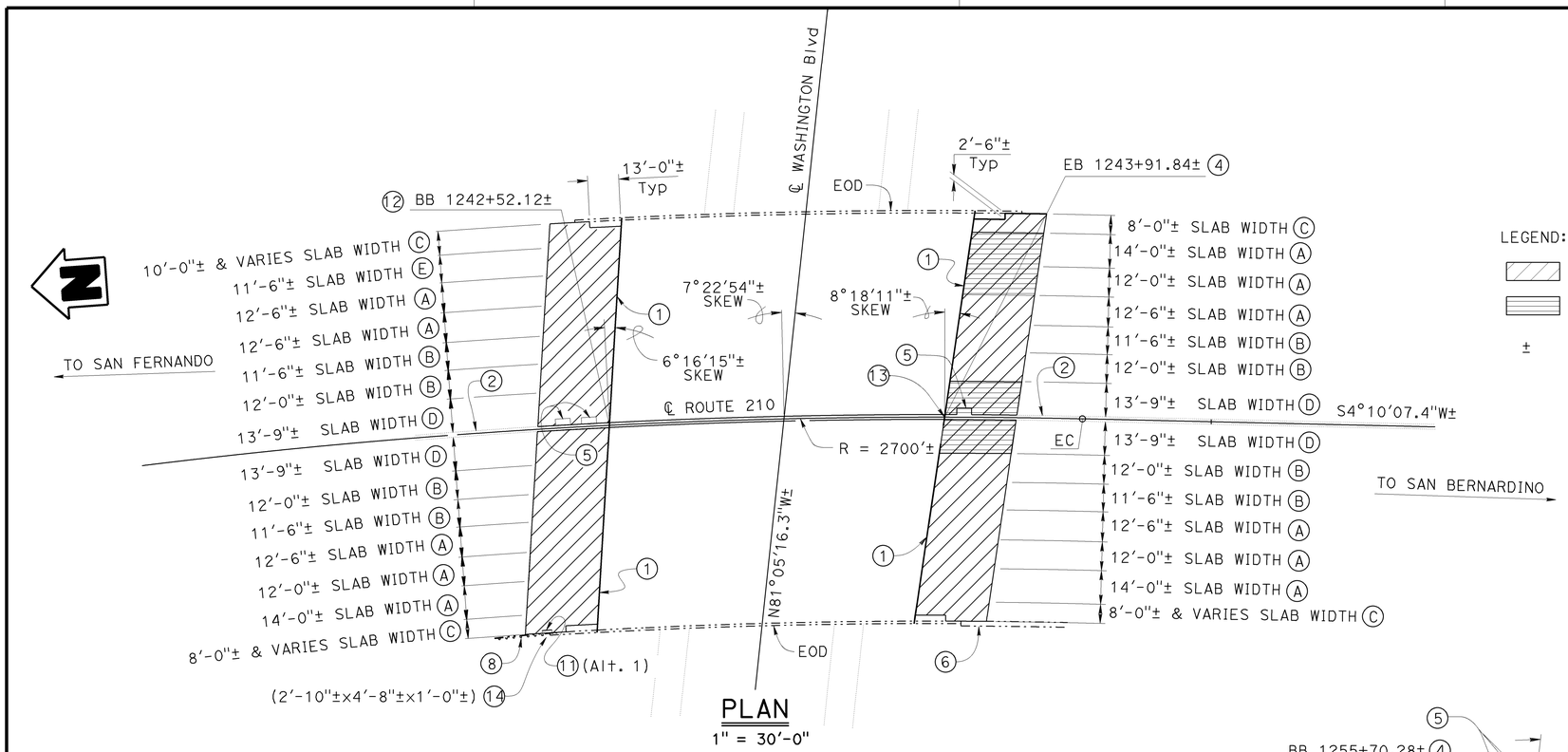

PLAN
1" = 30'-0"

WASHINGTON BOULEVARD
BRIDGE NUMBER 53-2157, PM 23.55

LEGEND:

Indicates Structure Approach Slab Type R(30D)

Indicates Limits of Remove Embankment Material to 4'-0" below bottom of Approach Slab and Replace, compacting as Structure Backfill (Bridge).

± Indicates Dependant Dimensions (dimensions which are controlled or constrained by field dimensions).

NOTES:

1. Indicates Replace Joint Seals, see "MISCELLANEOUS DETAILS NO. 1" sheet.
2. Concrete Barrier see "ROADWAY PLANS"
3. Indicates Begin Removal of Concrete Barrier Type 50 and Begin Concrete Barrier Type 60A (Mod).
4. Indicates End Removal of Concrete Barrier Type 50, Begin Removal of Concrete BarrierType 50A, and Begin Refinish Bridge Deck (2 ft width).
5. Cleanout, DI, or PB. See "ROADWAY PLANS" and "MISCELLANEOUS DETAILS NO. 1" sheet.
6. Remove existing Bridge Approach Guard Railing Type 8 (L = 15'±).
7. Concrete Barrier Type 736B, see "ROADWAY PLANS".
8. MGS, see "ROADWAY PLANS".
9. Indicates End Removal of Concrete Barrier Type 50A, End Refinish Bridge Deck (2 ft width), and Begin Removal of Concrete BarrierType 50.
10. Indicates End Removal of Concrete Barrier Type 50 and End Concrete Barrier Type 60A (Mod).
11. Construct Concrete Barrier (Transition), see "MIDWEST GUARDRAIL SYSTEM CONNECTION-TYPE 9" sheet.
12. Indicates Begin Removal of Concrete Barrier Type 50A, Begin Refinish Bridge Deck (2'-0" width), and Begin Concrete Barrier Type 60A (Mod).
13. Indicates End Removal of Concrete Barrier Type 50A, End Refinish Bridge Deck (2'-0" width), and End Concrete Barrier Type 60A (Mod).
14. Remove Guard Rail Anchor Block.

NOTE:
THE CONTRACTOR SHALL VERIFY ALL CONTROLLING FIELD DIMENSIONS BEFORE ORDERING OR FABRICATING ANY MATERIAL.

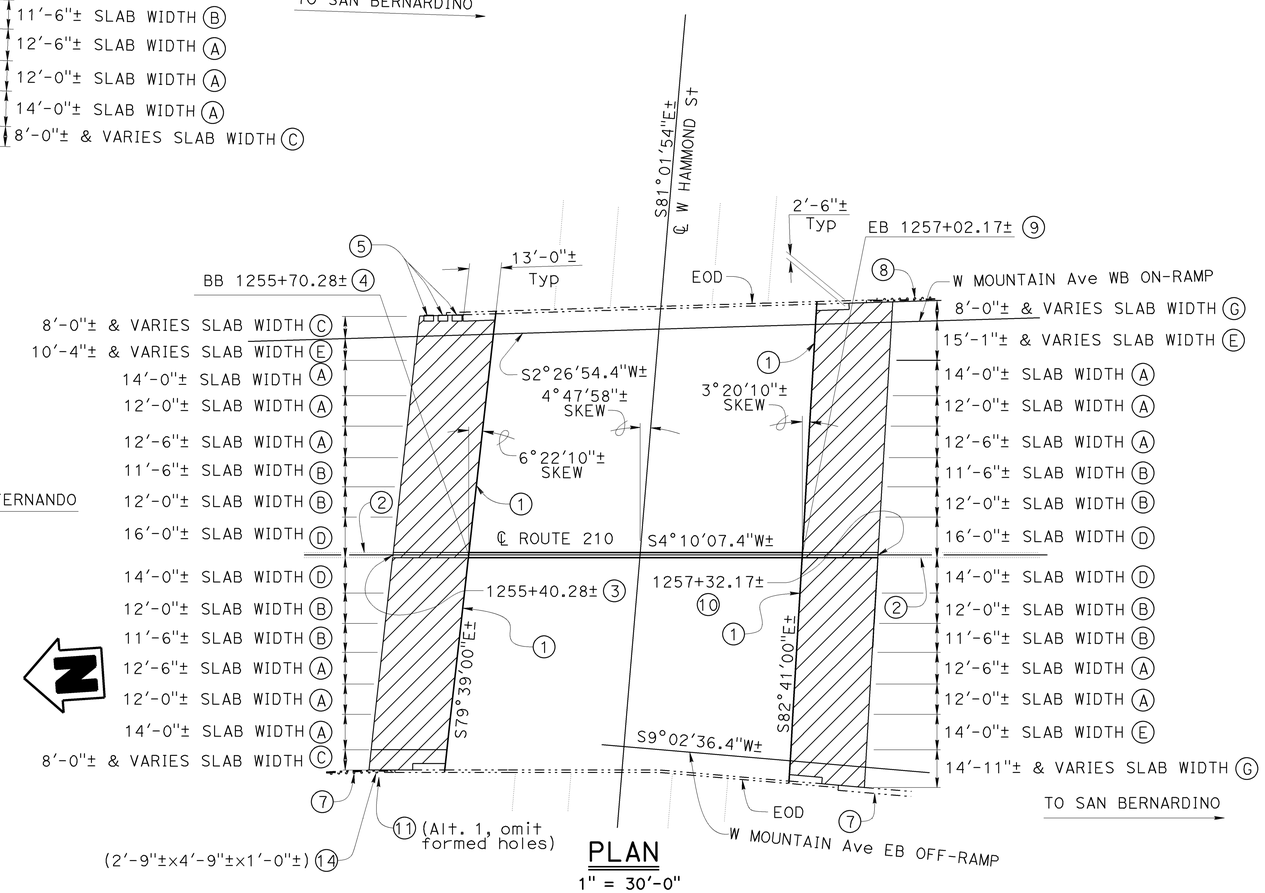

PLAN
1" = 30'-0"

HAMMOND STREET UNDERCROSSING
BRIDGE NUMBER 53-2158, PM 23.80

Traci Menard DESIGN ENGINEER	DESIGN	BY A. Rittenhouse	CHECKED D. Azzam	LOAD & RESISTANCE FACTOR DESIGN	LIVE LOADING: HL93 W/"LOW-BOY": PERMIT DESIGN VEHICLE
	DETAILS	BY Herman Mauroschadt	CHECKED D. Azzam	LAYOUT: BY A. Rittenhouse	CHECKED Traci Menard
	QUANTITIES	BY T. Sanderson	CHECKED J. Szabo	SPECIFICATIONS: BY Tanya Kershell	PLANS AND SPECS COMPARED Tanya Kershell

ORIGINAL SCALE IN INCHES FOR REDUCED PLANS 0 1 2 3

STATE OF CALIFORNIA
DEPARTMENT OF TRANSPORTATION

DIVISION OF ENGINEERING SERVICES
STRUCTURE DESIGN
DESIGN BRANCH 15

BRIDGE NO. AS SHOWN
POST MILE AS SHOWN

ROUTE 210 IMPROVEMENTS
GENERAL PLAN NO. 7

UNIT: 3604
PROJECT NUMBER & PHASE: 07140000851
CONTRACT NO.: 07-2881U4

DISREGARD PRINTS BEARING EARLIER REVISION DATES

REVISION DATES: 08-14-13 3-3-14 2-18-14 01-14-14

SHEET 7 OF 19

USERNAME => s132486 DATE PLOTTED => 23-JUN-2014 TIME PLOTTED => 13:44

STRUCTURES DESIGN GENERAL PLAN SHEET (ENGLISH) (REV.09-01-10)

FILE => 2881u4-g-gp7.dgn

DIST	COUNTY	ROUTE	POST MILES TOTAL PROJECT	SHEET No.	TOTAL SHEETS
07	LA	210	R16.1/R25.8	846	927

Andrew Rittenhouse 1-24-14
REGISTERED CIVIL ENGINEER DATE

5-12-14
PLANS APPROVAL DATE

REGISTERED PROFESSIONAL ENGINEER Andrew P Rittenhouse No. C61006 Exp. 12-31-14 CIVIL STATE OF CALIFORNIA

The State of California or its officers or agents shall not be responsible for the accuracy or completeness of scanned copies of this plan sheet.

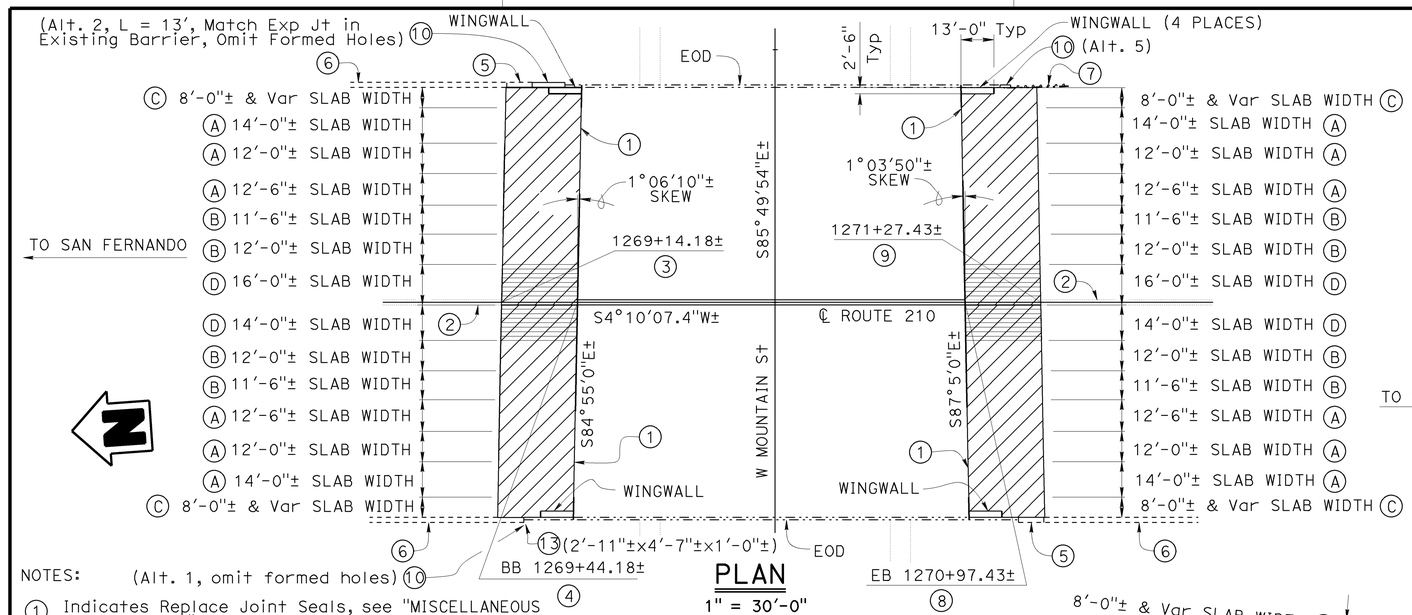

PLAN
1" = 30'-0"

MOUNTAIN STREET UNDERCROSSING
BRIDGE NUMBER 53-2159, PM 24.06

NOTES:

1. Indicates Replace Joint Seals, see "MISCELLANEOUS DETAILS NO. 1" sheet.
2. Concrete Barrier see "ROADWAY PLANS"
3. Indicates Begin Removal of Concrete Barrier Type 50 andBegin Concrete Barrier Type 60A (Mod).
4. Indicates End Removal of Concrete Barrier Type 50, Begin Removal of Concrete Barrier Type 50A, and Begin Refinish Bridge Deck (2 ft width)
5. Remove existing Bridge Approach Guard Railing Type 8 (L = 15'±, 2 locations).
6. Concrete Barrier Type 736B, see "ROADWAY PLANS".
7. MGS, see "ROADWAY PLANS".
8. Indicates End Removal of Concrete Barrier Type 50A End Refinish Bridge Deck (2 ft width), and Begin Removal of Concrete Barrier Type 50.
9. Indicates End Removal of Concrete Barrier Type 50 and End Concrete Barrier Type 60A (Mod).
10. Construct Concrete Barrier (Transition), see "MIDWEST GUARDRAIL SYSTEM CONNECTION-TYPE 9" sheet.
11. Indicates End Removal of Concrete Barrier Type 50A, End Refinish Bridge Deck (2'-0" width), and End Concrete Barrier Type 60A (Mod).
12. Cleanout, see "ROADWAY PLANS" and "MISCELLANEOUS DETAILS NO. 1" sheet.
13. Remove Guard Rail Anchor Block.

LEGEND:

- Indicates Structure Approach Slab Type R(30D)
- Indicates Limits of Remove Embankment Material to 4'-0" below bottom of Approach Slab and Replace, compacting as Structure Backfill (Bridge).
- ± Indicates Dependant Dimensions (dimensions which are controlled or constrained by field dimensions).
- Indicates Existing Structure Approach Slab to be removed. Average Existing Slab thickness = 1'-4". Maximum Existing Slab thickness = 2'-0".
- (A) - (I) See Limits of Existing Roadway Removal Longitudinal Sections on "MISCELLANEOUS DETAILS NO. 1" sheet.
- * Slab length to end at existing PB, separated by ½" Exp Jt Filler.

NOTE:
THE CONTRACTOR SHALL VERIFY ALL CONTROLLING FIELD DIMENSIONS BEFORE ORDERING OR FABRICATING ANY MATERIAL.

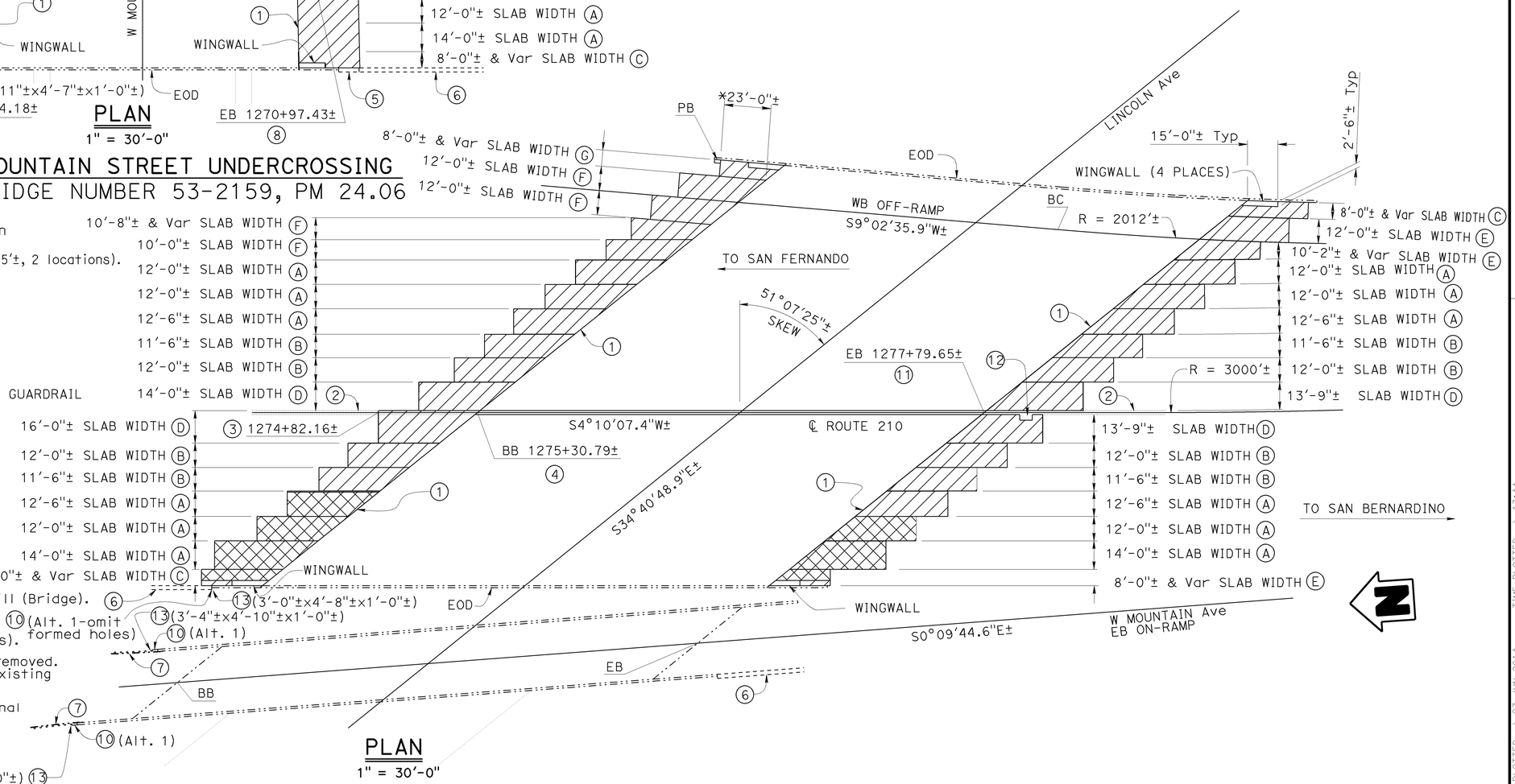

PLAN
1" = 30'-0"

LINCOLN AVENUE UNDERCROSSING
BRIDGE NUMBER 53-2160, PM 24.17

Traci Menard DESIGN ENGINEER	DESIGN	BY A. Rittenhouse	CHECKED D. Azzam	LOAD & RESISTANCE FACTOR DESIGN	LIVE LOADING: HL93 W/"LOW-BOY"; PERMIT DESIGN VEHICLE	
	DETAILS	BY Herman Mauroschadt	CHECKED D. Azzam	LAYOUT	BY A. Rittenhouse	CHECKED Traci Menard
	QUANTITIES	BY T. Sanderson	CHECKED J. Szabo	SPECIFICATIONS	BY Tanya Kershell	PLANS AND SPECS COMPARED Tanya Kershell

ORIGINAL SCALE IN INCHES FOR REDUCED PLANS 0 1 2 3

STATE OF CALIFORNIA
DEPARTMENT OF TRANSPORTATION

DIVISION OF ENGINEERING SERVICES
STRUCTURE DESIGN
DESIGN BRANCH 15

BRIDGE NO. AS SHOWN
POST MILE AS SHOWN

ROUTE 210 IMPROVEMENTS
GENERAL PLAN NO. 8

UNIT: 3604
PROJECT NUMBER & PHASE: 07140000851
CONTRACT NO.: 07-2881U4

DISREGARD PRINTS BEARING EARLIER REVISION DATES

REVISION DATES: 08-15-13 01-14-14 2-18-14 01-09-14

SHEET 8 OF 19

DIST	COUNTY	ROUTE	POST MILES TOTAL PROJECT	SHEET No.	TOTAL SHEETS
07	LA	210	R16.1/R25.8	847	927

Andrew Rittenhouse 1-24-14
REGISTERED CIVIL ENGINEER DATE

5-12-14
PLANS APPROVAL DATE

REGISTERED PROFESSIONAL ENGINEER Andrew P Rittenhouse No. C61006 Exp 12-31-14 CIVIL STATE OF CALIFORNIA

The State of California or its officers or agents shall not be responsible for the accuracy or completeness of scanned copies of this plan sheet.

DUNSMORE AVE UC (53-2282)

QUANTITIES

PUBLIC SAFETY PLAN	LUMP	SUM
REMOVE CONCRETE DECK SURFACE	815	SQFT
PREPARE CONCRETE BRIDGE DECK SURFACE	3,750	SQFT
FURNISH POLYESTER CONCRETE OVERLAY	495	CF
PLACE POLYESTER CONCRETE OVERLAY	3,750	SQFT
BRIDGE REMOVAL (PORTION), LOCATION A	LUMP	SUM
STRUCTURAL CONCRETE, BRIDGE	38	CY
AGGREGATE BASE (APPROACH SLAB)	26	CY
STRUCTURAL CONCRETE, APPROACH SLAB (TYPE R)	260	CY
PAVING NOTCH EXTENSION	160	CF
DRILL AND BOND DOWEL	180	LF
JOINT SEAL (MR 1/2")	200	LF
BAR REINFORCING STEEL (BRIDGE)	6,280	LB
RUSTIC ROCK BARRIER PATTERN	172	LF
CONCRETE BARRIER (TYPE 60A MODIFIED 1)	172	LF

NEW YORK AVE UC (53-2308)

QUANTITIES

PUBLIC SAFETY PLAN	LUMP	SUM
REMOVE CONCRETE DECK SURFACE	565	SQFT
PREPARE CONCRETE BRIDGE DECK SURFACE	4,440	SQFT
FURNISH POLYESTER CONCRETE OVERLAY	495	CF
PLACE POLYESTER CONCRETE OVERLAY	4,440	SQFT
BRIDGE REMOVAL (PORTION), LOCATION B	LUMP	SUM
STRUCTURAL CONCRETE, BRIDGE	45	CY
AGGREGATE BASE (APPROACH SLAB)	53	CY
STRUCTURAL CONCRETE, APPROACH SLAB (TYPE R)	530	CY
PAVING NOTCH EXTENSION	330	CF
DRILL AND BOND DOWEL	98	LF
JOINT SEAL (MR 1/2")	449	LF
BAR REINFORCING STEEL (BRIDGE)	5,900	LB
CONCRETE BARRIER (TRANSITION)	4	LF
RUSTIC ROCK BARRIER PATTERN	224	LF
CONCRETE BARRIER (TYPE 60A MODIFIED 1)	224	LF

PENNSYLVANIA AVE UC (53-2310)

QUANTITIES

PUBLIC SAFETY PLAN	LUMP	SUM
REMOVE CONCRETE DECK SURFACE	430	SQFT
PREPARE CONCRETE BRIDGE DECK SURFACE	5,580	SQFT
FURNISH POLYESTER CONCRETE OVERLAY	560	CF
PLACE POLYESTER CONCRETE OVERLAY	5,580	SQFT
BRIDGE REMOVAL (PORTION), LOCATION C	LUMP	SUM
STRUCTURAL CONCRETE, BRIDGE	110	CY
AGGREGATE BASE (APPROACH SLAB)	46	CY
STRUCTURAL CONCRETE, APPROACH SLAB (TYPE R)	465	CY
PAVING NOTCH EXTENSION	290	CF
DRILL AND BOND DOWEL	267	LF
JOINT SEAL (MR 1")	401	LF
BAR REINFORCING STEEL (BRIDGE)	13,320	LB
CONCRETE BARRIER (TRANSITION)	8	LF
RUSTIC ROCK BARRIER PATTERN	260	LF
CONCRETE BARRIER (TYPE 60A MODIFIED 1)	260	LF

WALTONIA DRIVE UC (53-2219)

QUANTITIES

REFINISH BRIDGE DECK	460	SQFT
BRIDGE REMOVAL (PORTION), LOCATION D	LUMP	SUM
AGGREGATE BASE (APPROACH SLAB)	47	CY
STRUCTURAL CONCRETE, APPROACH SLAB (TYPE R)	470	CY
PAVING NOTCH EXTENSION	285	CF
JOINT SEAL (MR 1")	384	LF
CONCRETE BARRIER (TRANSITION)	4	LF
RUSTIC ROCK BARRIER PATTERN	302	LF
CONCRETE BARRIER (TYPE 60A MODIFIED)	302	LF

WEST CONNECTOR UC (53-2191G)

QUANTITIES

REFINISH BRIDGE DECK	330	SQFT
BRIDGE REMOVAL (PORTION), LOCATION E	LUMP	SUM
AGGREGATE BASE (APPROACH SLAB)	53	CY
STRUCTURAL CONCRETE, APPROACH SLAB (TYPE R)	530	CY
PAVING NOTCH EXTENSION	495	CF
JOINT SEAL (MR 1/2")	681	LF
CONCRETE BARRIER (TRANSITION)	8	LF
RUSTIC ROCK BARRIER PATTERN	197	LF
CONCRETE BARRIER (TYPE 60A MODIFIED)	197	LF

EAST CONNECTOR UC (53-2199)

QUANTITIES

REFINISH BRIDGE DECK	355	SQFT
BRIDGE REMOVAL (PORTION), LOCATION F	LUMP	SUM
STRUCTURE EXCAVATION (BRIDGE)	125	CY
STRUCTURE BACKFILL (BRIDGE)	125	CY
AGGREGATE BASE (APPROACH SLAB)	44	CY
STRUCTURAL CONCRETE, APPROACH SLAB (TYPE R)	440	CY
PAVING NOTCH EXTENSION	340	CF
JOINT SEAL (MR 1")	479	LF
CONCRETE BARRIER (TRANSITION)	27	LF
RUSTIC ROCK BARRIER PATTERN	206	LF
CONCRETE BARRIER (TYPE 60A MODIFIED)	206	LF

BERKSHIRE PLACE UC (53-0734)

QUANTITIES

REFINISH BRIDGE DECK	320	SQFT
BRIDGE REMOVAL (PORTION), LOCATION G	LUMP	SUM
STRUCTURE EXCAVATION (BRIDGE)	482	CY
STRUCTURE BACKFILL (BRIDGE)	482	CY
AGGREGATE BASE (APPROACH SLAB)	35	CY
STRUCTURAL CONCRETE, APPROACH SLAB (TYPE R)	350	CY
PAVING NOTCH EXTENSION	205	CF
CLEAN EXPANSION JOINT	55	LF
JOINT SEAL (MR 1/2")	340	LF
CONCRETE BARRIER (TRANSITION)	8	LF
RUSTIC ROCK BARRIER PATTERN	159	LF
CONCRETE BARRIER (TYPE 60A MODIFIED)	159	LF

HAMPTON FOOTHILL UC (53-2202)

QUANTITIES

REFINISH BRIDGE DECK	1,330	SQFT
BRIDGE REMOVAL (PORTION), LOCATION H	LUMP	SUM
AGGREGATE BASE (APPROACH SLAB)	46	CY
STRUCTURAL CONCRETE, APPROACH SLAB (TYPE R)	460	CY
PAVING NOTCH EXTENSION	275	CF
CLEAN EXPANSION JOINT	180	LF
JOINT SEAL (MR 1")	98	LF
JOINT SEAL (MR 1 1/2")	284	LF
JOINT SEAL (MR 2")	180	LF
CONCRETE BARRIER (TRANSITION)	8	LF
RUSTIC ROCK BARRIER PATTERN	745	LF
CONCRETE BARRIER (TYPE 60A MODIFIED)	745	LF

FLINT CANYON WASH BR (53-0579)

QUANTITIES

REFINISH BRIDGE DECK	905	SQFT
BRIDGE REMOVAL (PORTION), LOCATION I	LUMP	SUM
AGGREGATE BASE (APPROACH SLAB)	57	CY
STRUCTURAL CONCRETE, APPROACH SLAB (TYPE R)	570	CY
JOINT SEAL (MR 1 1/2")	579	LF
CONCRETE BARRIER (TRANSITION)	17	LF
RUSTIC ROCK BARRIER PATTERN	452	LF
CONCRETE BARRIER (TYPE 60A MODIFIED)	452	LF

ARROYO SECO BR (53-2173)

QUANTITIES

REFINISH BRIDGE DECK	1,160	SQFT
BRIDGE REMOVAL (PORTION), LOCATION J	LUMP	SUM
AGGREGATE BASE (APPROACH SLAB)	53	CY
STRUCTURAL CONCRETE, APPROACH SLAB (TYPE R)	530	CY
JOINT SEAL (MR 2")	449	LF
CONCRETE BARRIER (TRANSITION)	3	LF
RUSTIC ROCK BARRIER PATTERN	670	LF
CONCRETE BARRIER (TYPE 60A MODIFIED)	670	LF

CASITAS AVE UC (53-2154)

QUANTITIES

REFINISH BRIDGE DECK	300	SQFT
BRIDGE REMOVAL (PORTION), LOCATION K	LUMP	SUM
AGGREGATE BASE (APPROACH SLAB)	46	CY
STRUCTURAL CONCRETE, APPROACH SLAB (TYPE R)	465	CY
PAVING NOTCH EXTENSION	265	CF
JOINT SEAL (MR 1/2")	372	LF
RUSTIC ROCK BARRIER PATTERN	216	LF
CONCRETE BARRIER (TYPE 60A MODIFIED)	216	LF

LINCOLN-HOWARD UC (53-2155)

QUANTITIES

REFINISH BRIDGE DECK	1,100	SQFT
BRIDGE REMOVAL (PORTION), LOCATION L	LUMP	SUM
AGGREGATE BASE (APPROACH SLAB)	50	CY
STRUCTURAL CONCRETE, APPROACH SLAB (TYPE R)	500	CY
PAVING NOTCH EXTENSION	340	CF
CLEAN EXPANSION JOINT	525	LF
JOINT SEAL (MR 1/2")	209	LF
JOINT SEAL (MR 1")	298	LF
JOINT SEAL (MR 1 1/2")	522	LF
CONCRETE BARRIER (TRANSITION)	4	LF
RUSTIC ROCK BARRIER PATTERN	550	LF
CONCRETE BARRIER (TYPE 60A MODIFIED)	550	LF

WASHINGTON BLVD (53-2157)

QUANTITIES

REFINISH BRIDGE DECK	280	SQFT
BRIDGE REMOVAL (PORTION), LOCATION M	LUMP	SUM
STRUCTURE EXCAVATION (BRIDGE)	250	CY
STRUCTURE BACKFILL (BRIDGE)	250	CY
AGGREGATE BASE (APPROACH SLAB)	40	CY
STRUCTURAL CONCRETE, APPROACH SLAB (TYPE R)	405	CY
PAVING NOTCH EXTENSION	250	CF
JOINT SEAL (MR 1/2")	349	LF
CONCRETE BARRIER (TRANSITION)	4	LF
RUSTIC ROCK BARRIER PATTERN	140	LF
CONCRETE BARRIER (TYPE 60A MODIFIED)	140	LF

HAMMOND ST UC (53-2158)

QUANTITIES

REFINISH BRIDGE DECK	260	SQFT
BRIDGE REMOVAL (PORTION), LOCATION N	LUMP	SUM
AGGREGATE BASE (APPROACH SLAB)	44	CY
STRUCTURAL CONCRETE, APPROACH SLAB (TYPE R)	440	CY
PAVING NOTCH EXTENSION	270	CF
JOINT SEAL (MR 1/2")	379	LF
CONCRETE BARRIER (TRANSITION)	4	LF
RUSTIC ROCK BARRIER PATTERN	192	LF
CONCRETE BARRIER (TYPE 60A MODIFIED)	192	LF

MOUNTAIN STREET UC (53-2159)

QUANTITIES

REFINISH BRIDGE DECK	310	SQFT
BRIDGE REMOVAL (PORTION), LOCATION O	LUMP	SUM
STRUCTURE EXCAVATION (BRIDGE)	270	CY
STRUCTURE BACKFILL (BRIDGE)	270	CY
AGGREGATE BASE (APPROACH SLAB)	41	CY
STRUCTURAL CONCRETE, APPROACH SLAB (TYPE R)	410	CY
PAVING NOTCH EXTENSION	250	CF
JOINT SEAL (MR 1/2")	348	LF
CONCRETE BARRIER (TRANSITION)	21	LF
RUSTIC ROCK BARRIER PATTERN	213	LF
CONCRETE BARRIER (TYPE 60A MODIFIED)	213	LF

LINCOLN AVE UC (53-2160)

QUANTITIES

REFINISH BRIDGE DECK	500	SQFT
BRIDGE REMOVAL (PORTION), LOCATION P	LUMP	SUM
AGGREGATE BASE (APPROACH SLAB)	62	CY
STRUCTURAL CONCRETE, APPROACH SLAB (TYPE R)	620	CY
PAVING NOTCH EXTENSION	470	CF
JOINT SEAL (MR 1")	640	LF
CONCRETE BARRIER (TRANSITION)	13	LF
RUSTIC ROCK BARRIER PATTERN	297	LF
CONCRETE BARRIER (TYPE 60A MODIFIED)	297	LF

STANDARD PLANS 2010

A10A	ABBREVIATIONS (SHEET 1 OF 2)
RSP A10B	ABBREVIATIONS (SHEET 2 OF 2)
A76A	CONCRETE BARRIER TYPE 60
B6-21	JOINT SEALS (MAXIMUM MOVEMENT RATING = 2")
RSP A77U1	MIDWEST GUARDRAIL SYSTEM CONNECTIONS TO BRIDGE RAILINGS WITHOUT SIDEWALKS DETAILS No. 1
RSP A77U2	MIDWEST GUARDRAIL SYSTEM CONNECTIONS TO BRIDGE RAILINGS WITHOUT SIDEWALKS DETAILS No. 2
RSP P10	CONCRETE PAVEMENT DOWEL BAR DETAILS
P45	CONCRETE PAVEMENT-DRAINAGE INLET DETAILS NO.1

STANDARD PLAN SHEET No.

DETAIL No.

INDEX TO PLANS

SHEET NO.	TITLE
1.	GENERAL PLAN NO. 1
2.	GENERAL PLAN NO. 2
3.	GENERAL PLAN NO. 3
4.	GENERAL PLAN NO. 4
5.	GENERAL PLAN NO. 5
6.	GENERAL PLAN NO. 6
7.	GENERAL PLAN NO. 7
8.	GENERAL PLAN NO. 8
9.	INDEX TO PLANS
10.	STRUCTURE DETAILS NO. 1
11.	STRUCTURE DETAILS NO. 2
12.	STRUCTURE DETAILS NO. 3
13.	STRUCTURE DETAILS NO. 4
14.	MISCELLANEOUS DETAILS NO. 1
15.	MISCELLANEOUS DETAILS NO. 2
16.	STRUCTURE APPROACH TYPE R(30S)
17.	STRUCTURE APPROACH TYPE R(30D)
18.	CONCRETE BARRIER TYPE 60A (Mod)
19.	MIDWEST GUARDRAIL SYSTEM CONNECTION - TYPE 9

GENERAL NOTES

DESIGN:

AASHTO LRFD BRIDGE DESIGN SPECIFICATIONS, 4th Edition and California Amendments, dated November, 2011

LIVE LOADING:

HL 93 and permit design load.

REINFORCED CONCRETE:

fy = 60 ksi (Yield Strength of Reinforcement)
f'c = 3.6 ksi (Compressive Strength at 28 days)

	BY	CHECKED
DESIGN	A. Rittenhouse	T. Menard
DETAILS	S. Cholda \ W. Zhang	T. Menard
QUANTITIES	A. Logus	J. Higareda

STATE OF CALIFORNIA
DEPARTMENT OF TRANSPORTATION

DIVISION OF ENGINEERING SERVICES
STRUCTURE DESIGN
DESIGN BRANCH 15

BRIDGE NO. AS SHOWN
POST MILE AS SHOWN

ROUTE 210 IMPROVEMENTS
INDEX TO PLANS

STRUCTURES DESIGN DETAIL SHEET (ENGLISH) (REV. 09-01-10)

ORIGINAL SCALE IN INCHES FOR REDUCED PLANS 0 1 2 3

UNIT: 3604
PROJECT NUMBER & PHASE: 07140000851
CONTRACT NO.: 07-2881U4

DISREGARD PRINTS BEARING EARLIER REVISION DATES

REVISION DATES 01-14-14 2-18-14

SHEET 9 OF 19

FILE => 2881u4-g-itp.dgn

USERNAME => s132486 DATE PLOTTED => 23-JUN-2014 TIME PLOTTED => 13:44

DIST	COUNTY	ROUTE	POST MILES TOTAL PROJECT	SHEET No.	TOTAL SHEETS
07	LA	210	R16.1/R25.8	848	927

Andrew Rittenhouse 1-24-14
REGISTERED CIVIL ENGINEER DATE

5-12-14
PLANS APPROVAL DATE

REGISTERED PROFESSIONAL ENGINEER Andrew P Rittenhouse No. C61006 Exp 12-31-14 CIVIL STATE OF CALIFORNIA

The State of California or its officers or agents shall not be responsible for the accuracy or completeness of scanned copies of this plan sheet.

NOTES:

1. LIMITS OF REMOVE CONCRETE DECK SURFACE TO 3/4" Min DEPTH
2. LIMITS OF ROUGHEN CONCRETE DECK SURFACE TO 1/4" AMPLITUDE
3. REMOVE EXISTING CONCRETE BARRIER TYPE 60A

LEGEND:

- INDICATES BRIDGE REMOVAL (PORTION). ALL EXISTING TRANSVERSE REINFORCEMENT TO BE PRESERVED
- INDICATES REMOVAL OF EXISTING CONCRETE BARRIER TYPE 60A (MAKE NOTE OF SCUPPER LOCATIONS AT DUNSMORE AVE UC PRIOR TO REMOVAL)
- ± INDICATES DEPENDANT DIMENSIONS (DIMENSIONS WHICH ARE CONTROLLED OR CONSTRAINED BY FIELD DIMMENSIONS).

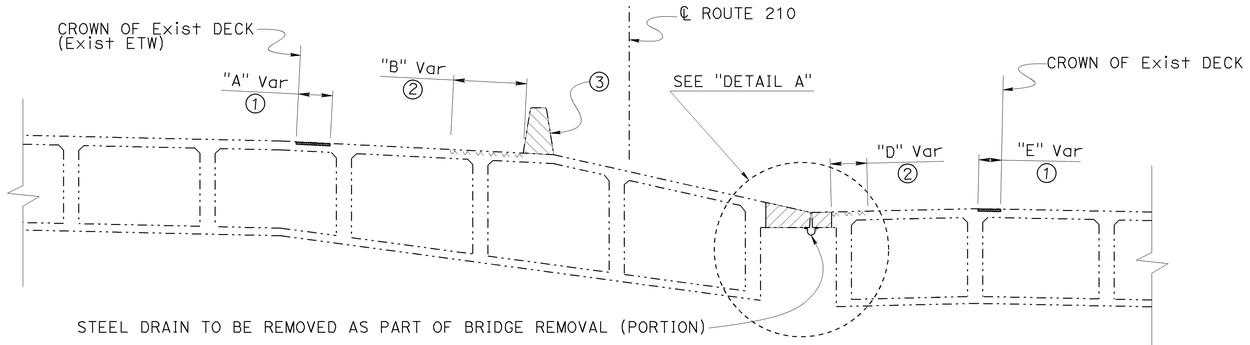

ELEVATION
1" = 5'-0"

NOTE:
FOR VARIABLE DIMENSIONS AND APPROXIMATE LONGITUDINAL LIMITS, SEE "MISCELLANEOUS DETAILS NO. 2" SHEET

DUNSMORE AVE UC (Br No. 53-2282)

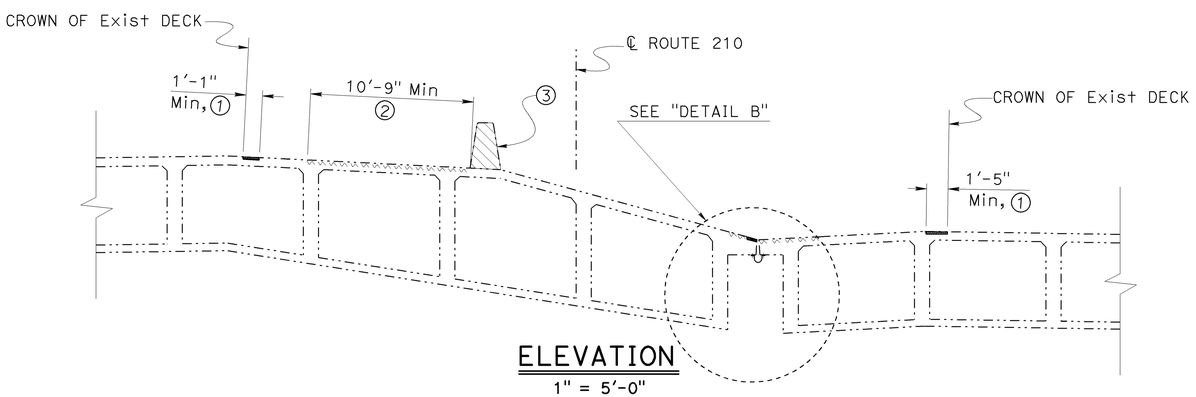

ELEVATION
1" = 5'-0"

NEW YORK AVE UC (Br No. 53-2308)

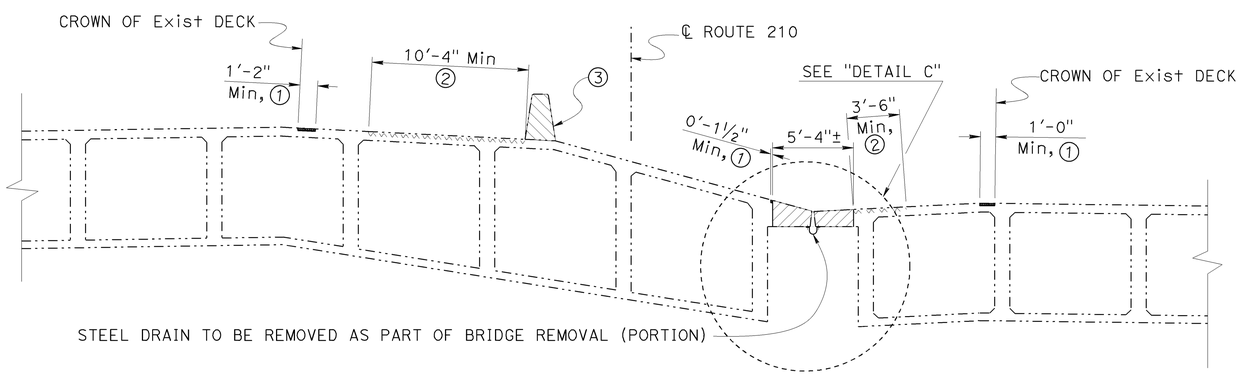

ELEVATION
1" = 5'-0"

PENNSYLVANIA AVE UC (Br No. 53-2310)

NOTE:
THE CONTRACTOR SHALL VERIFY ALL CONTROLLING FIELD DIMENSIONS BEFORE ORDERING OR FABRICATING ANY MATERIAL.

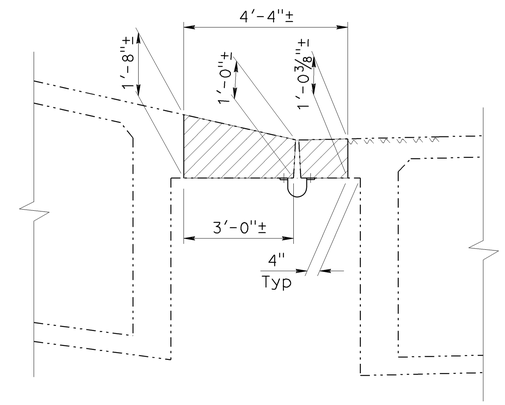

DETAIL A
1/2" = 1'-0"

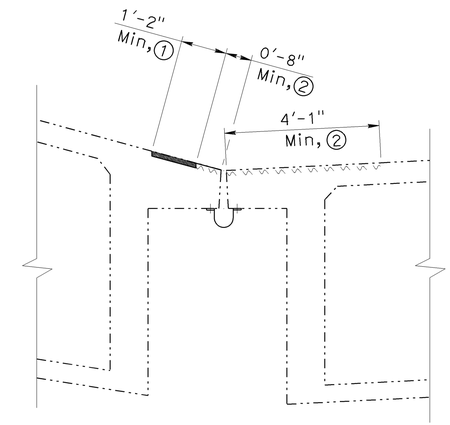

DETAIL B
1/2" = 1'-0"

NOTE:
FOR ADDITIONAL OVERHANG REMOVAL DETAILS SEE "MISCELLANEOUS DETAILS NO. 2" SHEET.

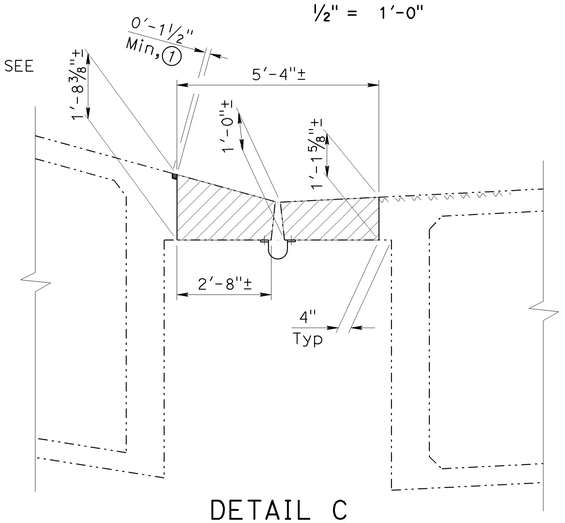

DETAIL C
1/2" = 1'-0"

DESIGN	BY A. Rittenhouse	CHECKED T. Menard	
DETAILS	BY S. Cholda \ W. Zhang	CHECKED T. Menard	
QUANTITIES	BY A. Logus	CHECKED J. Higareda	

STATE OF CALIFORNIA
DEPARTMENT OF TRANSPORTATION

DIVISION OF ENGINEERING SERVICES
STRUCTURE DESIGN
DESIGN BRANCH 15

BRIDGE NO. AS SHOWN
POST MILE AS SHOWN

ROUTE 210 IMPROVEMENTS
STRUCTURE DETAILS NO. 1

STRUCTURES DESIGN DETAIL SHEET (ENGLISH) (REV. 09-01-10)

ORIGINAL SCALE IN INCHES FOR REDUCED PLANS 0 1 2 3

UNIT: 3604
PROJECT NUMBER & PHASE: 07140000851
CONTRACT NO.: 07-2881U4

DISREGARD PRINTS BEARING EARLIER REVISION DATES

REVISION DATES: 09-26-13 01-08-14 2-18-14 01-14-14

SHEET 10 OF 19

FILE => 2881u4-g-sdet-new-01.dgn

USERNAME => s132486 DATE PLOTTED => 23-JUN-2014 TIME PLOTTED => 13:44

DIST	COUNTY	ROUTE	POST MILES TOTAL PROJECT	SHEET No.	TOTAL SHEETS
07	LA	210	R16.1/R25.8	849	927

Andrew Rittenhouse 1-24-14
REGISTERED CIVIL ENGINEER DATE

5-12-14
PLANS APPROVAL DATE

REGISTERED PROFESSIONAL ENGINEER Andrew P Rittenhouse No. C61006 Exp 12-31-14 CIVIL STATE OF CALIFORNIA

The State of California or its officers or agents shall not be responsible for the accuracy or completeness of scanned copies of this plan sheet.

LEGEND:

INDICATES POLYESTER CONCRETE OVERLAY

INDICATES EXISTING STRUCTURE

± INDICATES DEPENDANT DIMENSIONS (DIMENSIONS WHICH ARE CONTROLLED OR CONSTRAINED BY FIELD DIMMENSIONS).

NOTES:

① LIMITS OF PREPARE CONCRETE BRIDGE DECK SURFACE AND PLACE POLYESTER CONCRETE OVERLAY

* FOR VARIABLE DIMENSIONS AND APPROXIMATE LONGITUDINAL LIMITS, SEE "MISCELLANEOUS DETAILS NO. 2" SHEET

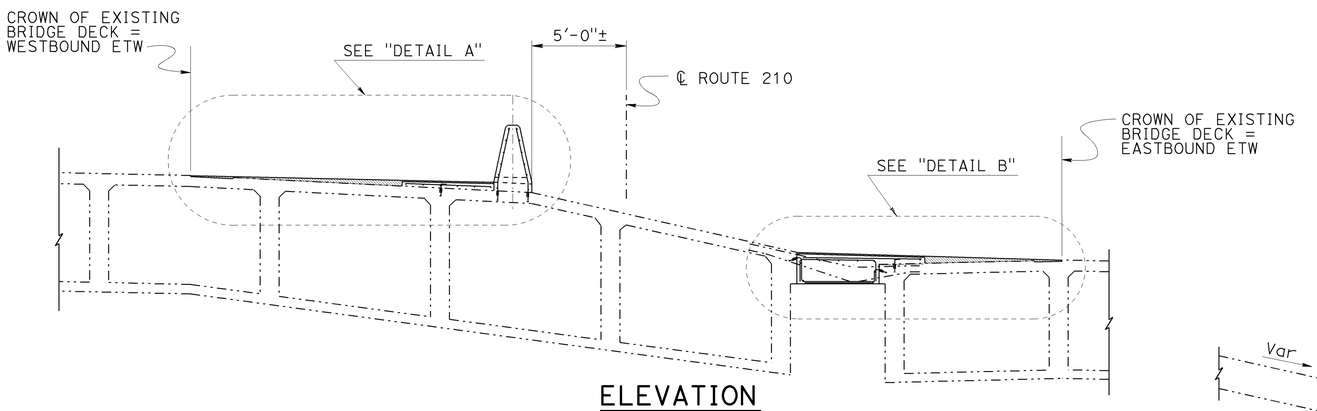

ELEVATION

¼" = 1'-0"

DECK MODIFICATION

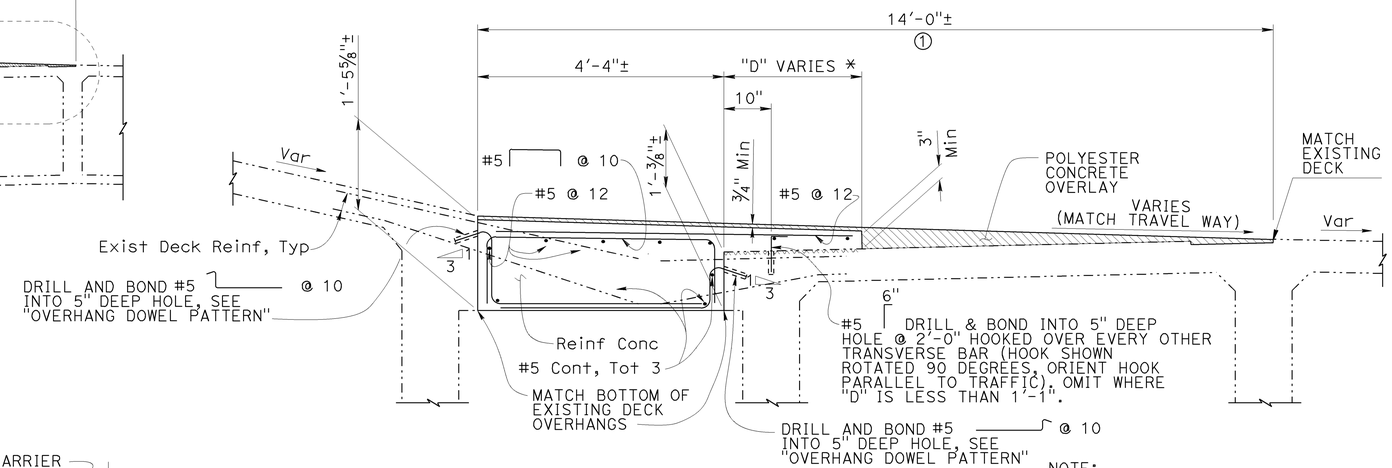

DETAIL B

¾" = 1'-0"

NOTE:
FOR ADDITIONAL DETAILS SEE "MISCELLANEOUS DETAILS NO. 2" SHEET.

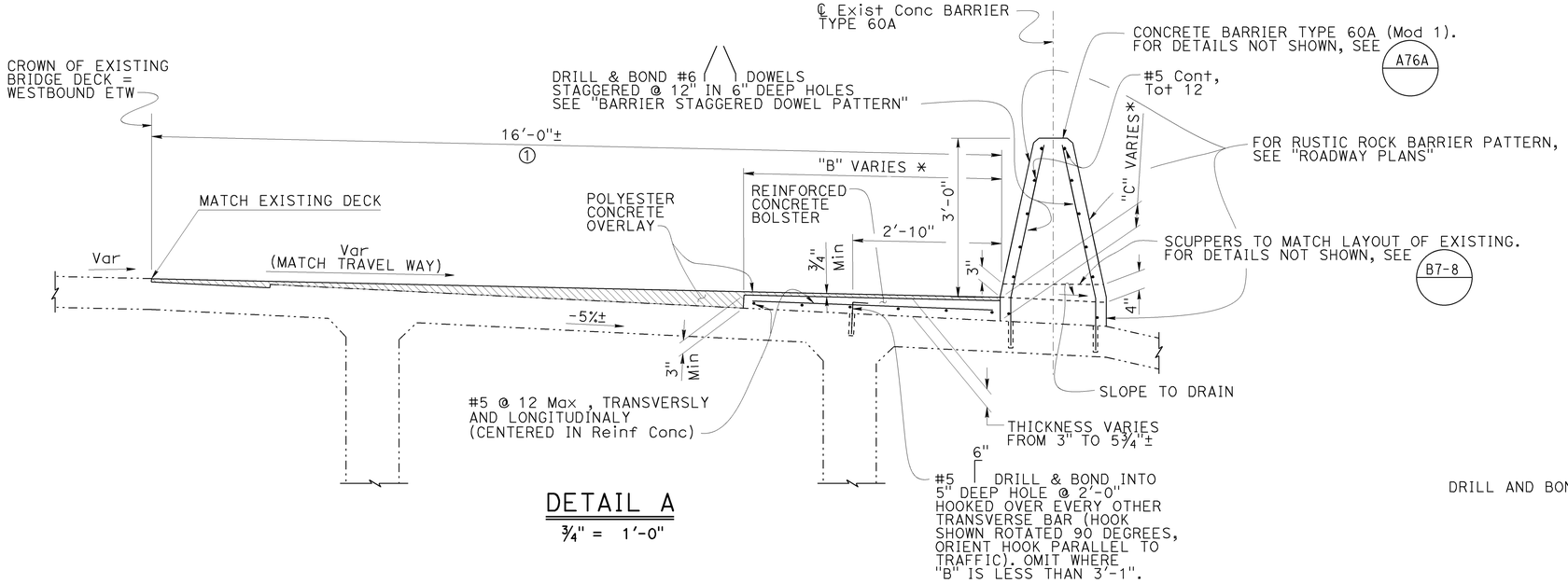

DETAIL A

¾" = 1'-0"

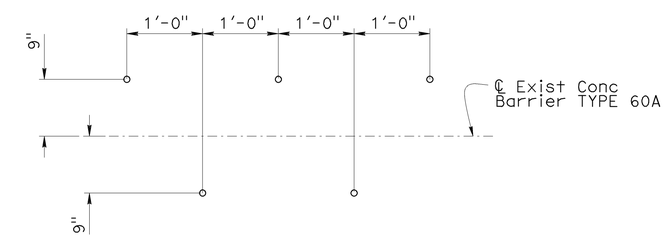

BARRIER STAGGERED DOWEL PATTERN

SCALE: 1"=1'-0"

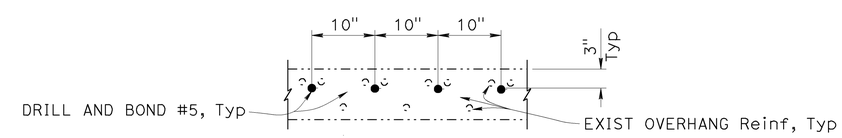

OVERHANG DOWEL PATTERN

NO SCALE

NOTE:
THE CONTRACTOR SHALL VERIFY ALL CONTROLLING FIELD DIMENSIONS BEFORE ORDERING OR FABRICATING ANY MATERIAL.

DUNSMORE AVE UC (Br. No. 53-2282) - DECK MODIFICATIONS

	BY	CHECKED
DESIGN	A. Rittenhouse	T. Menard
DETAILS	W. Zhang	T. Menard
QUANTITIES	A. Logus	J. Higareda

STATE OF CALIFORNIA
DEPARTMENT OF TRANSPORTATION

DIVISION OF ENGINEERING SERVICES
STRUCTURE DESIGN
DESIGN BRANCH 15

BRIDGE NO. AS SHOWN
POST MILE AS SHOWN

ROUTE 210 IMPROVEMENTS
STRUCTURE DETAILS NO. 2

STRUCTURES DESIGN DETAIL SHEET (ENGLISH) (REV. 09-01-10)

ORIGINAL SCALE IN INCHES FOR REDUCED PLANS 0 1 2 3

UNIT: 3604
PROJECT NUMBER & PHASE: 07140000851
CONTRACT NO.: 07-2881U4

DISREGARD PRINTS BEARING EARLIER REVISION DATES

REVISION DATES 10-01-13 2-18-14 01-24-14 01-02-14

SHEET 11 OF 19

FILE => 2881u4-g-sdet-new-02.dgn

USERNAME => s132486 DATE PLOTTED => 23-JUN-2014 TIME PLOTTED => 13:44

DIST	COUNTY	ROUTE	POST MILES TOTAL PROJECT	SHEET No.	TOTAL SHEETS
07	LA	210	R16.1/R25.8	850	927

Andrew Rittenhouse 1-24-14
REGISTERED CIVIL ENGINEER DATE

5-12-14
PLANS APPROVAL DATE

REGISTERED PROFESSIONAL ENGINEER
Andrew P Rittenhouse
No. C61006
Exp 12-31-14
CIVIL
STATE OF CALIFORNIA

The State of California or its officers or agents shall not be responsible for the accuracy or completeness of scanned copies of this plan sheet.

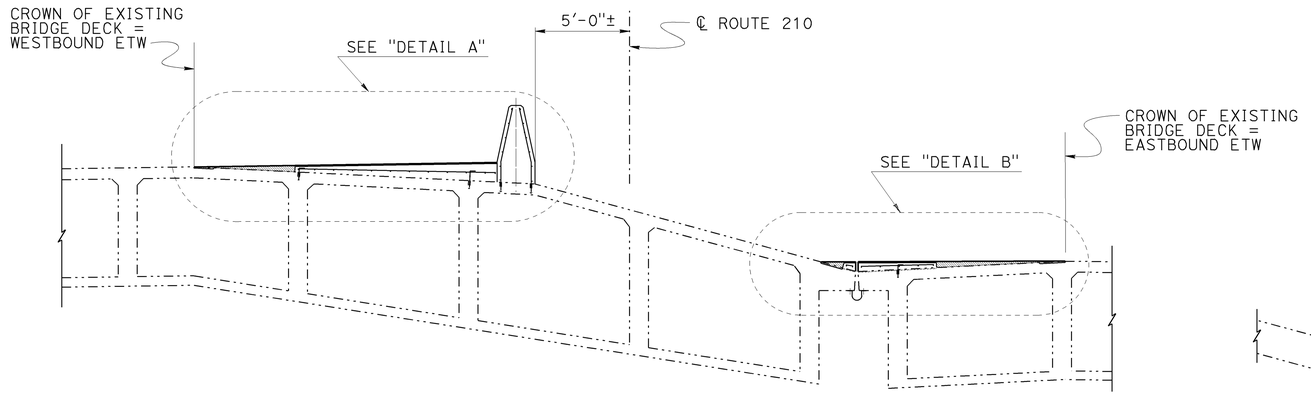

ELEVATION
1/4" = 1'-0"

DECK MODIFICATION

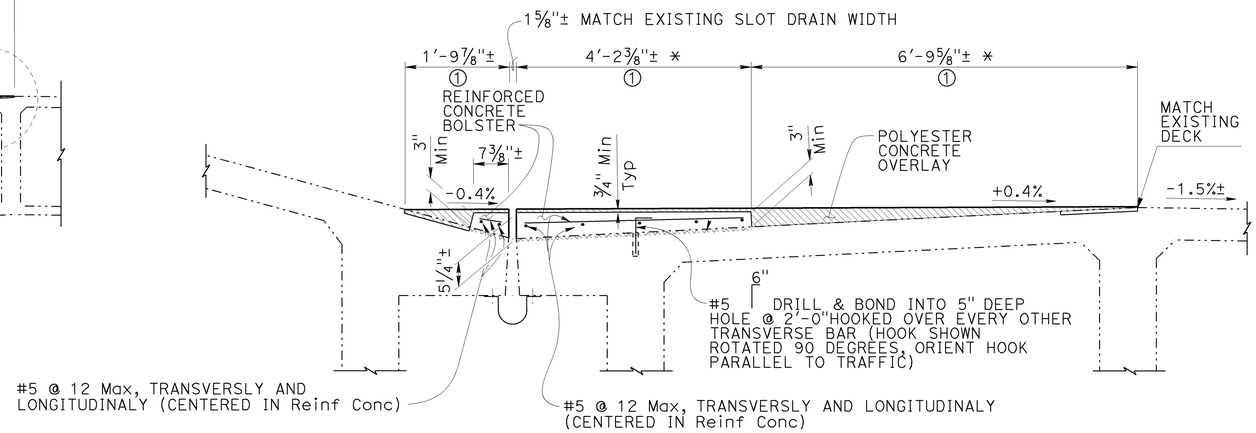

DETAIL B
3/4" = 1'-0"

NOTE:
FOR ADDITIONAL DETAILS SEE "MISCELLANEOUS DETAILS NO. 2" SHEET.

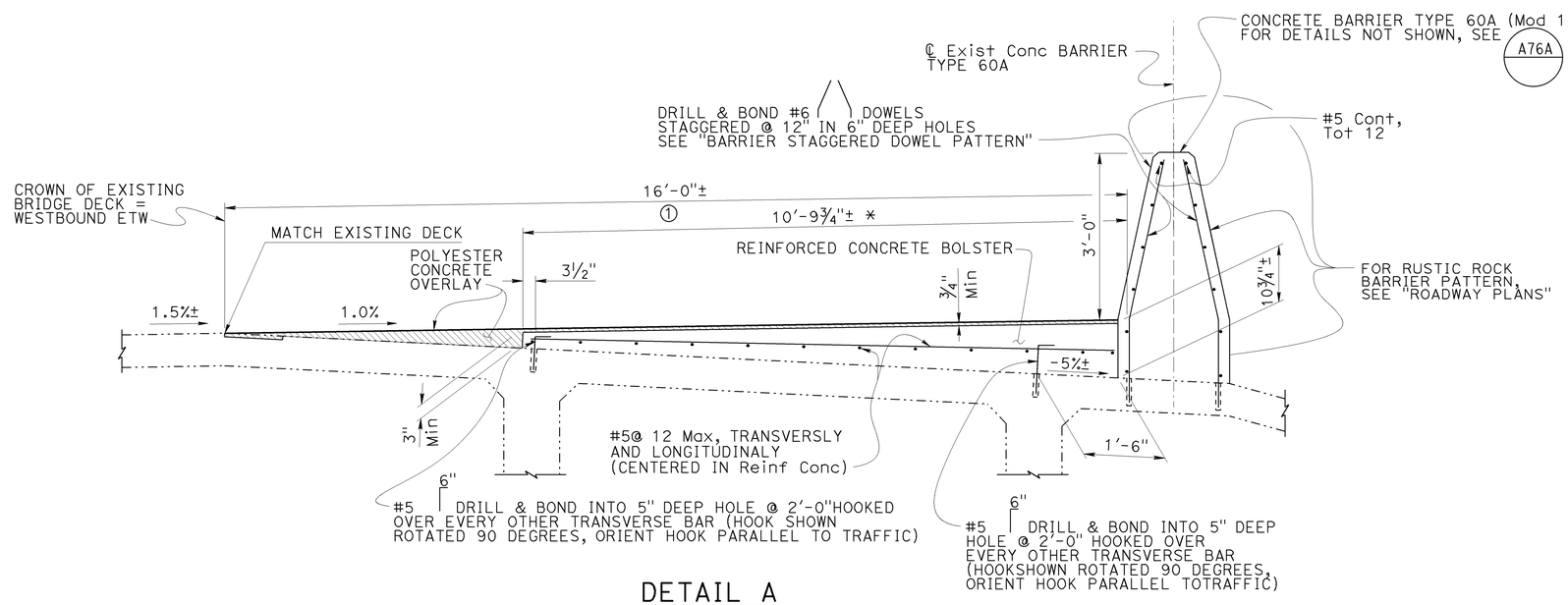

DETAIL A
3/4" = 1'-0"

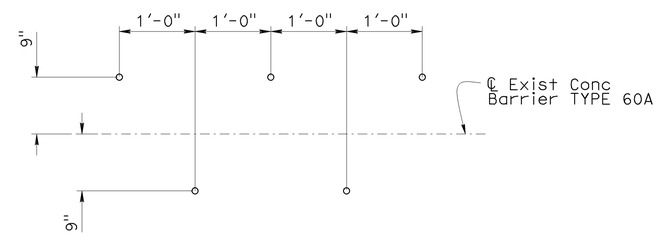

BARRIER STAGGERED DOWEL PATTERN
SCALE: 1"=1'-0"

LEGEND:

- INDICATES POLYESTER CONCRETE OVERLAY
- INDICATES EXISTING STRUCTURE
- * INDICATES ADJUST AS NECESSARY TO MAINTAIN 3" MINMUM THICKNESS BELOW POLYESTER CONCRETE OVERLAY
- ± INDICATES DEPENDANT DIMENSIONS (DIMENSIONS WHICH ARE CONTROLLED OR CONSTRAINED BY FIELD DIMMENSIONS).

NOTE:
① LIMITS OF PREPARE CONCRETE BRIDGE DECK SURFACE AND PLACE POLYESTER CONCRETE OVERLAY

NOTE:
THE CONTRACTOR SHALL VERIFY ALL CONTROLLING FIELD DIMENSIONS BEFORE ORDERING OR FABRICATING ANY MATERIAL.

NEW YORK AVE UC (Br No. 53-2308) - DECK MODIFICATIONS

	BY	CHECKED
DESIGN	A. Rittenhouse	T. Menard
DETAILS	W. Zhang	T. Menard
QUANTITIES	A. Logus	J. Higareda

STATE OF CALIFORNIA
DEPARTMENT OF TRANSPORTATION

DIVISION OF ENGINEERING SERVICES
STRUCTURE DESIGN
DESIGN BRANCH 15

BRIDGE NO. AS SHOWN
POST MILE AS SHOWN

ROUTE 210 IMPROVEMENTS
STRUCTURE DETAILS NO. 3

STRUCTURES DESIGN DETAIL SHEET (ENGLISH) (REV. 09-01-10)

ORIGINAL SCALE IN INCHES FOR REDUCED PLANS 0 1 2 3

UNIT: 3604
PROJECT NUMBER & PHASE: 07140000851
CONTRACT NO.: 07-2881U4

DISREGARD PRINTS BEARING EARLIER REVISION DATES
REVISION DATES 10-01-13 12-18-13 2-18-14 01-14-14
SHEET 12 OF 19

FILE => 2881u4-g-sdet-new-03.dgn

USERNAME => s132486 DATE PLOTTED => 23-JUN-2014 TIME PLOTTED => 13:44

DIST	COUNTY	ROUTE	POST MILES TOTAL PROJECT	SHEET No.	TOTAL SHEETS
07	LA	210	R16.1/R25.8	851	927

Andrew Rittenhouse 1-24-14
REGISTERED CIVIL ENGINEER DATE

5-12-14
PLANS APPROVAL DATE

The State of California or its officers or agents shall not be responsible for the accuracy or completeness of scanned copies of this plan sheet.

REGISTERED PROFESSIONAL ENGINEER — Andrew P Rittenhouse — No. C61006 — Exp 12-31-14 — CIVIL — STATE OF CALIFORNIA

LEGEND:

- INDICATES POLYESTER CONCRETE OVERLAY
- INDICATES EXISTING STRUCTURE
- ✳ INDICATES ADJUST AS NECESSARY TO MAINTAIN 3" MINMUM THICKNESS BELOW POLYESTER CONCRETE OVERLAY
- ± INDICATES DEPENDANT DIMENSIONS (DIMENSIONS WHICH ARE CONTROLLED OR CONSTRAINED BY FIELD DIMMENSIONS).

NOTE:

① LIMITS OF PREPARE CONCRETE BRIDGE DECK SURFACE AND PLACE POLYESTER CONCRETE OVERLAY

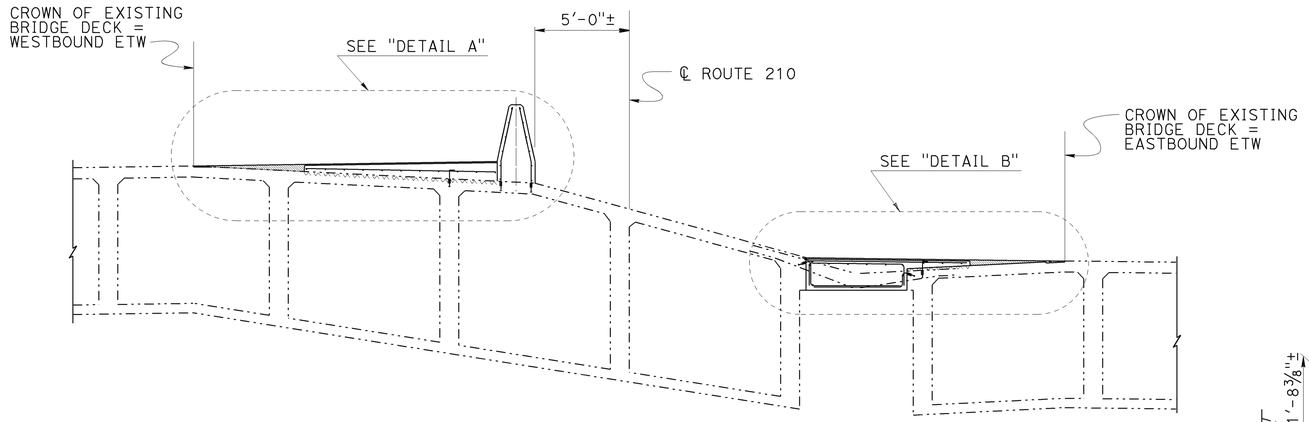

ELEVATION

¼" = 1'-0"

DECK MODIFICATION

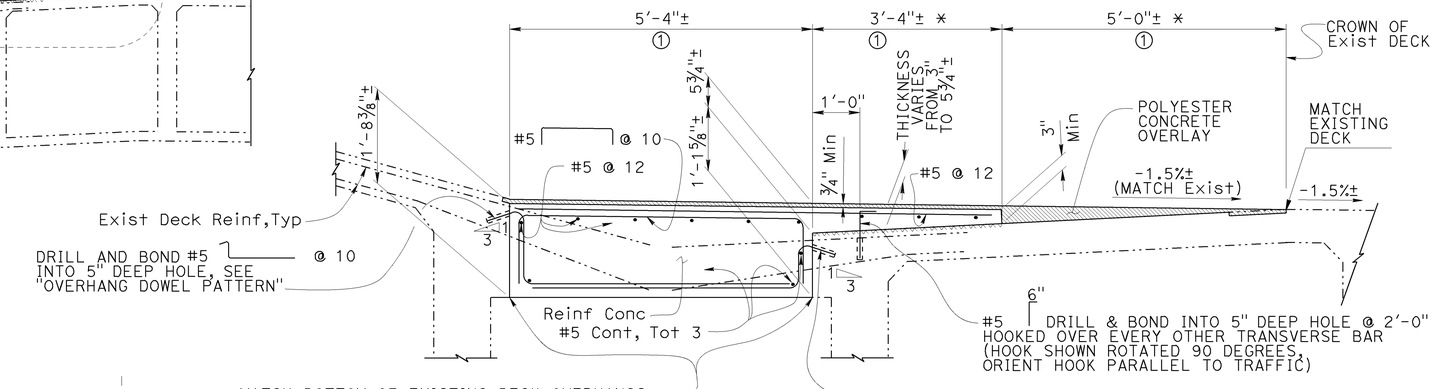

NOTE:
FOR ADDITIONAL DETAILS SEE "MISCELLANEOUS DETAILS NO. 2" SHEET.

DETAIL B

¾" = 1'-0"

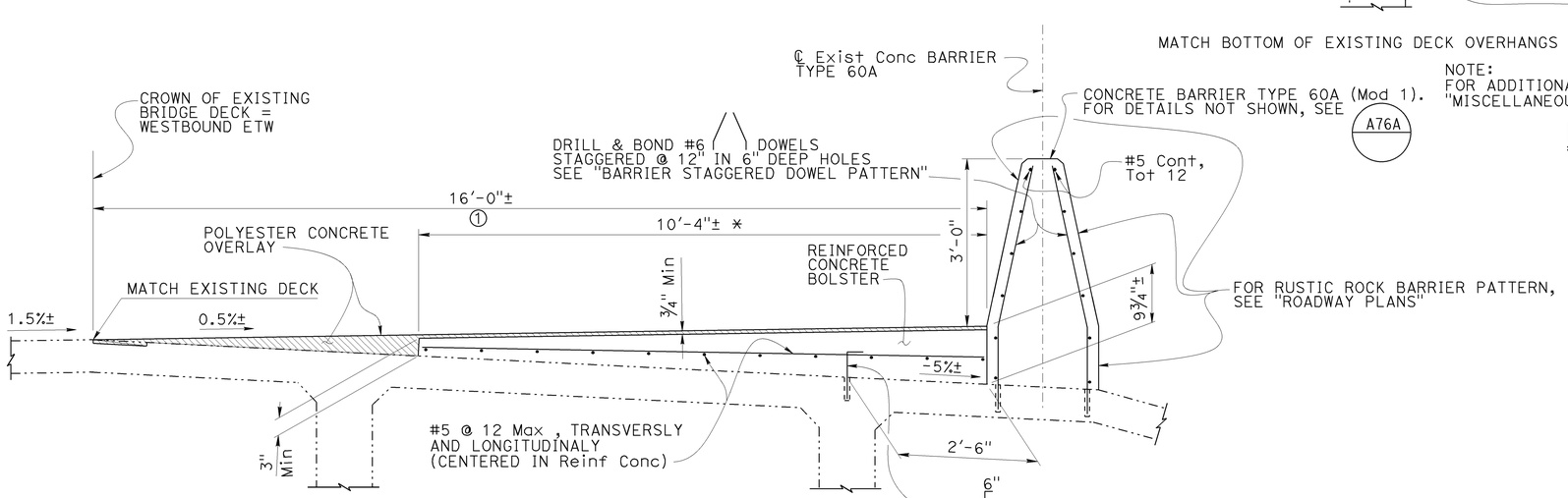

DETAIL A

¾" = 1'-0"

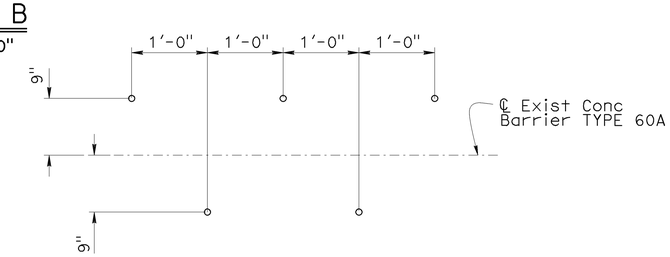

BARRIER STAGGERED DOWEL PATTERN

SCALE: 1"=1'-0"

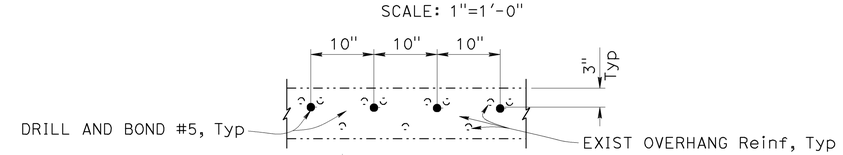

OVERHANG DOWEL PATTERN

NO SCALE

NOTE:
THE CONTRACTOR SHALL VERIFY ALL CONTROLLING FIELD DIMENSIONS BEFORE ORDERING OR FABRICATING ANY MATERIAL.

PENNSYLVANIA AVE UC (BR No. 53-2310) - DECK MODIFICATIONS

	BY	CHECKED
DESIGN	A. Rittenhouse	T. Menard
DETAILS	S. Cholda \ W. Zhang	T. Menard
QUANTITIES	A. Logus	J. Higareda

STATE OF CALIFORNIA
DEPARTMENT OF TRANSPORTATION

DIVISION OF ENGINEERING SERVICES
STRUCTURE DESIGN
DESIGN BRANCH 15

BRIDGE NO.: AS SHOWN
POST MILE: AS SHOWN

ROUTE 210 IMPROVEMENTS
STRUCTURE DETAILS NO. 4

STRUCTURES DESIGN DETAIL SHEET (ENGLISH) (REV. 09-01-10)

ORIGINAL SCALE IN INCHES FOR REDUCED PLANS 0 1 2 3

UNIT: 3604
PROJECT NUMBER & PHASE: 07140000851
CONTRACT NO.: 07-2881U4

DISREGARD PRINTS BEARING EARLIER REVISION DATES

REVISION DATES: 09-28-13 01-08-14 2-18-14 01-14-14

SHEET 13 OF 19

FILE => 2881u4-g-sdet-new-04.dgn

USERNAME => s132486 DATE PLOTTED => 23-JUN-2014 TIME PLOTTED => 13:44

DIST	COUNTY	ROUTE	POST MILES TOTAL PROJECT	SHEET No.	TOTAL SHEETS
07	LA	210	R16.1/R25.8	852	927

Andrew Rittenhouse 1-24-14
REGISTERED CIVIL ENGINEER DATE

5-12-14
PLANS APPROVAL DATE

REGISTERED PROFESSIONAL ENGINEER Andrew P Rittenhouse No. C61006 Exp 12-31-14 CIVIL STATE OF CALIFORNIA

The State of California or its officers or agents shall not be responsible for the accuracy or completeness of scanned copies of this plan sheet.

JOINT SEAL TABLE

BRIDGE NAME / LOCATION	BRIDGE NUMBER	MINIMUM "MR" (IN)	PAVING NOTCH EXT REQD	APPROX JT SEAL LENGTH (FT)	EXISTING WATERSTOP	APPROX DEPTH TO CLEAN EXP JT(IN)	APPROX LENGTH TO CLEAN EXP JT(FT)
Dunsmore Avenue UC	53-2282	1/2	Y	200	N	—	—
New York Avenue UC	53-2308	1/2	Y	449	N	—	—
Pennsylvania Avenue UC	53-2310	1	Y	401	N	—	—
Waltonia Drive UC	53-2219	1	Y	384	N	—	—
West Connector UC	53-2191G	1/2	Y	681	N	—	—
East Connector UC	53-2199	1	Y	479	N	—	—
Hampton-Foothill Blvd UC Abut 1 Left	53-2202	1 1/2	Y	94	N	—	—
Hampton-Foothill Blvd UC Abut 1 Right		1 1/2	Y	92	N	—	—
Hampton-Foothill Blvd UC Hinge Left		2	N	91	Y	8	91
Hampton-Foothill Blvd UC Hinge Right		2	N	89	Y	8	89
Hampton-Foothill Blvd UC Abut 8 Left		1	Y	99	N	—	—
Hampton-Foothill Blvd UC Abut 6 Right		1 1/2	Y	97	N	—	—
Berkshire Place UC	53-0734	1/2 **	Y	340	N	8	55
Flint Canyon Wash Bridge	53-0579	1 1/2	N	579	—	—	—
Arroyo Seco Bridge	53-2173	2	N	449	—	—	—
Casitas Avenue UC	53-2154	1/2 **	Y	372	N	—	—
Lincoln-Howard UC Abut 1 Left	53-2155	1 1/2	Y	118	N	—	—
Lincoln-Howard UC Abut 1 Right		1 1/2	Y	177	N	—	—
Lincoln-Howard UC Bent 3 Left Hinge		1 1/2	N	130	Y	8	130
Lincoln-Howard UC Bent 3 Right Hinge		1	N	172	Y	8	172
Lincoln-Howard UC Bent 6 Left Hinge		1 1/2	N	97	Y	8	97
Lincoln-Howard UC Bent 5 Right Hinge		1	N	126	Y	8	126
Lincoln-Howard UC Abut 7 Left		1/2	Y	95	N	—	—
Lincoln-Howard UC Abut 6 Right		1/2	Y	114	N	—	—
Washington Boulevard UC	53-2157	1/2 **	Y	349	N	—	—
Hammond Street UC	53-2158	1/2 **	Y	379	N	—	—
Mountain Street UC	53-2159	1/2 **	Y	348	N	—	—
Lincoln Avenue UC	53-2160	1	Y	639	N	—	—

Note:
All Joint Seal shall be "TYPE B" except where Min "MR" is noted by "**"
"**" denotes Joint Seal where "TYPE A" seal is allowed.

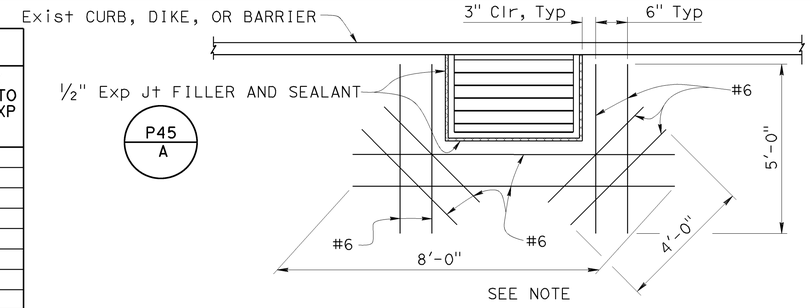

CLEANOUT OR DI IN SLAB

NO SCALE

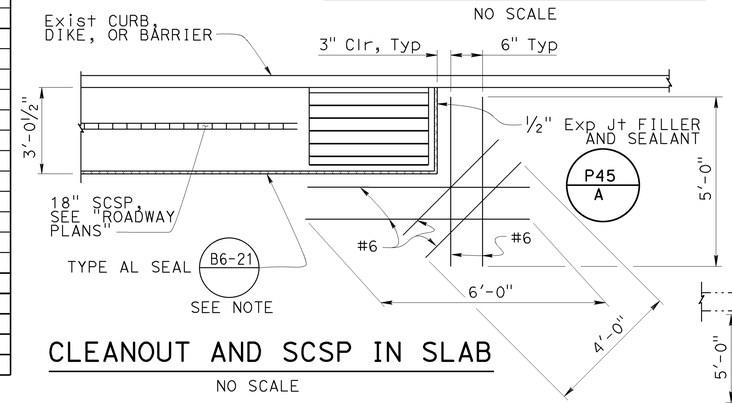

CLEANOUT AND SCSP IN SLAB

NO SCALE

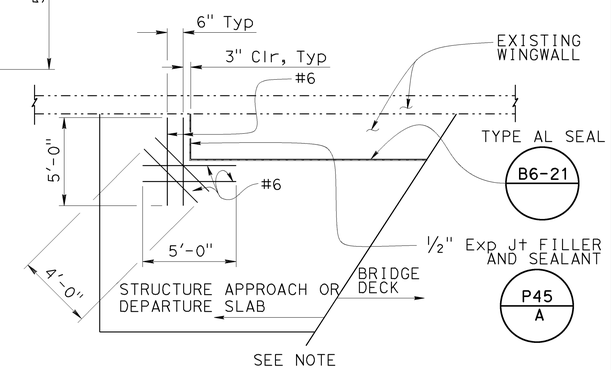

EXISTING WINGWALL IN SLAB (PM>22.5)

NO SCALE

LIMITS OF EXISTING ROADWAY REMOVAL LONGITUDINAL SECTIONS *

BRIDGE NUMBER	(A)	(B)	(C)	(D)	(E)	(F)	(G)	(H)	(I)
53-2282	PCC = 0.65'±	PCC = 0.60'±	AC = 0.30'±	AC = 0.25'±	AC = 0.35'±	AC = 0.25'±	AC = 0.30'±		
53-2308	CTB = 0.45'±	AB = 0.45'±	AB = 0.30'±	AB = 0.40'±	CTB = 0.70'±	AB = 0.35'±	CTB = 0.65'±		
53-2310			ASb = 0.40'±	ASb = 0.35'±		ASb = 0.40'±	AB = 0.05'±		
53-2219	PCC = 0.70'±	PCC = 0.65'±	AC = 0.30'±	AC = 0.25'±	AC = 0.30'±	AC = 0.25'±	AC = 0.25'±		
53-2191G	CTB = 0.45'±	CTB = 0.45'±	AB = 0.55'±	AB = 0.45'±	CTB = 0.65'±	AB = 0.45'±	CTB = 0.60'±		
53-2199			ASb = 0.15'±	ASb = 0.30'±	AB = 0.05'±	ASb = 0.30'±	ASb = 0.15'±		
53-2202									
53-0734	PCC = 0.70'±	PCC = 0.65'±	AC = 0.30'±	AC = 0.25'±	AC = 0.30'±	PCC = 0.70'±	PCC = 0.65'±	AC = 0.30'±	AC = 0.25'±
53-0579	CTB = 0.45'±	CTB = 0.45'±	AB = 0.55'±	AB = 0.45'±	CTB = 0.70'±	CTB = 0.45'±	CTB = 0.50'±	AB = 0.70'±	AB = 0.45'±
53-2173			ASb = 0.15'±	ASb = 0.30'±		ATP = 0.50'±	ATP = 0.50'±		ASb = 0.30'±
53-2154									
53-2155			AC = 0.30'±	AC = 0.25'±	AC = 0.30'±	AC = 0.25'±	AC = 0.20'±		
53-2157	PCC = 0.70'±	PCC = 0.65'±	AB = 0.55'±	AB = 0.45'±	CTB = 0.70'±	CTB = 0.60'±	AB = 0.45'±		
53-2158	CTB = 0.45'±	CTB = 0.45'±	ASb = 0.15'±	ASb = 0.30'±		AB = 0.15'±	ASb = 0.35'±		
53-2159									
53-2160									

* WHERE EXISTING STRUCTURE APPROACH SLABS ARE NOTED ON THE "GENERAL PLAN" SHEETS, EXISTING ROADWAY SECTION TO BE REMOVED CONSISTS OF EXISTING STRUCTURE APPROACH SLAB CONCRETE.

NOTE:
THE CONTRACTOR SHALL VERIFY ALL CONTROLLING FIELD DIMENSIONS BEFORE ORDERING OR FABRICATING ANY MATERIAL.

LEGEND:
PCC = PORTLAND CEMENT CONCRETE PAVEMENT
AC = ASPHALT CONCRETE PAVEMENT
CTB = CEMENT TREATED BASE
ASb = AGGREGATE SUBBASE
AB = AGGREGATE BASE
ATP = ASPHALT TREATED PERMEABLE MATERIAL
± INDICATES DEPENDANT DIMENSIONS (DIMENSIONS WHICH ARE CONTROLLED OR CONSTRAINED BY FIELD DIMENSIONS)

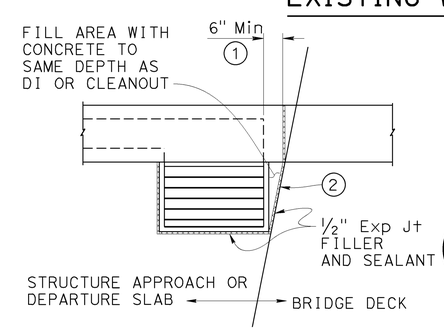

SKEW ANGLE ≤ 30°

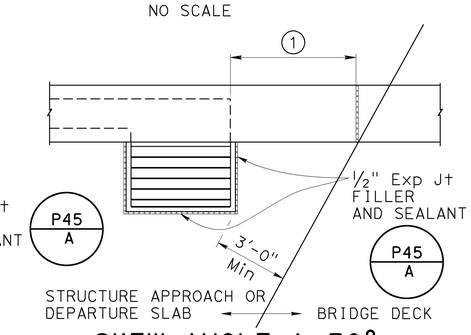

SKEW ANGLE > 30°

NOTES:

1. Void in water carring Barrier to be plugged with Concrete between DI or Cleanout and Expansion Joint.
2. Expansion Joint Filler and Sealant below Joint Seal.

DI OR CLEANOUT AT END OF SLAB

NO SCALE

DESIGN	BY A. Rittenhouse	CHECKED T. Menard	
DETAILS	BY W. Zhang	CHECKED D. Azzam	
QUANTITIES	BY A. Logus	CHECKED J. Higareda	

STATE OF CALIFORNIA
DEPARTMENT OF TRANSPORTATION

DIVISION OF ENGINEERING SERVICES
STRUCTURE DESIGN
DESIGN BRANCH 15

BRIDGE NO. AS SHOWN
POST MILE AS SHOWN

ROUTE 210 IMPROVEMENTS
MISCELLANEOUS DETAILS NO. 1

STRUCTURES DESIGN DETAIL SHEET (ENGLISH) (REV. 09-01-10)

ORIGINAL SCALE IN INCHES FOR REDUCED PLANS 0 1 2 3

UNIT: 3604
PROJECT NUMBER & PHASE: 07140000851
CONTRACT NO.: 07-2881U4

DISREGARD PRINTS BEARING EARLIER REVISION DATES

REVISION DATES 10-21-13 2-18-14 01-15-14 01-09-14

SHEET 14 OF 19

FILE => 2881u4-t1-miscdt01.dgn

USERNAME => s132486 DATE PLOTTED => 23-JUN-2014 TIME PLOTTED => 13:44

DIST	COUNTY	ROUTE	POST MILES TOTAL PROJECT	SHEET No.	TOTAL SHEETS
07	LA	210	R16.1/R25.8	853	927

Andrew Rittenhouse 1-24-14
REGISTERED CIVIL ENGINEER DATE

5-12-14
PLANS APPROVAL DATE

REGISTERED PROFESSIONAL ENGINEER
Andrew P Rittenhouse
No. C61006
Exp. 12-31-14
CIVIL
STATE OF CALIFORNIA

The State of California or its officers or agents shall not be responsible for the accuracy or completeness of scanned copies of this plan sheet.

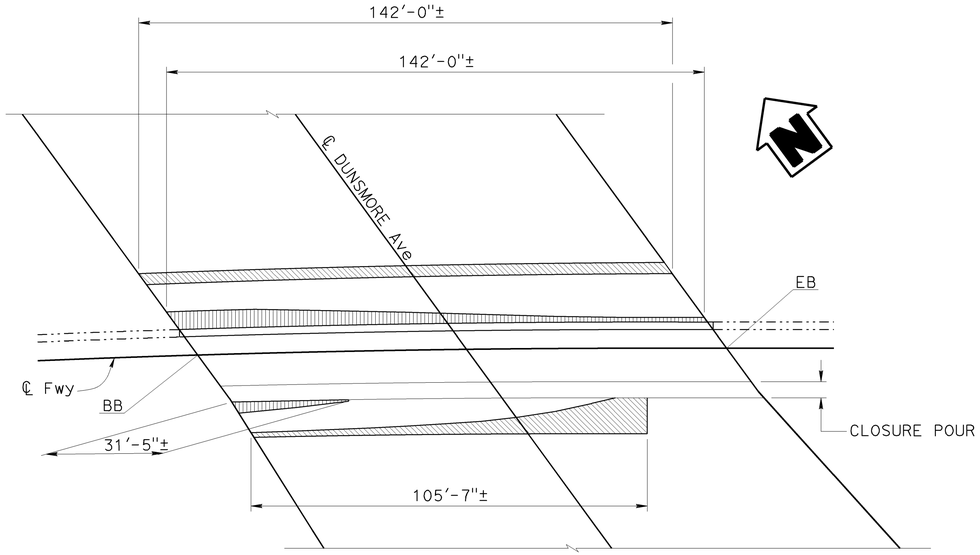

PLAN
1" = 20'

DUNSMORE AVENUE UNDERCROSSING

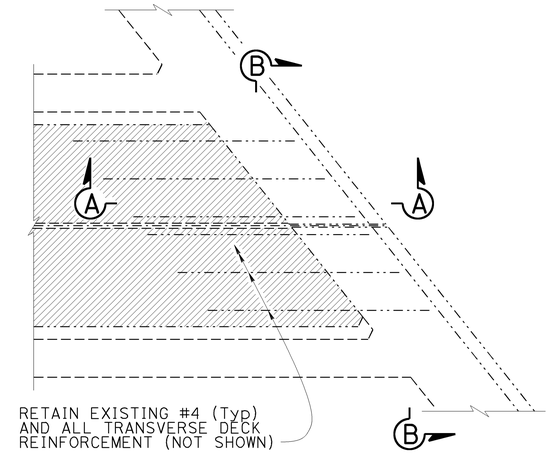

OVERHANG REMOVAL PLAN
½" = 1'-0"

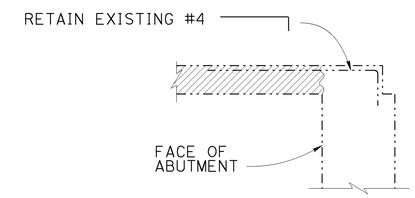

SECTION A-A
⅜" = 1'-0"

LEGEND:

- INDICATES APPROXIMATE LIMITS OF REMOVE CONCRETE DECK SURFACE TO ¾" Min DEPTH
- INDICATES APPROXIMATE LIMITS OF REINFORCED CONCRETE BOLSTER
- INDICATES LIMITS OF BRIDGE REMOVAL (PORTION)
- ± INDICATES DEPENDANT DIMENSIONS (DIMENSIONS WHICH ARE CONTROLLED OR CONSTRAINED BY FIELD DIMMENSIONS).

NOTES:

1. REMOVE CONCRETE DECK SURFACE TO ¾" MIN DEPTH. (SEE "STRUCTURE DETAILS" SHEETS)
2. ROUGHEN CONCRETE DECK SURFACE TO ¼" AMPLITUDE. (SEE "STRUCTURE DETAILS" SHEETS)

TABULATED CROSS SECTIONS ACROSS DUNSMORE AVE UC (Br NO. 53-2282)

℄ STATION	Min A	Max B	Max C	Max D	Min E
852+57.56	2'-2⅞"±	4'-10⅛"±	0'-5⅜"±	2'-6⅝"±	1'-5"±
852+67.55	2'-4⅛"±	4'-4½"±	0'-5⅛"±	1'-9¾"±	1'-6⅞"±
852+77.54	2'-5"±	3'-11¾"±	0'-4⅞"±	0'-9⅜"±	1'-9⅜"±
852+87.53	2'-6"±	3'-7"±	0'-4¾"±	NA	2'-½"±
852+92.52	2'-6⅞"±	3'-2½"±	0'-4⅝"±	NA	2'-4⅞"±
853+07.51	2'-7⅞"±	2'-9"±	0'-4½"±	NA	2'-10¾"±
853+17.50	2'-8⅞"±	2'-4⅛"±	0'-4½"±	NA	3'-6⅛"±
853+27.49	2'-9¾"±	1'-11⅞"±	0'-4⅜"±	NA	4'-6¾"±
853+37.48	2'-10⅝"±	1'-7½"±	0'-4¼"±	NA	6'-1"±
853+47.47	2'-11½"±	1'-2⅞"±	0'-4⅛"±	NA	8'-2⅛"±
853+57.46	2'-11½"±	1'-2¾"±	0'-4⅛"±	NA	9'-8"±
853+67.45	3'-0"±	1'-2⅝"±	0'-4"±	NA	NA
853+77.44	3'-0"±	1'-2½"±	0'-4"±	NA	NA

NOTE:
THE CONTRACTOR SHALL VERIFY ALL CONTROLLING FIELD DIMENSIONS BEFORE ORDERING OR FABRICATING ANY MATERIAL.

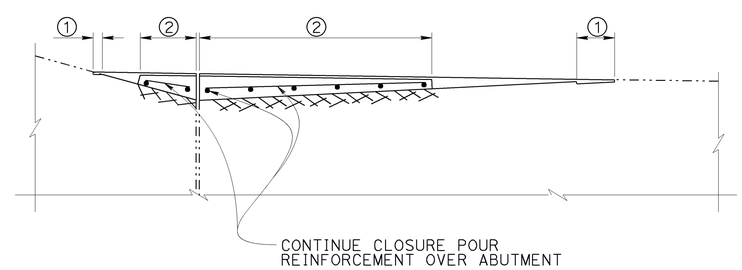

PROJECTED SECTION B-B
½" = 1'-0"

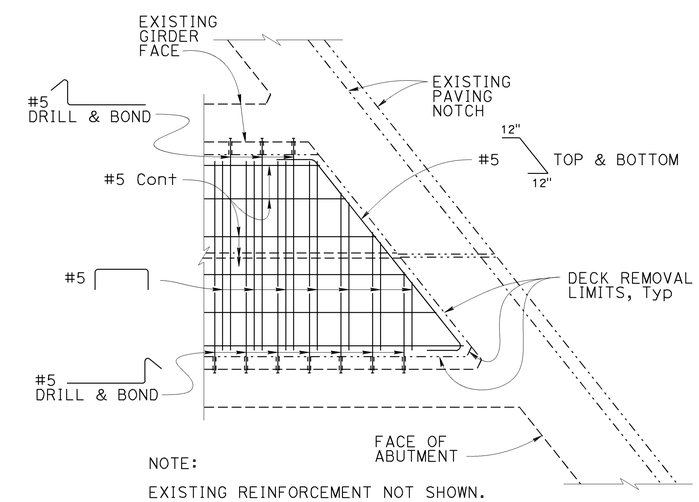

NOTE:
EXISTING REINFORCEMENT NOT SHOWN.

DECK CLOSURE POUR PLAN
½" = 1'-0"

DESIGN	BY A. Rittenhouse	CHECKED T. Menard	
DETAILS	BY W. Zhang	CHECKED T. Menard	
QUANTITIES	BY A. Logus	CHECKED J. Higareda	

STATE OF CALIFORNIA
DEPARTMENT OF TRANSPORTATION

DIVISION OF ENGINEERING SERVICES
STRUCTURE DESIGN
DESIGN BRANCH 15

BRIDGE NO. AS SHOWN
POST MILE AS SHOWN

ROUTE 210 IMPROVEMENTS
MISCELLANEOUS DETAILS NO. 2

STRUCTURES DESIGN DETAIL SHEET (ENGLISH) (REV. 09-01-10)

ORIGINAL SCALE IN INCHES FOR REDUCED PLANS 0 1 2 3

UNIT: 3604
PROJECT NUMBER & PHASE: 07140000851
CONTRACT NO.: 07-2881U4

DISREGARD PRINTS BEARING EARLIER REVISION DATES

REVISION DATES: 10-25-13 01-14-14 2-19-14 01-05-14

SHEET 15 OF 19

FILE => 2881u4-t1-miscdt02.dgn

USERNAME => s132486 DATE PLOTTED => 23-JUN-2014 TIME PLOTTED => 13:44

DIST	COUNTY	ROUTE	POST MILES TOTAL PROJECT	SHEET No.	TOTAL SHEETS
07	LA	210	R16.1/R25.8	854	927

Andrew Rittenhouse 1-24-14
REGISTERED CIVIL ENGINEER DATE

5-12-14
PLANS APPROVAL DATE

REGISTERED PROFESSIONAL ENGINEER
Andrew P Rittenhouse
No. C61006
Exp. 12-31-14
CIVIL
STATE OF CALIFORNIA

The State of California or its officers or agents shall not be responsible for the accuracy or completeness of scanned copies of this plan sheet.

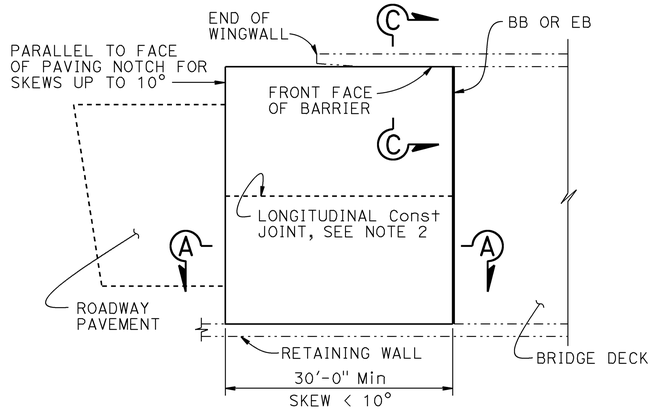

PLAN
1" = 10'

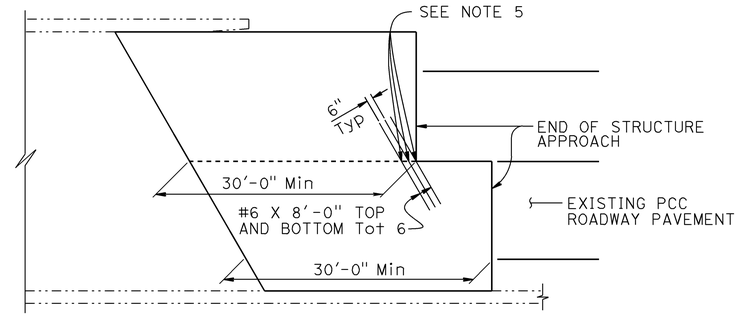

STRUCTURE APPROACH - END STAGGER DETAIL
NO SCALE

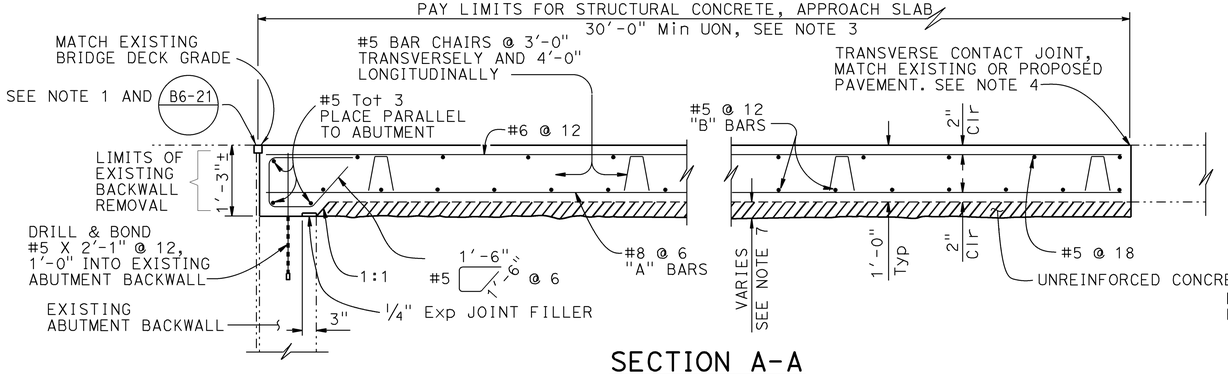

SECTION A-A
3/4" = 1'-0"

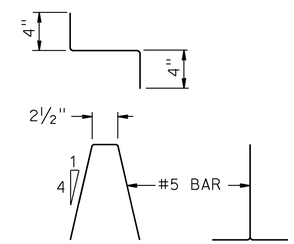

BAR CHAIR DETAIL
1 1/2" = 1'-0"

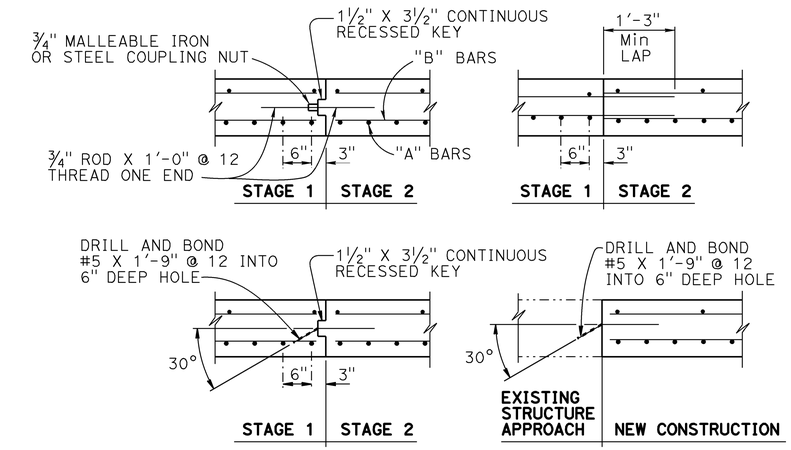

LONGITUDINAL CONSTRUCTION JOINT ALTERNATIVES
3/4" = 1'-0"

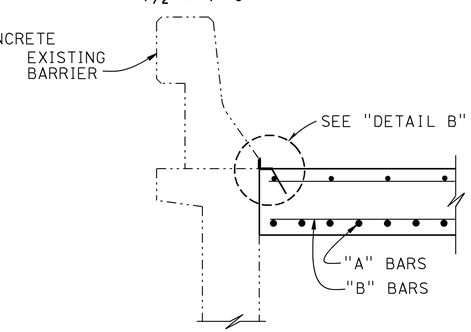

SECTION C-C
3/4" = 1'-0"

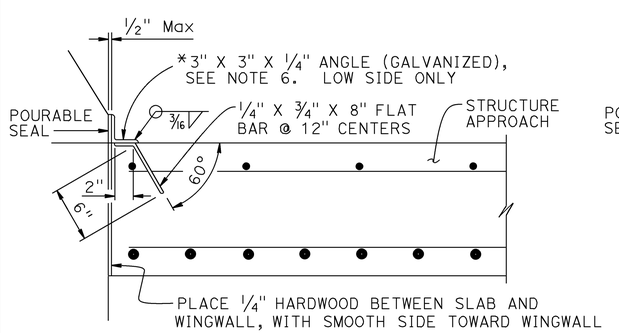

*(TO BE USED WITH CONCRETE BARRIER WITH VERTICAL FACE)

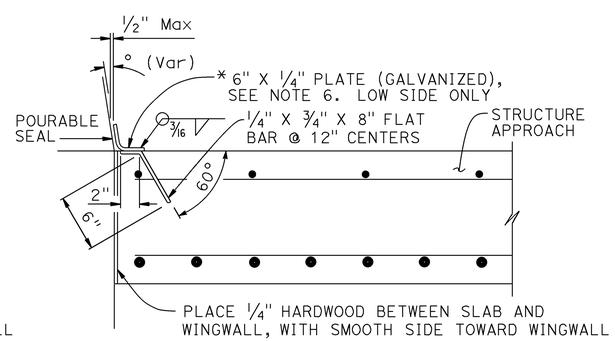

*(TO BE USED WITH CONCRETE BARRIER WITH SLOPING FACE)

DETAIL B
1 1/2" = 1'-0"

APPROACH SLAB TRANSVERSE CONTACT JOINT		
APPROACH SKEW	WITH AC ROADWAY PAVEMENT	WITH PCC ROADWAY PAVEMENT
< 10°	PARALLEL TO FACE OF PN	PARALLEL TO FACE OF PN
10° - 45°	STAGGER AT EVERY 2 OR 3 SLAB WIDTHS APART	STAGGER AT EVERY 2 OR 3 SLAB WIDTHS APART
> 45°	STAGGER AT EACH SLAB WIDTH	STAGGER AT EACH SLAB WIDTH

NOTES:

1. Sealed joint,for MR see Structure Plans. Adjust bar reinforcement to clear a sawcut for sealed joint, when required.
2. Longitudinal construction joints, when permitted by Engineer, shall be located on slab lines shown on General Plan sheets.
3. Transverse contact joint shall be a minimum of 5'-0" from an existing or constructed weakened plane joint.
4. For transverse contact joint with new PCC paving, refer to Revised Standard Plan RSP P10.
5. Couplers are required for stage construction.
6. End angle or plate at beginning of barrier transition, end of wingwall or end of structure approach as applicable.
7. Thickness of unreinforced concrete varies according to "LIMITS OF EXISTING ROADWAY REMOVAL LONGITUDINAL SECTIONS" table on "MISCELLANEOUS DETAILS NO. 1" sheet.

NOTE:
THE CONTRACTOR SHALL VERIFY ALL CONTROLLING FIELD DIMENSIONS BEFORE ORDERING OR FABRICATING ANY MATERIAL.

	BY	CHECKED
DESIGN	A. Rittenhouse	T. Menard
DETAILS	S. Cholda	T. Menard
QUANTITIES	T. Sanderson	J. Szabo

STATE OF CALIFORNIA
DEPARTMENT OF TRANSPORTATION

DIVISION OF ENGINEERING SERVICES
STRUCTURE DESIGN
DESIGN BRANCH 15

BRIDGE NO. SEE GP
POST MILE SEE GP

ROUTE 210 IMPROVEMENT
STRUCTURE APPROACH TYPE R(30S)

STRUCTURES DESIGN DETAIL SHEET (ENGLISH) (REV. 09-01-10)

ORIGINAL SCALE IN INCHES FOR REDUCED PLANS 0 1 2 3

UNIT: 3604
PROJECT NUMBER & PHASE: 07140000851
CONTRACT NO.: 07-2881U4

DISREGARD PRINTS BEARING EARLIER REVISION DATES
REVISION DATES 09-24-13 10-25-13 2-19-14 01-24-14

SHEET 16 OF 19

FILE => 2881u4-u1-xs3-130_custom.dgn

USERNAME => s133286 DATE PLOTTED => 23-JUN-2014 TIME PLOTTED => 13:44

DIST	COUNTY	ROUTE	POST MILES TOTAL PROJECT	SHEET No.	TOTAL SHEETS
07	LA	210	R16.1/R25.8	855	927

Andrew P Rittenhouse 1-24-14
REGISTERED CIVIL ENGINEER DATE

5-12-14
PLANS APPROVAL DATE

REGISTERED PROFESSIONAL ENGINEER Andrew P Rittenhouse No. C61006 Exp. 12-31-14 CIVIL STATE OF CALIFORNIA

The State of California or its officers or agents shall not be responsible for the accuracy or completeness of scanned copies of this plan sheet.

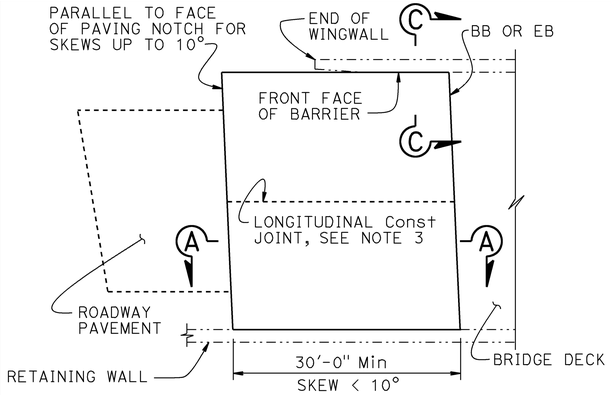

PLAN
1" = 10'

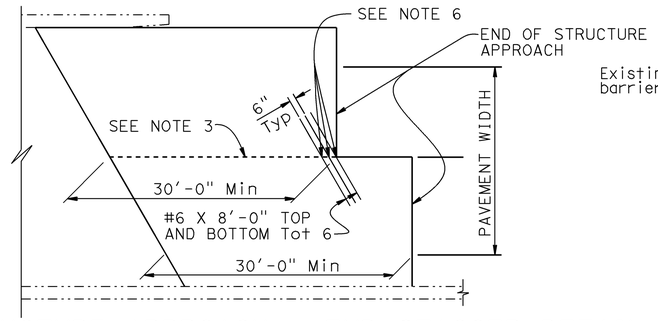

STRUCTURE APPROACH - END STAGGER DETAIL
NO SCALE

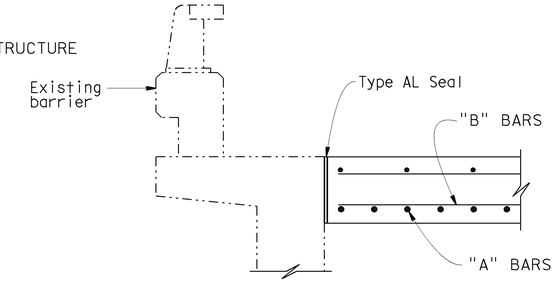

PM > 22.5

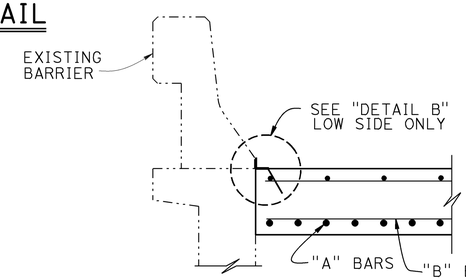

PM < 22.5

SECTION C-C
¾" = 1'-0"

APPROACH SLAB TRANSVERSE CONTACT JOINT		
APPROACH SKEW	WITH AC ROADWAY PAVEMENT	WITH PCC ROADWAY PAVEMENT
< 10°	PARALLEL TO FACE OF PN	PARALLEL TO FACE OF PN
10° - 45°	STAGGER AT EVERY 2 OR 3 SLAB WIDTHS APART	STAGGER AT EVERY 2 OR 3 SLAB WIDTHS APART
> 45°	STAGGER AT EACH SLAB WIDTH	STAGGER AT EACH SLAB WIDTH

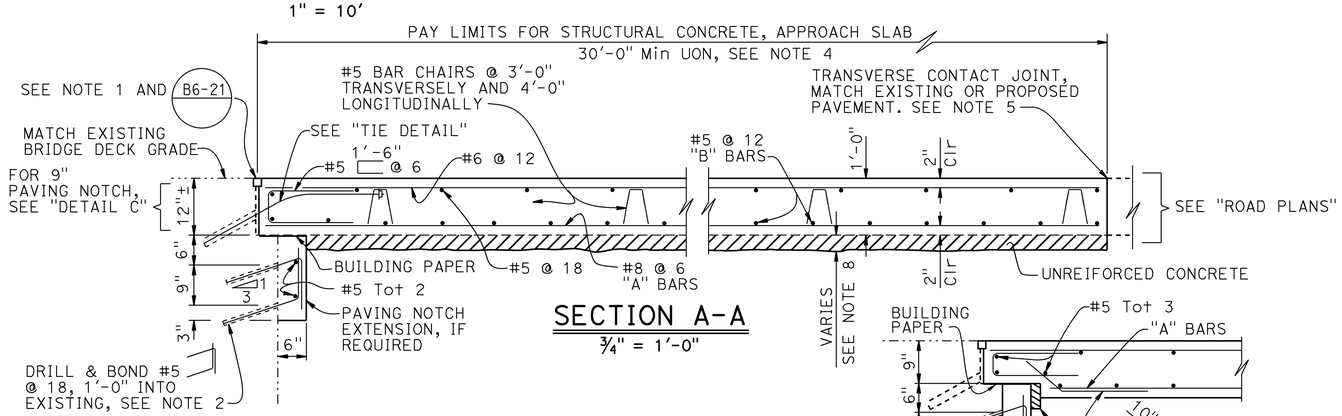

SECTION A-A
¾" = 1'-0"

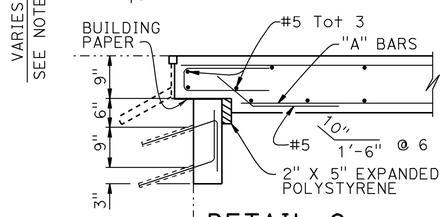

DETAIL C
¾" = 1'-0"

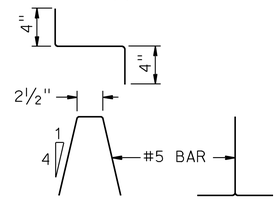

BAR CHAIR DETAIL
1½" = 1'-0"

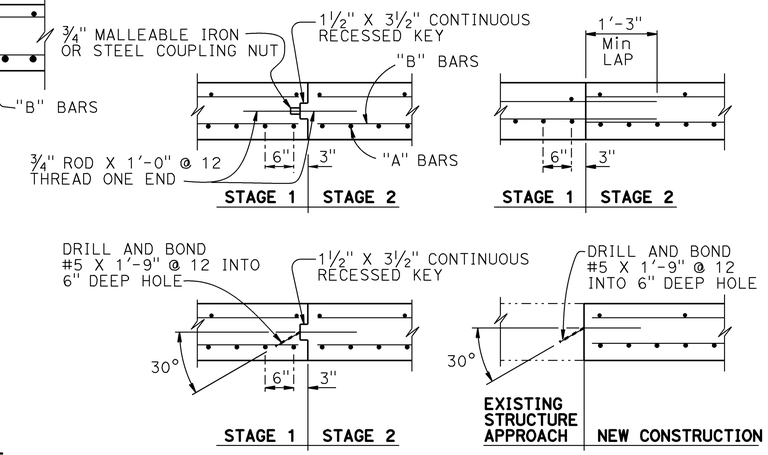

LONGITUDINAL CONSTRUCTION JOINT ALTERNATIVES
¾" = 1'-0"

NOTES:

1. For details not shown or noted, see Structure Plans. Adjust bar reinforcement to clear a sawcut for sealed joint, when required.
2. Space to avoid existing prestress anchorages and main reinforcement.
3. Longitudinal construction joints, when permitted by the Engineer, shall be located on slab lines shown on General Plan sheets.
4. Transverse contact joint shall be a minimum of 5'-0" from an existing or constructed weakened plane joint.
5. For transverse contact joint with new PCC paving, refer to Revised Standard Plan RSP P10.
6. Couplers are required for stage construction.
7. End angle or plate at beginning of barrier transition, end of wingwall or end of structure approach as applicable.
8. Thickness of unreinforced concrete varies according to "LIMITS OF EXISTING ROADWAY REMOVAL LONGITUDINAL SECTIONS" table on "MISCELLANEOUS DETAILS NO. 1" sheet.

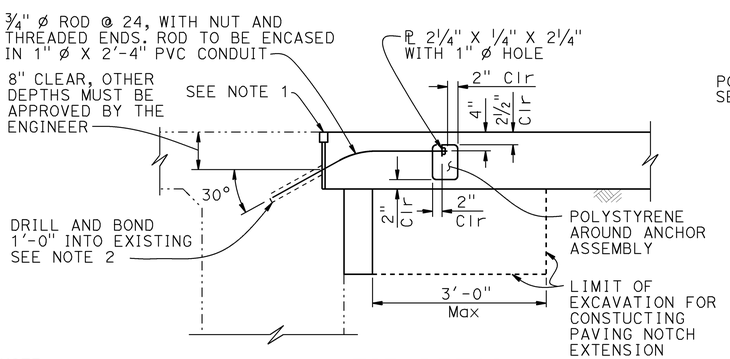

NOTE:
THE CONTRACTOR SHALL VERIFY ALL CONTROLLING FIELD DIMENSIONS BEFORE ORDERING OR FABRICATING ANY MATERIAL.

TIE DETAIL
¾" = 1'-0"

NOTE: For details not shown, see "SECTION A-A"

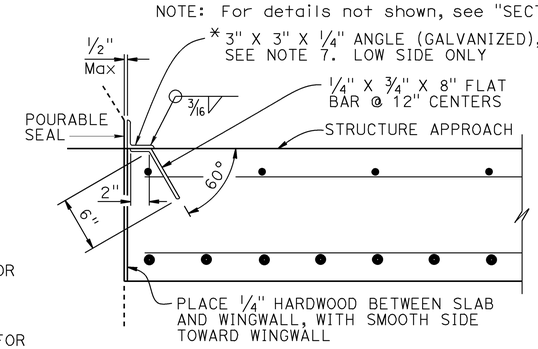

*(TO BE USED WITH CONCRETE BARRIER WITH VERTICAL FACE)

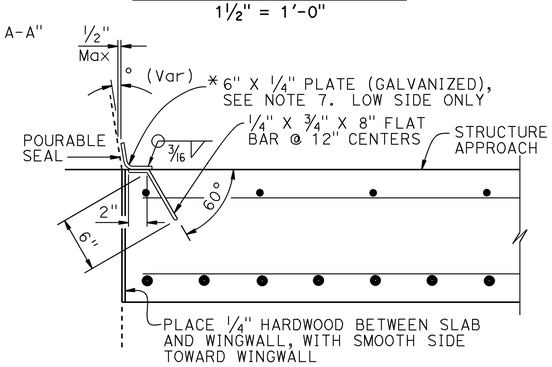

*(TO BE USED WITH CONCRETE BARRIER WITH SLOPING FACE)

DETAIL B
1½" = 1'-0"

	BY	CHECKED
DESIGN	A. Rittenhouse	T. Menard
DETAILS	S. Cholda	T. Menard
QUANTITIES	T. Sanderson	J. Szabo

STATE OF CALIFORNIA
DEPARTMENT OF TRANSPORTATION

DIVISION OF ENGINEERING SERVICES
STRUCTURE DESIGN
DESIGN BRANCH 15

BRIDGE NO. SEE GP
POST MILE SEE GP

ROUTE 210 IMPROVEMENTS
STRUCTURE APPROACH TYPE R(30D)

STRUCTURES DESIGN DETAIL SHEET (ENGLISH) (REV. 09-01-10)

ORIGINAL SCALE IN INCHES FOR REDUCED PLANS 0 1 2 3

UNIT: 3604
PROJECT NUMBER & PHASE: 07140000851
CONTRACT NO.: 07-2881U4

DISREGARD PRINTS BEARING EARLIER REVISION DATES

REVISION DATES: 09-24-13 10-25-13 01-14-14 2-19-14

SHEET 17 OF 19

FILE => 2881u4-u2-xs3-150_custom.dgn

USERNAME => s132486 DATE PLOTTED => 23-JUN-2014 TIME PLOTTED => 13:44

DIST	COUNTY	ROUTE	POST MILES TOTAL PROJECT	SHEET No.	TOTAL SHEETS
07	LA	210	R16.1/R25.8	856	927

Andrew Rittenhouse 1-24-14
REGISTERED CIVIL ENGINEER DATE

5-12-14
PLANS APPROVAL DATE

REGISTERED PROFESSIONAL ENGINEER
Andrew P Rittenhouse
No. C61006
Exp. 12-31-14
CIVIL
STATE OF CALIFORNIA

The State of California or its officers or agents shall not be responsible for the accuracy or completeness of scanned copies of this plan sheet.

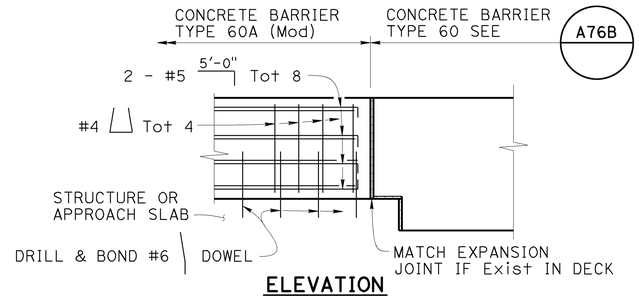

ELEVATION

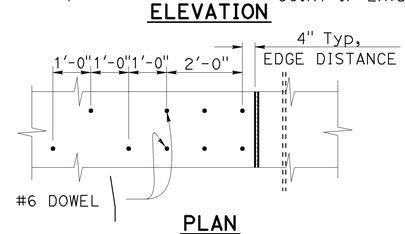

PLAN

CONNECTION TO STRUCTURE

½" = 1'-0"

NOTES:

1. Transverse expansion joints in concrete barrier shall match all deck joints.
2. If existing deck thickness is less than 7¾", depth of drilled hole equals depth of slab minus 1½".
3. Minor adjustments may be made in dowel spacing to clear main reinforcement.
4. Transitions to match adjacent "Type 60" Barrier shall have minimum flare of 20:1 off the structure.
5. Barrier to be doweled on either side of deck joints, based on field conditions.
6. For Concrete Barrier Type 60A (Mod) details not shown, see STANDARD PLAN A76A.

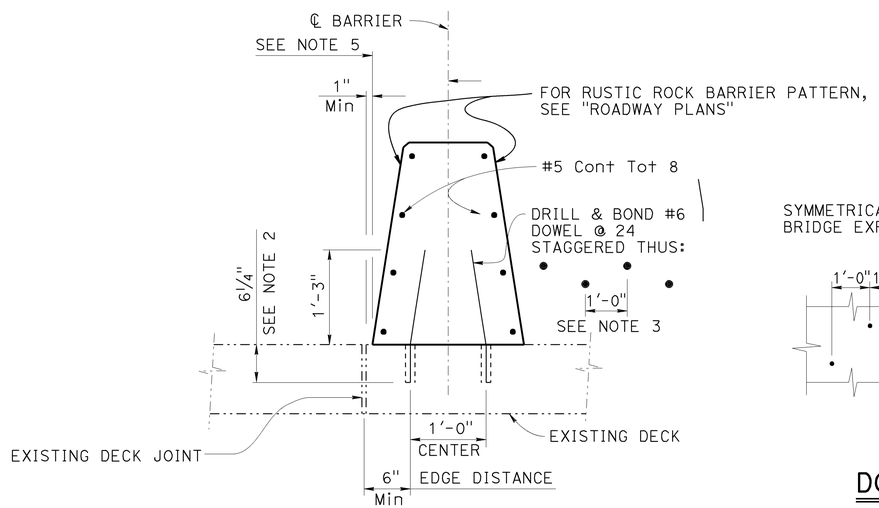

CONCRETE BARRIER TYPE 60A (Mod)

1" = 1'-0"

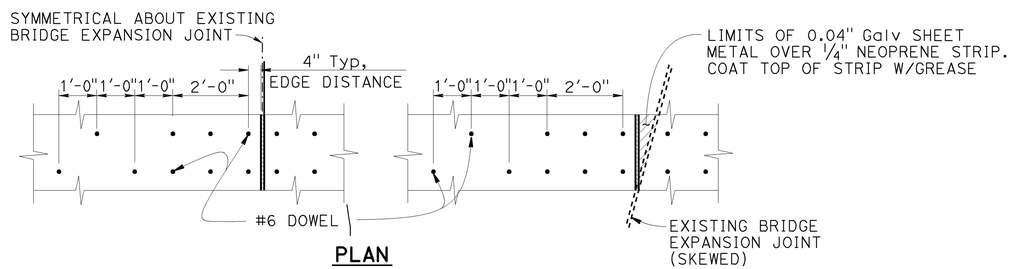

PLAN

DOWEL SPACING AT EXPANSION JOINT

½" = 1'-0"

LEGEND:

-··-··- - Indictates existing structure
——— - Indictates new structure

NOTE:
THE CONTRACTOR SHALL VERIFY ALL CONTROLLING FIELD DIMENSIONS BEFORE ORDERING OR FABRICATING ANY MATERIAL.

	BY	CHECKED
DESIGN	A. Rittenhouse	Traci Menard
DETAILS	Herman Mauroschadt	Traci Menard
QUANTITIES	T. Sanderson	J. Szabo

STATE OF CALIFORNIA
DEPARTMENT OF TRANSPORTATION

DIVISION OF ENGINEERING SERVICES
STRUCTURE DESIGN
DESIGN BRANCH 15

BRIDGE NO. VARIOUS
POST MILE VARIOUS

ROUTE 210 IMPROVEMENTS
CONCRETE BARRIER TYPE 60A (MOD)

STRUCTURES DESIGN DETAIL SHEET (ENGLISH) (REV. 09-01-10)

ORIGINAL SCALE IN INCHES FOR REDUCED PLANS 0 1 2 3

UNIT: 3604
PROJECT NUMBER & PHASE: 07140000851
CONTRACT NO.: 07-2881U4

DISREGARD PRINTS BEARING EARLIER REVISION DATES

REVISION DATES: 09-24-13 2-19-14 10-27-13 01-03-14

SHEET 18 OF 19

FILE => 2881u4-z1-xs16-100_custom.dgn

USERNAME => s132486 DATE PLOTTED => 23-JUN-2014 TIME PLOTTED => 13:44

DIST	COUNTY	ROUTE	POST MILES TOTAL PROJECT	SHEET No.	TOTAL SHEETS
07	LA	210	R16.1/R25.8	857	927

REGISTERED CIVIL ENGINEER — Andrew Rittenhouse — DATE 1-24-14

PLANS APPROVAL DATE 5-12-14

REGISTERED PROFESSIONAL ENGINEER — Andrew P Rittenhouse — No. C61006 — Exp. 12-31-14 — CIVIL — STATE OF CALIFORNIA

The State of California or its officers or agents shall not be responsible for the accuracy or completeness of scanned copies of this plan sheet.

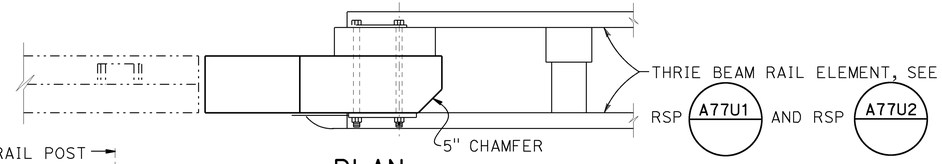

PLAN
NO SCALE

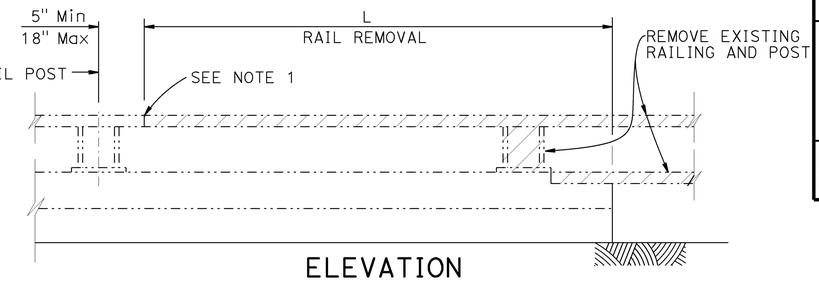

ELEVATION
NO SCALE
RAIL REMOVAL

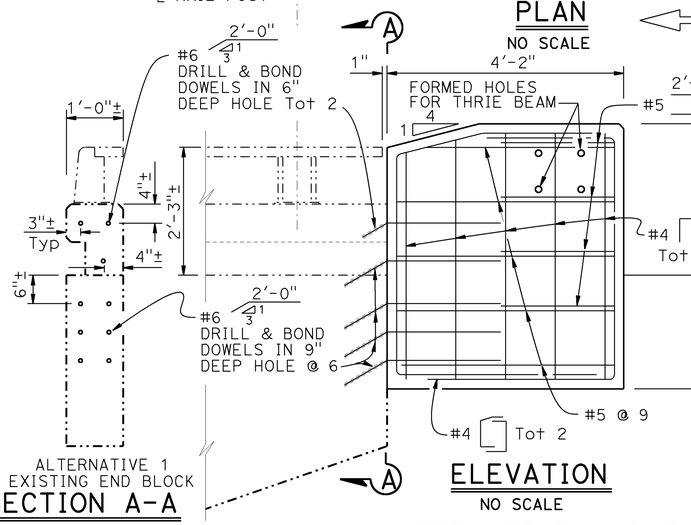

ALTERNATIVE 1
NO EXISTING END BLOCK
SECTION A-A
NO SCALE

ELEVATION
NO SCALE

ALTERNATIVE 1 & 5

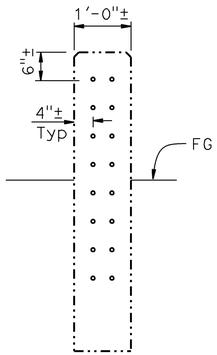

ALTERNATIVE 5
EXISTING END BLOCK
SECTION A-A
NO SCALE

NOTE:
Alternative 1 shown (No Existing End Block),
Alternative 5 similar (Existing End Block)

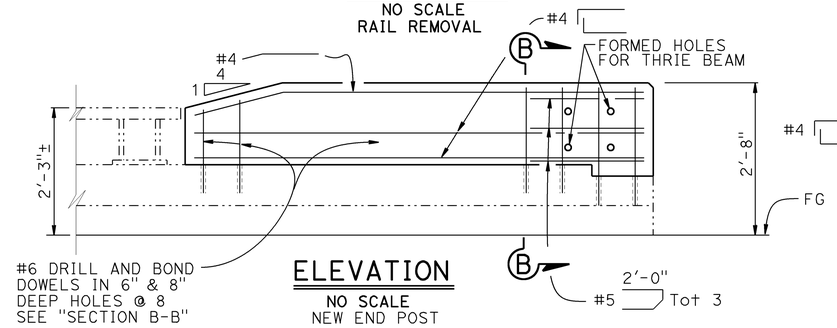

ELEVATION
NO SCALE
NEW END POST
ALTERNATIVE 2

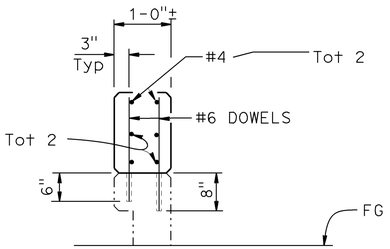

SECTION B-B
NO SCALE

LEGEND:

-·-·-·-	Indicates Existing Stucture
———	Indicates New Structure
±	Indicates dependant dimensions (dimensions which are controlled or constrained by field dimensions).

NOTE:

1. Cut and remove Type 9 and BAGR as required

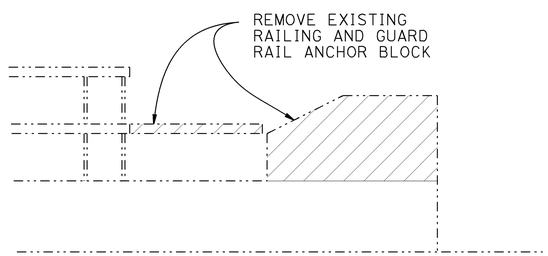

ELEVATION
NO SCALE
RAIL REMOVAL

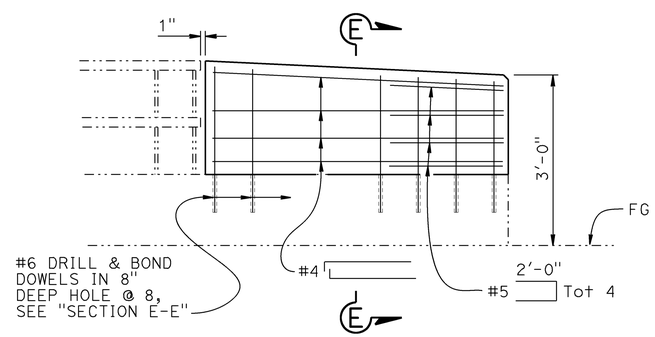

ELEVATION
NO SCALE
NEW BARRIER TRANSITION

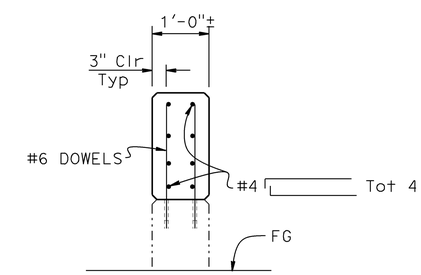

SECTION E-E
NO SCALE

ALTERNATIVE 3

NOTE:
THE CONTRACTOR SHALL VERIFY ALL CONTROLLING FIELD DIMENSIONS BEFORE ORDERING OR FABRICATING ANY MATERIAL.

	BY	CHECKED
DESIGN	A. Rittenhouse	T. Menard
DETAILS	S. Cholda	T. Menard
QUANTITIES	T. Sanderson	J. Szabo

STATE OF CALIFORNIA
DEPARTMENT OF TRANSPORTATION

DIVISION OF ENGINEERING SERVICES
STRUCTURE DESIGN
DESIGN BRANCH 15

BRIDGE NO. VARIOUS
POST MILE VARIOUS

ROUTE 210 IMPROVEMENTS
MIDWEST GUARDRAIL SYSTEM CONNECTION-TYPE 9

STRUCTURES DESIGN DETAIL SHEET (ENGLISH) (REV. 09-01-10)

ORIGINAL SCALE IN INCHES FOR REDUCED PLANS 0 1 2 3

UNIT: 3604
PROJECT NUMBER & PHASE: 07140000851
CONTRACT NO.: 07-2881U4

DISREGARD PRINTS BEARING EARLIER REVISION DATES

REVISION DATES: ~~9-26-13~~ 2-19-14 ~~01-03-14~~ ~~1-14-14~~

SHEET 19 OF 19

FILE => 2881u4-z2-xs16-030_custom.dgn

USERNAME => s132486 DATE PLOTTED => 23-JUN-2014 TIME PLOTTED => 13:44

INDEX TO PLANS

ARCHITECTURAL

A0-0.1 GENERAL PLAN, INDEX, BUILDING CODE DATA
A0-0.2 ARCHITECTURAL ABBREVIATIONS, SYMBOLS
A0-0.3 SCHEDULE
A0-0.4 GATE AND DETAIL
A0-0.5 GATE DETAILS
A0-1 SITE PLAN
A1-0 FLOOR PLAN
A1-1 ELEVATIONS
A1-2 SECTIONS
A1-3 ROOF PLAN AND DETAILS

STRUCTURAL

ST-1 LEGEND
ST-1A WOOD FRAMING STANDARD - NOTES
ST-1B WOOD FRAMING STANDARD - DETAILS
ST-1C WOOD FRAMING STANDARD - DETAILS
ST-2 CONCRETE STANDARD
ST-3A CONCRETE MASONARY UNIT STANDARD
ST-3B CONCRETE MASONARY UNIT STANDARD
ST1-0 DESIGN CRITERIA & DETAIL NOTES
ST1-1 FOUNDATION PLAN
ST1-2 ROOF FRAMING PLAN
ST1-3 BUILDING SECTIONS
ST1-4 FOOTING DETAILS
ST1-5 ROOF FRAMING DETAILS
ST1-6 ROOF FRAMING DETAILS
ST1-7 ROOF FRAMING DETAILS

ELECTRICAL

EE0-0 LEGEND
EE0-1 NOTES AND ABBREVIATIONS
EE0-2 OUTDOOR LIGHTING COMPLIANCE 1 OF 4
EE0-3 OUTDOOR LIGHTING COMPLIANCE 3 OF 4
EE0-4 INDOOR LIGHTING COMPLIANCE 1 OF 4
EE0-5 INDOOR LIGHTING COMPLIANCE 3 OF 4
EE1-1 EXISTING SITE PLAN
EE1-2 MODIFIED SITE PLAN
EE1-3 TUNNEL NO. 1 LIGHTING LAYOUT
EE1-4 TUNNEL NO. 2 LIGHTING LAYOUT
EE1-5 TUNNEL NO. 3 LIGHTING LAYOUT
EE1-6 TUNNEL PORTAL - CONDUITS STUBOUT
EE1-7 TUNNEL NO. 1 LIGHTING LEVELS LAYOUT
EE1-8 TUNNEL NO. 2 LIGHTING LEVELS LAYOUT
EE1-9 TUNNEL NO. 3 LIGHTING LEVELS LAYOUT
EE1-10 PANELS SCHEDULE 1
EE1-11 PANELS SCHEDULE 2
EE1-12 PHOTOMETRICS- TUNNEL LIGHT FIXTURE
EE2-1 POWER AND LIGHTING PLAN
EE2-2 TUNNELS CONTROL EQUIPMENT LAYOUT
EE3-1 SCHEMATIC DIAGRAM
EE3-2 PLC DIGITAL INPUT/ OUTPUT LAYOUT
EE3-3 PLC DIGITAL INPUT LAYOUT
EE3-4 PLC DIGITAL OUTPUT LAYOUT
EE3-5 TUNNELS DAYTIME LIGHTING CONTROL SCHEMATIC
EE3-6 TUNNEL NO. 1 LIGHTING CONTROL SCHEMATIC
EE3-7 TUNNEL NO. 2 LIGHTING CONTROL SCHEMATIC
EE3-8 TUNNEL NO. 3 LIGHTING CONTROL SCHEMATIC
EE3-9 TUNNEL NO. 1 LIGHTING CONTROL WIRING DIAGRAM
EE3-10 TUNNEL NO. 2 LIGHTING CONTROL WIRING DIAGRAM
EE3-11 TUNNEL NO. 3 LIGHTING CONTROL WIRING DIAGRAM
EE3-12 TUNNELS LIGHT CIRCUIT DIVIDER
EE3-13 TUNNEL NO.1 DIMMING CONTROL SCHEMATIC
EE3-14 TUNNEL NO.2 DIMMING CONTROL SCHEMATIC
EE3-15 TUNNEL NO.3 DIMMING CONTROL SCHEMATIC
EE3-16 TYPICAL TUNNEL DIMMING CONTROL PANEL
EE4-1 MAIN SERVICE SWITCHBOARD
EE4-2 TUNNELS CONTROL EQUIPMENT
EE4-3 LIGHT FIXTURE AND NEMA 4X JUNCTION BOX MOUNTING DETAILS
EE4-4 MISCELLANEOUS ELECTRICAL DETAILS
EE4-5 EXISTING SERVICES EQUIPMENT

BUILDING CODE DATA

DESIGN CODE

The building work for this project has been design to conform to
The 2013 edition of title 24, California code of regulations:
Part 2 - California building code 2013,
Part 3 - California electrical code 2013,
Part 4 - California mechanical code 2013,
Part 5 - NA
Part 6 - California energy code 2013,
Part 9 - California fire code 2013.
Part 11- California green building standards 2013
and the 2010 ADA Standards.

BUILDING DATA

THIS PROJECT IS IN COMPLIANCE

	OCCUPANCY	CONSTRUCTION TYPE	NUMBER OF STORIES	BUILDING HEIGHT	BUILDING AREA	AREA OF PROJECT	ALLOWABLE AREA	AREA OR HEIGHT INCREACES	FIRE SPRINKLERED	FIRE ALARM	OTHER FIRE PROTECTION SYSTEMS IF ANY	SMOKE CONTROL SYSTEM	OCCUPANT LOAD
	U	V-B	1	16'-0"	400 SQ FT	—	—	—	NOT REQUIRED	—	—	—	1

DIST.	COUNTY	ROUTE	POST MILES TOTAL PROJECT	SHEET NO.	TOTAL SHEETS
07	LA	210	R16.1/R25.8	858	927

LICENSED ARCHITECT DATE

LICENSED ARCHITECT C.A. SANCHEZ No. C-15201 Exp. 12-31-2015 STATE OF CALIFORNIA

5-12-14
PLANS APPROVAL DATE

The State of California or its officers or agents shall not be responsible for the accuracy or completeness of scanned copies of this plan sheet.

ACCESSIBILITY DESIGN APPROVAL STAMP DOT / DES / OTA
PROJECT ID 0714000085
* EXEMPT
Reviewed by: Y. A. WANG
Date: 04-17-14

CALIFORNIA STATE FIRE MARSHAL APPROVED
Approval of this plan does not authorize or approve any omission or deviation from applicable regulations. Final approval is subject to field inspection. One set of approved plans shall be available on the project site at all times.
Reviewed by: FRANCIS(SONNY)SOLICH
Approval date: March 27,2014

* PER 2013 CBC SEC.11B-203.5
& 2010 ADA STDS. SEC. 203.5

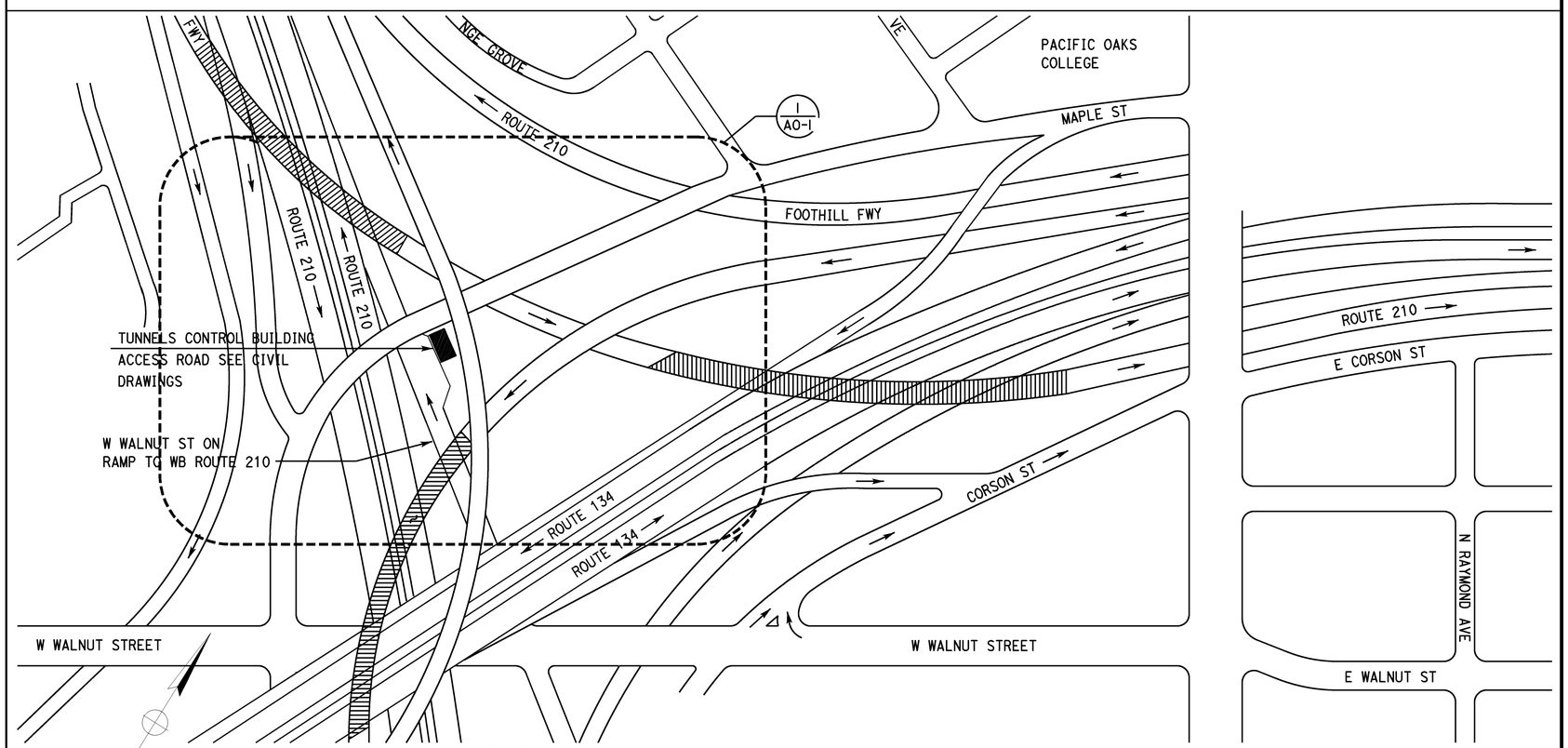

GENERAL PLAN

NO SCALE

R E Travis
DESIGN SUPERVISOR
DOUG LOWE
DESIGN ARCHITECT

DESIGNER CARLOS SANCHEZ
DRAWN BY FAY KIOUMEHR
CHECKED BY: C.FAUST
STRUCTURAL REVIEW D. LOWE

SHEET LEGEND
A-1 ARCHITECTURAL ST-1 STRUCTURAL
M-1 MECHANICAL EE-1 ELECTRICAL
MP-1 PLUMBING SS-1 SANITARY

STATE OF CALIFORNIA
DEPARTMENT OF TRANSPORTATION

DIVISION OF ENGINEERING SERVICES
ARCHITECTURAL AND STRUCTURAL DESIGN

BRIDGE NO. L5724
POST MILE X

PASADENA 210/134
TUNNELS CONTROL BUILDING
GENERAL PLAN, INDEX, BUILDING CODE DATA

SHEET A0-0.1

A0-0_1_General plan.dgn
TAEMWW imperial Rev. 7/10 18-JUN-2014 11:22:00:44

ORIGINAL SCALE IN INCHES FOR REDUCED PLANS 0 1 2 3

UNIT 3597 CONTRACT No. 2881 U4
PROJECT NUMBER & PHASE 07140000851
EA 000000

DISREGARD PRINTS BEARING EARLIER REVISION DATES
REVISION DATES (PRELIMINARY STAGE ONLY) - -07
SHEET X OF X

18-JUN-2014 12:04
A0-0_1_General plan.dgn

ARCHITECTURAL ABBREVIATIONS

&	AND
∟	ANGLE
℄	CENTER LINE
∅	DIAMETER OR ROUND
□	SQUARE
d	PENNY
°	DEGREE
A/C	AIR CONDITIONING
AB	ANCHOR BOLT
ABV	ABOVE
AC	ASPHALT CONCRETE
ACC	ACCESSIBLE
ACOUS	ACOUSTICAL
ADA	AMERICANS with DISABILITIES ACT
ADJ	ADJUSTABLE
AG	AGRICULTURAL
AIS	AGRICULTURAL INSPECTION STATION
ALT	ALTERNATE
ALUM	ALUMINUM
APA	AMERICAN PLYWOOD ASSOCIATION
ARB	AIR RESOURCES BOARD
ARCH	ARCHITECTURAL, ARCHITECT
ASPH	ASPHALT
BD	BOARD
BIT	BITUMINOUS
BLDG	BUILDING
BLK	BLOCK
BLKG	BLOCKING
BM	BEAM
BN	BOUNDARY NAILING
BOT	BOTTOM
BR	BRIDGE
BTM	BOTTOM
BTWN	BETWEEN
BUR	BUILT-UP ROOFING
CCTV	CLOSED CIRCUIT TV
CJ	CONTROL JOINT
CL	CHAIN LINK
CAB	CABINET
CB	CATCH BASIN
CEM	CEMENT
CER	CERAMIC
CFS	COLD FORMED STEEL
CH	CLOTHES HOOK
CIDH	CAST IN DRILLED HOLE
CIP	CAST IN PLACE
CKBD	CHALKBOARD
CLG	CEILING
CMU	CONCRETE MASONRY UNIT
CLO	CLOSET
CLR	CLEAR
COL	COLUMN
CONC	CONCRETE
CONN	CONNECTION
CONST	CONSTRUCTION
CONT	CONTINUOUS
CORR	CORRIDOR
CPT	CARPET
CT	CERAMIC TILE
CTR	CENTER
CTSK	COUNTERSUNK
CVEF	COMMERCIAL VEHICLE ENFORCEMENT FACILITY
CY	CUBIC YARD
D	DEPTH
DBL	DOUBLE
DEPT	DEPARTMENT
DET	DETAIL
DF	DOUGLAS FIR
DIA	DIAMETER
DIM	DIMENSION
DN	DOWN
DP	DEEP
DR	DOOR
DS	DOWNSPOUT
DWG	DRAWING
DWR	DRAWER
(E)	EXISTING
E	EAST
EA	EACH
EEWS	EMERGENCY EYE WASH & SHOWER
EF	EXHAUST FAN
EHD	ELECTRIC HAND DRYER
EIFS	EXTERIOR INSULATION FINISHING SYSTEM
EJ	EXPANSION JOINT
EL	ELEVATION (HEIGHT)
ELEC	ELECTRICAL
ELEV	ELEVATION (VIEW)
ELVR	ELEVATOR
EMER	EMERGENCY
EQ	EQUAL
EPB	ELECTRICAL PANEL BOARD
EQUIP	EQUIPMENT
ESCL	ESCALATOR
ETW	EDGE OF TRAVEL WAY
EWC	ELECTRIC WATER COOLER
EW/FD	EYE WASH/ SHOWER W/ FLOOR DRAIN
EXP	EXPANSION
EXPO	EXPOSED, EXPOSURE
EXT	EXTERIOR
EXTR	EXTRUDED
FD	FLOOR DRAIN
FDN	FOUNDATION
FE	FIRE EXTINGUISHER
FEC	FIRE EXTINGUISHER CABINET
FF	FINISH FLOOR
FG	FINISH GRADE
FH	FIRE HYDRANT
FHC	FIRE HOSE CABINET
FHMS	FLATHEAD METAL SCREW
FHWS	FLATHEAD WOOD SCREW
FIN	FINISH
FJ	FLOOR JOIST
FLASH	FLASHING
FLR	FLOOR
FLUOR	FLUORESCENT
FOC	FACE OF CONCRETE
FOF	FACE OF FINISH
FOM	FACE OF MASONRY
FOS	FACE OF STUD
FOT	FACE OF TILE
FRMG	FRAMING
FRPP	FIBERGLASS REINFORCED PLASTIC PANEL
FT	FEET, FOOT
FTG	FOOTING
FURR	FURRING
FWY	FREEWAY
GA	GAUGE
GAL	GALLON
GALV	GALVANIZED
GB	GRAB BAR
GI	GALVANIZED IRON
GL	GLASS
GLM	GLUE LAMINATED MEMBER
GLZ	GLAZING
GR	GRADE
GSM	GALVANIZED SHEET METAL
GYP	GYPSUM
GYP SHTG	GYPSUM SHEATHING
GYPBD/ GYP BD	GYPSUM BOARD GYPSUM BOARD
HB	HOSE BIB
HC	HOLLOW CORE
HD	HEAD, HOLD DOWN
HDR	HEADER
HDWD	HARDWOOD
HDWR	HARDWARE
HEX	HEXAGONAL
HF	HEMLOCK-FIR
HGR	HANGER
HM	HOLLOW METAL
HMA	HOT MIX ASPHALT
HORIZ	HORIZONTAL
HP	HIGH POINT
HR	HOUR
HSB	HIGH STRENGTH BOLT
HSS	HOLLOW STRUCT SECTION
HT	HEIGHT VENTILATING,
HVAC	HEATING, AIR CONDITIONING
HWY	HIGHWAY
ID	INSIDE DIAMETER
IDF	INTERMEDIATE DISTRIBUTION FRAME
IN	INCH
INFO	INFORMATION
INSUL	INSULATION
INT	INTERIOR
IT	INFORMATION TECHNOLOGY
ISA	INTERNATIONAL SYMBOL OF ACCESSIBILITY
JAN	JANITOR
JB	JUNCTION BOX
JH	JOIST HANGER
JST	JOIST
JT	JOINT
KIT	KITCHEN
L	LENGTH
LAB	LABORATORY
LAV	LAVATORY
LBF	POUND-FORCE
LKR	LOCKER
LLV	LONG LEG VERTICAL
LOL	LAYOUT LINE
LPG	LIQUIFIED PETROLEUM GAS
LS	LAG SCREW
LVR	LOUVER
M	METER
MAINT	MAINTENANCE
MDF	MAIN DISTRIBUTION FRAME
MAT	MATERIAL
MAX	MAXIMUM
MB	MACHINE BOLT
MBR	MEMBER
MECH	MECHANICAL
MEMB	MEMBRANE
MET	METAL
MTL	METAL
MF	METAL FRAME
MFR	MANUFACTURER
MFRD	MANUFACTURED
MH	MAN HOLE
MIN	MINIMUM
MIR	MIRROR
MISC	MISCELLANEOUS
MIW	MALLEABLE IRON WASHER
MKBD	MARKER BOARD
MO	MASONRY OPENING
MTD	MOUNTED
MUL	MULLION
N	NORTH
NA	NOT APPLICABLE
ND	NAPKIN DISPOSAL
NIC	NOT IN CONTRACT
NO	NUMBER
NOM	NOMINAL
NTS	NOT TO SCALE
OA	OVER ALL
OBSC	OBSCURE
OC	ON CENTER
OCC	OCCUPANTS, OCCUPANCY
OD	OUTSIDE DIAMETER
OFF	OFFICE
OFD	OVERFLOW DRAIN
OG	ORIGINAL GROUND
OH	OPPOSITE HAND
OHD	OVERHEAD
OHWS	OVALHEAD WOOD SCREW
OP	OPERATIONS
OPNG	OPENING
OPP	OPPOSITE
OPT	OPTION, OPTIONAL
P	PITCH
PB	POST BASE
PC	POST CAP
PCC	PORTLAND CEMENT CONCRETE
PDF	POWDER DRIVEN FASTENERS
PH	PHILLIPS HEAD
PL	PLATE
PLAM	PLASTIC LAMINATE
PLAS	PLASTER
PLYWD	PLYWOOD
PMF	PRESSED METAL FRAME
POT	PATH OF TRAVEL
PR	PAIR
PRTN	PARTITION
PT	POINT
PTD	PAPER TOWEL DISPENSER
PTD/R	PAPER TOWEL DISPENSER /RECEPTACLE
PVC	POLYVINYL CHLORIDE
PWB	PREFABRICATED WOOD I BEAM
PREFAB	PREFABRICATED
QT	QUARRY TILE
(R)	RELOCATED
R	RADIUS, RISER
R/W	RIGHT OF WAY
RD	ROOF DRAIN
RDWD	REDWOOD
REF	REFERENCE
REFG	REFRIGERATOR
REINF	REINFORCED(ING)
RFEC	RECESSED FIRE EXTINGUISHER CABINET
REQ	REQUIRED
RFG	ROOFING
RFSWN	ROUGHSAWN
RH	ROUND HEAD
RHWS	ROUND HEAD WOOD SCREWS
RJ	ROOF JOIST
RM	ROOM
RO	ROUGH OPENING
RSWN	RESAWN
S	SOUTH
SC	SOLID CORE
SCHED	SCHEDULE
SD	SOAP DISPENSER
SDST	SELF DRILLING SELF TAPPING
SF	SQUARE FEET/STORE FRONT
SH	SHELF
SHWR	SHOWER
SHT	SHEET
SHTG	SHEATHING
SIM	SIMILAR
SL	SCORE LINE
SMS	SHEET METAL SCREW
SOHD	SECTIONAL OVERHEAD DOOR
SPEC	SPECIFICATION
SPS	STRUCTURAL PLYWOOD SHEATHING
SQ	SQUARE
SRRA	SAFETY ROADSIDE REST AREA
SS	SERVICE SINK
SST	STAINLESS STEEL
STA	STATION
STAG	STAGGER
STD	STANDARD
STL	STEEL
STOR	STORAGE
STRUC	STRUCTURAL
SUSP	SUSPENDED
SWIM	SLOW-WEIGH-IN-MOTION
T	TREAD
T&G	TONGUE & GROOVE
TB	TOLL BOOTH
TC	TOP OF CONCRETE
TEL	TELEPHONE
TEMP	TEMPERED
TER	TERRAZZO
THK	THICK
THLD	THRESHOLD
TJ	TOOLED JOINT
TKBD	TACKBOARD
TN	TOE NAIL
TNVM	TAMPON/NAPKIN VENDING MACHINE
TOC	TOP OF CURB OR CONCRETE
TOP	TOP OF PAVEMENT
TOS	TOE OF SLOPE
TOS	TOP OF SLAB
TOT	TOTAL
TR	TRASH RECEPTACLE
TOW	TOP OF WALL
TS	TUBE STEEL
TSCD	TOILET SEAT COVER DISPENSER
TSF	TRANSOM SIDELIGHT FRAME
TTD	TOILET TISSUE DISPENSER
TTY	TELETYPEWRITER
TYP	TYPICAL
UNF	UNFINISHED
UON	UNLESS OTHERWISE NOTED
UR	URINAL
VAR	VARIES
VCT	VINYL COMPOSITION TILE
VEH	VEHICLE
VERT	VERTICAL
VEST	VESTIBULE
VR	VENT RISER
VMSS	VARIABLE MESSAGE SIGN SYSTEM
VTR	VENT THRU ROOF
W	WEST
W/	WITH
W/O	WITHOUT
WC	WATER CLOSET
WD	WOOD
WDW	WINDOW
WF	WIDE FLANGE
WH	WATER HEATER
WIM	WEIGH IN MOTION
WO	WOMEN
WP	WORKING POINT
WR	WATER RESISTANT
WSB	WEIGH STATION BYPASS
WSCT	WAINSCOT
WT	WEIGHT
WTPR	WATERPROOFING
WWF	WELDED WIRE FABRIC
YD	YARD

DIST.	COUNTY	ROUTE	POST MILES TOTAL PROJECT	SHEET NO.	TOTAL SHEETS
07	LA	210	R16.1/R25.8	859	927

LICENSED ARCHITECT — DATE

LICENSED ARCHITECT C.A. SANCHEZ No. C-15201 Exp. 12-31-2015 STATE OF CALIFORNIA

5-12-14
PLANS APPROVAL DATE

The State of California or its officers or agents shall not be responsible for the accuracy or completeness of scanned copies of this plan sheet.

CALIFORNIA STATE FIRE MARSHAL APPROVED
Approval of this plan does not authorize or approve any omission or deviation from applicable regulations. Final approval is subject to field inspection. One set of approved plans shall be available on the project site at all times.
Reviewed by: FRANCIS(SONNY)SOLICH
Approval date: March 27,2014

DESIGN CRITERIA

The building work on this project has been designed to conform to the 2010 title 24 california building code.

GENERAL NOTES

1. The contractor shall verify all controlling dimensions and field conditions before ordering or fabricating any materials or assemblies.
2. The contractor shall notify the engineer in writing of any discrepencies between these plans and actual measurements or field conditions.

SYMBOLS

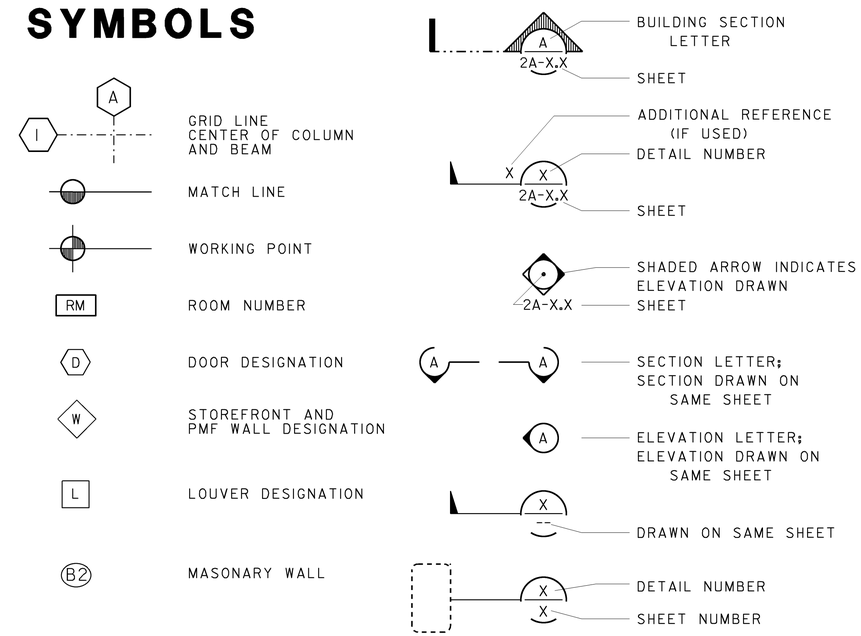

DESIGN	BY CARLOS SANCHEZ	CHECKED C.FAUST	
DETAILS	BY FAY KIOUMEHR	CHECKED D. LOWE	
QUANTITIES	BY	CHECKED	

STATE OF CALIFORNIA
DEPARTMENT OF TRANSPORTATION

DIVISION OF ENGINEERING SERVICES
ARCHITECTURAL AND STRUCTURAL DESIGN

BRIDGE NO. L5724
POST MILE X

PASADENA 210/134 TUNNELS CONTROL BUILDING
ARCHITECTURAL ABBREVIATIONS, SYMBOLS

SHEET A0-0.2

A0-0_2_Abbreviation.dgn
TAEMWW imperial Rev. 7/10 18-JUN-2014 12:04

ORIGINAL SCALE IN INCHES FOR REDUCED PLANS 0 1 2 3

UNIT 3597 CONTRACT No. 2881 U4
PROJECT NUMBER & PHASE 07140000851
EA 000000

DISREGARD PRINTS BEARING EARLIER REVISION DATES → - 07
REVISION DATES (PRELIMINARY STAGE ONLY)
SHEET X OF X

18-JUN-2014 12:04
A0-0_2_Abbreviation.dgn

DIST.	COUNTY	ROUTE	POST MILES TOTAL PROJECT	SHEET NO.	TOTAL SHEETS
07	LA	210	R16.1/R25.8	860	927

LICENSED ARCHITECT — DATE

LICENSED ARCHITECT C.A. SANCHEZ No. C-15201 Exp. 12-31-2015 STATE OF CALIFORNIA

5-12-14
PLANS APPROVAL DATE

The State of California or its officers or agents shall not be responsible for the accuracy or completeness of scanned copies of this plan sheet.

CALIFORNIA STATE FIRE MARSHAL APPROVED
Approval of this plan does not authorize or approve any omission or deviation from applicable regulations. Final approval is subject to field inspection. One set of approved plans shall be available on the project site at all times.
Reviewed by: FRANCIS(SONNY)SOLICH
Approval date: March 27,2014

FINISH SCHEDULE

Note: finish types listing continued on sheet

ROOM NUMBER	ROOM NAME	FLOOR: CONCRETE	BASE	WALLS NORTH: CONCRETE BLOCK, PAINTED	WALLS EAST: CONCRETE BLOCK, PAINTED	WALLS SOUTH: CONCRETE BLOCK, PAINTED	WALLS WEST: CONCRETE BLOCK, PAINTED	MISC	CEILING: GYPSUM BOARD PAINTED	APPROXIMATE CEILING HEIGHT	REMARKS, SPECIAL CONDITIONS
001	ROOM	X		X	X	X	X		X	VARIABLE	
002	UNCOVERED AREA	X		X	X	X	X			NA	

DOOR SCHEDULE

No.	DOOR TYPE	DOOR OPENING WIDTH	DOOR OPENING HEIGHT	DOOR THICK	DOOR MTL	DOOR FINISH	FRAME TYPE	FRAME MTL	FRAME WIDTH	FRAME FINISH	LABEL	DETAILS HEAD	DETAILS JAMB	DETAILS THRESHOLD	HDWR GROUP	SIGN	NOTES
1	A	6'-0"	8'-0"	1¾"	SST	PRE FINISH	-	SST	2"	PRE FINISH	NA	2/A0-0.3	3/A0-0.3	4/A0-0.3	NA	-	-
2	B	8'-0"	10'-0"	2"	SST	PRE FINISH	-	SST	2"	PRE FINISH	NA	NA	2/A0-0.4	NA	NA	-	-

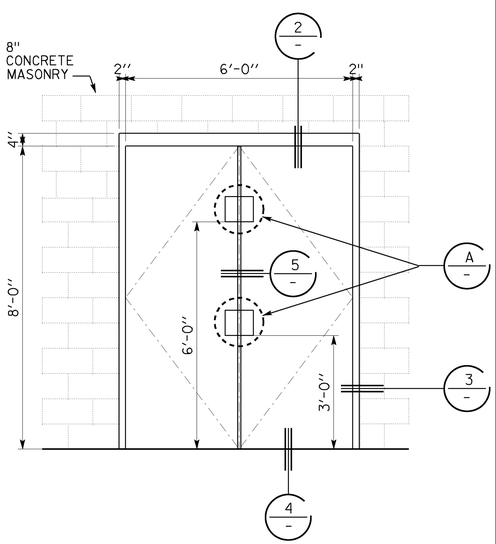

1 DOOR TYPE A
SCALE 1/2" = 1'-0"

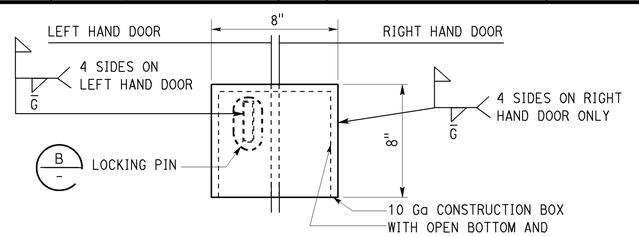

A LOCK BOX
NO SCALE
(TYPICAL TOP AND BOTTOM)

* DIMENSION TO BE DETERMINED BY ENGINEER

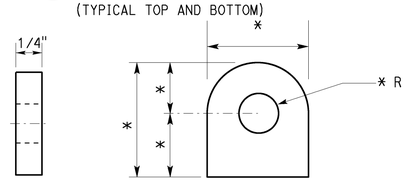

B LOCKING PIN
NO SCALE

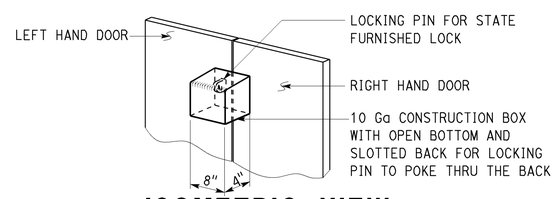

ALL COMPONENTS 316 SST

ISOMETRIC VIEW

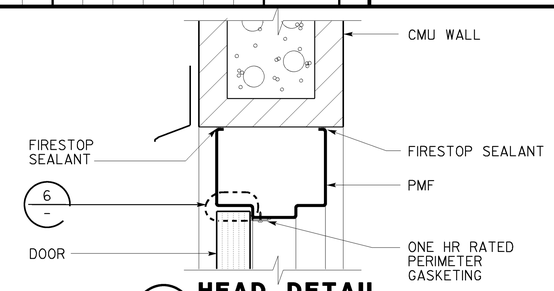

2 HEAD DETAIL
SCALE 3" = 1'-0"

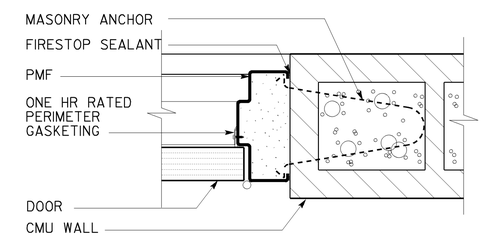

3 JAMB DETAIL
SCALE 3" = 1'-0"

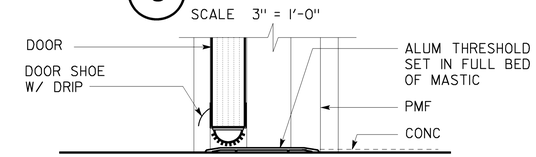

4 SILL DETAIL
SCALE 3" = 1'-0"

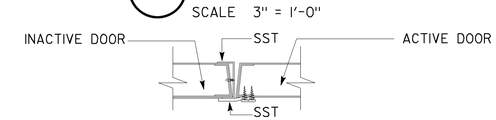

5 ASTRAGAL
SCALE 3" = 1'-0"

PAINT SCHEDULE

FEDERAL STANDARD COLORS

DESCRIPTION	NUMBERS
COLOR #1	21136
COLOR #2	21136
GYPBD (CEILING)	17860
MASONRY WALLS (INTERIOR-RM 001)	17778
MASONRY WALLS (UNCOVERED AREA INTERIOR)	17778
EXPOSED WOODWORK	20318
METAL ROOFING,	SIMILAR TO 21136
CONDUITS	SIMILAR TO 21136

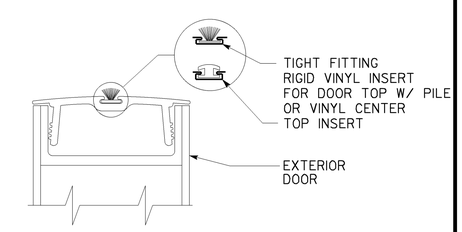

6 EXTERIOR DOOR TOP
NOT TO SCALE

DESIGN	BY CARLOS SANCHEZ	CHECKED C.FAUST	
DETAILS	BY FAY KIOUMEHR	CHECKED D. LOWE	
QUANTITIES	BY	CHECKED	

STATE OF CALIFORNIA
DEPARTMENT OF TRANSPORTATION

DIVISION OF ENGINEERING SERVICES
ARCHITECTURAL AND STRUCTURAL DESIGN

BRIDGE NO. L5724
POST MILE X

PASADENA 210/134
TUNNELS CONTROL BUILDING
SCHEDULE

SHEET A0-0.3

A0-0_3_sched.dgn
TAEMWW imperial Rev. 7/10 18-JUN-2014 12:04

ORIGINAL SCALE IN INCHES FOR REDUCED PLANS 0 1 2 3

UNIT 3597 CONTRACT No. 2881 U4
PROJECT NUMBER & PHASE 07140000851
EA 000000

DISREGARD PRINTS BEARING EARLIER REVISION DATES
REVISION DATES (PRELIMINARY STAGE ONLY) - 07
SHEET X OF X

18-JUN-2014 12:04
A0-0_3_sched.dgn

DIST.	COUNTY	ROUTE	POST MILES TOTAL PROJECT	SHEET NO.	TOTAL SHEETS
07	LA	210	R16.1/R25.8	861	927

LICENSED ARCHITECT DATE

LICENSED ARCHITECT C.A. SANCHEZ No. C-15201 Exp. 12-31-2015 STATE OF CALIFORNIA

5-12-14
PLANS APPROVAL DATE

The State of California or its officers or agents shall not be responsible for the accuracy or completeness of scanned copies of this plan sheet.

CALIFORNIA STATE FIRE MARSHAL APPROVED
Approval of this plan does not authorize or approve any omission or deviation from applicable regulations. Final approval is subject to field inspection. One set of approved plans shall be available on the project site at all times.
Reviewed by: FRANCIS(SONNY)SOLICH
Approval date: March 27,2014

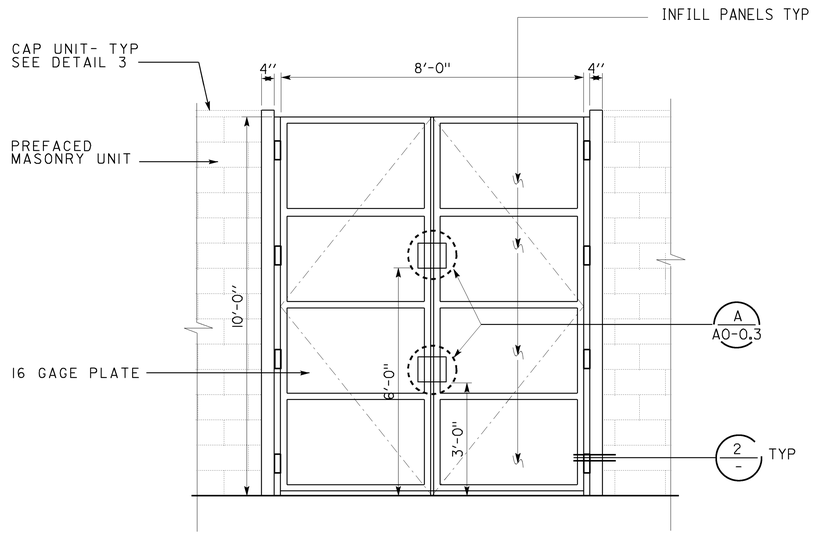

1 GATE TYPE B

SCALE 1/2" = 1'-0"

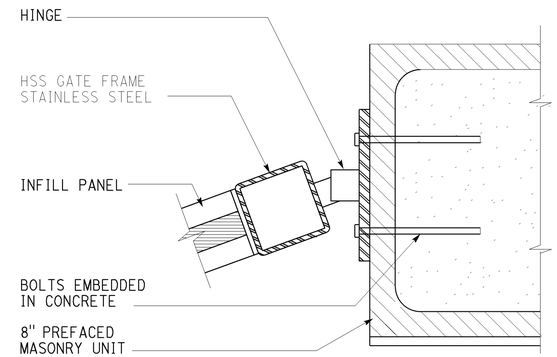

NOTES: ALL COMPONENTS ARE STAINLESS STEEL, TYPE 316

2 GATE JAMB

NOT TO SCALE

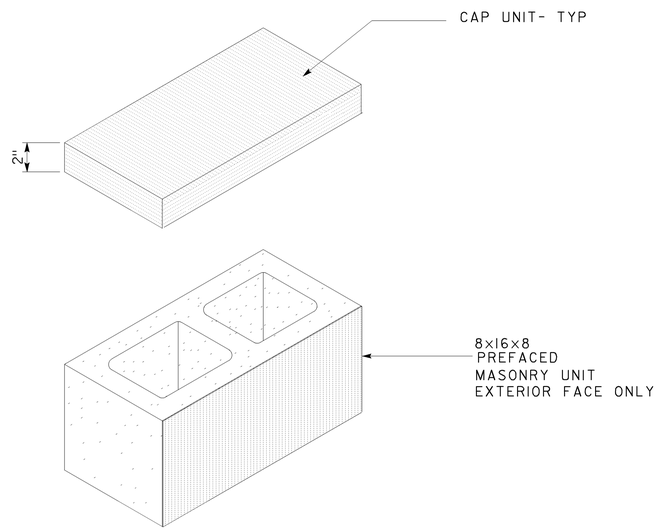

3 PREFACED MASONRY UNIT TYP

SCALE 1/2" = 1'-0"

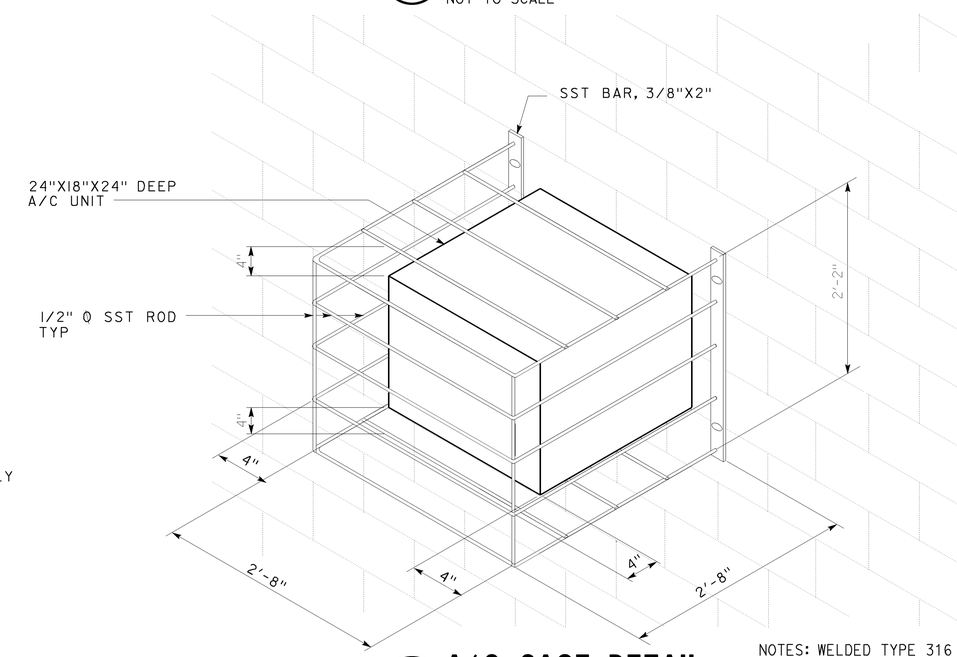

NOTES: WELDED TYPE 316 STAINLESS STEEL CONSTRUCTION BOLTED THROUGH THE WALL

4 A/C CAGE DETAIL

NOT TO SCALE

DESIGN	BY CARLOS SANCHEZ	CHECKED C.FAUST	
DETAILS	BY FAY KIOUMEHR	CHECKED D. LOWE	
QUANTITIES	BY	CHECKED	

STATE OF CALIFORNIA DEPARTMENT OF TRANSPORTATION

DIVISION OF ENGINEERING SERVICES
ARCHITECTURAL AND STRUCTURAL DESIGN

BRIDGE NO. L5724
POST MILE X

PASADENA 210/134 TUNNELS CONTROL BUILDING

GATE AND DETAIL

SHEET **A0-0.4**

A0-0_4door detail.dgn
TAEMWW imperial Rev. 7/10 18-JUN-2014 12:04

ORIGINAL SCALE IN INCHES FOR REDUCED PLANS 0 1 2 3

UNIT 3597 CONTRACT No. 2881 U4
PROJECT NUMBER & PHASE 07140000851
EA 000000

DISREGARD PRINTS BEARING EARLIER REVISION DATES

REVISION DATES (PRELIMINARY STAGE ONLY) - 07

SHEET X OF X

18-JUN-2014 12:04
A0-0_4door detail.dgn

DIST.	COUNTY	ROUTE	POST MILES TOTAL PROJECT	SHEET NO.	TOTAL SHEETS
07	LA	210	R16.1/R25.8	862	927

LICENSED ARCHITECT DATE

LICENSED ARCHITECT C.A. SANCHEZ No. C-15201 Exp. 12-31-2015 STATE OF CALIFORNIA

5-12-14
PLANS APPROVAL DATE

The State of California or its officers or agents shall not be responsible for the accuracy or completeness of scanned copies of this plan sheet.

CALIFORNIA STATE FIRE MARSHAL APPROVED
Approval of this plan does not authorize or approve any omission or deviation from applicable regulations. Final approval is subject to field inspection. One set of approved plans shall be available on the project site at all times.
Reviewed by: FRANCIS(SONNY)SOLICH
Approval date: March 27,2014

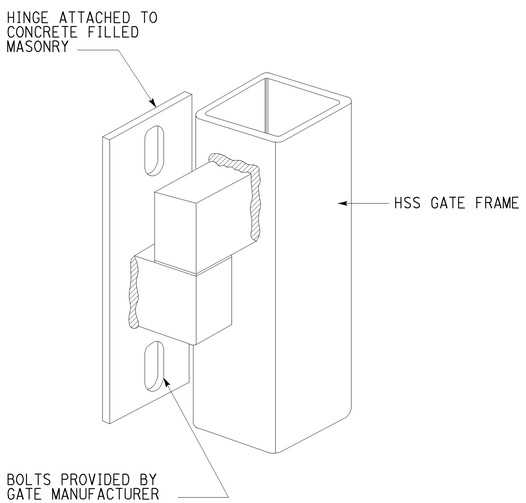

1 STEEL HINGE- HEAVY DUTY

SCALE: NTS

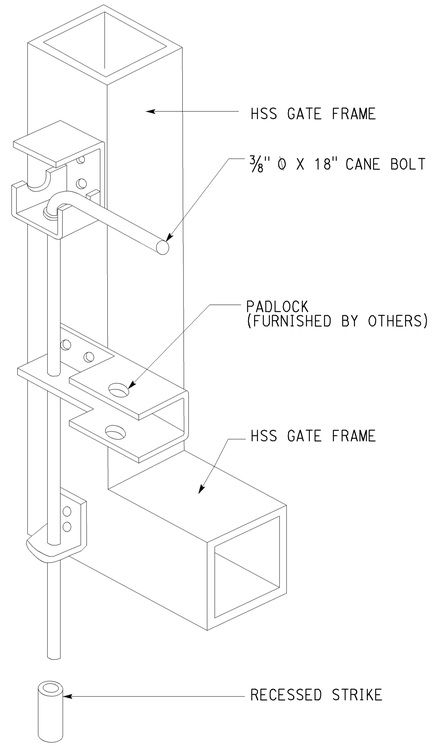

2 LOCKABLE CANE BOLT

SCALE: NTS

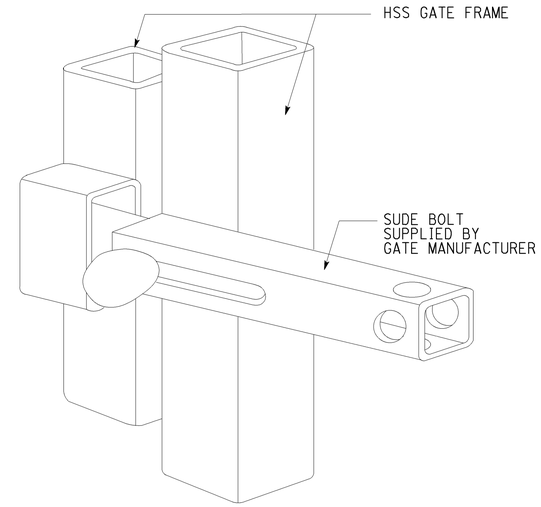

3 GATE SLIDE BOLT

SCALE: NTS

DESIGN	BY CARLOS SANCHEZ	CHECKED C.FAUST	
DETAILS	BY FAY KIOUMEHR	CHECKED D. LOWE	
QUANTITIES	BY	CHECKED	

STATE OF CALIFORNIA DEPARTMENT OF TRANSPORTATION

DIVISION OF ENGINEERING SERVICES ARCHITECTURAL AND STRUCTURAL DESIGN

BRIDGE NO. L5724 | POST MILE X

PASADENA 210/134 TUNNELS CONTROL BUILDING

GATE DETAILS

SHEET A0-0.5

AO-0_5 GATE DETAILS.dgn
TAEMWW imperial Rev. 7/10 18-JUN-2014 12:04

ORIGINAL SCALE IN INCHES FOR REDUCED PLANS 0 1 2 3

UNIT 3597 CONTRACT No. 2881 U4
PROJECT NUMBER & PHASE 07140000851
EA 000000

DISREGARD PRINTS BEARING EARLIER REVISION DATES → - 07

REVISION DATES (PRELIMINARY STAGE ONLY) SHEET X OF X

18-JUN-2014 12:04
AO-0_5 GATE DETAILS.dgn

DIST.	COUNTY	ROUTE	POST MILES TOTAL PROJECT	SHEET NO.	TOTAL SHEETS
07	LA	210	R16.1/R25.8	863	927

LICENSED ARCHITECT DATE

LICENSED ARCHITECT C.A. SANCHEZ No. C-15201 Exp. 12-31-2015 STATE OF CALIFORNIA

5-12-14
PLANS APPROVAL DATE

The State of California or its officers or agents shall not be responsible for the accuracy or completeness of scanned copies of this plan sheet.

CALIFORNIA STATE FIRE MARSHAL APPROVED
Approval of this plan does not authorize or approve any omission or deviation from applicable regulations. Final approval is subject to field inspection. One set of approved plans shall be available on the project site at all times.
Reviewed by: FRANCIS(SONNY)SOLICH
Approval date: March 27,2014

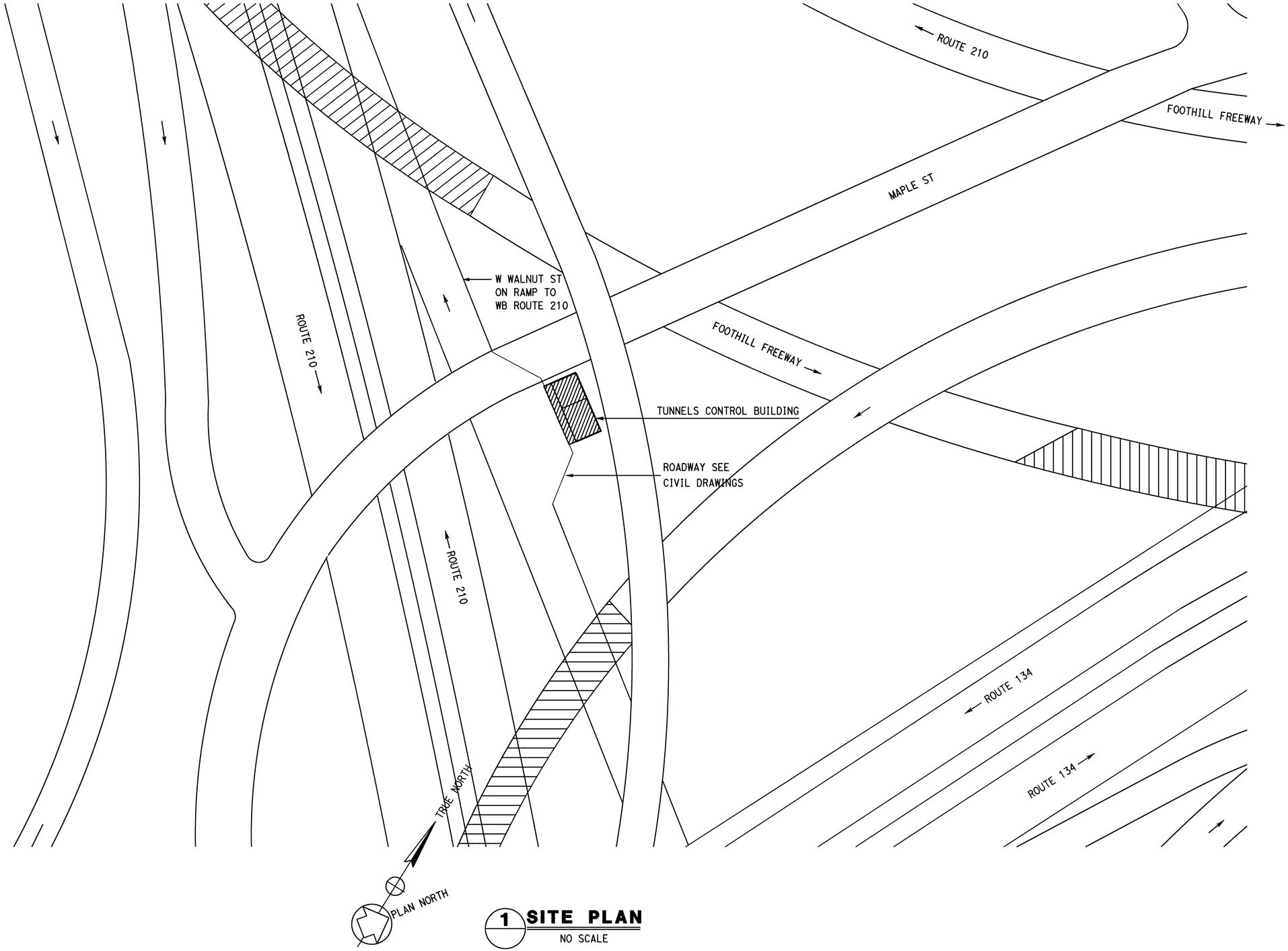

1 SITE PLAN
NO SCALE

DESIGN	BY CARLOS SANCHEZ	CHECKED C.FAUST	
DETAILS	BY FAY KIOUMEHR	CHECKED D. LOWE	
QUANTITIES	BY	CHECKED	

STATE OF CALIFORNIA DEPARTMENT OF TRANSPORTATION

DIVISION OF ENGINEERING SERVICES
ARCHITECTURAL AND STRUCTURAL DESIGN

BRIDGE NO. L5724
POST MILE X

PASADENA 210/134 TUNNELS CONTROL BUILDING
SITE PLAN

SHEET **A0-1**

A0-1 SITE PLAN.dgn
TAEMWW imperial Rev. 7/10 18-JUN-2014 12:04

ORIGINAL SCALE IN INCHES FOR REDUCED PLANS 0 1 2 3

UNIT 3597 CONTRACT No. 2881 U4
PROJECT NUMBER & PHASE 07140000851
EA 000000

DISREGARD PRINTS BEARING EARLIER REVISION DATES → 7-29-13

REVISION DATES (PRELIMINARY STAGE ONLY) SHEET OF

18-JUN-2014 12:04
A0-1 SITE PLAN.dgn

DIST.	COUNTY	ROUTE	POST MILES TOTAL PROJECT	SHEET NO.	TOTAL SHEETS
07	LA	210	R16.1/R25.8	864	927

LICENSED ARCHITECT DATE

LICENSED ARCHITECT C.A. SANCHEZ No. C-15201 Exp. 12-31-2015 STATE OF CALIFORNIA

5-12-14
PLANS APPROVAL DATE

The State of California or its officers or agents shall not be responsible for the accuracy or completeness of scanned copies of this plan sheet.

CALIFORNIA STATE FIRE MARSHAL APPROVED
Approval of this plan does not authorize or approve any omission or deviation from applicable regulations. Final approval is subject to field inspection. One set of approved plans shall be available on the project site at all times.
Reviewed by: FRANCIS (SONNY) SOLICH
Approval date: March 27,2014

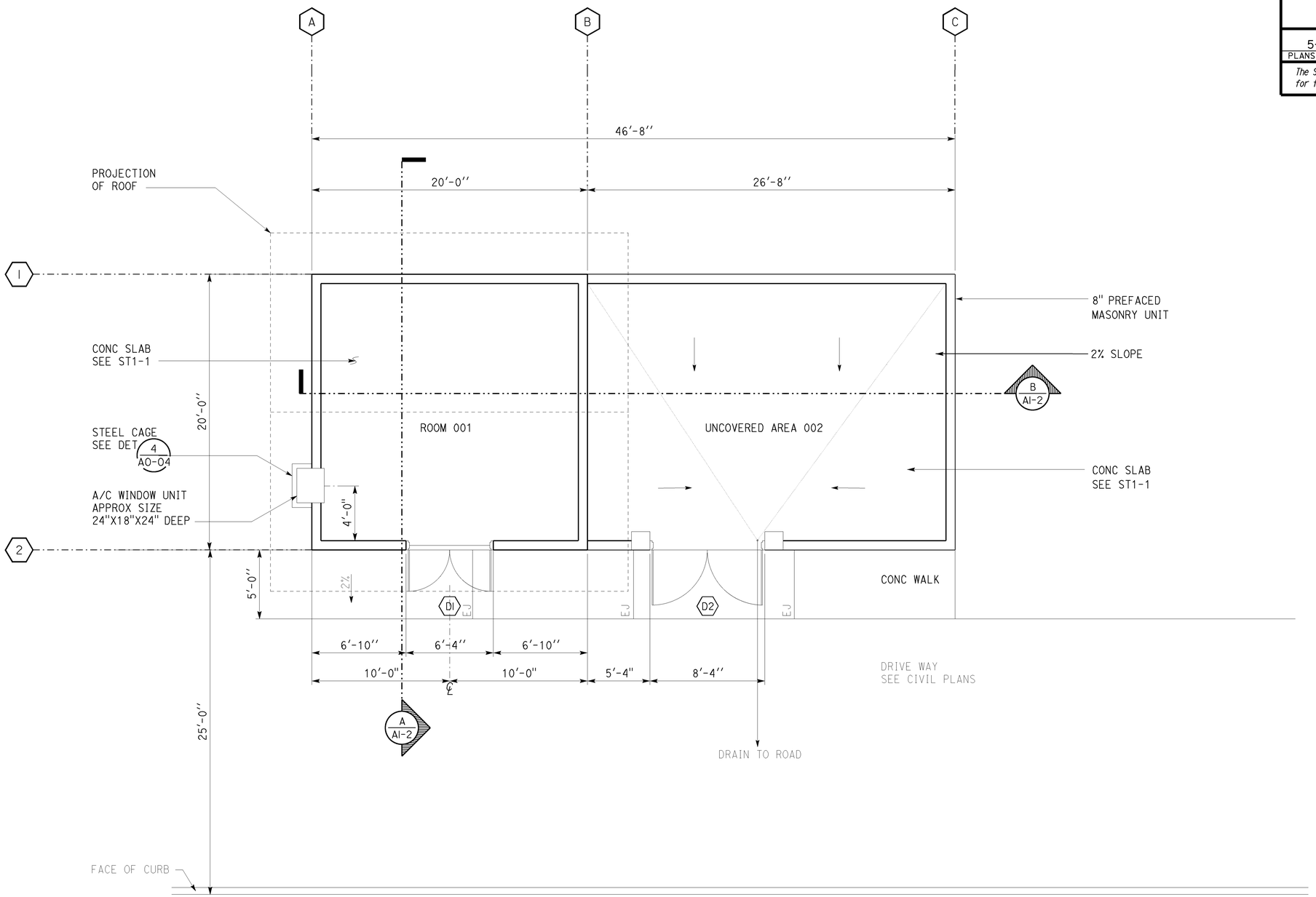

1 FLOOR PLAN

SCALE: 1/4"=1'-0"

DESIGN	BY CARLOS SANCHEZ	CHECKED C.FAUST	
DETAILS	BY FAY KIOUMEHR	CHECKED D. LOWE	
QUANTITIES	BY	CHECKED	

STATE OF CALIFORNIA DEPARTMENT OF TRANSPORTATION

DIVISION OF ENGINEERING SERVICES ARCHITECTURAL AND STRUCTURAL DESIGN

BRIDGE NO. L5724 POST MILE X

PASADENA 210/134 TUNNELS CONTROL BUILDING

FLOOR PLAN

SHEET **A1-0**

A1-0 FLOOR PLAN.dgn
TAEMWW imperial Rev. 7/10 18-JUN-2014 12:04

ORIGINAL SCALE IN INCHES FOR REDUCED PLANS 0 1 2 3

UNIT 3597 CONTRACT No. 2881 U4
PROJECT NUMBER & PHASE 07140000851

DISREGARD PRINTS BEARING EARLIER REVISION DATES → REVISION DATES (PRELIMINARY STAGE ONLY) - 07 SHEET X OF X

EA 000000

A1-0 FLOOR PLAN.dgn 18-JUN-2014 12:04

DIST.	COUNTY	ROUTE	POST MILES TOTAL PROJECT	SHEET NO.	TOTAL SHEETS
07	LA	210	R16.1/R25.8	865	927

LICENSED ARCHITECT DATE

LICENSED ARCHITECT C.A. SANCHEZ No. C-15201 Exp. 12-31-2015 STATE OF CALIFORNIA

5-12-14
PLANS APPROVAL DATE

The State of California or its officers or agents shall not be responsible for the accuracy or completeness of scanned copies of this plan sheet.

CALIFORNIA STATE FIRE MARSHAL APPROVED
Approval of this plan does not authorize or approve any omission or deviation from applicable regulations. Final approval is subject to field inspection. One set of approved plans shall be available on the project site at all times.
Reviewed by: FRANCIS(SONNY)SOLICH
Approval date: March 27,2014

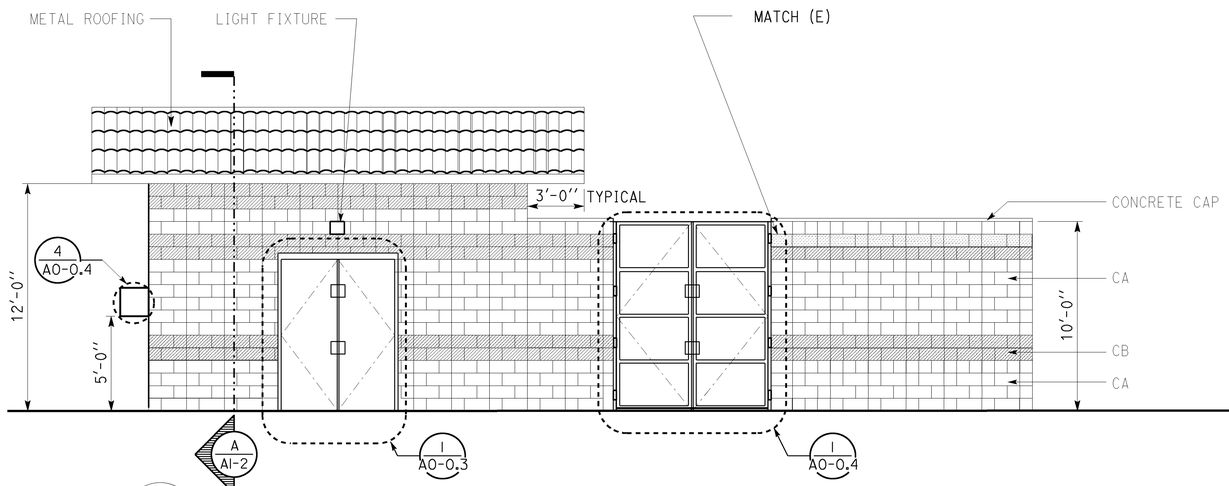

1 SOUTH ELEVATION
SCALE: 1/4"=1'-0"

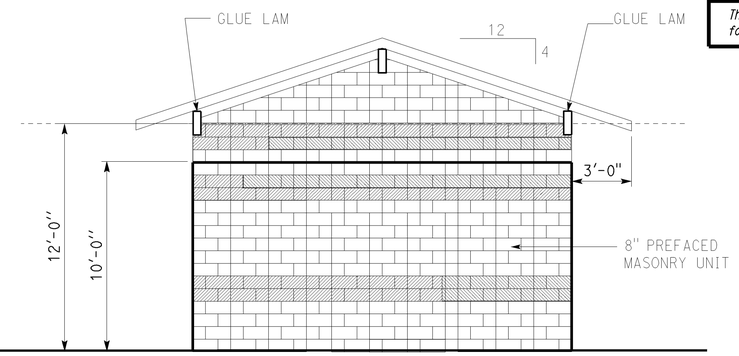

2 EAST ELEVATION
SCALE: 1/4"=1'-0"

PREFACED MASONRY UNIT COLOR SCHEDULE

	DESCRIPTION	SYMBOL
1	D-208 ROSE PINK A LR 45 TYP	CA
2	S-46 LIGHT SWEDISH RED LR 25	CB

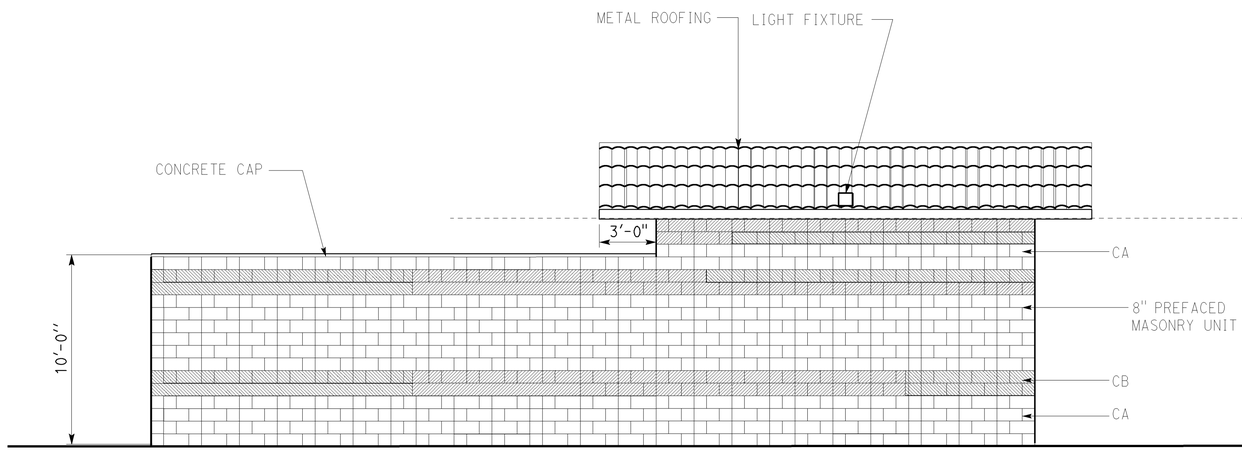

3 NORTH ELEVATION
SCALE: 1/4"=1'-0"

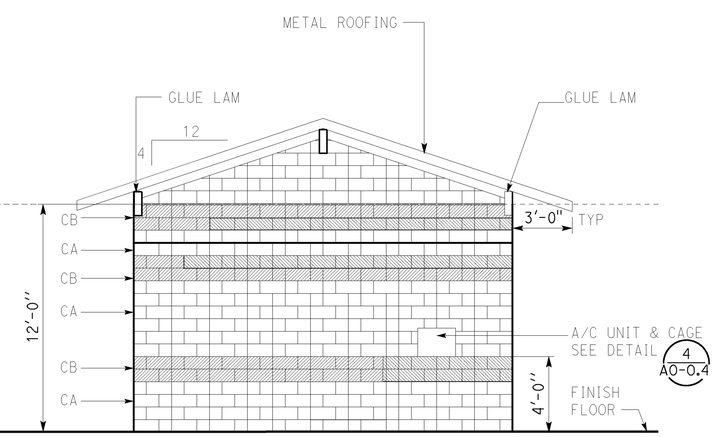

4 WEST ELEVATION
SCALE: 1/4"=1'-0"

DESIGN	BY CARLOS SANCHEZ	CHECKED C.FAUST	
DETAILS	BY FAY KIOUMEHR	CHECKED D. LOWE	
QUANTITIES	BY	CHECKED	

STATE OF CALIFORNIA
DEPARTMENT OF TRANSPORTATION

DIVISION OF ENGINEERING SERVICES
ARCHITECTURAL AND STRUCTURAL DESIGN

BRIDGE NO. L5724
POST MILE X

PASADENA 210/134 TUNNELS CONTROL BUILDING
ELEVATIONS

SHEET **A1-1**

A1-1 ELEVATIONS.dgn
TAEMWW imperial Rev. 7/10 18-JUN-2014 12:04

ORIGINAL SCALE IN INCHES FOR REDUCED PLANS 0 1 2 3

UNIT 3597 CONTRACT No. 2881 U4
PROJECT NUMBER & PHASE 07140000851
EA 000000

DISREGARD PRINTS BEARING EARLIER REVISION DATES → - -07

REVISION DATES (PRELIMINARY STAGE ONLY) SHEET X OF X

18-JUN-2014 12:04
A1-1 ELEVATIONS.dgn

DIST.	COUNTY	ROUTE	POST MILES TOTAL PROJECT	SHEET NO.	TOTAL SHEETS
07	LA	210	R16.1/R25.8	866	927

LICENSED ARCHITECT DATE

LICENSED ARCHITECT C.A. SANCHEZ No. C-15201 Exp. 12-31-2015 STATE OF CALIFORNIA

5-12-14
PLANS APPROVAL DATE

The State of California or its officers or agents shall not be responsible for the accuracy or completeness of scanned copies of this plan sheet.

CALIFORNIA STATE FIRE MARSHAL APPROVED
Approval of this plan does not authorize or approve any omission or deviation from applicable regulations. Final approval is subject to field inspection. One set of approved plans shall be available on the project site at all times.
Reviewed by: FRANCIS(SONNY)SOLICH
Approval date: March 27,2014

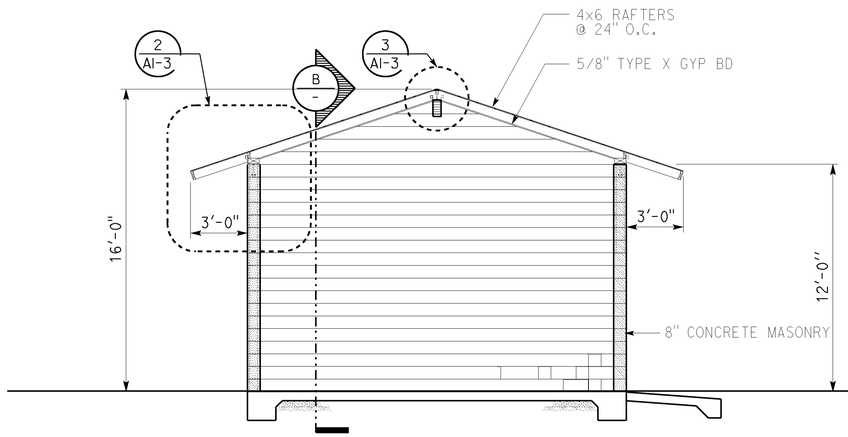

A - SECTION
SCALE: 1/4"=1'-0"

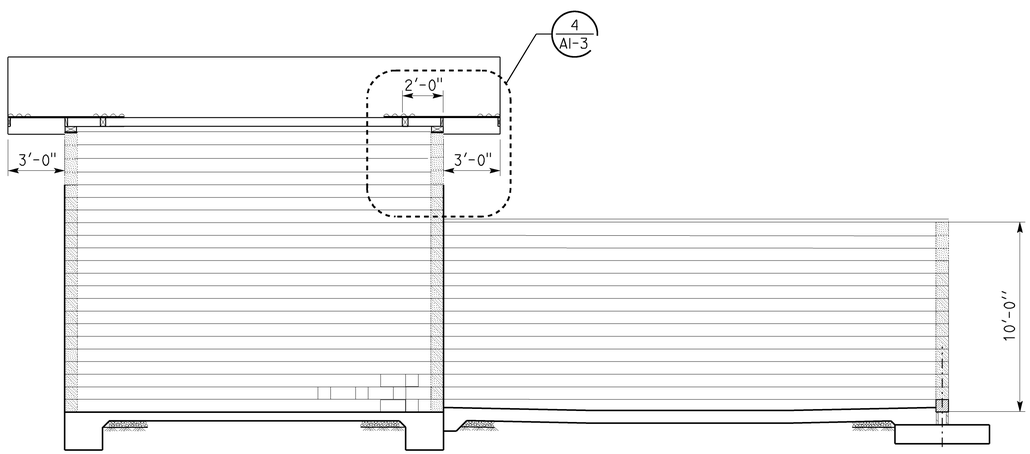

B - SECTION
SCALE: 1/4"=1'-0"

DESIGN	BY CARLOS SANCHEZ	CHECKED C.FAUST	
DETAILS	BY FAY KIOUMEHR	CHECKED D. LOWE	
QUANTITIES	BY	CHECKED	

STATE OF CALIFORNIA
DEPARTMENT OF TRANSPORTATION

DIVISION OF ENGINEERING SERVICES
ARCHITECTURAL AND STRUCTURAL DESIGN

BRIDGE NO. L5724
POST MILE X

PASADENA 210/134 TUNNELS CONTROL BUILDING
SECTIONS

SHEET **A1-2**

A1-2 SECTIONS.dgn
TAEMWW imperial Rev. 7/10 18-JUN-2014 12:04

ORIGINAL SCALE IN INCHES FOR REDUCED PLANS 0 1 2 3

UNIT 3597 CONTRACT No. 2881 U4
PROJECT NUMBER & PHASE 07140000851

DISREGARD PRINTS BEARING EARLIER REVISION DATES →
REVISION DATES (PRELIMINARY STAGE ONLY) - -07
SHEET X OF X

EA 000000

A1-2 SECTIONS.dgn 18-JUN-2014 12:04

DIST.	COUNTY	ROUTE	POST MILES TOTAL PROJECT	SHEET NO.	TOTAL SHEETS
07	LA	210	R16.1/R25.8	867	927

LICENSED ARCHITECT — DATE

LICENSED ARCHITECT C.A. SANCHEZ No. C-15201 Exp. 12-31-2015 STATE OF CALIFORNIA

5-12-14
PLANS APPROVAL DATE

The State of California or its officers or agents shall not be responsible for the accuracy or completeness of scanned copies of this plan sheet.

CALIFORNIA STATE FIRE MARSHAL APPROVED
Approval of this plan does not authorize or approve any omission or deviation from applicable regulations. Final approval is subject to field inspection. One set of approved plans shall be available on the project site at all times.
Reviewed by: FRANCIS (SONNY) SOLICH
Approval date: March 27, 2014

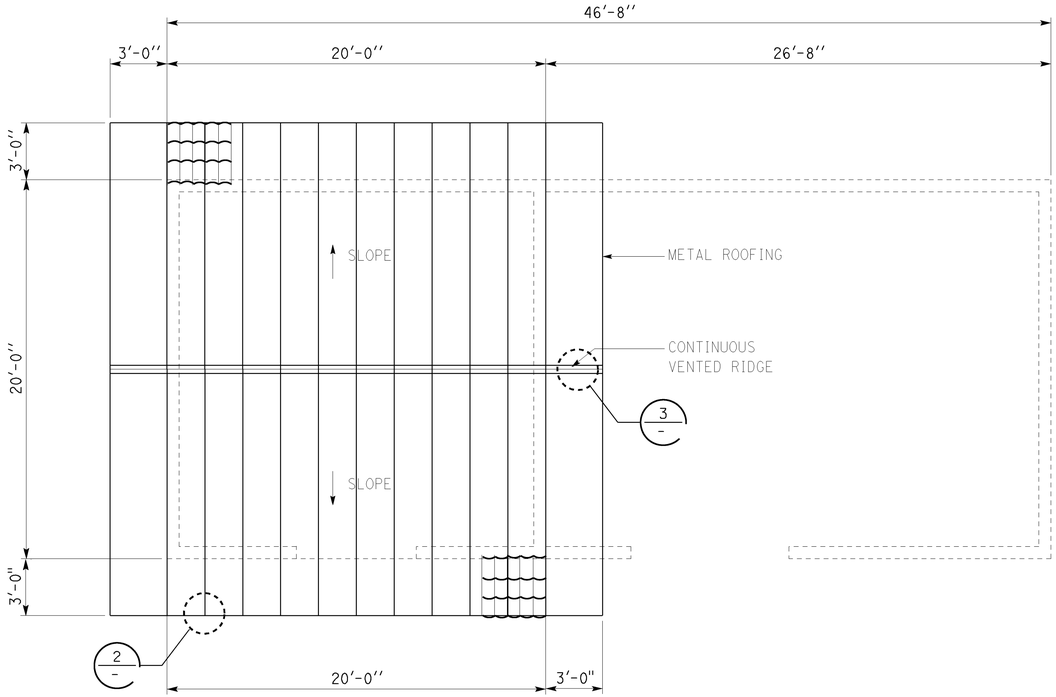

1 ROOF PLAN
SCALE: 1/4"=1'-0"

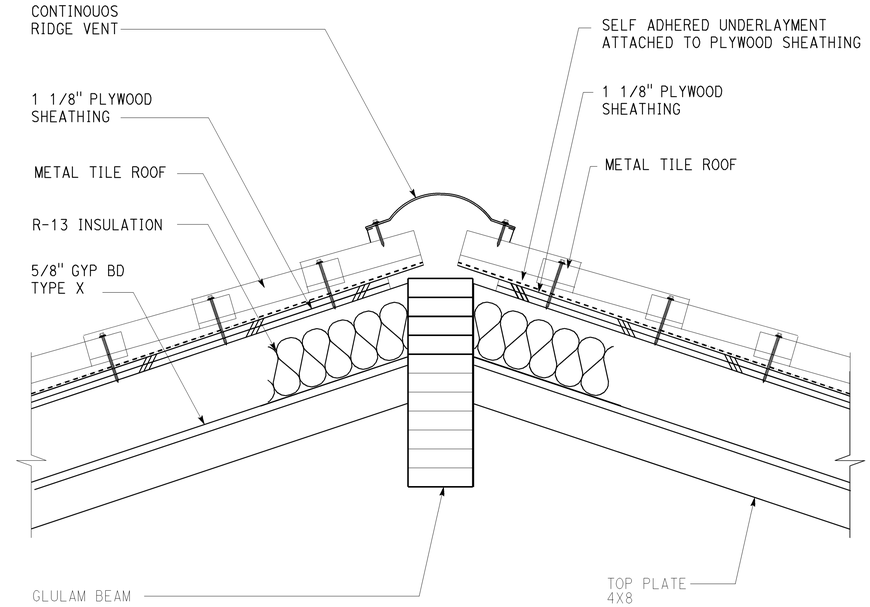

3 RIDGE DETAIL
SCALE: 2" = 1'- 0"

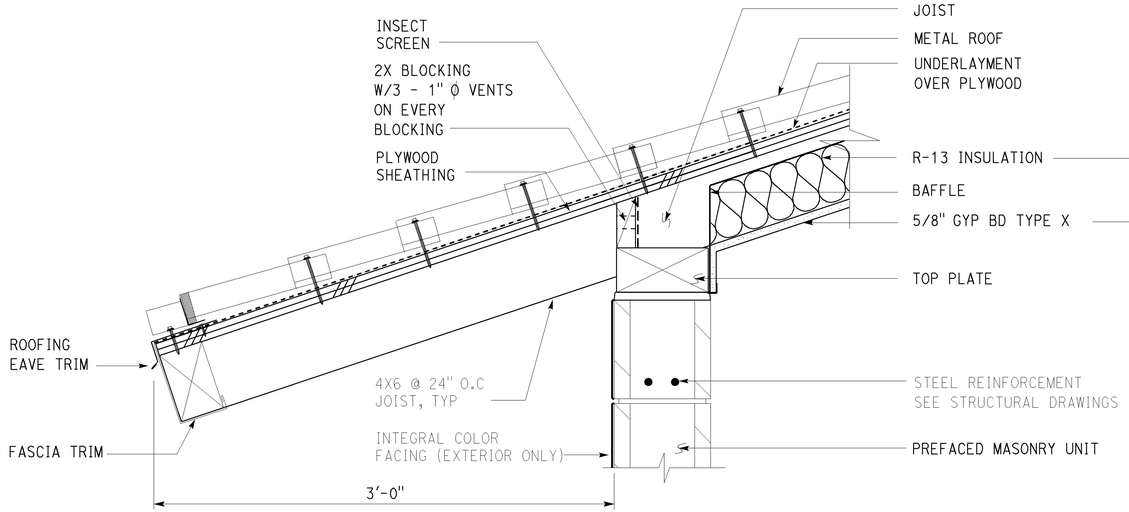

2 ROOF SECTION
SCALE: 2" = 1'- 0"

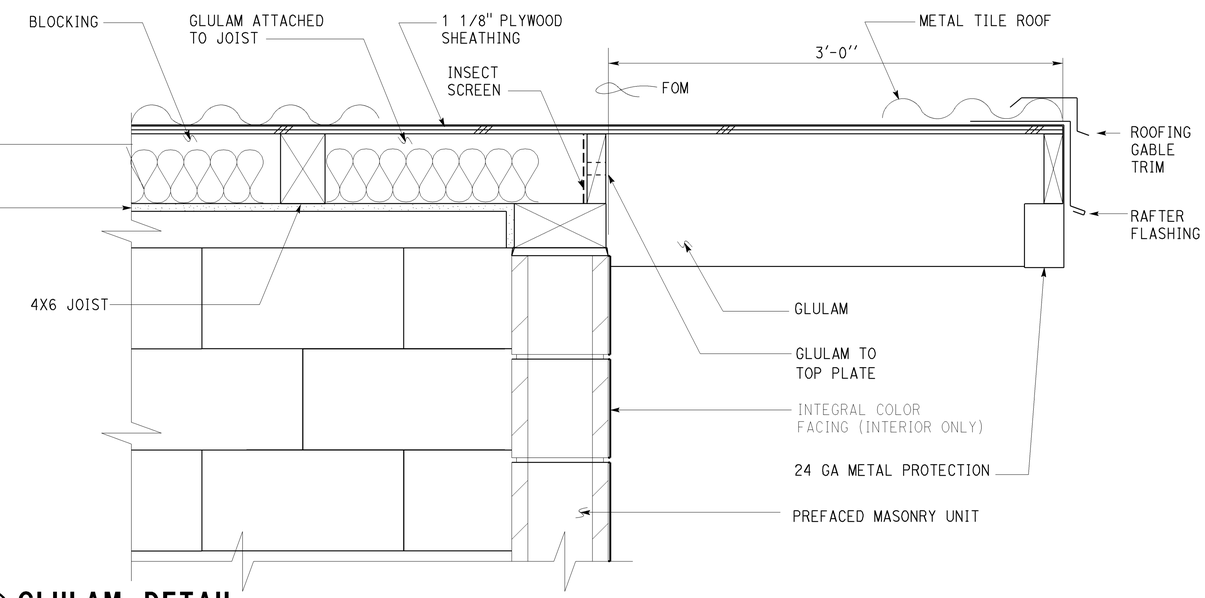

4 GLULAM DETAIL
SCALE: 2" = 1'- 0"

DESIGN	BY CARLOS SANCHEZ	CHECKED C.FAUST	
DETAILS	BY FAY KIOUMEHR	CHECKED D. LOWE	
QUANTITIES	BY	CHECKED	

STATE OF CALIFORNIA DEPARTMENT OF TRANSPORTATION

DIVISION OF ENGINEERING SERVICES ARCHITECTURAL AND STRUCTURAL DESIGN

BRIDGE NO. L5724 POST MILE X

PASADENA 210/134 TUNNELS CONTROL BUILDING

ROOF PLAN AND DETAILS

SHEET **A1-3**

A1-3 ROOF PLAN.dgn
TAEMWW imperial Rev. 7/10 18-JUN-2014 12:04

ORIGINAL SCALE IN INCHES FOR REDUCED PLANS 0 1 2 3

UNIT 3597 CONTRACT No. 2881 U4
PROJECT NUMBER & PHASE 07140000851
EA 000000

DISREGARD PRINTS BEARING EARLIER REVISION DATES → REVISION DATES (PRELIMINARY STAGE ONLY) - 07 SHEET X OF X

18-JUN-2014 12:04
A1-3 ROOF PLAN.dgn

Dist	COUNTY	ROUTE	POST MILES TOTAL PROJECT	SHEET No.	TOTAL SHEETS
07	LA	210	R16.1/R25.8	868	927

Jaswinder S Sandhu 04-25-14
REGISTERED ELECTRICAL ENGINEER DATE

5-12-14
PLANS APPROVAL DATE

REGISTERED PROFESSIONAL ENGINEER Jaswinder Sandhu No. 11803 Exp. 9-30-14 ELEC STATE OF CALIFORNIA

The State of California or its officers or agents shall not be responsible for the accuracy or completeness of scanned copies of this plan sheet.

CALIFORNIA STATE FIRE MARSHAL APPROVED
Approval of this plan does not authorize or approve any omission or deviation from applicable regulations. Final approval is subject to field inspection. One set of approved plans shall be available on the project site at all times.
Reviewed by: FRANCIS(SONNY)SOLICH
Approval date: March 27,2014

GRAPHIC SYMBOLS FOR ELECTRICAL WIRING AND LAYOUT DIAGRAMS

SYMBOL	DESCRIPTION
	POLE-TOP ELECTROLIER
	POLE-ARM ELECTROLIER
CEILING / WALL	
S / S	SURFACE FLUORESCENT, METAL HALIDE, LED, OR SODIUM VAPOR FIXTURE
R / R	RECESSED FLUORESCENT, METAL HALIDE, LED, OR SODIUM VAPOR FIXTURE
X / X	EXIT LIGHT
	SURFACE OR PENDANT INDIVIDUAL FLUORESCENT OR LED FIXTURE
R	RECESSED INDIVIDUAL FLUORESCENT OR LED FIXTURE
	SURFACE OR PENDANT CONTINUOUS ROW FLUORESCENT OR LED FIXTURES

NOTE: A LOWER CASE LETTER NEAR GRAPHIC LIGHTING FIXTURE SYMBOL DENOTES THAT FIXTURE IS CONTROLLED BY A SIMILARLY MARKED SWITCH, AN ALPHA-NUMERIC SYMBOL NEAR GRAPHIC LIGHTING FIXTURE SYMBOL DENOTES FIXTURE TYPE, (I=INCANDESCENT, F=FLUORESCENT, MH=METAL HALIDE, H=HIGH PRESSURE SODIUM VAPOR, L=LED), DESIGN TYPE, NUMBER OF LAMPS AND WATTAGE.

EXAMPLE : (4) F2-2x32
- 32 WATT LAMPS
- 2 LAMPS
- DESIGN TYPE
- FLUORESCENT
- NUMBER OF FIXTURES

SYMBOL	DESCRIPTION
B / B	BLANK OUTLET
J / J	JUNCTION BOX
D	DROP CORD
	FOURPLEX RECEPTACLE OUTLET
	DUPLEX RECEPTACLE OUTLET
(GFCI)	DUPLEX RECEPTACLE OUTLET (WITH GFCI)
(GFCI) WP	DUPLEX RECEPTACLE OUTLET, WEATHERPROOF (WITH GFCI)
	SINGLE, SPECIAL PURPOSE RECEPTACLE OUTLET
	DUPLEX, SPECIAL PURPOSE RECEPTACLE OUTLET
R	RANGE OUTLET
C	CLOCK HANGER RECEPTACLE
F	FAN HANGER RECEPTACLE
	FLOOR SINGLE RECEPTACLE OUTLET
	FLOOR DUPLEX RECEPTACLE OUTLET
	FLOOR SPECIAL PURPOSE OUTLET
	FLOOR RADIO OUTLET
	FLOOR TELEPHONE OUTLET
	MULTI-FLOOR OUTLET, 2 OR MORE GANG
	MULTI-OUTLET ASSEMBLY
S	SWITCH AND SINGLE RECEPTACLE
S	SWITCH AND DUPLEX RECEPTACLE
	RADIO OUTLET
	COMMUNICATION OUTLET
	SOUND SYSTEM LOUD SPEAKER OUTLET
R	RADIO OUTLET
TV	TELEVISION OUTLET
M	MICROPHONE OUTLET
T	THERMOSTAT

SYMBOL	DESCRIPTION
S	SINGLE-POLE SWITCH
S_2	DOUBLE-POLE SWITCH
S_3	THREE-WAY SWITCH
S_4	FOUR-WAY SWITCH
S_D	AUTOMATIC DOOR
S_K	KEY OPERATED SWITCH
S_P	SWITCH AND PILOT LIGHT
S_{MC}	MOMENTARY CONTACT SWITCH
S_{RC}	REMOTE CONTROL SWITCH
S_{WP}	WEATHERPROOF SWITCH
S_F	FAN SWITCH
S_L	LIGHT SWITCH
S_H	HEATER SWITCH
S_{VS}	VARIABLE SPEED MOTOR CONTROL SWITCH
S_{CHLF}	TWO TIMER SWITCHES, ONE SWITCH FOR LIGHT AND FAN AND ONE SWITCH FOR HEAT LAMP
S^O_1	OCCUPANCY SENSOR WALL SWITCH, SINGLE LEVEL
S^O_2	OCCUPANCY SENSOR WALL SWITCH, BILEVEL
S_M	MOTION SENSOR SWITCH
S_T	MANUAL MOTOR STARTING SWITCH, THERMAL OVERLOAD TYPE
S_{HP}	MANUAL MOTOR STARTING SWITCH, WITHOUT OVERLOAD ELEMENT
TS	EXHAUST FAN TIMER SWITCH
	PUSHBUTTON
L	PUSHBUTTON STATION, NC, WITH LOCKING DEVICE FOR OPEN
	PUSHBUTTON STATION MOTOR CONTROL
	BUZZER
FB	FIRE ALARM BELL
	COMBINATION BELL-BUZZER
PS	PRESSURE SWITCH
CR	CONTROL RELAY
FS	FLOW SWITCH
PEU	PHOTOELECTRIC UNIT
C	HAND DRYER NOZZLE
H	HAND DRYER
	FLUSH-MOUNTED PANELBOARD AND CABINET
	SURFACE-MOUNTED PANELBOARD AND CABINET
	LIGHTING PANEL
	POWER PANEL
	COMBINATION LIGHTING AND POWER
MC	MOTOR CONTROLLER
	DISCONNECT SWITCH
	CONDUIT CONCEALED IN CEILING OR WALL
	CONDUIT CONCEALED IN FLOOR
	CONDUIT EXPOSED
	CROSS-LINES INDICATE NUMBER OF #12 AWG CONDUCTORS. LONGER CROSS-LINE INDICATES 1#12 AWG (G) FOR EQUIPMENT GROUNDING CONDUCTOR. NO CROSS-LINE INDICATES 2#12 WITH 1#12 (G) UNLESS OTHERWISE NOTED. ALL CONDUIT MUST BE ½" UNLESS OTHERWISE NOTED.
A1,2	HOMERUN TO PANELBOARD, ARROWS INDICATE NUMBER OF CIRCUITS, LETTER DENOTES PANELBOARD, NUMERAL DENOTES CIRCUIT

SYMBOL	DESCRIPTION
SM	SURFACE METAL RACEWAY
(2) ½"C, PVC, 2#12	CONDUCTOR INFO (PER CONDUIT); CONDUIT TYPE; CONDUIT SIZE; NUMBER OF CONDUITS (NO NUMBER INDICATES ONE CONDUIT)
MC	CONDUIT, RIGID STEEL, UNDERGROUND
PVC	CONDUIT, POLYVINYL CHLORIDE, UNDERGROUND
	CONDUIT, FLEXIBLE
	CONDUIT, TURN UP
	CONDUIT, TURN DOWN
	CONDUIT SEAL, EXPLOSION-PROOF
X	CONDUIT, EXPANSION JOINT
	ADAPTER, ONE TYPE CONDUIT TO ANOTHER
	POLE
OC	OCCUPANCY SENSOR
P	OCCUPANCY SENSOR POWER PACK
P	MANUAL PULL STATION
AV	AUDIO/VISUAL ALARM DEVICE
H	HEAT DETECTOR
S	SMOKE DETECTOR
G	GLASS BREAK DISCRIMINATOR
C	MAGNETIC CONTACT SWITCH-PEDESTRIAN DOOR
C	MAGNETIC CONTACT SWITCH-VEHICLE DOOR
K	KEYPAD FOR ALARM SYSTEM
MDH	MECHANICAL DOOR HARDWARE
ARM	ADDRESSABLE RELAY MODULE
PD	PANIC DEVICE
CM	COMBINATION MOTION DETECTOR/PASSIVE INFRARED
DS	DUCT MOUNTED SMOKE DETECTOR
EL	ELECTROMECHANICAL LOCK
EH	ELECTRIFIED DOOR HINGE
KBX	KEY BOX
LB	MAGNETIC DOOR LOCK
LG	LOCK GUARD
EPT	ELECTRICAL POWER TRANSFER HINGE
EM	ELECTROMAGNETIC LOCK SET
R	DIGITAL CARD READER
SD	SMOKE DAMPER WITH ACTUATION
TS	REMOTE TEST SWITCH
CHLF	COMBINATION HEAT, LIGHT, AND FAN UNIT

A — SECTION/ELEVATION LETTER
EE-2 — SHEET NUMBER

1 — DETAIL NUMBER
EE-2 — SHEET NUMBER

APPROVED FOR ELECTRICAL WORK ONLY

GRAPHIC SYMBOLS FOR ELECTRICAL DIAGRAMS

SYMBOL	DESCRIPTION
	CIRCUIT BREAKER, SINGLE-POLE
	CIRCUIT BREAKER, DOUBLE-POLE
	CIRCUIT BREAKER, THREE-POLE
GFCI	CIRCUIT BREAKER, WITH GROUND FAULT CIRCUIT INTERRUPTER
	CIRCUIT BREAKER, SINGLE-POLE, SWITCHED NEUTRAL
	CONTACT, NORMALLY OPEN
	CONTACT, NORMALLY CLOSED
	CONTACT, NORMALLY CLOSED, TIME DELAY CLOSING ON DE-ENERGIZING
	CONTACT, NORMALLY OPEN, TIME DELAY OPENING ON DE-ENERGIZING
	CONTACT, NORMALLY OPEN, TIME DELAY CLOSING ON ENERGIZING
	CONTACT, NORMALLY CLOSED, TIME DELAY OPENING ON ENERGIZING
	CONTACT, SINGLE-POLE, DOUBLE-THROW
	OPERATING COIL
	LIQUID LEVEL ACTUATED SWITCH, NORMALLY CLOSED
	LIQUID LEVEL ACTUATED SWITCH, NORMALLY OPEN
	PRESSURE ACTUATED SWITCH, NORMALLY CLOSED
	PRESSURE ACTUATED SWITCH, NORMALLY OPEN
	FLOW ACTUATED SWITCH, NORMALLY CLOSED
	FLOW ACTUATED SWITCH, NORMALLY OPEN
	TEMPERATURE ACTUATED SWITCH, NORMALLY CLOSED
	TEMPERATURE ACTUATED SWITCH, NORMALLY OPEN
	LIMIT SWITCH, NORMALLY CLOSED
	LIMIT SWITCH, NORMALLY OPEN
	PUSHBUTTON SWITCH, NORMALLY CLOSED
	PUSHBUTTON SWITCH, NORMALLY OPEN
	SWITCH, SINGLE-POLE
	SWITCH, SINGLE-POLE, DOUBLE-THROW
	SWITCH, DOUBLE-POLE
	SWITCH, DOUBLE-POLE, DOUBLE-THROW
	SWITCH, SINGLE-POLE, 3-POSITION
	THERMAL OVERLOAD
	FUSE
	RESISTOR
	VARIABLE RESISTOR
	TRANSFORMER WINDING
	GROUNDING ELECTRODE
	ENCLOSURE BOND
A	PILOT LIGHT (A=AMBER, G=GREEN, R=RED)
A	INDICATING LIGHT (A=AMBER, G=GREEN, R=RED, O=ORANGE)
G	GENERATOR
M	MOTOR
F	FAN MOTOR

REMODEL WORK

SYMBOL	DESCRIPTION
	EXISTING FLUORESCENT FIXTURE-TO REMAIN
	EXISTING FLUORESCENT FIXTURE-REMOVE
	EXISTING INCANDESCENT FIXTURE-TO REMAIN
	EXISTING INCANDESCENT FIXTURE-REMOVE
	EXISTING OUTLET-TO REMAIN
	EXISTING RECEPTACLE OUTLET-TO REMAIN
	EXISTING RECEPTACLE OUTLET-REMOVE
—E---E—	EXISTING CONDUIT AND CONDUCTORS-TO REMAIN UNLESS OTHERWISE NOTED
—X---X—	EXISTING CONDUIT AND CONDUCTORS-REMOVE
S	EXISTING SWITCH-TO REMAIN
	EXISTING SWITCH-REMOVE
J	EXISTING JUNCTION BOX-TO REMAIN
	EXISTING JUNCTION BOX-REMOVE

DESIGN	BY Jaswinder Sandhu	CHECKED Jaswinder Gill	
DETAILS	BY Ed D. Tapalla	CHECKED Jaswinder Sandhu	
QUANTITIES	BY Jaswinder Sandhu	CHECKED Jaswinder Gill	

STATE OF CALIFORNIA
DEPARTMENT OF TRANSPORTATION

DIVISION OF ENGINEERING SERVICES
ELECTRICAL-MECHANICAL-WATER AND WASTEWATER DESIGN

BRIDGE No. L5724
POST MILE

PASADENA 210/134
TUNNEL CONTROL BUILDING
LEGEND

SHEET EE0-0

TAEMWW Imperial - CCSC Rev. 01/13

ORIGINAL SCALE IN INCHES FOR REDUCED PLANS 0 1 2 3

UNIT: 3597 CONTRACT No.: 2881U4
PROJECT NUMBER & PHASE: 07140000851

DISREGARD PRINTS BEARING EARLIER REVISION DATES → 1-26-13 2-28-14 4-25-14

REVISION DATES (PRELIMINARY STAGE ONLY) SHEET OF

EA 2881U1

P:\dist_07\0700020994_la_210_interchange_building\expedite\ee0_00.dgn

18-JUN-2014 10:18

Dist	COUNTY	ROUTE	POST MILES TOTAL PROJECT	SHEET No.	TOTAL SHEETS
07	LA	210	R16.1/R25.8	869	927

Jaswinder S Sandhu 04-25-14
REGISTERED ELECTRICAL ENGINEER DATE

5-12-14
PLANS APPROVAL DATE

REGISTERED PROFESSIONAL ENGINEER Jaswinder Sandhu No. 11803 Exp. 9-30-14 ELEC STATE OF CALIFORNIA

The State of California or its officers or agents shall not be responsible for the accuracy or completeness of scanned copies of this plan sheet.

CALIFORNIA STATE FIRE MARSHAL APPROVED
Approval of this plan does not authorize or approve any omission or deviation from applicable regulations. Final approval is subject to field inspection. One set of approved plans shall be available on the project site at all times.
Reviewed by: FRANCIS(SONNY)SOLICH
Approval date: March 27,2014

ABBREVIATIONS

A

A/C AIR CONDITIONING UNIT
ACS AIR COMPRESSOR STARTER
AFCI ARC FAULT CIRCUIT INTERRUPTER
AI ANALOG INPUT
AL ALARM LIGHT
AO ANALOG OUTPUT
AR ALARM RESET
AVC AIR VOLUME CONTROLLER

B

BC BARE COPPER
BD BUILDING DISCONNECT
BP BOOSTER PUMP
Brk BREAKER

C

Cat CATEGORY

CC CENTER CHANNEL LIGHT
CD CONTROL DISCONNECT
CIPCP CAST-IN-PLACE CONCRETE PIPE
CM CENTER MARGIN LIGHT
CPU CENTRAL PROCESSING UNIT

CR CONTROL RELAY
CSW CURRENT SWITCH

D

DI DIGITAL INPUT
DIMM DIMMING

DO DIGITAL OUTPUT
DP DUPLEX PLUG RECEPTACLE
DPB DIMMING PUSHBUTTON
DS DOOR SWITCH

E

(E) EXISTING

EF EXHAUST FAN
Elev ELEVATION
EMI ELECTROMAGNETIC INTERFERENCE
EMS EXTINGUISHABLE MESSAGE SIGN

F

F FUSE
FC FOOT CANDLE
FL FAILURE LIGHT
FLA FLASHER
Flex FLEXIBLE CONDUIT
FLS FLOW SWITCH
FR FAILURE RESET or FLAME RESISTANT
FS FLOAT SWITCH

G

G GROUND
GFCI GROUND FAULT CIRCUIT INTERRUPTER

H

hp HORSEPOWER

I

IC IRRIGATION CONTROLLER
ICC IRRIGATION CONTROLLER CABINET
IR INDUCTION RELAY
ISR INTRINSICALLY SAFE RELAY

J

JB JUNCTION BOX

L

L LIGHT or LENGTH
LC LIGHTING CONTACTOR
LCD LIQUID CRYSTAL DISPLAY
LCP LIGHTING CONTROL PANEL
LD LIGHT DISCONNECT
LDCI LEAK DETECTOR CIRCUIT INTERRUPTER
LL LIQUID LEVEL RELAY
LLC LIQUID LEVEL CONTROLLER
LLCR LIGHTING LEVEL CONTROL RELAY
LP LIGHT PANEL
LS LIGHT SWITCH
LT LIGHT TRANSFORMER
LTO LIGHT TRANSFORMER OVERLOAD

M

MB MAIN BREAKER
MC METALLIC CONDUIT
MCP MOTOR CIRCUIT PROTECTOR
MCC MOTOR CONTROL CENTER
MD MOTOR DISCONNECT
MH MOUNTING HEIGHT
MSB MAIN SWITCHBOARD

N

(N) NEW
Nav NAVIGATIONAL LIGHTS
NIC NOT IN CONTRACT
NL NIGHT LIGHT

NSW NEUTRAL SWITCHING BREAKER

O

O/C ON CENTER
OL OVERLOAD

P

PB PULL BOX or PUSHBUTTON
PCP PUMP CONTROL PANEL
PD PRIMARY DISCONNECT
PFR PHASE FAILURE RELAY
PFRD PHASE FAILURE RELAY DISCONNECT
PL PILOT LIGHT
PLC PROGRAMMABLE LOGIC CONTROLLER
PS PRESSURE SWITCH
PTS POWER TRANSFER SWITCH
PV PHOTOVOLTAIC

R

RCP REINFORCED CONCRETE PIPE
RD RECEPTACLE DISCONNECT
RES RESISTOR
RFI RADIO FREQUENCY INTERFERENCE
RMB RECIRCULATION AND LEACHFIELD MAIN
RTB RADIO TERMINAL BOARD

S

S STARTER COIL
Sch SCHEDULE
SD SERVICE DISCONNECT

SFR SEAL FAILURE RELAY
SL SUMP LIGHT
SPR STANDBY POWER RECEPTACLE
Sq SQUARE
SS SELECTOR SWITCH
SST SELECTOR SWITCH TUNNEL
ST STARTER
SV SOLENOID VALVE
SWIM SLOW WEIGH-IN-MOTION

T

T TUNNEL
TB TERMINAL BLOCK
TC TELEPHONE CABLE
TDR TIME DELAY RELAY
TGLS TOGGLE SWITCH
TL TUNNEL LIGHTING
TM TIME METER
TS TIMER SWITCH
TSW TEST SWITCH
TTB TELEPHONE TERMINAL BOARD

U

UPS UNINTERRUPTIBLE POWER SUPPLY

W

WLS WATER LEVEL SWITCH
WP WEATHERPROOF
WSMS WEIGH STATION MESSAGE SIGN

SYMBOLS

∠ ANGLE
° DEGREES
Δ DELTA
ø PHASE
± PLUS OR MINUS

NOTES:

A. Separate grounded (Neutral) conductor must be used for each 120-Volt circuit.

B. Homeruns to Panelboards must be installed as shown on the plans. Homeruns must not be combined.

C. A single insulated equipment grounding conductor, as shown, must be installed in each conduit run.

D. Based upon the approved shop submittals, prepare the following:

- Stake out the exact location of each Mechanical/ Electrical equipment and get it approved by the Engineer.
- Stake out the conduit stub-out areas for each Mechanical/Electrical equipment.
- Stub-out conduits as required.
- During installation of conduits, conduits must be spaced in a manner to allow installation of conduit bushing on them.
- Conduit stub-outs inside panelboards and switch-boards must be accomplished in a manner so that the conduit entering the equipment is in the front half depth of the equipment.

STANDARD NOTES

RLD Relocated equipment.

STANDARD PLANS

Dated 2010

- ES-6A
- ES-9B
- RSP ES-1A
- RSP ES-1B
- RSP ES-1C

APPROVED FOR ELECTRICAL WORK ONLY

	BY	CHECKED
DESIGN	Jaswinder Sandhu	Jaswinder Gill
DETAILS	Ed D. Tapalla	Jaswinder Sandhu
QUANTITIES	Jaswinder Sandhu	Jaswinder Gill

STATE OF CALIFORNIA DEPARTMENT OF TRANSPORTATION

DIVISION OF ENGINEERING SERVICES ELECTRICAL-MECHANICAL-WATER AND WASTEWATER DESIGN

BRIDGE No. L5724
POST MILE

PASADENA 210/134 TUNNEL CONTROL BUILDING
NOTES AND ABBREVIATIONS

SHEET EE0-1

TAEMWW Imperial - CCSC Rev. 01/13

ORIGINAL SCALE IN INCHES FOR REDUCED PLANS 0 1 2 3

UNIT: 3597 CONTRACT No.: 2881U4
PROJECT NUMBER & PHASE: 07140000851

DISREGARD PRINTS BEARING EARLIER REVISION DATES → 7-25-13 2-28-14 4-25-14

REVISION DATES (PRELIMINARY STAGE ONLY) SHEET OF

EA 2881U1

P:\dist_07\0700020994_la_210_interchange_building\expedite\ee0_01.dgn

18-JUN-2014 10:18

Dist	COUNTY	ROUTE	POST MILES TOTAL PROJECT	SHEET No.	TOTAL SHEETS
07	LA	210	R16.1/R25.8	870	927

Jaswinder S Sandhu 04-25-14
REGISTERED ELECTRICAL ENGINEER DATE

5-12-14
PLANS APPROVAL DATE

REGISTERED PROFESSIONAL ENGINEER Jaswinder Sandhu No. 11803 Exp. 9-30-14 ELEC STATE OF CALIFORNIA

The State of California or its officers or agents shall not be responsible for the accuracy or completeness of scanned copies of this plan sheet.

CERTIFICATE OF COMPLIANCE (Page 1 of 4) OLTG-1C

Project Name: Pasadena Route 210/134 Tunnels Control Building
Date: 02-24-14

Project Address: W Walnut Street on-ramp to Westbound Route 210
Total Hardscape Illuminated Area:

General Information

Phase of Construction: ☑ New Construction ☐ Addition ☐ Alteration

Documentation Author's Declaration Statement

- I Certify that this Certificate of Compliance documentation is accurate and complete.

Name: Jaswinder Gill
Signature:
Company: California Department of Transportation
Date: 02-24-14
Address: 1801 30th Street
If applicable: CEA # CEPE #
City/State/Zip: Sacramento, Ca. 95816
Phone: (916) 227-9492

Principal Lighting Designer's Declaration Statement

- I am eligible under Division 3 of the California Business and Professions Code to accept responsibility for the lighting design.
- This Certificate of Compliance identifies the lighting features and performance specification required for compliance with Title 24, Pages 1 and 6 of the California Code of Regulations.
- The design features represented on this Certificate of Compliance are consistent with the information provided to document this design on the other applicable compliance forms, worksheets, calculations, plans and specifications submitted to the enforcement agency for approval with this building permit application.

Name: Jaswinder Gill
Signature: Jaswinder S Gill
Company: California Department of Transportation
Phone: (916) 227-9492
Address: 1801 30th Street
License # E18551
City/State/Zip: Sacramento, Ca. 95816
Date: 12-31-14

Principal Lighting Designer's Declaration

☑ I Certify that this Certificate of Compliance documentation is accurate and complete, and accounts for all outdoor lighting power, including building mounted, pole mounted, as well as all other outdoor lighting designed for the site, and that Additional Lighting Power Allowances for Specific Applications or Additional Lighting Power Allowances for Ordinance Requirements have not been counted more than one time for the same area, in Accordance with Section 147 of the Standards.

Outdoor Lighting Mandatory Measures

Indicate location on building plans of Mandatory Measures Note Block: This sheet

LIGHTING COMPLIANCE FORMS & WORKSHEETS (check box if worksheet is included)

For detailed instructions on the use of this and all Energy Efficiency Standards compliance forms, please refer to the Nonresidential Manual published by the California Energy Commission.

☑	OLTG-1C	Certificate of Compliance. All 4 pages required on plans for all submittal.
☐	OLTG-2C	(Page 1 of 3) Lighting Wattage Allowances for General Hardscape, Sales Frontage, or Ornamental Lighting. Optional on plans.
☐	OLTG-2C	(Page 2 of 3) Lighting Wattage Allowances for Per Application or Per Area. Optional on plans.
☐	OLTG-2C	(Page 3 of 3) Additional Lighting Power Allowance for Ordinance Requirements. Optional on plans.

CERTIFICATE OF COMPLIANCE (Page 2 of 4) OLTG-1C

COMPLIANCE FIXTURE/LIGHTING CONTROL SCHEDULE and FIELD INSPECTION CHECKLIST

Project Name: Pasadena Route 210/134 Tunnels Control Building
Date: 02-24-14

INSTALLATION CERTIFICATE, OLTG-1-INST (Retain a copy and verify form is completed and signed.) **Field Inspection** ☐

CERTIFICATE OF ACCEPTANCE, OLTG-2A (Retain a copy and verify form is completed and signed.) **Field Inspection** ☐

Luminaire Schedule			Installed Watts							
A	B	C	D	E	F		G	H	I	
					How wattage was determined				Field Inspector 2	
Name Or Item Tag	Luminaire Description See footnote below (i.e, lamp pole-top shoe-box 400 watt metal halide)	Cutoff Designation	Watts per Luminaire 1	Special Features	Default from NA-8	According to S 130 (d or e)	Number of Luminaires	Installed Watts (D x G)	Pass	Fail
L1	Wall Mounted, LED	FL	70	☐	☐	☑	3	210	☐	☐
				☐	☐	☐			☐	☐
				☐	☐	☐			☐	☐
				☐	☐	☐			☐	☐
				☐	☐	☐			☐	☐
				☐	☐	☐			☐	☐
				☐	☐	☐			☐	☐
	Enter total into OLTG-1C; Page 4 of 4; Row H; Total Installed Watts:							210		

1. Type of luminaire (i.e.: post top, wall pack, surface, shoe box); for non-incandescent luminaires, indicate nominal lamp wattage and lamp type (i.e.: fluorescent incandescent, HID); ballast type (i.e.: electronic or magnetic); number of lamps and number of ballast per luminaire. For incandescent luminaires the luminaire wattage listed in column D shall be the maximum relamping rated wattage on a permanent factory-installed label on the luminaire. NOT the wattage of the lamp (bulb) used, in accordance with Section 130 (d or e).
2. If Fail then describe on Page 2 of the Inspection Checklist Form and take appropriate action to correct. Verify building plans if necessary.

EXEMPT LUMINAIRES **Field Inspection** ☐

Name or Symbol	Description of exempt luminaires in accordance with S 147

MANDATORY CONTROLS **Field Inspection** ☐

#	Description	Location	#	Description	Location
1	Photocell	Integrated to Fixture			
2	Motion Sensor	Integrated to Fixture			

SPECIAL FEATURES INSPECTION CHECKLIST (See Page 2 of 4 of OLTG-1C)

The local enforcement agency should pay special attention to the items specified in this checklist. These Items require special written justification and documentation, and special verification. The local enforcement agency determines the adequacy of the justification, and may reject a building or design that otherwise complies base on the adequacy of the special justification and documentation submitted.

Field Inspector Notes or Discrepancies:

CALIFORNIA STATE FIRE MARSHAL APPROVED
Approval of this plan does not authorize or approve any omission or deviation from applicable regulations. Final approval is subject to field inspection. One set of approved plans shall be available on the project site at all times.
Reviewed by: FRANCIS(SONNY)SOLICH
Approval date: March 27,2014

MANDATORY MEASURES:

A. All outdoor luminaires must be full cutoff.

B. All outdoor luminaires must be controlled by photocell and motion sensor.

C. All Tunnel lightings are exempt from control as per Section 132 (C)1.

APPROVED FOR ELECTRICAL WORK ONLY

	BY	CHECKED
DESIGN	Jaswinder Sandhu	Jaswinder Gill
DETAILS	Ed D. Tapalla	Jaswinder Sandhu
QUANTITIES	Jaswinder Sandhu	Jaswinder Gill

STATE OF CALIFORNIA DEPARTMENT OF TRANSPORTATION

DIVISION OF ENGINEERING SERVICES ELECTRICAL-MECHANICAL-WATER AND WASTEWATER DESIGN

BRIDGE No. L5724
POST MILE

PASADENA 210/134 TUNNEL CONTROL BUILDING
OUTDOOR LIGHTING COMPLIANCE 1

SHEET EE0-2

TAEMWW Imperial - CCSC Rev. 01/13

ORIGINAL SCALE IN INCHES FOR REDUCED PLANS 0 1 2 3

UNIT: 3597 CONTRACT No.: 2881U4
PROJECT NUMBER & PHASE: 07140000851

DISREGARD PRINTS BEARING EARLIER REVISION DATES → 11-26-13 2-28-14 4-25-14

REVISION DATES (PRELIMINARY STAGE ONLY) SHEET OF

EA 2881U1

P:\dist_07\0700020994_la_210_interchange_building\expedite\ee0_02.dgn

18-JUN-2014 10:18

Dist	COUNTY	ROUTE	POST MILES TOTAL PROJECT	SHEET No.	TOTAL SHEETS
07	LA	210	R16.1/R25.8	871	927

Jaswinder S Sandhu 04-25-14
REGISTERED ELECTRICAL ENGINEER DATE

5-12-14
PLANS APPROVAL DATE

REGISTERED PROFESSIONAL ENGINEER Jaswinder Sandhu No. 11803 Exp. 9-30-14 ELEC STATE OF CALIFORNIA

The State of California or its officers or agents shall not be responsible for the accuracy or completeness of scanned copies of this plan sheet.

CALIFORNIA STATE FIRE MARSHAL APPROVED
Approval of this plan does not authorize or approve any omission or deviation from applicable regulations. Final approval is subject to field inspection. One set of approved plans shall be available on the project site at all times.
Reviewed by: FRANCIS (SONNY) SOLICH
Approval date: March 27,2014

CERTIFICATE OF COMPLIANCE (Page 3 of 4) OLTG-1C

Project Name: Pasadena Route 210/134 Tunnels Control Building
Date: 02-24-14

A. OUTDOOR LIGHTING ZONE

OUTDOOR LIGHTING ZONE: ☐ OLZ 1 ☐ OLZ 2 ☑ OLZ 3 ☐ OLZ 4

Is the Outdoor Lighting Zone: ☐ Default in accordance with S 10-114, or ☐ Amended by JHA

Complete the information below if the default Outdoor Lighting Zone has been amended by the local jurisdiction having authority (JHA):

☐ The site is a government designated park, recreation area, wildlife preserve, or portion thereof, and has been designated as LZ2 or LZ3, in accordance with Table 10-114-A, because the site is contained within such a zone.
☐ The local jurisdiction having authority has officially adopted a change to the State Default Lighting Zone and has notified the Energy Commission by providing the materials required in S 10-114(d) to the Executive Director.
☐ The adopted change is posted on the Energy Commission website.

B. ADDITIONAL LIGHTING POWER ALLOWANCE FOR ORDINANCE REQUIREMENTS

Are additional lighting power allowances for ordinance in Table 147-C used? Yes ☐ No ☐

Complete the information below if the additional lighting power allowances for ordinance requirements are used:

☐ The local jurisdiction having authority has officially adopted specific outdoor light levels, which are expressed as average or minimum footcandle levels, by following a public process that allowed for formal public notification, review, and comment about the proposed changed.
☐ The local jurisdiction having authority which adopted specific outdoor light levels and has notified the Commission by providing the following materials required S 10-114(f) to the Executive Director.

C. ACCEPTANCE FORMS

Required Acceptance Tests

Designer:
This form is to be used by the designer and attached to the plans. Listed below is the acceptance tests for the Lighting system,
OLTG-2A. The designer is required to check the acceptance tests and list all control devices serving the building or space shall be certified as meeting the Acceptance Requirements for Code Compliance. If all the lighting system or control of a certain type requires a tests, list the different lighting and the number of systems. The NA7 Section in the Appendix of the Nonresidential Reference Appendices Manual describes the test. Since this form will be a part of the plans, completion of this section will allow the responsible party to budget for the scope of work appropriately. Forms can be grouped by type of Luminaire controlled.

Enforcement Agency:
Systems Acceptance. Before Occupancy Permit is granted for a newly constructed building or space or when ever new lighting system with controls is installed in the building or space shall be certified as meeting the Acceptance Requirements.
The OLTG-2A form is not considered a complete form and is not to be accepted by the enforcement agency unless the boxes are checked and/or filled and signed. In addition, a Certificate of Acceptance forms shall be submitted to the enforcement agency that certifies plans, specifications, installation certificates, and operating and maintenance information meet the requirements of S 10-103(b) of Title 24 Part 6. The field inspector must receive the properly filled out and signed forms before the building can receive final occupancy. A copy of the OLTG-2A for each different lighting luminaire control(s) must be provided to the owner of the building for their records.

	Luminaires Controlled			Certificate of Acceptance OLTG-2A [1]
Equipment Requiring Testing	Description	Number of like Controls	Location	Outdoor Lighting Acceptance Tests
OMS	Motion sensor	3	Integrated to Fixture	OMS
OP	Photo Control	3	Integrated to Fixture	OP

1. Insert: **OMS** for Outdoor Motion Sensor; **OLSC** for Outdoor Lighting Shutoff Controls; **OP** for Outdoor Photocontrol; **ATS** for Astronomical Time Switch; and, **STS** for Standard (non-astronomical) Time Switch acceptance.

CERTIFICATE OF COMPLIANCE (Page 4 of 4) OLTG-1C

COMPLIANCE FIXTURE/LIGHTING CONTROL SCHEDULE and FIELD INSPECTION CHECKLIST

Project Name: Pasadena Route 210/134 Tunnels Control Building
Date: 02-24-14

ALLOWED AND INSTALLED OUTDOOR LIGHTING POWER

		Lighting Wattage Power Allowance	
A	Lighting power allowance for general hardscape (from OLTG-2C Page 1 of 3)	11, 095	
B	Specific application lighting wattage allowance per unit length (from OLTG-2C Page 1 of 3)		
C	Specific application wattage allowance for ornamental lighting (from OLTG-2C Page 1 of 3)		
D	Specific application wattage allowance per application (from OLTG-2C Page 2 of 3)		
E	Specific application lighting wattage allowance per area (from OLTG-2C Page 2 of 3)		
F	Additional lighting power allowance for ordinance requirements (from OLTG-2C Page 3 of 3)		
G	Total Allowed Wattage = Sum of rows A through F:	11, 095	
H	Total installed Watts (from Luminaire Schedule, (from OLTG-1C (Page 2 of 4)	210	
Provided that the lighting wattage power allowance listed in rows A through F are identical to the lighting wattage power allowance taken from OLTG-2C pages 1 through 3, complies if installed Wattage in row H is less than or equal to the Total Installed Wattage in row G		☑ Yes	☐ No

NOTES:

APPROVED FOR ELECTRICAL WORK ONLY

	BY	CHECKED
DESIGN	Jaswinder Sandhu	Jaswinder Gill
DETAILS	Ed D. Tapalla	Jaswinder Sandhu
QUANTITIES	Jaswinder Sandhu	Jaswinder Gill

STATE OF CALIFORNIA
DEPARTMENT OF TRANSPORTATION

DIVISION OF ENGINEERING SERVICES
ELECTRICAL-MECHANICAL-WATER AND WASTEWATER DESIGN

BRIDGE No. L5724
POST MILE

PASADENA 210/134
TUNNEL CONTROL BUILDING
OUTDOOR LIGHTING COMPLIANCE 2

SHEET EE0-3

TAEMWW Imperial - CCSC Rev. 01/13

ORIGINAL SCALE IN INCHES FOR REDUCED PLANS 0 1 2 3

UNIT: 3597 CONTRACT No.: 2881U4
PROJECT NUMBER & PHASE: 07140000851

DISREGARD PRINTS BEARING EARLIER REVISION DATES → 11-26-13 2-28-14 4-25-14

REVISION DATES (PRELIMINARY STAGE ONLY) SHEET OF

EA 2881U1

P:\dist_07\0700020994_la_210_interchange_building\expedite\ee0_03.dgn

18-JUN-2014 10:18

CERTIFICATE OF COMPLIANCE (Page 1 of 4) LTG-1C

Project Name: Pasadena Route 210/134 Tunnels Control Building	Date: 02-24-14

Project Address: W Walnut Street on-ramp to Westbound Route 210	Climate Zone: 9	Building CFA: 400 Sq. feet Unconditioned Floor Area:

General Information

Building Type:	☑ Nonresidential	☐ High-Rise Residential	☐ Hotel/Motel
☐ Schools	☐ Relocatable Public Schools	☐ Conditioned Spaces	☐ Unconditioned Spaces
Phase of Construction:	☑ New Construction	☐ Addition	☐ Alteration
Method of Compliance:	☑ Complete Building	☐ Area Category	☐ Tailored

Documentation Author's Declaration Statement

- I Certify that this Certificate of Compliance documentation is accurate and complete.

Name: Jaswinder Gill	Signature:
Company: California Department of Transportation	Date: 02-24-14
Address: 1801 30th Street	If applicable: CEA # CEPE #
City/State/Zip: Sacramento, Ca. 95816	Phone:

Principal Lighting Designer's Declaration Statement

- I am eligible under Division 3 of the California Business and Professions Code to accept responsibility for the lighting design.
- This Certificate of Compliance identifies the lighting features and performance specifications required for compliance with Title 24, Pages 1 and 6 of the California Code of Regulations.
- The design features represented on this Certificate of Compliance are consistent with the information provided to document this design on the other applicable compliance forms, worksheets, calculations, plans and specifications submitted to the enforcement agency for approval with this building permit application.

Name: Jaswinder Gill	Signature:
Company: California Department of Transportation	Phone: (916) 227-9492
Address: 1801 30th Street	License # E18551
City/State/Zip: Sacramento, Ca. 95816	Date: 12-31-14

Lighting Mandatory Measures

Indicate location on building plans of Mandatory Measures Note Block: This sheet

LIGHTING COMPLIANCE FORMS & WORKSHEETS (Check box if worksheet is included)

For detailed instructions on the use of this and all Energy Efficiency Standards compliance forms, please refer to the Nonresidential Manual published by the California Energy Commission.

☑	LTG-1C Pages 1 through 4	Certificate of Compliance. All pages required on plans for all submittals.
☐	LTG-2C	Lighting Controls Credit Worksheet
☐	LTG-3C	Indoor Lighting Power Allowance
☐	LTG-4C Pages 1 through 4	Tailored Method Worksheet
☐	LTG-5C Pages 1 and 2	Line Voltage Track Lighting Worksheet

CERTIFICATE OF COMPLIANCE (Page 2 of 4) LTG-1C

INDOOR LIGHTING SCHEDULE and FIELD INSPECTION ENERGY CHECKLIST

Project Name: Pasadena Route 210/134 Tunnels Control Building	Date: 02-24-14
Installation Certificate, LTG-1-INST (Retain a copy and verify form is completed and signed.)	Field Inspector ☐
Certificate of Acceptance, LTG-2A and LTG-3A (Retain a copy and verify form is completed and signed.)	Field Inspector ☐

A separate Lighting Schedule Must Be Filled Out for Conditioned and Unconditioned Spaces Installed Lighting Power listed on this Lighting Schedule is only for: ☑ CONDITIONED SPACE ☐ UNCONDITIONED SPACE

☐ The actual indoor lighting power listed below includes all installed permanent and portable lighting system in accordance with S 146 (a)

☐ Only for offices: Up to the first 0.2 watts per square foot of portable lighting shall not be required to be included in the calculation of actual indoor lighting power density in accordance with Exception to S 146 (a). All portable lighting in excess of 0.2 watts per square foot is totaled below.

A	B	C	D	E	E	F	G	H	H
	Luminaire Schedule (Type, Lamps, Ballasts)		Installed Watts						
				How wattage was determined				Field Inspector 2	
Name or Item Tag	Complete Luminaire Description (i.e, 3 lamp fluorescent troffer, F32T8, one dimmable electronic ballast)		Watts per Luminaire 1	CEC Default from NA8	According to S 130 (d or e)	Number of Luminaires	Installed Watts (D x F)	Pass	Fail
L2	LED, Surface		50	☐	☑	3	150	☐	☐
				☐	☐			☐	☐
				☐	☐			☐	☐
				☐	☐			☐	☐
				☐	☐			☐	☐
				☐	☐			☐	☐
				☐	☐			☐	☐
				☐	☐			☐	☐
				☐	☐			☐	☐
				☐	☐			☐	☐
				☐	☐			☐	☐
				☐	☐			☐	☐
				☐	☐			☐	☐
				☐	☐			☐	☐
				☐	☐			☐	☐
				☐	☐			☐	☐
				☐	☐			☐	☐
						INSTALLED WATTS PAGE TOTAL:	150		

Building total number of pages		Installed Watts Building Total (Sum of all pages)	150

Enter into LTG-1C Page 4 of 4

1. Wattage shall be determined according to Section 130 (d and e). Wattage shall be rating of light fixture, not rating of bulb.
2. If Fail then describe on Page 2 of the Inspection Checklist Form and take appropriate action to correct. Verify building plans if necessary.

Dist	COUNTY	ROUTE	POST MILES TOTAL PROJECT	SHEET No.	TOTAL SHEETS
07	LA	210	R16.1/R25.8	872	927

REGISTERED ELECTRICAL ENGINEER — DATE 04-25-14

PLANS APPROVAL DATE 5-12-14

REGISTERED PROFESSIONAL ENGINEER — Jaswinder Sandhu — No. 11803 — Exp. 9-30-14 — ELEC — STATE OF CALIFORNIA

The State of California or its officers or agents shall not be responsible for the accuracy or completeness of scanned copies of this plan sheet.

CALIFORNIA STATE FIRE MARSHAL APPROVED
Approval of this plan does not authorize or approve any omission or deviation from applicable regulations. Final approval is subject to field inspection. One set of approved plans shall be available on the project site at all times.
Reviewed by: FRANCIS(SONNY)SOLICH
Approval date: March 27,2014

MANDATORY MEASURES:

A. AREA CONTROLS:
Each enclosed space must have independent switching device.

B. MULTI-LEVEL CONTROLS:
Any enclosed space 100 square feet or larger, and has a connected lighting load > 0.8 Watts per square foot, must have multi-level control.

C. SHUT-OFF CONTROLS:
Each enclosed space must have shut-off controls.

APPROVED FOR ELECTRICAL WORK ONLY

	BY	CHECKED
DESIGN	Jaswinder Sandhu	Jaswinder Gill
DETAILS	Ed D. Tapalla	Jaswinder Sandhu
QUANTITIES	Jaswinder Sandhu	Jaswinder Gill

STATE OF **CALIFORNIA** DEPARTMENT OF TRANSPORTATION

DIVISION OF ENGINEERING SERVICES ELECTRICAL-MECHANICAL-WATER AND WASTEWATER DESIGN

BRIDGE No. L5724 — POST MILE

PASADENA 210/134 TUNNEL CONTROL BUILDING

INDOOR LIGHTING COMPLIANCE 1

SHEET **EE0-4**

ORIGINAL SCALE IN INCHES FOR REDUCED PLANS 0 1 2 3

UNIT: 3597 CONTRACT No.: 2881U4
PROJECT NUMBER & PHASE: 07140000851

DISREGARD PRINTS BEARING EARLIER REVISION DATES → REVISION DATES (PRELIMINARY STAGE ONLY) 11-26-13 2-28-14 4-25-14 — SHEET OF

TAEMWW Imperial - CCSC Rev. 01/13

EA 2881U1

P:\dist_07\0700020994_la_210_interchange_building\expedite\ee0_04.dgn

18-JUN-2014 10:18

Dist	COUNTY	ROUTE	POST MILES TOTAL PROJECT	SHEET No.	TOTAL SHEETS
07	LA	210	R16.1/R25.8	873	927

Jaswinder S Sandhu 04-25-14
REGISTERED ELECTRICAL ENGINEER DATE

5-12-14
PLANS APPROVAL DATE

REGISTERED PROFESSIONAL ENGINEER Jaswinder Sandhu No. 11803 Exp. 9-30-14 ELEC STATE OF CALIFORNIA

The State of California or its officers or agents shall not be responsible for the accuracy or completeness of scanned copies of this plan sheet.

CALIFORNIA STATE FIRE MARSHAL APPROVED
Approval of this plan does not authorize or approve any omission or deviation from applicable regulations. Final approval is subject to field inspection. One set of approved plans shall be available on the project site at all times.
Reviewed by: FRANCIS(SONNY)SOLICH
Approval date: March 27,2014

CERTIFICATE OF COMPLIANCE (Page 3 of 4) LTG-1C

Project Name: Pasadena Route 210/134 Tunnels Control Building
Date: 02-24-14

INDOOR LIGHTING SCHEDULE and FIELD ENERGY CHECKLIST

Fill in controls for all spaces: a) area controls, b) multi-level controls, c) manual daylighting controls for daylit areas> 250 sq ft, automatic daylighting controls for daylit areas> 2,500 sq ft, d) shut-off controls, e) display lighting controls, f) tailored lighting controls-general lighting controlled separately from display, ornamental and display case lighting and g) demand responsive automatic controls for retail stores> 50,000 sq ft, in accordance with Section 131.

MANDATORY LIGHTING CONTROLS - FIELD INSPECTION ENERGY CHECKLIST

Type/Description	Number of Units	Location in Building		Field Inspector Pass	Field Inspector Fail
Dimming Switch	1	Tunnel Control Building		☐	☐
				☐	☐
				☐	☐
				☐	☐
				☐	☐
				☐	☐
				☐	☐
				☐	☐
				☐	☐
				☐	☐
				☐	☐
				☐	☐
				☐	☐
				☐	☐

Field Inspectors's Notes or Discrepancies:

2008 Nonresidential Compliance Forms *July 2010*

CERTIFICATE OF COMPLIANCE (Page 4 of 4) LTG-1C

Project Name: Pasadena Route 210/134 Tunnels Control Building
Date: 02-24-14

Conditioned and Unconditioned space Lighting must not be combined for compliance

Indoor Lighting Power for Conditioned Spaces		Watts	Indoor Lighting Power for Unconditioned Spaces		Watts
Installed Lighting (from Conditioned LTG-1C Page 2		150	Installed Lighting (from Unconditioned LTG-1C Page 2		
Lighting Control Credit Conditioned Spaces (from LTG-2C)	-	0	Lighting Control Credit Unconditioned Spaces (from LTG-2C)	-	
Adjusted Installed Lighting Power	=	150	Adjusted Installed Lighting Power	=	
Complies if Installed ≤ Allowed			Complies if Installed ≤ Allowed		
Allowed Lighting Power Conditioned Spaces (from LTG-3C)		280	Allowed Lighting Power Unconditioned Spaces (from LTG-3C)		

Required Acceptance Tests

Designer:
This form is to be used by the designer and attached to the plans. Listed below is the acceptance test for the Lighting system, LTG-2A and LTG-3A. The designer is required to check the acceptance tests and list all control devices serving the building or space shall be certified as meeting the Acceptance Requirements for Code Compliance. If all the lighting system or control of a certain type requires a test, list the different lighting and the number of systems. The NA7 Section in the Appendix of the Nonresidential Reference Appendices Manual describes the test. Since this form will be part of the plans, completion of this section will allow the responsible party to budget for the scope of work appropriately. Forms can be grouped by type of Luminaire controlled.

Enforcement Agency:
System Acceptance. Before Occupancy Permit is granted for a newly constructed building or space or when ever new lighting system with controls is installed in the building or space shall be certified as meeting the Acceptance Requirements.
The LTG-2A and LTG-3A forms are not considered a complete form and is not to be accepted by the enforcement agency unless the boxes are checked and/or filled and signed. In addition, a Certificate of Acceptance forms shall be submitted to the enforcement agency that certifies plans, specifications, installation certificates, and operating and maintenance information meet the requirements of S 10-103 (b) of Title 24 Part 6. The field inspector must receive the properly filled out and signed forms before the building can receive final occupancy. A copy of the LTG-2A and LTG-3A for each different lighting luminaire control(s) must be provided to the owner of the building for their records.

Luminaires Controlled				LTG-2A and LTG-3A
Equipment Requiring Testing	Description	Number of like Controls	Location	Controls and Sensors and Automatic Daylighting Controls Acceptance
				☐
				☐
				☐
				☐
				☐
				☐
				☐
				☐
				☐
				☐
				☐
				☐
				☐
				☐

2008 Nonresidential Compliance Forms *July 2010*

APPROVED FOR ELECTRICAL WORK ONLY

	BY	CHECKED
DESIGN	Jaswinder Sandhu	Jaswinder Gill
DETAILS	Ed D. Tapalla	Jaswinder Sandhu
QUANTITIES	Jaswinder Sandhu	Jaswinder Gill

STATE OF CALIFORNIA DEPARTMENT OF TRANSPORTATION

DIVISION OF ENGINEERING SERVICES ELECTRICAL-MECHANICAL-WATER AND WASTEWATER DESIGN

BRIDGE No. L5724
POST MILE

PASADENA 210/134 TUNNEL CONTROL BUILDING
INDOOR LIGHTING COMPLIANCE 2

SHEET EE0-5

TAEMWW Imperial - CCSC Rev. 01/13

ORIGINAL SCALE IN INCHES FOR REDUCED PLANS 0 1 2 3

UNIT: 3597 CONTRACT No.: 2881U4
PROJECT NUMBER & PHASE: 07140000851

DISREGARD PRINTS BEARING EARLIER REVISION DATES → 11-26-13 2-28-14 4-25-14

REVISION DATES (PRELIMINARY STAGE ONLY) SHEET OF

EA 2881U1

P:\dist_07\0700020994_la_210_interchange_building\expedite\ee0_05.dgn

18-JUN-2014 10:18

NOTES:

(1) Tunnel No. 1, 2 or 3 Electrical Service Equipment perform the following:

- Sand, prime and paint (Industrial gray color) all exterior and interior electrical cabinets. For details refer to sheet EE4-5.
- Modify existing Electrical Service Equipment. For details see sheet EE4-5.
- Make arrangement and provide for temporary electric power for energizing existing electrical loads during the period of service equipment modifications.

(2) Existing conduit and conductors to remain. Disconnect conductors at both termination points and mark them spare.

(3) Existing Tunnel Lighting Control Equipment consists of two panelboards and miscellaneous electrical hardware such as junction boxes and gutters, etc. Replace existing equipment with 24"x36", NEMA-4X stainless steel, double door type junction box. For hasp details, see sheet EE4-4.

(4) Remove existing (Total of 140) lighting fixtures from inside the tunnel. Existing tunnel light fixture consists of 8 foot long steel body fluorescent lighting fixture with plastic lens and two 8 foot lamps.

(5) Remove existing (Total of 200) lighting fixtures from inside the tunnel. Existing tunnel light fixture consists of 8 foot long steel body fluorescent lighting fixture with plastic lens and two 8 foot lamps.

(6) Remove existing (Total of 140) lighting fixtures from inside the tunnel. Existing tunnel light fixture consists of 8 foot long steel body fluorescent lighting fixture with plastic lens and two 8 foot lamps.

(7) Install temporary lights inside the tunnel. Temporary lighting must be kept operational 24/7 during construction and until tunnel lighting modification work is completed and is fully operational . For details, see "Temporary Lighting" in the project Special Provisions.

GENERAL NOTES:

A. Existing underground electrical conduits and conductors system as shown are diagrammatic and their location as shown is approximate only. Therefore, field verify exact location of existing underground facilities prior to the beginning of trenching and or removal work. The cost for pot holing and for locating existing underground utilities shall be considered to be paid for in the building lump sump price and no additional cost will be paid.

B. Not all underground utilities are shown.

C. Remove all unused exposed conduits and conductors. Cut unused conduits flush to the floor and fill resultant cavities with grout.

Dist	COUNTY	ROUTE	POST MILES TOTAL PROJECT	SHEET No.	TOTAL SHEETS
07	LA	210	R16.1/R25.8	874	927

Jaswinder S Sandhu 04-25-14
REGISTERED ELECTRICAL ENGINEER DATE

5-12-14
PLANS APPROVAL DATE

REGISTERED PROFESSIONAL ENGINEER Jaswinder Sandhu No. 11803 Exp. 9-30-14 ELEC STATE OF CALIFORNIA

The State of California or its officers or agents shall not be responsible for the accuracy or completeness of scanned copies of this plan sheet.

CALIFORNIA STATE FIRE MARSHAL APPROVED
Approval of this plan does not authorize or approve any omission or deviation from applicable regulations. Final approval is subject to field inspection. One set of approved plans shall be available on the project site at all times.
Reviewed by: FRANCIS(SONNY)SOLICH
Approval date: March 27,2014

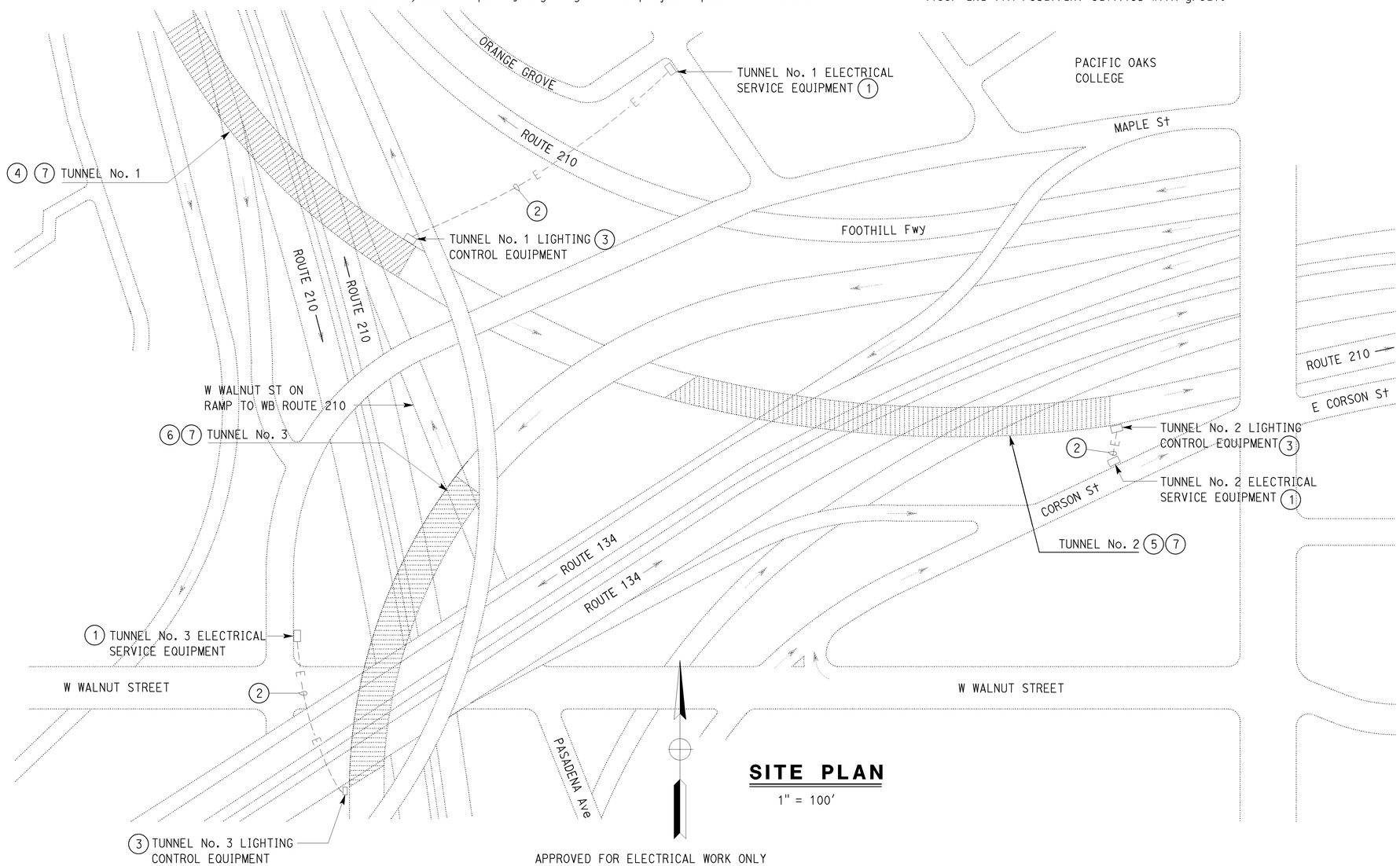

SITE PLAN

1" = 100'

APPROVED FOR ELECTRICAL WORK ONLY

DESIGN SUPERVISOR	DESIGN	BY Jaswinder Sandhu	CHECKED Jaswinder Gill
DESIGN ENGINEER	DETAILS	BY Ed D. Tapalla	CHECKED Jaswinder Sandhu
	QUANTITIES	BY Jaswinder Sandhu	CHECKED Jaswinder Gill

STATE OF CALIFORNIA
DEPARTMENT OF TRANSPORTATION

DIVISION OF ENGINEERING SERVICES
ELECTRICAL-MECHANICAL-WATER AND WASTEWATER DESIGN

BRIDGE No. L5724
POST MILE

PASADENA 210/134 TUNNEL CONTROL BUILDING

EXISTING SITE PLAN

SHEET **EE1-1**

TAEMWW Imperial - CCSC Rev. 01/13

ORIGINAL SCALE IN INCHES FOR REDUCED PLANS 0 1 2 3

UNIT: 3597 CONTRACT No.: 2881U4
PROJECT NUMBER & PHASE: 07140000851

DISREGARD PRINTS BEARING EARLIER REVISION DATES 7-29-13 2-28-14 4-25-14

REVISION DATES (PRELIMINARY STAGE ONLY) SHEET OF

EA 2881U1

P:\dist_07\0700020994_la_210_interchange_building\expedite\ee1_01.dgn

18-JUN-2014 10:18

Dist	COUNTY	ROUTE	POST MILES TOTAL PROJECT	SHEET No.	TOTAL SHEETS
07	LA	210	R16.1/R25.8	875	927

Jaswinder S Sandhu 04-25-14
REGISTERED ELECTRICAL ENGINEER DATE

5-12-14
PLANS APPROVAL DATE

REGISTERED PROFESSIONAL ENGINEER Jaswinder Sandhu No. 11803 Exp. 9-30-14 ELEC STATE OF CALIFORNIA

The State of California or its officers or agents shall not be responsible for the accuracy or completeness of scanned copies of this plan sheet.

CALIFORNIA STATE FIRE MARSHAL APPROVED
Approval of this plan does not authorize or approve any omission or deviation from applicable regulations. Final approval is subject to field inspection. One set of approved plans shall be available on the project site at all times.
Reviewed by: FRANCIS(SONNY)SOLICH
Approval date: March 27,2014

NOTES:

(1) Existing conduit and conductors (spare). For reference, see Note 2 on plan sheet EE1-1

(2) For reference, see Note 3 on plan sheet EE1-1.

(3) For reference, see Note 1 on plan sheet EE1-1. For details, refer to plan sheet EE4-5.

(4) - 3"C, MT, spare.
- (2) 1"C, MT, spare,
- (2) 3"C, each with 12#4, 1#4G, 2#4 spare for tunnel lighting to tunnel Light Circuit Divider Control Panels.
- 1"C, 2#8 (Dimming Control Panel power), 2#8 (Tunnel receptacles), 1#8G to Dimming Control Panel.
- 2"C, 6 Light level Intensity Reference Signal cables, 2 tunnel interior Light Sensor/Photodiode cables to Dimming Control Panel.

(5) For conduits layout/stubout, see sheet EE1-6.

(6) For conduits layout/stubout, see sheet EE1-6.

(7) For conduits layout/stubout, see sheet EE1-6.

(8) For lighting system conduit and conductors layout, see sheet EE1-3.

(9) For lighting system conduit and conductors layout, see sheet EE1-4.

(10) For lighting system conduit and conductors layout, see sheet EE1-5.

(11) Conduits run to various tunnels are shown without any intermediate pull box in them. For ease of pulling and in order not to exceed pulling tensions in conductors, you install additional pull boxes on as needed basis. For details of the underground pull boxes, refer to sheet EE4-4.

(12) Install all conduits by utilizing directional boring method only, except for those conduits to receive the City of Pasadena Water and Power Utility conductors.

(13) Terminate 3-4"C at the Service Vault per the direction of the City of Pasadena Water and Power.

(14) Cap 1-4"C here underneath the existing sidewalk for future telephone.

(15) Install 3'x5'x5' underground Service Vault with traffic rated cover at a location as directed by the City of Pasadena Water and Power. Service Vault to comply with the City of Pasadena Water and Power requirements.

(16) Encase all coduits to receive Utility conductors with concrete all around per the City of Pasadena Water and Power requirements.

GENERAL NOTES:

A. Existing underground electrical conduits and conductors system as shown are diagrammatic and their location as shown is approximate only. Therefore, field verify exact location of existing underground facilities prior to the beginning of trenching and or removal work.

B. Not all underground utilities shown.

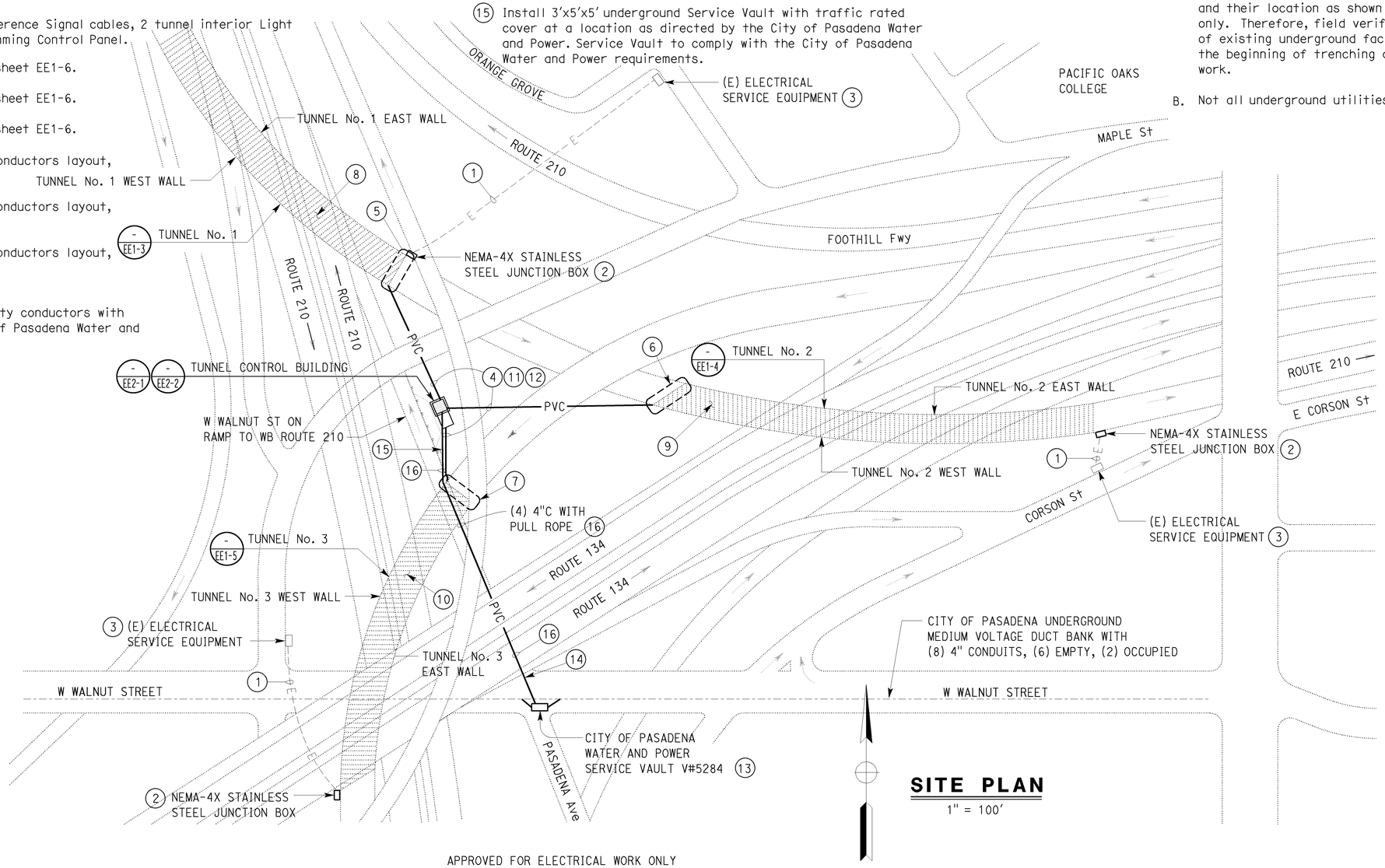

SITE PLAN
1" = 100'

APPROVED FOR ELECTRICAL WORK ONLY

	BY	CHECKED
DESIGN	Jaswinder Sandhu	Jaswinder Gill
DETAILS	Ed D. Tapalla	Jaswinder Sandhu
QUANTITIES	Jaswinder Sandhu	Jaswinder Gill

STATE OF CALIFORNIA
DEPARTMENT OF TRANSPORTATION

DIVISION OF ENGINEERING SERVICES
ELECTRICAL-MECHANICAL-WATER AND WASTEWATER DESIGN

BRIDGE No. L5724
POST MILE

PASADENA 210/134
TUNNEL CONTROL BUILDING
MODIFIED SITE PLAN

SHEET **EE1-2**

TAEMWW Imperial - CCSC Rev. 01/13

ORIGINAL SCALE IN INCHES FOR REDUCED PLANS 0 1 2 3

UNIT: 3597 CONTRACT No.: 2881U4
PROJECT NUMBER & PHASE: 07140000851

DISREGARD PRINTS BEARING EARLIER REVISION DATES → 1-29-13 2-28-14 4-25-14

REVISION DATES (PRELIMINARY STAGE ONLY) SHEET OF

EA 2881U1

P:\dist_07\0700020994_la_210_interchange_building\expedite\ee1_02.dgn

18-JUN-2014 10:18

Dist	COUNTY	ROUTE	POST MILES TOTAL PROJECT	SHEET No.	TOTAL SHEETS
07	LA	210	R16.1/R25.8	876	927

Jaswinder S Sandhu 04-25-14
REGISTERED ELECTRICAL ENGINEER DATE

5-12-14
PLANS APPROVAL DATE

REGISTERED PROFESSIONAL ENGINEER Jaswinder Sandhu No. 11803 Exp. 9-30-14 ELEC STATE OF CALIFORNIA

The State of California or its officers or agents shall not be responsible for the accuracy or completeness of scanned copies of this plan sheet.

CALIFORNIA STATE FIRE MARSHAL APPROVED
Approval of this plan does not authorize or approve any omission or deviation from applicable regulations. Final approval is subject to field inspection. One set of approved plans shall be available on the project site at all times.
Reviewed by: FRANCIS (SONNY) SOLICH
Approval date: March 27, 2014

NOTES:

1. 1"C, 2#10, 1#10 ground.
2. Duplex receptacle. Install duplex receptacle inside 12"x12"x8" NEMA-4X stainless steel hinged enclosure with padlockable hasp. Mount 4'-0" above finished grade.
3. For tunnel light fixtures and conduit installation details inside the tunnel, see sheet EE4-3.
4. This number represents number of daytime light fixtures between nighttime light fixtures. typical for all.
5. Install East Wall Light Circuit Divider Control Panel. Secure control panel to wall. For control panel details and size of conduit and conductors to and from this panel, see sheet EE3-12.
6. Install West Wall Light Circuit Divider Control Panel. Secure control panel to wall. For control panel details and size of conduit and conductors to and from this panel, see sheet EE3-12.
7. Install Tunnel No. 1 Dimming Control Panel. Secure dimming control panel to wall. For size of conduits and conductors to and from this panel, see sheet EE3-16.
8. 1"C, 2#8 (Dimming Control Panel power),2#8 (Tunnel duplex receptacle), 1#8 ground to Panel P inside Tunnel Control Building.
9. 2"C, 6 Tunnel Light Level Intensity Reference Signal cables, 2 Tunnel Interior Light Sensor/Photodiode cables to Tunnel Control Building.
10. 1"C, 1 Tunnel Interior Light Sensor/Photodiode cables to Tunnel No. 1 Dimming Control Panel.
11. In the direction of travel, supply first half tunnel daytime light fixtures from one set of circuit breakers and second half tunnel daytime light fixtures from the second set of circuit breakers inside Tunnel Light Circuit Divider Control Panel.Typical for both East and West wall. For details, see sheet EE3-12.
12. For additional conduits and cables not shown here, see sheet EE3-16 Notes No. 3, and 6 and sheet EE4-3.
13. For Tunnel Light Fixtures Photometrics, see sheet EE1-12.

GENERAL NOTES:

A. Nighttime light fixtures are unswitched and are "ON" 24/7/365. For dimming, see controls.

B. For wiring of each lighting fixtures in a given lighting group of fixtures, see sheet EE1-7.

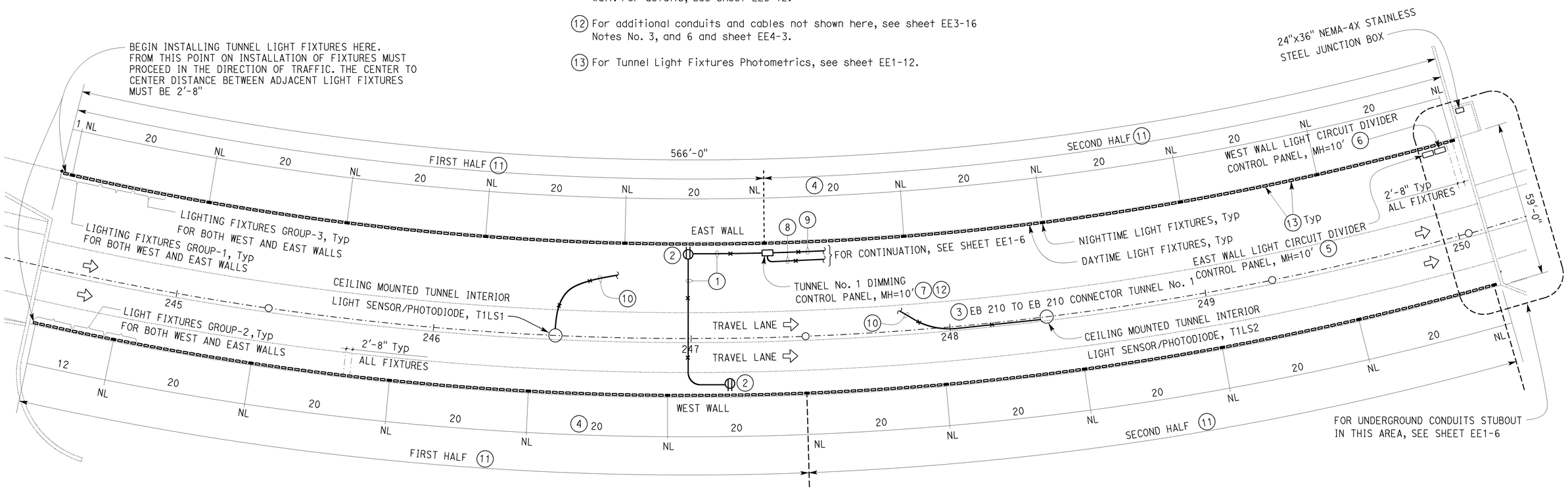

PLAN
1" = 20'

TUNNEL No. 1			
LOCATION	TOTAL NUMBER OF LIGHT FIXTURES		MOUNTING HEIGHT TO BOTTOM OF FIXTURES
	☐ DAYTIME LIGHT	▨ NIGHTTIME LIGHT	
EAST WALL	201	11	14'-0"
WEST WALL	212	11	14'-0"
TOTAL BOTH WALLS	413	22	

APPROVED FOR ELECTRICAL WORK ONLY

	BY	CHECKED
DESIGN	Jaswinder Sandhu	Jaswinder Gill
DETAILS	Ed D. Tapalla	Jaswinder Sandhu
QUANTITIES	Jaswinder Sandhu	Jaswinder Gill

STATE OF CALIFORNIA
DEPARTMENT OF TRANSPORTATION

DIVISION OF ENGINEERING SERVICES
ELECTRICAL-MECHANICAL-WATER AND WASTEWATER DESIGN

BRIDGE No. 53-2341
POST MILE R24.77

PASADENA 210/134 TUNNEL CONTROL BUILDING
TUNNEL No. 1 LIGHTING LAYOUT

SHEET **EE1-3**

TAEMWW Imperial - CCSC Rev. 01/13

ORIGINAL SCALE IN INCHES FOR REDUCED PLANS 0 1 2 3

UNIT: 3597 CONTRACT No.: 2881U4
PROJECT NUMBER & PHASE: 07140000851

DISREGARD PRINTS BEARING EARLIER REVISION DATES → 7-25-13 2-28-14 4-25-14

REVISION DATES (PRELIMINARY STAGE ONLY) SHEET OF

EA 2881U1

P:\dist_07\0700020994_la_210_interchange_building\expedite\ee1_03.dgn

18-JUN-2014 10:18

Dist	COUNTY	ROUTE	POST MILES TOTAL PROJECT	SHEET No.	TOTAL SHEETS
07	LA	210	R16.1/R25.8	877	927

Jaswinder S Sandhu 04-25-14
REGISTERED ELECTRICAL ENGINEER DATE

5-12-14
PLANS APPROVAL DATE

REGISTERED PROFESSIONAL ENGINEER Jaswinder Sandhu No. 11803 Exp. 9-30-14 ELEC STATE OF CALIFORNIA

The State of California or its officers or agents shall not be responsible for the accuracy or completeness of scanned copies of this plan sheet.

CALIFORNIA STATE FIRE MARSHAL APPROVED
Approval of this plan does not authorize or approve any omission or deviation from applicable regulations. Final approval is subject to field inspection. One set of approved plans shall be available on the project site at all times.
Reviewed by: FRANCIS (SONNY) SOLICH
Approval date: March 27, 2014

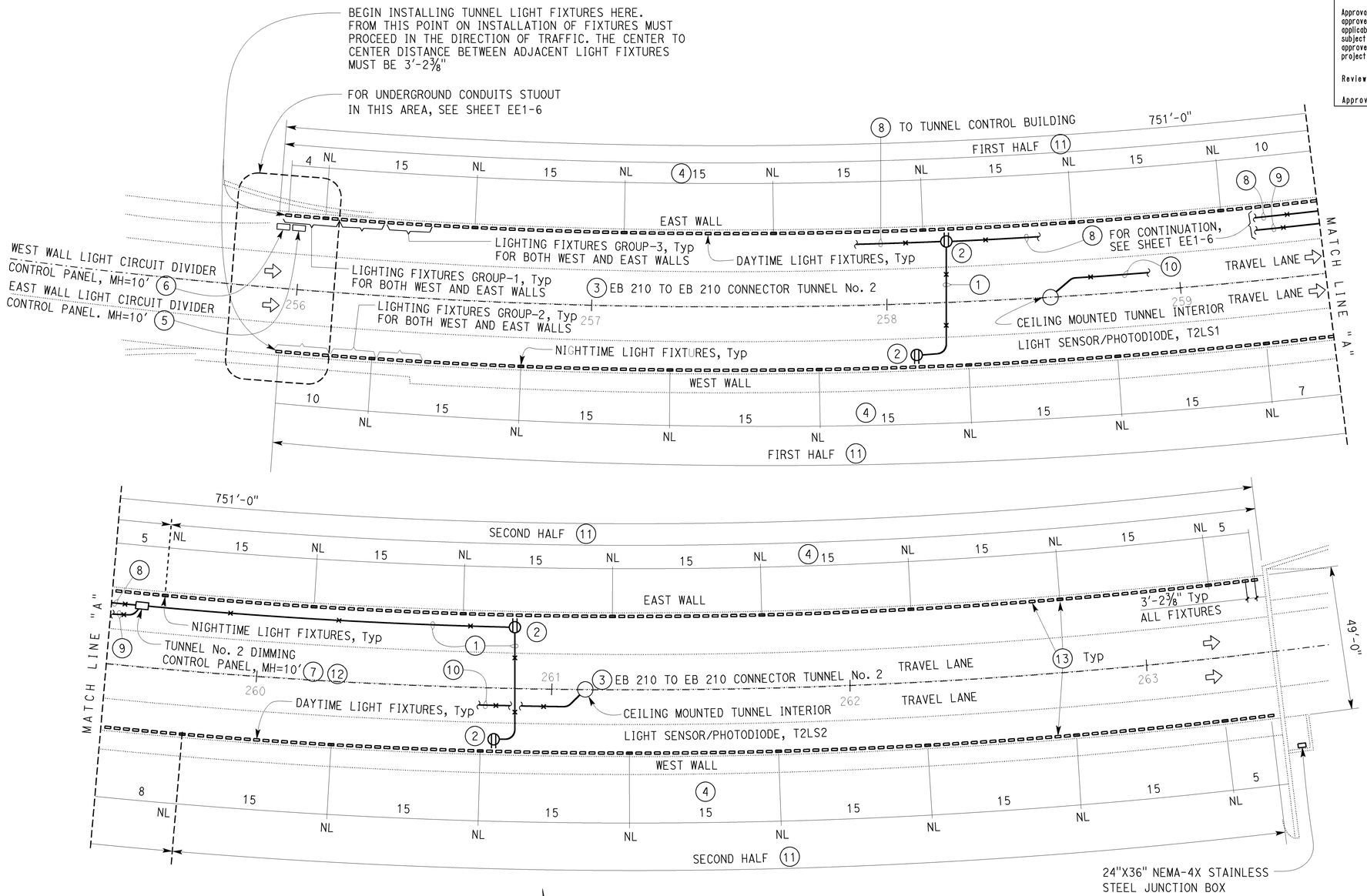

PLAN
1" = 20'

TUNNEL No. 2			
LOCATION	TOTAL NUMBER OF LIGHT FIXTURES		MOUNTING HEIGHT TO BOTTOM OF FIXTURES
	DAYTIME LIGHT	NIGHTTIME LIGHT	
EAST WALL	219	15	14'-0"
WEST WALL	225	15	14'-0"
TOTAL BOTH WALLS	444	30	

GENERAL NOTES:

A. Nighttime light fixtures are unswitched and are "ON" 24/7/365. For dimming, see controls.

B. For wiring of each lighting fixtures in a given lighting group of fixtures, see sheet EE1-8.

NOTES:

(1) 1"C, 2#10, 1#10 ground.

(2) Duplex receptacle. Install duplex receptacle inside 12"x12"x8" NEMA-4X stainless steel hinged enclosure with padlockable hasp. Mount 4'-0" above finish grade.

(3) For tunnel light fixtures and conduit installation details inside the tunnel, see sheet EE4-3.

(4) This number represents number of daytime light fixtures between nighttime light fixtures. typical for all.

(5) Install East Wall Light Circuit Divider Control Panel. Secure control panel to wall. For control panel details and size of conduit and conductors to and from this panel, see sheet EE3-12.

(6) Install West Wall Light Circuit Divider Control Panel. Secure control panel to wall. For control panel details and size of conduit and conductors to and from this panel, see sheet EE3-12.

(7) Install Tunnel No. 2 Dimming Control Panel. Secure dimming control panel to wall. For size of conduits and conductors to and from this panel, see sheet EE3-16.

(8) 1"C, 2#8 (Dimming Control Panel power),2#8 (Tunnel duplex receptacle), 1#8 ground to Panel P inside Tunnel Control Building.

(9) 2"C, 6 Tunnel Light Level Intensity Reference Signal cables, 2 Tunnel Interior Light Sensor/Photodiode cables to Tunnel Control Building.

(10) 1"C, 1 Tunnel Interior Light Sensor/Photodiode cable to Tunnel No. 2 Dimming Control Panel.

(11) In the direction of travel, supply first half tunnel daytime light fixtures from one set of circuit breakers and second half tunnel daytime light fixtures from the second set of circuit breakers inside Light Circuit Divider Control Panel. Typical for both East and West wall. For Details, see sheet EE1-12.

(12) For additional conduits and cables not shown here, see sheet EE3-16 Notes No. 3, 5 and 6 and sheet EE4-3.

(13) For Tunnel Light Fixtures Photometrics, see sheet EE1-12.

APPROVED FOR ELECTRICAL WORK ONLY

	BY	CHECKED
DESIGN	Jaswinder Sandhu	Jaswinder Gill
DETAILS	Ed D. Tapalla	Jaswinder Sandhu
QUANTITIES	Jaswinder Sandhu	Jaswinder Gill

STATE OF CALIFORNIA
DEPARTMENT OF TRANSPORTATION

DIVISION OF ENGINEERING SERVICES
ELECTRICAL-MECHANICAL-WATER AND WASTEWATER DESIGN

BRIDGE No. 53-2268
POST MILE R24.92

PASADENA 210/134 TUNNEL CONTROL BUILDING
TUNNEL No. 2 LIGHTING LAYOUT

SHEET **EE1-4**

TAEMWW Imperial - CCSC Rev. 01/13

ORIGINAL SCALE IN INCHES FOR REDUCED PLANS 0 1 2 3

UNIT: 3597 CONTRACT No.: 2881U4
PROJECT NUMBER & PHASE: 07140000851

DISREGARD PRINTS BEARING EARLIER REVISION DATES → 11-16-13 2-28-14 4-25-14

REVISION DATES (PRELIMINARY STAGE ONLY) SHEET OF

EA 2881U1

P:\dist_07\0700020994_la_210_interchange_building\expedite\ee1_04.dgn

18-JUN-2014 10:18

Dist	COUNTY	ROUTE	POST MILES TOTAL PROJECT	SHEET No.	TOTAL SHEETS
07	LA	210	R16.1/R25.8	878	927

Jaswinder S Sandhu 04-25-14
REGISTERED ELECTRICAL ENGINEER DATE

5-12-14
PLANS APPROVAL DATE

REGISTERED PROFESSIONAL ENGINEER Jaswinder Sandhu No. 11803 Exp. 9-30-14 ELEC STATE OF CALIFORNIA

The State of California or its officers or agents shall not be responsible for the accuracy or completeness of scanned copies of this plan sheet.

CALIFORNIA STATE FIRE MARSHAL APPROVED
Approval of this plan does not authorize or approve any omission or deviation from applicable regulations. Final approval is subject to field inspection. One set of approved plans shall be available on the project site at all times.
Reviewed by: FRANCIS(SONNY)SOLICH
Approval date: March 27,2014

NOTES:

(1) 1"C, 2#10, 1#10 ground.

(2) Duplex receptacle. Install duplex receptacle inside 12"x12"x8" NEMA-4X stainless steel hinged enclosure with padlockable hasp. Mount 4'-0" above finish grade.

(3) For tunnel light fixtures and conduit installation details inside the tunnel, see sheet EE4-3.

(4) This number represents number of daytime light fixtures between nighttime light fixtures. typical for all.

(5) Install East Wall Light Circuit Divider Control Panel. Secure control panel to wall. For Control Panel Details and size of conduit and conductors to and from this panel, see sheet EE3-12.

(6) Install West Wall Light Circuit Divider Control Panel. Secure control panel to wall. For Control Panel Details and size of conduit and conductors to and from this panel, see sheet EE3-12.

(7) Install Tunnel No. 1 Dimming Control Panel. Secure dimming control panel to wall. For size of conduits and conductors to and from this panel, see sheet EE3-16.

(8) 1"C, 2#8 (Dimming Control Panel power),2#8 (Tunnel duplex receptacle), 1#8 ground to Panel P inside Tunnel Control Building.

(9) 2"C, 6 Tunnel Light Level Intensity Reference Signal cables, 2 Tunnel Interior Light Sensor/Photodiode cables to Tunnel Control Building.

(10) 1"C, 1 Tunnel Interior Light Sensor/Photodiode cables to Tunnel No. 3 Dimming Control Panel.

(11) In the direction of travel, supply first half tunnel daytime light fixtures from one set of circuit breakers and second half tunnel daytime light fixtures from the second set of circuit breakers inside Tunnel Light Circuit Divider Control Panel.Typical for both East and West wall. For Details, see sheet EE3-12.

(12) For additional conduits and cables not shown here, see sheet EE3-16 Notes No. 3, 5 and 6 and sheet EE4-3.

(13) For Tunnel Light Fixtures Photometrics, see sheet EE1-12.

GENERAL NOTES:

A. Nighttime light fixtures are unswitched and are "ON" 24/7/365. For dimming, see controls.

B. For wiring of each lighting fixtures in a given lighting group of fixtures, see sheet EE1-9.

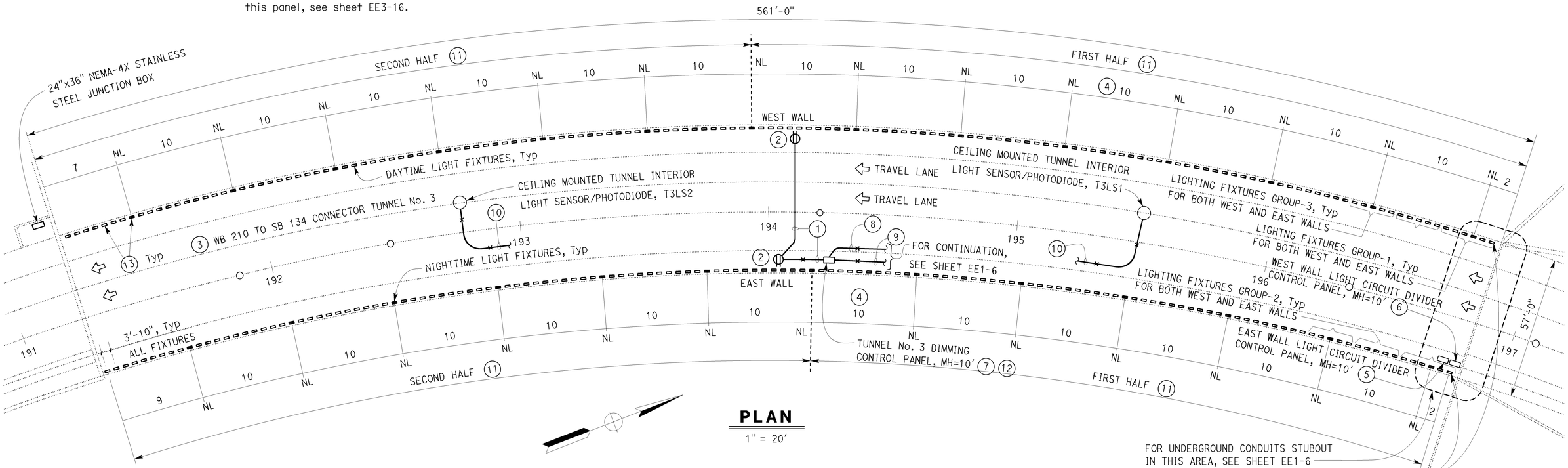

PLAN
1" = 20'

TUNNEL No. 3			
	TOTAL NUMBER OF LIGHT FIXTURES		MOUNTING HEIGHT TO BOTTOM OF FIXTURES
	DAYTIME LIGHT	NIGHTTIME LIGHT	
EAST WALL	131	14	14'-0"
WEST WALL	139	13	14'-0"
TOTAL BOTH WALLS	270	27	

APPROVED FOR ELECTRICAL WORK ONLY

	BY	CHECKED
DESIGN	Jaswinder Sandhu	Jaswinder Gill
DETAILS	Ed D. Tapalla	Jaswinder Sandhu
QUANTITIES	Jaswinder Sandhu	Jaswinder Gill

STATE OF CALIFORNIA
DEPARTMENT OF TRANSPORTATION

DIVISION OF ENGINEERING SERVICES
ELECTRICAL-MECHANICAL-WATER AND WASTEWATER DESIGN

BRIDGE No. 53-2256
POST MILE R25.13

PASADENA 210/134 TUNNEL CONTROL BUILDING
TUNNEL No. 3 LIGHTING LAYOUT

SHEET EE1-5

TAEMWW Imperial - CCSC Rev. 01/13

ORIGINAL SCALE IN INCHES FOR REDUCED PLANS 0 1 2 3

UNIT: 3597 CONTRACT No.: 2881U4
PROJECT NUMBER & PHASE: 07140000851

DISREGARD PRINTS BEARING EARLIER REVISION DATES → REVISION DATES (PRELIMINARY STAGE ONLY) 11-18-13 2-28-14 4-25-14 SHEET OF

EA 2881U1

P:\dist_07\0700020994_la_210_interchange_building\expedite\ee1_05.dgn

18-JUN-2014 10:18

Dist	COUNTY	ROUTE	POST MILES TOTAL PROJECT	SHEET No.	TOTAL SHEETS
07	LA	210	R16.1/R25.8	879	927

Jaswinder S Sandhu 04-25-14
REGISTERED ELECTRICAL ENGINEER DATE

5-12-14
PLANS APPROVAL DATE

REGISTERED PROFESSIONAL ENGINEER Jaswinder Sandhu No. 11803 Exp. 9-30-14 ELEC STATE OF CALIFORNIA

The State of California or its officers or agents shall not be responsible for the accuracy or completeness of scanned copies of this plan sheet.

CALIFORNIA STATE FIRE MARSHAL APPROVED
Approval of this plan does not authorize or approve any omission or deviation from applicable regulations. Final approval is subject to field inspection. One set of approved plans shall be available on the project site at all times.
Reviewed by: FRANCIS(SONNY)SOLICH
Approval date: March 27,2014

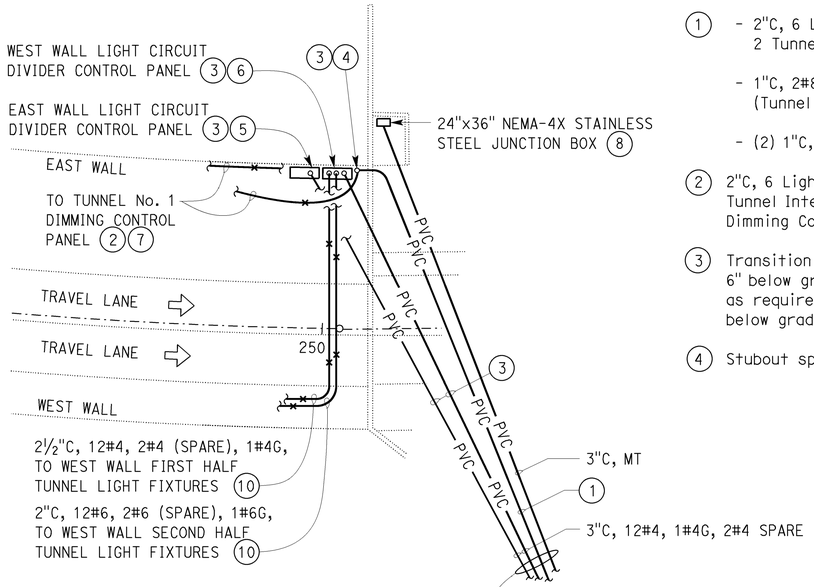

TUNNEL No. 1

NOTES:

1. - 2"C, 6 Light Level Intensity Reference Signal cables, 2 Tunnel interior Photodiode cables.
   - 1"C, 2#8 (Tunnel Dimming Control Panel power), 2#8 (Tunnel duplex receptacle), 1#8 ground.
   - (2) 1"C, PT, (Spare).
2. 2"C, 6 Light Level Intensity Reference Signal cables, 2 Tunnel Interior Light Sensor/Photodiode cables to Tunnel Dimming Control Panel.
3. Transition from PVC to Type 1 conduit must be made 6" below grade. Remove and replace existing pavement as required for making transition. Wrap Type 1 conduit below grade with two layer of pipe wrapping tape.
4. Stubout spare conduits 6" above grade and cap.
5. Install East Wall Light Circuit Divider Control Panel. Secure control panel to wall. For control panel details and size of conduit and conductors to and from this panel, see sheet EE3-12 and EE4-3.
6. Install West Wall Light Circuit Divider Control Panel. Secure control panel to wall. For control panel details and size of conduit and conductors to and from this panel, see sheet EE3-12 and EE4-3.
7. 1"C, 2#8 (Diming Control Panel power), 2#8 (Tunnel duplex receptacle), 1#8 ground.
8. Install NEMA-4X junction box in a manner to have existing conduit and conductors to (spare) get enclosed inside it.
9. Install all conduits by utilizing directional boring method only.
10. Install conduits on the tunnel soffit and support at interval indicated elsewhere.

GENERAL NOTE:

A. For conduit and conductors that are required but not shown here, refer to plan sheet EE3-12 and EE4-3

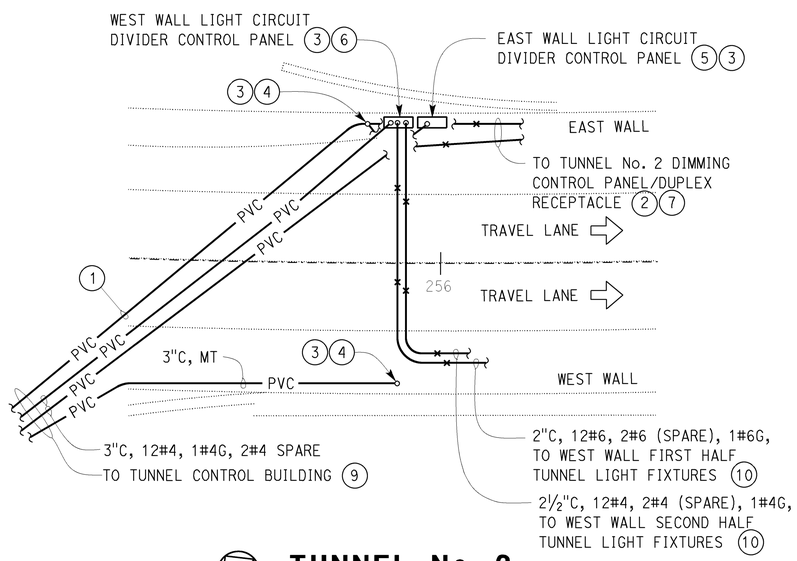

TUNNEL No. 2

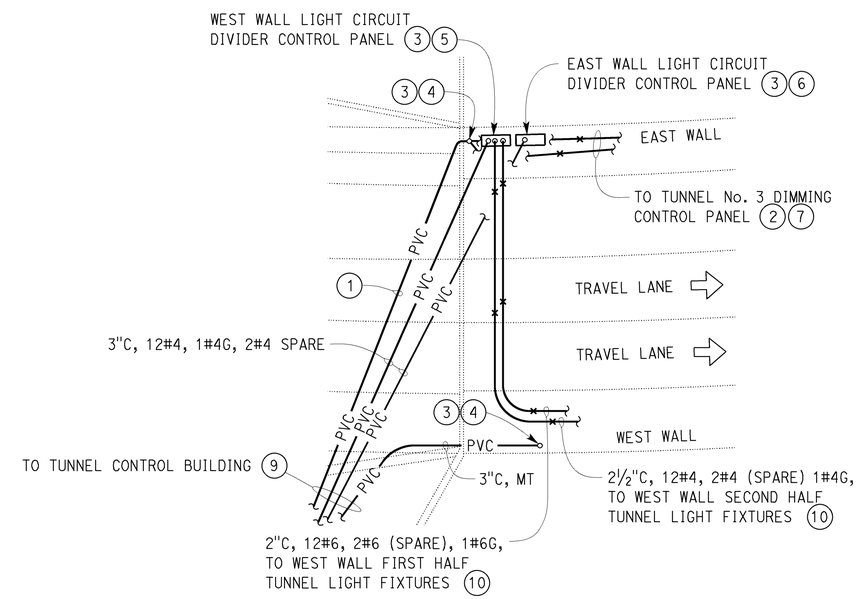

TUNNEL No. 3

APPROVED FOR ELECTRICAL WORK ONLY

	BY	CHECKED
DESIGN	Jaswinder Sandhu	Jaswinder Gill
DETAILS	Ed D. Tapalla	Jaswinder Sandhu
QUANTITIES	Jaswinder Sandhu	Jaswinder Gill

STATE OF CALIFORNIA
DEPARTMENT OF TRANSPORTATION

DIVISION OF ENGINEERING SERVICES
ELECTRICAL-MECHANICAL-WATER AND WASTEWATER DESIGN

BRIDGE No. L5724
POST MILE

PASADENA 210/134
TUNNEL CONTROL BUILDING
TUNNEL PORTAL-CONDUIT STUBOUT

SHEET **EE1-6**

TAEMWW Imperial - CCSC Rev. 01/13

ORIGINAL SCALE IN INCHES FOR REDUCED PLANS 0 1 2 3

UNIT: 3597 CONTRACT No.: 2881U4
PROJECT NUMBER & PHASE: 07140000851

DISREGARD PRINTS BEARING EARLIER REVISION DATES → REVISION DATES (PRELIMINARY STAGE ONLY) 1-10-14 2-28-14 4-25-14 SHEET OF

EA 2881U1

P:\dist_07\0700020994_la_210_interchange_building\expedite\ee1_06.dgn

18-JUN-2014 10:18

Dist	COUNTY	ROUTE	POST MILES TOTAL PROJECT	SHEET No.	TOTAL SHEETS
07	LA	210	R16.1/R25.8	880	927

CALIFORNIA STATE FIRE MARSHAL APPROVED
Approval of this plan does not authorize or approve any omission or deviation from applicable regulations. Final approval is subject to field inspection. One set of approved plans shall be available on the project site at all times.
Reviewed by: FRANCIS(SONNY)SOLICH
Approval date: March 27,2014

Jaswinder S Sandhu 04-25-14
REGISTERED ELECTRICAL ENGINEER DATE

5-12-14
PLANS APPROVAL DATE

REGISTERED PROFESSIONAL ENGINEER Jaswinder Sandhu No. 11803 Exp. 9-30-14 ELEC STATE OF CALIFORNIA

The State of California or its officers or agents shall not be responsible for the accuracy or completeness of scanned copies of this plan sheet.

LIGHTING FIXTURE GROUP No.	FIXTURE No. IN A GROUP OF 5 ON WEST WALL	LIGHT LEVEL No.	CIRCUIT No. FOR FIXTURE ON WEST WALL	FIXTURE No. IN A GROUP OF 5 ON EAST WALL	LIGHT LEVEL No.	CIRCUIT No. FOR FIXTURE ON EAST WALL
1	1	1	T1 1-3	1	2	T1 2-4
	2	3	T1 5-7	2	5	T1 6-8
	3	5	T1 9-11	3	3	T1 10-12
	4	2	T1 13-15	4	1	T1 14-16
	5	4	T1 17-19	5	4	T1 18-20
2	1	1	T1 1-3	1	2	T1 2-4
	2	3	T1 5-7	2	5	T1 6-8
	3	5	T1 9-11	3	3	T1 10-12
	4	2	T1 13-15	4	1	T1 14-16
	5	4	T1 17-19	5	4	T1 18-20
3	1	1	T1 1-3	1	2	T1 2-4
	2	3	T1 5-7	2	5	T1 6-8
	3	5	T1 9-11	3	3	T1 10-12
	4	2	T1 13-15	4	1	T1 14-16
	5	4	T1 17-19	5	4	T1 18-20
19	1	1	T1 1-3	1	2	T1 2-4
	2	3	T1 5-7	2	5	T1 6-8
	3	5	T1 9-11	3	3	T1 10-12
	4	2	T1 13-15	4	1	T1 14-16
	5	4	T1 17-19	5	4	T1 18-20
20	1	1	T1 1-3	1	2	T1 2-4
	2	3	T1 5-7	2	5	T1 6-8
	3	5	T1 9-11	3	3	T1 10-12
	4	2	T1 13-15	4	1	T1 14-16
	5	4	T1 17-19	5	4	T1 18-20
21	1	1	T1 1-3	1	2	T1 2-4
	2	3	T1 5-7	2	5	T1 6-8
	3	5	T1 9-11	3	3	T1 10-12
	4	2	T1 13-15	4	1	T1 14-16
	5	4	T1 17-19	5	4	T1 18-20

AND ON FOR THE ENTIRE LENGTH OF TUNNEL No. 1

ABBREVIATIONS

(SHEETS EE1-7 THRU EE1-9 AND SHEETS EE3-13 THRU EE3-15 ONLY)

F FIXTURE
LL LIGHTING LEVEL

GENERAL NOTE:

A. For tunnel "LIGHTING WIRING DIAGRAM" with corresponding circuit number, see this sheet and sheet EE3-9.

NOTES:

1. On west wall, the sequence of lighting levels (1-3-5-2-4) must be maintained on all lighting fixtures from Tunnel No. 1 entrance, and must continue towards the exit.

2. On east wall, the sequence of lighting level (2-5-3-1-4) must be maintained on all lighting fixtures from Tunnel No. 1 entrance, and must continue towards the exit.

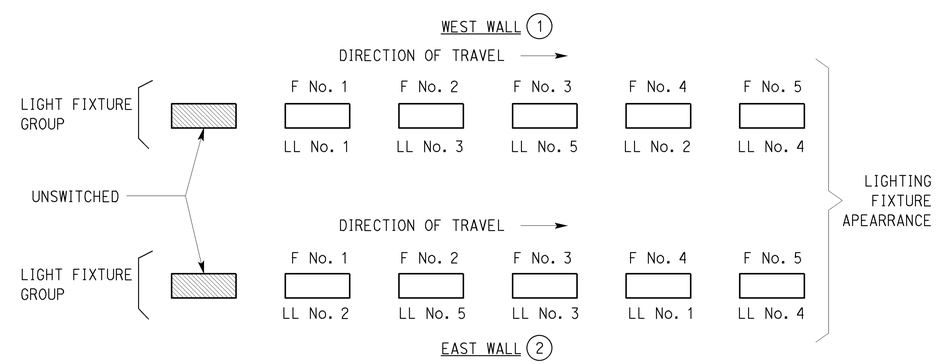

LIGHTING FIXTURE GROUP CONFIGURATION AND CORRESPONDING LEVEL DESIGNATION

APPROVED FOR ELECTRICAL WORK ONLY

	BY	CHECKED
DESIGN	Jaswinder Sandhu	Jaswinder Gill
DETAILS	Dali Zhou/Ed Tapalla	Jaswinder Sandhu
QUANTITIES	Jaswinder Sandhu	Jaswinder Gill

STATE OF CALIFORNIA DEPARTMENT OF TRANSPORTATION

DIVISION OF ENGINEERING SERVICES ELECTRICAL-MECHANICAL-WATER AND WASTEWATER DESIGN

BRIDGE No. 53-2341
POST MILE R24.77

PASADENA 210/134 TUNNEL CONTROL BUILDING
TUNNEL No. 1 LIGHTING LEVELS LAYOUT

SHEET EE1-7

TAEMWW Imperial - CCSC Rev. 01/13

ORIGINAL SCALE IN INCHES FOR REDUCED PLANS 0 1 2 3

UNIT: 3597 CONTRACT No.: 2881U4
PROJECT NUMBER & PHASE: 07140000851

DISREGARD PRINTS BEARING EARLIER REVISION DATES 12-13-13 2-28-14 4-25-14

REVISION DATES (PRELIMINARY STAGE ONLY) SHEET OF

EA 2881U1

P:\dist_07\0700020994_la_210_interchange_building\expedite\ee1_07.dgn

18-JUN-2014 10:18

Dist	COUNTY	ROUTE	POST MILES TOTAL PROJECT	SHEET No.	TOTAL SHEETS
07	LA	210	R16.1/R25.8	881	927

Jaswinder S Sandhu 04-25-14
REGISTERED ELECTRICAL ENGINEER DATE

5-12-14
PLANS APPROVAL DATE

REGISTERED PROFESSIONAL ENGINEER Jaswinder Sandhu No. 11803 Exp. 9-30-14 ELEC STATE OF CALIFORNIA

The State of California or its officers or agents shall not be responsible for the accuracy or completeness of scanned copies of this plan sheet.

CALIFORNIA STATE FIRE MARSHAL APPROVED
Approval of this plan does not authorize or approve any omission or deviation from applicable regulations. Final approval is subject to field inspection. One set of approved plans shall be available on the project site at all times.
Reviewed by: FRANCIS (SONNY) SOLICH
Approval date: March 27, 2014

LIGHTING FIXTURE GROUP No.	FIXTURE No. IN A GROUP OF 5 ON WEST WALL	LIGHT LEVEL No.	CIRCUIT No. FOR FIXTURE ON WEST WALL	FIXTURE No. IN A GROUP OF 5 ON EAST WALL	LIGHT LEVEL No.	CIRCUIT No. FOR FIXTURE ON EAST WALL
1	1	1	T2 1-3	1	2	T2 2-4
	2	3	T2 5-7	2	5	T2 6-8
	3	5	T2 9-11	3	3	T2 10-12
	4	2	T2 13-15	4	1	T2 14-16
	5	4	T2 17-19	5	4	T2 18-20
2	1	1	T2 1-3	1	2	T2 2-4
	2	3	T2 5-7	2	5	T2 6-8
	3	5	T2 9-11	3	3	T2 10-12
	4	2	T2 13-15	4	1	T2 14-16
	5	4	T2 17-19	5	4	T2 18-20
3	1	1	T2 1-3	1	2	T2 2-4
	2	3	T2 5-7	2	5	T2 6-8
	3	5	T2 9-11	3	3	T2 10-12
	4	2	T2 13-15	4	1	T2 14-16
	5	4	T2 17-19	5	4	T2 18-20
19	1	1	T2 1-3	1	2	T2 2-4
	2	3	T2 5-7	2	5	T2 6-8
	3	5	T2 9-11	3	3	T2 10-12
	4	2	T2 13-15	4	1	T2 14-16
	5	4	T2 17-19	5	4	T2 18-20
20	1	1	T2 1-3	1	2	T2 2-4
	2	3	T2 5-7	2	5	T2 6-8
	3	5	T2 9-11	3	3	T2 10-12
	4	2	T2 13-15	4	1	T2 14-16
	5	4	T2 17-19	5	4	T2 18-20
21	1	1	T2 1-3	1	2	T2 2-4
	2	3	T2 5-7	2	5	T2 6-8
	3	5	T2 9-11	3	3	T2 10-12
	4	2	T2 13-15	4	1	T2 14-16
	5	4	T2 17-19	5	4	T2 18-20

AND ON FOR THE ENTIRE LENGTH OF TUNNEL No. 2

GENERAL NOTE:

A. For tunnel "LIGHTING WIRING DIAGRAM" with corresponding circuit number, see this sheet and sheet EE3-10.

NOTES:

(1) On west wall, the sequence of lighting levels (1-3-5-2-4) must be maintained on all lighting fixtures from Tunnel No. 2 entrance, and must continue towards the exit.

(2) On east wall, the sequence of lighting level (2-5-3-1-4) must be maintained on all lighting fixtures from Tunnel No. 2 entrance, and must continue towards the exit.

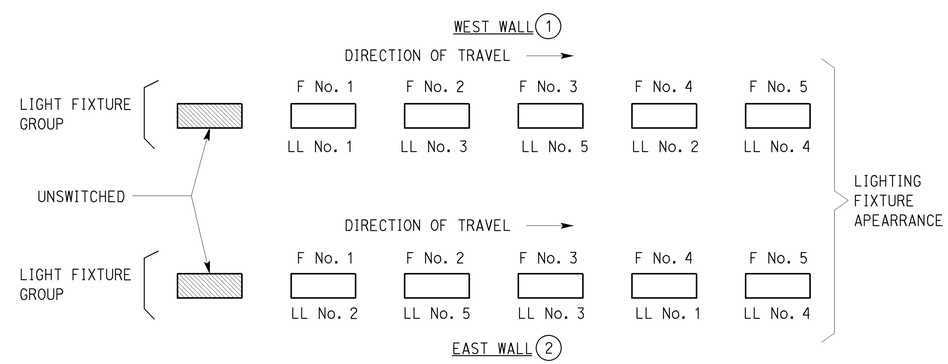

LIGHTING FIXTURE GROUP CONFIGURATION AND CORRESPONDING LEVEL DESIGNATION

APPROVED FOR ELECTRICAL WORK ONLY

	BY	CHECKED
DESIGN	Jaswinder Sandhu	Jaswinder Gill
DETAILS	Dali Zhou	Jaswinder Sandhu
QUANTITIES	Jaswinder Sandhu	Jaswinder Gill

STATE OF CALIFORNIA DEPARTMENT OF TRANSPORTATION

DIVISION OF ENGINEERING SERVICES ELECTRICAL-MECHANICAL-WATER AND WASTEWATER DESIGN

BRIDGE No. 53-2268
POST MILE R24.92

PASADENA 210/134 TUNNEL CONTROL BUILDING
TUNNEL No. 2 LIGHTING LEVELS LAYOUT

SHEET EE1-8

TAEMWW Imperial - CCSC Rev. 01/13

ORIGINAL SCALE IN INCHES FOR REDUCED PLANS 0 1 2 3

UNIT: 3597 CONTRACT No.: 2881U4
PROJECT NUMBER & PHASE: 07140000851

DISREGARD PRINTS BEARING EARLIER REVISION DATES 12-17-13 2-28-14 4-25-14

REVISION DATES (PRELIMINARY STAGE ONLY) SHEET OF

EA 2881U1

P:\dist_07\0700020994_la_210_interchange_building\expedite\ee1_08.dgn

18-JUN-2014 10:18

Dist	COUNTY	ROUTE	POST MILES TOTAL PROJECT	SHEET No.	TOTAL SHEETS
07	LA	210	R16.1/R25.8	882	927

Jaswinder S Sandhu 04-25-14
REGISTERED ELECTRICAL ENGINEER DATE

5-12-14
PLANS APPROVAL DATE

REGISTERED PROFESSIONAL ENGINEER Jaswinder Sandhu No. 11803 Exp. 9-30-14 ELEC STATE OF CALIFORNIA

The State of California or its officers or agents shall not be responsible for the accuracy or completeness of scanned copies of this plan sheet.

CALIFORNIA STATE FIRE MARSHAL APPROVED
Approval of this plan does not authorize or approve any omission or deviation from applicable regulations. Final approval is subject to field inspection. One set of approved plans shall be available on the project site at all times.
Reviewed by: FRANCIS(SONNY)SOLICH
Approval date: March 27,2014

LIGHTING FIXTURE GROUP No.	FIXTURE No. IN A GROUP OF 5 ON WEST WALL	LIGHT LEVEL No.	CIRCUIT No. FOR FIXTURE ON WEST WALL	FIXTURE No. IN A GROUP OF 5 ON EAST WALL	LIGHT LEVEL No.	CIRCUIT No. FOR FIXTURE ON EAST WALL
1	1	1	T3 1-3	1	2	T3 2-4
	2	3	T3 5-7	2	5	T3 6-8
	3	5	T3 9-11	3	3	T3 10-12
	4	2	T3 13-15	4	1	T3 14-16
	5	4	T3 17-19	5	4	T3 18-20
2	1	1	T3 1-3	1	2	T3 2-4
	2	3	T3 5-7	2	5	T3 6-8
	3	5	T3 9-11	3	3	T3 10-12
	4	2	T3 13-15	4	1	T3 14-16
	5	4	T3 17-19	5	4	T3 18-20
3	1	1	T3 1-3	1	2	T3 2-4
	2	3	T3 5-7	2	5	T3 6-8
	3	5	T3 9-11	3	3	T3 10-12
	4	2	T3 13-15	4	1	T3 14-16
	5	4	T3 17-19	5	4	T3 18-20
19	1	1	T3 1-3	1	2	T3 2-4
	2	3	T3 5-7	2	5	T3 6-8
	3	5	T3 9-11	3	3	T3 10-12
	4	2	T3 13-15	4	1	T3 14-16
	5	4	T3 17-19	5	4	T3 18-20
20	1	1	T3 1-3	1	2	T3 2-4
	2	3	T3 5-7	2	5	T3 6-8
	3	5	T3 9-11	3	3	T3 10-12
	4	2	T3 13-15	4	1	T3 14-16
	5	4	T3 17-19	5	4	T3 18-20
21	1	1	T3 1-3	1	2	T3 2-4
	2	3	T3 5-7	2	5	T3 6-8
	3	5	T3 9-11	3	3	T3 10-12
	4	2	T3 13-15	4	1	T3 14-16
	5	4	T3 17-19	5	4	T3 18-20

AND ON FOR THE ENTIRE LENGTH OF TUNNEL No. 3

GENERAL NOTE:

A. For tunnel "LIGHTING WIRING DIAGRAM" with corresponding circuit number, see this sheet and sheet EE3-11.

NOTES:

(1) On west wall, the sequence of lighting levels (1-3-5-2-4) must be maintained on all lighting fixtures from Tunnel No. 3 entrance, and must continue towards the exit.

(2) On east wall, the sequence of lighting level (2-5-3-1-4) must be maintained on all lighting fixtures from Tunnel No. 3 entrance, and must continue towards the exit.

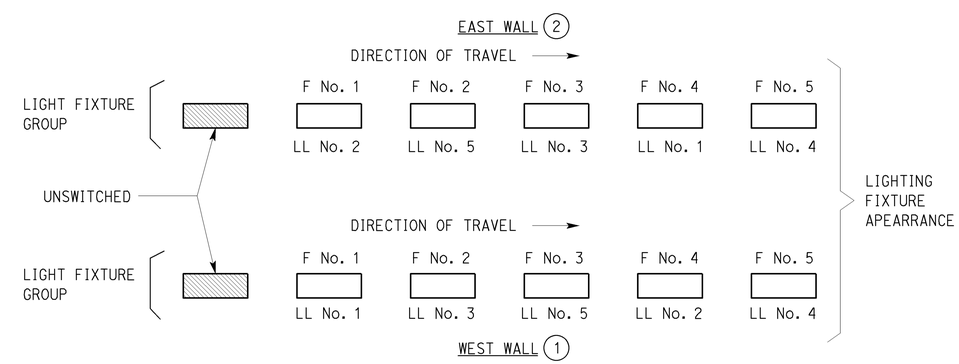

LIGHTING FIXTURE GROUP CONFIGURATION AND CORRESPONDING LEVEL DESIGNATION

APPROVED FOR ELECTRICAL WORK ONLY

	BY	CHECKED
DESIGN	Jaswinder Sandhu	Jaswinder Gill
DETAILS	Dali Zhou	Jaswinder Sandhu
QUANTITIES	Jaswinder Sandhu	Jaswinder Gill

STATE OF CALIFORNIA DEPARTMENT OF TRANSPORTATION

DIVISION OF ENGINEERING SERVICES ELECTRICAL-MECHANICAL-WATER AND WASTEWATER DESIGN

BRIDGE No. 53-2256
POST MILE R25.13

PASADENA 210/134 TUNNEL CONTROL BUILDING
TUNNEL No. 3 LIGHTING LEVELS LAYOUT

SHEET EE1-9

TAEMWW Imperial - CCSC Rev. 01/13

ORIGINAL SCALE IN INCHES FOR REDUCED PLANS 0 1 2 3

UNIT: 3597 CONTRACT No.: 2881U4
PROJECT NUMBER & PHASE: 07140000851

DISREGARD PRINTS BEARING EARLIER REVISION DATES 12-17-13 2-28-14 4-25-14

REVISION DATES (PRELIMINARY STAGE ONLY) SHEET OF

EA 2881U1

P:\dist_07\0700020994_la_210_interchange_building\expedite\ee1_09.dgn

18-JUN-2014 10:18

Dist	COUNTY	ROUTE	POST MILES TOTAL PROJECT	SHEET No.	TOTAL SHEETS
07	LA	210	R16.1/R25.8	883	927

CALIFORNIA STATE FIRE MARSHAL
APPROVED
Approval of this plan does not authorize or approve any omission or deviation from applicable regulations. Final approval is subject to field inspection. One set of approved plans shall be available on the project site at all times.
Reviewed by: FRANCIS(SONNY)SOLICH
Approval date: March 27,2014

Jaswinder S Sandhu 04-25-14
REGISTERED ELECTRICAL ENGINEER DATE

5-12-14
PLANS APPROVAL DATE

REGISTERED PROFESSIONAL ENGINEER Jaswinder Sandhu No. 11803 Exp. 9-30-14 ELEC STATE OF CALIFORNIA

The State of California or its officers or agents shall not be responsible for the accuracy or completeness of scanned copies of this plan sheet.

GENERAL NOTES:

A. For exact location of these panelboards, see sheets EE4-2.

B. Terminate field conductors at various terminal blocks inside lighting contactors section for each tunnel.

MAIN: 400 A/3P CIRCUIT BREAKER
VOLTS: 277/480 V, 3-PHASE, 4-WIRE

PANEL: T1 (TUNNEL No. 1)
SCCR 65000

LOCATION: TUNNEL CONTROL BUILDING

DESCRIPTION	AMPERES A	AMPERES B	AMPERES C	Brk	Ckt	A B C	Ckt	Brk	AMPERES A	AMPERES B	AMPERES C	DESCRIPTION
WEST SIDE LIGHTS (LEVEL 1) - LC1T1W	34.5			50/2	1		2	50/2	32			EAST SIDE LIGHTS (LEVEL 1) - LC1T1E
		34.5			3		4			32		
WEST SIDE LIGHTS (LEVEL 2) - LC2T1W			34.5		5		6				32	EAST SIDE LIGHTS (LEVEL 2) - LC2T1E
	34.5				7		8		32			
WEST SIDE LIGHTS (LEVEL 3) - LC3T1W		33.5			9		10			32		EAST SIDE LIGHTS (LEVEL 3) - LC3T1E
			33.5		11		12				32	
WEST SIDE LIGHTS (LEVEL 4) - LC4T1W	33.5				13		14		32			EAST SIDE LIGHTS (LEVEL 4) - LC4T1E
		33.5			15		16			32		
WEST SIDE LIGHTS (LEVEL 5) - LC5T1W			33.5		32		32				32	EAST SIDE LIGHTS (LEVEL 5) - LC5T1E
	33.5				19		20		32			
SPARE		-		30/2	21		22	40/2		18		NIGHT LIGHT
			-		23		24				18	
	-				25		26	50/2	-			SPARE
		-			27		28			-		
			-		29		30				-	SPARE
	-				31		32		-			
		-			33		34			-		SPARE
			-		35		36				-	
	-			20/3	37		38	50/3	-			SPARE
					39		40			-		
					41		42				-	

A	B	C	
264	215.5	215.5	TOTAL CONNECTED LOAD (AMPERES PER PHASE)

MAIN: 400 A/3P CIRCUIT BREAKER
VOLTS: 277/480 V, 3-PHASE, 4-WIRE

PANEL: T2 (TUNNEL No. 2)
SCCR 65000

LOCATION: TUNNELS CONTROL BUILDING

DESCRIPTION	AMPERES A	AMPERES B	AMPERES C	Brk	Ckt	A B C	Ckt	Brk	AMPERES A	AMPERES B	AMPERES C	DESCRIPTION
WEST SIDE LIGHTS (LEVEL 1) - LC1T2W	36			50/2	1		2	50/2	36			EAST SIDE LIGHTS (LEVEL 1) - LC1T2E
		36			3		4			36		
WEST SIDE LIGHTS (LEVEL 2) - LC2T2W			36		5		6				36	EAST SIDE LIGHTS (LEVEL 2) - LC2T2E
	36				7		8		36			
WEST SIDE LIGHTS (LEVEL 3) - LC3T2W		36			9		10			36		EAST SIDE LIGHTS (LEVEL 3) - LC3T2E
			36		11		12				36	
WEST SIDE LIGHTS (LEVEL 4) - LC4T2W	36				13		14		36			EAST SIDE LIGHTS (LEVEL 4) - LC4T2E
		36			15		16			36		
WEST SIDE LIGHTS (LEVEL 5) - LC5T2W			36		32		18				36	EAST SIDE LIGHTS (LEVEL 5) - LC5T2E
	36				19		20		36			
SPARE		-		30/2	21		22	50/2		-		SPARE
			-		23		24				-	
	-				25		26	40/2	24			NIGHT LIGHT
		-			27		28			24		
			-		29		30	50/2			-	SPARE
	-				31		32		-			
		-			33		34			-		SPARE
			-		35		36				-	
	-			20/3	37		38	50/3	-			SPARE
		-			39		40			-		
			-		41		42				-	

A	B	C	
312	240	216	TOTAL CONNECTED LOAD (AMPERES PER PHASE)

APPROVED FOR ELECTRICAL WORK ONLY

	BY	CHECKED
DESIGN	Jaswinder Sandhu	Jaswinder Gill
DETAILS	Dali Zhou	Jaswinder Sandhu
QUANTITIES	Jaswinder Sandhu	Jaswinder Gill

STATE OF CALIFORNIA
DEPARTMENT OF TRANSPORTATION

DIVISION OF ENGINEERING SERVICES
ELECTRICAL-MECHANICAL-WATER AND WASTEWATER DESIGN

BRIDGE No. L5724
POST MILE

PASADENA 210/134
TUNNEL CONTROL BUILDING

PANEL SCHEDULE 1

SHEET EE1-10

TAEMWW Imperial - CCSC Rev. 01/13

ORIGINAL SCALE IN INCHES FOR REDUCED PLANS 0 1 2 3

UNIT: 3597 CONTRACT No.: 2881U4
PROJECT NUMBER & PHASE: 07140000851

DISREGARD PRINTS BEARING EARLIER REVISION DATES → 12-31-13 1-13-14 2-28-14 4-25-14

REVISION DATES (PRELIMINARY STAGE ONLY) SHEET OF

EA 2881U1

P:\dist_07\0700020994_la_210_interchange_building\expedite\ee1_10.dgn

18-JUN-2014 10:18

Dist	COUNTY	ROUTE	POST MILES TOTAL PROJECT	SHEET No.	TOTAL SHEETS
07	LA	210	R16.1/R25.8	884	927

Jaswinder S Sandhu 04-25-14
REGISTERED ELECTRICAL ENGINEER DATE

5-12-14
PLANS APPROVAL DATE

REGISTERED PROFESSIONAL ENGINEER Jaswinder Sandhu No. 11803 Exp. 9-30-14 ELEC STATE OF CALIFORNIA

The State of California or its officers or agents shall not be responsible for the accuracy or completeness of scanned copies of this plan sheet.

CALIFORNIA STATE FIRE MARSHAL APPROVED
Approval of this plan does not authorize or approve any omission or deviation from applicable regulations. Final approval is subject to field inspection. One set of approved plans shall be available on the project site at all times.
Reviewed by: FRANCIS(SONNY)SOLICH
Approval date: March 27,2014

GENERAL NOTES:

A. For exact location of these panelboards, see sheets EE4-1.

B. Terminate field conductors at various branch circuit breakers.

MAIN: 400 A/3P CIRCUIT BREAKER
VOLTS: 277/480 V, 3-PHASE, 4-WIRE

PANEL: T3 (TUNNEL No. 3)
SCCR 65000

LOCATION: TUNNELS CONTROL BUILDING

DESCRIPTION	AMPERES A	AMPERES B	AMPERES C	Brk	Ckt	A B C	Ckt	Brk	AMPERES A	AMPERES B	AMPERES C	DESCRIPTION
WEST SIDE LIGHTS (LEVEL 1) - LC1T3W	23			50/2	1		2	50/2	23			EAST SIDE LIGHTS (LEVEL 1) - LC1T3E
		23			3		4			23		
WEST SIDE LIGHTS (LEVEL 2) - LC2T3W			23		5		6				23	EAST SIDE LIGHTS (LEVEL 2) - LC2T3E
	23				7		8		23			
WEST SIDE LIGHTS (LEVEL 3) - LC3T3W		23			9		10			23		EAST SIDE LIGHTS (LEVEL 3) - LC3T3E
			23		11		12				23	
WEST SIDE LIGHTS (LEVEL 4) - LC4T3W	23				13		14		23			EAST SIDE LIGHTS (LEVEL 4) - LC4T3E
		23			15		16			23		
WEST SIDE LIGHTS (LEVEL 5) - LC5T3W			23		17		18				23	EAST SIDE LIGHTS (LEVEL 5) - LC5T3E
	23				19		20		23			
SPARE		-		50/2	21		22	40/2		22		NIGHT LIGHTS
			-		23		24				22	
	-				25		26	30/2	-			SPARE
		-			27		28			-		
			-		29		30				-	SPARE
	-				31		32		-			
		-			33		34			-		SPARE
			-		35		36				-	
	-				37		38		-			SPARE
		-		20/3	39		40	40/3		-		
			-		41		42				-	

A	B	C	
184	160	160	TOTAL CONNECTED LOAD (AMPERES PER PHASE)

MAIN: 50 A/3P CIRCUIT BREAKER
VOLTS: 120/208 V, 3-PHASE, 4-WIRE

PANEL P (TUNNEL CONTROLS)
SCCR 22000

LOCATION: TUNNELS CONTROL BUILDING

DESCRIPTION	AMPERES A	AMPERES B	AMPERES C	Brk	Ckt	A B C	Ckt	Brk	AMPERES A	AMPERES B	AMPERES C	DESCRIPTION
TUNNEL No. 1 DUPLEX RECEPTACLE	3			20/1	1		2	20/1	5			CONTROL POWER
TUNNEL No. 2 DUPLEX RECEPTACLE		6			3		4			5		CONTROL POWER
TUNNEL No. 3 DUPLEX RECEPTACLE			3		5		6				5	CONTROL POWER
TUNNEL No. 1 DIMMING CONTROL PANEL	2				7		8	20/2	8			A/C UNIT
TUNNEL No. 2 DIMMING CONTROL PANEL		2			9		10			8		
TUNNEL No. 3 DIMMING CONTROL PANEL			2		11		12	20/1			4	BUILDING INTERIOR/EXTERIOR LIGHTS
SPARE	-			20/1	13		14	20/1	4.5			BUILDING DUPLEX RECEPTACLE
		-			15		16	20/1		-		SPARE
			-		17		18				-	
	-				19		20		-			
		-			21		22			-		
			-		23		24				-	

A	B	C	
22.5	21	14	TOTAL CONNECTED LOAD (AMPERES PER PHASE)

APPROVED FOR ELECTRICAL WORK ONLY

	BY	CHECKED
DESIGN	Jaswinder Sandhu	Jaswinder Gill
DETAILS	Dali Zhou	Jaswinder Sandhu
QUANTITIES	Jaswinder Sandhu	Jaswinder Gill

STATE OF CALIFORNIA
DEPARTMENT OF TRANSPORTATION

DIVISION OF ENGINEERING SERVICES
ELECTRICAL-MECHANICAL-WATER AND WASTEWATER DESIGN

BRIDGE No. L5724
POST MILE

PASADENA 210/134
TUNNEL CONTROL BUILDING
PANEL SCHEDULE 2

SHEET EE1-11

TAEMWW Imperial - CCSC Rev. 01/13

ORIGINAL SCALE IN INCHES FOR REDUCED PLANS 0 1 2 3

UNIT: 3597 CONTRACT No.: 2881U4
PROJECT NUMBER & PHASE: 07140000851

DISREGARD PRINTS BEARING EARLIER REVISION DATES → 12-13-13 1-13-14 2-28-14 4-25-14

REVISION DATES (PRELIMINARY STAGE ONLY) SHEET OF

EA 2881U1

P:\dist_07\0700020994_la_210_interchange_building\expedite\ee1_11.dgn 18-JUN-2014 10:18

Dist	COUNTY	ROUTE	POST MILES TOTAL PROJECT	SHEET No.	TOTAL SHEETS
07	LA	210	R16.1/R25.8	885	927

CALIFORNIA STATE FIRE MARSHAL APPROVED
Approval of this plan does not authorize or approve any omission or deviation from applicable regulations. Final approval is subject to field inspection. One set of approved plans shall be available on the project site at all times.
Reviewed by: FRANCIS(SONNY)SOLICH
Approval date: March 27,2014

Jaswinder S Sandhu 04-25-14
REGISTERED ELECTRICAL ENGINEER DATE

5-12-14
PLANS APPROVAL DATE

REGISTERED PROFESSIONAL ENGINEER Jaswinder Sandhu No. 11803 Exp. 9-30-14 ELEC STATE OF CALIFORNIA

The State of California or its officers or agents shall not be responsible for the accuracy or completeness of scanned copies of this plan sheet.

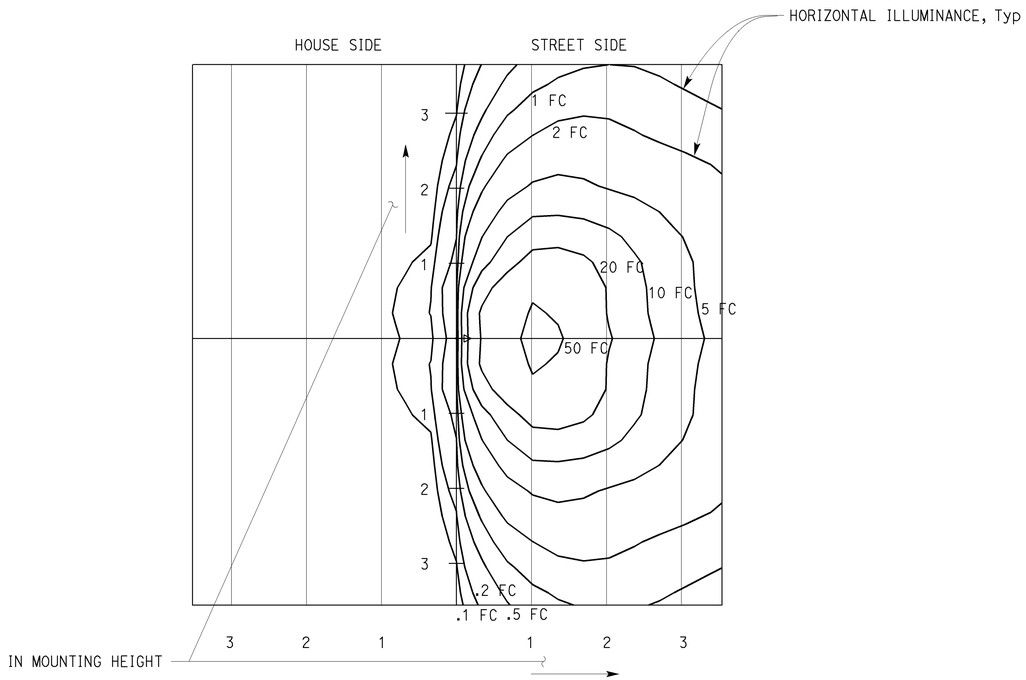

ISOFOOTCANDLE CURVES

1"=10'-0"

Light Loss Factor = 1
Luminaire Lumens = 30500
Mounting Height = 10 Feet
Arrangement = Single Distance
in units of mounting height

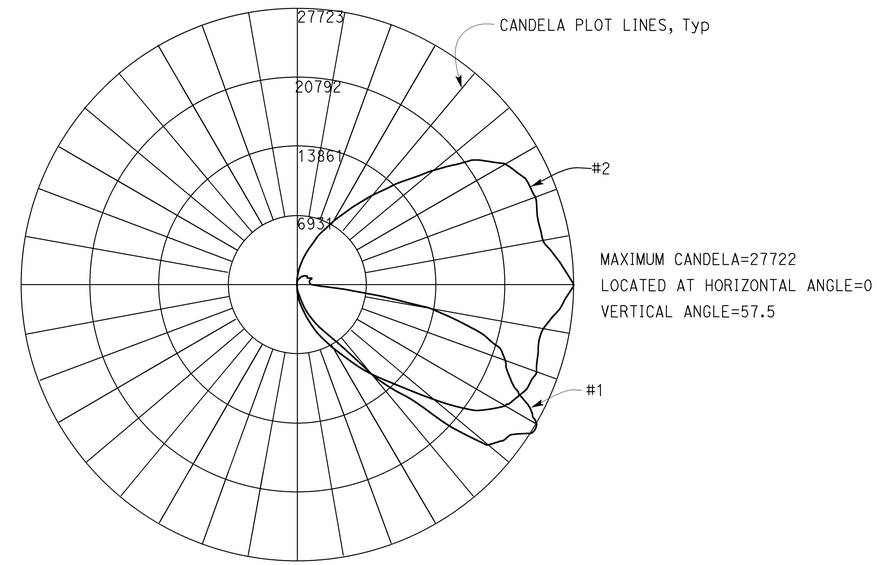

LUMINOUS INTENSITY DISTRIBUTION

#1 : Vertical plane through horizontal angle.

#2 : Horizontal cone through vertical angle.

(1) WALL MOUNTED-DAYTIME TUNNEL LIGHT FIXTURE

APPROVED FOR ELECTRICAL WORK ONLY

	BY	CHECKED
DESIGN	Jaswinder Sandhu	Jaswinder Gill
DETAILS	Ed D.Tapalla	Jaswinder Sandhu
QUANTITIES	Jaswinder Sandhu	Jaswinder Gill

STATE OF CALIFORNIA
DEPARTMENT OF TRANSPORTATION

DIVISION OF ENGINEERING SERVICES
ELECTRICAL-MECHANICAL-WATER AND WASTEWATER DESIGN

BRIDGE No. L5724
POST MILE

PASADENA 210/134
TUNNEL CONTROL BUILDING
PHOTOMETRICS-
TUNNEL LIGHT FIXTURES

SHEET EE1-12

TAEMWW Imperial - CCSC Rev. 01/13

ORIGINAL SCALE IN INCHES FOR REDUCED PLANS 0 1 2 3

UNIT: 3597 CONTRACT No.: 2881U4
PROJECT NUMBER & PHASE: 07140000851

DISREGARD PRINTS BEARING EARLIER REVISION DATES → 2-26-14 2-28-14 4-25-14

REVISION DATES (PRELIMINARY STAGE ONLY) SHEET OF

EA 2881U1

P:\dist_07\0700020994_la_210_interchange_building\expedite\ee1_12.dgn

18-JUN-2014 10:18

Dist	COUNTY	ROUTE	POST MILES TOTAL PROJECT	SHEET No.	TOTAL SHEETS
07	LA	210	R16.1/R25.8	886	927

CALIFORNIA STATE FIRE MARSHAL APPROVED
Approval of this plan does not authorize or approve any omission or deviation from applicable regulations. Final approval is subject to field inspection. One set of approved plans shall be available on the project site at all times.
Reviewed by: FRANCIS(SONNY)SOLICH
Approval date: March 27,2014

Jaswinder S Sandhu 04-25-14
REGISTERED ELECTRICAL ENGINEER DATE

5-12-14
PLANS APPROVAL DATE

REGISTERED PROFESSIONAL ENGINEER Jaswinder Sandhu No. 11803 Exp. 9-30-14 ELEC STATE OF CALIFORNIA

The State of California or its officers or agents shall not be responsible for the accuracy or completeness of scanned copies of this plan sheet.

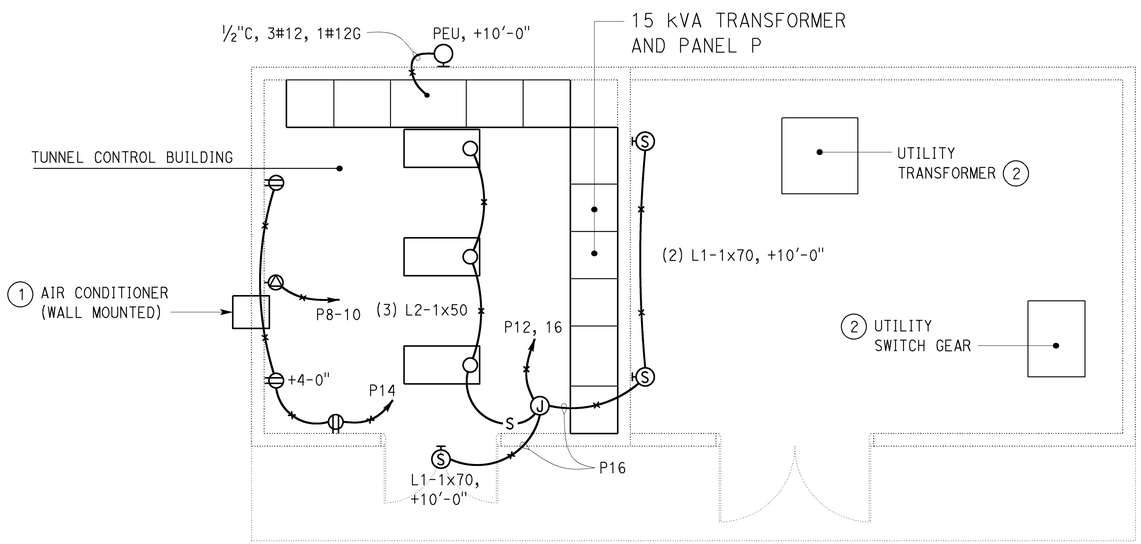

PLAN
1/4" = 1'-0"

NOTES:

1. Air conditioner (Wall mounted) must be 18,000 BTUH Nominal Cooling Capacity, 208-Volt, single phase. For exact location see Architectural plans.
2. Exact location will be determined by the City of Pasadena Water and Power.

APPROVED FOR ELECTRICAL WORK ONLY

	BY	CHECKED
DESIGN	Jaswinder Sandhu	Jaswinder Gill
DETAILS	Ed D. Tapalla	Jaswinder Sandhu
QUANTITIES	Jaswinder Sandhu	Jaswinder Gill

STATE OF CALIFORNIA
DEPARTMENT OF TRANSPORTATION

DIVISION OF ENGINEERING SERVICES
ELECTRICAL-MECHANICAL-WATER AND WASTEWATER DESIGN

BRIDGE No. L5724
POST MILE

PASADENA 210/134
TUNNEL CONTROL BUILDING
POWER AND LIGHTING PLAN

SHEET **EE2-1**

TAEMWW Imperial - CCSC Rev. 01/13

ORIGINAL SCALE IN INCHES FOR REDUCED PLANS 0 1 2 3

UNIT: 3597 CONTRACT No.: 2881U4
PROJECT NUMBER & PHASE: 07140000851

DISREGARD PRINTS BEARING EARLIER REVISION DATES → 11-26-13 2-28-14 4-25-14

REVISION DATES (PRELIMINARY STAGE ONLY) SHEET OF

EA 2881U1

P:\dist_07\0700020994_la_210_interchange_building\expedite\ee2_01.dgn

18-JUN-2014 10:18

Dist	COUNTY	ROUTE	POST MILES TOTAL PROJECT	SHEET No.	TOTAL SHEETS
07	LA	210	R16.1/R25.8	887	927

Jaswinder S Sandhu 04-25-14
REGISTERED ELECTRICAL ENGINEER DATE

5-12-14
PLANS APPROVAL DATE

REGISTERED PROFESSIONAL ENGINEER Jaswinder Sandhu No. 11803 Exp. 9-30-14 ELEC STATE OF CALIFORNIA

The State of California or its officers or agents shall not be responsible for the accuracy or completeness of scanned copies of this plan sheet.

CALIFORNIA STATE FIRE MARSHAL APPROVED
Approval of this plan does not authorize or approve any omission or deviation from applicable regulations. Final approval is subject to field inspection. One set of approved plans shall be available on the project site at all times.
Reviewed by: FRANCIS (SONNY) SOLICH
Approval date: March 27, 2014

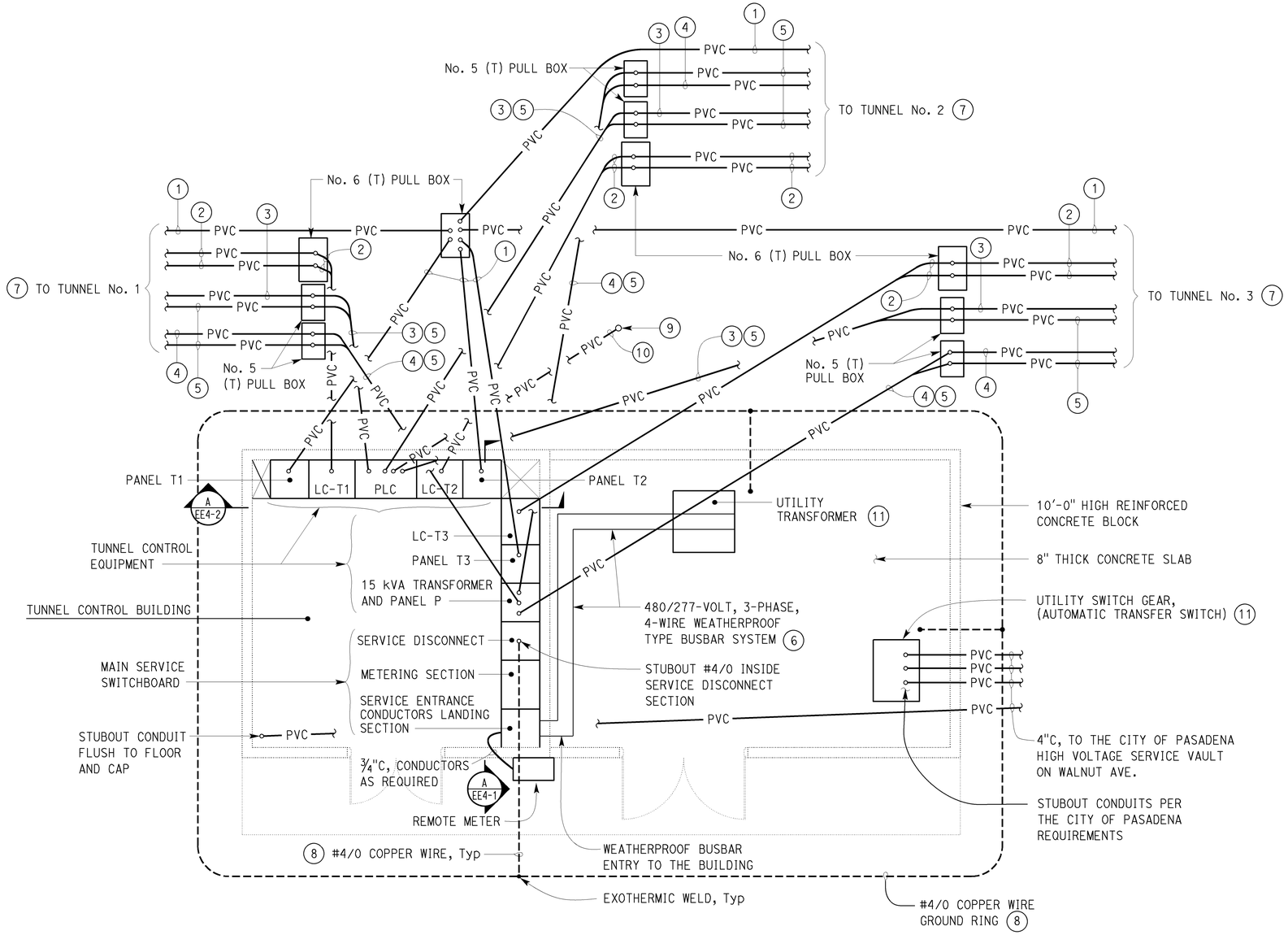

PLAN

¼" = 1'-0"

GENERAL NOTE:

A. Pull boxes location as shown is arbitrary only. Adjust location in the field as required.

NOTES:

(1) 3"C, MT. For continuation, see sheet EE1-6.

(2) 3"C, 12#4, 1#4 ground, 2#4 spares, to Tunnel Light Circuit Divider Control Panel. For continuation, see sheet EE1-2 thru EE1-7 as applicable.

(3) 2"C, 6 Tunnel Light Level Intensity Reference Signal cables, 2 Tunnel Interior Light Sensor/Photodiode cables. For continuation, see sheets EE1-2 thru EE1-7 as applicable.

(4) 1"C, 2#8 (Tunnel Dimming Control Panel power), 2#8 (Tunnel duplex receptacles power), 1#8 ground. For continuation, see sheet EE1-2 thru EE1-7 as applicable.

(5) 1"C, MT. For continuation, see sheet EE1-2 thru EE1-7 as applicable.

(6) Support busbar system with vertical pad mounted type supports. In addition install a minimum of five wall mounting type seismic braces as required. Submit details for approval to the Engineer and the City of Pasadena Water and Power Department prior to installation.

(7) For continuation, see sheet EE1-2 thru EE1-7 as applicable.

(8) Bury copper wire 36" below grade. Encase wire in a 2" thick concrete on top and below the wire.

(9) Type 15 Lighting Standard without a luminaire arm. For pole and foundation, see Standard Plan sheet ES-6A. Mount ambient Light Sensing Photodiode on top of the pole facing north as recommended by the sensor manufacturer. Provide and install sensor mounting bracket that fits on top of the pole.

(10) 1"C, 1-3 conductors, #18 twisted shielded cable with drain wire. Bond pole to the tunnel Electrical Equipment with #10 ground.

(11) Exact location will be determined by the City of Pasadena Water and Power.

APPROVED FOR ELECTRICAL WORK ONLY

	BY	CHECKED
DESIGN	Jaswinder Sandhu	Jaswinder Gill
DETAILS	Ed D. Tapalla	Jaswinder Sandhu
QUANTITIES	Jaswinder Sandhu	Jaswinder Gill

STATE OF CALIFORNIA
DEPARTMENT OF TRANSPORTATION

DIVISION OF ENGINEERING SERVICES
ELECTRICAL-MECHANICAL-WATER AND WASTEWATER DESIGN

BRIDGE No. L5724
POST MILE

PASADENA 210/134
TUNNEL CONTROL BUILDING
TUNNELS CONTROL EQUIPMENT LAYOUT

SHEET **EE2-2**

TAEMWW Imperial - CCSC Rev. 01/13

ORIGINAL SCALE IN INCHES FOR REDUCED PLANS 0 1 2 3

UNIT: 3597 CONTRACT No.: 2881U4
PROJECT NUMBER & PHASE: 07140000851

DISREGARD PRINTS BEARING EARLIER REVISION DATES
REVISION DATES (PRELIMINARY STAGE ONLY) 12-11-13 2-28-14 4-25-14 SHEET OF

EA 2881U1

P:\dist_07\0700020994_la_210_interchange_building\expedite\ee2_02.dgn

18-JUN-2014 10:18

Dist	COUNTY	ROUTE	POST MILES TOTAL PROJECT	SHEET No.	TOTAL SHEETS
07	LA	210	R16.1/R25.8	888	927

CALIFORNIA STATE FIRE MARSHAL APPROVED
Approval of this plan does not authorize or approve any omission or deviation from applicable regulations. Final approval is subject to field inspection. One set of approved plans shall be available on the project site at all times.
Reviewed by: FRANCIS (SONNY) SOLICH
Approval date: March 27, 2014

Jaswinder S Sandhu 04-25-14
REGISTERED ELECTRICAL ENGINEER DATE

5-12-14
PLANS APPROVAL DATE

REGISTERED PROFESSIONAL ENGINEER Jaswinder Sandhu No. 11803 Exp. 9-30-14 ELEC STATE OF CALIFORNIA

The State of California or its officers or agents shall not be responsible for the accuracy or completeness of scanned copies of this plan sheet.

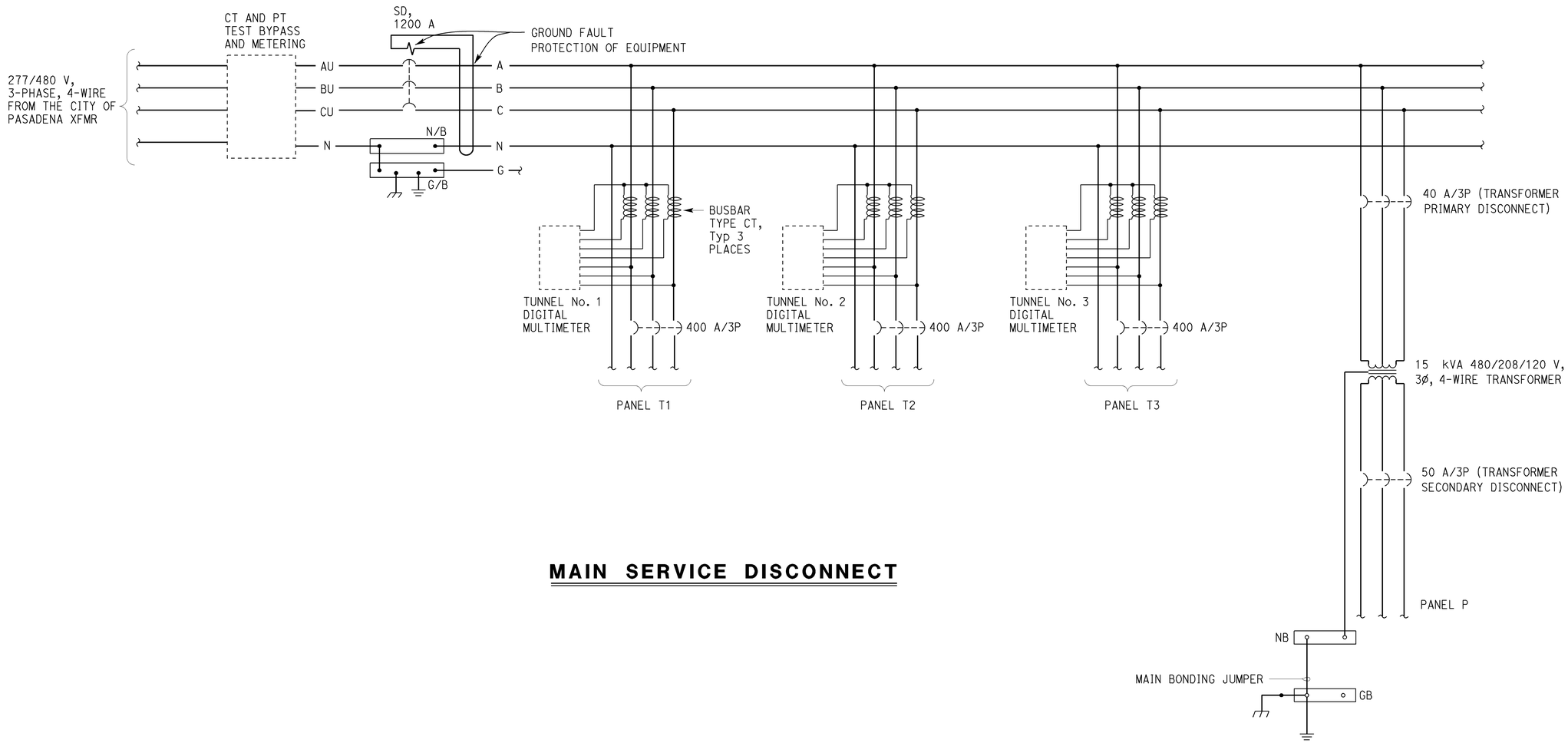

MAIN SERVICE DISCONNECT

APPROVED FOR ELECTRICAL WORK ONLY

	BY	CHECKED
DESIGN	Jaswinder Sandhu	Jaswinder Gill
DETAILS	Ed D. Tapalla	Jaswinder Sandhu
QUANTITIES	Jaswinder Sandhu	Jaswinder Gill

STATE OF CALIFORNIA
DEPARTMENT OF TRANSPORTATION

DIVISION OF ENGINEERING SERVICES
ELECTRICAL-MECHANICAL-WATER AND WASTEWATER DESIGN

BRIDGE No. L5724
POST MILE

PASADENA 210/134 TUNNEL CONTROL BUILDING
SCHEMATIC DIAGRAM

SHEET **EE3-1**

TAEMWW Imperial - CCSC Rev. 01/13

ORIGINAL SCALE IN INCHES FOR REDUCED PLANS 0 1 2 3

UNIT: 3597 CONTRACT No.: 2881U4
PROJECT NUMBER & PHASE: 07140000851

DISREGARD PRINTS BEARING EARLIER REVISION DATES → 11-26-13 2-28-14 4-25-14

REVISION DATES (PRELIMINARY STAGE ONLY) SHEET OF

EA 2881U1

P:\dist_07\0700020994_la_210_interchange_building\expedite\ee3_01.dgn

18-JUN-2014 10:18

Dist	COUNTY	ROUTE	POST MILES TOTAL PROJECT	SHEET No.	TOTAL SHEETS
07	LA	210	R16.1/R25.8	889	927

CALIFORNIA STATE FIRE MARSHAL APPROVED
Approval of this plan does not authorize or approve any omission or deviation from applicable regulations. Final approval is subject to field inspection. One set of approved plans shall be available on the project site at all times.
Reviewed by: FRANCIS (SONNY) SOLICH
Approval date: March 27, 2014

Jaswinder S Sandhu 04-25-14
REGISTERED ELECTRICAL ENGINEER DATE

5-12-14
PLANS APPROVAL DATE

REGISTERED PROFESSIONAL ENGINEER Jaswinder Sandhu No. 11803 Exp. 9-30-14 ELEC STATE OF CALIFORNIA

The State of California or its officers or agents shall not be responsible for the accuracy or completeness of scanned copies of this plan sheet.

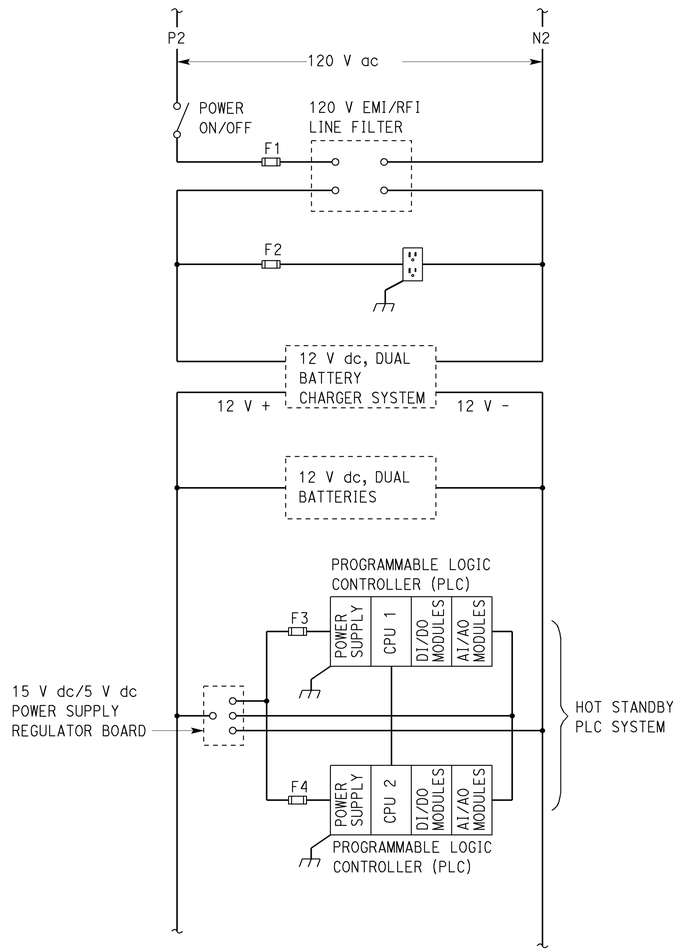

PLC POWER

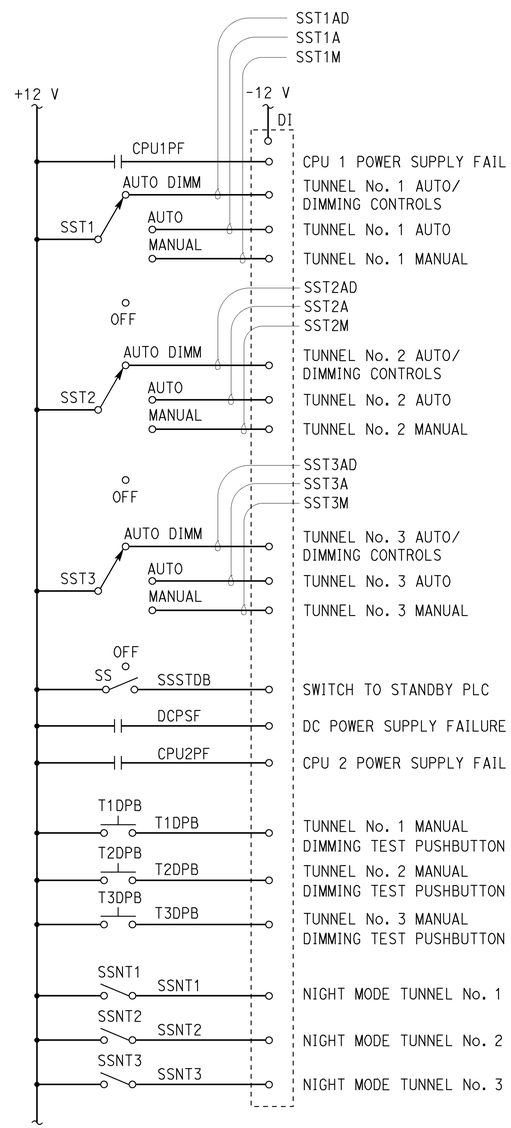

DIGITAL INPUTS

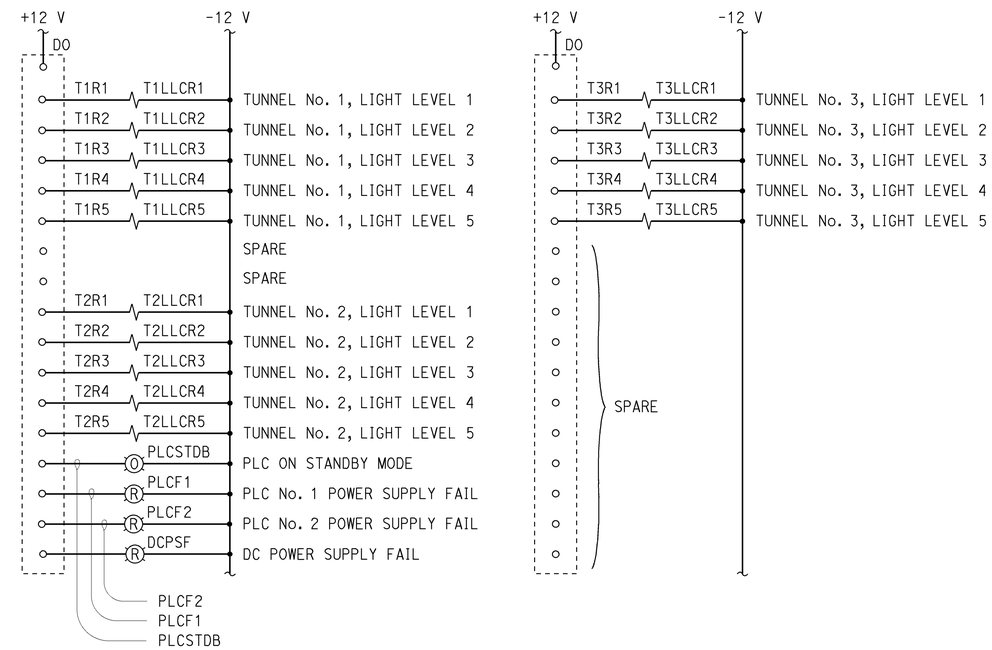

DIGITAL OUTPUTS

APPROVED FOR ELECTRICAL WORK ONLY

	BY	CHECKED
DESIGN	Jaswinder Sandhu	Jaswinder Gill
DETAILS	Dali Zhou	Jaswinder Sandhu
QUANTITIES	Jaswinder Sandhu	Jaswinder Gill

STATE OF CALIFORNIA DEPARTMENT OF TRANSPORTATION

DIVISION OF ENGINEERING SERVICES ELECTRICAL-MECHANICAL-WATER AND WASTEWATER DESIGN

BRIDGE No. L5724
POST MILE

PASADENA 210/134 TUNNEL CONTROL BUILDING

PLC DIGITAL INPUT/OUTPUT LAYOUT

SHEET **EE3-2**

TAEMWW Imperial - CCSC Rev. 01/13

ORIGINAL SCALE IN INCHES FOR REDUCED PLANS 0 1 2 3

UNIT: 3597 CONTRACT No.: 2881U4
PROJECT NUMBER & PHASE: 07140000851

DISREGARD PRINTS BEARING EARLIER REVISION DATES

REVISION DATES (PRELIMINARY STAGE ONLY) 12-18-13 1-7-14 2-28-14 4-25-14 SHEET OF

EA 2881U1

P:\dist_07\0700020994_la_210_interchange_building\expedite\ee3_02.dgn

18-JUN-2014 10:18

Dist	COUNTY	ROUTE	POST MILES TOTAL PROJECT	SHEET No.	TOTAL SHEETS
07	LA	210	R16.1/R25.8	890	927

CALIFORNIA STATE FIRE MARSHAL APPROVED
Approval of this plan does not authorize or approve any omission or deviation from applicable regulations. Final approval is subject to field inspection. One set of approved plans shall be available on the project site at all times.
Reviewed by: FRANCIS (SONNY) SOLICH
Approval date: March 27, 2014

Jaswinder S Sandhu 04-25-14
REGISTERED ELECTRICAL ENGINEER DATE

5-12-14
PLANS APPROVAL DATE

REGISTERED PROFESSIONAL ENGINEER Jaswinder Sandhu No. 11803 Exp. 9-30-14 ELEC STATE OF CALIFORNIA

The State of California or its officers or agents shall not be responsible for the accuracy or completeness of scanned copies of this plan sheet.

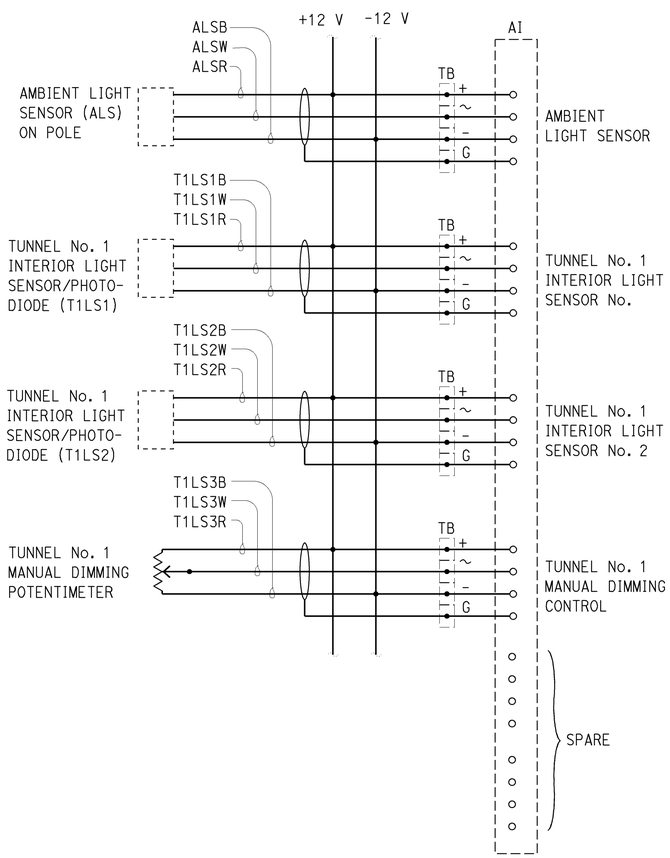

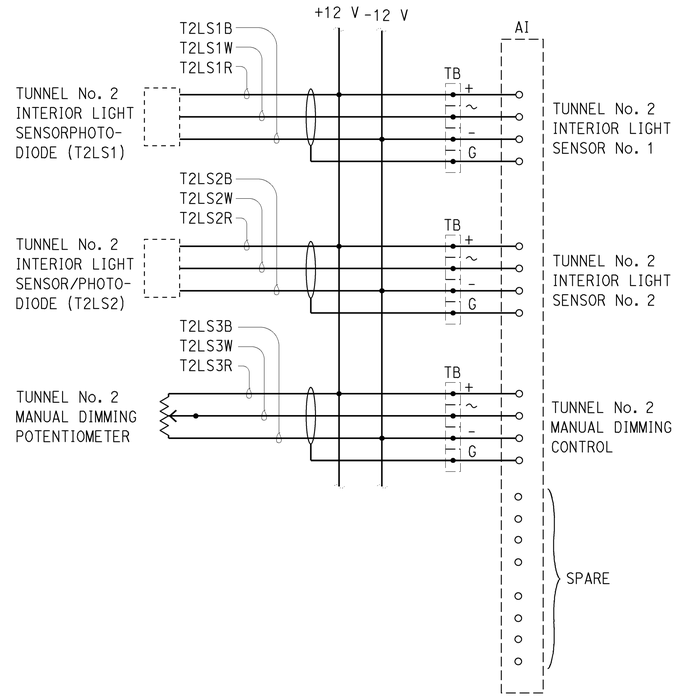

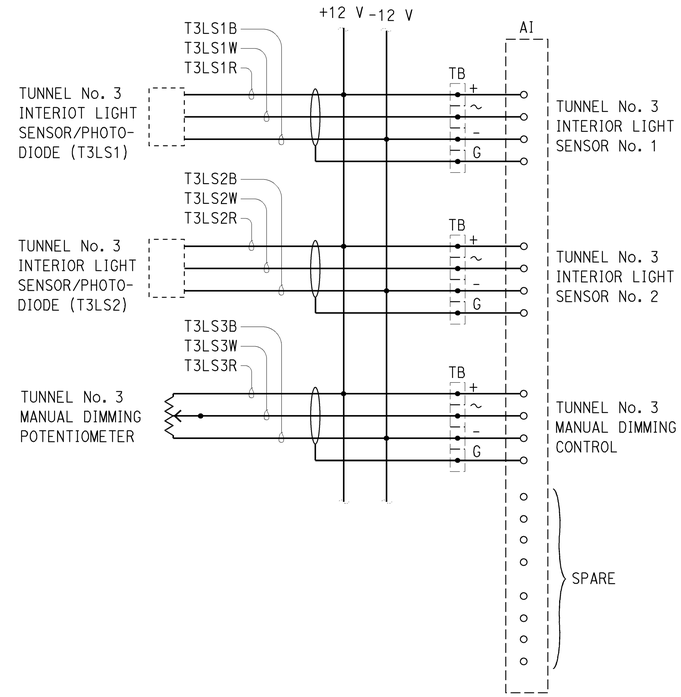

ANALOG INPUTS

GENERAL NOTE:

A. Provide total of 30 analog input for future monitoring of tunnel functions.

APPROVED FOR ELECTRICAL WORK ONLY

	BY	CHECKED
DESIGN	Jaswinder Sandhu	Jaswinder Gill
DETAILS	Ed Tapalla/D. Zhou	Jaswinder Sandhu
QUANTITIES	Jaswinder Sandhu	Jaswinder Gill

STATE OF CALIFORNIA
DEPARTMENT OF TRANSPORTATION

DIVISION OF ENGINEERING SERVICES
ELECTRICAL-MECHANICAL-WATER AND WASTEWATER DESIGN

BRIDGE No. L5724
POST MILE

PASADENA 210/134
TUNNEL CONTROL BUILDING
PLC ANALOG INPUT DIAGRAM

SHEET **EE3-3**

TAEMWW Imperial - CCSC Rev. 01/13

ORIGINAL SCALE IN INCHES FOR REDUCED PLANS 0 1 2 3

UNIT: 3597 CONTRACT No.: 2881U4
PROJECT NUMBER & PHASE: 07140000851

DISREGARD PRINTS BEARING EARLIER REVISION DATES
REVISION DATES (PRELIMINARY STAGE ONLY) 12-18-13 1-7-14 2-28-14 4-25-14 SHEET OF

EA 2881U1

P:\dist_07\0700020994_la_210_interchange_building\expedite\ee3_03.dgn

18-JUN-2014 10:18

Dist	COUNTY	ROUTE	POST MILES TOTAL PROJECT	SHEET No.	TOTAL SHEETS
07	LA	210	R16.1/R25.8	891	927

CALIFORNIA STATE FIRE MARSHAL APPROVED
Approval of this plan does not authorize or approve any omission or deviation from applicable regulations. Final approval is subject to field inspection. One set of approved plans shall be available on the project site at all times.
Reviewed by: FRANCIS (SONNY) SOLICH
Approval date: March 27, 2014

Jaswinder S Sandhu 04-25-14
REGISTERED ELECTRICAL ENGINEER DATE

5-12-14
PLANS APPROVAL DATE

REGISTERED PROFESSIONAL ENGINEER Jaswinder Sandhu No. 11803 Exp. 9-30-14 ELEC STATE OF CALIFORNIA

The State of California or its officers or agents shall not be responsible for the accuracy or completeness of scanned copies of this plan sheet.

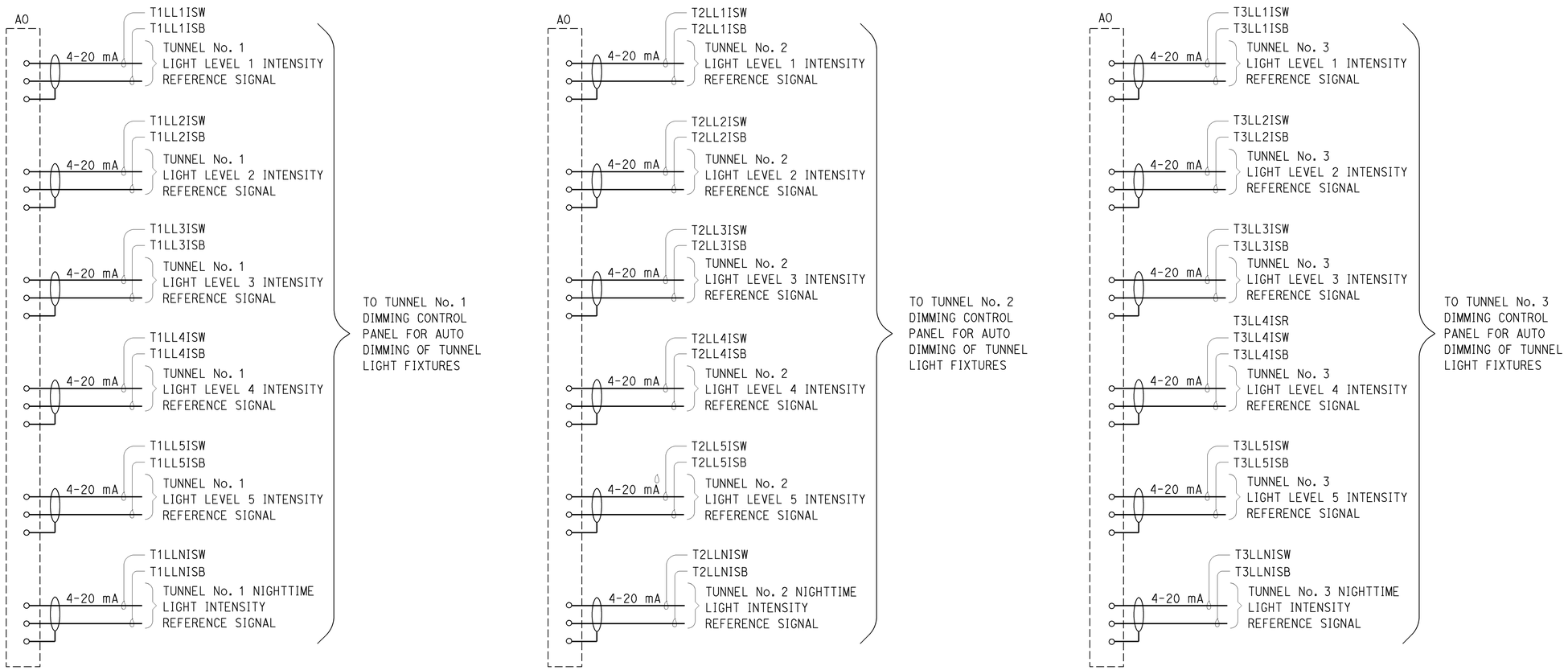

APPROVED FOR ELECTRICAL WORK ONLY

	BY	CHECKED
DESIGN	Jaswinder Sandhu	Jaswinder Gill
DETAILS	Dali Zhou	Jaswinder Sandhu
QUANTITIES	Jaswinder Sandhu	Jaswinder Gill

STATE OF CALIFORNIA
DEPARTMENT OF TRANSPORTATION

DIVISION OF ENGINEERING SERVICES
ELECTRICAL-MECHANICAL-WATER AND WASTEWATER DESIGN

BRIDGE No. L5724
POST MILE

PASADENA 210/134 TUNNEL CONTROL BUILDING

PLC ANALOG OUTPUT LAYOUT

SHEET **EE3-4**

TAEMWW Imperial - CCSC Rev. 01/13

ORIGINAL SCALE IN INCHES FOR REDUCED PLANS 0 1 2 3

UNIT: 3597 CONTRACT No.: 2881U4
PROJECT NUMBER & PHASE: 07140000851

DISREGARD PRINTS BEARING EARLIER REVISION DATES → 12-18-13 | 1-7-14 | 2-28-14 | 4-25-14

REVISION DATES (PRELIMINARY STAGE ONLY) SHEET OF

EA 2881U1

P:\dist_07\0700020994_la_210_interchange_building\expedite\ee3_04.dgn

18-JUN-2014 10:18

Dist	COUNTY	ROUTE	POST MILES TOTAL PROJECT	SHEET No.	TOTAL SHEETS
07	LA	210	R16.1/R25.8	892	927

Jaswinder S Sandhu 04-25-14
REGISTERED ELECTRICAL ENGINEER DATE

5-12-14
PLANS APPROVAL DATE

REGISTERED PROFESSIONAL ENGINEER Jaswinder Sandhu No. 11803 Exp. 9-30-14 ELEC STATE OF CALIFORNIA

The State of California or its officers or agents shall not be responsible for the accuracy or completeness of scanned copies of this plan sheet.

CALIFORNIA STATE FIRE MARSHAL APPROVED
Approval of this plan does not authorize or approve any omission or deviation from applicable regulations. Final approval is subject to field inspection. One set of approved plans shall be available on the project site at all times.
Reviewed by: FRANCIS(SONNY)SOLICH
Approval date: March 27,2014

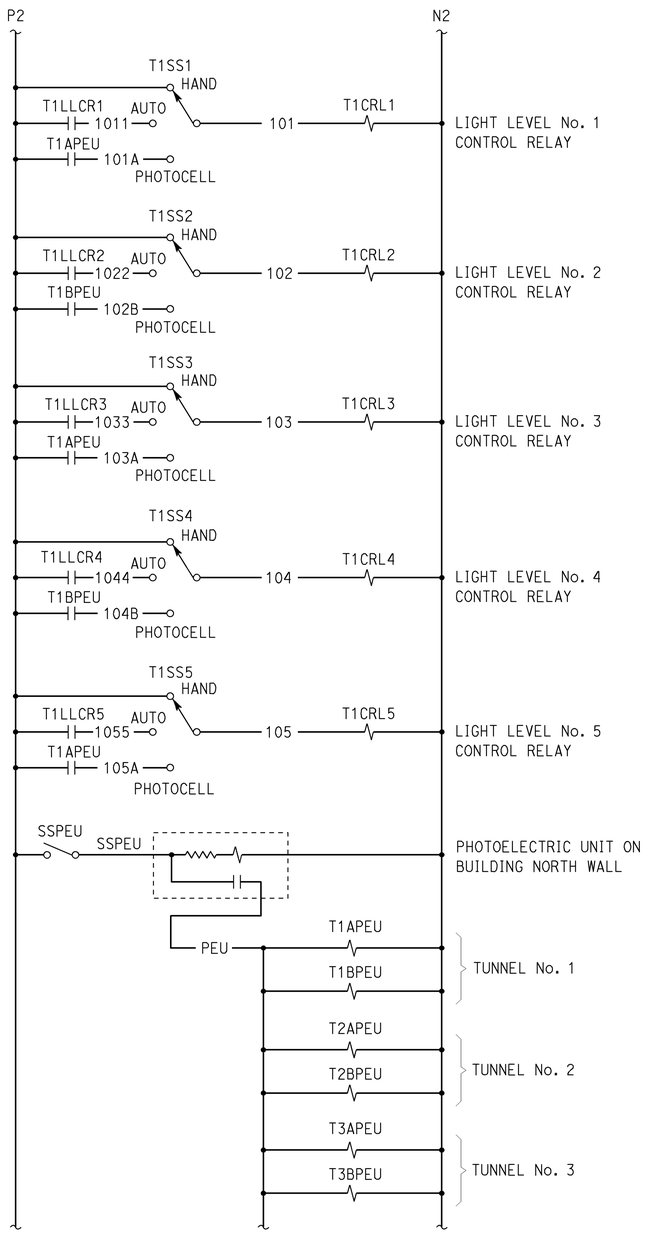

TUNNEL No. 1 DAYTIME LIGHTING CONTROLS

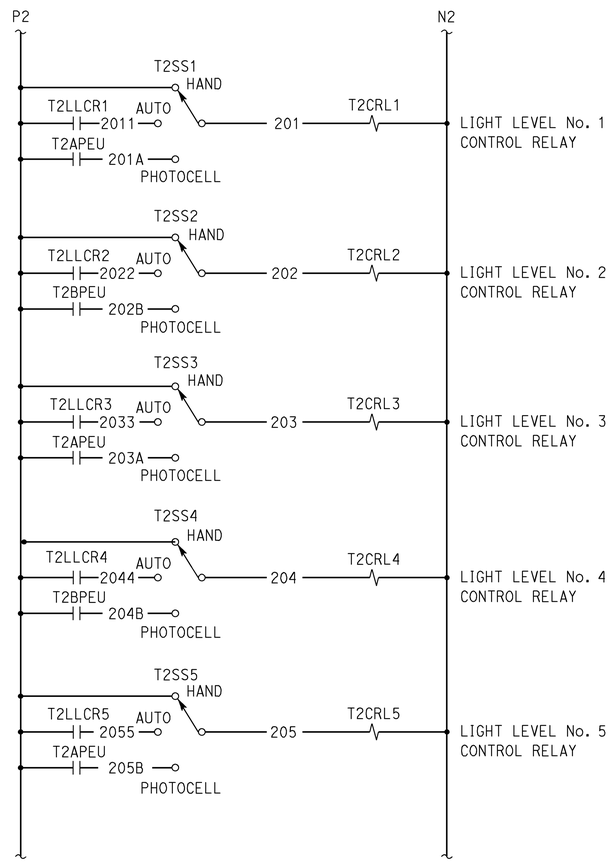

TUNNEL No. 2 DAYTIME LIGHTING CONTROLS

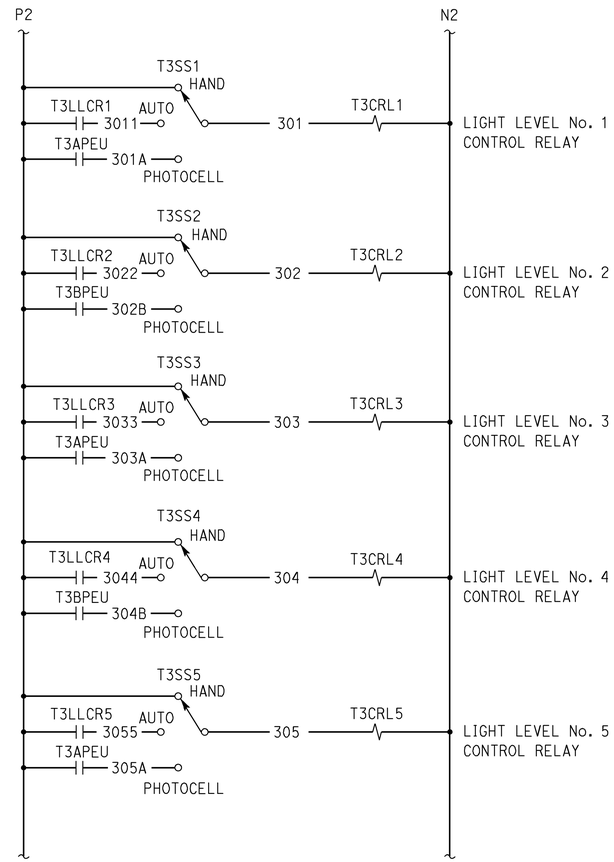

TUNNEL No. 3 DAYTIME LIGHTING CONTROLS

APPROVED FOR ELECTRICAL WORK ONLY

	BY	CHECKED
DESIGN	Jaswinder Sandhu	Jaswinder Gill
DETAILS	Ed D. Tapalla	Jaswinder Sandhu
QUANTITIES	Jaswinder Sandhu	Jaswinder Gill

STATE OF CALIFORNIA
DEPARTMENT OF TRANSPORTATION

DIVISION OF ENGINEERING SERVICES
ELECTRICAL-MECHANICAL-WATER AND WASTEWATER DESIGN

BRIDGE No. L5724
POST MILE

PASADENA 210/134 TUNNEL CONTROL BUILDING
TUNNELS DAYTIME LIGHTING CONTROL SCHEMATIC

SHEET EE3-5

TAEMWW Imperial - CCSC Rev. 01/13

ORIGINAL SCALE IN INCHES FOR REDUCED PLANS 0 1 2 3

UNIT: 3597 CONTRACT No.: 2881U4
PROJECT NUMBER & PHASE: 07140000851

DISREGARD PRINTS BEARING EARLIER REVISION DATES → 11-26-13 1-8-14 2-28-14 4-25-14

REVISION DATES (PRELIMINARY STAGE ONLY) SHEET OF

EA 2881U1

P:\dist_07\0700020994_la_210_interchange_building\expedite\ee3_05.dgn

18-JUN-2014 10:19

Dist	COUNTY	ROUTE	POST MILES TOTAL PROJECT	SHEET No.	TOTAL SHEETS
07	LA	210	R16.1/R25.8	893	927

Jaswinder S Sandhu 04-25-14
REGISTERED ELECTRICAL ENGINEER DATE

5-12-14
PLANS APPROVAL DATE

REGISTERED PROFESSIONAL ENGINEER Jaswinder Sandhu No. 11803 Exp. 9-30-14 ELEC STATE OF CALIFORNIA

The State of California or its officers or agents shall not be responsible for the accuracy or completeness of scanned copies of this plan sheet.

CALIFORNIA STATE FIRE MARSHAL APPROVED
Approval of this plan does not authorize or approve any omission or deviation from applicable regulations. Final approval is subject to field inspection. One set of approved plans shall be available on the project site at all times.
Reviewed by: FRANCIS (SONNY) SOLICH
Approval date: March 27, 2014

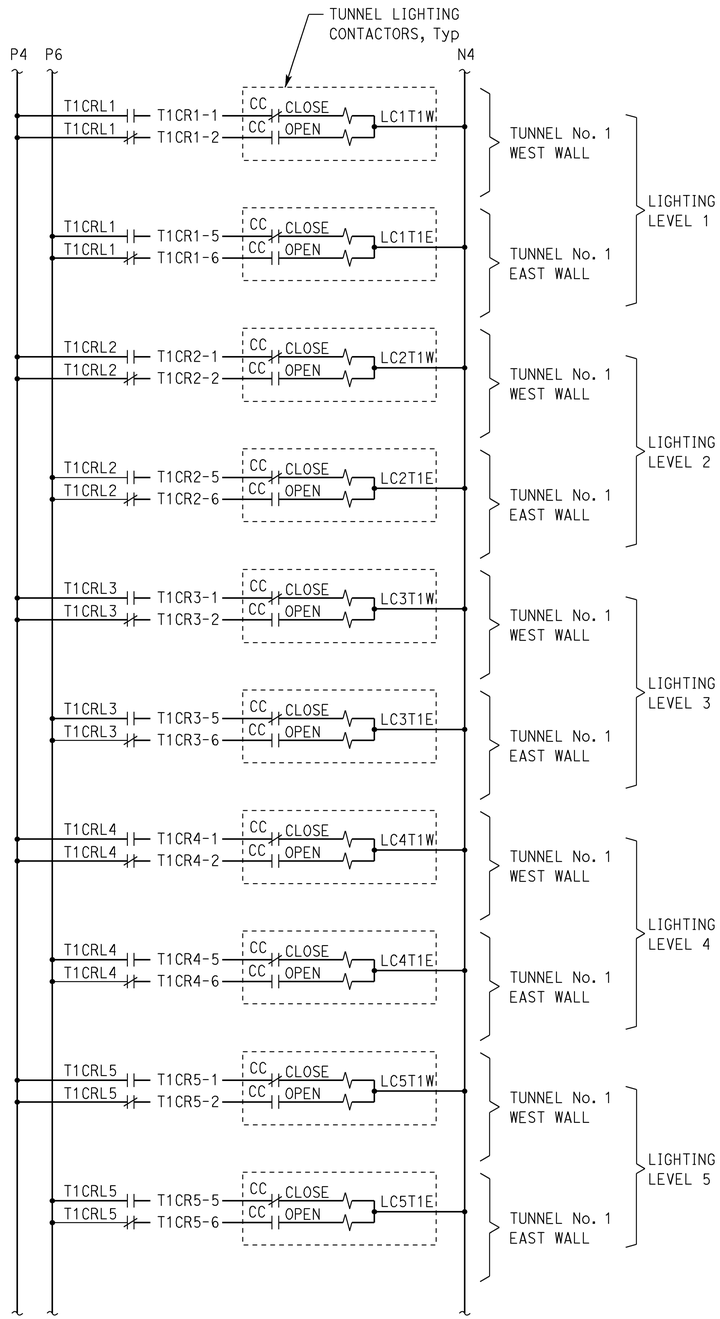

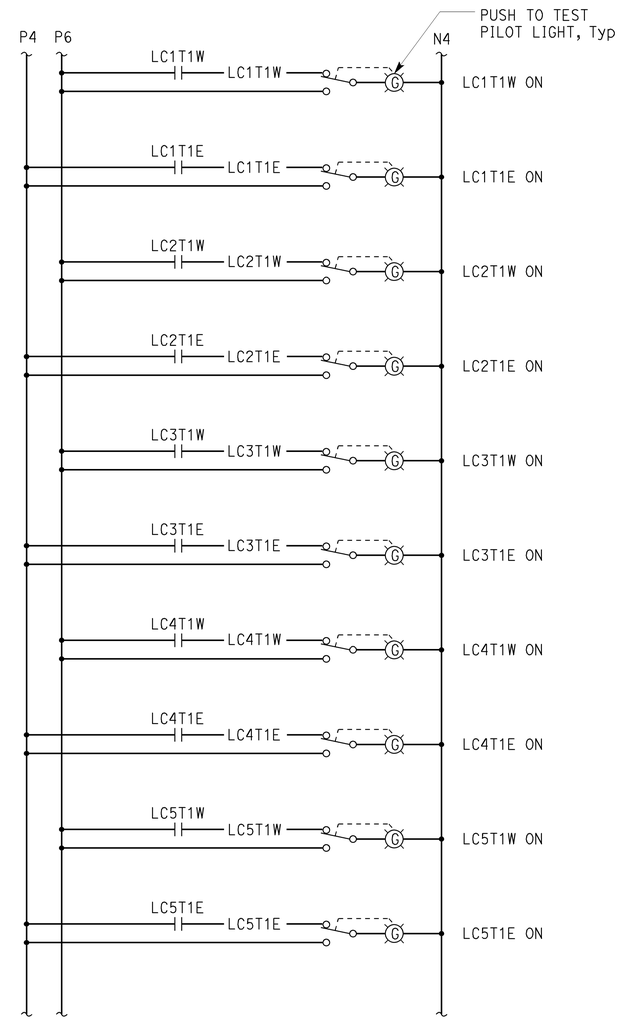

APPROVED FOR ELECTRICAL WORK ONLY

	BY	CHECKED
DESIGN	Jaswinder Sandhu	Jaswinder Gill
DETAILS	Ed D. Tapalla	Jaswinder Sandhu
QUANTITIES	Jaswinder Sandhu	Jaswinder Gill

STATE OF CALIFORNIA
DEPARTMENT OF TRANSPORTATION

DIVISION OF ENGINEERING SERVICES
ELECTRICAL-MECHANICAL-WATER AND WASTEWATER DESIGN

BRIDGE No. 53-2341
POST MILE R24.77

PASADENA 210/134
TUNNEL CONTROL BUILDING
TUNNEL No. 1 LIGHTING CONTROL SCHEMATIC

SHEET **EE3-6**

TAEMWW Imperial - CCSC Rev. 01/13

ORIGINAL SCALE IN INCHES FOR REDUCED PLANS 0 1 2 3

UNIT: 3597 CONTRACT No.: 2881U4
PROJECT NUMBER & PHASE: 07140000851

DISREGARD PRINTS BEARING EARLIER REVISION DATES
REVISION DATES (PRELIMINARY STAGE ONLY) 11-26-13 1-8-14 2-28-14 4-25-14 SHEET OF

EA 2881U1

P:\dist_07\0700020994_la_210_interchange_building\expedite\ee3_06.dgn

18-JUN-2014 10:19

Dist	COUNTY	ROUTE	POST MILES TOTAL PROJECT	SHEET No.	TOTAL SHEETS
07	LA	210	R16.1/R25.8	894	927

Jaswinder S Sandhu 04-25-14
REGISTERED ELECTRICAL ENGINEER DATE

5-12-14
PLANS APPROVAL DATE

REGISTERED PROFESSIONAL ENGINEER Jaswinder Sandhu No. 11803 Exp. 9-30-14 ELEC STATE OF CALIFORNIA

The State of California or its officers or agents shall not be responsible for the accuracy or completeness of scanned copies of this plan sheet.

CALIFORNIA STATE FIRE MARSHAL APPROVED
Approval of this plan does not authorize or approve any omission or deviation from applicable regulations. Final approval is subject to field inspection. One set of approved plans shall be available on the project site at all times.
Reviewed by: FRANCIS (SONNY) SOLICH
Approval date: March 27, 2014

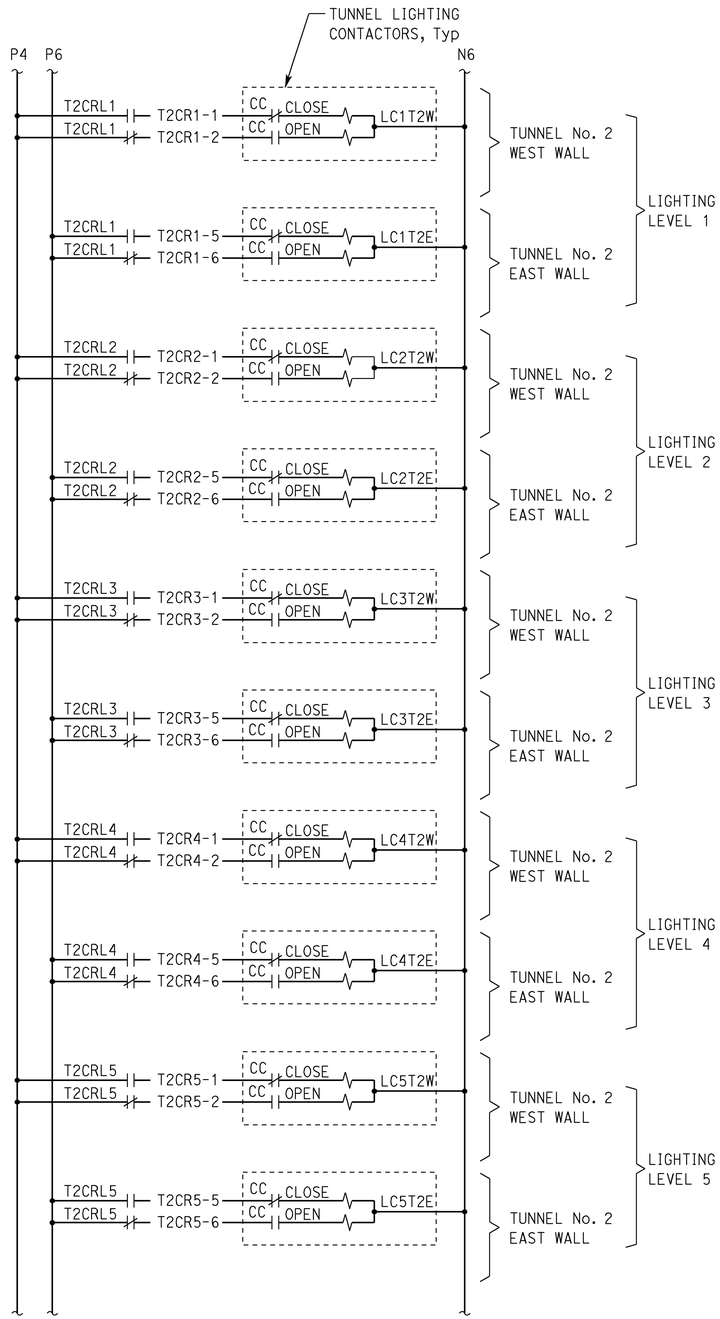

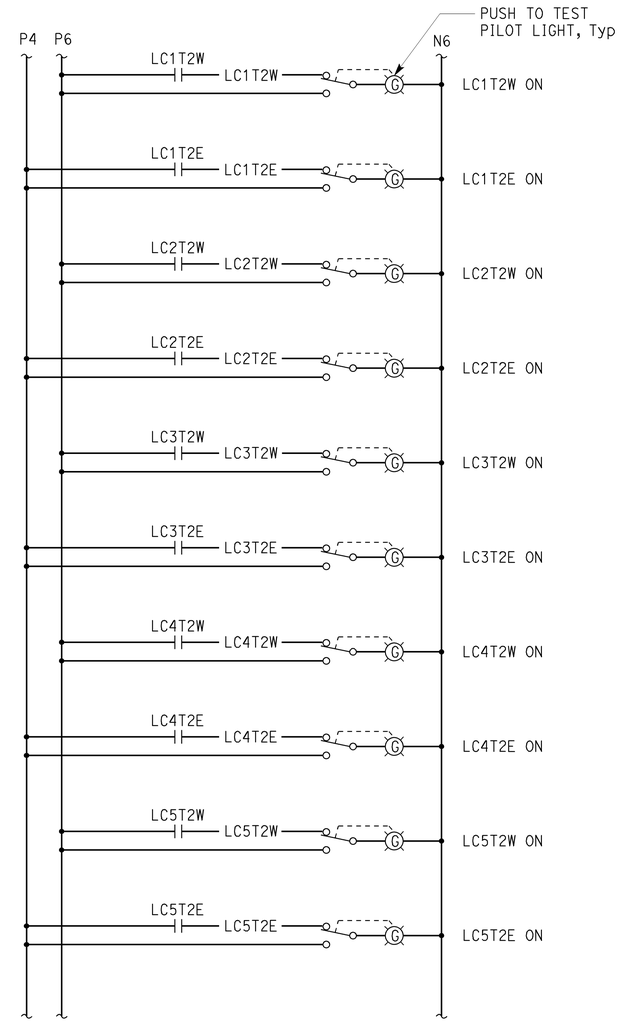

APPROVED FOR ELECTRICAL WORK ONLY

	BY	CHECKED
DESIGN	Jaswinder Sandhu	Jaswinder Gill
DETAILS	Ed D. Tapalla	Jaswinder Sandhu
QUANTITIES	Jaswinder Sandhu	Jaswinder Gill

STATE OF CALIFORNIA
DEPARTMENT OF TRANSPORTATION

DIVISION OF ENGINEERING SERVICES
ELECTRICAL-MECHANICAL-WATER AND WASTEWATER DESIGN

BRIDGE No. 53-2268
POST MILE R24.92

PASADENA 210/134
TUNNEL CONTROL BUILDING
TUNNEL No. 2 LIGHTING CONTROL SCHEMATIC

SHEET **EE3-7**

TAEMWW Imperial - CCSC Rev. 01/13

ORIGINAL SCALE IN INCHES FOR REDUCED PLANS 0 1 2 3

UNIT: 3597 CONTRACT No.: 2881U4
PROJECT NUMBER & PHASE: 07140000851

DISREGARD PRINTS BEARING EARLIER REVISION DATES → 11-26-13 | 1-8-14 | 2-28-14 | 4-25-14

REVISION DATES (PRELIMINARY STAGE ONLY) SHEET OF

EA 2881U1

P:\dist_07\0700020994_la_210_interchange_building\expedite\ee3_07.dgn

18-JUN-2014 10:19

Dist	COUNTY	ROUTE	POST MILES TOTAL PROJECT	SHEET No.	TOTAL SHEETS
07	LA	210	R16.1/R25.8	895	927

Jaswinder S Sandhu 04-25-14
REGISTERED ELECTRICAL ENGINEER DATE

5-12-14
PLANS APPROVAL DATE

REGISTERED PROFESSIONAL ENGINEER Jaswinder Sandhu No. 11803 Exp. 9-30-14 ELEC STATE OF CALIFORNIA

The State of California or its officers or agents shall not be responsible for the accuracy or completeness of scanned copies of this plan sheet.

CALIFORNIA STATE FIRE MARSHAL APPROVED
Approval of this plan does not authorize or approve any omission or deviation from applicable regulations. Final approval is subject to field inspection. One set of approved plans shall be available on the project site at all times.
Reviewed by: FRANCIS (SONNY) SOLICH
Approval date: March 27, 2014

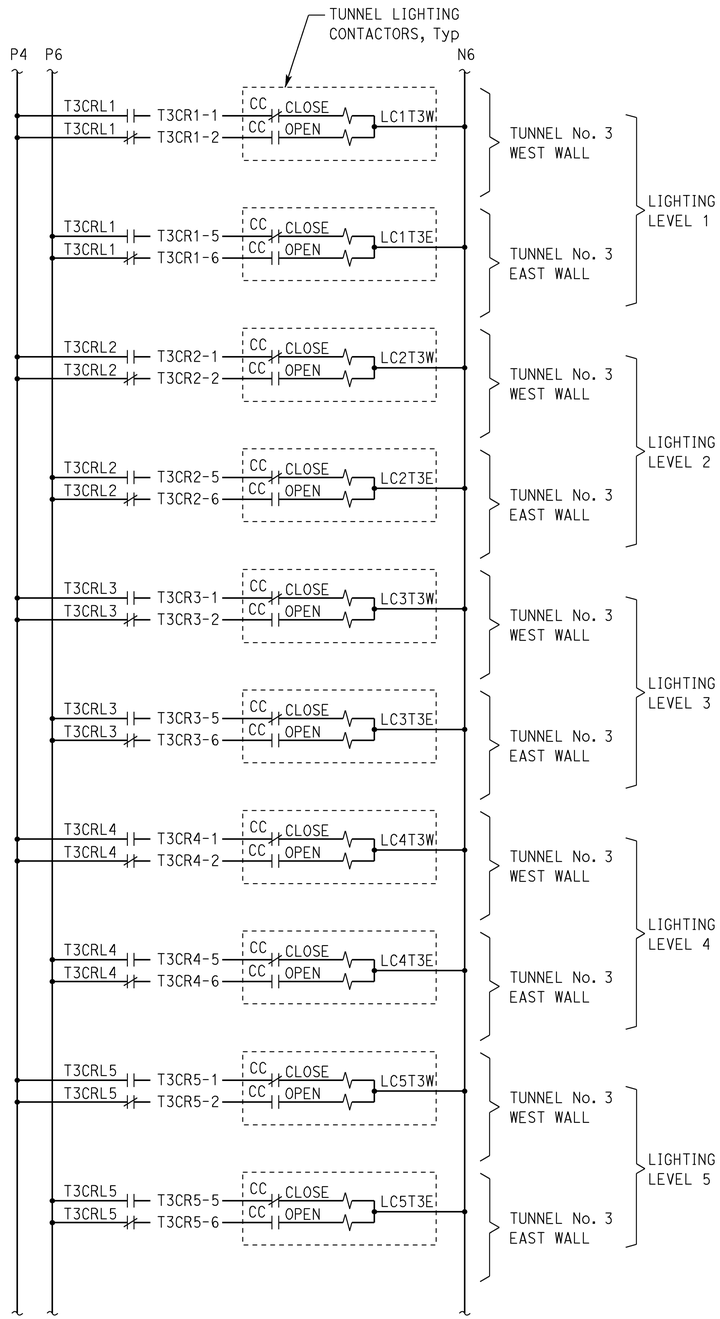

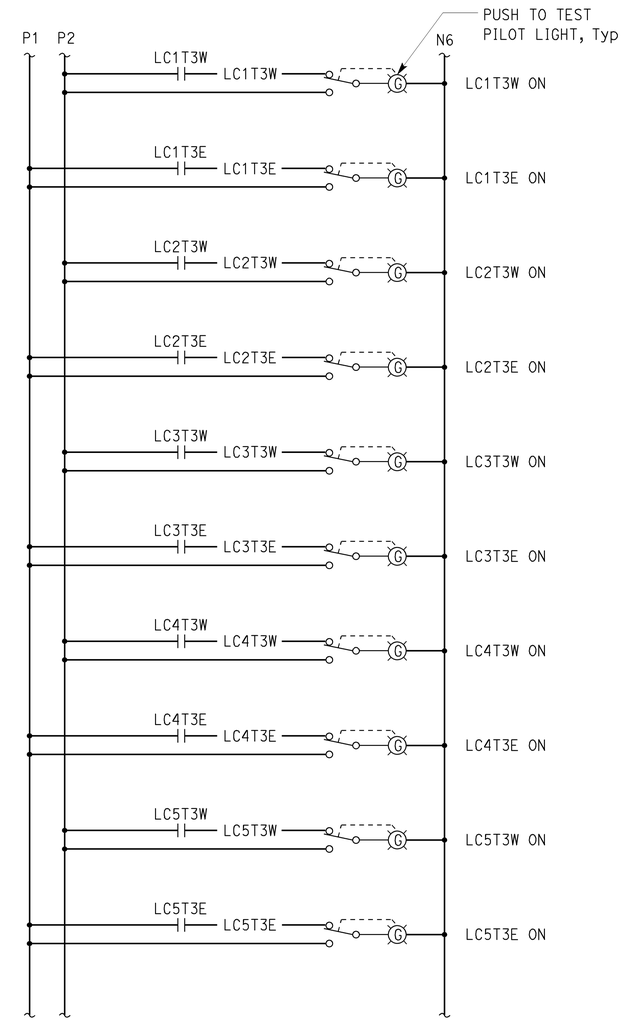

APPROVED FOR ELECTRICAL WORK ONLY

	BY	CHECKED
DESIGN	Jaswinder Sandhu	Jaswinder Gill
DETAILS	Ed D. Tapalla	Jaswinder Sandhu
QUANTITIES	Jaswinder Sandhu	Jaswinder Gill

STATE OF CALIFORNIA
DEPARTMENT OF TRANSPORTATION

DIVISION OF ENGINEERING SERVICES
ELECTRICAL-MECHANICAL-WATER AND WASTEWATER DESIGN

BRIDGE No. 53-2256
POST MILE R25.13

PASADENA 210/134
TUNNEL CONTROL BUILDING
TUNNEL No. 3 LIGHTING CONTROL SCHEMATIC

SHEET **EE3-8**

TAEMWW Imperial - CCSC Rev. 01/13

ORIGINAL SCALE IN INCHES FOR REDUCED PLANS 0 1 2 3

UNIT: 3597 CONTRACT No.: 2881U4
PROJECT NUMBER & PHASE: 07140000851

DISREGARD PRINTS BEARING EARLIER REVISION DATES → 11-26-13 1-8-14 2-28-14 4-25-14

REVISION DATES (PRELIMINARY STAGE ONLY) SHEET OF

EA 2881U1

P:\dist_07\0700020994_la_210_interchange_building\expedite\ee3_08.dgn

18-JUN-2014 10:19

Dist	COUNTY	ROUTE	POST MILES TOTAL PROJECT	SHEET No.	TOTAL SHEETS
07	LA	210	R16.1/R25.8	896	927

Jaswinder S Sandhu 04-25-14
REGISTERED ELECTRICAL ENGINEER DATE

5-12-14
PLANS APPROVAL DATE

REGISTERED PROFESSIONAL ENGINEER Jaswinder Sandhu No. 11803 Exp. 9-30-14 ELEC STATE OF CALIFORNIA

The State of California or its officers or agents shall not be responsible for the accuracy or completeness of scanned copies of this plan sheet.

CALIFORNIA STATE FIRE MARSHAL APPROVED
Approval of this plan does not authorize or approve any omission or deviation from applicable regulations. Final approval is subject to field inspection. One set of approved plans shall be available on the project site at all times.
Reviewed by: FRANCIS(SONNY)SOLICH
Approval date: March 27,2014

GENERAL NOTES:

A. For Light Circuit Divider Control Panel details, see sheet EE3-12.

B. Tunnel night light circuits and light fixtures are not shown on this plan sheet. For reference to night lights see plans.

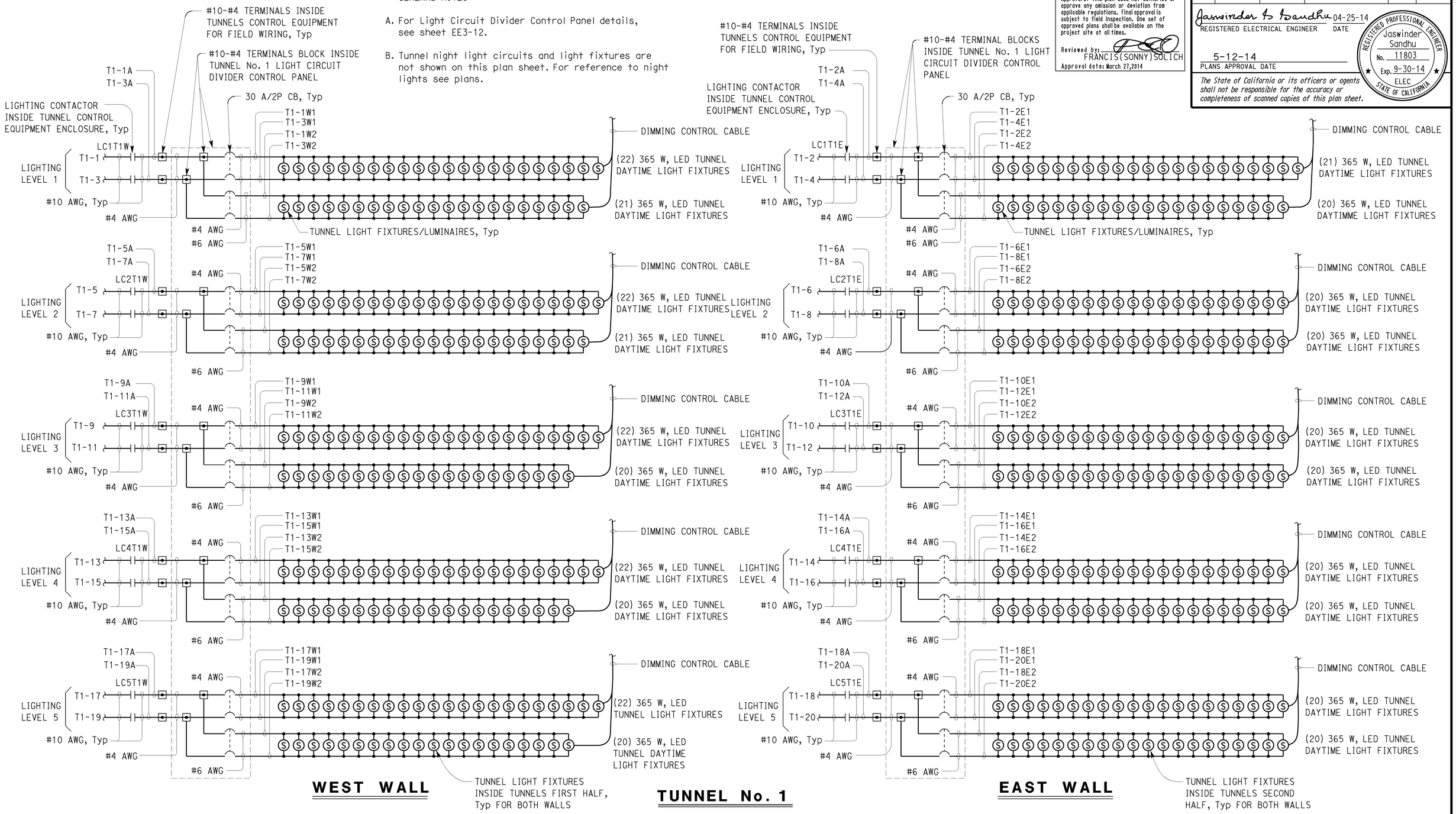

APPROVED FOR ELECTRICAL WORK ONLY

	BY	CHECKED
DESIGN	Jaswinder Sandhu	Jaswinder Gill
DETAILS	Ed D. Tapalla/Dali Zhou	Jaswinder Sandhu
QUANTITIES	Jaswinder Sandhu	Jaswinder Gill

STATE OF CALIFORNIA
DEPARTMENT OF TRANSPORTATION

DIVISION OF ENGINEERING SERVICES
ELECTRICAL-MECHANICAL-WATER AND WASTEWATER DESIGN

BRIDGE No. 53-2341
POST MILE R24.77

PASADENA 210/134 TUNNEL CONTROL BUILDING
TUNNEL No. 1 LIGHTING CONTROL WIRING DIAGRAM

SHEET **EE3-9**

TAEMWW Imperial - CCSC Rev. 01/13

ORIGINAL SCALE IN INCHES FOR REDUCED PLANS 0 1 2 3

UNIT: 3597 CONTRACT No.: 2881U4
PROJECT NUMBER & PHASE: 07140000851

DISREGARD PRINTS BEARING EARLIER REVISION DATES

REVISION DATES (PRELIMINARY STAGE ONLY) 11-26-13 1-8-14 2-28-14 4-25-14 SHEET OF

EA 2881U1

P:\dist_07\0700020994_la_210_interchange_building\expedite\ee3_09.dgn

18-JUN-2014 10:19

Dist	COUNTY	ROUTE	POST MILES TOTAL PROJECT	SHEET No.	TOTAL SHEETS
07	LA	210	R16.1/R25.8	897	927

Jaswinder S Sandhu 04-25-14
REGISTERED ELECTRICAL ENGINEER DATE

5-12-14
PLANS APPROVAL DATE

REGISTERED PROFESSIONAL ENGINEER Jaswinder Sandhu No. 11803 Exp. 9-30-14 ELEC STATE OF CALIFORNIA

The State of California or its officers or agents shall not be responsible for the accuracy or completeness of scanned copies of this plan sheet.

CALIFORNIA STATE FIRE MARSHAL APPROVED
Approval of this plan does not authorize or approve any omission or deviation from applicable regulations. Final approval is subject to field inspection. One set of approved plans shall be available on the project site at all times.
Reviewed by: FRANCIS (SONNY) SOLICH
Approval date: March 27, 2014

GENERAL NOTES:

A. For Light Circuit Divider Control Panel Details, see sheet EE3-12.

B. Tunnel night light circuits and light fixtures are not shown on this plan sheet. For reference to night lights see plans.

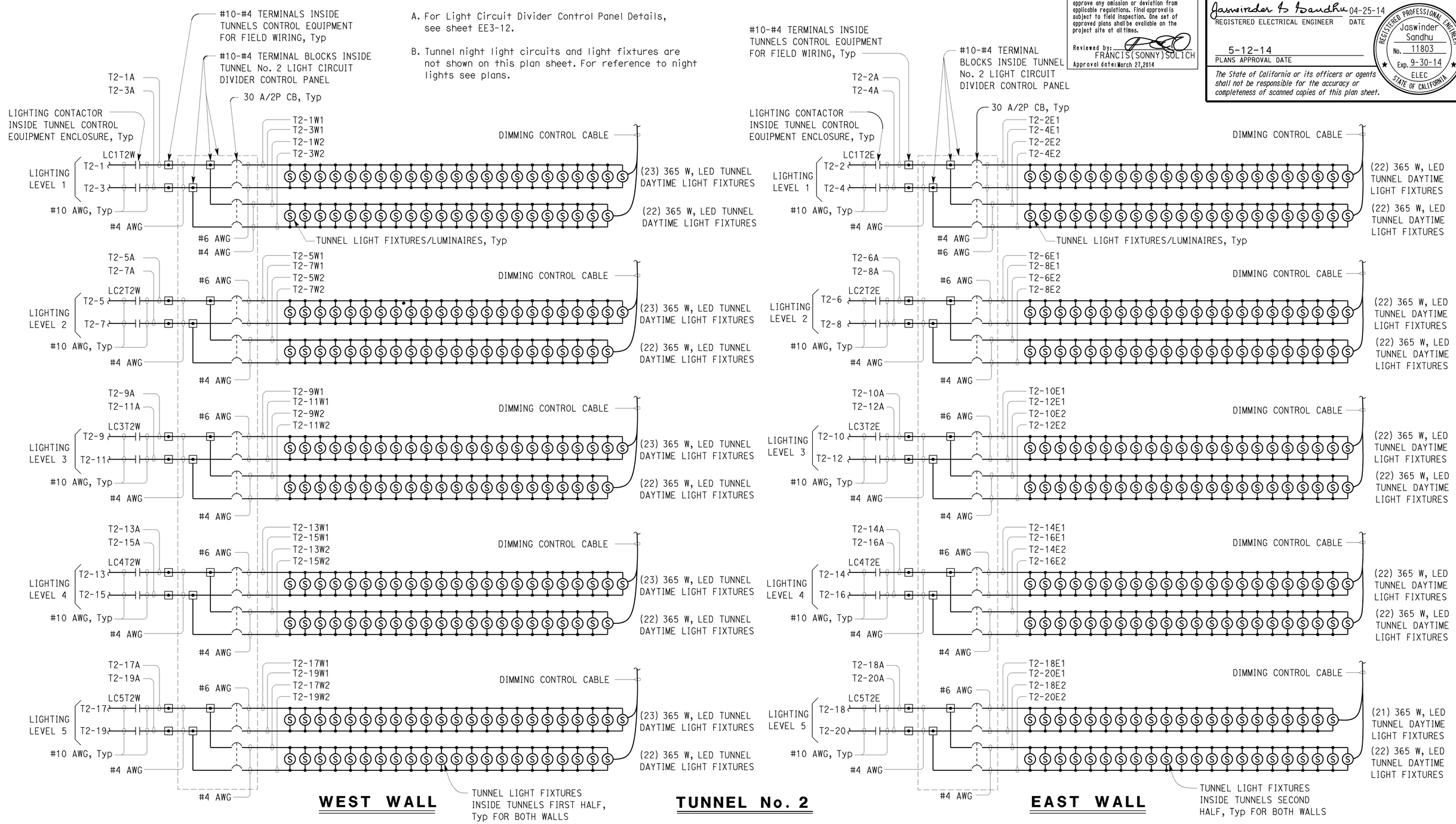

APPROVED FOR ELECTRICAL WORK ONLY

	BY	CHECKED
DESIGN	Jaswinder Sandhu	Jaswinder Gill
DETAILS	Ed D. Tapalla/Dali Zhou	Jaswinder Sandhu
QUANTITIES	Jaswinder Sandhu	Jaswinder Gill

STATE OF CALIFORNIA
DEPARTMENT OF TRANSPORTATION

DIVISION OF ENGINEERING SERVICES
ELECTRICAL-MECHANICAL-WATER AND WASTEWATER DESIGN

BRIDGE No. 53-2268
POST MILE R24.92

PASADENA 210/134 TUNNEL CONTROL BUILDING
TUNNEL No. 2 LIGHTING CONTROL WIRING DIAGRAM

SHEET **EE3-10**

TAEMWW Imperial - CCSC Rev. 01/13

ORIGINAL SCALE IN INCHES FOR REDUCED PLANS 0 1 2 3

UNIT: 3597 CONTRACT No.: 2881U4
PROJECT NUMBER & PHASE: 07140000851

DISREGARD PRINTS BEARING EARLIER REVISION DATES
REVISION DATES (PRELIMINARY STAGE ONLY) 11-26-13 1-8-14 2-28-14 4-25-14
SHEET OF

EA 2881U1

P:\dist_07\0700020994_la_210_interchange_building\expedite\ee3_10.dgn

18-JUN-2014 10:19

Dist	COUNTY	ROUTE	POST MILES TOTAL PROJECT	SHEET No.	TOTAL SHEETS
07	LA	210	R16.1/R25.8	898	927

Jaswinder S Sandhu 04-25-14
REGISTERED ELECTRICAL ENGINEER DATE

5-12-14
PLANS APPROVAL DATE

REGISTERED PROFESSIONAL ENGINEER Jaswinder Sandhu No. 11803 Exp. 9-30-14 ELEC STATE OF CALIFORNIA

The State of California or its officers or agents shall not be responsible for the accuracy or completeness of scanned copies of this plan sheet.

CALIFORNIA STATE FIRE MARSHAL APPROVED
Approval of this plan does not authorize or approve any omission or deviation from applicable regulations. Final approval is subject to field inspection. One set of approved plans shall be available on the project site at all times.
Reviewed by: FRANCIS (SONNY) SOLICH
Approval date: March 27, 2014

GENERAL NOTES:

A. For Light Circuit Divider Control Panel Details, see sheet EE3-12.

B. Tunnel night light circuits and light fixtures are not shown on this plan sheet. For reference to night lights see plans.

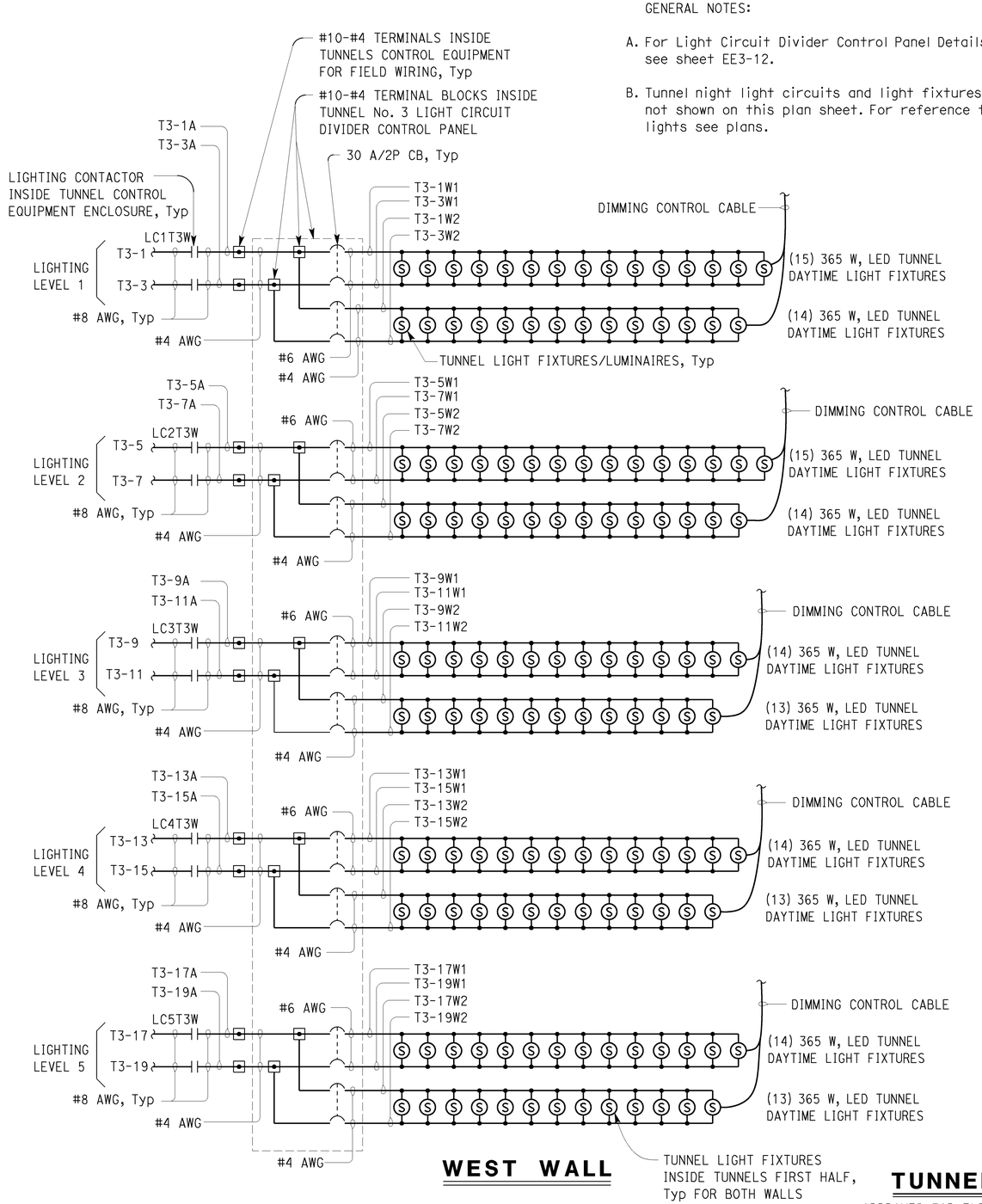

WEST WALL

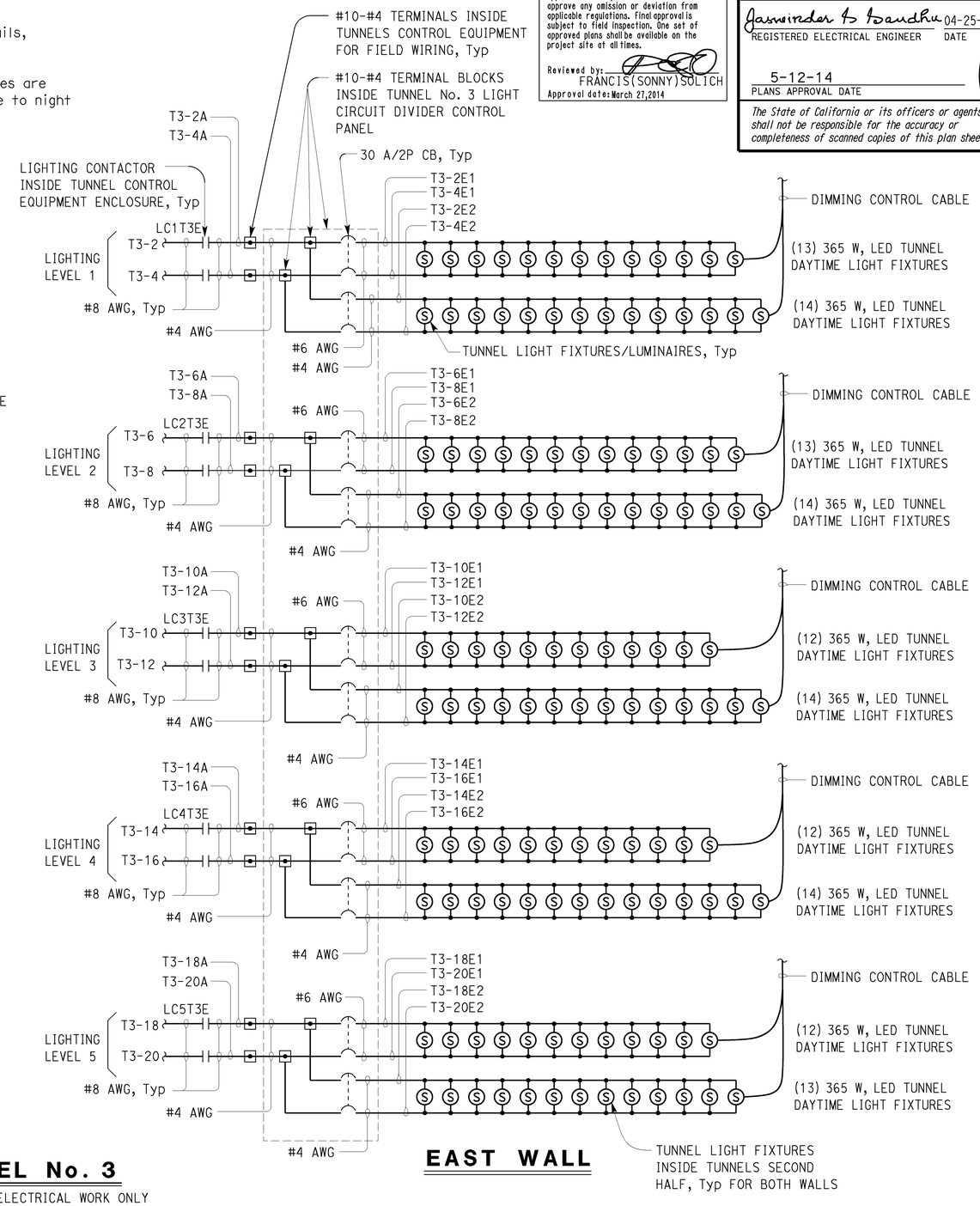

EAST WALL

TUNNEL No. 3

APPROVED FOR ELECTRICAL WORK ONLY

DESIGN	BY Jaswinder Sandhu	CHECKED Jaswinder Gill	
DETAILS	BY Ed D. Tapalla/Dali Zhou	CHECKED Jaswinder Sandhu	
QUANTITIES	BY Jaswinder Sandhu	CHECKED Jaswinder Gill	

STATE OF CALIFORNIA
DEPARTMENT OF TRANSPORTATION

DIVISION OF ENGINEERING SERVICES
ELECTRICAL-MECHANICAL-WATER AND WASTEWATER DESIGN

BRIDGE No. 53-2256
POST MILE R25.13

PASADENA 210/134 TUNNEL CONTROL BUILDING

TUNNEL No. 3 LIGHTING WIRING DIAGRAM

SHEET **EE3-11**

TAEMWW Imperial - CCSC Rev. 01/13

ORIGINAL SCALE IN INCHES FOR REDUCED PLANS 0 1 2 3

UNIT: 3597 CONTRACT No.: 2881U4
PROJECT NUMBER & PHASE: 07140000851

DISREGARD PRINTS BEARING EARLIER REVISION DATES → 11-26-13 1-8-14 2-28-14 4-25-14

REVISION DATES (PRELIMINARY STAGE ONLY) SHEET OF

EA 2881U1

P:\dist_07\0700020994_la_210_interchange_building\expedite\ee3_11.dgn

18-JUN-2014 10:19

Dist	COUNTY	ROUTE	POST MILES TOTAL PROJECT	SHEET No.	TOTAL SHEETS
07	LA	210	R16.1/R25.8	899	927

Jaswinder S Sandhu 04-25-14
REGISTERED ELECTRICAL ENGINEER DATE

5-12-14
PLANS APPROVAL DATE

REGISTERED PROFESSIONAL ENGINEER Jaswinder Sandhu No. 11803 Exp. 9-30-14 ELEC STATE OF CALIFORNIA

The State of California or its officers or agents shall not be responsible for the accuracy or completeness of scanned copies of this plan sheet.

CALIFORNIA STATE FIRE MARSHAL APPROVED
Approval of this plan does not authorize or approve any omission or deviation from applicable regulations. Final approval is subject to field inspection. One set of approved plans shall be available on the project site at all times.
Reviewed by: FRANCIS(SONNY)SOLICH
Approval date: March 27,2014

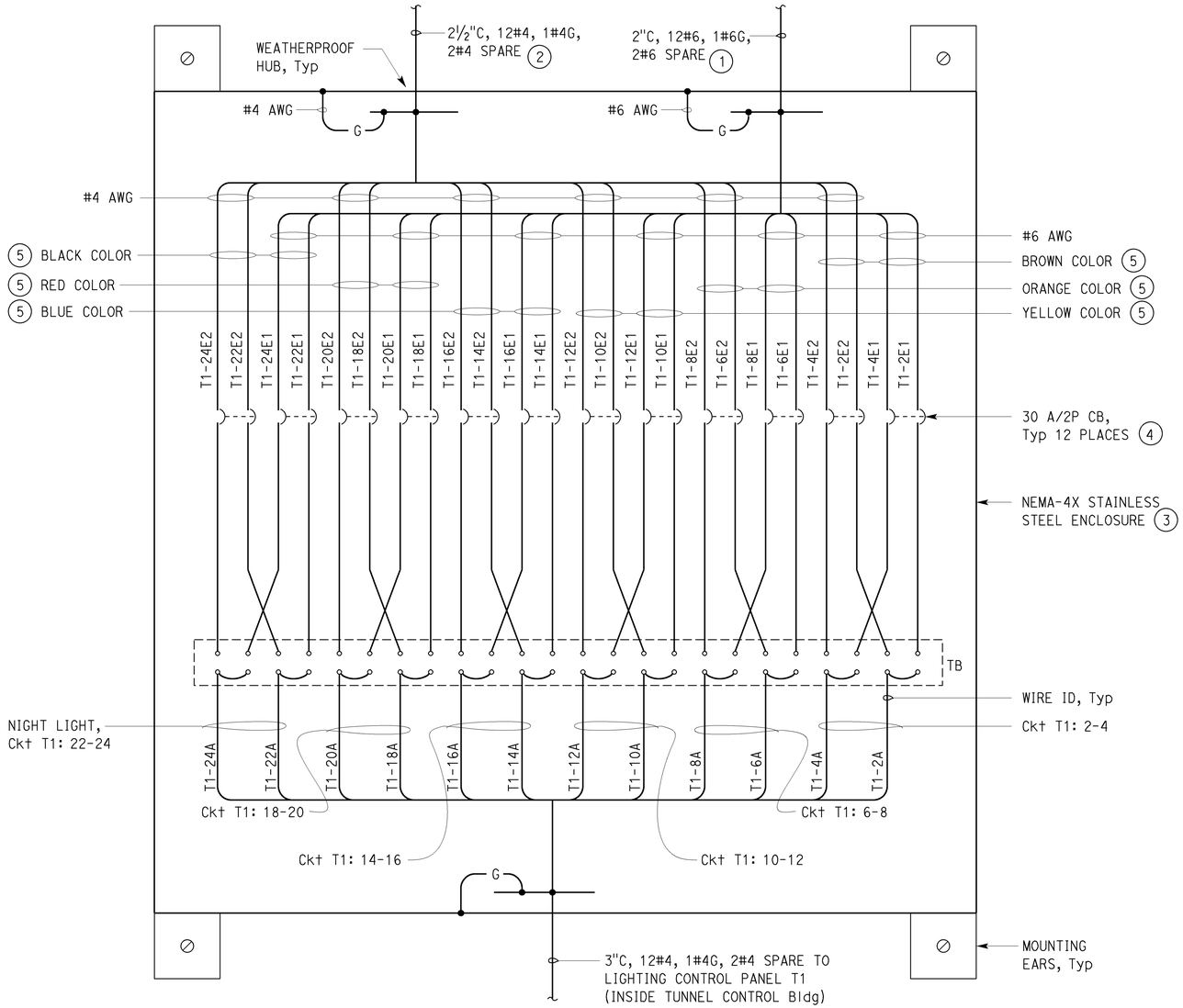

TUNNEL No. 1 EAST WALL LIGHT CIRCUIT DIVIDER CONTROL PANEL

NO SCALE

(EXTERIOR DOUBLE HINGED DOOR NOT SHOWN)

GENERAL NOTES:

A. East wall Light Circuit Divider Control Panel for Tunnel No. 1 shown. Light Circuit Divider Control Panel for west wall similar.

B. Light Circuit Divider Control Panel for Tunnel No. 1 shown. Light Circuit Divider Control Panel for Tunnel No. 2 and 3 similar except as follows:

- In Note No. 1 below replace "Second Half" with "First Half."
- In Note No. 2 below replace "First Half" with "Second Half".

C. Secure enclosure to Tunnel No. 1 with (4) ⅜"x4" mechanical expansion anchor.

D. Install identification on all conductors.

E. Install arc flash hazard warning label. For arc flash warning labels and hasp, see details on sheet EE4-4.

F. Paint panel enclosure and all conduits to match tunnel wall.

NOTES:

(1) Conduit and conductors to second half of the tunnel light fixtures on Tunnel No. 1 East wall.

(2) Conduit and conductors to first half of the tunnel light fixtures on Tunnel No. 1 East wall. Upon entry of this conduit to the junction box at the beginning of the first half of the tunnel, change this conduit and conductors to 2"C, 12#6, 2#6 spares, 1#6 ground for supplying tunnel light fixtures in the first half.

(3) Factory assembled, 12 gage, NEMA-4X and dual hinged door type stainless steel enclosure of the site suitable for housing electrical equipment as shown. Install the following electrical equipment on the back mounting panel:

- 30 A/2P Circuit breakers (Total of 12).
- 60 Amperes and 600-Volt rated power distribution type terminal blocks.

Number of terminal blocks to suit application. For door hasp detail, see sheet EE4-4.

(4) 30 A/2P Circuit breakers to be 480-Volt rated breakers with 100 Amperes frame.

(5) Inside the tunnel only, conductors insulation color scheme must be as follow:
- Light Level 1-brown color insulation
- Light Level 2-orange color insulation
- Light Level 3-yellow color insulation
- Light Level 4-blue color insulation
- Light Level 5-red color insulation:
- Night light-black color.

APPROVED FOR ELECTRICAL WORK ONLY

	BY	CHECKED
DESIGN	Jaswinder Sandhu	Jaswinder Gill
DETAILS	Dali Zhou/Ed Tapalla	Jaswinder Sandhu
QUANTITIES	Jaswinder Sandhu	Jaswinder Gill

STATE OF CALIFORNIA DEPARTMENT OF TRANSPORTATION

DIVISION OF ENGINEERING SERVICES
ELECTRICAL-MECHANICAL-WATER AND WASTEWATER DESIGN

BRIDGE No. L5724
POST MILE

PASADENA 210/134
TUNNEL CONTROL BUILDING
TUNNELS LIGHT CIRCUIT DIVIDER

SHEET EE3-12

TAEMWW Imperial - CCSC Rev. 01/13

ORIGINAL SCALE IN INCHES FOR REDUCED PLANS 0 1 2 3

UNIT: 3597 CONTRACT No.: 2881U4
PROJECT NUMBER & PHASE: 07140000851

DISREGARD PRINTS BEARING EARLIER REVISION DATES → 12-18-13 1-13-14 2-28-14 4-25-14

REVISION DATES (PRELIMINARY STAGE ONLY) SHEET OF

EA 2881U1

P:\dist_07\0700020994_la_210_interchange_building\expedite\ee3_12.dgn

18-JUN-2014 10:19

Dist	COUNTY	ROUTE	POST MILES TOTAL PROJECT	SHEET No.	TOTAL SHEETS
07	LA	210	R16.1/R25.8	900	927

Jaswinder S Sandhu 04-25-14
REGISTERED ELECTRICAL ENGINEER DATE

5-12-14
PLANS APPROVAL DATE

REGISTERED PROFESSIONAL ENGINEER Jaswinder Sandhu No. 11803 Exp. 9-30-14 ELEC STATE OF CALIFORNIA

The State of California or its officers or agents shall not be responsible for the accuracy or completeness of scanned copies of this plan sheet.

CALIFORNIA STATE FIRE MARSHAL APPROVED
Approval of this plan does not authorize or approve any omission or deviation from applicable regulations. Final approval is subject to field inspection. One set of approved plans shall be available on the project site at all times.
Reviewed by: FRANCIS (SONNY) SOLICH
Approval date: March 27, 2014

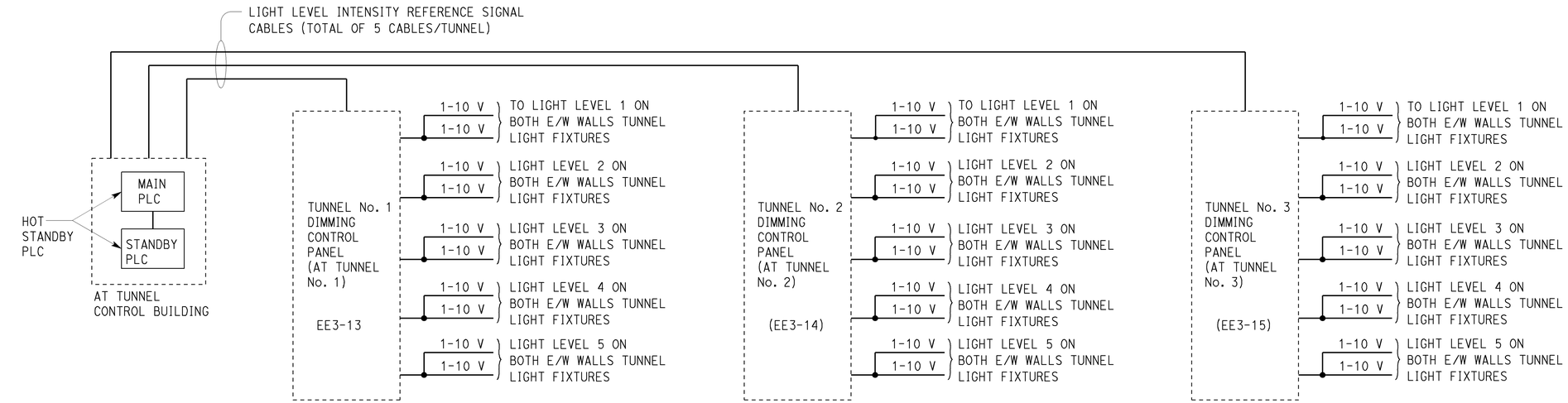

TUNNELS DIMMING CONTROL SCHEMATIC DIAGRAM

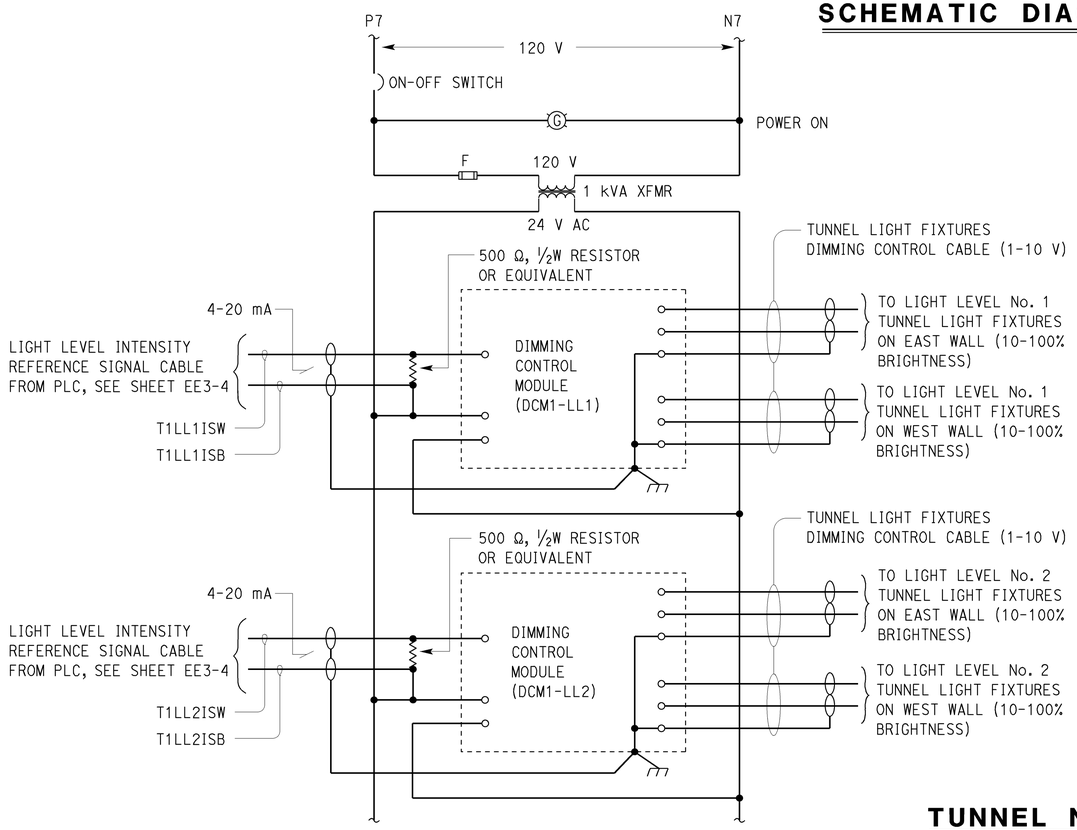

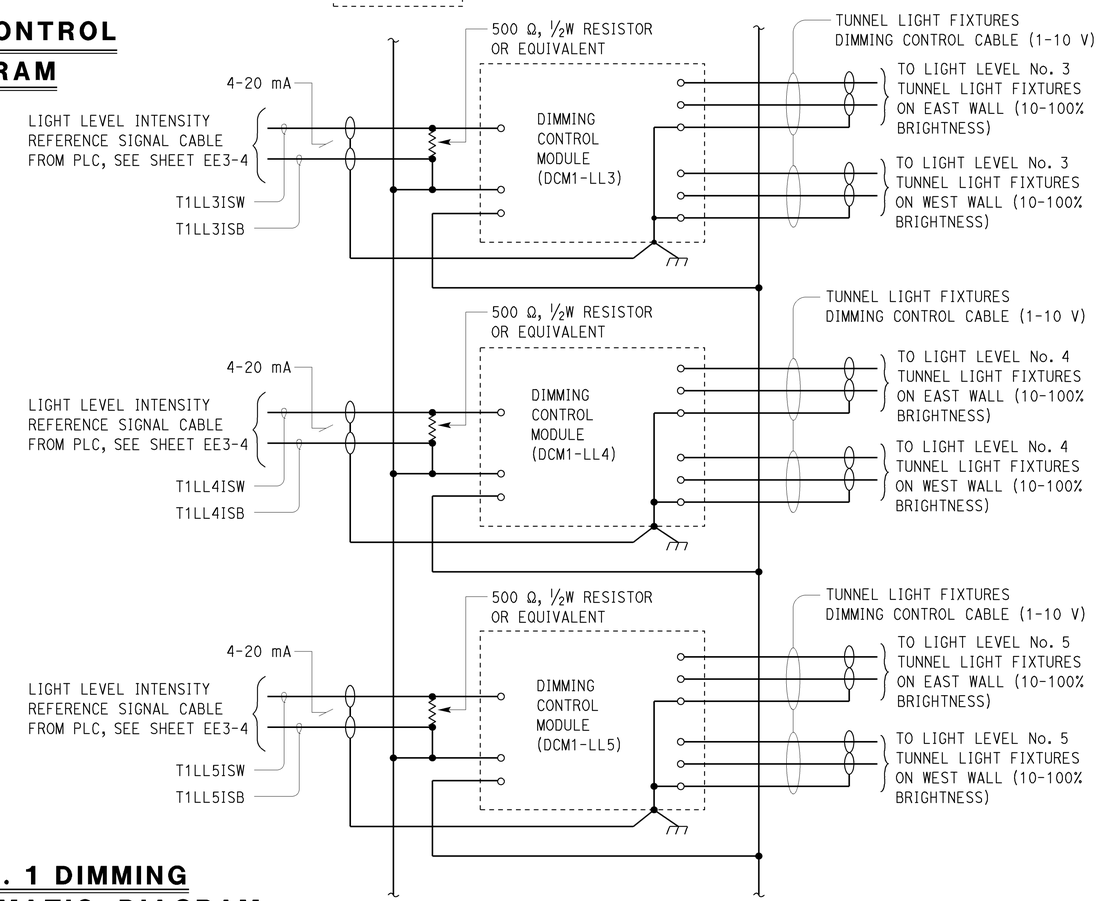

TUNNEL No. 1 DIMMING CONTROL SCHEMATIC DIAGRAM

FOR CONTINUATION, SEE SHEET EE3-14

APPROVED FOR ELECTRICAL WORK ONLY

	BY	CHECKED
DESIGN	Jaswinder Sandhu	Jaswinder Gill
DETAILS	Dali Zhou/Ed Tapalla	Jaswinder Sandhu
QUANTITIES	Jaswinder Sandhu	Jaswinder Gill

STATE OF CALIFORNIA
DEPARTMENT OF TRANSPORTATION

DIVISION OF ENGINEERING SERVICES
ELECTRICAL-MECHANICAL-WATER AND WASTEWATER DESIGN

BRIDGE No. 53-2341
POST MILE R24.77

PASADENA 210/134
TUNNEL CONTROL BUILDING
TUNNEL No. 1 DIMMING CONTROL SCHEMATIC

SHEET EE3-13

TAEMWW Imperial - CCSC Rev. 01/13

ORIGINAL SCALE IN INCHES FOR REDUCED PLANS 0 1 2 3

UNIT: 3597 CONTRACT No.: 2881U4
PROJECT NUMBER & PHASE: 07140000851

DISREGARD PRINTS BEARING EARLIER REVISION DATES → 12-18-13 1-8-14 2-28-14 4-25-14

REVISION DATES (PRELIMINARY STAGE ONLY) SHEET OF

EA 2881U1

P:\dist_07\0700020994_la_210_interchange_building\expedite\ee3_13.dgn

18-JUN-2014 10:19