| Dist | COUNTY | ROUTE | POST MILES TOTAL PROJECT | SHEET No. | TOTAL SHEETS |
|---|---|---|---|---|---|
| 07 | LA | 405 | 8.7/11.2 | 101 | 108 |

Theresa Gabriel
REGISTERED ELECTRICAL ENGINEER

July 19, 2013
PLANS APPROVAL DATE

REGISTERED PROFESSIONAL ENGINEER
Theresa Aziz Gabriel
No. E15129
Exp. 6-30-14
ELECTRICAL
STATE OF CALIFORNIA

*THE STATE OF CALIFORNIA OR ITS OFFICERS OR AGENTS SHALL NOT BE RESPONSIBLE FOR THE ACCURACY OR COMPLETENESS OF SCANNED COPIES OF THIS PLAN SHEET.*

TO ACCOMPANY PLANS DATED 5-11-15

2010 REVISED STANDARD PLAN RSP ES-1C

## EQUIPMENT IDENTIFICATION

### ILLUMINATED SIGN IDENTIFICATION NUMBER:

SIGN No. 12345 — SIGN NUMBER - PLACE ON POST OR STRUCTURE

10 ISL SCI 1.0

- 10 — TRANSFORMER RATING (kVA)
- SCI — LIGHTING CONTROL TYPE
- ISL — NUMBER AND TYPE OF FIXTURES

DO NOT PLACE ON STANDARD OR STRUCTURE

### ELECTROLIER OR EQUIPMENT IDENTIFICATION NUMBER:

12345 - 15'-0"

- 15'-0" — MAST ARM LENGTH, IF SHOWN. DO NOT PLACE ON STANDARD OR STRUCTURE
- 12345 — EQUIPMENT NUMBER - PLACE ON STANDARD OR STRUCTURE. EXISTING EQUIPMENT NUMBERS ARE SHOWN IN PARENTHESIS

### CONDUIT AND CONDUCTOR IDENTIFICATION:

1½"C, 2#10, 15#14, 2 DLC, 12P#18 (PAIR)

- 2#10, 15#14, 2 DLC, 12P#18 — NUMBER AND SIZE OF CONDUCTORS AND CABLES
- 1½"C — SIZE OF CONDUIT IN INCHES

| | |
|---|---|
| ø1, ø2, ø2P, etc. | TRAFFIC PHASE IDENTIFICATION FOR SIGNAL FACES, DETECTORS AND PHASE DIAGRAMS |
| 1 2 3 | LEGEND NUMBERS |
| A B C | EQUIPMENT, SIGNAL POLES, INSTALLATION OR ITEMS |
| 1 2 3 | CONDUIT RUN NUMBERS |

### SIGNAL AND LIGHTING STANDARD (TYPICAL DESIGNATION):

19A - 3 - 100

- 100 — WIND VELOCITY = 100 mph
- 3 — CASE 3 ARM LOADING
- 19A — STANDARD TYPE
- STANDARD PLAN SHEET NUMBER
- DETAIL, NUMBER, SECTION, TYPE OR ELEVATION

## MISCELLANEOUS EQUIPMENT

| NEW | EXISTING | |
|---|---|---|
| CMS | cms | CHANGEABLE MESSAGE SIGN |
| | | CLOSED CIRCUIT TELEVISION CAMERA |
| | | HIGHWAY ADVISORY RADIO POLE AND ANTENNA |
| EMS | ems | EXTINGUISHABLE MESSAGE SIGN |
| M<br>V | m<br>v | DETECTION DEVICE<br>M = MICROWAVE SENSOR<br>V = VIDEO IMAGE SENSOR |

## WIRING DIAGRAM LEGEND

- EXTERNAL CONDUCTOR
- CONDUCTOR OR BUS
- TIE POINT
- CONTACTOR COIL
- CONTACTOR, NO CONTACT
- TERMINAL BLOCKS
- CONTACTOR, NC CONTACT
- ENCLOSURE BOND
- GROUNDING ELECTRODE
- CIRCUIT BREAKER
- RECEPTACLE

## PULL BOXES

| NEW | EXISTING | |
|---|---|---|
| | | PULL BOX, No. 5 UNLESS OTHERWISE INDICATED OR NOTED |
| 3 | 9A(21) | PULL BOX, ADDITIONAL DESIGNATIONS OR DESCRIPTIONS |

3 No. 3½ PULL BOX
5 No. 5 PULL BOX
6 No. 6 PULL BOX
7 No. 7 (CEILING PULL BOX)
8 No. 8 (PENDANT SOFFIT PULL BOX)
9 No. 9 PULL BOX
9A No. 9A PULL BOX

(C) COMMUNICATIONS PULL BOX
(E) PULL BOX WITH EXTENSION
(S) SPRINKLER CONTROL PULL BOX
(21) ANCHOR BOLTS AND CONDUIT FOR FUTURE INSTALLATION OF TYPE 21 STANDARD
(T) TRAFFIC PULL BOX

## VEHICLE DETECTORS

5 J 9 U

- 5 — VEHICLE DETECTOR DESIGNATION
- U — U = UPPER, L = LOWER
- 9 — SLOT NUMBER IN INPUT FILE
- J — INPUT FILE (I OR J)
- 5 — PHASE

| NEW | EXISTING | |
|---|---|---|
| | | TYPE A DETECTOR LOOP. OUTLINE OF SAWCUT SHOWN |
| | | TYPE B DETECTOR LOOP. OUTLINE OF SAWCUT SHOWN |
| | | TYPE C DETECTOR LOOP. OUTLINE OF SAWCUT SHOWN |
| | | TYPE D DETECTOR LOOP. OUTLINE OF SAWCUT SHOWN |
| | | TYPE E DETECTOR LOOP. OUTLINE OF SAWCUT SHOWN |
| | | TYPE Q DETECTOR LOOP. OUTLINE OF SAWCUT SHOWN |
| | | MAGNETIC DETECTOR |
| DH | dh | DETECTOR HANDHOLE |
| | | MICROWAVE OR VIDEO DETECTION ZONE |

STATE OF CALIFORNIA
DEPARTMENT OF TRANSPORTATION

# ELECTRICAL SYSTEMS (LEGEND AND ABBREVIATIONS)

NO SCALE

RSP ES-1C DATED JULY 19, 2013 SUPERSEDES STANDARD PLAN ES-1C DATED MAY 20, 2011 - PAGE 427 OF THE STANDARD PLANS BOOK DATED 2010.

**REVISED STANDARD PLAN RSP ES-1C**

| Dist | COUNTY | ROUTE | POST MILES TOTAL PROJECT | SHEET No. | TOTAL SHEETS |
|---|---|---|---|---|---|
| 07 | LA | 405 | 8.7/11.2 | 102 | 108 |

Theresa Gabriel
REGISTERED ELECTRICAL ENGINEER

July 19, 2013
PLANS APPROVAL DATE

REGISTERED PROFESSIONAL ENGINEER Theresa Aziz Gabriel No. E15129 Exp. 6-30-14 ELECTRICAL STATE OF CALIFORNIA

*THE STATE OF CALIFORNIA OR ITS OFFICERS OR AGENTS SHALL NOT BE RESPONSIBLE FOR THE ACCURACY OR COMPLETENESS OF SCANNED COPIES OF THIS PLAN SHEET.*

TO ACCOMPANY PLANS DATED 5-11-15

**2010 REVISED STANDARD PLAN RSP ES-5B**

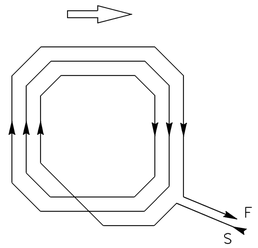


WINDING DETAIL

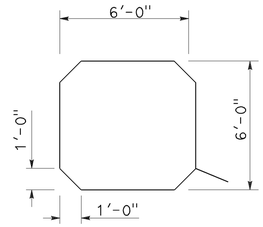


SAWCUT DETAIL

TYPE A LOOP DETECTOR CONFIGURATION

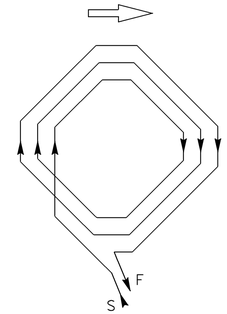


WINDING DETAIL

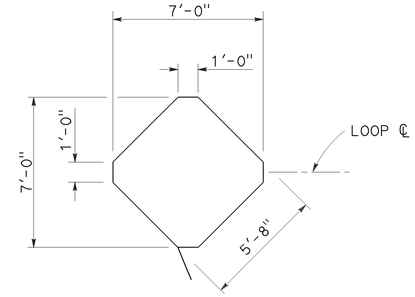


SAWCUT DETAIL

TYPE B LOOP DETECTOR CONFIGURATION

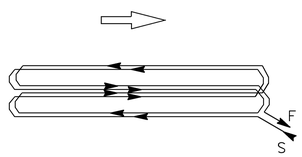


WINDING DETAIL

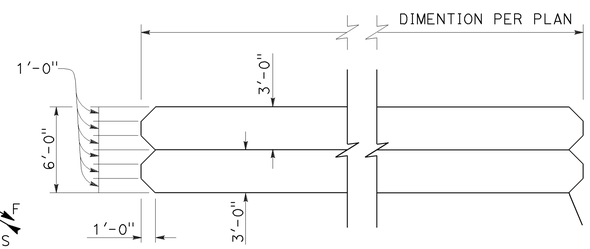


SAWCUT DETAIL

TYPE C LOOP DETECTOR CONFIGURATION

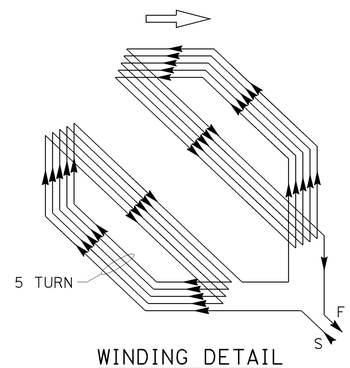


WINDING DETAIL

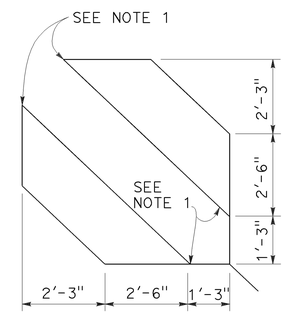


SAWCUT DETAIL

TYPE D LOOP DETECTOR CONFIGURATION

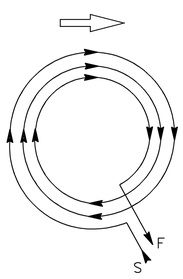


WINDING DETAIL

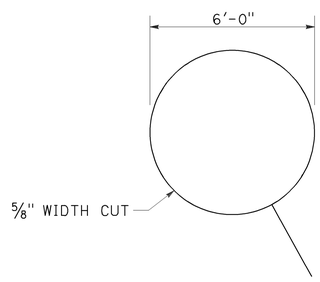


SAWCUT DETAIL

TYPE E LOOP DETECTOR CONFIGURATION

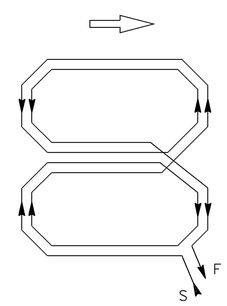


WINDING DETAIL

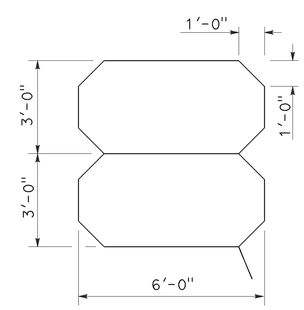


SAWCUT DETAIL

TYPE Q LOOP DETECTOR CONFIGURATION

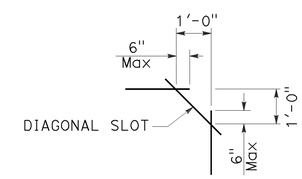


PLAN VIEW OF DIAGONAL SLOT AT CORNERS

NOTES:

1. Round corners of acute angle sawcuts to prevent damage to conductors.
2. Typical distance separating loops from edge to edge is 10' for Type A, B, D and E installation in single lane.

STATE OF CALIFORNIA
DEPARTMENT OF TRANSPORTATION

# ELECTRICAL SYSTEMS (DETECTORS)

NO SCALE

RSP ES-5B DATED JULY 19, 2013 SUPERSEDES STANDARD PLAN ES-5B DATED MAY 20, 2011 - PAGE 449 OF THE STANDARD PLANS BOOK DATED 2010.

**REVISED STANDARD PLAN RSP ES-5B**

7-9-13

| Dist | COUNTY | ROUTE | POST MILES TOTAL PROJECT | SHEET NO. | TOTAL SHEETS |
|---|---|---|---|---|---|
| 07 | LA | 405 | 8.7/11.2 | 103 | 108 |

Theresa Gabriel
REGISTERED ELECTRICAL ENGINEER

July 19, 2013
PLANS APPROVAL DATE

REGISTERED PROFESSIONAL ENGINEER Theresa Aziz Gabriel No. E15129 Exp. 6-30-14 ELECTRICAL STATE OF CALIFORNIA

THE STATE OF CALIFORNIA OR ITS OFFICERS OR AGENTS SHALL NOT BE RESPONSIBLE FOR THE ACCURACY OR COMPLETENESS OF SCANNED COPIES OF THIS PLAN SHEET.

TO ACCOMPANY PLANS DATED 5-11-15

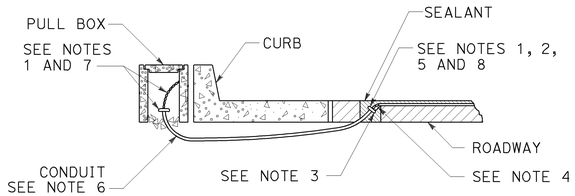


TYPE A
CURB TERMINATION DETAIL

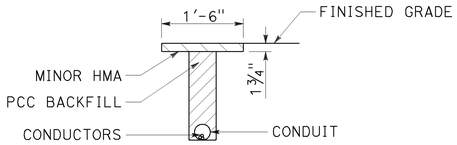


"T" TRENCH
DETAIL T

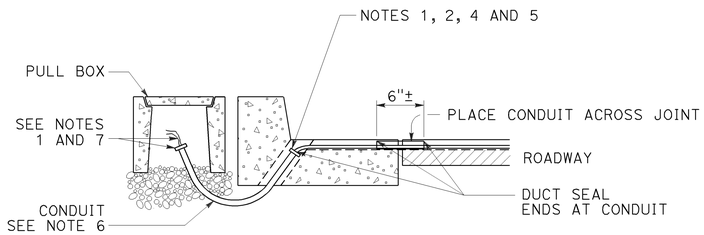


CROSS SECTION

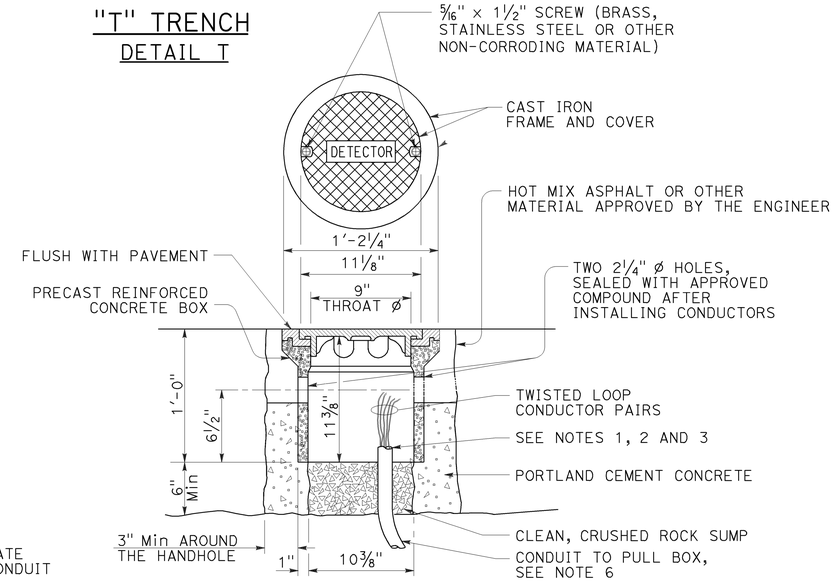


DETECTOR HANDHOLE DETAIL

## NOTES:

1. Bushing shall be used at end of conduit.
2. Tape detector conductors or cables 3" each side of bushings.
3. Install duct seal compound to each end of termination conduit before installing sealant.
4. Round all sharp edges where detector conductors or cables have to pass.
5. End of conduit shall be 3⅛" below roadway surface.
6. 

| Conduit size | Loop conductors |
|---|---|
| 1"C minimum | 1 to 2 pairs |
| 1½"C minimum | 3 to 4 pairs |
| 2"C minimum | 5 or more pairs |

7. Splice detector conductors or cables to detector lead-in-cable.
8. Location of detector handhole when shown on plans.
9. When the shoulder and traveled way are paved with the same material and there is no joint between them, the conduit shall extend only 2'-0" into the shoulder pavement.
10. ¾"C, Type 3 conduit 6" long minimum, plug both ends with duct compound to keep out sealant.
11. ½" Minimum between top of conduit and pavement surface.
12. Sawcut shall not exceed 1" in width and ⅛" longer than conduit to be installed.
13. Conductors with ½" minimum slack inside conduit.
14. Inductive loop detector saw slot.

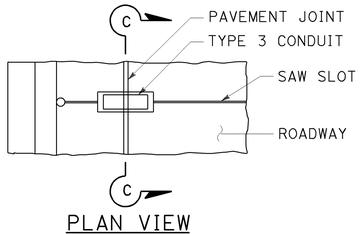


PLAN VIEW

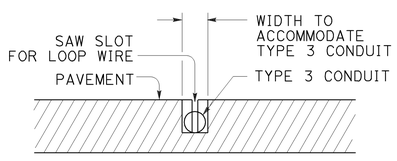


SECTION C-C

TYPE B
CURB TERMINATION DETAIL

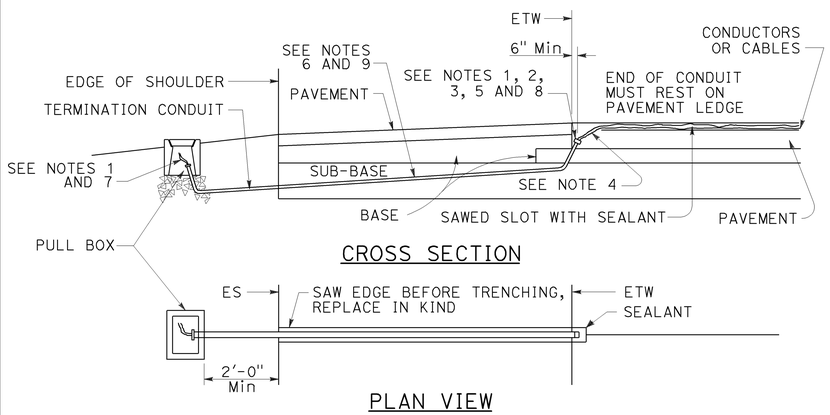


CROSS SECTION

PLAN VIEW

SHOULDER TERMINATION DETAILS

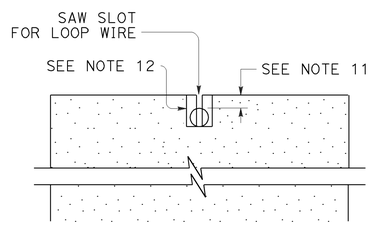


SECTION A-A

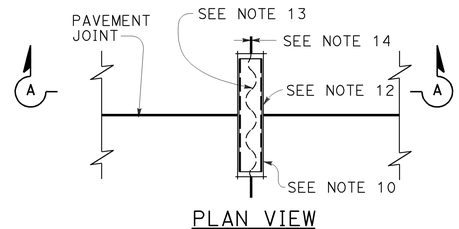


PLAN VIEW

TYPICAL LOOP LEAD-IN DETAIL
AT PAVEMENT JOINT

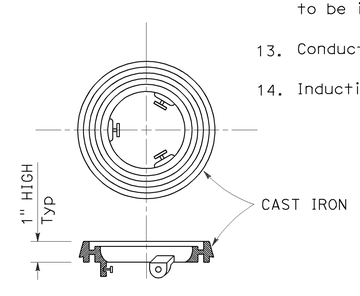


LOCKING GRADE RING

STATE OF CALIFORNIA
DEPARTMENT OF TRANSPORTATION

# ELECTRICAL SYSTEMS (CURB TERMINATION AND HANDHOLE)

NO SCALE

RSP ES-5D DATED JULY 19, 2013 SUPERSEDES STANDARD PLAN ES-5D DATED MAY 20, 2011 - PAGE 451 OF THE STANDARD PLANS BOOK DATED 2010.

**REVISED STANDARD PLAN RSP ES-5D**

**2010 REVISED STANDARD PLAN RSP ES-5D**

7-9-13

| DIST | COUNTY | ROUTE | POST MILES TOTAL PROJECT | SHEET NO. | TOTAL SHEETS |
|---|---|---|---|---|---|
| 07 | LA | 405 | 8.7/11.2 | 104 | 108 |

Theresa Gabriel
REGISTERED ELECTRICAL ENGINEER

July 19, 2013
PLANS APPROVAL DATE

REGISTERED PROFESSIONAL ENGINEER
Theresa Aziz Gabriel
No. E15129
Exp. 6-30-14
ELECTRICAL
STATE OF CALIFORNIA

*THE STATE OF CALIFORNIA OR ITS OFFICERS OR AGENTS SHALL NOT BE RESPONSIBLE FOR THE ACCURACY OR COMPLETENESS OF SCANNED COPIES OF THIS PLAN SHEET.*

TO ACCOMPANY PLANS DATED 5-11-15

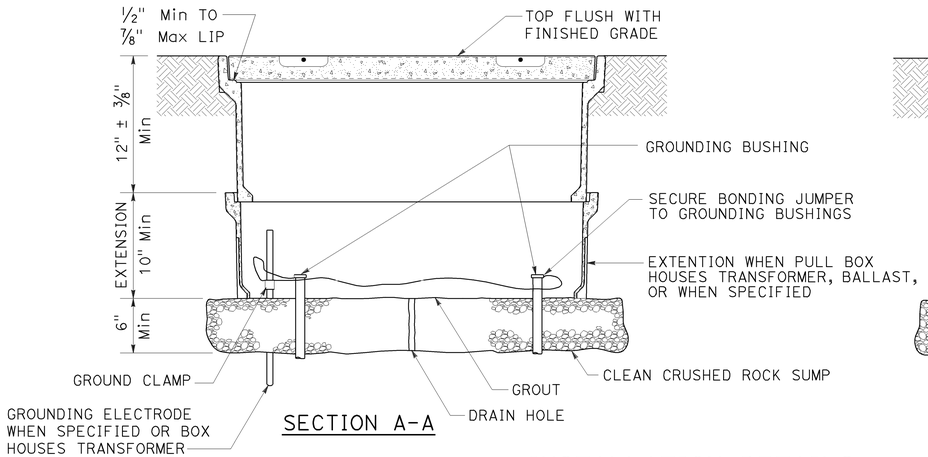


SECTION A-A

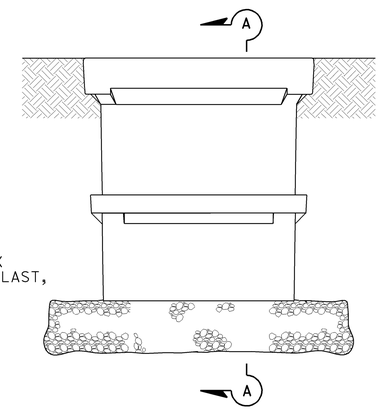


SIDE VIEW

## INSTALLATION DETAILS

### DETAIL A

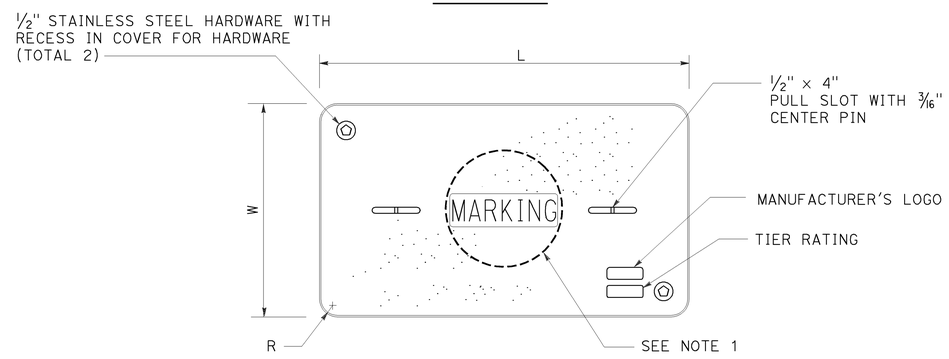


COVER TOP VIEW

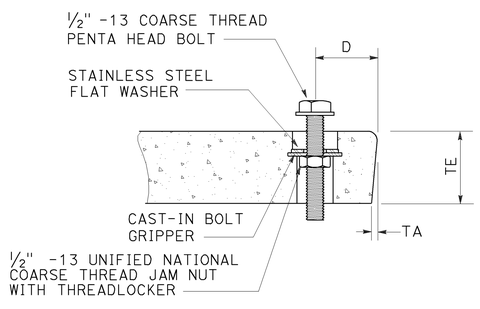


TYPICAL COVER CAPTIVE BOLT

OR SIMILAR

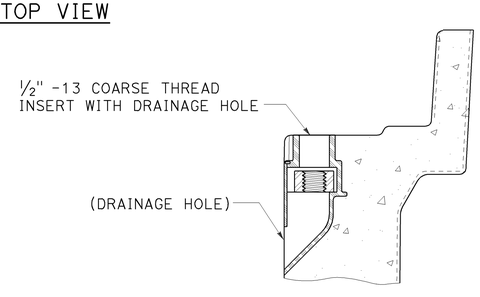


TYPICAL THREADED INSERT

OR SIMILAR

### DIMENSION TABLE

| PULL BOX | PULL BOX | | | COVER | | | | | | |
|---|---|---|---|---|---|---|---|---|---|---|
| | MINIMUM DEPTH BOX | MINIMUM DEPTH EXTENSION | MAXIMUM WEIGHT | L | W | R | TE | TA | D | MAXIMUM WEIGHT |
| No. 3½ | 12" | N/A | 40 lb | 1′ - 3⅜" | 10⅛" | 1⅜" | 2" | ⅛" | 1¾" | 30 lb |
| No. 5 | 12" | 10" | 55 lb | 1′ - 11¼" | 1′ - 1¾" | 1⅜" | 2" | ⅛" | 1¾" | 60 lb |
| No. 6 | 12" | 10" | 70 lb | 2′ - 6½" | 1′ - 5½" | 1⅜" | 2" | ⅛" | 2" | 85 lb |

## NOTES:

1. Pull box covers shall be marked as follows: "SERVICE" Service circuits between service point and service disconnect; "SPRINKLER-CONTROL" sprinkler control circuits, 50 V or less; "CALTRANS" on all pull boxes, except pull boxes marked "SPRINKLER-CONTROL"; and "TELEPHONE" Telephone service;
   - A) No. 3½ pull box.
     - 1) "SIGNAL" - Traffic signal circuits with or without lighting or sign lighting circuits.
     - 2) "LIGHTING" - Lighting or sign lighting circuits where voltage is under 600 V.
   - B) No. 5, 6, 9 or 9A pull box.
     - 1) "TRAFFIC SIGNAL" - Traffic signal circuits with or without lighting or sign lighting circuits.
     - 2) "LIGHTING" - Lighting or sign lighting circuits where voltage is under 600 V.
     - 3) "LIGHTING-HIGH VOLTAGE" - Lighting or sign lighting circuits where voltage is above 600 V.
     - 4) "IRRIGATION" - Circuits to irrigation controller 120 V or more.
     - 5) "RAMP METER" - Ramp meter circuits.
     - 6) "COUNT STATION" - Count or speed monitor circuits.
     - 7) "COMMUNICATIONS" - Communication circuits.
     - 8) "TOS COMMUNICATIONS" - TOS communication line.
     - 9) "TOS POWER" - TOS power.
     - 10) "TDC POWER" - Telephone demarcation cabinet power.
     - 11) "CCTV" - Closed circuit television circuits.
     - 12) "TMS" - Traffic monitoring station circuits.
     - 13) "CMS" - Changeable message sign circuits.
     - 14) "HAR" - Highway advisory radio circuits.
     - 15) "BOOSTER PUMP" - Booster pump circuit.
2. The nominal dimensions of the opening in which the cover sets shall be the same as the cover dimensions except the length and width dimensions shall be ⅛" greater.
3. Covers and boxes shall be interchangeable with California standard male and female gages. When interchanged with a standard male or female gage, the top surfaces shall be flush within ⅛". Top outside radius of covers and pull boxes shall have a ⅛" radius.
4. Pull box extension may be another pull box as long as the bottom edge of the pull box can fit into the cover opening.
5. All dimensions for the cover for non-traffic pull box are nominal values.

STATE OF CALIFORNIA
DEPARTMENT OF TRANSPORTATION

# ELECTRICAL SYSTEMS (NON-TRAFFIC PULL BOX)

NO SCALE

RSP ES-8A DATED JULY 19, 2013 SUPERSEDES RSP ES-8A DATED JANUARY 20, 2012 THAT SUPPLEMENTS THE STANDARD PLANS BOOK DATED 2010.

**REVISED STANDARD PLAN RSP ES-8A**

**2010 REVISED STANDARD PLAN RSP ES-8A**

7-15-13

| DIST | COUNTY | ROUTE | POST MILES TOTAL PROJECT | SHEET NO. | TOTAL SHEETS |
|---|---|---|---|---|---|
| 07 | LA | 405 | 8.7/11.2 | 105 | 108 |

Theresa Gabriel
REGISTERED ELECTRICAL ENGINEER

July 19, 2013
PLANS APPROVAL DATE

REGISTERED PROFESSIONAL ENGINEER
Theresa Aziz Gabriel
No. E15129
Exp. 6-30-14
ELECTRICAL
STATE OF CALIFORNIA

*THE STATE OF CALIFORNIA OR ITS OFFICERS OR AGENTS SHALL NOT BE RESPONSIBLE FOR THE ACCURACY OR COMPLETENESS OF SCANNED COPIES OF THIS PLAN SHEET.*

TO ACCOMPANY PLANS DATED 5-11-15

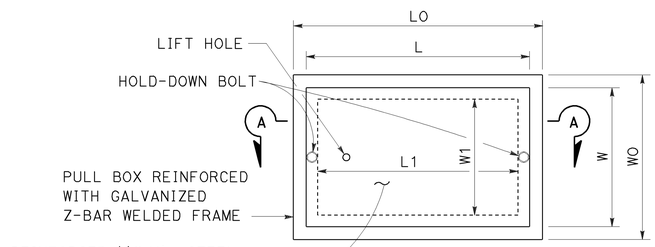


TOP VIEW

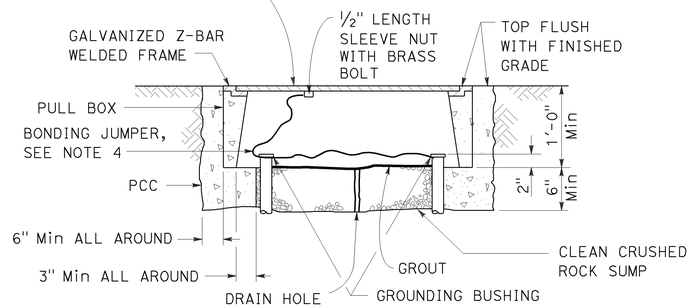


SECTION A-A

## No. 3½(T), No. 5(T) AND No. 6(T) TRAFFIC PULL BOX

## NOTES:

1. Traffic pull box shall be provided with steel cover and special concrete footing. Steel cover shall have embossed non-skid pattern.
2. Steel reinforcing shall be as regularly used in the standard products of the respective manufacturer.
3. Pull box covers shall be marked as follows: "SERVICE" Service circuits between service point and service disconnect; "SPRINKLER-CONTROL" Sprinkler control circuits, 50 V or less; "CALTRANS" On all pull boxes, except pull boxes marked "SPRINKLER-CONTROL"; and "TELEPHONE" Telephone service.
   - A) No. 3½(T) pull box.
     - 1) "SIGNAL" - Traffic signal circuits with or without lighting or sign lighting circuits.
     - 2) "LIGHTING" - Lighting or sign lighting circuits where voltage is under 600 V.
   - B) No. 5(T) or 6(T) pull box.
     - 1) "TRAFFIC SIGNAL" - Traffic signal circuits with or without lighting or sign lighting circuits.
     - 2) "LIGHTING" - Lighting or sign lighting circuits where voltage is under 600 V.
     - 3) "LIGHTING-HIGH VOLTAGE" - Lighting or sign lighting circuits where voltage is above 600 V.
     - 4) "IRRIGATION" - Circuits to irrigation controller 120 V or more.
     - 5) "RAMP METER" - Ramp meter circuits.
     - 6) "COUNT STATION" - Count or speed monitor circuits.
     - 7) "COMMUNICATION" - Communication circuits.
     - 8) "TOS COMMUNICATIONS" - TOS communications line.
     - 9) "TOS POWER" - TOS power.
     - 10) "TDC POWER" - Telephone demarcation cabinet power.
     - 11) "CCTV" - Closed circuit television circuits.
     - 12) "TMS" - Traffic monitoring station circuits.
     - 13) "CMS" - Changeable message sign circuits.
     - 14) "HAR" - Highway advisory radio circuits.
     - 15) "BOOSTER PUMP" - Booster pump circuit.
4. Bonding jumper for metal covers shall be 3' long, minimum.
5. The nominal dimensions of the opening in which the cover sets shall be the same as the cover dimensions except the length and width dimensions shall be ⅛" greater.
6. Covers and boxes shall be interchangeable with California standard male and female gages. When interchanged with a standard male or female gage, the top surfaces shall be flush within ⅛".

DIMENSION TABLE

| PULL BOX | PULL BOX | | | | | | COVER | | | | |
|---|---|---|---|---|---|---|---|---|---|---|---|
| | MINIMUM * THICKNESS | MINIMUM DEPTH BOX AND EXTENSION | WO | LO | L1 | W1 | L ** | W ** | R | EDGE THICKNESS | EDGE TAPER |
| No. 3½(T) | 1½" | 1'-0" | 1'-5"± 1" | 1'-8⅞"± | 1'-2½"± | 10⅝"± 1" | 1'-8"± | 1'-1¾"± | 0" | ½" | NONE |
| No. 5(T) | 1¾" | 1'-0" | 1'-11½"± 1" | 2'-5½"± | 1'-7"± | 1'-1"± 1" | 2'-3"± | 1'-4"± | 0" | ½" | NONE |
| No. 6(T) | 2" | 1'-0" | 2'-6"± 1" | 2'-11½"± | 1'-11½"± | 1'-5"± 1" | 2'-9"± | 1'-8"± | 0" | ½" | NONE |

* EXCLUDING CONDUIT WEB ** TOP DIMENSION

STATE OF CALIFORNIA
DEPARTMENT OF TRANSPORTATION

# ELECTRICAL SYSTEMS (TRAFFIC PULL BOX)

NO SCALE

RSP ES-8B DATED JULY 19, 2013 SUPERSEDES RSP ES-8B DATED JANUARY 20, 2012 THAT SUPPLEMENTS THE STANDARD PLANS BOOK DATED 2010.

**REVISED STANDARD PLAN RSP ES-8B**

**2010 REVISED STANDARD PLAN RSP ES-8B**

7-15-13

| Dist | COUNTY | ROUTE | POST MILES TOTAL PROJECT | SHEET No. | TOTAL SHEETS |
|---|---|---|---|---|---|
| 07 | LA | 405 | 8.7/11.2 | 106 | 108 |

Theresa Gabriel
REGISTERED ELECTRICAL ENGINEER

July 19, 2013
PLANS APPROVAL DATE

REGISTERED PROFESSIONAL ENGINEER
Theresa Aziz Gabriel
No. E15129
Exp. 6-30-14
ELECTRICAL
STATE OF CALIFORNIA

*THE STATE OF CALIFORNIA OR ITS OFFICERS OR AGENTS SHALL NOT BE RESPONSIBLE FOR THE ACCURACY OR COMPLETENESS OF SCANNED COPIES OF THIS PLAN SHEET.*

TO ACCOMPANY PLANS DATED 5-11-15

## ISOFOOTCANDLE CURVE - MINIMUM

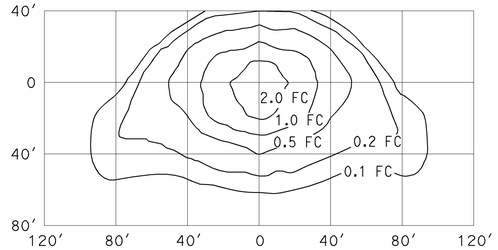


TYPE III MEDIUM CUTOFF

Cutoff Luminaire
34′ Mounting Height
Lamp operated at 22,000 lm
200-W high pressure sodium lamp
ANSI Designation S66

## ISOFOOTCANDLE CURVE - MINIMUM

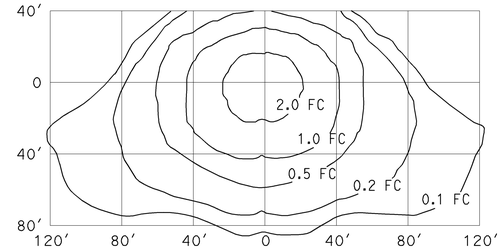


TYPE III MEDIUM CUTOFF

Cutoff Luminaire
40′ Mounting Height
Lamp operated at 37,000 lm
310-W high pressure sodium lamp
ANSI Designation S67

## ISOFOOTCANDLE CURVE - MINIMUM

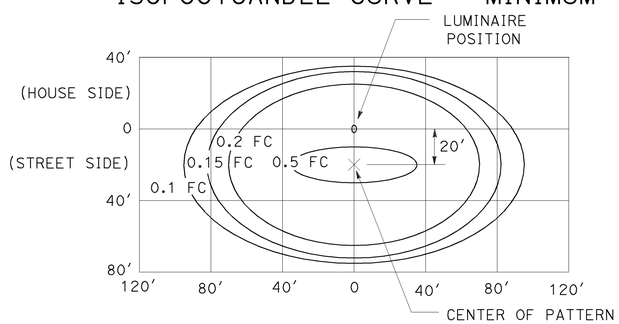


LED LUMINAIRE ROADWAY 1

165-W at 34′ Mounting Height

## ISOFOOTCANDLE CURVE - MINIMUM

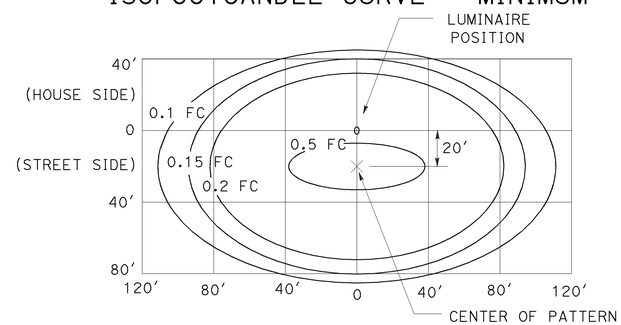


LED LUMINAIRE ROADWAY 2

235-W at 40′ Mounting Height

## ISOFOOTCANDLE CURVE - MINIMUM

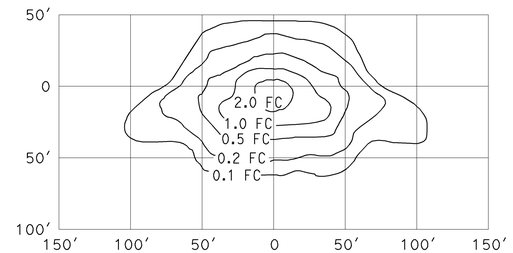


TYPE III MEDIUM CUTOFF

Cutoff Luminaire
30′ Mounting Height
Lamp operated at 16,000 lm
150-W high pressure sodium lamp
ANSI Designation S55

## ISOFOOTCANDLE CURVE - MINIMUM

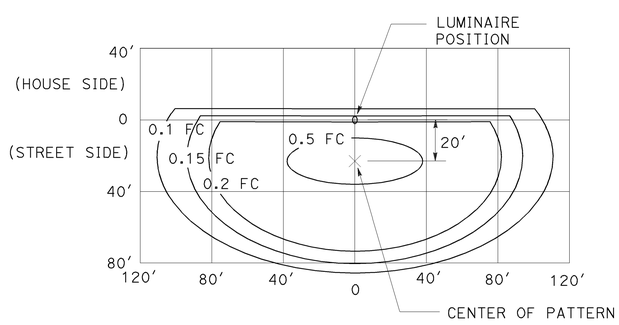


LED LUMINAIRE ROADWAY 3

235-W at 40′ Mounting Height
with back side control

## ISOFOOTCANDLE CURVE - MINIMUM

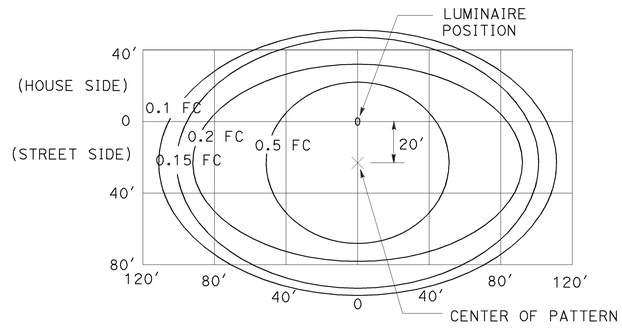


LED LUMINAIRE ROADWAY 4

300-W at 40′ Mounting Height

## ISOFOOTCANDLE CURVE - MINIMUM

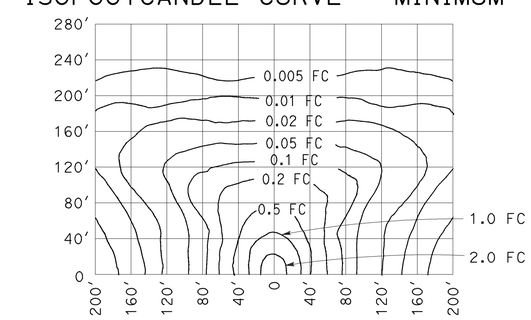


LOW PRESSURE SODIUM LUMINAIRE

40′ Mounting Height
Lamp operated at 33,000 lm
180-W low pressure sodium lamp

STATE OF CALIFORNIA
DEPARTMENT OF TRANSPORTATION

# ELECTRICAL SYSTEMS (ISOFOOTCANDLE DIAGRAMS)

NO SCALE

RSP ES-10A DATED JULY 19, 2013 SUPERSEDES RSP ES-10A DATED JULY 20, 2012 THAT SUPPLEMENTS THE STANDARD PLANS BOOK DATED 2010.

**REVISED STANDARD PLAN RSP ES-10A**

**2010 REVISED STANDARD PLAN RSP ES-10A**

7-9-13

| Dist | COUNTY | ROUTE | POST MILES TOTAL PROJECT | SHEET No. | TOTAL SHEETS |
|---|---|---|---|---|---|
| 07 | LA | 405 | 8.7/11.2 | 107 | 108 |

REGISTERED ELECTRICAL ENGINEER

July 20, 2012
PLANS APPROVAL DATE

REGISTERED PROFESSIONAL ENGINEER
Jeffery G. McRae
No. E14512
Exp. 6-30-14
ELECTRICAL
STATE OF CALIFORNIA

*THE STATE OF CALIFORNIA OR ITS OFFICERS OR AGENTS SHALL NOT BE RESPONSIBLE FOR THE ACCURACY OR COMPLETENESS OF SCANNED COPIES OF THIS PLAN SHEET.*

TO ACCOMPANY PLANS DATED 5-11-15

## ISOFOOTCANDLE CURVE - MINIMUM

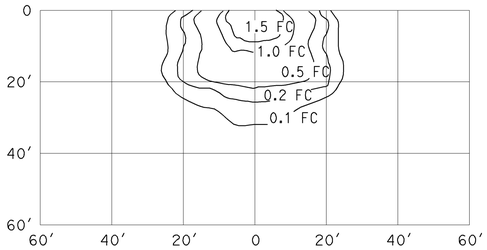


WALL LUMINAIRE
15′ Mounting Height
Lamp operated at 5,800 lm
70-W high pressure sodium lamp
ANSI Designation S62

## ISOFOOTCANDLE CURVE - MINIMUM

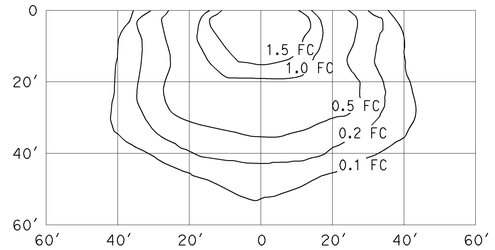


WALL LUMINAIRE
15′ Mounting Height
Lamp operated at 9,500 lm
100-W high pressure sodium lamp
ANSI Designation S54

## ISOFOOTCANDLE CURVE - MINIMUM

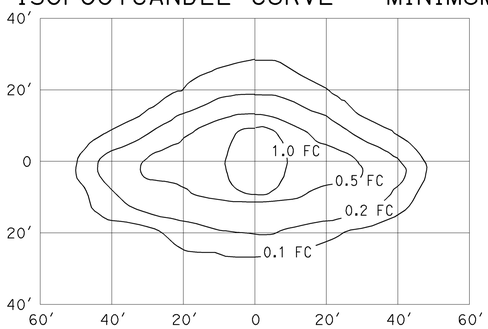


PENDANT SOFFIT LUMINAIRE
TYPE III SHORT
17′ Mounting Height
Lamp operated at 5,800 lm
70-W high pressure sodium lamp
ANSI Designation S62

## ISOFOOTCANDLE CURVE - MINIMUM

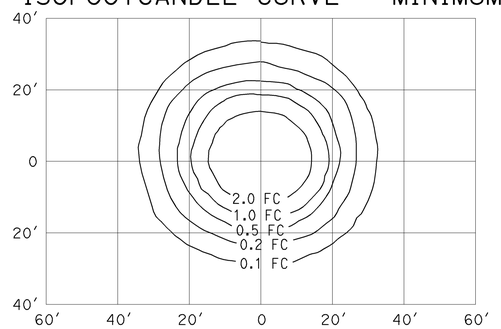


PENDANT SOFFIT LUMINAIRE
17′ Mounting Height
Lamp operated at 5,800 lm
70-W high pressure sodium lamp
ANSI Designation S62

## ISOFOOTCANDLE CURVE - MINIMUM

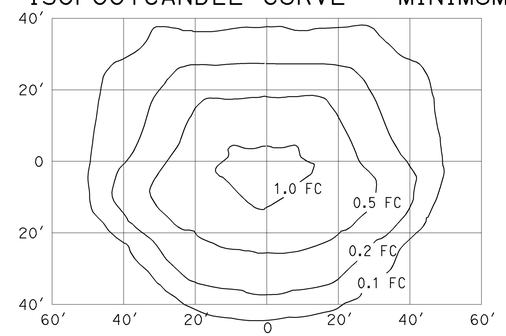


FLUSH SOFFIT LUMINAIRE
17′ Mounting Height
Lamp operated at 5,800 lm
70-W high pressure sodium lamp
ANSI Designation S62

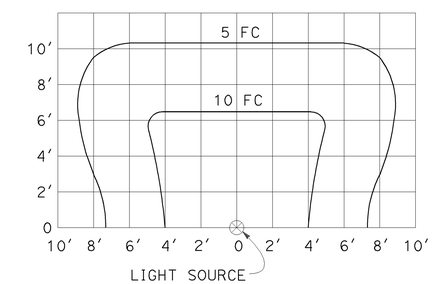


SIGN LIGHTING FIXTURE
ISOFOOTCANDLE DIAGRAM

NOTES:

1. Curves represent the minimum footcandle (FC) of initial illumination on a 10′-0″ x 20′-0″ panel.
2. The FC shown are with the fixture attached to the light fixture mounting channel which places the center of the source 4′-8″ in front of panel and 1′-0″ below the bottom edge.
3. Applicable lamp: 85-W fluorescent phosphor coated induction lamp.

STATE OF CALIFORNIA
DEPARTMENT OF TRANSPORTATION

# ELECTRICAL SYSTEMS (ISOFOOTCANDLE DIAGRAMS)

NO SCALE

RSP ES-10B DATED JULY 20, 2012 SUPPLEMENTS THE STANDARD PLANS BOOK DATED 2010.

**REVISED STANDARD PLAN RSP ES-10B**

**2010 REVISED STANDARD PLAN RSP ES-10B**

2-14-12

| Dist | COUNTY | ROUTE | POST MILES TOTAL PROJECT | SHEET No. | TOTAL SHEETS |
|---|---|---|---|---|---|
| 07 | LA | 405 | 8.7/11.2 | 108 | 108 |

REGISTERED CIVIL ENGINEER

July 19, 2013
PLANS APPROVAL DATE

REGISTERED PROFESSIONAL ENGINEER
Stanley P. Johnson
No. C57793
Exp. 3-31-14
CIVIL
STATE OF CALIFORNIA

THE STATE OF CALIFORNIA OR ITS OFFICERS OR AGENTS SHALL NOT BE RESPONSIBLE FOR THE ACCURACY OR COMPLETENESS OF SCANNED COPIES OF THIS PLAN SHEET.

TO ACCOMPANY PLANS DATED 5-11-15

| STANDARD TYPE | SETBACK (DIMENSION A) |
|---|---|
| 32 | 30'-0" (Min) |
| 31 | 20'-0" (Min) |
| 15, 15D, 15-SB, 21, 21D, 30 | ARM LENGTH (Min) |

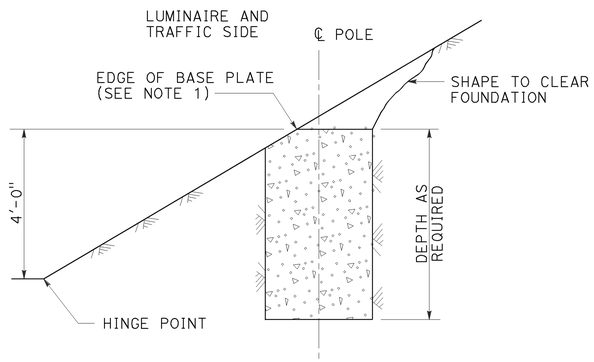


CUT SLOPES
STEEPER THAN 4:1,
LESS THAN 2:1
DETAIL A-1
See Note 2 and 3

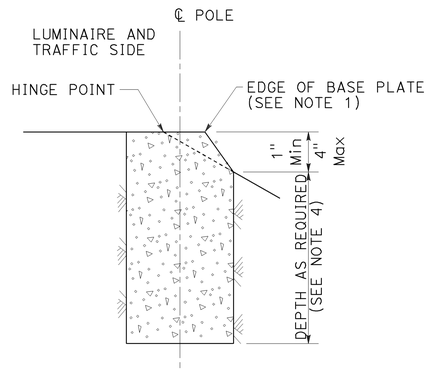


FILL SLOPES
STEEPER THAN 4:1,
LESS THAN 2:1
DETAIL A-2
See Note 2 and 3

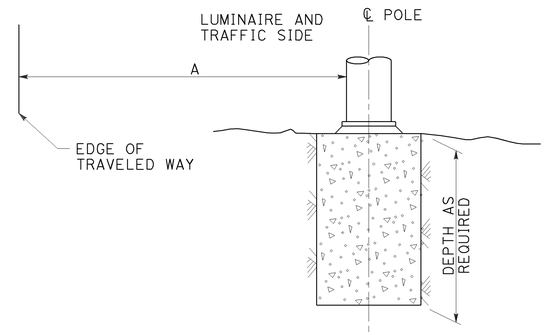


FLAT SECTIONS, CUT OR FILL SLOPES
4:1 OR FLATTER
DETAIL A-3
See Note 2

FOUNDATIONS ADJACENT TO ALL ROADWAYS EXCEPT
IN SIDEWALK, MEDIAN AND ISLAND AREAS
DETAIL A

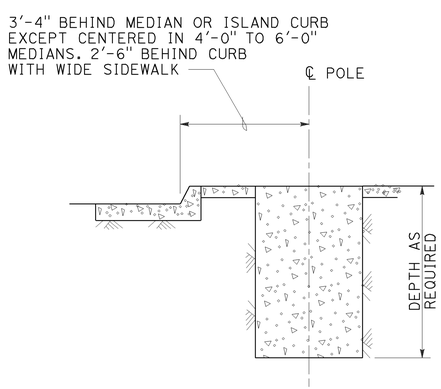


MEDIAN, ISLAND
OR WIDE SIDEWALK
DETAIL B-1
7' Wide and wider

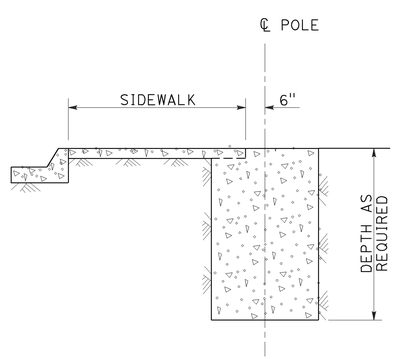


NARROW SIDEWALK
DETAIL B-2
Less than 7' wide

FOUNDATIONS IN SIDEWALK, MEDIAN AND ISLAND AREAS
DETAIL B

NOTES:

1. Where a portion of the foundation is above grade, the top edges shall have a 1" chamfer.
2. Slopes shall be horizontal to vertical ratio (Horizontal : Vertical).
3. Horizontal setbacks on cut and fill slopes steeper than 4:1 shall not exceed the distance shown for flat sections.
4. CIDH embedment depth shall be increased beyond standard depths by the diameter of the CIDH.

STATE OF CALIFORNIA
DEPARTMENT OF TRANSPORTATION

# ELECTRICAL SYSTEMS (FOUNDATION INSTALLATIONS)

NO SCALE

RSP ES-11 DATED JULY 19, 2013 SUPERSEDES STANDARD PLAN ES-11
DATED MAY 20, 2011 - PAGE 488 OF THE STANDARD PLANS BOOK DATED 2010.

**REVISED STANDARD PLAN RSP ES-11**

**2010 REVISED STANDARD PLAN RSP ES-11**

7-9-13