Dist	COUNTY	ROUTE	POST MILES TOTAL PROJECT	SHEET No.	TOTAL SHEETS
07	LA	60	R24.4/R25.3	1	384

TTDG-6207(076)

STATE OF CALIFORNIA
DEPARTMENT OF TRANSPORTATION

PROJECT PLANS FOR CONSTRUCTION ON
STATE HIGHWAY

IN LOS ANGELES COUNTY
IN DIAMOND BAR AND CITY OF INDUSTRY
FROM GRAND AVENUE OVERCROSSING
TO 0.1 MILE WEST OF PROSPECTORS UNDERCROSSING

TO BE SUPPLEMENTED BY STANDARD PLANS DATED 2010

INDEX OF PLANS

SHEET No.	DESCRIPTION
1	TITLE AND LOCATION MAP
2-7	TYPICAL CROSS SECTIONS
8	KEY MAP AND LINE INDEX
9-13	LAYOUTS
14-21	PROFILE AND SUPERELEVATION DIAGRAMS
22-41	CONSTRUCTION DETAILS
42-64	TEMPORARY WATER POLLUTION CONTROL PLANS, DETAILS AND QUANTITIES
65-69	CONTOUR GRADING
70-103	DRAINAGE PLANS, PROFILES, DETAILS AND QUANTITIES
104-108	UTILITY PLANS
109-110	CONSTRUCTION AREA SIGNS
111-116	MOTORIST INFORMATION PLANS
117-146	STAGE CONSTRUCTION,TRAFFIC HANDLING PLANS AND QUANTITIES
147-154	TRAFFIC HANDLING DETAILS
155-162	PAVEMENT DELINEATION PLANS AND QUANTITIES
163-180	SIGN PLANS, DETAILS AND QUANTITIES
181-185	SUMMARY OF QUANTITIES
186-196	LANDSCAPE PLANS, DETAILS AND QUANTITIES
197-202	EROSION CONTROL PLANS, DETAILS AND QUANTITIES
203-264	ELECTRICAL PLANS
265-373	REVISED STANDARD PLANS

STRUCTURE PLANS

374-384	RETAINING WALL No. 331

THE STANDARD PLANS LIST APPLICABLE TO THIS CONTRACT IS INCLUDED IN THE NOTICE TO BIDDERS AND SPECIAL PROVISIONS BOOK.

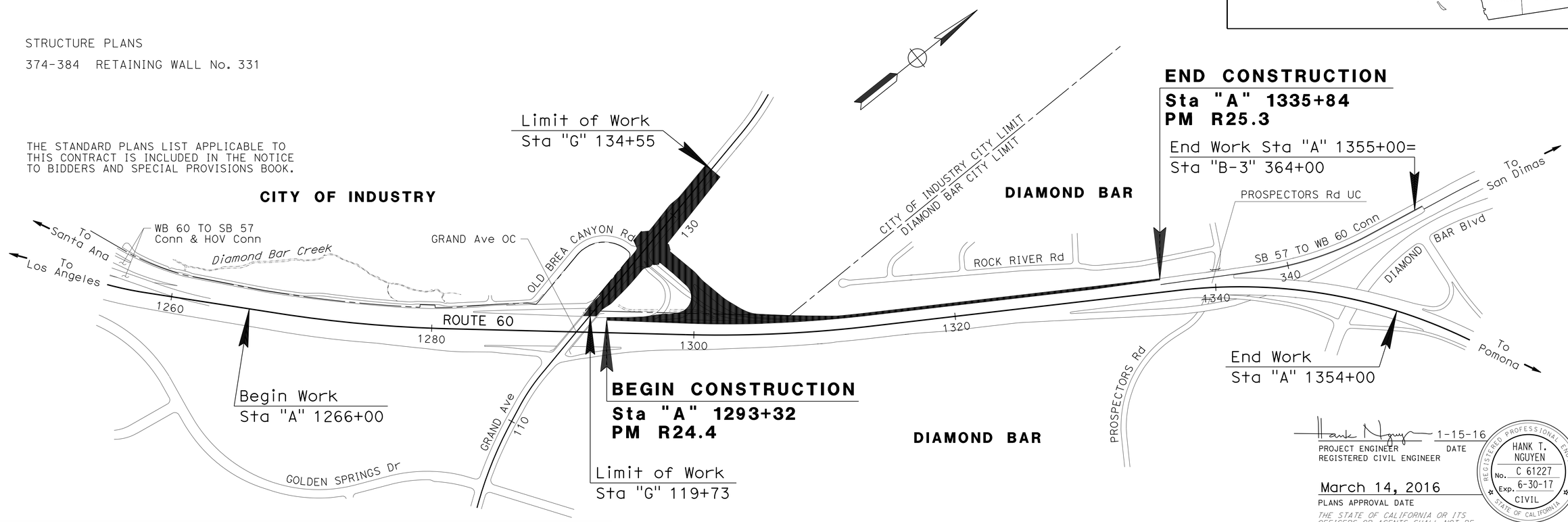

LOCATIONS OF WORK AT SGV HUB AND LARTMC			
ROUTE	PM	LOCATION	DESCRIPTION
2	18.7	ROUTE 134 AND ROUTE 2 INTERCHANGE (2901 WEST BROADWAY, LOS ANGELES, CA 90041)	LARTMC - LOS ANGELES REGIONAL TRANSPORTATION MANAGEMENT CENTER
605	20.2	SOUTHBOUND ROUTE 605 (EAST OF PECK ROAD)	SGV HUB - SAN GABRIEL VALLEY HUB

THE CONTRACTOR SHALL POSSESS THE CLASS (OR CLASSES) OF LICENSE AS SPECIFIED IN THE "NOTICE TO BIDDERS."

NO SCALE

Hank Nguyen 1-15-16
PROJECT ENGINEER DATE
REGISTERED CIVIL ENGINEER

March 14, 2016
PLANS APPROVAL DATE

REGISTERED PROFESSIONAL ENGINEER HANK T. NGUYEN No. C 61227 Exp. 6-30-17 CIVIL STATE OF CALIFORNIA

THE STATE OF CALIFORNIA OR ITS OFFICERS OR AGENTS SHALL NOT BE RESPONSIBLE FOR THE ACCURACY OR COMPLETENESS OF SCANNED COPIES OF THIS PLAN SHEET.

WKE, INC.
400 N. TUSTIN AVENUE, SUITE 275
SANTA ANA, CA 92705

CITY OF INDUSTRY
15651 EAST STAFFORD STREET
CITY OF INDUSTRY, CA 91744

CONTRACT No.	07-279114
PROJECT ID	0715000075

APPROVED AS TO IMPACT ON STATE FACILITIES AND CONFORMANCE WITH APPLICABLE STATE STANDARDS AND PRACTICES AND THAT TECHNICAL OVERSIGHT WAS PERFORMED.

CONSULTANT DESIGN MANAGER	CALTRANS DESIGN OVERSIGHT APPROVAL	REGISTRATION No.	LICENSE Exp DATE	DATE SIGNED
HANK T. NGUYEN	KYLE KUNITAKE	61921	9/30/17	00-00-00

LAST REVISION 00-00-00 DATE PLOTTED => 11-MAY-2016 TIME PLOTTED => 08:36

Dist	COUNTY	ROUTE	POST MILES TOTAL PROJECT	SHEET No.	TOTAL SHEETS
07	LA	60	R24.4/R25.3	2	384

REGISTERED CIVIL ENGINEER 1-15-16 DATE

3-14-16
PLANS APPROVAL DATE

REGISTERED PROFESSIONAL ENGINEER HANK T. NGUYEN No. C 61227 Exp. 6-30-17 CIVIL STATE OF CALIFORNIA

THE STATE OF CALIFORNIA OR ITS OFFICERS OR AGENTS SHALL NOT BE RESPONSIBLE FOR THE ACCURACY OR COMPLETENESS OF SCANNED COPIES OF THIS PLAN SHEET.

WKE, INC
400 N. TUSTIN AVENUE
SUITE 275
SANTA ANA, CA 92705

CITY OF INDUSTRY
15651 EAST STAFFORD STREET
CITY OF INDUSTRY, CA 91744

NOTES:

1. DIMENSIONS OF THE PAVEMENT STRUCTURES (STRUCTURAL SECTIONS) ARE SUBJECT TO TOLERANCES SPECIFIED IN THE STANDARD SPECIFICATIONS.
2. SUPERELEVATIONS ARE SHOWN ON THE SUPERELEVATION DIAGRAMS.
3. EXACT LOCATIONS AND TYPES OF DIKES, CURBS, MIDWEST GUARDRAIL SYSTEMS, AND CONCRETE BARRIER ARE SHOWN ON THE LAYOUTS AND IN THE SUMMARY OF QUANTITIES SHEETS.
4. FOR THE SOUND WALL ON RETAINING WALL No. 331, SEE STRUCTURE PLANS.
5. FOR BIOSWALES AND ROADSIDE DITCHES, SEE DRAINAGE PLANS.
6. FOR STRUCTURAL SECTION 3, TRAFFIC LOOPS MUST BE CUT AND EPOXY FILLED IN THE 0.35' HMA (TYPE A) LAYER PRIOR TO PLACING GPI AND SUBSEQUENT LAYERS.

TYPICAL PAVEMENT STRUCTURAL SECTIONS

1
- 1.30' JPCP
- ____ BASE BOND BREAKER
- 0.35' LCB
- 0.70' CLASS 3 AB

2
- 0.20' RHMA (GAP GRADED)
- 0.50' HMA (TYPE A)
- 0.70' LCB
- 1.40' CLASS 3 AB

3
- 0.20' RHMA (GAP GRADED)
- 0.15' HMA (TYPE A)
- ____ GPI (PAVING FABRIC)
- 0.35' HMA (TYPE A), SEE NOTE 6
- 0.70' LCB
- 1.40' CLASS 3 AB

4
- 0.60' HMA (TYPE A)
- 0.65' LCB
- 1.15' CLASS 3 AB

5
- 0.95' JPCP
- ____ BASE BOND BREAKER
- 0.35' LCB
- 0.70' CLASS 3 AB

6
- 1.30' JPCP (RSC)
- ____ BASE BOND BREAKER
- 0.35' LCBRS
- 0.70' CLASS 3 AB

7
- 0.85' JPCP
- ____ BASE BOND BREAKER
- 0.35' LCB
- 0.70' CLASS 3 AB

EXISTING PAVEMENT STRUCTURAL SECTIONS

A
- 0.35' AC (TYPE B)
- 0.70' CLASS 2 AB
- 0.95' CLASS 4 AS

B
- 0.67' PCC
- 0.35' CTB CLASS A (RMCTB)
- 0.33' CLASS 3 AB
- 0.65' CLASS 4 AS

C
- 0.75' PCC
- 0.50' CTB CLASS A (RMCTB)
- 0.25' CLASS 3 AB
- 0.50' CLASS 4 AS

D
- 0.35' AC (TYPE B)
- 0.65' CTB CLASS A (RMCTB)
- 0.25' CLASS 3 AB
- 0.75' CLASS 4 AS

E
- 0.35' AC
- 1.40' CLASS 2 AB

F
- 0.08' AC
- 2.17' AS

G
- 0.94' PCC
- 0.49' LCB
- 0.71' CLASS 3 AB

H
- 0.49' AC (TYPE B)
- 0.84' CLASS 2 AB
- 0.94' CLASS 4 AS

I
- 0.60' AC (TYPE A)
- 0.65' LCB
- 1.15' CLASS 3 AB
- ---- SEG, CLASS B3

J
- 0.35' AC (TYPE A)
- 1.40' CLASS 3 AB

WB ROUTE 60 DESIGN DESIGNATION

ADT (2009)	109,500	D	100%
ADT (2037)	147,600	T	10.3%
DHV	12,100	V	70 mph
ESAL	150,000,000	TI_{40}	17.5

PAVEMENT CLIMATE REGION: INLAND VALLEY

ABBREVIATIONS:

EOG	EDGE OF GUTTER
GPI	GEOSYNTHETIC PAVEMENT INTERLAYER
LCBRS	LEAN CONCRETE BASE RAPID SETTING
RMCTB	ROAD MIXED CEMENT TREATED BASE
RSC	RAPID STRENGTH CONCRETE
SEG	SUBGRADE ENHANCEMENT GEOTEXTILE
Ult	ULTIMATE

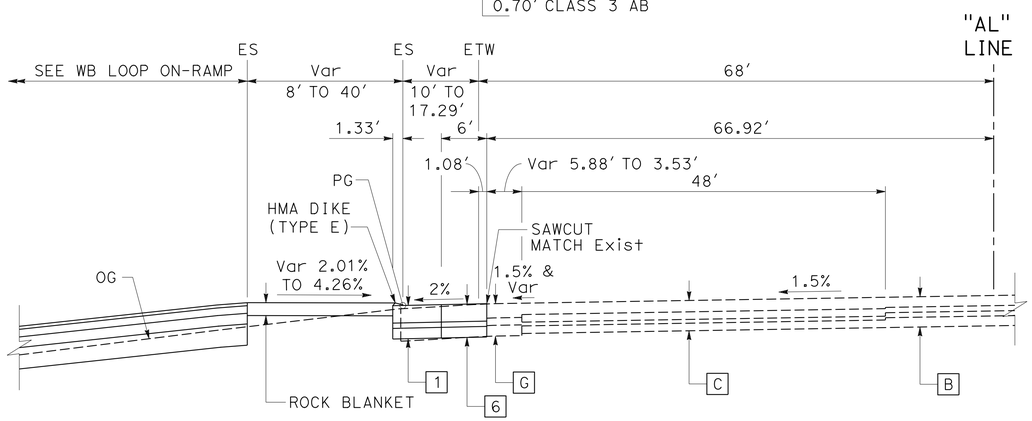

"AL" 297+50 TO "AL" 299+37

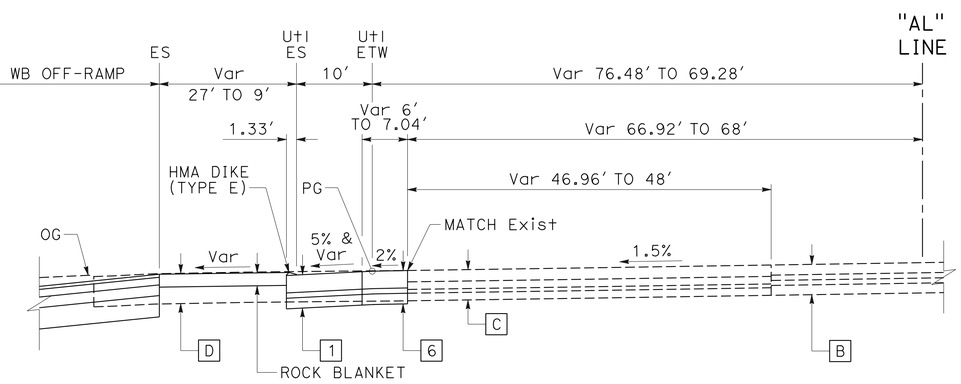

"AL" 304+35 TO "AL" 306+97.8

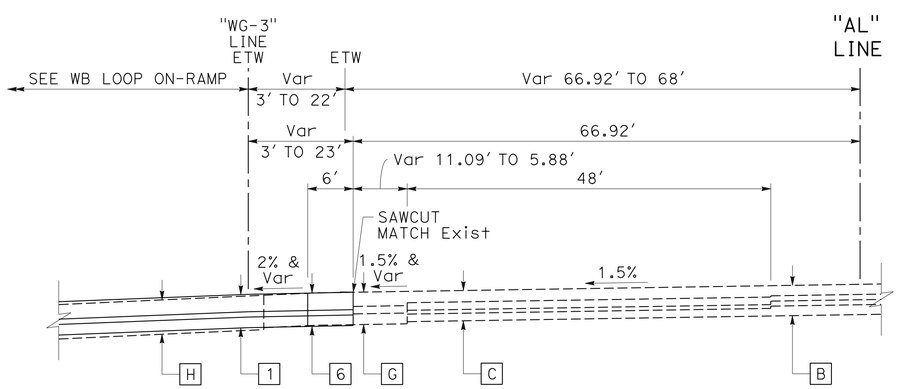

"AL" 293+34 TO "AL" 297+50

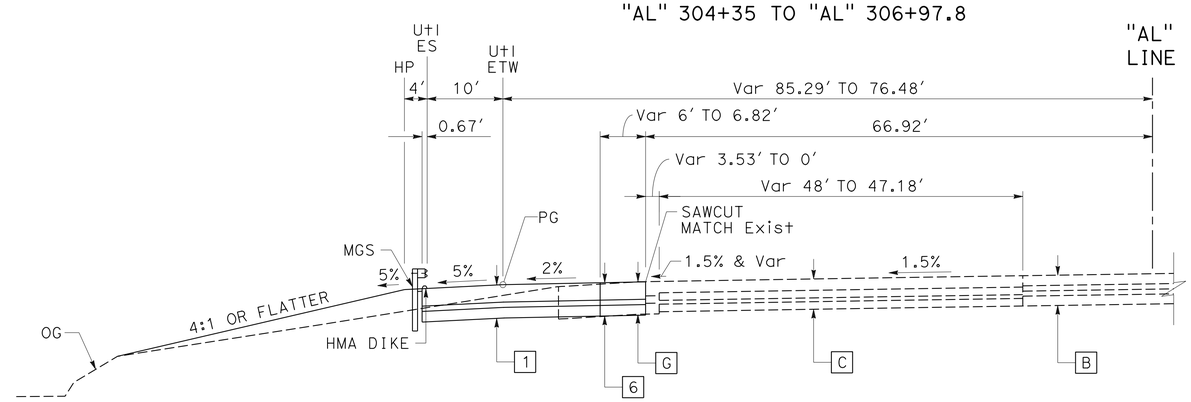

"AL" 299+37 TO "AL" 304+35

TYPICAL CROSS SECTIONS

NO SCALE

WESTBOUND ROUTE 60

X-1

STATE OF CALIFORNIA - DEPARTMENT OF TRANSPORTATION
DESIGN
CONSULTANT FUNCTIONAL SUPERVISOR: DAN WEDDELL
CALCULATED-DESIGNED BY: HUA ZHENG
CHECKED BY: YOSUKE ARAI
REVISED BY
DATE REVISED

LAST REVISION 00-00-00
DATE PLOTTED => 09-MAY-2016
TIME PLOTTED => 15:04

Dist	COUNTY	ROUTE	POST MILES TOTAL PROJECT	SHEET No.	TOTAL SHEETS
07	LA	60	R24.4/R25.3	3	384

REGISTERED CIVIL ENGINEER 1-15-16 DATE

3-14-16
PLANS APPROVAL DATE

REGISTERED PROFESSIONAL ENGINEER HANK T. NGUYEN No. C 61227 Exp. 6-30-17 CIVIL STATE OF CALIFORNIA

THE STATE OF CALIFORNIA OR ITS OFFICERS OR AGENTS SHALL NOT BE RESPONSIBLE FOR THE ACCURACY OR COMPLETENESS OF SCANNED COPIES OF THIS PLAN SHEET.

WKE, INC
400 N. TUSTIN AVENUE
SUITE 275
SANTA ANA, CA 92705

CITY OF INDUSTRY
15651 EAST STAFFORD STREET
CITY OF INDUSTRY, CA 91744

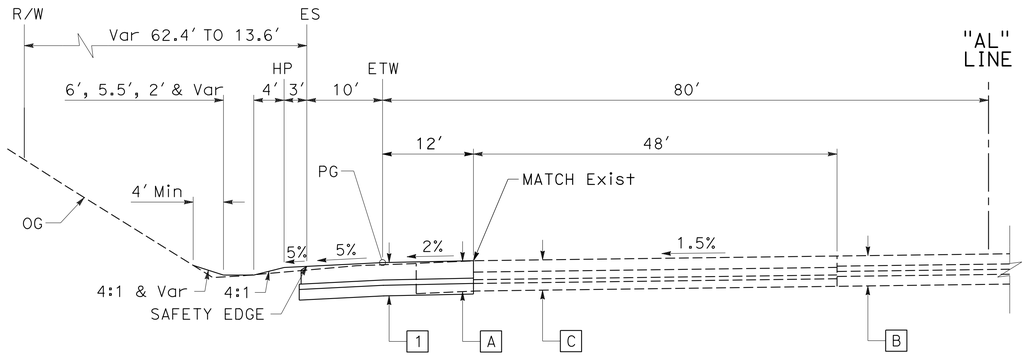

"AL" 311+27.7 TO "AL" 326+93

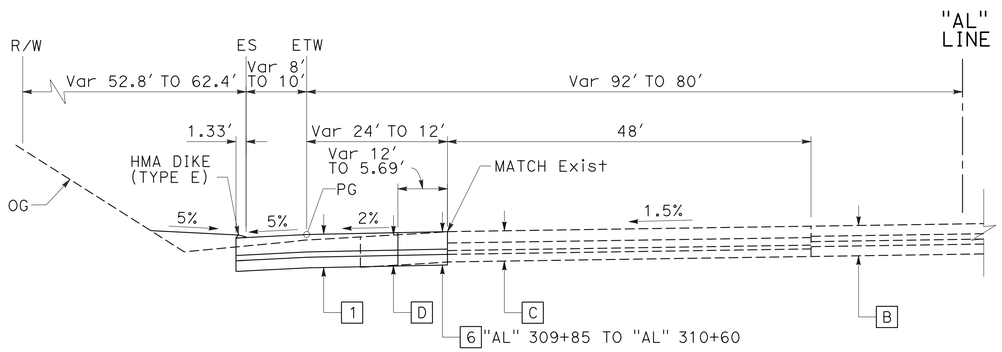

"AL" 309+85 TO "AL" 311+27.7

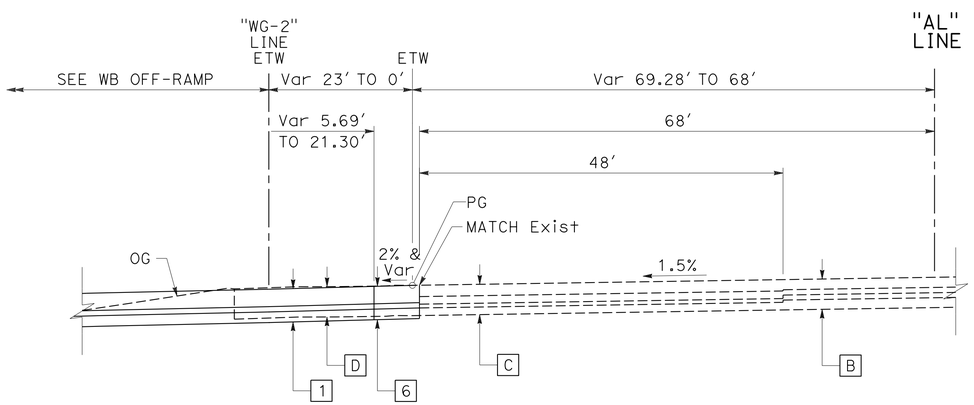

"AL" 306+97.8 TO "AL" 309+85

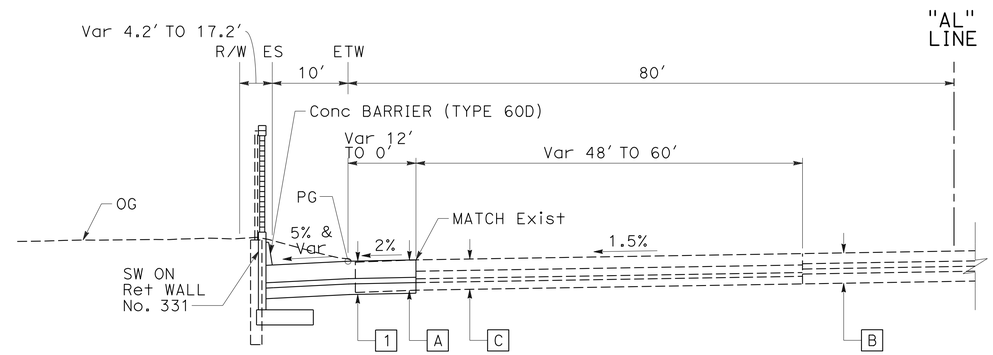

"AL" 330+60.6 TO "AL" 335+83.7

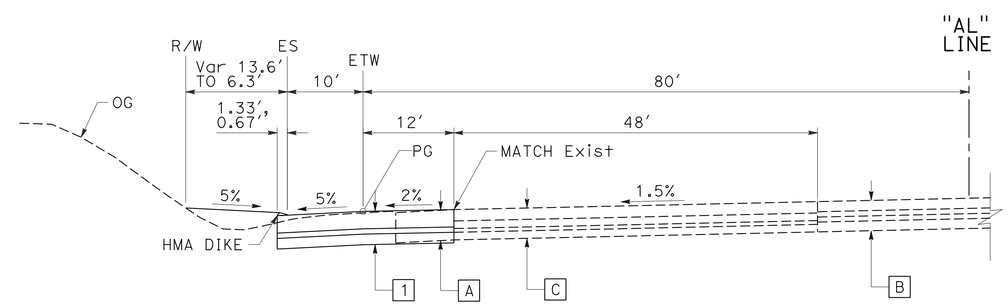

"AL" 326+93 TO "AL" 330+60.6

TYPICAL CROSS SECTIONS

NO SCALE

WESTBOUND ROUTE 60

X-2

STATE OF CALIFORNIA - DEPARTMENT OF TRANSPORTATION
DESIGN
Caltrans

CONSULTANT FUNCTIONAL SUPERVISOR: DAN WEDDELL
CALCULATED-DESIGNED BY: HUA ZHENG
CHECKED BY: YOSUKE ARAI
REVISED BY
DATE REVISED

LAST REVISION 00-00-00
DATE PLOTTED => 09-MAY-2016
TIME PLOTTED => 15:04

Dist	COUNTY	ROUTE	POST MILES TOTAL PROJECT	SHEET No.	TOTAL SHEETS
07	LA	60	R24.4/R25.3	4	384

REGISTERED CIVIL ENGINEER 1-15-16 DATE

3-14-16
PLANS APPROVAL DATE

REGISTERED PROFESSIONAL ENGINEER HANK T. NGUYEN No. C 61227 Exp. 6-30-17 CIVIL STATE OF CALIFORNIA

THE STATE OF CALIFORNIA OR ITS OFFICERS OR AGENTS SHALL NOT BE RESPONSIBLE FOR THE ACCURACY OR COMPLETENESS OF SCANNED COPIES OF THIS PLAN SHEET.

WKE, INC
400 N. TUSTIN AVENUE
SUITE 275
SANTA ANA, CA 92705

CITY OF INDUSTRY
15651 EAST STAFFORD STREET
CITY OF INDUSTRY, CA 91744

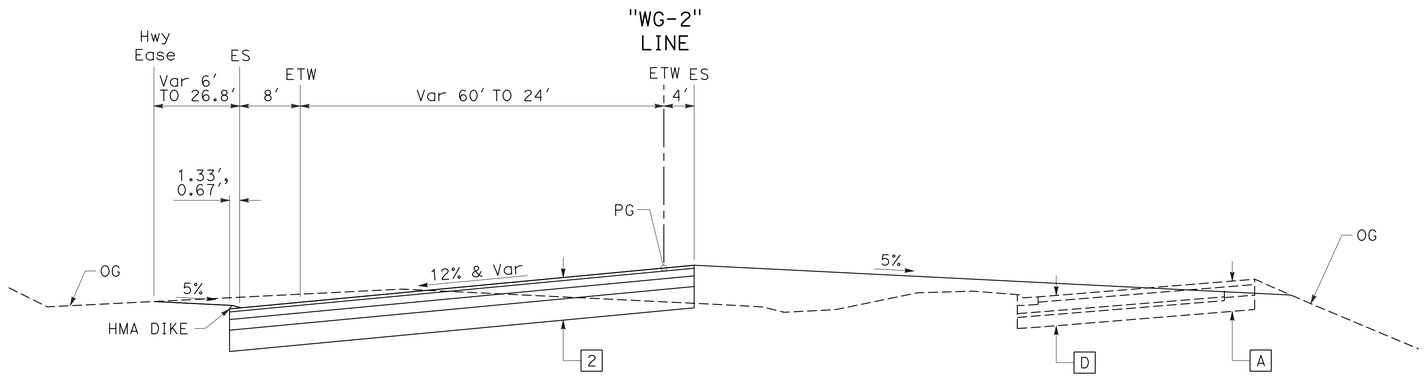

"WG-2" 97+60 TO "WG-2" 106+99.7

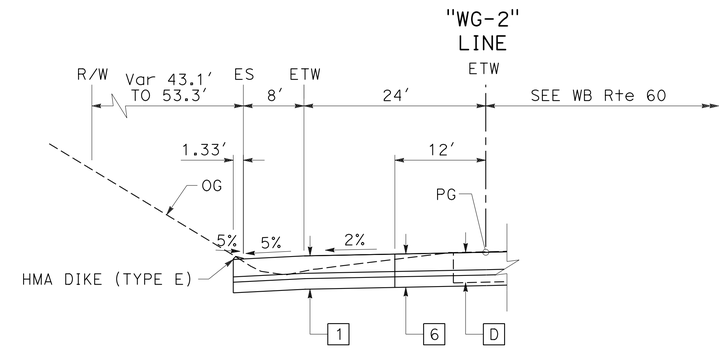

"WG-2" 108+75.2 TO "WG-2" 109+85.2

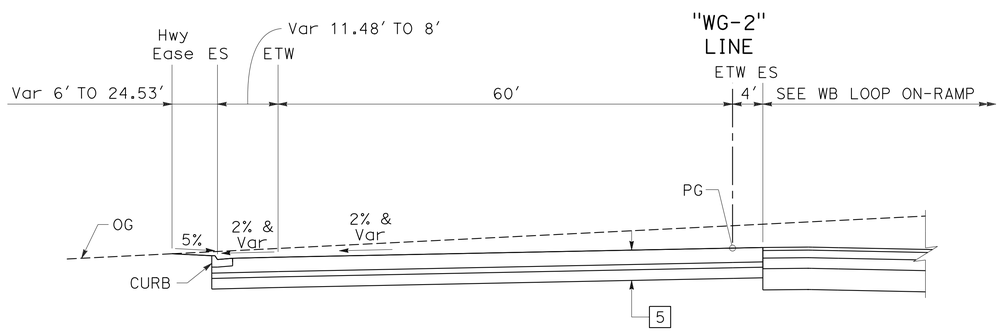

"WG-2" 96+10 TO "WG-2" 97+60

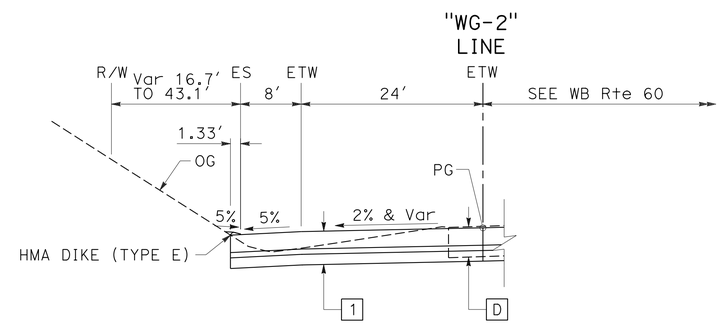

"WG-2" 106+99.7 TO "WG-2" 108+75.2

WB OFF-RAMP

TYPICAL CROSS SECTIONS

NO SCALE

X-3

STATE OF CALIFORNIA - DEPARTMENT OF TRANSPORTATION
Caltrans®
DESIGN

CONSULTANT FUNCTIONAL SUPERVISOR: DAN WEDDELL
CALCULATED-DESIGNED BY: HUA ZHENG
CHECKED BY: YOSUKE ARAI
REVISED BY
DATE REVISED

LAST REVISION 00-00-00
DATE PLOTTED => 09-MAY-2016
TIME PLOTTED => 15:04

Dist	COUNTY	ROUTE	POST MILES TOTAL PROJECT	SHEET No.	TOTAL SHEETS
07	LA	60	R24.4/R25.3	5	384

REGISTERED CIVIL ENGINEER 1-15-16 DATE

3-14-16
PLANS APPROVAL DATE

REGISTERED PROFESSIONAL ENGINEER HANK T. NGUYEN No. C 61227 Exp. 6-30-17 CIVIL STATE OF CALIFORNIA

THE STATE OF CALIFORNIA OR ITS OFFICERS OR AGENTS SHALL NOT BE RESPONSIBLE FOR THE ACCURACY OR COMPLETENESS OF SCANNED COPIES OF THIS PLAN SHEET.

WKE, INC
400 N. TUSTIN AVENUE
SUITE 275
SANTA ANA, CA 92705

CITY OF INDUSTRY
15651 EAST STAFFORD STREET
CITY OF INDUSTRY, CA 91744

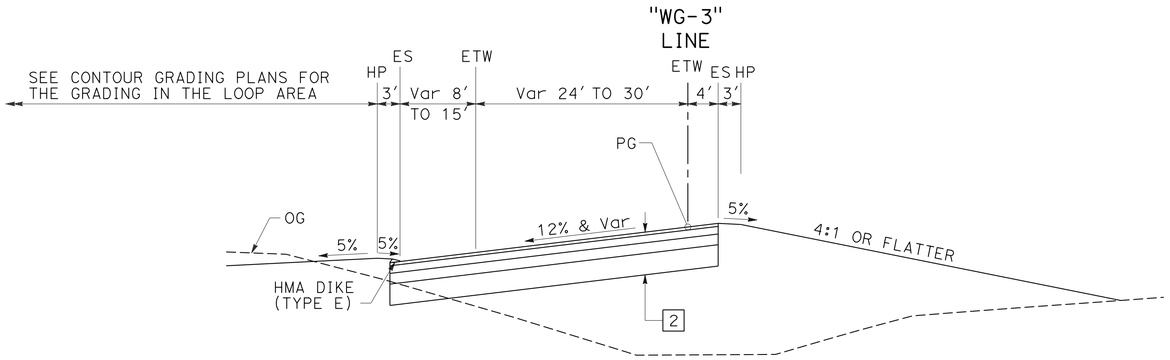

"WG-3" 97+50.3 TO "WG-3" 98+15
"WG-3" 98+85 TO "WG-3" 102+00

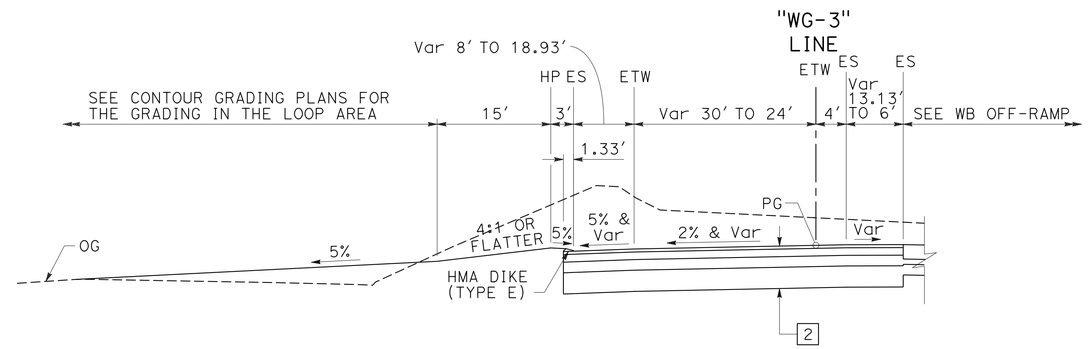

"WG-3" 102+00 TO "WG-3" 105+25.9

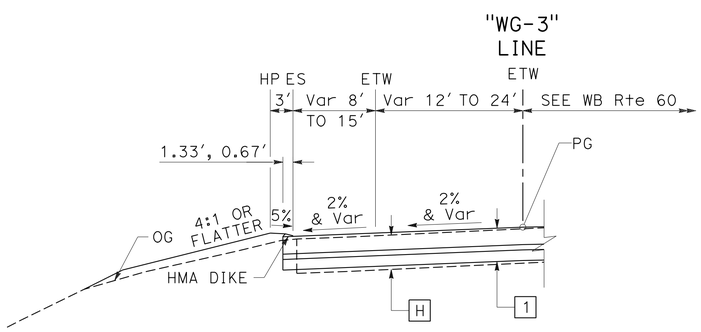

"WG-3" 93+34 TO "WG-3" 97+50.3

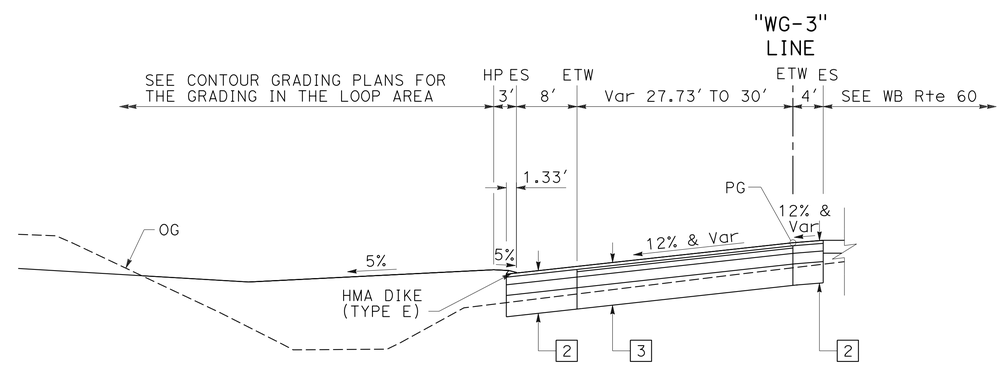

"WG-3" 98+15 TO "WG-3" 98+85

TYPICAL CROSS SECTIONS

NO SCALE

WB LOOP ON-RAMP

X-4

STATE OF CALIFORNIA - DEPARTMENT OF TRANSPORTATION
Caltrans®
DESIGN

CONSULTANT FUNCTIONAL SUPERVISOR: DAN WEDDELL
CALCULATED-DESIGNED BY: HUA ZHENG
CHECKED BY: YOSUKE ARAI
REVISED BY
DATE REVISED

LAST REVISION 00-00-00
DATE PLOTTED => 09-MAY-2016
TIME PLOTTED => 15:04

Dist	COUNTY	ROUTE	POST MILES TOTAL PROJECT	SHEET No.	TOTAL SHEETS
07	LA	60	R24.4/R25.3	6	384

REGISTERED CIVIL ENGINEER 1-15-16 DATE

3-14-16
PLANS APPROVAL DATE

REGISTERED PROFESSIONAL ENGINEER HANK T. NGUYEN No. C 61227 Exp. 6-30-17 CIVIL STATE OF CALIFORNIA

THE STATE OF CALIFORNIA OR ITS OFFICERS OR AGENTS SHALL NOT BE RESPONSIBLE FOR THE ACCURACY OR COMPLETENESS OF SCANNED COPIES OF THIS PLAN SHEET.

WKE, INC
400 N. TUSTIN AVENUE
SUITE 275
SANTA ANA, CA 92705

CITY OF INDUSTRY
15651 EAST STAFFORD STREET
CITY OF INDUSTRY, CA 91744

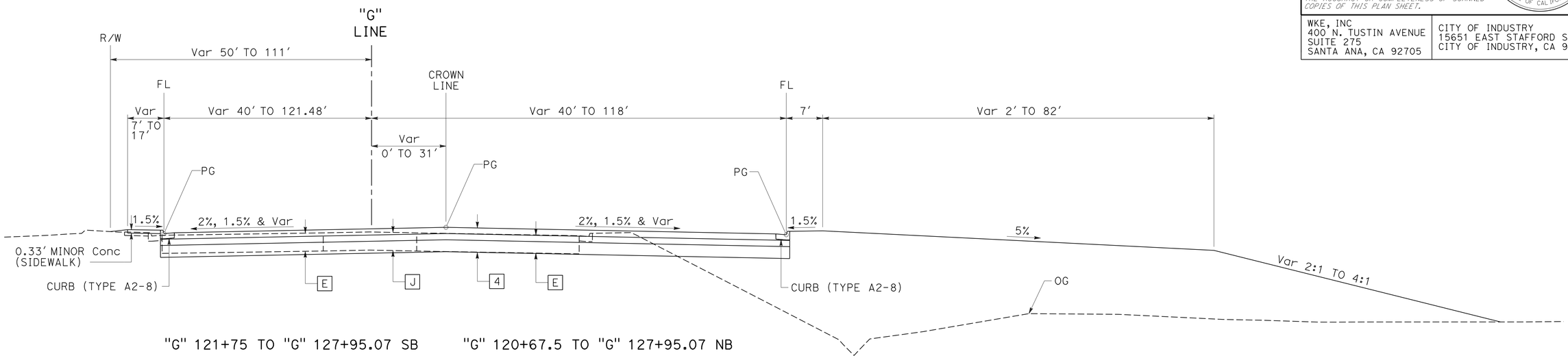

"G" 121+75 TO "G" 127+95.07 SB "G" 120+67.5 TO "G" 127+95.07 NB

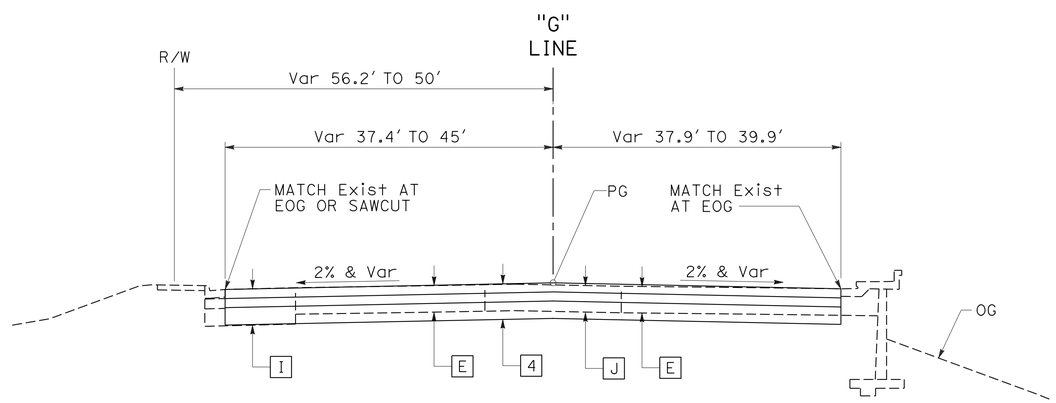

"G" 119+73.1 TO "G" 121+75 SB "G" 120+03 TO "G" 120+67.5 NB

TYPICAL CROSS SECTIONS

NO SCALE

X-5

GRAND AVENUE

STATE OF CALIFORNIA - DEPARTMENT OF TRANSPORTATION
Caltrans
DESIGN

CONSULTANT FUNCTIONAL SUPERVISOR: DAN WEDDELL
CALCULATED-DESIGNED BY: HUA ZHENG
CHECKED BY: YOSUKE ARAI
REVISED BY
DATE REVISED

LAST REVISION 00-00-00
DATE PLOTTED => 09-MAY-2016
TIME PLOTTED => 15:04

Dist	COUNTY	ROUTE	POST MILES TOTAL PROJECT	SHEET No.	TOTAL SHEETS
07	LA	60	R24.4/R25.3	7	384

REGISTERED CIVIL ENGINEER 1-15-16 DATE

3-14-16
PLANS APPROVAL DATE

REGISTERED PROFESSIONAL ENGINEER HANK T. NGUYEN No. C 61227 Exp. 6-30-17 CIVIL STATE OF CALIFORNIA

THE STATE OF CALIFORNIA OR ITS OFFICERS OR AGENTS SHALL NOT BE RESPONSIBLE FOR THE ACCURACY OR COMPLETENESS OF SCANNED COPIES OF THIS PLAN SHEET.

WKE, INC
400 N. TUSTIN AVENUE
SUITE 275
SANTA ANA, CA 92705

CITY OF INDUSTRY
15651 EAST STAFFORD STREET
CITY OF INDUSTRY, CA 91744

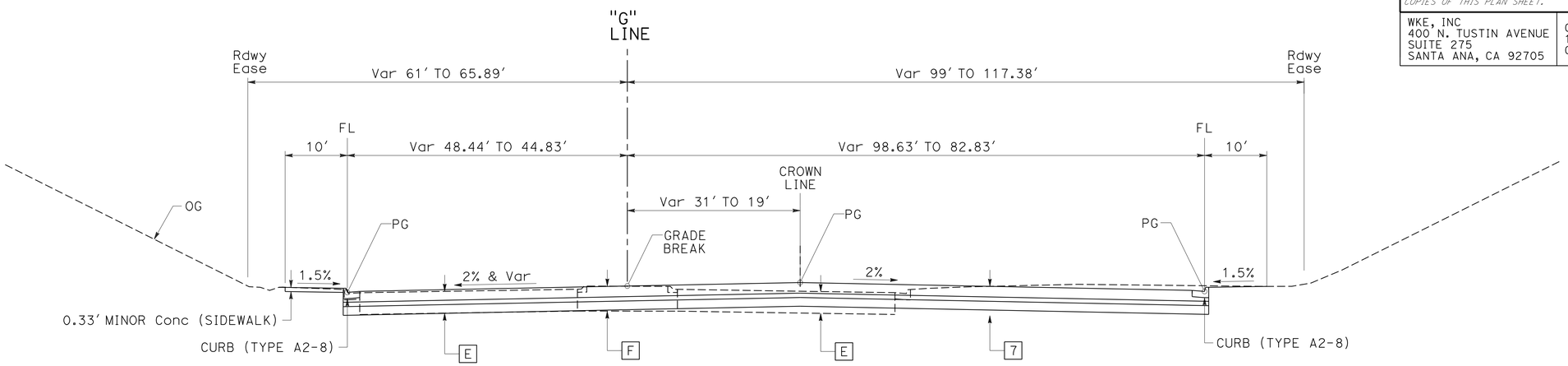

"G" 131+05 TO "G" 134+55

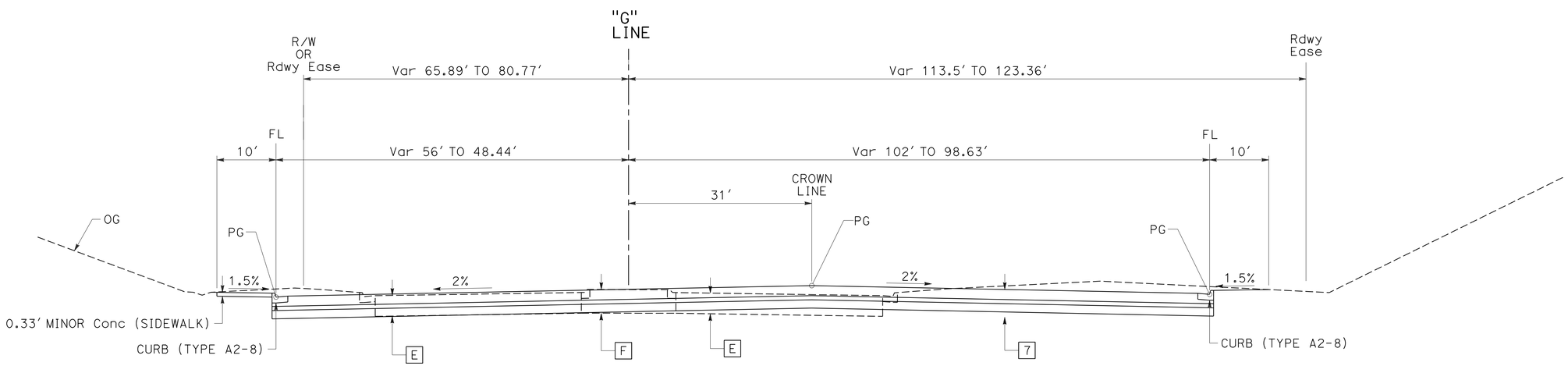

"G" 127+95.07 TO "G" 131+05

TYPICAL CROSS SECTIONS

NO SCALE

GRAND AVENUE

X-6

STATE OF CALIFORNIA - DEPARTMENT OF TRANSPORTATION
Caltrans
DESIGN

CONSULTANT FUNCTIONAL SUPERVISOR: DAN WEDDELL
CALCULATED-DESIGNED BY: HUA ZHENG
CHECKED BY: YOSUKE ARAI
REVISED BY
DATE REVISED

LAST REVISION 00-00-00
DATE PLOTTED => 09-MAY-2016
TIME PLOTTED => 15:04

Dist	COUNTY	ROUTE	POST MILES TOTAL PROJECT	SHEET No.	TOTAL SHEETS
07	LA	60	R24.4/R25.3	8	384

REGISTERED CIVIL ENGINEER 1-15-16 DATE

3-14-16
PLANS APPROVAL DATE

REGISTERED PROFESSIONAL ENGINEER
HANK T. NGUYEN
No. C 61227
Exp. 6-30-17
CIVIL
STATE OF CALIFORNIA

THE STATE OF CALIFORNIA OR ITS OFFICERS OR AGENTS SHALL NOT BE RESPONSIBLE FOR THE ACCURACY OR COMPLETENESS OF SCANNED COPIES OF THIS PLAN SHEET.

WKE, INC
400 N. TUSTIN AVENUE
SUITE 275
SANTA ANA, CA 92705

CITY OF INDUSTRY
15651 EAST STAFFORD STREET
CITY OF INDUSTRY, CA 91744

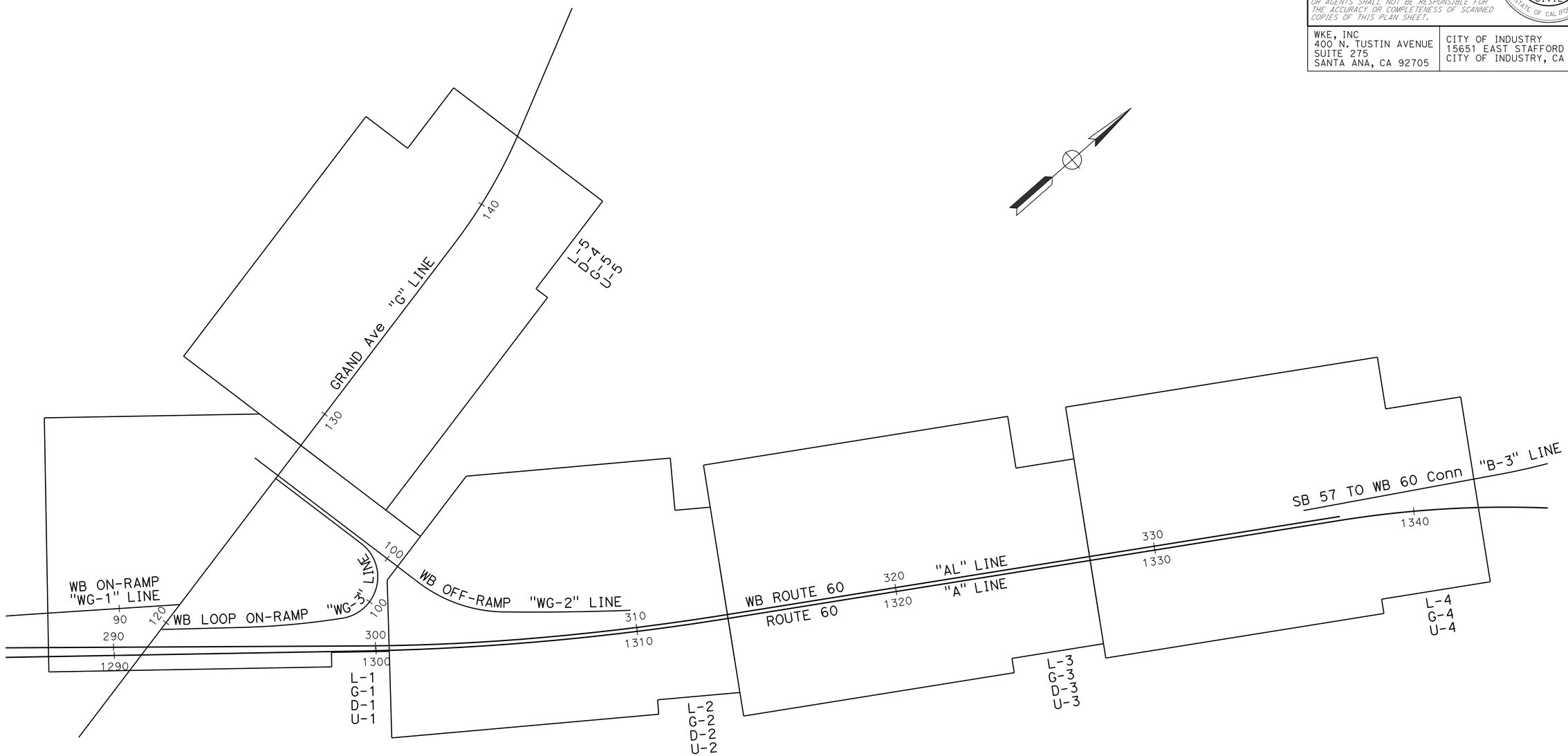

KEY MAP AND LINE INDEX

NO SCALE

K-1

STATE OF CALIFORNIA - DEPARTMENT OF TRANSPORTATION
Caltrans®
DESIGN

CONSULTANT FUNCTIONAL SUPERVISOR: DAN WEDDELL
CALCULATED-DESIGNED BY: HUA ZHENG
CHECKED BY: YOSUKE ARAI
REVISED BY
DATE REVISED

LAST REVISION 00-00-00
DATE PLOTTED => 09-MAY-2016
TIME PLOTTED => 15:04

Dist	COUNTY	ROUTE	POST MILES TOTAL PROJECT	SHEET No.	TOTAL SHEETS
07	LA	60	R24.4/R25.3	9	384

REGISTERED CIVIL ENGINEER — DATE 1-15-16

3-14-16
PLANS APPROVAL DATE

REGISTERED PROFESSIONAL ENGINEER — HANK T. NGUYEN — No. C 61227 — Exp. 6-30-17 — CIVIL — STATE OF CALIFORNIA

THE STATE OF CALIFORNIA OR ITS OFFICERS OR AGENTS SHALL NOT BE RESPONSIBLE FOR THE ACCURACY OR COMPLETENESS OF SCANNED COPIES OF THIS PLAN SHEET.

WKE, INC
400 N. TUSTIN AVENUE
SUITE 275
SANTA ANA, CA 92705

CITY OF INDUSTRY
15651 EAST STAFFORD STREET
CITY OF INDUSTRY, CA 91744

NOTES:

1. FOR ACCURATE RIGHT OF WAY DATA, CONTACT RIGHT OF WAY ENGINEERING AT THE DISTRICT OFFICE.
2. ALL MIDWEST GUARDRAIL SYSTEMS ARE WOOD POST.
3. FOR DETAILS OF CURB RETURNS, CURB RAMPS, MEDIAN ISLANDS, DRIVEWAY, AND MAINTENANCE ACCESS ROAD, SEE CONSTRUCTION DETAIL SHEETS C-1 THRU C-6.
4. FOR BAY TAPER LAYOUTS, SEE CONSTRUCTION DETAILS SHEET C-7.
5. FOR CURB AND DIKE TRANSITIONS, SEE CONSTRUCTION DETAILS SHEET C-8.
7. (20.00') Lt "WG-3" (93+32.84)
   Beg MGS TYPE 12B LAYOUT
   Trans RAILING (TYPE WB-31)
   CONNECT TO Exist Conc BARRIER
8. 95.29' Lt "AL" 299+37.03
   Beg ULTIMATE Shld
   Beg SAFETY EDGE
9. 41.504' Lt "WG-3" +56.00
   END MGS, Beg AFTS
   END HMA DIKE (TYPE F)
   Beg HMA DIKE (TYPE C)
10. 35.90' Lt "WG-3" +20.00
   END HMA DIKE (TYPE C)
   Beg HMA DIKE (TYPE E)

CURVE DATA

No. (X)	R	Δ	T	L
1	10000.00'	08°04'38"	706.03'	1409.73'
3	8200.00'	04°26'26"	317.91'	635.50'
8	3000.00'	07°27'57"	195.73'	390.91'
9	159.83'	133°49'21"	374.92'	373.31'
10	1944.00'	02°03'32"	34.93'	69.85'
11	2056.00'	05°52'25"	105.48'	210.77'
12	60.00'	44°13'12"	24.38'	46.31'
13	60.00'	44°13'12"	24.38'	46.31'
14	50.00'	90°00'00"	50.00'	78.54'
15	55.00'	97°23'08"	62.59'	93.48'
16	50.00'	90°00'00"	50.00'	78.54'
17	55.00'	83°13'51"	48.86'	79.90'
18	694.00'	13°37'01"	82.86'	164.55'

ABBREVIATIONS:

AFTS ALTERNATIVE FLARED TERMINAL SYSTEM
AITS ALTERNATIVE IN-LINE TERMINAL SYSTEM
EAA END ANCHOR ASSEMBLY
UIt ULTIMATE

LEGEND:

VEGETATION CONTROL (MINOR CONCRETE)
TCE
Hwy Ease

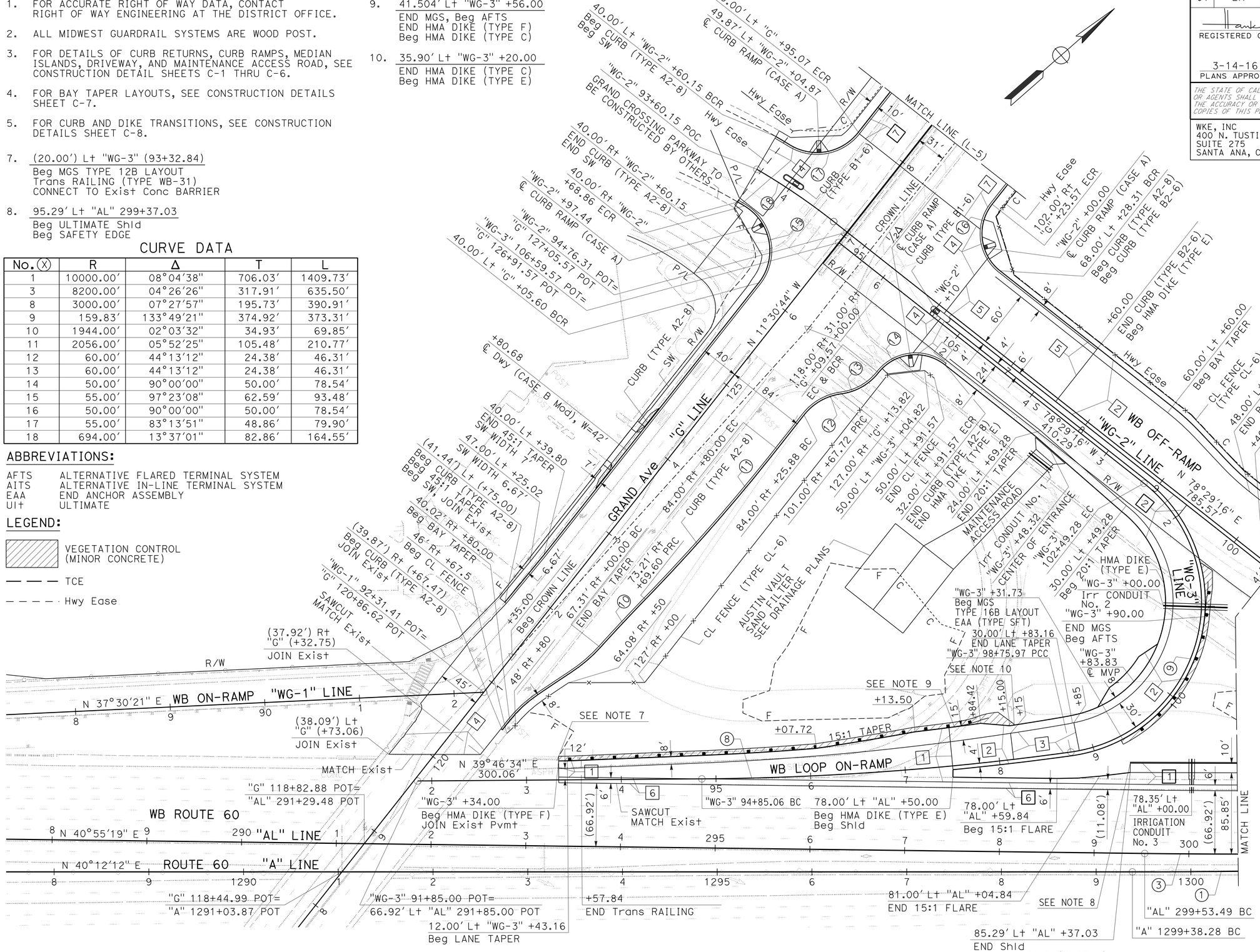

LAYOUT

SCALE: 1" = 50'

L-1

STATE OF CALIFORNIA - DEPARTMENT OF TRANSPORTATION — DESIGN — Caltrans

CONSULTANT FUNCTIONAL SUPERVISOR: DAN WEDDELL
CALCULATED-DESIGNED BY: YOSUKE ARAI
CHECKED BY: HUA ZHENG
REVISED BY / DATE REVISED

LAST REVISION 00-00-00 | DATE PLOTTED => 09-MAY-2016 | TIME PLOTTED => 15:04

Dist	COUNTY	ROUTE	POST MILES TOTAL PROJECT	SHEET No.	TOTAL SHEETS
07	LA	60	R24.4/R25.3	10	384

REGISTERED CIVIL ENGINEER 1-15-16 DATE

3-14-16
PLANS APPROVAL DATE

REGISTERED PROFESSIONAL ENGINEER HANK T. NGUYEN No. C 61227 Exp. 6-30-17 CIVIL STATE OF CALIFORNIA

THE STATE OF CALIFORNIA OR ITS OFFICERS OR AGENTS SHALL NOT BE RESPONSIBLE FOR THE ACCURACY OR COMPLETENESS OF SCANNED COPIES OF THIS PLAN SHEET.

WKE, INC
400 N. TUSTIN AVENUE
SUITE 275
SANTA ANA, CA 92705

CITY OF INDUSTRY
15651 EAST STAFFORD STREET
CITY OF INDUSTRY, CA 91744

NOTES:

1. FOR ACCURATE RIGHT OF WAY DATA, CONTACT RIGHT OF WAY ENGINEERING AT THE DISTRICT OFFICE.
2. FOR CONCRETE BARRIER (TYPE 60R Mod), SEE CONSTRUCTION DETAIL SHEETS.
3. 95.83′ Lt "AL" 300+54.35
   Beg HMA DIKE (TYPE F)
   Beg MGS TYPE 16B LAYOUT
   EAA (TYPE SFT)

CURVE DATA

No. (X)	R	Δ	T	L
1	10000.00′	08°04′38"	706.03′	1409.73′
3	8200.00′	04°26′26"	317.91′	635.50′
4	9985.00′	04°21′19"	379.69′	759.02′
6	550.00′	37°14′03"	185.28′	357.42′
7	9917.00′	02°10′20"	188.01′	375.98′
20	5032.00′	05°25′52"	238.67′	476.98′

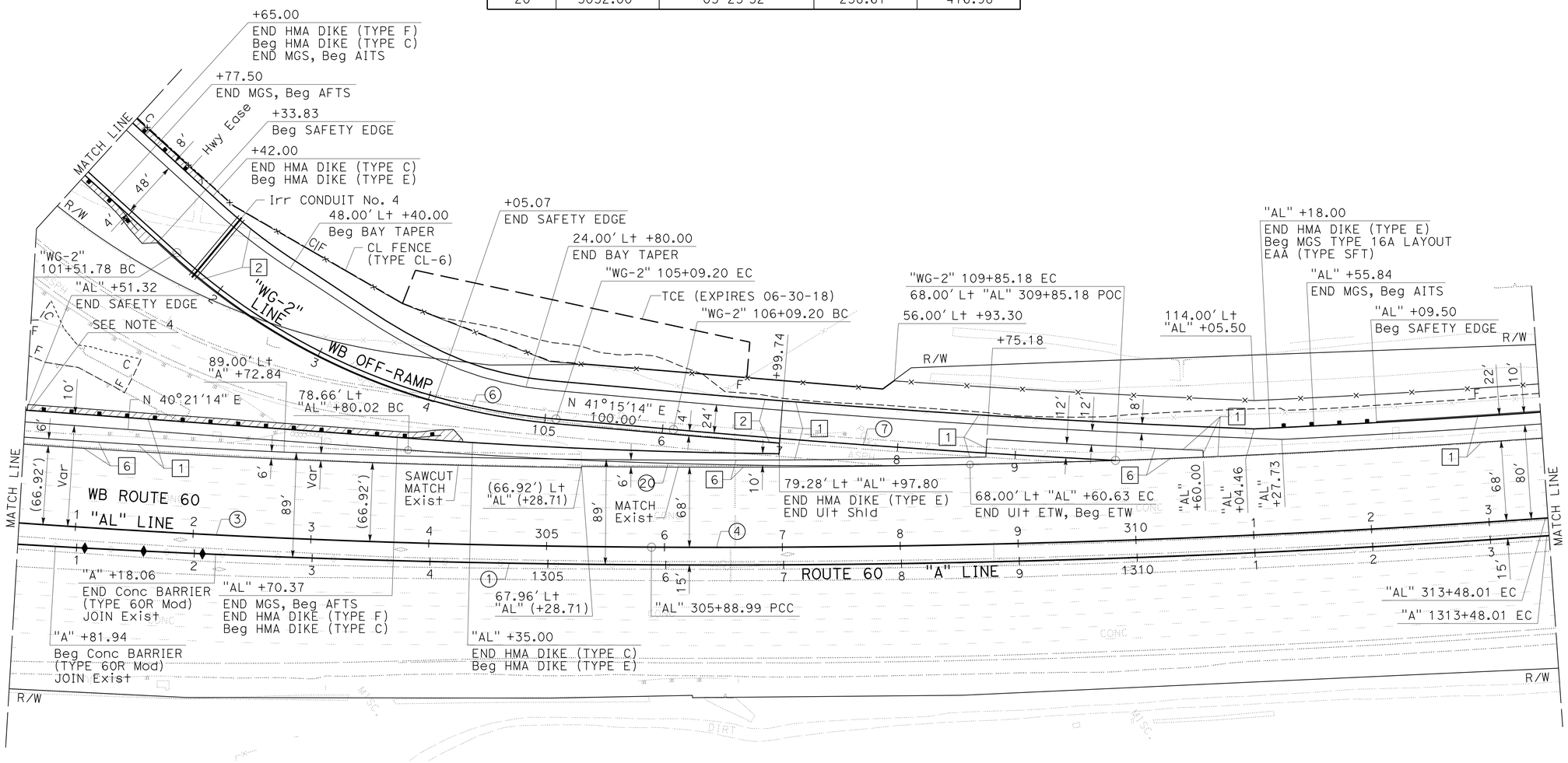

LAYOUT
SCALE: 1" = 50′

L-2

STATE OF CALIFORNIA - DEPARTMENT OF TRANSPORTATION
Caltrans®
DESIGN
CONSULTANT FUNCTIONAL SUPERVISOR: DAN WEDDELL
CALCULATED-DESIGNED BY: HUA ZHENG
CHECKED BY: YOSUKE ARAI
REVISED BY
DATE REVISED

LAST REVISION 00-00-00
DATE PLOTTED => 09-MAY-2016
TIME PLOTTED => 15:04

Dist	COUNTY	ROUTE	POST MILES TOTAL PROJECT	SHEET No.	TOTAL SHEETS
07	LA	60	R24.4/R25.3	11	384

REGISTERED CIVIL ENGINEER 1-15-16 DATE

3-14-16
PLANS APPROVAL DATE

REGISTERED PROFESSIONAL ENGINEER HANK T. NGUYEN No. C 61227 Exp. 6-30-17 CIVIL STATE OF CALIFORNIA

THE STATE OF CALIFORNIA OR ITS OFFICERS OR AGENTS SHALL NOT BE RESPONSIBLE FOR THE ACCURACY OR COMPLETENESS OF SCANNED COPIES OF THIS PLAN SHEET.

WKE, INC
400 N. TUSTIN AVENUE
SUITE 275
SANTA ANA, CA 92705

CITY OF INDUSTRY
15651 EAST STAFFORD STREET
CITY OF INDUSTRY, CA 91744

NOTE:

FOR ACCURATE RIGHT OF WAY DATA, CONTACT
RIGHT OF WAY ENGINEERING AT THE DISTRICT OFFICE.

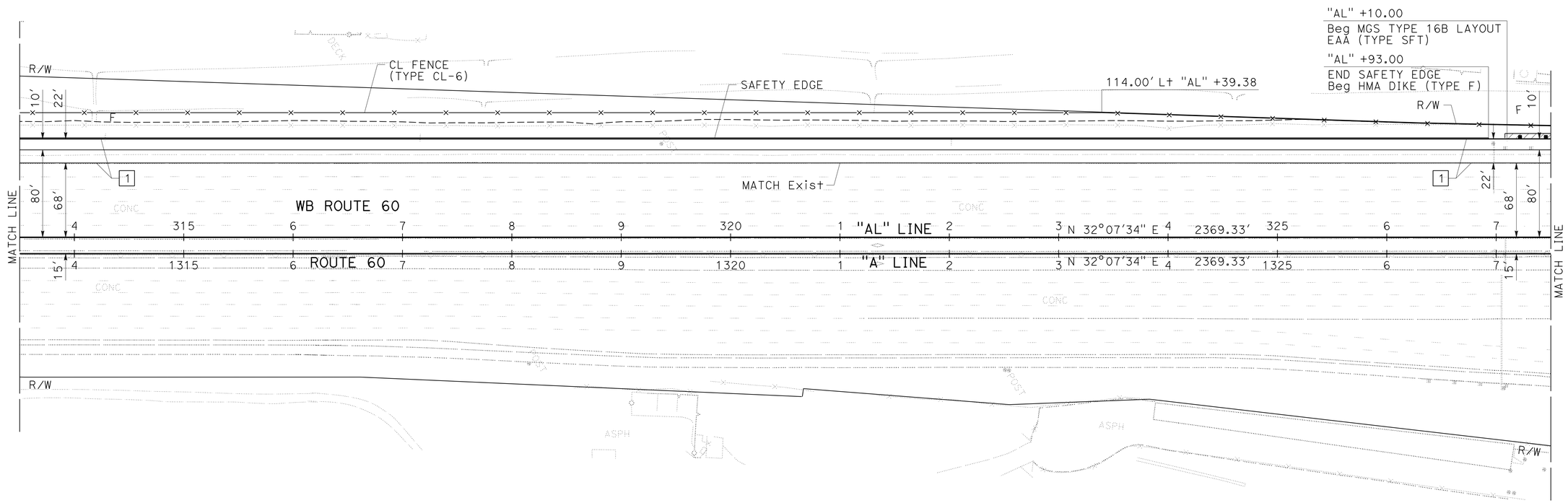

LAYOUT
SCALE: 1" = 50'

L-3

STATE OF CALIFORNIA - DEPARTMENT OF TRANSPORTATION
Caltrans
DESIGN

CONSULTANT FUNCTIONAL SUPERVISOR: DAN WEDDELL
CALCULATED-DESIGNED BY: HUA ZHENG
CHECKED BY: YOSUKE ARAI
REVISED BY
DATE REVISED

LAST REVISION 00-00-00
DATE PLOTTED => 09-MAY-2016
TIME PLOTTED => 15:04

Dist	COUNTY	ROUTE	POST MILES TOTAL PROJECT	SHEET No.	TOTAL SHEETS
07	LA	60	R24.4/R25.3	12	384

REGISTERED CIVIL ENGINEER 1-15-16 DATE

3-14-16
PLANS APPROVAL DATE

REGISTERED PROFESSIONAL ENGINEER HANK T. NGUYEN No. C 61227 Exp. 6-30-17 CIVIL STATE OF CALIFORNIA

THE STATE OF CALIFORNIA OR ITS OFFICERS OR AGENTS SHALL NOT BE RESPONSIBLE FOR THE ACCURACY OR COMPLETENESS OF SCANNED COPIES OF THIS PLAN SHEET.

WKE, INC
400 N. TUSTIN AVENUE
SUITE 275
SANTA ANA, CA 92705

CITY OF INDUSTRY
15651 EAST STAFFORD STREET
CITY OF INDUSTRY, CA 91744

NOTES:

1. FOR ACCURATE RIGHT OF WAY DATA, CONTACT RIGHT OF WAY ENGINEERING AT THE DISTRICT OFFICE.
2. FOR SOUND WALL ON RETAINING WALL No. 331, SEE STRUCTURES PLANS.

CURVE DATA

No. (X)	R	Δ	T	L
2	4000.00′	37°42′02″	1365.63′	2632.00′

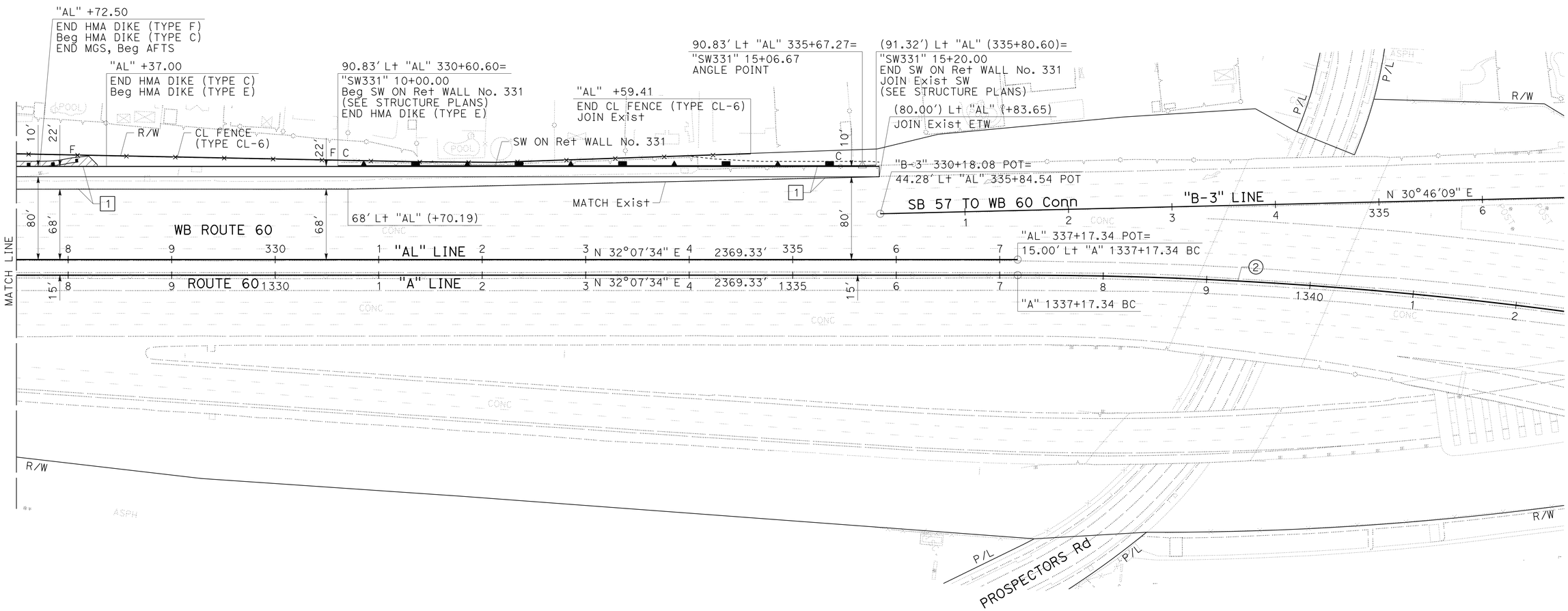

LAYOUT

SCALE: 1" = 50′

L-4

STATE OF CALIFORNIA - DEPARTMENT OF TRANSPORTATION
Caltrans
DESIGN

CONSULTANT FUNCTIONAL SUPERVISOR: DAN WEDDELL
CALCULATED-DESIGNED BY: HUA ZHENG
CHECKED BY: YOSUKE ARAI
REVISED BY
DATE REVISED

LAST REVISION 00-00-00
DATE PLOTTED => 09-MAY-2016
TIME PLOTTED => 15:04

Dist	COUNTY	ROUTE	POST MILES TOTAL PROJECT	SHEET No.	TOTAL SHEETS
07	LA	60	R24.4/R25.3	13	384

REGISTERED CIVIL ENGINEER 1-15-16 DATE

3-14-16
PLANS APPROVAL DATE

REGISTERED PROFESSIONAL ENGINEER HANK T. NGUYEN No. C 61227 Exp. 6-30-17 CIVIL STATE OF CALIFORNIA

THE STATE OF CALIFORNIA OR ITS OFFICERS OR AGENTS SHALL NOT BE RESPONSIBLE FOR THE ACCURACY OR COMPLETENESS OF SCANNED COPIES OF THIS PLAN SHEET.

WKE, INC
400 N. TUSTIN AVENUE
SUITE 275
SANTA ANA, CA 92705

CITY OF INDUSTRY
15651 EAST STAFFORD STREET
CITY OF INDUSTRY, CA 91744

NOTE:

FOR ACCURATE RIGHT OF WAY DATA, CONTACT RIGHT OF WAY ENGINEERING AT THE DISTRICT OFFICE.

CURVE DATA

No. (X)	R	Δ	T	L
5	1999.95′	14°10′43″	248.73′	494.92′
18	2046.00′	86°46′07″	57.71′	115.39′
19	1922.00′	86°46′07″	56.19′	112.35′

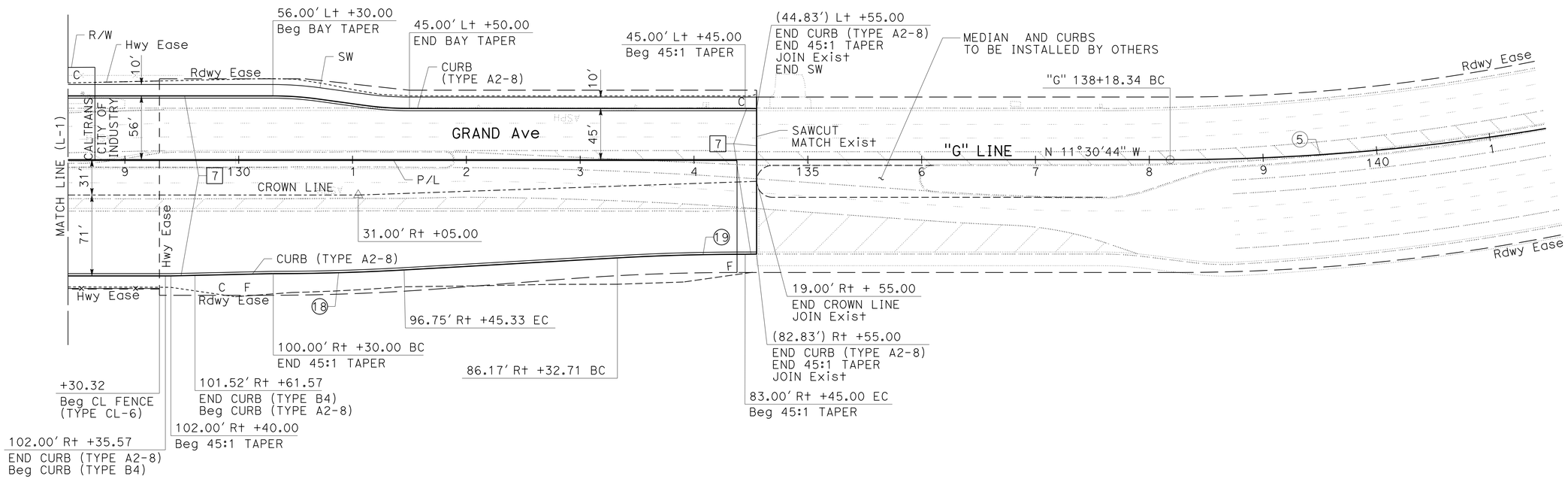

LAYOUT

SCALE: 1" = 50′

L-5

STATE OF CALIFORNIA - DEPARTMENT OF TRANSPORTATION
Caltrans®
DESIGN
CONSULTANT FUNCTIONAL SUPERVISOR: DAN WEDDELL
CALCULATED-DESIGNED BY: HUA ZHENG
CHECKED BY: YOSUKE ARAI
REVISED BY
DATE REVISED

LAST REVISION 00-00-00
DATE PLOTTED => 09-MAY-2016
TIME PLOTTED => 15:04

NOTES:

1. ALL ELEVATIONS ARE BASED ON NAVD 88.
2. ELEVATIONS IN PARENTHESES ARE INTERPOLATED FROM SURVEY DATA. YOU MUST FIELD VERIFY THE TIE-IN ELEVATIONS AND NOTIFY THE ENGINEER OF ANY DISCREPANCIES.

Dist	COUNTY	ROUTE	POST MILES TOTAL PROJECT	SHEET No.	TOTAL SHEETS
07	LA	60	R24.4/R25.3	14	384

REGISTERED CIVIL ENGINEER 1-15-16 DATE

3-14-16
PLANS APPROVAL DATE

REGISTERED PROFESSIONAL ENGINEER HANK T. NGUYEN No. C 61227 Exp. 6-30-17 CIVIL STATE OF CALIFORNIA

THE STATE OF CALIFORNIA OR ITS OFFICERS OR AGENTS SHALL NOT BE RESPONSIBLE FOR THE ACCURACY OR COMPLETENESS OF SCANNED COPIES OF THIS PLAN SHEET.

WKE, INC
400 N. TUSTIN AVENUE
SUITE 275
SANTA ANA, CA 92705

CITY OF INDUSTRY
15651 EAST STAFFORD STREET
CITY OF INDUSTRY, CA 91744

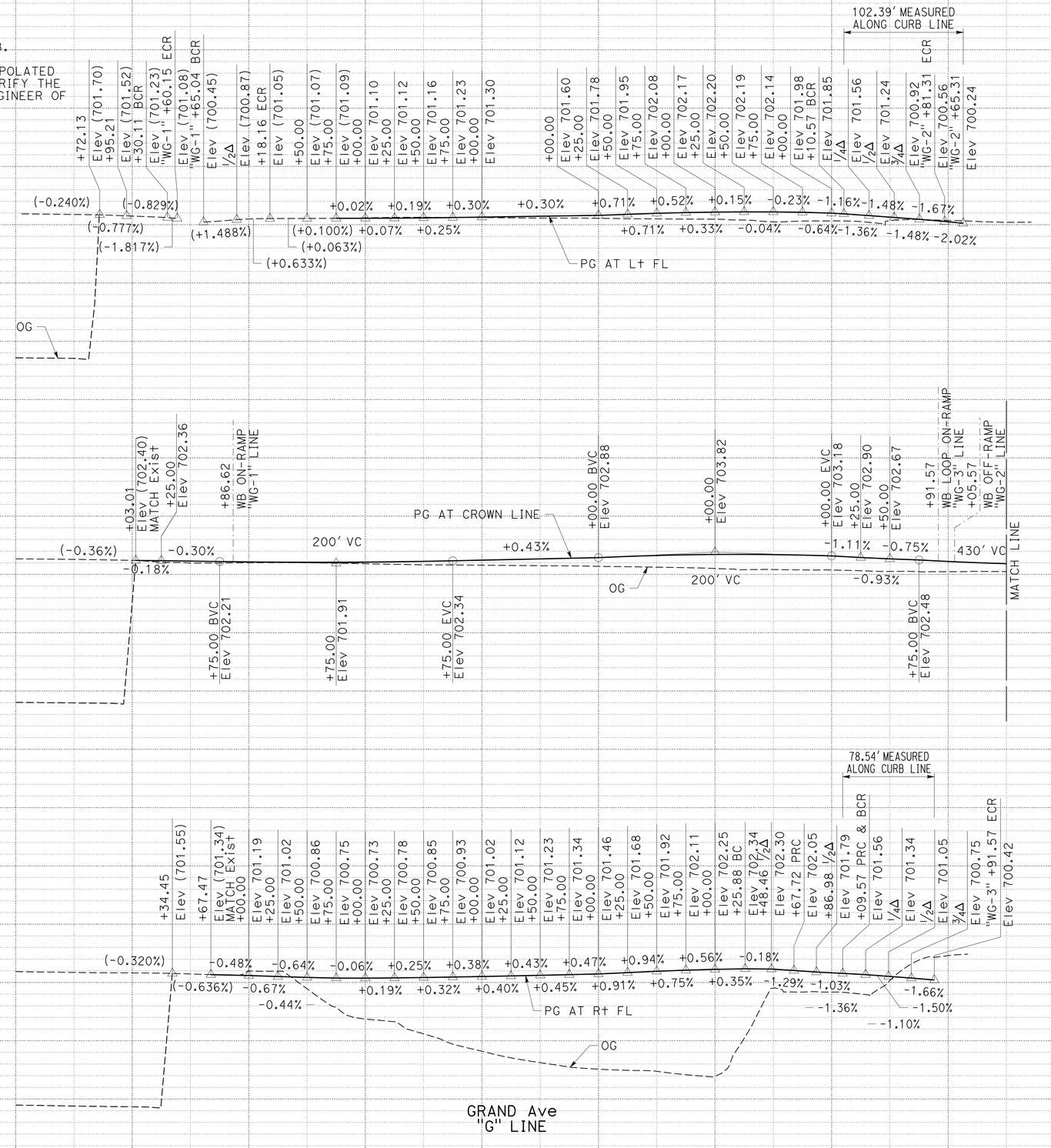

PROFILE
SCALE: Horiz 1" = 50'
Vert 1" = 10'

P-1

STATION		120	1	2	3	4	125	6	7	TOTAL
CY	Exc	5,335								5,140
	Emb	26,208								26,208

STATE OF CALIFORNIA - DEPARTMENT OF TRANSPORTATION
DESIGN
CONSULTANT FUNCTIONAL SUPERVISOR: HANK T. NGUYEN
CALCULATED-DESIGNED BY: HUA ZHENG
CHECKED BY: JOSEPH CARBAJAL
REVISED BY / DATE REVISED

DATE PLOTTED => 09-MAY-2016
TIME PLOTTED => 15:04
LAST REVISION 00-00-00

BORDER LAST REVISED 7/2/2010
USERNAME => s125624
DGN FILE => 727911fa001.dgn
RELATIVE BORDER SCALE IS IN INCHES 0 1 2 3
UNIT 1823
PROJECT NUMBER & PHASE 07150000751

Dist	COUNTY	ROUTE	POST MILES TOTAL PROJECT	SHEET No.	TOTAL SHEETS
07	LA	60	R24.4/R25.3	15	384

REGISTERED CIVIL ENGINEER 1-15-16 DATE

3-14-16
PLANS APPROVAL DATE

REGISTERED PROFESSIONAL ENGINEER HANK T. NGUYEN No. C 61227 Exp. 6-30-17 CIVIL STATE OF CALIFORNIA

THE STATE OF CALIFORNIA OR ITS OFFICERS OR AGENTS SHALL NOT BE RESPONSIBLE FOR THE ACCURACY OR COMPLETENESS OF SCANNED COPIES OF THIS PLAN SHEET.

WKE, INC
400 N. TUSTIN AVENUE
SUITE 275
SANTA ANA, CA 92705

CITY OF INDUSTRY
15651 EAST STAFFORD STREET
CITY OF INDUSTRY, CA 91744

PROFILE

SCALE: Horiz 1" = 50'
Vert 1" = 10'

P-2

REVISED BY | DATE REVISED
HUA ZHENG | JOSEPH CARBAJAL
CALCULATED-DESIGNED BY | CHECKED BY
CONSULTANT FUNCTIONAL SUPERVISOR
HANK T. NGUYEN

STATE OF CALIFORNIA - DEPARTMENT OF TRANSPORTATION
Caltrans
DESIGN

LAST REVISION 00-00-00 | DATE PLOTTED => 09-MAY-2016 | TIME PLOTTED => 15:04

Dist	COUNTY	ROUTE	POST MILES TOTAL PROJECT	SHEET No.	TOTAL SHEETS
07	LA	60	R24.4/R25.3	16	384

REGISTERED CIVIL ENGINEER 1-15-16 DATE

3-14-16
PLANS APPROVAL DATE

REGISTERED PROFESSIONAL ENGINEER HANK T. NGUYEN No. C 61227 Exp. 6-30-17 CIVIL STATE OF CALIFORNIA

THE STATE OF CALIFORNIA OR ITS OFFICERS OR AGENTS SHALL NOT BE RESPONSIBLE FOR THE ACCURACY OR COMPLETENESS OF SCANNED COPIES OF THIS PLAN SHEET.

WKE, INC
400 N. TUSTIN AVENUE
SUITE 275
SANTA ANA, CA 92705

CITY OF INDUSTRY
15651 EAST STAFFORD STREET
CITY OF INDUSTRY, CA 91744

NOTE :(THIS SHEET ONLY):

EXCAVATION AND EMBANKMENT QUANTITIES ARE INCLUDED IN THE "WG-3" PROFILE SHEET.

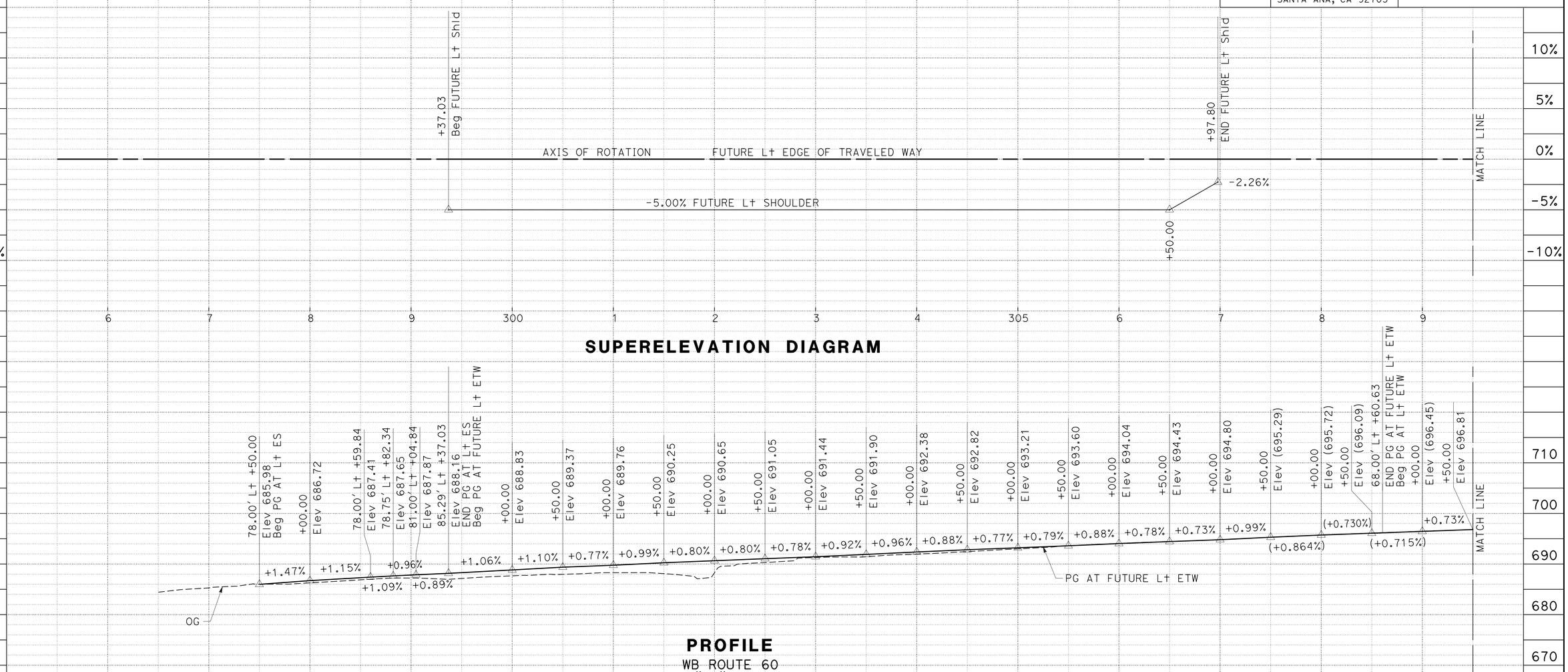

PROFILE AND SUPERELEVATION DIAGRAM

SCALE: Horiz 1" = 50'
Vert 1" = 10'

PS-1

STATION	6	7	8	9	300	1	2	3	4	305	6	7	8	9	TOTAL
CY Exc	SEE NOTE 1				1,915										1,738
CY Emb					1,415										1,415

REVISED BY | DATE REVISED
HUA ZHENG | JOSEPH CARBAJAL
CALCULATED-DESIGNED BY | CHECKED BY
CONSULTANT FUNCTIONAL SUPERVISOR: HANK T. NGUYEN

STATE OF CALIFORNIA - DEPARTMENT OF TRANSPORTATION
Caltrans
DESIGN

LAST REVISION 00-00-00 | DATE PLOTTED => 09-MAY-2016 | TIME PLOTTED => 15:04

Dist	COUNTY	ROUTE	POST MILES TOTAL PROJECT	SHEET No.	TOTAL SHEETS
07	LA	60	R24.4/R25.3	17	384

REGISTERED CIVIL ENGINEER 1-15-16 DATE

3-14-16
PLANS APPROVAL DATE

REGISTERED PROFESSIONAL ENGINEER HANK T. NGUYEN No. C 61227 Exp. 6-30-17 CIVIL STATE OF CALIFORNIA

THE STATE OF CALIFORNIA OR ITS OFFICERS OR AGENTS SHALL NOT BE RESPONSIBLE FOR THE ACCURACY OR COMPLETENESS OF SCANNED COPIES OF THIS PLAN SHEET.

WKE, INC
400 N. TUSTIN AVENUE
SUITE 275
SANTA ANA, CA 92705

CITY OF INDUSTRY
15651 EAST STAFFORD STREET
CITY OF INDUSTRY, CA 91744

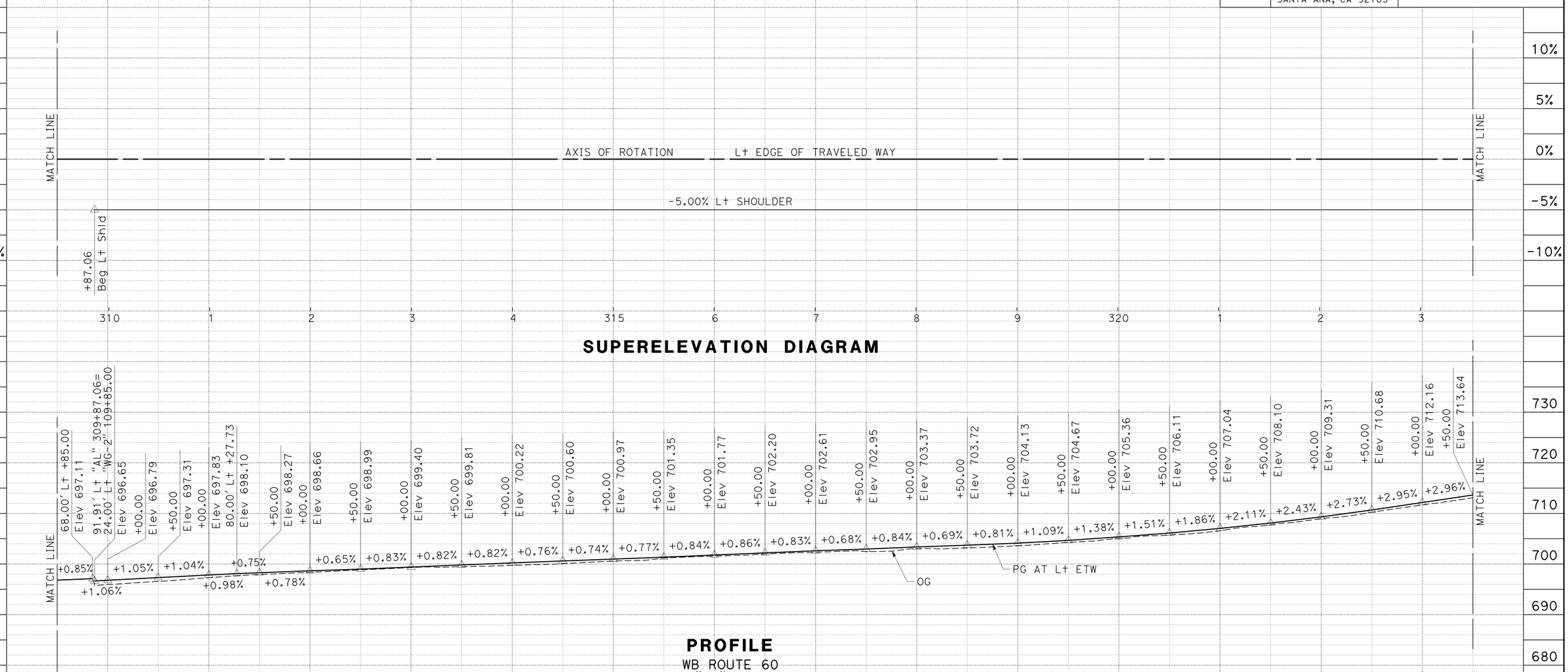

PROFILE AND SUPERELEVATION DIAGRAM

SCALE: Horiz 1" = 50'
Vert 1" = 10'

PS-2

STATION		310	1	2	3	4	315	6	7	8	9	320	1	2	3	TOTAL
CY	Exc	2,358														2,180
	Emb	521														521

REVISED BY | DATE REVISED
HUA ZHENG | JOSEPH CARBAJAL
CALCULATED-DESIGNED BY | CHECKED BY
CONSULTANT FUNCTIONAL SUPERVISOR: HANK T. NGUYEN
STATE OF CALIFORNIA - DEPARTMENT OF TRANSPORTATION
Caltrans DESIGN

LAST REVISION 00-00-00 | DATE PLOTTED => 09-MAY-2016 | TIME PLOTTED => 15:04

Dist	COUNTY	ROUTE	POST MILES TOTAL PROJECT	SHEET No.	TOTAL SHEETS
07	LA	60	R24.4/R25.3	18	384

REGISTERED CIVIL ENGINEER 1-15-16 DATE

3-14-16
PLANS APPROVAL DATE

REGISTERED PROFESSIONAL ENGINEER HANK T. NGUYEN No. C 61227 Exp. 6-30-17 CIVIL STATE OF CALIFORNIA

THE STATE OF CALIFORNIA OR ITS OFFICERS OR AGENTS SHALL NOT BE RESPONSIBLE FOR THE ACCURACY OR COMPLETENESS OF SCANNED COPIES OF THIS PLAN SHEET.

WKE, INC
400 N. TUSTIN AVENUE
SUITE 275
SANTA ANA, CA 92705

CITY OF INDUSTRY
15651 EAST STAFFORD STREET
CITY OF INDUSTRY, CA 91744

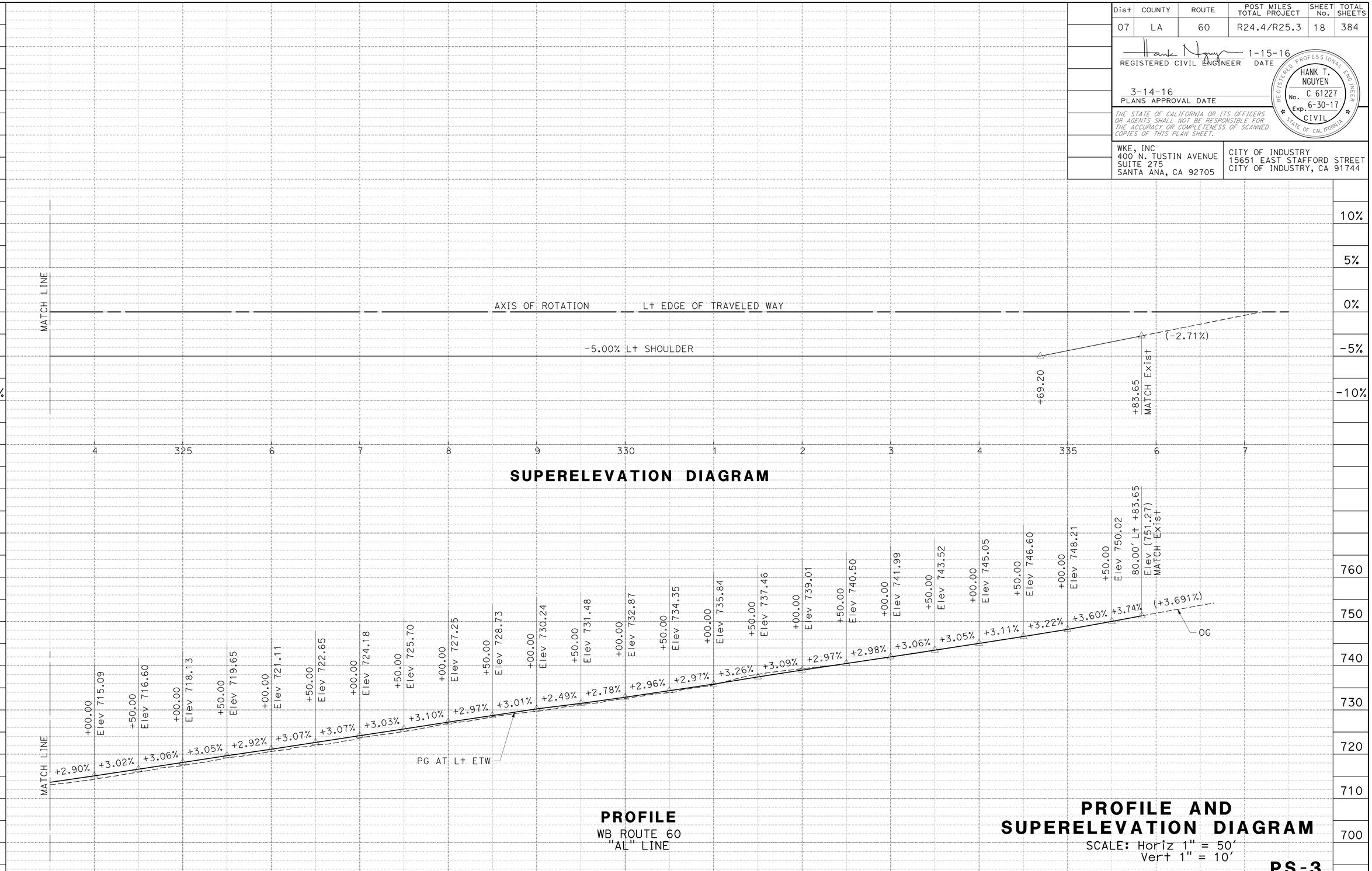

PROFILE AND SUPERELEVATION DIAGRAM

SCALE: Horiz 1" = 50'
Vert 1" = 10'

PS-3

STATION		4	325	6	7	8	9	330	1	2	3	4	335	6	7	TOTAL
CY	Exc	2,058														1,922
	Emb	601														601

STATE OF CALIFORNIA - DEPARTMENT OF TRANSPORTATION
Caltrans
DESIGN

CONSULTANT FUNCTIONAL SUPERVISOR: HANK T. NGUYEN
CALCULATED-DESIGNED BY: JOSEPH CARBAJAL
CHECKED BY: HUA ZHENG
REVISED BY
DATE REVISED

LAST REVISION 00-00-00
DATE PLOTTED => 09-MAY-2016
TIME PLOTTED => 15:04

Dist	COUNTY	ROUTE	POST MILES TOTAL PROJECT	SHEET No.	TOTAL SHEETS
07	LA	60	R24.4/R25.3	19	384

REGISTERED CIVIL ENGINEER 1-15-16 DATE

3-14-16
PLANS APPROVAL DATE

REGISTERED PROFESSIONAL ENGINEER HANK T. NGUYEN No. C 61227 Exp. 6-30-17 CIVIL STATE OF CALIFORNIA

THE STATE OF CALIFORNIA OR ITS OFFICERS OR AGENTS SHALL NOT BE RESPONSIBLE FOR THE ACCURACY OR COMPLETENESS OF SCANNED COPIES OF THIS PLAN SHEET.

WKE, INC
400 N. TUSTIN AVENUE
SUITE 275
SANTA ANA, CA 92705

CITY OF INDUSTRY
15651 EAST STAFFORD STREET
CITY OF INDUSTRY, CA 91744

NOTE (THIS SHEET ONLY):

EXCAVATION AND EMBANKMENT QUANTITIES INCLUDE THE EARTHWORK IN THE TRIANGLE AREA BETWEEN THE ON- AND OFF-RAMPS AND THE FREEWAY.

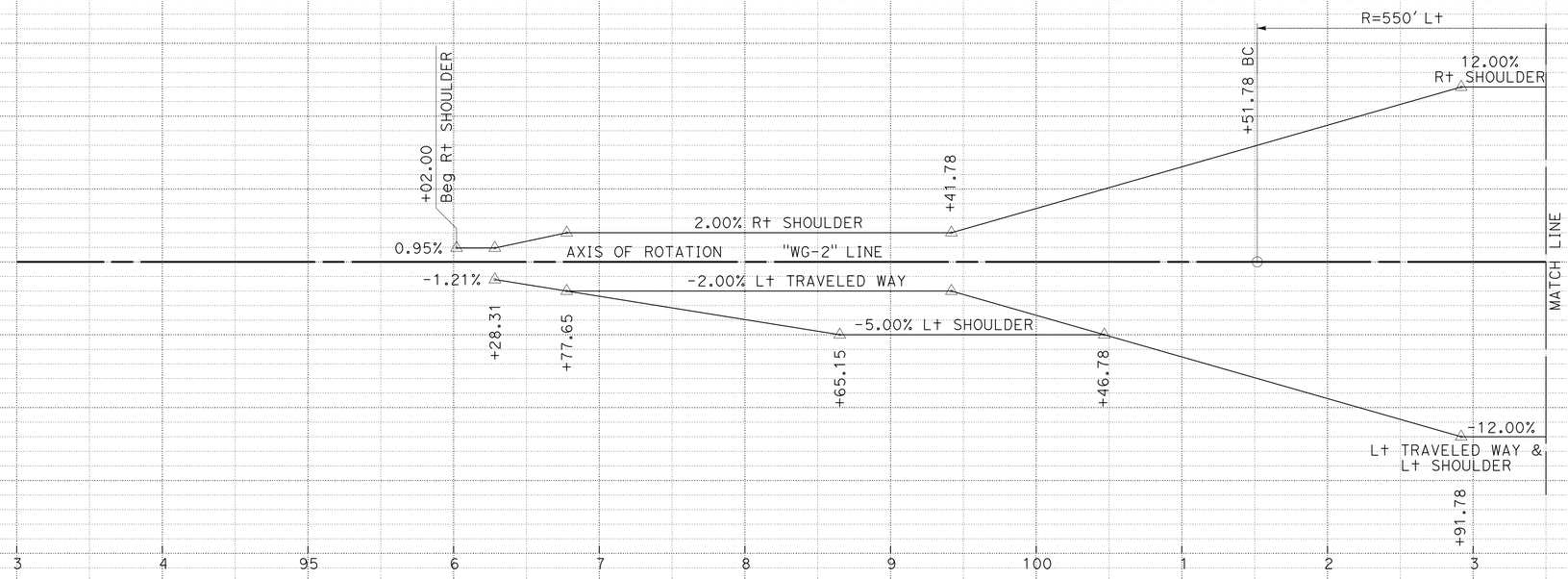

SUPERELEVATION DIAGRAM

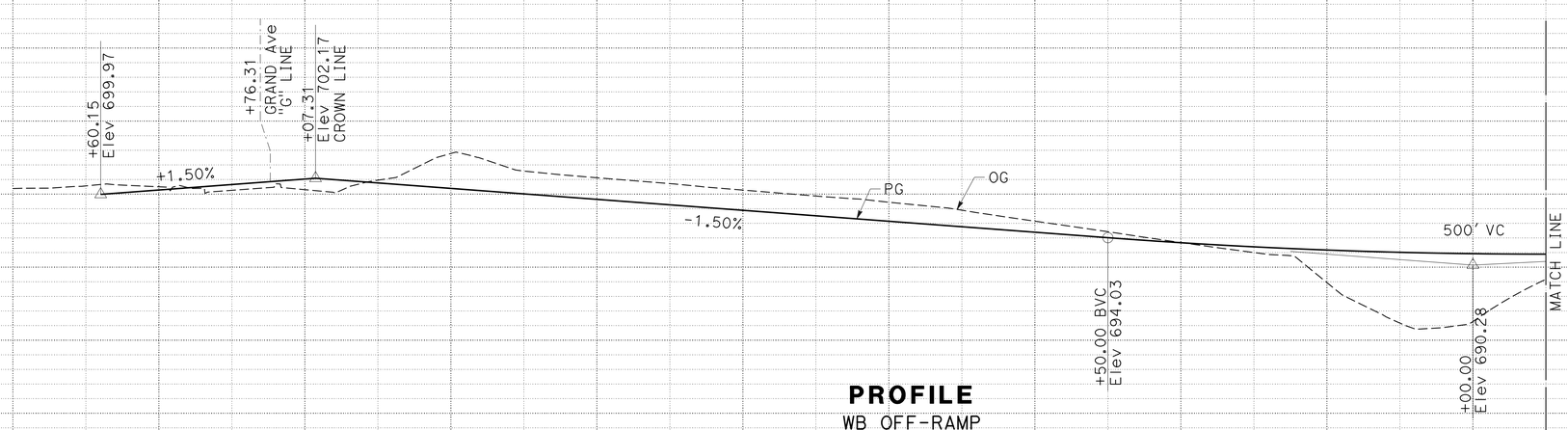

PROFILE

WB OFF-RAMP
"WG-2" LINE

PROFILE AND SUPERELEVATION DIAGRAM

SCALE: Horiz 1" = 50'
Vert 1" = 10'

PS-4

STATION		3	4	95	6	7	8	9	100	1	2	3	TOTAL
CY	Exc						8,670						8,670
	Emb						1,914						1,914

REVISED BY | DATE REVISED
HUA ZHENG | JOSEPH CARBAJAL
CALCULATED-DESIGNED BY | CHECKED BY
CONSULTANT FUNCTIONAL SUPERVISOR: HANK T. NGUYEN
STATE OF CALIFORNIA - DEPARTMENT OF TRANSPORTATION
Caltrans® DESIGN

LAST REVISION 00-00-00 | DATE PLOTTED => 09-MAY-2016 | TIME PLOTTED => 15:04

Dist	COUNTY	ROUTE	POST MILES TOTAL PROJECT	SHEET No.	TOTAL SHEETS
07	LA	60	R24.4/R25.3	20	384

REGISTERED CIVIL ENGINEER 1-15-16 DATE

3-14-16
PLANS APPROVAL DATE

REGISTERED PROFESSIONAL ENGINEER HANK T. NGUYEN No. C 61227 Exp. 6-30-17 CIVIL STATE OF CALIFORNIA

THE STATE OF CALIFORNIA OR ITS OFFICERS OR AGENTS SHALL NOT BE RESPONSIBLE FOR THE ACCURACY OR COMPLETENESS OF SCANNED COPIES OF THIS PLAN SHEET.

WKE, INC
400 N. TUSTIN AVENUE
SUITE 275
SANTA ANA, CA 92705

CITY OF INDUSTRY
15651 EAST STAFFORD STREET
CITY OF INDUSTRY, CA 91744

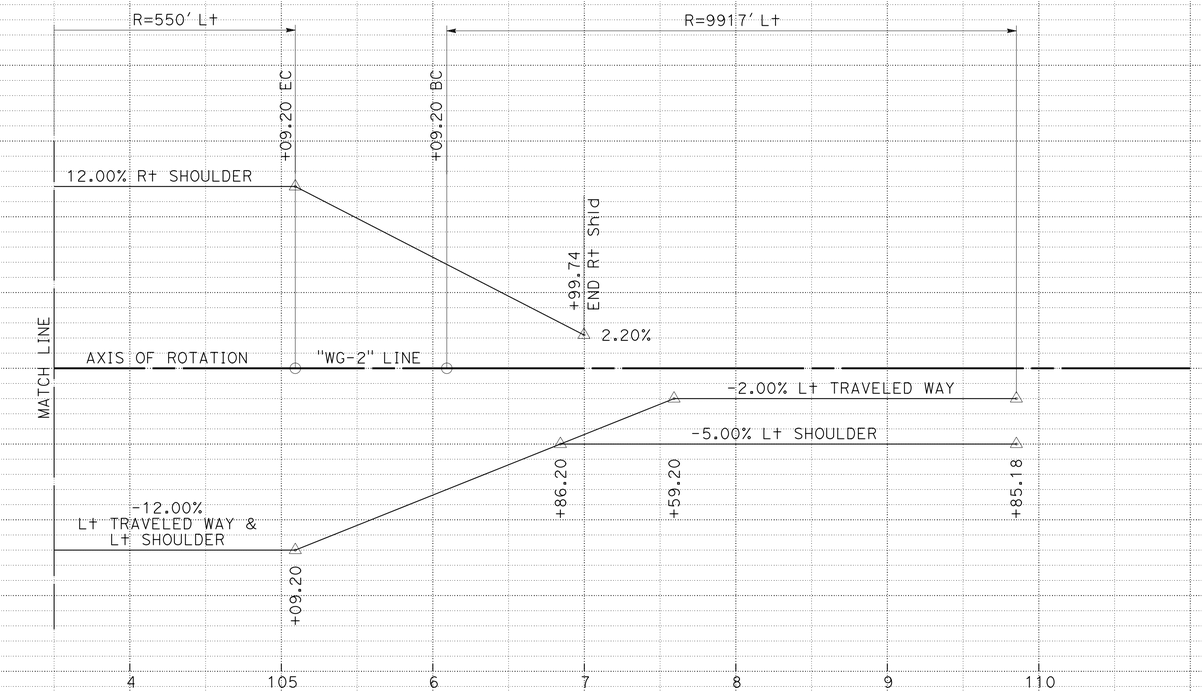

SUPERELEVATION DIAGRAM

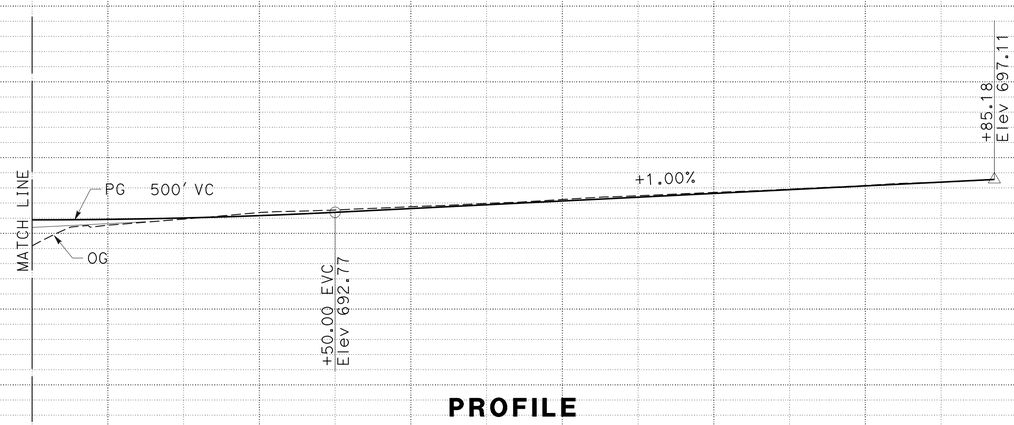

PROFILE

WB OFF-RAMP
"WG-2" LINE

PROFILE AND SUPERELEVATION DIAGRAM

SCALE: Horiz 1" = 50'
Vert 1" = 10'

PS-5

STATION		4	105	6	7	8	9	110	TOTAL
CY	Exc	1,295							1,295
	Emb	635							635

REVISED BY | DATE REVISED
HUA ZHENG | JOSEPH CARBAJAL
CALCULATED-DESIGNED BY | CHECKED BY
CONSULTANT FUNCTIONAL SUPERVISOR
HANK T. NGUYEN

STATE OF CALIFORNIA - DEPARTMENT OF TRANSPORTATION
Caltrans
DESIGN

LAST REVISION 00-00-00
DATE PLOTTED => 09-MAY-2016
TIME PLOTTED => 15:04

Dist	COUNTY	ROUTE	POST MILES TOTAL PROJECT	SHEET No.	TOTAL SHEETS
07	LA	60	R24.4/R25.3	21	384

REGISTERED CIVIL ENGINEER 1-15-16 DATE

3-14-16
PLANS APPROVAL DATE

REGISTERED PROFESSIONAL ENGINEER HANK T. NGUYEN No. C 61227 Exp. 6-30-17 CIVIL STATE OF CALIFORNIA

THE STATE OF CALIFORNIA OR ITS OFFICERS OR AGENTS SHALL NOT BE RESPONSIBLE FOR THE ACCURACY OR COMPLETENESS OF SCANNED COPIES OF THIS PLAN SHEET.

WKE, INC
400 N. TUSTIN AVENUE
SUITE 275
SANTA ANA, CA 92705

CITY OF INDUSTRY
15651 EAST STAFFORD STREET
CITY OF INDUSTRY, CA 91744

NOTE (THIS SHEET ONLY)

EXCAVATION AND EMBANKMENT QUANTITIES INCLUDE THE EARTHWORK IN THE LOOP AREA.

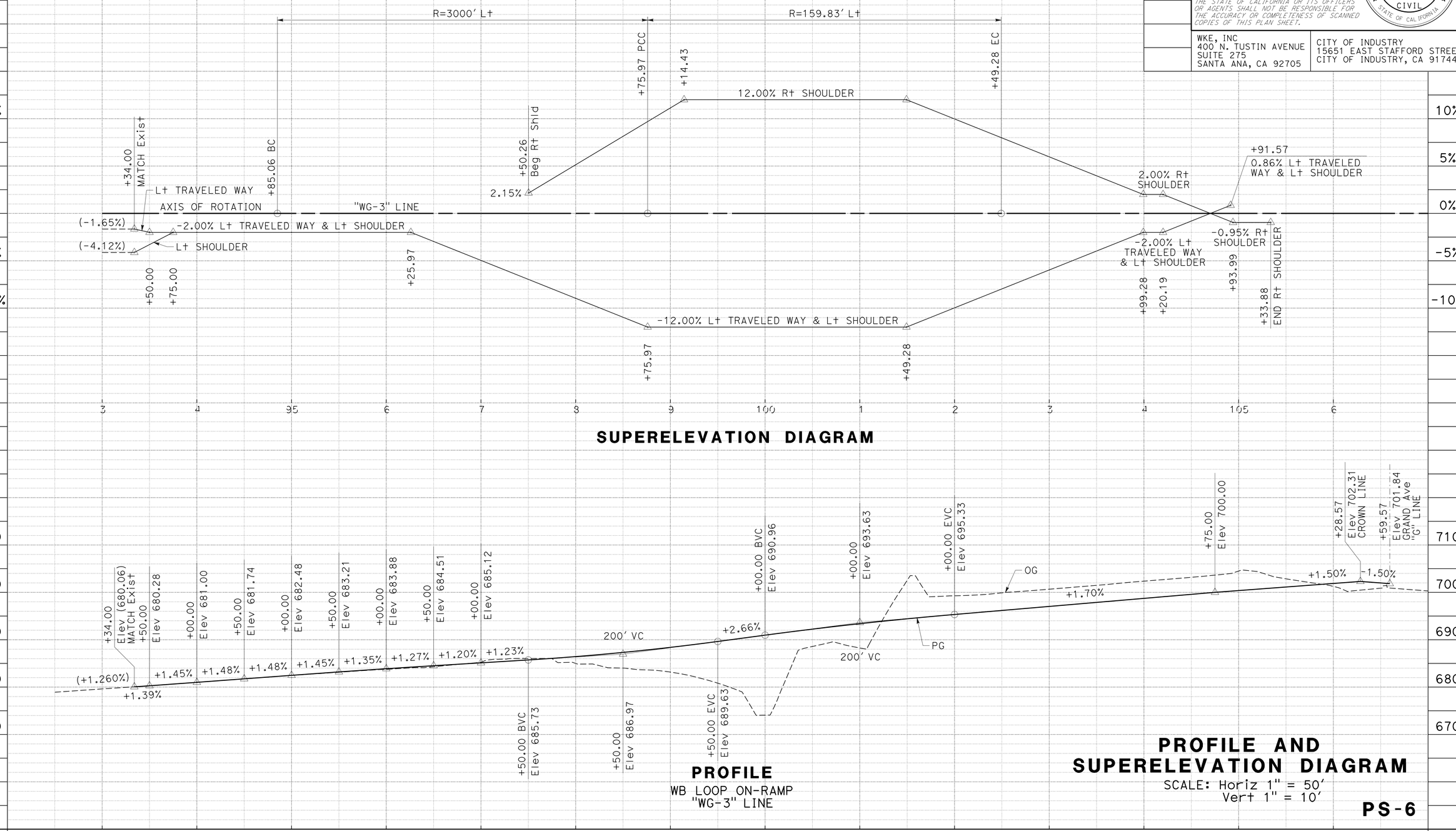

CY			TOTAL
Exc	10,256	10,256	10,256
Emb	6,374		6,374

STATE OF CALIFORNIA - DEPARTMENT OF TRANSPORTATION
Caltrans®
DESIGN
CONSULTANT FUNCTIONAL SUPERVISOR: HANK T. NGUYEN
CALCULATED-DESIGNED BY: JOSEPH CARBAJAL
CHECKED BY: HUA ZHENG
REVISED BY
DATE REVISED

LAST REVISION 00-00-00
DATE PLOTTED => 09-MAY-2016
TIME PLOTTED => 15:04

Dist	COUNTY	ROUTE	POST MILES TOTAL PROJECT	SHEET No.	TOTAL SHEETS
07	LA	60	R24.4/R25.3	22	384

REGISTERED CIVIL ENGINEER 1-15-16 DATE

3-14-16
PLANS APPROVAL DATE

REGISTERED PROFESSIONAL ENGINEER HANK T. NGUYEN No. C 61227 Exp. 6-30-17 CIVIL STATE OF CALIFORNIA

THE STATE OF CALIFORNIA OR ITS OFFICERS OR AGENTS SHALL NOT BE RESPONSIBLE FOR THE ACCURACY OR COMPLETENESS OF SCANNED COPIES OF THIS PLAN SHEET.

WKE, INC
400 N. TUSTIN AVENUE
SUITE 275
SANTA ANA, CA 92705

CITY OF INDUSTRY
15651 EAST STAFFORD STREET
CITY OF INDUSTRY, CA 91744

NOTE:

MINOR CONCRETE (BRUSHED CONCRETE) SURFACE TO BE COLORED CONCRETE. USE FEDERAL COLOR #10091.

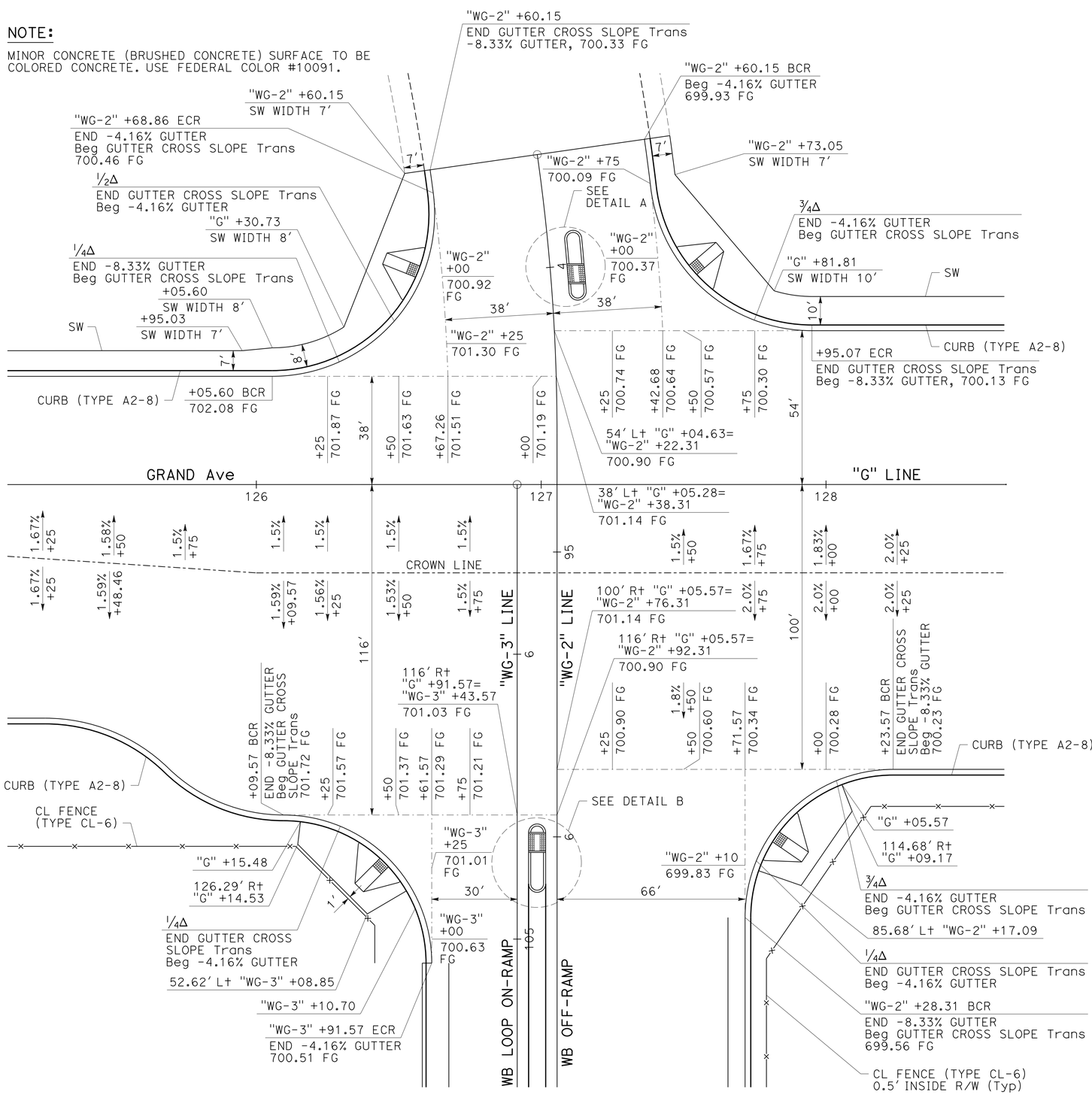

GRAND Ave/RAMP INTERSECTION

NOTE: FOR FL PROFILES SEE PROFILE SHEETS P-1 AND P-2

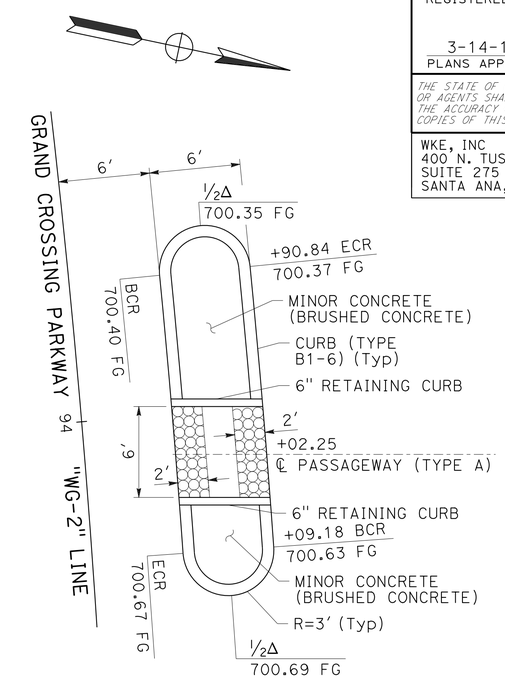

DETAIL A

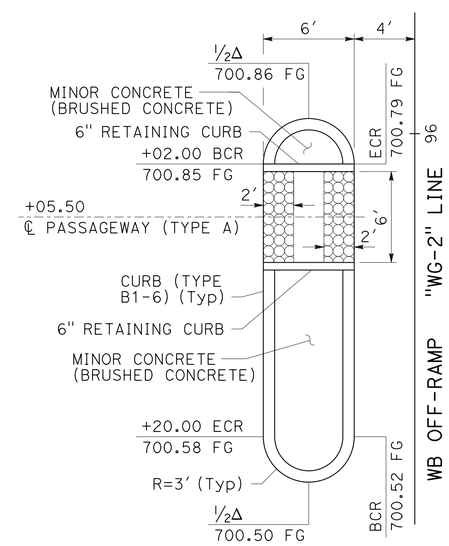

DETAIL B

CONSTRUCTION DETAILS

NO SCALE

C-1

STATE OF CALIFORNIA - DEPARTMENT OF TRANSPORTATION
DESIGN
CONSULTANT FUNCTIONAL SUPERVISOR: DAN WEDDELL
CALCULATED-DESIGNED BY: HUA ZHENG
CHECKED BY: YOSUKE ARAI
REVISED BY
DATE REVISED

LAST REVISION 00-00-00
DATE PLOTTED => 09-MAY-2016
TIME PLOTTED => 15:04

Dist	COUNTY	ROUTE	POST MILES TOTAL PROJECT	SHEET No.	TOTAL SHEETS
07	LA	60	R24.4/R25.3	23	384

REGISTERED CIVIL ENGINEER 1-15-16 DATE

3-14-16
PLANS APPROVAL DATE

REGISTERED PROFESSIONAL ENGINEER HANK T. NGUYEN No. C 61227 Exp. 6-30-17 CIVIL STATE OF CALIFORNIA

THE STATE OF CALIFORNIA OR ITS OFFICERS OR AGENTS SHALL NOT BE RESPONSIBLE FOR THE ACCURACY OR COMPLETENESS OF SCANNED COPIES OF THIS PLAN SHEET.

WKE, INC
400 N. TUSTIN AVENUE
SUITE 275
SANTA ANA, CA 92705

CITY OF INDUSTRY
15651 EAST STAFFORD STREET
CITY OF INDUSTRY, CA 91744

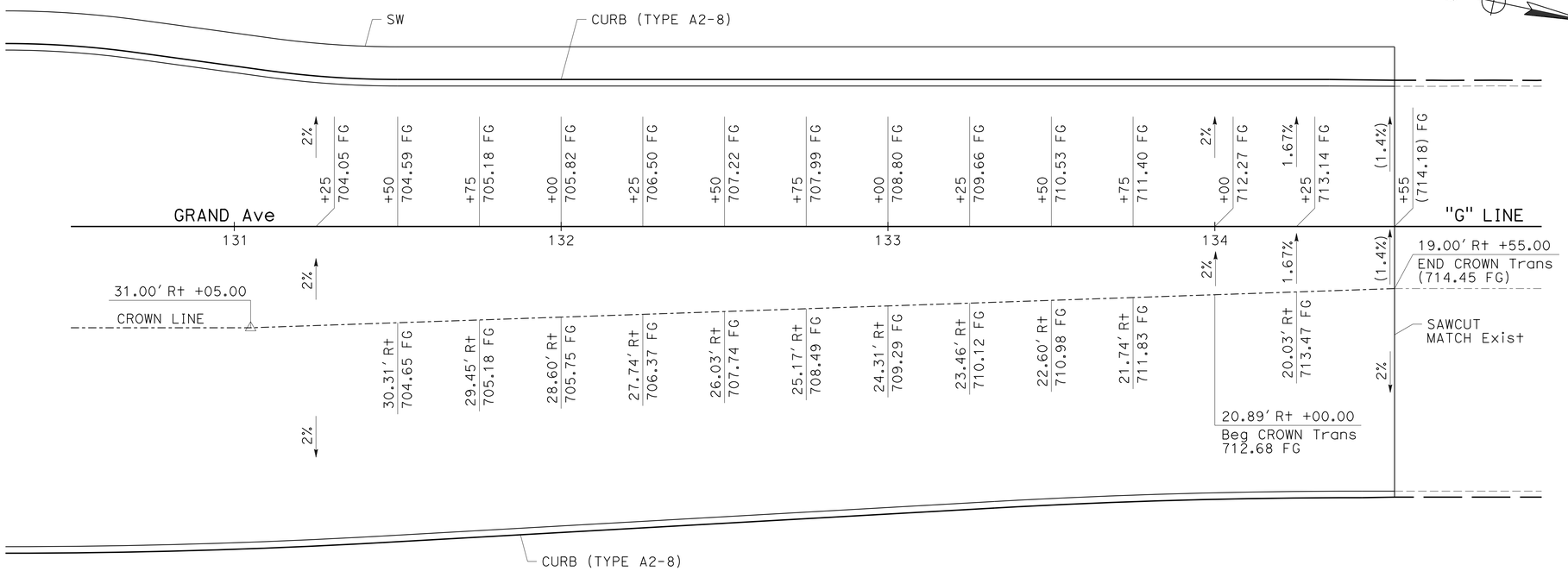

CROWN TRANSITION AND TIE-IN EXISTING

NOTE: FOR FL PROFILES SEE PROFILE SHEETS P-1 AND P-2

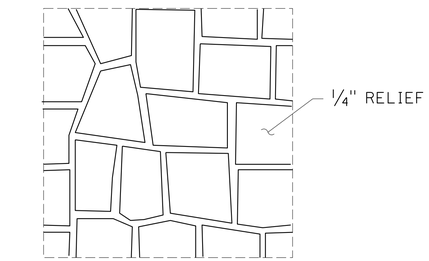

MINOR CONCRETE (TEXTURED PAVING) FLAGSTONE PATTERN

FEDERAL COLOR: 10091

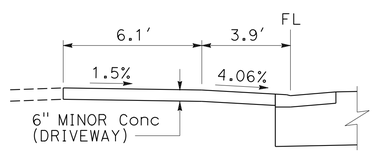

CENTERLINE OF DRIVEWAY

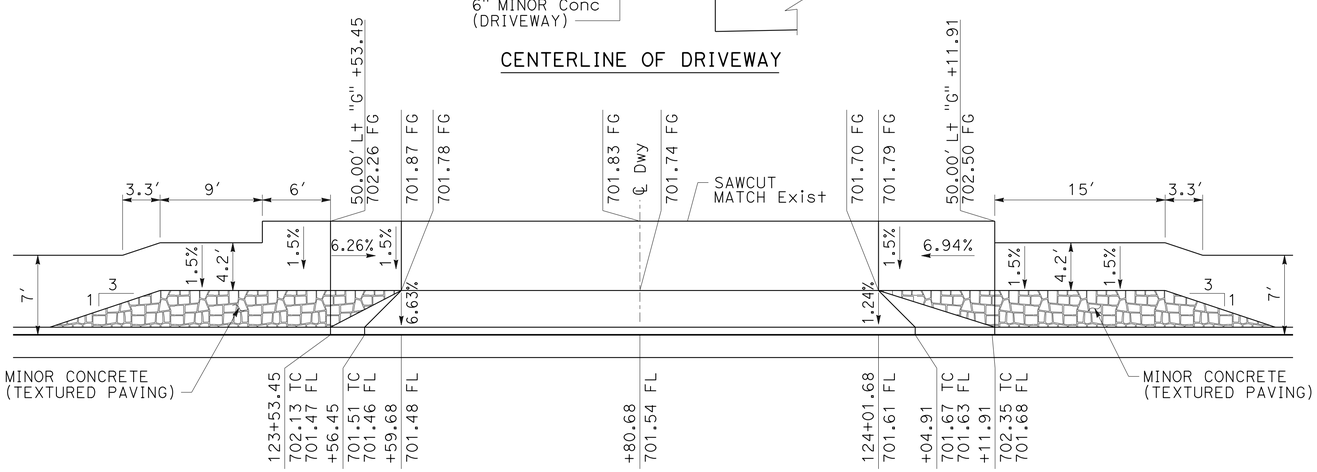

DRIVEWAY (CASE B Mod)

NOTE: SEE RSP A87A FOR DETAILS NOT SHOWN

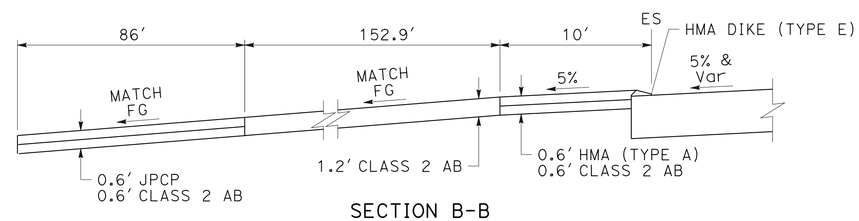

SECTION B-B

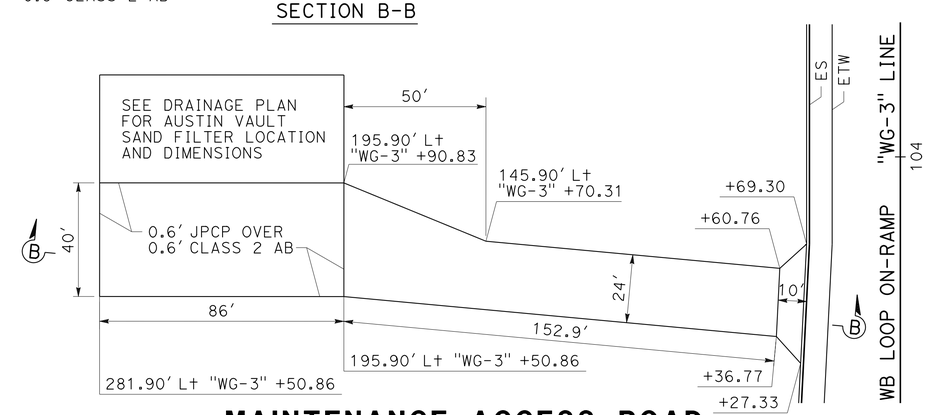

MAINTENANCE ACCESS ROAD

CONSTRUCTION DETAILS

NO SCALE

C-2

STATE OF CALIFORNIA - DEPARTMENT OF TRANSPORTATION
Caltrans
DESIGN
CONSULTANT FUNCTIONAL SUPERVISOR: DAN WEDDELL
CALCULATED-DESIGNED BY: HUA ZHENG
CHECKED BY: YOSUKE ARAI
REVISED BY
DATE REVISED

LAST REVISION 00-00-00
DATE PLOTTED => 09-MAY-2016
TIME PLOTTED => 15:04

Dist	COUNTY	ROUTE	POST MILES TOTAL PROJECT	SHEET No.	TOTAL SHEETS
07	LA	60	R24.4/R25.3	24	384

REGISTERED CIVIL ENGINEER 1-15-16 DATE

3-14-16
PLANS APPROVAL DATE

REGISTERED PROFESSIONAL ENGINEER HANK T. NGUYEN No. C 61227 Exp. 6-30-17 CIVIL STATE OF CALIFORNIA

THE STATE OF CALIFORNIA OR ITS OFFICERS OR AGENTS SHALL NOT BE RESPONSIBLE FOR THE ACCURACY OR COMPLETENESS OF SCANNED COPIES OF THIS PLAN SHEET.

WKE, INC
400 N. TUSTIN AVENUE
SUITE 275
SANTA ANA, CA 92705

CITY OF INDUSTRY
15651 EAST STAFFORD STREET
CITY OF INDUSTRY, CA 91744

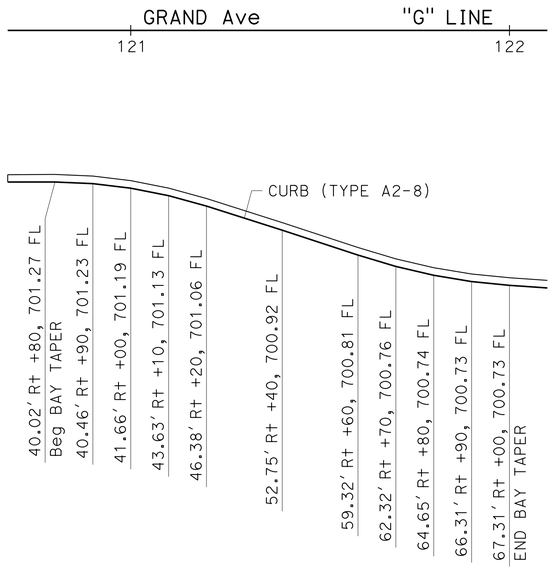

"G" 120+80 TO "G" 122+00

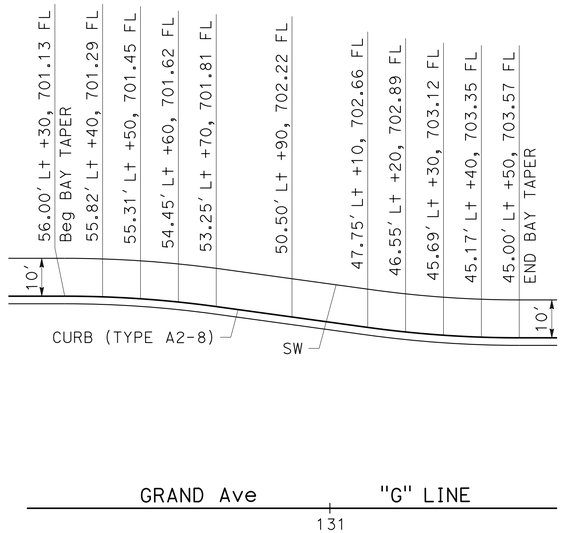

"G" 130+30 TO "G" 131+50

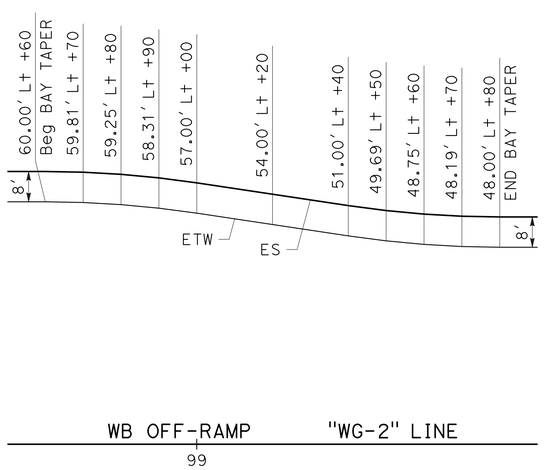

"WG-2" 98+60 TO "WG-2" 99+80

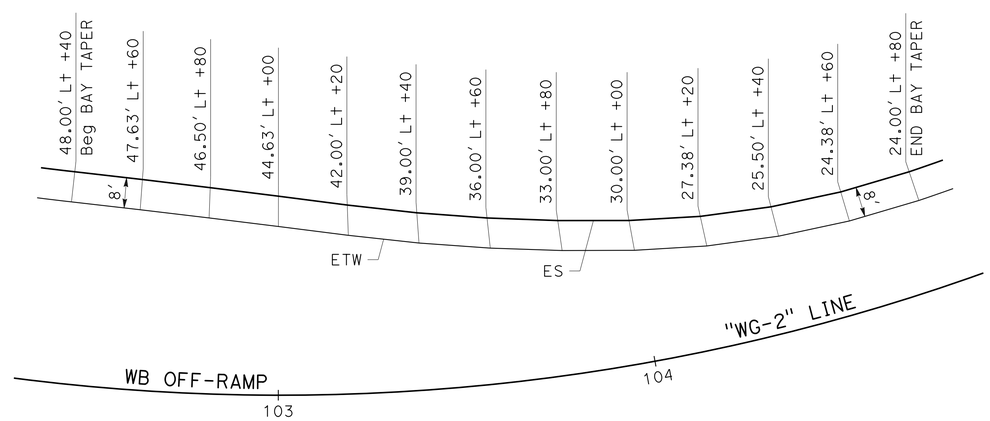

"WG-2" 102+40 TO "WG-2" 104+80

BAY TAPER LAYOUTS

CONSTRUCTION DETAILS

NO SCALE

C-3

STATE OF CALIFORNIA - DEPARTMENT OF TRANSPORTATION
Caltrans®
DESIGN

CONSULTANT FUNCTIONAL SUPERVISOR: DAN WEDDELL
CALCULATED-DESIGNED BY: HUA ZHENG
CHECKED BY: YOSUKE ARAI
REVISED BY
DATE REVISED

LAST REVISION 00-00-00
DATE PLOTTED => 09-MAY-2016
TIME PLOTTED => 15:04

Dist	COUNTY	ROUTE	POST MILES TOTAL PROJECT	SHEET No.	TOTAL SHEETS
07	LA	60	R24.4/R25.3	25	384

REGISTERED CIVIL ENGINEER 1-15-16 DATE

3-14-16
PLANS APPROVAL DATE

REGISTERED PROFESSIONAL ENGINEER HANK T. NGUYEN No. C 61227 Exp. 6-30-17 CIVIL STATE OF CALIFORNIA

THE STATE OF CALIFORNIA OR ITS OFFICERS OR AGENTS SHALL NOT BE RESPONSIBLE FOR THE ACCURACY OR COMPLETENESS OF SCANNED COPIES OF THIS PLAN SHEET.

WKE, INC
400 N. TUSTIN AVENUE
SUITE 275
SANTA ANA, CA 92705

CITY OF INDUSTRY
15651 EAST STAFFORD STREET
CITY OF INDUSTRY, CA 91744

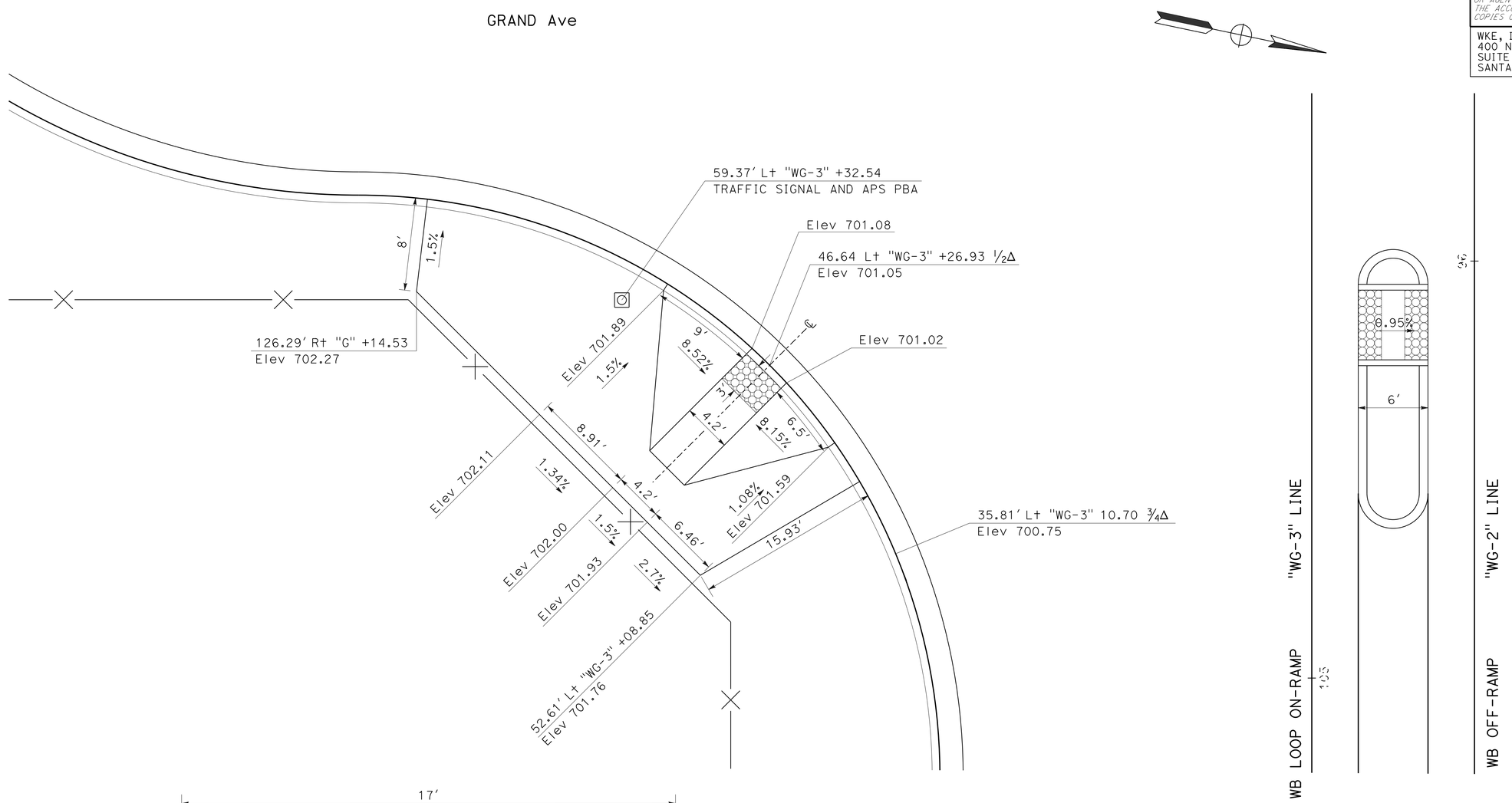

CENTERLINE OF CURB RAMP

SE CURB RAMP

CONSTRUCTION DETAILS

SCALE: 1" = 5'

C-4

REVISED BY	DATE REVISED
HUA ZHENG	YOSUKE ARAI

CALCULATED-DESIGNED BY
CHECKED BY

CONSULTANT FUNCTIONAL SUPERVISOR
DAN WEDDELL

STATE OF CALIFORNIA - DEPARTMENT OF TRANSPORTATION
Caltrans
DESIGN

LAST REVISION 00-00-00
DATE PLOTTED => 09-MAY-2016
TIME PLOTTED => 15:04

Dist	COUNTY	ROUTE	POST MILES TOTAL PROJECT	SHEET No.	TOTAL SHEETS
07	LA	60	R24.4/R25.3	26	384

REGISTERED CIVIL ENGINEER — DATE 1-15-16

3-14-16
PLANS APPROVAL DATE

REGISTERED PROFESSIONAL ENGINEER — HANK T. NGUYEN — No. C 61227 — Exp. 6-30-17 — CIVIL — STATE OF CALIFORNIA

THE STATE OF CALIFORNIA OR ITS OFFICERS OR AGENTS SHALL NOT BE RESPONSIBLE FOR THE ACCURACY OR COMPLETENESS OF SCANNED COPIES OF THIS PLAN SHEET.

WKE, INC
400 N. TUSTIN AVENUE
SUITE 275
SANTA ANA, CA 92705

CITY OF INDUSTRY
15651 EAST STAFFORD STREET
CITY OF INDUSTRY, CA 91744

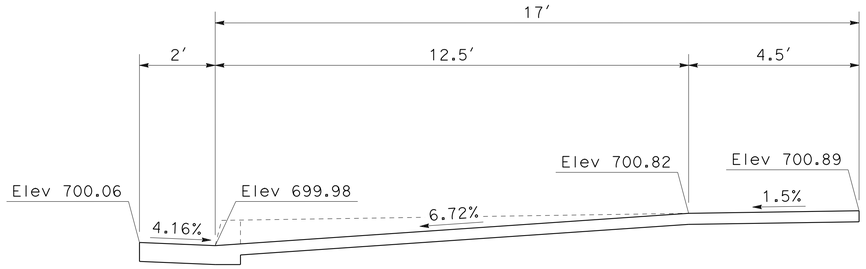

CENTERLINE OF CURB RAMP

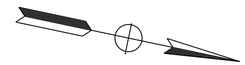

GRAND Ave

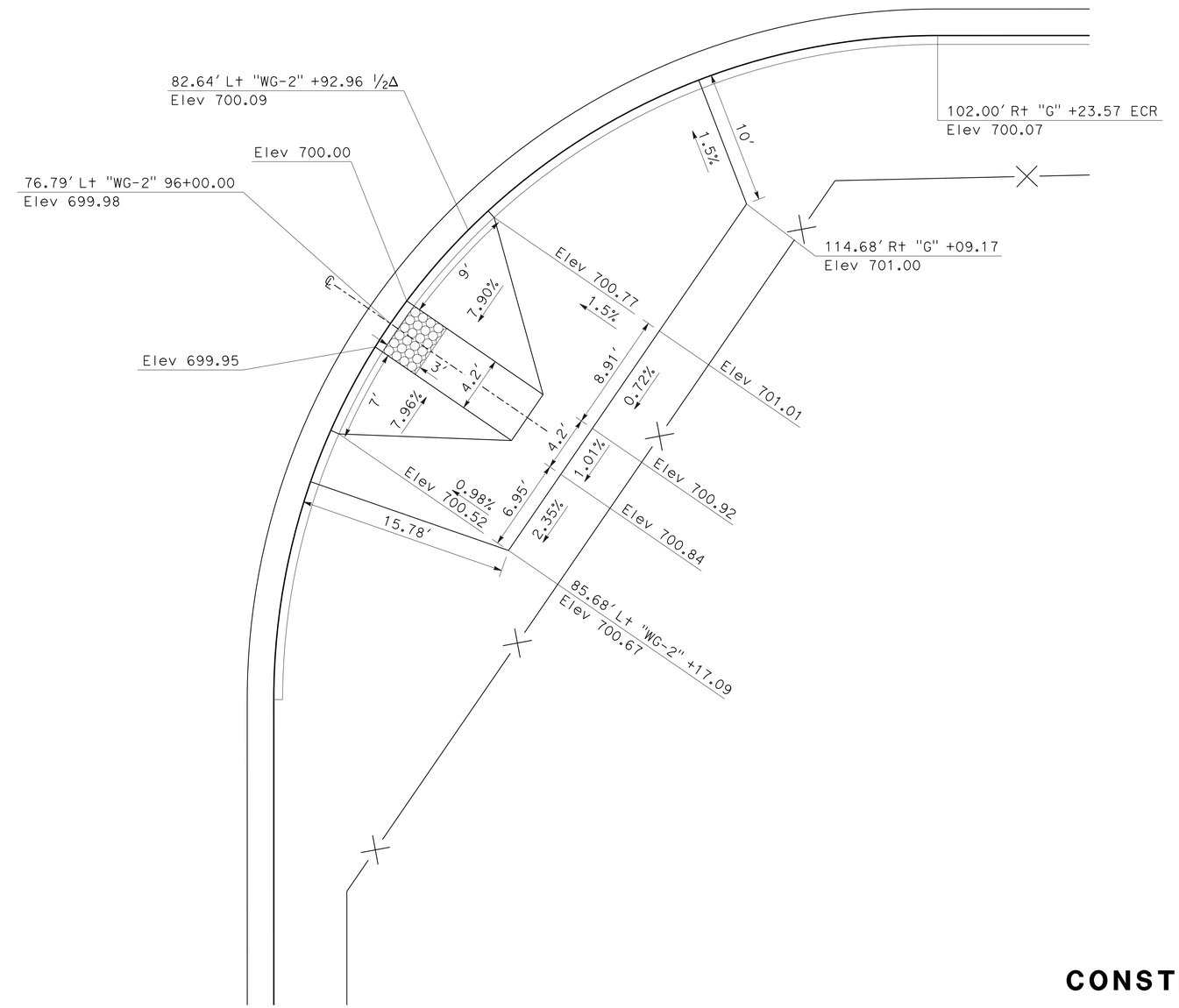

WB OFF-RAMP

NE CURB RAMP

CONSTRUCTION DETAILS

SCALE: 1" = 5′

C-5

STATE OF CALIFORNIA - DEPARTMENT OF TRANSPORTATION
Caltrans® DESIGN

CONSULTANT FUNCTIONAL SUPERVISOR: DAN WEDDELL
CALCULATED-DESIGNED BY: HUA ZHENG
CHECKED BY: YOSUKE ARAI
REVISED BY
DATE REVISED

LAST REVISION 00-00-00
DATE PLOTTED => 09-MAY-2016
TIME PLOTTED => 15:04

Dist	COUNTY	ROUTE	POST MILES TOTAL PROJECT	SHEET No.	TOTAL SHEETS
07	LA	60	R24.4/R25.3	27	384

REGISTERED CIVIL ENGINEER 1-15-16 DATE

3-14-16
PLANS APPROVAL DATE

REGISTERED PROFESSIONAL ENGINEER HANK T. NGUYEN No. C 61227 Exp. 6-30-17 CIVIL STATE OF CALIFORNIA

THE STATE OF CALIFORNIA OR ITS OFFICERS OR AGENTS SHALL NOT BE RESPONSIBLE FOR THE ACCURACY OR COMPLETENESS OF SCANNED COPIES OF THIS PLAN SHEET.

WKE, INC
400 N. TUSTIN AVENUE
SUITE 275
SANTA ANA, CA 92705

CITY OF INDUSTRY
15651 EAST STAFFORD STREET
CITY OF INDUSTRY, CA 91744

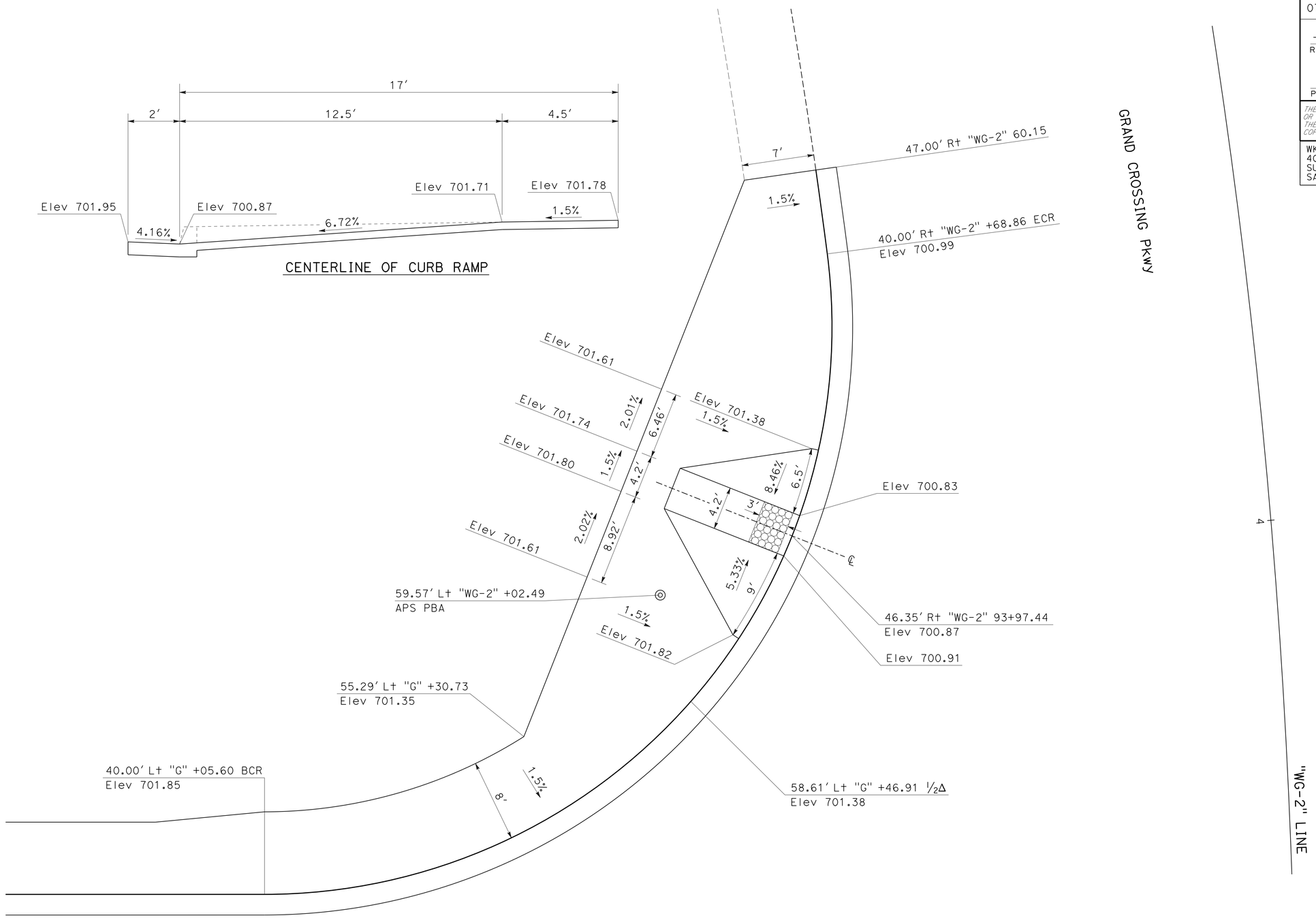

SW CURB RAMP

CONSTRUCTION DETAILS

SCALE: 1" = 5'

C-6

STATE OF CALIFORNIA - DEPARTMENT OF TRANSPORTATION
Caltrans
DESIGN

CONSULTANT FUNCTIONAL SUPERVISOR: DAN WEDDELL
CALCULATED-DESIGNED BY: YOSUKE ARAI
CHECKED BY: HUA ZHENG
REVISED BY
DATE REVISED

LAST REVISION 00-00-00
DATE PLOTTED => 09-MAY-2016
TIME PLOTTED => 15:04

Dist	COUNTY	ROUTE	POST MILES TOTAL PROJECT	SHEET No.	TOTAL SHEETS
07	LA	60	R24.4/R25.3	28	384

REGISTERED CIVIL ENGINEER 1-15-16 DATE

3-14-16
PLANS APPROVAL DATE

REGISTERED PROFESSIONAL ENGINEER HANK T. NGUYEN No. C 61227 Exp. 6-30-17 CIVIL STATE OF CALIFORNIA

THE STATE OF CALIFORNIA OR ITS OFFICERS OR AGENTS SHALL NOT BE RESPONSIBLE FOR THE ACCURACY OR COMPLETENESS OF SCANNED COPIES OF THIS PLAN SHEET.

WKE, INC
400 N. TUSTIN AVENUE
SUITE 275
SANTA ANA, CA 92705

CITY OF INDUSTRY
15651 EAST STAFFORD STREET
CITY OF INDUSTRY, CA 91744

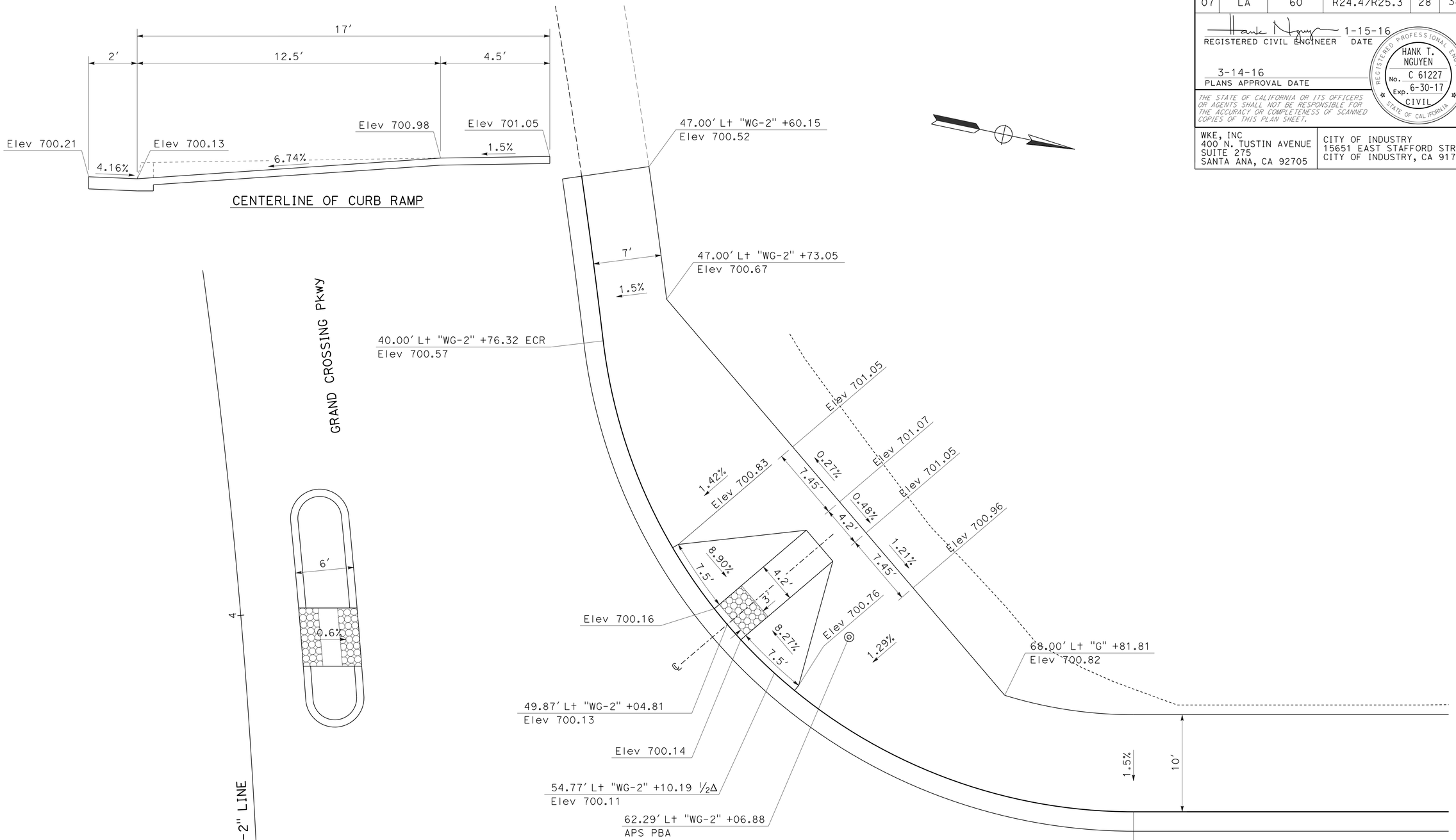

CONSTRUCTION DETAILS

SCALE: 1" = 5′

C-7

REVISED BY	DATE REVISED
HUA ZHENG	YOSUKE ARAI

CALCULATED-DESIGNED BY
CHECKED BY

CONSULTANT FUNCTIONAL SUPERVISOR
DAN WEDDELL

STATE OF CALIFORNIA - DEPARTMENT OF TRANSPORTATION
Caltrans®
DESIGN

LAST REVISION 00-00-00
DATE PLOTTED => 09-MAY-2016
TIME PLOTTED => 15:04

Dist	COUNTY	ROUTE	POST MILES TOTAL PROJECT	SHEET No.	TOTAL SHEETS
07	LA	60	R24.4/R25.3	29	384

REGISTERED CIVIL ENGINEER 1-15-16 DATE

3-14-16
PLANS APPROVAL DATE

REGISTERED PROFESSIONAL ENGINEER
HANK T. NGUYEN
No. C 61227
Exp. 6-30-17
CIVIL
STATE OF CALIFORNIA

THE STATE OF CALIFORNIA OR ITS OFFICERS OR AGENTS SHALL NOT BE RESPONSIBLE FOR THE ACCURACY OR COMPLETENESS OF SCANNED COPIES OF THIS PLAN SHEET.

WKE, INC
400 N. TUSTIN AVENUE
SUITE 275
SANTA ANA, CA 92705

CITY OF INDUSTRY
15651 EAST STAFFORD STREET
CITY OF INDUSTRY, CA 91744

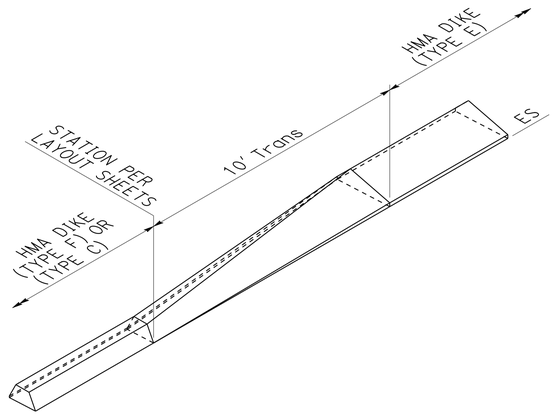

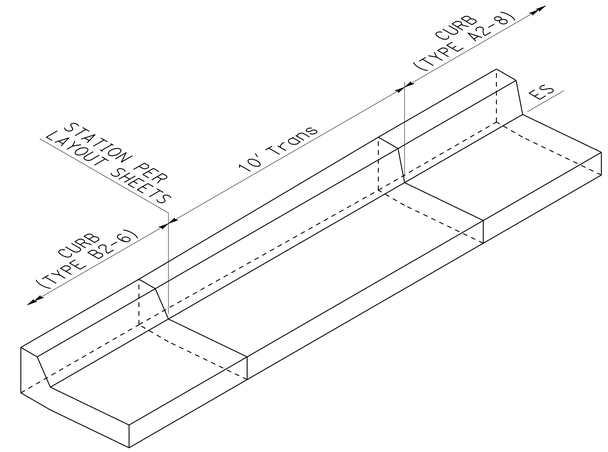

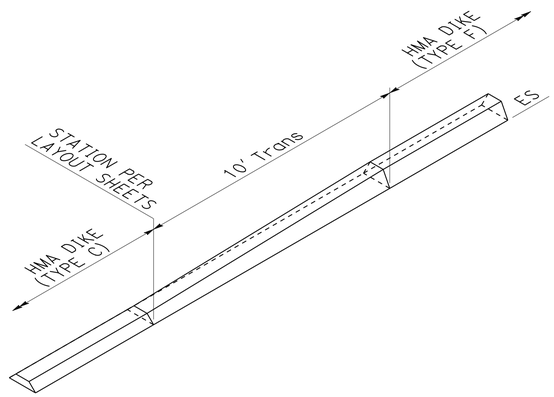

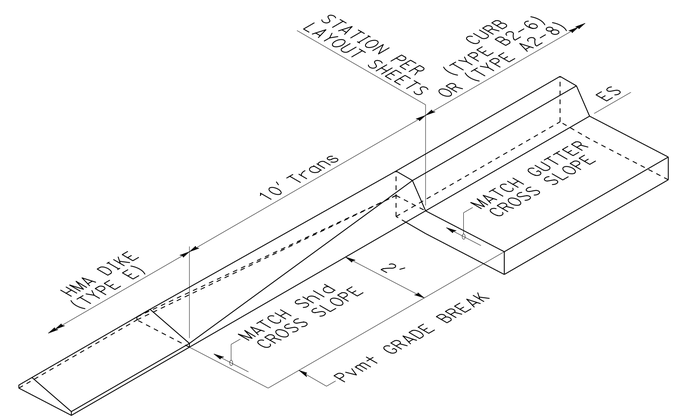

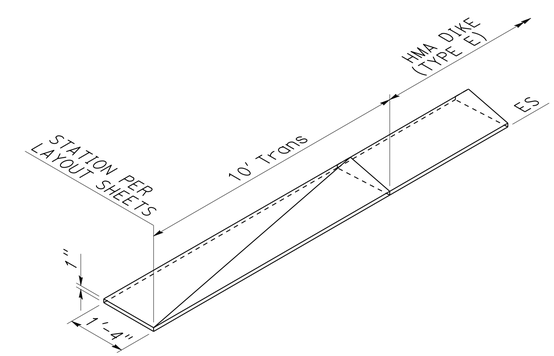

HMA DIKE AND CURB TRANSITIONS

CONSTRUCTION DETAILS

NO SCALE

C-8

STATE OF CALIFORNIA - DEPARTMENT OF TRANSPORTATION
Caltrans
DESIGN

CONSULTANT FUNCTIONAL SUPERVISOR: DAN WEDDELL

CALCULATED-DESIGNED BY: HUA ZHENG
CHECKED BY: YOSUKE ARAI

REVISED BY
DATE REVISED

LAST REVISION 00-00-00
DATE PLOTTED => 09-MAY-2016
TIME PLOTTED => 15:04

Dist	COUNTY	ROUTE	POST MILES TOTAL PROJECT	SHEET No.	TOTAL SHEETS
07	LA	60	R24.4/R25.3	30	384

REGISTERED CIVIL ENGINEER 1-15-16 DATE

3-14-16
PLANS APPROVAL DATE

REGISTERED PROFESSIONAL ENGINEER HANK T. NGUYEN No. C 61227 Exp. 6-30-17 CIVIL STATE OF CALIFORNIA

THE STATE OF CALIFORNIA OR ITS OFFICERS OR AGENTS SHALL NOT BE RESPONSIBLE FOR THE ACCURACY OR COMPLETENESS OF SCANNED COPIES OF THIS PLAN SHEET.

WKE, INC
400 N. TUSTIN AVENUE
SUITE 275
SANTA ANA, CA 92705

CITY OF INDUSTRY
15651 EAST STAFFORD STREET
CITY OF INDUSTRY, CA 91744

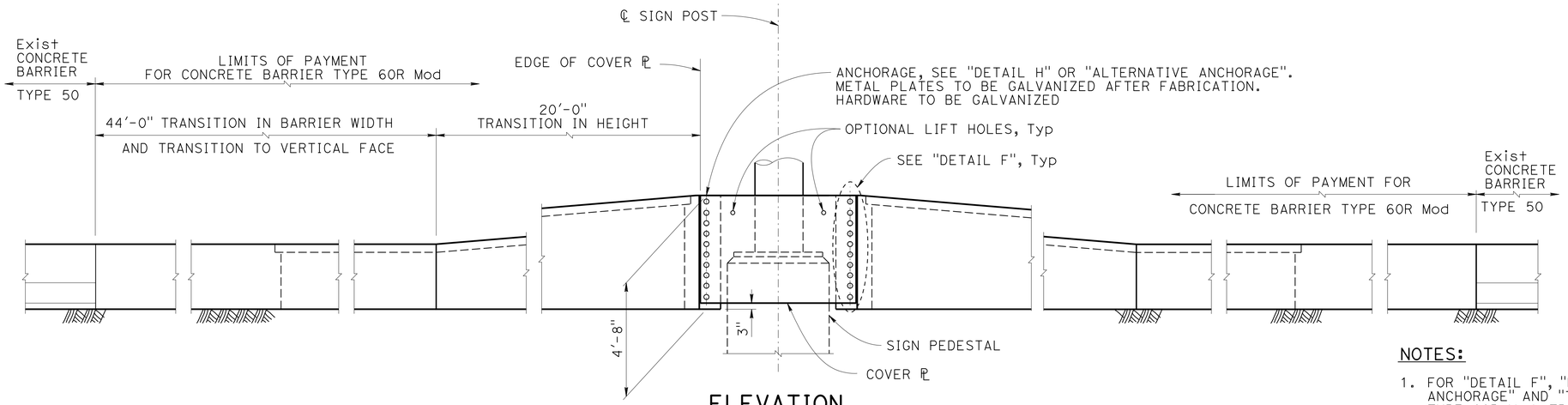

ELEVATION
3/8" = 1'-0"

NOTES:

1. FOR "DETAIL F", "DETAIL G", DETAIL H", "ALTERNATIVE ANCHORAGE" AND "TABLE 1" SEE "CONCRETE BARRIER TYPE 60R Mod, TRANSITION AT SIGN POST - DETAILS NO. 2" SHEET
2. FOR COVER PLATE LENGTH SEE "TABLE 1" ON "TRANSITION AT SIGN POST - DETAILS NO. 2" SHEET
3. ADJUST HEIGHT OF CONCRETE BARRIERS WALL ON LOW SIDE OF OFFSET OR SUPERELEVATED ROADWAYS TO PROVIDE LEVEL GRADE ACROSS TOP OF CONCRETE BARRIER CAP.
4. FOR SIGN POST TYPE AND TOP ELEVATION OF SIGN PEDESTAL SEE SIGN PLAN

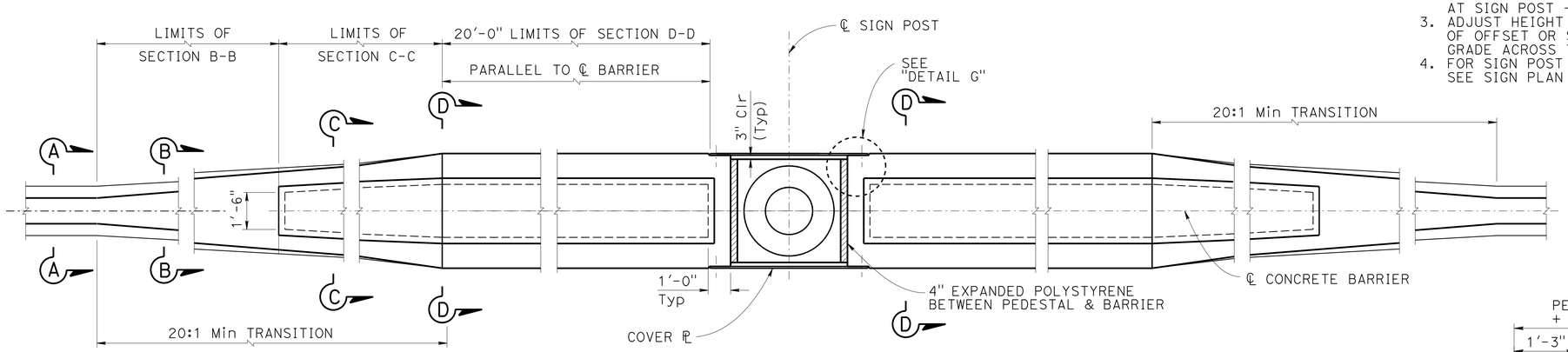

PLAN
3/8" = 1'-0"

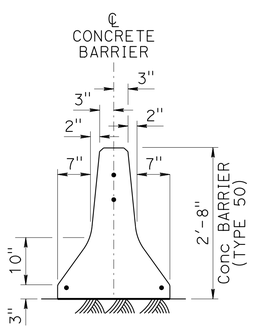

SECTION A-A
3/4" = 1'-0"

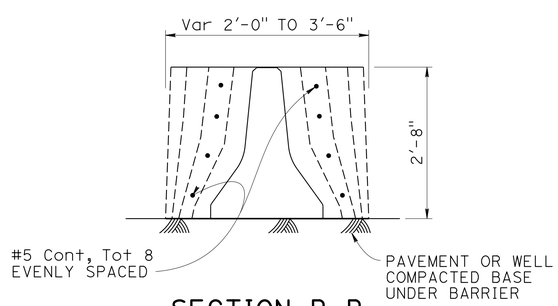

SECTION B-B
3/4" = 1'-0"

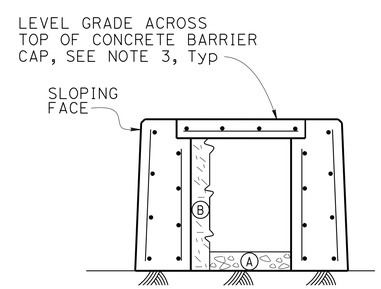

SECTION C-C
3/4" = 1'-0"

NOTES:

1. Contractor options for fill between barrier walls
   - (A) Place 4" PCC at base between barrier walls
   - (B) Place granular material from base to bottom of 4" cap

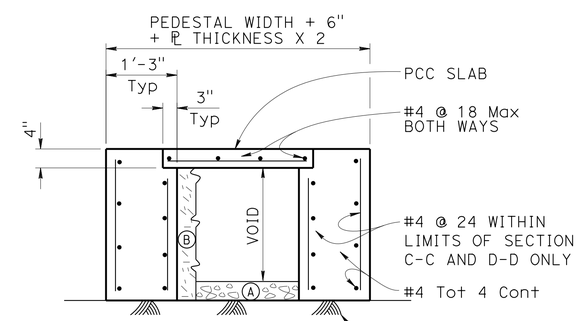

SECTION D-D
3/4" = 1'-0"

CONSTRUCTION DETAILS
SCALE: AS SHOWN

C-9

STATE OF CALIFORNIA - DEPARTMENT OF TRANSPORTATION
Caltrans
DESIGN
CONSULTANT FUNCTIONAL SUPERVISOR: DAN WEDDELL
CALCULATED-DESIGNED BY: HUA ZHENG
CHECKED BY: YOSUKE ARAI
REVISED BY
DATE REVISED

LAST REVISION 00-00-00
DATE PLOTTED => 09-MAY-2016
TIME PLOTTED => 15:04

Dist	COUNTY	ROUTE	POST MILES TOTAL PROJECT	SHEET No.	TOTAL SHEETS
07	LA	60	R24.4/R25.3	31	384

REGISTERED CIVIL ENGINEER 1-15-16 DATE

3-14-16
PLANS APPROVAL DATE

REGISTERED PROFESSIONAL ENGINEER HANK T. NGUYEN No. C 61227 Exp. 6-30-17 CIVIL STATE OF CALIFORNIA

THE STATE OF CALIFORNIA OR ITS OFFICERS OR AGENTS SHALL NOT BE RESPONSIBLE FOR THE ACCURACY OR COMPLETENESS OF SCANNED COPIES OF THIS PLAN SHEET.

WKE, INC
400 N. TUSTIN AVENUE
SUITE 275
SANTA ANA, CA 92705

CITY OF INDUSTRY
15651 EAST STAFFORD STREET
CITY OF INDUSTRY, CA 91744

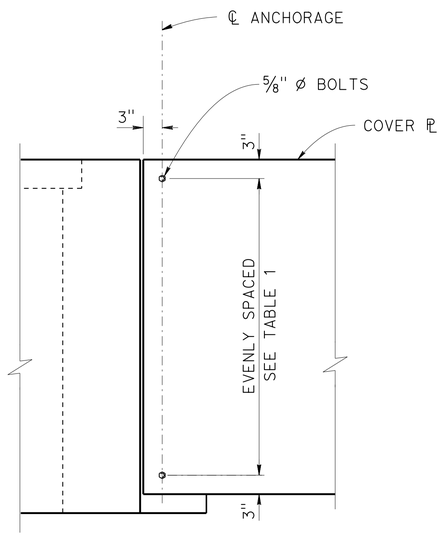

DETAIL F
1" = 1'-0"

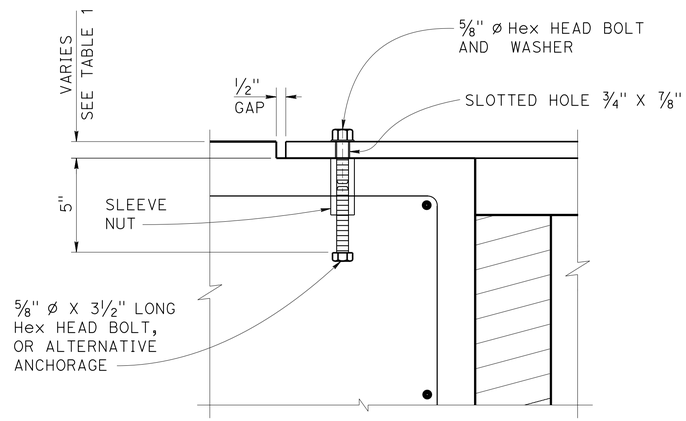

DETAIL H
3" = 1'-0"

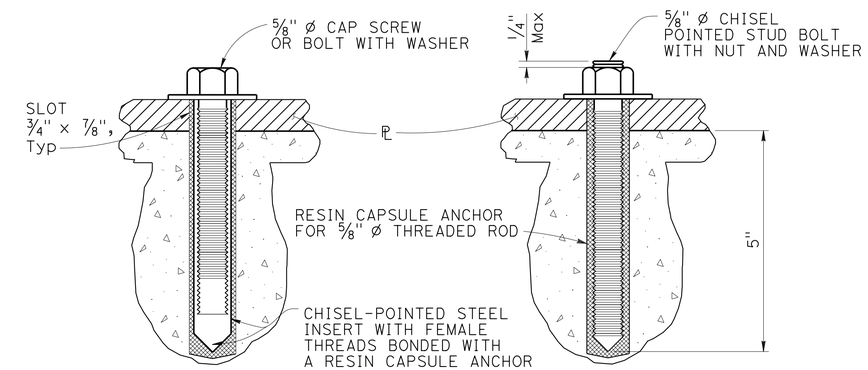

ALTERNATIVE A ALTERNATIVE B

ALTERNATIVE ANCHORAGE
NO SCALE

TABLE 1		
L (ft)	PLATE THICKNESS (in)	TOTAL No. OF BOLTS
8'-6" Max	7/8	10
6'-6" Max	11/16	7
4'-6" Max	7/16	5

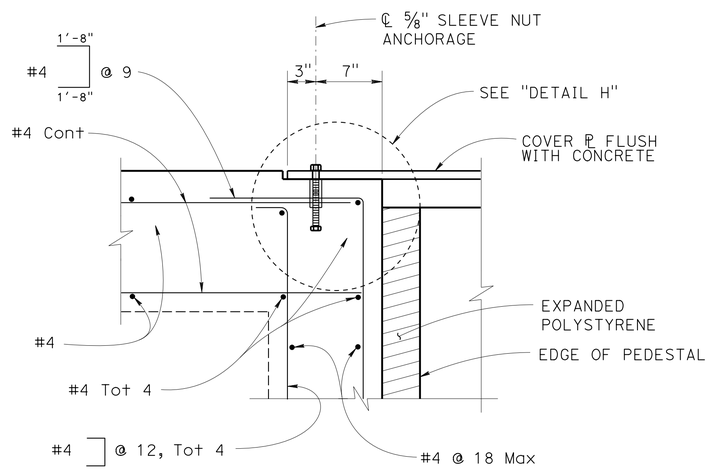

DETAIL G
1 1/2" = 1'-0"

NOTE:

STRUCTURAL STEEL, fy = 50,000 psi
UNLESS OTHERWISE NOTED

CONSTRUCTION DETAILS
SCALE: AS SHOWN

C-10

STATE OF CALIFORNIA - DEPARTMENT OF TRANSPORTATION
DESIGN
Caltrans
CONSULTANT FUNCTIONAL SUPERVISOR: DAN WEDDELL
CALCULATED-DESIGNED BY: YOSUKE ARAI
CHECKED BY: HUA ZHENG
REVISED BY
DATE REVISED

LAST REVISION 00-00-00
DATE PLOTTED => 09-MAY-2016
TIME PLOTTED => 15:04

Dist	COUNTY	ROUTE	POST MILES TOTAL PROJECT	SHEET No.	TOTAL SHEETS
07	LA	60	R24.4/R25.3	32	384

REGISTERED CIVIL ENGINEER 1-15-16 DATE

3-14-16
PLANS APPROVAL DATE

REGISTERED PROFESSIONAL ENGINEER HANK T. NGUYEN No. C 61227 Exp. 6-30-17 CIVIL STATE OF CALIFORNIA

THE STATE OF CALIFORNIA OR ITS OFFICERS OR AGENTS SHALL NOT BE RESPONSIBLE FOR THE ACCURACY OR COMPLETENESS OF SCANNED COPIES OF THIS PLAN SHEET.

WKE, INC
400 N. TUSTIN AVENUE
SUITE 275
SANTA ANA, CA 92705

CITY OF INDUSTRY
15651 EAST STAFFORD STREET
CITY OF INDUSTRY, CA 91744

NOTE:

FOR ACCURATE RIGHT OF WAY DATA, CONTACT RIGHT OF WAY ENGINEERING AT THE DISTRICT OFFICE.

LEGEND:

- REMOVE Conc Pvmt
- REMOVE STAMPED Conc
- REMOVE Conc SW
- REMOVE Conc Dwy
- REMOVE Conc BARRIER
- REMOVE SOUND WALL
- REMOVE Conc

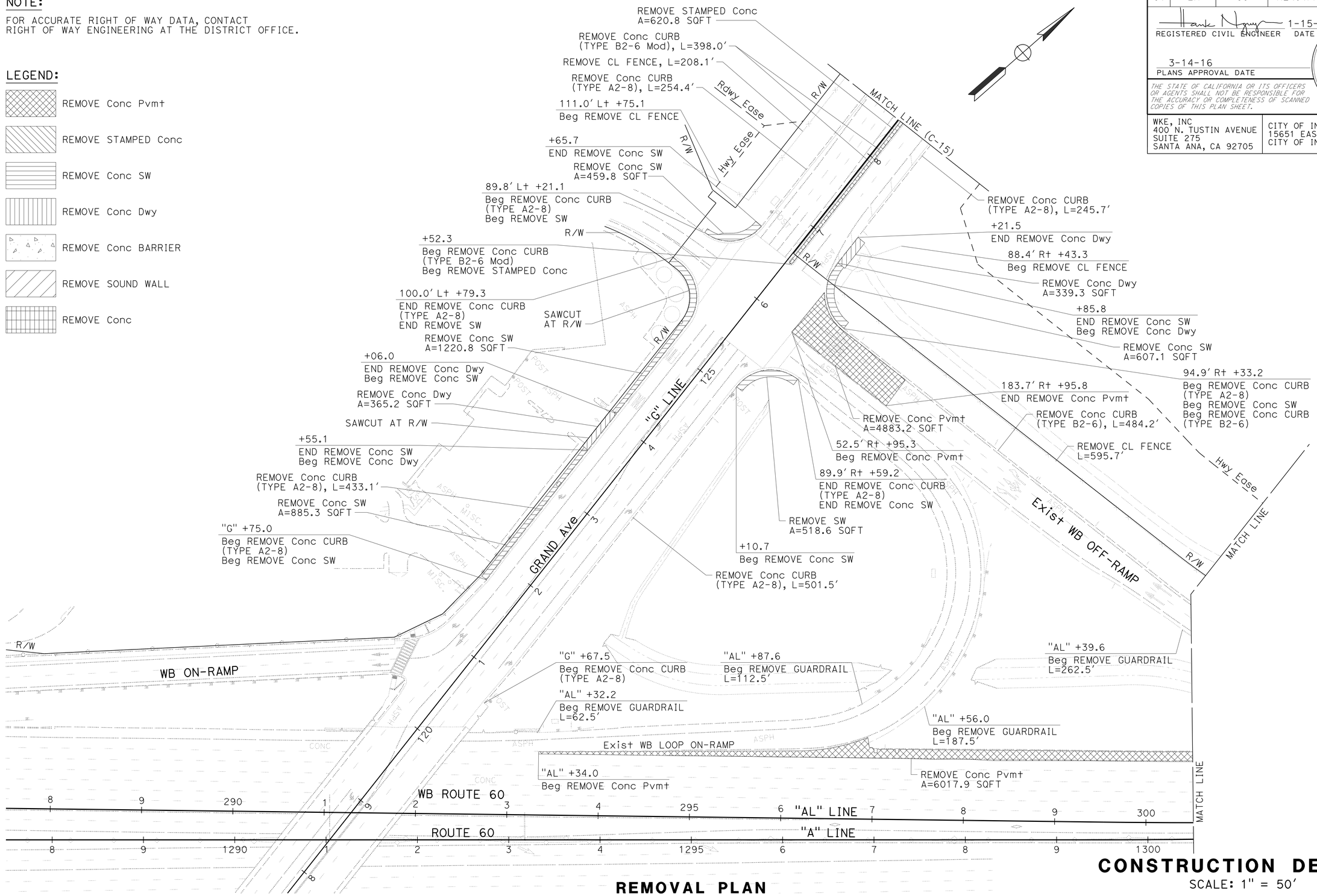

REMOVAL PLAN

CONSTRUCTION DETAILS

SCALE: 1" = 50'

C-11

STATE OF CALIFORNIA - DEPARTMENT OF TRANSPORTATION
Caltrans
DESIGN

CONSULTANT FUNCTIONAL SUPERVISOR: DAN WEDDELL
CALCULATED-DESIGNED BY: HUA ZHENG
CHECKED BY: YOSUKE ARAI
REVISED BY
DATE REVISED

LAST REVISION 00-00-00
DATE PLOTTED => 09-MAY-2016
TIME PLOTTED => 15:04

Dist	COUNTY	ROUTE	POST MILES TOTAL PROJECT	SHEET No.	TOTAL SHEETS
07	LA	60	R24.4/R25.3	33	384

REGISTERED CIVIL ENGINEER 1-15-16 DATE

3-14-16
PLANS APPROVAL DATE

REGISTERED PROFESSIONAL ENGINEER HANK T. NGUYEN No. C 61227 Exp. 6-30-17 CIVIL STATE OF CALIFORNIA

THE STATE OF CALIFORNIA OR ITS OFFICERS OR AGENTS SHALL NOT BE RESPONSIBLE FOR THE ACCURACY OR COMPLETENESS OF SCANNED COPIES OF THIS PLAN SHEET.

WKE, INC
400 N. TUSTIN AVENUE
SUITE 275
SANTA ANA, CA 92705

CITY OF INDUSTRY
15651 EAST STAFFORD STREET
CITY OF INDUSTRY, CA 91744

NOTE:

FOR ACCURATE RIGHT OF WAY DATA, CONTACT
RIGHT OF WAY ENGINEERING AT THE DISTRICT OFFICE.

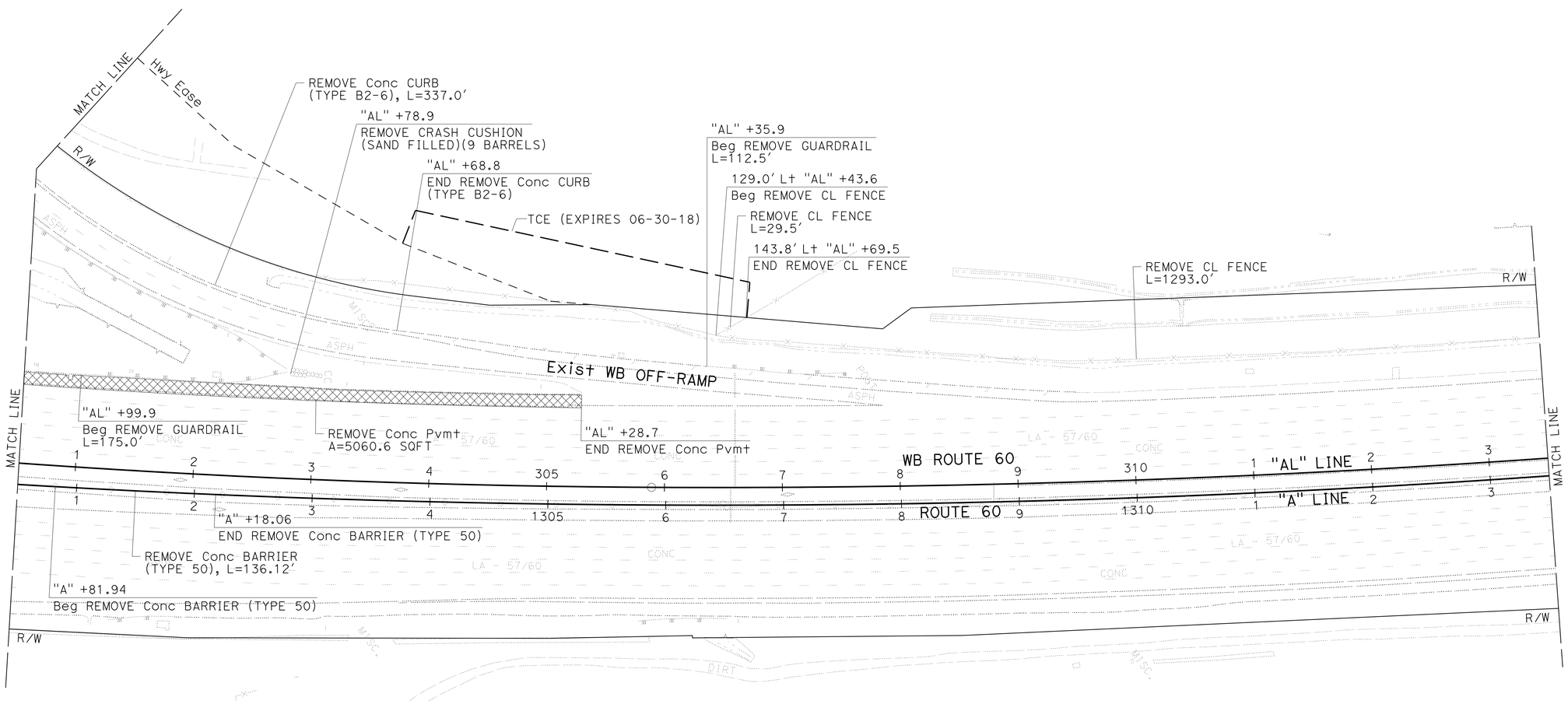

REMOVAL PLAN

CONSTRUCTION DETAILS

SCALE: 1" = 50'

C-12

STATE OF CALIFORNIA - DEPARTMENT OF TRANSPORTATION
Caltrans
DESIGN
CONSULTANT FUNCTIONAL SUPERVISOR: DAN WEDDELL
CALCULATED-DESIGNED BY: HUA ZHENG
CHECKED BY: YOSUKE ARAI
REVISED BY
DATE REVISED

LAST REVISION 00-00-00
DATE PLOTTED => 09-MAY-2016
TIME PLOTTED => 15:04

Dist	COUNTY	ROUTE	POST MILES TOTAL PROJECT	SHEET No.	TOTAL SHEETS
07	LA	60	R24.4/R25.3	34	384

REGISTERED CIVIL ENGINEER 1-15-16 DATE

3-14-16
PLANS APPROVAL DATE

REGISTERED PROFESSIONAL ENGINEER HANK T. NGUYEN No. C 61227 Exp. 6-30-17 CIVIL STATE OF CALIFORNIA

THE STATE OF CALIFORNIA OR ITS OFFICERS OR AGENTS SHALL NOT BE RESPONSIBLE FOR THE ACCURACY OR COMPLETENESS OF SCANNED COPIES OF THIS PLAN SHEET.

WKE, INC
400 N. TUSTIN AVENUE
SUITE 275
SANTA ANA, CA 92705

CITY OF INDUSTRY
15651 EAST STAFFORD STREET
CITY OF INDUSTRY, CA 91744

NOTE:

FOR ACCURATE RIGHT OF WAY DATA, CONTACT
RIGHT OF WAY ENGINEERING AT THE DISTRICT OFFICE.

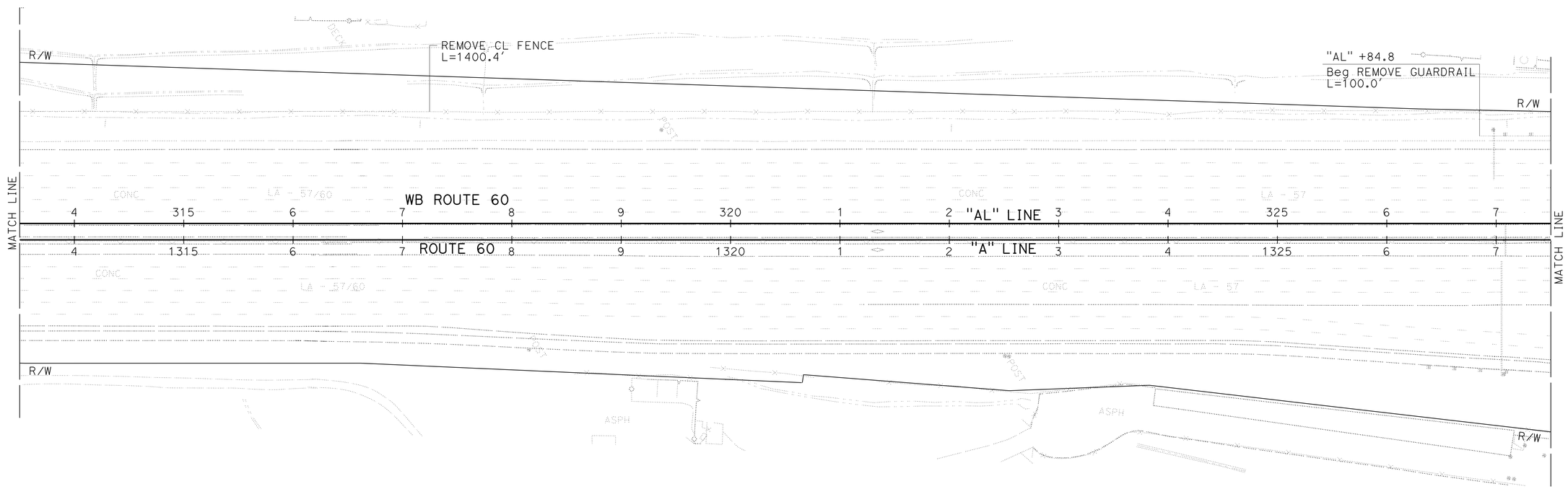

REMOVAL PLAN

CONSTRUCTION DETAILS
SCALE: 1" = 50'

C-13

STATE OF CALIFORNIA - DEPARTMENT OF TRANSPORTATION
Caltrans
DESIGN

CONSULTANT FUNCTIONAL SUPERVISOR
DAN WEDDELL

CALCULATED-DESIGNED BY
HUA ZHENG

CHECKED BY
YOSUKE ARAI

REVISED BY

DATE REVISED

LAST REVISION 00-00-00
DATE PLOTTED => 09-MAY-2016
TIME PLOTTED => 15:04

Dist	COUNTY	ROUTE	POST MILES TOTAL PROJECT	SHEET No.	TOTAL SHEETS
07	LA	60	R24.4/R25.3	35	384

REGISTERED CIVIL ENGINEER 1-15-16 DATE

3-14-16
PLANS APPROVAL DATE

REGISTERED PROFESSIONAL ENGINEER HANK T. NGUYEN No. C 61227 Exp. 6-30-17 CIVIL STATE OF CALIFORNIA

THE STATE OF CALIFORNIA OR ITS OFFICERS OR AGENTS SHALL NOT BE RESPONSIBLE FOR THE ACCURACY OR COMPLETENESS OF SCANNED COPIES OF THIS PLAN SHEET.

WKE, INC
400 N. TUSTIN AVENUE
SUITE 275
SANTA ANA, CA 92705

CITY OF INDUSTRY
15651 EAST STAFFORD STREET
CITY OF INDUSTRY, CA 91744

NOTE:

FOR ACCURATE RIGHT OF WAY DATA, CONTACT RIGHT OF WAY ENGINEERING AT THE DISTRICT OFFICE.

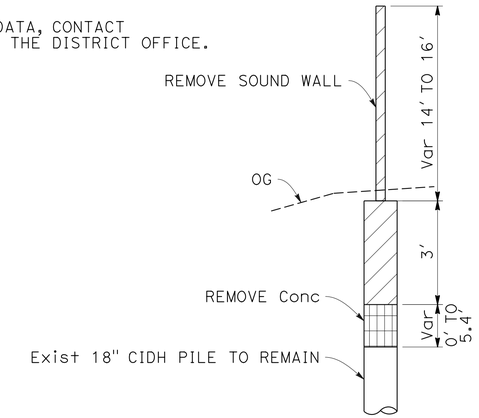

SECTION B-B
NO SCALE

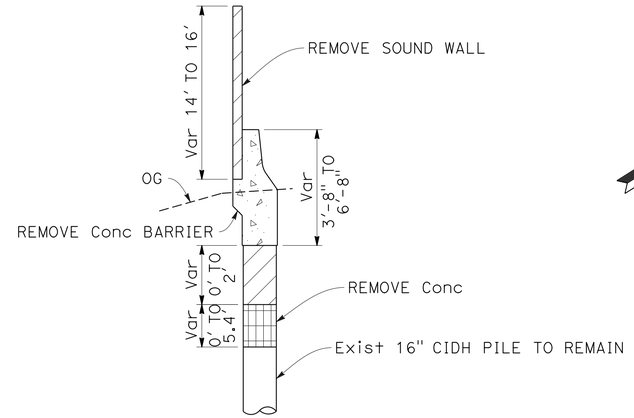

SECTION A-A
NO SCALE

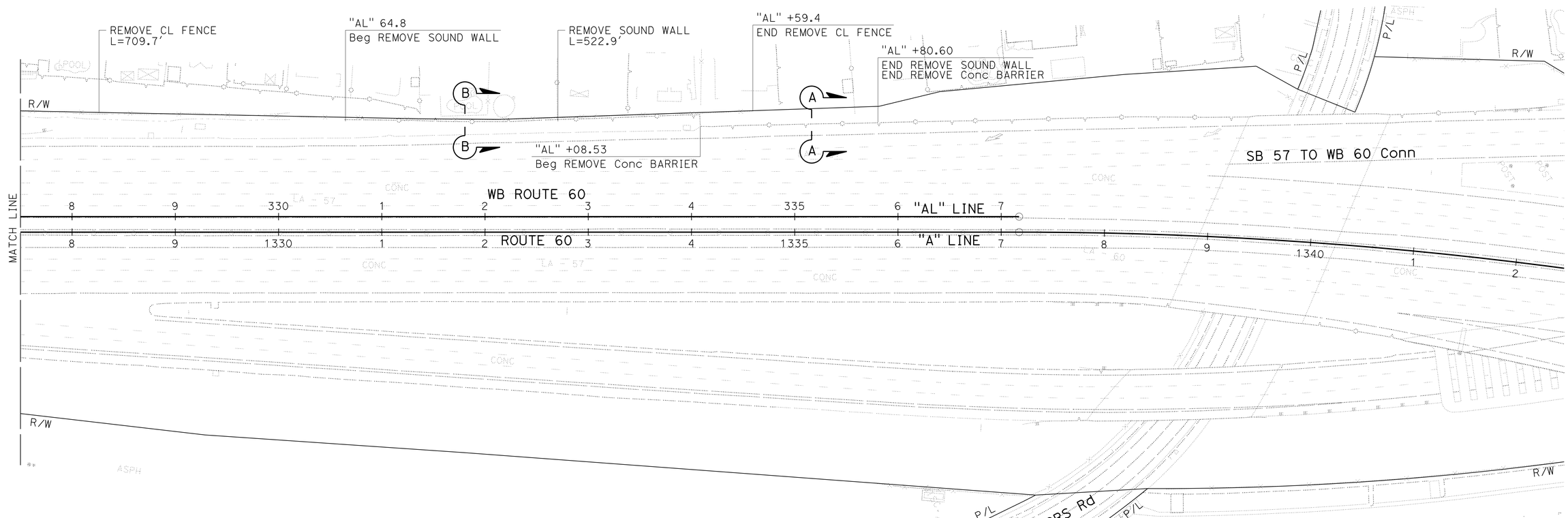

REMOVAL PLAN

CONSTRUCTION DETAILS

SCALE: 1" = 50'

C-14

STATE OF CALIFORNIA - DEPARTMENT OF TRANSPORTATION
Caltrans
DESIGN

CONSULTANT FUNCTIONAL SUPERVISOR: DAN WEDDELL
CALCULATED-DESIGNED BY: YOSUKE ARAI
CHECKED BY: HUA ZHENG
REVISED BY
DATE REVISED

LAST REVISION 00-00-00
DATE PLOTTED => 09-MAY-2016
TIME PLOTTED => 15:04

Dist	COUNTY	ROUTE	POST MILES TOTAL PROJECT	SHEET No.	TOTAL SHEETS
07	LA	60	R24.4/R25.3	36	384

REGISTERED CIVIL ENGINEER 1-15-16 DATE

3-14-16
PLANS APPROVAL DATE

REGISTERED PROFESSIONAL ENGINEER HANK T. NGUYEN No. C 61227 Exp. 6-30-17 CIVIL STATE OF CALIFORNIA

THE STATE OF CALIFORNIA OR ITS OFFICERS OR AGENTS SHALL NOT BE RESPONSIBLE FOR THE ACCURACY OR COMPLETENESS OF SCANNED COPIES OF THIS PLAN SHEET.

WKE, INC
400 N. TUSTIN AVENUE
SUITE 275
SANTA ANA, CA 92705

CITY OF INDUSTRY
15651 EAST STAFFORD STREET
CITY OF INDUSTRY, CA 91744

NOTE:

FOR ACCURATE RIGHT OF WAY DATA, CONTACT RIGHT OF WAY ENGINEERING AT THE DISTRICT OFFICE.

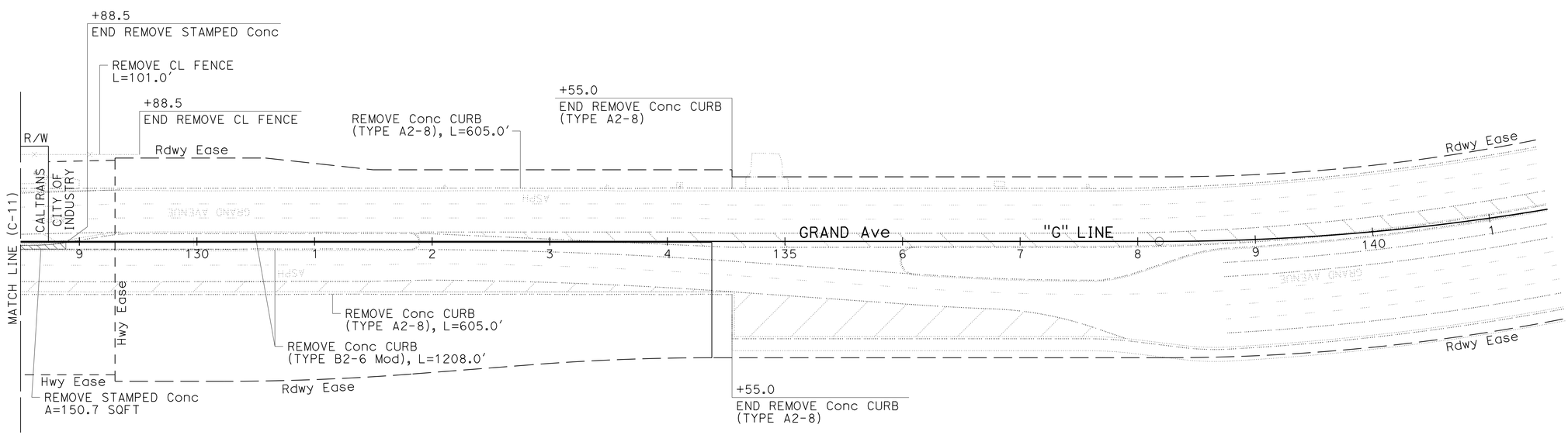

REMOVAL PLAN

CONSTRUCTION DETAILS

SCALE: 1" = 50'

C-15

STATE OF CALIFORNIA - DEPARTMENT OF TRANSPORTATION
Caltrans® DESIGN

CONSULTANT FUNCTIONAL SUPERVISOR: DAN WEDDELL

CALCULATED-DESIGNED BY: HUA ZHENG
CHECKED BY: YOSUKE ARAI

REVISED BY
DATE REVISED

LAST REVISION 00-00-00
DATE PLOTTED => 09-MAY-2016
TIME PLOTTED => 15:04

Dist	COUNTY	ROUTE	POST MILES TOTAL PROJECT	SHEET No.	TOTAL SHEETS
07	LA	60	R24.4/R25.3	37	384

REGISTERED CIVIL ENGINEER 1-15-16 DATE

3-14-16
PLANS APPROVAL DATE

REGISTERED PROFESSIONAL ENGINEER HANK T. NGUYEN No. C 61227 Exp. 6-30-17 CIVIL STATE OF CALIFORNIA

THE STATE OF CALIFORNIA OR ITS OFFICERS OR AGENTS SHALL NOT BE RESPONSIBLE FOR THE ACCURACY OR COMPLETENESS OF SCANNED COPIES OF THIS PLAN SHEET.

WKE, INC
400 N. TUSTIN AVENUE
SUITE 275
SANTA ANA, CA 92705

CITY OF INDUSTRY
15651 EAST STAFFORD STREET
CITY OF INDUSTRY, CA 91744

NOTE:

FOR ACCURATE RIGHT OF WAY DATA, CONTACT RIGHT OF WAY ENGINEERING AT THE DISTRICT OFFICE.

LEGEND:

ROADWAY EXCAVATION (UNSUITABLE MATERIAL)

SECTION A-A
NO SCALE

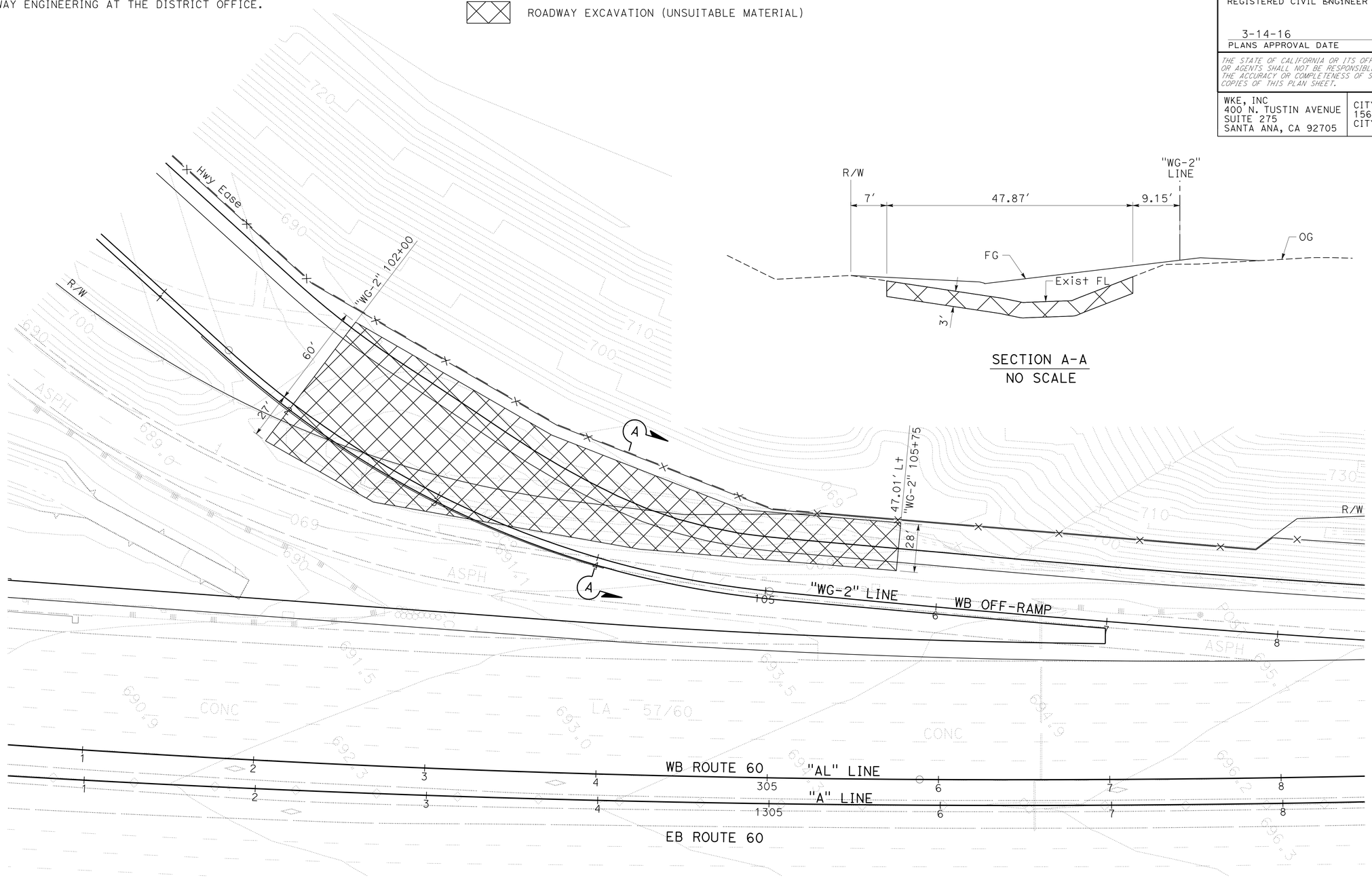

CONSTRUCTION DETAILS
(UNSUITABLE MATERIAL REMOVAL)

SCALE: 1" = 30'

C-16

STATE OF CALIFORNIA - DEPARTMENT OF TRANSPORTATION
Caltrans
DESIGN

CONSULTANT FUNCTIONAL SUPERVISOR: DAN WEDDELL
CALCULATED-DESIGNED BY: HUA ZHENG
CHECKED BY: YOSUKE ARAI
REVISED BY
DATE REVISED

LAST REVISION 00-00-00
DATE PLOTTED => 09-MAY-2016
TIME PLOTTED => 15:04

Dist	COUNTY	ROUTE	POST MILES TOTAL PROJECT	SHEET No.	TOTAL SHEETS
07	LA	60	R24.4/R25.3	38	384

REGISTERED CIVIL ENGINEER 1-15-16 DATE

3-14-16
PLANS APPROVAL DATE

REGISTERED PROFESSIONAL ENGINEER HANK T. NGUYEN No. C 61227 Exp. 6-30-17 CIVIL STATE OF CALIFORNIA

THE STATE OF CALIFORNIA OR ITS OFFICERS OR AGENTS SHALL NOT BE RESPONSIBLE FOR THE ACCURACY OR COMPLETENESS OF SCANNED COPIES OF THIS PLAN SHEET.

WKE, INC
400 N. TUSTIN AVENUE
SUITE 275
SANTA ANA, CA 92705

CITY OF INDUSTRY
15651 EAST STAFFORD STREET
CITY OF INDUSTRY, CA 91744

NOTES:

1. FOR ACCURATE RIGHT OF WAY DATA, CONTACT RIGHT OF WAY ENGINEERING AT THE DISTRICT OFFICE.
2. FOR ROADWAY EXCAVATION (TYPE Z-2)(AERIALLY DEPOSITED LEAD), EXCAVATE TO LIMIT OF GRADING OR RIGHT OF WAY, 50' Max FROM Exist WB ROUTE 60 ES.

LEGEND:

ROADWAY EXCAVATION (TYPE Z-2) (AERIALLY DEPOSITED LEAD) - 6" EXCAVATION BELOW OG

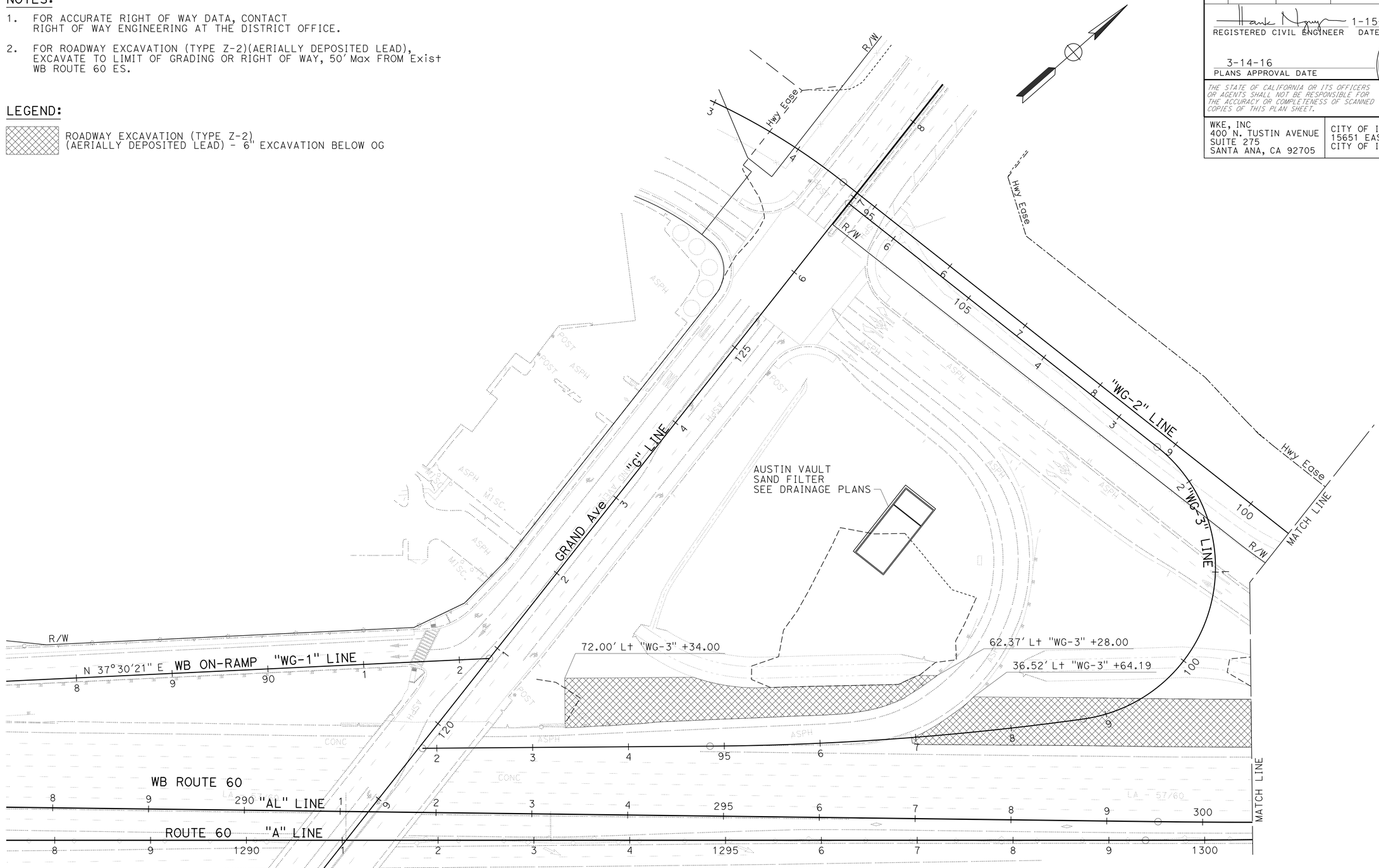

CONSTRUCTION DETAILS
(MATERIAL WITH AERIALLY DEPOSITED LEAD)

SCALE: 1" = 50'

C-17

STATE OF CALIFORNIA - DEPARTMENT OF TRANSPORTATION
Caltrans DESIGN

CONSULTANT FUNCTIONAL SUPERVISOR: DAN WEDDELL
CALCULATED-DESIGNED BY: HUA ZHENG
CHECKED BY: YOSUKE ARAI
REVISED BY
DATE REVISED

LAST REVISION 00-00-00
DATE PLOTTED => 09-MAY-2016
TIME PLOTTED => 15:05

Dist	COUNTY	ROUTE	POST MILES TOTAL PROJECT	SHEET No.	TOTAL SHEETS
07	LA	60	R24.4/R25.3	39	384

REGISTERED CIVIL ENGINEER 1-15-16 DATE

3-14-16
PLANS APPROVAL DATE

REGISTERED PROFESSIONAL ENGINEER HANK T. NGUYEN No. C 61227 Exp. 6-30-17 CIVIL STATE OF CALIFORNIA

THE STATE OF CALIFORNIA OR ITS OFFICERS OR AGENTS SHALL NOT BE RESPONSIBLE FOR THE ACCURACY OR COMPLETENESS OF SCANNED COPIES OF THIS PLAN SHEET.

WKE, INC
400 N. TUSTIN AVENUE
SUITE 275
SANTA ANA, CA 92705

CITY OF INDUSTRY
15651 EAST STAFFORD STREET
CITY OF INDUSTRY, CA 91744

NOTES:

1. FOR ACCURATE RIGHT OF WAY DATA, CONTACT RIGHT OF WAY ENGINEERING AT THE DISTRICT OFFICE.
2. FOR ROADWAY EXCAVATION (TYPE Z-2)(AERIALLY DEPOSITED LEAD), EXCAVATE TO LIMIT OF GRADING OR RIGHT OF WAY, 50' Max FROM Exist WB ROUTE 60 ES.

LEGEND:

ROADWAY EXCAVATION (TYPE Z-2)
(AERIALLY DEPOSITED LEAD) - 6" EXCAVATION BELOW OG

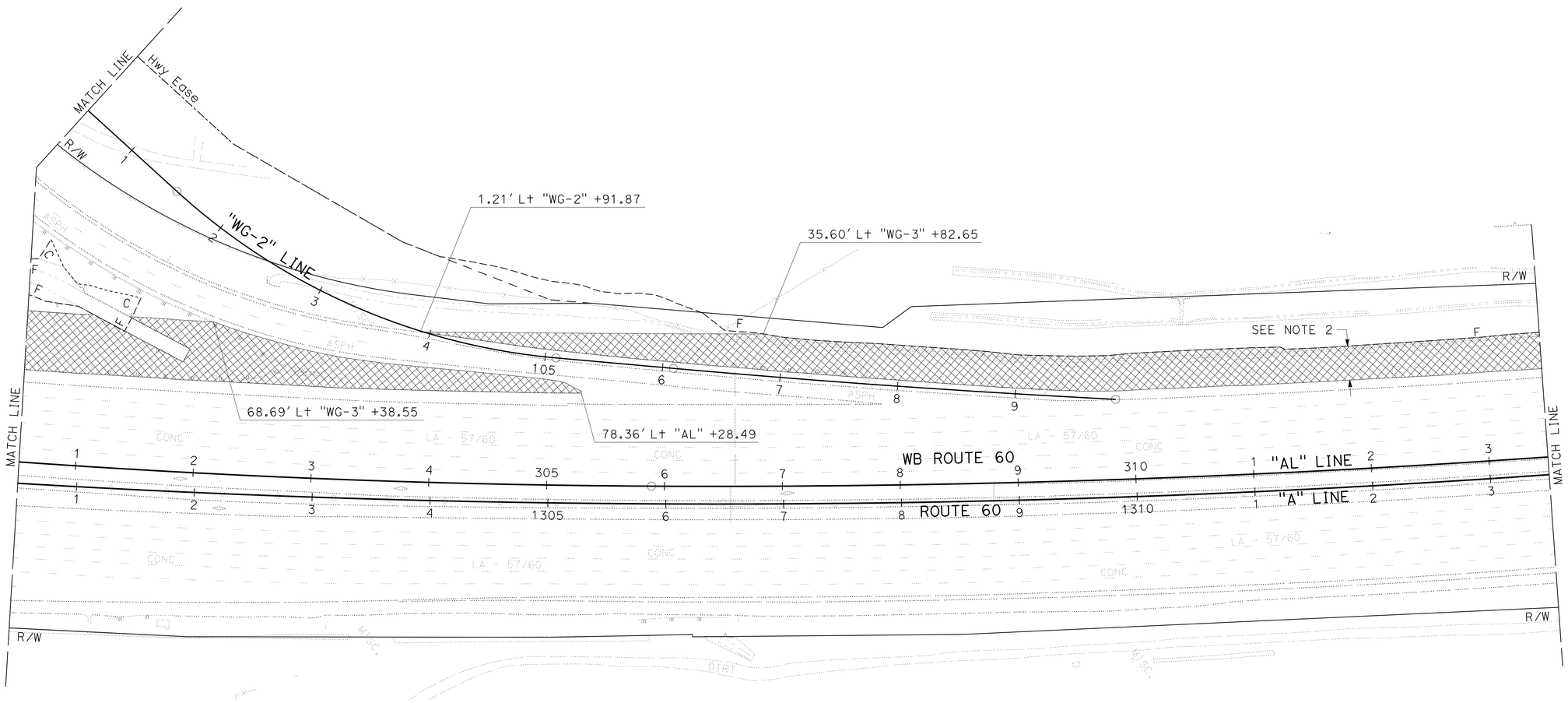

CONSTRUCTION DETAILS
(MATERIAL WITH AERIALLY DEPOSITED LEAD)

SCALE: 1" = 50'

C-18

REVISED BY | DATE REVISED
HUA ZHENG | YOSUKE ARAI
CALCULATED-DESIGNED BY | CHECKED BY
CONSULTANT FUNCTIONAL SUPERVISOR: DAN WEDDELL
STATE OF CALIFORNIA - DEPARTMENT OF TRANSPORTATION
Caltrans
DESIGN

LAST REVISION 00-00-00 | DATE PLOTTED => 09-MAY-2016 | TIME PLOTTED => 15:05

Dist	COUNTY	ROUTE	POST MILES TOTAL PROJECT	SHEET No.	TOTAL SHEETS
07	LA	60	R24.4/R25.3	40	384

REGISTERED CIVIL ENGINEER 1-15-16 DATE

3-14-16
PLANS APPROVAL DATE

REGISTERED PROFESSIONAL ENGINEER HANK T. NGUYEN No. C 61227 Exp. 6-30-17 CIVIL STATE OF CALIFORNIA

THE STATE OF CALIFORNIA OR ITS OFFICERS OR AGENTS SHALL NOT BE RESPONSIBLE FOR THE ACCURACY OR COMPLETENESS OF SCANNED COPIES OF THIS PLAN SHEET.

WKE, INC
400 N. TUSTIN AVENUE
SUITE 275
SANTA ANA, CA 92705

CITY OF INDUSTRY
15651 EAST STAFFORD STREET
CITY OF INDUSTRY, CA 91744

NOTES:

1. FOR ACCURATE RIGHT OF WAY DATA, CONTACT RIGHT OF WAY ENGINEERING AT THE DISTRICT OFFICE.
2. FOR ROADWAY EXCAVATION (TYPE Z-2)(AERIALLY DEPOSITED LEAD), EXCAVATE TO LIMIT OF GRADING OR RIGHT OF WAY, 50' Max FROM Exist WB ROUTE 60 ES.

LEGEND:

ROADWAY EXCAVATION (TYPE Z-2)
(AERIALLY DEPOSITED LEAD) - 6" EXCAVATION BELOW OG

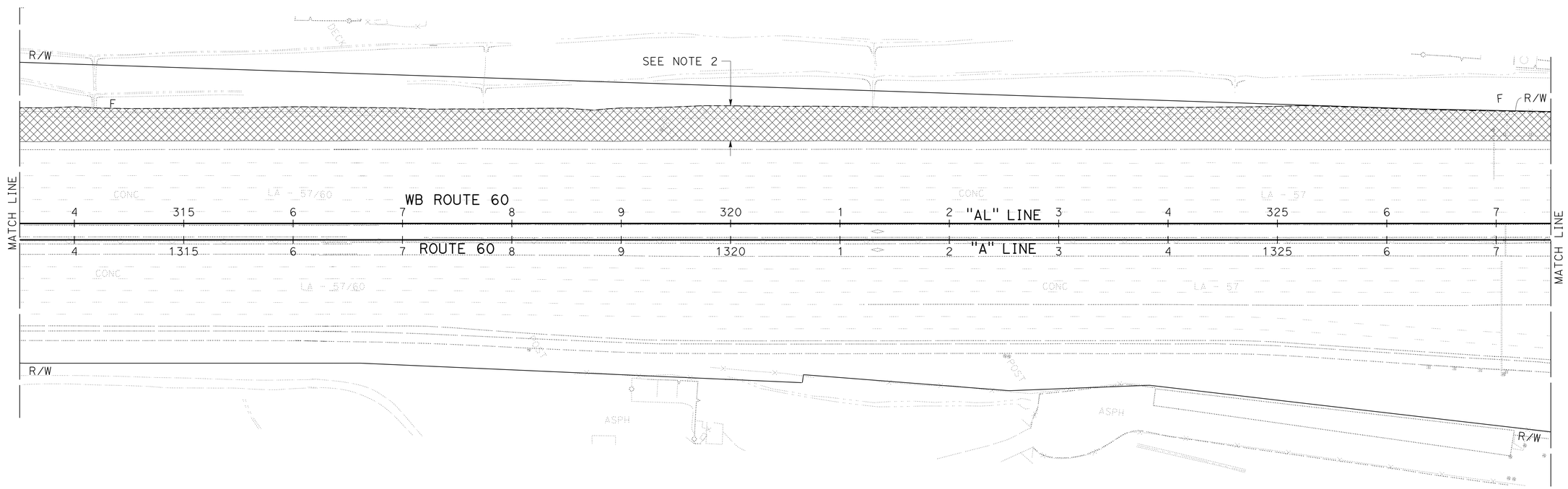

CONSTRUCTION DETAILS
(MATERIAL WITH AERIALLY DEPOSITED LEAD)

SCALE: 1" = 50'

C-19

STATE OF CALIFORNIA - DEPARTMENT OF TRANSPORTATION
Caltrans® DESIGN

CONSULTANT FUNCTIONAL SUPERVISOR: DAN WEDDELL
CALCULATED-DESIGNED BY: HUA ZHENG
CHECKED BY: YOSUKE ARAI
REVISED BY
DATE REVISED

LAST REVISION 00-00-00
DATE PLOTTED => 09-MAY-2016
TIME PLOTTED => 15:05

Dist	COUNTY	ROUTE	POST MILES TOTAL PROJECT	SHEET No.	TOTAL SHEETS
07	LA	60	R24.4/R25.3	41	384

REGISTERED CIVIL ENGINEER 1-15-16 DATE

3-14-16
PLANS APPROVAL DATE

REGISTERED PROFESSIONAL ENGINEER HANK T. NGUYEN No. C 61227 Exp. 6-30-17 CIVIL STATE OF CALIFORNIA

THE STATE OF CALIFORNIA OR ITS OFFICERS OR AGENTS SHALL NOT BE RESPONSIBLE FOR THE ACCURACY OR COMPLETENESS OF SCANNED COPIES OF THIS PLAN SHEET.

WKE, INC
400 N. TUSTIN AVENUE
SUITE 275
SANTA ANA, CA 92705

CITY OF INDUSTRY
15651 EAST STAFFORD STREET
CITY OF INDUSTRY, CA 91744

NOTES:

1. FOR ACCURATE RIGHT OF WAY DATA, CONTACT RIGHT OF WAY ENGINEERING AT THE DISTRICT OFFICE.
2. FOR ROADWAY EXCAVATION (TYPE Z-2)(AERIALLY DEPOSITED LEAD), EXCAVATE TO LIMIT OF GRADING OR RIGHT OF WAY, 50′ Max FROM Exist WB ROUTE 60 ES.
3. "AL" +60.60 TO "AL" +80.60
   FOR EXCAVATION WITHIN RETAINING WALL WORK LIMITS, SEE STRUCTURE PLANS.

LEGEND:

ROADWAY EXCAVATION (TYPE Z-2) (AERIALLY DEPOSITED LEAD) - 6" EXCAVATION BELOW OG

ROADWAY EXCAVATION (TYPE Z-2) (AERIALLY DEPOSITED LEAD) - 2.5′ EXCAVATION BELOW OG

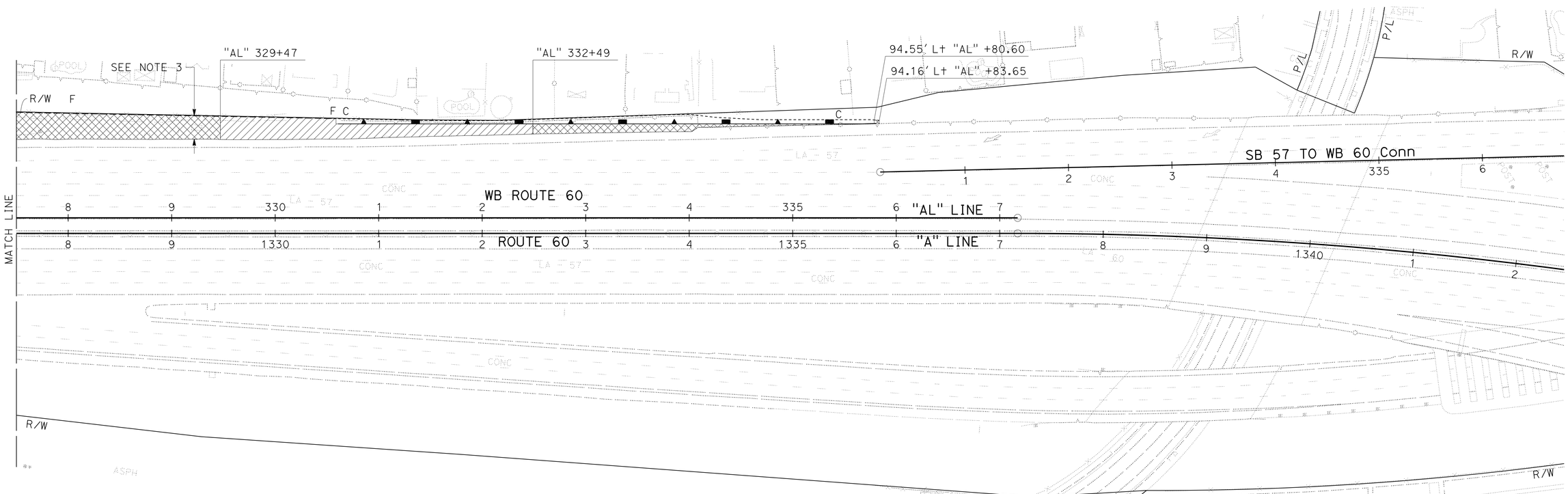

CONSTRUCTION DETAILS
(MATERIAL WITH AERIALLY DEPOSITED LEAD)

SCALE: 1" = 50′

C-20

STATE OF CALIFORNIA - DEPARTMENT OF TRANSPORTATION
Caltrans® DESIGN

CONSULTANT FUNCTIONAL SUPERVISOR: DAN WEDDELL
CALCULATED-DESIGNED BY: HUA ZHENG
CHECKED BY: YOSUKE ARAI
REVISED BY
DATE REVISED

LAST REVISION 00-00-00
DATE PLOTTED => 09-MAY-2016
TIME PLOTTED => 15:05

Dist	COUNTY	ROUTE	POST MILES TOTAL PROJECT	SHEET No.	TOTAL SHEETS
07	LA	60	R24.4/R25.3	42	384

REGISTERED CIVIL ENGINEER 1-15-16 DATE

3-14-16
PLANS APPROVAL DATE

REGISTERED PROFESSIONAL ENGINEER MICHAEL HYNES No. C 67872 Exp. 06-30-17 CIVIL STATE OF CALIFORNIA

THE STATE OF CALIFORNIA OR ITS OFFICERS OR AGENTS SHALL NOT BE RESPONSIBLE FOR THE ACCURACY OR COMPLETENESS OF SCANNED COPIES OF THIS PLAN SHEET.

WKE, INC
400 N. TUSTIN AVENUE
SUITE 275
SANTA ANA, CA 92705

CITY OF INDUSTRY
15651 EAST STAFFORD STREET
CITY OF INDUSTRY, CA 91744

LEGEND:

Temp HYDRAULIC MULCH

Temp EROSION CONTROL BLANKET

ABBREVIATIONS:

TSF	Temp SILT FENCE
TFR	Temp FIBER ROLL
THM	Temp HYDRAULIC MULCH
ECB	EROSION CONTROL BLANKET

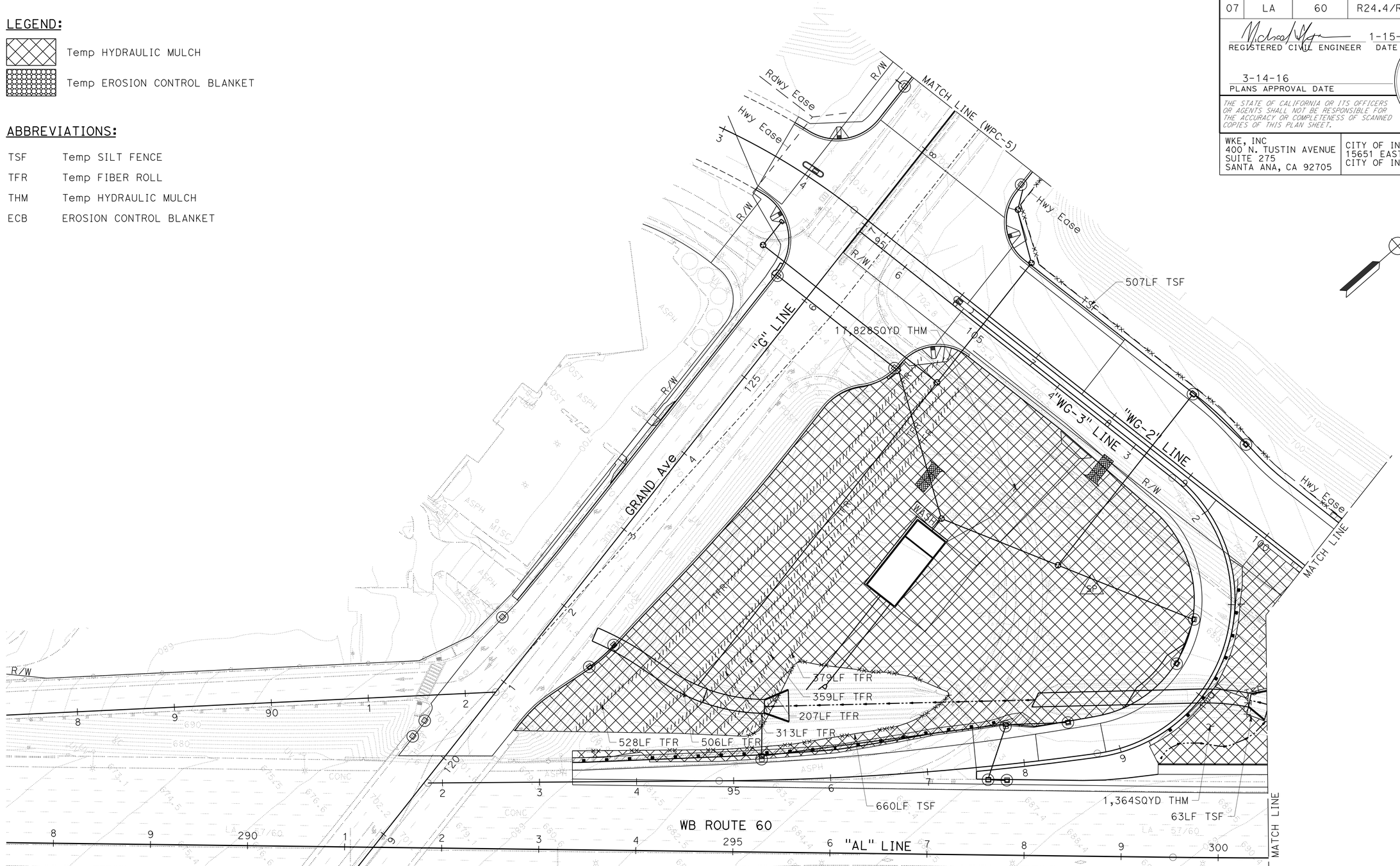

TEMPORARY WATER POLLUTION CONTROL PLAN

SCALE: 1" = 50'

WPC-1

APPROVED FOR RETAINING WALL WORK ONLY

STATE OF CALIFORNIA - DEPARTMENT OF TRANSPORTATION
Caltrans®
DESIGN

CONSULTANT FUNCTIONAL SUPERVISOR: MICHAEL HYNES
CALCULATED-DESIGNED BY: JOSEPH CARBAJAL
CHECKED BY: MICHAEL HYNES
REVISED BY
DATE REVISED

LAST REVISION 00-00-00
DATE PLOTTED => 09-MAY-2016
TIME PLOTTED => 15:05

Dist	COUNTY	ROUTE	POST MILES TOTAL PROJECT	SHEET No.	TOTAL SHEETS
07	LA	60	R24.4/R25.3	43	384

REGISTERED CIVIL ENGINEER 1-15-16 DATE

3-14-16
PLANS APPROVAL DATE

REGISTERED PROFESSIONAL ENGINEER MICHAEL HYNES No. C 67872 Exp. 06-30-17 CIVIL STATE OF CALIFORNIA

THE STATE OF CALIFORNIA OR ITS OFFICERS OR AGENTS SHALL NOT BE RESPONSIBLE FOR THE ACCURACY OR COMPLETENESS OF SCANNED COPIES OF THIS PLAN SHEET.

WKE, INC
400 N. TUSTIN AVENUE
SUITE 275
SANTA ANA, CA 92705

CITY OF INDUSTRY
15651 EAST STAFFORD STREET
CITY OF INDUSTRY, CA 91744

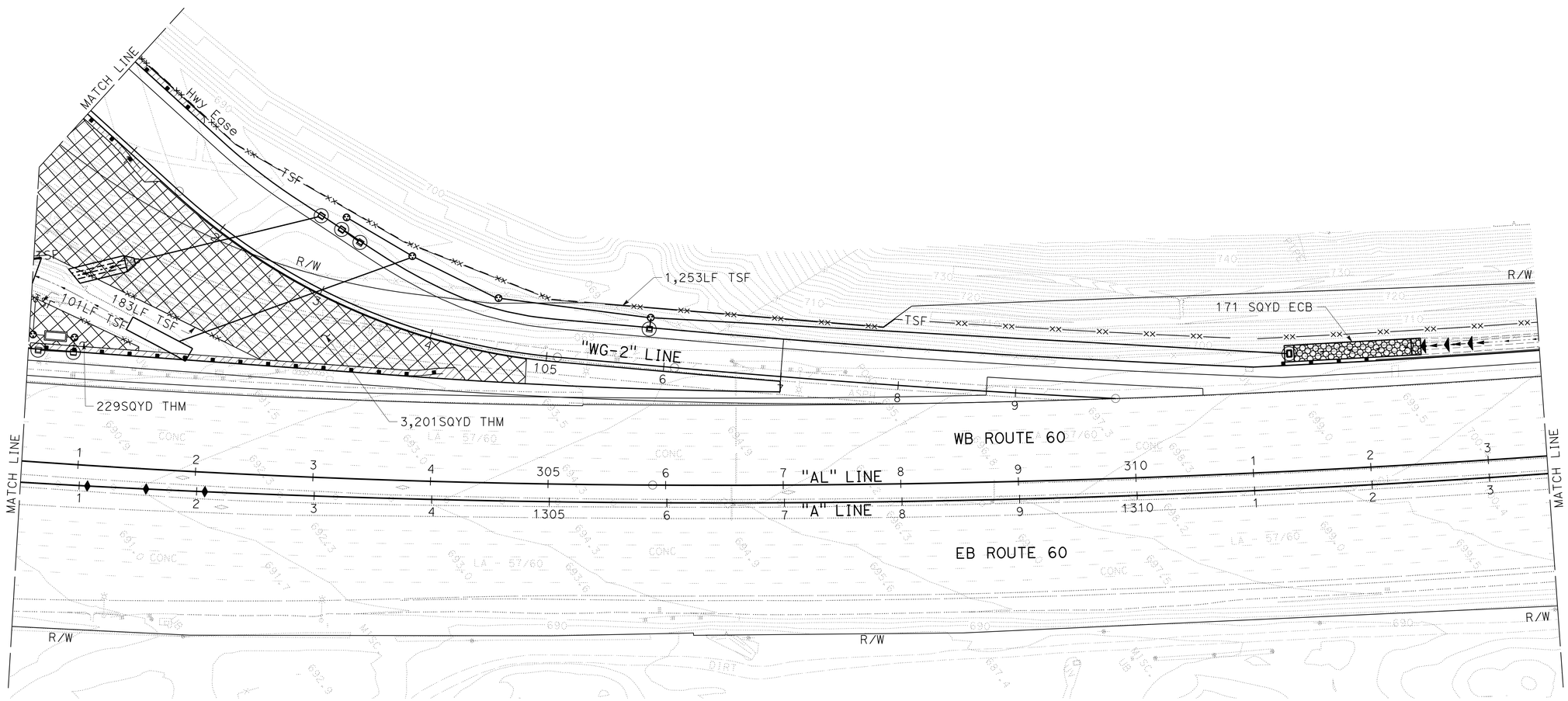

TEMPORARY WATER POLLUTION CONTROL PLAN

SCALE: 1" = 50'

WPC-2

APPROVED FOR TEMPORARY WATER POLLUTION CONTROL WORK ONLY

STATE OF CALIFORNIA - DEPARTMENT OF TRANSPORTATION
Caltrans® DESIGN
CONSULTANT FUNCTIONAL SUPERVISOR MICHAEL HYNES
CALCULATED-DESIGNED BY JOSEPH CARBAJAL
CHECKED BY MICHAEL HYNES
REVISED BY
DATE REVISED

LAST REVISION 00-00-00
DATE PLOTTED => 09-MAY-2016
TIME PLOTTED => 15:05

Dist	COUNTY	ROUTE	POST MILES TOTAL PROJECT	SHEET No.	TOTAL SHEETS
07	LA	60	R24.4/R25.3	44	384

REGISTERED CIVIL ENGINEER 1-15-16 DATE

3-14-16
PLANS APPROVAL DATE

REGISTERED PROFESSIONAL ENGINEER
MICHAEL HYNES
No. C 67872
Exp. 06-30-17
CIVIL
STATE OF CALIFORNIA

THE STATE OF CALIFORNIA OR ITS OFFICERS OR AGENTS SHALL NOT BE RESPONSIBLE FOR THE ACCURACY OR COMPLETENESS OF SCANNED COPIES OF THIS PLAN SHEET.

WKE, INC
400 N. TUSTIN AVENUE
SUITE 275
SANTA ANA, CA 92705

CITY OF INDUSTRY
15651 EAST STAFFORD STREET
CITY OF INDUSTRY, CA 91744

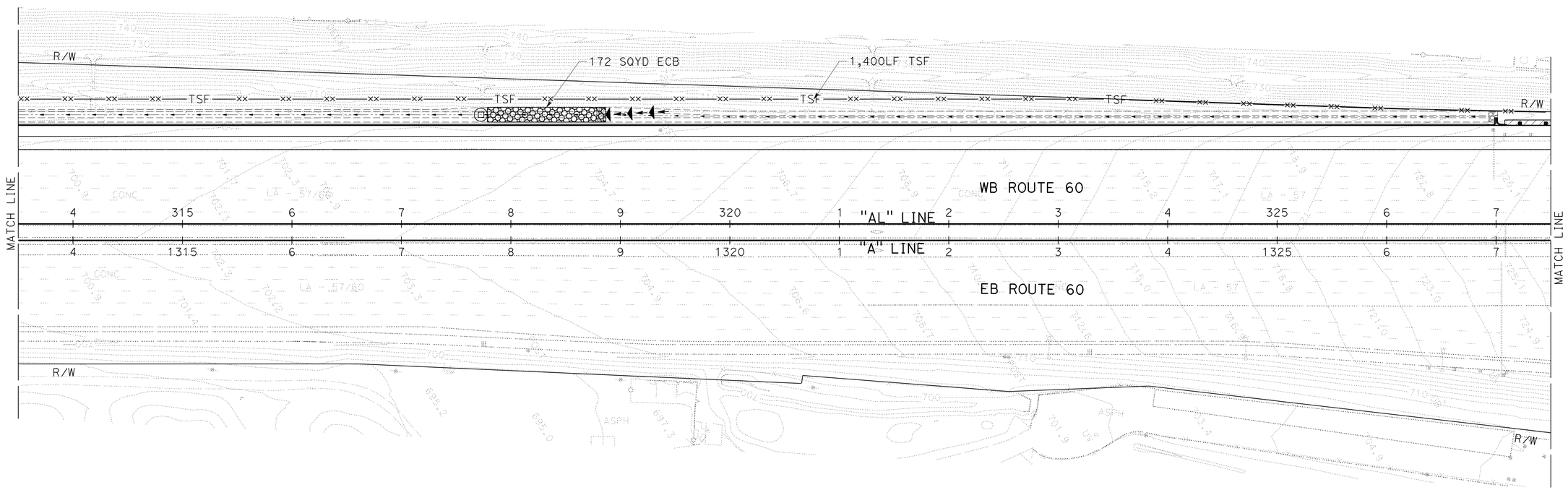

TEMPORARY WATER POLLUTION CONTROL PLAN

SCALE: 1" = 50'

WPC-3

APPROVED FOR TEMPORARY WATER POLLUTION CONTROL WORK ONLY

STATE OF CALIFORNIA - DEPARTMENT OF TRANSPORTATION
Caltrans
DESIGN

CONSULTANT FUNCTIONAL SUPERVISOR: MICHAEL HYNES
CALCULATED-DESIGNED BY: JOSEPH CARBAJAL
CHECKED BY: MICHAEL HYNES
REVISED BY
DATE REVISED

LAST REVISION DATE PLOTTED => 09-MAY-2016
TIME PLOTTED => 15:05

09-MAY-2016 15:05

Dist	COUNTY	ROUTE	POST MILES TOTAL PROJECT	SHEET No.	TOTAL SHEETS
07	LA	60	R24.4/R25.3	45	384

REGISTERED CIVIL ENGINEER 1-15-16 DATE

3-14-16
PLANS APPROVAL DATE

REGISTERED PROFESSIONAL ENGINEER
MICHAEL HYNES
No. C 67872
Exp. 06-30-17
CIVIL
STATE OF CALIFORNIA

THE STATE OF CALIFORNIA OR ITS OFFICERS OR AGENTS SHALL NOT BE RESPONSIBLE FOR THE ACCURACY OR COMPLETENESS OF SCANNED COPIES OF THIS PLAN SHEET.

WKE, INC
400 N. TUSTIN AVENUE
SUITE 275
SANTA ANA, CA 92705

CITY OF INDUSTRY
15651 EAST STAFFORD STREET
CITY OF INDUSTRY, CA 91744

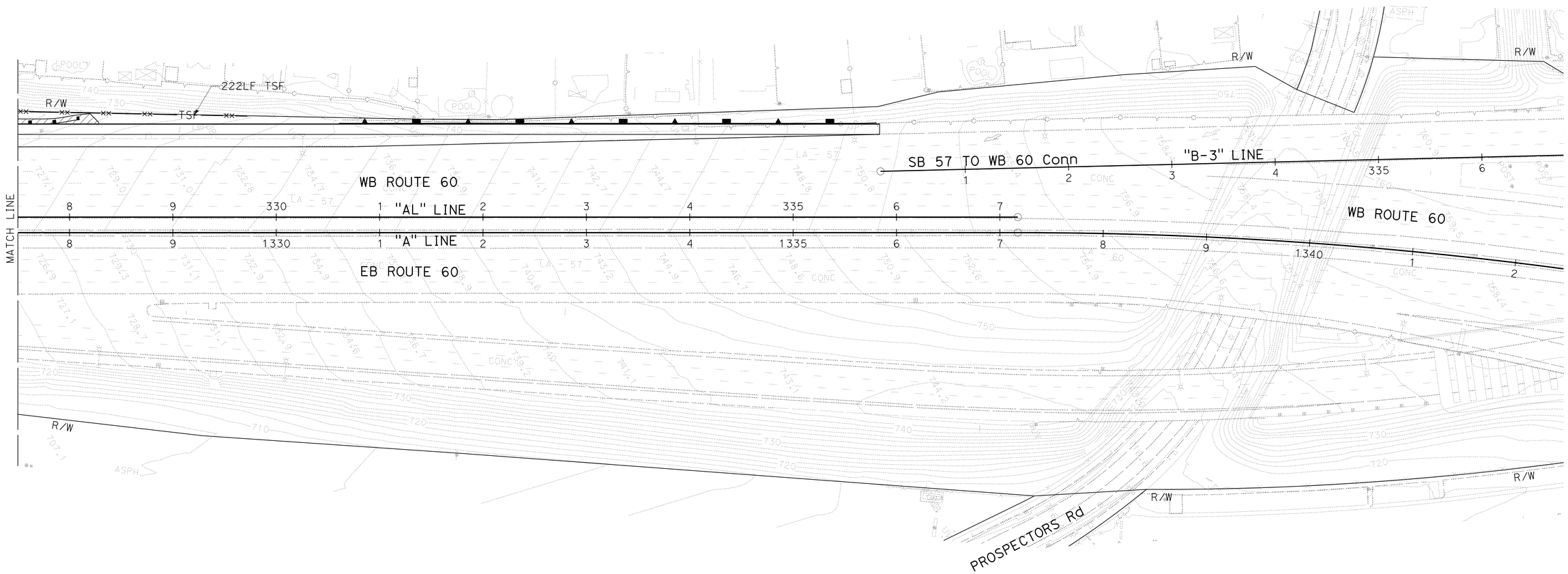

TEMPORARY WATER POLLUTION CONTROL PLAN

SCALE: 1" = 50'

WPC-4

APPROVED FOR TEMPORARY WATER POLLUTION CONTROL WORK ONLY

STATE OF CALIFORNIA - DEPARTMENT OF TRANSPORTATION
Caltrans
DESIGN

CONSULTANT FUNCTIONAL SUPERVISOR: MICHAEL HYNES
CALCULATED-DESIGNED BY: JOSEPH CARBAJAL
CHECKED BY: MICHAEL HYNES
REVISED BY
DATE REVISED

LAST REVISION 00-00-00
DATE PLOTTED => 09-MAY-2016
TIME PLOTTED => 15:05

09-MAY-2016 15:05

BORDER LAST REVISED 7/2/2010
USERNAME => s125624
DGN FILE => 727911gb004.dgn
RELATIVE BORDER SCALE IS IN INCHES 0 1 2 3
UNIT 1823
PROJECT NUMBER & PHASE 07150000751

Dist	COUNTY	ROUTE	POST MILES TOTAL PROJECT	SHEET No.	TOTAL SHEETS
07	LA	60	R24.4/R25.3	46	384

REGISTERED CIVIL ENGINEER 1-15-16 DATE

3-14-16
PLANS APPROVAL DATE

REGISTERED PROFESSIONAL ENGINEER
MICHAEL HYNES
No. C 67872
Exp. 06-30-17
CIVIL
STATE OF CALIFORNIA

THE STATE OF CALIFORNIA OR ITS OFFICERS OR AGENTS SHALL NOT BE RESPONSIBLE FOR THE ACCURACY OR COMPLETENESS OF SCANNED COPIES OF THIS PLAN SHEET.

WKE, INC
400 N. TUSTIN AVENUE
SUITE 275
SANTA ANA, CA 92705

CITY OF INDUSTRY
15651 EAST STAFFORD STREET
CITY OF INDUSTRY, CA 91744

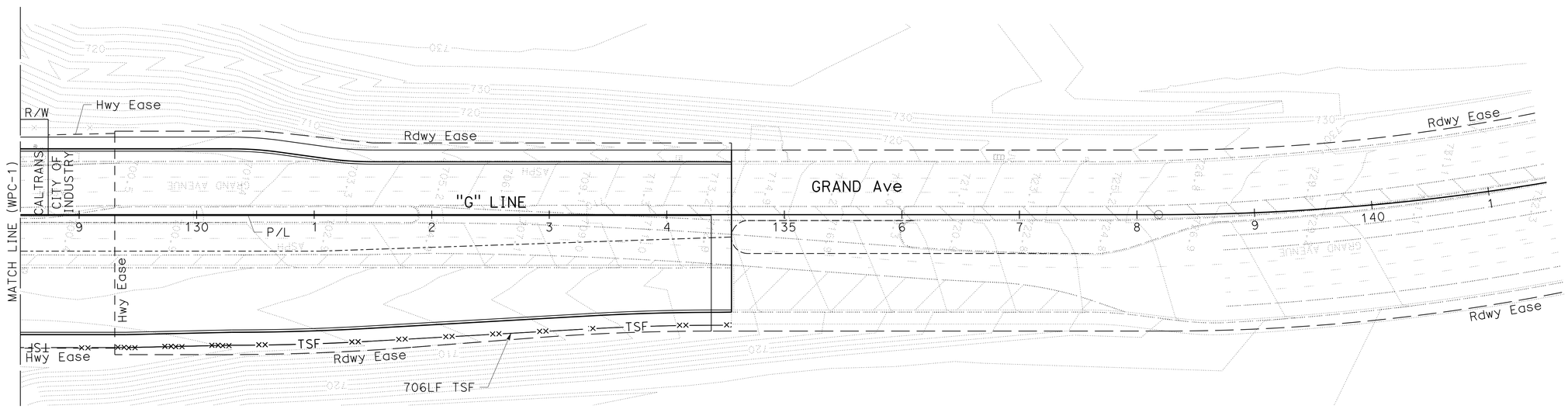

TEMPORARY WATER POLLUTION CONTROL PLAN

SCALE: 1" = 50'

WPC-5

APPROVED FOR TEMPORARY WATER POLLUTION CONTROL WORK ONLY

STATE OF CALIFORNIA - DEPARTMENT OF TRANSPORTATION
Caltrans
DESIGN

CONSULTANT FUNCTIONAL SUPERVISOR: MICHAEL HYNES
CALCULATED-DESIGNED BY: JOSEPH CARBAJAL
CHECKED BY: MICHAEL HYNES
REVISED BY
DATE REVISED

LAST REVISION 00-00-00
DATE PLOTTED => 09-MAY-2016
TIME PLOTTED => 15:05

Dist	COUNTY	ROUTE	POST MILES TOTAL PROJECT	SHEET No.	TOTAL SHEETS
07	LA	60	R24.4/R25.3	47	384

Timothy G Sobelman 11-16-12
REGISTERED CIVIL ENGINEER DATE

3-14-16
PLANS APPROVAL DATE

REGISTERED PROFESSIONAL ENGINEER TIMOTHY B. SOBELMAN No. 59249 Exp. 6-30-17 CIVIL STATE OF CALIFORNIA

THE STATE OF CALIFORNIA OR ITS OFFICERS OR AGENTS SHALL NOT BE RESPONSIBLE FOR THE ACCURACY OR COMPLETENESS OF SCANNED COPIES OF THIS PLAN SHEET.

GENERAL NOTES

Designation:
Partial Austin Vault Sand Filters (AVSFs) are open air reinforced concrete vaults utilizing both sedimentation and sand filtration basins. Type designation is based on length configuration, water quality volume to be drained in a 24 hour period, and average depth of water.

Standard configurations are noted for the following design water quality volumes (WQV): 5,000, 10,000, and 15,000 cubic feet. Length configurations are either short (S) or long (L). The average water depth can be either 3 ft, 4.5 ft, or 6 ft as designed in Design Water Quality Volumes (WQV) table.

Special Reinforcement Coverage:
AVSF Standard Details are not to be used in a corrosive environment or where there is a severe abrasive flow condition or in freeze-thaw locations.

Special Design:
Required for the following conditions: ground water conditions above bottom of AVSF, surcharge loads exceeding HS20 truck load, design bearing pressures or sizes greater than those on this plan, inlet velocities which exceed 8.0 ft/sec at gabion wall, and settlement due to liquefaction.

DESIGN WATER QUALITY VOLUMES (WQV)

AVSF Type*	WQV (ft^3)	W(ft)	L_S(ft)	L_f(ft)	H_W(ft)
S-3500-3	3,500	21	14	38	3
L-3500-3	3,500	15	18	53	3
S-3500-4.5	4,380	21	14	38	4.5
L-3500-4.5	4,380	15	18	53	4.5
S-3500-6	5,260	21	14	38	6
L-3500-6	5,260	15	18	53	6
S-5000-3	5,000	27	15	42	3
L-5000-3	5,000	18	21	63	3
S-5000-4.5	6,250	27	15	42	4.5
L-5000-4.5	6,250	18	21	63	4.5
S-5000-6	7,500	27	15	42	6
L-5000-6	7,500	18	21	63	6
S-10000-3	10,000	36	21	63	3
L-10000-3	10,000	24	30	94	3
S-10000-4.5	12,500	36	21	63	4.5
L-10000-4.5	12,500	24	30	94	4.5
S-10000-6	15,000	36	21	63	6
L-10000-6	15,000	24	30	94	6
S-15000-3	15,000	45	25	76	3
L-15000-3	15,000	30	37	115	3
S-15000-4.5	18,750	45	25	76	4.5
L-15000-4.5	18,750	30	37	115	4.5
S-15000-6	22,500	45	25	76	6
L-15000-6	22,500	30	37	115	6

* AVSF TYPE = LENGTH CONFIGURATION (S OR L) - WATER QUALITY VOLUME (CF) - DESIGN WATER DEPTH (H_W ELEVATION)

DESIGN NOTES

Specifications:
Design:
Bridge Design Specification April 2000 (LFD) (1996 AASHTO) with interims and revisions by Caltrans

Wall & Footing (LFD): 1.5 D + 1.5 E + 1.5 W + 1.5 SC
Where D = Dead Load
E = Earth Load
W = Water Load
SC = Surcharge

Capacity reduction factor is included.

Earth Load:
125 lb/ft^3 vertical,

Water Load:
62.4 lb/ft^3 horizontal/vertical,

Earth pressure for 2:1 unlimited slope determined from Rankine's formula with $\phi = 33°42'$ (Case II).

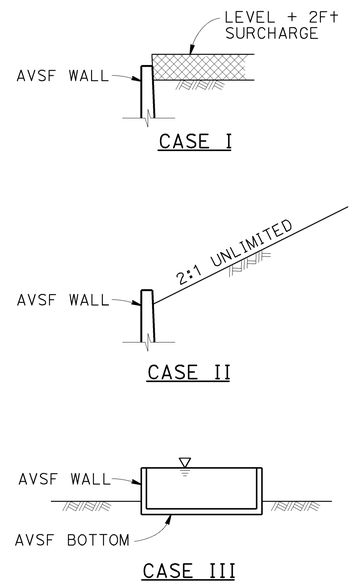

DETAIL OF DESIGN LOADING CASES

CASE I LEVEL + 2FT SURCHARGE, AVSF EMPTY
CASE II 2:1 UNLIMITED SLOPE, AVSF EMPTY
CASE III AVSF FULL OF WATER, NO SOIL PRESSURE

UNIT STRESSES:
$f'c$ = 4,000 psi
fy = 60,000 psi

ABBREVIATIONS

AVSF - AUSTIN VAULT SAND FILTER
EWT&B - EACH WAY TOP AND BOTTOM
H_W - GABION WALL HEIGHT (TYPICALLY SET AT DESIGN WATER DEPTH)
L_f - LENGTH OF FILTRATION BASIN
L_S - LENGTH OF SEDIMENT BASIN
T - WALL THICKNESS
W - WIDTH OF AVSF
WQV - WATER QUALITY VOLUME

LEGEND

DESIGN WATER DEPTH
STANDARD PLAN SHEET No.
DETAIL No.

NOTES

Expansion joints:
Inverts and sidewalls - Place ½" expansion joint filler and waterstop where indicated. See "Austin Vault Sand Filter Details No. 2" sheet for specific wall & invert details.

Construction Joints:
Must be placed where indicated on plans.

Backfill:
See Standard Specifications, except the difference in backfill must not exceed 8'-0" between side walls and inlet and outlet walls.

Earthwork:
Limits of payment for excavation and backfill.

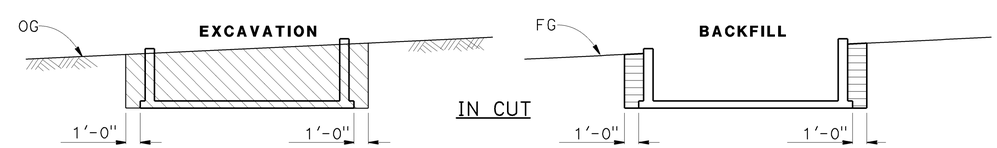

LEGEND:
STRUCTURE EXCAVATION
STRUCTURE BACKFILL

NOTES:
1. Slope or shore excavation sides as necessary.
2. Dimensions shown are minimum.
3. 95% compaction 1'-0" below floor slabs.

AUSTIN VAULT SAND FILTER

WATER POLLUTION CONTROL DETAILS
AUSTIN VAULT SAND FILTER
LEGEND
NO SCALE

WD-1

STATE OF CALIFORNIA - DEPARTMENT OF TRANSPORTATION
Caltrans
DIVISION OF DESIGN
OFFICE OF STORM WATER MANAGEMENT
FUNCTIONAL SUPERVISOR: TIMOTHY B. SOBELMAN
CALCULATED-DESIGNED BY: D. WANG
CHECKED BY: L. HE
REVISED BY
DATE REVISED

LAST REVISION 04-12-13
DATE PLOTTED => 25-JUN-2015
TIME PLOTTED => 08:58

Dist	COUNTY	ROUTE	POST MILES TOTAL PROJECT	SHEET No.	TOTAL SHEETS
07	LA	60	R24.4/R25.3	48	384

Timothy B Sobelman 11-16-12
REGISTERED CIVIL ENGINEER DATE

3-14-16
PLANS APPROVAL DATE

REGISTERED PROFESSIONAL ENGINEER TIMOTHY B. SOBELMAN No. 59249 Exp. 6-30-17 CIVIL STATE OF CALIFORNIA

THE STATE OF CALIFORNIA OR ITS OFFICERS OR AGENTS SHALL NOT BE RESPONSIBLE FOR THE ACCURACY OR COMPLETENESS OF SCANNED COPIES OF THIS PLAN SHEET.

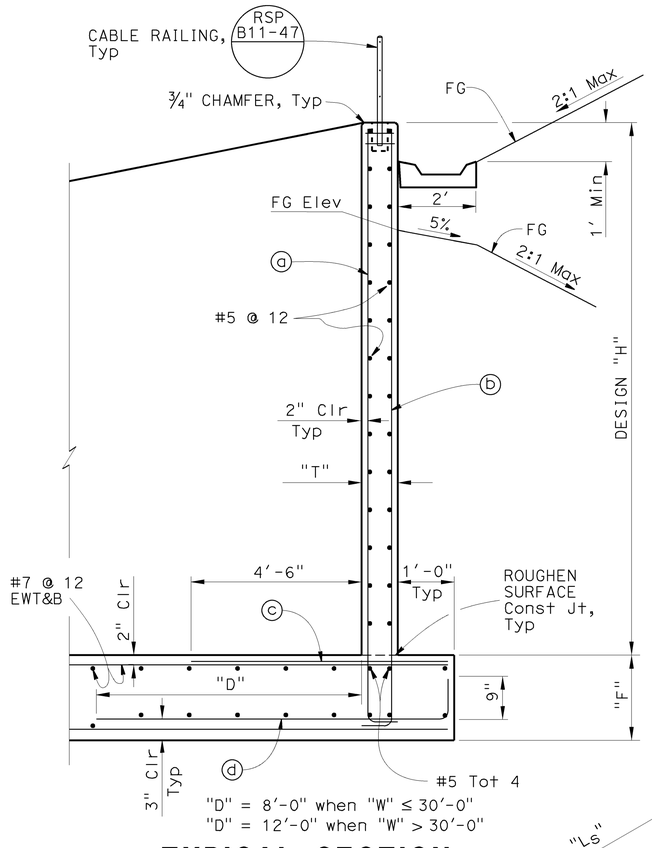

TYPICAL SECTION

REINFORCING STEEL AND DATA FOR WALLS

Design "H"	6'	8'	10'	12'	14'	16'
"T"	12"	12"	12"	12"	14"	14"
"F"	1'-3"	1'-3"	1'-3"	1'-6"	1'-9"	1'-9"
ⓐ bars ⌊	#6 @ 12	#6 @ 12	#6 @ 8	#7 @ 8	#8 @ 8	#9 @ 6
ⓑ bars ⌋	#6 @ 12	#6 @ 12	#6 @ 8	#7 @ 8	#8 @ 8	#8 @ 6
ⓒ bars	#6 @ 12	#6 @ 12	#6 @ 8	#6 @ 8	#7 @ 8	#7 @ 6
ⓓ bars ⌣	#6 @ 12	#6 @ 12	#6 @ 8	#6 @ 8	#7 @ 8	#7 @ 6

NOTES (THIS SHEET ONLY):

1. For dimensions "W", "Ls", "Lf" and "Hw", see Design WQV table on "Austin Vault Sand Filter Legend" sheet.
2. For footing details not shown, see "Austin Wall Sand Filter Details No. 1 and No. 2" sheets.
3. The contractor has the option of matching the Sedimentation Basin wall thickness with the Filtration Basin wall thickness. Thicker design wall must be used at no additional cost to the Department.
4. For additional corner reinforcement not shown see Typical Corner Detail on "Austin Wall Sand Filter Details No. 1" sheet.
5. * - For details see "Drainage Plans".
6. For project specific AVFS elevations, see Wall Design Elevation Table on the drainage profile sheets.

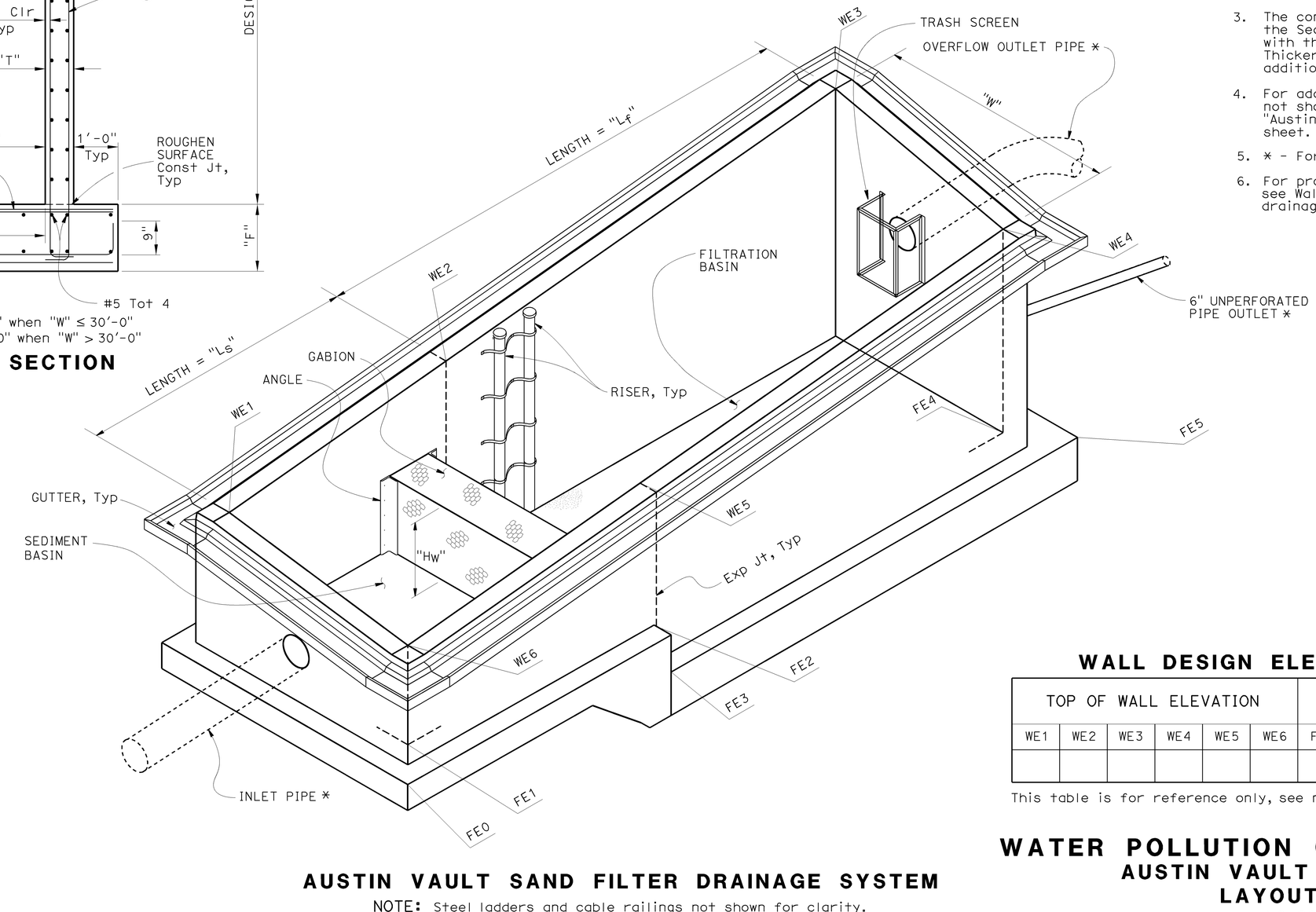

AUSTIN VAULT SAND FILTER DRAINAGE SYSTEM

NOTE: Steel ladders and cable railings not shown for clarity.

WALL DESIGN ELEVATION TABLE

TOP OF WALL ELEVATION						TOP OF FOOTING ELEVATION					
WE1	WE2	WE3	WE4	WE5	WE6	FE0	FE1	FE2	FE3	FE4	FE5

This table is for reference only, see note 6.

WATER POLLUTION CONTROL DETAILS
AUSTIN VAULT SAND FILTER
LAYOUT No. 1

NO SCALE

WD-2

STATE OF CALIFORNIA - DEPARTMENT OF TRANSPORTATION
Caltrans
DIVISION OF DESIGN
OFFICE OF STORM WATER MANAGEMENT

FUNCTIONAL SUPERVISOR: TIMOTHY B. SOBELMAN
CALCULATED-DESIGNED BY: D. WANG
CHECKED BY: L. HE
REVISED BY
DATE REVISED

LAST REVISION 04-12-13
DATE PLOTTED => 25-JUN-2015
TIME PLOTTED => 08:58

Dist	COUNTY	ROUTE	POST MILES TOTAL PROJECT	SHEET No.	TOTAL SHEETS
07	LA	60	R24.4/R25.3	49	384

Timothy G Sobelman 11-16-12
REGISTERED CIVIL ENGINEER DATE

3-14-16
PLANS APPROVAL DATE

REGISTERED PROFESSIONAL ENGINEER TIMOTHY B. SOBELMAN No. 59249 Exp. 6-30-17 CIVIL STATE OF CALIFORNIA

THE STATE OF CALIFORNIA OR ITS OFFICERS OR AGENTS SHALL NOT BE RESPONSIBLE FOR THE ACCURACY OR COMPLETENESS OF SCANNED COPIES OF THIS PLAN SHEET.

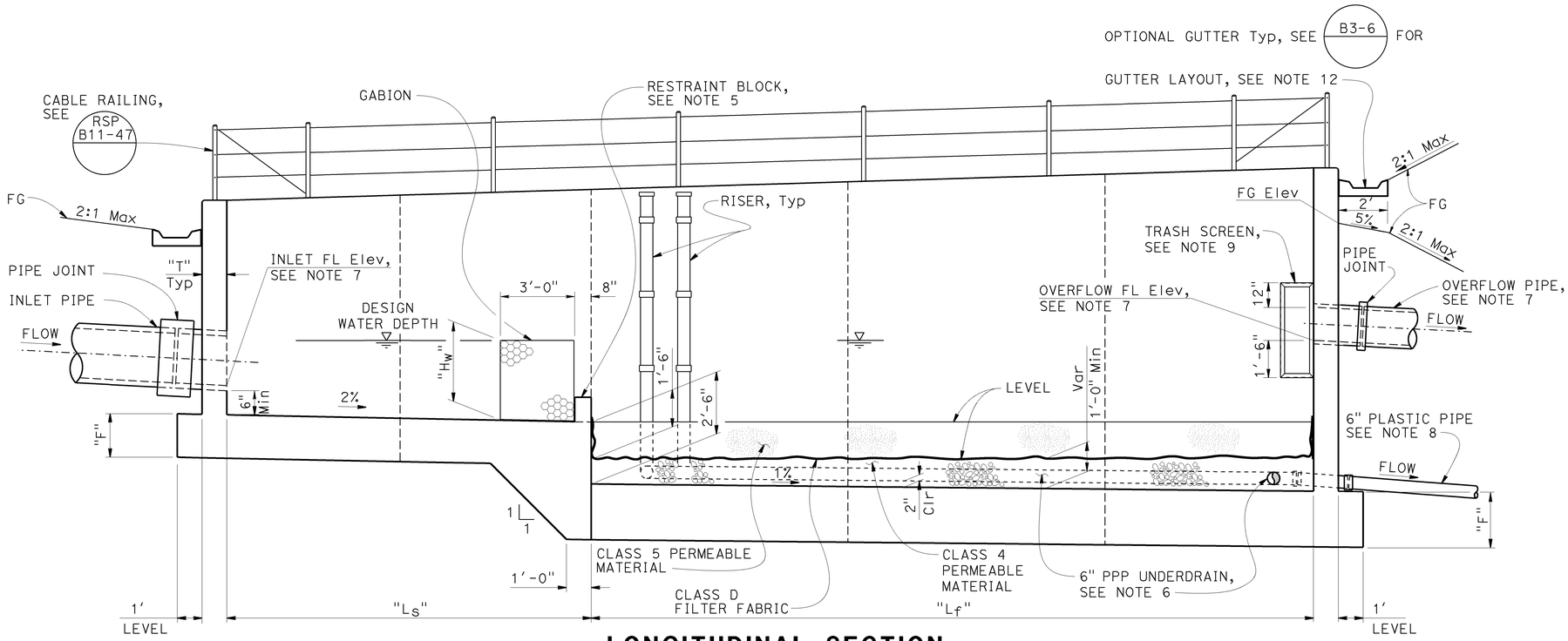

LONGITUDINAL SECTION

NOTE: Ladder not shown for clarity.

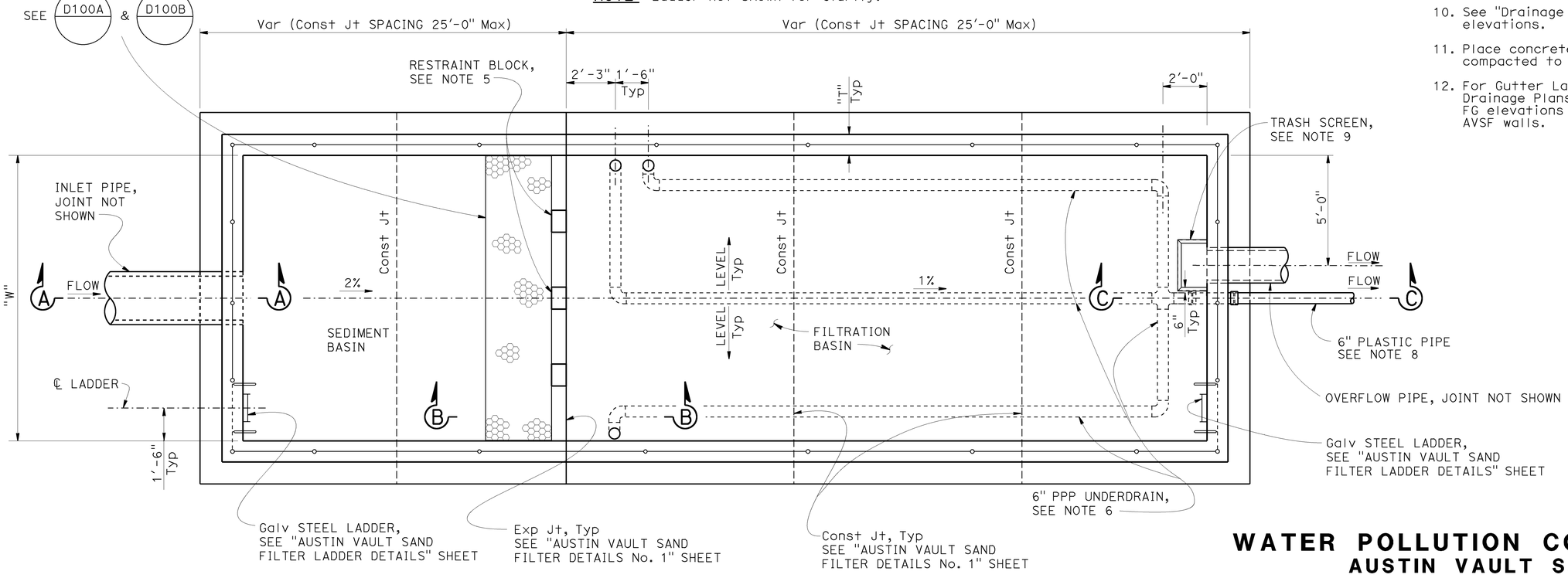

PLAN

NOTE: Gutter not shown for clarity.

NOTES (THIS SHEET ONLY)

1. For dimensions "W", "Ls", "Lf" and "Hw", see Design WQV table on "Austin Vault Sand Filter Legend" sheet.
2. For dimensions "T" and "F", see "Austin Vault Sand Filter Layout No. 1" sheet.
3. For Typical Section, see "Austin Vault Sand Filter Layout No. 1" sheet.
4. For Section A-A, B-B and C-C, see "Austin Vault Sand Filter Details No. 1" sheet.
5. For restraint block details, see "Austin Vault Sand Filter Details No. 1" and "Details No. 2" sheets.
6. For details of PPP underdrain system, see "Austin Vault Sand Filter Underdrain Details" sheet.
7. For Layout and FL elevations of inlet and overflow pipe, see "Drainage Plans and Drainage Profiles" sheets.
8. For slope of outlet plastic pipe, see "Drainage Profiles".
9. For trash screen details (frame and perforated metal skin), see "Austin Vault Sand Filter Trash Screen Details" sheet.
10. See "Drainage Profiles" for top of wall elevations.
11. Place concrete on base or native material compacted to 95% relative compaction.
12. For Gutter Layout and FL elevations, see Drainage Plans and Drainage Profiles. Show FG elevations at all grade breaks along the AVSF walls.

WATER POLLUTION CONTROL DETAILS
AUSTIN VAULT SAND FILTER
LAYOUT No. 2

NO SCALE

WD-3

STATE OF CALIFORNIA - DEPARTMENT OF TRANSPORTATION
DIVISION OF DESIGN
OFFICE OF STORM WATER MANAGEMENT

FUNCTIONAL SUPERVISOR: TIMOTHY B. SOBELMAN
CALCULATED-DESIGNED BY: D. WANG
CHECKED BY: L. HE
REVISED BY
DATE REVISED

LAST REVISION 04-12-13
DATE PLOTTED => 25-JUN-2015
TIME PLOTTED => 08:58

Dist	COUNTY	ROUTE	POST MILES TOTAL PROJECT	SHEET No.	TOTAL SHEETS
07	LA	60	R24.4/R25.3	50	384

REGISTERED CIVIL ENGINEER 11-16-12 DATE

3-14-16
PLANS APPROVAL DATE

REGISTERED PROFESSIONAL ENGINEER TIMOTHY B. SOBELMAN No. 59249 Exp. 6-30-17 CIVIL STATE OF CALIFORNIA

THE STATE OF CALIFORNIA OR ITS OFFICERS OR AGENTS SHALL NOT BE RESPONSIBLE FOR THE ACCURACY OR COMPLETENESS OF SCANNED COPIES OF THIS PLAN SHEET.

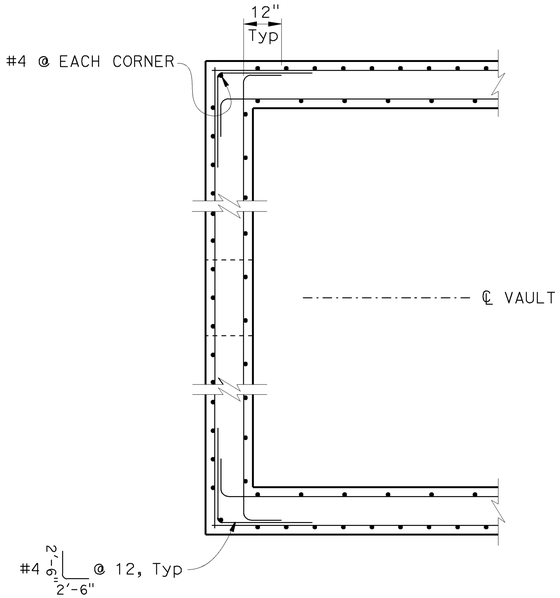

TYPICAL CORNER DETAIL

Inlet wall shown, outlet wall similar.

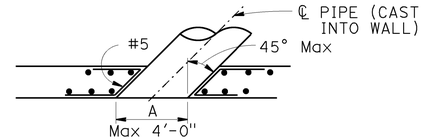

SECTION D-D

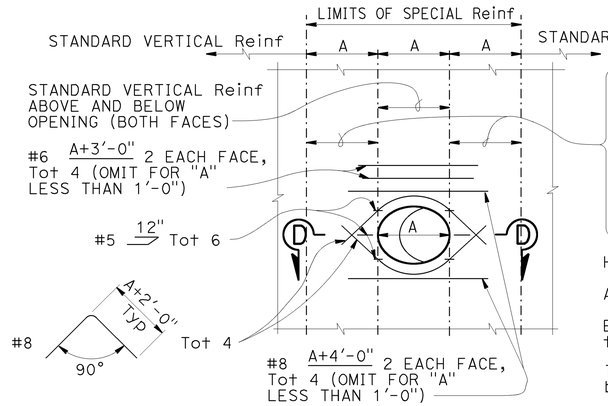

Standard vertical reinforcement plus additional vertical bars corresponding in size and number to bars cut by the opening. Place half on each side. Extend the additional bars into the footing the same as other vertical wall reinforcement and to a minimum of 60 bar diameters above the top of utility opening if wall height permits. Bundle bars as required.

Horizontal Reinf to be standard except as shown.

All Reinf to clear opening by 2" minimum.

Expansion joints must not be located within the limits of special reinforcing.

The rebar lengths shown are maximum and must be adjusted due to the limitations of space.

WALL OPENING DETAIL

To be used at inlet, outlet and overflow pipe locations

NOTES (THIS SHEET ONLY):

1. For locations of section A-A, B-B, and C-C, see "Austin Vault Sand Filter Layout No. 2" sheet.
2. For wall and footing reinforcement details, see Typical Section on "Austin Vault Sand Filter Layout No. 1" sheet.

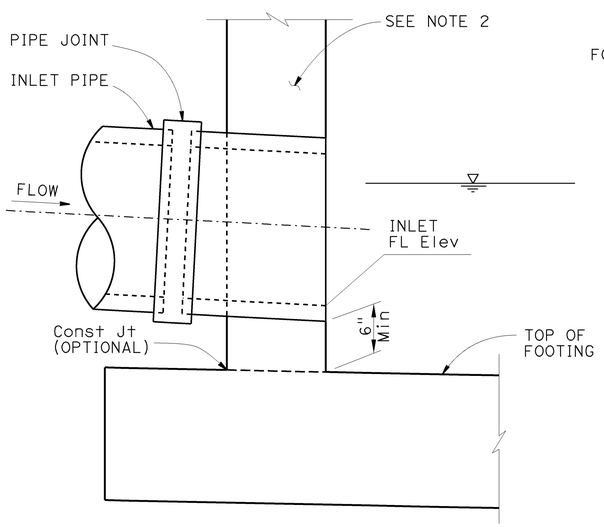

SECTION A-A

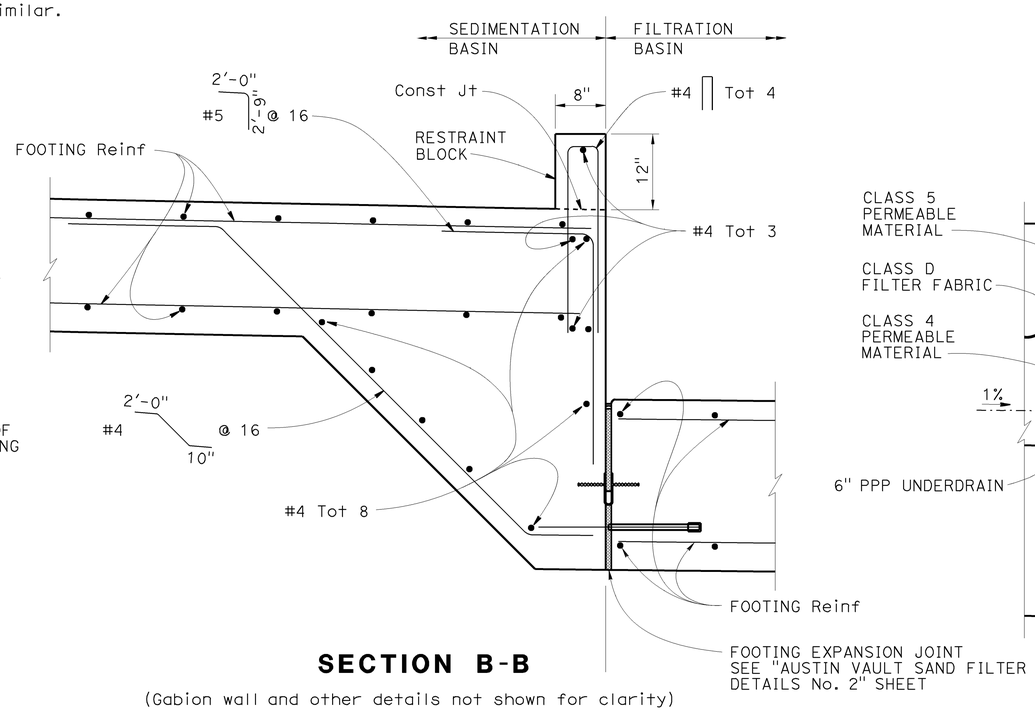

SECTION B-B

(Gabion wall and other details not shown for clarity)

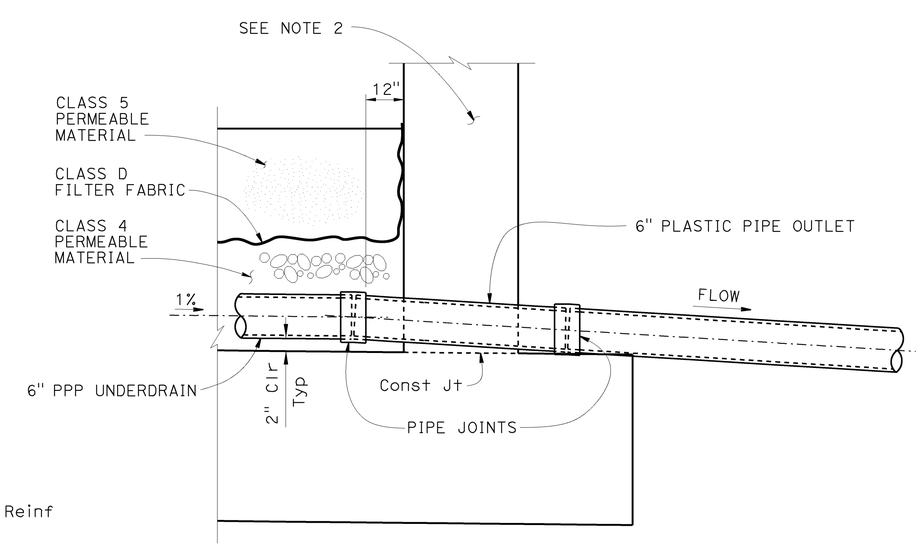

SECTION C-C

WATER POLLUTION CONTROL DETAILS
AUSTIN VAULT SAND FILTER
DETAILS No. 1

NO SCALE

WD-4

STATE OF CALIFORNIA - DEPARTMENT OF TRANSPORTATION
DIVISION OF DESIGN
OFFICE OF STORM WATER MANAGEMENT
Caltrans

FUNCTIONAL SUPERVISOR: TIMOTHY B. SOBELMAN
CALCULATED-DESIGNED BY: D. WANG
CHECKED BY: L. HE
REVISED BY
DATE REVISED

LAST REVISION 04-12-13
DATE PLOTTED => 25-JUN-2015
TIME PLOTTED => 08:58

Dist	COUNTY	ROUTE	POST MILES TOTAL PROJECT	SHEET No.	TOTAL SHEETS
07	LA	60	R24.4/R25.3	51	384

REGISTERED CIVIL ENGINEER 11-16-12 DATE

3-14-16
PLANS APPROVAL DATE

REGISTERED PROFESSIONAL ENGINEER TIMOTHY B. SOBELMAN No. 59249 Exp. 6-30-17 CIVIL STATE OF CALIFORNIA

THE STATE OF CALIFORNIA OR ITS OFFICERS OR AGENTS SHALL NOT BE RESPONSIBLE FOR THE ACCURACY OR COMPLETENESS OF SCANNED COPIES OF THIS PLAN SHEET.

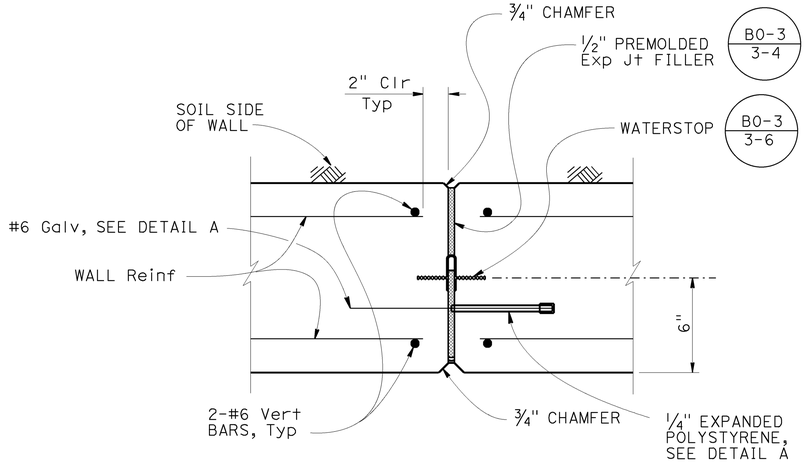

WALL EXPANSION JOINT DETAIL - PLAN SECTION

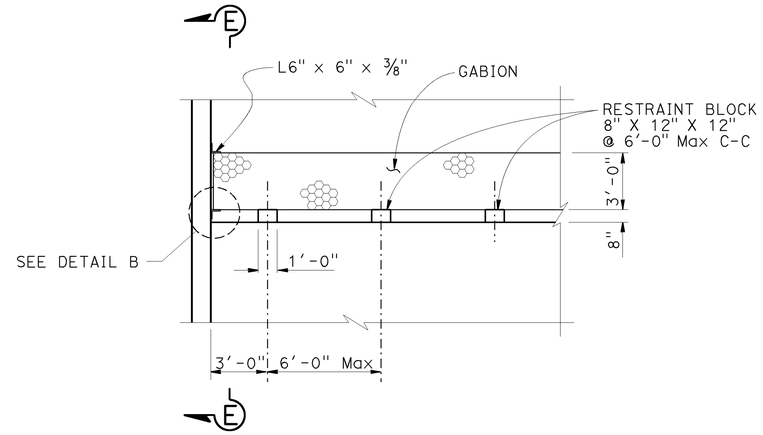

RESTRAINT BLOCK DETAIL

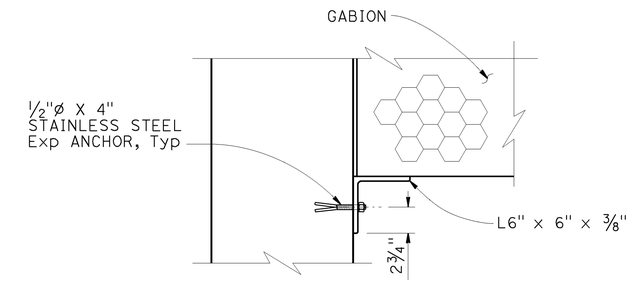

DETAIL B

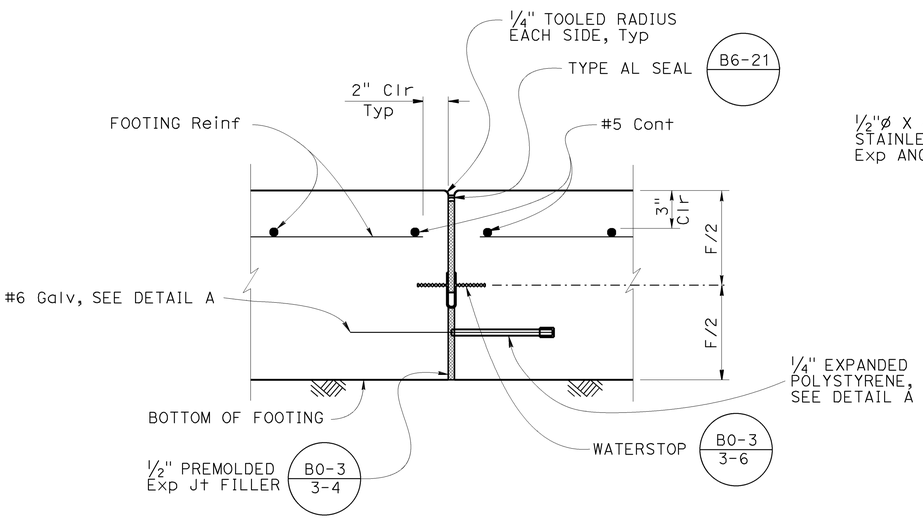

FOOTING EXPANSION JOINT DETAIL

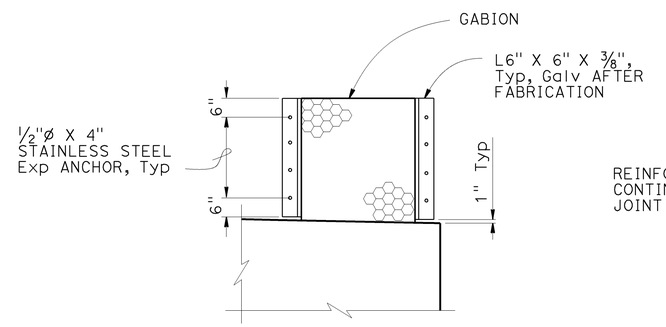

SECTION E-E

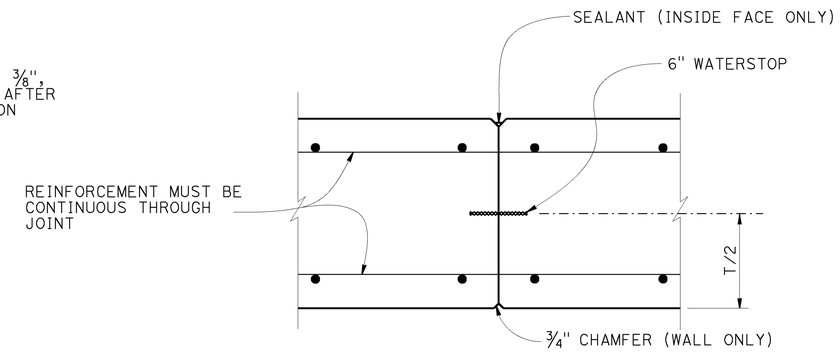

WALL CONSTRUCTION JOINT DETAIL

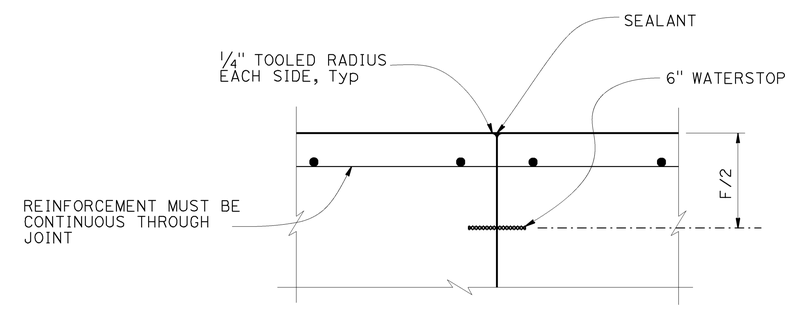

FOOTING CONSTRUCTION JOINT DETAIL

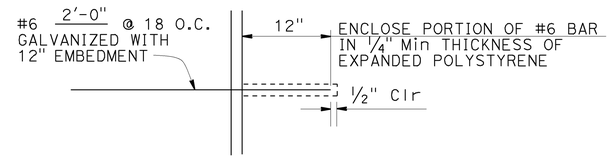

DETAIL A

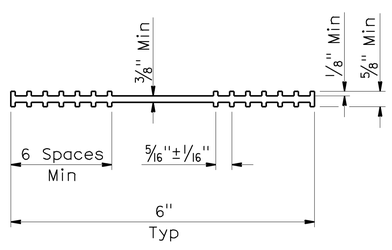

6" WATERSTOP DETAIL

WATER POLLUTION CONTROL DETAILS
AUSTIN VAULT SAND FILTER
DETAILS No. 2

NO SCALE

WD-5

STATE OF CALIFORNIA - DEPARTMENT OF TRANSPORTATION
DIVISION OF DESIGN
OFFICE OF STORM WATER MANAGEMENT

FUNCTIONAL SUPERVISOR: TIMOTHY B. SOBELMAN
CALCULATED-DESIGNED BY: D. WANG
CHECKED BY: L. HE
REVISED BY
DATE REVISED

LAST REVISION 04-12-13
DATE PLOTTED => 25-JUN-2015
TIME PLOTTED => 08:58

Dist	COUNTY	ROUTE	POST MILES TOTAL PROJECT	SHEET No.	TOTAL SHEETS
07	LA	60	R24.4/R25.3	52	384

REGISTERED CIVIL ENGINEER — DATE 11-16-12

3-14-16
PLANS APPROVAL DATE

REGISTERED PROFESSIONAL ENGINEER TIMOTHY B. SOBELMAN No. 59249 Exp. 6-30-17 CIVIL STATE OF CALIFORNIA

THE STATE OF CALIFORNIA OR ITS OFFICERS OR AGENTS SHALL NOT BE RESPONSIBLE FOR THE ACCURACY OR COMPLETENESS OF SCANNED COPIES OF THIS PLAN SHEET.

NOTES (THIS SHEET ONLY):

1. All angles, screws and perforated metal must be galvanized.
2. Paint all weld joints with zinc rich paint or galvanize after welding.
3. Dimension "D1" is to be equal to inside diameter of overflow pipe.

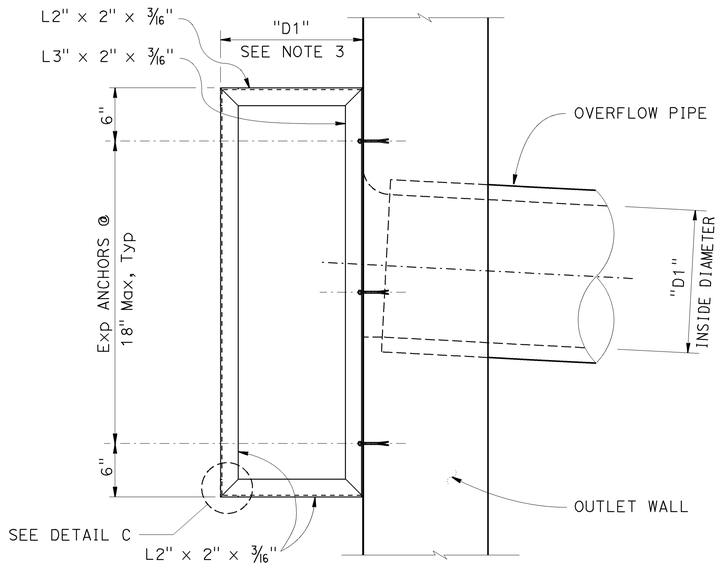

ELEVATION

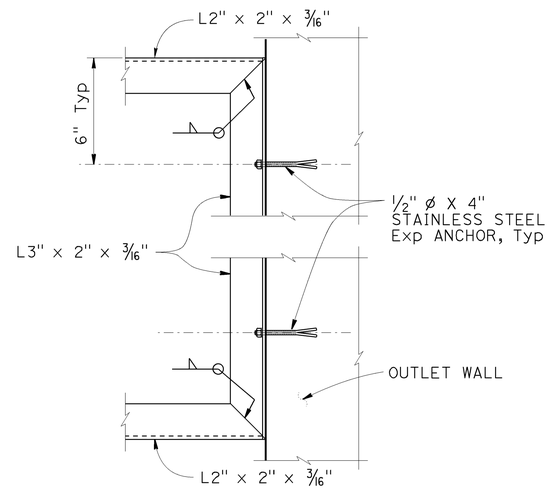

SECTION F - F

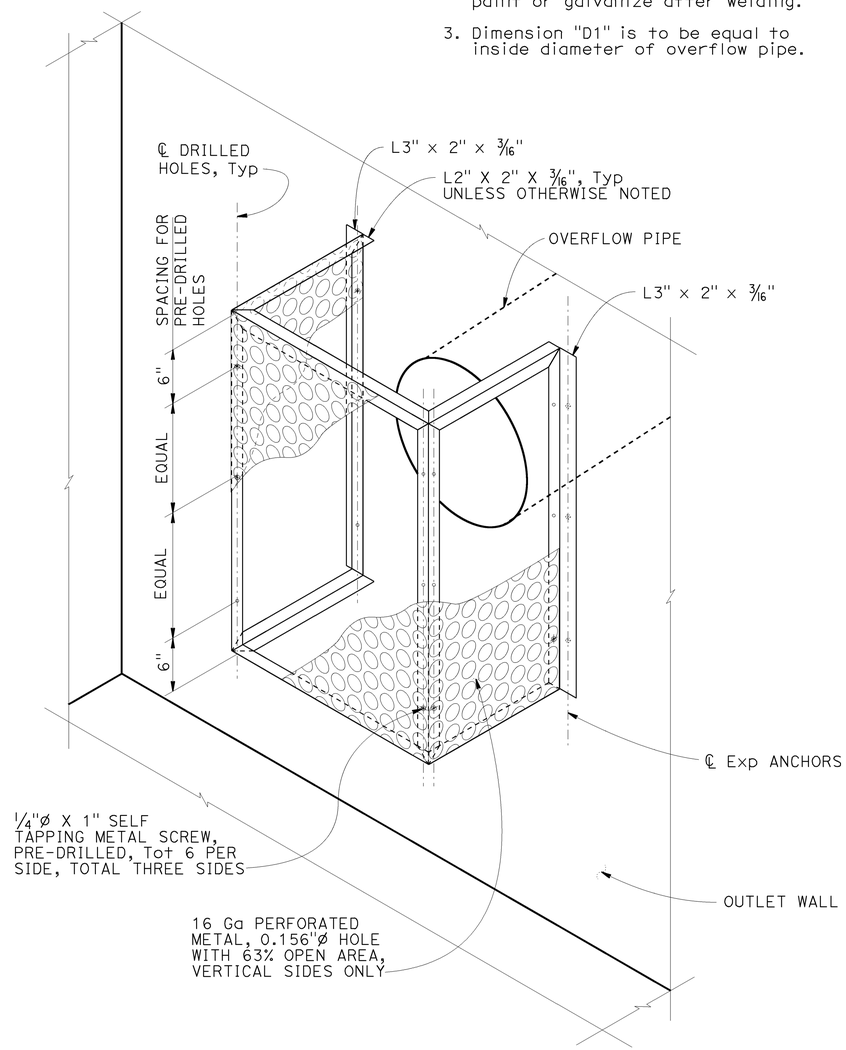

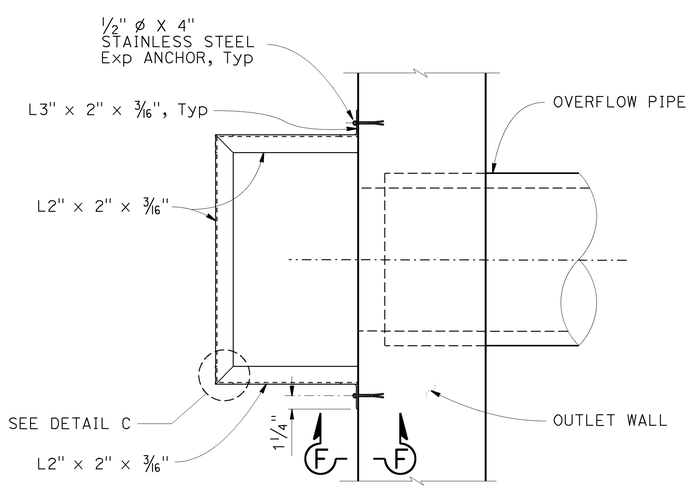

PLAN

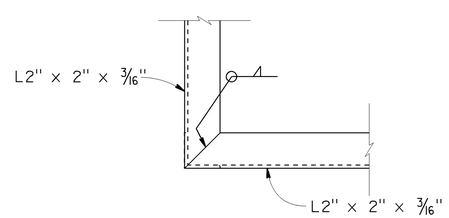

DETAIL C
TYPICAL CORNER DETAIL

WATER POLLUTION CONTROL DETAILS
AUSTIN VAULT SAND FILTER
TRASH SCREEN DETAILS

NO SCALE

WD-6

STATE OF CALIFORNIA - DEPARTMENT OF TRANSPORTATION
DIVISION OF DESIGN
OFFICE OF STORM WATER MANAGEMENT

FUNCTIONAL SUPERVISOR: TIMOTHY B. SOBELMAN
CALCULATED-DESIGNED BY: D. WANG
CHECKED BY: L. HE
REVISED BY
DATE REVISED

LAST REVISION 04-12-13
DATE PLOTTED => 25-JUN-2015
TIME PLOTTED => 08:58

Dist	COUNTY	ROUTE	POST MILES TOTAL PROJECT	SHEET No.	TOTAL SHEETS
07	LA	60	R24.4/R25.3	53	384

REGISTERED CIVIL ENGINEER — DATE 11-16-12

3-14-16
PLANS APPROVAL DATE

REGISTERED PROFESSIONAL ENGINEER — TIMOTHY B. SOBELMAN — No. 59249 — Exp. 6-30-17 — CIVIL — STATE OF CALIFORNIA

THE STATE OF CALIFORNIA OR ITS OFFICERS OR AGENTS SHALL NOT BE RESPONSIBLE FOR THE ACCURACY OR COMPLETENESS OF SCANNED COPIES OF THIS PLAN SHEET.

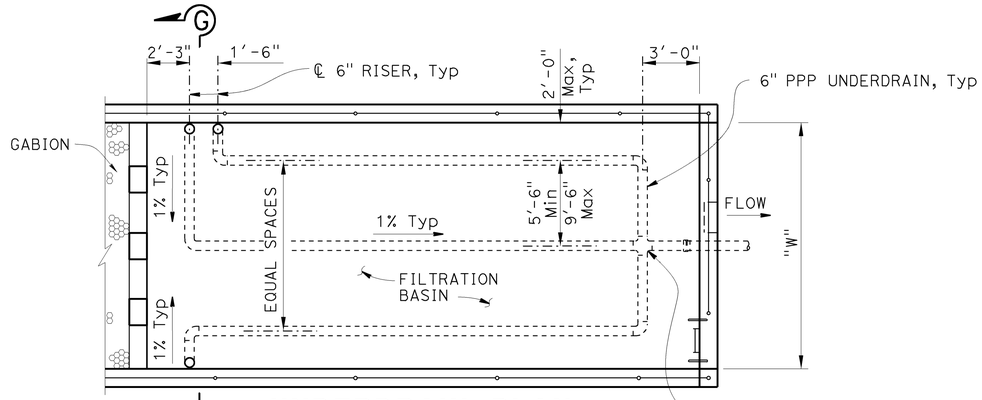

UNDERDRAIN PLAN (FILTRATION BASIN)

"W" = 15' or 21'
AVSF Type = (S or L 3,500)

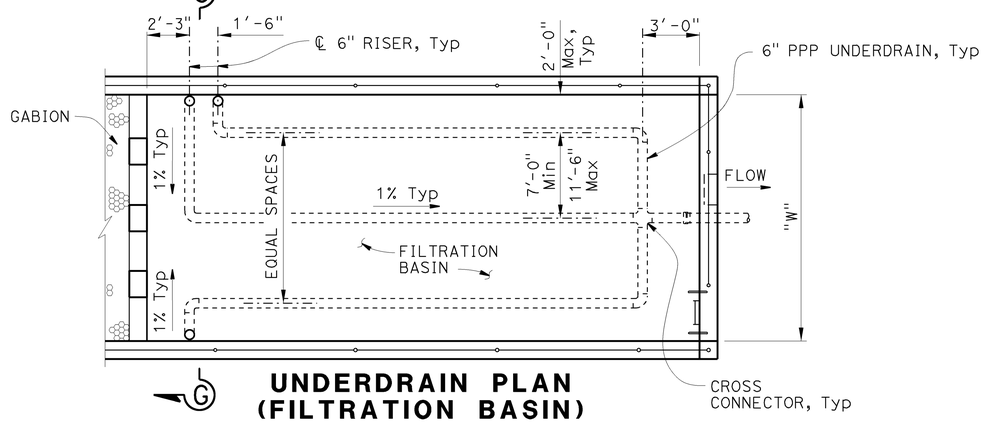

UNDERDRAIN PLAN (FILTRATION BASIN)

"W" = 18', 24' or 27'
AVSF Type = (S or L 5,000, L 10,000)

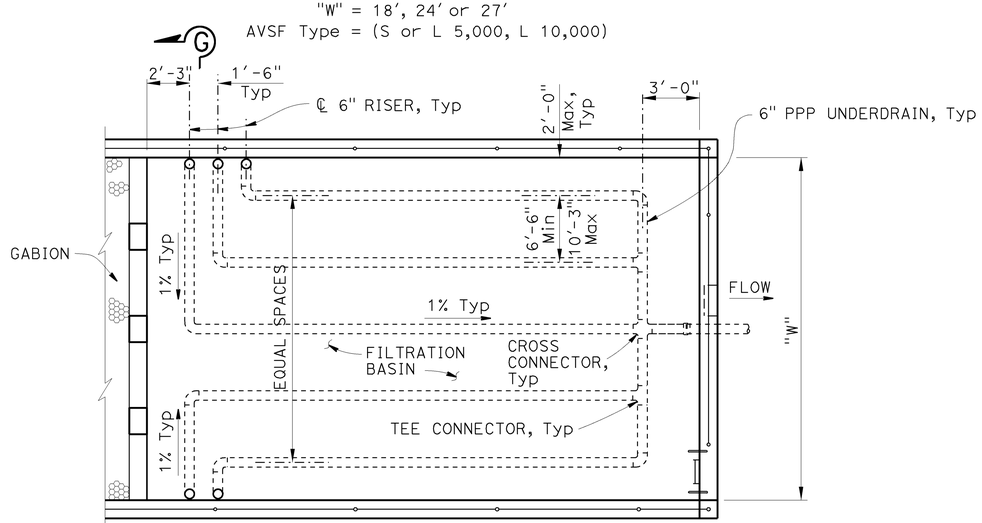

UNDERDRAIN PLAN (FILTRATION BASIN)

"W" = 30', 36' or 45'
AVSF Type = (S 10,000, S or L 15,000)

NOTE (THIS SHEET ONLY):

1. For typical cover and depth of permeable material, see "Austin Vault Sand Filter Layout No. 2" sheet.

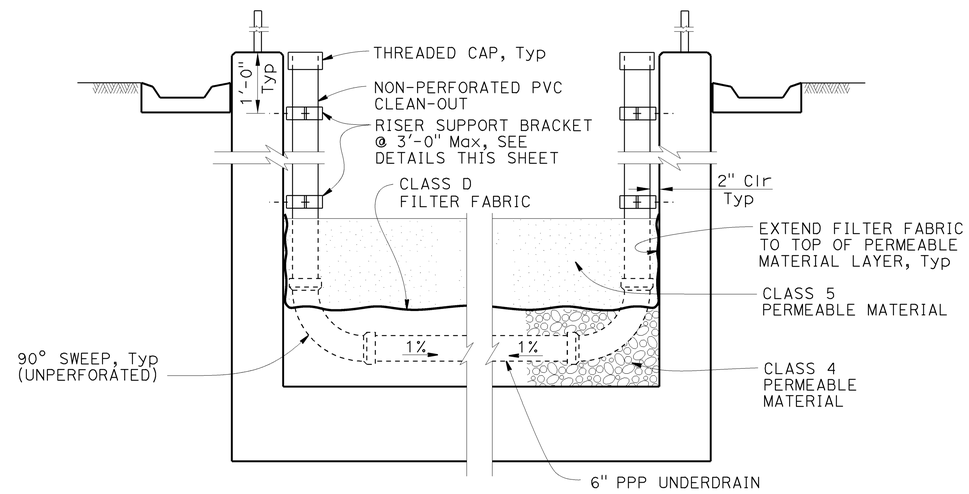

SECTION G - G

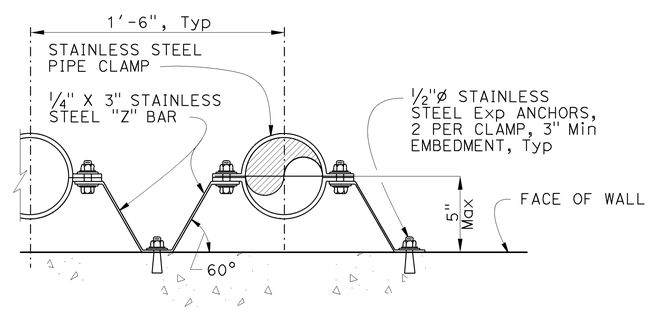

RISER SUPPORT BRACKET DETAIL

WATER POLLUTION CONTROL DETAILS
AUSTIN VAULT SAND FILTER UNDERDRAIN DETAILS

NO SCALE

WD-7

STATE OF CALIFORNIA - DEPARTMENT OF TRANSPORTATION
DIVISION OF DESIGN
OFFICE OF STORM WATER MANAGEMENT

FUNCTIONAL SUPERVISOR: TIMOTHY B. SOBELMAN
CALCULATED-DESIGNED BY: D. WANG
CHECKED BY: L. HE
REVISED BY
DATE REVISED

LAST REVISION 04-12-13
DATE PLOTTED => 25-JUN-2015
TIME PLOTTED => 08:58

Dist	COUNTY	ROUTE	POST MILES TOTAL PROJECT	SHEET No.	TOTAL SHEETS
07	LA	60	R24.4/R25.3	54	384

REGISTERED CIVIL ENGINEER 11-16-12 DATE

3-14-16
PLANS APPROVAL DATE

REGISTERED PROFESSIONAL ENGINEER TIMOTHY B SOBELMAN No. 59249 Exp. 6-30-17 CIVIL STATE OF CALIFORNIA

THE STATE OF CALIFORNIA OR ITS OFFICERS OR AGENTS SHALL NOT BE RESPONSIBLE FOR THE ACCURACY OR COMPLETENESS OF SCANNED COPIES OF THIS PLAN SHEET.

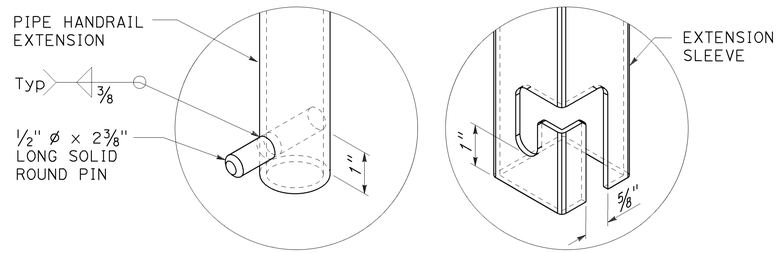

EXTENDABLE HANDRAIL LATCH

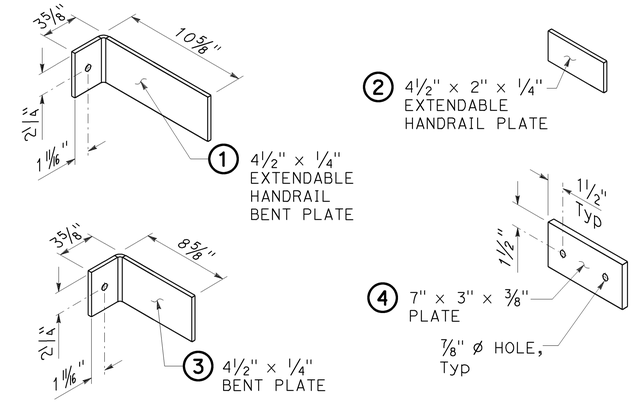

BRACKET DETAILS

NOTES (THIS SHEET ONLY):

1. Rungs must be skid resistant.
2. Use wall mounted handrail for vault depths between 4'-0" and 6'-6". For deeper vaults use extendable handrail detail. Vault depth is distance between top of wall and either top of floor slab or top of filter media material (use which ever distance is less). Ladders must not extend into filter media material.
3. No handrail required for Linear Radial GSRD 4'-0" depth, due to grate conflict.

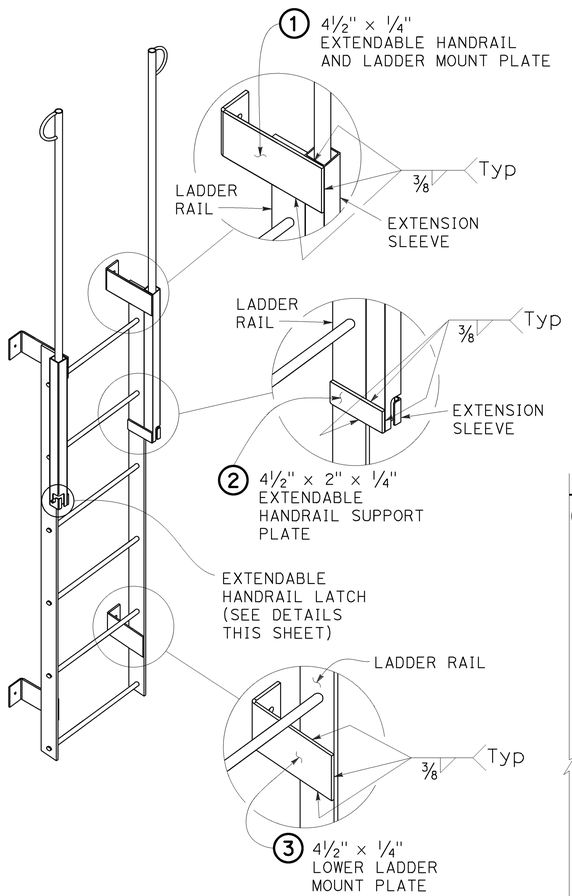

LADDER

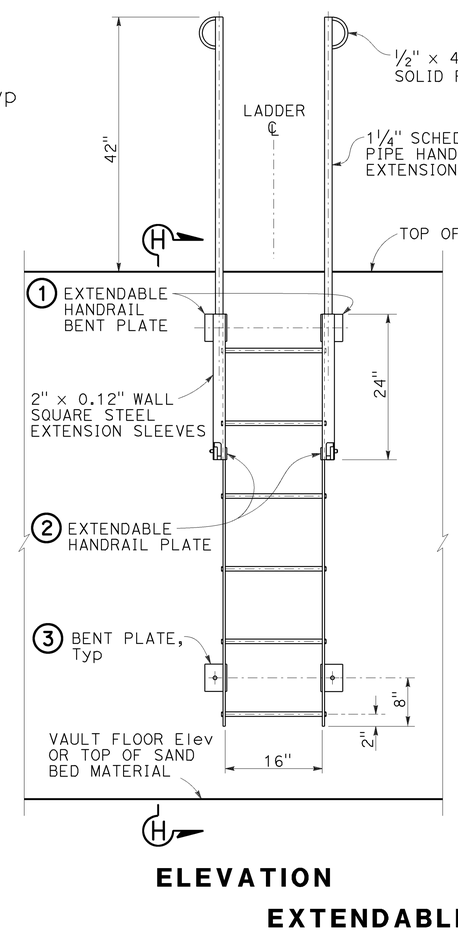

ELEVATION

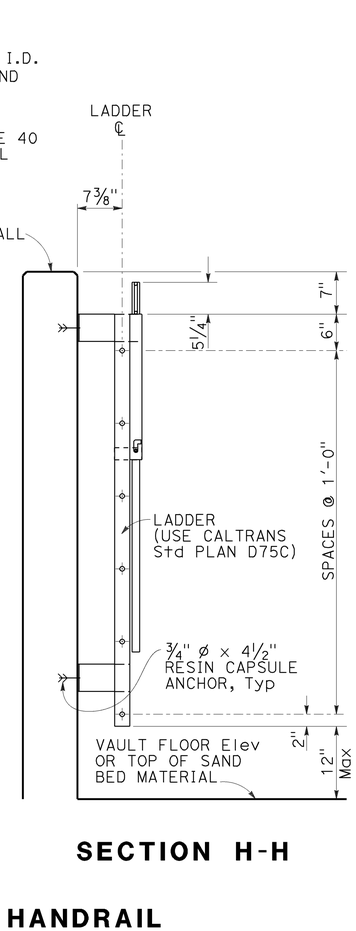

SECTION H-H

EXTENDABLE HANDRAIL

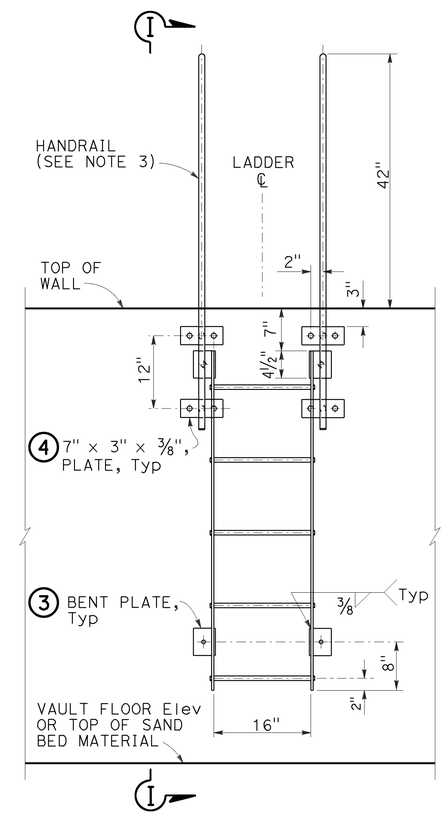

ELEVATION

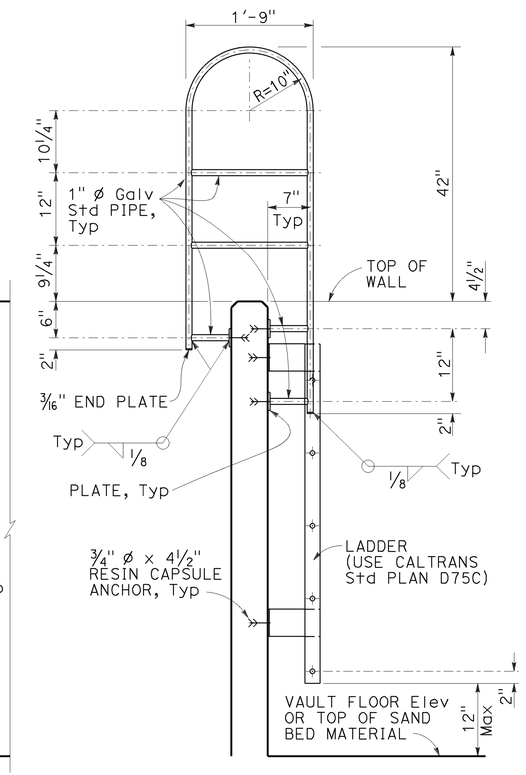

SECTION I-I

WALL MOUNTED HANDRAIL

WATER POLLUTION CONTROL DETAILS
AUSTIN VAULT SAND FILTER
LADDER DETAILS

NO SCALE

WD-8

STATE OF CALIFORNIA - DEPARTMENT OF TRANSPORTATION
DIVISION OF DESIGN
OFFICE OF STORM WATER MANAGEMENT

FUNCTIONAL SUPERVISOR: TIMOTHY B. SOBELMAN
CALCULATED-DESIGNED BY: D. WANG
CHECKED BY: L. HE
REVISED BY
DATE REVISED

LAST REVISION 04-12-13
DATE PLOTTED => 25-JUN-2015
TIME PLOTTED => 08:58

Dist	COUNTY	ROUTE	POST MILES TOTAL PROJECT	SHEET No.	TOTAL SHEETS
07	LA	60	R24.4/R25.3	55	384

REGISTERED CIVIL ENGINEER 12-12-12 DATE

3-14-16
PLANS APPROVAL DATE

REGISTERED PROFESSIONAL ENGINEER TIMOTHY B. SOBELMAN No. 59249 Exp. 6-30-17 CIVIL STATE OF CALIFORNIA

THE STATE OF CALIFORNIA OR ITS OFFICERS OR AGENTS SHALL NOT BE RESPONSIBLE FOR THE ACCURACY OR COMPLETENESS OF SCANNED COPIES OF THIS PLAN SHEET.

GENERAL NOTES

Designation:
Types of Gross Solids Removal Devices (GSRDs) are Linear Radial (LR) and Inclined Screen. The Linear Radial has either a standard or high velocity configuration noted as Linear Radial or Linear Radial (HV). All GSRD BMP Detail Drawings are applicable for velocities up to 20 fps.

Special Reinforcement Coverage:
GSRD BMP Detail Drawings are not to be used in a corrosive environment or where there is a severe abrasive flow condition or in freeze-thaw locations.

Special Design:
Required for ground water conditions above bottom of GSRD, surcharge loads exceeding HS20 truck load, design bearing pressures or sizes greater than those on this plan.

Traffic Loading:
No traffic load is allowed over GSRDs. As determined by the Engineer, barriers or MBGR shall be provided between GSRDs and traffic lanes.

LINEAR RADIAL DESIGN CHART

GSRD TYPE	TOTAL SCREENED PIPE LENGTH "T_S"	FLOW RATE (cfs)	DEBRIS AREA (acres)	INSIDE LENGTH "L"	HIGH VELOCITY INSIDE LENGTH "L_{HV}" *	No. OF INTERMEDIATE SCREENED PIPES
LR-1	5'-6"	3.54	0.79	11'-11"	14'-3¾"	0
LR-2	10'-6"	7.07	1.58	16'-11"	19'-3¾"	1
LR-3	15'-6"	10.96	2.25	21'-11"	24'-3¾"	2
LR-4	20'-6"	14.49	3.16	26'-11"	29'-3¾"	3
LR-5	25'-6"	18.38	3.95	31'-11"	34'-3¾"	4
LR-6	30'-6"	21.91	4.74	36'-11"	39'-3¾"	5

* High velocity is achieved when inlet Velocity exceeds 8.2 fps.

NOTES:

1. The total screened pipe length "T_S" is the sum of the end screened and intermediate screened pipes. For dimension "T_S" and location of end screened pipe and intermediate screened pipes, see "GSRD Layout" sheet.
2. Example of Linear Radial nomenclature is LR-1 (6'-0"); for high velocity type LR(HV)-3 (3'-0"). The wall height is the number represented in the parentheses.
3. The inside length "L" is shown on the "Linear Radial Layout" sheet, see plan view. Like wise the inside length "L_{HV}" is shown on the "Linear Radial (High Velocity) Layout sheet, see plan view.

DESIGN NOTES

Specifications:
Design:
Bridge Design Specification April 2000 (LFD) (1996 AASHTO) with interims and revisions by Caltrans

Wall (LFD) : 1.5 D + 1.5 E and 1.5 D + W
Footing (LFD): 1.5 D + 1.5 E
Where D = Dead Load
E = Earth Load

Capacity reduction factor is included.

Earth Load:
125 lb/ft^3 vertical,

Water Load:
62.4 lb/ft^3 horizontal,

Equivalent Fluid Pressure =
100 lb/ft^3 horizontal (Case I).

Earth pressure for 2:1 unlimited slope determined from Rankine's formula with ϕ = 33°42' (Case II).

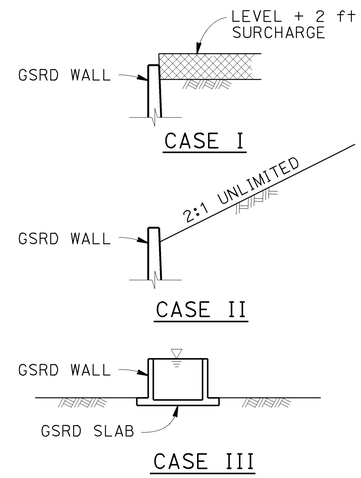

DETAIL OF DESIGN LOADING CASES

CASE I Level + 2'-0" surcharge, GSRD empty
CASE II 2:1 Unlimited slope, GSRD empty
CASE III GSRD full of water, no soil pressure

Grating (LL) Load :
0.5 psi

Unit Stresses:
f'_c = 3.6 ksi
f_y = 60 ksi (bar reinforcing)

Design Soil Bearing Pressure (Service Load) = 20 psi

ABBREVIATIONS

cfs	CUBIC FEET PER SECOND
fps	FEET PER SECOND
GSRD	GROSS SOLIDS REMOVAL DEVICE
HV	HIGH VELOCITY
LL	LIVE LOAD
LR	LINEAR RADIAL

LEGEND

DESIGN WATER DEPTH

STANDARD PLAN SHEET No.

DETAIL No.

NOTES

Expansion joints:
Inverts - No expansion joints shall be permitted.
Walls - Place ½" expansion joint filler vertically at 26'-0" centers with strip water stop (B0-1 / 1-3).

Construction Joints:
Construction joints may be permitted if normal (or radial) to ℄ of GSRD.

Backfill:
See Standard Specifications, except the difference in backfill shall not exceed 4 ft between side walls and shall not exceed the lesser of wall height "H" or 4 ft between inlet and outlet walls.

Earthwork:
Excavation and Backfill with Cut and Exposed conditions:

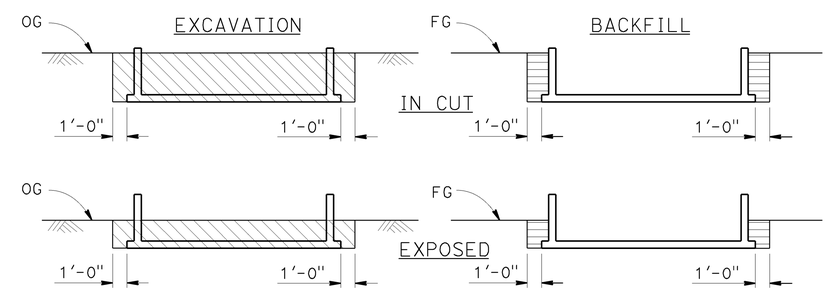

LINEAR RADIAL

LEGEND

STRUCTURE EXCAVATION

STRUCTURE BACKFILL
90% RELATIVE COMPACTION

NOTES

1. Slope or shore excavation sides as necessary.
2. Dimensions shown are minimum.

WATER POLLUTION CONTROL DETAILS
GROSS SOLIDS REMOVAL DEVICE
LINEAR RADIAL LEGEND

NO SCALE

WD-9

STATE OF CALIFORNIA - DEPARTMENT OF TRANSPORTATION
DIVISION OF DESIGN
OFFICE OF STORM WATER MANAGEMENT
Caltrans

FUNCTIONAL SUPERVISOR: TIMOTHY B. SOBELMAN
CALCULATED-DESIGNED BY: D. WANG
CHECKED BY: L. HE
REVISED BY
DATE REVISED

LAST REVISION 10-15-13
DATE PLOTTED => 25-JUN-2015
TIME PLOTTED => 09:28

Dist	COUNTY	ROUTE	POST MILES TOTAL PROJECT	SHEET No.	TOTAL SHEETS
07	LA	60	R24.4/R25.3	56	384

Timothy B. Sobelman 12-12-12
REGISTERED CIVIL ENGINEER DATE

3-14-16
PLANS APPROVAL DATE

REGISTERED PROFESSIONAL ENGINEER TIMOTHY B. SOBELMAN No. 59249 Exp. 6-30-17 CIVIL STATE OF CALIFORNIA

THE STATE OF CALIFORNIA OR ITS OFFICERS OR AGENTS SHALL NOT BE RESPONSIBLE FOR THE ACCURACY OR COMPLETENESS OF SCANNED COPIES OF THIS PLAN SHEET.

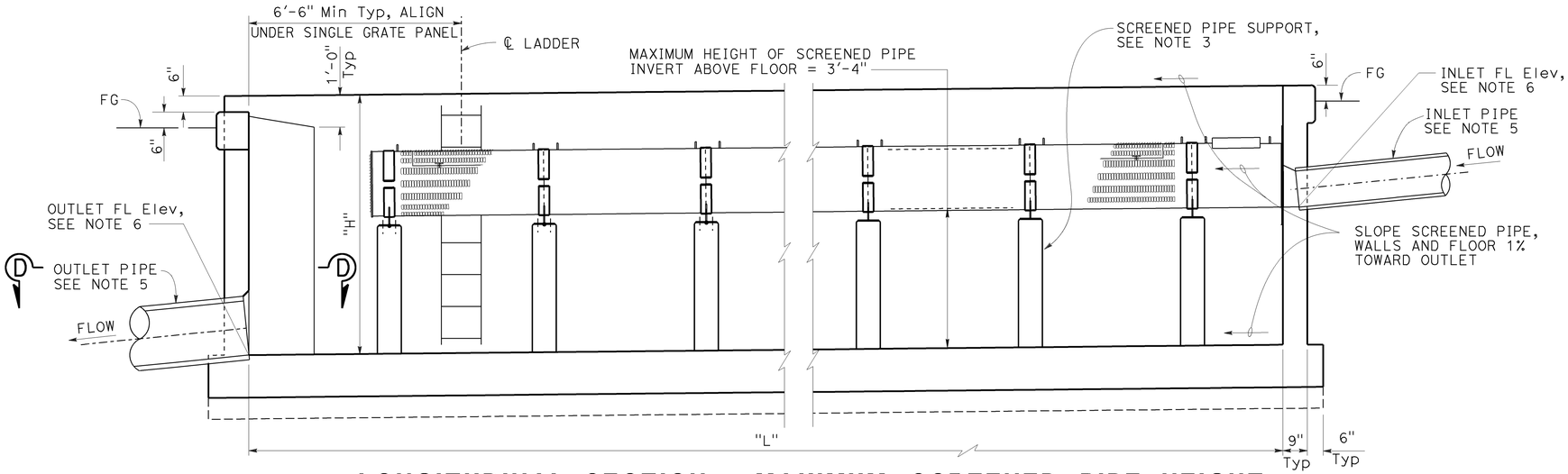

LONGITUDINAL SECTION - MAXIMUM SCREENED PIPE HEIGHT

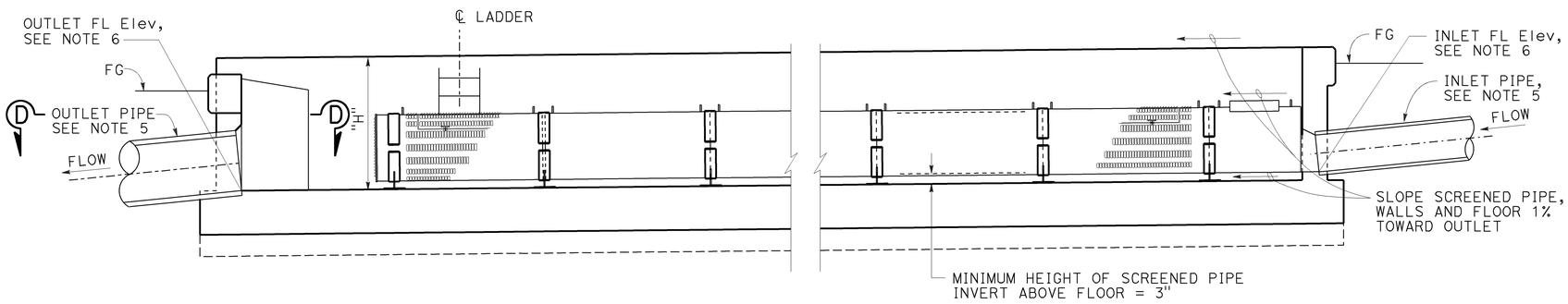

LONGITUDINAL SECTION - MINIMUM SCREENED PIPE HEIGHT

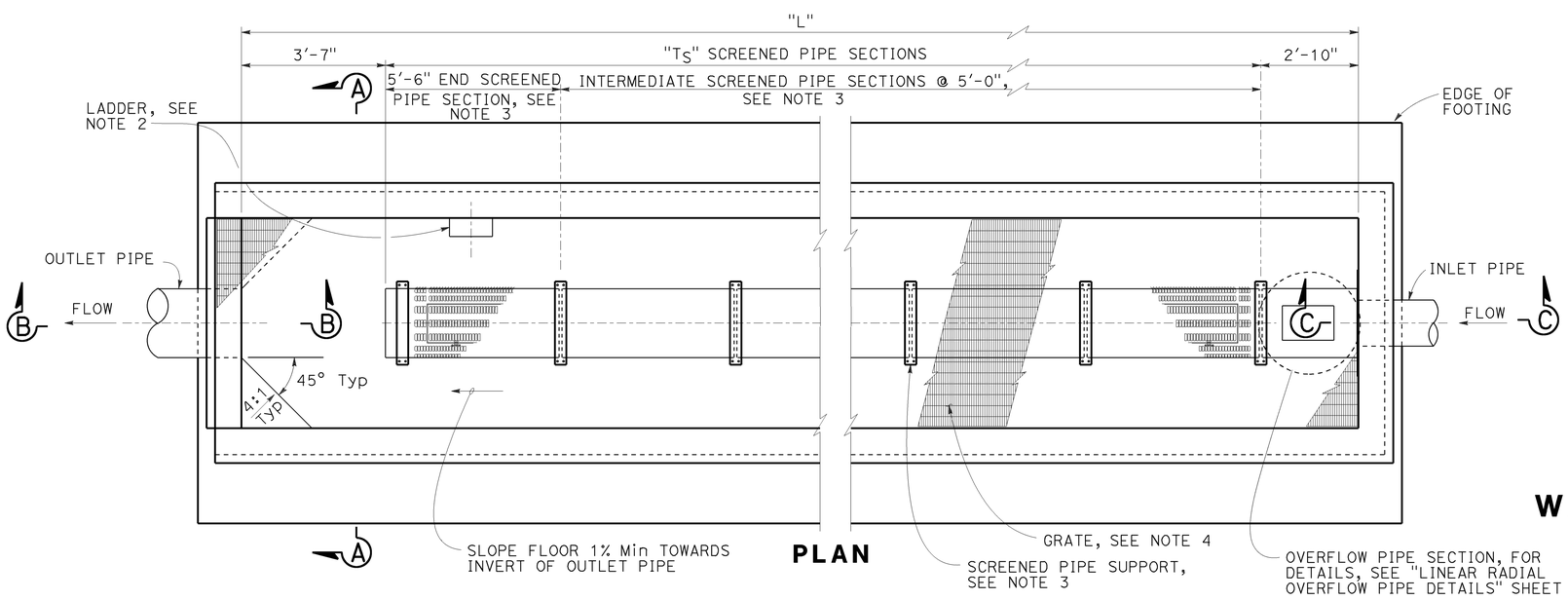

PLAN

NOTES (THIS SHEET ONLY):

1. For Section A-A, B-B, C-C and D-D, see "Linear Radial Details" sheet.
2. For ladder details see "Linear Radial Ladder Details" sheet.
3. For end and intermediate screened pipe details, see "Linear Radial Screened Pipe Details" sheet.
4. For grate details, see "Linear Radial Grate Panel Details" sheet.
5. For layout of inlet and outlet pipes, see "Drainage Plans".
6. For FL elevation of inlet and outlet pipes, see "Drainage Profiles".
7. For dimension "L", "Ts" and other design data, see Design Chart on "Linear Radial Legend" sheet.
8. For dimension "H", see "Linear Radial Details sheet.

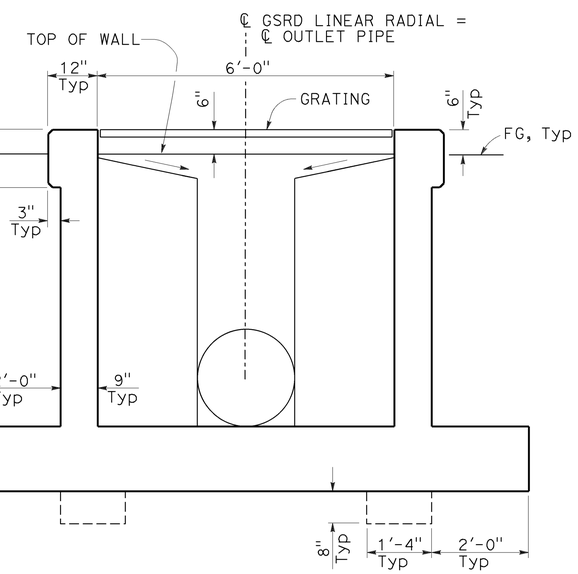

TYPICAL SECTION

WATER POLLUTION CONTROL DETAILS
GROSS SOLIDS REMOVAL DEVICE
LINEAR RADIAL LAYOUT

NO SCALE

WD-10

STATE OF CALIFORNIA - DEPARTMENT OF TRANSPORTATION
DIVISION OF DESIGN
OFFICE OF STORM WATER MANAGEMENT
Caltrans

FUNCTIONAL SUPERVISOR: TIMOTHY B. SOBELMAN
CALCULATED-DESIGNED BY: D. WANG
CHECKED BY: L. HE
REVISED BY
DATE REVISED

LAST REVISION 10-15-13
DATE PLOTTED => 25-JUN-2015
TIME PLOTTED => 09:28

Dist	COUNTY	ROUTE	POST MILES TOTAL PROJECT	SHEET No.	TOTAL SHEETS
07	LA	60	R24.4/R25.3	57	384

REGISTERED CIVIL ENGINEER 12-12-12 DATE

3-14-16
PLANS APPROVAL DATE

REGISTERED PROFESSIONAL ENGINEER TIMOTHY B. SOBELMAN No. 59249 Exp. 6-30-17 CIVIL STATE OF CALIFORNIA

THE STATE OF CALIFORNIA OR ITS OFFICERS OR AGENTS SHALL NOT BE RESPONSIBLE FOR THE ACCURACY OR COMPLETENESS OF SCANNED COPIES OF THIS PLAN SHEET.

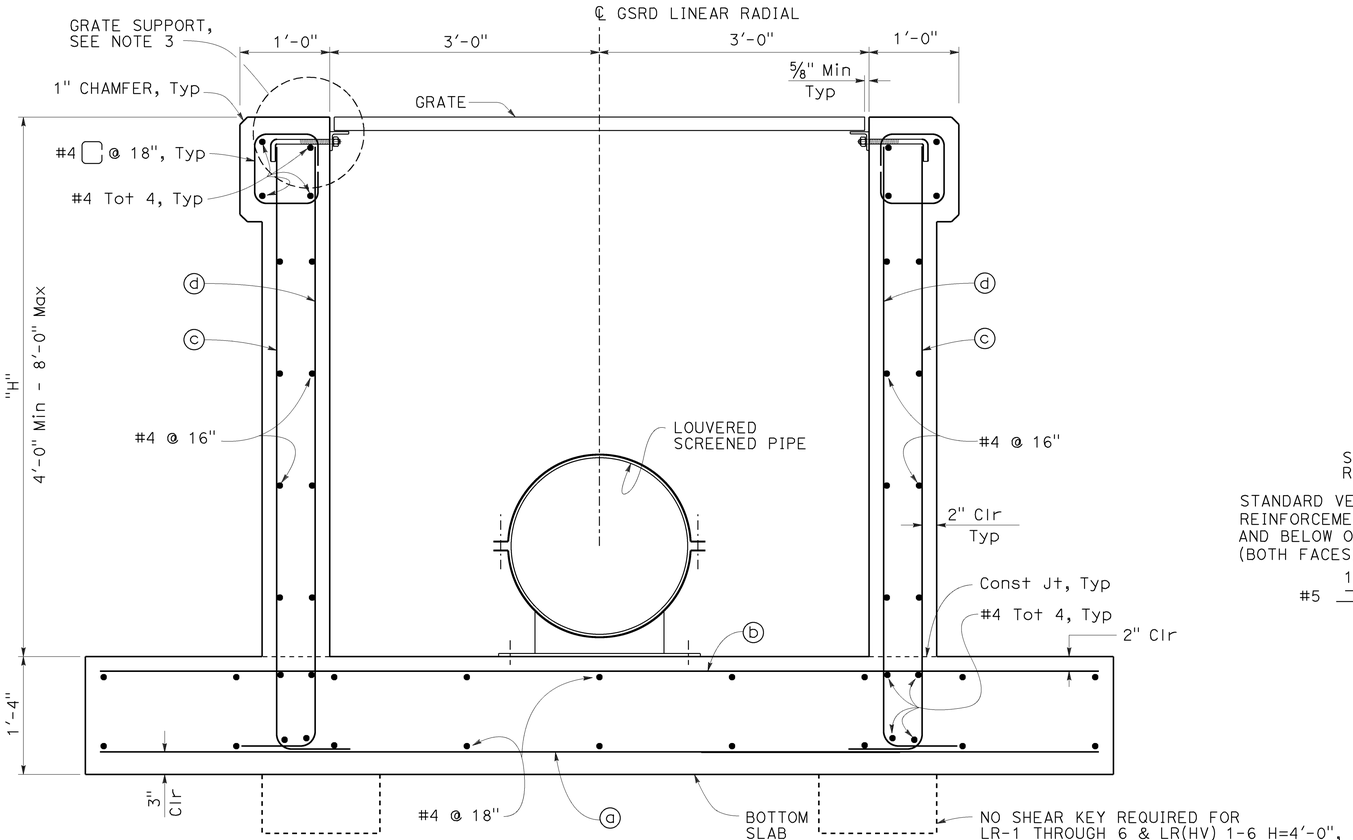

SECTION A-A

NOTES (THIS SHEET ONLY):

1. For location of sections A-A, B-B, C-C and D-D, see "Linear Radial Layout" sheet.
2. For invert elevation differential between inlet and outlet, see "Drainage Profiles" sheets.
3. For grate support detail, see "Linear Radial Grate Panel Details" sheet.

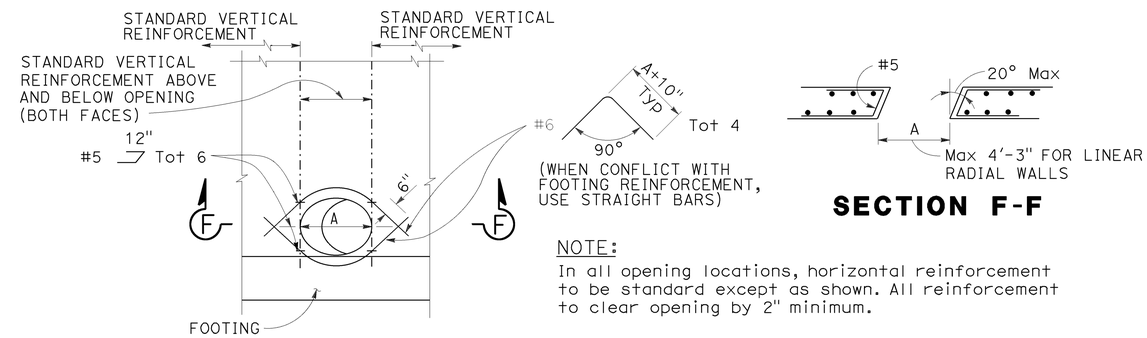

SECTION F-F

NOTE:
In all opening locations, horizontal reinforcement to be standard except as shown. All reinforcement to clear opening by 2" minimum.

WALL OPENING DETAILS

To be used at Linear Radial inlet and outlet pipe locations

REINFORCING STEEL AND DATA FOR WALLS

Design "H"	4'-0"	6'-0"	8'-0"
ⓐ BARS	#4 @ 18"	#5 @ 12"	#5 @ 8"
ⓑ BARS	#4 @ 18"	#4 @ 18"	#5 @ 16"
ⓒ BARS ⌊	#5 @ 14"	#5 @ 9"	#5 @ 4"
ⓓ BARS ⌋	#5 @ 14"	#5 @ 14"	#5 @ 12"

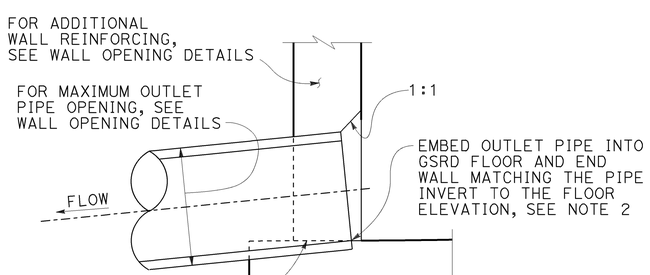

SECTION B-B

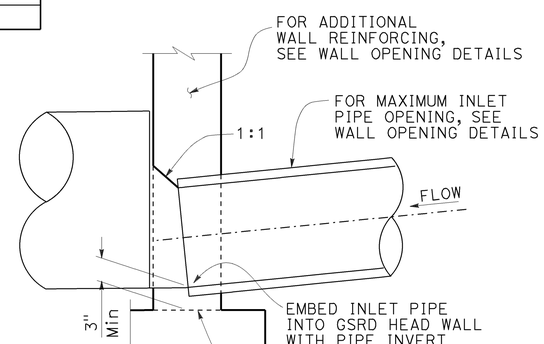

SECTION C-C

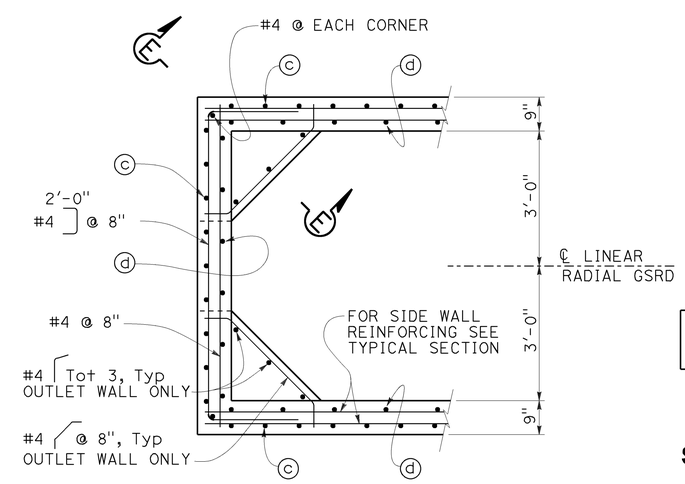

SECTION D-D

NOTE: OUTLET WALL SHOWN, INLET WALL SIMILAR.

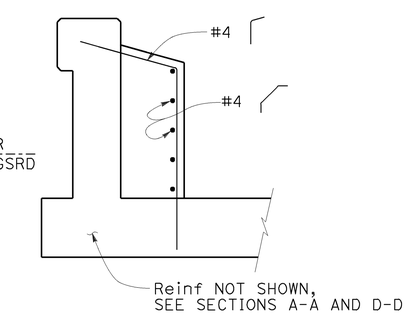

SECTION E-E

(OUTLET END ONLY)

WATER POLLUTION CONTROL DETAILS
GROSS SOLIDS REMOVAL DEVICE
LINEAR RADIAL DETAILS

NO SCALE

WD-11

STATE OF CALIFORNIA - DEPARTMENT OF TRANSPORTATION
DIVISION OF DESIGN
OFFICE OF STORM WATER MANAGEMENT
Caltrans

FUNCTIONAL SUPERVISOR: TIMOTHY B. SOBELMAN
CALCULATED-DESIGNED BY: D. WANG
CHECKED BY: L. HE
REVISED BY
DATE REVISED

LAST REVISION 10-15-13
DATE PLOTTED => 25-JUN-2015
TIME PLOTTED => 09:28

Dist	COUNTY	ROUTE	POST MILES TOTAL PROJECT	SHEET No.	TOTAL SHEETS
07	LA	60	R24.4/R25.3	58	384

Timothy B. Sobelman 12-12-12
REGISTERED CIVIL ENGINEER DATE

3-14-16
PLANS APPROVAL DATE

REGISTERED PROFESSIONAL ENGINEER TIMOTHY B. SOBELMAN No. 59249 Exp. 6-30-17 CIVIL STATE OF CALIFORNIA

THE STATE OF CALIFORNIA OR ITS OFFICERS OR AGENTS SHALL NOT BE RESPONSIBLE FOR THE ACCURACY OR COMPLETENESS OF SCANNED COPIES OF THIS PLAN SHEET.

NOTE (THIS SHEET ONLY):

1. All metal components of screen pipe including connections to concrete must be stainless steel.

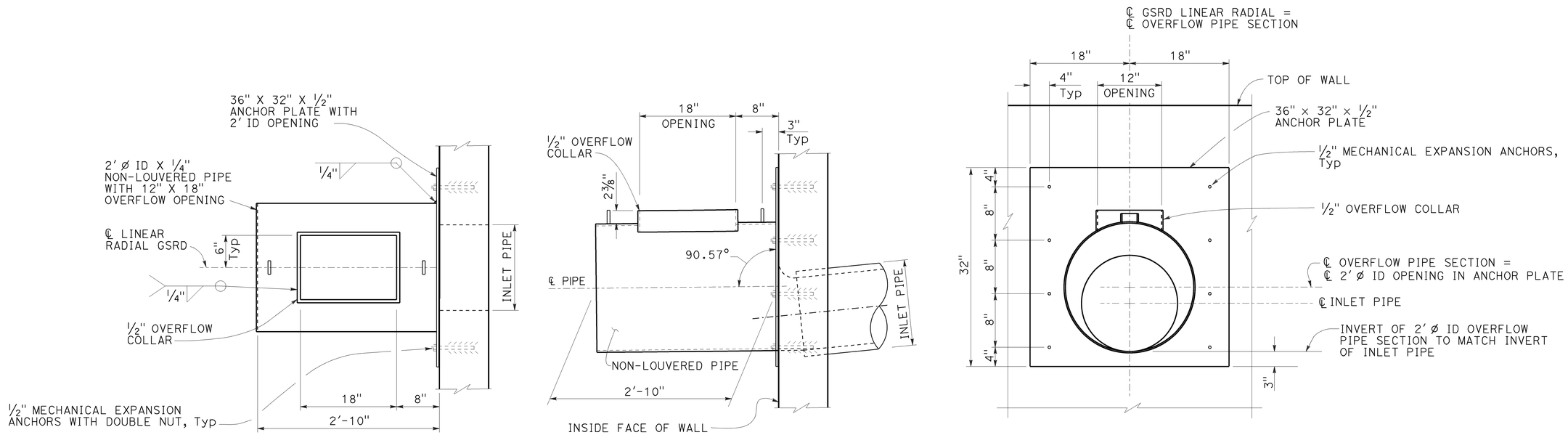

OVERFLOW PIPE AND ANCHOR PLATE DETAILS

WATER POLLUTION CONTROL DETAILS
GROSS SOLIDS REMOVAL DEVICE
LINEAR RADIAL OVERFLOW PIPE DETAILS

NO SCALE

WD-12

STATE OF CALIFORNIA - DEPARTMENT OF TRANSPORTATION
Caltrans
DIVISION OF DESIGN
OFFICE OF STORM WATER MANAGEMENT

FUNCTIONAL SUPERVISOR: TIMOTHY B. SOBELMAN
CALCULATED-DESIGNED BY: D. WANG
CHECKED BY: L. HE
REVISED BY
DATE REVISED

LAST REVISION 10-15-13
DATE PLOTTED => 25-JUN-2015
TIME PLOTTED => 09:28

Dist	COUNTY	ROUTE	POST MILES TOTAL PROJECT	SHEET No.	TOTAL SHEETS
07	LA	60	R24.4/R25.3	59	384

Timothy B. Sobelman 12-12-12
REGISTERED CIVIL ENGINEER DATE

3-14-16
PLANS APPROVAL DATE

REGISTERED PROFESSIONAL ENGINEER TIMOTHY B. SOBELMAN No. 59249 Exp. 6-30-17 CIVIL STATE OF CALIFORNIA

THE STATE OF CALIFORNIA OR ITS OFFICERS OR AGENTS SHALL NOT BE RESPONSIBLE FOR THE ACCURACY OR COMPLETENESS OF SCANNED COPIES OF THIS PLAN SHEET.

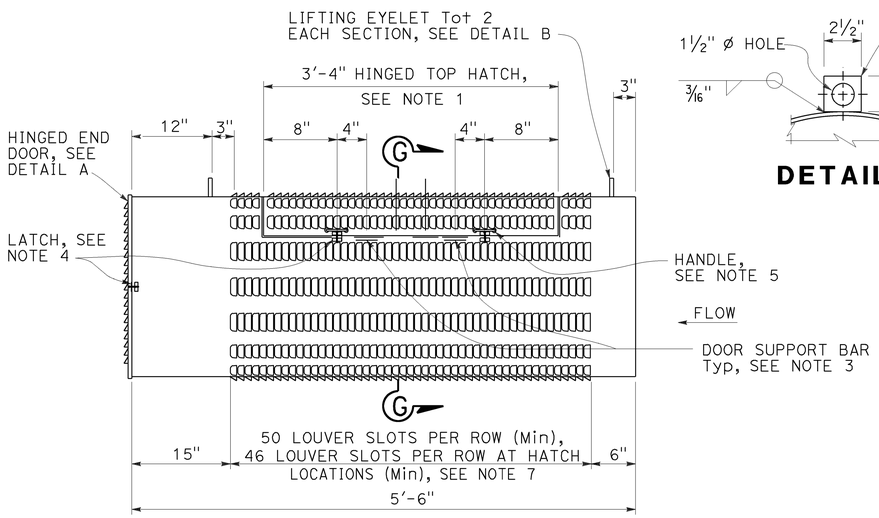

END SCREENED PIPE

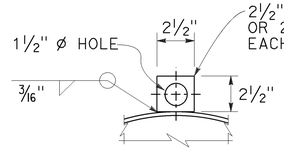

DETAIL B

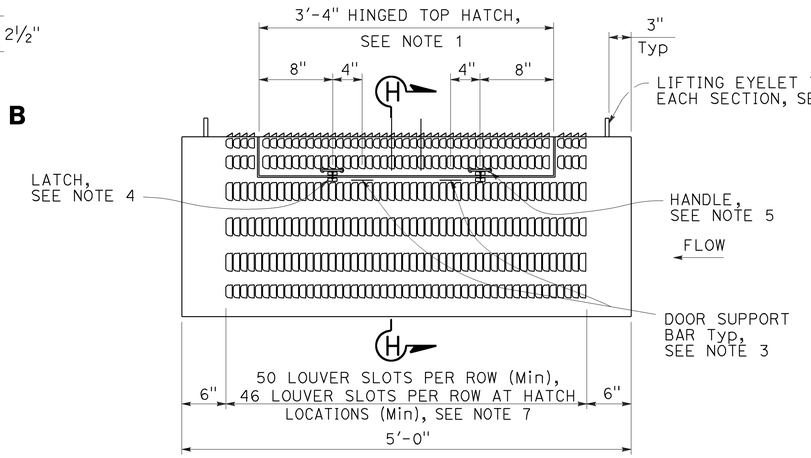

INTERMEDIATE SCREENED PIPE

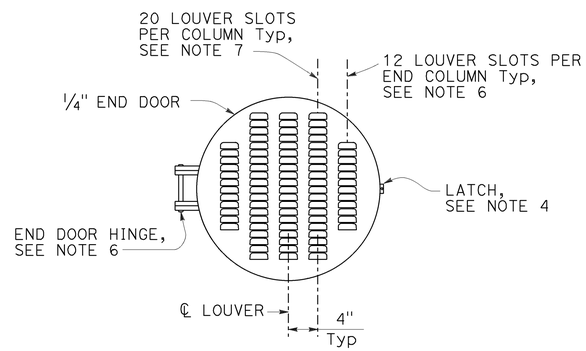

DETAIL A

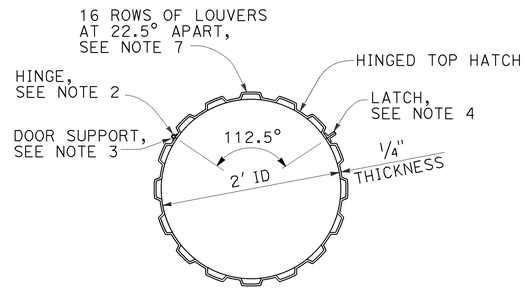

SECTION G-G

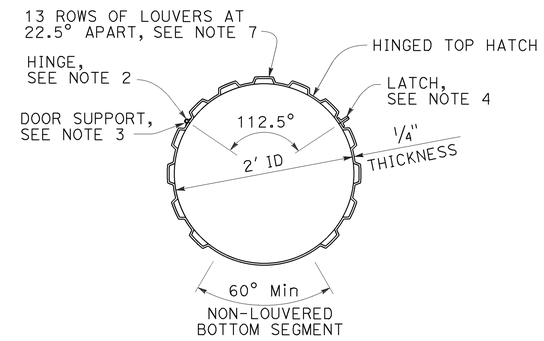

SECTION H-H

NOTES (THIS SHEET ONLY):

1. Provide 1" x 3/16" stainless steel bar at all cut edges to provide a seat and support for all doors when closed.
2. Provide stainless steel ¼" thick heavy duty hinges 4" x 4" thick with ⅝" Dia pin. Use fillet weld at cover and frame. Total 2 each door, evenly spaced.
3. Attach 2- 1" x 1" x 3" stainless steel bars (or fabricator equivalent design) to support doors when in an open position. Mechanical stops can be welded on hinges.
4. Provide latch. Latch must have threaded U-bolt for adjustment. Latch to have ⅜" total adjustability and 1 7/16" drawing movement and be rated at 360 LB.
5. Provide stainless steel handles at locations indicated.
6. End door to be secured to end screen with ⅜" Dia x 10" continuous bolt with lock nut through flat bars.
7. The aperture size of each louver slot must be 3/16" wide x 2½" long. Louver slot apertures must meet the following requirements:

Width	% of Total
0.189" - 0.209"	90
0.181" - 0.209"	95
0.169" - 0.209"	100

Length	% of Total
2.250" - 2.750"	90
2.000" - 3.000"	100

8. If inlet invert height above floor is at the minimum 3 inch height, use anchor bolts to mount the pipe support base plate to the floor. Otherwise, construct concrete support.

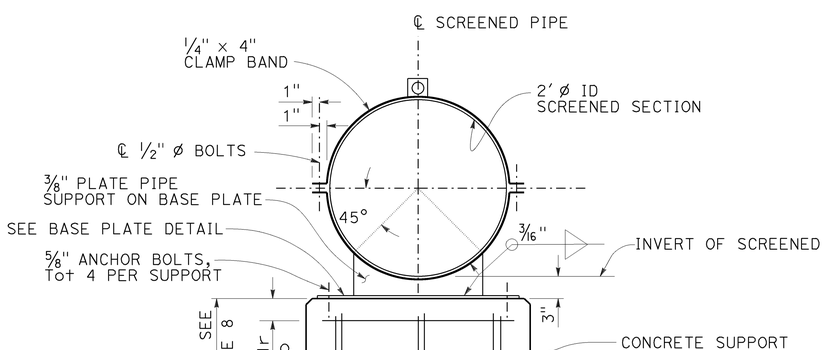

SECTION I-I

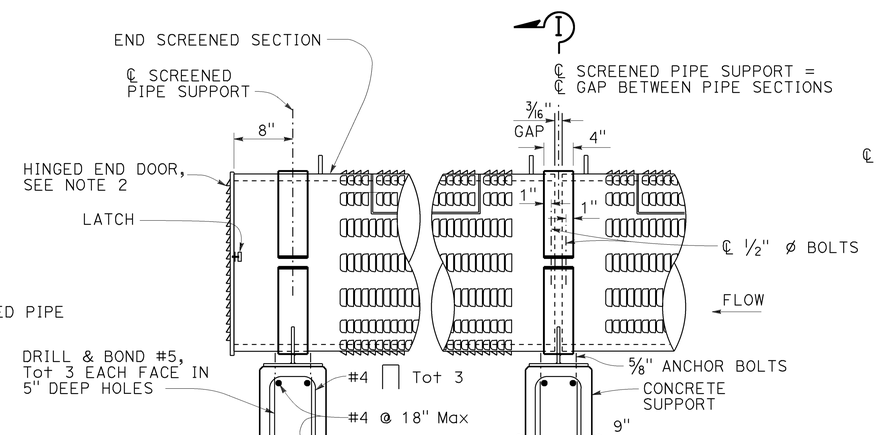

SCREENED PIPE SUPPORT

SIDE VIEW

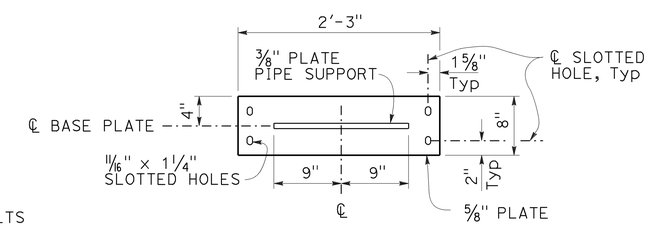

BASE PLATE DETAIL

WATER POLLUTION CONTROL DETAILS
GROSS SOLIDS REMOVAL DEVICE
LINEAR RADIAL SCREENED PIPE DETAILS

NO SCALE

WD-13

STATE OF CALIFORNIA - DEPARTMENT OF TRANSPORTATION
DIVISION OF DESIGN
OFFICE OF STORM WATER MANAGEMENT
Caltrans

FUNCTIONAL SUPERVISOR: TIMOTHY B. SOBELMAN
CALCULATED-DESIGNED BY: D. WANG
CHECKED BY: L. HE
REVISED BY
DATE REVISED

LAST REVISION 10-15-13
DATE PLOTTED => 25-JUN-2015
TIME PLOTTED => 09:28

Dist	COUNTY	ROUTE	POST MILES TOTAL PROJECT	SHEET No.	TOTAL SHEETS
07	LA	60	R24.4/R25.3	60	384

Timothy B. Sobelman 12-12-12
REGISTERED CIVIL ENGINEER DATE

3-14-16
PLANS APPROVAL DATE

REGISTERED PROFESSIONAL ENGINEER TIMOTHY B. SOBELMAN No. 59249 Exp. 6-30-17 CIVIL STATE OF CALIFORNIA

THE STATE OF CALIFORNIA OR ITS OFFICERS OR AGENTS SHALL NOT BE RESPONSIBLE FOR THE ACCURACY OR COMPLETENESS OF SCANNED COPIES OF THIS PLAN SHEET.

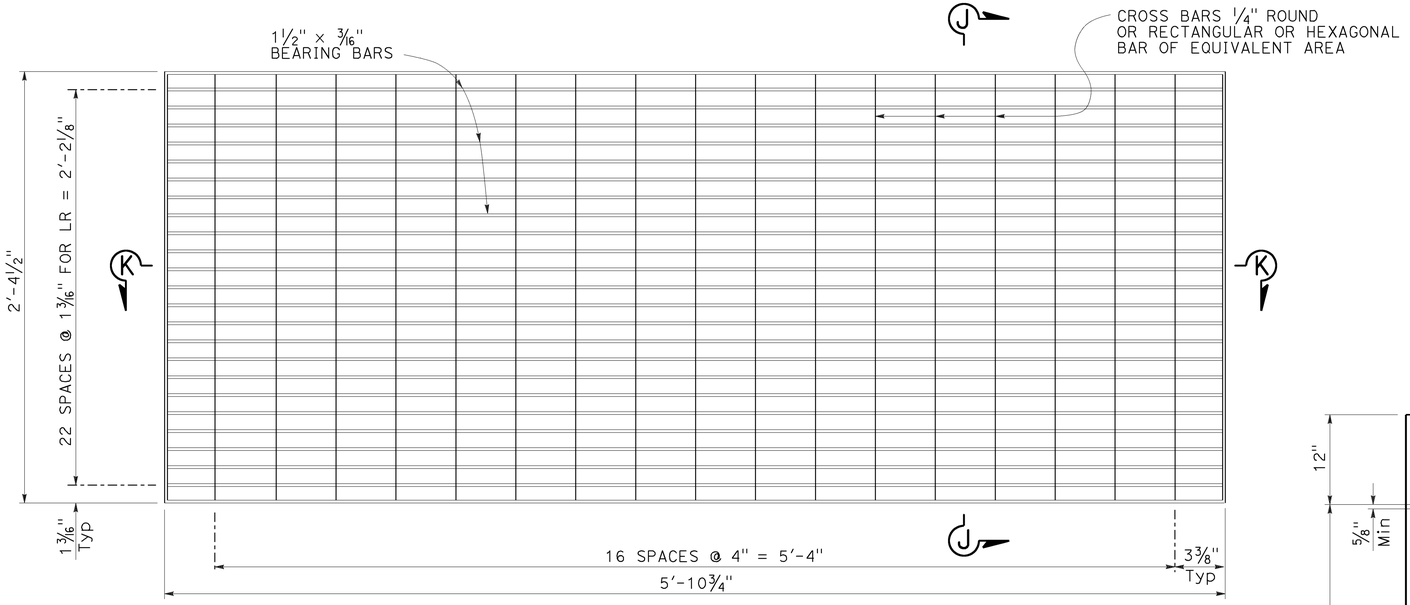

GRATE PANEL

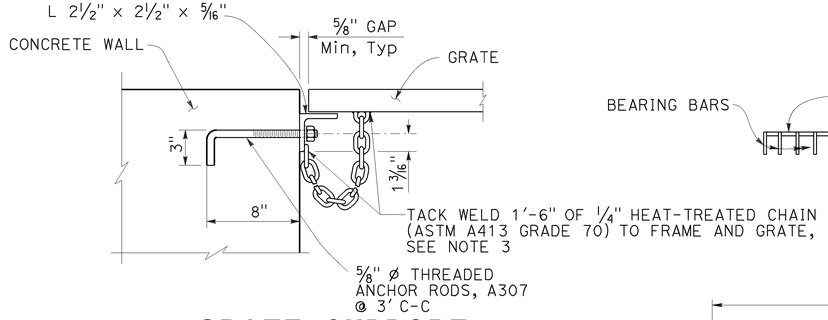

GRATE SUPPORT

SECTION J-J

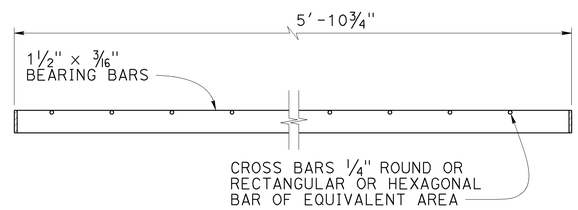

SECTION K-K

NOTE: CROSS BARS MAYBE FILLET WELDED, RESISTANCE WELDED OR ELECTROFORGED TO BEARING BARS.

No. OF INTERMEDIATE SCREENED PIPES	LR No. OF GRATES	LR(HV) No. OF GRATES
0	5	6
1	7	8
2	9	10
3	11	12
4	13	14
5	15	16

NOTES (THIS SHEET ONLY):

1. Gap between grate panels is 1".
2. All metal components of grating including connections to wall must be galvanized.
3. Attach "heat-treated chain" per grate on wall opposite of service ladder, see "Grate Support Detail" this sheet.

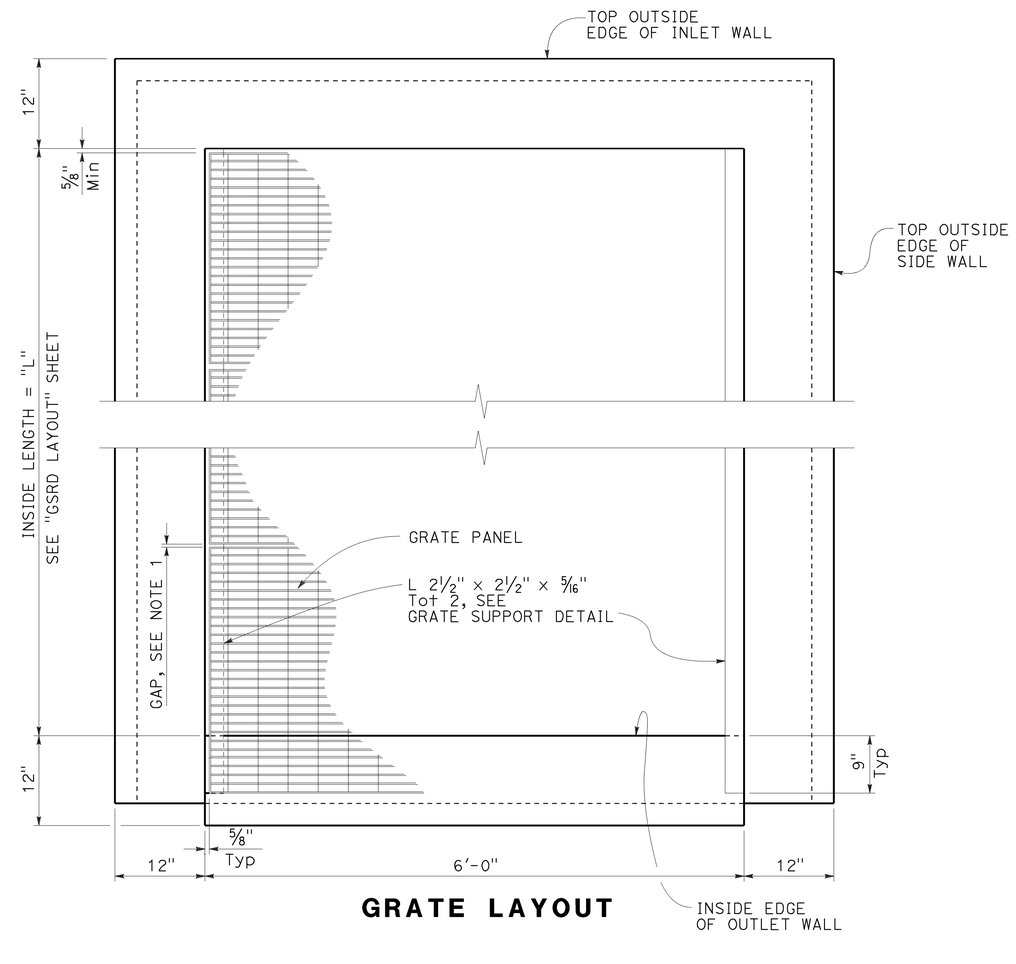

GRATE LAYOUT

WATER POLLUTION CONTROL DETAILS
GROSS SOLIDS REMOVAL DEVICE
LINEAR RADIAL GRATE PANEL DETAILS

NO SCALE

WD-14

STATE OF CALIFORNIA - DEPARTMENT OF TRANSPORTATION
DIVISION OF DESIGN
OFFICE OF STORM WATER MANAGEMENT
Caltrans

FUNCTIONAL SUPERVISOR: TIMOTHY B. SOBELMAN
CALCULATED-DESIGNED BY: D. WANG
CHECKED BY: L. HE
REVISED BY
DATE REVISED

LAST REVISION 10-15-13
DATE PLOTTED => 25-JUN-2015
TIME PLOTTED => 09:28

Dist	COUNTY	ROUTE	POST MILES TOTAL PROJECT	SHEET No.	TOTAL SHEETS
07	LA	60	R24.4/R25.3	61	384

Timothy B. Sobelman 12-12-12
REGISTERED CIVIL ENGINEER DATE

3-14-16
PLANS APPROVAL DATE

REGISTERED PROFESSIONAL ENGINEER TIMOTHY B. SOBELMAN No. 59249 Exp. 6-30-17 CIVIL STATE OF CALIFORNIA

THE STATE OF CALIFORNIA OR ITS OFFICERS OR AGENTS SHALL NOT BE RESPONSIBLE FOR THE ACCURACY OR COMPLETENESS OF SCANNED COPIES OF THIS PLAN SHEET.

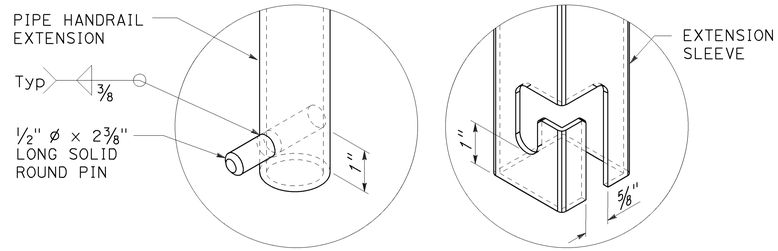

EXTENDABLE HANDRAIL LATCH

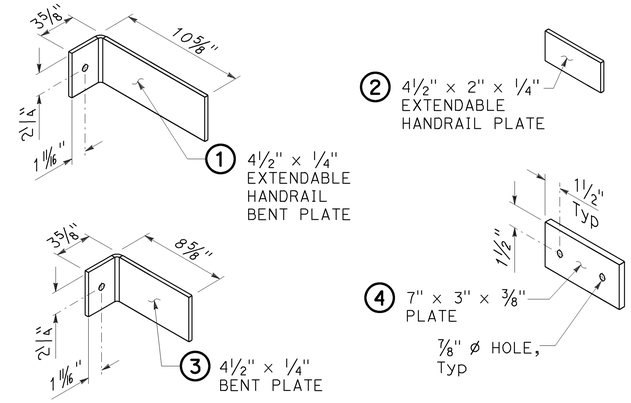

BRACKET DETAILS

NOTES (THIS SHEET ONLY):

1. Rungs must be skid resistant.
2. Use handrails for vault depths between 4'-0" and 6'-6". For deeper vaults use extendable handrail detail. Vault depth is distance between top of wall and either top of floor slab or top of filter media material (use which ever distance is less). Ladders must not extend into filter media material.
3. No handrail required for Linear Radial GSRD 4'-0" depth, due to grate conflict.

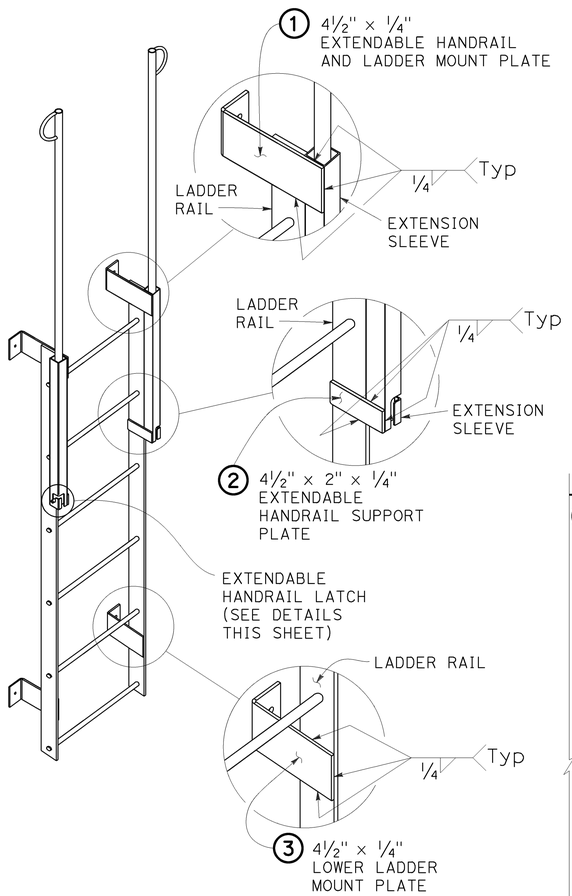

LADDER

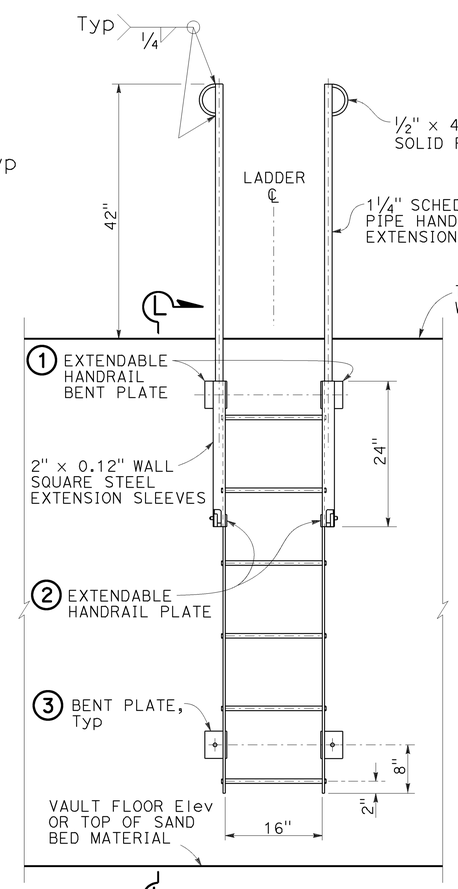

ELEVATION

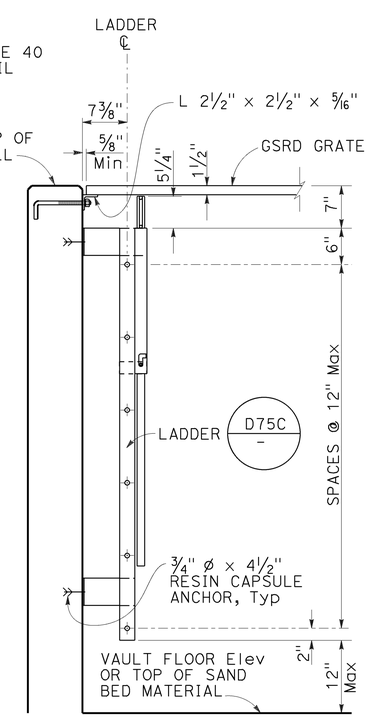

SECTION L-L

EXTENDABLE HANDRAIL

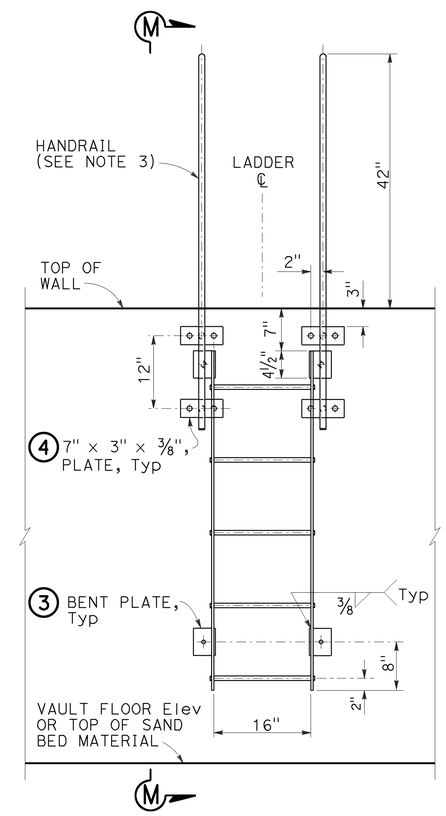

ELEVATION

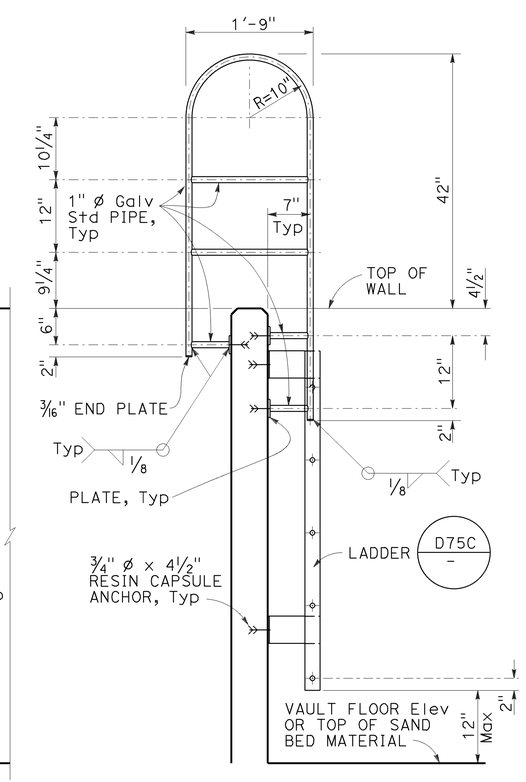

SECTION M-M

WALL MOUNTED HANDRAIL

WATER POLLUTION CONTROL DETAILS
GROSS SOLIDS REMOVAL DEVICE
LINEAR RADIAL LADDER DETAILS

NO SCALE

WD-15

STATE OF CALIFORNIA - DEPARTMENT OF TRANSPORTATION
DIVISION OF DESIGN
OFFICE OF STORM WATER MANAGEMENT

FUNCTIONAL SUPERVISOR: TIMOTHY B. SOBELMAN
CALCULATED-DESIGNED BY: D. WANG
CHECKED BY: L. HE
REVISED BY
DATE REVISED

LAST REVISION 10-15-13
DATE PLOTTED => 25-JUN-2015
TIME PLOTTED => 09:28

Dist	COUNTY	ROUTE	POST MILES TOTAL PROJECT	SHEET No.	TOTAL SHEETS
07	LA	60	R24.4/R25.3	62	384

Timothy B. Sobelman 12-12-12
REGISTERED CIVIL ENGINEER DATE

3-14-16
PLANS APPROVAL DATE

REGISTERED PROFESSIONAL ENGINEER TIMOTHY B. SOBELMAN No. 59249 Exp. 6-30-17 CIVIL STATE OF CALIFORNIA

THE STATE OF CALIFORNIA OR ITS OFFICERS OR AGENTS SHALL NOT BE RESPONSIBLE FOR THE ACCURACY OR COMPLETENESS OF SCANNED COPIES OF THIS PLAN SHEET.

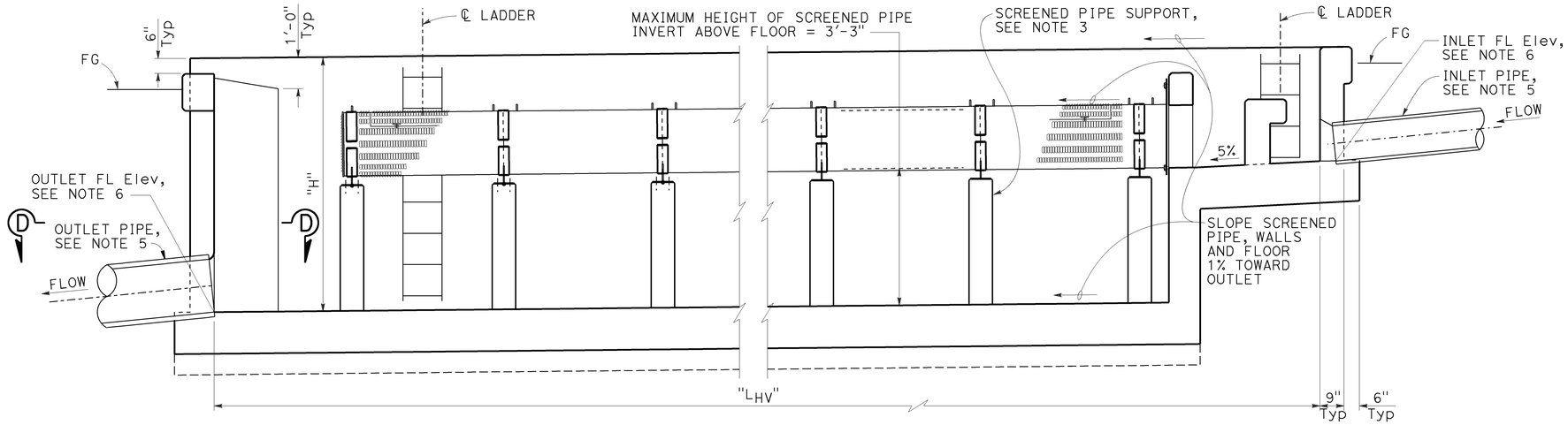

LONGITUDINAL SECTION - MAXIMUM SCREENED PIPE HEIGHT

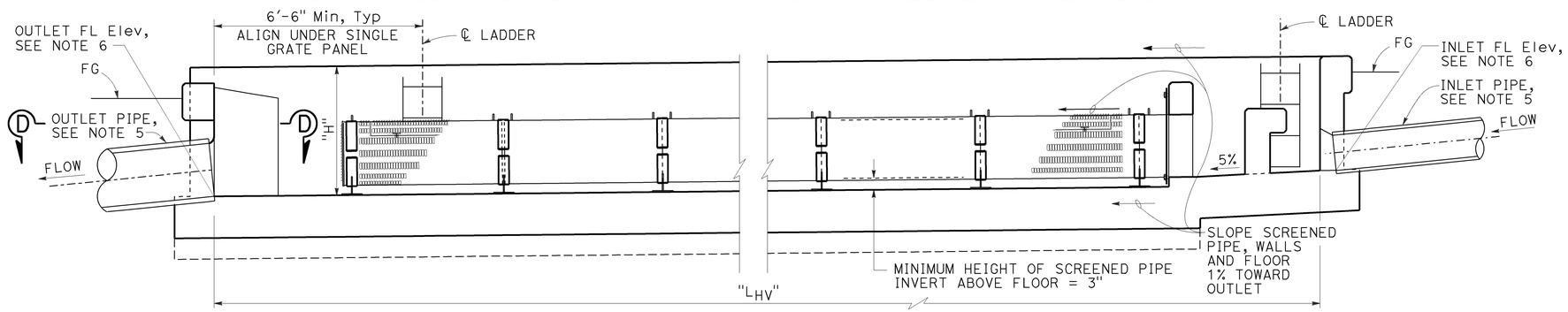

LONGITUDINAL SECTION - MINIMUM SCREENED PIPE HEIGHT

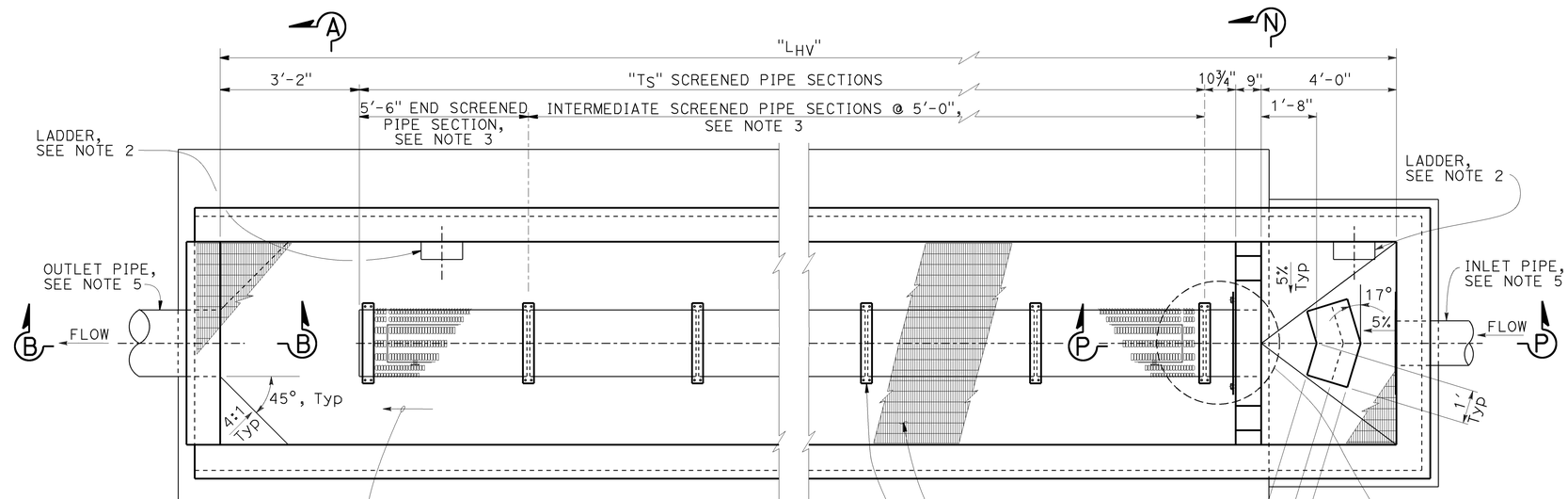

PLAN

NOTES (THIS SHEET ONLY):

1. For Section A-A, B-B, and D-D, see "Linear Radial Details" sheet.
2. For ladder details see "Linear Radial Ladder Details" sheet.
3. For end and intermediate screened pipe details, see "Linear Radial Screened Pipe Details" sheet.
4. For grate details, see "Linear Radial Grate Panel Details" sheet.
5. For layout of inlet and outlet pipes, see "Drainage Plans".
6. For FL elevations of inlet and outlet pipes, see "Drainage Profiles".
7. For dimension "L_{HV}", "T_S" and other design data, see Design Chart on "Linear Radial Legend" sheet.
8. For dimension "H", see "Linear Radial Details sheet.
9. For Section M-M and N-N, see "Linear Radial (High Velocity) Details No. 1" sheet.

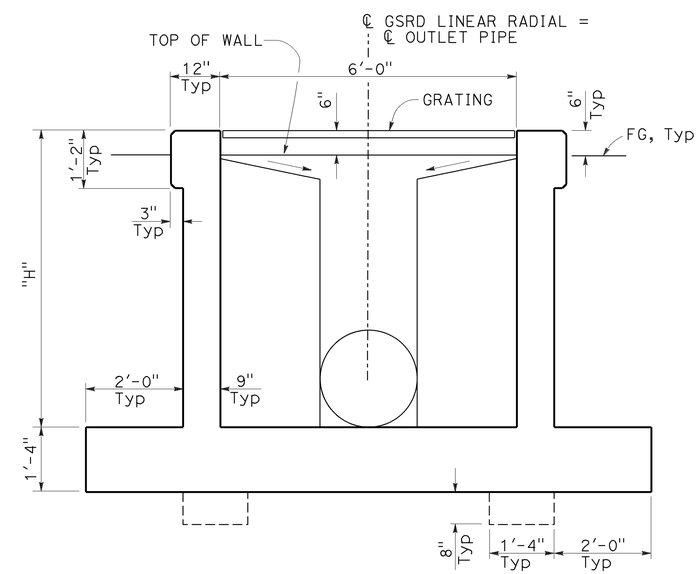

TYPICAL SECTION

WATER POLLUTION CONTROL DETAILS
GROSS SOLIDS REMOVAL DEVICE
LINEAR RADIAL (HIGH VELOCITY) LAYOUT

NO SCALE

WD-16

STATE OF CALIFORNIA - DEPARTMENT OF TRANSPORTATION
DIVISION OF DESIGN
OFFICE OF STORM WATER MANAGEMENT
Caltrans

FUNCTIONAL SUPERVISOR: TIMOTHY B. SOBELMAN
CALCULATED-DESIGNED BY: D. WANG
CHECKED BY: L. HE
REVISED BY
DATE REVISED

LAST REVISION 10-15-13
DATE PLOTTED => 25-JUN-2015
TIME PLOTTED => 09:28

Dist	COUNTY	ROUTE	POST MILES TOTAL PROJECT	SHEET No.	TOTAL SHEETS
07	LA	60	R24.4/R25.3	63	384

REGISTERED CIVIL ENGINEER DATE 12-12-12

3-14-16
PLANS APPROVAL DATE

REGISTERED PROFESSIONAL ENGINEER TIMOTHY B. SOBELMAN No. 59249 Exp. 6-30-17 CIVIL STATE OF CALIFORNIA

THE STATE OF CALIFORNIA OR ITS OFFICERS OR AGENTS SHALL NOT BE RESPONSIBLE FOR THE ACCURACY OR COMPLETENESS OF SCANNED COPIES OF THIS PLAN SHEET.

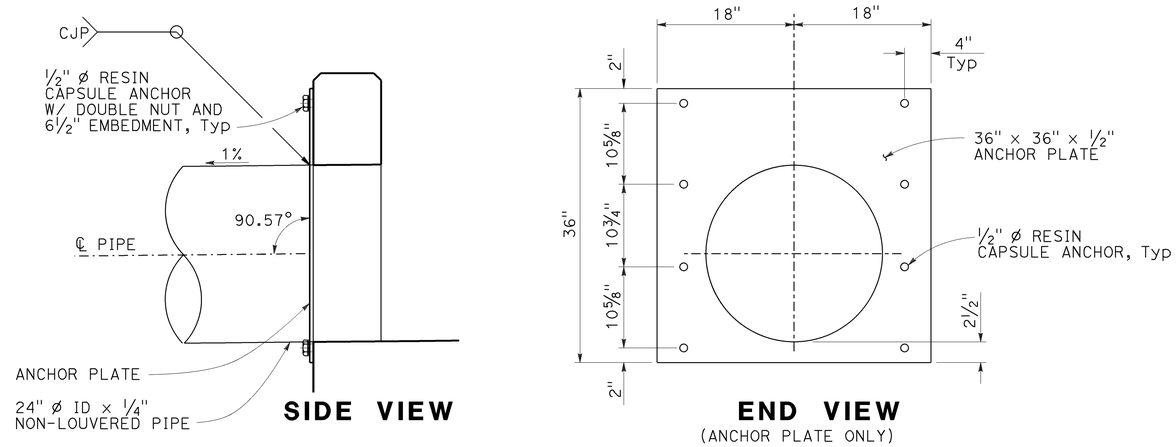

ANCHOR PLATE DETAILS

NOTES:

1. For location of Sections M-M and N-N, see "Linear Radial (High Velocity) Layout" sheet.
2. For Grate Support Details, see "Linear Radial Grate Panel Details" sheet.
3. For bottom slab details not shown, see Section A-A on "Linear Radial Details" sheet.

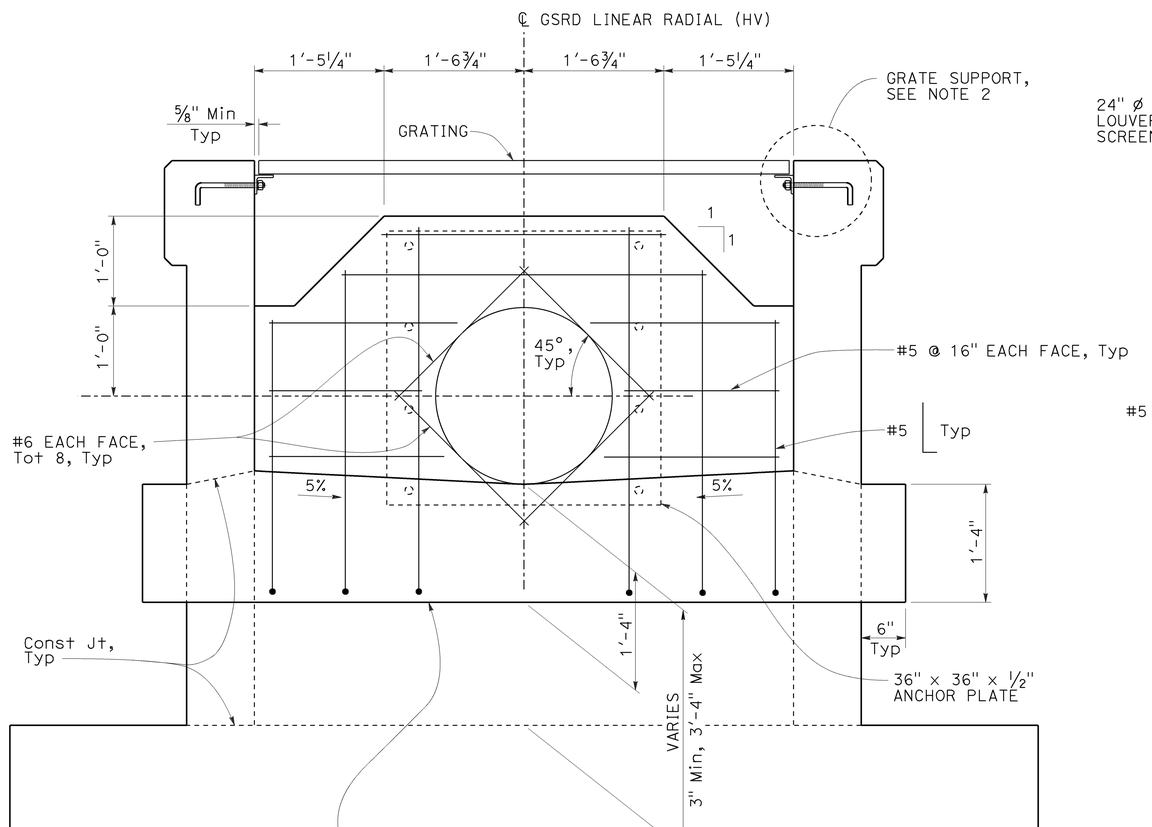

SECTION N-N

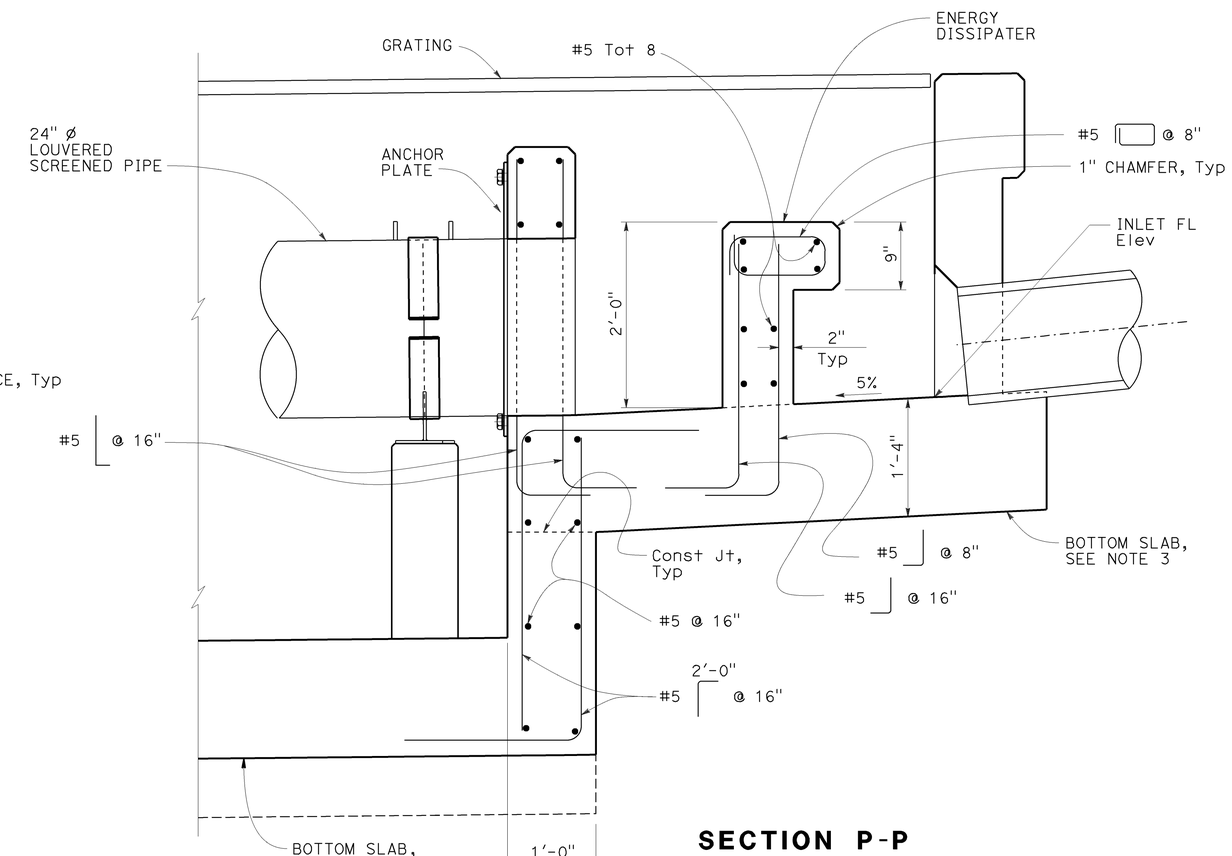

SECTION P-P

NOTE: Ladder not shown for clarity.

WATER POLLUTION CONTROL DETAILS
GROSS SOLIDS REMOVAL DEVICE
LINEAR RADIAL (HIGH VELOCITY) DETAILS

NO SCALE

WD-17

STATE OF CALIFORNIA - DEPARTMENT OF TRANSPORTATION
DIVISION OF DESIGN
OFFICE OF STORM WATER MANAGEMENT

FUNCTIONAL SUPERVISOR: TIMOTHY B. SOBELMAN
CALCULATED-DESIGNED BY: D. WANG
CHECKED BY: L. HE
REVISED BY
DATE REVISED

LAST REVISION 10-15-13
DATE PLOTTED => 25-JUN-2015
TIME PLOTTED => 09:29

Dist	COUNTY	ROUTE	POST MILES TOTAL PROJECT	SHEET No.	TOTAL SHEETS
07	LA	60	R24.4/R25.3	64	384

REGISTERED CIVIL ENGINEER 1-15-16 DATE

3-14-16
PLANS APPROVAL DATE

REGISTERED PROFESSIONAL ENGINEER MICHAEL HYNES No. C 67872 Exp. 06-30-17 CIVIL STATE OF CALIFORNIA

THE STATE OF CALIFORNIA OR ITS OFFICERS OR AGENTS SHALL NOT BE RESPONSIBLE FOR THE ACCURACY OR COMPLETENESS OF SCANNED COPIES OF THIS PLAN SHEET.

WKE, INC
400 N. TUSTIN AVENUE
SUITE 275
SANTA ANA, CA 92705

CITY OF INDUSTRY
15651 EAST STAFFORD STREET
CITY OF INDUSTRY, CA 91744

WATER POLLUTION CONTROL QUANTITIES

SHEET No.	LOCATION	CLASSIFICATION	STRUCTURAL CONCRETE	BAR REINFORCING STEEL	STRUCTURE EXCAVATION	STRUCTURE BACKFILL	FRAME AND GRATE	MISCELLANEOUS METAL	MISCELLANEOUS METAL (SCREENED PIPE)	GABION	CABLE RAILING	CLASS 4 PERMEABLE MATERIAL	CLASS 5 PERMEABLE MATERIAL	CLASS D FILTER FABRIC	6" PERFORATED PLASTIC PIPE UNDERDRAIN	6" NON-PERFORATED PLASTIC PIPE UNDERDRAIN	JOINT SEAL (TYPE AL)	DITCH EXCAVATION	MINOR CONCRETE (MISCELLANEOUS CONSTRUCTION)
			CY	LB	CY	CY	EA	LB	LB	CY	LF	CY	CY	SQYD	LF	LF	LF	CY	CY
D-1	WG-3 LOOP RAMP	AUSTIN VAULT SAND FILTER	357.0	82,972.1	2,038.0	266.0		115.0		12.0	237.0	126.0	110.0	285.0	367.8	69.2	3.5		4.5
D-1	"AL" 300+80	GROSS SOLIDS REMOVAL DEVICE	20.3	2,791.0	54.7	7.7	7.0	1,382.3	1,091.3										
D-1	"WG-2" 101+20	BIOSWALE																16.7	
D-2	"AL" 311+90	BIOSWALE																37.0	
D-2 TO D-3	"AL" 315+63	UNLINED SWALE																130.7	
D-3	"AL" 318+29	BIOSWALE																35.2	
D-3	"AL" 323+00	UNLINED SWALE																230.4	
TOTAL			377.3	85,763.2	2,092.7	273.7	7.0	1,497.3	1,091.3	12.0	237.0	126.0	110.0	285.0	367.8	69.2	3.5	450.0	4.5
TOTAL FROM DRAINAGE QUANTITIES SHEET DQ-6																127.1			
TOTAL FROM SUMMARY OF QUANTITIES SHEET Q-2																			375.1
GRAND TOTAL			377.3	85,763.2	2,092.7	273.7	7.0	1,497.3	1,091.3	12.0	237.0	126.0	110.0	285.0	367.8	196.3	3.5	450.0	379.6

WATER POLLUTION CONTROL QUANTITIES

WQ-1

STATE OF CALIFORNIA - DEPARTMENT OF TRANSPORTATION
Caltrans®
DESIGN

CONSULTANT FUNCTIONAL SUPERVISOR: MICHAEL HYNES
CALCULATED-DESIGNED BY: JOSEPH CARBAJAL
CHECKED BY: MICHAEL HYNES
REVISED BY
DATE REVISED

LAST REVISION 00-00-00
DATE PLOTTED => 09-MAY-2016
TIME PLOTTED => 15:05

Dist	COUNTY	ROUTE	POST MILES TOTAL PROJECT	SHEET No.	TOTAL SHEETS
07	LA	60	R24.4/R25.3	65	384

REGISTERED CIVIL ENGINEER 1-15-16 DATE

3-14-16
PLANS APPROVAL DATE

REGISTERED PROFESSIONAL ENGINEER HANK T. NGUYEN No. C 61227 Exp. 6-30-17 CIVIL STATE OF CALIFORNIA

THE STATE OF CALIFORNIA OR ITS OFFICERS OR AGENTS SHALL NOT BE RESPONSIBLE FOR THE ACCURACY OR COMPLETENESS OF SCANNED COPIES OF THIS PLAN SHEET.

WKE, INC
400 N. TUSTIN AVENUE
SUITE 275
SANTA ANA, CA 92705

CITY OF INDUSTRY
15651 EAST STAFFORD STREET
CITY OF INDUSTRY, CA 91744

NOTE:

FOR ACCURATE RIGHT OF WAY DATA, CONTACT RIGHT OF WAY ENGINEERING AT THE DISTRICT OFFICE.

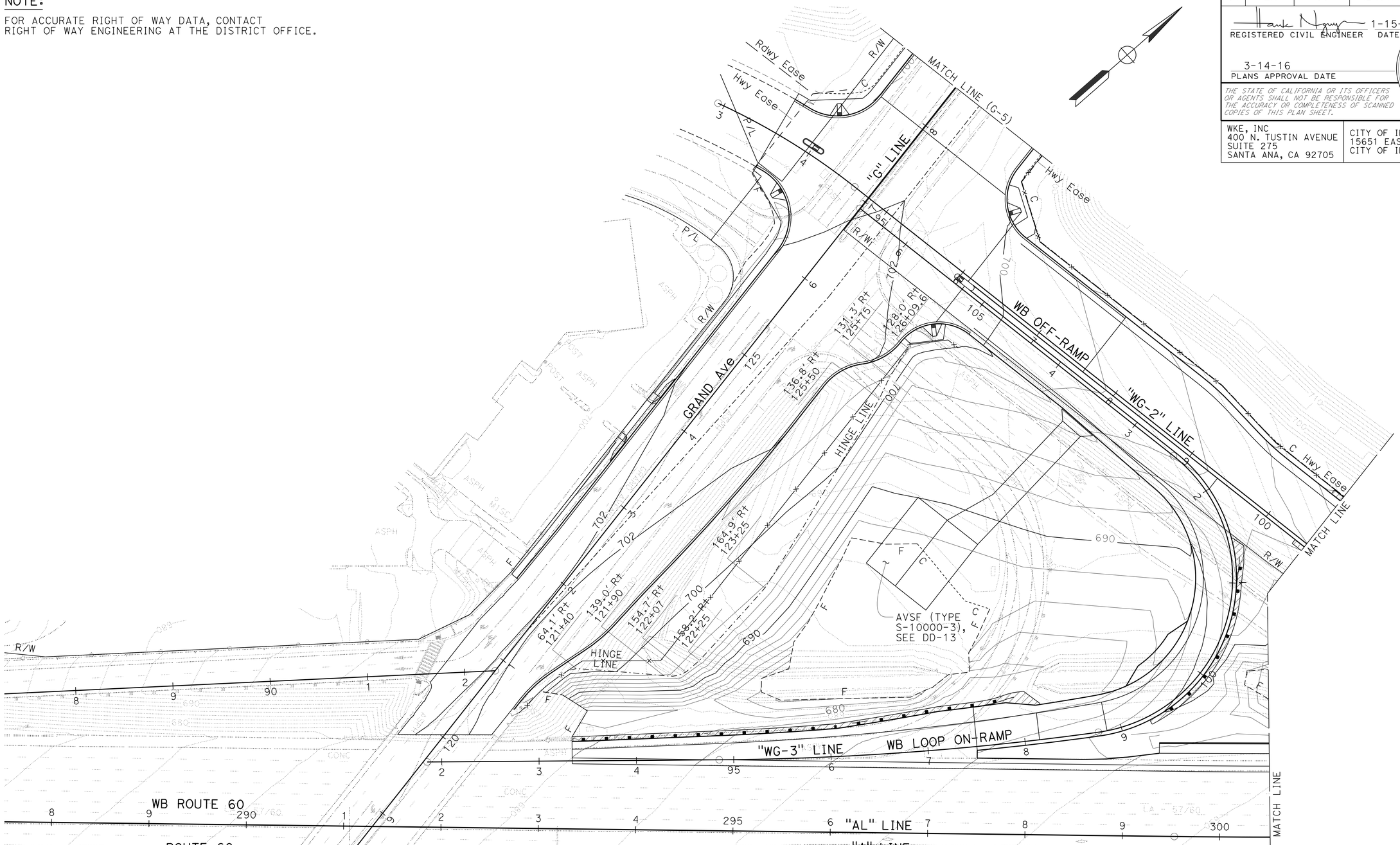

CONTOUR GRADING

SCALE: 1" = 50'

G-1

APPROVED FOR CONTOUR GRADING WORK ONLY

STATE OF CALIFORNIA - DEPARTMENT OF TRANSPORTATION

Caltrans

DESIGN

CONSULTANT FUNCTIONAL SUPERVISOR: DAN WEDDELL

CALCULATED-DESIGNED BY: HUA ZHENG

CHECKED BY: YOSUKE ARAI

REVISED BY

DATE REVISED

LAST REVISION 00-00-00

DATE PLOTTED => 09-MAY-2016
TIME PLOTTED => 15:05

Dist	COUNTY	ROUTE	POST MILES TOTAL PROJECT	SHEET No.	TOTAL SHEETS
07	LA	60	R24.4/R25.3	66	384

REGISTERED CIVIL ENGINEER 1-15-16 DATE

3-14-16
PLANS APPROVAL DATE

REGISTERED PROFESSIONAL ENGINEER HANK T. NGUYEN No. C 61227 Exp. 6-30-17 CIVIL STATE OF CALIFORNIA

THE STATE OF CALIFORNIA OR ITS OFFICERS OR AGENTS SHALL NOT BE RESPONSIBLE FOR THE ACCURACY OR COMPLETENESS OF SCANNED COPIES OF THIS PLAN SHEET.

WKE, INC
400 N. TUSTIN AVENUE
SUITE 275
SANTA ANA, CA 92705

CITY OF INDUSTRY
15651 EAST STAFFORD STREET
CITY OF INDUSTRY, CA 91744

NOTE:

FOR ACCURATE RIGHT OF WAY DATA, CONTACT
RIGHT OF WAY ENGINEERING AT THE DISTRICT OFFICE.

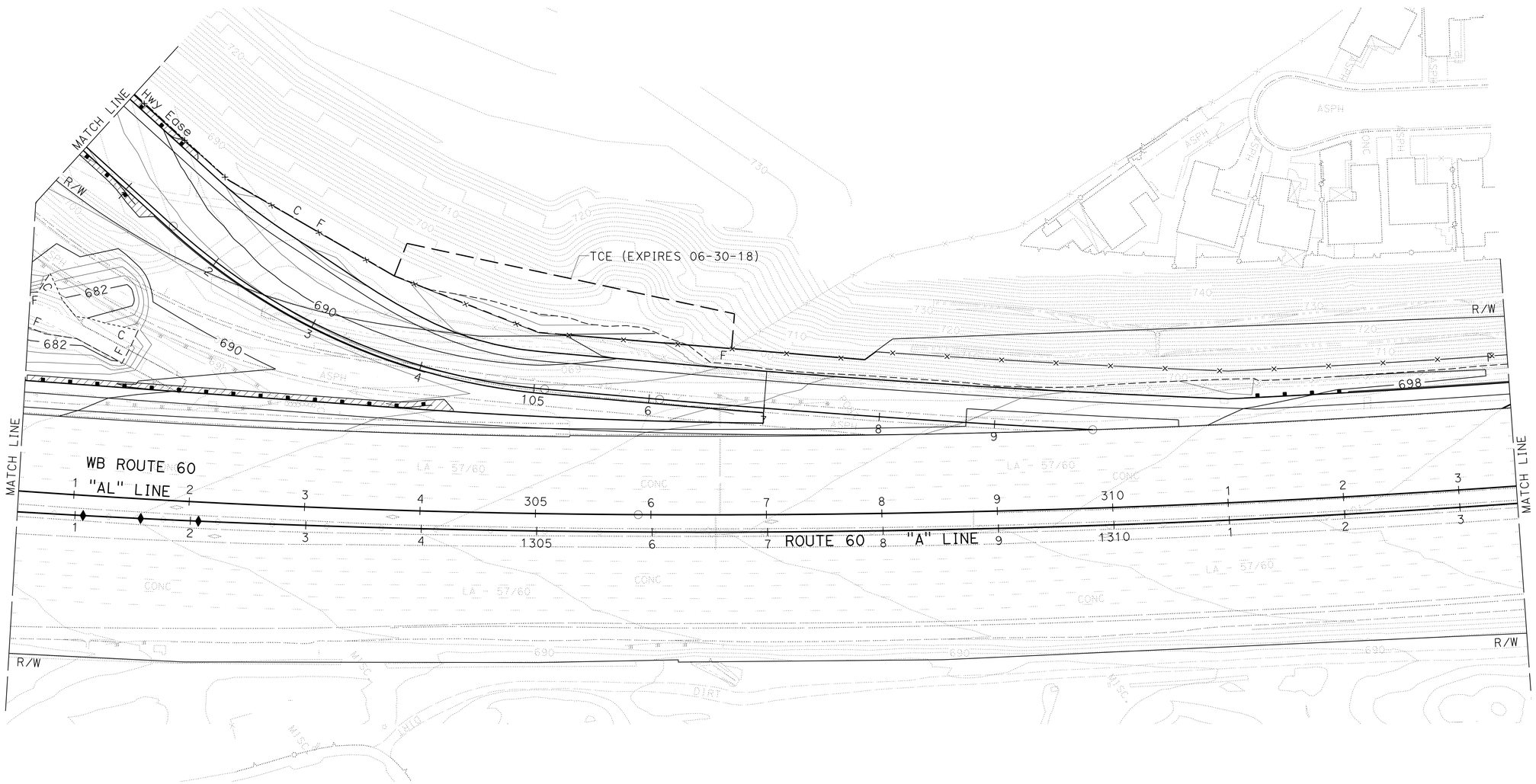

CONTOUR GRADING

SCALE: 1" = 50'

G-2

APPROVED FOR CONTOUR GRADING WORK ONLY

STATE OF CALIFORNIA - DEPARTMENT OF TRANSPORTATION
Caltrans
DESIGN

CONSULTANT FUNCTIONAL SUPERVISOR: DAN WEDDELL

CALCULATED-DESIGNED BY: HUA ZHENG
CHECKED BY: YOSUKE ARAI

REVISED BY
DATE REVISED

LAST REVISION 00-00-00
DATE PLOTTED => 09-MAY-2016
TIME PLOTTED => 15:05

Dist	COUNTY	ROUTE	POST MILES TOTAL PROJECT	SHEET No.	TOTAL SHEETS
07	LA	60	R24.4/R25.3	67	384

REGISTERED CIVIL ENGINEER 1-15-16 DATE

3-14-16
PLANS APPROVAL DATE

REGISTERED PROFESSIONAL ENGINEER HANK T. NGUYEN No. C 61227 Exp. 6-30-17 CIVIL STATE OF CALIFORNIA

THE STATE OF CALIFORNIA OR ITS OFFICERS OR AGENTS SHALL NOT BE RESPONSIBLE FOR THE ACCURACY OR COMPLETENESS OF SCANNED COPIES OF THIS PLAN SHEET.

WKE, INC
400 N. TUSTIN AVENUE
SUITE 275
SANTA ANA, CA 92705

CITY OF INDUSTRY
15651 EAST STAFFORD STREET
CITY OF INDUSTRY, CA 91744

NOTE:

FOR ACCURATE RIGHT OF WAY DATA, CONTACT RIGHT OF WAY ENGINEERING AT THE DISTRICT OFFICE.

CONTOUR GRADING

SCALE: 1" = 50'

G-3

APPROVED FOR CONTOUR GRADING WORK ONLY

REVISED BY | DATE REVISED

HUA ZHENG | YOSUKE ARAI

CALCULATED-DESIGNED BY | CHECKED BY

CONSULTANT FUNCTIONAL SUPERVISOR: DAN WEDDELL

STATE OF CALIFORNIA - DEPARTMENT OF TRANSPORTATION

Caltrans® DESIGN

LAST REVISION 00-00-00 | DATE PLOTTED => 09-MAY-2016 | TIME PLOTTED => 15:05

Dist	COUNTY	ROUTE	POST MILES TOTAL PROJECT	SHEET No.	TOTAL SHEETS
07	LA	60	R24.4/R25.3	68	384

REGISTERED CIVIL ENGINEER — DATE: 1-15-16

3-14-16
PLANS APPROVAL DATE

REGISTERED PROFESSIONAL ENGINEER — HANK T. NGUYEN — No. C 61227 — Exp. 6-30-17 — CIVIL — STATE OF CALIFORNIA

THE STATE OF CALIFORNIA OR ITS OFFICERS OR AGENTS SHALL NOT BE RESPONSIBLE FOR THE ACCURACY OR COMPLETENESS OF SCANNED COPIES OF THIS PLAN SHEET.

WKE, INC
400 N. TUSTIN AVENUE
SUITE 275
SANTA ANA, CA 92705

CITY OF INDUSTRY
15651 EAST STAFFORD STREET
CITY OF INDUSTRY, CA 91744

NOTE:

FOR ACCURATE RIGHT OF WAY DATA, CONTACT RIGHT OF WAY ENGINEERING AT THE DISTRICT OFFICE.

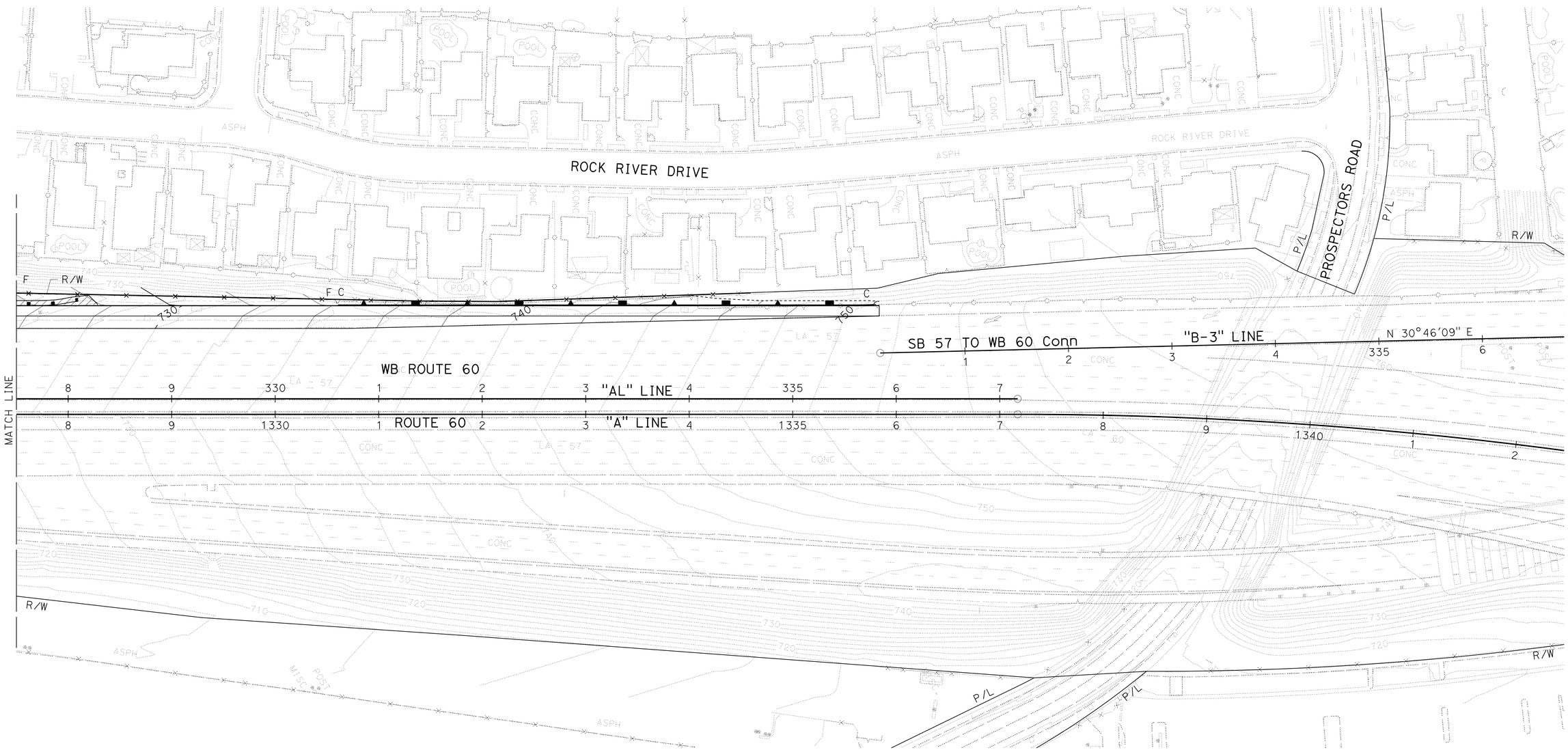

CONTOUR GRADING

SCALE: 1" = 50'

G-4

APPROVED FOR CONTOUR GRADING WORK ONLY

STATE OF CALIFORNIA - DEPARTMENT OF TRANSPORTATION
DESIGN
CONSULTANT FUNCTIONAL SUPERVISOR: DAN WEDDELL
CALCULATED-DESIGNED BY: HUA ZHENG
CHECKED BY: YOSUKE ARAI
REVISED BY
DATE REVISED

LAST REVISION 00-00-00
DATE PLOTTED => 09-MAY-2016
TIME PLOTTED => 15:05

Dist	COUNTY	ROUTE	POST MILES TOTAL PROJECT	SHEET No.	TOTAL SHEETS
07	LA	60	R24.4/R25.3	69	384

REGISTERED CIVIL ENGINEER 1-15-16 DATE

3-14-16
PLANS APPROVAL DATE

REGISTERED PROFESSIONAL ENGINEER
HANK T. NGUYEN
No. C 61227
Exp. 6-30-17
CIVIL
STATE OF CALIFORNIA

THE STATE OF CALIFORNIA OR ITS OFFICERS OR AGENTS SHALL NOT BE RESPONSIBLE FOR THE ACCURACY OR COMPLETENESS OF SCANNED COPIES OF THIS PLAN SHEET.

WKE, INC
400 N. TUSTIN AVENUE
SUITE 275
SANTA ANA, CA 92705

CITY OF INDUSTRY
15651 EAST STAFFORD STREET
CITY OF INDUSTRY, CA 91744

NOTE:

FOR ACCURATE RIGHT OF WAY DATA, CONTACT RIGHT OF WAY ENGINEERING AT THE DISTRICT OFFICE.

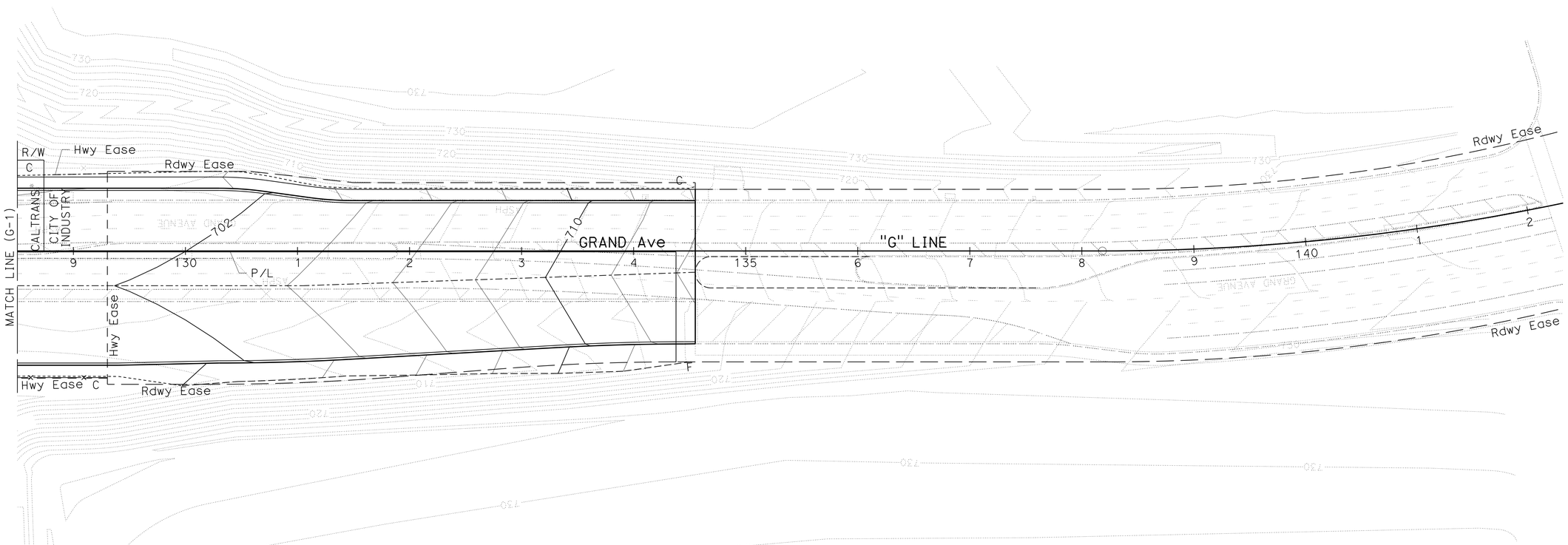

CONTOUR GRADING

SCALE: 1" = 50'

G-5

APPROVED FOR CONTOUR GRADING WORK ONLY

STATE OF CALIFORNIA - DEPARTMENT OF TRANSPORTATION
Caltrans
DESIGN

CONSULTANT FUNCTIONAL SUPERVISOR: DAN WEDDELL

CALCULATED-DESIGNED BY: HUA ZHENG
CHECKED BY: YOSUKE ARAI

REVISED BY
DATE REVISED

LAST REVISION 00-00-00
DATE PLOTTED => 09-MAY-2016
TIME PLOTTED => 15:05

Dist	COUNTY	ROUTE	POST MILES TOTAL PROJECT	SHEET No.	TOTAL SHEETS
07	LA	60	R24.4/R25.3	70	384

REGISTERED CIVIL ENGINEER 1-15-16 DATE

3-14-16
PLANS APPROVAL DATE

REGISTERED PROFESSIONAL ENGINEER MICHAEL HYNES No. C 67872 Exp. 06-30-17 CIVIL STATE OF CALIFORNIA

THE STATE OF CALIFORNIA OR ITS OFFICERS OR AGENTS SHALL NOT BE RESPONSIBLE FOR THE ACCURACY OR COMPLETENESS OF SCANNED COPIES OF THIS PLAN SHEET.

WKE, INC
400 N. TUSTIN AVENUE
SUITE 275
SANTA ANA, CA 92705

CITY OF INDUSTRY
15651 EAST STAFFORD STREET
CITY OF INDUSTRY, CA 91744

NOTE:

1. FOR ACCURATE RIGHT OF WAY DATA, CONTACT RIGHT OF WAY ENGINEERING AT THE DISTRICT OFFICE.
2. CONTRACTOR MUST FIELD VERIFY CONFLICTS PRIOR TO PLACEMENT BETWEEN DRAINAGE SYSTEMS AND EXISTING TREES THAT ARE TO BE PROTECTED IN PLACE.

LEGEND

- (1) DRAINAGE SYSTEM No.
- DRAINAGE UNIT
- ROCK SLOPE PROTECTION (RSP)
- BIOFILTRATION SWALE

ABBREVIATIONS

AVSF	AUSTIN VAULT SAND FILTER
GSRD	GROSS SOLIDS REMOVAL DEVICE

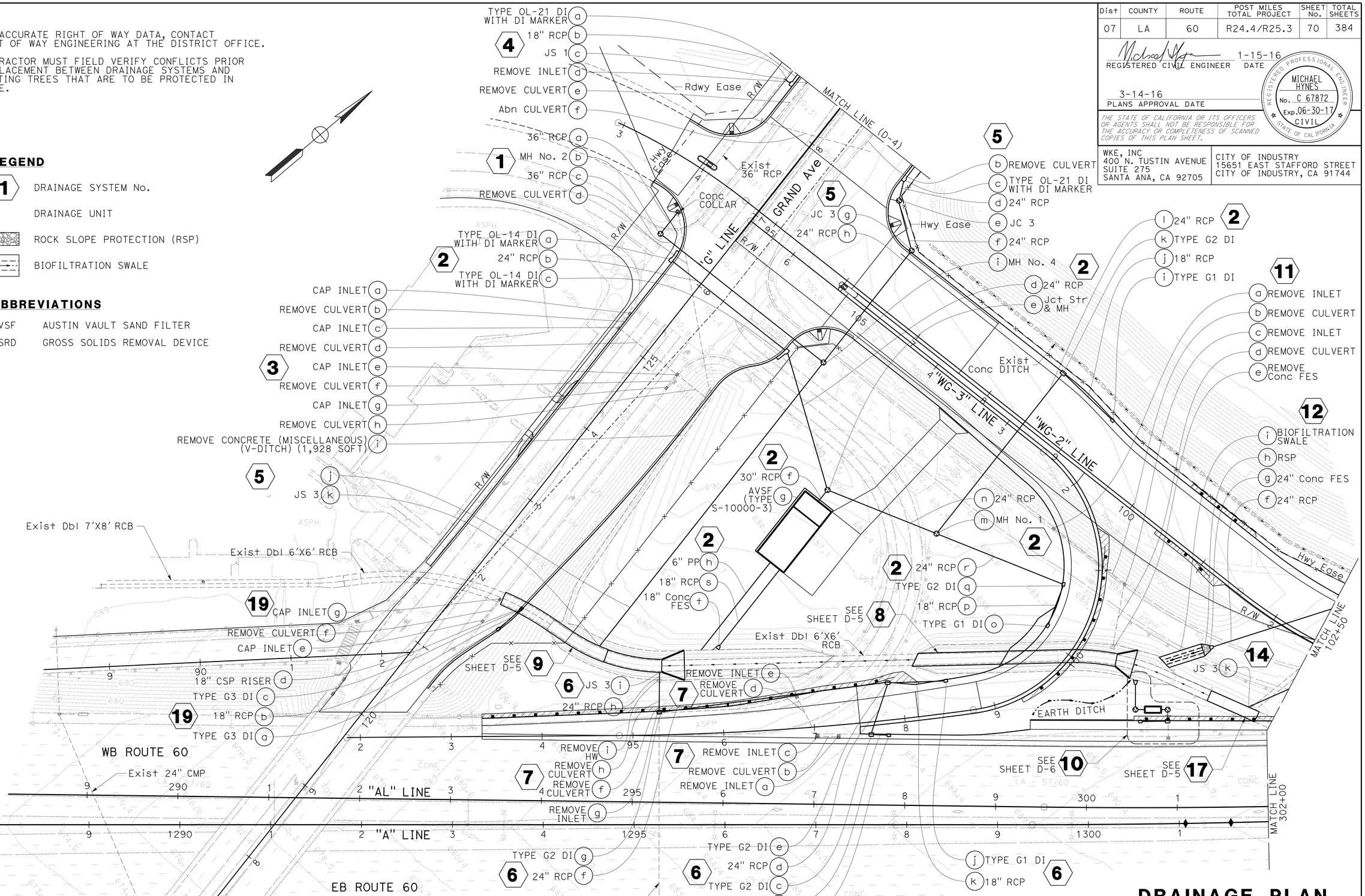

APPROVED FOR DRAINAGE WORK ONLY

DRAINAGE PLAN

SCALE: 1" = 50'

D-1

STATE OF CALIFORNIA - DEPARTMENT OF TRANSPORTATION
Caltrans® DESIGN
CONSULTANT FUNCTIONAL SUPERVISOR: MICHAEL HYNES
CALCULATED-DESIGNED BY: JOSEPH CARBAJAL
CHECKED BY: MICHAEL HYNES
REVISED BY
DATE REVISED

LAST REVISION 00-00-00
DATE PLOTTED => 09-MAY-2016
TIME PLOTTED => 15:05

BORDER LAST REVISED 7/2/2010
USERNAME => s125624
DGN FILE => 727911ia001.dgn
RELATIVE BORDER SCALE IS IN INCHES 0 1 2 3
UNIT 1823
PROJECT NUMBER & PHASE 07150000751

Dist	COUNTY	ROUTE	POST MILES TOTAL PROJECT	SHEET No.	TOTAL SHEETS
07	LA	60	R24.4/R25.3	71	384

REGISTERED CIVIL ENGINEER 1-15-16 DATE

3-14-16
PLANS APPROVAL DATE

REGISTERED PROFESSIONAL ENGINEER MICHAEL HYNES No. C 67872 Exp. 06-30-17 CIVIL STATE OF CALIFORNIA

THE STATE OF CALIFORNIA OR ITS OFFICERS OR AGENTS SHALL NOT BE RESPONSIBLE FOR THE ACCURACY OR COMPLETENESS OF SCANNED COPIES OF THIS PLAN SHEET.

WKE, INC
400 N. TUSTIN AVENUE
SUITE 275
SANTA ANA, CA 92705

CITY OF INDUSTRY
15651 EAST STAFFORD STREET
CITY OF INDUSTRY, CA 91744

NOTE:

FOR ACCURATE RIGHT OF WAY DATA, CONTACT RIGHT OF WAY ENGINEERING AT THE DISTRICT OFFICE.

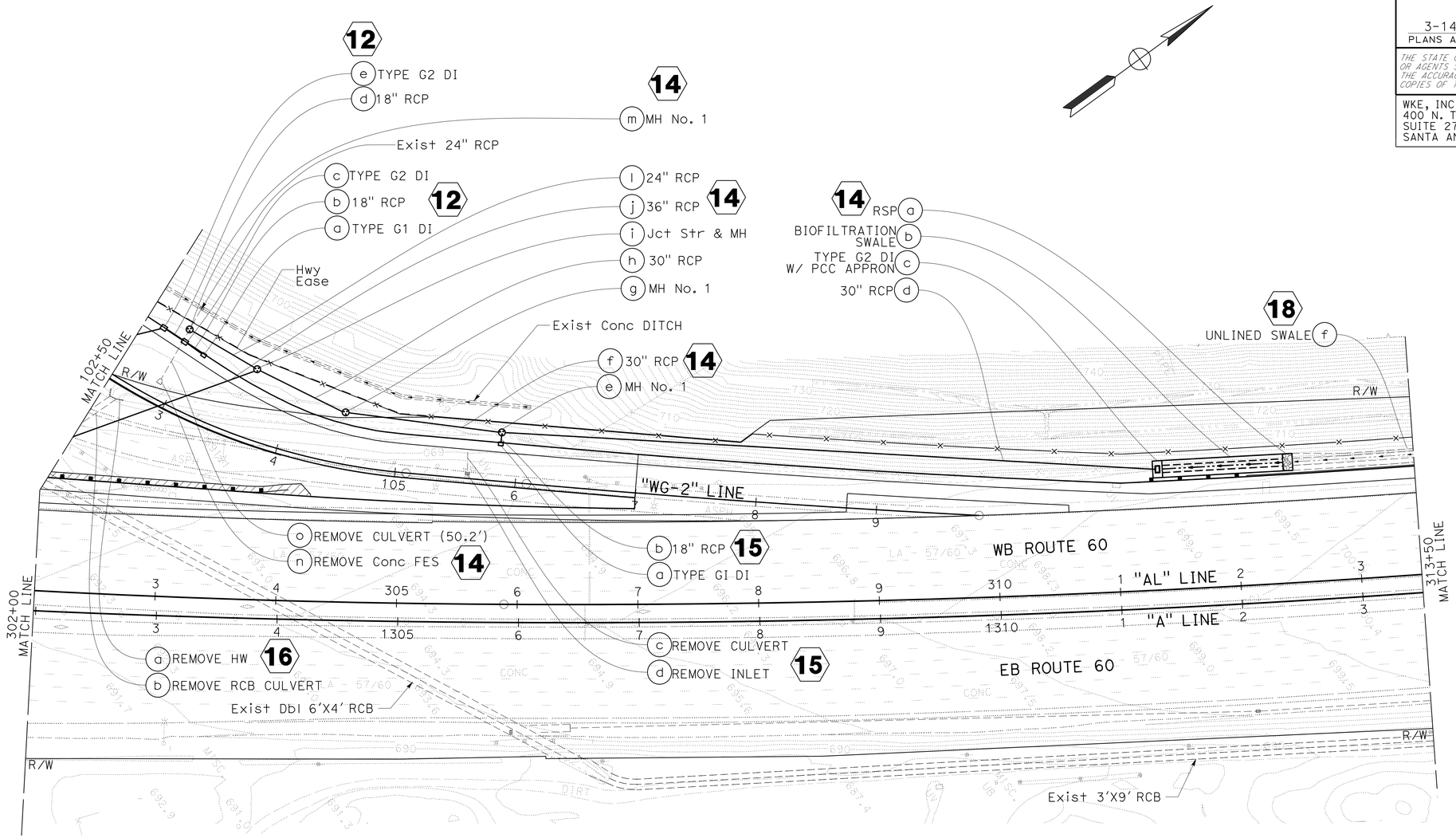

DRAINAGE PLAN

SCALE: 1" = 50'

D-2

APPROVED FOR DRAINAGE WORK ONLY

STATE OF CALIFORNIA - DEPARTMENT OF TRANSPORTATION

DESIGN

CONSULTANT FUNCTIONAL SUPERVISOR: MICHAEL HYNES

CALCULATED-DESIGNED BY: JOSEPH CARBAJAL

CHECKED BY: MICHAEL HYNES

REVISED BY

DATE REVISED

LAST REVISION 00-00-00

DATE PLOTTED => 09-MAY-2016
TIME PLOTTED => 15:06

Dist	COUNTY	ROUTE	POST MILES TOTAL PROJECT	SHEET No.	TOTAL SHEETS
07	LA	60	R24.4/R25.3	72	384

REGISTERED CIVIL ENGINEER 1-15-16 DATE

3-14-16
PLANS APPROVAL DATE

REGISTERED PROFESSIONAL ENGINEER
MICHAEL HYNES
No. C 67872
Exp. 06-30-17
CIVIL
STATE OF CALIFORNIA

THE STATE OF CALIFORNIA OR ITS OFFICERS OR AGENTS SHALL NOT BE RESPONSIBLE FOR THE ACCURACY OR COMPLETENESS OF SCANNED COPIES OF THIS PLAN SHEET.

WKE, INC
400 N. TUSTIN AVENUE
SUITE 275
SANTA ANA, CA 92705

CITY OF INDUSTRY
15651 EAST STAFFORD STREET
CITY OF INDUSTRY, CA 91744

NOTE:

FOR ACCURATE RIGHT OF WAY DATA, CONTACT RIGHT OF WAY ENGINEERING AT THE DISTRICT OFFICE.

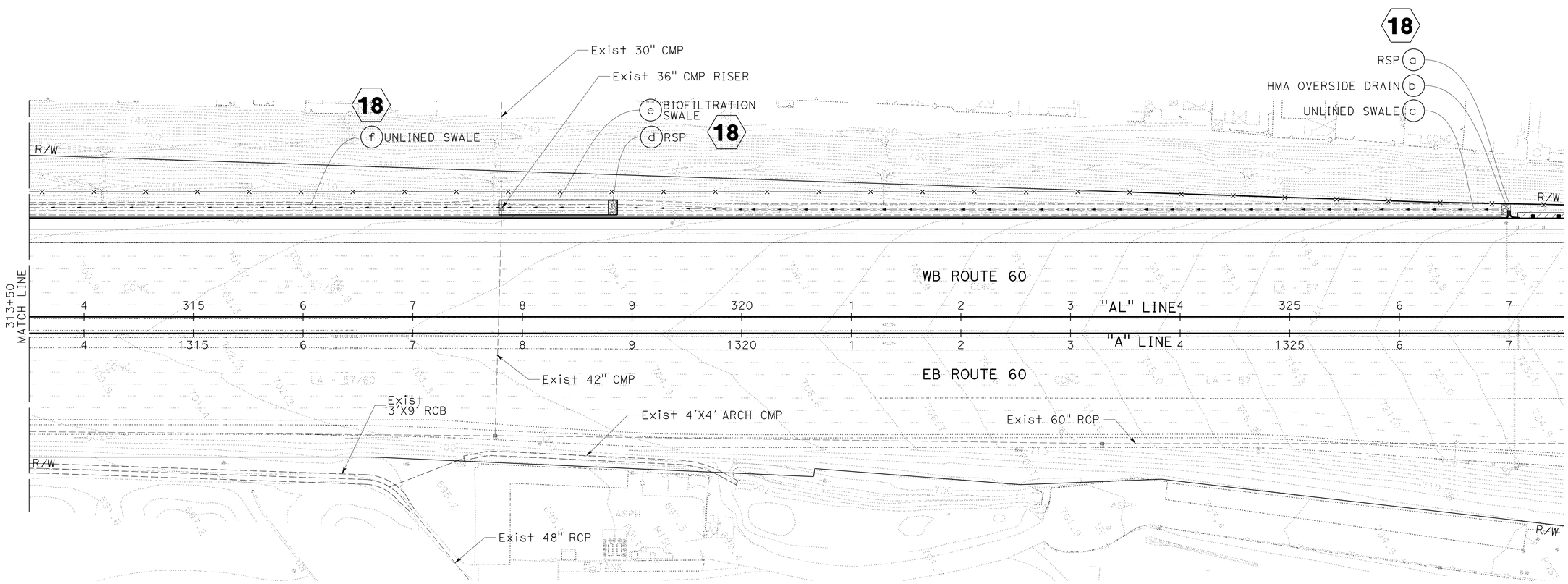

DRAINAGE PLAN

SCALE: 1" = 50'

D-3

APPROVED FOR DRAINAGE WORK ONLY

STATE OF CALIFORNIA - DEPARTMENT OF TRANSPORTATION
Caltrans
DESIGN

CONSULTANT FUNCTIONAL SUPERVISOR: MICHAEL HYNES
CALCULATED-DESIGNED BY: JOSEPH CARBAJAL
CHECKED BY: MICHAEL HYNES
REVISED BY
DATE REVISED

LAST REVISION 00-00-00
DATE PLOTTED => 09-MAY-2016
TIME PLOTTED => 15:06

Dist	COUNTY	ROUTE	POST MILES TOTAL PROJECT	SHEET No.	TOTAL SHEETS
07	LA	60	R24.4/R25.3	73	384

REGISTERED CIVIL ENGINEER 1-15-16 DATE

3-14-16
PLANS APPROVAL DATE

REGISTERED PROFESSIONAL ENGINEER
MICHAEL HYNES
No. C 67872
Exp. 06-30-17
CIVIL
STATE OF CALIFORNIA

THE STATE OF CALIFORNIA OR ITS OFFICERS OR AGENTS SHALL NOT BE RESPONSIBLE FOR THE ACCURACY OR COMPLETENESS OF SCANNED COPIES OF THIS PLAN SHEET.

WKE, INC
400 N. TUSTIN AVENUE
SUITE 275
SANTA ANA, CA 92705

CITY OF INDUSTRY
15651 EAST STAFFORD STREET
CITY OF INDUSTRY, CA 91744

NOTE:

FOR ACCURATE RIGHT OF WAY DATA, CONTACT RIGHT OF WAY ENGINEERING AT THE DISTRICT OFFICE.

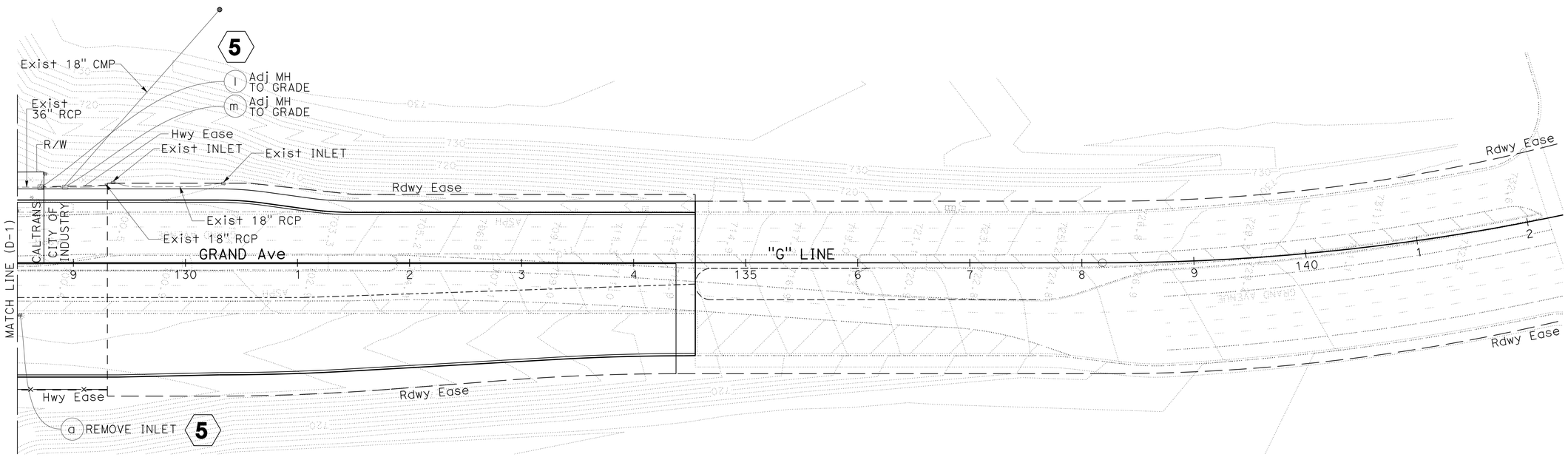

APPROVED FOR DRAINAGE WORK ONLY

DRAINAGE PLAN

SCALE: 1" = 50'

D-4

STATE OF CALIFORNIA - DEPARTMENT OF TRANSPORTATION
Caltrans
DESIGN

CONSULTANT FUNCTIONAL SUPERVISOR: MICHAEL HYNES

CALCULATED-DESIGNED BY: JOSEPH CARBAJAL
CHECKED BY: MICHAEL HYNES

REVISED BY
DATE REVISED

LAST REVISION 00-00-00
DATE PLOTTED => 09-MAY-2016
TIME PLOTTED => 15:06

Dist	COUNTY	ROUTE	POST MILES TOTAL PROJECT	SHEET No.	TOTAL SHEETS
07	LA	60	R24.4/R25.3	74	384

REGISTERED CIVIL ENGINEER 1-15-16 DATE

3-14-16
PLANS APPROVAL DATE

REGISTERED PROFESSIONAL ENGINEER MICHAEL HYNES No. C 67872 Exp. 06-30-17 CIVIL STATE OF CALIFORNIA

THE STATE OF CALIFORNIA OR ITS OFFICERS OR AGENTS SHALL NOT BE RESPONSIBLE FOR THE ACCURACY OR COMPLETENESS OF SCANNED COPIES OF THIS PLAN SHEET.

WKE, INC
400 N. TUSTIN AVENUE
SUITE 275
SANTA ANA, CA 92705

CITY OF INDUSTRY
15651 EAST STAFFORD STREET
CITY OF INDUSTRY, CA 91744

NOTES (THIS SHEET ONLY):

1. FOR DRAINAGE ITEMS NOT IDENTIFIED ON THIS SHEET, SEE SHEETS D-1 THROUGH D-4.
2. FOR Dbl 6'X6' RCB (Mod) DETAILS, SEE DRAINAGE DETAIL SHEET DD-14.

CURVE DATA

No.	R	Δ	T	L
1	299.86'	78°32'08"	30.10'	60.00'
2	185.00'	35°31'49"	59.27'	114.72'
3	240.00'	25°25'36"	54.14'	106.51'

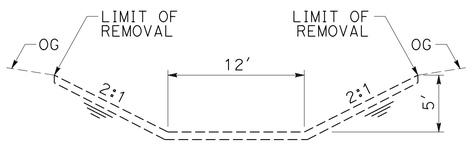

Exist Conc CHANNEL

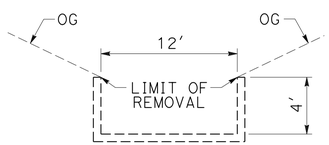

Exist U-CHANNEL

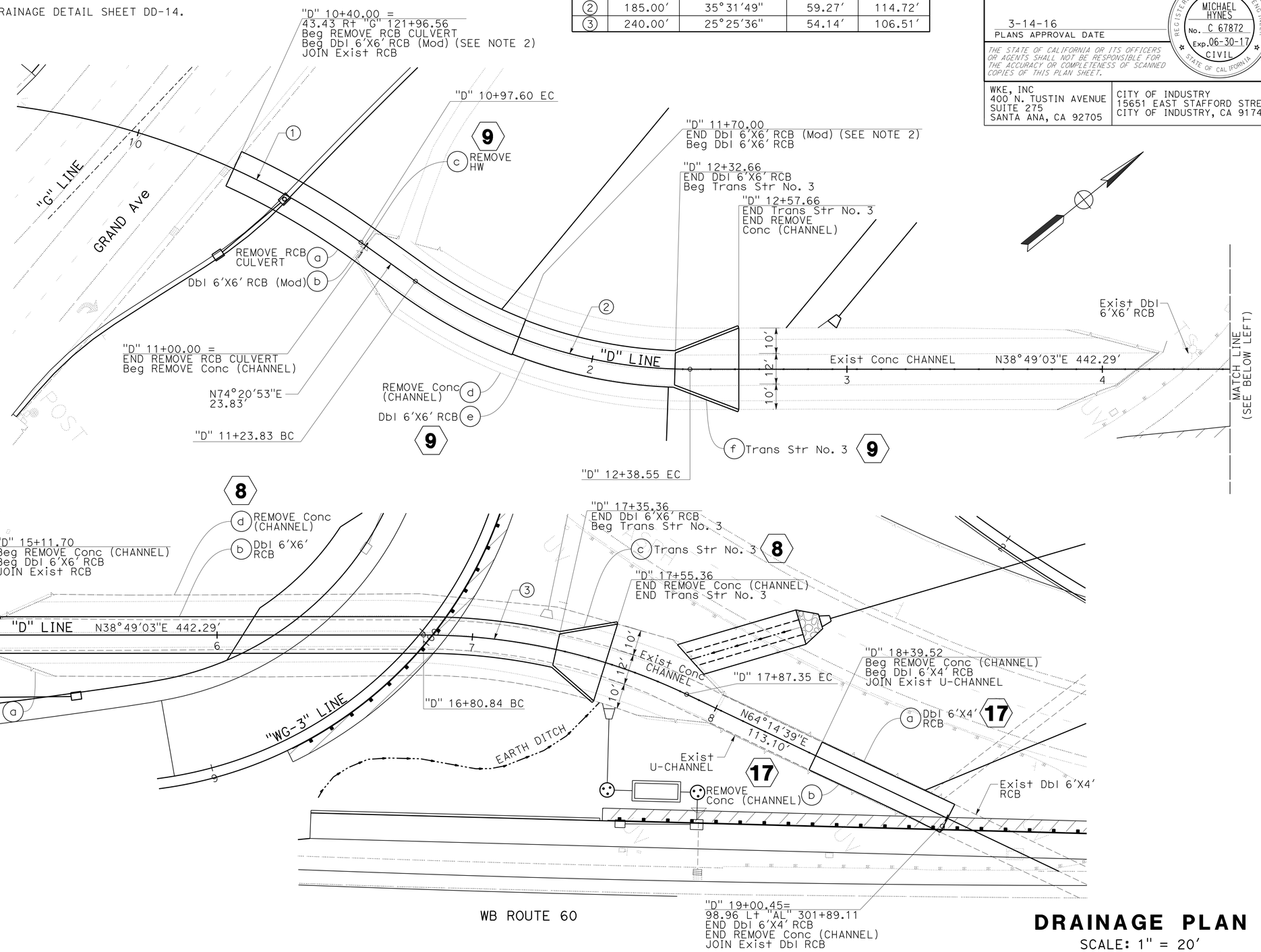

APPROVED FOR DRAINAGE WORK ONLY

DRAINAGE PLAN

SCALE: 1" = 20'

D-5

STATE OF CALIFORNIA - DEPARTMENT OF TRANSPORTATION
Caltrans
DESIGN
CONSULTANT FUNCTIONAL SUPERVISOR: MICHAEL HYNES
CALCULATED-DESIGNED BY: JOSEPH CARBAJAL
CHECKED BY: MICHAEL HYNES
REVISED BY
DATE REVISED

LAST REVISION 00-00-00
DATE PLOTTED => 09-MAY-2016
TIME PLOTTED => 15:06

Dist	COUNTY	ROUTE	POST MILES TOTAL PROJECT	SHEET No.	TOTAL SHEETS
07	LA	60	R24.4/R25.3	75	384

REGISTERED CIVIL ENGINEER 1-15-16 DATE

3-14-16
PLANS APPROVAL DATE

REGISTERED PROFESSIONAL ENGINEER MICHAEL HYNES No. C 67872 Exp. 06-30-17 CIVIL STATE OF CALIFORNIA

THE STATE OF CALIFORNIA OR ITS OFFICERS OR AGENTS SHALL NOT BE RESPONSIBLE FOR THE ACCURACY OR COMPLETENESS OF SCANNED COPIES OF THIS PLAN SHEET.

WKE, INC
400 N. TUSTIN AVENUE
SUITE 275
SANTA ANA, CA 92705

CITY OF INDUSTRY
15651 EAST STAFFORD STREET
CITY OF INDUSTRY, CA 91744

NOTE (THIS SHEET ONLY):

FOR DRAINAGE ITEMS NOT IDENTIFIED ON THIS SHEET, SEE SHEETS D-1 THROUGH D-5.

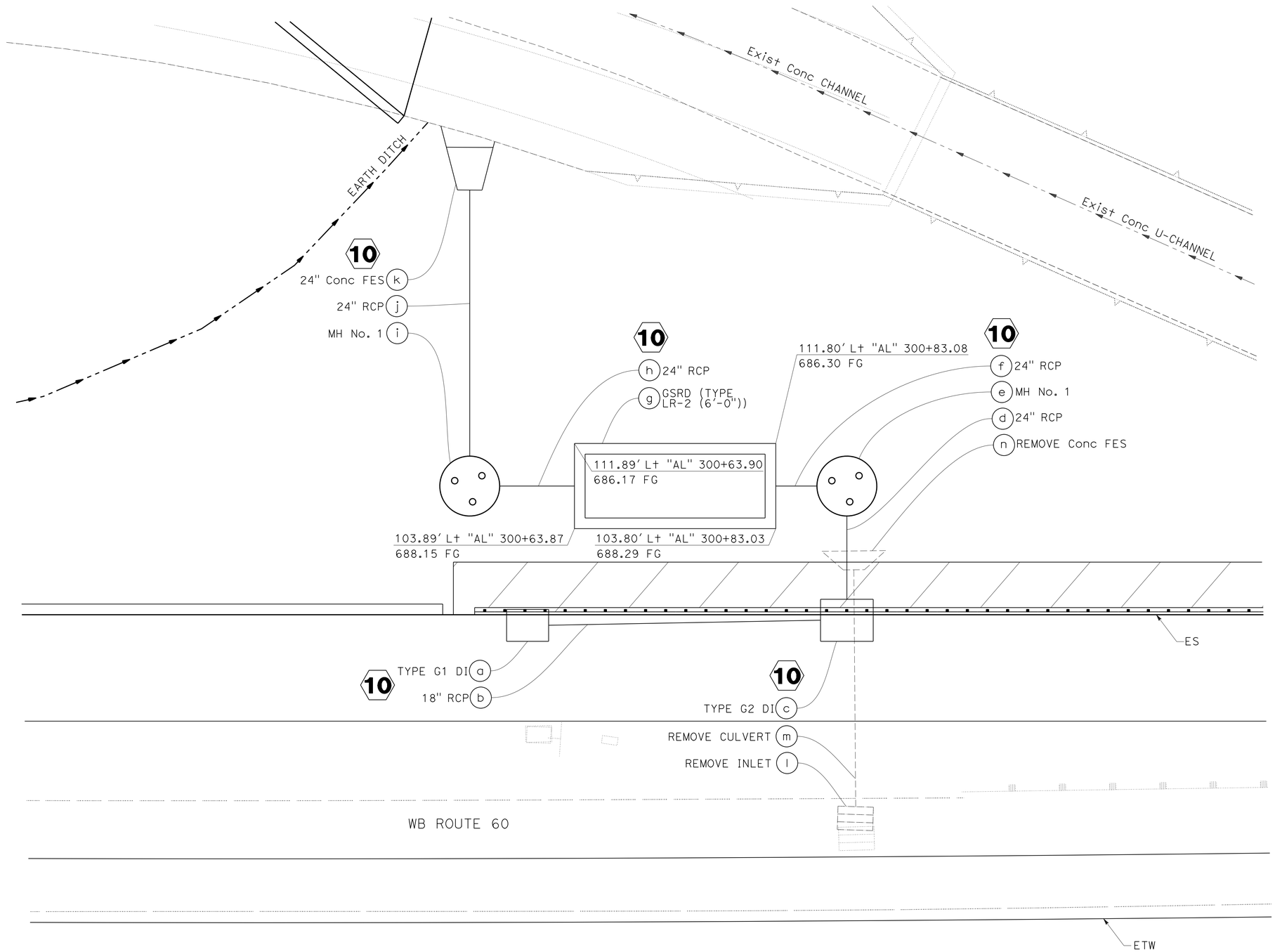

APPROVED FOR DRAINAGE WORK ONLY

DRAINAGE PLAN

SCALE: 1" = 5'

D-6

STATE OF CALIFORNIA - DEPARTMENT OF TRANSPORTATION
Caltrans
DESIGN

CONSULTANT FUNCTIONAL SUPERVISOR: MICHAEL HYNES
CALCULATED-DESIGNED BY: JOSEPH CARBAJAL
CHECKED BY: MICHAEL HYNES
REVISED BY
DATE REVISED

LAST REVISION 00-00-00
DATE PLOTTED => 09-MAY-2016
TIME PLOTTED => 15:06

Dist	COUNTY	ROUTE	POST MILES TOTAL PROJECT	SHEET No.	TOTAL SHEETS
07	LA	60	R24.4/R25.3	76	384

REGISTERED CIVIL ENGINEER 1-15-16 DATE

3-14-16
PLANS APPROVAL DATE

REGISTERED PROFESSIONAL ENGINEER MICHAEL HYNES No. C 67872 Exp. 06-30-17 CIVIL STATE OF CALIFORNIA

THE STATE OF CALIFORNIA OR ITS OFFICERS OR AGENTS SHALL NOT BE RESPONSIBLE FOR THE ACCURACY OR COMPLETENESS OF SCANNED COPIES OF THIS PLAN SHEET.

WKE, INC
400 N. TUSTIN AVENUE
SUITE 275
SANTA ANA, CA 92705

CITY OF INDUSTRY
15651 EAST STAFFORD STREET
CITY OF INDUSTRY, CA 91744

NOTES:

1. CONTRACTOR SHALL VERIFY ELEVATIONS OF EXISTING DRAINAGE SYSTEMS BEFORE COMMENCEMENT OF WORK.
2. FOR AVSF DETAILS, SEE WATER POLLUTION CONTROL DETAILS AND DRAINAGE DETAILS SHEET DD-13.

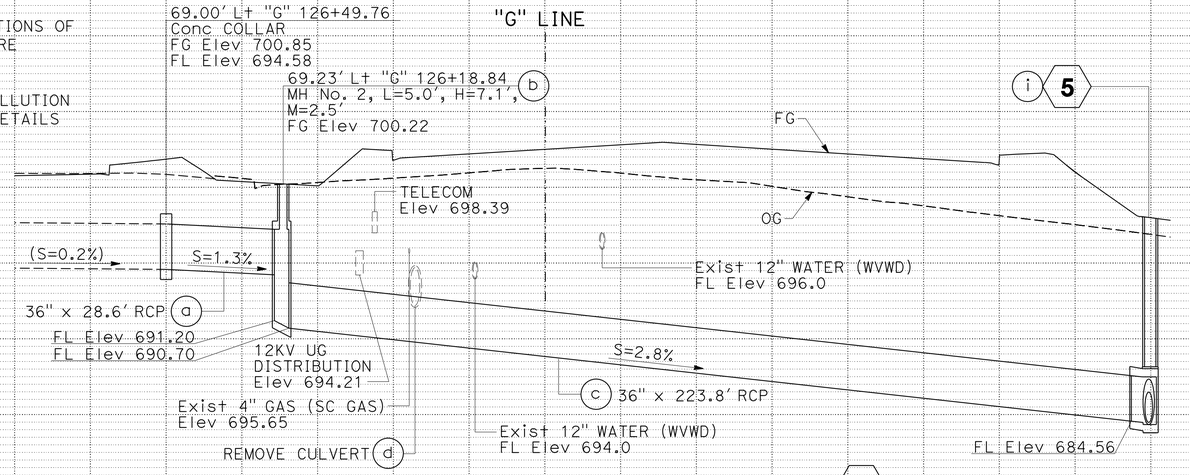

DRAINAGE SYSTEM No. 1

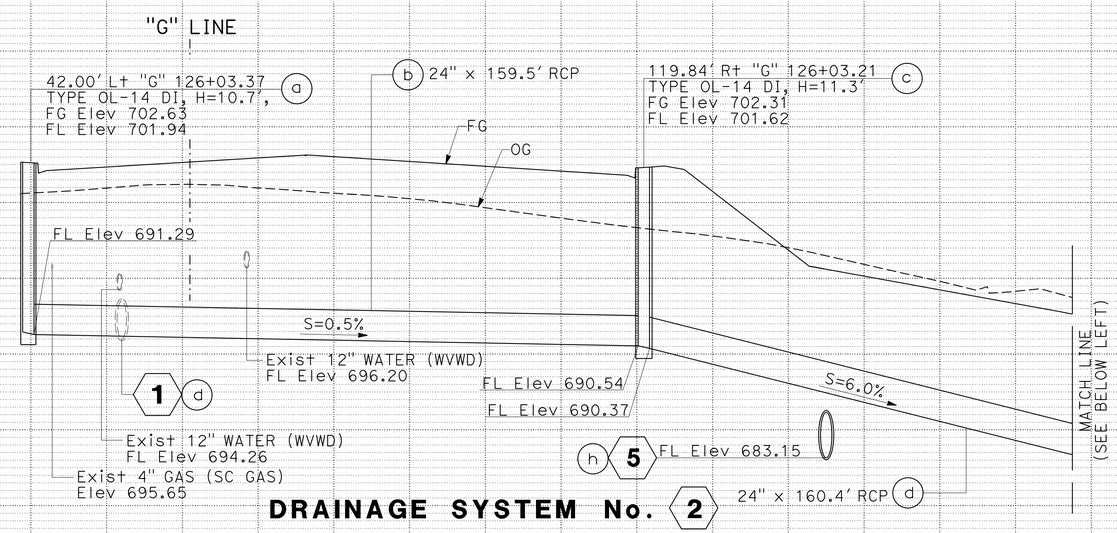

DRAINAGE SYSTEM No. 2

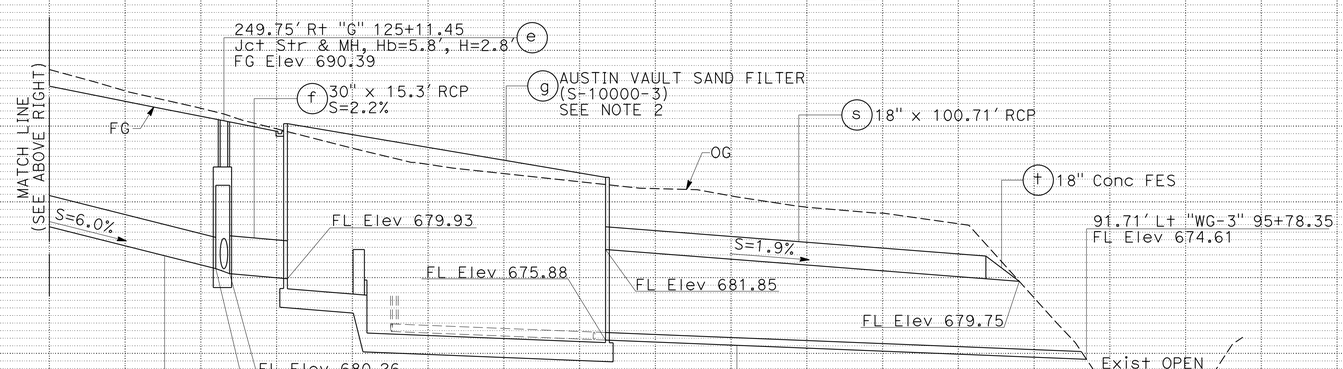

DRAINAGE SYSTEM No. 2

DRAINAGE PROFILES

SCALE: Horiz 1" = 20'
Vert 1" = 5'

DP-1

STATE OF CALIFORNIA - DEPARTMENT OF TRANSPORTATION
DESIGN
CONSULTANT FUNCTIONAL SUPERVISOR: MICHAEL HYNES
CALCULATED-DESIGNED BY: JOSEPH CARBAJAL
CHECKED BY: MICHAEL HYNES
REVISED BY
DATE REVISED

LAST REVISION 00-00-00
DATE PLOTTED => 09-MAY-2016
TIME PLOTTED => 15:06

Dist	COUNTY	ROUTE	POST MILES TOTAL PROJECT	SHEET No.	TOTAL SHEETS
07	LA	60	R24.4/R25.3	77	384

REGISTERED CIVIL ENGINEER 1-15-16 DATE

3-14-16
PLANS APPROVAL DATE

REGISTERED PROFESSIONAL ENGINEER MICHAEL HYNES No. C 67872 Exp. 06-30-17 CIVIL STATE OF CALIFORNIA

THE STATE OF CALIFORNIA OR ITS OFFICERS OR AGENTS SHALL NOT BE RESPONSIBLE FOR THE ACCURACY OR COMPLETENESS OF SCANNED COPIES OF THIS PLAN SHEET.

WKE, INC
400 N. TUSTIN AVENUE
SUITE 275
SANTA ANA, CA 92705

CITY OF INDUSTRY
15651 EAST STAFFORD STREET
CITY OF INDUSTRY, CA 91744

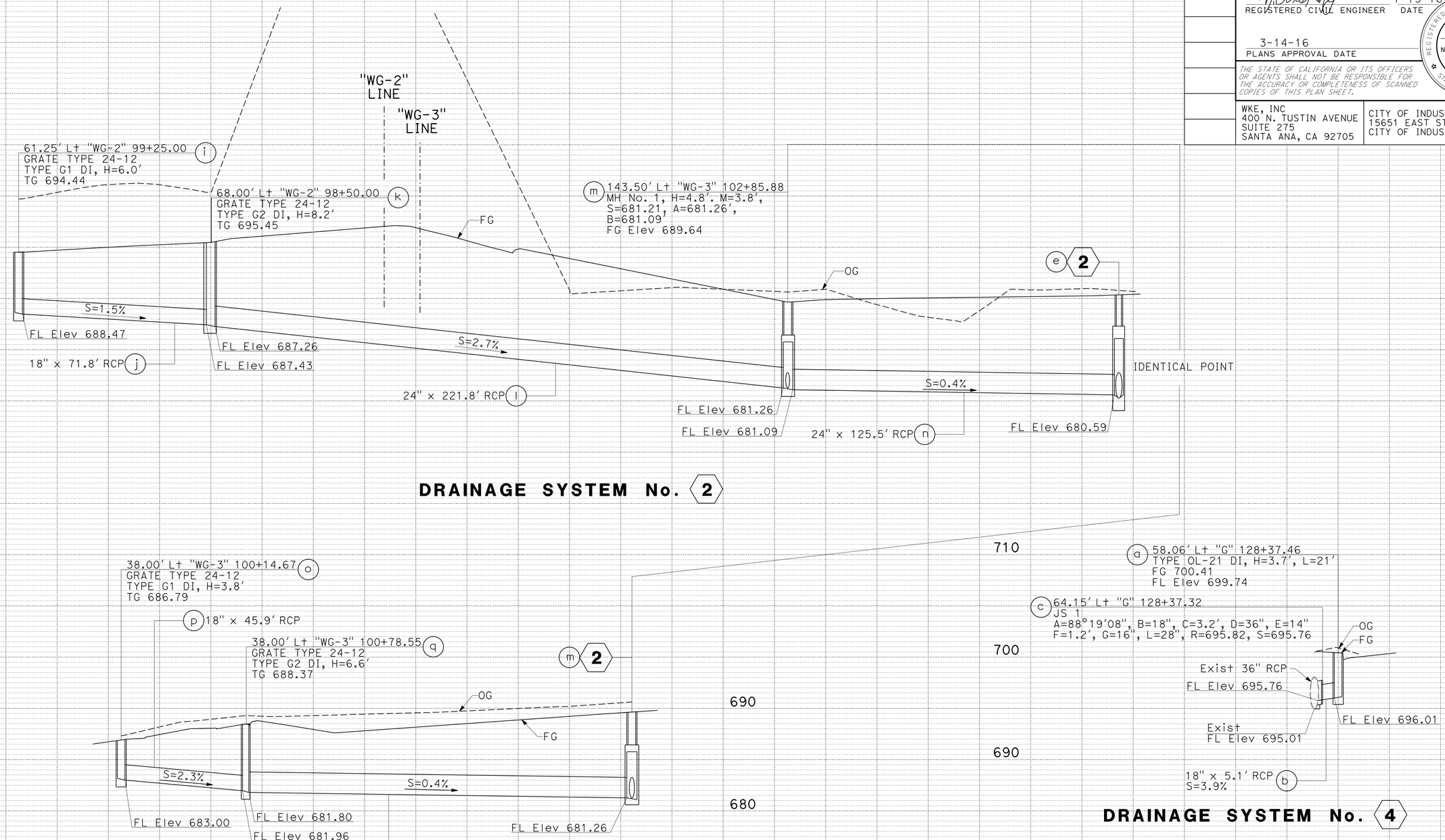

DRAINAGE PROFILES

SCALE: Horiz 1" = 20'
Vert 1" = 5'

DP-2

STATE OF CALIFORNIA - DEPARTMENT OF TRANSPORTATION
DESIGN
CONSULTANT FUNCTIONAL SUPERVISOR: MICHAEL HYNES
CALCULATED-DESIGNED BY: JOSEPH CARBAJAL
CHECKED BY: MICHAEL HYNES
REVISED BY
DATE REVISED

LAST REVISION 00-00-00
DATE PLOTTED => 09-MAY-2016
TIME PLOTTED => 15:06

Dist	COUNTY	ROUTE	POST MILES TOTAL PROJECT	SHEET No.	TOTAL SHEETS
07	LA	60	R24.4/R25.3	78	384

REGISTERED CIVIL ENGINEER 1-15-16 DATE

3-14-16
PLANS APPROVAL DATE

REGISTERED PROFESSIONAL ENGINEER MICHAEL HYNES No. C 67872 Exp. 06-30-17 CIVIL STATE OF CALIFORNIA

THE STATE OF CALIFORNIA OR ITS OFFICERS OR AGENTS SHALL NOT BE RESPONSIBLE FOR THE ACCURACY OR COMPLETENESS OF SCANNED COPIES OF THIS PLAN SHEET.

WKE, INC
400 N. TUSTIN AVENUE
SUITE 275
SANTA ANA, CA 92705

CITY OF INDUSTRY
15651 EAST STAFFORD STREET
CITY OF INDUSTRY, CA 91744

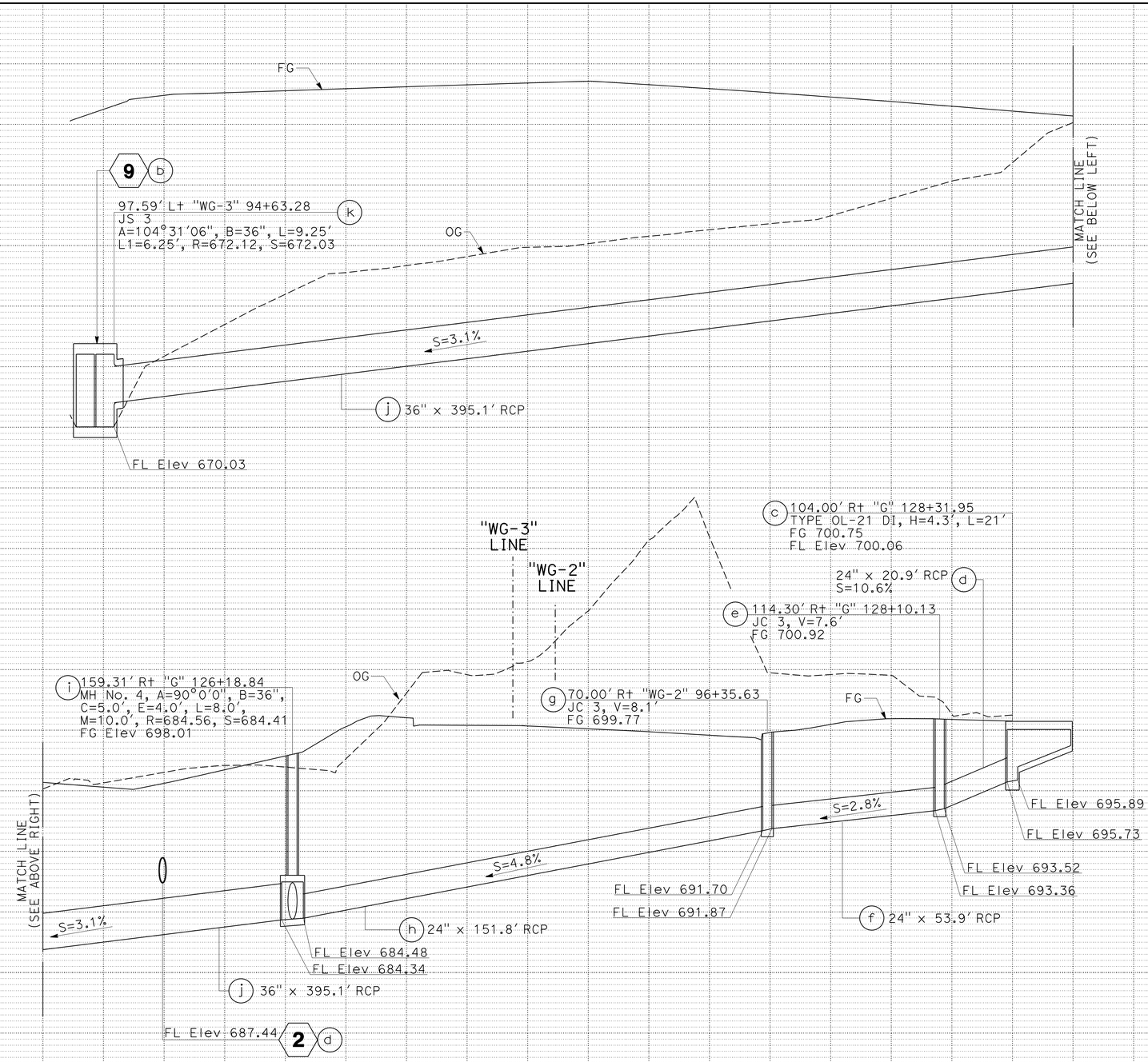

DRAINAGE SYSTEM No. 5

DRAINAGE PROFILES

SCALE: Horiz 1" = 20'
Vert 1" = 5'

DP-3

REVISED BY | DATE REVISED
JOSEPH CARBAJAL | MICHAEL HYNES
CALCULATED-DESIGNED BY | CHECKED BY
CONSULTANT FUNCTIONAL SUPERVISOR: MICHAEL HYNES
STATE OF CALIFORNIA - DEPARTMENT OF TRANSPORTATION
Caltrans
DESIGN

LAST REVISION 00-00-00 | DATE PLOTTED => 09-MAY-2016 | TIME PLOTTED => 15:06

Dist	COUNTY	ROUTE	POST MILES TOTAL PROJECT	SHEET No.	TOTAL SHEETS
07	LA	60	R24.4/R25.3	79	384

REGISTERED CIVIL ENGINEER 1-15-16 DATE

3-14-16
PLANS APPROVAL DATE

REGISTERED PROFESSIONAL ENGINEER MICHAEL HYNES No. C 67872 Exp. 06-30-17 CIVIL STATE OF CALIFORNIA

THE STATE OF CALIFORNIA OR ITS OFFICERS OR AGENTS SHALL NOT BE RESPONSIBLE FOR THE ACCURACY OR COMPLETENESS OF SCANNED COPIES OF THIS PLAN SHEET.

WKE, INC
400 N. TUSTIN AVENUE
SUITE 275
SANTA ANA, CA 92705

CITY OF INDUSTRY
15651 EAST STAFFORD STREET
CITY OF INDUSTRY, CA 91744

NOTE:

FOR GSRD DETAILS, SEE WATER POLLUTION CONTROL DETAILS.

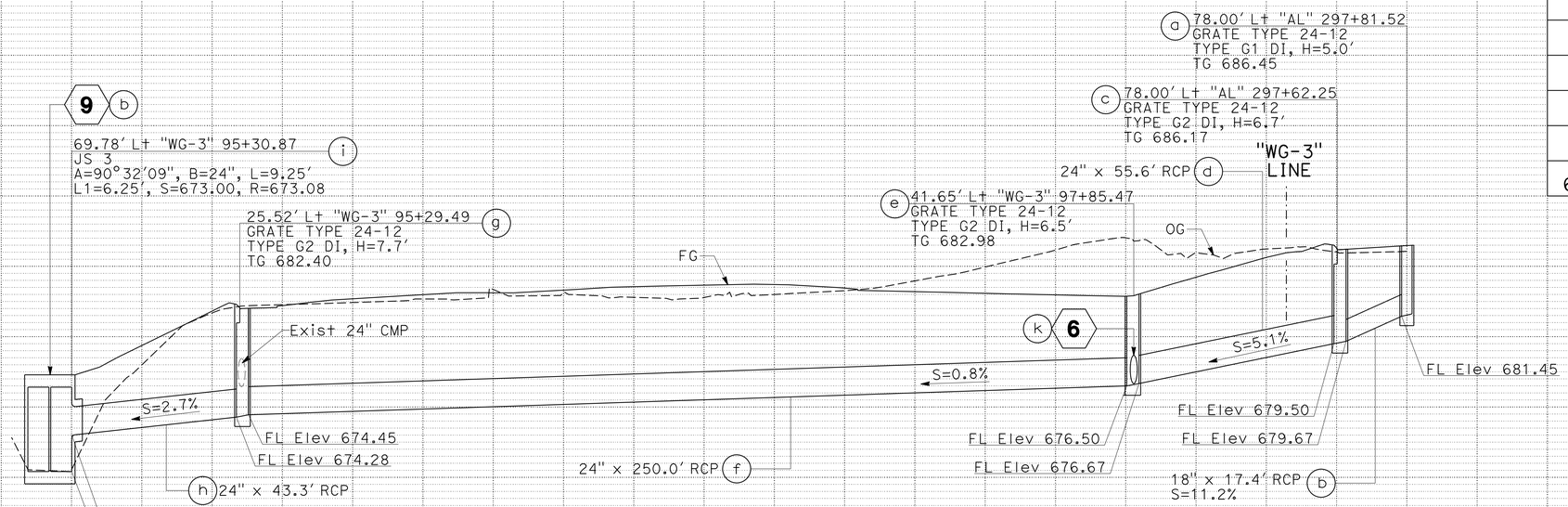

DRAINAGE SYSTEM No. 6

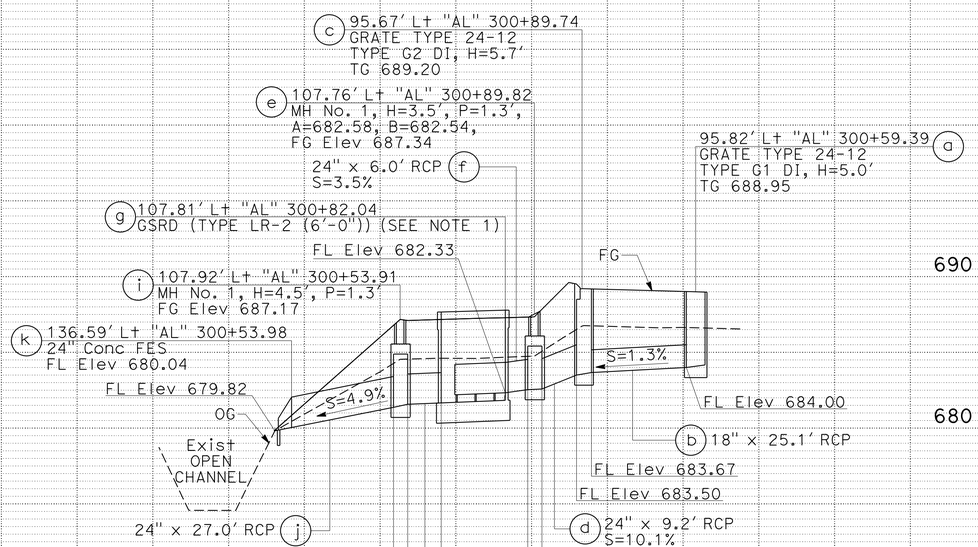

DRAINAGE SYSTEM No. 10

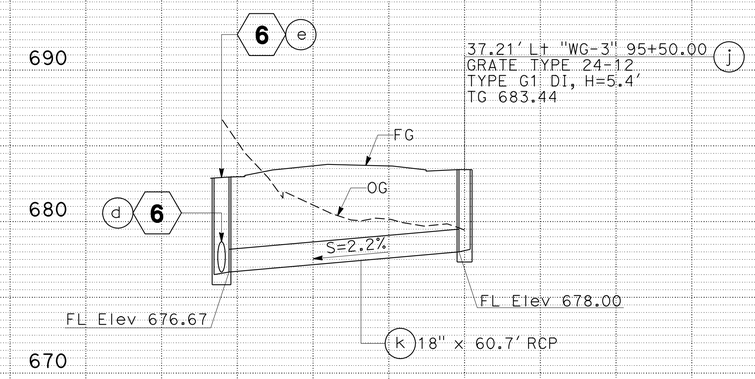

DRAINAGE SYSTEM No. 6

DRAINAGE PROFILES

SCALE: Horiz 1" = 20'
Vert 1" = 5'

DP-4

STATE OF CALIFORNIA - DEPARTMENT OF TRANSPORTATION
Caltrans®
DESIGN
CONSULTANT FUNCTIONAL SUPERVISOR: MICHAEL HYNES
CALCULATED-DESIGNED BY: JOSEPH CARBAJAL
CHECKED BY: MICHAEL HYNES
REVISED BY
DATE REVISED

LAST REVISION 00-00-00
DATE PLOTTED => 09-MAY-2016
TIME PLOTTED => 15:06

Dist	COUNTY	ROUTE	POST MILES TOTAL PROJECT	SHEET No.	TOTAL SHEETS
07	LA	60	R24.4/R25.3	80	384

REGISTERED CIVIL ENGINEER 1-15-16 DATE

3-14-16
PLANS APPROVAL DATE

REGISTERED PROFESSIONAL ENGINEER MICHAEL HYNES No. C 67872 Exp. 06-30-17 CIVIL STATE OF CALIFORNIA

THE STATE OF CALIFORNIA OR ITS OFFICERS OR AGENTS SHALL NOT BE RESPONSIBLE FOR THE ACCURACY OR COMPLETENESS OF SCANNED COPIES OF THIS PLAN SHEET.

WKE, INC
400 N. TUSTIN AVENUE
SUITE 275
SANTA ANA, CA 92705

CITY OF INDUSTRY
15651 EAST STAFFORD STREET
CITY OF INDUSTRY, CA 91744

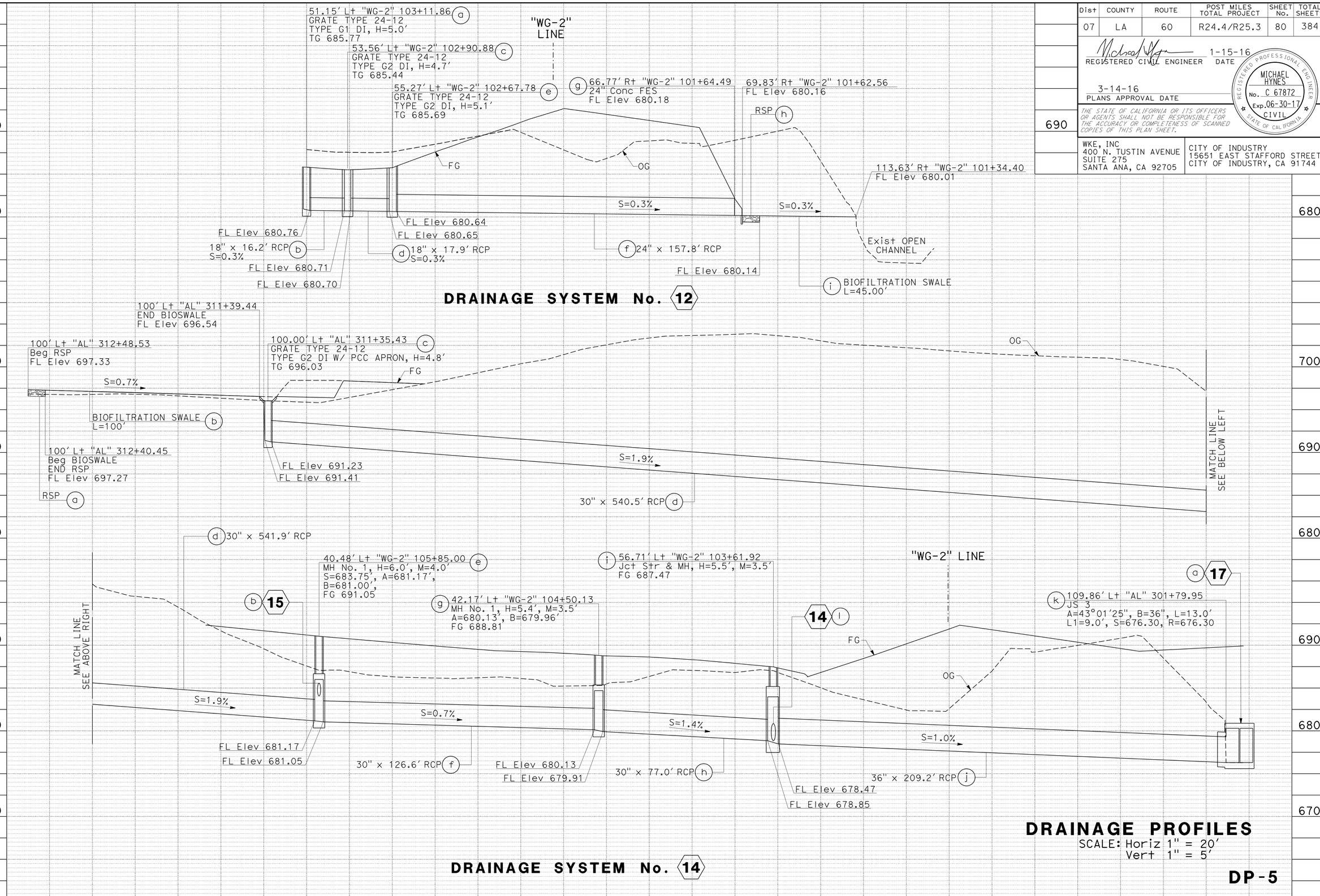

DRAINAGE SYSTEM No. 14

DRAINAGE PROFILES

SCALE: Horiz 1" = 20'
Vert 1" = 5'

DP-5

REVISED BY | DATE REVISED
JOSEPH CARBAJAL | MICHAEL HYNES
CALCULATED-DESIGNED BY | CHECKED BY
CONSULTANT FUNCTIONAL SUPERVISOR | MICHAEL HYNES
STATE OF CALIFORNIA - DEPARTMENT OF TRANSPORTATION
Caltrans
DESIGN

LAST REVISION 00-00-00 | DATE PLOTTED => 09-MAY-2016 | TIME PLOTTED => 15:06

Dist	COUNTY	ROUTE	POST MILES TOTAL PROJECT	SHEET No.	TOTAL SHEETS
07	LA	60	R24.4/R25.3	81	384

REGISTERED CIVIL ENGINEER 1-15-16 DATE

3-14-16
PLANS APPROVAL DATE

REGISTERED PROFESSIONAL ENGINEER MICHAEL HYNES No. C 67872 Exp. 06-30-17 CIVIL STATE OF CALIFORNIA

THE STATE OF CALIFORNIA OR ITS OFFICERS OR AGENTS SHALL NOT BE RESPONSIBLE FOR THE ACCURACY OR COMPLETENESS OF SCANNED COPIES OF THIS PLAN SHEET.

WKE, INC
400 N. TUSTIN AVENUE
SUITE 275
SANTA ANA, CA 92705

CITY OF INDUSTRY
15651 EAST STAFFORD STREET
CITY OF INDUSTRY, CA 91744

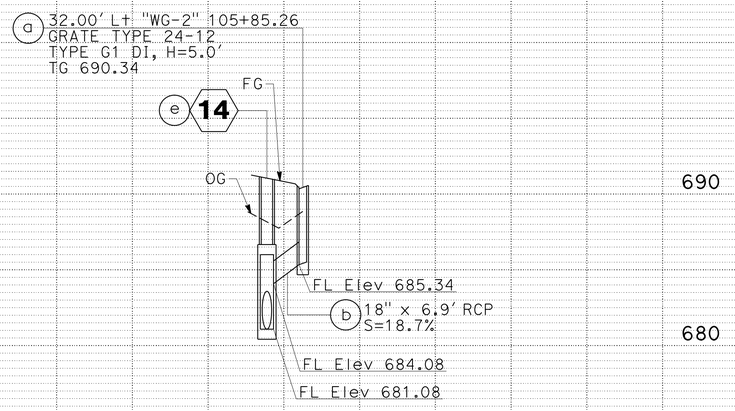

DRAINAGE SYSTEM No. 15

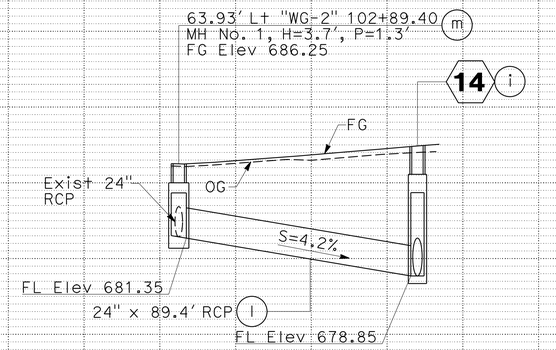

DRAINAGE SYSTEM No. 14

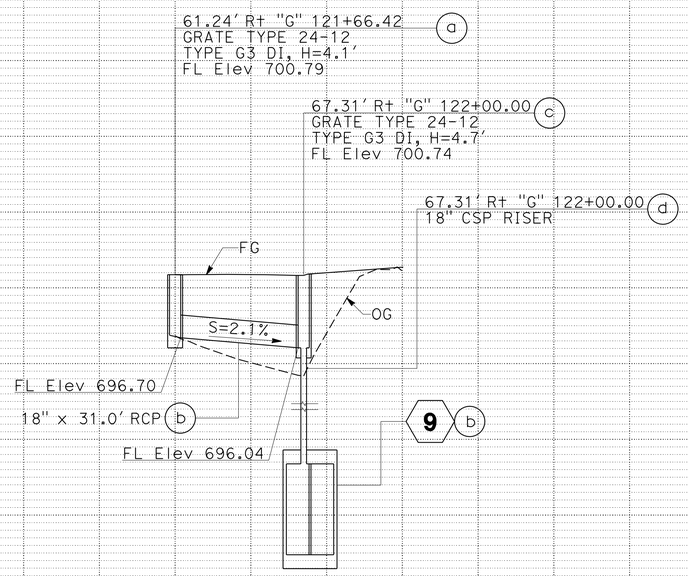

DRAINAGE SYSTEM No. 19

DRAINAGE PROFILES

SCALE: Horiz 1" = 20'
Vert 1" = 5'

DP-6

STATE OF CALIFORNIA - DEPARTMENT OF TRANSPORTATION
Caltrans® DESIGN

CONSULTANT FUNCTIONAL SUPERVISOR: MICHAEL HYNES
CALCULATED-DESIGNED BY: JOSEPH CARBAJAL
CHECKED BY: MICHAEL HYNES
REVISED BY
DATE REVISED

LAST REVISION 00-00-00
DATE PLOTTED => 09-MAY-2016
TIME PLOTTED => 15:06

Dist	COUNTY	ROUTE	POST MILES TOTAL PROJECT	SHEET No.	TOTAL SHEETS
07	LA	60	R24.4/R25.3	82	384

REGISTERED CIVIL ENGINEER 1-15-16 DATE

3-14-16
PLANS APPROVAL DATE

REGISTERED PROFESSIONAL ENGINEER MICHAEL HYNES No. C 67872 Exp. 06-30-17 CIVIL STATE OF CALIFORNIA

THE STATE OF CALIFORNIA OR ITS OFFICERS OR AGENTS SHALL NOT BE RESPONSIBLE FOR THE ACCURACY OR COMPLETENESS OF SCANNED COPIES OF THIS PLAN SHEET.

WKE, INC
400 N. TUSTIN AVENUE
SUITE 275
SANTA ANA, CA 92705

CITY OF INDUSTRY
15651 EAST STAFFORD STREET
CITY OF INDUSTRY, CA 91744

NOTE:

FOR Dbl 6' x 6' RCB (Mod) "DETAIL 1" AND "DETAIL 2", SEE DRAINAGE DETAIL SHEET DD-14.

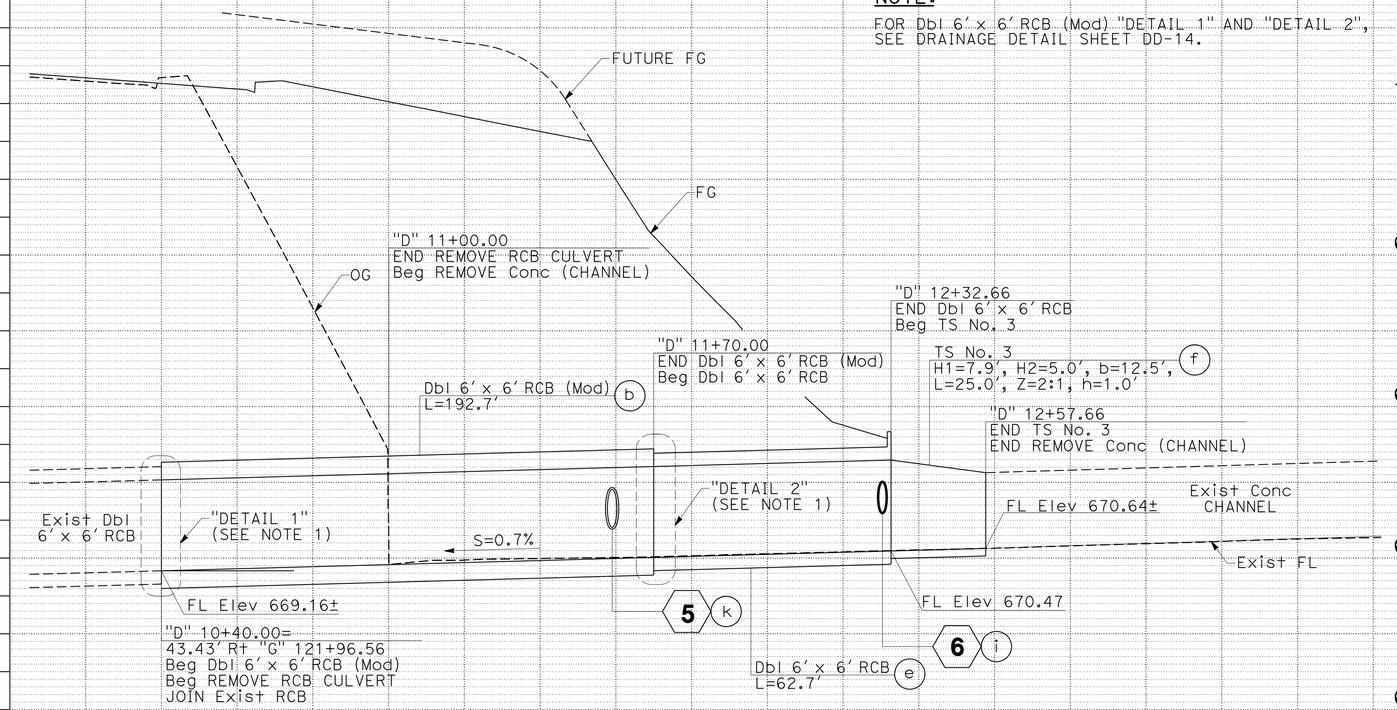

DRAINAGE SYSTEM No. 9

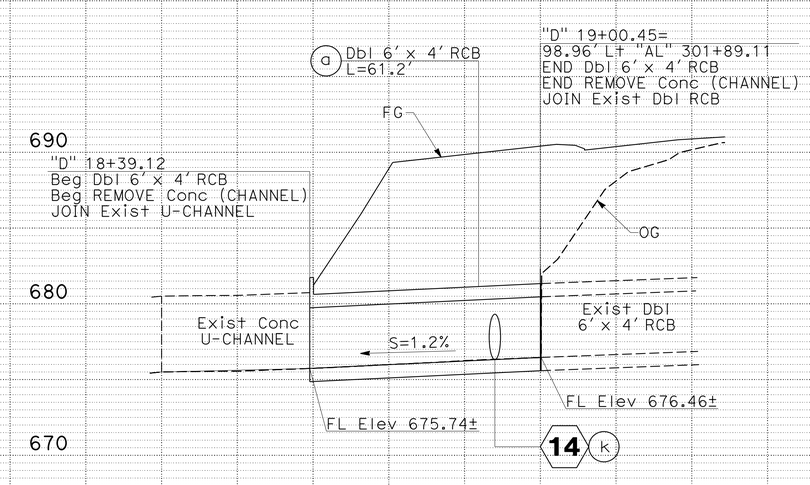

DRAINAGE SYSTEM No. 17

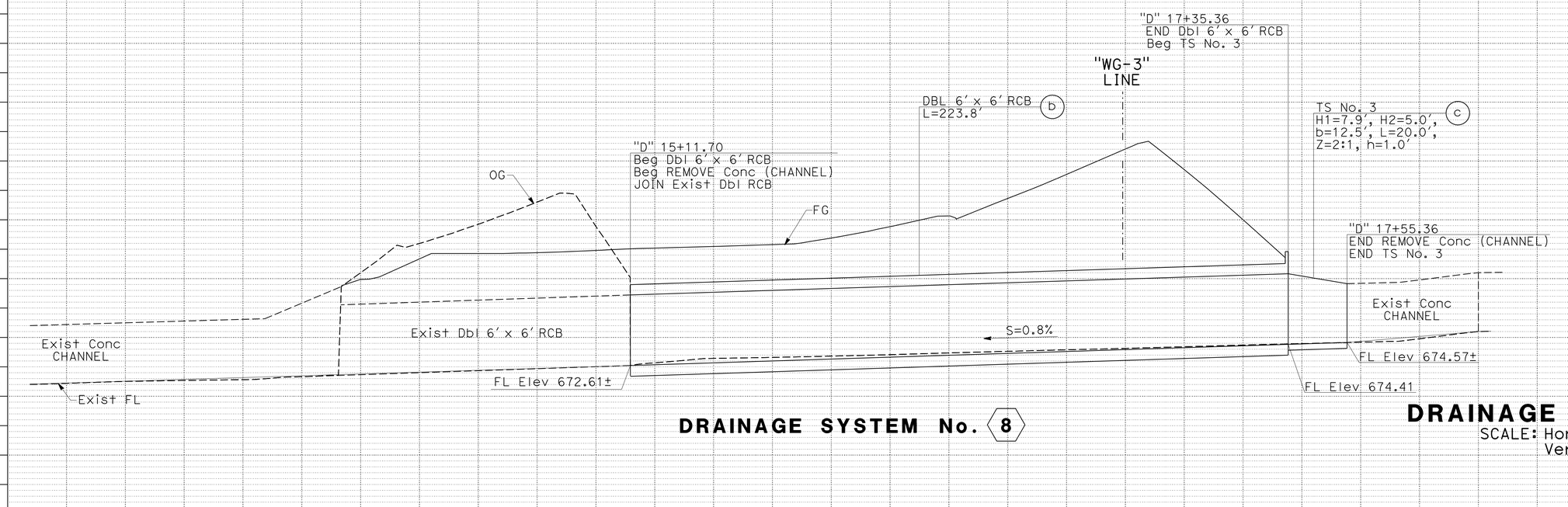

DRAINAGE SYSTEM No. 8

DRAINAGE PROFILES

SCALE: Horiz 1" = 20'
Vert 1" = 5'

DP-7

STATE OF CALIFORNIA - DEPARTMENT OF TRANSPORTATION
Caltrans
DESIGN
CONSULTANT FUNCTIONAL SUPERVISOR: MICHAEL HYNES
CALCULATED-DESIGNED BY: JOSEPH CARBAJAL
CHECKED BY: MICHAEL HYNES
REVISED BY
DATE REVISED

LAST REVISION 00-00-00
DATE PLOTTED => 09-MAY-2016
TIME PLOTTED => 15:06

Dist	COUNTY	ROUTE	POST MILES TOTAL PROJECT	SHEET No.	TOTAL SHEETS
07	LA	60	R24.4/R25.3	83	384

REGISTERED CIVIL ENGINEER 1-15-16 DATE

3-14-16
PLANS APPROVAL DATE

REGISTERED PROFESSIONAL ENGINEER MICHAEL HYNES No. C 67872 Exp. 06-30-17 CIVIL STATE OF CALIFORNIA

THE STATE OF CALIFORNIA OR ITS OFFICERS OR AGENTS SHALL NOT BE RESPONSIBLE FOR THE ACCURACY OR COMPLETENESS OF SCANNED COPIES OF THIS PLAN SHEET.

WKE, INC
400 N. TUSTIN AVENUE
SUITE 275
SANTA ANA, CA 92705

CITY OF INDUSTRY
15651 EAST STAFFORD STREET
CITY OF INDUSTRY, CA 91744

DRAINAGE SYSTEM No. 18

DRAINAGE PROFILES

SCALE: Horiz 1" = 20'
Vert 1" = 5'

DP-8

STATE OF CALIFORNIA - DEPARTMENT OF TRANSPORTATION
Caltrans
DESIGN
CONSULTANT FUNCTIONAL SUPERVISOR: MICHAEL HYNES
CALCULATED-DESIGNED BY: JOSEPH CARBAJAL
CHECKED BY: MICHAEL HYNES
REVISED BY
DATE REVISED

LAST REVISION 00-00-00
DATE PLOTTED => 09-MAY-2016
TIME PLOTTED => 15:06

Dist	COUNTY	ROUTE	POST MILES TOTAL PROJECT	SHEET No.	TOTAL SHEETS
07	LA	60	R24.4/R25.3	84	384

REGISTERED CIVIL ENGINEER 1-15-16 DATE

3-14-16
PLANS APPROVAL DATE

REGISTERED PROFESSIONAL ENGINEER MICHAEL HYNES No. C 67872 Exp. 06-30-17 CIVIL STATE OF CALIFORNIA

THE STATE OF CALIFORNIA OR ITS OFFICERS OR AGENTS SHALL NOT BE RESPONSIBLE FOR THE ACCURACY OR COMPLETENESS OF SCANNED COPIES OF THIS PLAN SHEET.

WKE, INC
400 N. TUSTIN AVENUE
SUITE 275
SANTA ANA, CA 92705

CITY OF INDUSTRY
15651 EAST STAFFORD STREET
CITY OF INDUSTRY, CA 91744

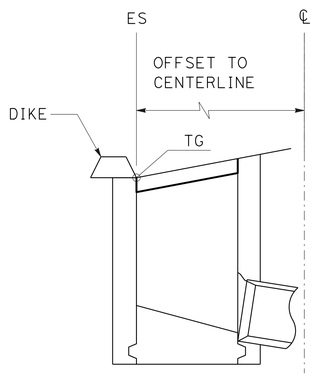

SECTION

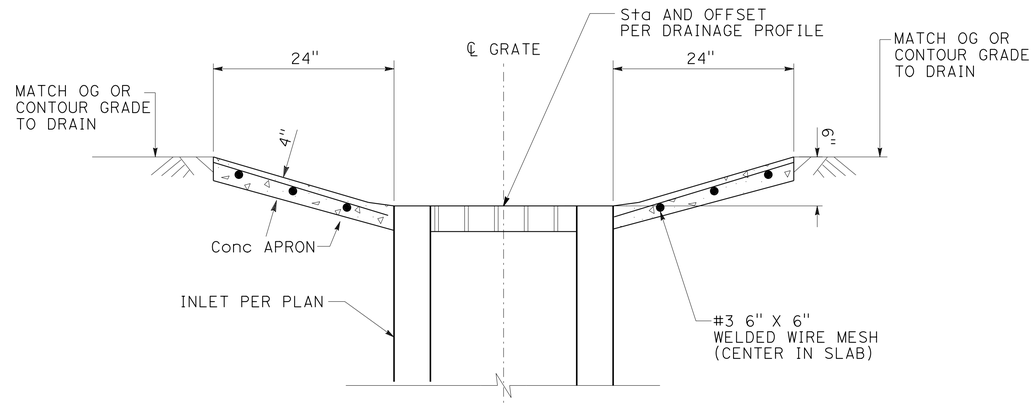

SECTION A-A

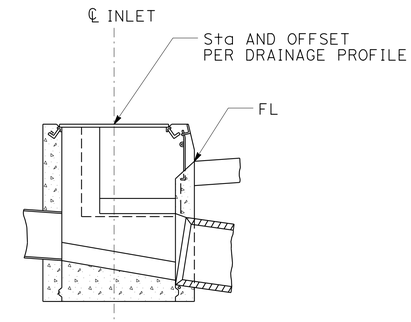

SECTION B-B

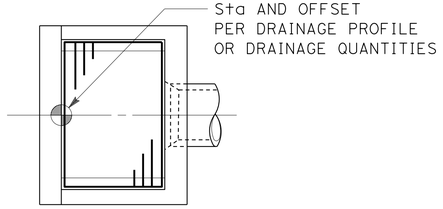

PLAN

INLET ADJACENT TO DIKE

INLET LAYOUT
CONTROL POINT DETAIL

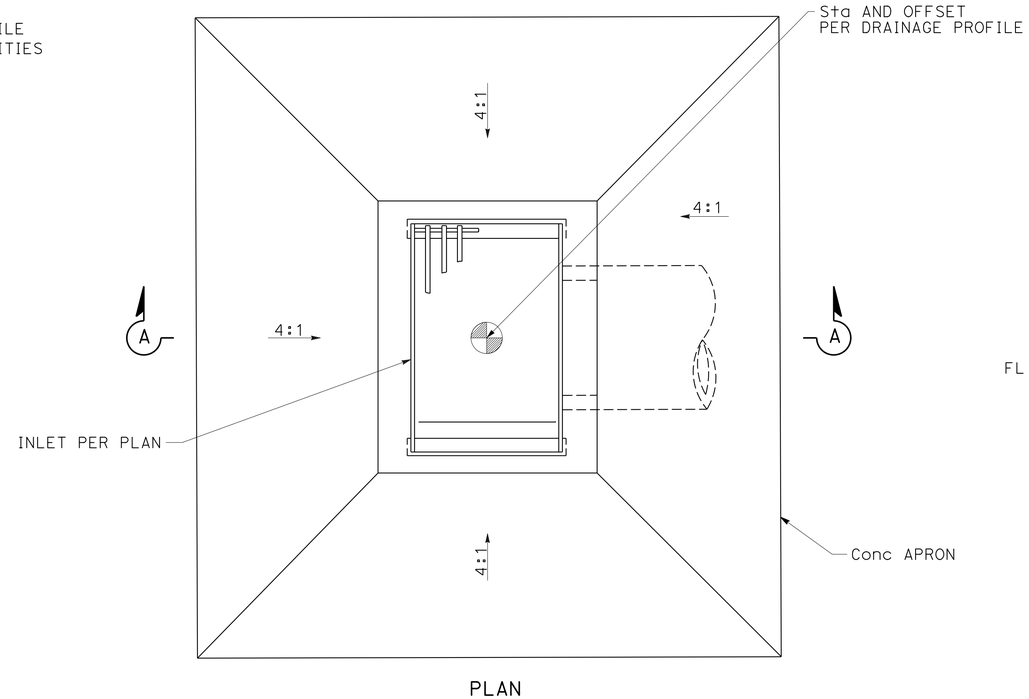

PLAN
RECTANGULAR

INLET APRON

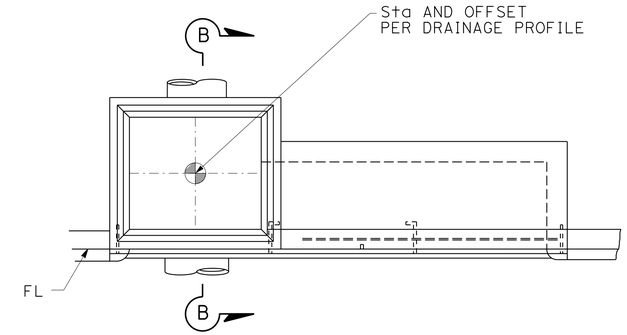

PLAN

CURB OPENING INLET LAYOUT
CONTROL POINT DETAIL

DRAINAGE DETAILS

NO SCALE

DD-1

STATE OF CALIFORNIA - DEPARTMENT OF TRANSPORTATION
Caltrans® DESIGN

CONSULTANT FUNCTIONAL SUPERVISOR: MICHAEL HYNES
CALCULATED-DESIGNED BY: JOSEPH CARBAJAL
CHECKED BY: MICHAEL HYNES
REVISED BY
DATE REVISED

LAST REVISION 00-00-00
DATE PLOTTED => 09-MAY-2016
TIME PLOTTED => 15:06

Dist	COUNTY	ROUTE	POST MILES TOTAL PROJECT	SHEET No.	TOTAL SHEETS
07	LA	60	R24.4/R25.3	85	384

REGISTERED CIVIL ENGINEER 1-15-16 DATE

3-14-16
PLANS APPROVAL DATE

REGISTERED PROFESSIONAL ENGINEER MICHAEL HYNES No. C 67872 Exp. 06-30-17 CIVIL STATE OF CALIFORNIA

THE STATE OF CALIFORNIA OR ITS OFFICERS OR AGENTS SHALL NOT BE RESPONSIBLE FOR THE ACCURACY OR COMPLETENESS OF SCANNED COPIES OF THIS PLAN SHEET.

WKE, INC
400 N. TUSTIN AVENUE
SUITE 275
SANTA ANA, CA 92705

CITY OF INDUSTRY
15651 EAST STAFFORD STREET
CITY OF INDUSTRY, CA 91744

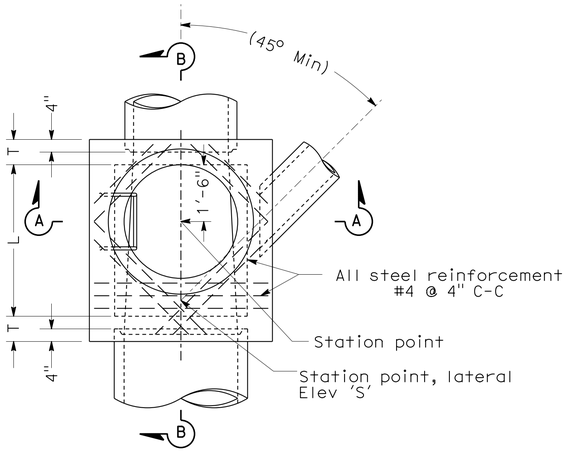

PLAN
(Shaft not shown)

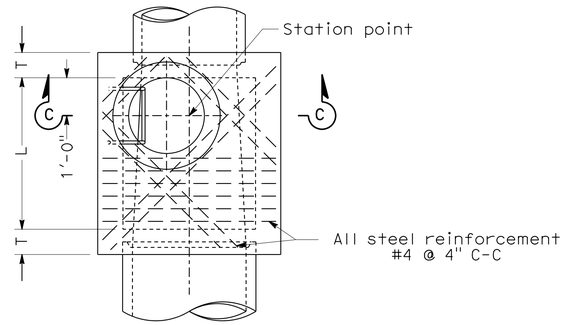

PLAN
DETAIL N
(Shaft not shown)

NOTES:

1. Height 'H' (in Sec A-A and Sec B-B) shall be not less than 4'-8", but may be increased provided that the value of 'M' shall be not less than the minimum specified and that the reducer shall be used. For 'H' (in Sec C-C) see Note 4.
2. Length 'L' shall be 4' unless otherwise shown on drainage plan.
3. Shaft shall be constructed as per Sec C-C and Detail N when depth 'M' from street grade to top of box is less than 2'-10 1/2" for paved streets or 3'-6" for unpaved streets.
4. Depth 'P' may be reduced to an absolute limit of 6" when larger values of 'P' would reduce 'H' (in Sec C-C) to 3'-6" or less.
5. 'T' shall be 8" for values of 'H' up to and including 8'. 'T' shall be 10" for values of 'H' over 8'.
6. Lowest step shall be not more than 16" above the ledge at the side of manhole floor.
7. Body of manhole shall be poured in one continuous operation, except that the Contractor shall have the option of placing at the spring line a construction joint with a longitudinal keyway.
8. Reinforcing steel shall be 1 1/2" clear from face of concrete.
9. Floor of manhole shall be steel-troweled to spring line.
10. Rings, reducer, and pipe for access shaft shall be seated in 1:2 cement mortar and neatly pointed or wiped inside shaft.
11. Manhole frame and cover per Standard Plan B7-11 detail 'U45'.
12. Step detail per Standard Plans D74C and D75C.

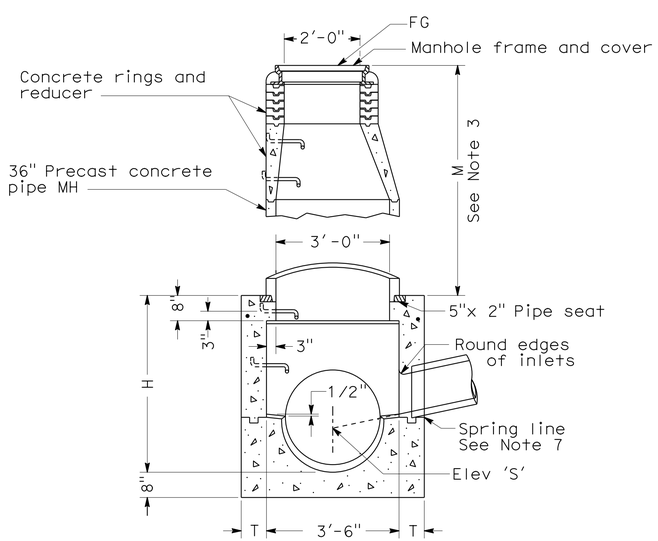

SECTION A-A

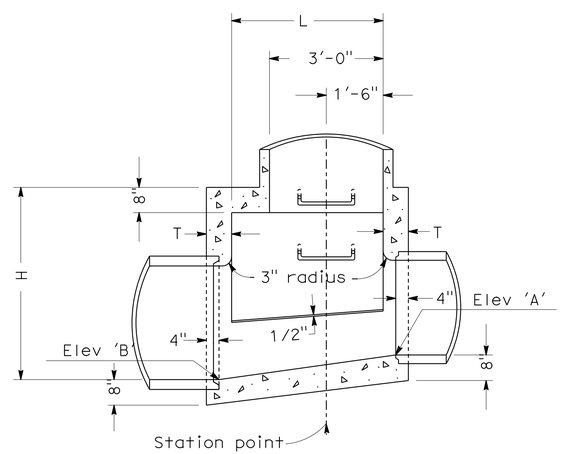

SECTION B-B

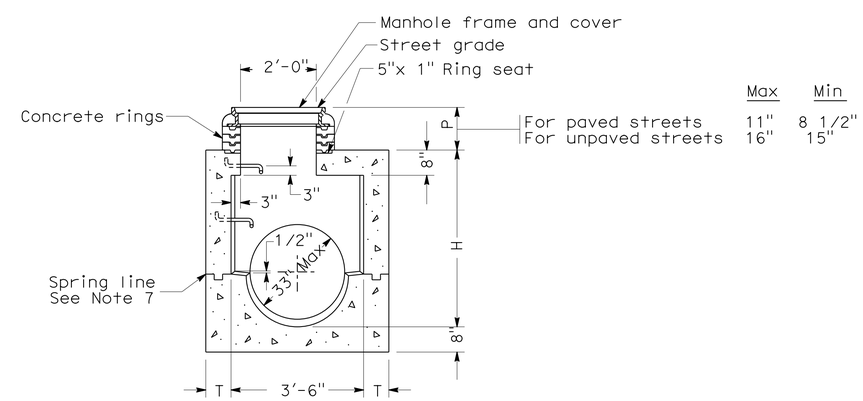

SECTION C-C

MANHOLE No. 1 (MH No. 1)

DRAINAGE DETAILS

NO SCALE

DD-2

STATE OF CALIFORNIA - DEPARTMENT OF TRANSPORTATION
Caltrans
DESIGN
CONSULTANT FUNCTIONAL SUPERVISOR: MICHAEL HYNES
CALCULATED-DESIGNED BY: JOSEPH CARBAJAL
CHECKED BY: MICHAEL HYNES
REVISED BY
DATE REVISED

LAST REVISION 00-00-00
DATE PLOTTED => 09-MAY-2016
TIME PLOTTED => 15:06

Dist	COUNTY	ROUTE	POST MILES TOTAL PROJECT	SHEET No.	TOTAL SHEETS
07	LA	60	R24.4/R25.3	86	384

REGISTERED CIVIL ENGINEER 1-15-16 DATE

3-14-16
PLANS APPROVAL DATE

REGISTERED PROFESSIONAL ENGINEER MICHAEL HYNES No. C 67872 Exp. 06-30-17 CIVIL STATE OF CALIFORNIA

THE STATE OF CALIFORNIA OR ITS OFFICERS OR AGENTS SHALL NOT BE RESPONSIBLE FOR THE ACCURACY OR COMPLETENESS OF SCANNED COPIES OF THIS PLAN SHEET.

WKE, INC
400 N. TUSTIN AVENUE
SUITE 275
SANTA ANA, CA 92705

CITY OF INDUSTRY
15651 EAST STAFFORD STREET
CITY OF INDUSTRY, CA 91744

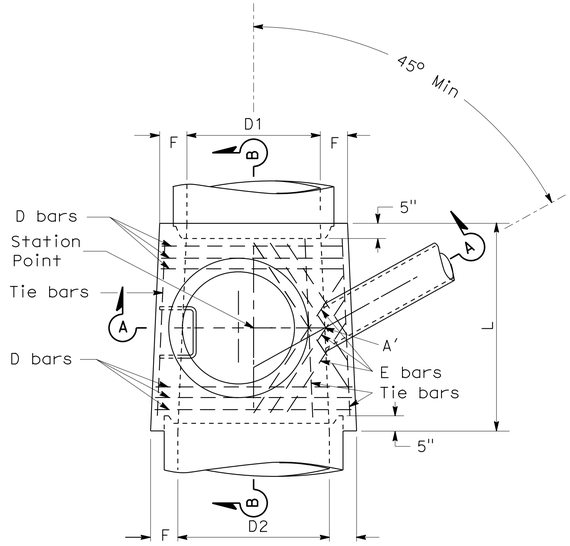

PLAN
(Shaft not shown)

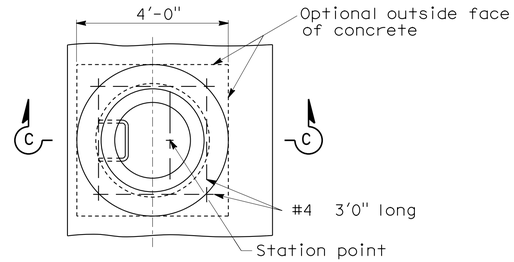

DETAIL N
(Shaft not shown)

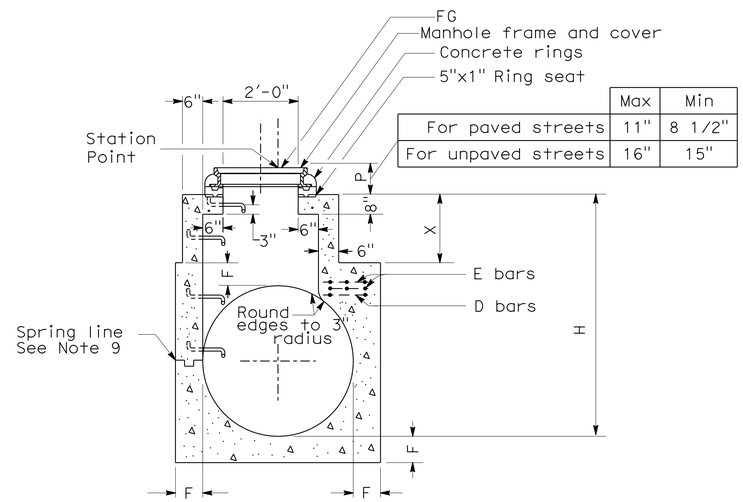

	Max	Min
For paved streets	11"	8 1/2"
For unpaved streets	16"	15"

SECTION C-C
(See note 10)

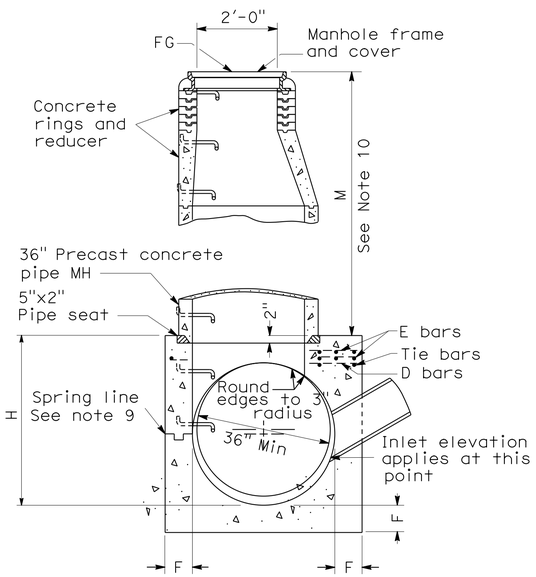

SECTION A-A'-A

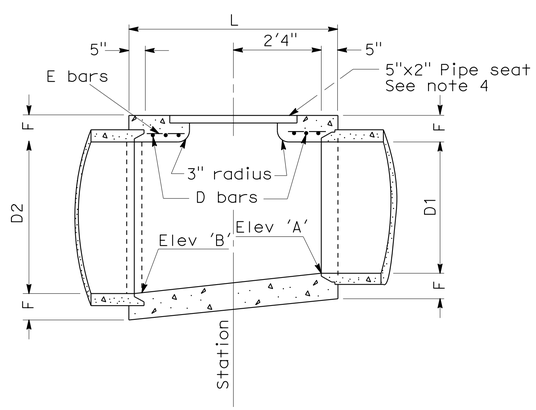

SECTION B-B

NOTES:

1. Values for Elev 'A', Elev 'B', 'H', 'L', 'M' or 'P' and 'X' are shown on the drainage plan.
2. Center of manhole shaft shall be located over centerline of storm drain when diameter 'D1' is 48" or less, in which case place E bar symmetrically around shaft at 45° with centerline.
3. Length 'L' shall be 5'-6" unless shown otherwise on drainage plan.
4. Thickness of 'F' shall vary when necessary to provide level pipeseat, but shall not be less than tabular values for 'F' shown on this plan.
5. Reinforcing steel shall be 1 1/2" clear from face of concrete unless shown otherwise. Sizes and lengths are shown in table below.
6. Unless otherwise shown, steps shall be placed 12" on centers. The lowest step shall be not more than 16" above the ledge at side of manhole floor.
7. Rings, reducer, and pipe for access shaft shall be seated in 1:2 cement mortar and neatly pointed or wiped inside the shaft.
8. Floor of manhole shall be steel-troweled to spring line.
9. Body of manhole shall be poured in one continous operation, except that the contractor shall have the option of placing at the spring line a construction joint with a longitudinal keyway.
10. Section C-C and Detail N: When depth of manhole from street grade to top of box is less than 2'-10 1/2" for paved streets or 3'-6" for unpaved streets, construct monolithic shaft as per Section C-C and Detail N. When diameter 'D' is 48" or less, center of shaft shall be located as per note 2.
11. Manhole frame and cover per Standard Plan B7-11 detail 'U45' (SEE SHEET DD-9).
12. Step detail per Standard Plans D74C and D75C.
13. D bars shall be placed 3" C-C. E bars shall be spaced 4" C-C. Tie bars shall be #3 spaced 18" C-C or less.
14. When 'L' greater than 5'-6" is specified on drainage plan, continue D bars at 6" C-C.
15. Lengths shown in table are for longest bars. Where shorter bars are required, bend or cut to meet field requirements.

TABLE OF VALUES FOR F	
D2	F
36"	6 1/2"
39"	7"
42"	7 1/2"
45"	7 3/4"
48"	8"
51"	8 1/2"
54"	9"
57"	9 1/4"
60"	9 1/2"
63"	10"
66"	10 1/4"
69"	10 3/4"
72"	11"
78"	11 3/4"
84"	12 1/2"
90"	13 1/4"
96"	14"

STEEL TABLE						
D bars				E bars		
D2	No Req	Size	Length	No Req	Size	Length
36"	6	#4	3'-10"	4	#4	2'-9"
39"	6	"	4'-2"	4	"	2'-11"
42"	6	#5	4'-6"	4	"	3'-2"
45"	6	"	4'-10"	4	"	3'-5"
48"	6	"	5'-1"	4	"	3'-7"
51"	6	"	5'-5"	6	"	4'-9"
54"	6	"	5'-9"	6	"	5'-1"
57"	6	"	6'-1"	6	"	5'-6"
60"	6	"	6'-4"	6	"	5'-11"
63"	6	"	6'-8"	6	"	6'-3"
66"	6	"	7'-0"	8	"	6'-8"
69"	6	"	7'-4"	8	"	6'-8"
72"	6	"	7'-7"	8	"	6'-8"
78"	6	"	8'-3"	8	"	6'-8"
84"	6	"	8'-10"	10	"	6'-8"
90"	6	#6	9'-6"	10	"	6'-8"
	6	"	10'-1"	10	"	6'-8"

DRAINAGE DETAILS

NO SCALE

DD-3

MANHOLE No. 2 (MH No. 2)

STATE OF CALIFORNIA - DEPARTMENT OF TRANSPORTATION
Caltrans®
DESIGN
CONSULTANT FUNCTIONAL SUPERVISOR: MICHAEL HYNES
CALCULATED-DESIGNED BY: JOSEPH CARBAJAL
CHECKED BY: MICHAEL HYNES
REVISED BY
DATE REVISED

LAST REVISION 00-00-00
DATE PLOTTED => 09-MAY-2016
TIME PLOTTED => 15:06

Dist	COUNTY	ROUTE	POST MILES TOTAL PROJECT	SHEET No.	TOTAL SHEETS
07	LA	60	R24.4/R25.3	87	384

REGISTERED CIVIL ENGINEER 1-15-16 DATE

3-14-16
PLANS APPROVAL DATE

REGISTERED PROFESSIONAL ENGINEER MICHAEL HYNES No. C 67872 Exp. 06-30-17 CIVIL STATE OF CALIFORNIA

THE STATE OF CALIFORNIA OR ITS OFFICERS OR AGENTS SHALL NOT BE RESPONSIBLE FOR THE ACCURACY OR COMPLETENESS OF SCANNED COPIES OF THIS PLAN SHEET.

WKE, INC
400 N. TUSTIN AVENUE
SUITE 275
SANTA ANA, CA 92705

CITY OF INDUSTRY
15651 EAST STAFFORD STREET
CITY OF INDUSTRY, CA 91744

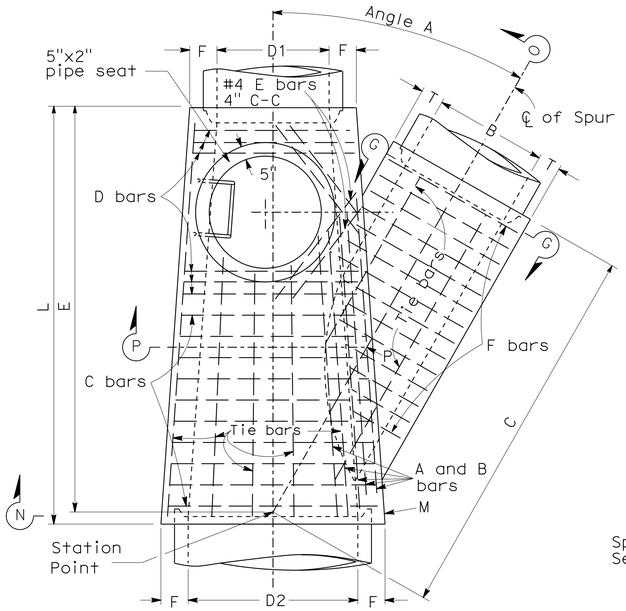

PLAN
(Shaft not shown)

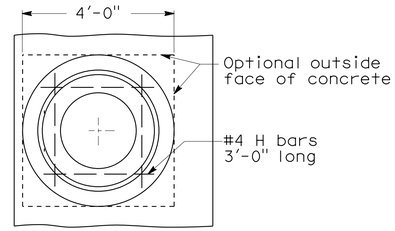

PLAN
(Rings and cover not shown)

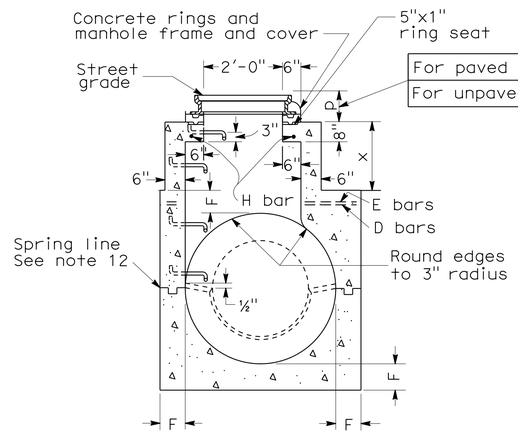

	Max	Min
For paved streets	11"	8½"
For unpaved streets	16"	15"

DETAIL 'M'
(See note 5)

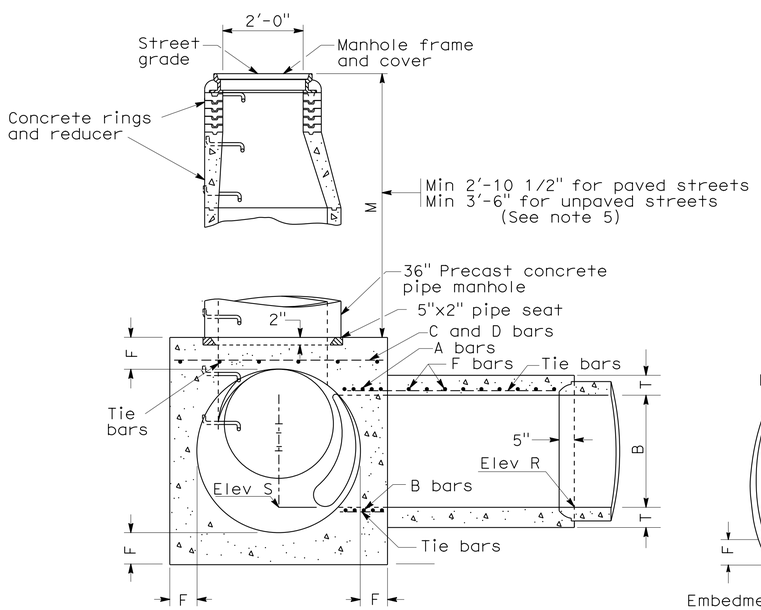

SECTION N-M-P-O
Projected on P-P-O

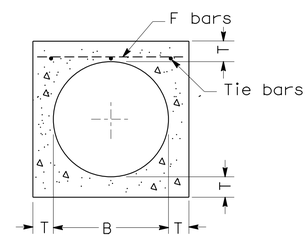

SECTION G-G

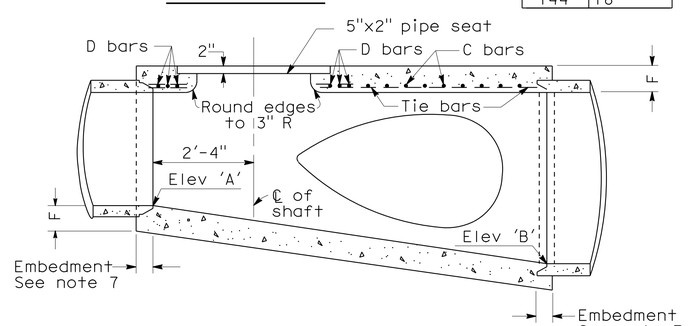

LONGITUDINAL SECTION

TABLE OF VALUES FOR F AND T			
D2	F	B	T
12"	4"	12"	4"
15"	4 1/4"	15"	4 1/4"
18"	4 1/2"	18"	4 1/2"
21"	5"	21"	5"
24"	5 1/4"	24"	5 1/4"
27"	5 1/2"	27"	5 1/2"
30"	6"	30"	6"
33"	6 1/4"	33"	6 1/4"
36"	6 1/2"	36"	6 1/2"
39"	7"	39"	7"
42"	7 1/2"	42"	7 1/2"
45"	7 3/4"	45"	7 3/4"
48"	8"	48"	8"
51"	8 1/2"	51"	8 1/2"
54"	9"	54"	9"
57"	9 1/4"	57"	9 1/4"
60"	9 1/2"	60"	9 1/2"
63"	10"	63"	10"
66"	10 1/4"	66"	10 1/2"
69"	10 3/4"	69"	10 3/4"
72"	11"	72"	11"
78"	11 3/4"	90"	13 1/4"
84"	12 1/2"	96"	14"
90"	13 1/4"	102"	15 1/2"
96"	14"	108"	16"
108"	16"	114"	16 1/2"
114"	16 1/2"	120"	17"
120"	17"	126"	17"
126"	17"	132"	17 1/2"
132"	17 1/2"	138"	17 1/2"
138"	17 1/2"	144"	18"
144"	18"		

NOTES:

1. Values for 'A', 'B', 'C', 'D1', 'D2', 'E', 'L', 'M', or 'P' and 'X', Elev 'R', Elev 'S', Elev 'A', and Elev 'B' are shown on drainage plan.
2. Laterals: If laterals enter on both sides of manhole, access shaft shall be located on side receiving the smaller lateral Laterals shall be designated on drainage plan as right or left, facing in the direction of stationing.
3. Center of manhole shaft shall be located over centerline of main storm drain when 'D1' is 48" or less, in which case place 4E bars symmetrically around shaft at 45° with center line.
4. Length L shown on drainage plan.
5. Detail 'M': When depth of manhole from street grade to top of box is less than 2'-10 1/2" for paved streets or 3'-6" for unpaved streets, construct monolithic shaft as per Detail 'M'. When diameter 'D1' is 48" or less, center of shaft shall be located as per Note 3.
6. Reinforcing steel shall be round, deformed, straight bars 1 1/2" clear from face of concrete unless shown otherwise. Tie bars shall be #3 and spaced 18" on centers or closer. Steel schedule detailed below.
7. Embedment shall be 5" for 'D2'= 96" or less and 8" for 'D2' over 96".
8. Unless otherwise shown, steps shall be placed 12" on centers. The lowest step shall be not more than 16" above the ledge at the side of manhole floor.
9. Rings, reducer, and pipe for access shaft shall be seated in 1:2 cement mortar and neatly pointed or wiped inside shaft.
10. Stations of manholes shown on drainage plan apply at intersection of center lines of main line and spur.
11. Floor of manhole shall be steel troweled to spring line.
12. Body of manhole, including spur, shall be poured in one continuous operation, except that the Contractor shall have the option of placing at the spring line a construction joint with longitudinal keyway.
13. Elevation 'S' applies at center of main line on prolongation invert of spur.
14. Manhole frame and cover per Standard Plan B7-11 detail 'U45'.
15. Step detail per Standard Plan D74C and D75C.

STEEL SCHEDULE

Dia B or D2	A & B bars	C & F bars	D bars
12" to 39"	#5 @ 3"	#4 @ 6"	#4 @ 3"
42" to 84"	#6 @ 3"	#5 @ 6"	#5 @ 3"
90" to 144"	#7 @ 3"	#6 @ 6"	#6 @ 3"

MANHOLE No. 4 (MH No. 4)

DRAINAGE DETAILS

NO SCALE

DD-4

STATE OF CALIFORNIA - DEPARTMENT OF TRANSPORTATION
Caltrans®
DESIGN
CONSULTANT FUNCTIONAL SUPERVISOR: MICHAEL HYNES
CALCULATED-DESIGNED BY: JOSEPH CARBAJAL
CHECKED BY: MICHAEL HYNES
REVISED BY
DATE REVISED

LAST REVISION 00-00-00
DATE PLOTTED => 09-MAY-2016
TIME PLOTTED => 15:06

Dist	COUNTY	ROUTE	POST MILES TOTAL PROJECT	SHEET No.	TOTAL SHEETS
07	LA	60	R24.4/R25.3	88	384

REGISTERED CIVIL ENGINEER 1-15-16 DATE

3-14-16
PLANS APPROVAL DATE

REGISTERED PROFESSIONAL ENGINEER MICHAEL HYNES No. C 67872 Exp. 06-30-17 CIVIL STATE OF CALIFORNIA

THE STATE OF CALIFORNIA OR ITS OFFICERS OR AGENTS SHALL NOT BE RESPONSIBLE FOR THE ACCURACY OR COMPLETENESS OF SCANNED COPIES OF THIS PLAN SHEET.

WKE, INC
400 N. TUSTIN AVENUE
SUITE 275
SANTA ANA, CA 92705

CITY OF INDUSTRY
15651 EAST STAFFORD STREET
CITY OF INDUSTRY, CA 91744

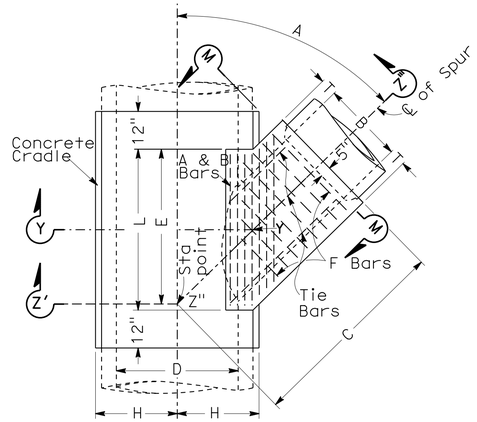

PLAN

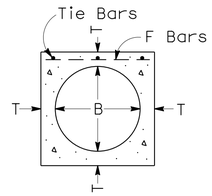

SECTION M-M

Table of Values For T	
B	T
12"	4"
15"	4 1/4"
18"	4 1/2"
21"	5"
24"	5 1/4"
27"	5 1/2"
30"	6"
33"	6 1/4"
36"	6 1/2"
39"	7"

Minimum depth of top and bottom slabs shall be $\frac{D}{12}$ + 2"

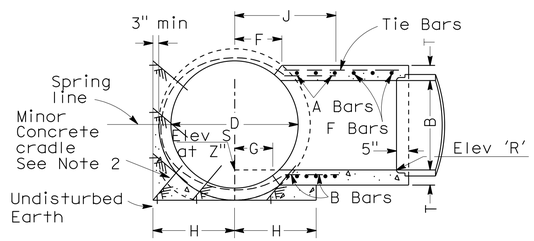

SECTION Z'-Z"-Z'''
Projected on Y-Y-Z'''

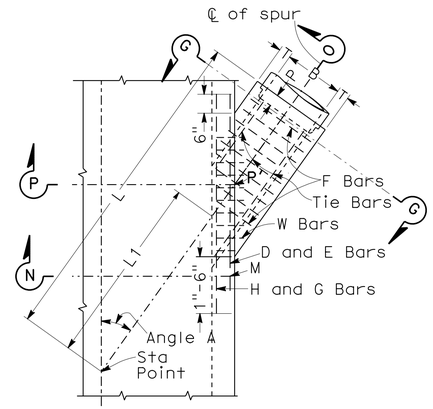

PLAN

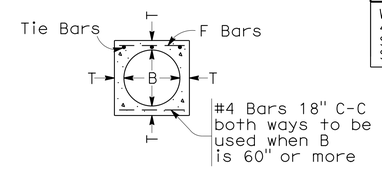

SECTION G-G

TABLE OF VALUES FOR T			
B	T	B	T
12"	4"	63"	10"
15"	4 1/4"	66"	10 1/4"
18"	4 1/2"	69"	10 3/4"
21"	5"	72"	11"
24"	5 1/4"	78"	11 3/4"
27"	5 1/2"	84"	12 1/2"
30"	6"	90"	13 1/4"
33"	6 1/4"	96"	14"
36"	6 1/2"	102"	15 1/2"
39"	7"	108"	16"
42"	7 1/2"	114"	16 1/2"
45"	7 3/4"	120"	17"
48"	8"	126"	17"
51"	8 1/2"	132"	17 1/2"
54"	9"	138"	17 1/2"
57"	9 1/4"	144"	18"
60"	9 1/2"		

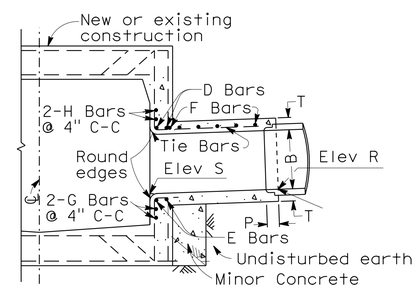

SECTION N-M-P'-O
Projected on P-P'-O

NOTES:

1. Values for 'A', 'B', 'C', 'D', 'E', 'F', 'G', 'L', Elev 'R' and Elev 'S' shown on Drainage Plans.
2. Pipe shall be cradled in concrete extending longitudinally to 1' beyond limits of 'L'. H=1/2 outside diameter of pipe plus 3" as a minimum. Cradle may be omitted on side opposite lateral inlet when constructed in connection with existing pipe storm drain.
3. A and B Bars shall be carried to a point not less than J distance from center line. J= D + 6.
4. Rectangular opening in main line pipe shall be cut within limits of 'F', 'G', and 'L' normal to pipe surface without damaging steel.
5. Transverse reinforcement in pipe shall be cut in center of opening and bent to uniform distance from top and bottom of junction structure.
6. Optional construction: When Junction Structure #1 is specifiedon Drainage Plan, the Contractor shall have the option of constructing Junction Structure #2, in which case construction data will be furnished by the Engineer.
7. Reinforcing steel shall be 1½" clear from face of concrete unless otherwise shown.
8. Steel schedule: A and B Bars - #5 @ 3" C-C
   F Bars - #4 @ 6" C-C
   Tie Bars - #3 @ 18" C-C
9. Monolithic arch: When Junction Structure #1 is specified with reinforced monolithic arch storm drain, value 'D' shall refer to the clear span of arch. Reinforcing steel shall be cut and bent into junction structure the same as for pipe. Concrete cradle under reinforced monolithic arch is not required.
10. Floor of structure shall be steel-troweled to spring line.
11. Elevation 'S' applies at center of main line on prolongation of invert spur.

JUNCTION STRUCTURE No. 1 (JS 1)

NOTES:

1. VALUES for 'A', 'B', 'L', 'L1', 'Elev R' and 'Elev S' are shown on Drainage Plan.
2. STATIONS specified in Drainage Plan apply at intersection of centerlines of main line and lateral.
3. EMBEDMENT 'P' shall be 5" for pipe diameters 12" to 96" and 8" for pipe diameters 102" to 144".
4. REINFORCING STEEL shall be 1½" clear from face of concrete unless otherwise shown. W Bars are of size and spacing specified for wall steel on Drainage Plan, and shall be cut in center of opening and bent into top and bottom of junction structure. OMIT H Bars when soffit of spur is 1' or less below soffit of main line, and omit G Bars when invert of spur is 1' or less above floor of main line.
5. STEEL SCHEDULE:

Dia B	D,E,H,G Bars	F Bars
12" to 39"	#5	#4 @ 6" C-C
42" to 84"	#6	#5 @ 6" C-C
90" to 144"	#7	#6 @ 6" C-C
Tie bars - #3 @ 18" C-C		

6. JUNCTION STRUCTURE shall be poured monolithic with main line storm drain or manhole.
7. FLOOR of structure shall be steel-troweled.

JUNCTION STRUCTURE No. 3 (JS 3)

DRAINAGE DETAILS

NO SCALE

DD-5

STATE OF CALIFORNIA - DEPARTMENT OF TRANSPORTATION
Caltrans®
DESIGN
CONSULTANT FUNCTIONAL SUPERVISOR: MICHAEL HYNES
CALCULATED-DESIGNED BY: JOSEPH CARBAJAL
CHECKED BY: MICHAEL HYNES
REVISED BY
DATE REVISED

LAST REVISION 00-00-00
DATE PLOTTED => 09-MAY-2016
TIME PLOTTED => 15:06

Dist	COUNTY	ROUTE	POST MILES TOTAL PROJECT	SHEET No.	TOTAL SHEETS
07	LA	60	R24.4/R25.3	89	384

REGISTERED CIVIL ENGINEER 1-15-16 DATE

3-14-16
PLANS APPROVAL DATE

REGISTERED PROFESSIONAL ENGINEER MICHAEL HYNES No. C 67872 Exp. 06-30-17 CIVIL STATE OF CALIFORNIA

THE STATE OF CALIFORNIA OR ITS OFFICERS OR AGENTS SHALL NOT BE RESPONSIBLE FOR THE ACCURACY OR COMPLETENESS OF SCANNED COPIES OF THIS PLAN SHEET.

WKE, INC
400 N. TUSTIN AVENUE
SUITE 275
SANTA ANA, CA 92705

CITY OF INDUSTRY
15651 EAST STAFFORD STREET
CITY OF INDUSTRY, CA 91744

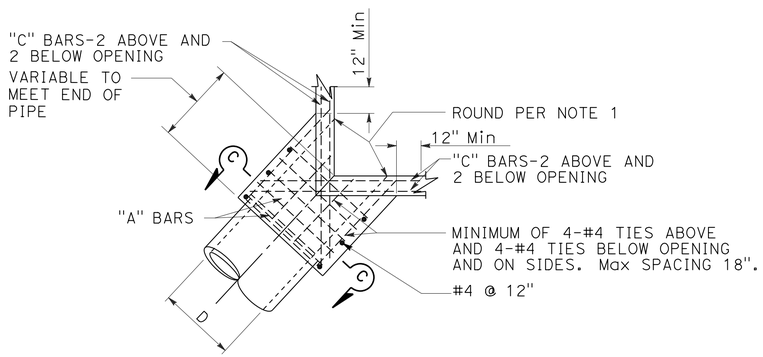

PLAN
CORNER CONNECTION

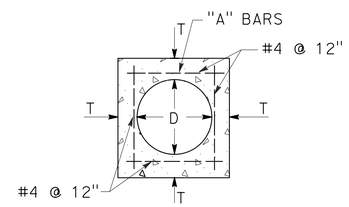

SECTION C-C

D	T	"A"	"B"-"C"
12"	4-½"	#4 @ 6"	#5
15"	4-½"		
18"	5"		
21"	5-½"		
24"	6"		
27"	6-½"		
30"	7"		
33"	7"		
36"	7-½"		
39"	8"		
42"	8"		
45"	8"	#5 @ 6"	#6
48"	8"		
51"	8"		
54"	8"		
57"	10"		
60"	10"		
63"	10"		
66"	11"		
69"	11"		
72"	11"		

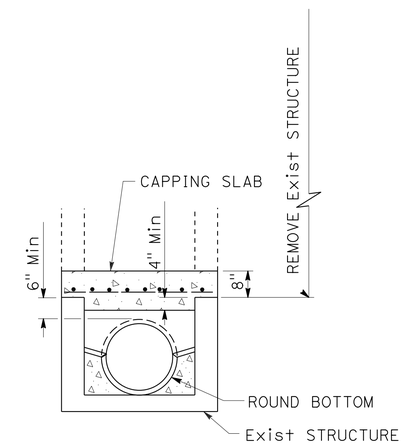

SECTION A-A

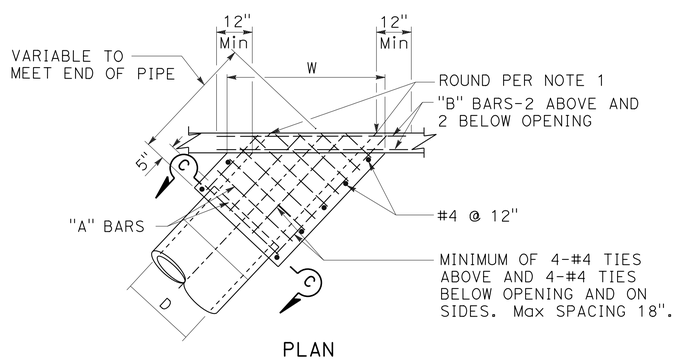

PLAN
SIDE CONNECTION

NOTES:

1. ROUND EDGE OF OUTLET TO 3" RADIUS.
2. REINFORCEMENT SHALL BE 1½" CLEAR FROM THE FACE OF CONCRETE.
3. IN CONNECTING TO AN EXISTING STRUCTURE BREAK OUT PORTIONS OF THE EXISTING STRUCTURE SIX INCHES OUTSIDE ITS INTERSECTION WITH THE NEW CONNECTION. BEND ENDS OF #4 BARS OVER CONNECTION OPENING AS REQUIRED.

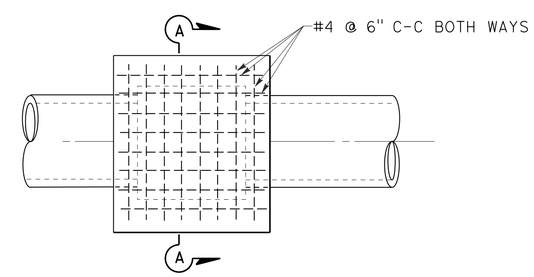

PLAN

MONOLITHIC CONNECTION FOR PIPES 12" TO 72" INCLUSIVE

CAP INLET DETAIL

DRAINAGE DETAILS

NO SCALE

DD-6

STATE OF CALIFORNIA - DEPARTMENT OF TRANSPORTATION
DESIGN
CONSULTANT FUNCTIONAL SUPERVISOR: MICHAEL HYNES
CALCULATED-DESIGNED BY: JOSEPH CARBAJAL
CHECKED BY: MICHAEL HYNES
REVISED BY
DATE REVISED

LAST REVISION 00-00-00
DATE PLOTTED => 09-MAY-2016
TIME PLOTTED => 15:06

Dist	COUNTY	ROUTE	POST MILES TOTAL PROJECT	SHEET No.	TOTAL SHEETS
07	LA	60	R24.4/R25.3	90	384

REGISTERED CIVIL ENGINEER 1-15-16 DATE

3-14-16
PLANS APPROVAL DATE

REGISTERED PROFESSIONAL ENGINEER MICHAEL HYNES No. C 67872 Exp. 06-30-17 CIVIL STATE OF CALIFORNIA

THE STATE OF CALIFORNIA OR ITS OFFICERS OR AGENTS SHALL NOT BE RESPONSIBLE FOR THE ACCURACY OR COMPLETENESS OF SCANNED COPIES OF THIS PLAN SHEET.

WKE, INC
400 N. TUSTIN AVENUE
SUITE 275
SANTA ANA, CA 92705

CITY OF INDUSTRY
15651 EAST STAFFORD STREET
CITY OF INDUSTRY, CA 91744

NOTES:

1. FOR DETAILS NOT SHOWN, SEE Std. PLAN D91A & D91B.
2. FOR STEP DETAILS AND STEP SPACING, SEE Std PLAN D74C AND D72 (NOTE 6).

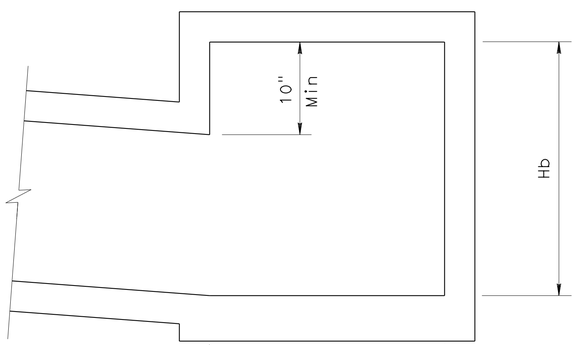

SECTION A-A

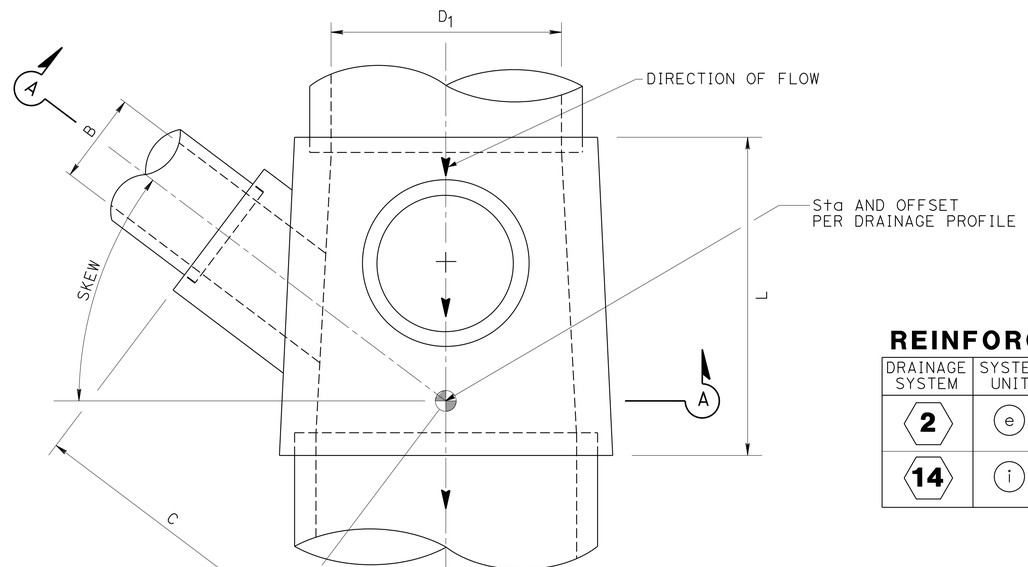

PLAN

REINFORCED CONCRETE Jct Str TABLE

DRAINAGE SYSTEM	SYSTEM UNIT	Hb	L	SPAN	D_1	D_2	SKEW	B	C
2	e	5'-10"	6'	3'-6"	24"	30"	43°40'29"	24"	5'
14	i	5'-6"	8'	3'-6"	30"	36"	26°38'55"	24"	4.5'

REINFORCED CONCRETE Jct Str LAYOUT DETAIL

DRAINAGE DETAILS

NO SCALE

DD-7

STATE OF CALIFORNIA - DEPARTMENT OF TRANSPORTATION
Caltrans® DESIGN

CONSULTANT FUNCTIONAL SUPERVISOR: MICHAEL HYNES
CALCULATED-DESIGNED BY: JOSEPH CARBAJAL
CHECKED BY: MICHAEL HYNES
REVISED BY
DATE REVISED

LAST REVISION 00-00-00
DATE PLOTTED => 09-MAY-2016
TIME PLOTTED => 15:06

Dist	COUNTY	ROUTE	POST MILES TOTAL PROJECT	SHEET No.	TOTAL SHEETS
07	LA	60	R24.4/R25.3	91	384

REGISTERED CIVIL ENGINEER 1-15-16 DATE

3-14-16
PLANS APPROVAL DATE

REGISTERED PROFESSIONAL ENGINEER MICHAEL HYNES No. C 67872 Exp. 06-30-17 CIVIL STATE OF CALIFORNIA

THE STATE OF CALIFORNIA OR ITS OFFICERS OR AGENTS SHALL NOT BE RESPONSIBLE FOR THE ACCURACY OR COMPLETENESS OF SCANNED COPIES OF THIS PLAN SHEET.

WKE, INC
400 N. TUSTIN AVENUE
SUITE 275
SANTA ANA, CA 92705

CITY OF INDUSTRY
15651 EAST STAFFORD STREET
CITY OF INDUSTRY, CA 91744

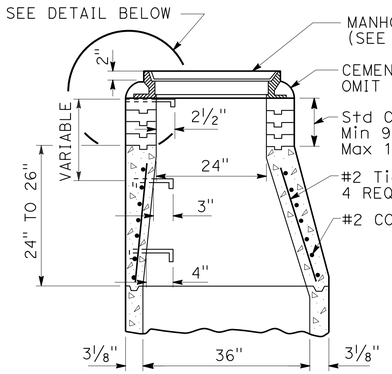

VARIABLE LENGTH SECTIONS OF REINFORCED MANHOLE SHAFT WITH STEEL STEPS

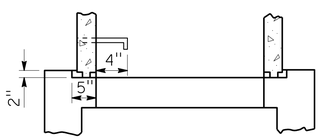

VERTICAL SECTION OF REINFORCED CONCRETE ECCENTRIC MANHOLE SHAFT

NOTES:

1. ALL JOINTS SHALL BE FILLED WITH CEMENT MORTAR NEATLY POINTED OR WIPED ON INSIDE OF SHAFT.
2. COLLAR OF CEMENT MORTAR AROUND COVER FRAME SHALL BE OMITTED IN PAVED STREETS.
3. STEPS SHALL BE 4 BEND, ¾ ROUND, GALVANIZED STELL AND ANCHORED NOT LESS THAN 6" IN THE WALLS OF STRUCTURES. UNLESS OTHERWISE SHOWN, STEPS SHALL BE PLACED 12" ON CENTERS. THE LOWEST STEP SHALL BE NOT MORE THAN 16" ABOVE THE LEDGE AT SIDE OF MANHOLE FLOOR.
4. ECCENTRIC MANHOLE SHAFT REDUCER AND RINGS MAY BE PRECAST CONCRETE. FOR UNREINFORCED SECTIONS, THE MINIMUM THICKNESS SHALL BE 6".
5. 3-INCH RINGS SHALL BE REINFORCED WITH ONE ¼" ROUND STEEL HOOP. 6-INCH RINGS SHALL BE REINFORCED WITH 2 HOOPS.

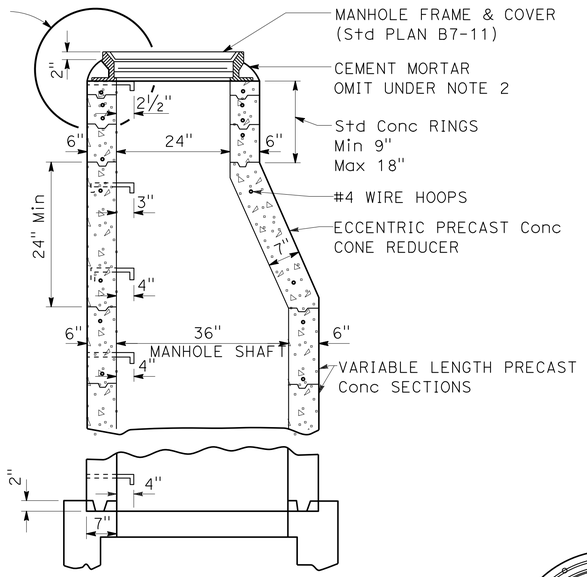

VERTICAL SECTION OF PLAIN CONCRETE ECCENTRIC MANHOLE SHAFT

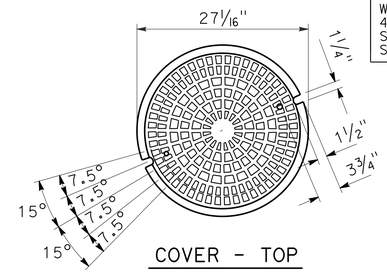

COVER - TOP
262 LBS

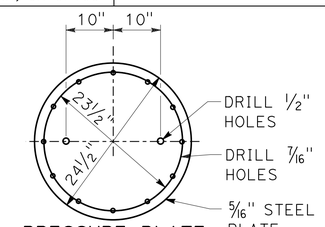

PRESSURE PLATE
42 LBS

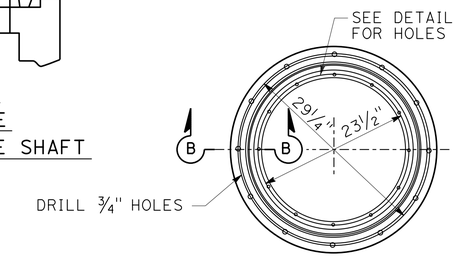

FRAME-PLAN
195 LBS

NOTES:

1. MANHOLE FRAME AND COVER SHALL BE MADE OF GRAY CAST IRON CONFORMING TO THE LATEST SPECIFICATIONS.
2. ALL PARTS OF THE MANHOLE FRAME AND COVER EXCEPT MACHINED SURFACES SHALL BE COATED WITH ASPHALTUM PAINT.
3. MANHOLE FRAME AND COVER SHALL BE TESTED FOR ACCURACY OF FIT AND SHALL BE MARKED IN SETS BEFORE DELIVERY. THE COVER SHALL FIT THE FRAME SNUGLY BUT NOT TIGHTLY.
4. COVERS SHALL BEAR THE LETTER "S" FOR SEWER STRUCTURES IN PLACE OF THE LETTER "D".
5. WEIGHTS OF FRAME, COVER AND PRESSURE PLATE SHALL NOT VARY MORE THAN TWO PERCENT FROM THOSE GIVEN HEREON.
6. USE STANDARD MANHOLE SHAFT UNLESS OTHERWISE SHOWN ON DRAINAGE PLAN.

STANDARD MANHOLE SHAFT

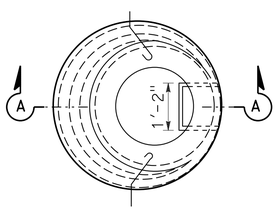

PLAN

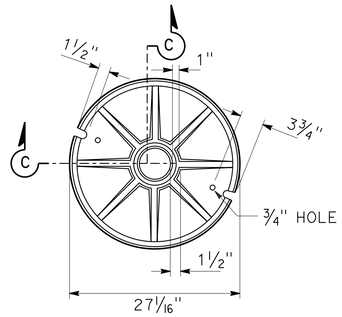

COVER-BOTTOM
262 LBS

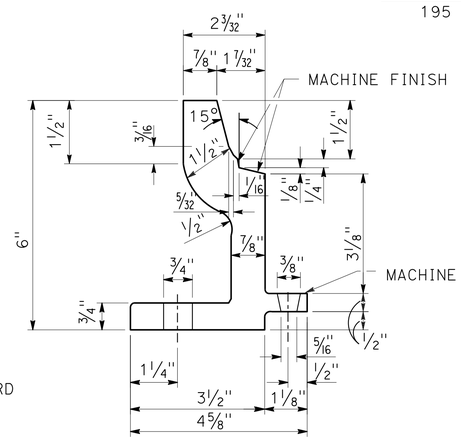

SECTION B-B

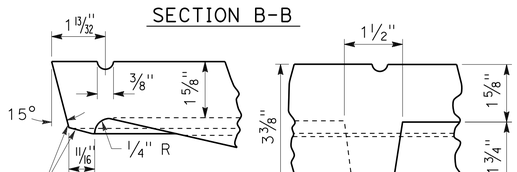

SECTION C-C

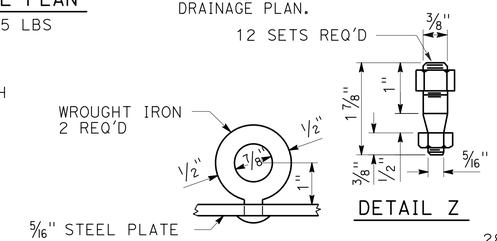

DETAIL Z

DETAIL Y

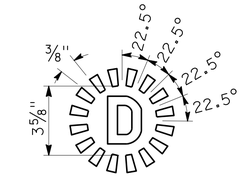

LETTER DETAIL

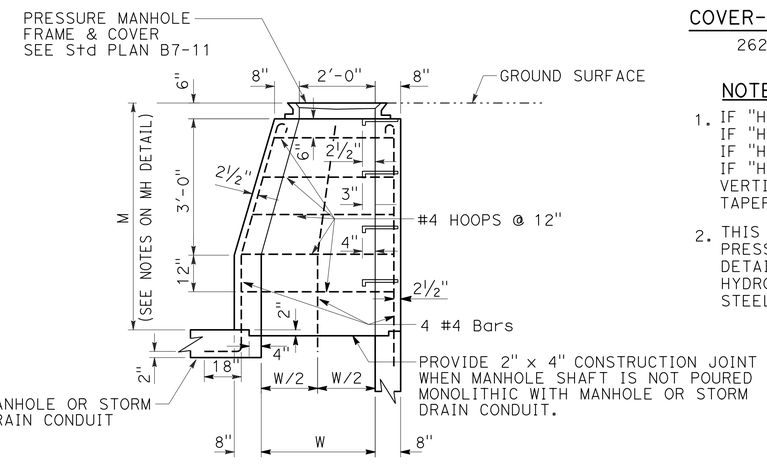

SECTION A-A

NOTES:

1. IF "H" IS LESS THAN 1'-6", W=2'-0".
   IF "H" IS BETWEEN 1'-6" AND 2'-6", W=2'-6".
   IF "H" IS 2'-6" OR MORE, W=3'-0".
   IF "H" IS MORE THAN 4'-0", BRING WALLS VERTICALLY TO 4'-0" BELOW SURFACE AND TAPER FROM 3'-0" TO 2'-0" AS SHOWN.
2. THIS STRUCTURE SHALL BE USED WITH STANDARD PRESSURE MANHOLE FRAME AND COVER PER DETAIL HEREON. IT MAY BE USED FOR HYDROSTATIC HEADS UP TO 25' ABOVE THE STEEL PLATE.

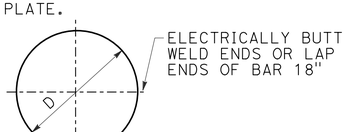

#4 HOOP BARS

WHERE "H" IS MORE THAN 4'-0", D=3'-1¾" FOR TOPMOST HOOP IN SHAFT, EACH LOWER HOOP IN SUCCESSION INCREASES 3½" IN DIAMETER TO A MAXIMUM OF 4'-0" IN THE VERTICAL PORTION OF THE SHAFT.

PRESSURE MANHOLE SHAFT

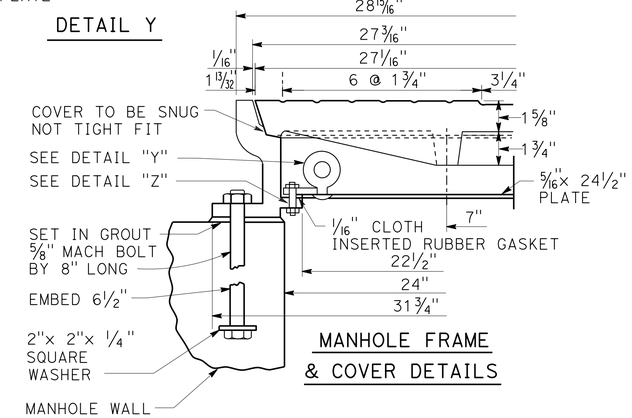

MANHOLE FRAME & COVER DETAILS

DRAINAGE DETAILS

NO SCALE

DD-8

STANDARD AND PRESSURE MANHOLE SHAFTS

STATE OF CALIFORNIA - DEPARTMENT OF TRANSPORTATION
DESIGN
CONSULTANT FUNCTIONAL SUPERVISOR: MICHAEL HYNES
CALCULATED-DESIGNED BY: JOSEPH CARBAJAL
CHECKED BY: MICHAEL HYNES
REVISED BY
DATE REVISED

LAST REVISION 00-00-00
DATE PLOTTED => 09-MAY-2016
TIME PLOTTED => 15:06

Dist	COUNTY	ROUTE	POST MILES TOTAL PROJECT	SHEET No.	TOTAL SHEETS
07	LA	60	R24.4/R25.3	92	384

REGISTERED CIVIL ENGINEER 1-15-16 DATE

3-14-16
PLANS APPROVAL DATE

REGISTERED PROFESSIONAL ENGINEER MICHAEL HYNES No. C 67872 Exp. 06-30-17 CIVIL STATE OF CALIFORNIA

THE STATE OF CALIFORNIA OR ITS OFFICERS OR AGENTS SHALL NOT BE RESPONSIBLE FOR THE ACCURACY OR COMPLETENESS OF SCANNED COPIES OF THIS PLAN SHEET.

WKE, INC
400 N. TUSTIN AVENUE
SUITE 275
SANTA ANA, CA 92705

CITY OF INDUSTRY
15651 EAST STAFFORD STREET
CITY OF INDUSTRY, CA 91744

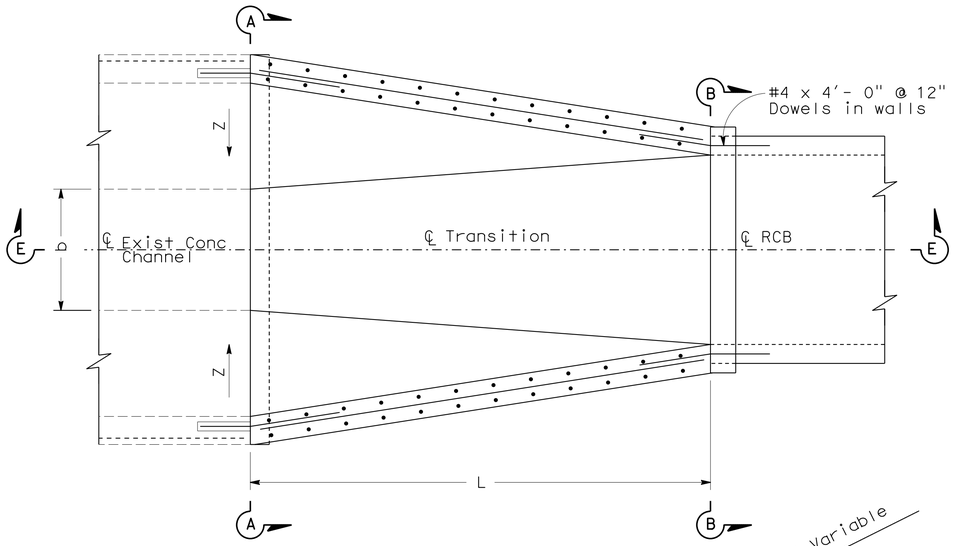

PLAN

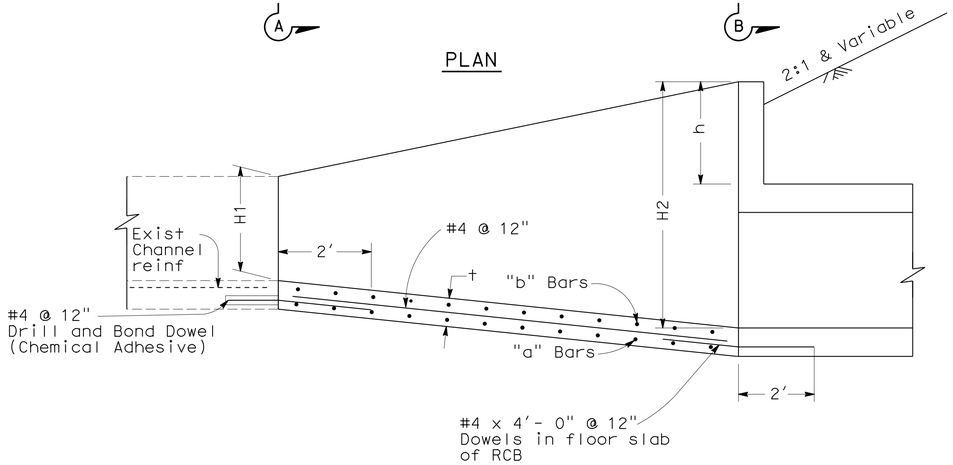

SECTION E-E

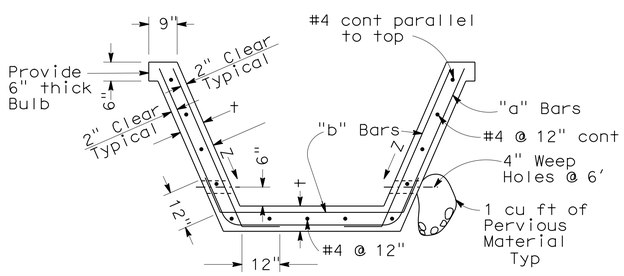

SECTION A-A

TABLE 1

* DESIGN "H"	†	REINFORCEMENT
0' - 4'	6"	#4 @ 12" both ways centered in slab
4' - 6'	6"	"a" Bars #5 @ 12" "b" Bars #5 @ 12"
6' - 8'	6"	"a" Bars #6 @ 12" "b" Bars #5 @ 12"
Greater than 8'	10"	"a" Bars #6 @ 6" "b" Bars #5 @ 12"

* Design "H" varies throughout length of transition. Use larger "H" on short transitions (L=15' or less). For longer transitions, vary reinforcement as indicated above.

TRANSITION STRUCTURE NO 3 (TS No. 3)

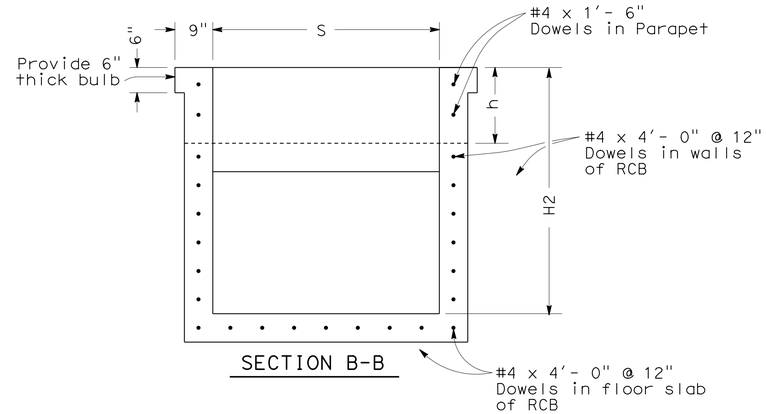

SECTION B-B

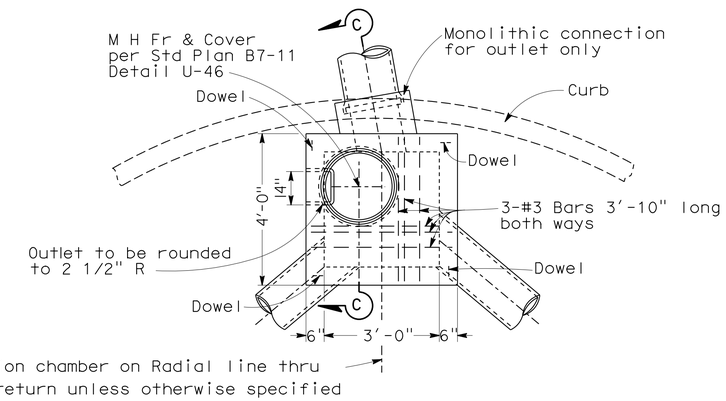

PLAN

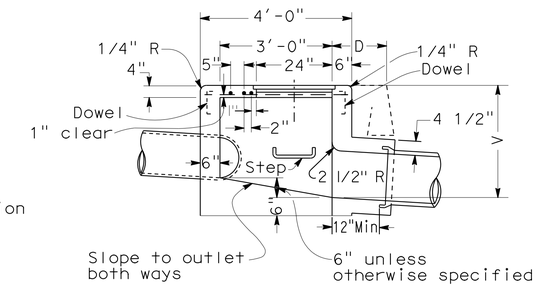

SECTION C-C

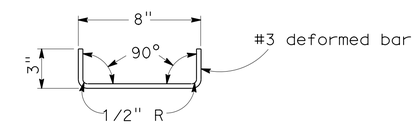

DETAIL OF DOWEL

One at each corner to be used when top is poured separate

NOTES:

1. Connection pipes may be placed in any position around the walls provided they point in the proper direction and the position is otherwise consistent with the Drainage Plan.
2. Dimensions: D=18" unless otherwise specified.
   V=3'-6" unless otherwise specified.
3. Exposed surface of the Junction Chamber shall conform in slope, grade, color, finish and scoring to existing sidewalk adjacent to the Junction Chamber. Where no sidewalk exists, the top shall be finished to conform to standard sidewalk slopeand finish, and scoring lines shall conform as nearly as possible to 20" squares.
4. Floor of chamber shall be given a steel-troweled finish and shall slope from all directions to outlet.
5. Manhole shall be placed in corner nearest outlet.
6. Outlet pipe shall be connected to Junction Chamber with Monolithic Connection.
7. Reinforcing steel not required in walls when V=6' or less.
8. Steps: None required where V=3'-6" or less.
   Install one step 16"± above floor when V is more than 3'-6" and less than 5'-0".
   Where V is more than 5'-0" steps shall be evenly spaced at 12"± intervals from 16"± above floor to within 12"± of the top of the box.

JUNCTION CHAMBER NO 3 (JC 3)

DRAINAGE DETAILS

NO SCALE

DD-9

REVISED BY | DATE REVISED
JOSEPH CARBAJAL | MICHAEL HYNES
CALCULATED-DESIGNED BY | CHECKED BY
CONSULTANT FUNCTIONAL SUPERVISOR | MICHAEL HYNES
STATE OF CALIFORNIA - DEPARTMENT OF TRANSPORTATION | DESIGN
Caltrans

LAST REVISION 00-00-00 | DATE PLOTTED => 09-MAY-2016 | TIME PLOTTED => 15:06

Dist	COUNTY	ROUTE	POST MILES TOTAL PROJECT	SHEET No.	TOTAL SHEETS
07	LA	60	R24.4/R25.3	93	384

REGISTERED CIVIL ENGINEER 1-15-16 DATE

3-14-16
PLANS APPROVAL DATE

REGISTERED PROFESSIONAL ENGINEER MICHAEL HYNES No. C 67872 Exp. 06-30-17 CIVIL STATE OF CALIFORNIA

THE STATE OF CALIFORNIA OR ITS OFFICERS OR AGENTS SHALL NOT BE RESPONSIBLE FOR THE ACCURACY OR COMPLETENESS OF SCANNED COPIES OF THIS PLAN SHEET.

WKE, INC
400 N. TUSTIN AVENUE
SUITE 275
SANTA ANA, CA 92705

CITY OF INDUSTRY
15651 EAST STAFFORD STREET
CITY OF INDUSTRY, CA 91744

NOTES:

1. FOR FES DIMENSIONS SEE Std PLANS D94A AND D94B.
2. ANY ROCK SLOPE PROTECTION SHALL BE NATURAL EXISTING IRREGULAR FORM, COLOR AND CHARACTER OF THE EXISTING ROCK OUTCROPPINGS.

LEGEND:

D - DIAMETER OF PIPE
T - THICKNESS OF RSP
L - LENGTH OF RSP
W - BOTTOM WIDTH OF RSP

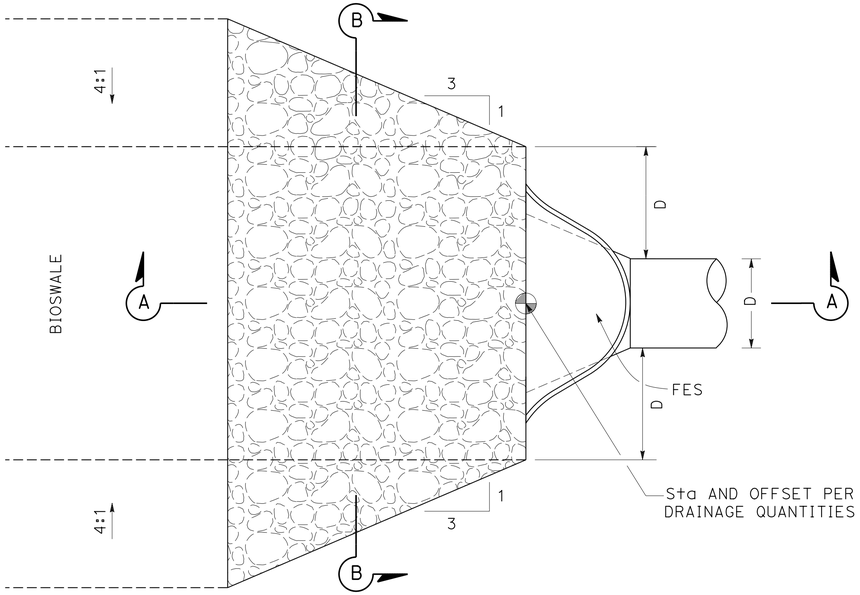

PLAN VIEW

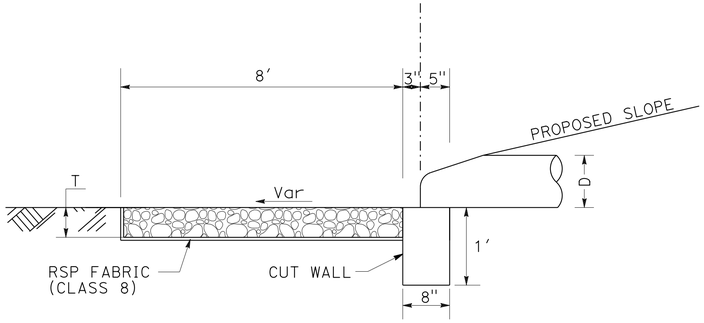

SECTION A-A

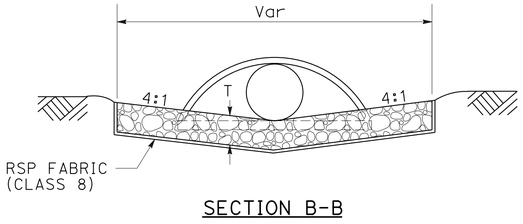

SECTION B-B

FLARED END SECTION/FREE OUTLET

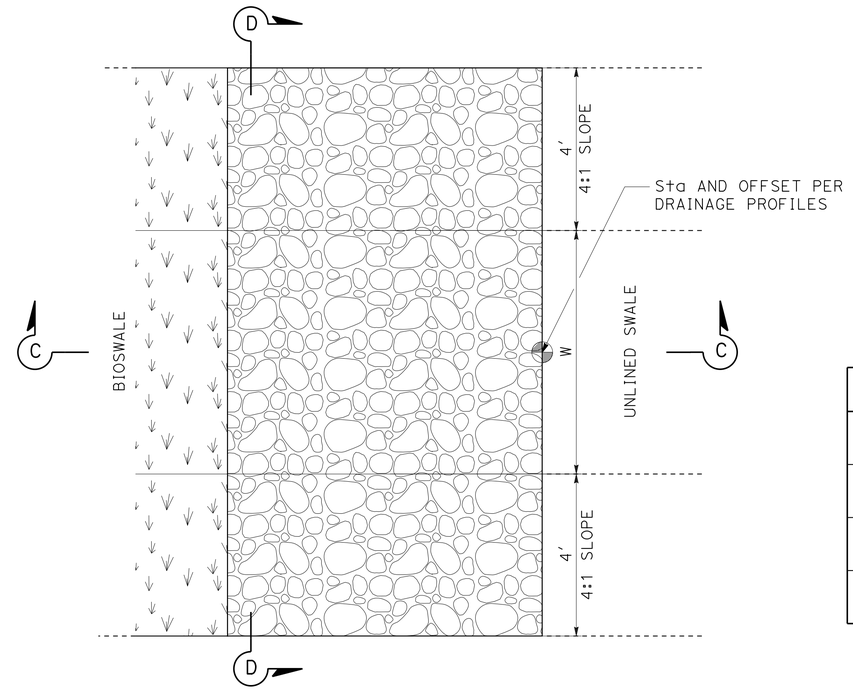

PLAN VIEW

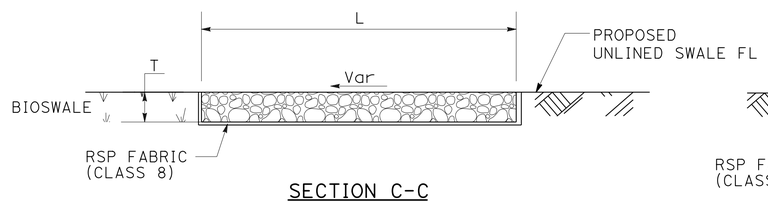

SECTION C-C

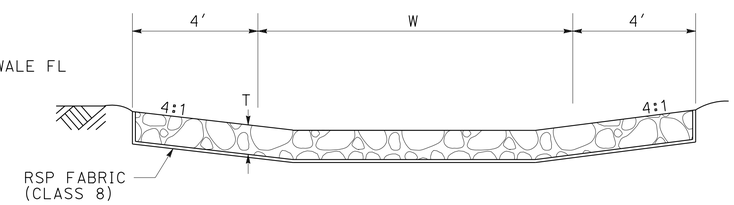

SECTION D-D

UNLINED SWALE TO RSP

ROCK SLOPE PROTECTION
BACKING No. 3 METHOD B
DRAINAGE SYSTEM UNIT No.
12
14
18

RSP TABLE

DRAINAGE SYSTEM	SYSTEM UNIT	L(FT)	T(FT)	W(FT)
12	h	8	0.75	6
14	a	8	0.75	6
18	a	8	0.75	2
18	d	8	0.75	5.5

DRAINAGE DETAILS

NO SCALE

DD-10

STATE OF CALIFORNIA - DEPARTMENT OF TRANSPORTATION
DESIGN
CONSULTANT FUNCTIONAL SUPERVISOR: MICHAEL HYNES
CALCULATED-DESIGNED BY: JOSEPH CARBAJAL
CHECKED BY: MICHAEL HYNES
REVISED BY
DATE REVISED

LAST REVISION 00-00-00
DATE PLOTTED => 09-MAY-2016
TIME PLOTTED => 15:06

Dist	COUNTY	ROUTE	POST MILES TOTAL PROJECT	SHEET No.	TOTAL SHEETS
07	LA	60	R24.4/R25.3	94	384

REGISTERED CIVIL ENGINEER 1-15-16 DATE

3-14-16
PLANS APPROVAL DATE

REGISTERED PROFESSIONAL ENGINEER MICHAEL HYNES No. C 67872 Exp. 06-30-17 CIVIL STATE OF CALIFORNIA

THE STATE OF CALIFORNIA OR ITS OFFICERS OR AGENTS SHALL NOT BE RESPONSIBLE FOR THE ACCURACY OR COMPLETENESS OF SCANNED COPIES OF THIS PLAN SHEET.

WKE, INC
400 N. TUSTIN AVENUE
SUITE 275
SANTA ANA, CA 92705

CITY OF INDUSTRY
15651 EAST STAFFORD STREET
CITY OF INDUSTRY, CA 91744

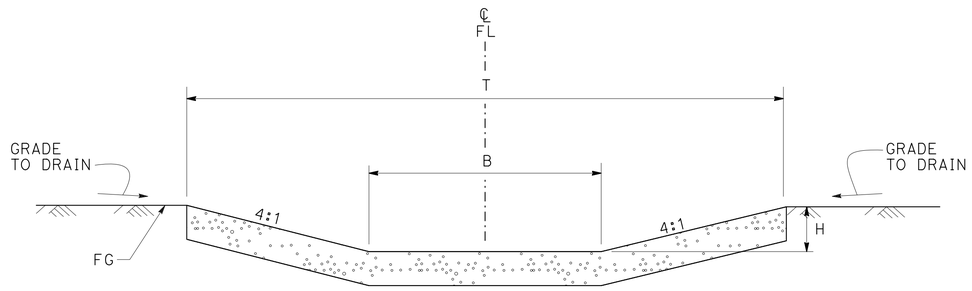

UNLINED SWALE

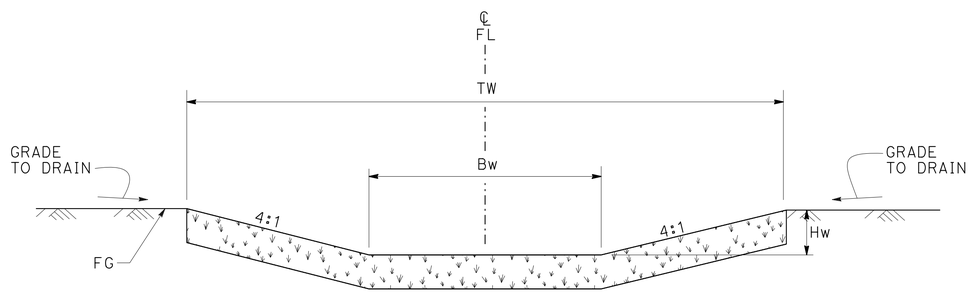

BIOFILTRATION SWALE

UNLINED SWALE DETAIL TABLE

SYSTEM NUMBER	UNIT	B (ft)	T (ft)	H (ft)
18	c	2.00	10.00	1.00
18	f	5.50	11.50	1.00

BIOFILTRATION SWALE DETAIL TABLE

SYSTEM NUMBER	UNIT	Bw (ft)	TW (ft)	Hw (ft)
12	i	6.00	14.00	1.00
14	b	6.00	14.00	1.00
18	e	5.50	13.50	1.00

NOTE: FOR BIOFILTRATION SWALE LENGTH, SEE DRAINAGE PROFILE SHEETS

DRAINAGE DETAILS

NO SCALE

DD-11

STATE OF CALIFORNIA - DEPARTMENT OF TRANSPORTATION
Caltrans®
DESIGN

CONSULTANT FUNCTIONAL SUPERVISOR: MICHAEL HYNES
CALCULATED-DESIGNED BY: JOSEPH CARBAJAL
CHECKED BY: MICHAEL HYNES
REVISED BY
DATE REVISED

LAST REVISION 00-00-00
DATE PLOTTED => 09-MAY-2016
TIME PLOTTED => 15:06

Dist	COUNTY	ROUTE	POST MILES TOTAL PROJECT	SHEET No.	TOTAL SHEETS
07	LA	60	R24.4/R25.3	95	384

REGISTERED CIVIL ENGINEER 1-15-16 DATE

3-14-16
PLANS APPROVAL DATE

REGISTERED PROFESSIONAL ENGINEER MICHAEL HYNES No. C 67872 Exp. 06-30-17 CIVIL STATE OF CALIFORNIA

THE STATE OF CALIFORNIA OR ITS OFFICERS OR AGENTS SHALL NOT BE RESPONSIBLE FOR THE ACCURACY OR COMPLETENESS OF SCANNED COPIES OF THIS PLAN SHEET.

WKE, INC
400 N. TUSTIN AVENUE
SUITE 275
SANTA ANA, CA 92705

CITY OF INDUSTRY
15651 EAST STAFFORD STREET
CITY OF INDUSTRY, CA 91744

NOTES:

1. A concrete collar is required where the change in grade exceeds 0.10′ per foot, or if change in alignment exceeds 0.10′ per foot.
2. If the extreme ends of the pipe leave a clear space that is greated than 1", but less than 6", a concrete collar is required (see DETAIL "A" this sheet). If the clear space is 6" or greaters, a junction chamber is requried.
3. Concrete collar shall not be used for a size change on the main line.
4. For pipe size not listed use the next size larger.
5. Omit reinforcing on pipes 24" and less in diameter and on all pipes where angle A is less than 10°.
6. Where reinforcing is required the diameter of the circular ties shall be D + (2 X wall thickness) + 8".
7. Join pipes at inverts.
8. Pipe may be corrugated metal pipe, concrete pipe, or reinforced concrete pipe.
9. Concrete shall be minor concrete.

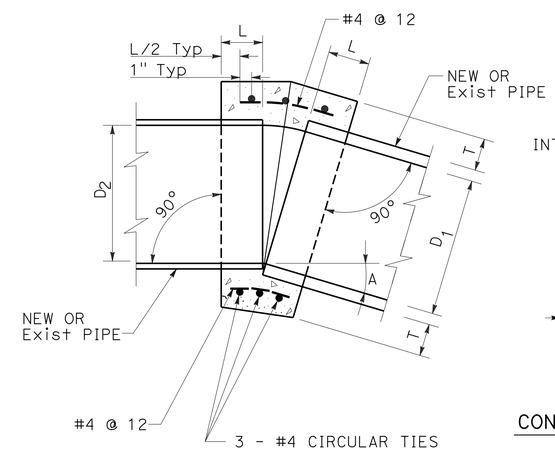

PROFILE

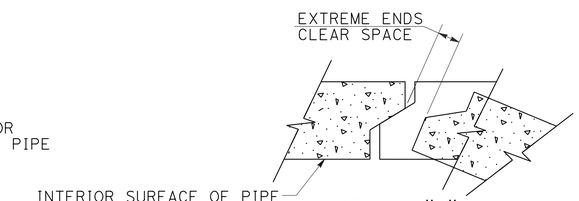

DETAIL "A"

TYPICAL JOINT FOR
REINFORCED CONCRETE PIPE

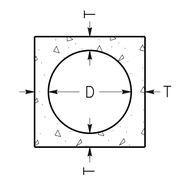

CONCRETE COLLAR

Elev

D	L	T
12"	12"	4"
18"	12"	5"
24"	12"	6"
30"	18"	7"
36"	18"	9"
42"	18"	9"
48"	18"	10"
54"	18"	10"
72"	24"	12"
108"	30"	18"
120"	36"	24"

CONCRETE COLLAR

(TO BE USED WITH PIPES OF LIKE MATERIALS)
(IF JOINT CAN BE CONSTRUCTED PER MANUFACTURERS SPECIFICATION AND CALTRANS Std SPECIFICATION 61-1.01, A COLLAR IS NOT REQUIRED)

DRAINAGE DETAILS

NO SCALE

DD-12

STATE OF CALIFORNIA - DEPARTMENT OF TRANSPORTATION
Caltrans® DESIGN

CONSULTANT FUNCTIONAL SUPERVISOR: MICHAEL HYNES

CALCULATED-DESIGNED BY: JOSEPH CARBAJAL
CHECKED BY: MICHAEL HYNES

REVISED BY
DATE REVISED

LAST REVISION 00-00-00
DATE PLOTTED => 09-MAY-2016
TIME PLOTTED => 15:06

Dist	COUNTY	ROUTE	POST MILES TOTAL PROJECT	SHEET No.	TOTAL SHEETS
07	LA	60	R24.4/R25.3	96	384

REGISTERED CIVIL ENGINEER 1-15-16 DATE

3-14-16
PLANS APPROVAL DATE

REGISTERED PROFESSIONAL ENGINEER MICHAEL HYNES No. C 67872 Exp. 06-30-17 CIVIL STATE OF CALIFORNIA

THE STATE OF CALIFORNIA OR ITS OFFICERS OR AGENTS SHALL NOT BE RESPONSIBLE FOR THE ACCURACY OR COMPLETENESS OF SCANNED COPIES OF THIS PLAN SHEET.

WKE, INC
400 N. TUSTIN AVENUE
SUITE 275
SANTA ANA, CA 92705

CITY OF INDUSTRY
15651 EAST STAFFORD STREET
CITY OF INDUSTRY, CA 91744

NOTES: (THIS SHEET ONLY)

1. FOR DRAINAGE SYSTEMS, SEE DRAINAGE PLANS.
2. FOR MAINTENANCE ACCESS ROAD DETAILS SEE CONSTRUCTION DETAILS.

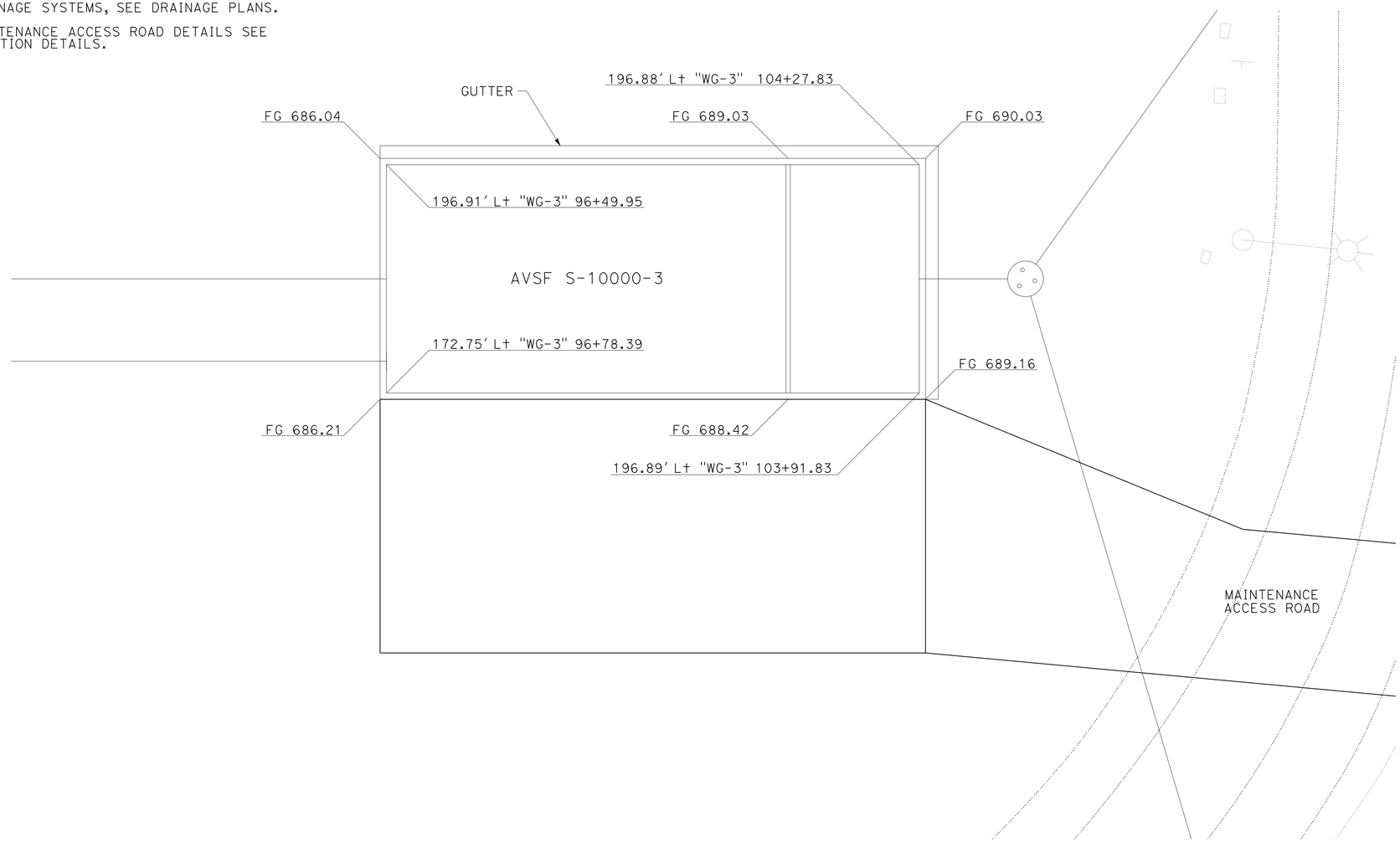

WALL DESIGN TABLE													
DESIGN BASIN WALL	DESIGN WALL HT H	TOP OF WALL ELEVATION						TOP OF FOOTING ELEVATION					
		WE1	WE2	WE3	WE4	WE5	WE6	FE0	FE1	FE2	FE3	FE4	FE5
SEDIMENT	12'	689.66	688.92	686.71	686.54	689.53	690.53	679.30	679.26	678.84	676.34	675.71	675.69
FILTRATION	14'												

AVSF S-10000-3
DRAINAGE SYSTEM 2 g

DRAINAGE DETAILS

SCALE: 1" = 5'

DD-13

STATE OF CALIFORNIA - DEPARTMENT OF TRANSPORTATION
Caltrans
DESIGN
CONSULTANT FUNCTIONAL SUPERVISOR: MICHAEL HYNES
CALCULATED-DESIGNED BY: JOSEPH CARBAJAL
CHECKED BY: MICHAEL HYNES
REVISED BY
DATE REVISED

LAST REVISION 00-00-00
DATE PLOTTED => 09-MAY-2016
TIME PLOTTED => 15:06

Dist	COUNTY	ROUTE	POST MILES TOTAL PROJECT	SHEET No.	TOTAL SHEETS
07	LA	60	R24.4/R25.3	97	384

REGISTERED CIVIL ENGINEER 1-15-16 DATE

3-14-16
PLANS APPROVAL DATE

REGISTERED PROFESSIONAL ENGINEER Vinh Trinh No. 50685 Exp. 09/30/17 CIVIL STATE OF CALIFORNIA

THE STATE OF CALIFORNIA OR ITS OFFICERS OR AGENTS SHALL NOT BE RESPONSIBLE FOR THE ACCURACY OR COMPLETENESS OF SCANNED COPIES OF THIS PLAN SHEET.

WKE, INC
400 N. TUSTIN AVENUE
SUITE 275
SANTA ANA, CA 92705

CITY OF INDUSTRY
15651 EAST STAFFORD STREET
CITY OF INDUSTRY, CA 91744

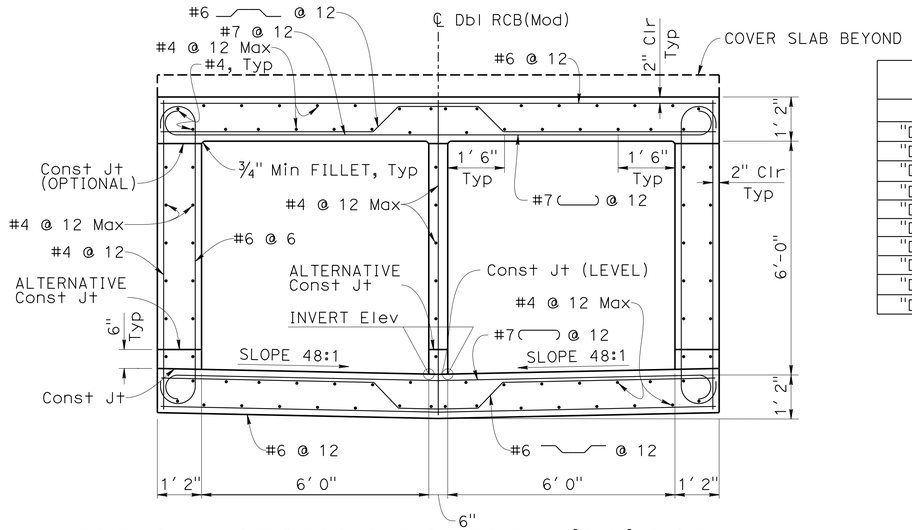

TYPICAL SECTION DOUBLE 6'X6' RCB (Mod)

½" = 1'-0"

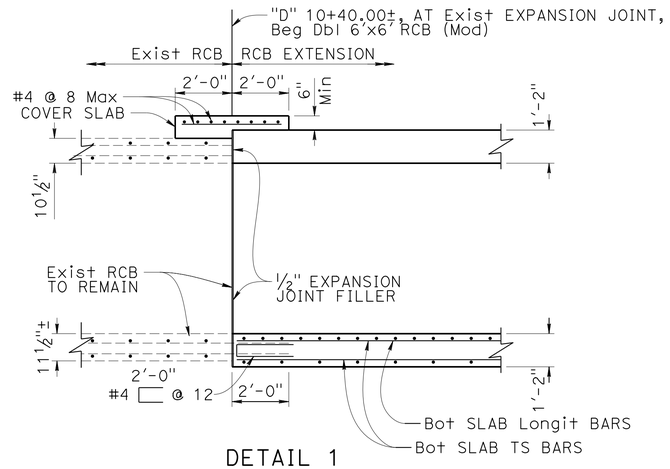

DETAIL 1

⅜" = 1'-0"

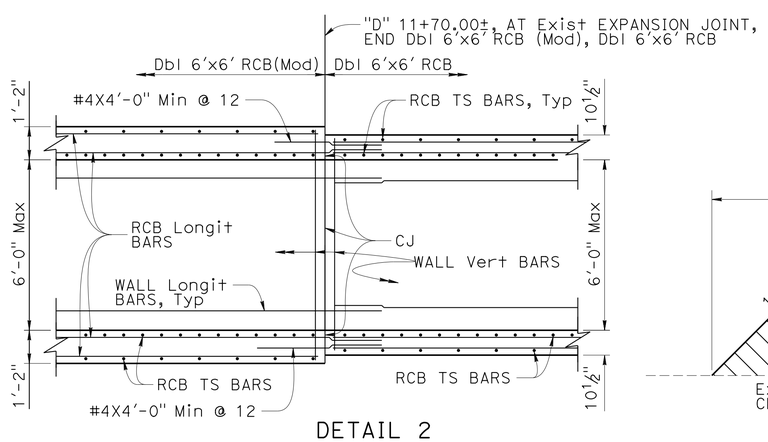

DETAIL 2

⅜" = 1'-0"

SETTLEMENT MONITORING HUB LOCATION		
STATION	OFFSET	TYPE
"D" 10+55.00	3.00' Lt	GROUND
"D" 10+67.00	35.00' Rt	BURIED
"D" 10+74.00	35.00' Rt	GROUND
"D" 11+06.00	3.00' Lt	GROUND
"D" 11+06.00	20.00' Lt	BURIED
"D" 11+32.00	30.00' Rt	GROUND
"D" 11+39.00	30.00' Rt	BURIED
"D" 11+76.00	3.00' Lt	GROUND
"D" 12+20.00	3.00' Rt	BURIED
"D" 12+27.00	12.00' Lt	GROUND

CONSTRUCTION SEQUENCE

1. INSTALL 36" Temp CULVERT
2. REMOVE Exist RCB
3. PRELOAD
4. MONITOR SETTLEMENT DURING THE SETTLEMENT PERIOD AS SPECIFIED IN THE SPECIAL PROVISIONS.
5. CONSTRUCT NEW RCB

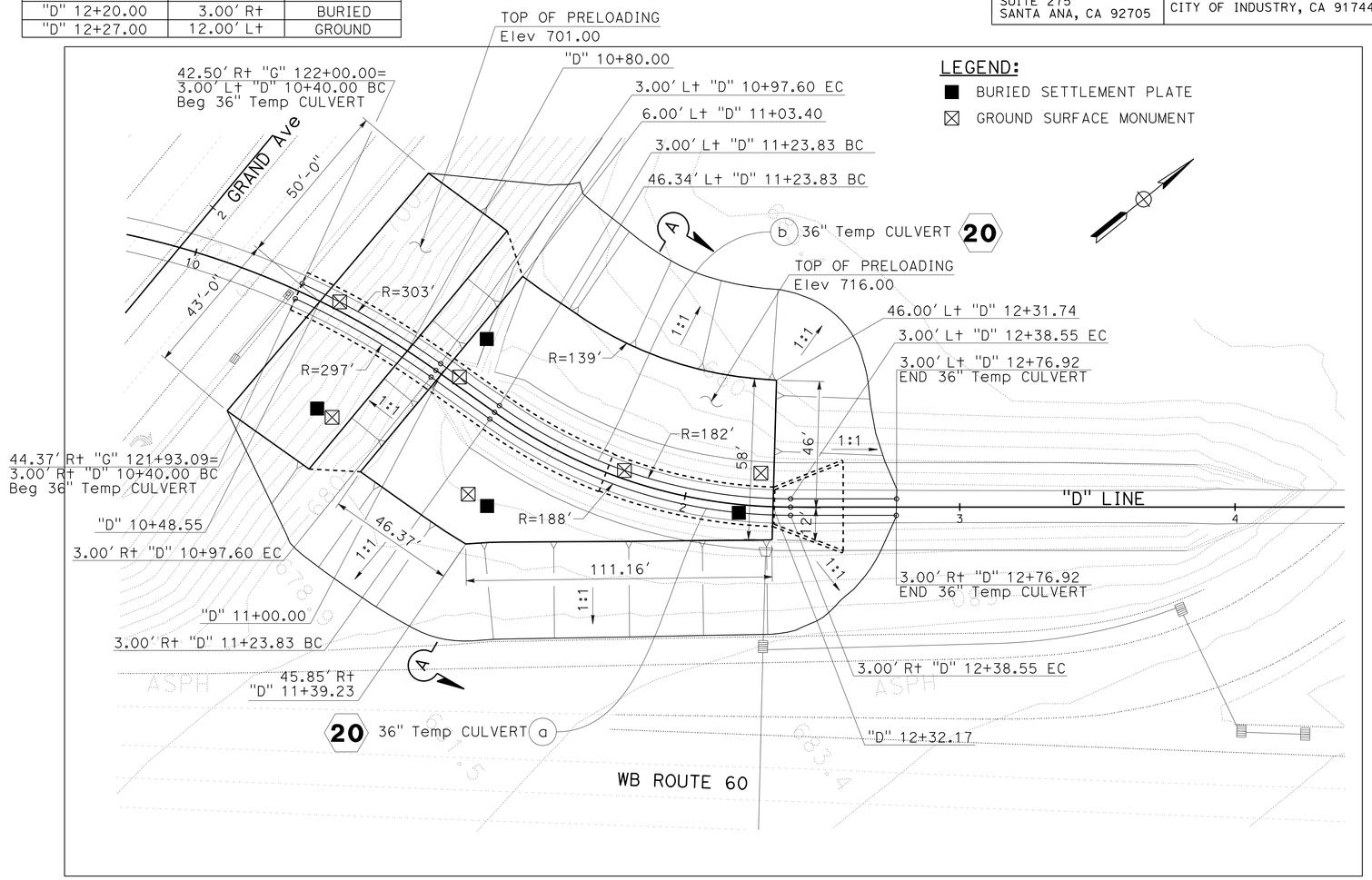

PRELOADING DIAGRAM

1" = 50'

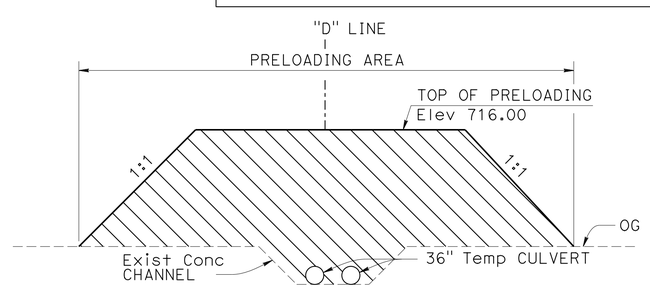

SECTION A-A

1" = 50'

DRAINAGE DETAILS

NO SCALE

DD-14

STATE OF CALIFORNIA - DEPARTMENT OF TRANSPORTATION
Caltrans® DESIGN

CONSULTANT FUNCTIONAL SUPERVISOR: MICHAEL HYNES
CALCULATED-DESIGNED BY: JOSEPH CARBAJAL
CHECKED BY: MICHAEL HYNES
REVISED BY
DATE REVISED

LAST REVISION 00-00-00
DATE PLOTTED => 09-MAY-2016
TIME PLOTTED => 15:06

Dist	COUNTY	ROUTE	POST MILES TOTAL PROJECT	SHEET No.	TOTAL SHEETS
07	LA	60	R24.4/R25.3	98	384

REGISTERED CIVIL ENGINEER 1-15-16 DATE

3-14-16
PLANS APPROVAL DATE

REGISTERED PROFESSIONAL ENGINEER MICHAEL HYNES No. C 67872 Exp. 06-30-17 CIVIL STATE OF CALIFORNIA

THE STATE OF CALIFORNIA OR ITS OFFICERS OR AGENTS SHALL NOT BE RESPONSIBLE FOR THE ACCURACY OR COMPLETENESS OF SCANNED COPIES OF THIS PLAN SHEET.

WKE, INC
400 N. TUSTIN AVENUE
SUITE 275
SANTA ANA, CA 92705

CITY OF INDUSTRY
15651 EAST STAFFORD STREET
CITY OF INDUSTRY, CA 91744

NOTES:

1. FOR AUSTIN VAULT SAND FILTER, GSRD, BIOFILTRATION SWALE, AND UNLINED SWALE QUANTITIES, SEE WATER POLLUTION CONTROL QUANTITIES SHEET WQ-1.
2. ALL JOINTS ARE STANDARD JOINT TYPE.

DRAINAGE QUANTITIES

DRAINAGE SHEET No.	DRAINAGE SYSTEM No.	DRAINAGE UNIT	REMOVE HEADWALL	REMOVE INLET	REMOVE CULVERT	REMOVE Conc FES	REMOVE CONCRETE (MISCELLANEOUS)	ABANDON CULVERT	REMOVE REINFORCED CONCRETE BOX CULVERT	REMOVE Conc (CHANNEL)	CAP INLET	36" TEMPORARY CULVERT	REINFORCED CONCRETE PIPE (CLASS IV) 18"	24"	30"	36"	CONCRETE FLARED END SECTION 18"	24"	18" CORRUGATED STEEL PIPE (0.079" THICK)	PLACE HOT MIX ASPHALT (MISCELLANEOUS AREA)	HMA (TYPE A)	ADJUST MANHOLE TO GRADE	6" NON-PERFORATED PLASTIC PIPE UNDERDRAIN	36" PRECAST CONCRETE PIPE MANHOLE	STRUCTURAL CONCRETE, BOX CULVERT	BAR REINFORCING STEEL (BOX CULVERT)	ROCK SLOPE PROTECTION (FACING, METHOD B)	ROCK SLOPE PROTECTION FABRIC (CLASS 8)	DRAINAGE INLET MARKER	SAND BACKFILL	MISCELLANEOUS IRON AND STEEL	MINOR CONCRETE (MINOR STRUCTURE)	MANHOLE FRAME AND COVER (U45) (N)	MANHOLE FRAME AND COVER (U46) (N)	(N) "H" OR "V" OR "M"	(N) HEIGHT OF COVER	DESCRIPTION	STATION
			EA	EA	LF	EA	SQFT	EA	LF	CY	EA	LF	LF				EA		LF	SQYD	TON	EA	LF	LF	CY	LB	CY	SQYD	EA	CY	LB	CY	EA	EA	LF	LF		
D-1	1	a														28.6																				4.4	36" RCP	
		b																						2.5							457.0	1.4	1		2.5		MANHOLE No. 2 (MH No. 2)	69.23' Lt "G" 126+18.84
		c														223.8																				13.7	36" RCP	
		d			199.3																															11.9	REMOVE CULVERT	
	2	a																											1		170.0	6.4			10.7		TYPE OL-14 DI WITH DI MARKER	42.00' Lt "G" 126+03.37
		b												159.5																						10.2	24" RCP	
		c																											1		170.0	6.7			11.3		TYPE OL-14 DI WITH DI MARKER	119.84' Rt "G" 126+03.21
		d												159.9																						10.3	24" RCP	
		e																						2.8							457.0	5.4	1		2.8		Jct Str & MH	249.75' Rt "G" 125+11.45
		f													15.3																					7.5	30" RCP	
		g																																			AVSF, SEE NOTE 1	
		h																					127.1													9.7	6" PP	
		i																													326.0	1.6			6.0		TYPE G1 DI, GRATE TYPE 24-12	61.25' Lt "WG-2" 99+25.00
		j											71.8																							6.5	18" RCP	
		k																													326.0	3.5			8.2		TYPE G2 DI, GRATE TYPE 24-12	68.00' Lt "WG-2" 98+50.00
		l												221.8																						9.9	24" RCP	
		m																						3.8							457.0		1		3.8		MH No. 1	143.50' Lt "WG-3" 102+85.88
		n												125.5																						7.8	24" RCP	
		o																													326.0	1.3			3.8		TYPE G1 DI, GRATE TYPE 24-12	38.00' Lt "WG-3" 100+14.67
		p											45.9																							5.0	18" RCP	
		q																													326.0	2.2			6.6		TYPE G2 DI, GRATE TYPE 24-12	38.00' Lt "WG-3" 100+78.55
		r												147.5																						6.4	24" RCP	
		s											100.7																							2.9	18" RCP	
		t															1																				18" Conc FES	94.63' Lt "WG-3" 95+98.64
					199.3								218.4	814.2	15.3	252.4	1						127.1	9.1					2		3,015.0	28.6	3				TOTAL (THIS SHEET)	

(N) - NOT A SEPARATE PAY ITEM, FOR INFORMATION ONLY.

DRAINAGE QUANTITIES
DQ-1

STATE OF CALIFORNIA - DEPARTMENT OF TRANSPORTATION
DESIGN
CONSULTANT FUNCTIONAL SUPERVISOR: MICHAEL HYNES
CALCULATED-DESIGNED BY: JOSEPH CARBAJAL
CHECKED BY: MICHAEL HYNES
REVISED BY
DATE REVISED

LAST REVISION 00-00-00
DATE PLOTTED => 09-MAY-2016
TIME PLOTTED => 15:06

NOTES:

1. FOR AUSTIN VAULT SAND FILTER, GSRD, BIOFILTRATION SWALE, AND UNLINED SWALE QUANTITIES, SEE WATER POLLUTION CONTROL QUANTITIES SHEET WQ-1.
2. ALL JOINTS ARE STANDARD JOINT TYPE.

Dist	COUNTY	ROUTE	POST MILES TOTAL PROJECT	SHEET No.	TOTAL SHEETS
07	LA	60	R24.4/R25.3	99	384

REGISTERED CIVIL ENGINEER 1-15-16 DATE

3-14-16
PLANS APPROVAL DATE

REGISTERED PROFESSIONAL ENGINEER MICHAEL HYNES No. C 67872 Exp. 06-30-17 CIVIL STATE OF CALIFORNIA

THE STATE OF CALIFORNIA OR ITS OFFICERS OR AGENTS SHALL NOT BE RESPONSIBLE FOR THE ACCURACY OR COMPLETENESS OF SCANNED COPIES OF THIS PLAN SHEET.

WKE, INC
400 N. TUSTIN AVENUE
SUITE 275
SANTA ANA, CA 92705

CITY OF INDUSTRY
15651 EAST STAFFORD STREET
CITY OF INDUSTRY, CA 91744

DRAINAGE QUANTITIES

DRAINAGE SHEET No.	DRAINAGE SYSTEM No.	DRAINAGE UNIT	REMOVE HEADWALL	REMOVE INLET	REMOVE CULVERT	REMOVE Conc FES	REMOVE CONCRETE (MISCELLANEOUS)	ABANDON CULVERT	REMOVE REINFORCED CONCRETE BOX CULVERT	REMOVE Conc (CHANNEL)	CAP INLET	36" TEMPORARY CULVERT	REINFORCED CONCRETE PIPE (CLASS IV) 18"	24"	30"	36"	CONCRETE FLARED END SECTION 18"	24"	18" CORRUGATED STEEL PIPE (0.079" THICK)	PLACE HOT MIX ASPHALT (MISCELLANEOUS AREA)	HMA (TYPE A)	ADJUST MANHOLE TO GRADE	6" NON-PERFORATED PLASTIC PIPE UNDERDRAIN	36" PRECAST CONCRETE PIPE MANHOLE	STRUCTURAL CONCRETE, BOX CULVERT	BAR REINFORCING STEEL (BOX CULVERT)	ROCK SLOPE PROTECTION (FACING, METHOD B)	ROCK SLOPE PROTECTION FABRIC (CLASS 8)	DRAINAGE INLET MARKER	SAND BACKFILL	MISCELLANEOUS IRON AND STEEL	MINOR CONCRETE (MINOR STRUCTURE)	MANHOLE FRAME AND COVER (U45) (N)	MANHOLE FRAME AND COVER (U46) (N)	(N) "H" OR "V" OR "M"	(N) HEIGHT OF COVER	DESCRIPTION	STATION
			EA	EA	LF	EA	SQFT	EA	LF	CY	EA	LF	LF				EA		LF	SQYD	TON	EA	LF	LF	CY	LB	CY	SQYD	EA	CY	LB	CY	EA	EA	LF	LF		
D-1	3	a									1																										CAP INLET	41.10′ Lt "G" 125+29.07
		b			16.8																															3.9	REMOVE CULVERT	
		c									1																										CAP INLET	41.02′ Lt "G" 125+08.95
		d			79.7																															6.3	REMOVE CULVERT	
		e									1																										CAP INLET	40.91′ Rt "G" 125+08.54
		f			15.5																															7.5	REMOVE CULVERT	
		g									1																										CAP INLET	41.05′ Rt "G" 124+89.66
		h			38.9																															17.4	REMOVE CULVERT	
		i					1,928.0																														REMOVE CONCRETE (MISCELLANEOUS)	
	4	a																											1		170.0	4.6			3.7		TYPE OL-21 DI WITH DI MARKER	58.06′ Lt "G" 128+37.46
		b											5.1																							3.2	18" RCP	
		c																																			JS 1	64.15′ Lt "G" 128+37.32
		d		1																																	REMOVE INLET	46.30′ Lt "G" 128+49.59
		e			59.6																															4.7	REMOVE CULVERT	
		f						1																						8.8							Abn CULVERT	
D-4	5	a		1																																	REMOVE INLET	46.86′ Rt "G" 128+52.48
D-1		b			22.3																															4.3	REMOVE CULVERT	
		c																											1		170.0	4.8			4.3		TYPE OL-21 DI WITH DI MARKER	104.00′ Rt "G" 128+31.95
		d												20.9																						5.3	24" RCP	
		e																													235.0	2.6		1	7.6		JC 3	114.30′ Rt "G" 128+10.13
		f												53.9																						6.2	24" RCP	
		g																													235.0	2.6		1	8.1		JC 3	70.00′ Rt "WG-2" 96+35.63
		h												151.8																						13.6	24" RCP	
		i																						10.0							457.0	4.0	1		10.0		MH No. 4	159.31′ Rt "G" 126+18.84
		j														395.1																				21.9	36" RCP	
		k																														1.7					JS 3	97.59′ Lt "WG-3" 94+63.28
				2	232.8		1,928.0	1			4		5.1	226.6		395.1								10.0					2	8.8	1,267.0	20.3	1	2			TOTAL (THIS SHEET)	

(N) - NOT A SEPARATE PAY ITEM, FOR INFORMATION ONLY.

DRAINAGE QUANTITIES
DQ-2

STATE OF CALIFORNIA - DEPARTMENT OF TRANSPORTATION
Caltrans
DESIGN

CONSULTANT FUNCTIONAL SUPERVISOR: MICHAEL HYNES
CALCULATED-DESIGNED BY: JOSEPH CARBAJAL
CHECKED BY: MICHAEL HYNES
REVISED BY
DATE REVISED

LAST REVISION 00-00-00
DATE PLOTTED => 09-MAY-2016
TIME PLOTTED => 15:06

Dist	COUNTY	ROUTE	POST MILES TOTAL PROJECT	SHEET No.	TOTAL SHEETS
07	LA	60	R24.4/R25.3	100	384

REGISTERED CIVIL ENGINEER 1-15-16 DATE

3-14-16
PLANS APPROVAL DATE

REGISTERED PROFESSIONAL ENGINEER MICHAEL HYNES No. C 67872 Exp. 06-30-17 CIVIL STATE OF CALIFORNIA

THE STATE OF CALIFORNIA OR ITS OFFICERS OR AGENTS SHALL NOT BE RESPONSIBLE FOR THE ACCURACY OR COMPLETENESS OF SCANNED COPIES OF THIS PLAN SHEET.

WKE, INC
400 N. TUSTIN AVENUE
SUITE 275
SANTA ANA, CA 92705

CITY OF INDUSTRY
15651 EAST STAFFORD STREET
CITY OF INDUSTRY, CA 91744

NOTES:

1. FOR AUSTIN VAULT SAND FILTER, GSRD, BIOFILTRATION SWALE, AND UNLINED SWALE QUANTITIES, SEE WATER POLLUTION CONTROL QUANTITIES SHEET WQ-1.
2. ALL JOINTS ARE STANDARD JOINT TYPE.

DRAINAGE QUANTITIES

DRAINAGE SHEET No.	DRAINAGE SYSTEM No.	DRAINAGE UNIT	REMOVE HEADWALL	REMOVE INLET	REMOVE CULVERT	REMOVE Conc FES	REMOVE CONCRETE (MISCELLANEOUS)	ABANDON CULVERT	REMOVE REINFORCED CONCRETE BOX CULVERT	REMOVE Conc (CHANNEL)	CAP INLET	36" TEMPORARY CULVERT	REINFORCED CONCRETE PIPE (CLASS IV) 18"	24"	30"	36"	CONCRETE FLARED END SECTION 18"	24"	18" CORRUGATED STEEL PIPE (0.079" THICK)	PLACE HOT MIX ASPHALT (MISCELLANEOUS AREA)	HMA (TYPE A)	ADJUST MANHOLE TO GRADE	6" NON-PERFORATED PLASTIC PIPE UNDERDRAIN	36" PRECAST CONCRETE PIPE MANHOLE	STRUCTURAL CONCRETE, BOX CULVERT	BAR REINFORCING STEEL (BOX CULVERT)	ROCK SLOPE PROTECTION (FACING, METHOD B)	ROCK SLOPE PROTECTION FABRIC (CLASS 8)	DRAINAGE INLET MARKER	SAND BACKFILL	MISCELLANEOUS IRON AND STEEL	MINOR CONCRETE (MINOR STRUCTURE)	MANHOLE FRAME AND COVER (U45) (N)	MANHOLE FRAME AND COVER (U46) (N)	(N) "H" OR "V" OR "M"	(N) HEIGHT OF COVER	DESCRIPTION	STATION
			EA	EA	LF	EA	SQFT	EA	LF	CY	EA	LF	LF				EA		LF	SQYD	TON	EA	LF	LF	CY	LB	CY	SQYD	EA	CY	LB	CY	EA	EA	LF	LF		
D-4	5	l																				1															Adj MH TO GRADE	67.45′ Lt "G" 128+72.29
		m																				1															Adj MH TO GRADE	67.52′ Lt "G" 128+92.72
D-1	6	a																													326.0	1.4			5.0		TYPE G1 DI, GRATE TYPE 24-12	78.00′ Lt "AL" 297+81.52
		b											17.4																							5.0	18" RCP	
		c																													326.0	2.3			6.7		TYPE G2 DI, GRATE TYPE 24-12	78.00′ Lt "AL" 297+62.25
		d												55.6																						5.2	24" RCP	
		e																													326.0	2.2			6.5		TYPE G2 DI, GRATE TYPE 24-12	40.06′ Lt "WG-3" 97+85.31
		f												250.0																						6.2	24" RCP	
		g																													326.0	2.5			7.7		TYPE G2 DI, GRATE TYPE 24-12	22.00′ Lt "WG-3" 95+29.33
		h												43.3																						6.2	24" RCP	
		i																														0.9					JS 3	69.78′ Lt "WG-3" 95+30.87
		j																													326.0	1.5			5.4		TYPE G1 DI, GRATE TYPE 24-12	35.53′ Lt "WG-3" 98+50.04
		k											60.7																							5.0	18" RCP	
D-1	7	a		1																																	REMOVE INLET	12.69′ Rt "WG-3" 97+25.69
		b			19.9																															5.2	REMOVE CULVERT	
		c		1																																	REMOVE INLET	10.24′ Rt "WG-3" 97+02.66
		d			44.9																															5.4	REMOVE CULVERT	
		e		1																																	REMOVE INLET	35.11′ Lt "WG-3" 96+83.06
		f			149.9																															6.1	REMOVE CULVERT	
		g		1																																	REMOVE INLET	25.16′ Lt "WG-3" 95+29.35
		h			30.7																															3.7	REMOVE CULVERT	
		i	1																																		REMOVE HW	58.06′ Lt "WG-3" 95+30.22
D-1	8	a	1																																		REMOVE HW	62.73′ Lt "WG-3" 98+18.90
		b																							175.7	34,017.6											Dbl 6′ x 6′ RCB	
		c																														12.8					Trans Str No. 3	47.11′ Rt "WG-3" 100+21.15
		d								131.5																											REMOVE Conc (CHANNEL)	
			2	4	245.4					132			78.1	348.9								2			176	34,018					1,630.0	23.5					TOTAL (THIS SHEET)	

(N) - NOT A SEPARATE PAY ITEM, FOR INFORMATION ONLY.

DRAINAGE QUANTITIES

DQ-3

REVISED BY | DATE REVISED

JOSEPH CARBAJAL | MICHAEL HYNES

CALCULATED-DESIGNED BY | CHECKED BY

CONSULTANT FUNCTIONAL SUPERVISOR | MICHAEL HYNES

STATE OF CALIFORNIA - DEPARTMENT OF TRANSPORTATION

Caltrans® DESIGN

LAST REVISION 00-00-00 | DATE PLOTTED => 09-MAY-2016 | TIME PLOTTED => 15:06