Dist	COUNTY	ROUTE	POST MILES TOTAL PROJECT	SHEET No.	TOTAL SHEETS
07	LA	405	4.3	1	89

STATE OF CALIFORNIA

DEPARTMENT OF TRANSPORTATION

ACNHPI-405-3(034)E

PROJECT PLANS FOR CONSTRUCTION ON

STATE HIGHWAY

IN LOS ANGELES COUNTY
IN LONG BEACH
AT TEMPLE AVENUE OVERCROSSING

TO BE SUPPLEMENTED BY STANDARD PLANS DATED 2010

INDEX OF PLANS

SHEET No.	DESCRIPTION
1	TITLE AND LOCATION MAP
2	TYPICAL CROSS SECTION
3	LAYOUT
4-6	CONSTRUCTION DETAILS
7-10	DRAINAGE PLANS, PROFILES, DETAILS AND QUANTITIES
11	UTILITY PLAN
12-13	CONSTRUCTION AREA SIGNS
14-21	STAGE CONSTRUCTION PLANS AND TRAFFIC HANDLING PLANS
22-23	STAGE CONSTRUCTION AND TRAFFIC HANDLING QUANTITIES
24-30	TRAFIC HANDLING DETAILS
31-33	DETOUR PLANS
34-39	PAVEMENT DELINEATION PLANS, DETAILS AND QUANTITIES
40	SUMMARY OF QUANTITIES
41-46	LANDSCAPE PLANS
47-51	ELECTRICAL PLANS
52-56	TRAFFIC CONTROL SYSTEMS
57-62	REVISED STANDARD PLANS

STRUCTURE PLANS

63-89	TEMPLE Ave OC (REPAIR)

THE STANDARD PLANS LIST APPLICABLE TO THIS CONTRACT IS INCLUDED IN THE NOTICE TO BIDDERS AND SPECIAL PROVISIONS BOOK.

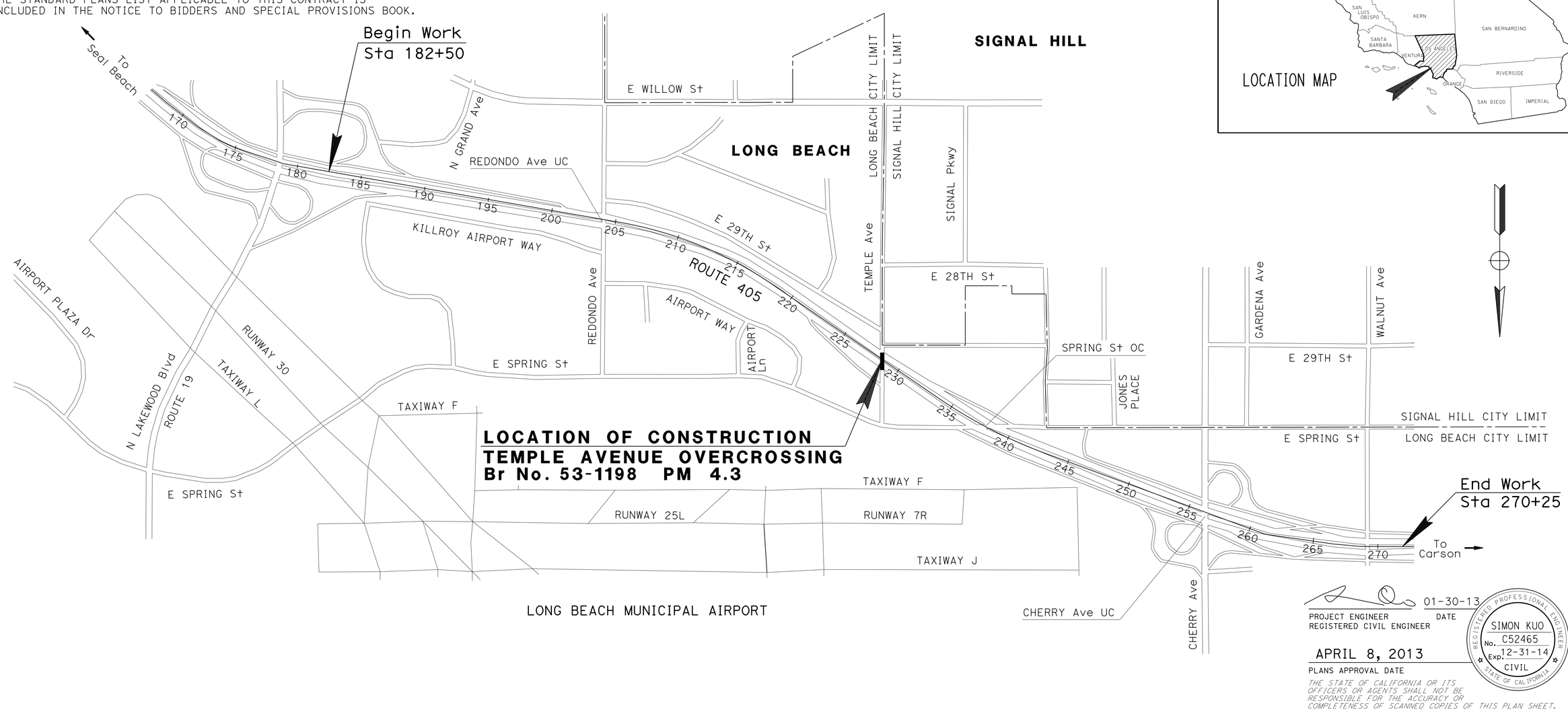

01-30-13
PROJECT ENGINEER DATE
REGISTERED CIVIL ENGINEER

APRIL 8, 2013
PLANS APPROVAL DATE

REGISTERED PROFESSIONAL ENGINEER
SIMON KUO
No. C52465
Exp. 12-31-14
CIVIL
STATE OF CALIFORNIA

THE STATE OF CALIFORNIA OR ITS OFFICERS OR AGENTS SHALL NOT BE RESPONSIBLE FOR THE ACCURACY OR COMPLETENESS OF SCANNED COPIES OF THIS PLAN SHEET.

PROJECT MANAGER MABEL TRAN

DESIGN ENGINEER SIMON KUO

THE CONTRACTOR SHALL POSSESS THE CLASS (OR CLASSES) OF LICENSE AS SPECIFIED IN THE "NOTICE TO BIDDERS."

NO SCALE

CONTRACT No.	07-278304
PROJECT ID	0700000539

LAST REVISION 00-00-00 DATE PLOTTED => 21-MAY-2013 TIME PLOTTED => 13:22

Dist	COUNTY	ROUTE	POST MILES TOTAL PROJECT	SHEET No.	TOTAL SHEETS
07	LA	405	4.3	2	89

01-30-13
REGISTERED CIVIL ENGINEER DATE

04-08-13
PLANS APPROVAL DATE

REGISTERED PROFESSIONAL ENGINEER
SIMON KUO
No. C52465
Exp. 12-31-14
CIVIL
STATE OF CALIFORNIA

THE STATE OF CALIFORNIA OR ITS OFFICERS OR AGENTS SHALL NOT BE RESPONSIBLE FOR THE ACCURACY OR COMPLETENESS OF SCANNED COPIES OF THIS PLAN SHEET.

NOTES:

1. DIMENSIONS OF THE PAVEMENT STRUCTURES (STRUCTURAL SECTIONS) ARE SUBJECT TO TOLERANCES SPECIFIED IN THE STANDARD SPECIFICATIONS.
2. SUPERELEVATIONS ARE AS SHOWN.

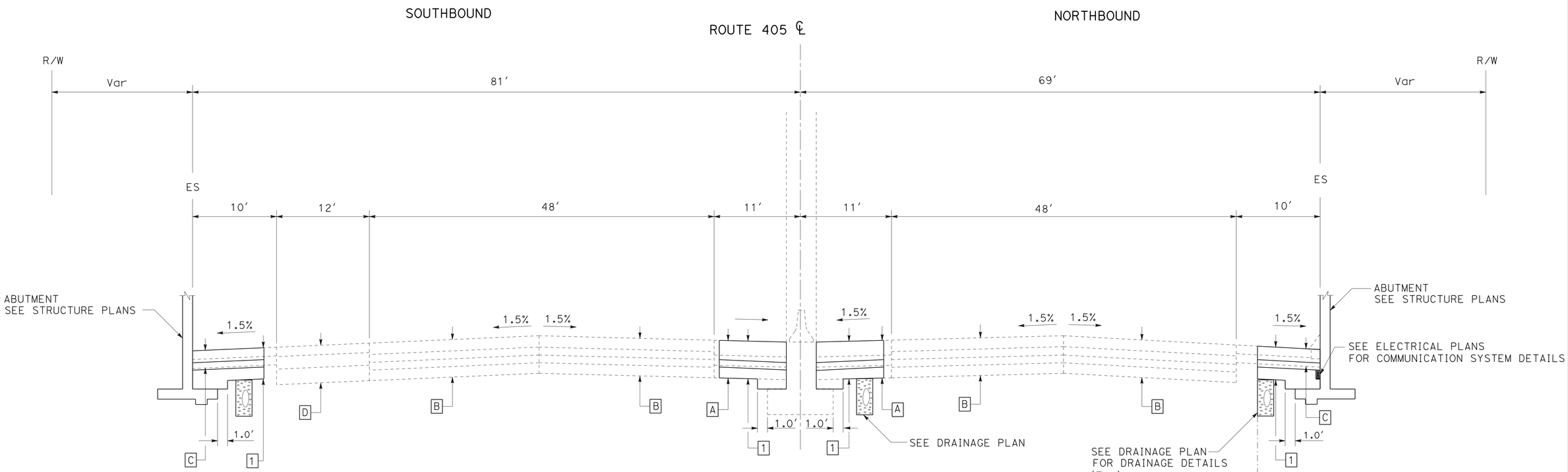

Sta 227+40.00 TO Sta 228+41.79

Sta 227+50.00 TO Sta 229+00.00

Sta 228+35.00 TO Sta 229+46.22

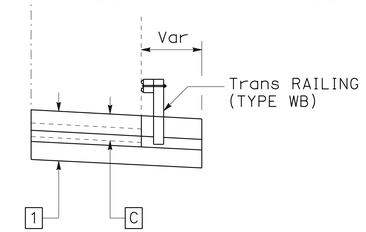

Sta 228+10.98 TO Sta 228+35.00

ROUTE 405

TYPICAL STRUCTURAL SECTION

1
- 1.05′ JOINTED PLAIN Conc PAVEMENT (JPCP)
- 0.50′ LEAN Conc BASE (LCB)
- 0.70′ CLASS 3 AGGREGATE BASE (AB)
- & Var

2
- 0.15′ COLD PLANE ASPHALT CONCRETE PAVEMENT
- 0.15′ HOT MIX ASPHALT (TYPE A)

EXISTING STRUCTURAL SECTION

A
- 0.85′ PCC
- 0.50′ LCB
- 0.70′ AB CL3

B
- 0.67′ PCC
- 0.33′ CTB
- 0.33′ AB
- 0.67′ ASB

C
- 0.30′ AC (TYPE B)
- 0.40′ AC BASE

D
- 0.33′ AC
- 0.67′ CTB
- 1.00′ ASB

TYPICAL CROSS SECTIONS

NO SCALE

X-1

REVISED BY | DATE REVISED
SOLANGE PRADO | MAI P. BUI
CALCULATED-DESIGNED BY | CHECKED BY
FUNCTIONAL SUPERVISOR | SIMON KUO

STATE OF CALIFORNIA - DEPARTMENT OF TRANSPORTATION
Caltrans® OFFICE OF DESIGN A

LAST REVISION 00-00-00 | DATE PLOTTED => 21-MAY-2013 | TIME PLOTTED => 13:22

Dist	COUNTY	ROUTE	POST MILES TOTAL PROJECT	SHEET No.	TOTAL SHEETS
07	LA	405	4.3	3	89

REGISTERED CIVIL ENGINEER 01-30-13 DATE

PLANS APPROVAL DATE 04-08-13

REGISTERED PROFESSIONAL ENGINEER SIMON KUO No. C52465 Exp. 12-31-14 CIVIL STATE OF CALIFORNIA

THE STATE OF CALIFORNIA OR ITS OFFICERS OR AGENTS SHALL NOT BE RESPONSIBLE FOR THE ACCURACY OR COMPLETENESS OF SCANNED COPIES OF THIS PLAN SHEET.

NOTE:

1. FOR ACCURATE RIGHT OF WAY DATA, CONTACT RIGHT OF WAY ENGINEERING AT THE DISTRICT OFFICE.

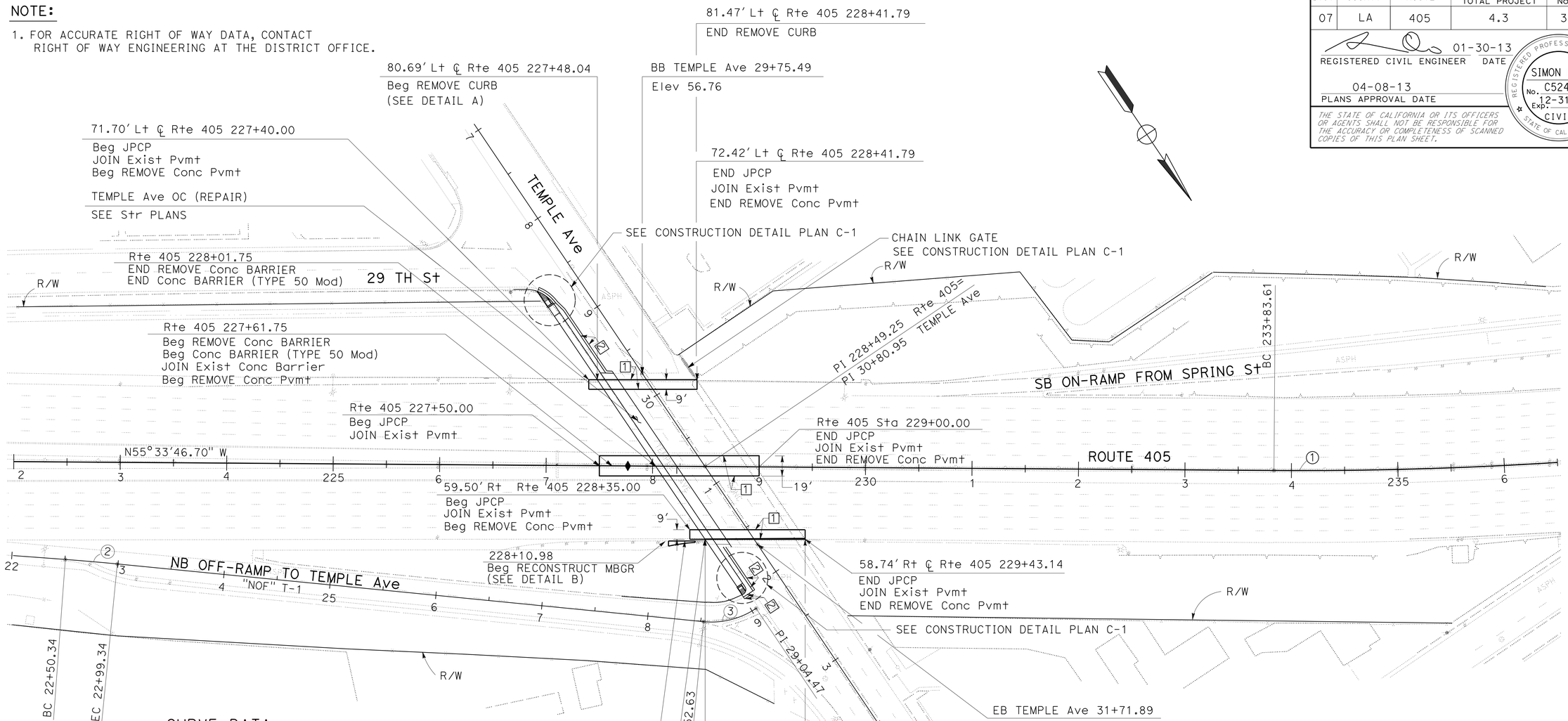

CURVE DATA

No. ⓧ	R	Δ	T	L
1	3750.00'	4°18'41"	141.16'	282.18'
2	1999.97'	1°24'14"	24.50'	49.00'
3	75.00'	39°36'10"	27.00'	51.84'

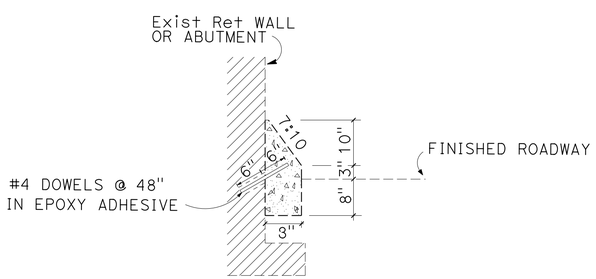

CURB TYPE 'J' AT Exist Ret WALLS AND BRIDGE ABUTMENTS

DETAIL A

NO SCALE

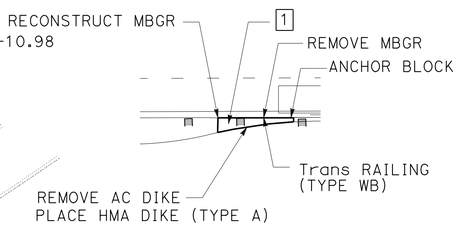

DETAIL B

NO SCALE

LAYOUT

SCALE: 1" = 50'

L-1

STATE OF CALIFORNIA - DEPARTMENT OF TRANSPORTATION
Caltrans OFFICE OF DESIGN A

FUNCTIONAL SUPERVISOR: SIMON KUO
CALCULATED-DESIGNED BY / CHECKED BY: MAI P. BUI
REVISED BY / DATE REVISED: SOLANGE PRADO

LAST REVISION 00-00-00 | DATE PLOTTED => 21-MAY-2013 | TIME PLOTTED => 13:22

Dist	COUNTY	ROUTE	POST MILES TOTAL PROJECT	SHEET No.	TOTAL SHEETS
07	LA	405	4.3	4	89

REGISTERED CIVIL ENGINEER 01-30-13 DATE

PLANS APPROVAL DATE 04-08-13

REGISTERED PROFESSIONAL ENGINEER SIMON KUO No. C52465 Exp. 12-31-14 CIVIL STATE OF CALIFORNIA

THE STATE OF CALIFORNIA OR ITS OFFICERS OR AGENTS SHALL NOT BE RESPONSIBLE FOR THE ACCURACY OR COMPLETENESS OF SCANNED COPIES OF THIS PLAN SHEET.

CURVE DATA

No. ⊗	R	Δ	T	L
1	35.00′	34°20′20″	10.81′	20.98′
2	5.00′	102°41′56″	6.25′	8.96′

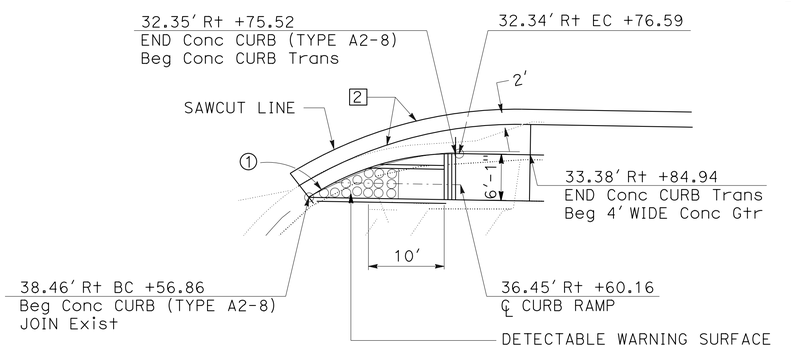

DETAIL A
NO SCALE

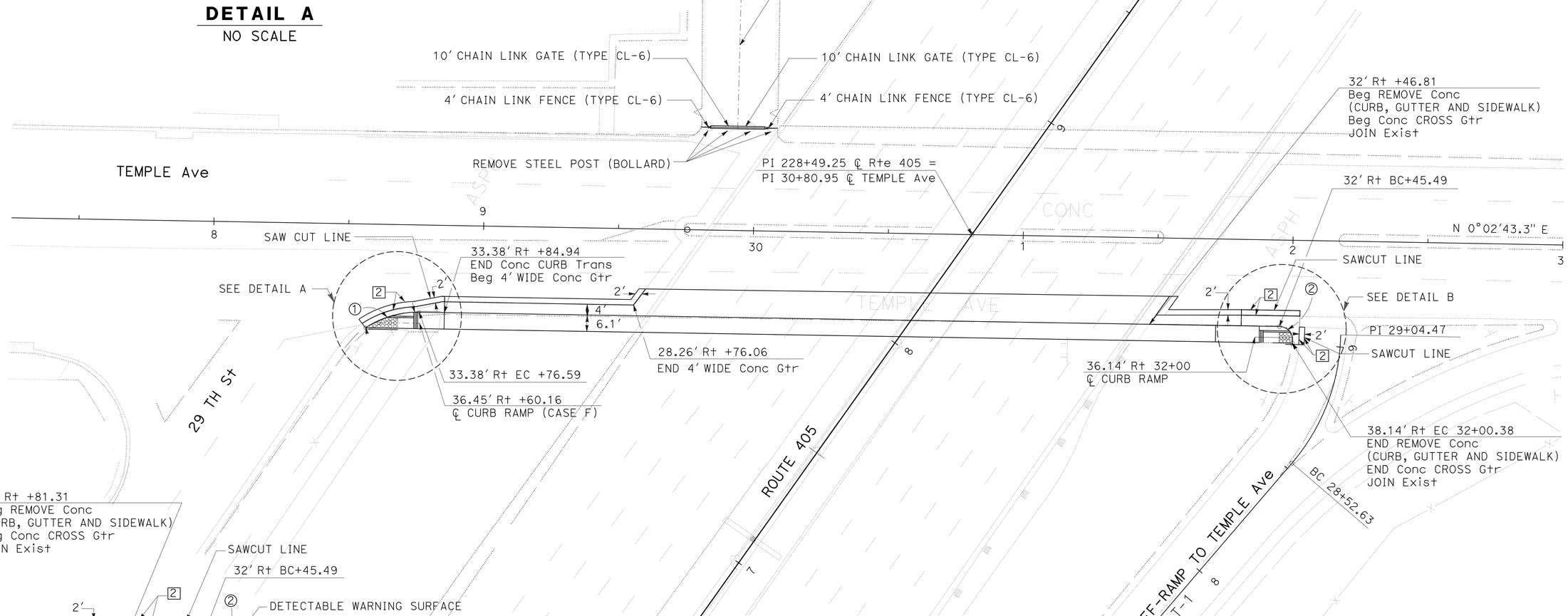

DETAIL B
NO SCALE

CONSTRUCTION DETAILS

SCALE: 1″ = 20′

C-1

STATE OF CALIFORNIA - DEPARTMENT OF TRANSPORTATION
Caltrans® OFFICE OF DESIGN A

FUNCTIONAL SUPERVISOR: SIMON KUO
CALCULATED-DESIGNED BY: MAI P. BUI
CHECKED BY: SOLANGE PRADO
REVISED BY / DATE REVISED

LAST REVISION 00-00-00
DATE PLOTTED => 21-MAY-2013
TIME PLOTTED => 13:22

Dist	COUNTY	ROUTE	POST MILES TOTAL PROJECT	SHEET No.	TOTAL SHEETS
07	LA	405	4.3	5	89

REGISTERED CIVIL ENGINEER 01-30-13 DATE

04-08-13
PLANS APPROVAL DATE

REGISTERED PROFESSIONAL ENGINEER SIMON KUO No. C52465 Exp. 12-31-14 CIVIL STATE OF CALIFORNIA

THE STATE OF CALIFORNIA OR ITS OFFICERS OR AGENTS SHALL NOT BE RESPONSIBLE FOR THE ACCURACY OR COMPLETENESS OF SCANNED COPIES OF THIS PLAN SHEET.

NOTE:

1. FOR CONCRETE SLAB DIMENSIONS NOT SHOWN THE WIDTH TO LENGTH RATIO IS 1:1.25 TO 1:1.35.

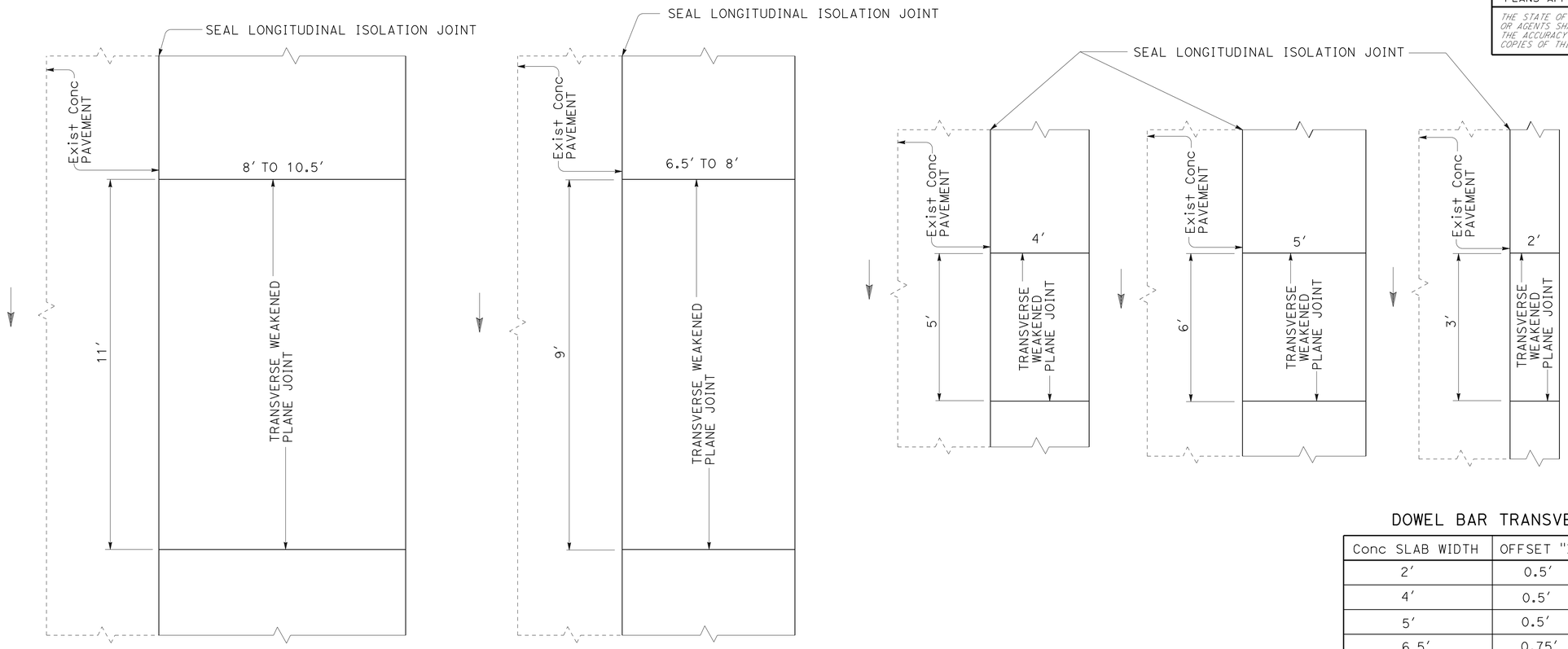

FOR DETAILS NOT SHOWN SEE STANDARD PLANS

TYPICAL CONCRETE SLAB DIMENSIONS

DOWEL BAR TRANSVERSE SPACING

Conc SLAB WIDTH	OFFSET "X"	No. OF DOWELS
2′	0.5′	2
4′	0.5′	4
5′	0.5′	5
6.5′	0.75′	6
7′	0.75′	7
8′	0.5′	8
10.5′	0.75′	10

LEGEND:

DIRECTION OF TRAVEL

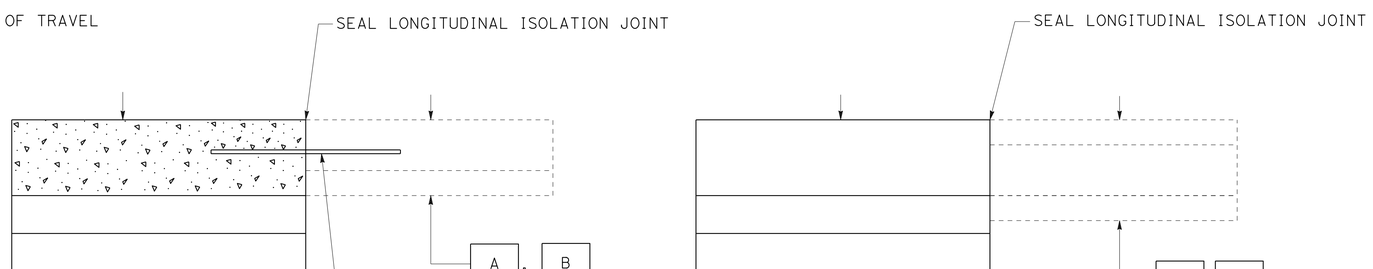

TIE BAR LOCATION

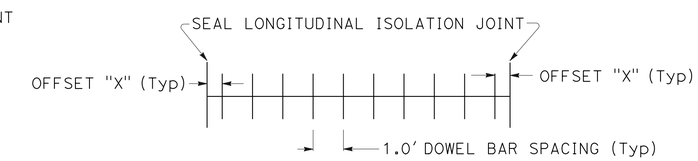

TYPICAL TRANSVERSE JOINT DOWEL BAR LAYOUT

FOR ODD SIZE SLAB WIDTHS
0.5′ < "X" < 1.0′

CONSTRUCTION DETAILS

NO SCALE

C-2

STATE OF CALIFORNIA - DEPARTMENT OF TRANSPORTATION
Caltrans® OFFICE OF DESIGN A

FUNCTIONAL SUPERVISOR: SIMON KUO
CALCULATED-DESIGNED BY / CHECKED BY: MAI P. BUI
SOLANGE PRADO
REVISED BY / DATE REVISED

LAST REVISION 00-00-00
DATE PLOTTED => 21-MAY-2013
TIME PLOTTED => 13:22

Dist	COUNTY	ROUTE	POST MILES TOTAL PROJECT	SHEET No.	TOTAL SHEETS
07	LA	405	4.3	6	89

REGISTERED CIVIL ENGINEER 01-30-13 DATE

04-08-13
PLANS APPROVAL DATE

REGISTERED PROFESSIONAL ENGINEER SIMON KUO No. C52465 Exp. 12-31-14 CIVIL STATE OF CALIFORNIA

THE STATE OF CALIFORNIA OR ITS OFFICERS OR AGENTS SHALL NOT BE RESPONSIBLE FOR THE ACCURACY OR COMPLETENESS OF SCANNED COPIES OF THIS PLAN SHEET.

CONCRETE BARRIER (TYPE 50 MODIFIED)

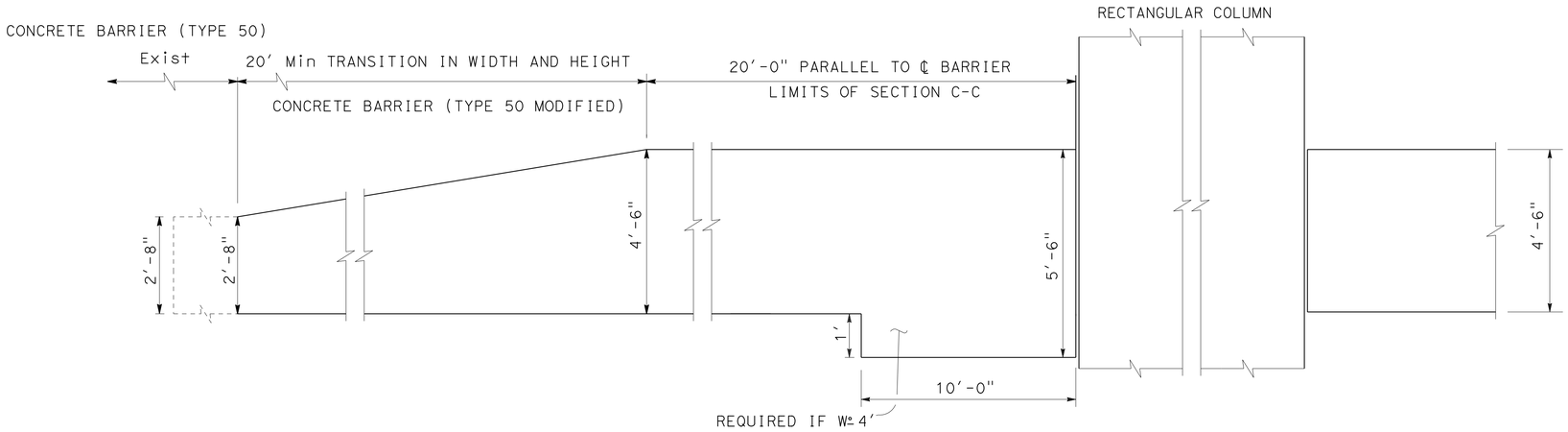

ELEVATION

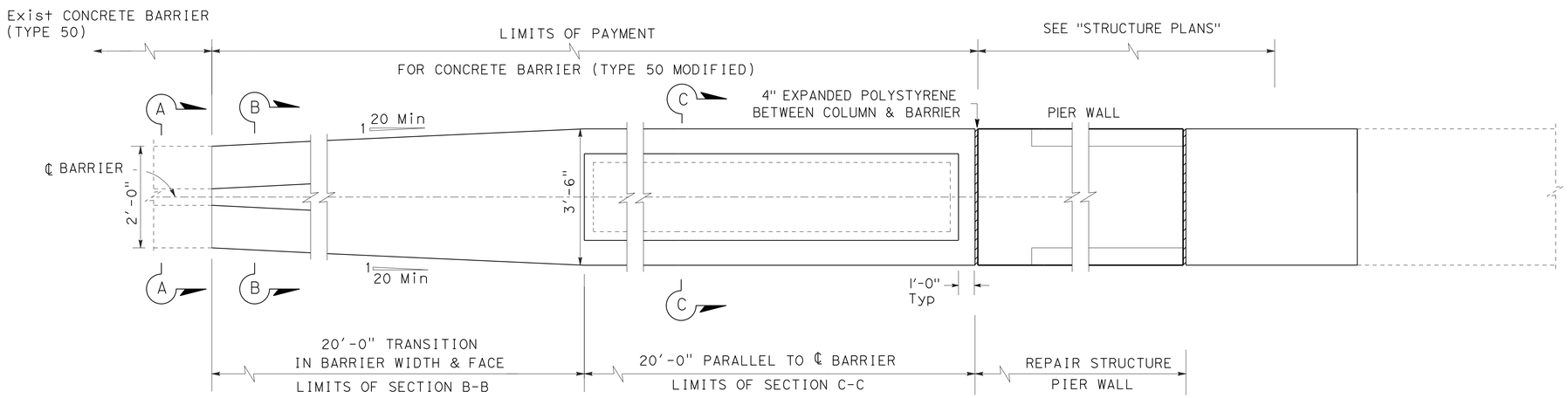

PLAN

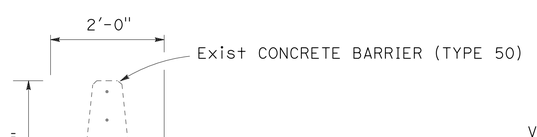

SECTION A-A

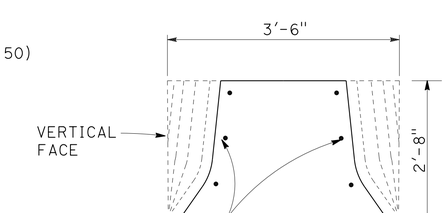

SECTION B-B

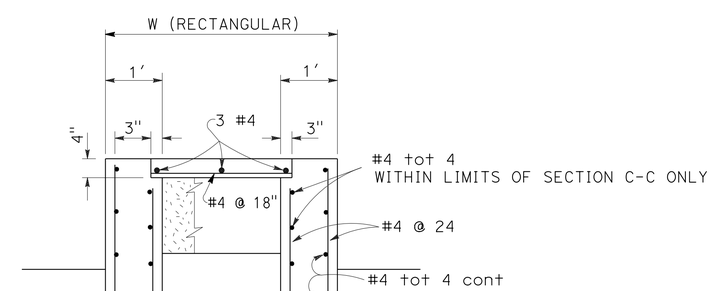

SECTION C-C

CONSTRUCTION DETAILS

NO SCALE

C-3

STATE OF CALIFORNIA - DEPARTMENT OF TRANSPORTATION
Caltrans® OFFICE OF DESIGN A

FUNCTIONAL SUPERVISOR: SIMON KUO
CALCULATED-DESIGNED BY: SOLANGE PRADO
CHECKED BY: MAI P. BUI
REVISED BY
DATE REVISED

LAST REVISION 00-00-00
DATE PLOTTED => 21-MAY-2013
TIME PLOTTED => 13:22

Dist	COUNTY	ROUTE	POST MILES TOTAL PROJECT	SHEET No.	TOTAL SHEETS
07	LA	405	4.3	7	89

Hoa Kien Luu 4/2/12
REGISTERED CIVIL ENGINEER DATE

04-08-13
PLANS APPROVAL DATE

REGISTERED PROFESSIONAL ENGINEER HOA KIEN LUU No. C58555 Exp. 12-31-14 CIVIL STATE OF CALIFORNIA

THE STATE OF CALIFORNIA OR ITS OFFICERS OR AGENTS SHALL NOT BE RESPONSIBLE FOR THE ACCURACY OR COMPLETENESS OF SCANNED COPIES OF THIS PLAN SHEET.

NOTE:

FOR ACCURATE RIGHT OF WAY DATA, CONTACT RIGHT OF WAY ENGINEERING AT THE DISTRICT OFFICE.

ABBREVIATIONS:

PMP PERFORATED METAL PIPE

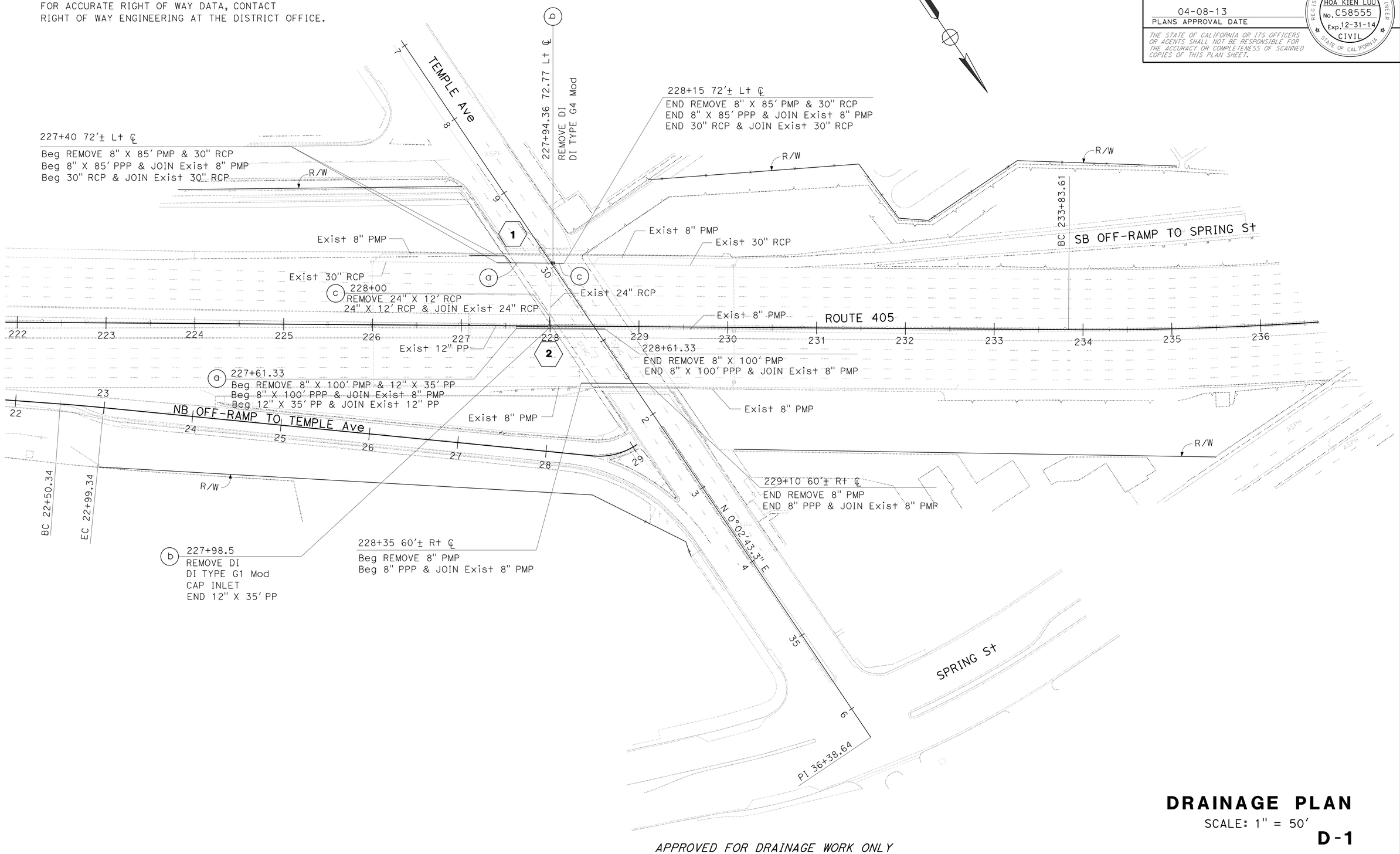

DRAINAGE PLAN

SCALE: 1" = 50'

D-1

APPROVED FOR DRAINAGE WORK ONLY

STATE OF CALIFORNIA - DEPARTMENT OF TRANSPORTATION
Caltrans
HYDRAULICS

FUNCTIONAL SUPERVISOR: TIMOTHY H TIEU
CALCULATED-DESIGNED BY: HOA K LUU
CHECKED BY: CHUONG VU
REVISED BY
DATE REVISED

LAST REVISION 00-00-00
DATE PLOTTED => 21-MAY-2013
TIME PLOTTED => 13:22

Dist	COUNTY	ROUTE	POST MILES TOTAL PROJECT	SHEET No.	TOTAL SHEETS
07	LA	405	4.3	8	89

Hoa Kien Luu 4/2/12
REGISTERED CIVIL ENGINEER DATE

04-08-13
PLANS APPROVAL DATE

REGISTERED PROFESSIONAL ENGINEER
HOA KIEN LUU
No. C58555
Exp. 12-31-14
CIVIL
STATE OF CALIFORNIA

THE STATE OF CALIFORNIA OR ITS OFFICERS OR AGENTS SHALL NOT BE RESPONSIBLE FOR THE ACCURACY OR COMPLETENESS OF SCANNED COPIES OF THIS PLAN SHEET.

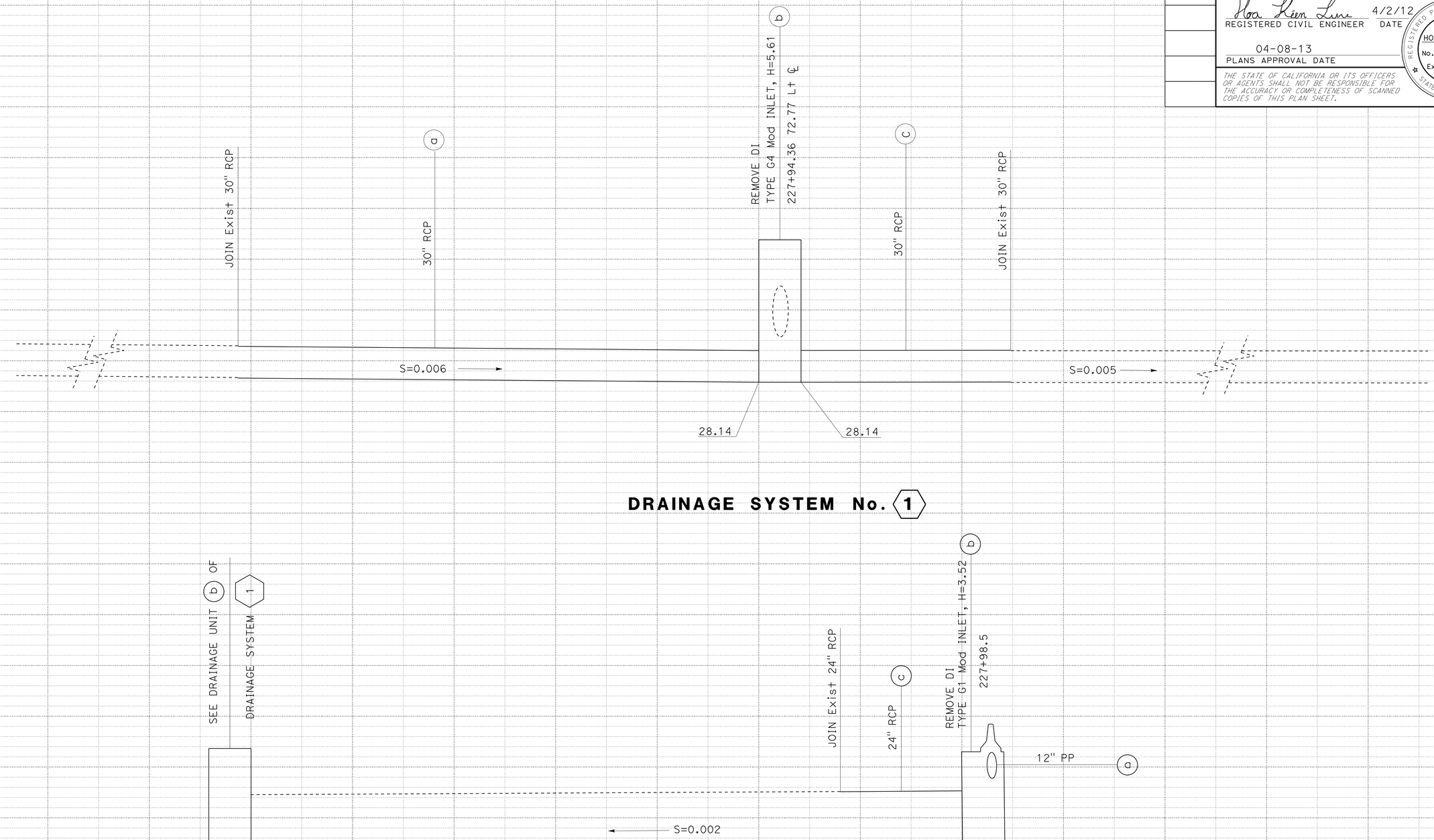

DRAINAGE PROFILES

SCALE: Horiz 1" = 10'
Vert 1" = 25'

DP-1

STATE OF CALIFORNIA - DEPARTMENT OF TRANSPORTATION
Caltrans
HYDRAULICS

FUNCTIONAL SUPERVISOR: TIMOTHY H TIEU
CALCULATED-DESIGNED BY: HOA K LUU
CHECKED BY: CHUONG VU
REVISED BY
DATE REVISED

LAST REVISION 00-00-00
DATE PLOTTED => 21-MAY-2013
TIME PLOTTED => 13:22

Dist	COUNTY	ROUTE	POST MILES TOTAL PROJECT	SHEET No.	TOTAL SHEETS
07	LA	405	4.3	9	89

Hoa Kien Luu 4/2/12
REGISTERED CIVIL ENGINEER DATE

04-08-13
PLANS APPROVAL DATE

REGISTERED PROFESSIONAL ENGINEER HOA KIEN LUU No. C58555 Exp. 12-31-14 CIVIL STATE OF CALIFORNIA

THE STATE OF CALIFORNIA OR ITS OFFICERS OR AGENTS SHALL NOT BE RESPONSIBLE FOR THE ACCURACY OR COMPLETENESS OF SCANNED COPIES OF THIS PLAN SHEET.

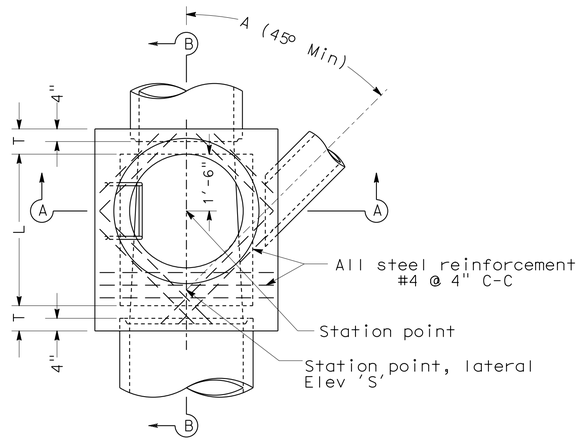

PLAN
(SHAFT NOT SHOWN)

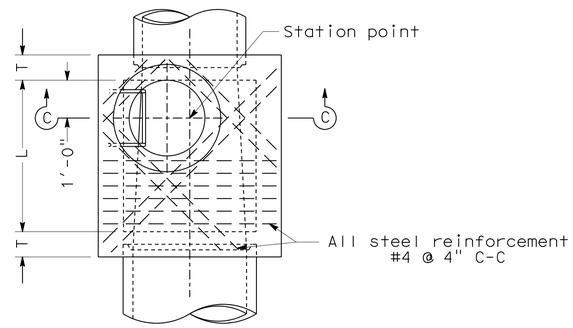

PLAN
DETAIL N
(SHAFT NOT SHOWN)

NOTES

1. Height 'H' (in Sec A-A and Sec B-B) must be not less than 4'-8", but may be increased provided that the value of 'M' must be not less than the minimum specified and that the reducer must be used. For 'H' (in Sec C-C) see Note 4.
2. Length 'L' must be 4' unless otherwise shown on drainage plan.
3. Shaft must be constructed as per Sec C-C and Detail N when depth 'M' from street grade to top of box is less than 2'-10 1/2" for paved streets or 3'-6" for unpaved streets.
4. Depth 'P' may be reduced to an absolute limit of 6" when larger values of 'P' would reduce 'H' (in Sec C-C) to 3'-6" or less.
5. 'T' must be 8" for values of 'H' up to and including 8'. 'T' must be 10" for values of 'H' over 8'.
6. Lowest step must be not more than 16" above the ledge at the side of manhole floor.
7. Body of manhole must be poured in one continuous operation, except that the Contractor must have the option of placing at the spring line a construction joint with a longitudinal keyway.
8. Reinforcing steel must be 1½" clear from face of concrete.
9. Floor of manhole must be steel-troweled to spring line.
10. Rings, reducer, and pipe for access shaft must be seated in 1:2 cement mortar and neatly pointed or wiped inside shaft.
11. Manhole frame and cover per Standard Plan B7-11 detail 'U45'.
12. Step detail per Standard Plans D74C.

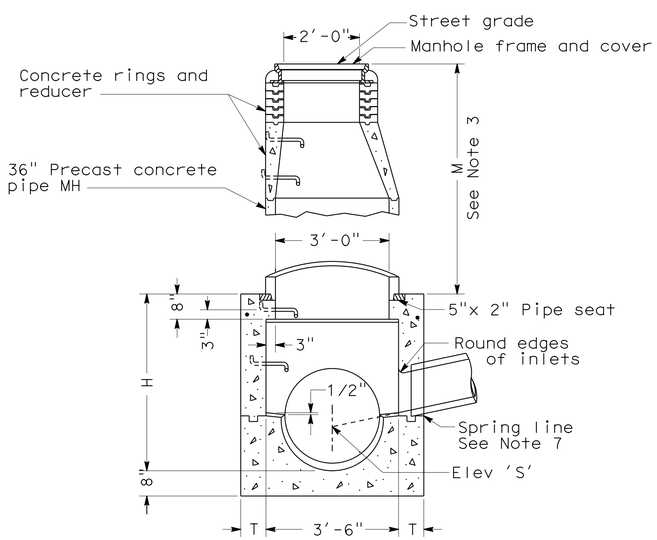

SECTION A-A

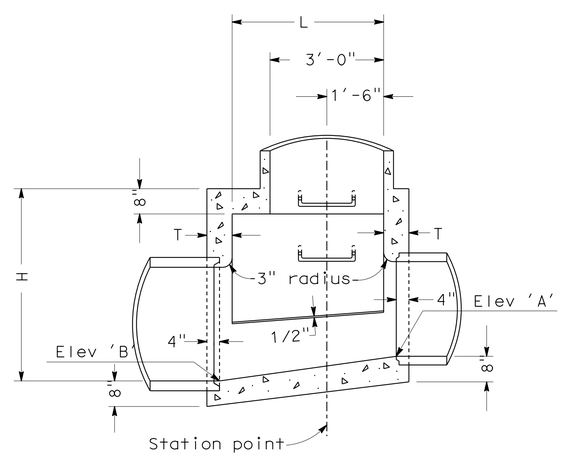

SECTION B-B

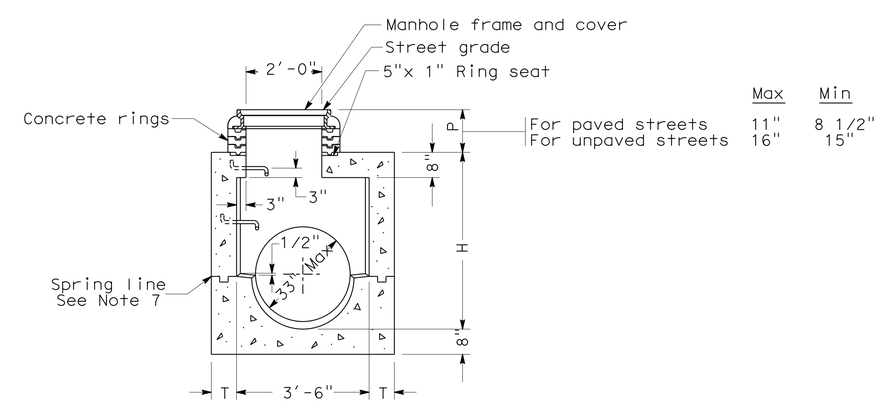

	Max	Min
For paved streets	11"	8 1/2"
For unpaved streets	16"	15"

SECTION C-C

MANHOLE No. 1 (MH No. 1)

DRAINAGE DETAILS

NO SCALE

DD-1

STATE OF CALIFORNIA - DEPARTMENT OF TRANSPORTATION
Caltrans® HYDRAULICS

FUNCTIONAL SUPERVISOR: TIMOTHY H TIEU
CALCULATED-DESIGNED BY: HOA K LUU
CHECKED BY: CHUONG VU
REVISED BY / DATE REVISED

LAST REVISION 00-00-00
DATE PLOTTED => 21-MAY-2013
TIME PLOTTED => 13:22

Dist	COUNTY	ROUTE	POST MILES TOTAL PROJECT	SHEET No.	TOTAL SHEETS
07	LA	405	4.3	10	89

REGISTERED CIVIL ENGINEER 4/2/12 DATE

04-08-13
PLANS APPROVAL DATE

REGISTERED PROFESSIONAL ENGINEER HOA KIEN LUU No. C58555 Exp. 12-31-14 CIVIL STATE OF CALIFORNIA

THE STATE OF CALIFORNIA OR ITS OFFICERS OR AGENTS SHALL NOT BE RESPONSIBLE FOR THE ACCURACY OR COMPLETENESS OF SCANNED COPIES OF THIS PLAN SHEET.

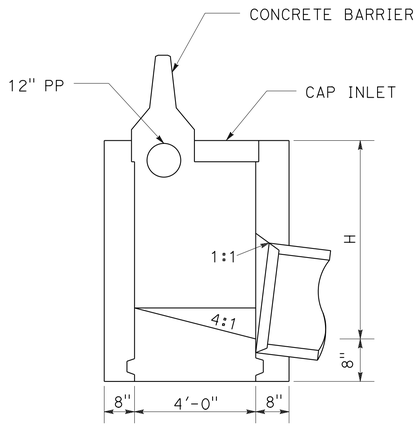

TYPE G1 INLET MODIFIED

FOR INFORMATION AND DETAILS NOT SHOWN SEE Std PLAN D73

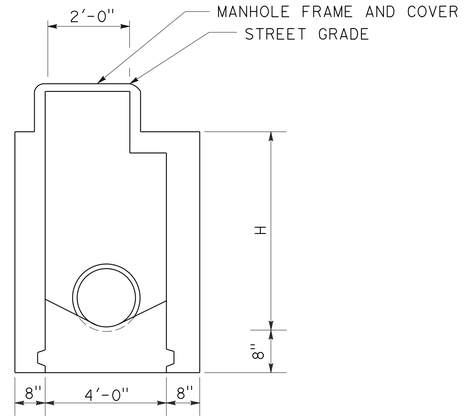

TYPE G4 INLET MODIFIED

FOR INFORMATION AND DETAILS NOT SHOWN SEE Std PLAN D73 & DD-1

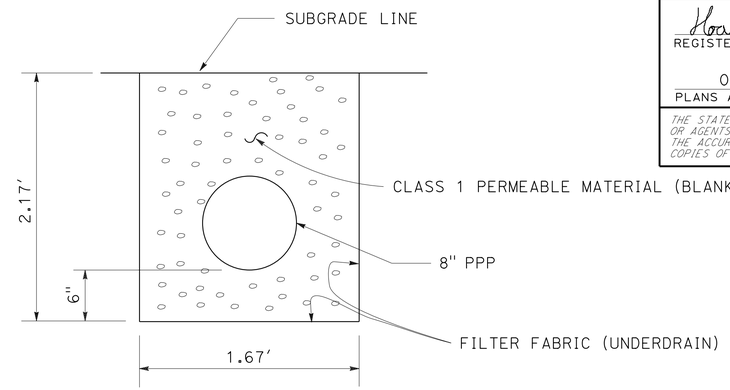

8" PPP UNDERDRAIN

NOTE: PIPE JOINTS ARE STANDARD

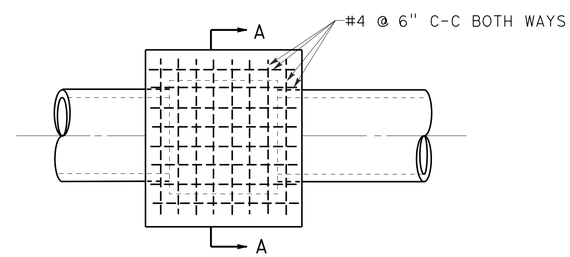

PLAN

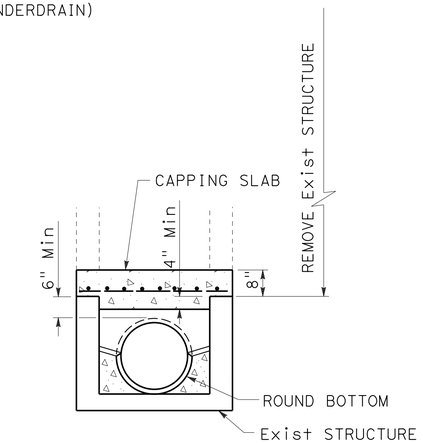

SECTION A-A

CAP INLET DETAIL

DRAINAGE QUANTITIES

DRAINAGE SYSTEM No.	DRAINAGE UNIT	MINOR CONCRETE (MINOR STRUCTURE)	MISCELLANEOUS IRON AND STEEL	24" REINFORCED CONCRETE PIPE	30" REINFORCED CONCRETE PIPE	8" PERFORATED PLASTIC PIPE UNDERDRAIN	REMOVE PIPE	REMOVE INLET	12" PLASTIC PIPE	MANHOLE FRAME AND COVER	CONCRETE BACKFILL (PIPE TRENCH)	CAP INLET	CLASS 1 PERMEABLE MATERIAL (BLANKET)	FILTER FABRIC (N) (UNDERDRAIN)	BAR REINFORCING STEEL		DESCRIPTION	STATION
		CY	LB	LF	LF	LF	LF	EA	LF	EA	CY	EA	CY	SQYD	LB			
1	a				55		55										30" RCP	227+40 72'± Lt ℄
	b	3.5						1		1							DI TYPE G4 Mod	227+94.36 72.77' Lt ℄
	c				21		21										30" RCP	228+15 72'± Lt ℄
2	a						35		35		4.16				106		12" PP WITH Conc BACKFILL	227+61.33
	b	1.6	249					1				1					DI TYPE G1 Mod	227+98.5
	c			12			12										24" RCP	228+00
						85	85						10.31	34.2			8" PPP UNDERDRAIN	227+40 TO 228+15 72' Var Lt ℄
						100	100						12.13	40.3			8" PPP UNDERDRAIN	227+61.33 TO 228+61.33 1.5' Rt ℄
						75	75						9.10	30.2			8" PPP UNDERDRAIN	228+35 TO 229±10 60'+ Rt ℄
TOTAL		5.1	249	12	76	260	383	2	35	1	4.16	1	31.54	104.7	106			

(N) NOT A SEPARATE PAY ITEM, FOR INFORMATION ONLY

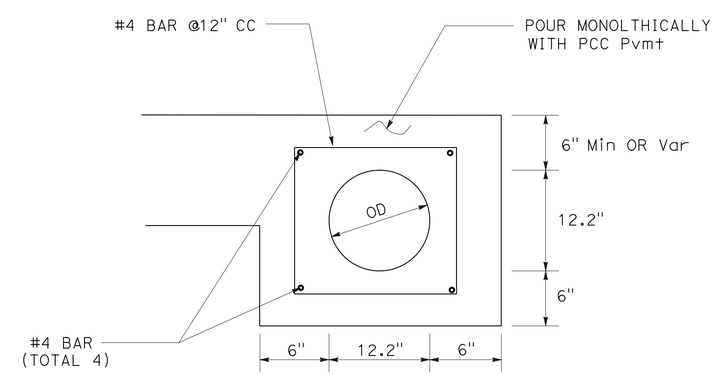

CONCRETE BACKFILL FOR 12" PP

DRAINAGE DETAILS & DRAINAGE QUANTITIES

NO SCALE

DD-2

STATE OF CALIFORNIA - DEPARTMENT OF TRANSPORTATION
Caltrans
HYDRAULICS

FUNCTIONAL SUPERVISOR: TIMOTHY H TIEU
CALCULATED-DESIGNED BY: HOA K LUU
CHECKED BY: CHUONG VU
REVISED BY / DATE REVISED

LAST REVISION 00-00-00
DATE PLOTTED => 21-MAY-2013
TIME PLOTTED => 13:22

Dist	COUNTY	ROUTE	POST MILES TOTAL PROJECT	SHEET No.	TOTAL SHEETS
07	LA	405	4.3	11	89

M. Celina Aviles 8/27/12
REGISTERED CIVIL ENGINEER DATE

04-08-13
PLANS APPROVAL DATE

REGISTERED PROFESSIONAL ENGINEER CELINA AVILES No. 57106 Exp. 12/31/13 CIVIL STATE OF CALIFORNIA

THE STATE OF CALIFORNIA OR ITS OFFICERS OR AGENTS SHALL NOT BE RESPONSIBLE FOR THE ACCURACY OR COMPLETENESS OF SCANNED COPIES OF THIS PLAN SHEET.

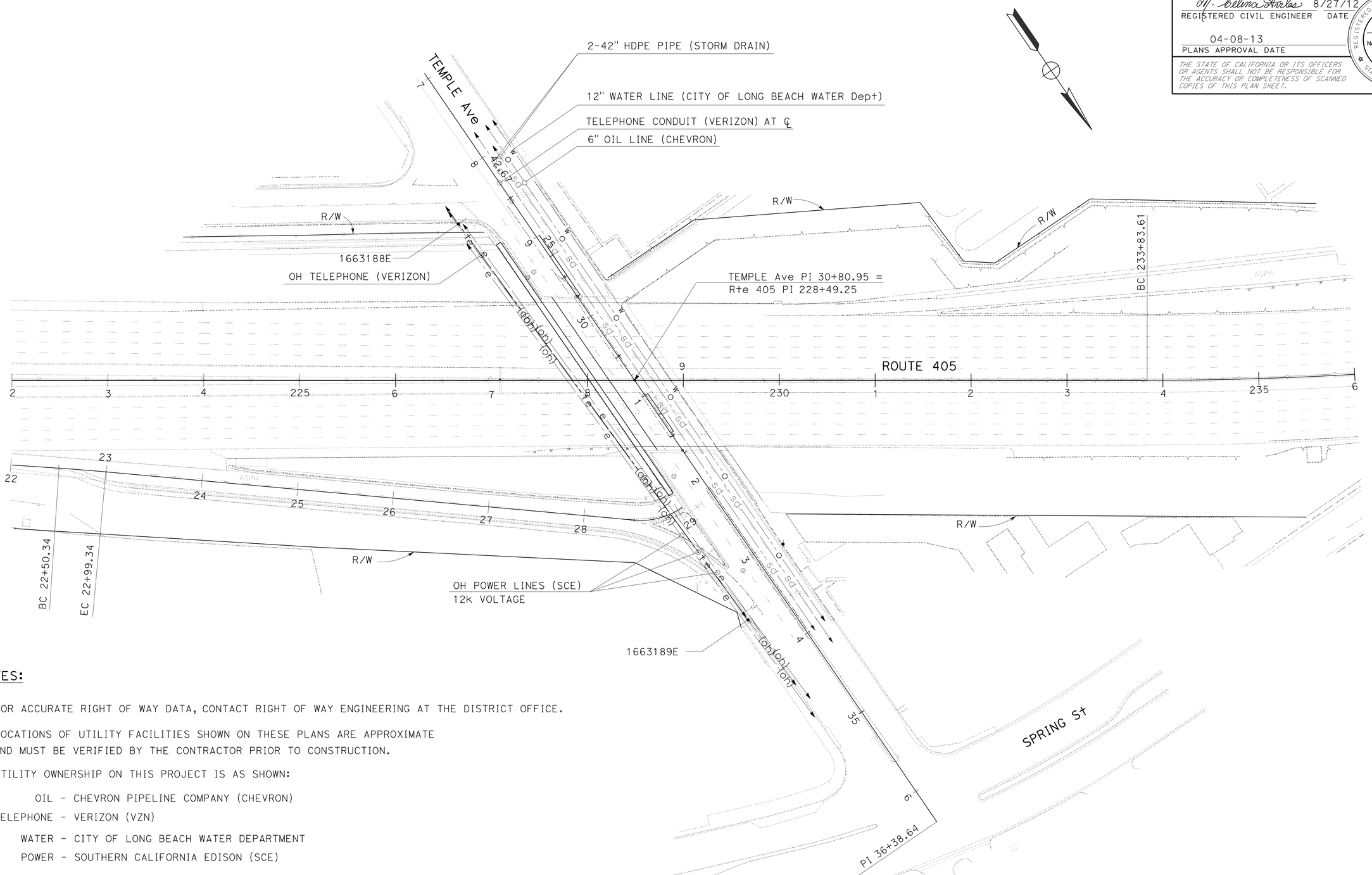

NOTES:

1. FOR ACCURATE RIGHT OF WAY DATA, CONTACT RIGHT OF WAY ENGINEERING AT THE DISTRICT OFFICE.
2. LOCATIONS OF UTILITY FACILITIES SHOWN ON THESE PLANS ARE APPROXIMATE AND MUST BE VERIFIED BY THE CONTRACTOR PRIOR TO CONSTRUCTION.
3. UTILITY OWNERSHIP ON THIS PROJECT IS AS SHOWN:

OIL - CHEVRON PIPELINE COMPANY (CHEVRON)
TELEPHONE - VERIZON (VZN)
WATER - CITY OF LONG BEACH WATER DEPARTMENT
POWER - SOUTHERN CALIFORNIA EDISON (SCE)

UTILITY PLAN

SCALE: 1" = 50'

U-1

APPROVED FOR UTILITY INFORMATION ONLY

STATE OF CALIFORNIA - DEPARTMENT OF TRANSPORTATION
Caltrans OFFICE OF DESIGN A

FUNCTIONAL SUPERVISOR: CELINA AVILES
CALCULATED-DESIGNED BY: CUONG PHAM
CHECKED BY: CELINA AVILES
REVISED BY
DATE REVISED

LAST REVISION 00-00-00
DATE PLOTTED => 21-MAY-2013
TIME PLOTTED => 13:22

Dist	COUNTY	ROUTE	POST MILES TOTAL PROJECT	SHEET No.	TOTAL SHEETS
07	LA	405	4.3	12	89

REGISTERED CIVIL ENGINEER 01-30-13 DATE

04-08-13
PLANS APPROVAL DATE

REGISTERED PROFESSIONAL ENGINEER SIMON KUO No. C52465 Exp. 12-31-14 CIVIL STATE OF CALIFORNIA

THE STATE OF CALIFORNIA OR ITS OFFICERS OR AGENTS SHALL NOT BE RESPONSIBLE FOR THE ACCURACY OR COMPLETENESS OF SCANNED COPIES OF THIS PLAN SHEET.

STATIONARY CONSTRUCTION AREA SIGNS

SIGN No. (X)	SIGN CODE	PANEL SIZE	SIGN MESSAGE	NUMBER OF POSTS AND SIZE	NUMBER OF SIGNS
A	W20-1	48" x 48"	ROAD WORK AHEAD	1 - 6" x 6"	2
B	W20-1	36" x 36"	ROAD WORK AHEAD	1 - 4" x 6"	5
C	C40	144" x 60"	TRAFFIC FINES DOUBLED IN CONSTRUCTION ZONES	2 - 6" x 6"	3
D	G20-2	36" x 18"	END ROAD WORK	1 - 4" x 4"	3
E	G20-2	48" x 24"	END ROAD WORK	1 - 4" x 4"	2
F	R3-2	36" x 36"	NO LEFT TURN SYMBOL	1 - 4" x 6"	1
G		7' x 11'	CONSTRUCTION FUNDING IDENTIFICATION SIGN	2 - 4" x 6"	2

NOTES:

1. LOCATION OF CONSTRUCTION AREA SIGNS SHOWN ARE APPROXIMATE.
2. FOR SIGN "C40" (TRAFFIC FINES DOUBLED IN CONSTRUCTION ZONES), ALL LETTERS MUST BE BLACK ON WHITE BACKGROUND.
3. SIGN CODES PER 2012 CALIFORNIA MUTCD (MANUAL ON UNIFORM TRAFFIC CONTROL DEVICES).

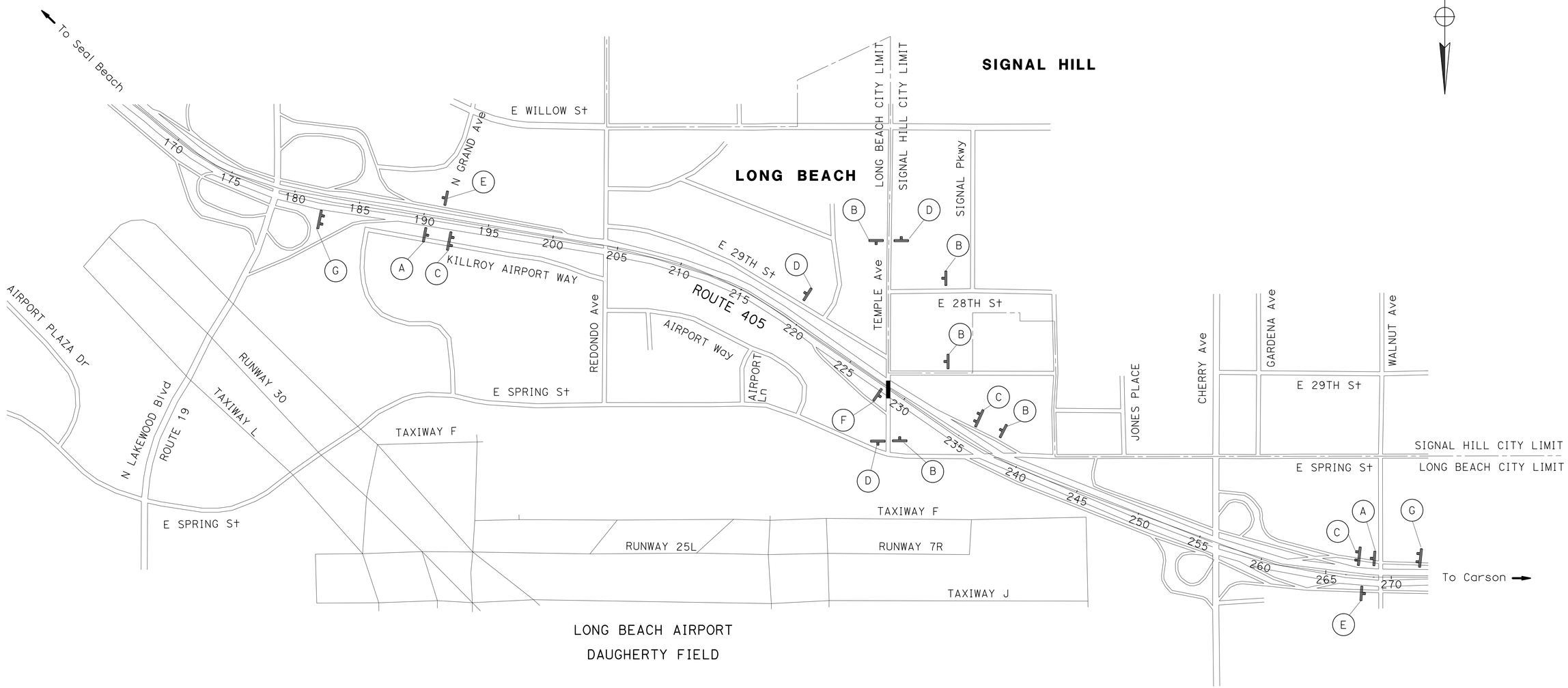

CONSTRUCTION AREA SIGNS

NO SCALE

APPROVED FOR CONSTRUCTION AREA SIGN WORK ONLY

CS-1

STATE OF CALIFORNIA - DEPARTMENT OF TRANSPORTATION
Caltrans OFFICE OF DESIGN A

FUNCTIONAL SUPERVISOR: SIMON KUO
CALCULATED-DESIGNED BY: MAI P. BUI
CHECKED BY
REVISED BY
DATE REVISED

LAST REVISION 00-00-00
DATE PLOTTED => 21-MAY-2013
TIME PLOTTED => 13:22

Dist	COUNTY	ROUTE	POST MILES TOTAL PROJECT	SHEET No.	TOTAL SHEETS
07	LA	405	4.3	13	89

REGISTERED CIVIL ENGINEER 01-31-13 DATE

04-08-13
PLANS APPROVAL DATE

REGISTERED PROFESSIONAL ENGINEER SIMON KUO No. C52465 Exp. 12-31-14 CIVIL STATE OF CALIFORNIA

THE STATE OF CALIFORNIA OR ITS OFFICERS OR AGENTS SHALL NOT BE RESPONSIBLE FOR THE ACCURACY OR COMPLETENESS OF SCANNED COPIES OF THIS PLAN SHEET.

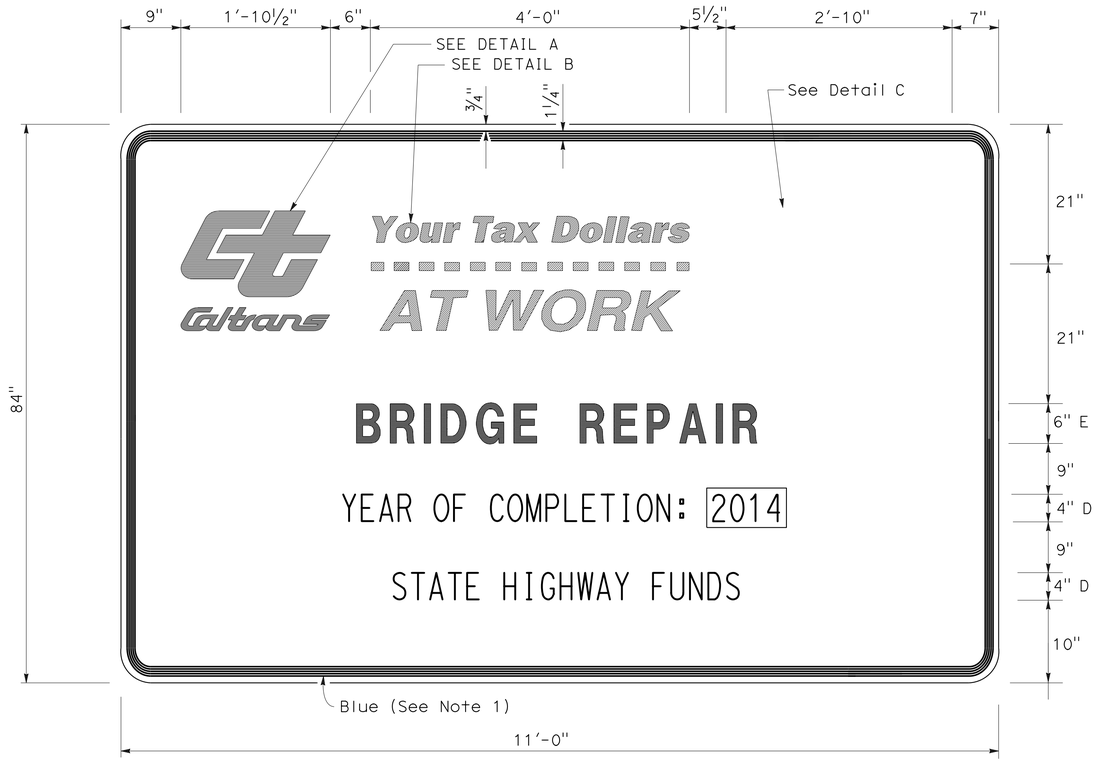

CONSTRUCTION PROJECT FUNDING IDENTIFICATION SIGN

NOTES:

1. Except as otherwise shown, the legend of sign shall be black on a white background (non-reflective).
2. The border of the sign and detail "B" shall be blue (non-reflective).
3. The diamond in detail "C" shall be blue for the background of message, 'SLOW FOR THE CONE ZONE", and white background for the orange cones. The color and type of font for the "SLOW FOR THE CONE ZONE" message shall be :"SLOW" white D; "FOR THE" white D; 'CONE" orange Arial font; "ZONE" white Arial font.
4. Sign panels shall comply with Standard Plans S93 and S94.

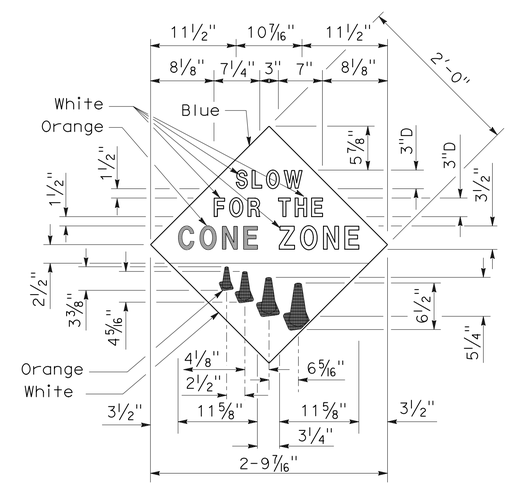

DETAIL C

(See Note 3)

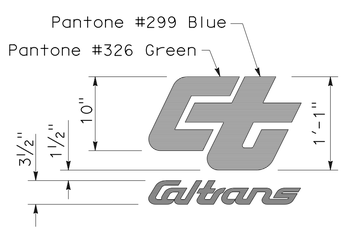

DETAIL A

DETAIL B

(See Note 2)

APPROVED FOR CONSTRUCTION AREA SIGN WORK ONLY

CONSTRUCTION AREA SIGNS

NO SCALE

CS-2

STATE OF CALIFORNIA - DEPARTMENT OF TRANSPORTATION
Caltrans® OFFICE OF DESIGN A

FUNCTIONAL SUPERVISOR: SIMON KUO
CALCULATED-DESIGNED BY: SOLANGE PRADO
CHECKED BY: MAI P. BUI
REVISED BY
DATE REVISED

LAST REVISION 00-00-00
DATE PLOTTED => 21-MAY-2013
TIME PLOTTED => 13:22

Dist	COUNTY	ROUTE	POST MILES TOTAL PROJECT	SHEET No.	TOTAL SHEETS
07	LA	405	4.3	14	89

REGISTERED CIVIL ENGINEER 01-30-13 DATE

04-08-13
PLANS APPROVAL DATE

REGISTERED PROFESSIONAL ENGINEER SIMON KUO No. C52465 Exp. 12-31-14 CIVIL STATE OF CALIFORNIA

THE STATE OF CALIFORNIA OR ITS OFFICERS OR AGENTS SHALL NOT BE RESPONSIBLE FOR THE ACCURACY OR COMPLETENESS OF SCANNED COPIES OF THIS PLAN SHEET.

NOTES:

1. TEMPLE Ave TO BE CLOSED DURING BRIDGE REMOVAL.
2. NB OFF-RAMP TO TEMPLE Ave TO BE CLOSED DURING RETAINING WALL REMOVAL.
3. CHANNELIZERS (SURFACE MOUNTED) MUST BE MAINTAINED THROUGHOUT THE ENTIRE CLOSURE PERIOD.
4. FOR ADDITIONAL PAVEMENT DELINEATION SEE PAVEMENT DELINEATION PLANS.
5. SIGN LOCATIONS SHOWN ARE APPROXIMATE.
6. FOR DETAIL 13 (Mod) SEE PAVEMENT DELINEATION PLANS.
7. REMOVE STRIPING AND PAVEMENT MARKERS IN CONFLICT WITH TEMPORARY PAVEMENT DELINEATION.
8. ALL TEMPORARY TRAFFIC STRIPES ARE PAINT (2 COAT).

LEGEND

- DIRECTION OF TRAFFIC
- XX — TEMPORARY TRAFFIC STRIPE DETAIL No.
- XX — TRAFFIC STRIPE Det No.
- ROADSIDE SIGN ONE-POST
- CHANNELIZER (SURFACE MOUNTED)
- Temp RAILING (TYPE K)
- TEMPORARY CRASH CUSHION (TS14)
- CONSTRUCTION AREA

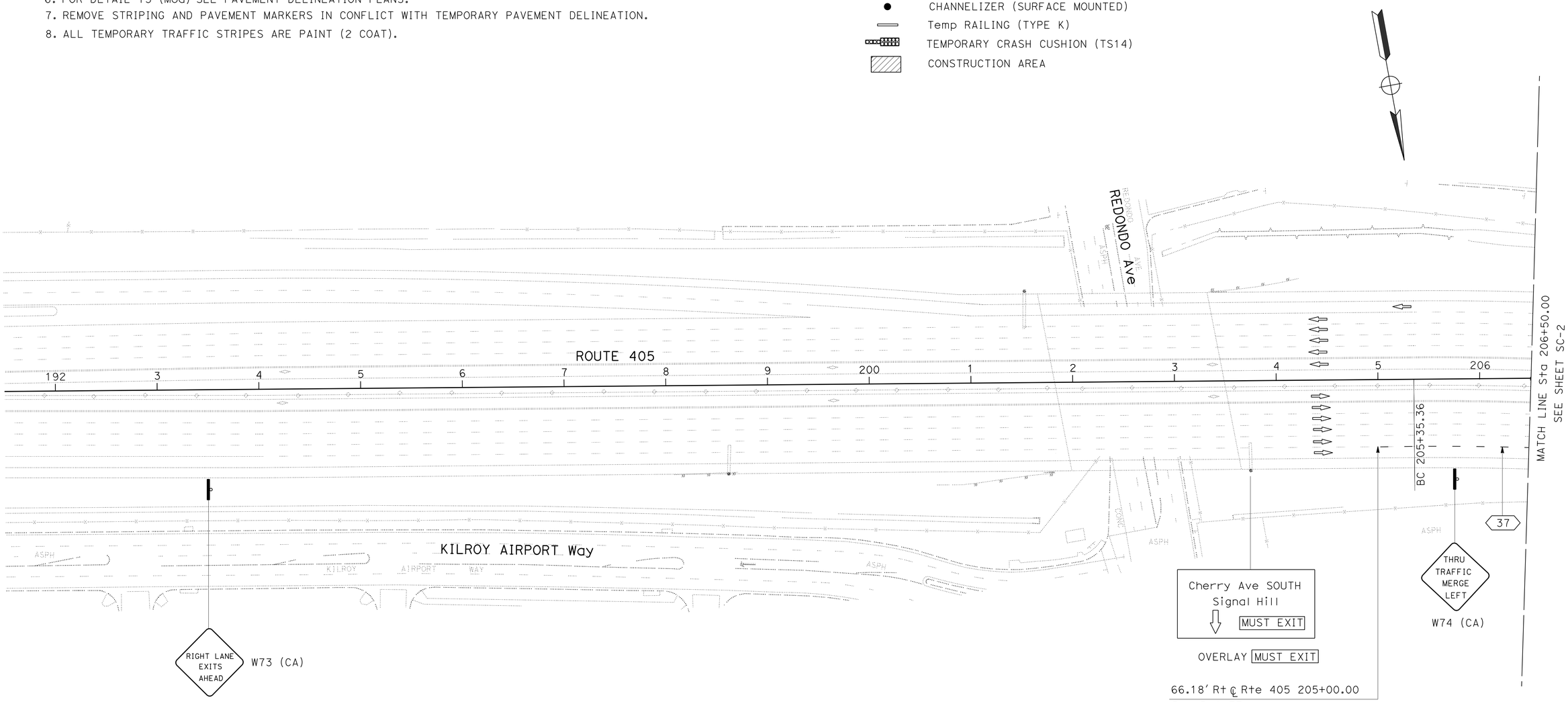

STAGE 1
STAGE CONSTRUCTION AND TRAFFIC HANDLING PLAN

SCALE: 1" = 50'

APPROVED FOR STAGE CONSTRUCTION AND TRAFFIC HANDLING WORK ONLY

SC-1

STATE OF CALIFORNIA - DEPARTMENT OF TRANSPORTATION
Caltrans® OFFICE OF DESIGN A

FUNCTIONAL SUPERVISOR: SIMON KUO
CALCULATED-DESIGNED BY: MAI P. BUI
CHECKED BY: SOLANGE PRADO
REVISED BY / DATE REVISED

LAST REVISION 00-00-00
DATE PLOTTED => 21-MAY-2013
TIME PLOTTED => 13:22

Dist	COUNTY	ROUTE	POST MILES TOTAL PROJECT	SHEET No.	TOTAL SHEETS
07	LA	405	4.3	15	89

REGISTERED CIVIL ENGINEER 01-30-13 DATE

04-08-13
PLANS APPROVAL DATE

REGISTERED PROFESSIONAL ENGINEER
SIMON KUO
No. C52465
Exp. 12-31-14
CIVIL
STATE OF CALIFORNIA

THE STATE OF CALIFORNIA OR ITS OFFICERS OR AGENTS SHALL NOT BE RESPONSIBLE FOR THE ACCURACY OR COMPLETENESS OF SCANNED COPIES OF THIS PLAN SHEET.

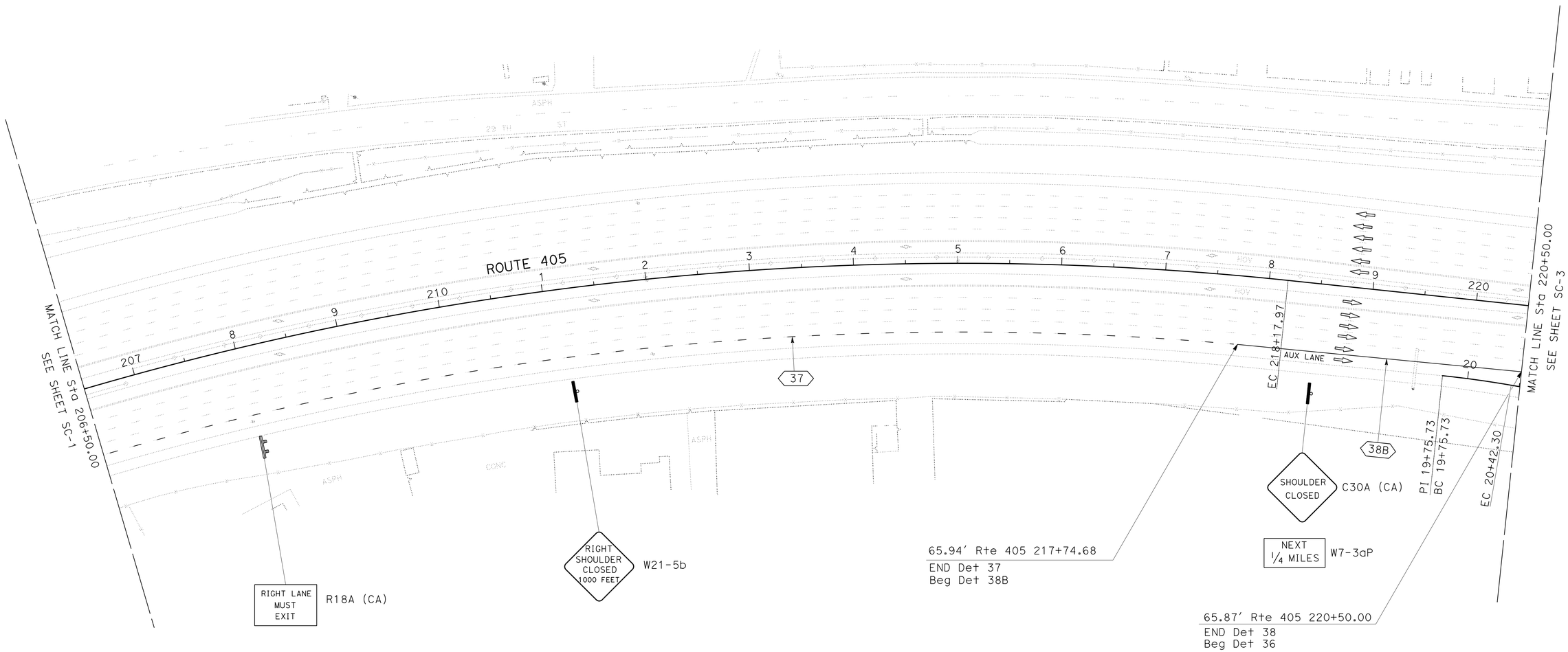

STAGE 1
STAGE CONSTRUCTION AND TRAFFIC HANDLING PLAN

SCALE: 1" = 50'

SC-2

APPROVED FOR STAGE CONSTRUCTION AND TRAFFIC HANDLING WORK ONLY

STATE OF CALIFORNIA - DEPARTMENT OF TRANSPORTATION
Caltrans® OFFICE OF DESIGN A

FUNCTIONAL SUPERVISOR: SIMON KUO
CALCULATED-DESIGNED BY: SOLANGE PRADO
CHECKED BY: MAI P. BUI
REVISED BY
DATE REVISED

LAST REVISION 00-00-00
DATE PLOTTED => 21-MAY-2013
TIME PLOTTED => 13:22

Dist	COUNTY	ROUTE	POST MILES TOTAL PROJECT	SHEET No.	TOTAL SHEETS
07	LA	405	4.3	16	89

REGISTERED CIVIL ENGINEER 01-30-13 DATE

04-08-13
PLANS APPROVAL DATE

REGISTERED PROFESSIONAL ENGINEER SIMON KUO No. C52465 Exp. 12-31-14 CIVIL STATE OF CALIFORNIA

THE STATE OF CALIFORNIA OR ITS OFFICERS OR AGENTS SHALL NOT BE RESPONSIBLE FOR THE ACCURACY OR COMPLETENESS OF SCANNED COPIES OF THIS PLAN SHEET.

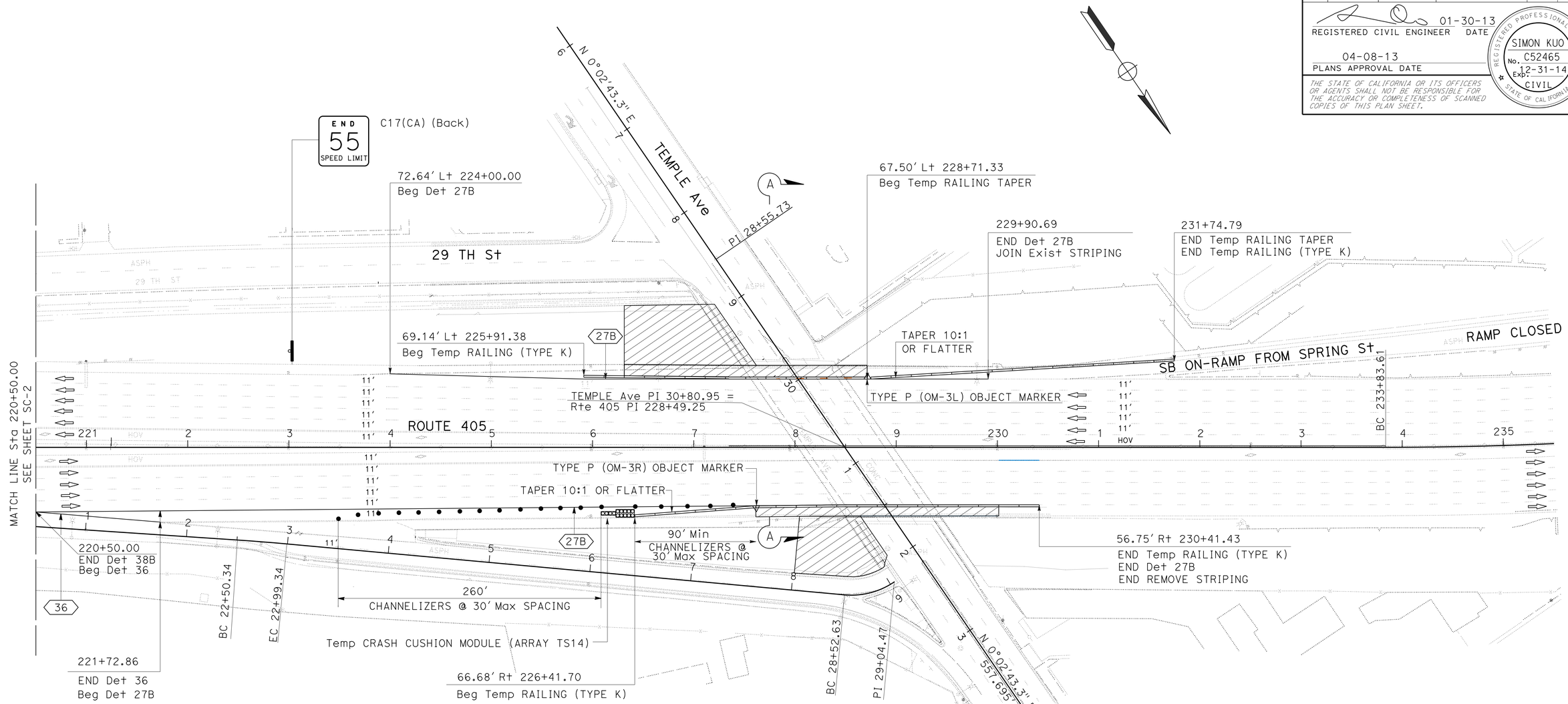

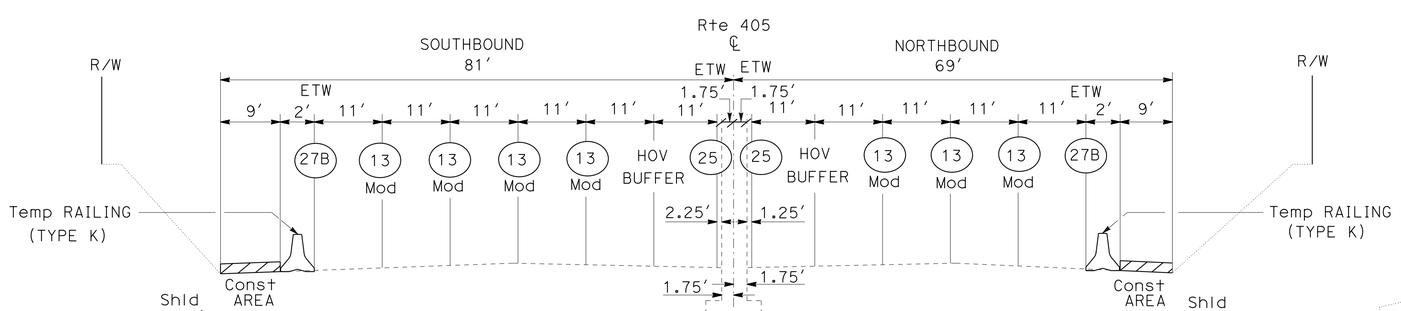

SECTION A-A

NO SCALE

APPROVED FOR STAGE CONSTRUCTION AND TRAFFIC HANDLING WORK ONLY

STAGE 1
STAGE CONSTRUCTION AND TRAFFIC HANDLING PLAN

SCALE: 1" = 50'

SC-3

STATE OF CALIFORNIA - DEPARTMENT OF TRANSPORTATION
Caltrans® OFFICE OF DESIGN A

FUNCTIONAL SUPERVISOR: SIMON KUO
CALCULATED-DESIGNED BY: SOLANGE PRADO
CHECKED BY: MAI P. BUI
REVISED BY
DATE REVISED

LAST REVISION 00-00-00
DATE PLOTTED => 21-MAY-2013
TIME PLOTTED => 13:22

BORDER LAST REVISED 7/2/2010
USERNAME => s125624
DGN FILE => 727830ma003.dgn
RELATIVE BORDER SCALE IS IN INCHES 0 1 2 3
UNIT 1798
PROJECT NUMBER & PHASE 07000005391

Dist	COUNTY	ROUTE	POST MILES TOTAL PROJECT	SHEET No.	TOTAL SHEETS
07	LA	405	4.3	17	89

REGISTERED CIVIL ENGINEER 01-03-13 DATE

04-08-13
PLANS APPROVAL DATE

REGISTERED PROFESSIONAL ENGINEER SIMON KUO No. C52465 Exp. 12-31-14 CIVIL STATE OF CALIFORNIA

THE STATE OF CALIFORNIA OR ITS OFFICERS OR AGENTS SHALL NOT BE RESPONSIBLE FOR THE ACCURACY OR COMPLETENESS OF SCANNED COPIES OF THIS PLAN SHEET.

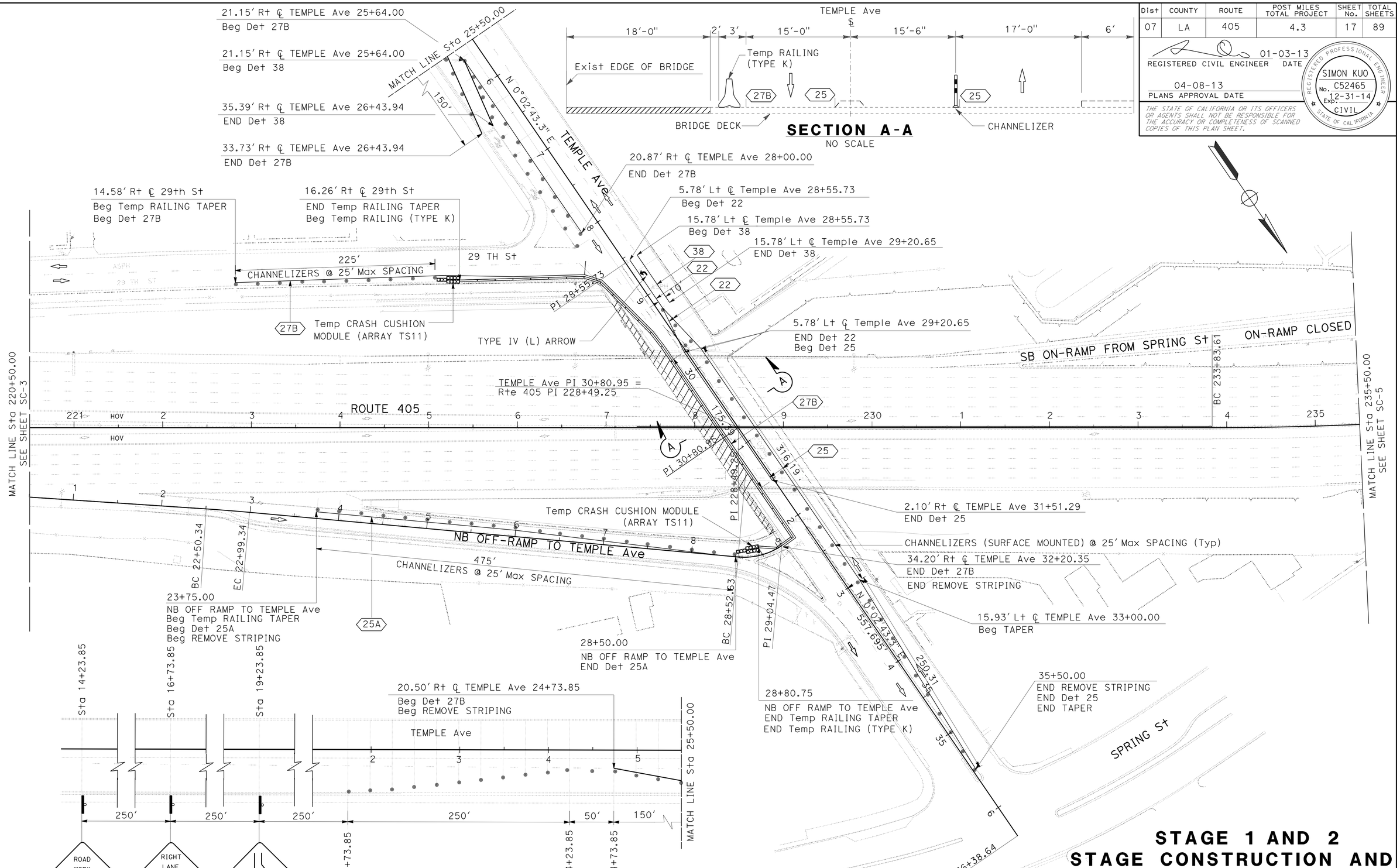

STAGE 1 AND 2 STAGE CONSTRUCTION AND TRAFFIC HANDLING PLAN

SCALE: 1" = 50'

SC-4

APPROVED FOR STAGE CONSTRUCTION AND TRAFFIC HANDLING WORK ONLY

STATE OF CALIFORNIA - DEPARTMENT OF TRANSPORTATION
Caltrans® OFFICE OF DESIGN A

FUNCTIONAL SUPERVISOR: SIMON KUO
CALCULATED-DESIGNED BY: SOLANGE PRADO
CHECKED BY: MAI P. BUI
REVISED BY
DATE REVISED

LAST REVISION 00-00-00
DATE PLOTTED => 21-MAY-2013
TIME PLOTTED => 13:22

Dist	COUNTY	ROUTE	POST MILES TOTAL PROJECT	SHEET No.	TOTAL SHEETS
07	LA	405	4.3	18	89

REGISTERED CIVIL ENGINEER 01-30-13 DATE

04-08-13
PLANS APPROVAL DATE

REGISTERED PROFESSIONAL ENGINEER
SIMON KUO
No. C52465
Exp. 12-31-14
CIVIL
STATE OF CALIFORNIA

THE STATE OF CALIFORNIA OR ITS OFFICERS OR AGENTS SHALL NOT BE RESPONSIBLE FOR THE ACCURACY OR COMPLETENESS OF SCANNED COPIES OF THIS PLAN SHEET.

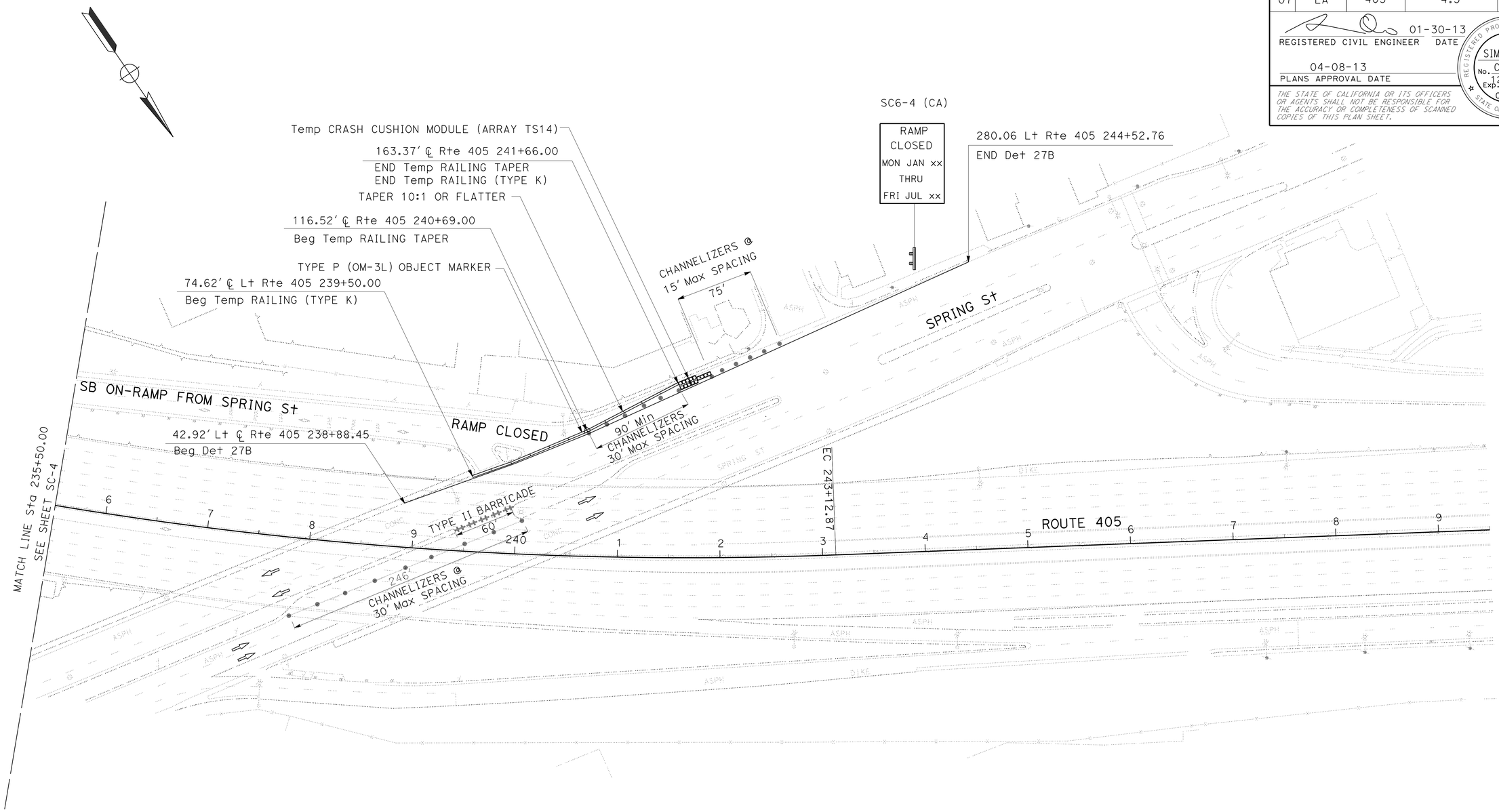

STAGE 1
STAGE CONSTRUCTION AND TRAFFIC HANDLING PLAN

SCALE: 1" = 50′

APPROVED FOR STAGE CONSTRUCTION AND TRAFFIC HANDLING WORK ONLY

SC-5

STATE OF CALIFORNIA - DEPARTMENT OF TRANSPORTATION
Caltrans® OFFICE OF DESIGN A

FUNCTIONAL SUPERVISOR: SIMON KUO
CALCULATED-DESIGNED BY: SOLANGE PRADO
CHECKED BY: MAI P. BUI
REVISED BY
DATE REVISED

LAST REVISION 00-00-00
DATE PLOTTED => 21-MAY-2013
TIME PLOTTED => 13:22

Dist	COUNTY	ROUTE	POST MILES TOTAL PROJECT	SHEET No.	TOTAL SHEETS
07	LA	405	4.3	19	89

01-30-13
REGISTERED CIVIL ENGINEER DATE

04-08-13
PLANS APPROVAL DATE

REGISTERED PROFESSIONAL ENGINEER
SIMON KUO
No. C52465
Exp. 12-31-14
CIVIL
STATE OF CALIFORNIA

THE STATE OF CALIFORNIA OR ITS OFFICERS OR AGENTS SHALL NOT BE RESPONSIBLE FOR THE ACCURACY OR COMPLETENESS OF SCANNED COPIES OF THIS PLAN SHEET.

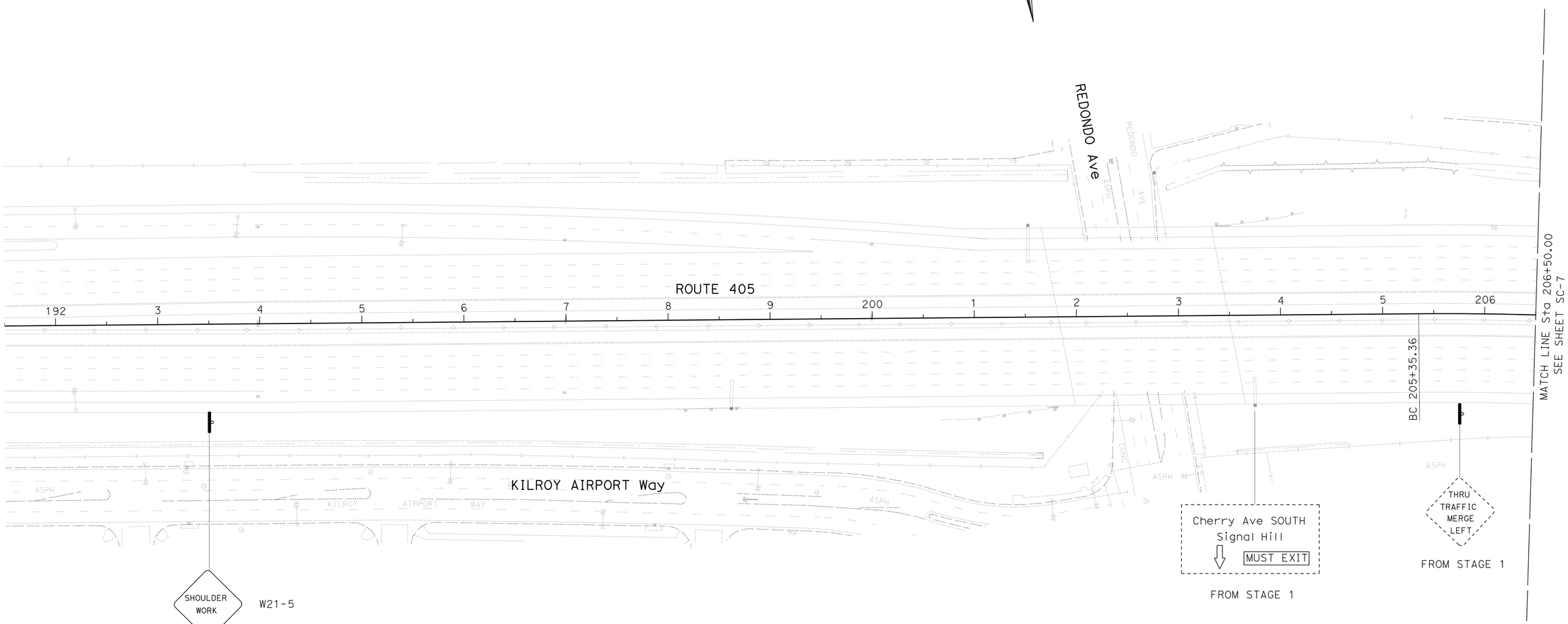

STAGE 2
STAGE CONSTRUCTION AND TRAFFIC HANDLING PLAN

SCALE: 1" = 50'

APPROVED FOR STAGE CONSTRUCTION AND TRAFFIC HANDLING WORK ONLY

SC-6

STATE OF CALIFORNIA - DEPARTMENT OF TRANSPORTATION
Caltrans® OFFICE OF DESIGN A

FUNCTIONAL SUPERVISOR: SIMON KUO
CALCULATED-DESIGNED BY: SOLANGE PRADO
CHECKED BY: MAI P. BUI
REVISED BY
DATE REVISED

LAST REVISION 00-00-00
DATE PLOTTED => 21-MAY-2013
TIME PLOTTED => 13:22

Dist	COUNTY	ROUTE	POST MILES TOTAL PROJECT	SHEET No.	TOTAL SHEETS
07	LA	405	4.3	20	89

REGISTERED CIVIL ENGINEER 01-30-13 DATE

04-08-13
PLANS APPROVAL DATE

REGISTERED PROFESSIONAL ENGINEER
SIMON KUO
No. C52465
Exp. 12-31-14
CIVIL
STATE OF CALIFORNIA

THE STATE OF CALIFORNIA OR ITS OFFICERS OR AGENTS SHALL NOT BE RESPONSIBLE FOR THE ACCURACY OR COMPLETENESS OF SCANNED COPIES OF THIS PLAN SHEET.

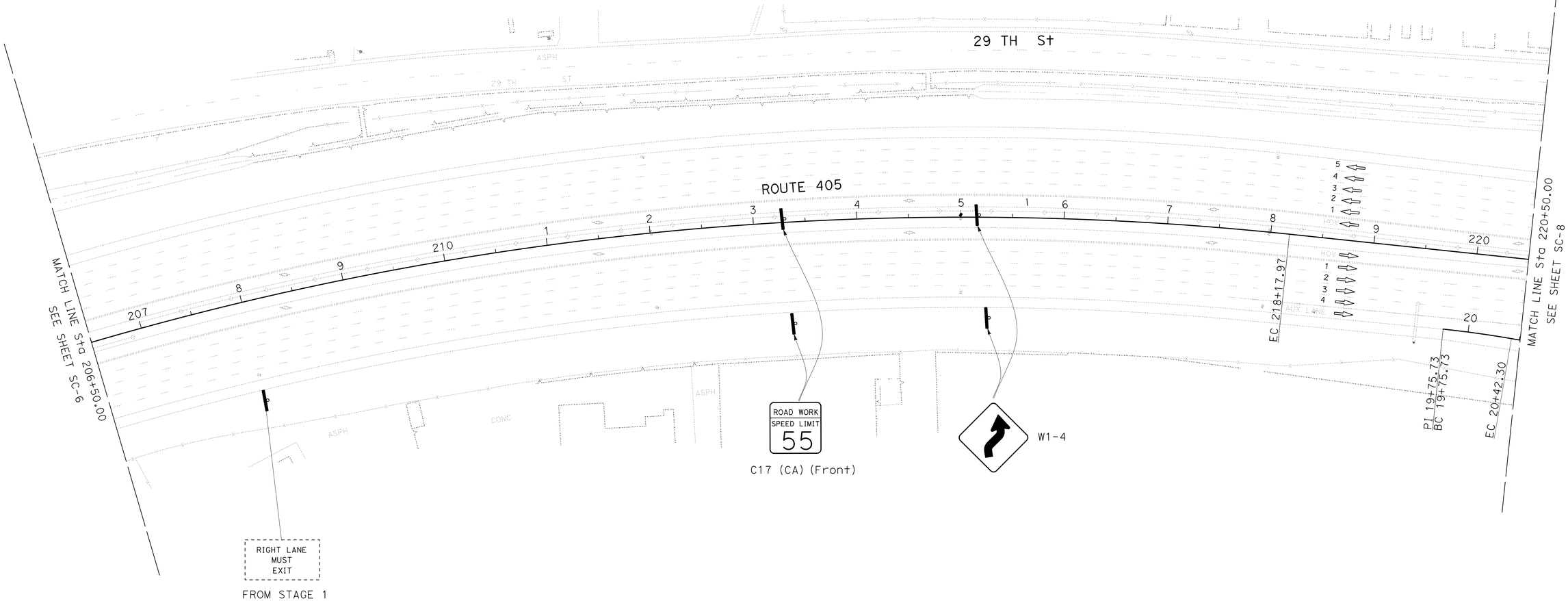

STAGE 2
STAGE CONSTRUCTION AND TRAFFIC HANDLING PLAN

SCALE: 1" = 50'

SC-7

APPROVED FOR STAGE CONSTRUCTION AND TRAFFIC HANDLING WORK ONLY

STATE OF CALIFORNIA - DEPARTMENT OF TRANSPORTATION
Caltrans® OFFICE OF DESIGN A

FUNCTIONAL SUPERVISOR: SIMON KUO
CALCULATED-DESIGNED BY: SOLANGE PRADO
CHECKED BY: MAI P. BUI
REVISED BY
DATE REVISED

LAST REVISION 00-00-00
DATE PLOTTED => 21-MAY-2013
TIME PLOTTED => 13:22

Dist	COUNTY	ROUTE	POST MILES TOTAL PROJECT	SHEET No.	TOTAL SHEETS
07	LA	405	4.3	21	89

REGISTERED CIVIL ENGINEER 01-30-13 DATE

04-08-13
PLANS APPROVAL DATE

REGISTERED PROFESSIONAL ENGINEER SIMON KUO No. C52465 Exp. 12-31-14 CIVIL STATE OF CALIFORNIA

THE STATE OF CALIFORNIA OR ITS OFFICERS OR AGENTS SHALL NOT BE RESPONSIBLE FOR THE ACCURACY OR COMPLETENESS OF SCANNED COPIES OF THIS PLAN SHEET.

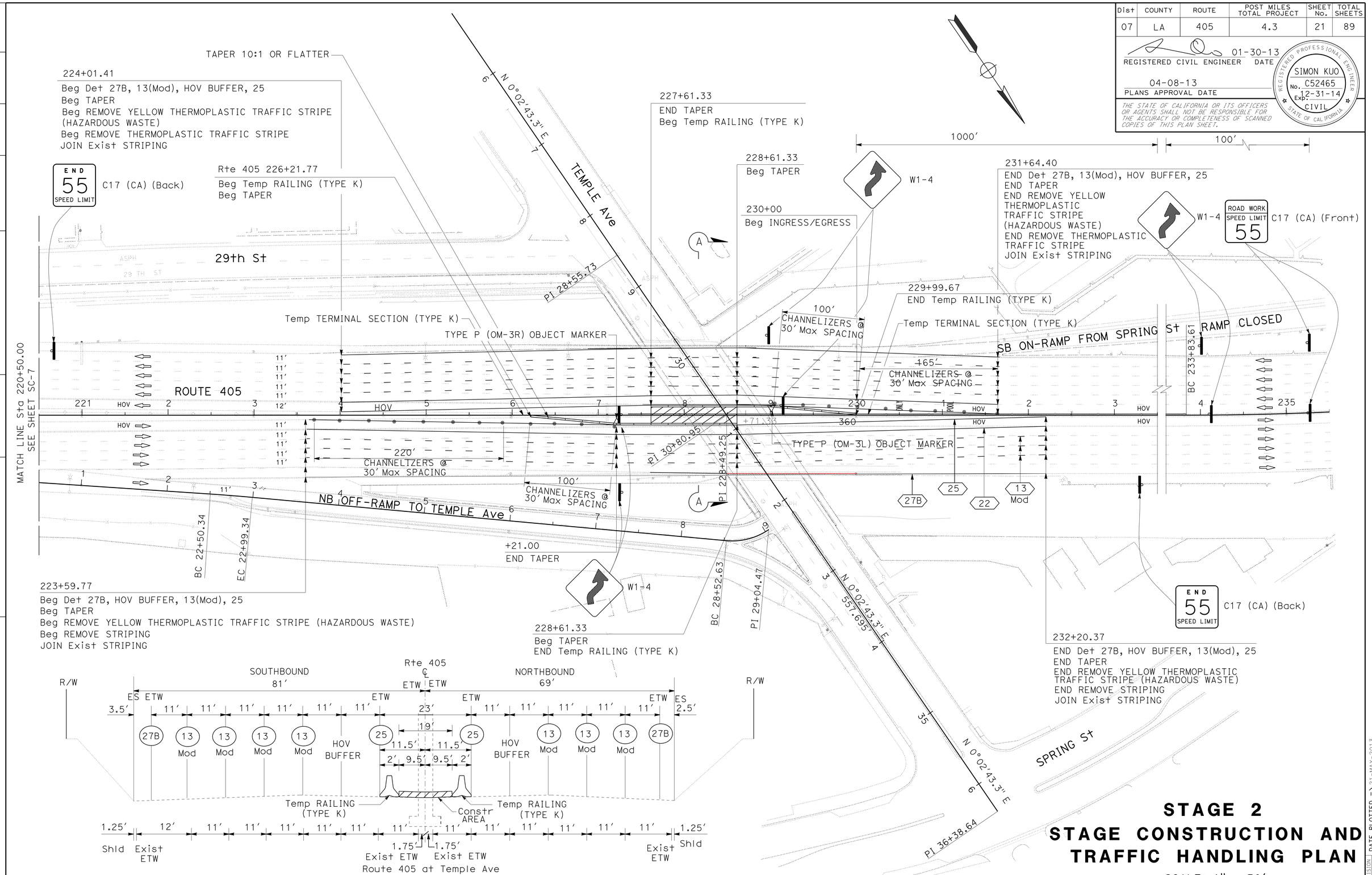

SECTION A-A

NO SCALE

APPROVED FOR STAGE CONSTRUCTION AND TRAFFIC HANDLING WORK ONLY

STAGE 2
STAGE CONSTRUCTION AND TRAFFIC HANDLING PLAN

SCALE: 1" = 50'

SC-8

STATE OF CALIFORNIA - DEPARTMENT OF TRANSPORTATION
Caltrans® OFFICE OF DESIGN A

FUNCTIONAL SUPERVISOR: SIMON KUO
CALCULATED-DESIGNED BY: MAI P. BUI
CHECKED BY: SOLANGE PRADO
REVISED BY / DATE REVISED

LAST REVISION 00-00-00 | DATE PLOTTED => 21-MAY-2013 | TIME PLOTTED => 13:22

BORDER LAST REVISED 7/2/2010 | USERNAME => s125624 | DGN FILE => 727830ma008.dgn | RELATIVE BORDER SCALE IS IN INCHES 0 1 2 3 | UNIT 1798 | PROJECT NUMBER & PHASE 07000005391

Dist	COUNTY	ROUTE	POST MILES TOTAL PROJECT	SHEET No.	TOTAL SHEETS
07	LA	405	4.3	22	89

REGISTERED CIVIL ENGINEER 01-30-13 DATE

04-08-13
PLANS APPROVAL DATE

REGISTERED PROFESSIONAL ENGINEER SIMON KUO No. C52465 Exp. 12-31-14 CIVIL STATE OF CALIFORNIA

THE STATE OF CALIFORNIA OR ITS OFFICERS OR AGENTS SHALL NOT BE RESPONSIBLE FOR THE ACCURACY OR COMPLETENESS OF SCANNED COPIES OF THIS PLAN SHEET.

TRAFFIC HANDLING QUANTITIES

SHEET	LOCATION	STATION	DETAIL No PAVEMENT MARKING	PAVEMENT MARKER NON-REFLECTIVE TYPE A	PAVEMENT MARKER RETROREFLECTIVE TYPE C	PAVEMENT MARKER RETROREFLECTIVE TYPE G	PAVEMENT MARKER RETROREFLECTIVE TYPE H	PAVEMENT MARKER RETROREFLECTIVE TYPE D	PAINT TRAFFIC STRIPE (2-COAT) 4"	PAINT TRAFFIC STRIPE (2-COAT) 8"	PAINT PAVEMENT MARKING (2-COAT) WORDS	PAINT PAVEMENT MARKING (2-COAT) SYMBOLS	REMOVE THERMOPLASTIC PAVEMENT MARKING "SIGNAL"	REMOVE THERMOPLASTIC PAVEMENT MARKING "AHEAD"	REMOVE THERMOPLASTIC PAVEMENT MARKING TYPE III (L) (R) ARROW	REMOVE THERMOPLASTIC PAVEMENT MARKING LIMIT LINE	REMOVE PAVEMENT MARKER NON-REFLECTIVE TYPE A	REMOVE PAVEMENT MARKER TYPE G	REMOVE PAVEMENT MARKER TYPE H	REMOVE PAVEMENT MARKER TYPE D	REMOVE THERMOPLASTIC TRAFFIC STRIPE	REMOVE YELLOW THERMOPLASTIC TRAFFIC STRIPE (HAZARDOUS WASTE)	TEMPORARY RAILING (TYPE K)	TEMPORARY CRASH CUSHION MODULE	CHANNELIZER (SURFACE MOUNTED)	TYPE II BARRICADE	TEMPORARY TERMINAL SECTION (TYPE K)	REMARKS
				EA	EA	EA	EA	EA	LF	LF	SQFT	SQFT	SQFT	SQFT	SQFT	SQFT	EA	EA	EA	EA	LF	LF	LF	EA	EA	EA	EA	
SC-1	NB Rte 405	205+00 TO 206+50	37			10				300*																		STAGE 1
	NB Rte 405	205+00 TO 206+50	13 Mod														14	4			42							
SC-2	NB Rte 405	206+50 TO 217+75	37		8	68				2,250*																		
	NB Rte 405	217+75 TO 220+50	38B			24				550*																		
	NB Rte 405	206+50 TO 220+50	13 Mod														115	29			348							
SC-3	NB Rte 405	220+50 TO 221+73	36			11				492*																		
	NB Rte 405	221+73 TO 230+41	27B						868																			
	NB Rte 405	226+41 TO 230+41																					400	14	19			
	NB Rte 405	220+50 TO 230+41	13 Mod														35	48			348							
	SB Rte 405	224+00 TO 229+91	27B						591																			
	SB Rte 405	225+92 TO 231+75																					580					
SC-4	NB OFF-RAMP	23+75 TO 28+50	25A				20		475															11	20			
	Temple Ave	24+74 TO 35+50	27B						836			15											400		67			
	Temple Ave	28+56 TO 29+21	22					17	370																			
	Temple Ave	25+64 TO 26+44	38			5				160*																		
	Temple Ave	28+56 TO 29+21	38			4				130*								3			130							
	Temple Ave	29+21 TO 35+50	25				19		861										8			344						
	29th St		27B						395														140	11	10			
	NB OFF-RAMP	23+75 TO 28+53	12										64	62	168	50		7			134							
	Temple Ave	24+74 TO 35+50	12															30			360							
	Temple Ave	28+56 TO 31+52	22																	30		329						
SC-5	Spring St	Rte 405 238+89 TO 244+53	27B						598																			STAGE 2
	Spring St																						220	14	21	5		
SC-8	NB Rte 405	223+60 TO 232+21	27B						861												861							
	NB Rte 405	223+60 TO 232+21	13 Mod	215		54			2,583								215	55			646							
	NB Rte 405	223+60 TO 232+21	HOV BUFFER				38		1,722										38			1,722						
	NB Rte 405	223+60 TO 232+21	25				19		861										19			861						
	NB Rte 405	226+22 TO 228+62																					240		21			
	SB Rte 405	224+01 TO 231+65	27B						764												764						2	
	SB Rte 405	224+01 TO 231+65	13 Mod	255		64			3,056								255	65			764							
	SB Rte 405	224+01 TO 231+65	HOV BUFFER			8	25		1,198	329*	46	11						8	25			1,198						
	SB Rte 405	224+01 TO 231+65	25				17		764										17			764						
	SB Rte 405	227+61 TO 230+00																					240					
SUBTOTAL				470	8	248	138	17	16,803	4,211	46	26	64	62	168	50	634	249	107	30	4,397	5,218	2,220	50	158	5	2	
SHEET TOTAL				470	411				21,014		72		344				1,020				4,397	5,218	2,220	50	158	5	2	

* 8" WIDE STRIPES ARE MEASURED AS 2 TRAFFIC STRIPES.

STAGE CONSTRUCTION AND TRAFFIC HANDLING QUANTITIES

SCQ-1

STATE OF CALIFORNIA - DEPARTMENT OF TRANSPORTATION
Caltrans® OFFICE OF DESIGN A

FUNCTIONAL SUPERVISOR: SIMON KUO
CALCULATED-DESIGNED BY: MAI P. BUI
CHECKED BY: SOLANGE PRADO
REVISED BY / DATE REVISED

LAST REVISION 00-00-00
DATE PLOTTED => 21-MAY-2013
TIME PLOTTED => 13:22

Dist	COUNTY	ROUTE	POST MILES TOTAL PROJECT	SHEET No.	TOTAL SHEETS
07	LA	405	4.3	23	89

REGISTERED CIVIL ENGINEER 01-30-13 DATE

04-08-13
PLANS APPROVAL DATE

REGISTERED PROFESSIONAL ENGINEER SIMON KUO No. C52465 Exp. 12-31-14 CIVIL STATE OF CALIFORNIA

THE STATE OF CALIFORNIA OR ITS OFFICERS OR AGENTS SHALL NOT BE RESPONSIBLE FOR THE ACCURACY OR COMPLETENESS OF SCANNED COPIES OF THIS PLAN SHEET.

NOTES:

1. LOCATION OF STAGE CONSTRUCTION AND TRAFFIC HANDLING SIGNS SHOWN ARE APPROXIMATE.
2. SIGN CODES PER 2012 CALIFORNIA MUTCD (MANUAL ON UNIFORM TRAFFIC CONTROL DEVICES).
3. FOR ADDITIONAL CONSTRUCTION AREA SIGN LOCATIONS, DETAILS AND QUANTITIES, SEE CONSTRUCTION AREA SIGN PLAN CS-1,

STATIONARY MOUNTED CONSTRUCTION AREA SIGNS

SHEET	LOCATION	SIGN CODE	PANEL SIZE	SIGN MESSAGE	NUMBER OF POSTS AND SIZE	NUMBER OF SIGNS	REMARKS
SC-1	NB Rte 405	W73 (CA)	48" x 48"	RIGHT LANE EXITS AHEAD	1 - 4" x 6"	1	STAGE 1
	NB Rte 405	W74 (CA)	48" x 48"	THRU TRAFFIC MERGE LEFT	1 - 4" x 6"	1	
	NB Rte 405	OVERLAY		MUST EXIT		1	
SC-2	NB Rte 405	R18A (CA)	66" x 48"	RIGHT LANE MUST EXIT	2 - 4" x 6"	1	
	NB Rte 405	W21-5b	36" x 36"	RIGHT SHOULDER CLOSED 1000 FEET	1 - 4" x 4"	1	
	NB Rte 405	C30A (CA)	36" x 36"	SHOULDER CLOSED	1 - 4" x 4"	1	
	NB Rte 405	W7-3aP	36" x 30"	NEXT 1/4 MILES	1 - 4" x 4"	1	
SC-3	SB Rte 405	C17 (CA) (Back)	48" x 48"	END 55 SPEED LIMIT	1 - 4" x 6"	1	
SC-4	NB TEMPLE Ave	W20-1	48" x 48"	ROAD WORK AHEAD	1 - 4" x 6"	1	
	NB TEMPLE Ave	C20 (CA)	48" x 48"	RIGHT LANE CLOSED AHEAD	1 - 4" x 6"	1	
	NB TEMPLE Ave	W4-2	48" x 48"	LANE ENDS SYMBOL	1 - 4" x 6"	1	
SC-5	EB SPRING St	SC6-4 (CA)	48" x 60"	RAMP CLOSED MON JAN xx FRI JUL xx	2 - 4" x 6"	1	
SC-6	NB Rte 405	W21-5	48" x 48"	SHOULDER WORK	1 - 4" x 6"	1	STAGE 2
SC-7	NB Rte 405	C17 (CA) (Front)	48" x 48"	ROAD WORK SPEED LIMIT 55	1 - 4" x 6"	2	
	NB Rte 405	W1-4	48" x 48"	CURVE AHEAD SYMBOL	1 - 4" x 6"	2	
SC-8	NB Rte 405	W1-4	48" x 48"	CURVE AHEAD SYMBOL	1 - 4" x 6"	2	
	NB Rte 405	C17 (CA) (Back)	48" x 48"	END 55 SPEED LIMIT	1 - 4" x 6"	1	
	SB Rte 405	C17 (CA) (Back)	48" x 48"	END 55 SPEED LIMIT	1 - 4" x 6"	1	
	SB Rte 405	W1-4	48" x 48"	CURVE AHEAD SYMBOL	1 - 4" x 6"	4	
	SB Rte 405	C17 (CA) (Front)	48" x 48"	ROAD WORK SPEED LIMIT 55	1 - 4" x 6"	2	

STAGE CONSTRUCTION AND TRAFFIC HANDLING QUANTITIES

SCQ-2

REVISED BY | DATE REVISED
SOLANGE PRADO | MAI P. BUI
CALCULATED-DESIGNED BY | CHECKED BY
FUNCTIONAL SUPERVISOR: SIMON KUO
STATE OF CALIFORNIA - DEPARTMENT OF TRANSPORTATION
Caltrans® OFFICE OF DESIGN A

LAST REVISION 00-00-00 | DATE PLOTTED => 21-MAY-2013 | TIME PLOTTED => 13:22

Dist	COUNTY	ROUTE	POST MILES TOTAL PROJECT	SHEET No.	TOTAL SHEETS
07	LA	405	4.3	24	89

R.M. Mishreki 9-4-12
REGISTERED CIVIL ENGINEER DATE

04-08-13
PLANS APPROVAL DATE

REGISTERED PROFESSIONAL ENGINEER R.M. MISHREKI No. C68484 Exp. 9-30-13 CIVIL STATE OF CALIFORNIA

THE STATE OF CALIFORNIA OR ITS OFFICERS OR AGENTS SHALL NOT BE RESPONSIBLE FOR THE ACCURACY OR COMPLETENESS OF SCANNED COPIES OF THIS PLAN SHEET.

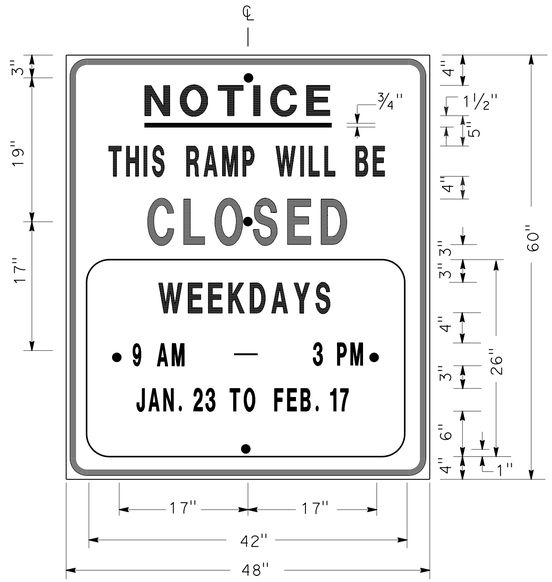

SIGN SP-1

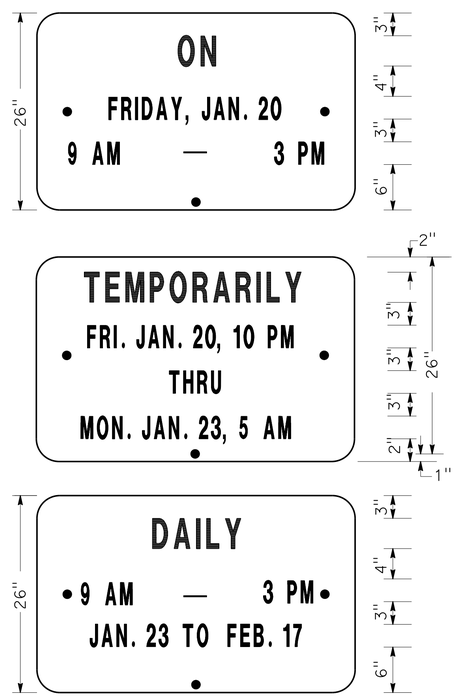

ALTERNATE OVERLAY PANELS (TYPICAL)

SPECIAL ADVANCE NOTICE PUBLICITY SIGN

NOTES: (SIGN SP-1)

1. LETTERS AND BORDER SHALL BE BLACK ON REFLECTORIZED ORANGE BACKGROUND.
2. BOLT HOLES SHALL BE 3/8" DIAMETER.
3. BASE MATERIAL SHALL BE ALUMINUM (MINIMUM 0.06").
4. SIGNS SHALL BE MOUNTED WITH BOTTOMS OF SIGNS A MINIMUM OF 7' ABOVE GROUND.

SIZE	BORDER WIDTH	MARGIN WIDTH	LETTER SIZE					CORNER RADIUS
			LINE 1	LINE 2*	LINE 3	LINE 4	LINE 5, 6, & 7*	
48"x60"	1 1/4"	3/4"	4E	4D	6E	4D		3"
42"x26"	OVERLAY						3D	1 1/2"
* CONDENSED SPACING IF NECESSARY								

SIGN SP-4

NOTES: (SIGN SP-4)

1. LETTERS - 6" SERIES C.
2. LETTERS AND BORDER SHALL BE BLACK ON REFLECTORIZED WHITE BACKGROUND.
3. BOLT HOLES SHALL BE 3/8" DIAMETER.
4. BASE MATERIAL SHALL BE ALUMINUM (MINIMUM 0.06").
5. SIGNS SHALL BE PLACED AT RAMP ENTRANCES IN ADDITION TO SIGNS POSTED IN ACCORDANCE WITH STANDARD PLAN T14.

SPECIAL SIGN FOR ENTRANCE RAMP CLOSURES

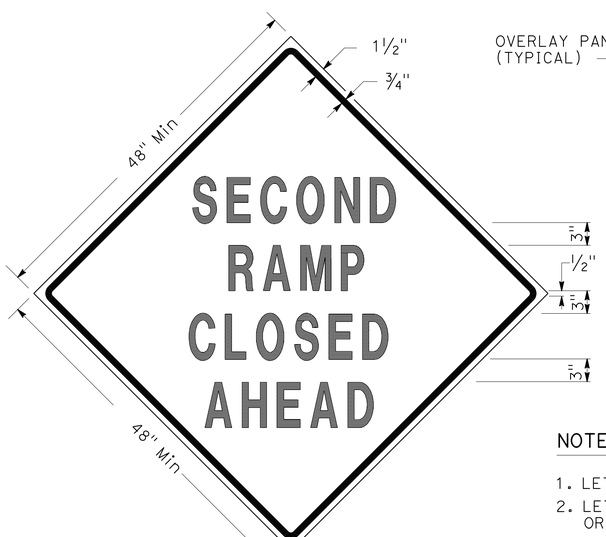

SIGN SP-3

SIGN SP-5

NOTES: (SIGNS SP-3 & SP-5)

1. LETTERS - 6" SERIES D.
2. LETTERS AND BORDER SHALL BE BLACK ON REFLECTORIZED ORANGE BACKGROUND.
3. BOLT HOLES SHALL BE 3/8" DIAMETER.
4. BASE MATERIAL SHALL BE ALUMINUM (MINIMUM 0.06").
5. SIGNS SHALL BE MOUNTED WITH BOTTOMS OF SIGNS A MINIMUM OF 7' ABOVE GROUND.
6. SIGN SP-5 SHALL BE USED IF THE OFF-RAMP TO BE CLOSED FOLLOWS A FREEWAY OFF-CONNECTOR.

SPECIAL SIGNS FOR EXIT RAMP CLOSURES

TRAFFIC HANDLING DETAILS
TRAFFIC CONTROL SYSTEM FOR RAMP CLOSURES, DETOUR SIGNS, AND MISCELLANEOUS DETAILS
SHEET 1 OF 2

NO SCALE

THD-1

REVISED BY	DATE REVISED
JC	3/12

ALBERT K YU — JOCELYN C CHIANG — CALCULATED-DESIGNED BY / CHECKED BY

FUNCTIONAL SUPERVISOR: DENIS KATAYAMA

STATE OF CALIFORNIA - DEPARTMENT OF TRANSPORTATION — Caltrans — DTM

LAST REVISION 00-00-00 — DATE PLOTTED => 21-MAY-2013 — TIME PLOTTED => 13:22

Dist	COUNTY	ROUTE	POST MILES TOTAL PROJECT	SHEET No.	TOTAL SHEETS
07	LA	405	4.3	25	89

R.M. Mishreki 9-4-12
REGISTERED CIVIL ENGINEER DATE

04-08-13
PLANS APPROVAL DATE

REGISTERED PROFESSIONAL ENGINEER R.M. MISHREKI No. C68484 Exp. 9-30-13 CIVIL STATE OF CALIFORNIA

THE STATE OF CALIFORNIA OR ITS OFFICERS OR AGENTS SHALL NOT BE RESPONSIBLE FOR THE ACCURACY OR COMPLETENESS OF SCANNED COPIES OF THIS PLAN SHEET.

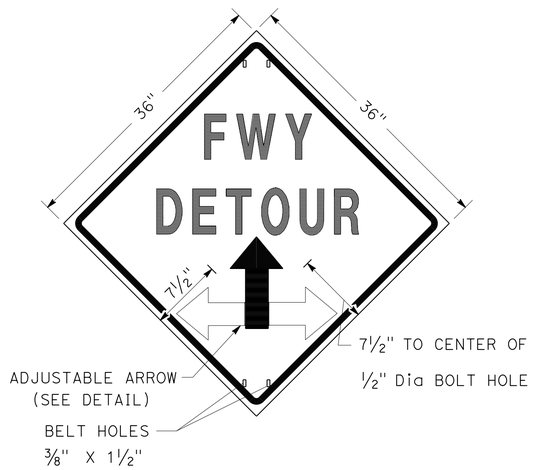

SIGN SP-2

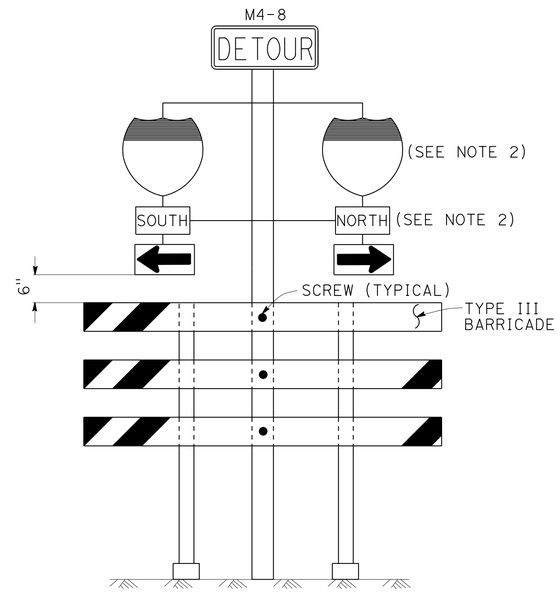

SIGN SP-6 (SEE NOTE 1)

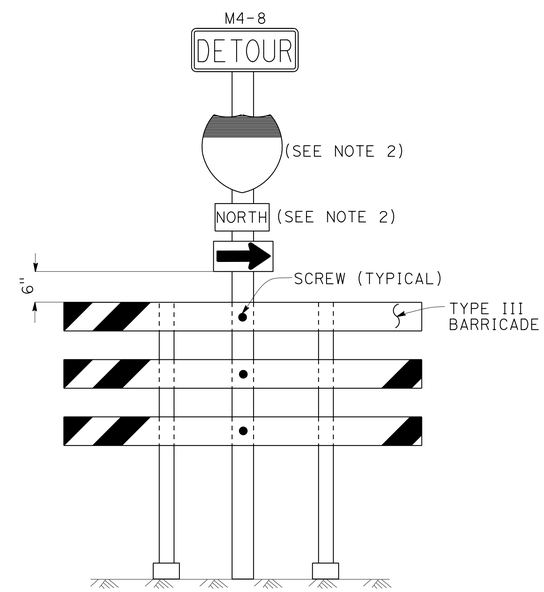

SIGN SP-7 (SEE NOTE 1)

NOTES: SIGN SP-2

1. LETTERS - 6" SERIES E.
2. LETTERS, BORDER AND ARROW - BLACK ON RETROREFLECTORIZED ORANGE BACKGROUND.
3. BASE MATERIAL FOR SIGNS AND ARROWS SHALL BE ALUMINUM (MINIMUM 0.06").
4. BELTS (LUGGAGE STRAPS) SHALL BE 1" WIDE BY 48" LONG, MADE OF COTTON OR POLYPROPYLENE WEB MATERIAL.
5. SIGNS SHALL BE MOUNTED WITH BOTTOMS OF SIGNS A MINIMUM OF 7' ABOVE GROUND EXCEPT AS OTHERWISE SHOWN ON OTHER TRAFFIC HANDLING DETAILS PLANS.

NOTES: SIGNS SP-6 & SP-7

1. IN LIEU OF PLACING SIGNS ON TYPE III BARRICADES, SIGNS, INCLUDING POSTS, MAY BE PLACED INTO THE GROUND OR FASTENED ONTO ELECTROLIERS.
2. USE APPROPRIATE ROUTE MARKER [G26-2(CA), G27-2(CA), G28-2(CA)] AND CARDINAL DIRECTION [NORTH (M3-1), SOUTH (M3-3), EAST (M3-2), WEST (M3-4)].

SPECIAL PORTABLE FREEWAY DETOUR SIGNS

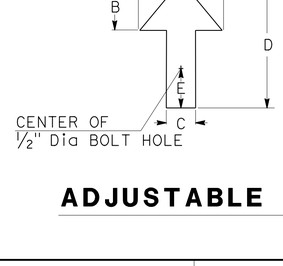

DIMENSIONS				
A	B	C	D	E
6"	3"	2"	8"	1"

ADJUSTABLE ARROW DETAIL

ABBREVIATION

(CA) CALIFORNIA CODE

TRAFFIC HANDLING DETAILS

TRAFFIC CONTROL SYSTEM FOR RAMP CLOSURES, DETOUR SIGNS, AND MISCELLANEOUS DETAILS

SHEET 2 OF 2

NO SCALE

THD-2

STATE OF CALIFORNIA - DEPARTMENT OF TRANSPORTATION
Caltrans® DTM

FUNCTIONAL SUPERVISOR: DENIS KATAYAMA
CALCULATED-DESIGNED BY: ALBERT K YU
CHECKED BY: JOCELYN C CHIANG
REVISED BY: JC
DATE REVISED: 3/12

LAST REVISION 00-00-00 | DATE PLOTTED => 21-MAY-2013 | TIME PLOTTED => 13:22

Dist	COUNTY	ROUTE	POST MILES TOTAL PROJECT	SHEET No.	TOTAL SHEETS
07	LA	405	4.3	26	89

R.M. Mishreki 9-4-12
REGISTERED CIVIL ENGINEER DATE

04-08-13
PLANS APPROVAL DATE

REGISTERED PROFESSIONAL ENGINEER R.M. MISHREKI No. C68484 Exp. 9-30-13 CIVIL STATE OF CALIFORNIA

THE STATE OF CALIFORNIA OR ITS OFFICERS OR AGENTS SHALL NOT BE RESPONSIBLE FOR THE ACCURACY OR COMPLETENESS OF SCANNED COPIES OF THIS PLAN SHEET.

LEGEND

- SIGN SP-2
- AND/OR — DESIGNATED DETOUR ROUTE
- DETOUR DIRECTION
- CONTROLLED INTERSECTION

NOTES:

1. SP-2 SIGNS MAY BE STRAPPED ON EXISTING ELECTROLIER, SIGNAL POST OR SIGN POST.
2. SP-2 SIGNS SHALL NOT BE INSTALLED ON BARRICADES EXCEPT AS OTHERWISE SHOWN.
3. SIGN LOCATIONS ARE APPROXIMATE. EXACT LOCATIONS WILL BE DETERMINED BY THE ENGINEER.
4. SP-2 SIGNS SHALL BE POSTED AT EACH CONTROLLED INTERSECTION (EXCEPT AT COMMERCIAL PROPERTY, RESIDENTIAL COMPLEX OR T-INTERSECTION FROM ONE-WAY STREET) ALONG THE DESIGNATED DETOUR ROUTE.
5. UNLESS OTHERWISE SHOWN ON OTHER THD PLANS, WHEN CONTROLLED INTERSECTIONS ALONG THE DESIGNATED DETOUR ROUTE ARE CLOSELY SPACED, PLACE SP-2 SIGNS AT CONTROLLED INTERSECTIONS AT A DISTANCE NOT TO EXCEED 1/4 MILE FROM THE PRECEDING DETOUR SIGN.
6. EXCEPT AS OTHERWISE SHOWN ON OTHER PLANS OR SPECIFIED IN THE SPECIAL PROVISIONS, SP-2 SIGNS SHALL BE PLACED AS SHOWN ON THIS PLAN.

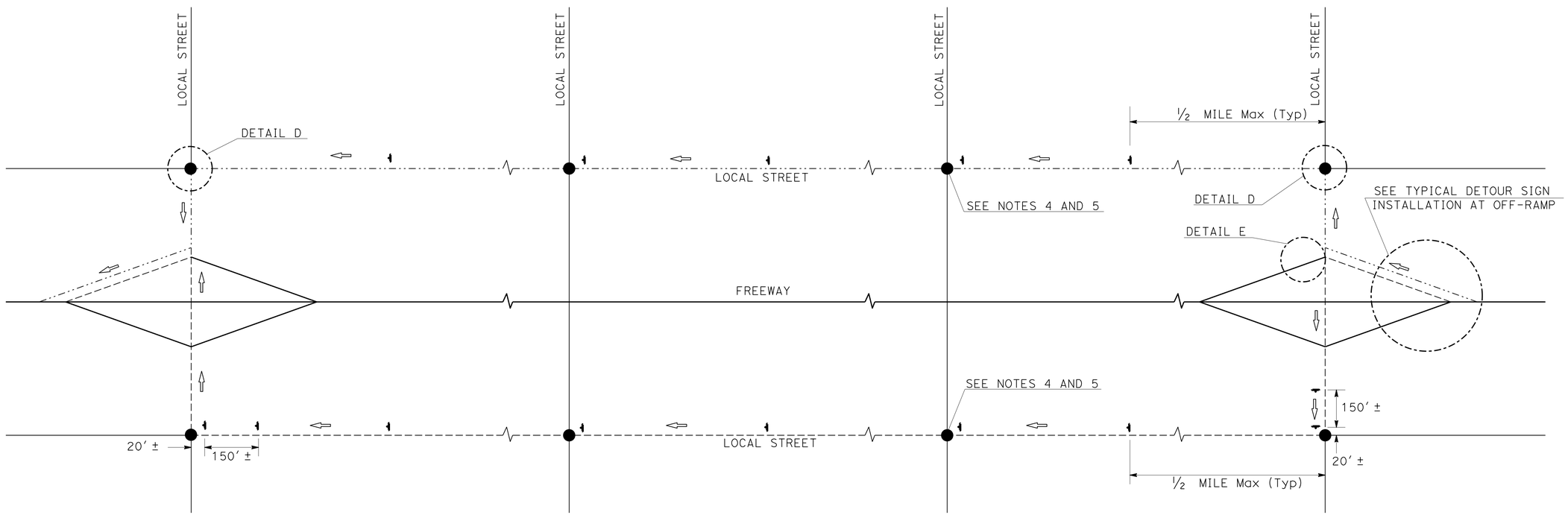

TYPICAL DETOUR SIGN INSTALLATION ALONG DESIGNATED DETOUR ROUTE

TRAFFIC HANDLING DETAILS

TRAFFIC CONTROL SYSTEM FOR DETOUR SIGN INSTALLATION ALONG DESIGNATED DETOUR ROUTE

SHEET 1 OF 3

NO SCALE

THD-3

STATE OF CALIFORNIA - DEPARTMENT OF TRANSPORTATION
Caltrans DTM

FUNCTIONAL SUPERVISOR: DENIS KATAYAMA
CALCULATED-DESIGNED BY: ALBERT K YU
CHECKED BY: JOCELYN C CHIANG
REVISED BY: JC
DATE REVISED: 3/12

LAST REVISION 00-00-00
DATE PLOTTED => 21-MAY-2013
TIME PLOTTED => 13:22

Dist	COUNTY	ROUTE	POST MILES TOTAL PROJECT	SHEET No.	TOTAL SHEETS
07	LA	405	4.3	27	89

R.M. Mishreki 9-4-12
REGISTERED CIVIL ENGINEER DATE

04-08-13
PLANS APPROVAL DATE

REGISTERED PROFESSIONAL ENGINEER R.M. MISHREKI No. C68484 Exp. 9-30-13 CIVIL STATE OF CALIFORNIA

THE STATE OF CALIFORNIA OR ITS OFFICERS OR AGENTS SHALL NOT BE RESPONSIBLE FOR THE ACCURACY OR COMPLETENESS OF SCANNED COPIES OF THIS PLAN SHEET.

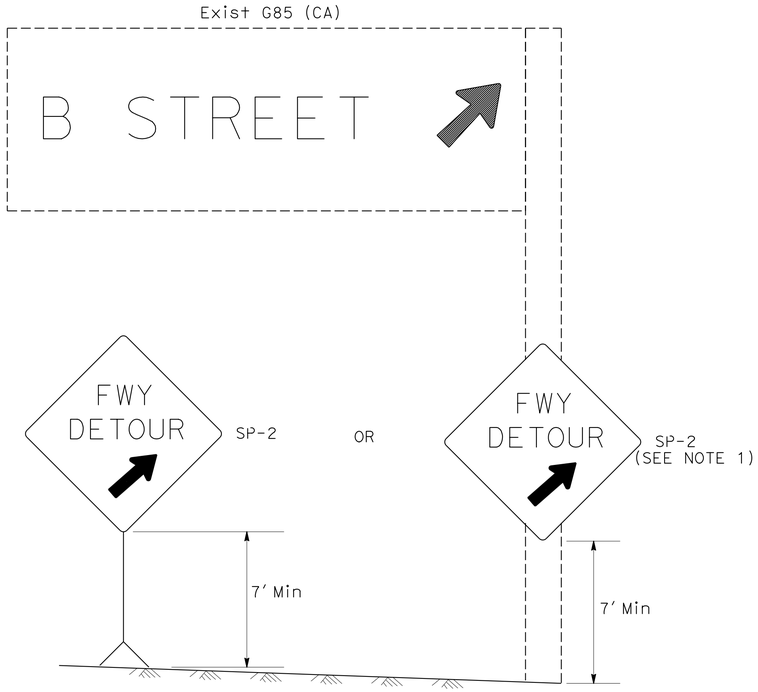

DETAIL A (SEE NOTE 3)

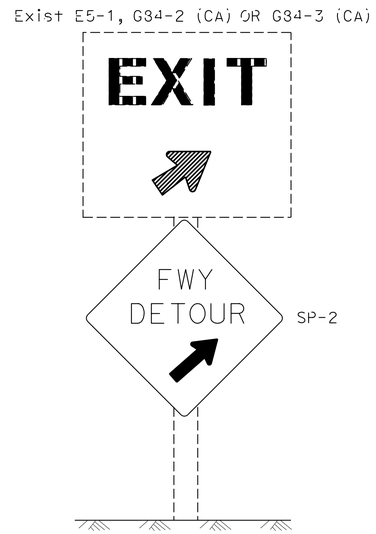

DETAIL B (SEE NOTE 3)

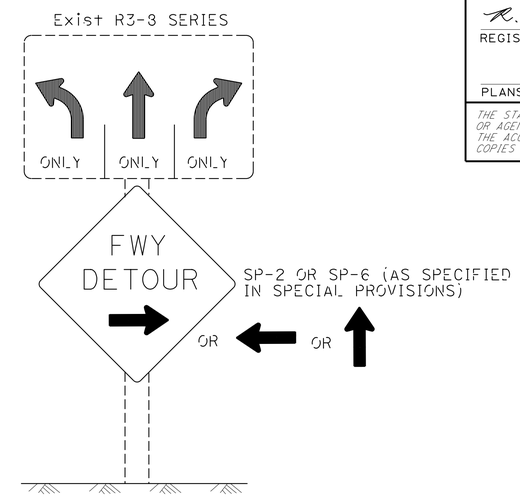

DETAIL C (SEE NOTES 4, 5, AND 6)

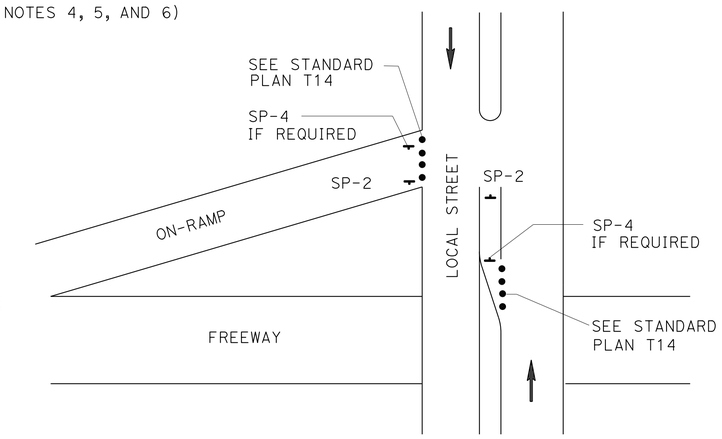

DETAIL E

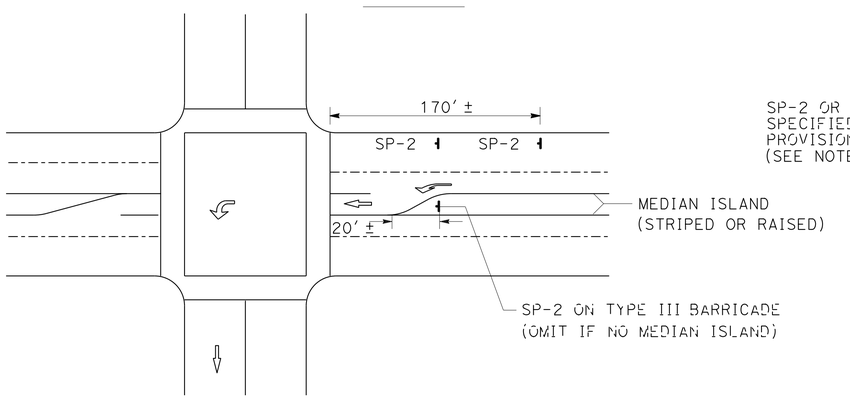

DETAIL D

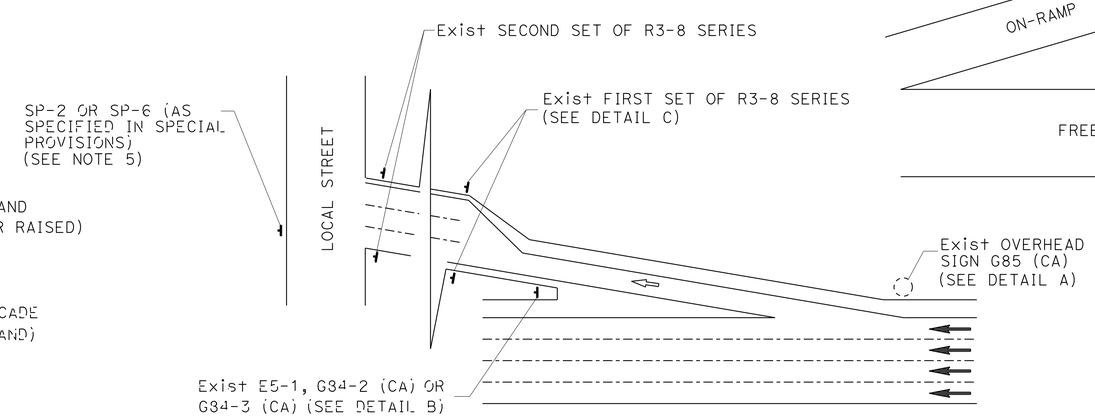

TYPICAL DETOUR SIGN INSTALLATION AT OFF-RAMP

LEGEND

- CONE
- PORTABLE SIGN
- DIRECTION OF TRAVEL
- DETOUR DIRECTION
- EXISTING OVERHEAD SIGN

NOTES: SIGN SP-2

1. SP-2 SIGNS MAY BE STRAPPED ON EXISTING ELECTROLIER, SIGNAL POST OR SIGN POST.
2. SP-2 SIGNS SHALL NOT BE INSTALLED ON BARRICADES EXCEPT AS OTHERWISE SHOWN.
3. OMIT DETAILS A AND B FOR FULL FREEWAY CLOSURES.
4. SEE TRAFFIC HANDLING DETAILS-TRAFFIC CONTROL SYSTEM FOR RAMP CLOSURES, DETOUR SIGNS, AND MISCELLANEOUS DETAILS PLAN SHEET 2 OF 2 FOR SP-6 SIGN DETAILS.
5. IF R3-8 SERIES SIGNS ARE NOT PRESENT AT THE OFF-RAMP, SP-2 OR SP-6 SIGNS SHALL BE FASTENED ONTO EXISTING ELECTROLIER, SIGNAL POST OR SIGN POST.
6. EXCEPT FOR DETAILS A & B, OMIT SP-2 SIGNS IF RAMP HAS MANDATORY SINGLE MOVE.

SIGN CODE LEGEND

XXYY-Y: FEDERAL SIGN CODE PER MANUAL ON UNIFORM TRAFFIC CONTROL DEVICES (MUTCD)

XXYY-Y (CA): CALIFORNIA SIGN CODE PER CALIFORNIA MUTCD

TRAFFIC HANDLING DETAILS
TRAFFIC CONTROL SYSTEM FOR DETOUR SIGN INSTALLATION ALONG DESIGNATED DETOUR ROUTE
SHEET 2 OF 3

NO SCALE

THD-4

STATE OF CALIFORNIA - DEPARTMENT OF TRANSPORTATION
Caltrans® DTM

FUNCTIONAL SUPERVISOR: DENIS KATAYAMA
REVISED BY: JC — DATE REVISED: 3/12
ALBERT K YU — JOCELYN C CHIANG
CALCULATED-DESIGNED BY — CHECKED BY

LAST REVISION 00-00-00 — DATE PLOTTED => 21-MAY-2013 — TIME PLOTTED => 13:23

Dist	COUNTY	ROUTE	POST MILES TOTAL PROJECT	SHEET No.	TOTAL SHEETS
07	LA	405	4.3	28	89

R.M. Mishreki 9-4-12
REGISTERED CIVIL ENGINEER DATE

04-08-13
PLANS APPROVAL DATE

REGISTERED PROFESSIONAL ENGINEER R.M. MISHREKI No. C68484 Exp. 9-30-13 CIVIL STATE OF CALIFORNIA

THE STATE OF CALIFORNIA OR ITS OFFICERS OR AGENTS SHALL NOT BE RESPONSIBLE FOR THE ACCURACY OR COMPLETENESS OF SCANNED COPIES OF THIS PLAN SHEET.

NOTES:

1. LANE CLOSURES SHALL NOT BE PLACED ON CREST VERTICAL CURVES OR ON HORIZONTAL CURVES.
2. PCMS SHALL BE ACTIVATED PRIOR TO TRAFFIC CONTROL ACTIVITIES ON THE HOV LANE.
3. A MINIMUM SIGHT DISTANCE OF 1500′ SHALL BE PROVIDED IN ADVANCE OF PCMS.
4. VEHICLE-MOUNTED SIGN PANELS SHALL BE TYPE III OR IV RETROREFLECTORIZED SHEETING, BLACK ON WHITE OR BLACK ON ORANGE WITH 8" MINIMUM SERIES D LETTERS PER CALTRANS SIGN SPECIFICATIONS.
5. PLACE PCMS ON THE MEDIAN SHOULDER WHERE SUFFICIENT ROOM (SUCH AS CHP ENFORCEMENT AREAS) EXISTS.
6. ADVANCE WARNING SIGN INSTALLATIONS SHALL BE EQUIPPED WITH FLAGS FOR DAYTIME CLOSURES. TYPE B HIGH INTENSITY FLASHING WARNING LIGHTS SHALL BE USED ON SP-16 SIGN DURING NIGHT LANE CLOSURES. FLAGS AND WARNING LIGHTS SHALL BE ATTACHED TO SIGNS AS APPROVED BY THE ENGINEER.

LEGEND

V1, V2	SHADOW VEHICLES
V3	WORK/APPLICATION VEHICLE
	PCMS
	DIRECTION OF TRAVEL
	HOV LANE
	FLASHING BEACON

ABBREVIATIONS

FAS	FLASHING ARROW SIGN
IAV	IMPACT ATTENUATOR VEHICLE
CMS	CHANGEABLE MESSAGE SIGN
(CA)	CALIFORNIA CODE
PCMS	PORTABLE CHANGEABLE MESSAGE SIGN
HOV	HIGH OCCUPANCY VEHICLE
CHP	CALIFORNIA HIGHWAY PATROL

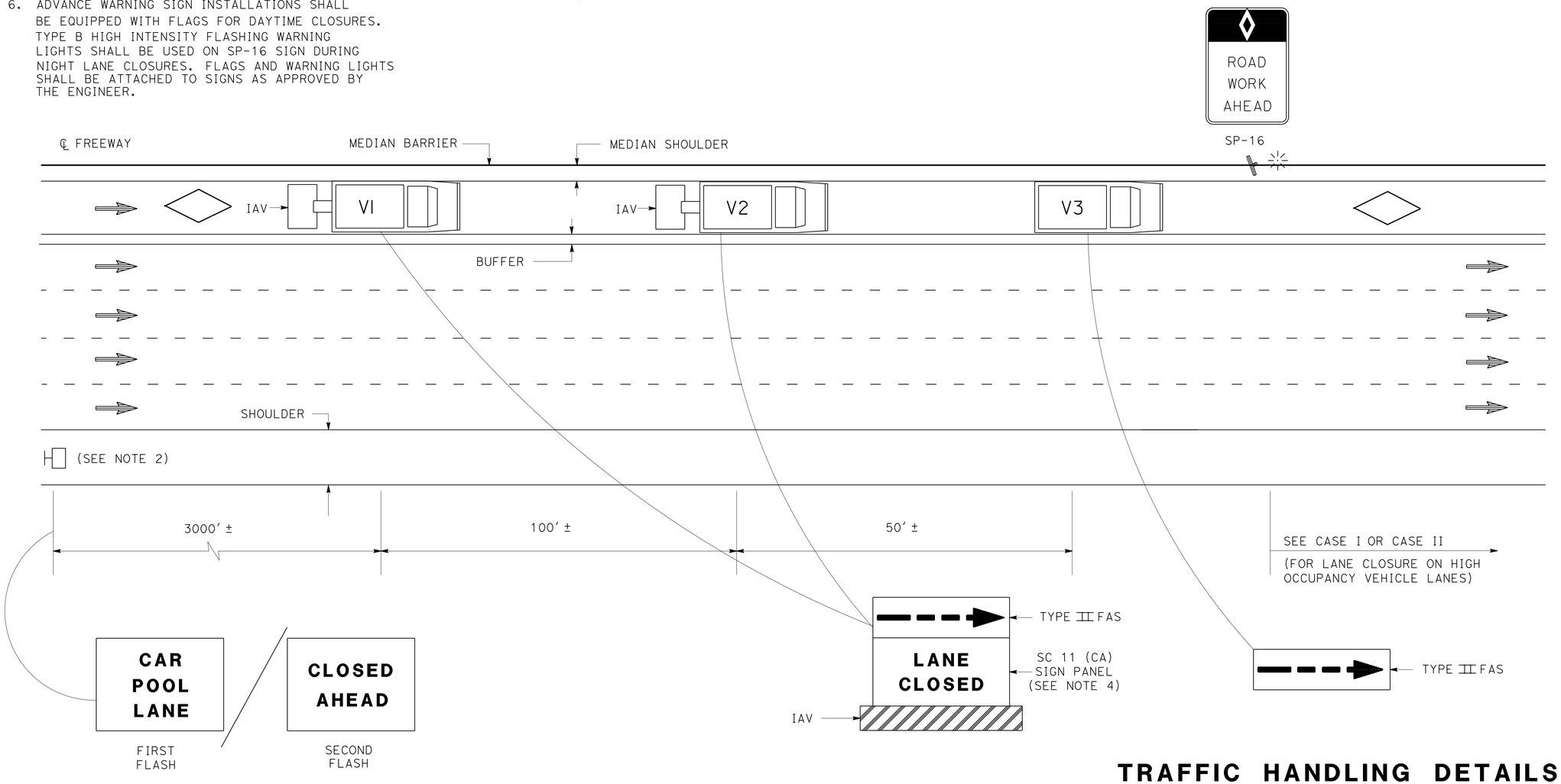

PCMS OR TRUCK MOUNTED CMS MESSAGE

(SEE NOTE 5)

TRAFFIC HANDLING DETAILS
TRAFFIC CONTROL SYSTEM FOR HIGH OCCUPANCY VEHICLE LANES WITH MEDIAN SHOULDERS LESS THAN 8 FEET

NO SCALE

THD-5

STATE OF CALIFORNIA - DEPARTMENT OF TRANSPORTATION
Caltrans® DTM

FUNCTIONAL SUPERVISOR: DENIS KATAYAMA
CALCULATED-DESIGNED BY: ALBERT K YU
CHECKED BY: JOCELYN C CHIANG
REVISED BY: JC
DATE REVISED: 3/12

LAST REVISION 00-00-00
DATE PLOTTED => 21-MAY-2013
TIME PLOTTED => 13:23

Dist	COUNTY	ROUTE	POST MILES TOTAL PROJECT	SHEET No.	TOTAL SHEETS
07	LA	405	4.3	29	89

R.M. Mishreki 9-4-12
REGISTERED CIVIL ENGINEER DATE

04-08-13
PLANS APPROVAL DATE

REGISTERED PROFESSIONAL ENGINEER R.M. MISHREKI No. C68484 Exp. 9-30-13 CIVIL STATE OF CALIFORNIA

THE STATE OF CALIFORNIA OR ITS OFFICERS OR AGENTS SHALL NOT BE RESPONSIBLE FOR THE ACCURACY OR COMPLETENESS OF SCANNED COPIES OF THIS PLAN SHEET.

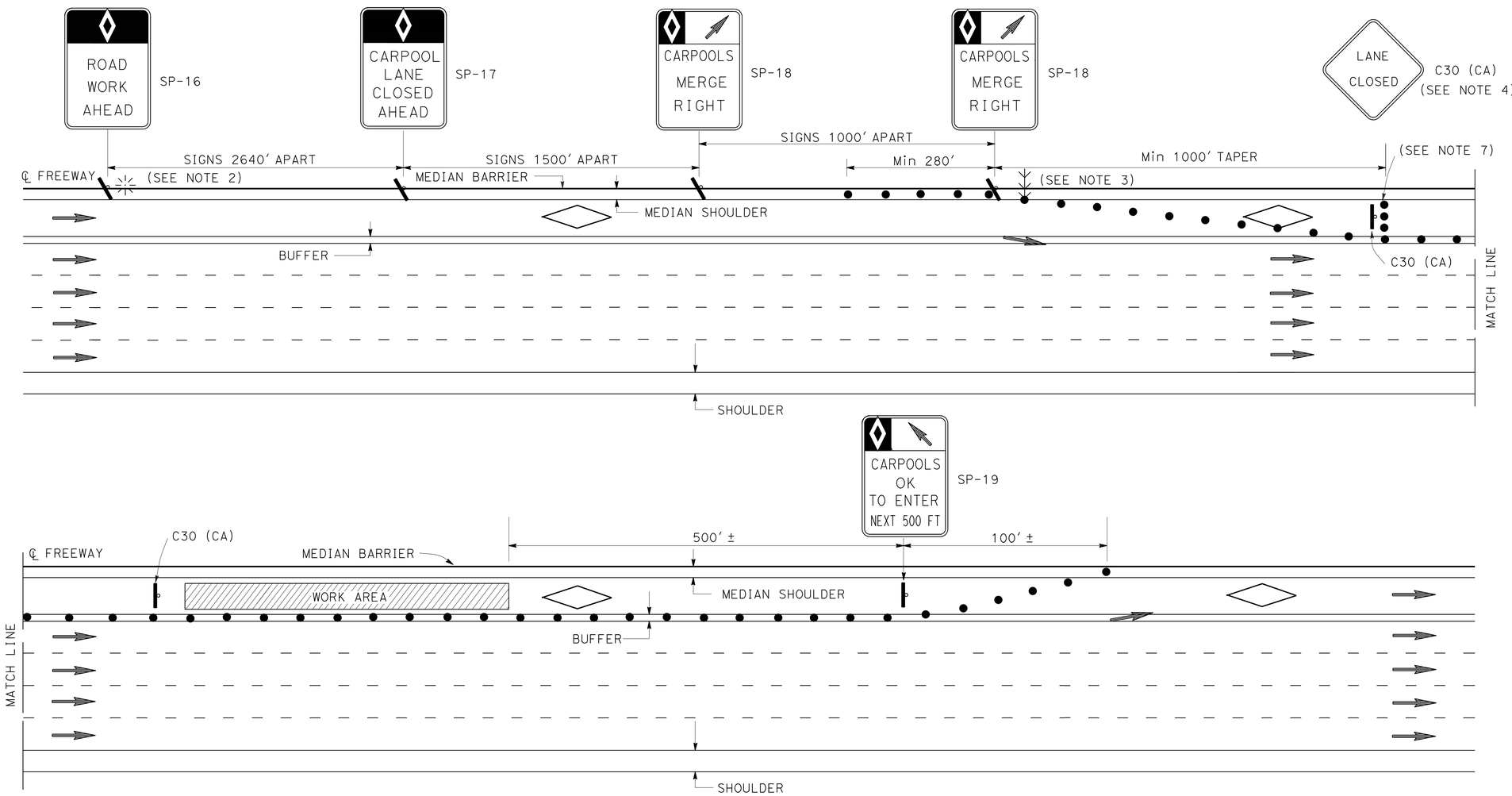

LEGEND

- CONE
- FLASHING BEACON
- HOV LANE
- FLASHING ARROW SIGN
- PORTABLE SIGN
- DIRECTION OF TRAVEL

ABBREVIATIONS

(CA)	CALIFORNIA CODE
HOV	HIGH OCCUPANCY VEHICLE

SIGN PANEL

	SIZE (MIN)
SP-16	36" X 54"
SP-17	36" X 54"
SP-18	36" X 48"
SP-19	36" X 60"
C30 (CA)	30" X 30"
G20-2	48" X 24"

NOTES: (FOR CASE I AND CASE II)

1. AT LEAST ONE PERSON SHALL BE ASSIGNED TO FULL TIME MAINTENANCE OF TRAFFIC CONTROL DEVICES ON NIGHT LANE CLOSURES OR DAY-TIME CLOSURES EXCEEDING 1 MILE LENGTH, INCLUDING TAPERS.
2. ADVANCE WARNING SIGN INSTALLATIONS SHALL BE EQUIPPED WITH FLAGS FOR DAYTIME CLOSURES. TYPE B HIGH INTENSITY FLASHING WARNING LIGHTS SHALL BE USED ON SP-16 SIGN DURING NIGHT LANE CLOSURES. FLAGS AND WARNING LIGHTS SHALL BE ATTACHED TO SIGNS AS APPROVED BY THE ENGINEER.
3. THE FLASHING ARROW SIGN SHALL BE TYPE I.
4. PLACE C30 (CA) SIGNS EVERY 2000' THROUGHOUT THE LENGTH OF LANE CLOSURE.
5. A MINIMUM 1500' OF SIGHT DISTANCE SHALL BE PROVIDED WHERE POSSIBLE FOR VEHICLES APPROACHING THE FLASHING ARROW SIGN. LANE CLOSURES SHALL NOT BE PLACED ON CREST VERTICAL CURVES OR ON HORIZONTAL CURVES.
6. PORTABLE DELINEATORS PLACED AT ONE-HALF THE SPACING INDICATED FOR TRAFFIC CONES MAY BE USED INSTEAD OF CONES FOR DAYTIME CLOSURES.
7. A MINIMUM OF 3 CONES SHALL BE PLACED TRANSVERSELY ACROSS CLOSED LANES WHERE TAPERS END AND EVERY 2000'. TWO TYPE II BARRICADES MAY BE USED INSTEAD OF 3 CONES. THE ALIGNMENT OF CONES OR BARRICADES MAY BE SHIFTED FROM THE TRANSVERSE ALIGNMENT TO PROVIDE ACCESS TO WORK.
8. IF AN INGRESS/EGRESS AREA IS WITHIN 5250' UPSTREAM OR DOWNSTREAM OF THE WORK AREA, LANE CLOSURES SHALL BE EXTENDED TO THAT AREA AS SHOWN IN CASE II.
9. SIGNS SP-16, 17, 18, AND 19 MAY BE OVERLAID ON EXISTING CARPOOL SIGNS IN MEDIANS AS APPROVED BY THE ENGINEER.
10. SIGNS SP-16, 17, 18, AND C30 (CA) SHALL BE BLACK ON ORANGE BACKGROUND. SIGN SP-19 SHALL BE BLACK ON WHITE BACKGROUND. DIAMONDS ON SIGNS SHALL BE WHITE.
11. FOR CLOSURE OF LANE(S) ADJACENT TO HOV LANES, SEE CASE II.
12. THE MAXIMUM SPACING BETWEEN CONES SHALL BE APPROXIMATELY 50' IN TAPERS AND 100' ON TANGENTS.

TRAFFIC HANDLING DETAILS
TRAFFIC CONTROL SYSTEM FOR HIGH OCCUPANCY VEHICLE LANES AT NON-INGRESS/EGRESS AREAS
CASE I

NO SCALE

THD-6

FUNCTIONAL SUPERVISOR	DENIS KATAYAMA
CALCULATED-DESIGNED BY	ALBERT K YU
CHECKED BY	JOCELYN C CHIANG
REVISED BY	JC
DATE REVISED	3/12

STATE OF CALIFORNIA - DEPARTMENT OF TRANSPORTATION
Caltrans DTM

LAST REVISION 00-00-00 | DATE PLOTTED => 21-MAY-2013 | TIME PLOTTED => 13:23

Dist	COUNTY	ROUTE	POST MILES TOTAL PROJECT	SHEET No.	TOTAL SHEETS
07	LA	405	4.3	30	89

R.M. Mishreki 9-4-12
REGISTERED CIVIL ENGINEER DATE

04-08-13
PLANS APPROVAL DATE

REGISTERED PROFESSIONAL ENGINEER R.M. MISHREKI No. C68484 Exp. 9-30-13 CIVIL STATE OF CALIFORNIA

THE STATE OF CALIFORNIA OR ITS OFFICERS OR AGENTS SHALL NOT BE RESPONSIBLE FOR THE ACCURACY OR COMPLETENESS OF SCANNED COPIES OF THIS PLAN SHEET.

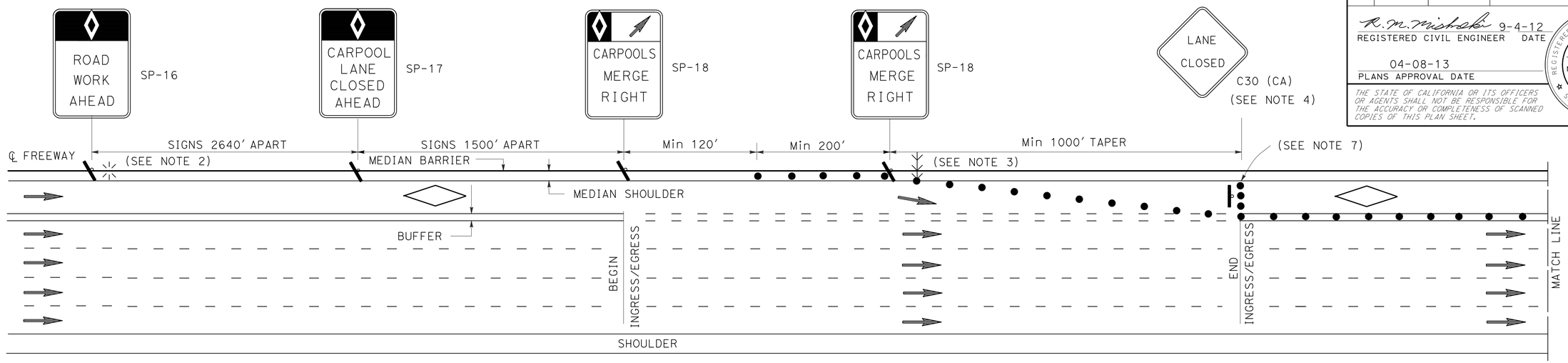

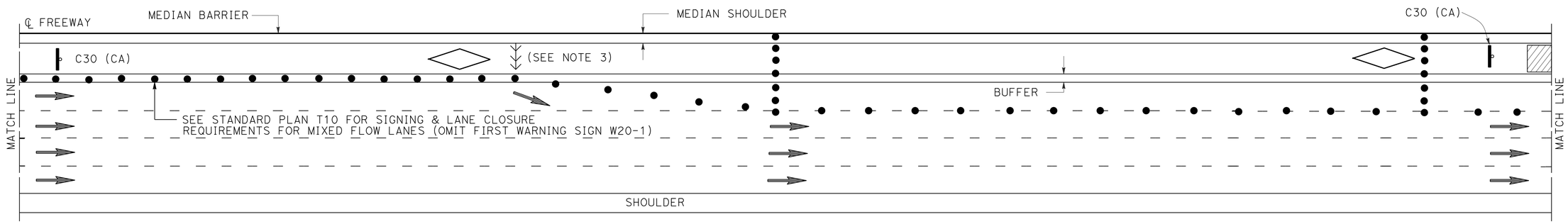

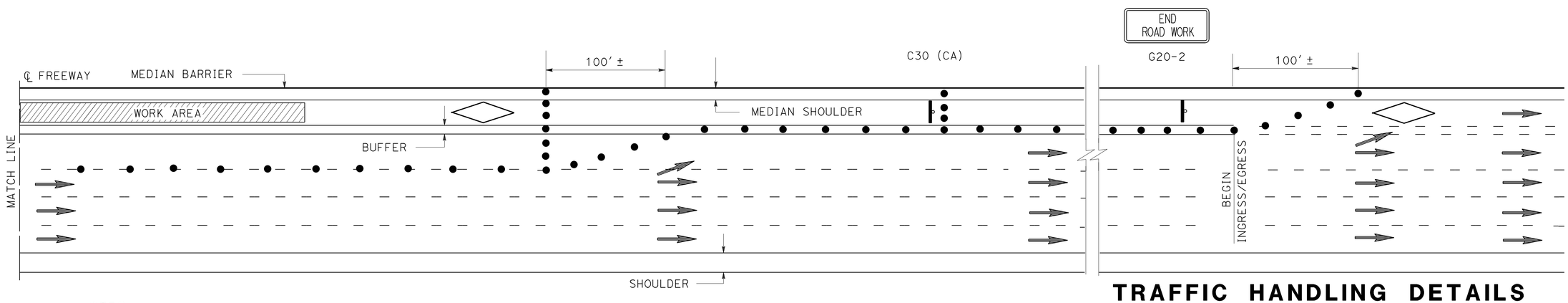

NOTES:

1. SEE CASE I FOR NOTES, LEGEND, SIGN PANEL, AND ABBREVIATIONS FOR THIS SHEET.
2. CLOSURES OF ONE MIXED FLOW TRAFFIC LANE ADJACENT TO HOV LANE SHOWN ON THIS SHEET. MULTIPLE MIXED FLOW LANE CLOSURES ARE SIMILAR.

TRAFFIC HANDLING DETAILS
TRAFFIC CONTROL SYSTEM FOR HIGH OCCUPANCY VEHICLE LANES AND ADJACENT FREEWAY LANES BETWEEN INGRESS/EGRESS AREAS
CASE II

NO SCALE

THD-7

REVISED BY	DATE REVISED
JC	3/12

CALCULATED-DESIGNED BY: ALBERT K YU
CHECKED BY: JOCELYN C CHIANG
FUNCTIONAL SUPERVISOR: DENIS KATAYAMA

STATE OF CALIFORNIA - DEPARTMENT OF TRANSPORTATION
Caltrans
DTM

LAST REVISION 00-00-00 | DATE PLOTTED => 21-MAY-2013 | TIME PLOTTED => 13:23

DIST	COUNTY	ROUTE	POST MILES TOTAL PROJECT	SHEET No.	TOTAL SHEETS
07	LA	405	4.3	31	89

R.M. Mishreki 8-21-12
REGISTERED CIVIL ENGINEER

04-08-13
PLANS APPROVAL DATE

REGISTERED PROFESSIONAL ENGINEER R.M. MISHREKI No. C68484 Exp. 9-30-13 CIVIL STATE OF CALIFORNIA

THE STATE OF CALIFORNIA OR ITS OFFICERS OR AGENTS SHALL NOT BE RESPONSIBLE FOR THE ACCURACY OR COMPLETENESS OF SCANNED COPIES OF THIS PLAN SHEET.

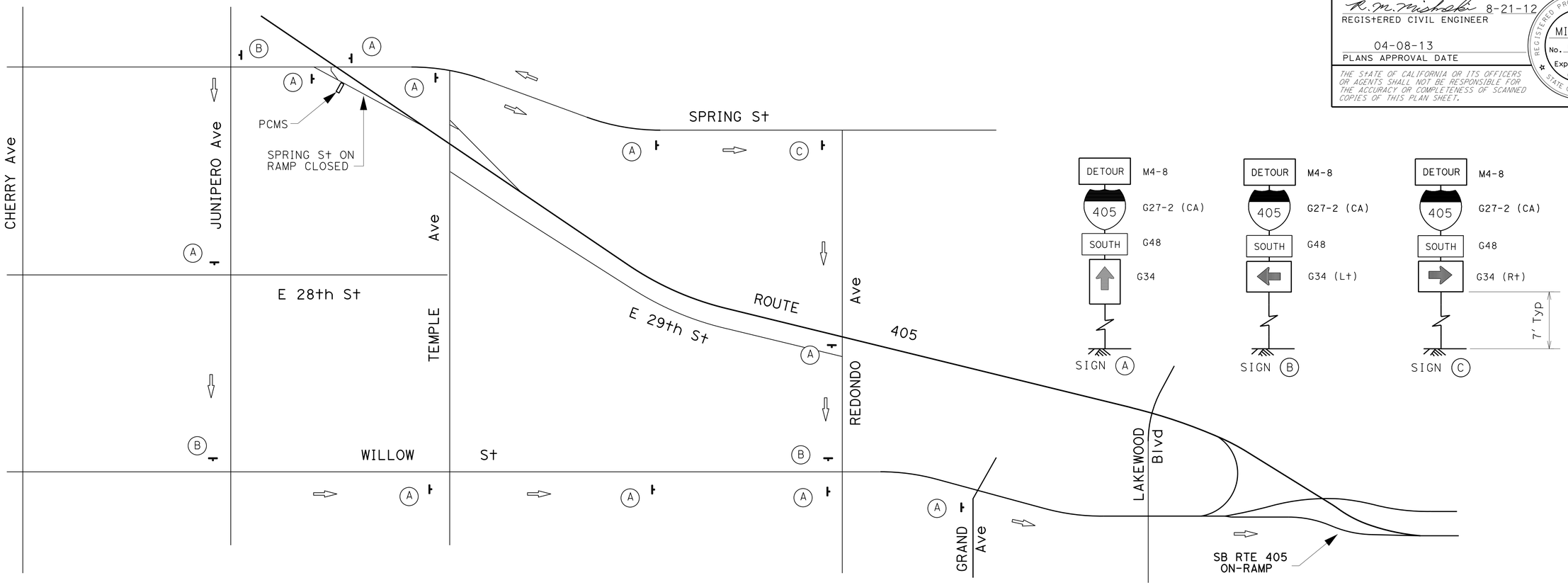

SIGN	LOCATION	MESSAGE		COMMENTS
		1St FLASH	2ND FLASH	
PCMS	RIGHT SHOULDER SPRING St ON-RAMP	RAMP TEMP CLOSED	STARTING MM-DD-YY	ACTIVATE TWO WEEKS PRIOR TO CLOSURE
1 LANE MAY BE CLOSED FOR PCMS INSTALLATION 7:00 PM TO 6:00 AM, M-F. RAMP MAY BE CLOSED FOR LONG-TERM STAGE CONSTRUCTION AFTER 7:00 PM.				

SIGN No. (X)	QUANTITY	POST SIZE	PANEL SIZES (W x H)	
A	10	4" x 6"	M4-8 24" x 12" BLACK on ORANGE	G27-2 (CA) 21" x 18"
B	3	4" x 6"		
C	1	4" x 6"	G48 21" x 9" WHITE on BLUE	G34 21" x 15" WHITE on BLUE

NOTES

1. REFER TO SC-5 AND STANDARD PLAN TCS-5 FOR COMPLETE INFORMATION.
2. DETOUR SIGNS MUST BE MAINTAINED FOR THE ENTIRE DURATION OF RAMP CLOSURE.
3. UPON APPROVAL BY LOCAL AUTHORITIES, SIGNS MAY BE ATTACHED TO EXISTING UTILITY POLES BY STRAP AND SADDLE METHOD, INSTEAD OF WOOD POSTS.

LEGEND

⇨ DIRECTION OF TRAVEL

TEMPORARY SIGN

PCMS PORTABLE CHANGEABLE MESSAGE SIGN

DETOUR PLAN
SPRING STREET ON-RAMP

NO SCALE

APPROVED FOR DETOUR CONSTRUCTION WORK ONLY

DE-1

CALCULATED-DESIGNED BY	R. MISHREKI
CHECKED BY	D. KATAYAMA
REVISED BY	JC
DATE REVISED	8/10
FUNCTIONAL SUPERVISOR	DENIS KATAYAMA

STATE OF CALIFORNIA - DEPARTMENT OF TRANSPORTATION
DTM
Caltrans

LAST REVISION 00-00-00 | DATE PLOTTED => 21-MAY-2013 | TIME PLOTTED => 13:23

Dist	COUNTY	ROUTE	POST MILES TOTAL PROJECT	SHEET No.	TOTAL SHEETS
07	LA	405	4.3	32	89

REGISTERED CIVIL ENGINEER 01-30-13 DATE

04-08-13
PLANS APPROVAL DATE

REGISTERED PROFESSIONAL ENGINEER
SIMON KUO
No. C52465
Exp. 12-31-14
CIVIL
STATE OF CALIFORNIA

THE STATE OF CALIFORNIA OR ITS OFFICERS OR AGENTS SHALL NOT BE RESPONSIBLE FOR THE ACCURACY OR COMPLETENESS OF SCANNED COPIES OF THIS PLAN SHEET.

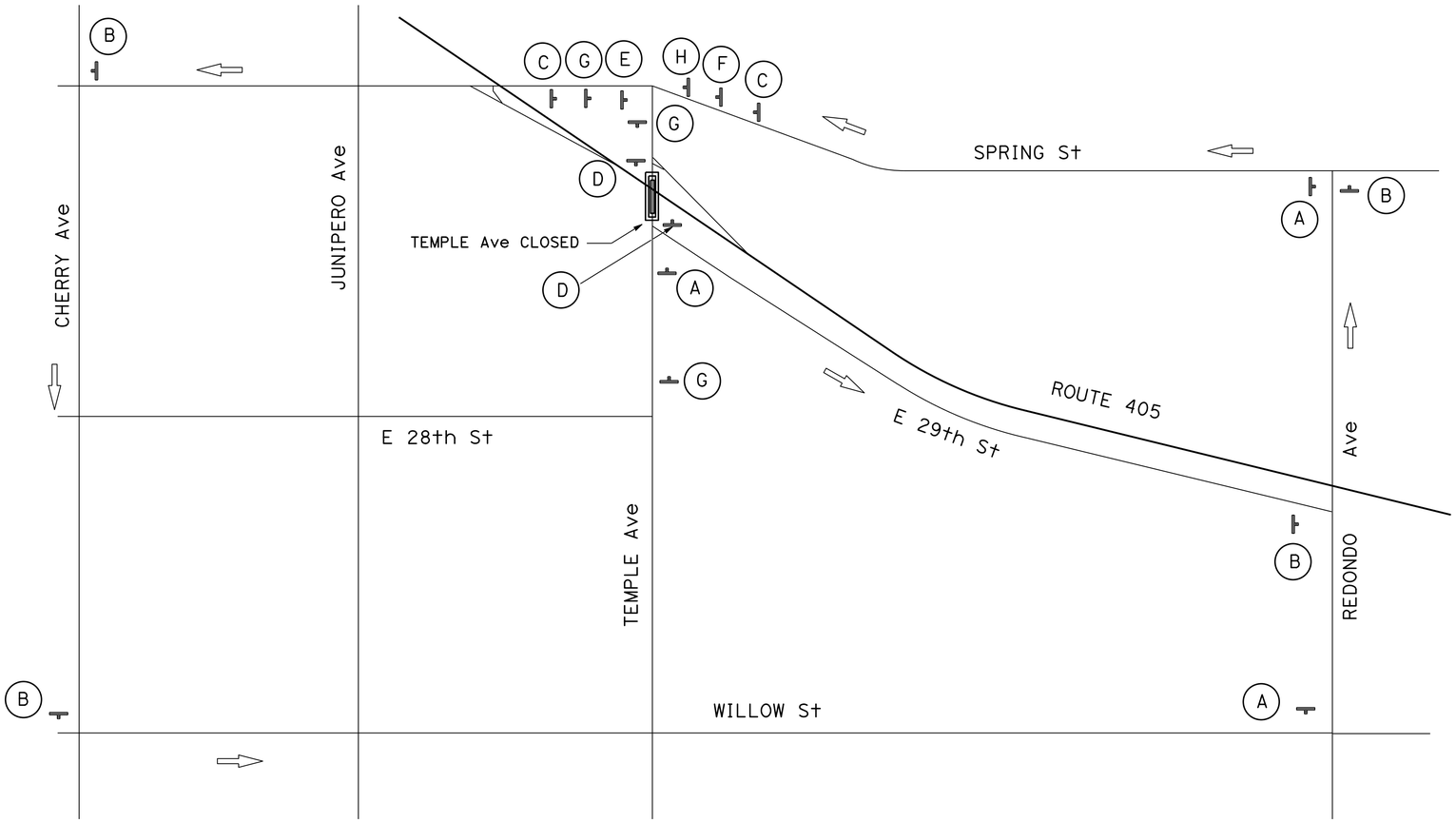

SIGN No. (X)	LOCATION	SIGN MESSAGE	SIGN CODE
A	AS SHOWN	TEMPLE Ave DETOUR ⇨	M4-8
B	AS SHOWN	TEMPLE Ave DETOUR ⇦	M4-8
C	AS SHOWN	⇧ TEMPLE Ave DETOUR	M4-8
D	AS SHOWN	ROAD CLOSED	R11-2
E	RIGHT TURN LANE	ROAD CLOSED TO THRU TRAFFIC	R11-4
F	IN THE MEDIAN	ROAD CLOSED TO THRU TRAFFIC	R11-4
G	AS SHOWN	ROAD CLOSED AHEAD	W20-3
H	AS SHOWN	TEMPLE Ave	G7-2

NOTES:

1. DETOUR SIGNS MUST BE MAINTAINED FOR THE ENTIRE DURATION OF FULL STREET CLOSURE.
2. TEMPLE Ave DETOUR SIGNS MUST BE REMOVED OR COVERED WHEN NOT IN USE.
3. INSTEAD OF WOOD POSTS AND UPON APPROVAL BY LOCAL AUTHORITIES SIGNS MAY BE ATTACHED TO EXISTING UTILITY POLES BY STRAP AND SADDLE METHOD.

LEGEND

⇨ DIRECTION OF TRAVEL

TEMPORARY SIGN

DETOUR PLAN

TEMPLE AVE - FULL CLOSURE

NO SCALE

APPROVED FOR DETOUR CONSTRUCTION WORK ONLY

DE-2

REVISED BY | DATE REVISED
SOLANGE PRADO | MAI P. BUI
CALCULATED-DESIGNED BY | CHECKED BY
FUNCTIONAL SUPERVISOR
SIMON KUO

STATE OF CALIFORNIA - DEPARTMENT OF TRANSPORTATION
Caltrans® OFFICE OF DESIGN A

LAST REVISION 00-00-00 | DATE PLOTTED => 21-MAY-2013 | TIME PLOTTED => 13:23

Dist	COUNTY	ROUTE	POST MILES TOTAL PROJECT	SHEET No.	TOTAL SHEETS
07	LA	405	4.3	33	89

01-30-13
REGISTERED CIVIL ENGINEER DATE

04-08-13
PLANS APPROVAL DATE

REGISTERED PROFESSIONAL ENGINEER
SIMON KUO
No. C52465
Exp. 12-31-14
CIVIL
STATE OF CALIFORNIA

THE STATE OF CALIFORNIA OR ITS OFFICERS OR AGENTS SHALL NOT BE RESPONSIBLE FOR THE ACCURACY OR COMPLETENESS OF SCANNED COPIES OF THIS PLAN SHEET.

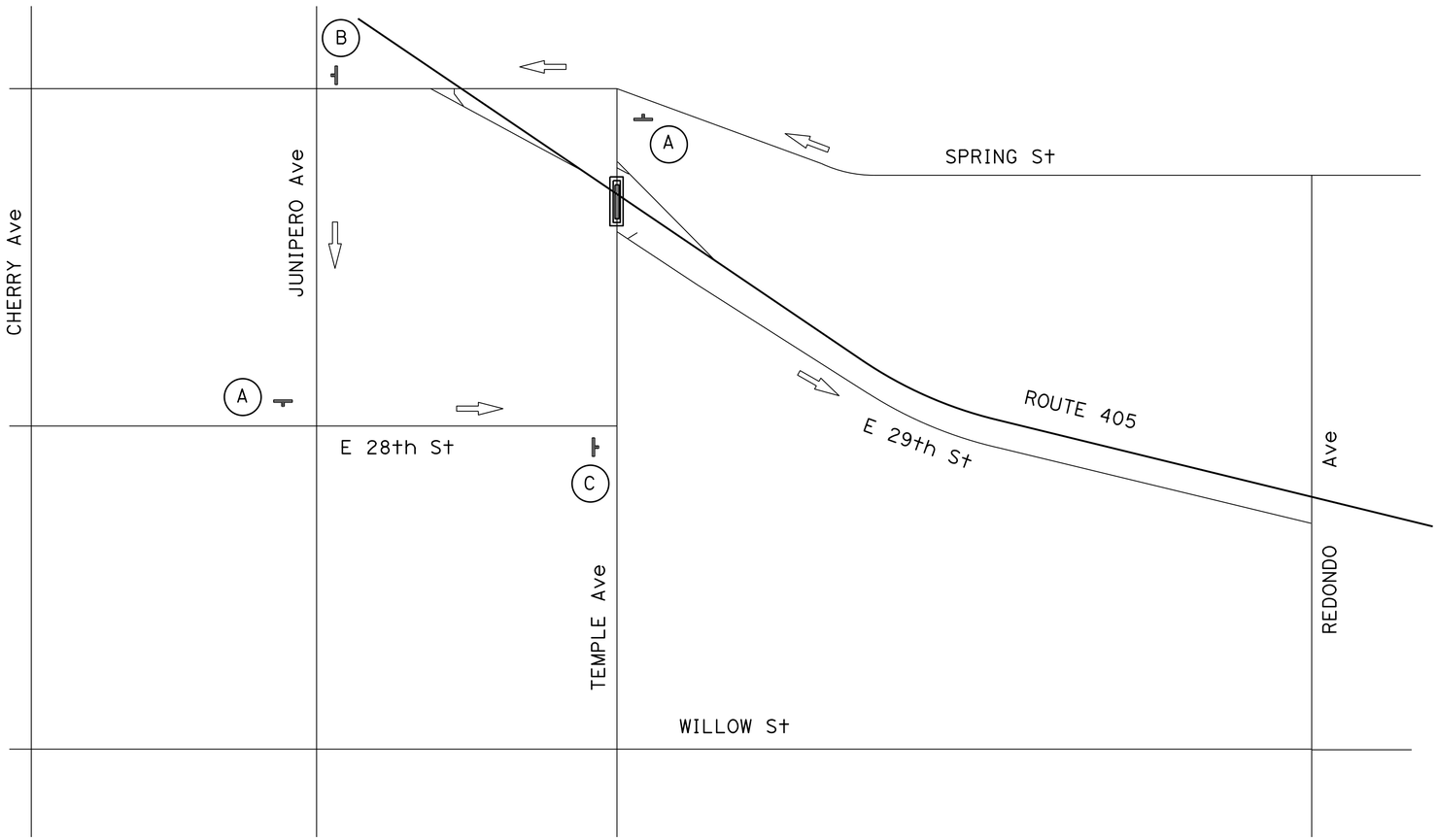

SIGN No. (A)	LOCATION	SIGN MESSAGE	SIGN CODE
A	AS SHOWN	⇧ TEMPLE Ave DETOUR	M4-8
B	AS SHOWN	TEMPLE Ave DETOUR ⇦	M4-8
C	AS SHOWN	END DETOUR	M4-8a

NOTES:

1. DETOUR SIGNS MUST BE MAINTAINED FOR THE ENTIRE DURATION OF STREET CLOSURE.
2. TEMPLE Ave DETOUR SIGNS MUST BE REMOVED OR COVERED WHEN NOT IN USE.
3. INSTEAD OF WOOD POSTS AND UPON APPROVAL BY LOCAL AUTHORITIES SIGNS MAY BE ATTACHED TO EXISTING UTILITY POLES BY STRAP AND SADDLE METHOD.

LEGEND

⇨ DIRECTION OF TRAVEL

TEMPORARY SIGN

APPROVED FOR DETOUR CONSTRUCTION WORK ONLY

DETOUR PLAN
TEMPLE AVE
NO SCALE

DE-3

STATE OF CALIFORNIA - DEPARTMENT OF TRANSPORTATION
Caltrans® OFFICE OF DESIGN A

FUNCTIONAL SUPERVISOR: SIMON KUO
CALCULATED-DESIGNED BY: SOLANGE PRADO
CHECKED BY: MAI P. BUI
REVISED BY
DATE REVISED

LAST REVISION 00-00-00
DATE PLOTTED => 21-MAY-2013
TIME PLOTTED => 13:23

Dist	COUNTY	ROUTE	POST MILES TOTAL PROJECT	SHEET No.	TOTAL SHEETS
07	LA	405	4.3	34	89

REGISTERED CIVIL ENGINEER 01-30-13 DATE

04-08-13
PLANS APPROVAL DATE

REGISTERED PROFESSIONAL ENGINEER SIMON KUO No. C52465 Exp. 12-31-14 CIVIL STATE OF CALIFORNIA

THE STATE OF CALIFORNIA OR ITS OFFICERS OR AGENTS SHALL NOT BE RESPONSIBLE FOR THE ACCURACY OR COMPLETENESS OF SCANNED COPIES OF THIS PLAN SHEET.

NOTES:

1. ALL STRIPES AND PAVEMENT MARKINGS MUST BE THERMOPLASTIC UNLESS OTHERWISE NOTED.
2. ALL CONFLICTING STRIPING MUST BE REMOVED.

LEGEND:

(X) STRIPING DETAIL NUMBER PER CALTRANS STANDARD PLANS

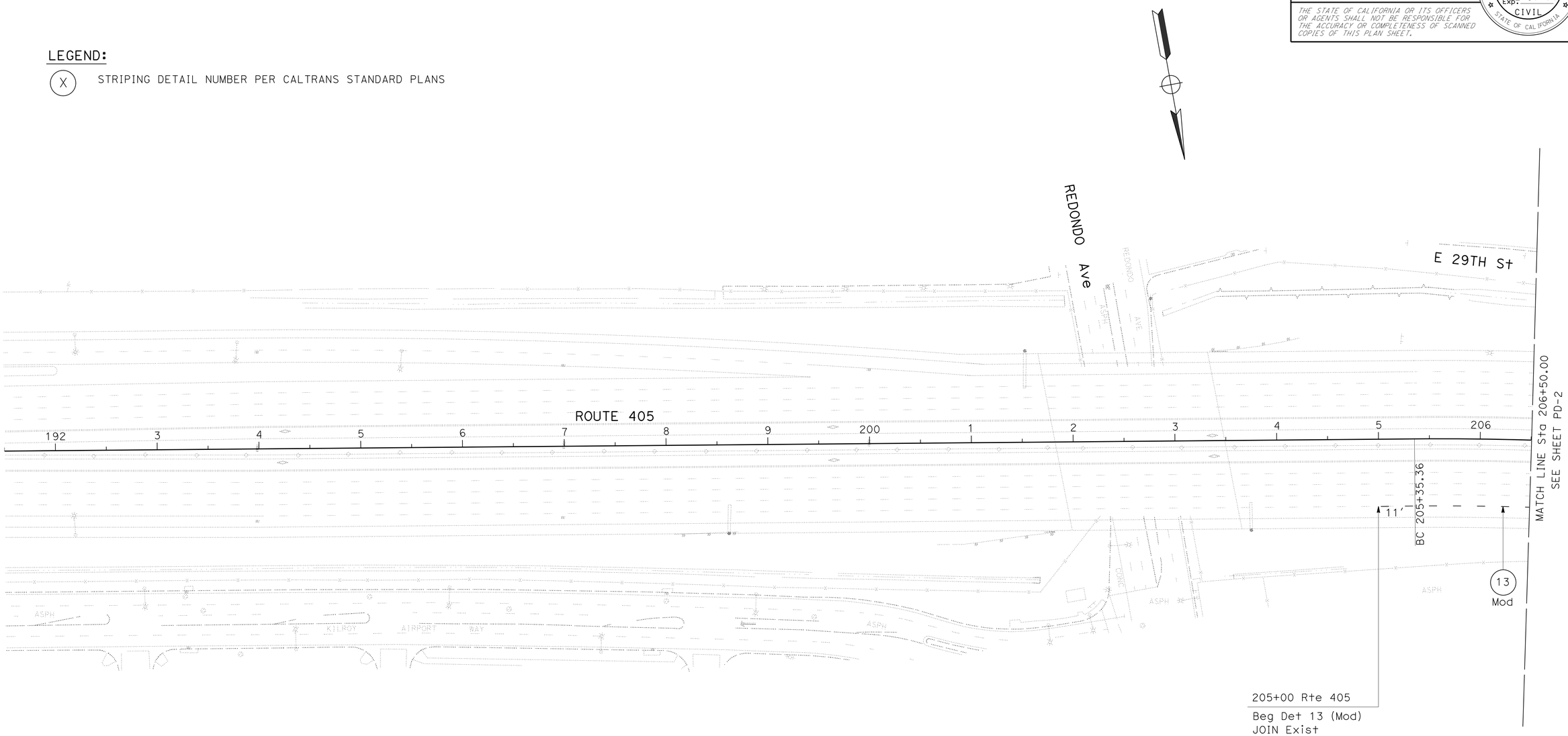

PAVEMENT DELINEATION PLAN

SCALE: 1" = 50'

PD-1

APPROVED FOR PAVEMENT DELINEATION WORK ONLY

REVISED BY	DATE REVISED

CALCULATED-DESIGNED BY	SOLANGE PRADO
CHECKED BY	MAI P. BUI
FUNCTIONAL SUPERVISOR	SIMON KUO

STATE OF CALIFORNIA - DEPARTMENT OF TRANSPORTATION
Caltrans® OFFICE OF DESIGN A

LAST REVISION 00-00-00 | DATE PLOTTED => 21-MAY-2013 | TIME PLOTTED => 13:23

Dist	COUNTY	ROUTE	POST MILES TOTAL PROJECT	SHEET No.	TOTAL SHEETS
07	LA	405	4.3	35	89

REGISTERED CIVIL ENGINEER 01-30-13 DATE

04-08-13
PLANS APPROVAL DATE

REGISTERED PROFESSIONAL ENGINEER
SIMON KUO
No. C52465
Exp. 12-31-14
CIVIL
STATE OF CALIFORNIA

THE STATE OF CALIFORNIA OR ITS OFFICERS OR AGENTS SHALL NOT BE RESPONSIBLE FOR THE ACCURACY OR COMPLETENESS OF SCANNED COPIES OF THIS PLAN SHEET.

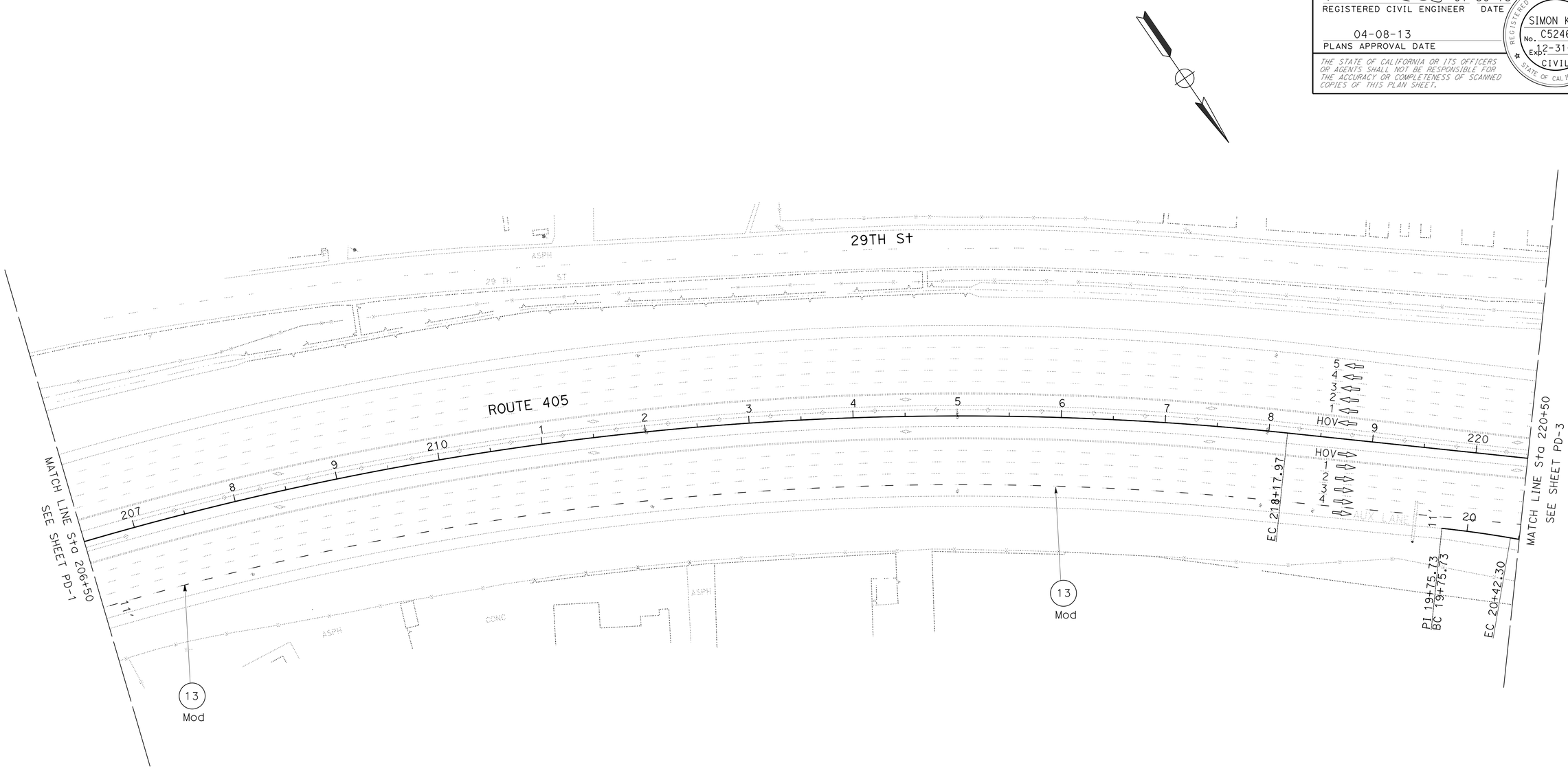

PAVEMENT DELINEATION PLAN

SCALE: 1" = 50'

PD-2

APPROVED FOR PAVEMENT DELINEATION WORK ONLY

STATE OF CALIFORNIA - DEPARTMENT OF TRANSPORTATION
Caltrans® OFFICE OF DESIGN A

FUNCTIONAL SUPERVISOR: SIMON KUO
CALCULATED-DESIGNED BY: SOLANGE PRADO
CHECKED BY: MAI P. BUI
REVISED BY
DATE REVISED

LAST REVISION 00-00-00
DATE PLOTTED => 21-MAY-2013
TIME PLOTTED => 13:23

Dist	COUNTY	ROUTE	POST MILES TOTAL PROJECT	SHEET No.	TOTAL SHEETS
07	LA	405	4.3	36	89

REGISTERED CIVIL ENGINEER 01-30-13 DATE

04-08-13
PLANS APPROVAL DATE

REGISTERED PROFESSIONAL ENGINEER SIMON KUO No. C52465 Exp. 12-31-14 CIVIL STATE OF CALIFORNIA

THE STATE OF CALIFORNIA OR ITS OFFICERS OR AGENTS SHALL NOT BE RESPONSIBLE FOR THE ACCURACY OR COMPLETENESS OF SCANNED COPIES OF THIS PLAN SHEET.

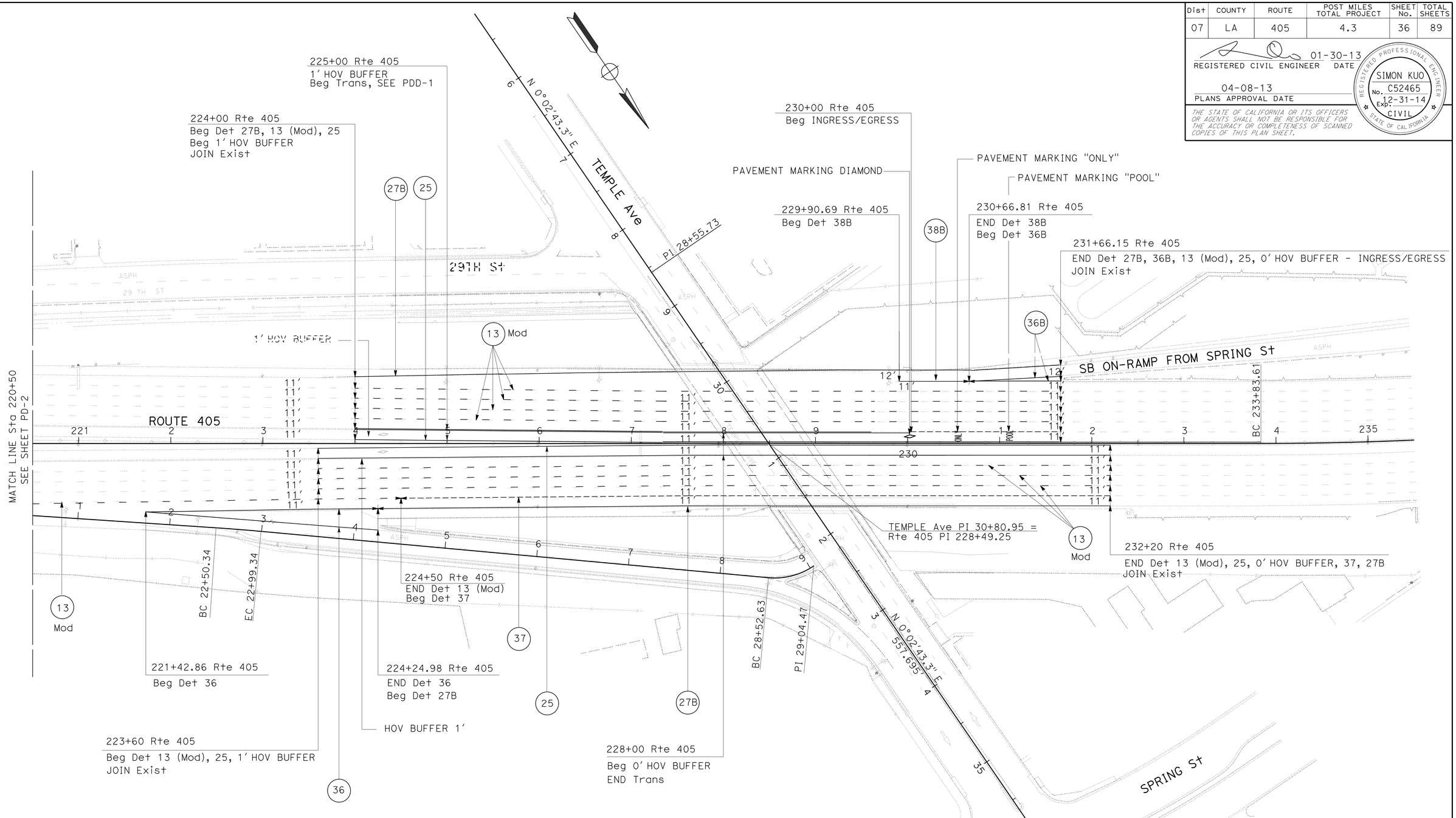

PAVEMENT DELINEATION PLAN
ROUTE 405
SCALE: 1" = 50'

PD-3

APPROVED FOR PAVEMENT DELINEATION WORK ONLY

STATE OF CALIFORNIA - DEPARTMENT OF TRANSPORTATION
Caltrans OFFICE OF DESIGN A

FUNCTIONAL SUPERVISOR: SIMON KUO
CALCULATED-DESIGNED BY: MAI P. BUI
CHECKED BY: SOLANGE PRADO
REVISED BY / DATE REVISED

LAST REVISION 00-00-00
DATE PLOTTED => 21-MAY-2013
TIME PLOTTED => 13:23

Dist	COUNTY	ROUTE	POST MILES TOTAL PROJECT	SHEET No.	TOTAL SHEETS
07	LA	405	4.3	37	89

REGISTERED CIVIL ENGINEER 01-30-13 DATE

PLANS APPROVAL DATE 04-08-13

REGISTERED PROFESSIONAL ENGINEER SIMON KUO No. C52465 Exp. 12-31-14 CIVIL STATE OF CALIFORNIA

THE STATE OF CALIFORNIA OR ITS OFFICERS OR AGENTS SHALL NOT BE RESPONSIBLE FOR THE ACCURACY OR COMPLETENESS OF SCANNED COPIES OF THIS PLAN SHEET.

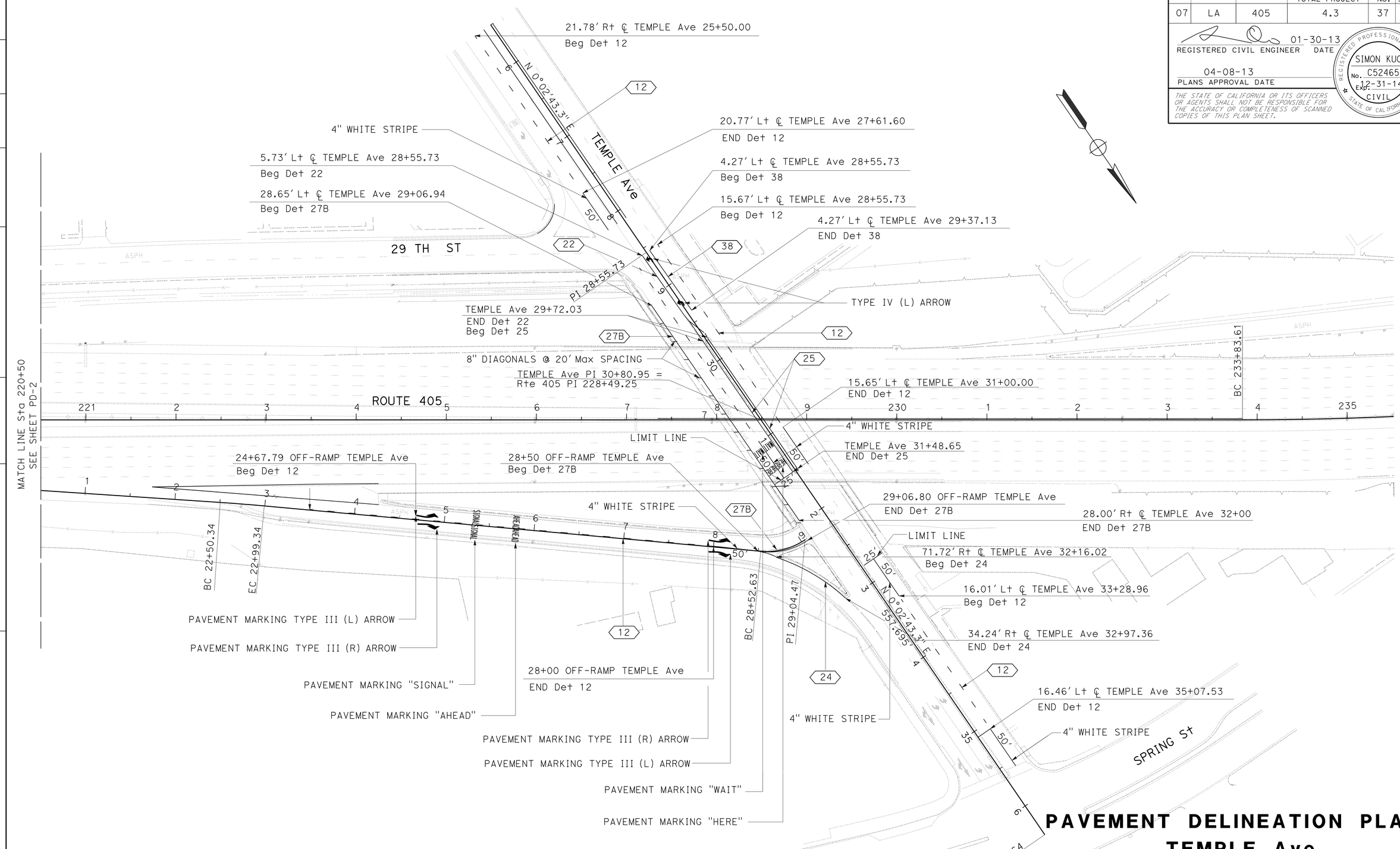

PAVEMENT DELINEATION PLAN
TEMPLE Ave
NB ROUTE 405 OFF-RAMP

SCALE: 1" = 50'

PD-4

APPROVED FOR PAVEMENT DELINEATION WORK ONLY

STATE OF CALIFORNIA - DEPARTMENT OF TRANSPORTATION
Caltrans® OFFICE OF DESIGN A

FUNCTIONAL SUPERVISOR: SIMON KUO
CALCULATED-DESIGNED BY: MAI P. BUI
CHECKED BY
REVISED BY
DATE REVISED

LAST REVISION 00-00-00
DATE PLOTTED => 21-MAY-2013
TIME PLOTTED => 13:23

Dist	COUNTY	ROUTE	POST MILES TOTAL PROJECT	SHEET No.	TOTAL SHEETS
07	LA	405	4.3	38	89

01-30-13
REGISTERED CIVIL ENGINEER DATE

04-08-13
PLANS APPROVAL DATE

REGISTERED PROFESSIONAL ENGINEER
SIMON KUO
No. C52465
Exp. 12-31-14
CIVIL
STATE OF CALIFORNIA

THE STATE OF CALIFORNIA OR ITS OFFICERS OR AGENTS SHALL NOT BE RESPONSIBLE FOR THE ACCURACY OR COMPLETENESS OF SCANNED COPIES OF THIS PLAN SHEET.

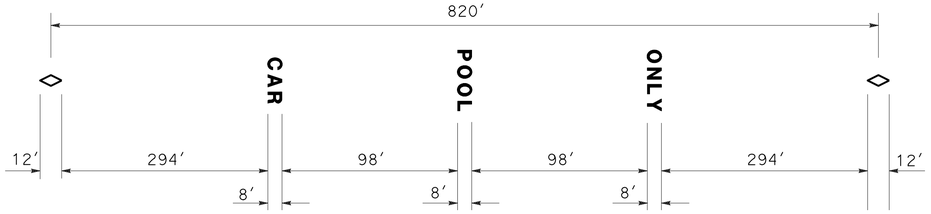

DETAIL "A"
LANE MARKING

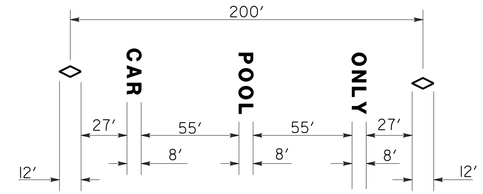

DETAIL "B"
INGRESS/EGRESS MARKING

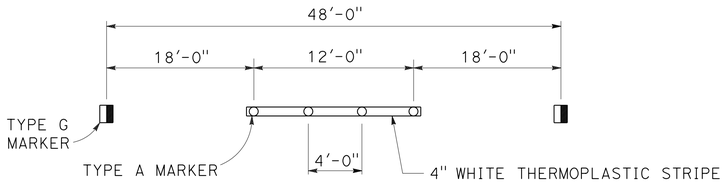

DETAIL 13 (Mod)

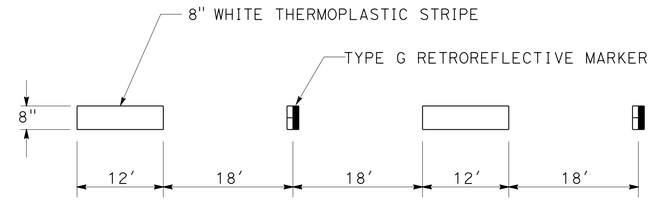

DETAIL "C"
INGRESS/EGRESS STRIPING DETAIL

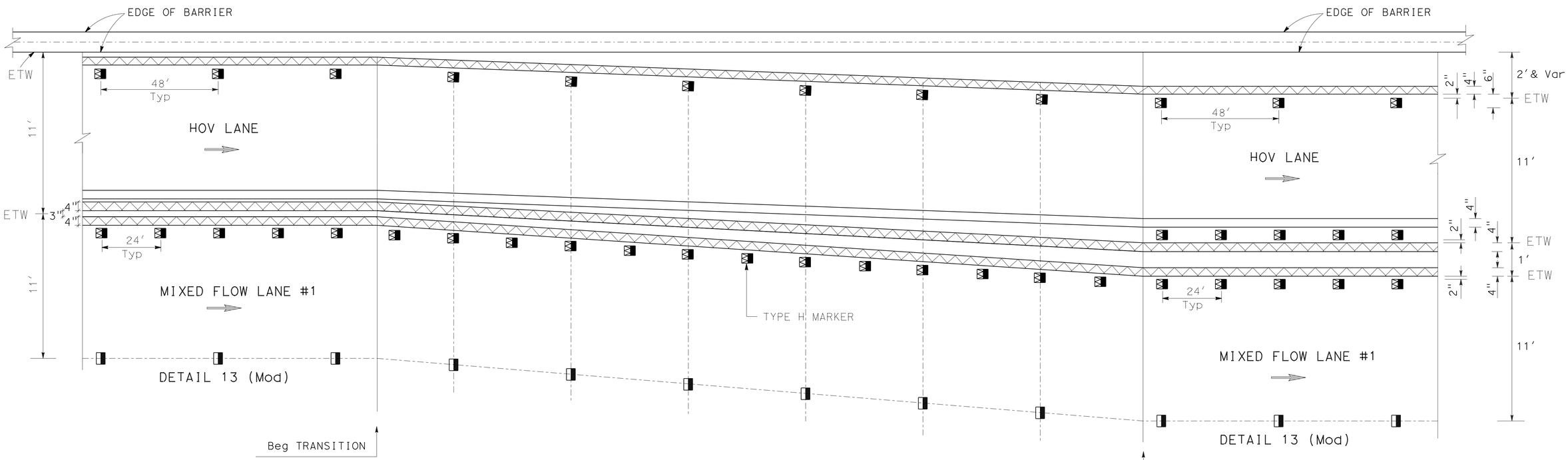

0' BUFFER DETAIL

300'
0' TO 1' BUFFER TRANSITION STRIPING DETAIL

1' BUFFER DETAIL

PAVEMENT DELINATION DETAILS

NO SCALE

APPROVED FOR PAVEMENT DELINEATION WORK ONLY

PDD-1

REVISED BY | DATE REVISED
SOLANGE PRADO | MAI P. BUI
CALCULATED-DESIGNED BY | CHECKED BY
FUNCTIONAL SUPERVISOR | SIMON KUO
STATE OF CALIFORNIA - DEPARTMENT OF TRANSPORTATION
Caltrans® OFFICE OF DESIGN A

LAST REVISION 00-00-00 | DATE PLOTTED => 21-MAY-2013 | TIME PLOTTED => 13:23

Dist	COUNTY	ROUTE	POST MILES TOTAL PROJECT	SHEET No.	TOTAL SHEETS
07	LA	405	4.3	39	89

REGISTERED CIVIL ENGINEER 01-30-13 DATE

PLANS APPROVAL DATE 04-08-13

REGISTERED PROFESSIONAL ENGINEER SIMON KUO No. C52465 Exp. 12-31-14 CIVIL STATE OF CALIFORNIA

THE STATE OF CALIFORNIA OR ITS OFFICERS OR AGENTS SHALL NOT BE RESPONSIBLE FOR THE ACCURACY OR COMPLETENESS OF SCANNED COPIES OF THIS PLAN SHEET.

PAVEMENT DELINEATION QUANTITIES

SHEET No.	LOCATION	STATION	DETAIL No/ PAVEMENT MARKING	REMOVE: PAINTED TRAFFIC STRIPE	REMOVE: PAINTED PAVEMENT MARKING	REMOVE: PAVEMENT MARKER: NON-REFLECTIVE (TYPE A)	REMOVE: PAVEMENT MARKER: TYPE C	REMOVE: PAVEMENT MARKER: TYPE G	REMOVE: PAVEMENT MARKER: TYPE H	REMOVE: PAVEMENT MARKER: TYPE D	PAVEMENT MARKER: NON-REFLECTIVE (TYPE A)	PAVEMENT MARKER: RETROREFLECTIVE: TYPE C	PAVEMENT MARKER: RETROREFLECTIVE: TYPE G	PAVEMENT MARKER: RETROREFLECTIVE: TYPE H	PAVEMENT MARKER: RETROREFLECTIVE: TYPE D	PAINT TRAFFIC STRIPE (2-COAT) ** : 4"	PAINT TRAFFIC STRIPE (2-COAT) ** : 8"	THERMOPLASTIC TRAFFIC STRIPE 4": WHITE SOLID	THERMOPLASTIC TRAFFIC STRIPE 4": WHITE BROKEN	THERMOPLASTIC TRAFFIC STRIPE 4": YELLOW SOLID	THERMOPLASTIC TRAFFIC STRIPE 8": WHITE BROKEN	THERMOPLASTIC TRAFFIC STRIPE 8": WHITE SOLID	THERMOPLASTIC PAVEMENT MARKING: DIAMOND	THERMOPLASTIC PAVEMENT MARKING: "ONLY"	THERMOPLASTIC PAVEMENT MARKING: "POOL"	THERMOPLASTIC PAVEMENT MARKING: "WAIT"	THERMOPLASTIC PAVEMENT MARKING: "HERE"	THERMOPLASTIC PAVEMENT MARKING: "SIGNAL"	THERMOPLASTIC PAVEMENT MARKING: "AHEAD"	THERMOPLASTIC PAVEMENT MARKING: TYPE III (L) ARROW	THERMOPLASTIC PAVEMENT MARKING: TYPE III (R) ARROW	THERMOPLASTIC PAVEMENT MARKING: TYPE IV (L) ARROW	THERMOPLASTIC PAVEMENT MARKING: DIAGONAL	THERMOPLASTIC PAVEMENT MARKING: LIMIT LINE
				LF	SQFT	EA	EA	EA	EA	EA	EA	EA	EA	EA	EA	LF	LF	LF		LF	LF	LF	SQFT	SQFT	SQFT	SQFT	SQFT	SQFT	SQFT	SQFT	SQFT	SQFT	SQFT	SQFT
PD-1	NB Rte 405	205+00 TO 206+50	13 (Mod)								14		4						150															
	NB Rte 405			60				10																										
PD-2	NB Rte 405	206+50 TO 220+50	13 (Mod)								119		30						1,400															
	NB Rte 405			1,001			8	92																										
PD-3	SB Rte 405	224+00 TO 231+66	13 (Mod)								264		64						3,059															
		224+00 TO 231+66	27B															765																
		224+00 TO 231+66	25											16						767														
		224+00 TO 231+66	HOV BUFFER											25						1,198	167													
		229+90 TO 230+66	38B										8									76												
		230+66 TO 231+66	36B										5					100				100	11	22	23									
				3,831	57	264		72	41																									
	NB Rte 405	220+50 TO 224+50	13 (Mod)								35		9						400															
		223+60 TO 232+20	25											18						861														
		224+25 TO 232+20	27B															795																
		224+50 TO 232+20	37										53								770													
		221+43 TO 224+25	36										24									564												
		223+60 TO 232+20	HOV BUFFER											36						1,722														
		223+60 TO 232+20	13 (Mod)								222		54						2,582															
				4,772		222		65	54																									
PD-4	Temple Ave	25+50 TO 35+08	12										21						881															
	Temple Ave		WHITE STRIPE															250																
	Temple Ave		MARKINGS																							38	52					15	62	50
	Temple Ave	28+56 TO 29+72	22												14					284														
	Temple Ave	29+72 TO 31+49	25											8						354														
	Temple Ave	29+07 TO 32+00	27B															294																
	Temple Ave	28+56 TO 29+38	38										8									164												
	Rte 405 NB OFF-RAMP	24+68 TO 28+00	12										7						333															
	Rte 405 NB OFF-RAMP		WHITE STRIPE															50																
	Rte 405 NB OFF-RAMP		MARKINGS																									64	62	84	84			
	Rte 405 NB OFF-RAMP		24																	100														
	Rte 405 NB OFF-RAMP	28+50 TO 29+07	27B															57																
				3,167				7	39	32																								
	SUBTOTAL					486	8	246	134	32	654		287	103	14			2,311	8,805	5,286	937	904	11	22	23	38	52	64	62	84	84	15	62	50
	SHEET PDQ-1 TOTAL			12,831	57	906					654	404						16,402			1,841		567											
	SHEET SCQ-1 TOTAL					1,020					470	411				21,014																		
	TOTAL			12,831	57	1,926					1,124	815				21,014		16,402			1,841		567											

** 8" WIDE STRIPES ARE MEASURED AS 2 TRAFFIC STRIPES.

PAVEMENT DELINEATION QUANTITIES

PDQ-1

STATE OF CALIFORNIA - DEPARTMENT OF TRANSPORTATION
Caltrans OFFICE OF DESIGN A

FUNCTIONAL SUPERVISOR: SIMON KUO
CALCULATED-DESIGNED BY: MAI P. BUI
CHECKED BY
REVISED BY
DATE REVISED

LAST REVISION 00-00-00
DATE PLOTTED => 21-MAY-2013
TIME PLOTTED => 13:23

Dist	COUNTY	ROUTE	POST MILES TOTAL PROJECT	SHEET No.	TOTAL SHEETS
07	LA	405	4.3	40	89

REGISTERED CIVIL ENGINEER 01-30-13 DATE

04-08-13
PLANS APPROVAL DATE

REGISTERED PROFESSIONAL ENGINEER SIMON KUO No. C52465 Exp. 12-31-14 CIVIL STATE OF CALIFORNIA

THE STATE OF CALIFORNIA OR ITS OFFICERS OR AGENTS SHALL NOT BE RESPONSIBLE FOR THE ACCURACY OR COMPLETENESS OF SCANNED COPIES OF THIS PLAN SHEET.

ROADWAY QUANTITIES

SHEET NUMBER	LOCATION	REMOVE CONCRETE BARRIER	REMOVE STEEL PIPE (BOLLARD)	REMOVE Conc Pvmt	REMOVE Conc (CURB, GUTTER AND SIDEWALK)	ROADWAY EXCAVATION	REMOVE CURB	REMOVE METAL BEAM GUARD RAILING	REMOVE ASPHALT CONCRETE DIKE	EMBANKMENT (N)	MINOR CONCRETE (MINOR STRUCTURE)	HOT MIX ASPHALT (TYPE A)	PLACE HOT MIX ASPHALT DIKE (TYPE A)	CLASS 3 AGGREGATE BASE	LEAN CONCRETE BASE	JOINTED PLAIN CONCRETE PAVEMENT (JPCP)	MINOR CONCRETE (MISCELLANEOUS CONSTRUCTION)	CONCRETE BARRIER (TYPE 50 Mod)	SEAL PAVEMENT JOINT	SEAL ISOLATION JOINT	CHAIN LINK FENCE (TYPE CL-6)	10' CHAIN LINK GATE (TYPE CL-6)	Transition RAILING (TYPE WB)	END CAP (TYPE TC)	RECONSTRUCT METAL BEAM GUARD RAILING	DETECTABLE WARNING SURFACE	COLD PLANE ASPHALT Conc
		LF	EA	SQYD	CY	CY	LF	LF	LF	CY	CY	TON	LF	CY	CY	CY	CY	LF	LF	LF	LF	EA	EA	EA	LF	SQFT	SQFT
L-1	Rte 405	40		540		398	188	34	38	250	2.1	0.8	38	141	101	212		40	979	516			1	1	13		
C-1	TEMPLE Ave		4		30	45						5		10	5		9				8	2				53	10
	SUBTOTAL	40	4	540	30	443	188	34	38	250	2.1	5.8	38	151	106	212	9	40	979	516	8	2	1	1	13	53	10

(N) NOT A SEPARATE PAY ITEM. FOR INFORMATION ONLY.

TEMPORARY WATER POLLUTION CONTROL QUANTITIES

LOCATION	TEMPORARY EROSION CONTROL BLANKET	TEMPORARY DRAINAGE INLET PROTECTION	TEMPORARY FIBER ROLL	TEMPORARY SILT FENCE
	SQYD	EA	LF	LF
Rte 405 Sta 182+50 TO Sta 270+25	2,460	5	1,800	700
TOTAL	2,460	5	1,800	700

SUMMARY OF QUANTITIES

Q-1

REVISED BY | DATE REVISED
SOLANGE PRADO | MAI P. BUI
CALCULATED-DESIGNED BY | CHECKED BY
FUNCTIONAL SUPERVISOR: SIMON KUO
STATE OF CALIFORNIA - DEPARTMENT OF TRANSPORTATION
Caltrans OFFICE OF DESIGN A

LAST REVISION 00-00-00 | DATE PLOTTED => 21-MAY-2013 | TIME PLOTTED => 13:23

Dist	COUNTY	ROUTE	POST MILES TOTAL PROJECT	SHEET No.	TOTAL SHEETS
07	LA	405	4.3	41	89

George Olguin
LICENSED LANDSCAPE ARCHITECT

04-08-13
PLANS APPROVAL DATE

LICENSED LANDSCAPE ARCHITECT
GEORGE OLGUIN
NO. 4333
George Olguin
Signature
08-31-14
Renewal Date
11-04-12
Date
STATE OF CALIFORNIA

THE STATE OF CALIFORNIA OR ITS OFFICERS OR AGENTS SHALL NOT BE RESPONSIBLE FOR THE ACCURACY OR COMPLETENESS OF SCANNED COPIES OF THIS PLAN SHEET.

SPRINKLER SCHEDULE

SYMBOL	TYPE	DESCRIPTION	SPRAY PATTERN	OPERATING PRESSURE (psi)	PRESSURE COMPENSATING	PLUS/MINUS 5% ② DISCHARGE GALLONS PER MINUTE (GPM)	DISCHARGE GALLONS PER HOUR (GPH)	RADIUS (ft)	WIDTH x LENGTH (ft)	MATERIAL	INLET CONNECTION (NPT INCH)	POSITIVE-LOCKING Adj ARC STOP	BACKSPLASH PREVENTER	DIFFUSER PIN	DISTANCE CONTROL FLAP	Adj DISCHARGE	RISER TYPE	RISER MATERIAL PLASTIC	RISER MATERIAL GALVANIZED	RISER SIZE (IPS INCH)	RISER HEIGHT (INCH)	RISER FLOW SHUTOFF DEVICE	⑤ SWING JOINT (TYPE)	RISER SUPPORT	SPRINKLER PROTECTOR (TYPE)	REMARKS
⑤	A-5	GEAR DRIVEN	P	35	—	3.50	—	40	—	PL	½	—	—	—	—	—	IV	—	X	½	18	X	III	—	—	SHRUB ROTOR
⑤	A-5	GEAR DRIVEN	P/Q	35	—	1.81/0.91	—	34	—	PL	½	—	—	—	—	—	IV	—	X	½	18	X	III	—	—	SHRUB ROTOR
▲	B-2	SHRUB SPRAY	H	30	—	1.85	—	15	—	PL	½	—	—	—	—	—	—	X	—	½	—	—	I	—	—	POP-UP ⑦

APPLICABLE WHEN CIRCLED BELOW:

1 - SEE SPECIAL PROVISIONS.
② - IF A PRESSURE COMPENSATING DEVICE IS SPECIFIED, THE DISCHARGE AND RADII SHOWN REFLECT ITS USE.
3 - ARC STOP SHALL BE FITTED WITH A NUT AND BOLT.
4 - VINYL-COATED CAST IRON HOUSING.
⑤ - SWING JOINTS REQUIRED ADJACENT TO SHOULDERS, CURBS, SIDEWALKS, AND DIKES.
6 - UNLESS OTHERWISE SHOWN ON PLANS.

X IN BOX DENOTES REQUIREMENT

⑦ - 12" POP UP.

IRRIGATION SPRINKLER SCHEDULE

NO SCALE

ISS-1

REVISED BY | DATE REVISED
XUAN WU | GEORGE OLGUIN
CALCULATED-DESIGNED BY | CHECKED BY
SENIOR LANDSCAPE ARCHITECT
JENNIFER TAIRA
STATE OF CALIFORNIA - DEPARTMENT OF TRANSPORTATION
Caltrans® LANDSCAPE ARCHITECTURE

LAST REVISION 00-00-00 | DATE PLOTTED => 21-MAY-2013 | TIME PLOTTED => 13:23

Dist	COUNTY	ROUTE	POST MILES TOTAL PROJECT	SHEET No.	TOTAL SHEETS
07	LA	405	4.3	42	89

George Olguin
LICENSED LANDSCAPE ARCHITECT

04-08-13
PLANS APPROVAL DATE

LICENSED LANDSCAPE ARCHITECT
GEORGE OLGUIN
No. 4333
George Olguin
Signature
08-31-14
Renewal Date
11-04-12
Date
STATE OF CALIFORNIA

THE STATE OF CALIFORNIA OR ITS OFFICERS OR AGENTS SHALL NOT BE RESPONSIBLE FOR THE ACCURACY OR COMPLETENESS OF SCANNED COPIES OF THIS PLAN SHEET.

NOTE:

1. FOR ACCURATE RIGHT OF WAY DATA, CONTACT RIGHT OF WAY ENGINEERING AT THE DISTRICT OFFICE.

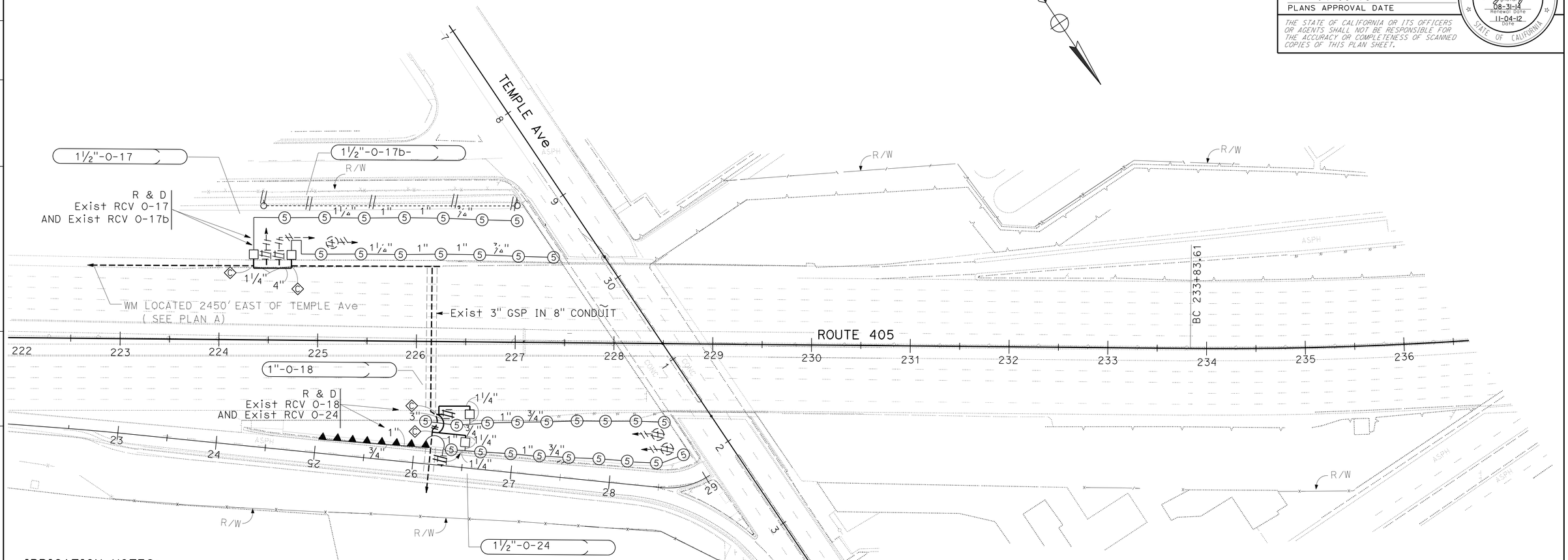

IRRIGATION NOTES:

1. NEW CNC REQUIRED TO NEW RCV'S.
2. RECONNECT Exist RCV'S TO NEW ICC.
3. NEW CNC REQUIRED TO Exist RCV'S THAT FAIL CONDUCTIVITY TEST.

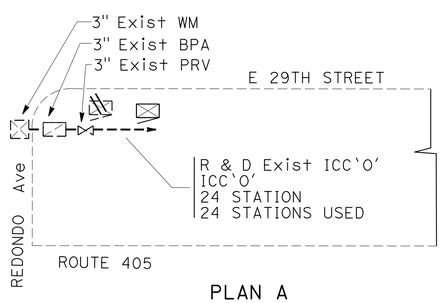

PLAN A

IRRIGATION PLAN

SCALE: 1" = 50'

IP-1

APPROVED FOR IRRIGATION WORK ONLY

STATE OF CALIFORNIA - DEPARTMENT OF TRANSPORTATION
Caltrans LANDSCAPE ARCHITECTURE

SENIOR LANDSCAPE ARCHITECT: JENNIFER TAIRA
CALCULATED-DESIGNED BY: YI SU
CHECKED BY: GEORGE OLGUIN
REVISED BY
DATE REVISED

LAST REVISION 00-00-00
DATE PLOTTED => 21-MAY-2013
TIME PLOTTED => 13:23

Dist	COUNTY	ROUTE	POST MILES TOTAL PROJECT	SHEET No.	TOTAL SHEETS
07	LA	405	4.3	43	89

George Olguin
LICENSED LANDSCAPE ARCHITECT

04-08-13
PLANS APPROVAL DATE

LICENSED LANDSCAPE ARCHITECT
GEORGE OLGUIN
NO. 4333
George Olguin
Signature
08-31-14
Renewal Date
11-04-12
Date
STATE OF CALIFORNIA

THE STATE OF CALIFORNIA OR ITS OFFICERS OR AGENTS SHALL NOT BE RESPONSIBLE FOR THE ACCURACY OR COMPLETENESS OF SCANNED COPIES OF THIS PLAN SHEET.

SUBTOTALS PER VALVE ON LATERAL SUPPLY SIDE OF CONTROL VALVE

DESCRIPTION		UNIT	VALVE OR ASSEMBLY NUMBER 0-17	0-17b	0-18	0-24	SUBTOTALS	UNIT	DESCRIPTION	
PLASTIC PIPE SUPPLY LINE	SCH 40	¾"	LF	80	80	195	230	585	LF	¾"
		1"	LF	80	80	55	130	345	LF	1"
		1¼"	LF	160	105		15	280	LF	1¼"
GSP										
DIP										
SPRINKLER TYPE		A-5	EA	7	7	9	9	32	EA	A-5
		B-2	EA				8	8	EA	B-2

DESCRIPTION		UNIT	VALVE OR ASSEMBLY NUMBER	SUBTOTALS	UNIT	DESCRIPTION	
PLASTIC PIPE SUPPLY LINE							PLASTIC PIPE SUPPLY LINE
GSP							GSP
DIP							DIP
SPRINKLER TYPE							SPRINKLER TYPE

IRRIGATION QUANTITIES

IQ-1

STATE OF CALIFORNIA - DEPARTMENT OF TRANSPORTATION
Caltrans® LANDSCAPE ARCHITECTURE

SENIOR LANDSCAPE ARCHITECT: JENNIFER TAIRA
CALCULATED-DESIGNED BY: GEORGE OLGUIN
CHECKED BY: XUAN WU
REVISED BY
DATE REVISED

LAST REVISION 00-00-00
DATE PLOTTED => 21-MAY-2013
TIME PLOTTED => 13:23

Dist	COUNTY	ROUTE	POST MILES TOTAL PROJECT	SHEET No.	TOTAL SHEETS
07	LA	405	4.3	44	89

George Olguin
LICENSED LANDSCAPE ARCHITECT

04-08-13
PLANS APPROVAL DATE

LICENSED LANDSCAPE ARCHITECT
GEORGE OLGUIN
NO. 4333
George Olguin
Signature
08-31-14
Renewal Date
11-04-12
Date
STATE OF CALIFORNIA

THE STATE OF CALIFORNIA OR ITS OFFICERS OR AGENTS SHALL NOT BE RESPONSIBLE FOR THE ACCURACY OR COMPLETENESS OF SCANNED COPIES OF THIS PLAN SHEET.

SUBTOTALS PER PLAN SHEET ON MAIN SUPPLY SIDE OF CONTROL VALVE

DESCRIPTION			UNIT	SHEET NUMBER IP-1	SUBTOTALS
BPA		ENCLOSURE			
BOOSTER PUMP					
IRRIGATION CONTROLLER		24 STATION		1	
		STATION			
		STATION			
	CEC	SINGLE		1	
		DOUBLE			
VALVES AND ASSEMBLIES	RCV	1"	EA	1	
		1½"	EA	3	
	GV				
	QCV				
	FV				
	FAU				
CONDUIT	CSP				
	WSP				
PLASTIC PIPE SUPPLY LINE	SCH 40	3"	LF	55	
		4"	LF	40	
GSP					
DIP					

TOTAL QUANTITIES

TOTALS	UNIT	DESCRIPTION		
		ENCLOSURE		BPA
		BOOSTER PUMP		
1	EA	24 STATION		IRRIGATION CONTROLLER
		STATION		
		STATION		
1	EA	SINGLE	CEC	
		DOUBLE		
1	EA	1"	RCV	VALVES AND ASSEMBLIES
3	EA	1½"		
			GV	
			QCV	
			FV	
			FAU	
			CSP	CONDUIT
			WSP	
585	LF	¾"	SCH 40	PLASTIC PIPE SUPPLY LINE
345	LF	1"		
280	LF	1¼"		
55	LF	3"		
40	LF	4"		
			GSP	
			DIP	
32	EA	A-5	SPRINKLER TYPE	
8	EA	B-2		

IRRIGATION QUANTITIES

IQ-2

STATE OF CALIFORNIA - DEPARTMENT OF TRANSPORTATION
LANDSCAPE ARCHITECTURE

CONSULTANT SENIOR LANDSCAPE ARCHITECT: JENNIFER TAIRA
CALCULATED-DESIGNED BY: XUAN WU
CHECKED BY: GEORGE OLGUIN
REVISED BY
DATE REVISED

LAST REVISION 00-00-00
DATE PLOTTED => 21-MAY-2013
TIME PLOTTED => 13:23

Dist	COUNTY	ROUTE	POST MILES TOTAL PROJECT	SHEET No.	TOTAL SHEETS
07	LA	405	4.3	45	89

George Olguin
LICENSED LANDSCAPE ARCHITECT

04-08-13
PLANS APPROVAL DATE

LICENSED LANDSCAPE ARCHITECT GEORGE OLGUIN NO. 4333 George Olguin Signature 08-31-14 Renewal Date 11-04-12 Date STATE OF CALIFORNIA

THE STATE OF CALIFORNIA OR ITS OFFICERS OR AGENTS SHALL NOT BE RESPONSIBLE FOR THE ACCURACY OR COMPLETENESS OF SCANNED COPIES OF THIS PLAN SHEET.

PLANT LIST AND PLANTING SPECIFICATIONS

PLANT GROUP	PLANT No.	SYMBOL	BOTANICAL NAME	COMMON NAME	SIZE	QUANTITY EACH	HOLE SIZE (INCH) Dia	HOLE SIZE (INCH) DEPTH	BASIN TYPE	IRON SULFATE ①	SOIL AMEND	COMMERCIAL FERTILIZER ① PLANTING	COMMERCIAL FERTILIZER ① PLT ESTB	BASIN MULCH (CY)	STAKING	PLANTING LIMITS MINIMUM DISTANCE (ft) FROM ETW	Pvmt	FENCE	WALL	PAVED DITCH	EARTH DITCH	ON CENTER (ft)	REMARKS
H			CARPOBROTUS EDULIS	HOTTENTOT FIG	CUTTINGS	5200	—	—	—	—	⑦	6.6 LBS/ 1,000 SQFT	6.6 LBS/ 1,000 SQFT	—	—	—	6	6	6	6	8	1.5	GROUND COVER

APPLICABLE WHEN CIRCLED:

① - QUANTITIES SHOWN ARE "PER PLANT" UNLESS SHOWN AS SQFT OR SQYD APPLICATION RATES
2 - BASIN MULCH IS INCLUDED WITH MULCH QUANTITIES SHOWN ON PLANTING PLAN
3 - SUFFICIENT TO RECEIVE ROOT BALL AND AMENDMENTS IF REQUIRED
4 - SEE DETAIL
5 - SEE SPECIAL PROVISIONS
6 - SEE STANDARD SPECIFICATIONS
⑦ - AS SHOWN ON PLANS
8 - UNLESS OTHERWISE SHOWN ON PLANS
9 - FOLIAGE PROTECTOR REQUIRED
10 - ROOT PROTECTOR REQUIRED
11 - ROOT BARRIER REQUIRED
12 - STATE-FURNISHED

NOTE:

UNDERLINED PORTIONS OF BOTANICAL NAME INDICATE ABBREVIATIONS USED ON PLANTING PLANS.

LEGEND

RC — ROADSIDE CLEARING (REMOVE Exist PLANTS EXCEPT TREES) (UNLESS OTHERWISE NOTED.)

SOIL AMEND CY

STATE OF CALIFORNIA - DEPARTMENT OF TRANSPORTATION
Caltrans® LANDSCAPE ARCHITECTURE

SENIOR LANDSCAPE ARCHITECT: JENNIFER TAIRA
CALCULATED-DESIGNED BY: GEORGE OLGUIN
CHECKED BY: Y1 SU
REVISED BY: DATE REVISED

PLANT LIST

PL-1

LAST REVISION 00-00-00
DATE PLOTTED => 21-MAY-2013
TIME PLOTTED => 13:23

Dist	COUNTY	ROUTE	POST MILES TOTAL PROJECT	SHEET No.	TOTAL SHEETS
07	LA	405	4.3	46	89

George Olguin
LICENSED LANDSCAPE ARCHITECT

04-08-13
PLANS APPROVAL DATE

LICENSED LANDSCAPE ARCHITECT
GEORGE OLGUIN
No. 4335
George Olguin
Signature
08-31-14
Renewal Date
11-04-12
Date
STATE OF CALIFORNIA

THE STATE OF CALIFORNIA OR ITS OFFICERS OR AGENTS SHALL NOT BE RESPONSIBLE FOR THE ACCURACY OR COMPLETENESS OF SCANNED COPIES OF THIS PLAN SHEET.

NOTE:

1. FOR ACCURATE RIGHT OF WAY DATA, CONTACT RIGHT OF WAY ENGINEERING AT THE DISTRICT OFFICE.

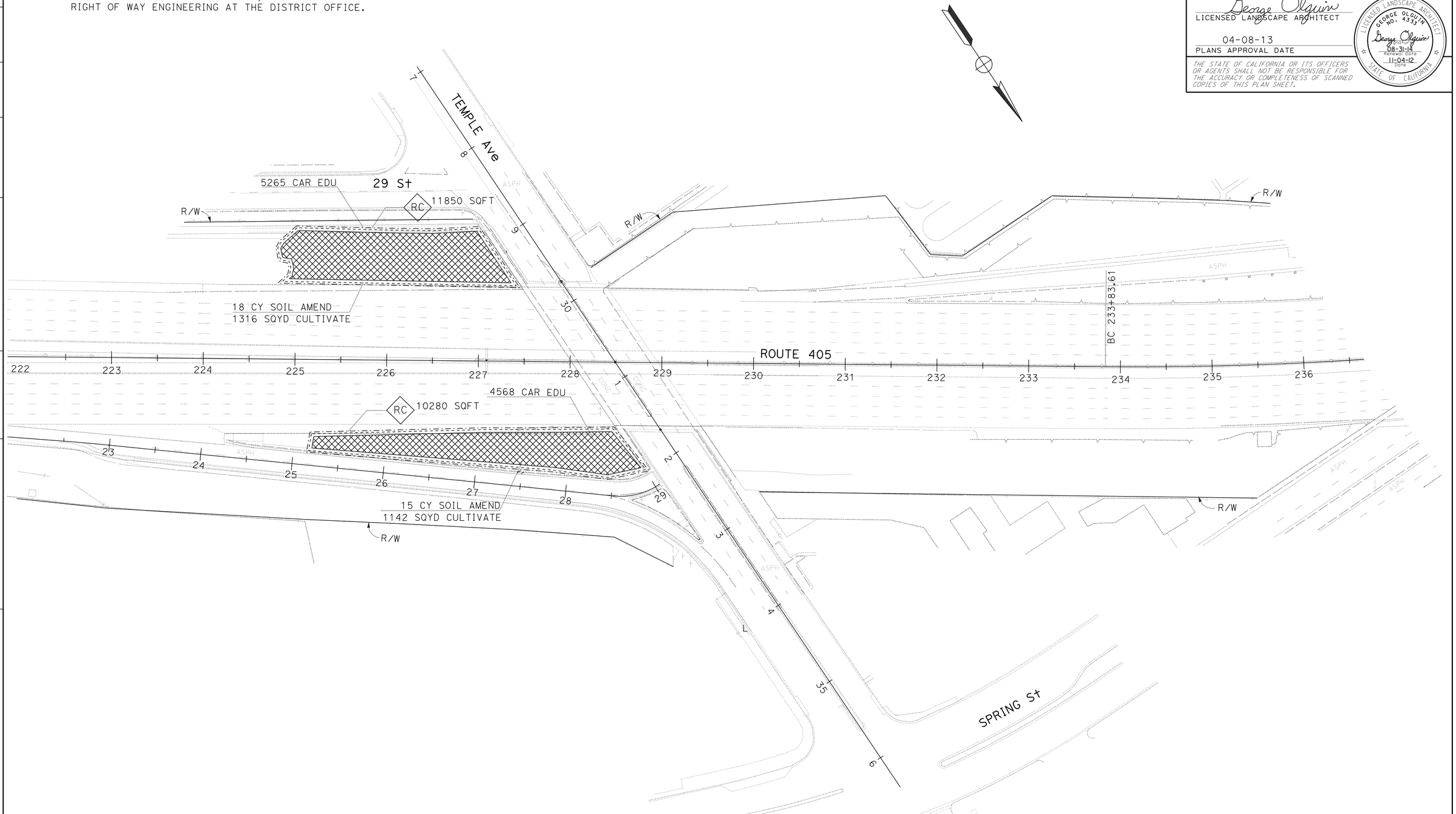

PLANTING PLAN

SCALE: 1" = 50'

PP-1

APPROVED FOR PLANTING WORK ONLY

REVISED BY | DATE REVISED

YI SU | GEORGE OLGUIN

CALCULATED-DESIGNED BY | CHECKED BY

SENIOR LANDSCAPE ARCHITECT | JENNIFER TAIRA

STATE OF CALIFORNIA - DEPARTMENT OF TRANSPORTATION
Caltrans® LANDSCAPE ARCHITECTURE

LAST REVISION 00-00-00 | DATE PLOTTED => 21-MAY-2013 | TIME PLOTTED => 13:23

Dist	COUNTY	ROUTE	POST MILES TOTAL PROJECT	SHEET No.	TOTAL SHEETS
07	LA	405	4.3	47	89

Jacqueline C Tan 01-30-13
REGISTERED ELECTRICAL ENGINEER DATE

04-08-13
PLANS APPROVAL DATE

REGISTERED PROFESSIONAL ENGINEER JACQUELINE C.TAN No. E015611 Exp.12/31/13 ELECTRICAL STATE OF CALIFORNIA

THE STATE OF CALIFORNIA OR ITS OFFICERS OR AGENTS SHALL NOT BE RESPONSIBLE FOR THE ACCURACY OR COMPLETENESS OF SCANNED COPIES OF THIS PLAN SHEET.

NOTE:

1. FOR ACCURATE RIGHT OF WAY DATA, CONTACT RIGHT OF WAY ENGINEERING AT THE DISTRICT OFFICE.

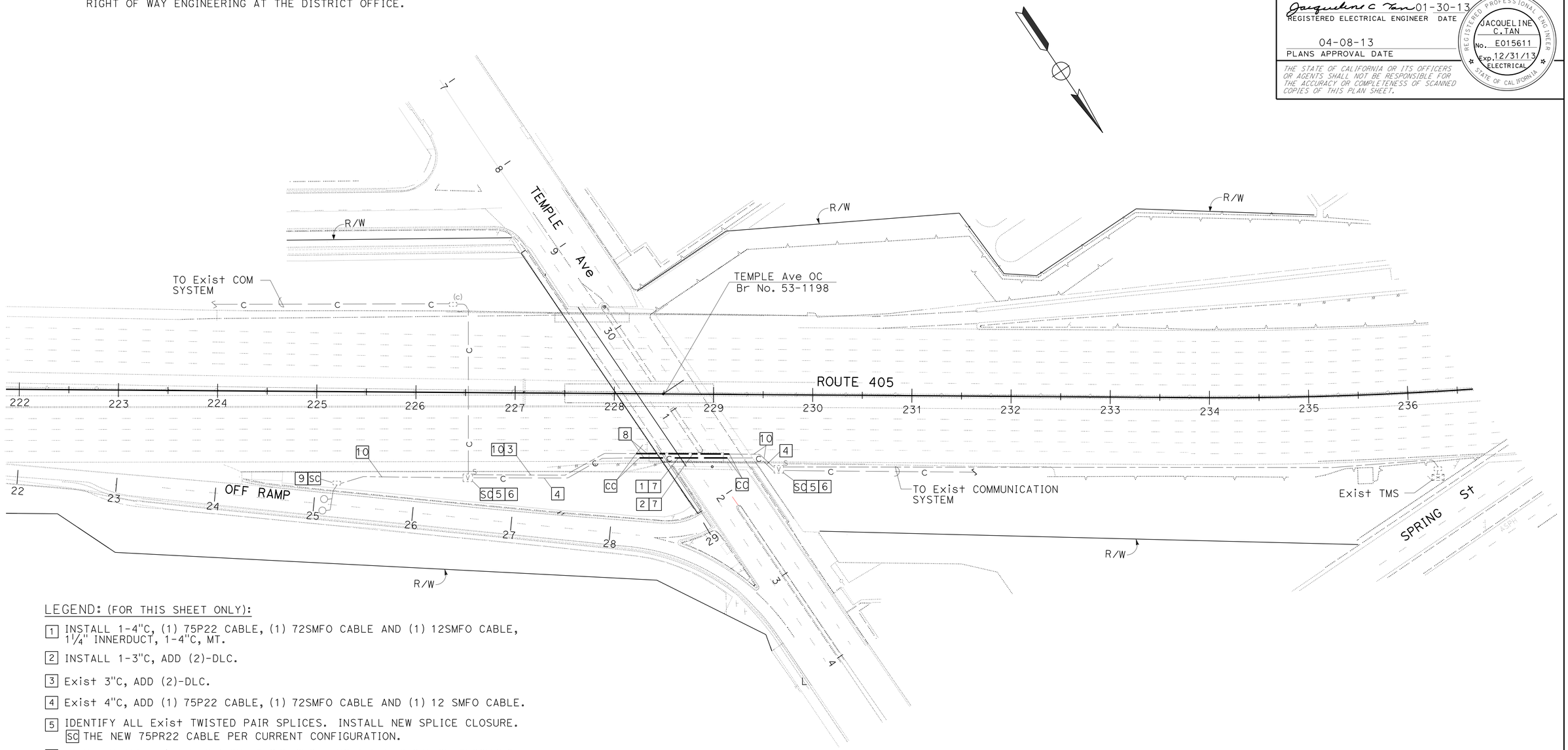

LEGEND: (FOR THIS SHEET ONLY):

1. INSTALL 1-4"C, (1) 75P22 CABLE, (1) 72SMFO CABLE AND (1) 12SMFO CABLE, 1¼" INNERDUCT, 1-4"C, MT.
2. INSTALL 1-3"C, ADD (2)-DLC.
3. Exist 3"C, ADD (2)-DLC.
4. Exist 4"C, ADD (1) 75P22 CABLE, (1) 72SMFO CABLE AND (1) 12 SMFO CABLE.
5. IDENTIFY ALL Exist TWISTED PAIR SPLICES. INSTALL NEW SPLICE CLOSURE. SC THE NEW 75PR22 CABLE PER CURRENT CONFIGURATION.
6. IDENTIFY ALL Exist FIBER OPTIC SPLICES. INSTALL NEW SPLICE CLOSURES. SC THE NEW 72SMFO AND 12SMFO CABLE PER CURRENT CONFIGURATION.
7. TRENCH AND INSTALL CONDUITS IN NEW CONCRETE PAVEMENT. SEE SHEET E-3 FOR DETAIL.
8. INSTALL CONDUITS IN THE SAME TRENCH.
9. RESPLICE dlc WITH LOOP DETECTOR CABLES.
10. RE-INSTALL Exist dlc. SEE NOTE 3 ON SHEET E-4.

MODIFY COMMUNICATION SYSTEM

SCALE: 1" = 50'

E-1

APPROVED FOR ELECTRICAL WORK ONLY

REVISED BY | DATE REVISED
HIEU LUU | JACQUELINE C TAN
CALCULATED-DESIGNED BY | CHECKED BY
FUNCTIONAL SUPERVISOR | JACQUELINE C TAN
STATE OF CALIFORNIA - DEPARTMENT OF TRANSPORTATION
Caltrans
OFFICE OF ITS

LAST REVISION 00-00-00 | DATE PLOTTED => 21-MAY-2013 | TIME PLOTTED => 13:23

Dist	COUNTY	ROUTE	POST MILES TOTAL PROJECT	SHEET No.	TOTAL SHEETS
07	LA	405	4.3	48	89

Jacqueline C Tan 01-30-13
REGISTERED ELECTRICAL ENGINEER DATE

04-08-13
PLANS APPROVAL DATE

REGISTERED PROFESSIONAL ENGINEER JACQUELINE C. TAN No. E015611 Exp. 12/31/13 ELECTRICAL STATE OF CALIFORNIA

THE STATE OF CALIFORNIA OR ITS OFFICERS OR AGENTS SHALL NOT BE RESPONSIBLE FOR THE ACCURACY OR COMPLETENESS OF SCANNED COPIES OF THIS PLAN SHEET.

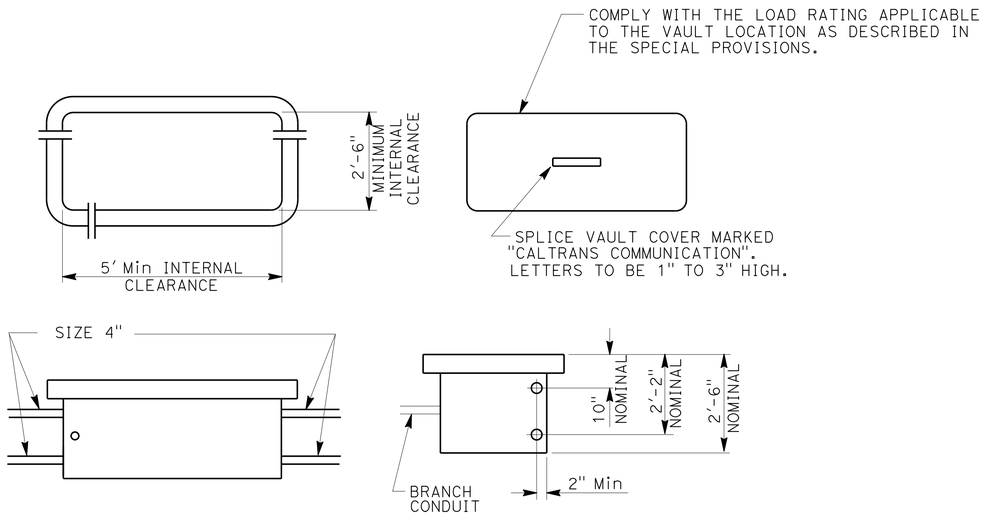

SPLICE VAULT DIMENSIONS

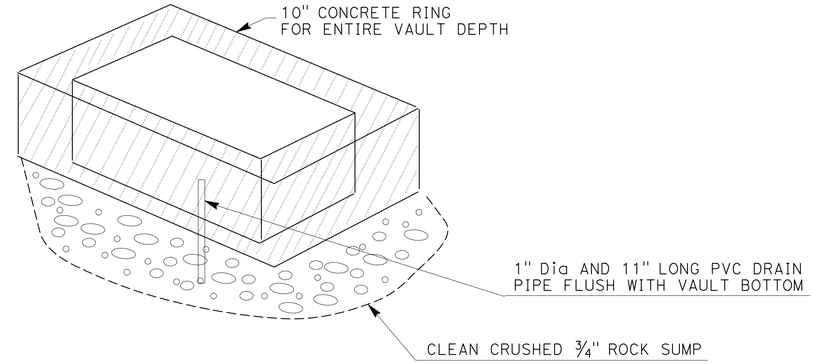

DETAIL A

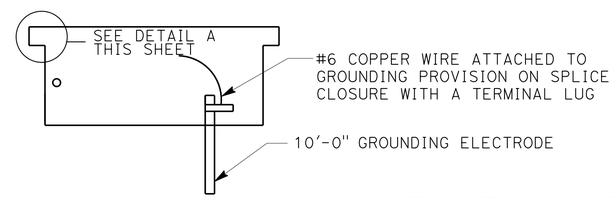

SPLICE VAULT INSTALLATION

INSTALLATION NOTES:

1. CONCRETE RING MUST BE MINOR CONCRETE.
2. CONCRETE ENCASEMENT RING DIMENSION, D, TO BE EQUAL TO DESIGN PAVEMENT DEPTH

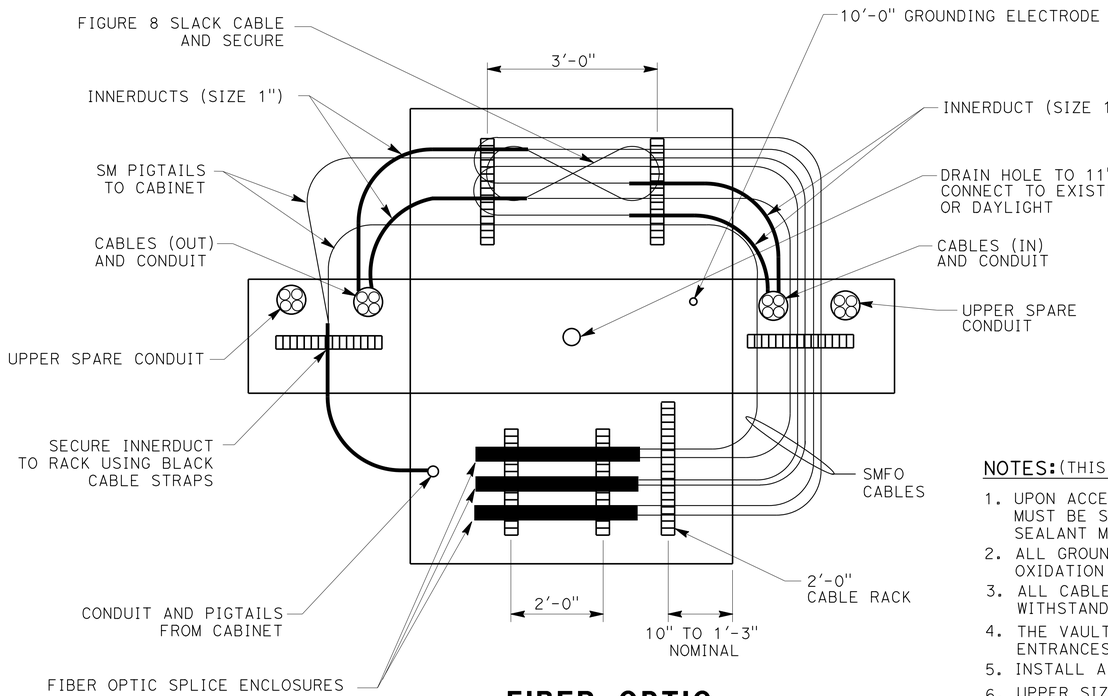

FIBER OPTIC CABLE INSTALLATION

TOP VIEW - WALLS FOLDED DOWN FOR CLARITY

NOTES: (THIS SHEET ONLY)

1. UPON ACCEPTANCE OF THE WORK ALL CONDUITS MUST BE SEALED WITH COMPATIBLE SEALANT MATERIAL.
2. ALL GROUND CONNECTIONS MUST BE COATED WITH OXIDATION PROHIBITING COMPOUND.
3. ALL CABLE STRAPS MUST BE DESIGNED TO WITHSTAND ULTRA-VIOLET EXPOSURE.
4. THE VAULT MUST BE CAULKED AFTER ALL KNOWN ENTRANCES HAVE BEEN MADE.
5. INSTALL ALL CABLES IN LOWER SIZE 4" CONDUIT.
6. UPPER SIZE 4" CONDUIT IS MT.
7. VAULT MUST HAVE INTEGRAL BASE OR MUST BE GROUTED PER STANDARD SPECIFICATION OF PULL BOXES.
8. NUMBER OF SPLICE CLOSURES AND INNERDUCTS MAY VARY.

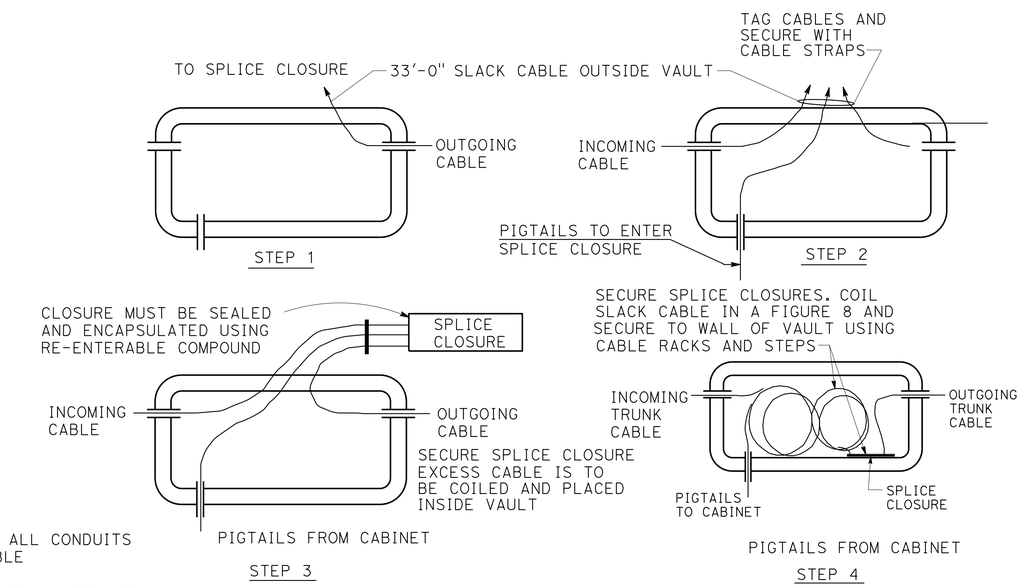

SPLICE PROCEDURE

ALL DIMENSIONS ARE IN FEET UNLESS OTHERWISE SHOWN

MODIFY COMMUNICATION SYSTEM
(SPLICE VAULT DETAILS)

NO SCALE

E-2

APPROVED FOR ELECTRICAL WORK ONLY

STATE OF CALIFORNIA - DEPARTMENT OF TRANSPORTATION
Caltrans
OFFICE OF ITS

FUNCTIONAL SUPERVISOR: JACQUELINE C TAN
CALCULATED-DESIGNED BY: HIEU LUU
CHECKED BY: JACQUELINE C TAN
REVISED BY
DATE REVISED

LAST REVISION 00-00-00
DATE PLOTTED => 21-MAY-2013
TIME PLOTTED => 13:23

Dist	COUNTY	ROUTE	POST MILES TOTAL PROJECT	SHEET No.	TOTAL SHEETS
07	LA	405	4.3	49	89

Jacqueline C Tan 01-30-13
REGISTERED ELECTRICAL ENGINEER DATE

04-08-13
PLANS APPROVAL DATE

REGISTERED PROFESSIONAL ENGINEER JACQUELINE C.TAN No. E015611 Exp. 12/31/13 ELECTRICAL STATE OF CALIFORNIA

THE STATE OF CALIFORNIA OR ITS OFFICERS OR AGENTS SHALL NOT BE RESPONSIBLE FOR THE ACCURACY OR COMPLETENESS OF SCANNED COPIES OF THIS PLAN SHEET.

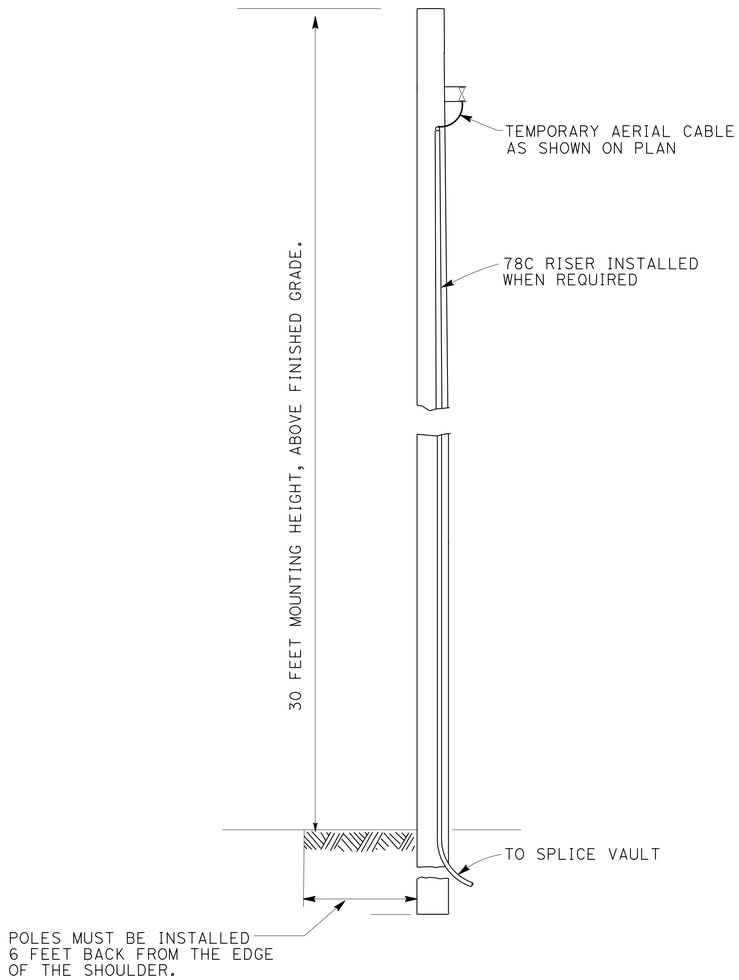

TEMPORARY WOOD POLE

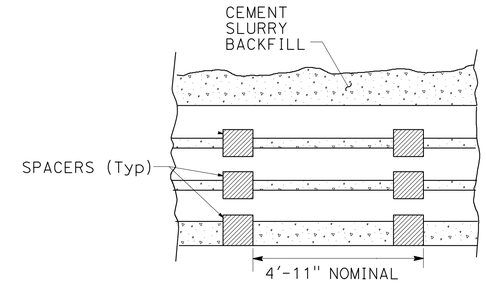

CONDUIT SPACER PLACEMENT (SIDE VIEW)

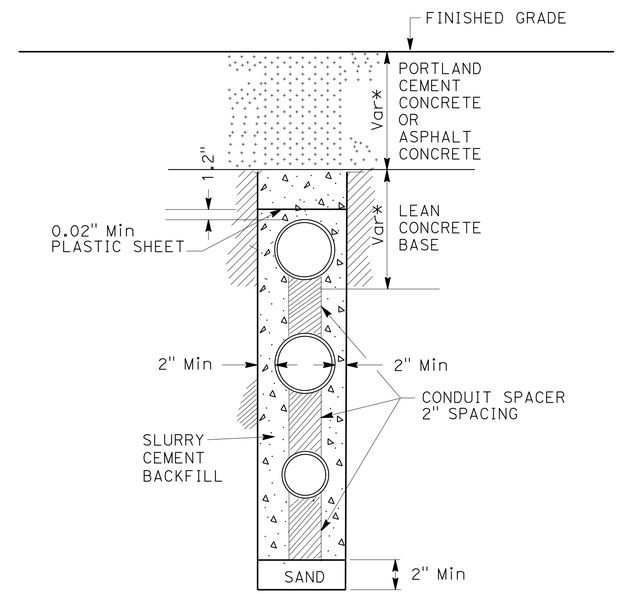

TRENCH IN NEW PAVEMENT

(* PAVEMENT THICKNESS, SEE TYPICAL CROSS SECTION PLANS)

NOTES: (THIS SHEET ONLY):

1. TRENCH TO BE CENTERED IN SHOULDER.
2. MAINTAIN 24" MINIMUM COVER AND BACKFILL TRENCH WITH SLURRY CEMENT BETWEEN PULL BOX AND PAVED SHOULDER.
3. ANCHOR/RESTRAIN TOP CONDUIT FROM FLOATING DURING SLURRY CEMENT BACKFILL.
4. CONDUITS MUST BE INSTALLED IN NEW CONCRETE PAVEMENT AFTER AGGREGATE BASE IS PLACED AND COMPACTED.
5. ALL OVERHEAD CABLE MUST BE SLACK SPANNED WITH 20 FEET MINIMUM OVERHEAD CLEARANCE.
6. POLES MUST BE BREAST BLOCKED, GUYED OR RAKED WHERE NECESSARY.

APPROVED FOR ELECTRICAL WORK ONLY

ELECTRICAL DETAILS

NO SCALE

E-3

REVISED BY | DATE REVISED
HIEU LUU | JACQUELINE C TAN
CALCULATED-DESIGNED BY | CHECKED BY
FUNCTIONAL SUPERVISOR
JACQUELINE C TAN
STATE OF CALIFORNIA - DEPARTMENT OF TRANSPORTATION
Caltrans
OFFICE OF ITS

LAST REVISION 00-00-00 | DATE PLOTTED => 21-MAY-2013 | TIME PLOTTED => 13:23

Dist	COUNTY	ROUTE	POST MILES TOTAL PROJECT	SHEET No.	TOTAL SHEETS
07	LA	405	4.3	50	89

Jacqueline C Tan 01-30-13
REGISTERED ELECTRICAL ENGINEER DATE

04-08-13
PLANS APPROVAL DATE

REGISTERED PROFESSIONAL ENGINEER
JACQUELINE C. TAN
No. E015611
Exp. 12/31/13
ELECTRICAL
STATE OF CALIFORNIA

THE STATE OF CALIFORNIA OR ITS OFFICERS OR AGENTS SHALL NOT BE RESPONSIBLE FOR THE ACCURACY OR COMPLETENESS OF SCANNED COPIES OF THIS PLAN SHEET.

NOTE:

1. FOR ACCURATE RIGHT OF WAY DATA, CONTACT RIGHT OF WAY ENGINEERING AT THE DISTRICT OFFICE.

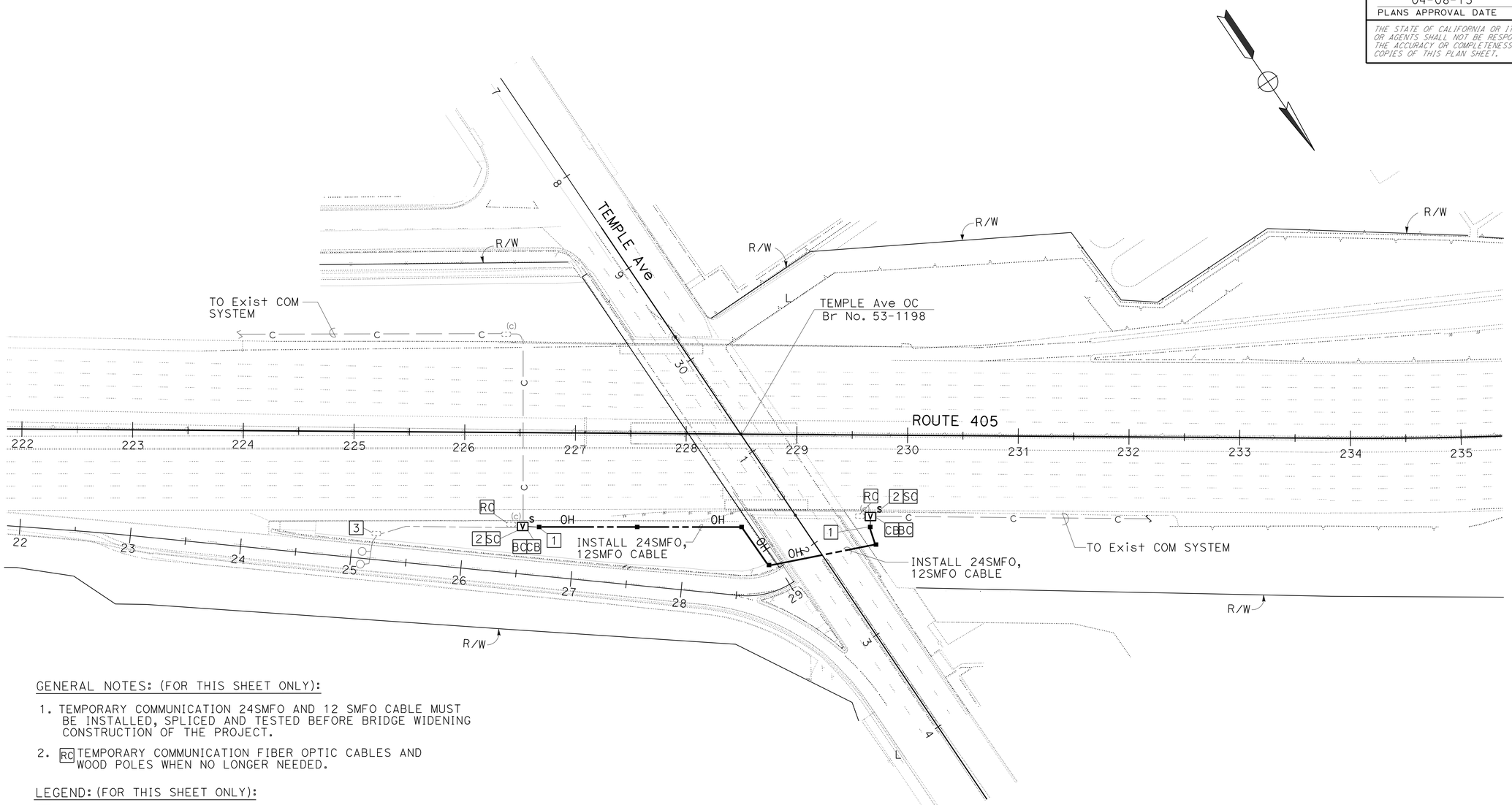

GENERAL NOTES: (FOR THIS SHEET ONLY):

1. TEMPORARY COMMUNICATION 24SMFO AND 12 SMFO CABLE MUST BE INSTALLED, SPLICED AND TESTED BEFORE BRIDGE WIDENING CONSTRUCTION OF THE PROJECT.
2. RC TEMPORARY COMMUNICATION FIBER OPTIC CABLES AND WOOD POLES WHEN NO LONGER NEEDED.

LEGEND: (FOR THIS SHEET ONLY):

1 INSTALL WOOD POLE WITH 78C RISER.

2 IDENTIFY ALL Exist FIBER OPTIC SPLICES. INSTALL NEW SPLICE VAULT AND FIBER OPTIC SPLICE CLOSURES. SC THE NEW 24SMFO AND 12SMFO CABLE PER CURRENT CONFIGURATION.

3 DISCONNECT 2 EXIST dlc. PULL BACK AND COIL AT THE SPLICE VAULT STA 229+60 FOR RE-INSTALLATION.

LEGEND:

■ TEMPORARY WOOD POLE. SEE DETAIL ON SHEET E-3.

TEMPORARY COMMUNICATION SYSTEM ROUTING
(AERIAL FIBER OPTIC CABLES)

SCALE: 1" = 50'

E-4

APPROVED FOR ELECTRICAL WORK ONLY

STATE OF CALIFORNIA - DEPARTMENT OF TRANSPORTATION
Caltrans®
OFFICE OF ITS

FUNCTIONAL SUPERVISOR: JACQUELINE C TAN

CALCULATED-DESIGNED BY: HIEU LUU
CHECKED BY: JACQUELINE C TAN

REVISED BY
DATE REVISED

LAST REVISION 00-00-00
DATE PLOTTED => 21-MAY-2013
TIME PLOTTED => 13:23

Dist	COUNTY	ROUTE	POST MILES TOTAL PROJECT	SHEET No.	TOTAL SHEETS
07	LA	405	4.3	51	89

Jacqueline C Tan 01-30-13
REGISTERED ELECTRICAL ENGINEER DATE

04-08-13
PLANS APPROVAL DATE

REGISTERED PROFESSIONAL ENGINEER
JACQUELINE C.TAN
No. E015611
Exp. 12/31/13
ELECTRICAL
STATE OF CALIFORNIA

THE STATE OF CALIFORNIA OR ITS OFFICERS OR AGENTS SHALL NOT BE RESPONSIBLE FOR THE ACCURACY OR COMPLETENESS OF SCANNED COPIES OF THIS PLAN SHEET.

MODIFY COMMUNICATION SYSTEM

SHEET No.	(N) FIBER OPTIC SPLICE CLOSURE	(N) TWISTED PAIR SPLICE CLOSURE	(N) 75P22 CABLE	(N) 72SMFO CABLE	(N) 12SMFO CABLE	(N) 4"C, TYPE 3	(N) 3"C, TYPE 3
	EA	EA	LF	LF	LF	LF	LF
E-1	2	2	600	600	600	140	140

TEMPORARY COMMUNICATION SYSTEM ROUTING

SHEET No.	(N) SPLICE VAULT	(N) FIBER OPTIC SPLICE CLOSURE	(N) WOOD POLE	(N) 72SMFO CABLE	(N) 12SMFO CABLE
	EA	EA	EA	LF	LF
E-4	2	2	6	700	700

(N) - NOT A SEPARATE PAY ITEM, FOR INFORMATION ONLY.

ELECTRICAL QUANTITIES

E-5

REVISED BY	DATE REVISED
HIEU LUU	JACQUELINE C TAN

CALCULATED-DESIGNED BY	CHECKED BY

FUNCTIONAL SUPERVISOR: JACQUELINE C TAN

STATE OF CALIFORNIA - DEPARTMENT OF TRANSPORTATION
Caltrans® OFFICE OF ITS

LAST REVISION 07-11-12
DATE PLOTTED => 21-MAY-2013
TIME PLOTTED => 13:23

Dist	COUNTY	ROUTE	POST MILES TOTAL PROJECT	SHEET No.	TOTAL SHEETS
07	LA	405	4.3	52	89

REGISTERED CIVIL ENGINEER 12-7-12 DATE

04-08-13
PLANS APPROVAL DATE

REGISTERED PROFESSIONAL ENGINEER Gurinderpal Bhullar No. C48815 Exp. 9-30-14 CIVIL STATE OF CALIFORNIA

THE STATE OF CALIFORNIA OR ITS OFFICERS OR AGENTS SHALL NOT BE RESPONSIBLE FOR THE ACCURACY OR COMPLETENESS OF SCANNED COPIES OF THIS PLAN SHEET.

NOTES:

Unless otherwise specified in the special provisions, all temporary warning signs shall have black legend on orange background.

California code are designated by (CA). Otherwise, Federal (MUTCD) codes are shown.

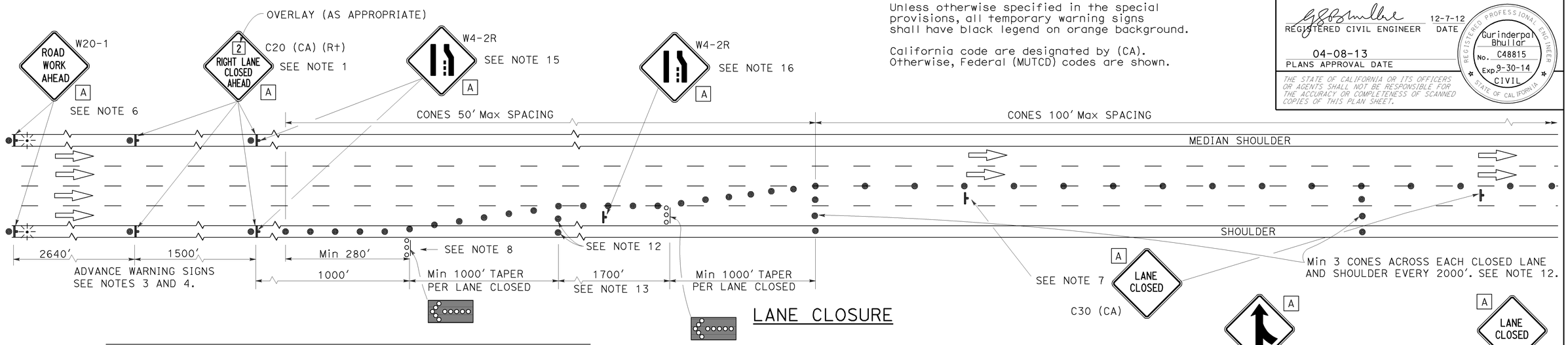

LANE CLOSURE

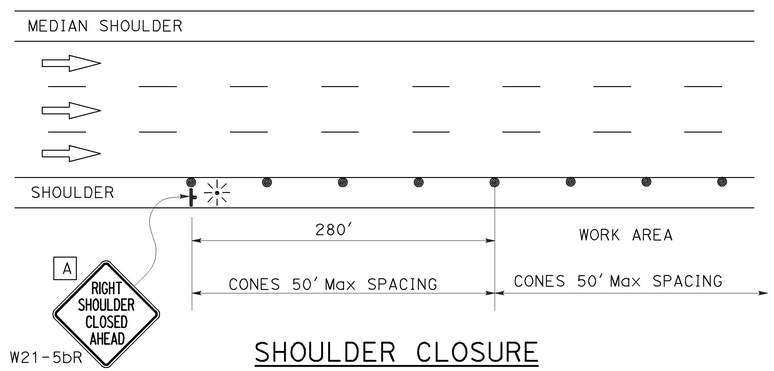

SHOULDER CLOSURE

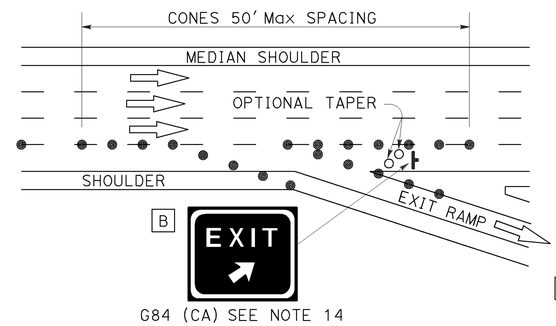

LANE CLOSURE AT EXIT RAMP

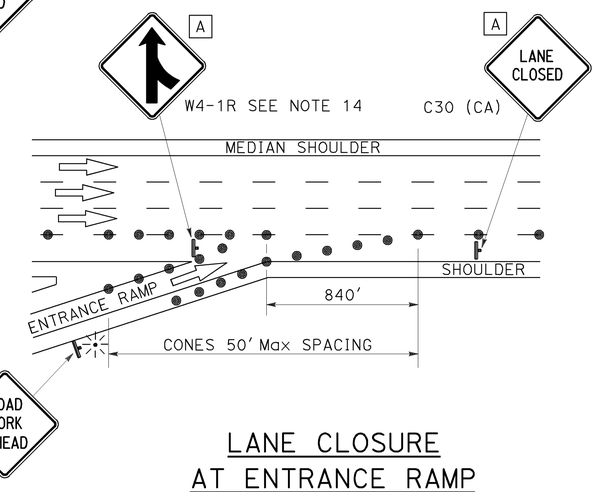

LANE CLOSURE AT ENTRANCE RAMP

NOTES:

1. Median lane closures shall conform to the details for outside lane closures except that C20 (CA) (Lt) signs shall be used.
2. At least one person shall be assigned to provide full time maintenance of traffic control devices for lane closures.
3. Duplicate sign installations are not required:
   a) On opposite shoulder if at least one-half of the available lanes remain open to traffic.
   b) In the median if the width of the median shoulder is less than 8' and the outside lanes are to be closed.
4. Each advance warning sign on each side of the roadway shall be equipped with at least two flags for daytime closure. Each flag shall be at least 16" x 16" in size and shall be orange or fluorescent red-orange in color. Flashing beacons shall be placed at the locations indicated for lane closure during hours of darkness.
5. A C14 (CA) "END ROAD WORK" sign, as appropriate, shall be placed at the end of the lane closure unless the end of work area is obvious or ends within a larger project's limits.
6. If the W20-1 sign would follow within 2000' of a stationary W20-1 or C11 (CA) "ROAD WORK NEXT _____ MILES", use a C20 (CA) sign for the first advance warning sign.
7. Place a C30 (CA) sign every 2000' throughout length of lane closure.
8. One flashing arrow sign for each lane closed. The first flashing arrow sign shall be Type I. All others may be either Type I or Type II.
9. A minimum 1500' of sight distance shall be provided where possible for vehicles approaching the first flashing arrow sign. Lane closures shall not begin at top of crest vertical curve or on a horizontal curve.
10. All cones used for lane closures during the hours of darkness shall be fitted with retroreflective bands (or sleeves) as specified in the specifications.
11. Portable delineators, placed at one-half the spacing indicated for traffic cones may be used instead of cones for daytime closures only.
12. Unless otherwise specified in the special provisions, a minimum of 3 cones shall be placed transversely across each closed lane and shoulder at each location where a taper across a traffic lane ends and every 2000' as shown on the "Lane Closure" detail. Two Type II barricades may be used instead of the 3 cones. The transverse alignment of the cones or barricades on the closed shoulder may be shifted from the transverse alignment to provide access to the work.
13. Unless otherwise specified in the special provisions, the 1700' tangent shown along lane lines shall be used between the 1000' tapers required for each closed traffic lane.
14. Unless otherwise specified in the special provisions, the G84 (CA) and W4-1 signs shall be used as shown.
15. When specified in the special provisions, a W4-2 "LANE ENDS" symbol sign is to be used in place of the C20 (CA) "RIGHT LANE CLOSED AHEAD" sign.
16. The W4-2 "LANE ENDS" symbol sign shown at this location is to be used where the W4-2 sign is used as advance warning as described in Note 15.

SIGN PANEL SIZE (Min)

A	48" x 48"
B	54" x 48"

LEGEND

- TRAFFIC CONE
- TRAFFIC CONE (OPTIONAL TAPER)
- TEMPORARY SIGN
- FLASHING ARROW SIGN (FAS)
- FAS SUPPORT OR TRAILER
- PORTABLE FLASHING BEACON

STATE OF CALIFORNIA
DEPARTMENT OF TRANSPORTATION

TRAFFIC CONTROL SYSTEM FOR LANE CLOSURE ON FREEWAYS AND EXPRESSWAYS

NO SCALE

TCS-1

REVISED BY | DATE REVISED | CALCULATED-DESIGNED BY | CHECKED BY | FUNCTIONAL SUPERVISOR

STATE OF CALIFORNIA - DEPARTMENT OF TRANSPORTATION

Caltrans

LAST REVISION 12-18-12 | DATE PLOTTED => 10-DEC-2012 | TIME PLOTTED => 09:45

Dist	COUNTY	ROUTE	POST MILES TOTAL PROJECT	SHEET No.	TOTAL SHEETS
07	LA	405	4.3	53	89

REGISTERED CIVIL ENGINEER 12-7-12 DATE

04-08-13
PLANS APPROVAL DATE

REGISTERED PROFESSIONAL ENGINEER Gurinderpal Bhullar No. C48815 Exp. 9-30-14 CIVIL STATE OF CALIFORNIA

THE STATE OF CALIFORNIA OR ITS OFFICERS OR AGENTS SHALL NOT BE RESPONSIBLE FOR THE ACCURACY OR COMPLETENESS OF SCANNED COPIES OF THIS PLAN SHEET.

NOTES:

Unless otherwise specified in the special provisions, all temporary warning signs shall have black legend on orange background.

California code are designated by (CA). Otherwise, Federal (MUTCD) codes are shown.

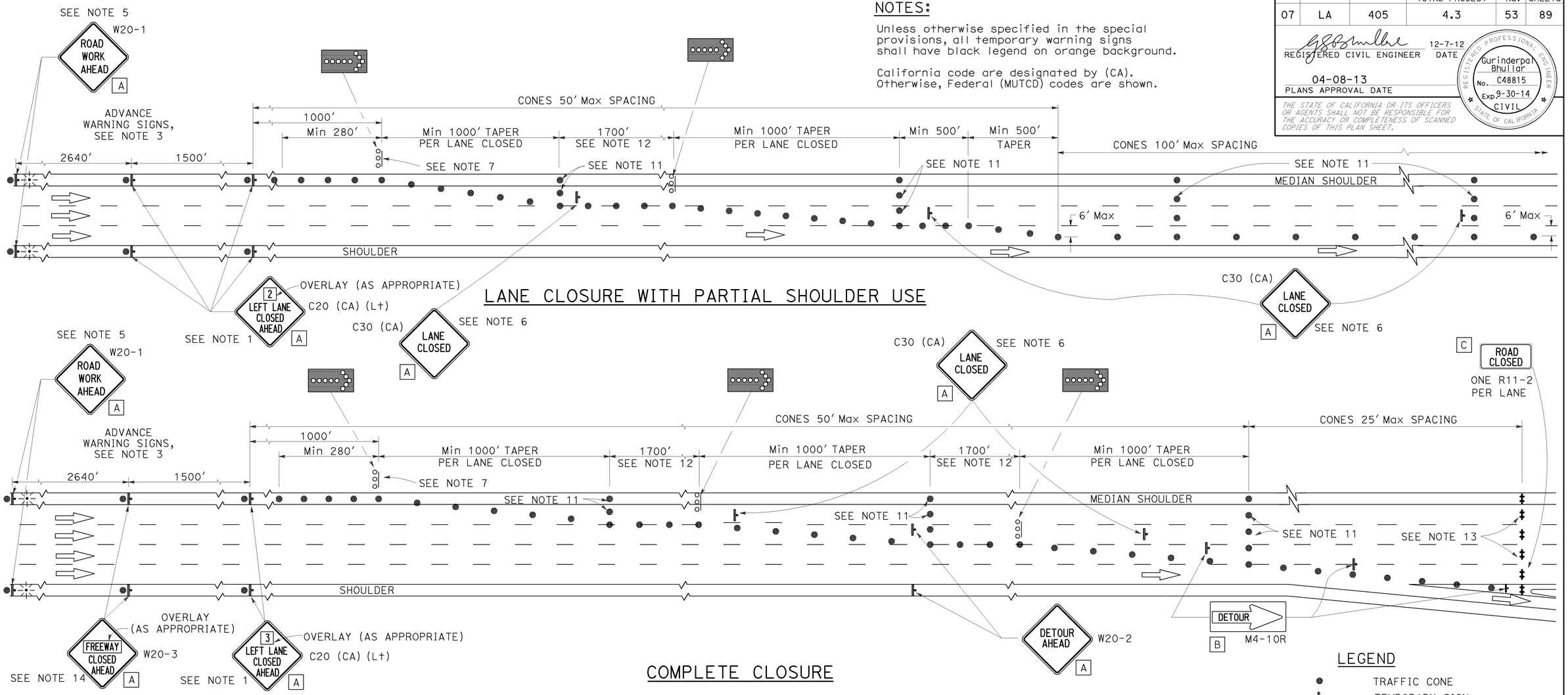

LANE CLOSURE WITH PARTIAL SHOULDER USE

COMPLETE CLOSURE

LEGEND

- TRAFFIC CONE
- TEMPORARY SIGN
- BARRICADE
- FLASHING ARROW SIGN (FAS)
- FAS SUPPORT OR TRAILER
- PORTABLE FLASHING BEACON

NOTES:

1. Lane closures on the right side using partial median shoulder as a traffic lane shall conform to the details for inside lane closure except that C20 (CA) (Rt) signs shall be used.
2. At least one person shall be assigned to provide full time maintenance of traffic control devices for lane closures.
3. Each advance warning sign on each side of the roadway shall be equipped with at least two flags for daytime closure. Each flag shall be at least 16" X 16" in size and shall be orange or fluorescent red-orange in color. Flashing beacons shall be placed at the locations indicated for lane closure during hours of darkness.
4. A C14 (CA) "END ROAD WORK" sign, as appropriate, shall be placed at the end of the lane closure unless the end of work area is obvious or ends within a larger project's limits.
5. If the W20-1 sign would follow within 2000′ of a stationary W20-1 or C11 (CA) "ROAD WORK NEXT ___ MILES", use a C20 (CA) sign for the first advance warning sign.
6. Place a C30 (CA) sign every 2000′ throughout length of lane closure.
7. One flashing arrow sign for each lane closed. The first flashing arrow sign shall be Type I. All others may be either Type I or Type II.
8. A minimum 1500′ of sight distance shall be provided where possible for vehicles approaching the first flashing arrow sign. Lane closures shall not begin at the top of crest vertical curve or on a horizontal curve.
9. All cones used for lane closures during the hours of darkness shall be fitted with retroreflective bands (or sleeves) as specified in the specifications.
10. Portable delineators, placed at one-half the spacing indicated for traffic cones, may be used instead of cones for daytime closures only.
11. Unless otherwise specified in the special provisions, a minimum of 3 cones shall be placed transversely across each closed lane and shoulder at each location where a taper across a traffic lane ends and every 2000′ as shown on the "Lane Closure With Partial Shoulder Use" detail. Two Type II barricades may be used instead of the 3 cones. The transverse alignment of the cones or barricades on the closed shoulder may be shifted from the transverse alignment to provide access to the work.
12. Unless otherwise specified in the special provisions, the 1700′ tangent shown along lane lines shall be used between the 1000′ tapers required for each closed traffic lane.
13. A minimum of Two Type II barricades shall be placed across each closed lane and shoulder at the location shown and every 2000′ within the complete closure area. Within the complete closure area, the transverse alignment of the barricades on the closed shoulder may be shifted from the transverse alignment to provide access to the work.
14. When specified in the special provisions, a W20-2 "DETOUR AHEAD" sign is to be used in place of the W20-3 "FREEWAY CLOSED AHEAD" sign.

SIGN PANEL SIZE (Min)

A	48" × 48"
B	48" × 18"
C	48" × 30"

STATE OF CALIFORNIA
DEPARTMENT OF TRANSPORTATION

TRAFFIC CONTROL SYSTEM FOR LANE AND COMPLETE CLOSURES ON FREEWAYS AND EXPRESSWAYS

NO SCALE

TCS-2

STATE OF CALIFORNIA - DEPARTMENT OF TRANSPORTATION

Caltrans

REVISED BY | DATE REVISED | CALCULATED-DESIGNED BY | CHECKED BY | FUNCTIONAL SUPERVISOR

LAST REVISION 12-18-12 | DATE PLOTTED => 10-DEC-2012 | TIME PLOTTED => 09:45

Dist	COUNTY	ROUTE	POST MILES TOTAL PROJECT	SHEET No.	TOTAL SHEETS
07	LA	405	4.3	54	89

REGISTERED CIVIL ENGINEER 12-7-12 DATE

04-08-13
PLANS APPROVAL DATE

REGISTERED PROFESSIONAL ENGINEER Gurinderpal Bhullar No. C48815 Exp. 9-30-14 CIVIL STATE OF CALIFORNIA

THE STATE OF CALIFORNIA OR ITS OFFICERS OR AGENTS SHALL NOT BE RESPONSIBLE FOR THE ACCURACY OR COMPLETENESS OF SCANNED COPIES OF THIS PLAN SHEET.

TYPICAL LANE CLOSURE

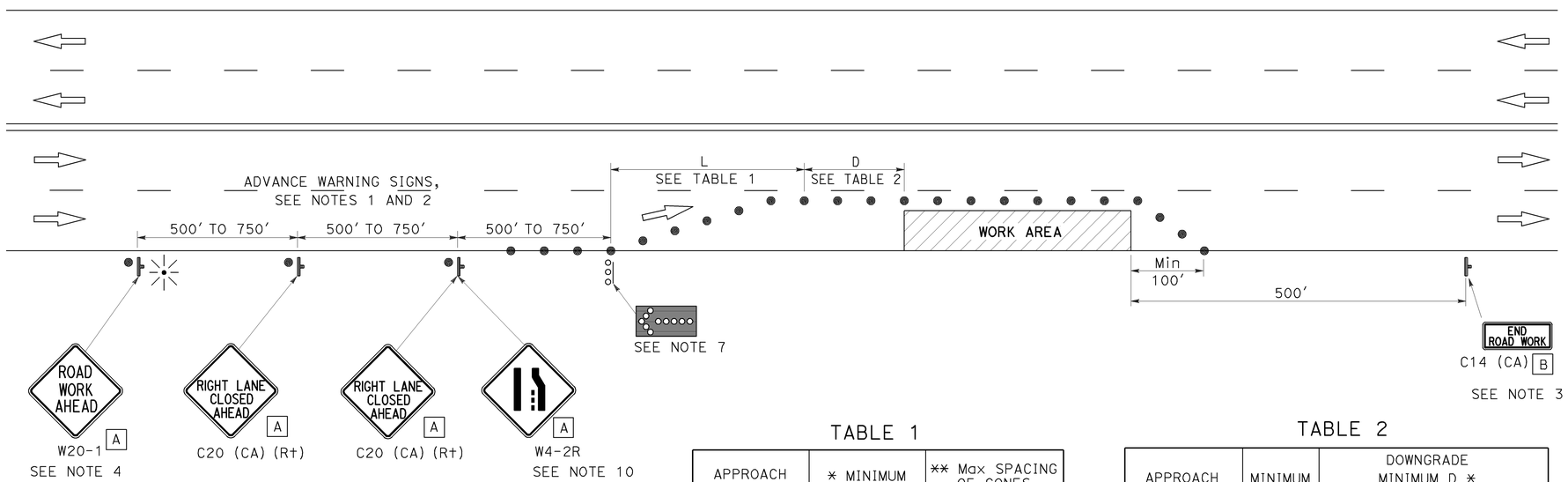

NOTES:

Unless otherwise specified in the special provisions, all temporary warning signs shall have black legend on orange background.

California code are designated by (CA). Otherwise, Federal (MUTCD) codes are shown.

LEGEND

- TRAFFIC CONE
- TEMPORARY SIGN
- FLASHING ARROW SIGN (FAS)
- FAS SUPPORT OR TRAILER
- PORTABLE FLASHING BEACON

SIGN PANEL SIZE (Min)

A 36" x 36"

B 36" x 18"

TABLE 1

APPROACH SPEED	* MINIMUM L	** Max SPACING OF CONES ALONG TAPER
mph	ft	ft
20 AND BELOW	80	20
25	125	25
30	180	30
35	245	35
40	320	40
45	540	45
50	600	50
Over 50	SEE NOTE 9	

* USE L FOR LANE WIDTHS LESS THAN OR EQUAL TO 12'.
** SEE NOTE 8.

TABLE 2

APPROACH SPEED	MINIMUM D	DOWNGRADE MINIMUM D *		
		-3%	-6%	-9%
mph	ft	ft	ft	ft
25 AND BELOW	155	158	165	173
30	200	205	215	227
35	250	257	271	287
40	305	315	333	354
45	360	378	400	427
50	425	446	474	507
OVER 50	SEE NOTE 9			

* USE ON SUSTAINED DOWNGRADE STEEPER THAN -3 PERCENT AND LONGER THAN 1 MILE.

NOTES:

1. Where approach speeds are low, advance warning signs may be placed at 300' spacing and placed closer in urban areas.
2. Each advance warning sign shall be equipped with at least two flags for daytime closure. Each flag shall be at least 16" x 16" in size and shall be orange or fluorescent red-orange in color. Flashing beacons shall be placed at the locations indicated for lane closure during hours of darkness.
3. A C14 (CA) "END ROAD WORK" sign, as appropriate, shall be placed at the end of the lane closure unless the end of work area is obvious, or ends within a larger project's limits.
4. If the W20-1 sign would follow within 2000' of a stationary W20-1 or C11 (CA) "ROAD WORK NEXT _____ MILES", use a C20 (CA) sign for the first advance warning sign.
5. All cones used for lane closures during the hours of darkness shall be fitted with retroreflective bands (or sleeves) as specified in the specifications.
6. Portable delineators, placed at one-half the spacing indicated for traffic cones, may be used instead of cones for daytime closures only.
7. Flashing arrow sign shall be either Type I or Type II.
8. The maximum spacing between cones along a tangent shall be 50' and along a taper shall be approximately as shown in Table 1.
9. For approach speeds over 50 mph, use the "Traffic Control System for Lane Closure On Freeways And Expressways" plan for lane closure details and requirements.
10. When specified in the special provisions, a W4-2 "LANE ENDS" symbol sign is to be used in place of the C20 (CA) "RIGHT LANE CLOSED AHEAD" sign.

STATE OF CALIFORNIA
DEPARTMENT OF TRANSPORTATION

TRAFFIC CONTROL SYSTEM FOR LANE CLOSURE ON MULTILANE CONVENTIONAL HIGHWAYS

NO SCALE

TCS-3

STATE OF CALIFORNIA - DEPARTMENT OF TRANSPORTATION
Caltrans

FUNCTIONAL SUPERVISOR | CALCULATED-DESIGNED BY | CHECKED BY | REVISED BY | DATE REVISED

LAST REVISION 12-18-12 | DATE PLOTTED => 10-DEC-2012 | TIME PLOTTED => 09:45

Dist	COUNTY	ROUTE	POST MILES TOTAL PROJECT	SHEET No.	TOTAL SHEETS
07	LA	405	4.3	55	89

REGISTERED CIVIL ENGINEER 12-7-12 DATE

04-08-13
PLANS APPROVAL DATE

REGISTERED PROFESSIONAL ENGINEER Gurinderpal Bhullar No. C48815 Exp. 9-30-14 CIVIL STATE OF CALIFORNIA

THE STATE OF CALIFORNIA OR ITS OFFICERS OR AGENTS SHALL NOT BE RESPONSIBLE FOR THE ACCURACY OR COMPLETENESS OF SCANNED COPIES OF THIS PLAN SHEET.

LEGEND

- TRAFFIC CONE
- TEMPORARY SIGN
- FLASHING ARROW SIGN (FAS)
- FAS SUPPORT OR TRAILER
- PORTABLE FLASHING BEACON

TABLE 1

APPROACH SPEED	* MINIMUM L	** Max SPACING OF CONES ALONG TAPER
mph	ft	ft
20 and below	80	20
25	125	25
30	180	30
35	245	35
40	320	40
45	540	45
50	600	50
OVER 50	SEE NOTE 11	

* USE L FOR LANE WIDTHS LESS THAN OR EQUAL TO 12'.
** SEE NOTE 10.

TABLE 2

APPROACH SPEED	MINIMUM D	DOWNGRADE MINIMUM D *		
		-3%	-6%	-9%
mph	ft	ft	ft	ft
25 AND BELOW	155	158	165	173
30	200	205	215	227
35	250	257	271	287
40	305	315	333	354
45	360	378	400	427
50	425	446	474	507
OVER 50	SEE NOTE 11			

* USE ON SUSTAINED DOWNGRADE STEEPER THAN -3 PERCENT AND LONGER THAN 1 MILE.

TYPICAL CLOSING OF HALF ROADWAY

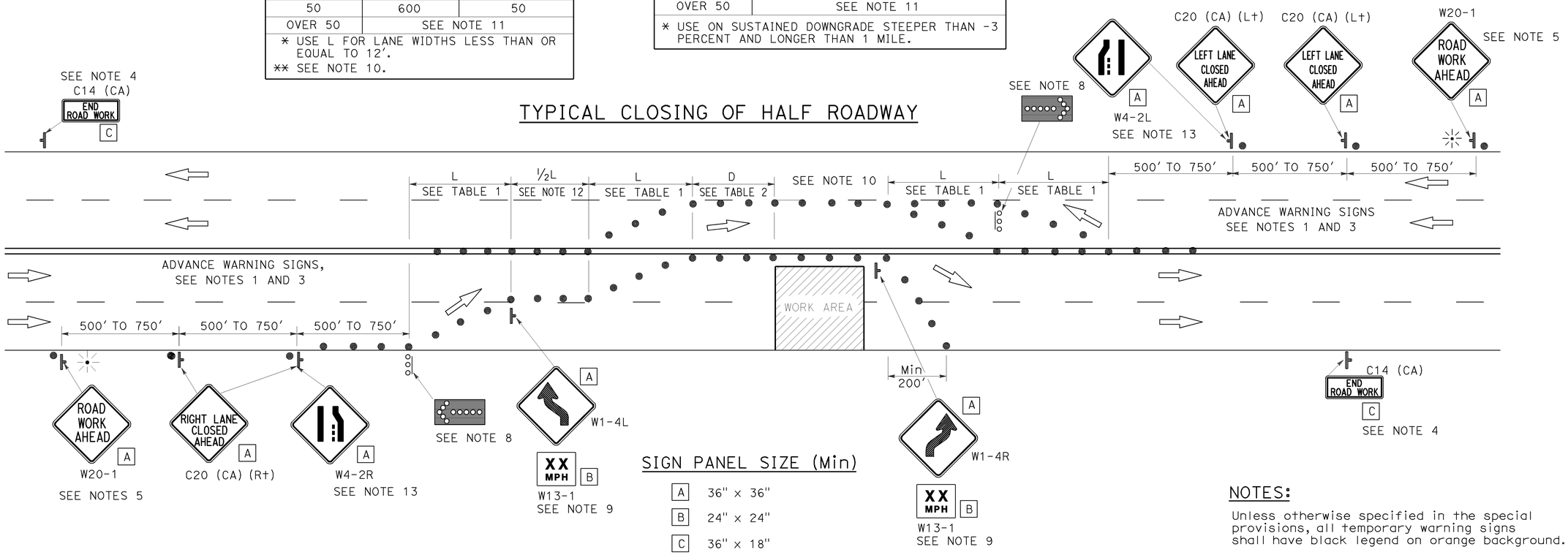

SIGN PANEL SIZE (Min)

A	36" x 36"
B	24" x 24"
C	36" x 18"

NOTES:

Unless otherwise specified in the special provisions, all temporary warning signs shall have black legend on orange background.

California code are designated by (CA). Otherwise, Federal (MUTCD) codes are shown.

NOTES:

1. Where Approach speeds are low, advance warning signs may be placed at 300' spacing and placed closer in urban areas.
2. At least one person shall be assigned to provide full time maintenance of traffic control devices for lane closure unless, otherwise directed by the Engineer.
3. Each advance warning sign in each direction of travel shall be equipped with at least two flags for daytime closure. Each flag shall be at least 16" x 16" in size and shall be orange or fluorescent red-orange in color. Flashing beacons shall be placed at the locations indicated for lane closure during hours of darkness.
4. A C14 (CA) "END ROAD WORK" sign, as appropriate, shall be placed at the end of the lane closure unless the end of work area is obvious, or ends within a larger project's limits.
5. If the W20-1 sign would follow within 2000' of a stationary W20-1 or C11 (CA) "ROAD WORK NEXT _____ MILES", use a C20 (CA) sign for the first advance warning sign.
6. All cones used for lane closures during the hours of darkness shall be fitted with retroreflective bands (or sleeves) as specified in the specifications.
7. Portable delineators, placed at one-half the spacing indicated for traffic cones, may be used instead of cones for daytime closures only.
8. Flashing arrow signs shall be either Type I or Type II.
9. Advisory speed will be determined by the Engineer. The W13-1 Sign will not be required when advisory speed is more than the posted or maximum speed limit.
10. The maximum spacing between cones along a tangent shall be 50' and along a taper shall be approximately as shown in Table 1.
11. For approach speeds over 50 mph, use the "Traffic Control System For Lane Closure On Freeways And Expressways" plan for lane closure details and requirements.
12. Unless otherwise specified in the special provisions, the (½ L) shown between the two (L) lane closure tapers shall be used.
13. When specified in the special provisions, a W4-2 "Lane Ends" symbol sign is to be used in place of the C20 (CA) "RIGHT (LEFT) LANE CLOSED AHEAD" sign.

STATE OF CALIFORNIA
DEPARTMENT OF TRANSPORTATION

TRAFFIC CONTROL SYSTEM FOR LANE CLOSURE ON MULTILANE CONVENTIONAL HIGHWAYS

NO SCALE

TCS-4

STATE OF CALIFORNIA - DEPARTMENT OF TRANSPORTATION
Caltrans

FUNCTIONAL SUPERVISOR | CALCULATED-DESIGNED BY | CHECKED BY | REVISED BY | DATE REVISED

LAST REVISION 12-18-12 | DATE PLOTTED => 10-DEC-2012 | TIME PLOTTED => 09:45

Dist	COUNTY	ROUTE	POST MILES TOTAL PROJECT	SHEET No.	TOTAL SHEETS
07	LA	405	4.3	56	89

REGISTERED CIVIL ENGINEER 12-7-12 DATE

04-08-13
PLANS APPROVAL DATE

REGISTERED PROFESSIONAL ENGINEER Gurinderpal Bhullar No. C48815 Exp. 9-30-14 CIVIL STATE OF CALIFORNIA

THE STATE OF CALIFORNIA OR ITS OFFICERS OR AGENTS SHALL NOT BE RESPONSIBLE FOR THE ACCURACY OR COMPLETENESS OF SCANNED COPIES OF THIS PLAN SHEET.

TYPICAL RAMP CLOSURES

SIGN PANEL SIZE (Min)

- A 48" x 48"
- B 48" x 30"
- C 30" x 30"
- D 48" x 48" - SPEED OF 50 mph OR MORE
  36" x 36" - SPEED LESS THAN 50 mph
- E 48" x 36"

LEGEND

- TRAFFIC CONE
- TEMPORARY SIGN
- BARRICADES

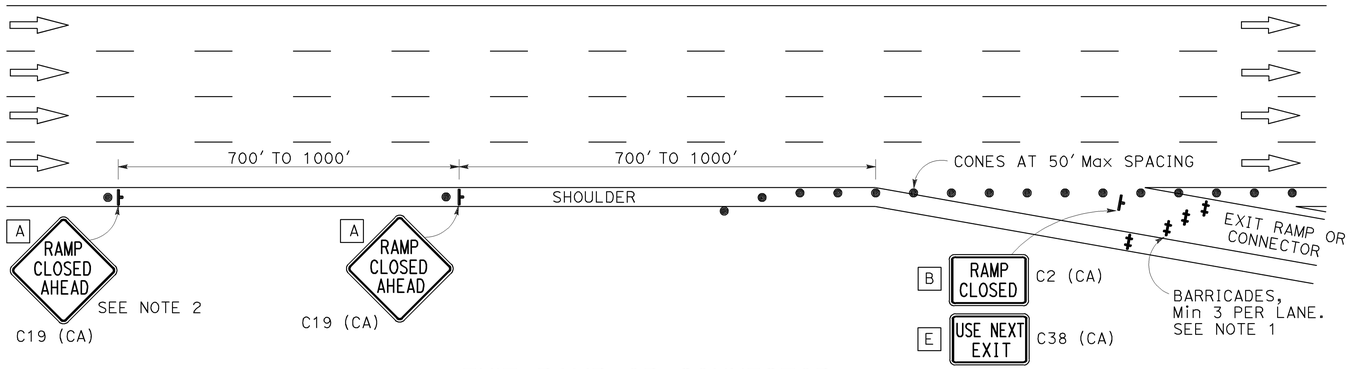

EXIT RAMP OR CONNECTOR

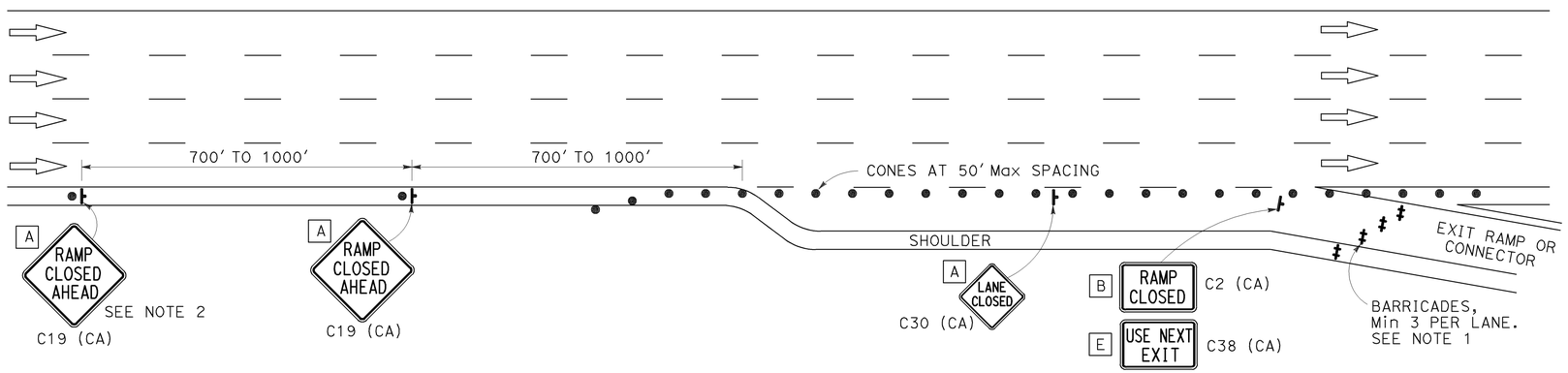

EXIT RAMP OR CONNECTOR WITH ADDITIONAL LANE

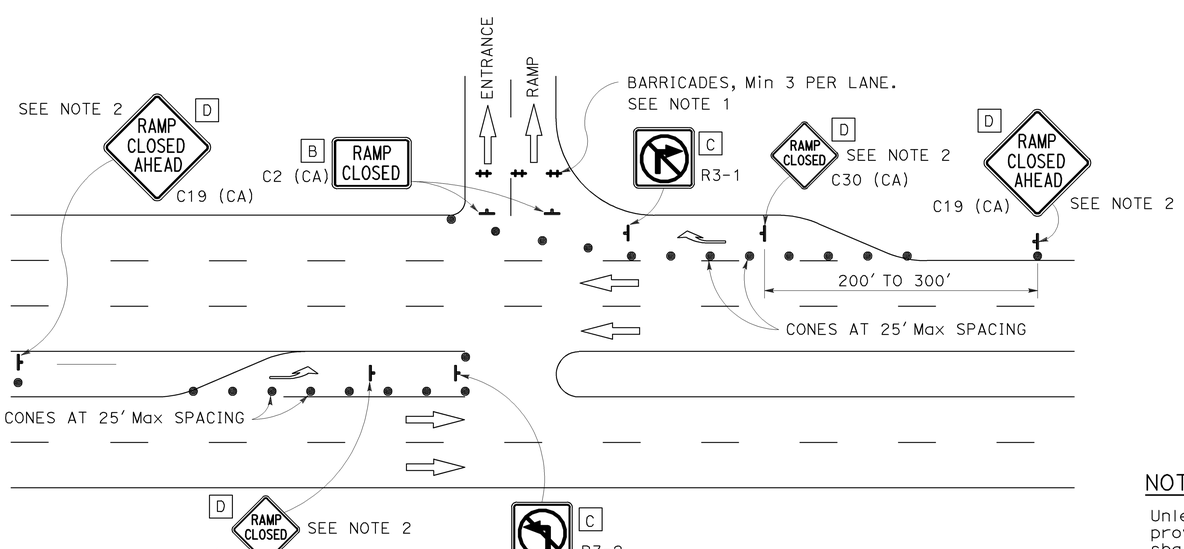

ENTRANCE RAMP WITH TURNING POCKETS

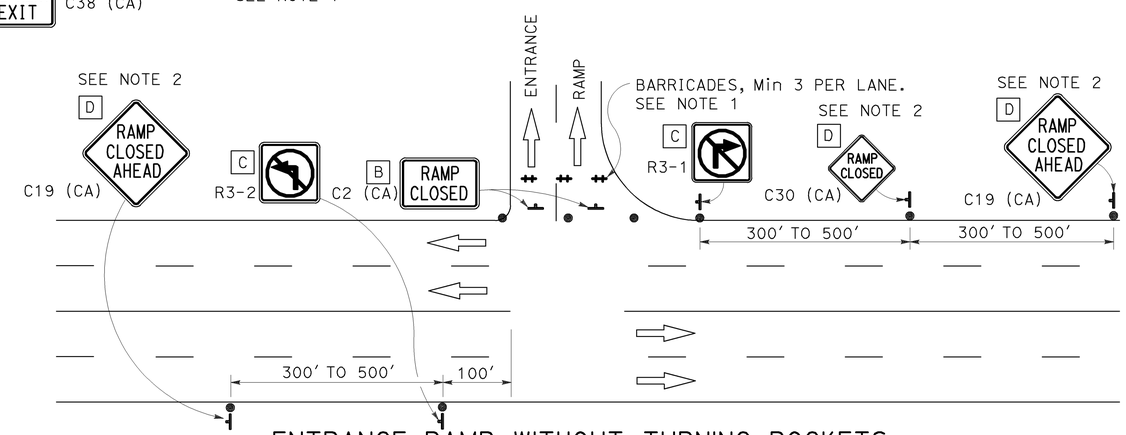

ENTRANCE RAMP WITHOUT TURNING POCKETS

NOTES:

1. Barricades shall be Type I, II, or III for closures lasting one week or less and Type III for closures lasting longer than one week.
2. In addition to placing the C19 (CA) "RAMP CLOSED AHEAD" and C30 (CA) "RAMP CLOSED" signs, black on orange overlay plates with the word "CLOSED" may be mounted, as directed by the Engineer, on all guide signs that refer to the closed ramp. The letter size on the overlay shall be the same as the guide sign.
3. Each advance C19 (CA) "RAMP CLOSED AHEAD" sign shall be equipped with at least two flags for daytime closure. Each flag shall be at least 16" x 16" in size and shall be orange or fluorescent red-orange in color.
4. All cones used for ramp closures during the hours of darkness shall be fitted with retroreflective bands (or sleeves) as specified in the specifications.
5. Portable delineators, placed at one-half the spacing indicated for traffic cones, may be used instead of cones for daytime ramp closures only.
6. At least one person shall be assigned to provide full time maintenance of traffic control devices, unless otherwise directed by the Engineer.
7. The existing "EXIT" sign in the gore area shall be covered during ramp closures.

NOTES:

Unless otherwise specified in the special provisions, all temporary warning signs shall have black legend on orange background.

California code are designated by (CA). Otherwise, Federal (MUTCD) codes are shown.

STATE OF CALIFORNIA
DEPARTMENT OF TRANSPORTATION

TRAFFIC CONTROL SYSTEM FOR RAMP CLOSURE

NO SCALE

TCS-5

STATE OF CALIFORNIA - DEPARTMENT OF TRANSPORTATION

Caltrans

FUNCTIONAL SUPERVISOR | CALCULATED-DESIGNED BY | CHECKED BY | REVISED BY | DATE REVISED

LAST REVISION 12-18-12 | DATE PLOTTED => 10-DEC-2012 | TIME PLOTTED => 09:45

Dist	COUNTY	ROUTE	POST MILES TOTAL PROJECT	SHEET No.	TOTAL SHEETS
07	LA	405	4.3	57	89

REGISTERED CIVIL ENGINEER

April 20, 2012
PLANS APPROVAL DATE

REGISTERED PROFESSIONAL ENGINEER
Roberta L. McLaughlin
No. C40375
Exp. 3-31-13
CIVIL
STATE OF CALIFORNIA

THE STATE OF CALIFORNIA OR ITS OFFICERS OR AGENTS SHALL NOT BE RESPONSIBLE FOR THE ACCURACY OR COMPLETENESS OF SCANNED COPIES OF THIS PLAN SHEET.

TO ACCOMPANY PLANS DATED 04-08-13

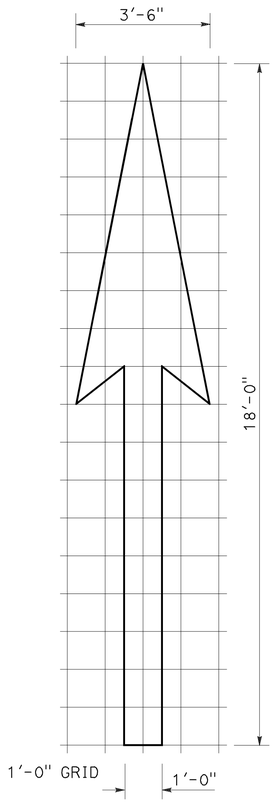

A=25 ft^2

TYPE I 18'-0" ARROW

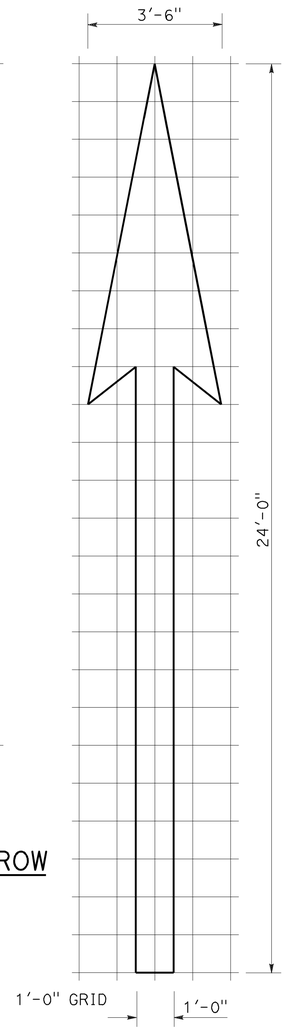

A=31 ft^2

TYPE I 24'-0" ARROW

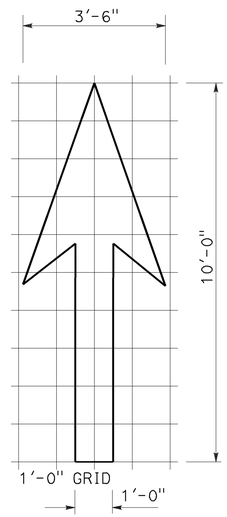

A=14 ft^2

TYPE I 10'-0" ARROW

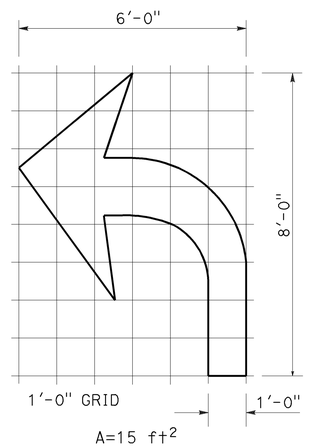

A=15 ft^2

TYPE IV (L) ARROW

(For Type IV (R) arrow, use mirror image)

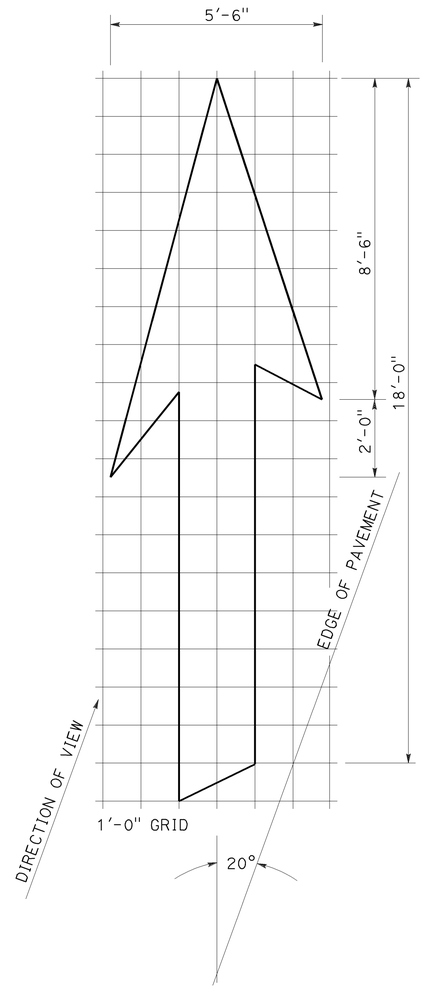

A=42 ft^2

TYPE VI ARROW

Right lane drop arrow
(For left lane, use mirror image)

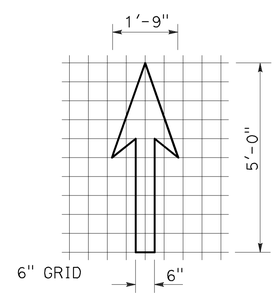

A=3.5 ft^2

BIKE LANE ARROW

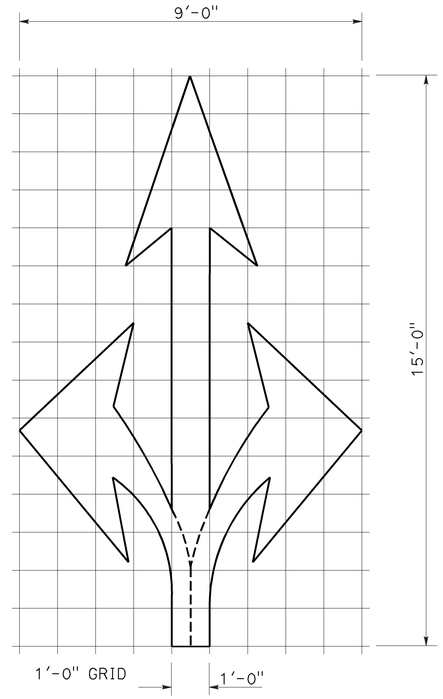

A=36 ft^2

TYPE VIII ARROW

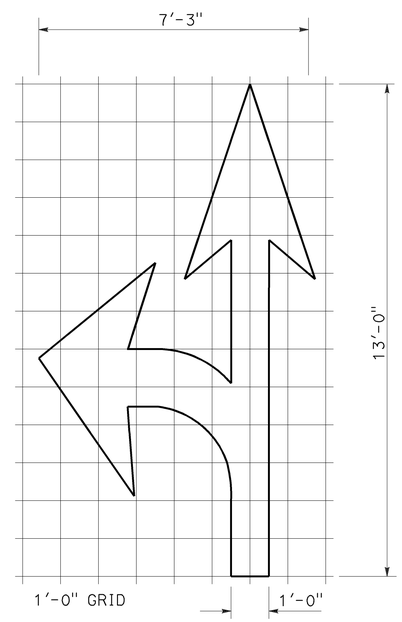

A=27 ft^2

TYPE VII (L) ARROW

(For Type VII (R) arrow, use mirror image)

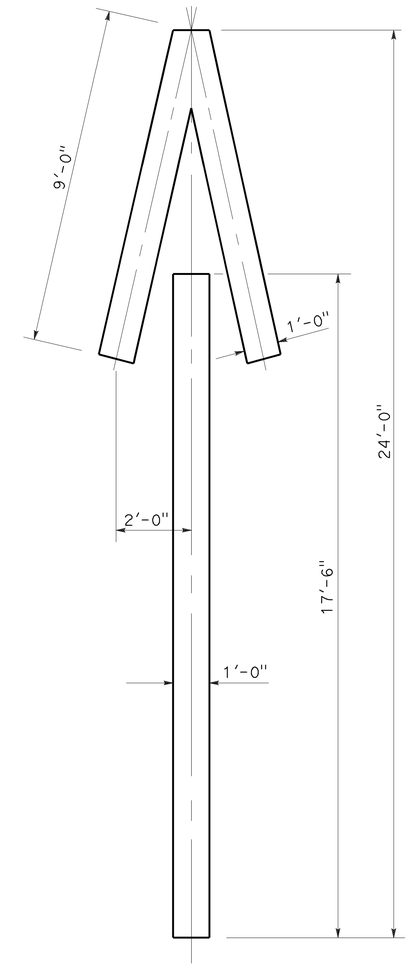

A=33 ft^2

TYPE V ARROW

NOTE:
Minor variations in dimensions may be accepted by the Engineer.

STATE OF CALIFORNIA
DEPARTMENT OF TRANSPORTATION

PAVEMENT MARKINGS ARROWS

NO SCALE

RSP A24A DATED APRIL 20, 2012 SUPERSEDES STANDARD PLAN A24A DATED MAY 20, 2011 - PAGE 13 OF THE STANDARD PLANS BOOK DATED 2010.

REVISED STANDARD PLAN RSP A24A

2010 REVISED STANDARD PLAN RSP A24A

3-14-12

Dist	COUNTY	ROUTE	POST MILES TOTAL PROJECT	SHEET No.	TOTAL SHEETS
07	LA	405	4.3	58	89

REGISTERED CIVIL ENGINEER

July 20, 2012
PLANS APPROVAL DATE

REGISTERED PROFESSIONAL ENGINEER
Roberta L. McLaughlin
No. C40375
Exp. 3-31-13
CIVIL
STATE OF CALIFORNIA

THE STATE OF CALIFORNIA OR ITS OFFICERS OR AGENTS SHALL NOT BE RESPONSIBLE FOR THE ACCURACY OR COMPLETENESS OF SCANNED COPIES OF THIS PLAN SHEET.

TO ACCOMPANY PLANS DATED 04-08-13

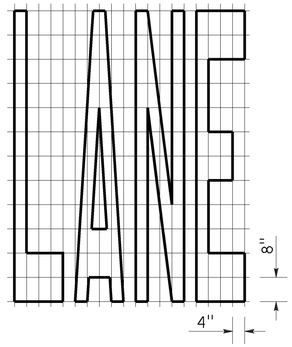

A=24 ft^2

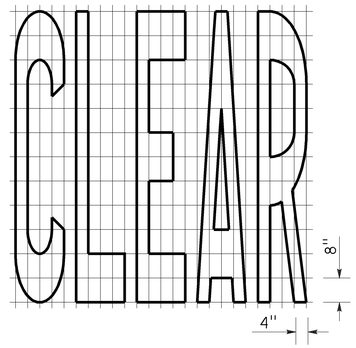

A=27 ft^2

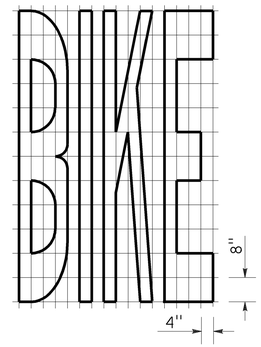

A=21 ft^2

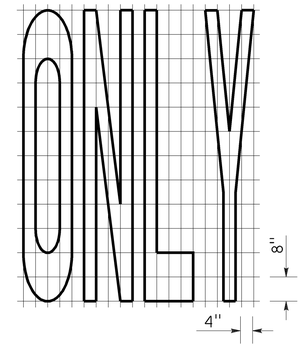

A=22 ft^2

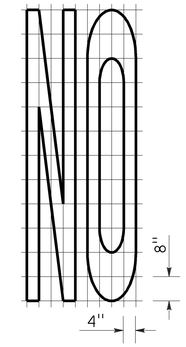

A=14 ft^2

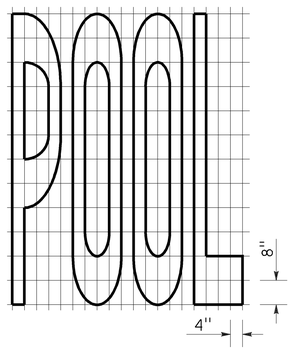

A=23 ft^2

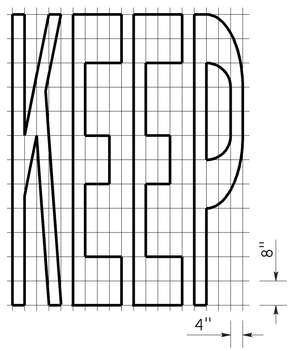

A=24 ft^2

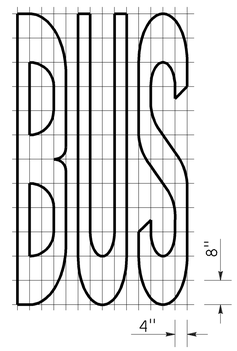

A=20 ft^2

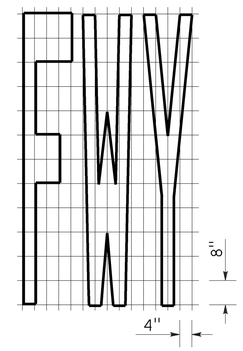

A=16 ft^2

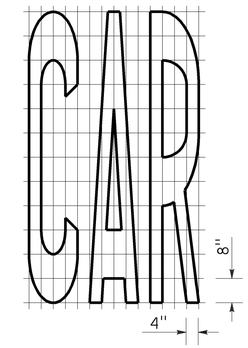

A=17 ft^2

WORD MARKINGS			
ITEM	ft^2	ITEM	ft^2
LANE	24	NO	14
POOL	23	BIKE	21
CAR	17	BUS	20
CLEAR	27	ONLY	22
KEEP	24	FWY	16

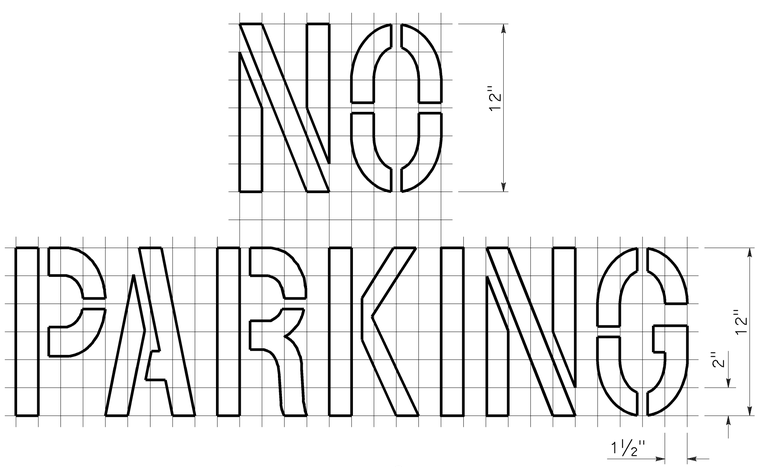

A=2 ft^2

See Notes 6 and 7

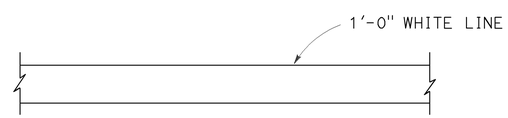

LIMIT LINE (STOP LINE)

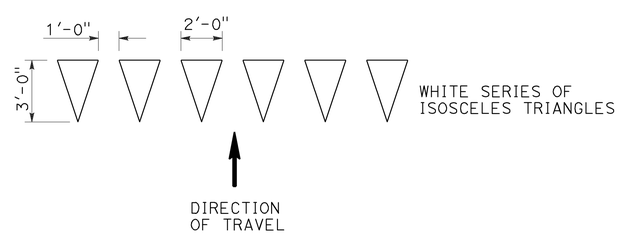

YIELD LINE

NOTES:

1. If a message consists of more than one word, it should read "UP", i.e., the first word should be nearest the driver.
2. The space between words should be at least four times the height of the characters for low speed roads, but not more than ten times the height of the characters. The space may be reduced appropriately where there is limited space because of local conditions.
3. Minor variations in dimensions may be accepted by the Engineer.
4. Portions of a letter, number or symbol may be separated by connecting segments not to exceed 2" in width.
5. The words "NO PARKING" pavement marking is to be used for parking facilities. For typical locations of markings, see Standard Plans A90A and A90B.
6. The words "NO PARKING", shall be painted in white letters no less than 1'-0" high on a contrasting background and located so that it is visible to traffic enforcement officials.

STATE OF CALIFORNIA
DEPARTMENT OF TRANSPORTATION

PAVEMENT MARKINGS WORDS, LIMIT AND YIELD LINES

NO SCALE

RSP A24E DATED JULY 20, 2012 SUPERSEDES STANDARD PLAN A24E
DATED MAY 20, 2011 - PAGE 17 OF THE STANDARD PLANS BOOK DATED 2010.

REVISED STANDARD PLAN RSP A24E

2010 REVISED STANDARD PLAN RSP A24E

6-12-12

Dist	COUNTY	ROUTE	POST MILES TOTAL PROJECT	SHEET No.	TOTAL SHEETS
07	LA	405	4.3	59	89

REGISTERED CIVIL ENGINEER

July 20, 2012
PLANS APPROVAL DATE

REGISTERED PROFESSIONAL ENGINEER
Roberta L. McLaughlin
No. C40375
Exp. 3-31-13
CIVIL
STATE OF CALIFORNIA

THE STATE OF CALIFORNIA OR ITS OFFICERS OR AGENTS SHALL NOT BE RESPONSIBLE FOR THE ACCURACY OR COMPLETENESS OF SCANNED COPIES OF THIS PLAN SHEET.

TO ACCOMPANY PLANS DATED 04-08-13

2010 REVISED STANDARD PLAN RSP A24F

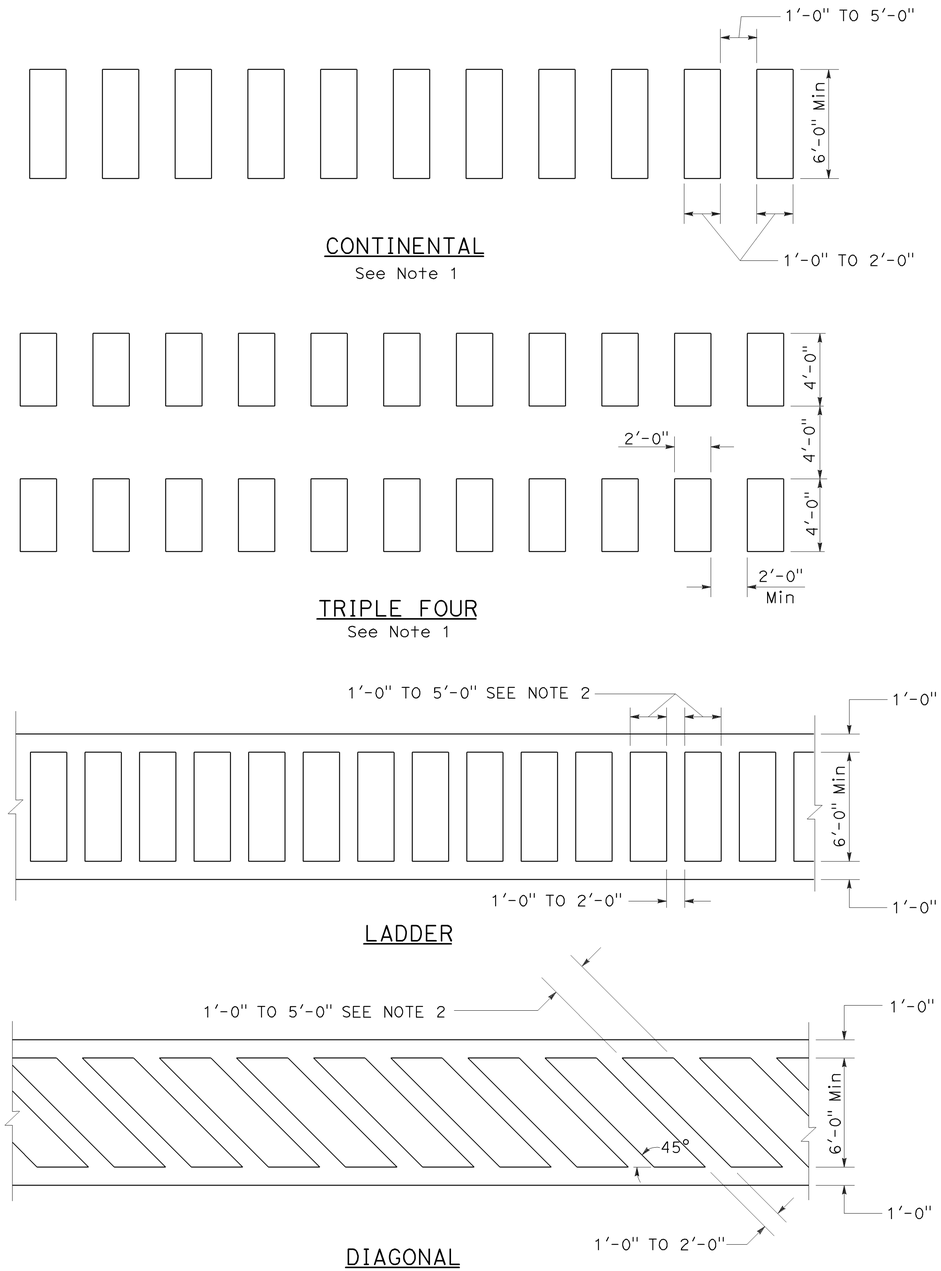

HIGHER VISIBILITY CROSSWALKS

NOTES:

1. Spaces between markings should be placed in wheel tracks of each lane.
2. Spacings not to exceed 2.5 times width of longitudinal line.
3. All crosswalk markings must be white except for those near schools must be yellow.

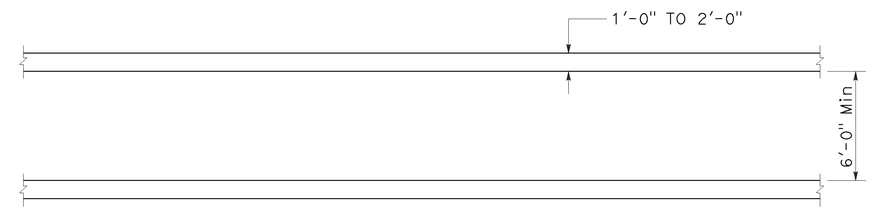

BASIC

STATE OF CALIFORNIA
DEPARTMENT OF TRANSPORTATION

PAVEMENT MARKINGS CROSSWALKS

NO SCALE

RSP A24F DATED JULY 20, 2012 SUPPLEMENTS THE STANDARD PLANS BOOK DATED 2010.

REVISED STANDARD PLAN RSP A24F

Dist	COUNTY	ROUTE	POST MILES TOTAL PROJECT	SHEET No.	TOTAL SHEETS
07	LA	405	4.3	60	89

Raymond Don Tsztoo
REGISTERED CIVIL ENGINEER

July 20, 2012
PLANS APPROVAL DATE

REGISTERED PROFESSIONAL ENGINEER Raymond Don Tsztoo No. C37332 Exp. 6-30-14 CIVIL STATE OF CALIFORNIA

THE STATE OF CALIFORNIA OR ITS OFFICERS OR AGENTS SHALL NOT BE RESPONSIBLE FOR THE ACCURACY OR COMPLETENESS OF SCANNED COPIES OF THIS PLAN SHEET.

TO ACCOMPANY PLANS DATED 04-08-13

2010 REVISED STANDARD PLAN RSP D77A

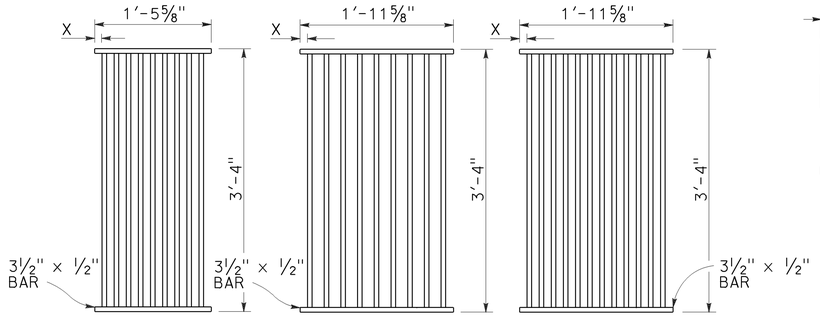

TYPE 18-9

1⅜" Clear spacing. Use within the roadbed on highways where bicycles and pedestrians are excluded.

TYPE 24-9

2" Clear spacing. Use in locations off the roadbed on all types of highways.

TYPE 24-12

1⅜" Clear spacing. Use within the roadbed on highways where bicycles and pedestrians are excluded.

RECTANGULAR GRATE DETAILS

(See table below)

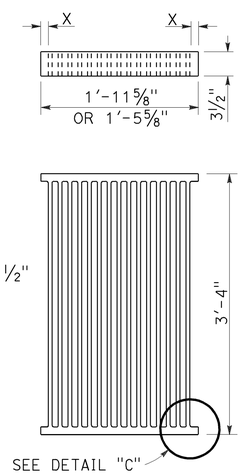

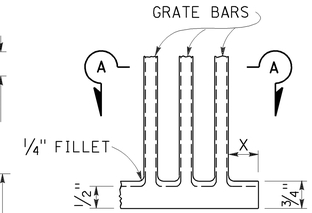

DETAIL "C"

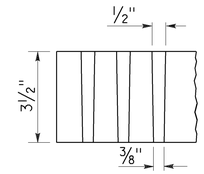

SECTION A-A

ALTERNATIVE CAST DUCTILE IRON GRATE OR CAST CARBON STEEL GRATE

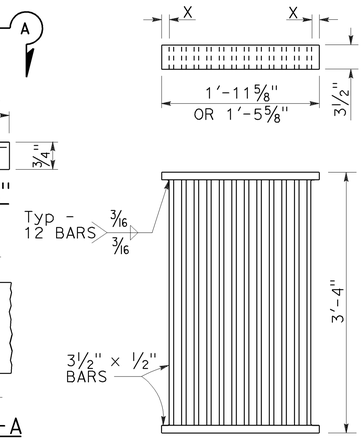

ALTERNATIVE WELDED GRATE

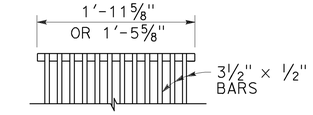

CAST END BLOCK

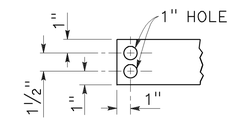

END OF BAR

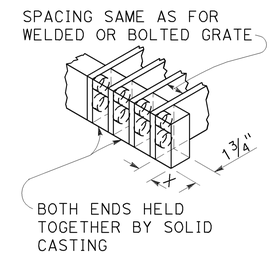

ALTERNATIVE CAST DUCTILE IRON OR CAST CARBON STEEL END BLOCK GRATE

NOTES:

1. Grate type numbers refer to approximate width of grate in inches and number of bars, respectively.
2. Contractor has the option of using cast ductile iron, cast carbon steel, welded, bolted, or cast end block grate.
3. Rounded top of bars optional on all grates.
4. Pipe inlets with a grate shall be placed so that bars parallel direction of principle surface flow.
5. Complete joint penetration butt welds may be substituted for the fillet welds on all anchors.
6. Standard square, hexagon, round or equivalent headed anchors may be substituted for the right angle hooks on the anchors shown on this plan.
7. Grate and frame weights are based on welded grates (weights of face angles, steps, protection bars, etc. are not included).
8. Connect chain to grate and frame only at locations shown on the plans. When chain is required, do not use cast ductile iron grates.

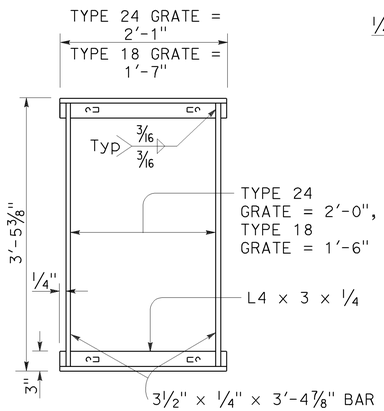

TYPICAL FRAME

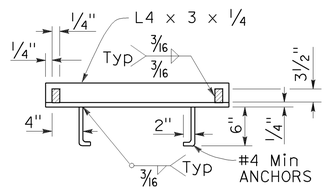

CROSS SECTION

(Thru frame)

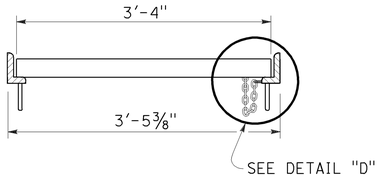

LONGITUDINAL SECTION

(Thru frame and grate)

RECTANGULAR FRAME DETAILS

(For all rectangular grates)

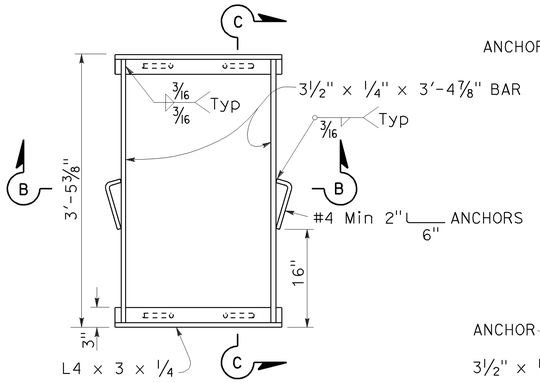

TYPICAL FRAME

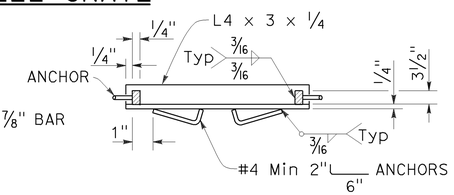

SECTION B-B

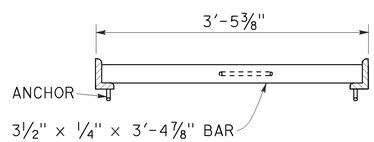

SECTION C-C

ALTERNATIVE ANCHOR FOR RECTANGULAR FRAME

(For details not shown, See Rectangular Frame Details)

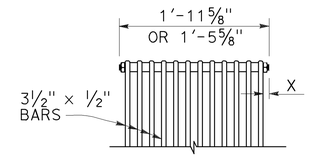

BOLTED END BLOCK

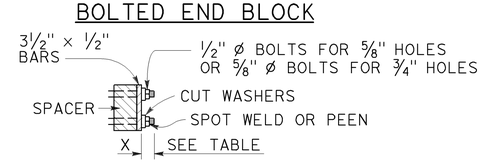

BOLTING DETAIL

ALTERNATIVE BOLTED GRATE

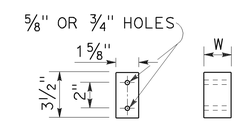

BAR SPACER

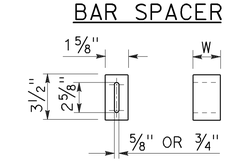

ALTERNATIVE SPACER

W = 1⅜" or 2"

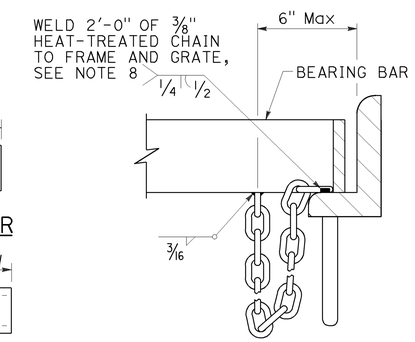

DETAIL "D"

(Steel grates only)

GRATE BAR SPACING TABLE

TYPE	No. OF BARS	CLEAR BAR SPACING	X
18-9	9	1⅜"	1 1/16"
24-9	9	2"	1 9/16"
24-12	12	1⅜"	1¼"

INLET TYPE	COVER TYPE	WEIGHT LB
OS	PLATE	174
OL-7	PLATE	170
OL-10	PLATE	170
OL-14	PLATE	170
OL-21	PLATE	170
OCP	PLATE	112
OCPI	PLATE	112
OCPI	REDWOOD	42
OMP	PLATE	177
OMPI	PLATE	177

INLET TYPE	GRATE TYPE	No. OF GRATES	WEIGHT LB
GDO	24-12	2	634
GOL-7	24-12	1	326
GOL-10	24-12	1	326
GO,G1,G2,G3,G4 (TYPE 24)	24-9	1	263
	24-12	1	326
G4 (TYPE 18),G5,G6	18-9	1	249
GT1	18-9	2	498
GT2	18-9	2	498
GT3	24-12	2	652
GT4	24-12	2	652
TRASH RACK			22
GRATE CHAIN			3

BASIS FOR Misc IRON & STEEL FINAL PAY WEIGHTS FOR DRAINAGE INLETS

(See Note 7)

STATE OF CALIFORNIA
DEPARTMENT OF TRANSPORTATION

GRATE DETAILS

NO SCALE

RSP D77A DATED JULY 20, 2012 SUPERSEDES STANDARD PLAN D77A
DATED MAY 20, 2011 - PAGE 164 OF THE STANDARD PLANS BOOK DATED 2010.

REVISED STANDARD PLAN RSP D77A

6-13-12

Dist	COUNTY	ROUTE	POST MILES TOTAL PROJECT	SHEET No.	TOTAL SHEETS
07	LA	405	4.3	61	89

REGISTERED CIVIL ENGINEER

April 20, 2012
PLANS APPROVAL DATE

REGISTERED PROFESSIONAL ENGINEER William K. Farnbach No. C49042 Exp. 9-30-12 CIVIL STATE OF CALIFORNIA

THE STATE OF CALIFORNIA OR ITS OFFICERS OR AGENTS SHALL NOT BE RESPONSIBLE FOR THE ACCURACY OR COMPLETENESS OF SCANNED COPIES OF THIS PLAN SHEET.

TO ACCOMPANY PLANS DATED 04-08-13

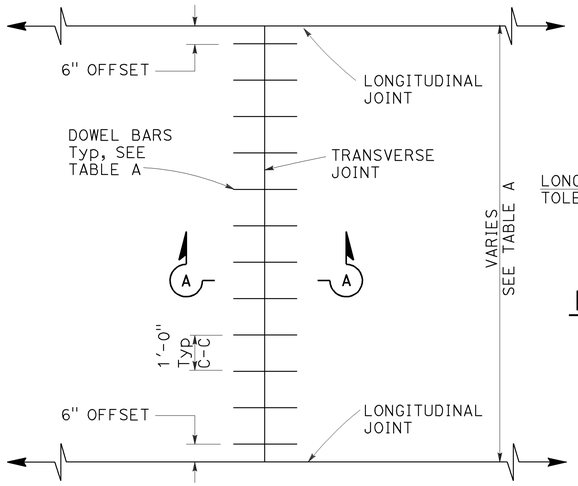

TRANSVERSE JOINT DOWEL BAR LAYOUT

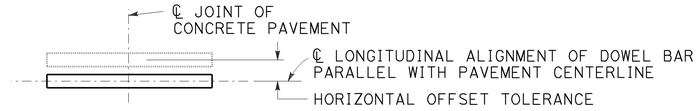

PLAN

HORIZONTAL OFFSET TOLERANCE

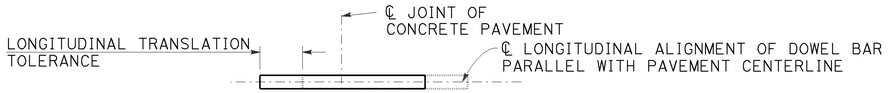

PLAN

LONGITUDINAL TRANSLATION TOLERANCE

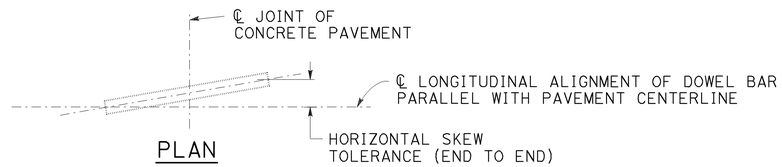

PLAN

HORIZONTAL SKEW TOLERANCE

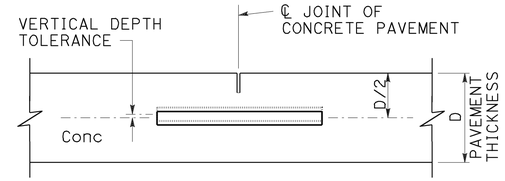

ELEVATION

VERTICAL DEPTH TOLERANCE

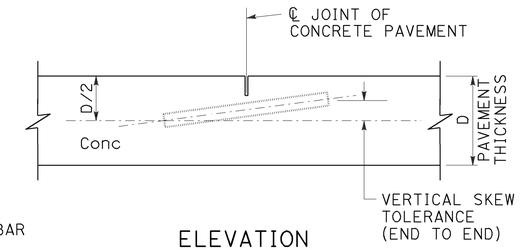

ELEVATION

VERTICAL SKEW TOLERANCE

NOTES:

1. See Standard Plan P1 for typical dowel bar placement and locations.
2. 1½" Dia dowel bars are to be used with a pavement thickness, D, equal to or greater than 0.70 feet. For pavement thickness, D, less than 0.70 feet, use 1¼" Dia dowel bars.
3. For widths not shown, see Project Plans.
4. If fresh concrete pavement is placed adjacent to existing concrete pavement, the top corner of the existing concrete pavement does not need to be rounded to the ¼" radius, as shown.
5. May also use ¾" Dia dowel bars 2'-4" ± ¼" in length. Center the length of dowel bars at the centerline of longitudinal joint.

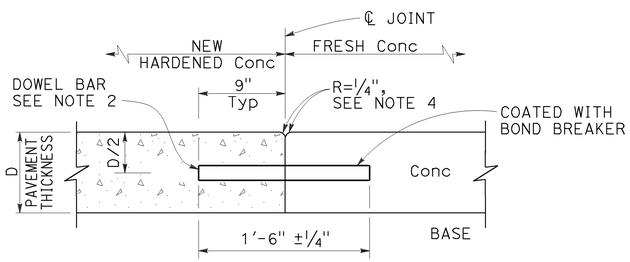

SECTION A-A

TRANSVERSE CONSTRUCTION JOINT DETAIL

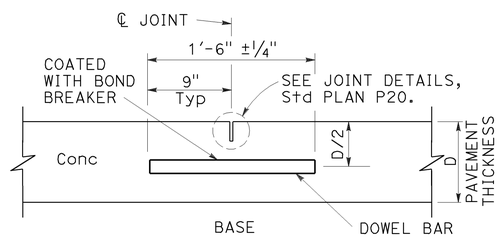

TRANSVERSE CONTRACTION JOINT

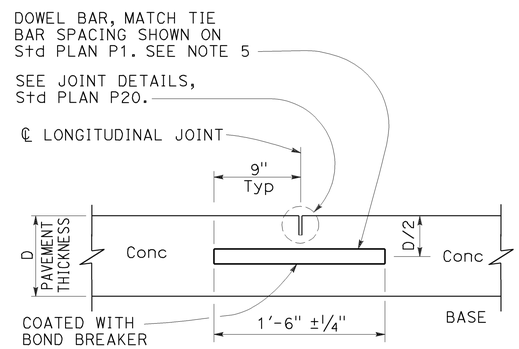

LONGITUDINAL CONTRACTION JOINT WITH DOWEL BARS

See Revised Std Plan RSP P18

TABLE A (See Note 3)

DOWEL BAR TRANSVERSE SPACING TABLE	
WIDTH BETWEEN LONGITUDINAL JOINTS	NUMBER OF DOWELS BETWEEN LONGITUDINAL JOINTS
14'-0"	14
13'-0"	13
12'-0"	12
11'-0"	11
10'-0"	10
8'-0"	8
5'-0"	5
4'-0"	4

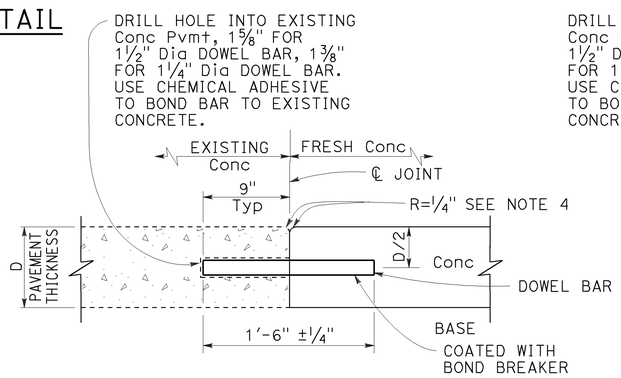

TRANSVERSE CONSTRUCTION JOINT FOR EXISTING CONCRETE PAVEMENT

Drill and bond locations

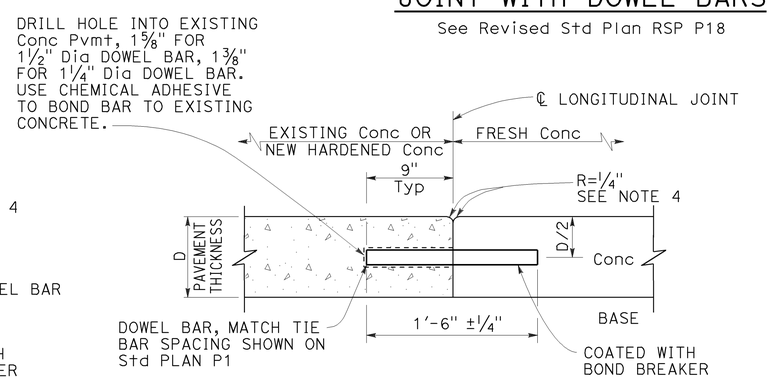

LONGITUDINAL CONSTRUCTION JOINT WITH DOWEL BARS

See Revised Std Plan RSP P18

STATE OF CALIFORNIA
DEPARTMENT OF TRANSPORTATION

CONCRETE PAVEMENT-DOWEL BAR DETAILS

NO SCALE

RSP P10 DATED APRIL 20, 2012 SUPERSEDES STANDARD PLAN P10 DATED MAY 20, 2011 - PAGE 131 OF THE STANDARD PLANS BOOK DATED 2010.

REVISED STANDARD PLAN RSP P10

2010 REVISED STANDARD PLAN RSP P10

2-22-12

Dist	COUNTY	ROUTE	POST MILES TOTAL PROJECT	SHEET No.	TOTAL SHEETS
07	LA	405	4.3	62	89

William K. Farnbach
REGISTERED CIVIL ENGINEER

April 20, 2012
PLANS APPROVAL DATE

REGISTERED PROFESSIONAL ENGINEER
William K. Farnbach
No. C49042
Exp. 9-30-12
CIVIL
STATE OF CALIFORNIA

THE STATE OF CALIFORNIA OR ITS OFFICERS OR AGENTS SHALL NOT BE RESPONSIBLE FOR THE ACCURACY OR COMPLETENESS OF SCANNED COPIES OF THIS PLAN SHEET.

TO ACCOMPANY PLANS DATED 04-08-13

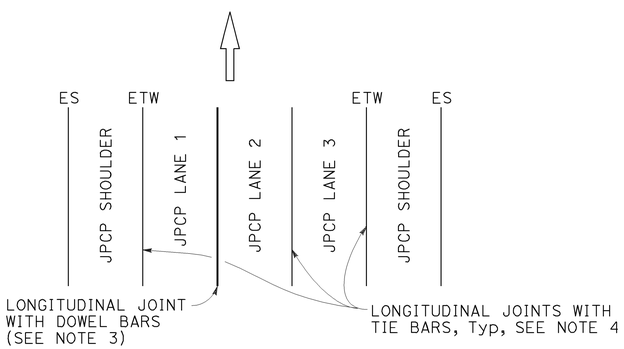

3 LANES WITH CONCRETE SHOULDERS
PLAN

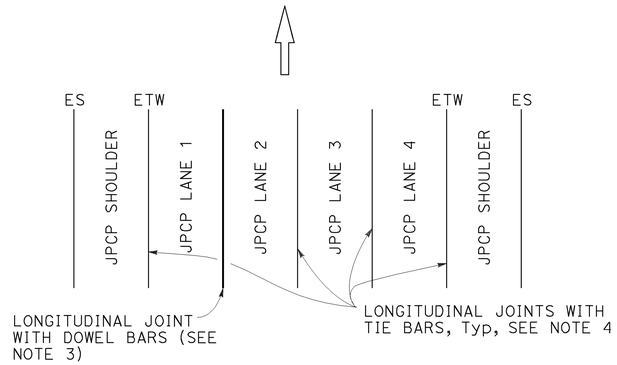

4 LANES WITH CONCRETE SHOULDERS
PLAN

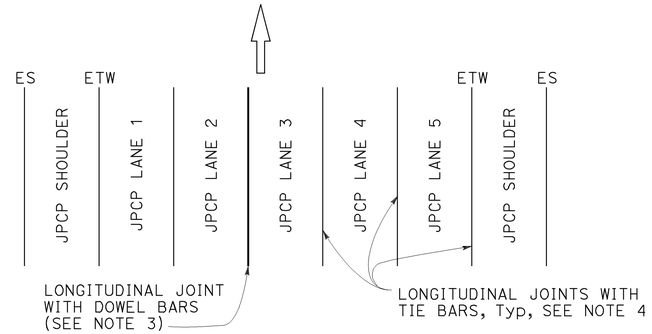

5 LANES WITH CONCRETE SHOULDERS
PLAN

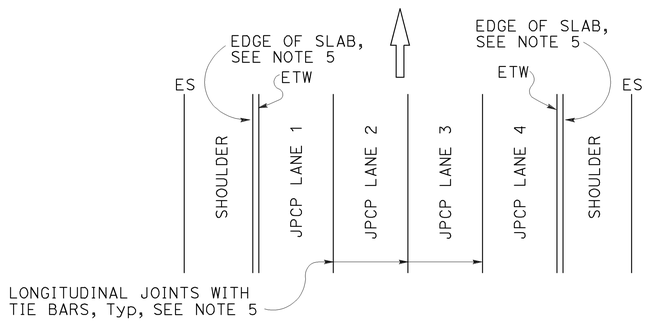

4 LANES OR LESS WITH AC SHOULDERS
PLAN

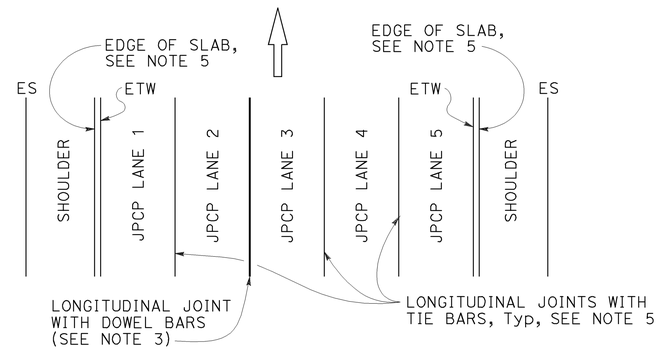

5 LANES WITH AC SHOULDERS
PLAN

NEW CONSTRUCTION

Location of Longitudinal Joints
For JPCP

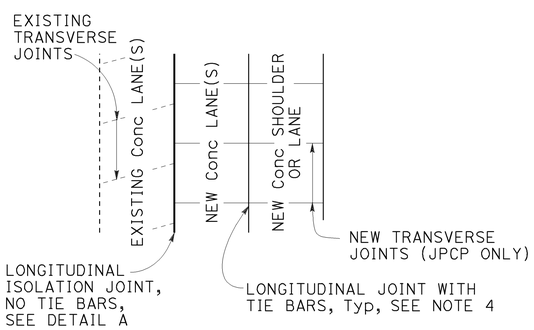

CASE 1
PLAN

Transverse Joints do not align between new and existing.

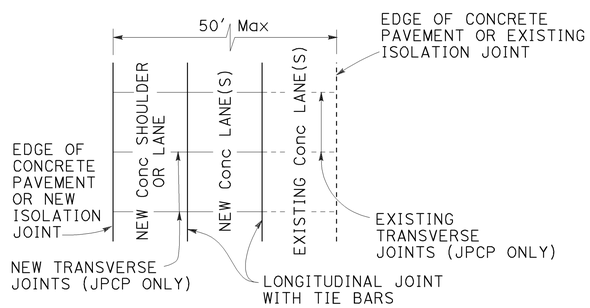

CASE 2
PLAN

Transverse Joints align between new and existing.

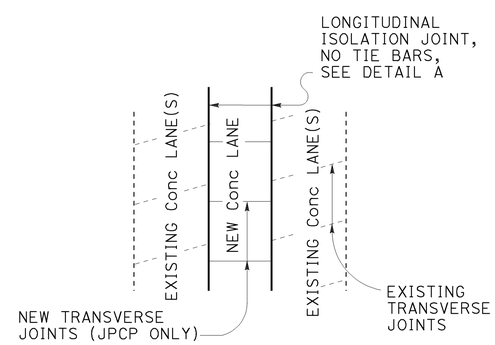

CASE 3 (INTERIOR LANE REPLACEMENT)
PLAN

Transverse Joints do not align between new and existing.

LANE/SHOULDER ADDITION OR RECONSTRUCTION

For JPCP and CRCP

NOTES:

1. Where Lean Concrete Base is not used as base material, the joint filler material used for the longitudinal isolation joint shall only extend to the bottom of the new concrete slab. See Detail A.
2. Use 5/8" ±1/16" dimension for silicone sealant.
3. See Revised Standard Plan RSP P10 for longitudinal joint with dowel bars.
4. See Standard Plan P1.
5. See Standard Plan P2.

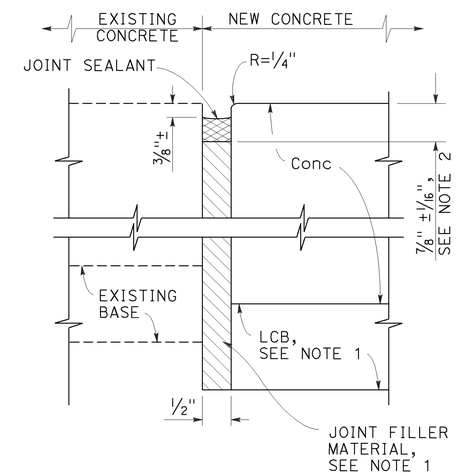

DETAIL "A"

ISOLATION JOINT

STATE OF CALIFORNIA
DEPARTMENT OF TRANSPORTATION

CONCRETE PAVEMENT-LANE SCHEMATICS AND ISOLATION JOINT DETAIL

NO SCALE

RSP P18 DATED APRIL 20, 2012 SUPERSEDES STANDARD PLAN P18
DATED MAY 20, 2011 - PAGE 135 OF THE STANDARD PLANS BOOK DATED 2010.

REVISED STANDARD PLAN RSP P18

2010 REVISED STANDARD PLAN RSP P18

2-22-12

DIST	COUNTY	ROUTE	POST MILES TOTAL PROJECT	SHEET No.	TOTAL SHEETS
07	LA	405	4.3	63	89

REGISTERED CIVIL ENGINEER 06/28/12 DATE

4-08-2013
PLANS APPROVAL DATE

REGISTERED PROFESSIONAL ENGINEER BIN SHEN No. C76221 Exp. 06-30-14 CIVIL STATE OF CALIFORNIA

The State of California or its officers or agents shall not be responsible for the accuracy or completeness of electronic copies of this plan sheet.

LEGEND:

- Indicates existing structure
- Indicates new structure
- Indicates direction of traffic
- Indicates limit of bridge removal See "LIMITS OF BRIDGE REMOVAL, PORTION" sheet
- Point of minimum vertical clearance

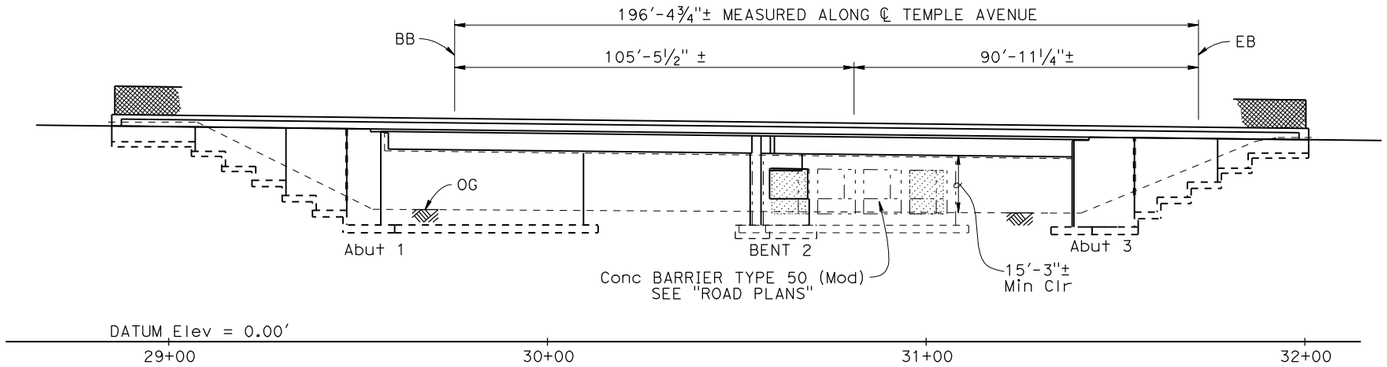

ELEVATION

1" = 20'

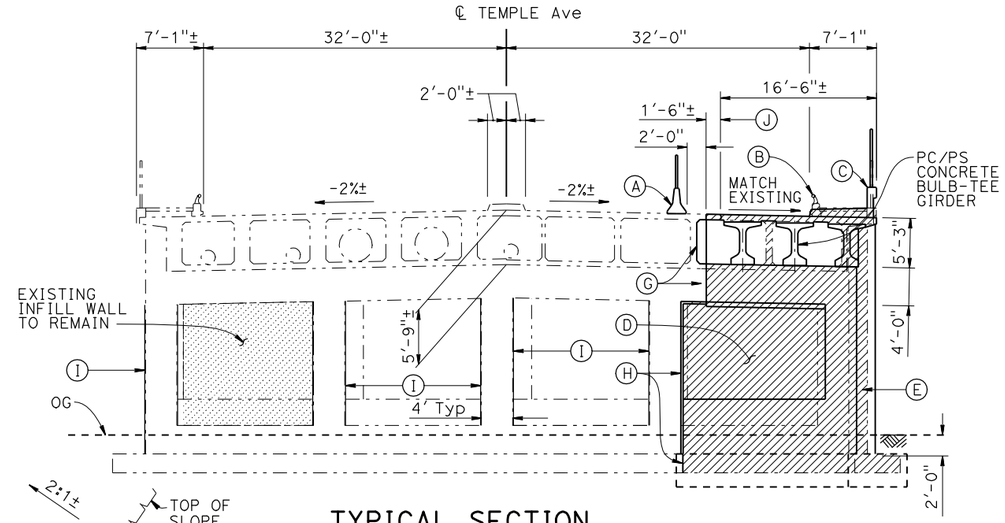

TYPICAL SECTION

⅛" = 1'-0"

NOTES:

- (A) Temporary Railing, Type K, see "ROAD PLANS"
- (B) Remove concrete barrier and sidewalk, salvage metal bridge railing
- (C) Concrete Barrier Type 26 (Mod) with Chain Link Railing Type 7
- (D) Existing infill wall to be removed
- (E) New Pier Wall with end element
- (F) Remove Median Concrete Barrier by District
- (G) Refinish existing girder and end of bent cap
- (H) Refinish existing column and footing
- (I) Composite Column Casing
- (J) Closure Pour

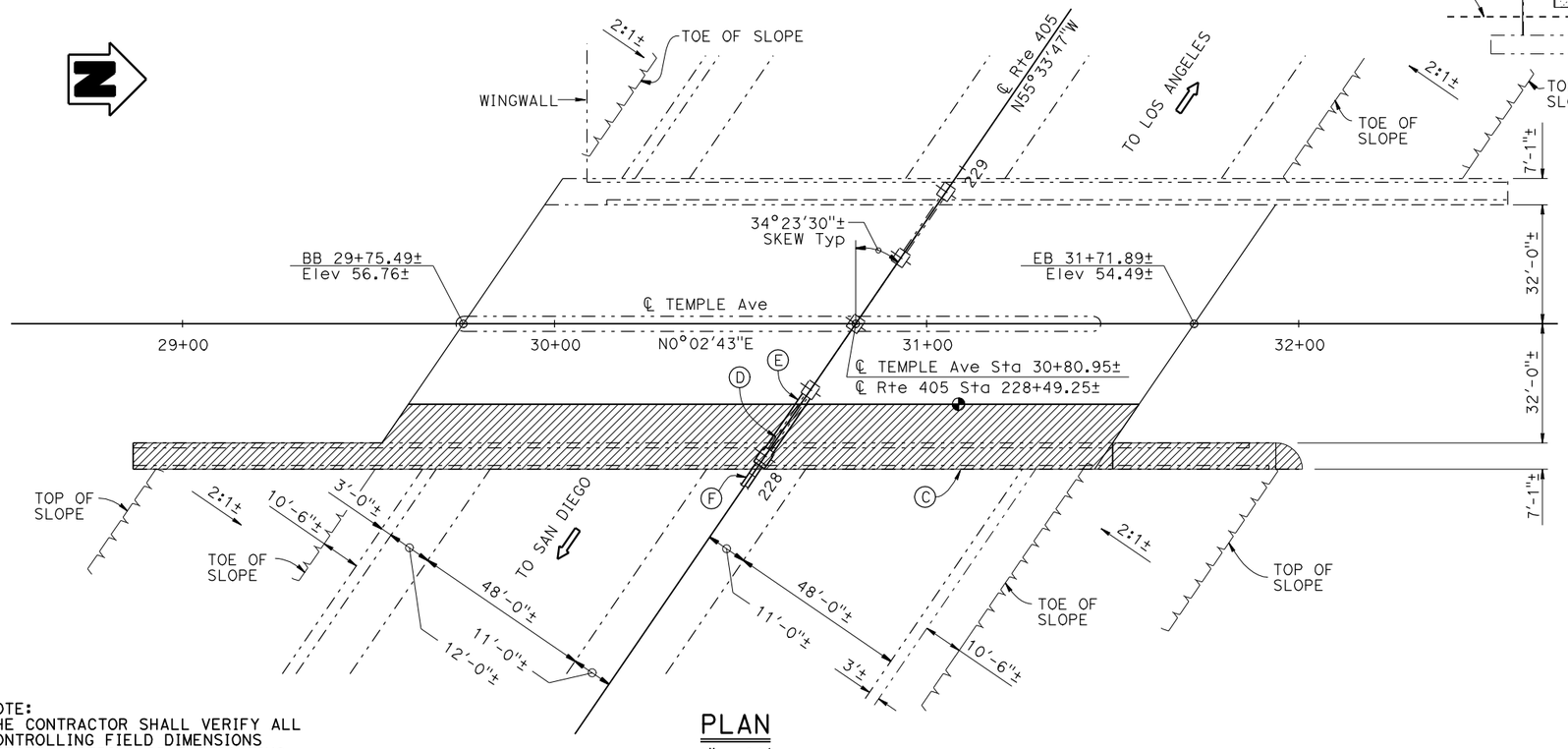

PLAN

1" = 20'

NOTE:
THE CONTRACTOR SHALL VERIFY ALL CONTROLLING FIELD DIMENSIONS BEFORE ORDERING OR FABRICATING ANY MATERIAL.

QUANTITIES

SALVAGE METAL BRIDGE RAILING	600	LF
BRIDGE REMOVAL (PORTION)	LUMP	SUM
ASBESTOS COMPLIANCE PLAN	LUMP	SUM
STRUCTURE EXCAVATION (BRIDGE)	326	CY
STRUCTURE EXCAVATION (TYPE Z-2)(AERIALLY DEPOSITED LEAD)	4	CY
STRUCTURE BACKFILL (BRIDGE)	885	CY
PRESTRESSING PRECAST GIRDER	LUMP	SUM
STRUCTURAL CONCRETE, BRIDGE FOOTING	173	CY
STRUCTURAL CONCRETE, BRIDGE	346	CY
DRILL AND BOND DOWEL	354	LF
FURNISH PRECAST PRESTRESSED CONCRETE BULB-TEE GIRDER (80'-90')	3	EA
FURNISH PRECAST PRESTRESSED CONCRETE BULB-TEE GIRDER (90'-100')	3	EA
ERECT PRECAST PRESTRESSED CONCRETE GIRDER	6	EA
REFINISH CONCRETE SURFACE	1,219	SQFT
JOINT SEAL (MR 1 1/2")	44	LF
BAR REINFORCING STEEL (BRIDGE)	110,500	LB
COMPOSITE COLUMN CASING	3,360	SQFT
CHAIN LINK RAILING (TYPE 7)	315	LF
CONCRETE BARRIER (TYPE 26 MODIFIED)	315	LF

MINA PEZESHPOUR
DESIGN ENGINEER

	BY	CHECKED
DESIGN	B. Shen	J. Wu
DETAILS	B. Jenko / J. Valencia	B. Shen
QUANTITIES	B. Shen	J. Wu

LOAD & RESISTANCE FACTOR DESIGN — LIVE LOADING: HL93 W/"LOW-BOY": PERMIT DESIGN VEHICLE

	BY	CHECKED
LAYOUT	B. Jenko	B. Shen
SPECIFICATIONS	M. Pan	PLANS AND SPECS COMPARED M. Pan

ORIGINAL SCALE IN INCHES FOR REDUCED PLANS 0 1 2 3

STATE OF CALIFORNIA
DEPARTMENT OF TRANSPORTATION

DIVISION OF ENGINEERING SERVICES
STRUCTURE DESIGN
DESIGN BRANCH 22

BRIDGE NO. 53-1198
POST MILE 4.3

TEMPLE AVENUE OC (REPAIR)
GENERAL PLAN

UNIT: 3626
PROJECT NUMBER & PHASE: 07000005391
CONTRACT NO.: 07-278304

DISREGARD PRINTS BEARING EARLIER REVISION DATES

REVISION DATES 11-15-10 06-28-12 1-24-12

SHEET 1 OF 27

FILE => 53-1198-a-gp01.dgn

USERNAME => s133329 DATE PLOTTED => 20-MAY-2013 TIME PLOTTED => 13:27

STRUCTURES DESIGN GENERAL PLAN SHEET (ENGLISH) (REV.09-01-10)

DIST	COUNTY	ROUTE	POST MILES TOTAL PROJECT	SHEET No.	TOTAL SHEETS
07	LA	405	4.3	64	89

REGISTERED CIVIL ENGINEER 06/28/12 DATE

4-08-2013
PLANS APPROVAL DATE

REGISTERED PROFESSIONAL ENGINEER BIN SHEN No. C76221 Exp. 06-30-14 CIVIL STATE OF CALIFORNIA

The State of California or its officers or agents shall not be responsible for the accuracy or completeness of electronic copies of this plan sheet.

INDEX TO PLANS

SHEET NO.	SHEET TITLE
1.	GENERAL PLAN
2.	INDEX TO PLANS
3.	CONSTRUCTION STAGING PLAN
4.	FOUNDATION PLAN
5.	LIMITS OF BRIDGE REMOVAL, PORTION
6.	ABUTMENT 1 LAYOUT
7.	ABUTMENT 3 LAYOUT
8.	ABUTMENT DETAILS NO. 1
9.	ABUTMENT DETAILS NO. 2
10.	ABUTMENT DETAILS NO. 3
11.	RETAINING WALL LAYOUT
12.	RETAINING WALL TYPE 1 (MOD)
13.	RETAINING WALL DETAILS
14.	BENT LAYOUT
15.	BENT DETAILS NO. 1
16.	BENT DETAILS NO. 2
17.	COMPOSITE COLUMN CASING
18.	TYPICAL SECTION
19.	GIRDER LAYOUT
20.	PC/PS BULB-TEE GIRDER DETAILS NO. 1
21.	PC/PS BULB-TEE GIRDER DETAILS NO. 2
22.	ADDITIONAL DECK REINFORCEMENT
23.	BARRIER DETAILS
24.	LOG OF TEST BORINGS 1 of 4
25.	LOG OF TEST BORINGS 2 of 4
26.	LOG OF TEST BORINGS 3 of 4
27.	LOG OF TEST BORINGS 4 of 4

STANDARD PLANS 2010

A10A	ABBREVIATIONS (SHEET 1 OF 2)
A10B	ABBREVIATIONS (SHEET 2 OF 2)
A10C	LINES AND SYMBOLS (SHEET 1 OF 3)
A10D	LINES AND SYMBOLS (SHEET 2 OF 3)
A10E	LINES AND SYMBOLS (SHEET 3 OF 3)
A62C	LIMITS OF PAYMENT FOR EXCAVATION AND BACKFILL BRIDGE
BO-1	BRIDGE DETAILS
BO-3	BRIDGE DETAILS
BO-5	BRIDGE DETAILS
BO-13	BRIDGE DETAILS
B6-10	UTILITY OPENING T-BEAM
B6-21	JOINT SEALS (MAXIMUM MOVEMENT RATING = 2")
B11-52	CHAIN LINK RAILING TYPE 7
B14-3	COMMUNICATION & SPRINKLER CONTROL CONDUITS

STANDARD PLAN SHEET NO.

DETAIL NO.

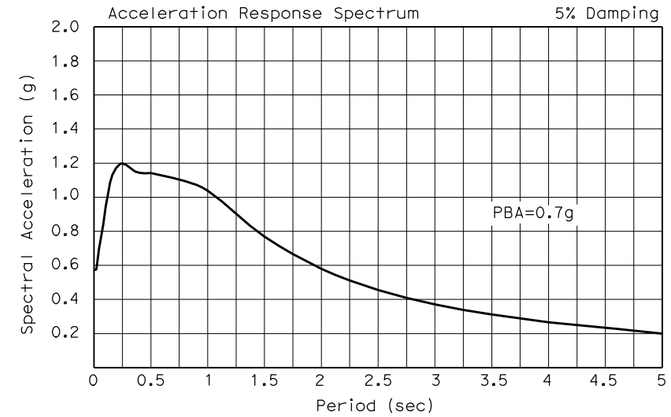

MODIFIED ARS CURVE

Temple Avenue OC Br. No. 53-1198

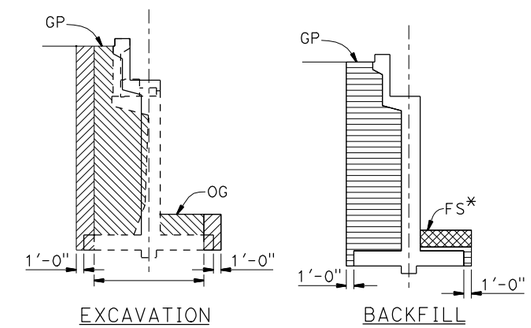

ABUTMENT SECTION

No Scale

* See NOTE 9 on "ABUTMENT 1 LAYOUT" sheet

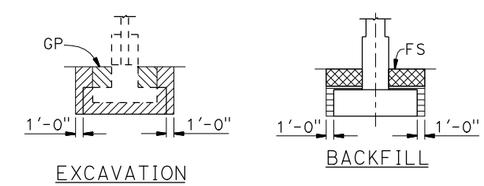

BENT SECTION

No Scale

GENERAL NOTES

LOAD AND RESISTANCE FACTOR DESIGN

DESIGN:	AASHTO LRFD Bridge Design Specifications, 4th Edition and the Caltrans Amendments, preface dated 2008; except that Bridge Details, Barrier and Railings (details taken from Standard Plans May 2010 and earlier versions, Standard Bridge Details XS sheets,etc) are designed using Bridge Design Specifications ('96 AASTHO w/ Revisions by Caltrans).
SEISMIC DESIGN:	Caltrans Seismic Design Criteria (SDC) version 1.6 dated 2010
DEAD LOAD: (Including 10% Metal Deck Form)	Includes 35 PSF future wearing surface. The Deck Dead Load has been increased by a factor of 10% to allow for the use of metal deck forms.
LIVE LOAD:	HL93 with "Low-Boy" and Permit Design Vehicle
SEISMIC LOADING:	Modified SDC ARS Curve Soil Profile Type D_W with V_{S30}= 886 ft/sec (270 m/sec). M_W = 6.8 ± 0.25 for T<0.35 sec, M_W = 7.5 ± 0.25 for T>0.35 sec. Peak Bed Rock Acceleration (PBA) = 0.7g
REINFORCED CONCRETE:	ASTM A706 f_y = 60 ksi f'_c, see "CONCRETE STRENGTH AND TYPE LIMITS"
PRESTRESSED CONCRETE:	See "PRESTRESSING NOTES" on "GIRDER LAYOUT" sheet

NOTE:
THE CONTRACTOR SHALL VERIFY ALL CONTROLLING FIELD DIMENSIONS BEFORE ORDERING OR FABRICATING ANY MATERIAL.

SPREAD FOOTING DATA TABLE

Support Location	Working Stress Design (WSD)		Load and Resistance Factor Design (LRFD)		
	Permissible Gross Contact Stress (ksf)	Allowable Gross Bearing Capacity (ksf)	**Service** Permissible Net Contact Stress (Settlement) (ksf)	**Strength** Factored Gross Nominal Bearing Resistance (ϕ_b =0.45) (ksf)	**Extreme Event** Factored Gross Nominal Bearing Resistance (ϕ_b =1.00) (ksf)
Abut 1	4.2	8.7	N/A	N/A	N/A
Bent 2	N/A	N/A	2.6	20.8	39.5
Abut 3	3.5	8.2	N/A	N/A	N/A

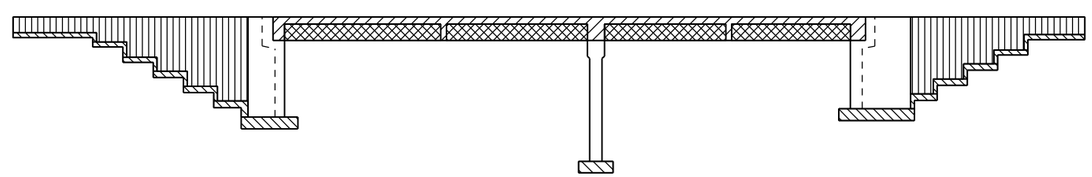

Structural Concrete, Bridge (f_c = 3.6 ksi)

Structural Concrete, Bridge Substructure (Abutment & Pier Wall) (f'_c = 4 ksi @ 28 days)

Structural Concrete, Bridge Footing f'_c = 4 ksi

Structural Concrete Bridge (Deck, Bent cap Intermediate Diaphragm & End Diaphragm) (f'_c = 5 ksi @ 28 days)

Precast Pre-stressed Bulb-Tee Girders (See "PC/PS BULB-TEE GIRDER DETAILS NO. 1" sheet)

CONCRETE STRENGTH AND TYPE LIMITS

No Scale

LEGEND:

- Included in Bridge Removal
- Structure Excavation, see NOTE 2 on "FOUNDATION PLAN" sheet
- Structure Backfill, Bridge
- Roadway Structural Section, See "ROAD PLANS" for Details
- Existing Structure
- New Structure

DESIGN	BY B. Shen	CHECKED J. Wu	
DETAILS	BY B. Jenko / J. Valencia	CHECKED B. Shen	
QUANTITIES	BY B. Shen	CHECKED J. Wu	

STATE OF CALIFORNIA DEPARTMENT OF TRANSPORTATION

DIVISION OF ENGINEERING SERVICES STRUCTURE DESIGN DESIGN BRANCH 22

BRIDGE NO. 53-1198
POST MILE 4.3

TEMPLE AVENUE OC (REPAIR)

INDEX TO PLANS

STRUCTURES DESIGN DETAIL SHEET (ENGLISH) (REV. 09-01-10)

ORIGINAL SCALE IN INCHES FOR REDUCED PLANS 0 1 2 3

UNIT: 3626
PROJECT NUMBER & PHASE: 07000005391
CONTRACT NO.: 07-278304

DISREGARD PRINTS BEARING EARLIER REVISION DATES

REVISION DATES: ~~6-10-11~~ 6-28-12 ~~1-28-12~~

SHEET 2 OF 27

FILE => 53-1198-a-itp.dgn

USERNAME => s133329 DATE PLOTTED => 20-MAY-2013 TIME PLOTTED => 13:27

DIST	COUNTY	ROUTE	POST MILES TOTAL PROJECT	SHEET No.	TOTAL SHEETS
07	LA	405	4.3	65	89

REGISTERED CIVIL ENGINEER 06/28/12 DATE

4-08-2013
PLANS APPROVAL DATE

REGISTERED PROFESSIONAL ENGINEER
BIN SHEN
No. C76221
Exp. 06-30-14
CIVIL
STATE OF CALIFORNIA

The State of California or its officers or agents shall not be responsible for the accuracy or completeness of electronic copies of this plan sheet.

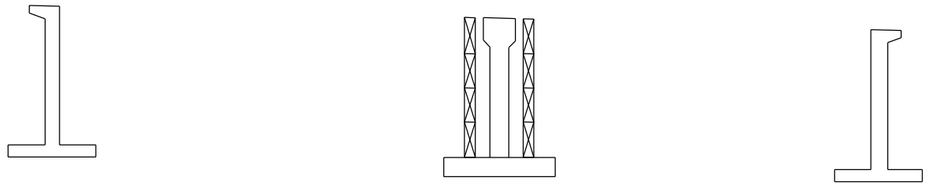

STEP 1

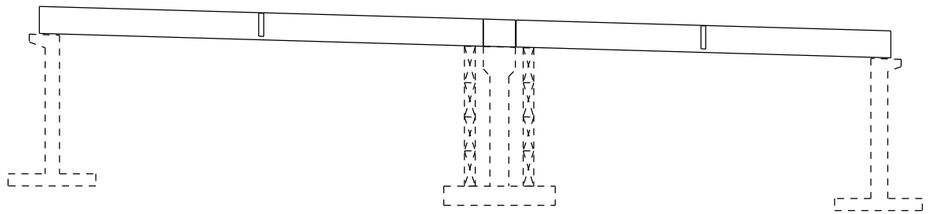

STEP 2

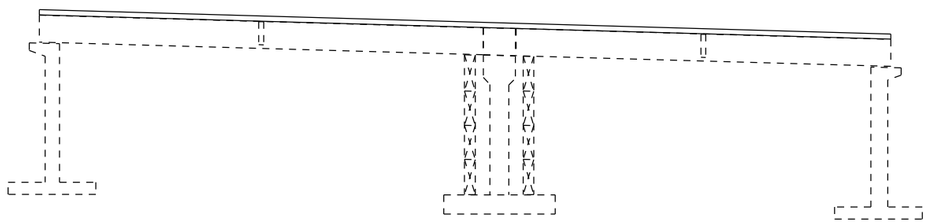

STEP 3

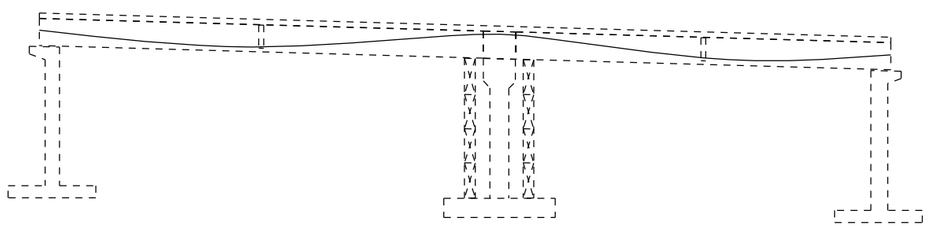

STEP 4

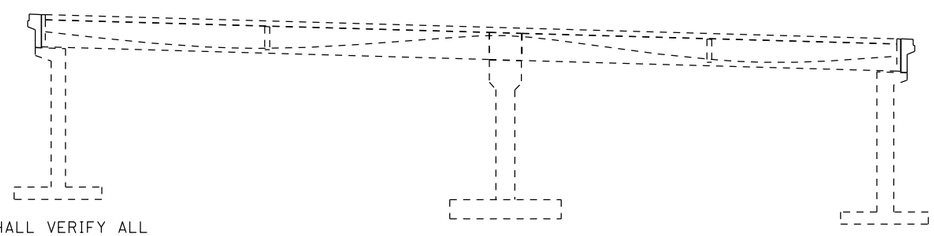

STEP 5

NOTE:
THE CONTRACTOR SHALL VERIFY ALL CONTROLLING FIELD DIMENSIONS BEFORE ORDERING OR FABRICATING ANY MATERIAL.

LEGEND:

----- Indicate previously completed steps

BRIDGE CONSTRUCTION SEQUENCE

Step 1. Construct abutments and pier wall (including their footings). Set up the temporary girder support by the pier wall. The temporary girder support shall stand on pier wall footing.

Temporary girder support shall be capable of supporting 120 kips per girder end. This load does not include forces due to wind, impact or construction load.

Step 2. Erect all PC/PS Bulb-Tee girders.

Construct cast-in-place bent cap, intermediate diaphragm, and abutment end diaphragm. Allow concrete to reach strength of 5 ksi @ 28 days.

Step 3. Place deck concrete.

Step 4. Longitudinal post-tensioning operation shall be conducted no less than 10 days after the placement of deck concrete, and the concrete compressive strength at time of stressing has reached the specified f'ci=3.5 ksi.

Step 5. Remove temporary girder support. Finish the construction of abutment end diaphragm and backwall.

Step 6. Construct closure pour, closure pour shall not be placed sooner than 14 days after the completion of longitudinal post-tensioning. Closure pour shall be placed after removal of temporary girder supports and placement of barrier rails.

NOTE: Schematics of Step 6 is not shown.

NOTES:

1. Any alternative to this construction sequence must be approved by the Engineer.
2. For prestressing notes, see "GIRDER LAYOUT" sheet.

	BY	CHECKED
DESIGN	B. Shen	J. Wu
DETAILS	B. Jenko / J. Valencia	B. Shen
QUANTITIES	B. Shen	J. Wu

STATE OF CALIFORNIA
DEPARTMENT OF TRANSPORTATION

DIVISION OF ENGINEERING SERVICES
STRUCTURE DESIGN
DESIGN BRANCH 22

BRIDGE NO. 53-1198
POST MILE 4.3

TEMPLE AVENUE OC (REPAIR)
CONSTRUCTION STAGING PLAN

STRUCTURES DESIGN DETAIL SHEET (ENGLISH) (REV. 09-01-10)

ORIGINAL SCALE IN INCHES FOR REDUCED PLANS 0 1 2 3

UNIT: 3626
PROJECT NUMBER & PHASE: 07000005391
CONTRACT NO.: 07-278304

DISREGARD PRINTS BEARING EARLIER REVISION DATES

REVISION DATES: 10-25-11 06-28-12

SHEET 3 OF 27

FILE => 53-1198-b-cs.dgn

USERNAME => s133329 DATE PLOTTED => 20-MAY-2013 TIME PLOTTED => 13:27

DIST	COUNTY	ROUTE	POST MILES TOTAL PROJECT	SHEET No.	TOTAL SHEETS
07	LA	405	4.3	66	89

REGISTERED CIVIL ENGINEER 06/28/12 DATE

4-08-2013
PLANS APPROVAL DATE

REGISTERED PROFESSIONAL ENGINEER BIN SHEN No. C76221 Exp. 06-30-14 CIVIL STATE OF CALIFORNIA

The State of California or its officers or agents shall not be responsible for the accuracy or completeness of electronic copies of this plan sheet.

CURVE DATA

No.	R	Δ	T	L
(1)	75.000	N39°36′10"E	27.004	51.840

(A) Sta 228+49.25 ℄ Route 405 =
Sta 30+80.95 ℄ Temple Ave

(B) Sta 32+18.27, 34.788 Rt ℄ Temple Ave =
Sta 29+04.47 LOL NB 405 Off-Ramp

Bridge Location

(AA) - 37.321 Lt ℄ Sta 30+01.18 Elev=56.009 ±
(BB) - 32.043 Lt ℄ Sta 31+93.87 Elev=53.547 ±
(CC) - 31.877 Rt ℄ Sta 31+50.00 Elev=54.166 ±
(DD) - 31.884 Rt ℄ Sta 29+53.87 Elev=56.443 ±

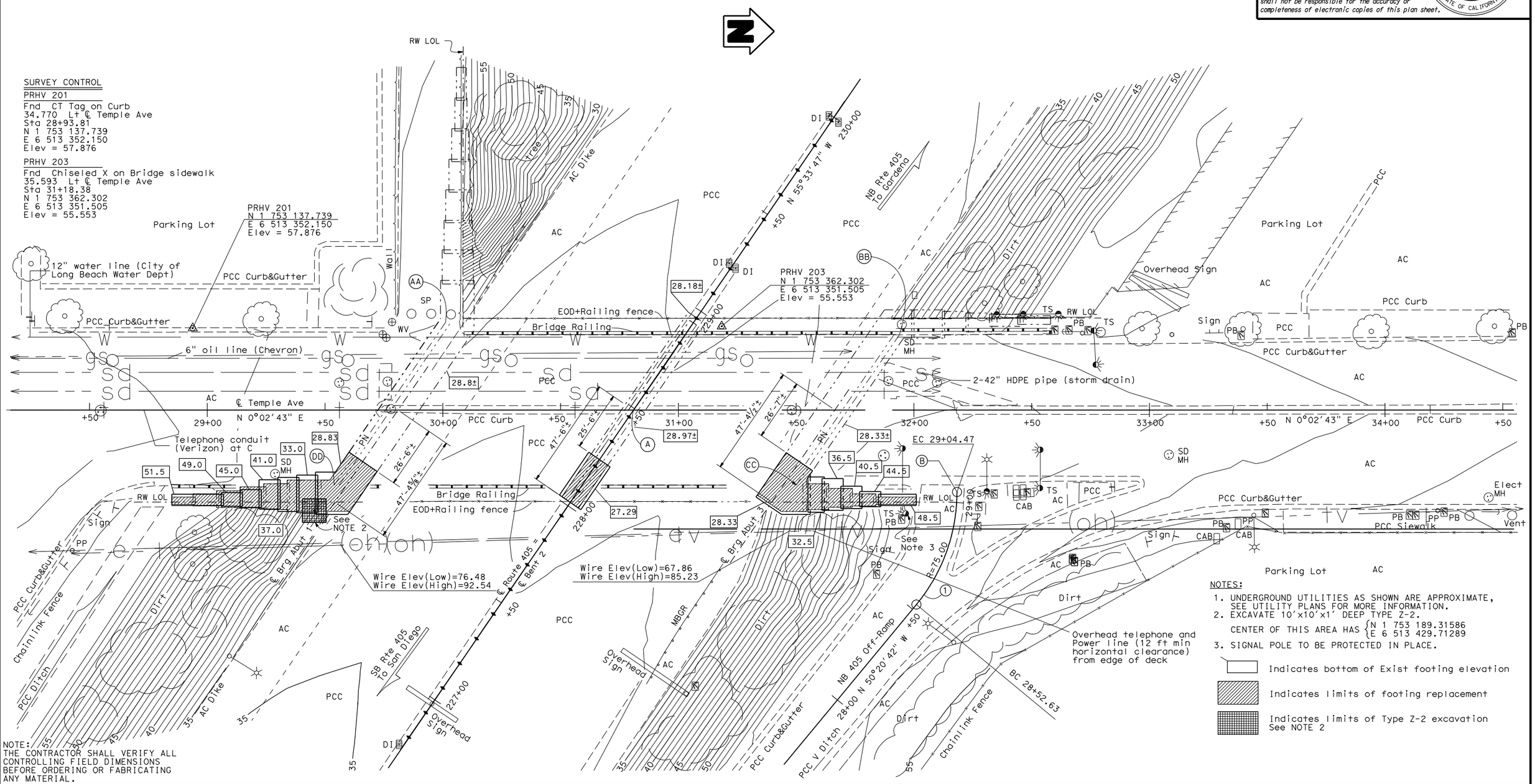

NOTE:
THE CONTRACTOR SHALL VERIFY ALL CONTROLLING FIELD DIMENSIONS BEFORE ORDERING OR FABRICATING ANY MATERIAL.

PRELIMINARY INVESTIGATION SECTION

SCALE 1"=20′	VERT.DATUM NAVD 88	PHOTOGRAMMETRY AS OF: X			
	HORZ.DATUM NAD 83	SURVEYED	BY District	CHECKED	BY E. Viajar
ALIGNMENT TIES Dist. Traverse Sheet		DRAFTED	BY M. Sadaghiani 03-11	CHECKED	BY E. Viajar

DESIGN	BY B. Shen	CHECKED J. Wu	
DETAILS	BY B. Jenko / J. Valencia	CHECKED B. Shen	
QUANTITIES	BY B. Shen	CHECKED J. Wu	

STATE OF CALIFORNIA
DEPARTMENT OF TRANSPORTATION

DIVISION OF ENGINEERING SERVICES
STRUCTURE DESIGN
DESIGN BRANCH 22

BRIDGE NO. 53-1198
POST MILE 4.3

TEMPLE AVENUE OC (REPAIR)
FOUNDATION PLAN

STRUCTURES FOUNDATION PLAN SHEET (ENGLISH) (REV. 09-01-10)

ORIGINAL SCALE IN INCHES FOR REDUCED PLANS 0 1 2 3

UNIT: 3626
PROJECT NUMBER & PHASE: 07000005391
CONTRACT NO.: 07-278304

DISREGARD PRINTS BEARING EARLIER REVISION DATES

REVISION DATES 4/27/11 6-28-12 12-14-11

SHEET 4 OF 27

FILE => 53-1198-e-fpl01new.dgn

DIST	COUNTY	ROUTE	POST MILES TOTAL PROJECT	SHEET No.	TOTAL SHEETS
07	LA	405	4.3	67	89

REGISTERED CIVIL ENGINEER 06/28/12 DATE

4-08-2013
PLANS APPROVAL DATE

REGISTERED PROFESSIONAL ENGINEER BIN SHEN No. C76221 Exp. 06-30-14 CIVIL STATE OF CALIFORNIA

The State of California or its officers or agents shall not be responsible for the accuracy or completeness of electronic copies of this plan sheet.

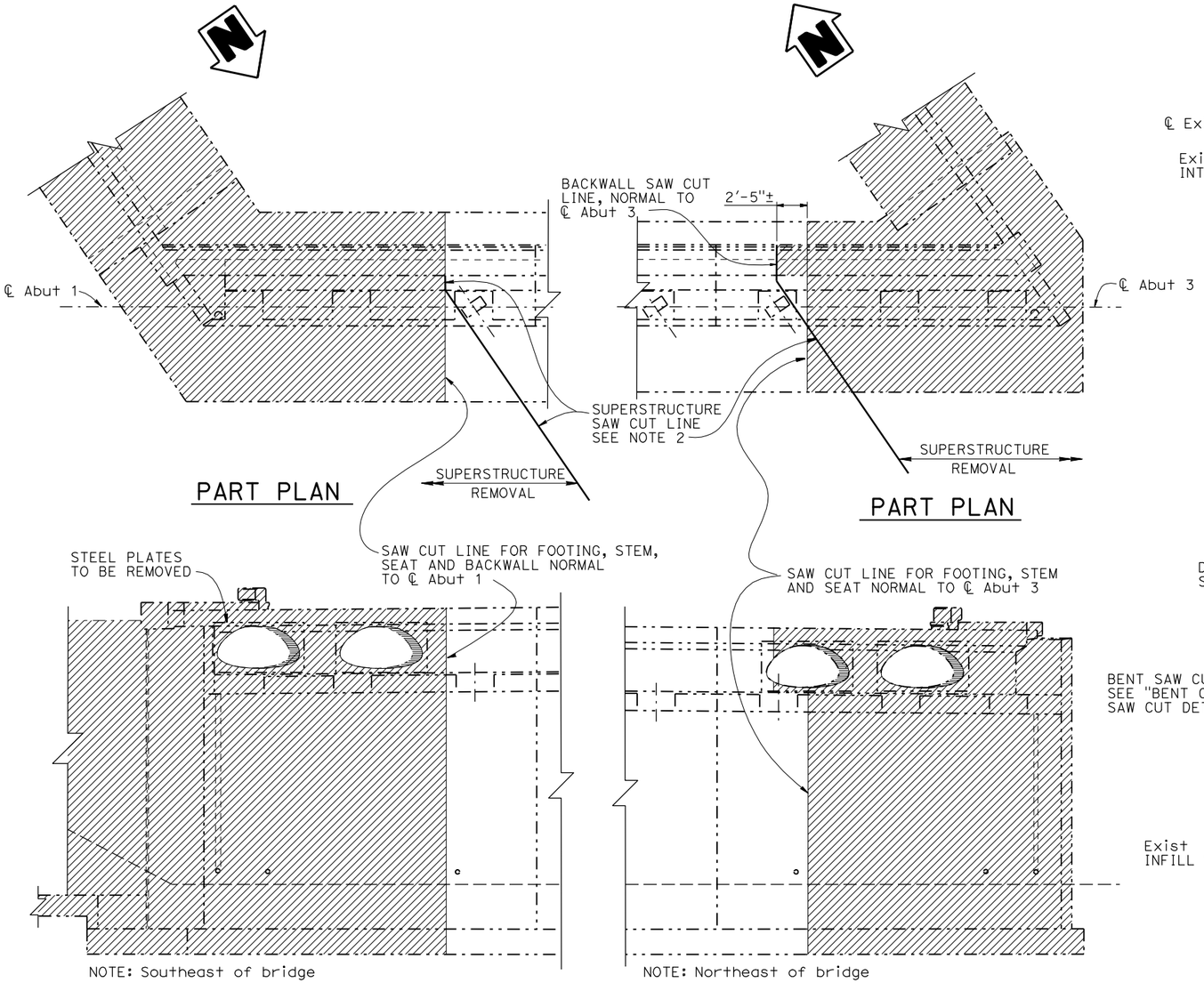

LIMITS OF ABUTMENT 1 CONCRETE REMOVAL

3/16"=1'-0"

LIMITS OF ABUTMENT 3 CONCRETE REMOVAL

3/16"=1'-0"

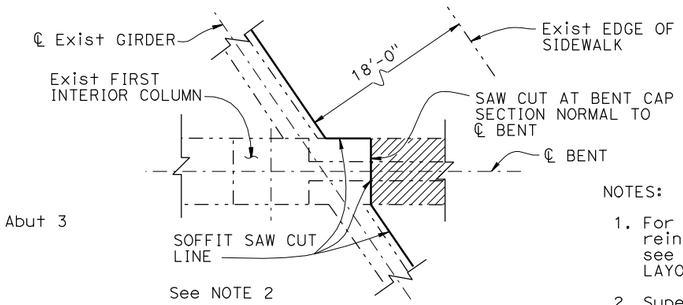

BENT CAP SAW CUT DETAIL

1/4"=1'-0"

NOTES:

1. For details of the existing abutment reinforcement to be kept in place, see "ABUTMENT DETAILS NO.1" and "ABUTMENT 3 LAYOUT" sheets.
2. Superstructure saw cut line is 18'-0" from Exist edge of sidewalk, except minor deviation at Abutments and Bent 2 as shown in this sheet.
3. Existing exposed deck transverse reinforcement and girder shear stirrups to remain undamaged for closure pour section, see "TYPICAL SECTION" sheet.
4. For limits of concrete removal of existing retaining wall, see "RETAINING WALL LAYOUT" sheet.

Indicates concrete removal

Indicates Exist structure

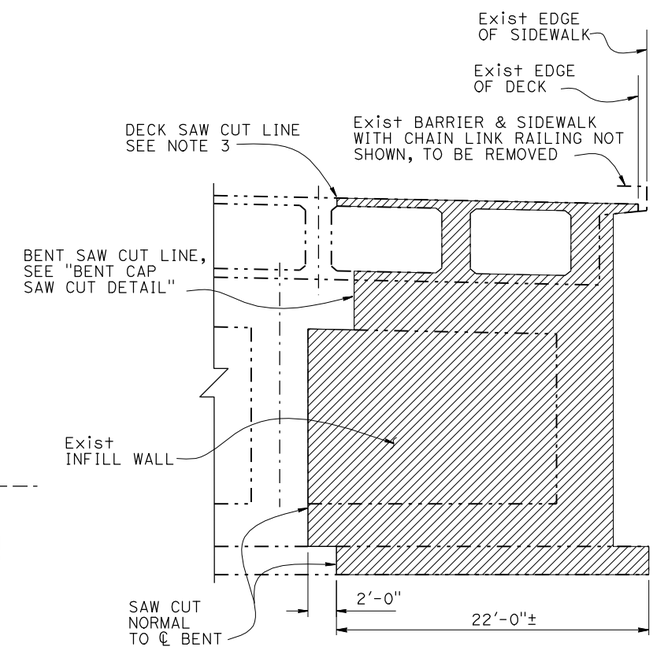

LIMITS OF BENT CONCRETE REMOVAL

3/16"=1'-0"

NOTE:
THE CONTRACTOR SHALL VERIFY ALL CONTROLLING FIELD DIMENSIONS BEFORE ORDERING OR FABRICATING ANY MATERIAL.

	BY	CHECKED
DESIGN	B. Shen	J. Wu
DETAILS	B. Jenko / J. Valencia	B. Shen
QUANTITIES	B. Shen	J. Wu

STATE OF CALIFORNIA DEPARTMENT OF TRANSPORTATION

DIVISION OF ENGINEERING SERVICES STRUCTURE DESIGN DESIGN BRANCH 22

BRIDGE NO. 53-1198
POST MILE 4.3

TEMPLE AVENUE OC (REPAIR)

LIMITS OF BRIDGE REMOVAL, PORTION

STRUCTURES DESIGN DETAIL SHEET (ENGLISH) (REV. 09-01-10)

ORIGINAL SCALE IN INCHES FOR REDUCED PLANS 0 1 2 3

UNIT: 3626
PROJECT NUMBER & PHASE: 07000005391
CONTRACT NO.: 07-278304

DISREGARD PRINTS BEARING EARLIER REVISION DATES

REVISION DATES 8-19-11 10-26-11 06-28-12

SHEET 5 OF 27

FILE => 53-1198-e-rem-pl-dt01.dgn

USERNAME => s133329 DATE PLOTTED => 20-MAY-2013 TIME PLOTTED => 13:27

DIST	COUNTY	ROUTE	POST MILES TOTAL PROJECT	SHEET No.	TOTAL SHEETS
07	LA	405	4.3	68	89

REGISTERED CIVIL ENGINEER 06/28/12 DATE

4-08-2013
PLANS APPROVAL DATE

REGISTERED PROFESSIONAL ENGINEER BIN SHEN No. C76221 Exp. 06-30-14 CIVIL STATE OF CALIFORNIA

The State of California or its officers or agents shall not be responsible for the accuracy or completeness of electronic copies of this plan sheet.

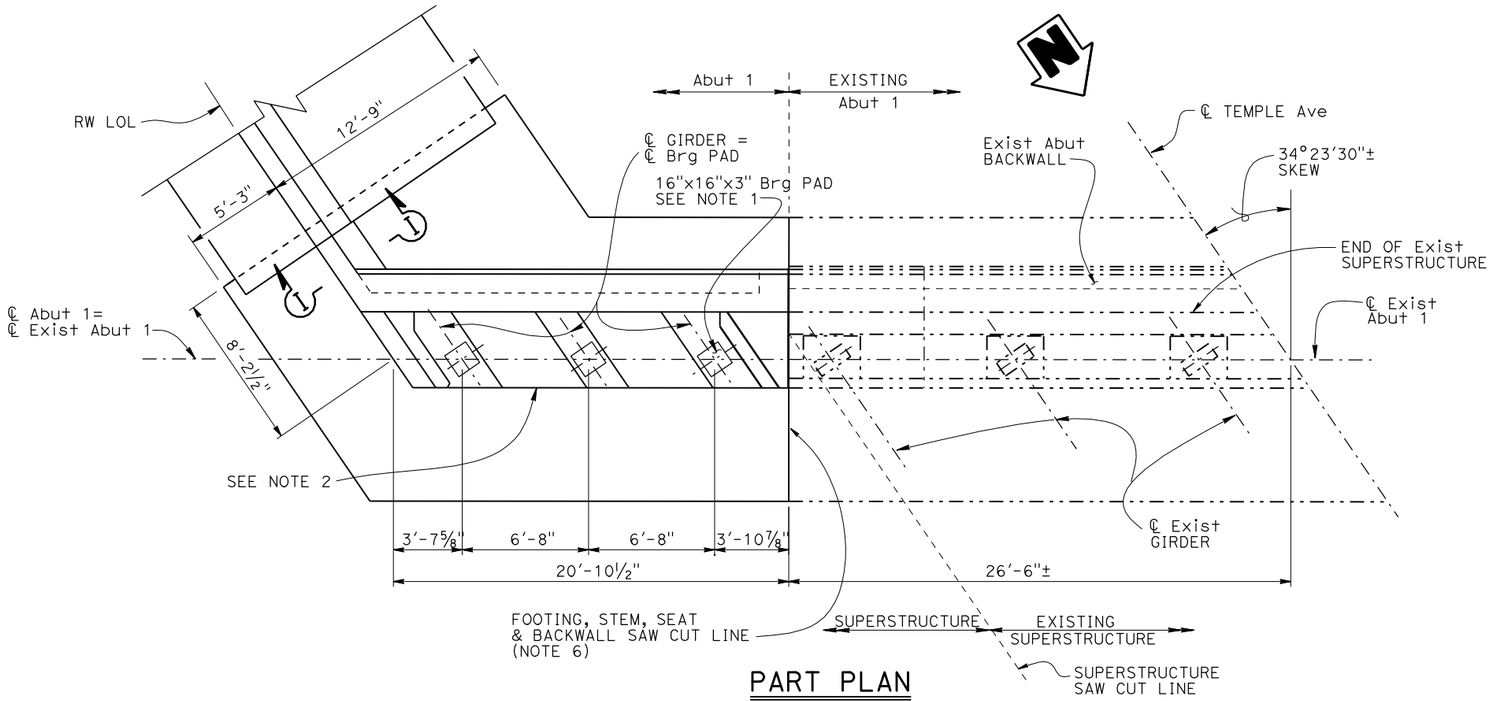

PART PLAN

¼"=1'-0"

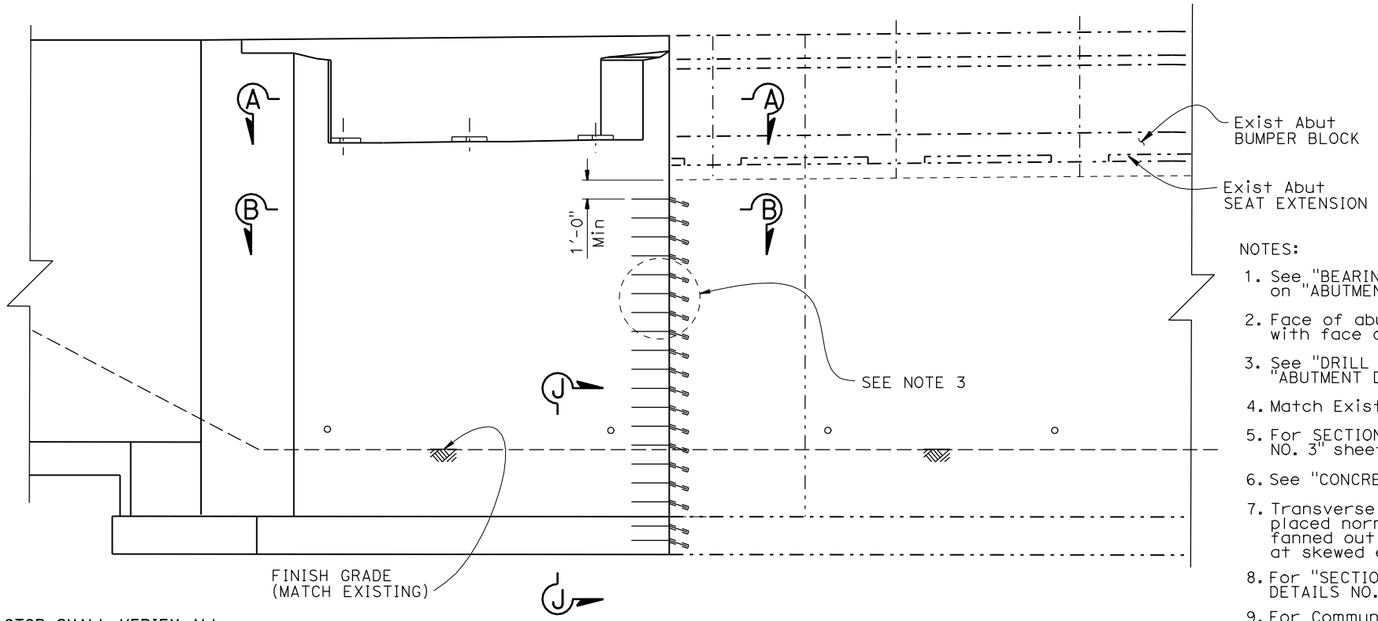

PART ELEVATION

¼"=1'-0"

NOTE:
THE CONTRACTOR SHALL VERIFY ALL CONTROLLING FIELD DIMENSIONS BEFORE ORDERING OR FABRICATING ANY MATERIAL.

NOTES:

1. See "BEARING PAD DETAIL" on "ABUTMENT LAYOUT NO.3" sheet.
2. Face of abutment to match with face of existing abutment.
3. See "DRILL AND BOND DETAIL" on "ABUTMENT DETAILS NO. 3" sheet.
4. Match Exist paving notch.
5. For SECTION I-I, see "ABUTMENT DETAILS NO. 3" sheet.
6. See "CONCRETE REMOVAL LIMITS" sheet.
7. Transverse reinforcement above stem to be placed normal to ℄ Abut and to be fanned out and evenly distributed at skewed end.
8. For "SECTION A-A & B-B", see "ABUTMENT DETAILS NO. 1" sheet.
9. For Communication conduits on Abutment 3 Footing, see "ROAD PLANS".
10. Alternate long and short #11 reinforcement, do not bundle.

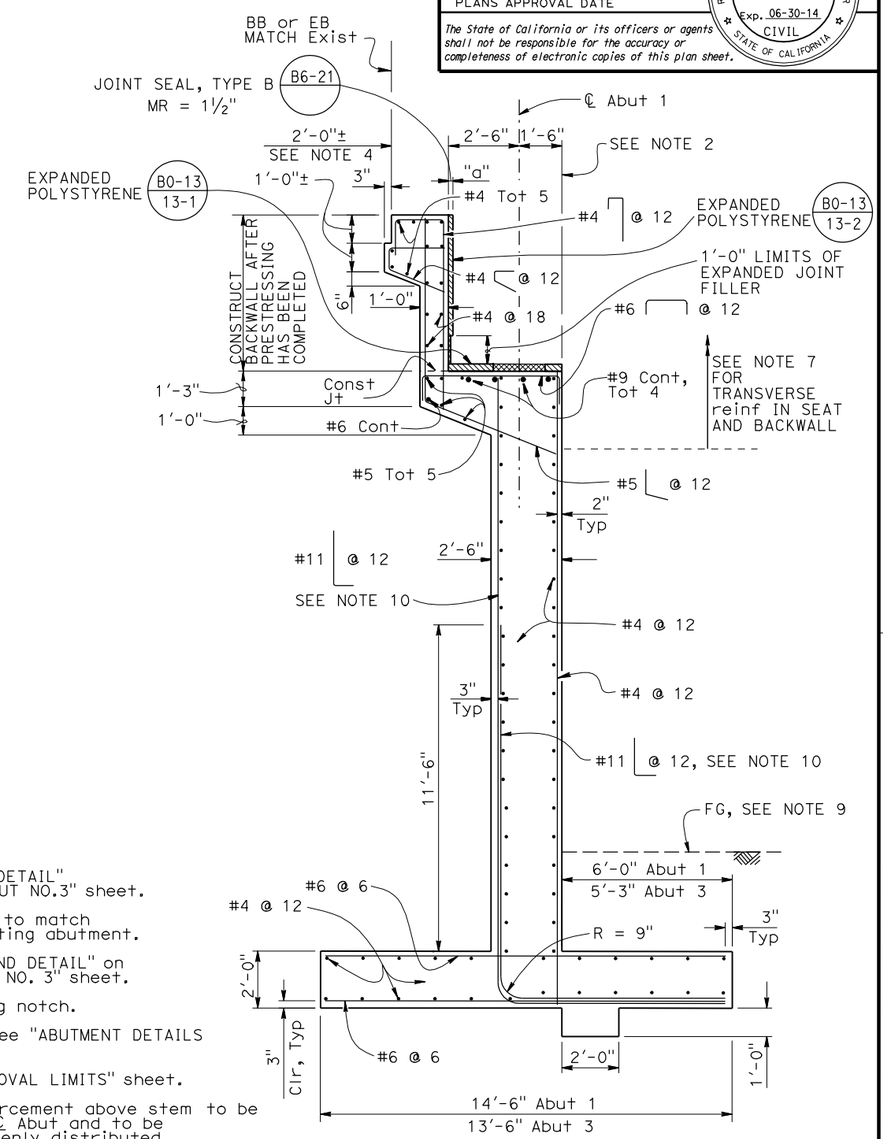

TYPICAL SECTION

⅜"=1'-0"

NOTE: Abut 1 SHOWN, Abut 3 SIMILAR

DESIGN	BY B. Shen	CHECKED J. Wu	
DETAILS	BY B. Jenko / J. Valencia	CHECKED B. Shen	
QUANTITIES	BY B. Shen	CHECKED J. Wu	

STATE OF CALIFORNIA
DEPARTMENT OF TRANSPORTATION

DIVISION OF ENGINEERING SERVICES
STRUCTURE DESIGN
DESIGN BRANCH 22

BRIDGE NO. 53-1198
POST MILE 4.3

TEMPLE AVENUE OC (REPAIR)
ABUTMENT 1 LAYOUT

STRUCTURES DESIGN DETAIL SHEET (ENGLISH) (REV. 09-01-10)

ORIGINAL SCALE IN INCHES FOR REDUCED PLANS 0 1 2 3

UNIT: 3626
PROJECT NUMBER & PHASE: 07000005391
CONTRACT NO.: 07-278304

DISREGARD PRINTS BEARING EARLIER REVISION DATES

REVISION DATES 8-10-11 12-28-11 06-28-12

SHEET 6 OF 27

FILE => 53-1198-f-a01_lo.dgn

USERNAME => s133329 DATE PLOTTED => 20-MAY-2013 TIME PLOTTED => 13:27

DIST	COUNTY	ROUTE	POST MILES TOTAL PROJECT	SHEET No.	TOTAL SHEETS
07	LA	405	4.3	69	89

REGISTERED CIVIL ENGINEER 06/28/12 DATE

4-08-2013
PLANS APPROVAL DATE

REGISTERED PROFESSIONAL ENGINEER BIN SHEN No. C76221 Exp. 06-30-14 CIVIL STATE OF CALIFORNIA

The State of California or its officers or agents shall not be responsible for the accuracy or completeness of electronic copies of this plan sheet.

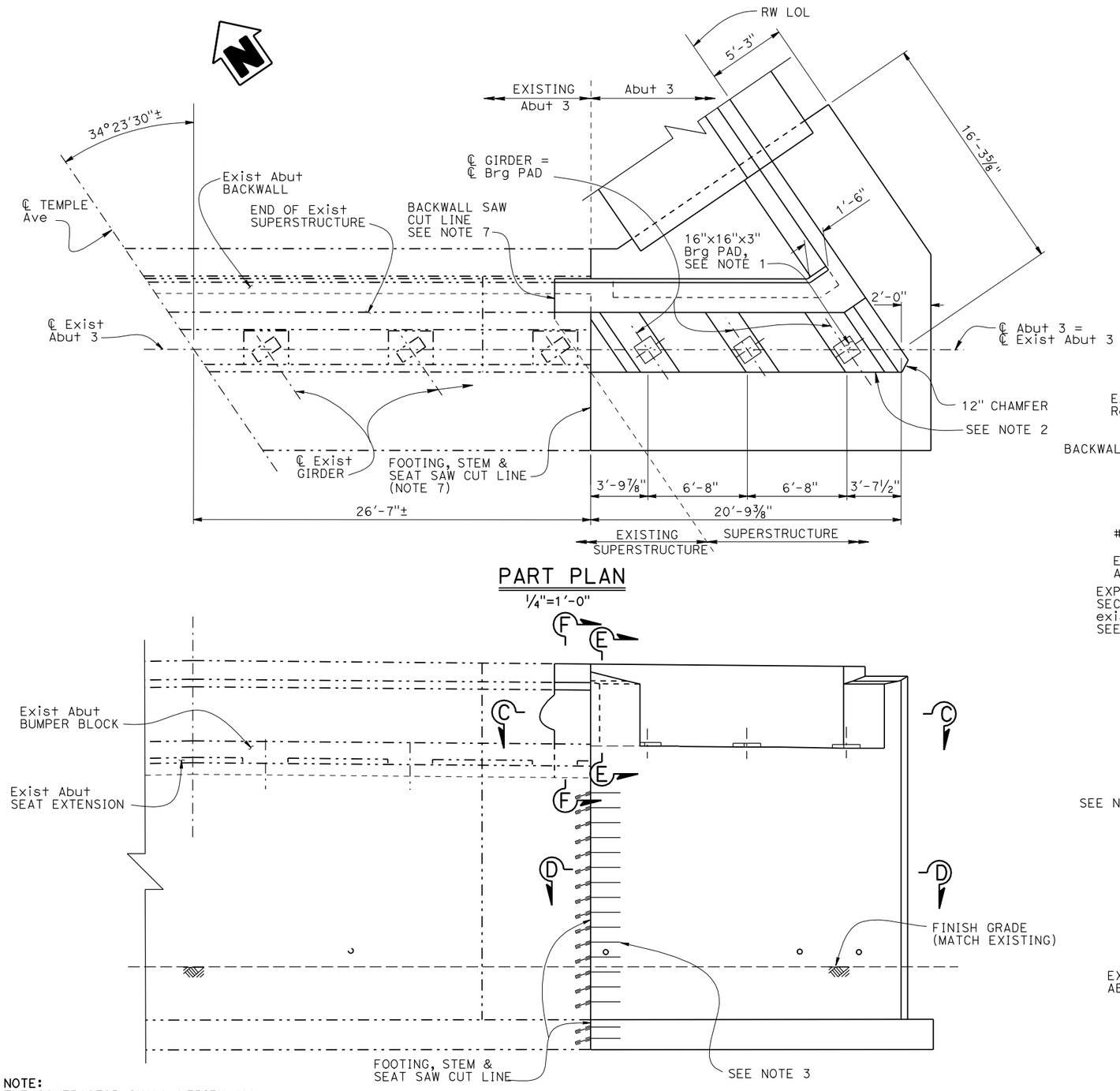

PART PLAN
1/4"=1'-0"

PART ELEVATION
1/4"=1'-0"

NOTE:
THE CONTRACTOR SHALL VERIFY ALL CONTROLLING FIELD DIMENSIONS BEFORE ORDERING OR FABRICATING ANY MATERIAL.

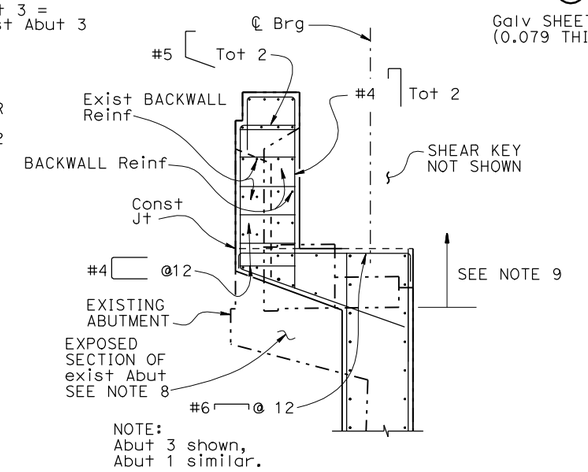

SECTION E-E
3/8"=1'-0"

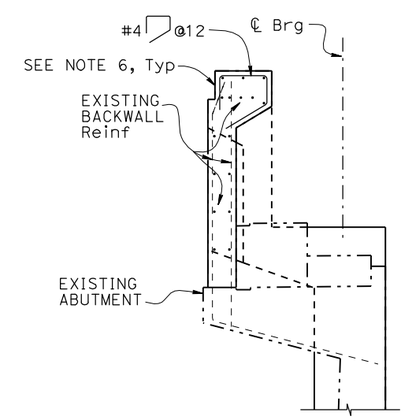

SECTION F-F
3/8"=1'-0"

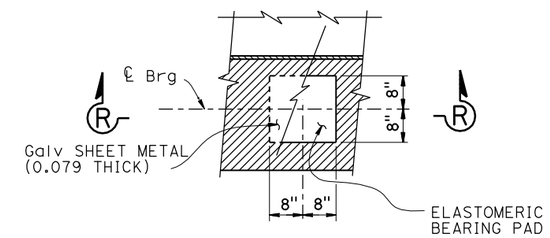

PLAN

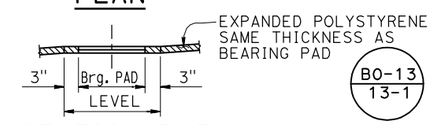

SECTION R-R

BO-13
13-1

BEARING PAD DETAIL
No Scale
Details typical at all bearing pads

NOTES:

1. See "BEARING PAD DETAIL"
2. Face of abutment to match with face of existing abutment.
3. For drill & bond details, see "ABUTMENT DETAILS NO. 3" sheet.
4. For abutment typical section, see "ABUTMENT 1 LAYOUT" sheet.
5. For "SECTION C-C & D-D", see "ABUTMENT DETAILS NO.1" sheet.
6. Match Exist paving notch
7. See "CONCRETE REMOVAL LIMITS" sheet.
8. Exposed face of Exist Abut section surface to be treated to prevent corrosion of Existing rebar.
9. Within overlapped regions above the stem of existing abutment, keep no less than 1'-3" length of Exist transverse rebar (including bumper block and seat extension) in abutment.

	BY	CHECKED
DESIGN	B. Shen	J. Wu
DETAILS	B. Jenko / J. Valencia	B. Shen
QUANTITIES	B. Shen	J. Wu

STATE OF CALIFORNIA
DEPARTMENT OF TRANSPORTATION

DIVISION OF ENGINEERING SERVICES
STRUCTURE DESIGN
DESIGN BRANCH 22

BRIDGE NO. 53-1198
POST MILE 4.3

TEMPLE AVENUE OC (REPAIR)
ABUTMENT 3 LAYOUT

STRUCTURES DESIGN DETAIL SHEET (ENGLISH) (REV. 09-01-10)

ORIGINAL SCALE IN INCHES FOR REDUCED PLANS 0 1 2 3

UNIT: 3626
PROJECT NUMBER & PHASE: 07000005391
CONTRACT NO.: 07-278304

DISREGARD PRINTS BEARING EARLIER REVISION DATES

REVISION DATES: 7-6-11 06-28-12 1-28-12

SHEET 7 OF 27

FILE => 53-1198-f-a03_lo.dgn

USERNAME => s133329 DATE PLOTTED => 20-MAY-2013 TIME PLOTTED => 13:27

DIST	COUNTY	ROUTE	POST MILES TOTAL PROJECT	SHEET No.	TOTAL SHEETS
07	LA	405	4.3	70	89

REGISTERED CIVIL ENGINEER 06/28/12 DATE

4-08-2013
PLANS APPROVAL DATE

REGISTERED PROFESSIONAL ENGINEER BIN SHEN No. C76221 Exp. 06-30-14 CIVIL STATE OF CALIFORNIA

The State of California or its officers or agents shall not be responsible for the accuracy or completeness of electronic copies of this plan sheet.

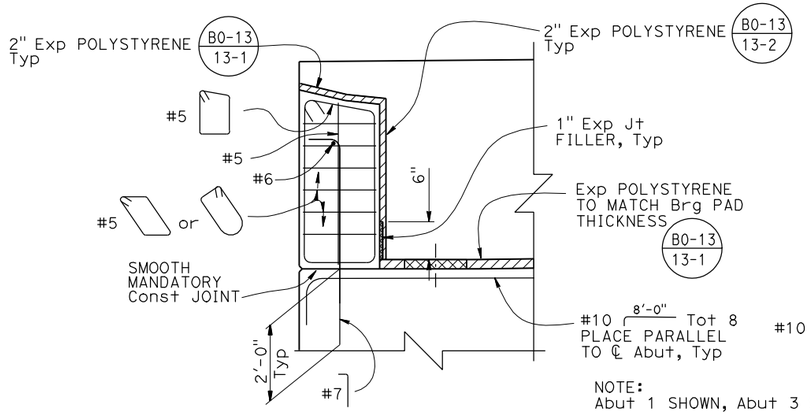

NOTE:
Abut 1 SHOWN, Abut 3 SIMILAR

EXTERIOR SHEAR KEY SECTION
½"=1'-0"

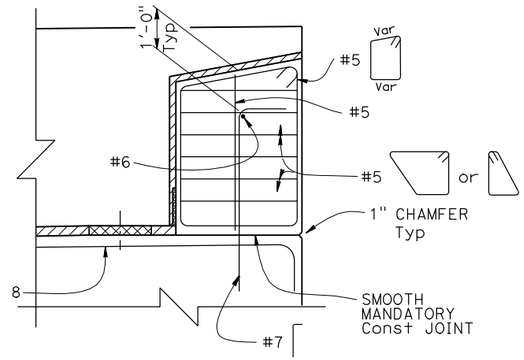

INTERIOR SHEAR KEY SECTION
½"=1'-0"

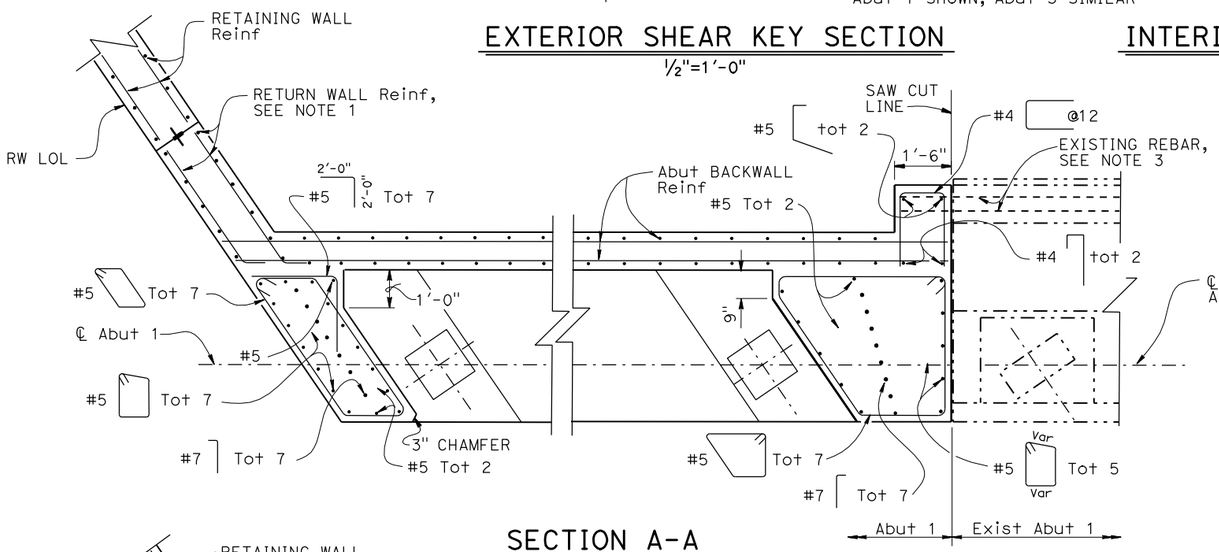

SECTION A-A
½"=1'-0"

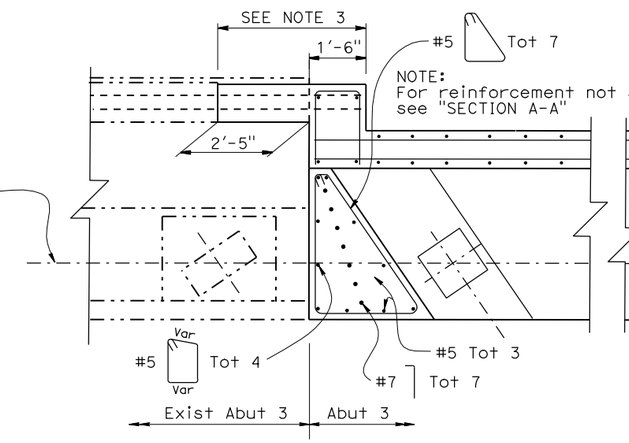

SECTION C-C
½"=1'-0"

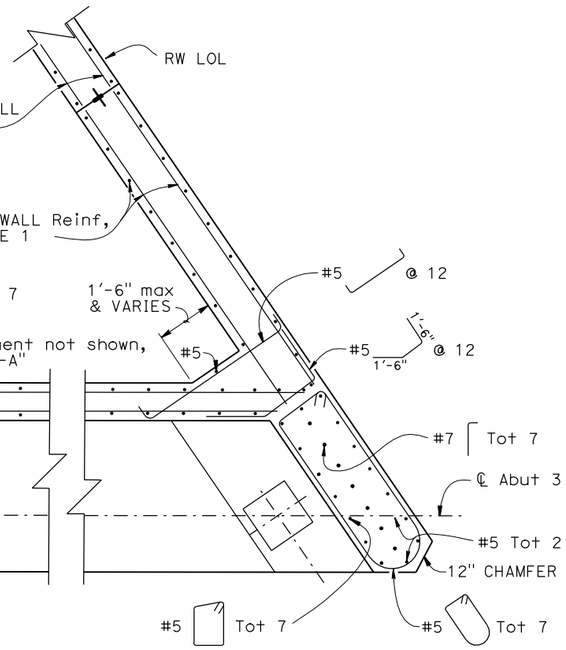

NOTES:

1. For Abut 1 & Abut 3 return wall reinforcement, see "SECTION I-I" in "ABUTMENT DETAILS NO. 3" sheet.
2. For drill & bond details, see "ABUTMENT DETAIL NO. 3" sheet.
3. Keep 1'-3" of existing backwall longitudinal reinforcement beyond the existing abutment stem saw cut line.

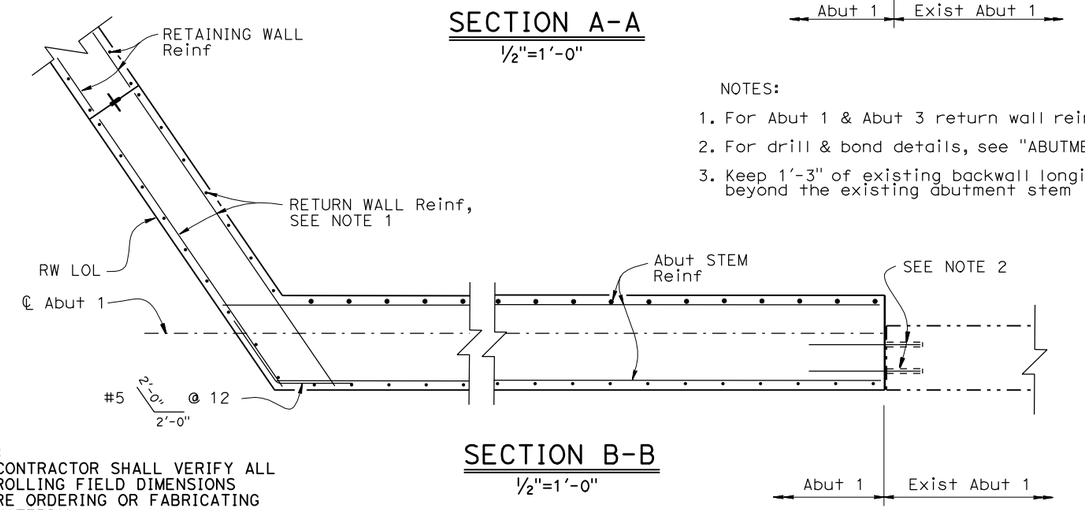

SECTION B-B
½"=1'-0"

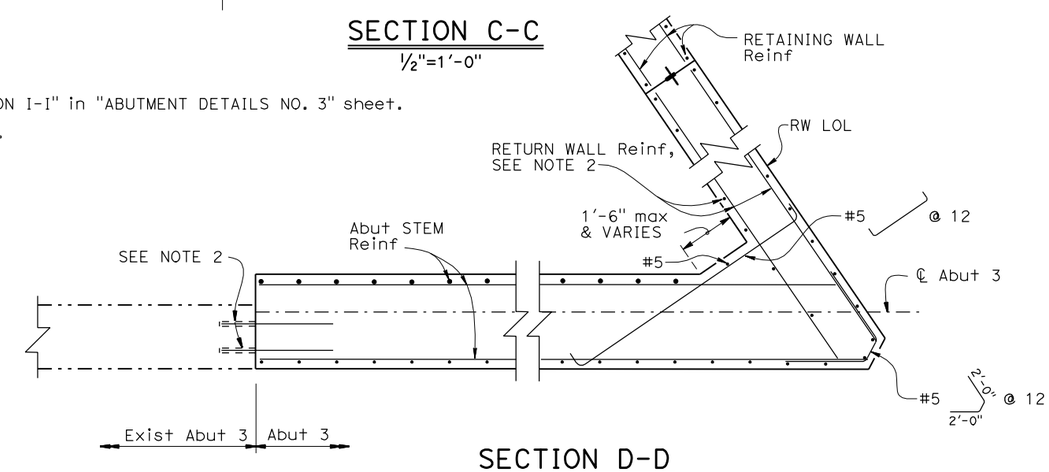

SECTION D-D
½"=1'-0"

NOTE:
THE CONTRACTOR SHALL VERIFY ALL CONTROLLING FIELD DIMENSIONS BEFORE ORDERING OR FABRICATING ANY MATERIAL.

	BY	CHECKED
DESIGN	B. Shen	J. Wu
DETAILS	B. Jenko / J. Valencia	B. Shen
QUANTITIES	B. Shen	J. Wu

STATE OF CALIFORNIA
DEPARTMENT OF TRANSPORTATION

DIVISION OF ENGINEERING SERVICES
STRUCTURE DESIGN
DESIGN BRANCH 22

BRIDGE NO. 53-1198
POST MILE 4.3

TEMPLE AVENUE OC (REPAIR)
ABUTMENT DETAILS NO. 1

STRUCTURES DESIGN DETAIL SHEET (ENGLISH) (REV. 09-01-10)

ORIGINAL SCALE IN INCHES FOR REDUCED PLANS 0 1 2 3

UNIT: 3626
PROJECT NUMBER & PHASE: 07000005391
CONTRACT NO.: 07-278304

DISREGARD PRINTS BEARING EARLIER REVISION DATES

REVISION DATES: 7-14-11 12-27-11 6-28-12

SHEET 8 OF 27

FILE => 53-1198-g-a01dt01.dgn

USERNAME => s133329 DATE PLOTTED => 20-MAY-2013 TIME PLOTTED => 13:27

DIST	COUNTY	ROUTE	POST MILES TOTAL PROJECT	SHEET No.	TOTAL SHEETS
07	LA	405	4.3	71	89

REGISTERED CIVIL ENGINEER 06/28/12 DATE

4-08-2013
PLANS APPROVAL DATE

REGISTERED PROFESSIONAL ENGINEER BIN SHEN No. C76221 Exp. 06-30-14 CIVIL STATE OF CALIFORNIA

The State of California or its officers or agents shall not be responsible for the accuracy or completeness of electronic copies of this plan sheet.

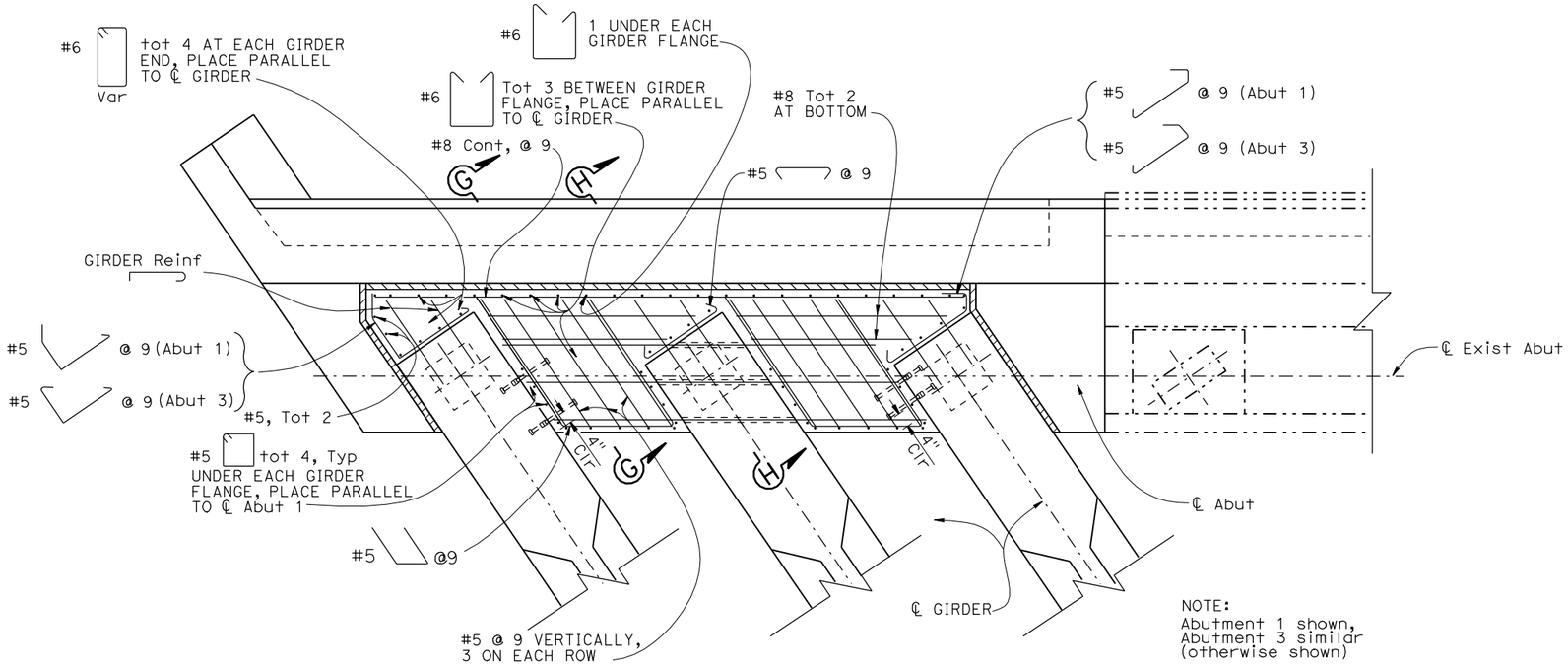

NOTE:
Abutment 1 shown,
Abutment 3 similar
(otherwise shown)

PART PLAN

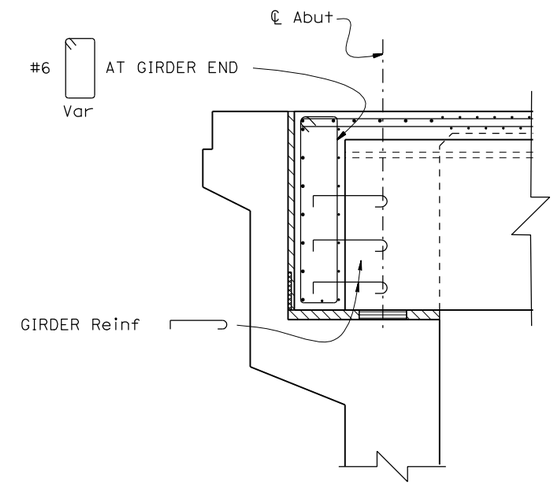

SECTION H-H

½"=1'-0"

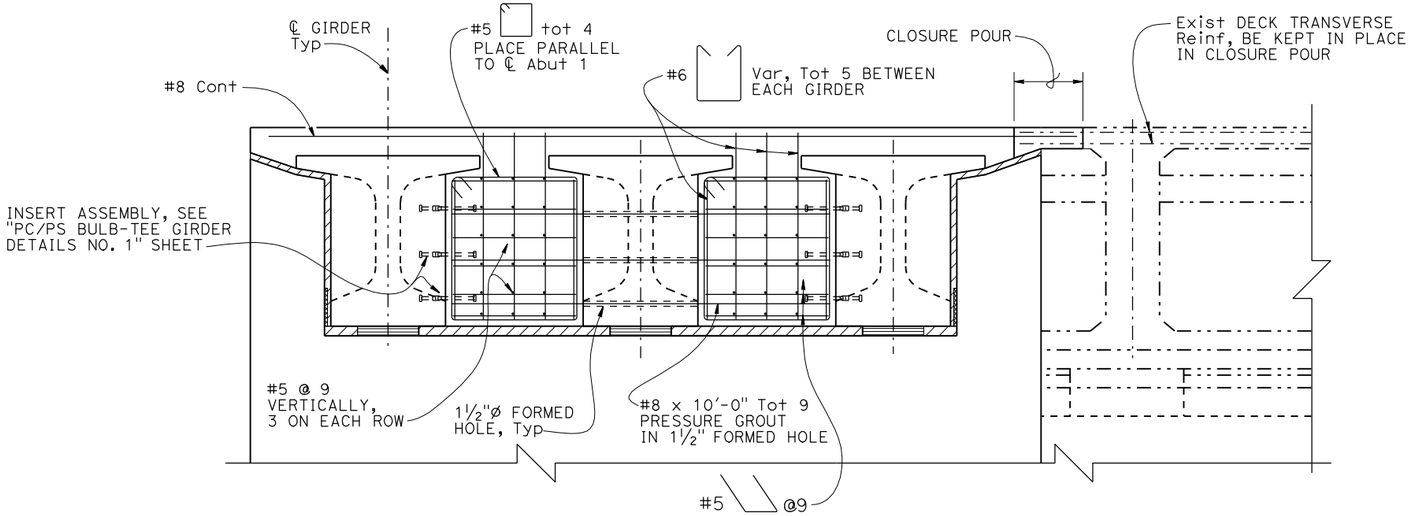

PART ELEVATION

ABUTMENT DIAPHRAGM

½"=1'-0"

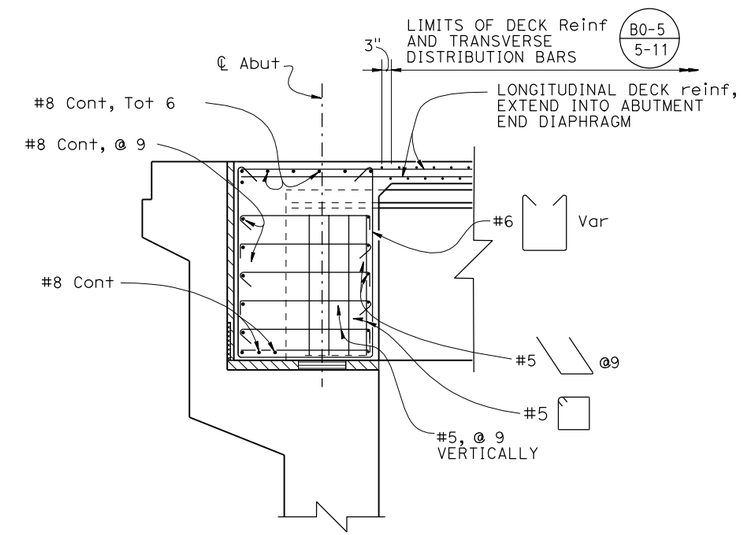

SECTION G-G

½"=1'-0"

NOTE:
THE CONTRACTOR SHALL VERIFY ALL CONTROLLING FIELD DIMENSIONS BEFORE ORDERING OR FABRICATING ANY MATERIAL.

	BY	CHECKED
DESIGN	B. Shen	J. Wu
DETAILS	B. Jenko / J. Valencia	B. Shen
QUANTITIES	B. Shen	J. Wu

STATE OF CALIFORNIA
DEPARTMENT OF TRANSPORTATION

DIVISION OF ENGINEERING SERVICES
STRUCTURE DESIGN
DESIGN BRANCH 22

BRIDGE NO. 53-1198
POST MILE 4.3

TEMPLE AVENUE OC (REPAIR)
ABUTMENT DETAILS NO. 2

STRUCTURES DESIGN DETAIL SHEET (ENGLISH) (REV. 09-01-10)

ORIGINAL SCALE IN INCHES FOR REDUCED PLANS 0 1 2 3

UNIT: 3626
PROJECT NUMBER & PHASE: 07000005391
CONTRACT NO.: 07-278304

DISREGARD PRINTS BEARING EARLIER REVISION DATES → 7-14-11 6-28-12 1-18-12

SHEET 9 OF 27

FILE => 53-1198-g-a01dt02.dgn

USERNAME => s133329 DATE PLOTTED => 20-MAY-2013 TIME PLOTTED => 13:27

DIST	COUNTY	ROUTE	POST MILES TOTAL PROJECT	SHEET No.	TOTAL SHEETS
07	LA	405	4.3	72	89

REGISTERED CIVIL ENGINEER 06/28/12 DATE

4-08-2013
PLANS APPROVAL DATE

REGISTERED PROFESSIONAL ENGINEER BIN SHEN No. C76221 Exp. 06-30-14 CIVIL STATE OF CALIFORNIA

The State of California or its officers or agents shall not be responsible for the accuracy or completeness of electronic copies of this plan sheet.

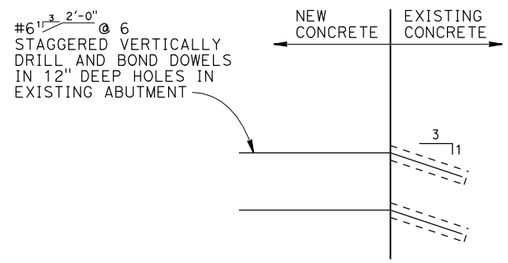

DRILL AND BOND DETAIL

NO SCALE

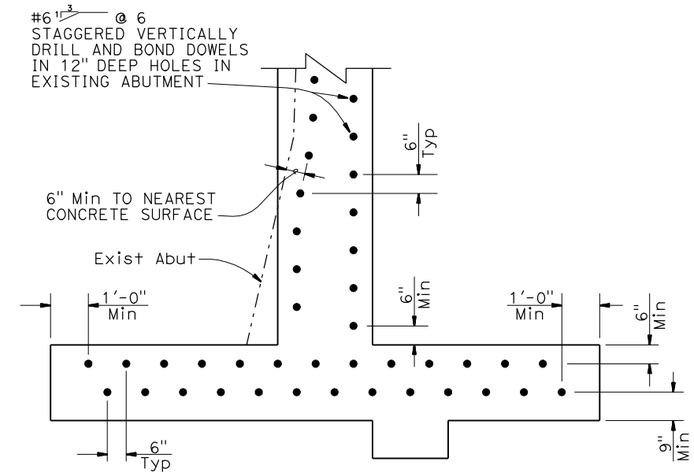

NOTE: drill & bond details

SECTION J-J

1/2"=1'-0"

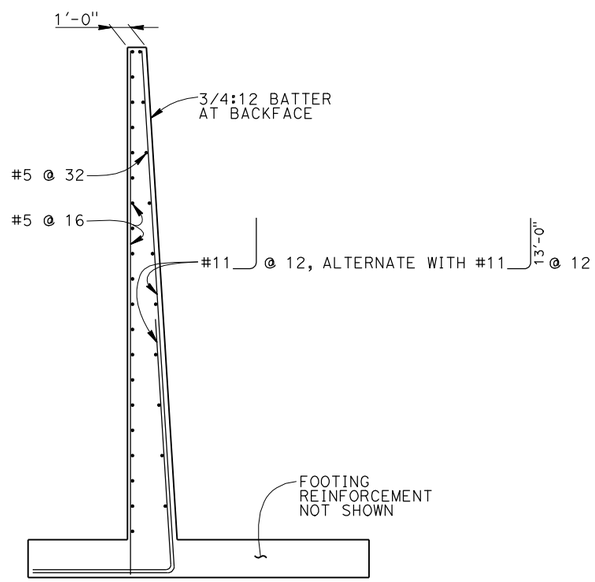

SECTION I-I

1/4"=1'-0"

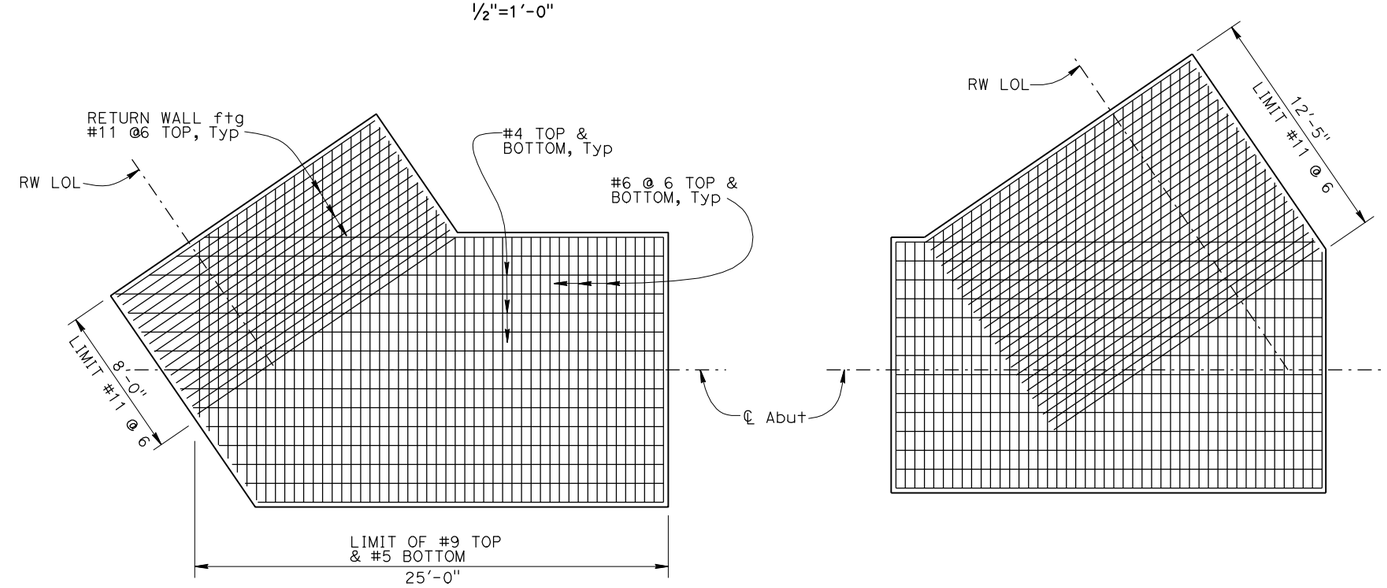

ABUTMENT 1

ABUTMENT 3

ABUTMENT FOOTING DETAIL PLAN

1/4"=1'-0"

NOTE:
THE CONTRACTOR SHALL VERIFY ALL CONTROLLING FIELD DIMENSIONS BEFORE ORDERING OR FABRICATING ANY MATERIAL.

	BY	CHECKED
DESIGN	B. Shen	J. Wu
DETAILS	B. Jenko	B. Shen
QUANTITIES	B. Shen	J. Wu

STATE OF CALIFORNIA DEPARTMENT OF TRANSPORTATION

DIVISION OF ENGINEERING SERVICES STRUCTURE DESIGN DESIGN BRANCH 22

BRIDGE NO. 53-1198
POST MILE 4.3

TEMPLE AVENUE OC (REPAIR)
ABUTMENT DETAILS NO. 3

STRUCTURES DESIGN DETAIL SHEET (ENGLISH) (REV. 09-01-10)

ORIGINAL SCALE IN INCHES FOR REDUCED PLANS 0 1 2 3

UNIT: 3626
PROJECT NUMBER & PHASE: 07000005391
CONTRACT NO.: 07-278304

DISREGARD PRINTS BEARING EARLIER REVISION DATES

REVISION DATES 7-28-11 1-26-12 06-28-12

SHEET 10 OF 27

FILE => 53-1198-g-a01dt03.dgn

USERNAME => s133329 DATE PLOTTED => 20-MAY-2013 TIME PLOTTED => 13:27

DIST	COUNTY	ROUTE	POST MILES TOTAL PROJECT	SHEET No.	TOTAL SHEETS
07	LA	405	4.3	73	89

REGISTERED CIVIL ENGINEER 06/28/12 DATE

4-08-2013
PLANS APPROVAL DATE

REGISTERED PROFESSIONAL ENGINEER BIN SHEN No. C76221 Exp. 06-30-14 CIVIL STATE OF CALIFORNIA

The State of California or its officers or agents shall not be responsible for the accuracy or completeness of electronic copies of this plan sheet.

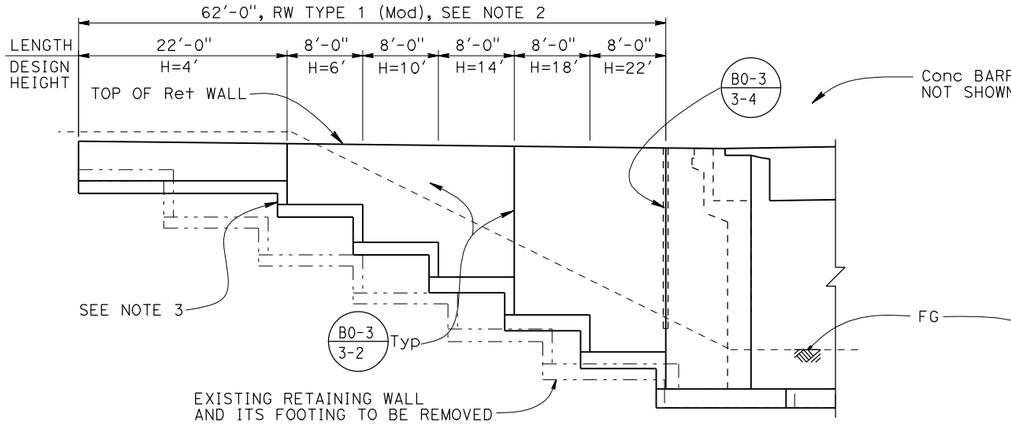

ABUTMENT 1 RETAINING WALL ELEVATION

1/8"= 1'-0"

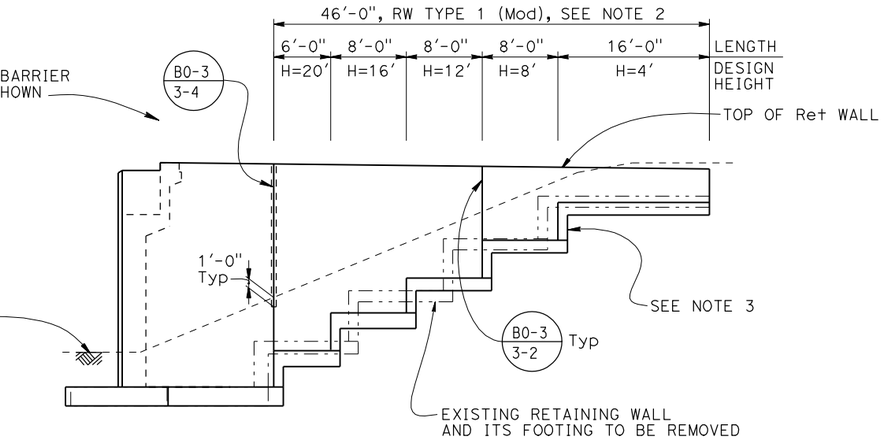

ABUTMENT 3 RETAINING WALL ELEVATION

1/8"= 1'-0"

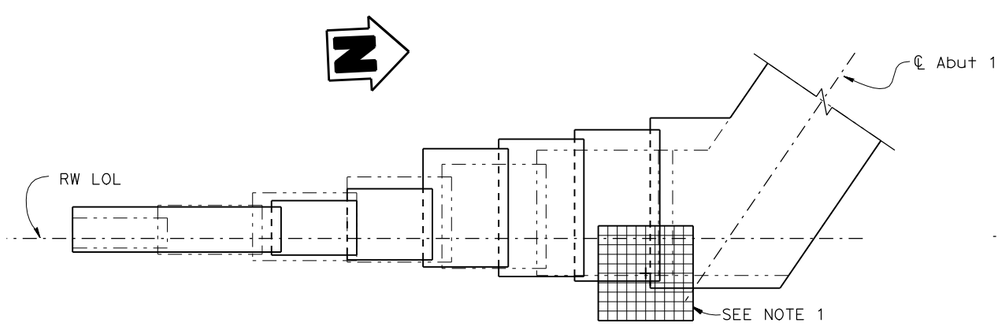

ABUTMENT 1 RETAINING WALL FOOTING PLAN

1/8"= 1'-0"

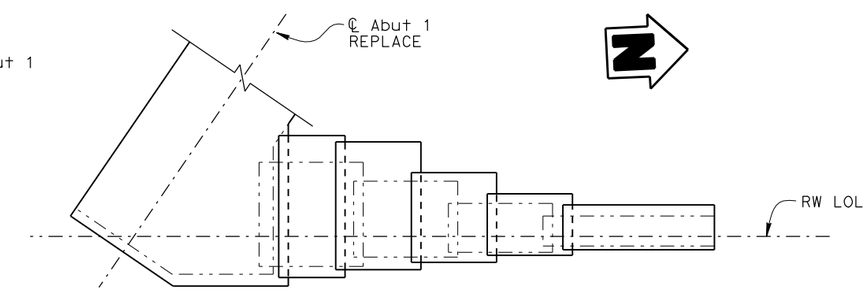

ABUTMENT 3 RETAINING WALL FOOTING PLAN

1/8"= 1'-0"

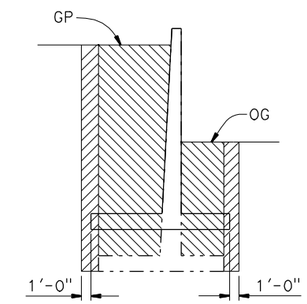

EXCAVATION

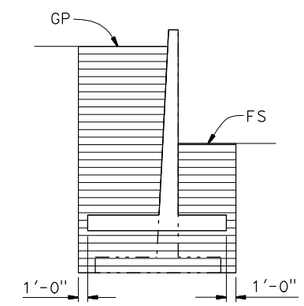

BACKFILL

NOTE: One situation shown, other situations silmilar.

RETAINING WALL SECTION

No Scale

LEGEND:

- Included in Bridge Removal
- Structure Excavation, see NOTE 1
- Structure Backfill, Bridge
- Existing Structure
- New Construction

NOTES:

1. For limits of structure excavation Type Z-2 (Aerially Deposited Lead), see NOTE 2 on "FOUNDATION PLAN" sheet.
2. See "RETAINING WALL TYPE 1 (MOD)" sheet for wall details.
3. See "RETAINING WALL DETAILS" sheet.

NOTE:
THE CONTRACTOR SHALL VERIFY ALL CONTROLLING FIELD DIMENSIONS BEFORE ORDERING OR FABRICATING ANY MATERIAL.

	BY	CHECKED
DESIGN	B. Shen	J. Wu
DETAILS	B. Jenko / J. Valencia	B. Shen
QUANTITIES	B. Shen	J. Wu

STATE OF CALIFORNIA
DEPARTMENT OF TRANSPORTATION

DIVISION OF ENGINEERING SERVICES
STRUCTURE DESIGN
DESIGN BRANCH 22

BRIDGE NO. 53-1198
POST MILE 4.3

TEMPLE AVENUE OC (REPAIR)
RETAINING WALL LAYOUT

STRUCTURES DESIGN DETAIL SHEET (ENGLISH) (REV. 09-01-10)

ORIGINAL SCALE IN INCHES FOR REDUCED PLANS 0 1 2 3

UNIT: 3626
PROJECT NUMBER & PHASE: 07000005391
CONTRACT NO.: 07-278304

DISREGARD PRINTS BEARING EARLIER REVISION DATES

REVISION DATES: 7-28-11 6-28-12 1-28-13

SHEET 11 OF 27

FILE => 53-1198-g-rw_lo01.dgn

USERNAME => s133329 DATE PLOTTED => 20-MAY-2013 TIME PLOTTED => 13:27

DIST	COUNTY	ROUTE	POST MILES TOTAL PROJECT	SHEET No.	TOTAL SHEETS
07	LA	405	4.3	74	89

REGISTERED CIVIL ENGINEER 06/28/12 DATE

4-08-2013
PLANS APPROVAL DATE

REGISTERED PROFESSIONAL ENGINEER GARY WANG No. C58298 Exp. 06-30-12 CIVIL STATE OF CALIFORNIA

The State of California or its officers or agents shall not be responsible for the accuracy or completeness of electronic copies of this plan sheet.

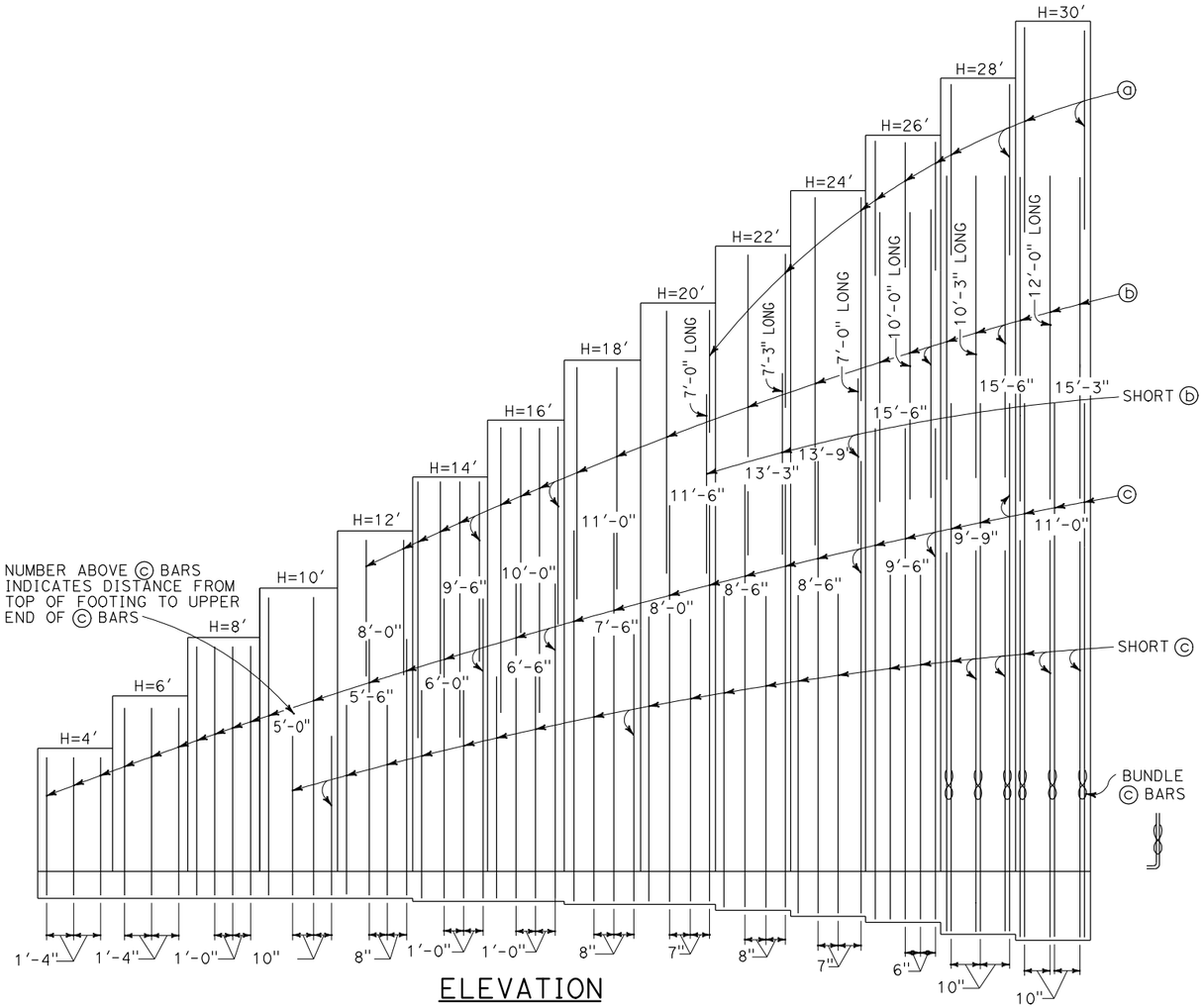

ELEVATION

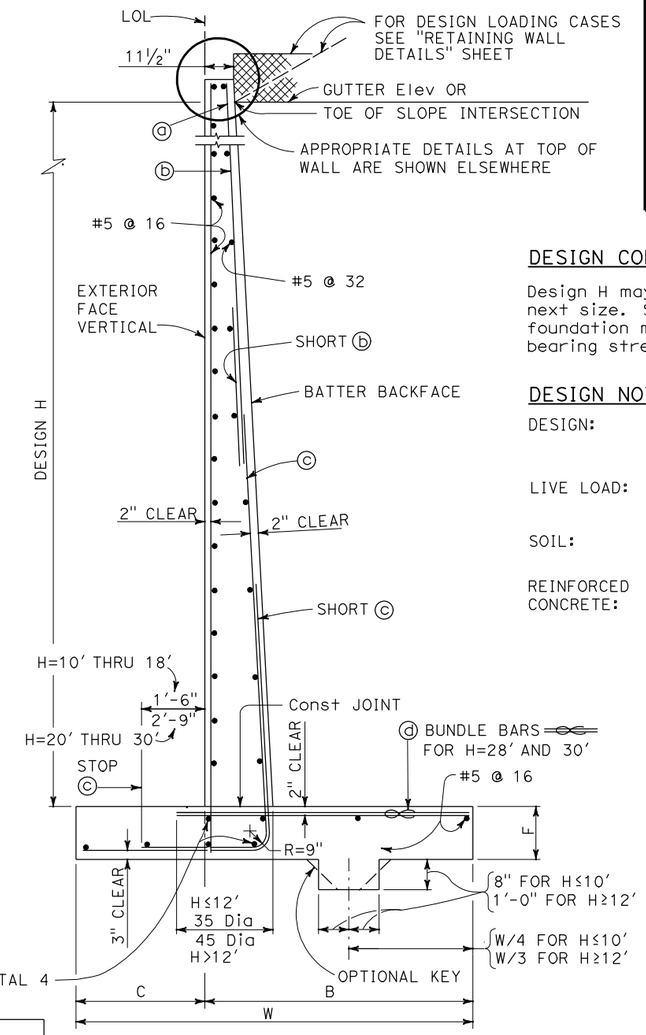

SPREAD FOOTING SECTION

DESIGN CONDITIONS:

Design H may be exceeded by 6" before going to the next size. Special footing design is required where foundation material is incapable of supporting bearing stress listed in table.

DESIGN NOTES:

DESIGN: AASHTO LRFD Bridge Design Specifications, 4th edition with California Amendments

LIVE LOAD: Surcharge on level ground surface

SOIL: ϕ = 34°
γ = 120 pcf

REINFORCED CONCRETE: fy = 60,000 psi
fc′ = 3,600 psi
n = 8

TABLE OF REINFORCING STEEL DIMENSIONS AND DATA

DESIGN H		4′	6′	8′	10′	12′	14′	16′	18′	20′	22′	24′	26′	28′	30′
W		4′-9"	5′-9"	6′-6"	7′-6"	9′-6"	12′-6"	13′-6"	14′-6"	15′-0"	16′-0"	17′-0"	18′-0"	19′-0"	20′-0"
C		1′-5"	1′-9"	2′-0"	2′-3"	2′-9"	3′-0"	3′-6"	4′-0"	4′-4"	4′-6"	5′-0"	5′-3"	5′-6"	6′-0"
B		3′-4"	4′-0"	4′-6"	5′-3"	6′-9"	9′-6"	10′-0"	10′-6"	10′-8"	11′-6"	12′-0"	12′-9"	13′-6"	14′-0"
F		1′-4"	1′-4"	1′-4"	1′-4"	1′-4"	1′-8"	1′-8"	1′-8"	1′-8"	1′-9"	2′-3"	2′-5"	2′-8"	3′-0"
BATTER		½:12	½:12	½:12	½:12	½:12	½:12	½:12	½:12	½:12	½:12	⅝:12	¾:12	¾:12	⅞:12
ⓐ BARS		—	—	—	—	—	—	—	—	#5 @ 28	#5 @ 32	#5 @ 28	#5 @ 12	#5 @ 20	#8 @ 20
ⓑ BARS		—	—	—	—	#5 @ 16	#5 @ 12	#5 @ 12	#6 @ 16	#8 @ 14	#8 @ 16	#8 @ 14	#8 @ 12	#8 @ 10	#9 @ 10
ⓒ BARS		#5 @ 16	#5 @ 16	#5 @ 12	#6 @ 10	#6 @ 8	#9 @ 12	#9 @ 12	#9 @ 8	#9 @ 7	#11 @ 8	#11 @ 7	#11 @ 6	#11 @ 10 ⋓	#11 @ 10 ⋓
ⓓ BARS		#5 @ 16	#5 @ 16	#5 @ 12	#6 @ 10	#6 @ 8	#9 @ 12	#9 @ 12	#9 @ 8	#10 @ 7	#11 @ 8	#11 @ 7	#11 @ 6	#11 @ 10 ⋓	#11 @ 10 ⋓
LOADING CASE I	Ser: B′, q'_o	4.4, 0.7	5.1, 0.9	5.4, 1.2	6.2, 1.4	8.5, 1.4	11.8, 1.6	12.8, 1.7	13.8, 1.8	13.9, 2.0	14.6, 2.3	15.2, 2.5	15.9, 2.8	16.5, 3.1	17.2, 3.3
	Str: B′, q_o	4.3, 1.5	4.9, 1.9	5.1, 2.2	5.8, 2.5	8.2, 2.6	11.5, 2.6	12.4, 3.0	13.3, 3.1	13.4, 3.4	14.0, 3.8	14.5, 4.2	15.1, 4.6	15.7, 5.1	16.3, 5.5
LOADING CASE II	Ser: B′, q'_o	4.8, 0.5	5.7, 0.7	6.2, 1.0	6.9, 1.3	9.1, 1.5	12.3, 1.8	13.1, 2.1	14.0, 2.3	14.2, 2.6	14.0, 3.0	15.4, 3.3	16.0, 3.7	16.6 4.1	17.3,4.4
	Str: B′, q_o	4.7, 1.1	5.6, 1.4	6.0, 1.8	6.7, 2.3	8.8, 2.6	12.0, 3.1	12.8, 3.4	13.6, 3.7	13.7, 4.2	14.3, 4.7	14.8, 5.3	15.4, 5.9	15.9, 6.5	16.5, 7.0
LOADING CASE III	Ser: B′, q'_o	4.3, 0.7	4.5, 1.0	4.7, 1.4	5.1, 1.7	6.8, 1.8	8.7, 2.3	9.6, 2.4	10.5, 2.6	10.5, 2.9	11.2, 3.2	11.7, 3.5	12.4, 3.9	13.1, 4.2	13.7, 4.4
	Str: B′, q_o	4.1, 1.4	4.5, 1.8	4.5, 2.4	4.7, 3.0	6.3, 3.2	8.0, 4.0	9.0, 4.2	9.9, 4.4	9.7, 4.9	10.5, 5.4	10.9, 5.9	11.6, 6.4	12.2, 6.9	12.7,7.4

SYMBOLS:

Ser - service limit state 1
Str - strength limit state 1
B′ - effective footing width (ft)
q'_o - net bearing stress (ksf)
q_o - gross uniform bearing stress (ksf)
⋓ Denotes a bundle of 2 bars

NOTES:

1. For details not shown and drainage notes see "RETAINING WALL DETAILS" sheet.
2. For wall stem joint details see (B0-3 / 3-3) and (B0-3 / 3-4)
3. At ⓒ and Short ⓒ bars:
   H ≤ 6′, no splices are allowed within 1′-8" above the top of footing.
   H > 6′, no splices are allowed within H/4 above the top of footing.

NOTE:
THE CONTRACTOR SHALL VERIFY ALL CONTROLLING FIELD DIMENSIONS BEFORE ORDERING OR FABRICATING ANY MATERIAL.

NO SCALE

	BY	CHECKED
DESIGN	G. Wang	V. Lopez
DETAILS	J. Valencia	G. Wang
QUANTITIES	B. Shen	J. Wu

STATE OF CALIFORNIA
DEPARTMENT OF TRANSPORTATION

DIVISION OF ENGINEERING SERVICES
STRUCTURE DESIGN
DESIGN BRANCH 22

BRIDGE NO. 53-1198
POST MILE 4.3

TEMPLE AVENUE OC (REPAIR)
RETAINING WALL TYPE 1 (MOD)

STRUCTURES DESIGN DETAIL SHEET (ENGLISH) (REV. 09-01-10)

ORIGINAL SCALE IN INCHES FOR REDUCED PLANS 0 1 2 3

UNIT: 3626
PROJECT NUMBER & PHASE: 07000005391
CONTRACT NO.: 07-278304

DISREGARD PRINTS BEARING EARLIER REVISION DATES

REVISION DATES: 5-14-12 6-28-12

SHEET 12 OF 27

FILE => 53-1198-g-rw_t1.dgn

USERNAME => s133329 DATE PLOTTED => 20-MAY-2013 TIME PLOTTED => 13:27

DIST	COUNTY	ROUTE	POST MILES TOTAL PROJECT	SHEET No.	TOTAL SHEETS
07	LA	405	4.3	75	89

REGISTERED CIVIL ENGINEER 06/28/12 DATE

4-08-2013
PLANS APPROVAL DATE

REGISTERED PROFESSIONAL ENGINEER GARY WANG No. C58298 Exp. 06-30-12 CIVIL STATE OF CALIFORNIA

The State of California or its officers or agents shall not be responsible for the accuracy or completeness of electronic copies of this plan sheet.

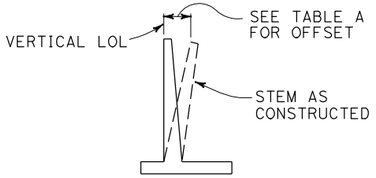

APPROXIMATE WALL OFFSET VALUES

Values for offseting forms to be determined by the Engineer.

TABLE A

H	OFFSET
4'-12'	H/200
14'-16'	H/160
18'-20'	H/140
22'-24'	H/130
26'-36'	2½"

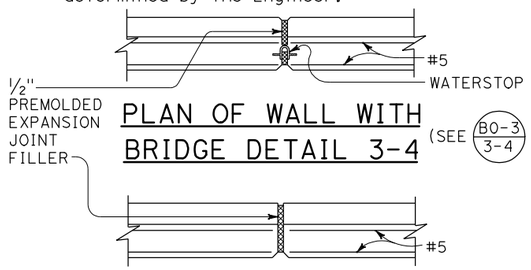

PLAN OF WALL WITH BRIDGE DETAIL 3-4

(SEE B0-3 / 3-4)

PLAN OF WALL WITH EXPANSION JOINT ONLY

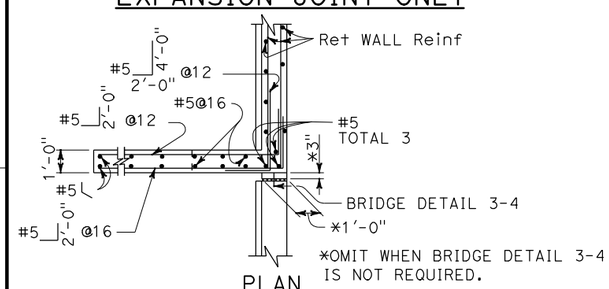

*OMIT WHEN BRIDGE DETAIL 3-4 IS NOT REQUIRED.

PLAN
(For return wall Type "A")

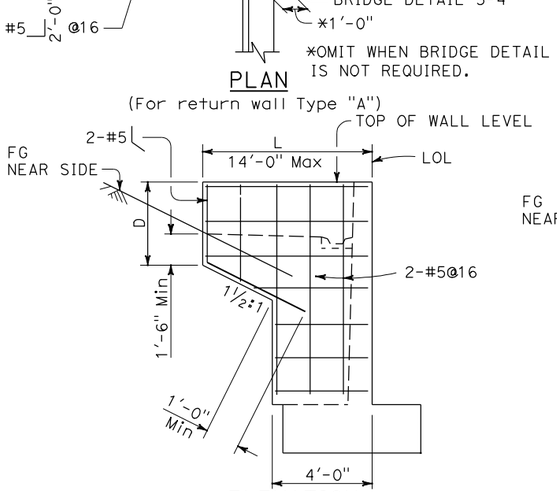

ELEVATION
RETURN WALL TYPE "A"
Use where H=8' or less

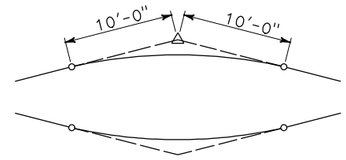

20'-0" VC AT TOP OF WALL SLOPE CHANGE

Where shown on the plans

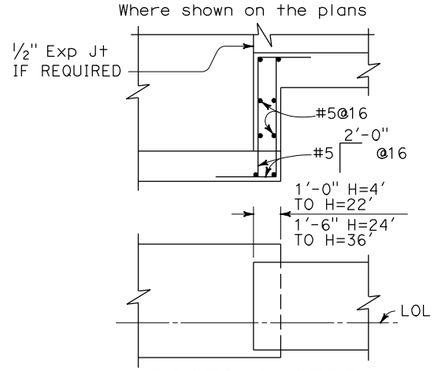

FOOTING STEP

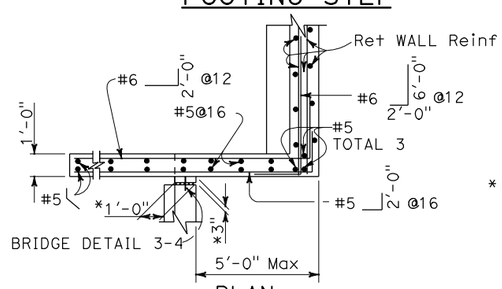

PLAN
(For return wall Type "B")

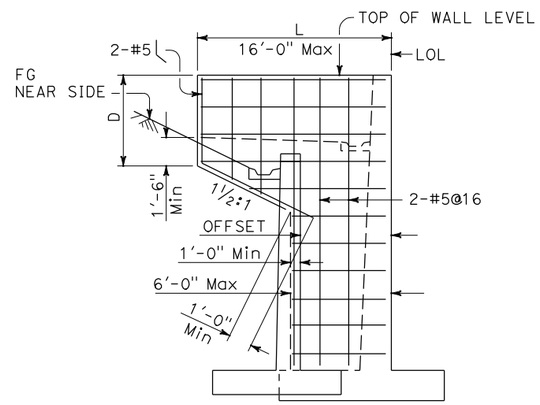

ELEVATION
RETURN WALL TYPE "B"
Use where H=10' or more on offset walls

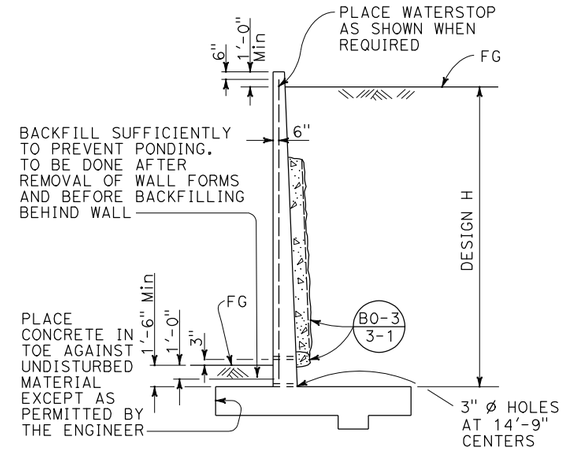

DESIGN AND DRAINAGE

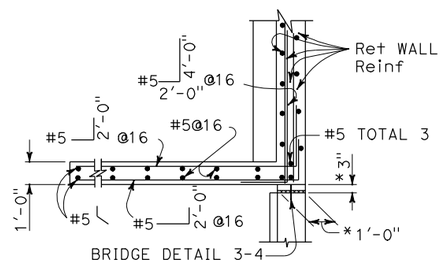

*OMIT WHEN BRIDGE DETAIL 3-4 IS NOT REQUIRED.

PLAN
(For return wall Type "C")

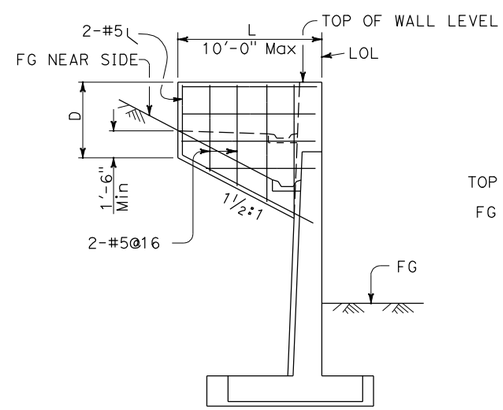

ELEVATION
RETURN WALL TYPE "C"
Use where H=10' or more on straight walls

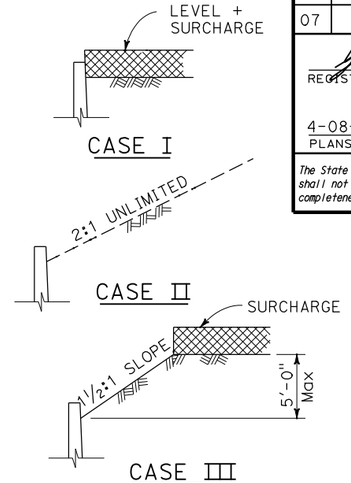

DETAIL OF DESIGN LOADING CASES

Case I Level + surcharge
Case II 2:1 Unlimited slope
Case III 1½:1 Limited slope (5'-0" Max height) + surcharge

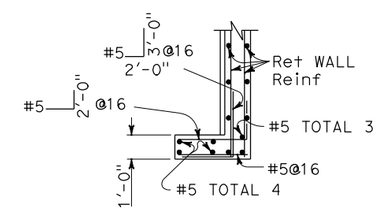

PLAN
(For return wall Type "D")

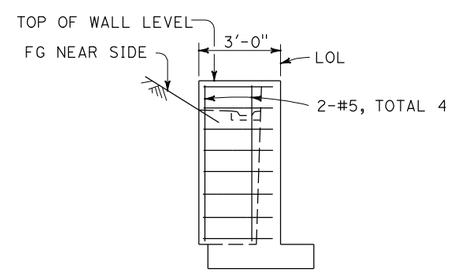

ELEVATION
RETURN WALL TYPE "D"
Use where H=6' or less

DESIGN CONDITIONS:

Design "H" may be exceeded by 6" before going to the next size. Special footing design is required where foundation material is incapable of supporting bearing stress listed in table

Return wall not required unless shown elsewhere

DESIGN NOTES:

DESIGN: AASHTO LRFD Bridge Design Specifications, 4th edition with California Amendments

LIVE LOAD: Surcharge on level ground surface

SOIL: ø = 34°
γ = 120 pcf

REINFORCED CONCRETE: fy = 60,000 psi
fc' = 3,600 psi
n = 8

NO SCALE

NOTE:
THE CONTRACTOR SHALL VERIFY ALL CONTROLLING FIELD DIMENSIONS BEFORE ORDERING OR FABRICATING ANY MATERIAL.

	BY	CHECKED
DESIGN	G. Wang	V. Lopez
DETAILS	J. Valencia	G. Wang
QUANTITIES	B. Shen	J. Wu

STATE OF CALIFORNIA
DEPARTMENT OF TRANSPORTATION

DIVISION OF ENGINEERING SERVICES
STRUCTURE DESIGN
DESIGN BRANCH 22

BRIDGE NO. 53-1198
POST MILE 4.3

TEMPLE AVENUE OC (REPAIR)
RETAINING WALL DETAILS

STRUCTURES DESIGN DETAIL SHEET (ENGLISH) (REV. 09-01-10)

ORIGINAL SCALE IN INCHES FOR REDUCED PLANS 0 1 2 3

UNIT: 3626
PROJECT NUMBER & PHASE: 07000005391
CONTRACT NO.: 07-278304

DISREGARD PRINTS BEARING EARLIER REVISION DATES

REVISION DATES: 5-14-12 6-28-12

SHEET 13 OF 27

FILE => 53-1198-g-rwdt01.dgn

USERNAME => s133329 DATE PLOTTED => 20-MAY-2013 TIME PLOTTED => 13:27

DIST	COUNTY	ROUTE	POST MILES TOTAL PROJECT	SHEET No.	TOTAL SHEETS
07	LA	405	4.3	76	89

REGISTERED CIVIL ENGINEER 06/28/12 DATE

4-08-2013
PLANS APPROVAL DATE

REGISTERED PROFESSIONAL ENGINEER BIN SHEN No. C76221 Exp. 06-30-14 CIVIL STATE OF CALIFORNIA

The State of California or its officers or agents shall not be responsible for the accuracy or completeness of electronic copies of this plan sheet.

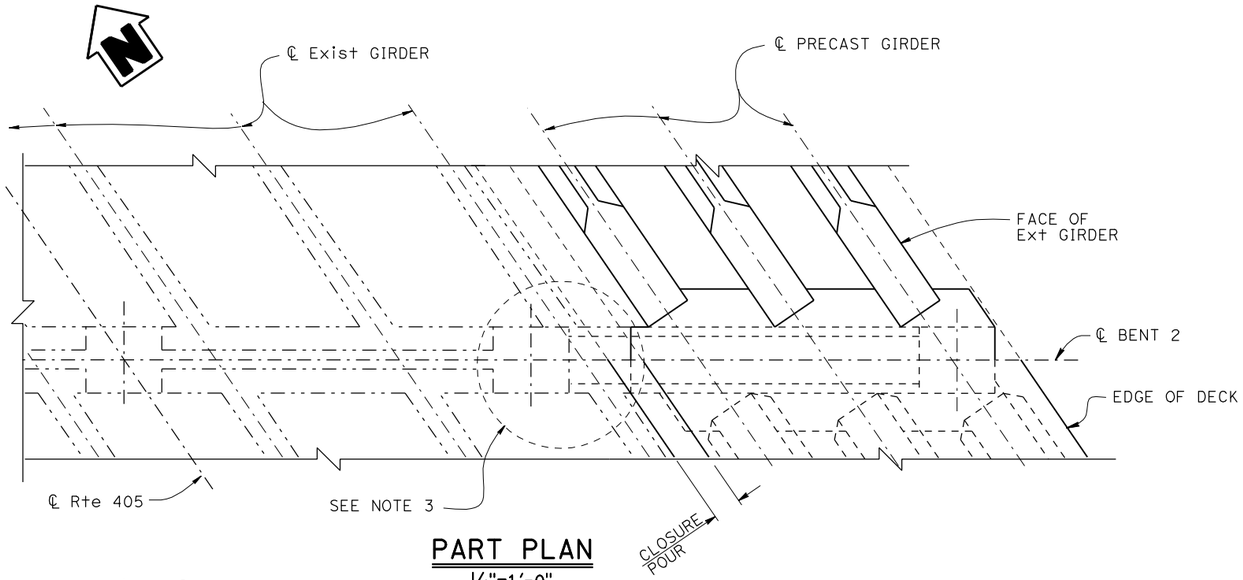

PART PLAN
1/4"=1'-0"

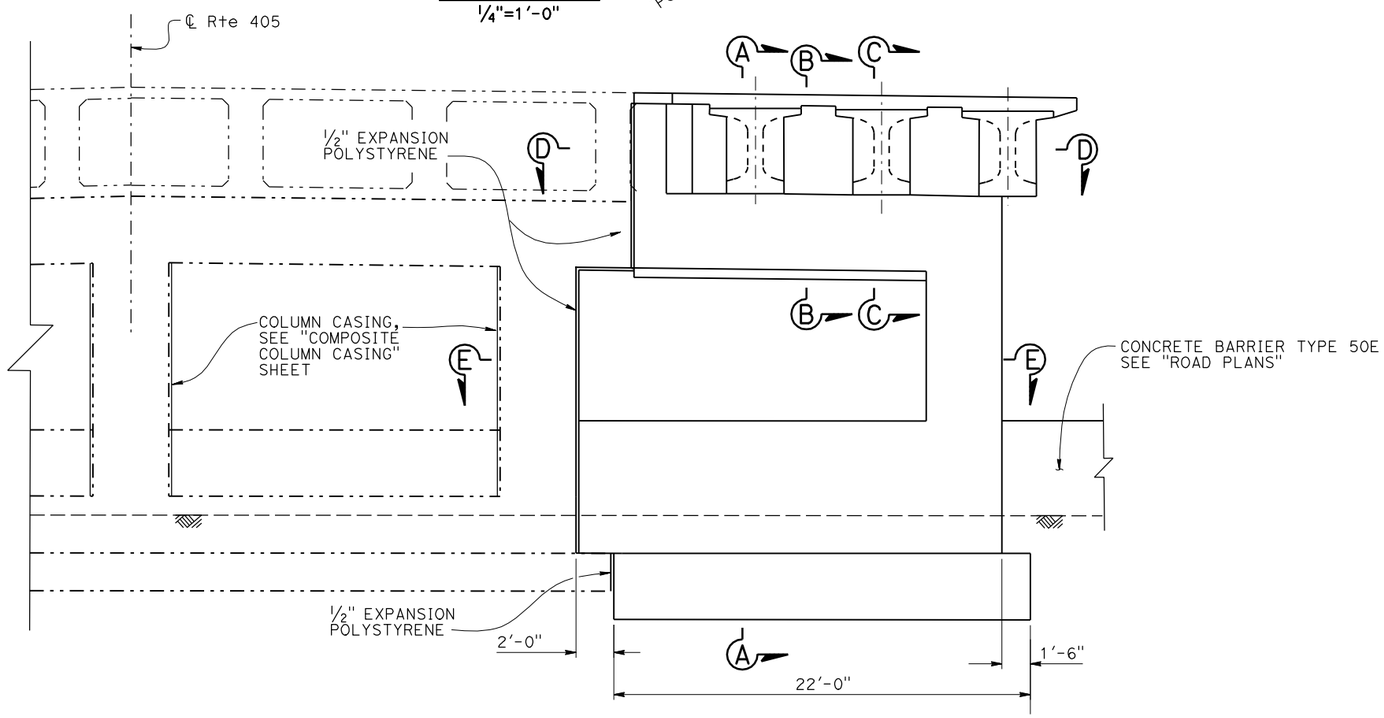

PART ELEVATION
1/4"=1'-0"

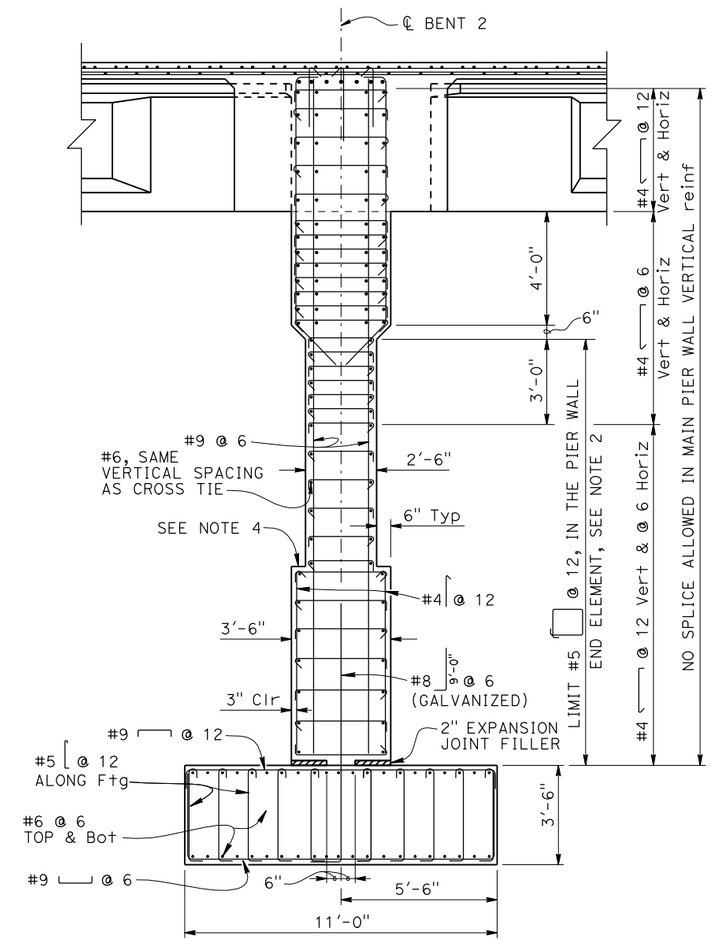

SECTION A-A
3/8"=1'-0"

NOTE:
THE CONTRACTOR SHALL VERIFY ALL CONTROLLING FIELD DIMENSIONS BEFORE ORDERING OR FABRICATING ANY MATERIAL.

NOTES:
1. For "SECTION B-B" and "SECTION C-C", see "BENT DETAILS NO. 1" sheet.
2. For pier wall end element reinforcement, see "SECTION E-E" on "BENT DETAILS NO. 2" sheet.
3. See "BENT CAP SAW CUT DETAIL", on "CONCRETE REMOVAL LIMITS" sheet.
4. Top to match existing and new barriers.

	BY	CHECKED
DESIGN	B. Shen	J. Wu
DETAILS	B. Jenko / J. Valencia	B. Shen
QUANTITIES	B. Shen	J. Wu

STATE OF CALIFORNIA
DEPARTMENT OF TRANSPORTATION

DIVISION OF ENGINEERING SERVICES
STRUCTURE DESIGN
DESIGN BRANCH 22

BRIDGE NO. 53-1198
POST MILE 4.3

TEMPLE AVENUE OC (REPAIR)
BENT LAYOUT

STRUCTURES DESIGN DETAIL SHEET (ENGLISH) (REV. 09-01-10)

ORIGINAL SCALE IN INCHES FOR REDUCED PLANS 0 1 2 3

UNIT: 3626
PROJECT NUMBER & PHASE: 07000005391
CONTRACT NO.: 07-278304

DISREGARD PRINTS BEARING EARLIER REVISION DATES
REVISION DATES 6-15-11 2-28-12 6-28-12

SHEET 14 OF 27

FILE => 53-1198-h-b01_lo.dgn

USERNAME => s133329 DATE PLOTTED => 20-MAY-2013 TIME PLOTTED => 13:27

DIST	COUNTY	ROUTE	POST MILES TOTAL PROJECT	SHEET No.	TOTAL SHEETS
07	LA	405	4.3	77	89

REGISTERED CIVIL ENGINEER 06/28/12 DATE

4-08-2013
PLANS APPROVAL DATE

REGISTERED PROFESSIONAL ENGINEER BIN SHEN No. C76221 Exp. 06-30-14 CIVIL STATE OF CALIFORNIA

The State of California or its officers or agents shall not be responsible for the accuracy or completeness of electronic copies of this plan sheet.

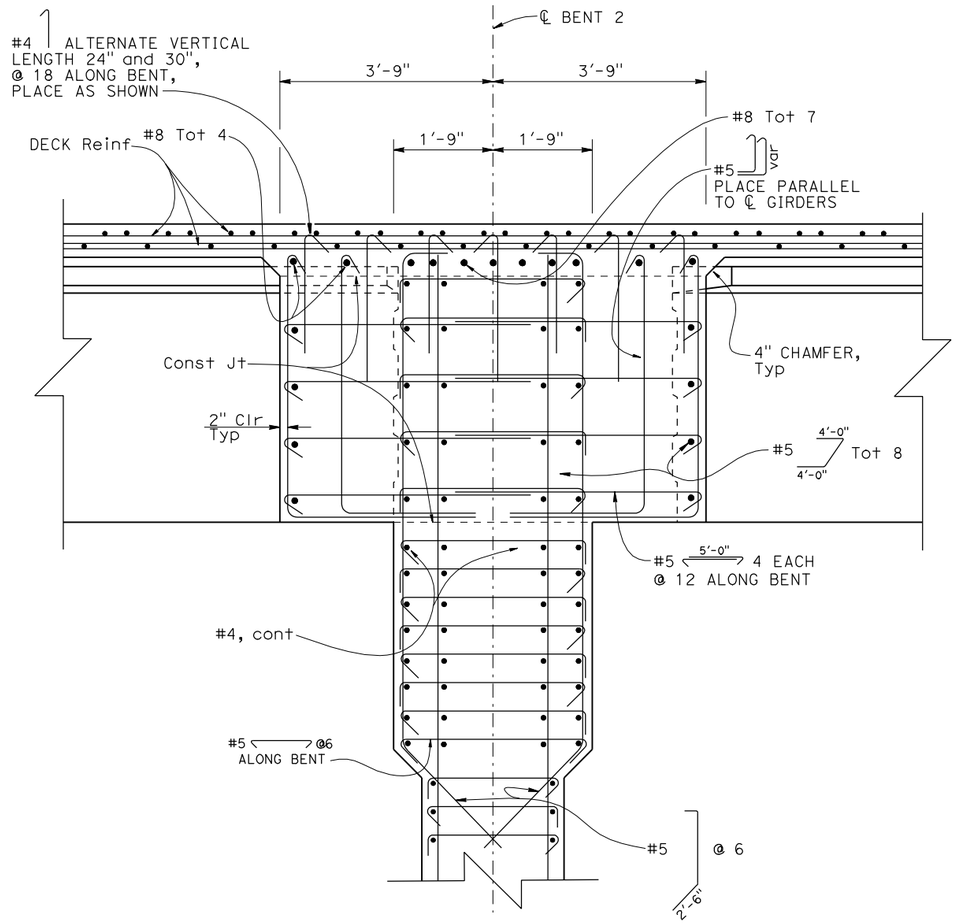

SECTION B-B
3/4"=1'-0"

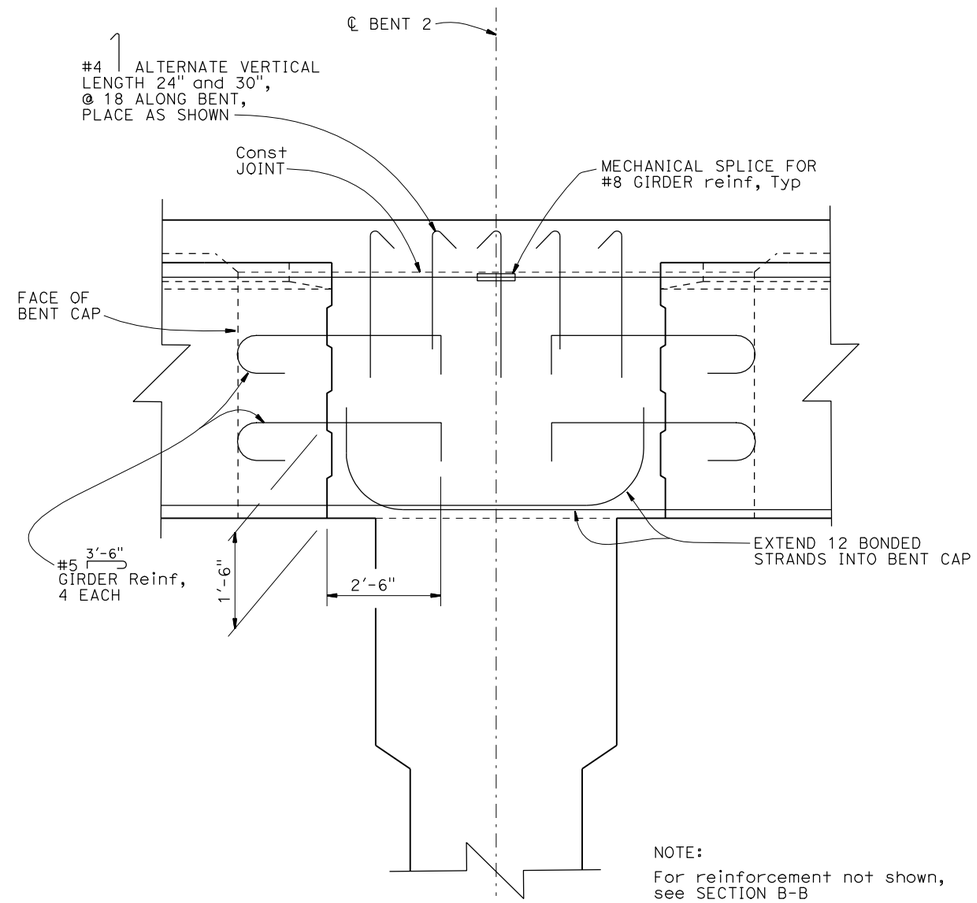

NOTE:
For reinforcement not shown, see SECTION B-B

SECTION C-C
3/4"=1'-0"

NOTE:
THE CONTRACTOR SHALL VERIFY ALL CONTROLLING FIELD DIMENSIONS BEFORE ORDERING OR FABRICATING ANY MATERIAL.

	BY	CHECKED
DESIGN	B. Shen	J. Wu
DETAILS	B. Jenko	B. Shen
QUANTITIES	B. Shen	J. Wu

STATE OF CALIFORNIA
DEPARTMENT OF TRANSPORTATION

DIVISION OF ENGINEERING SERVICES
STRUCTURE DESIGN
DESIGN BRANCH 22

BRIDGE NO. 53-1198
POST MILE 4.3

TEMPLE AVENUE OC (REPAIR)
BENT DETAILS NO. 1

STRUCTURES DESIGN DETAIL SHEET (ENGLISH) (REV. 09-01-10)

ORIGINAL SCALE IN INCHES FOR REDUCED PLANS 0 1 2 3

UNIT: 3626
PROJECT NUMBER & PHASE: 07000005391
CONTRACT NO.: 07-278304

DISREGARD PRINTS BEARING EARLIER REVISION DATES
REVISION DATES 11-8-11 2-15-12 6-28-12
SHEET 15 OF 27

FILE => 53-1198-h-b01dt01.dgn

USERNAME => s133329 DATE PLOTTED => 20-MAY-2013 TIME PLOTTED => 13:27

DIST	COUNTY	ROUTE	POST MILES TOTAL PROJECT	SHEET No.	TOTAL SHEETS
07	LA	405	4.3	78	89

REGISTERED CIVIL ENGINEER 06/28/12 DATE

4-08-2013
PLANS APPROVAL DATE

REGISTERED PROFESSIONAL ENGINEER BIN SHEN No. C76221 Exp. 06-30-14 CIVIL STATE OF CALIFORNIA

The State of California or its officers or agents shall not be responsible for the accuracy or completeness of electronic copies of this plan sheet.

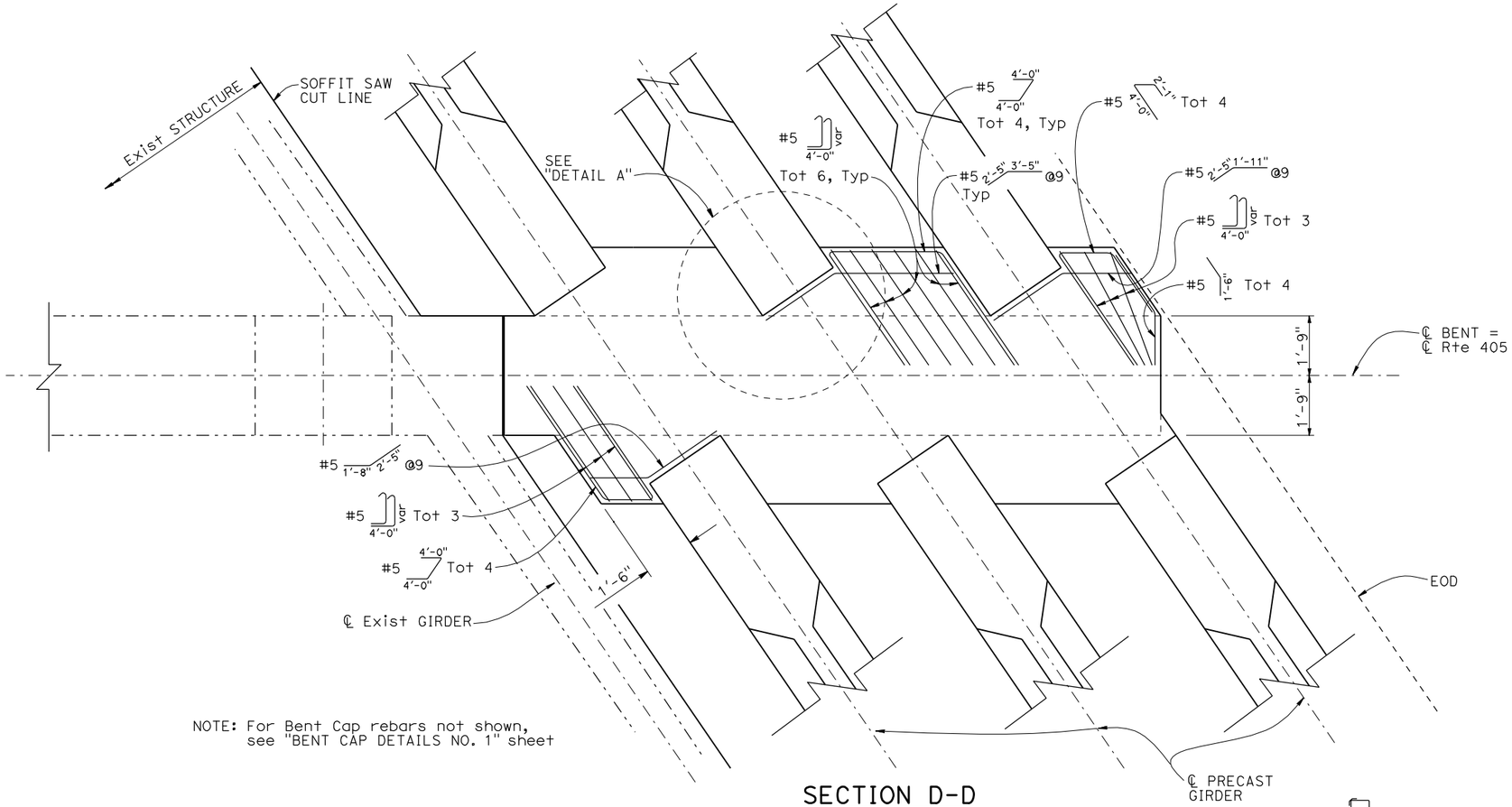

NOTE: For Bent Cap rebars not shown, see "BENT CAP DETAILS NO. 1" sheet

SECTION D-D

½"=1'-0"

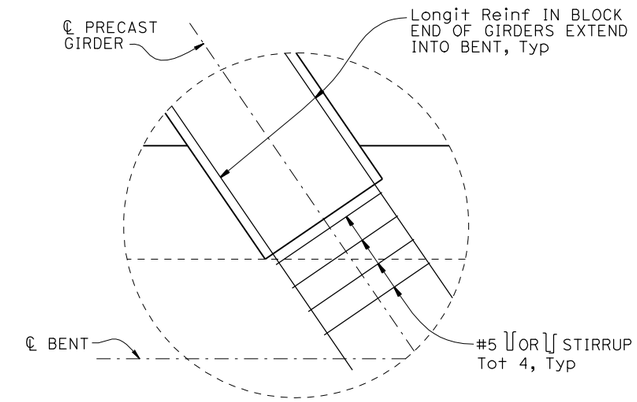

DETAIL A

¾"=1'-0"

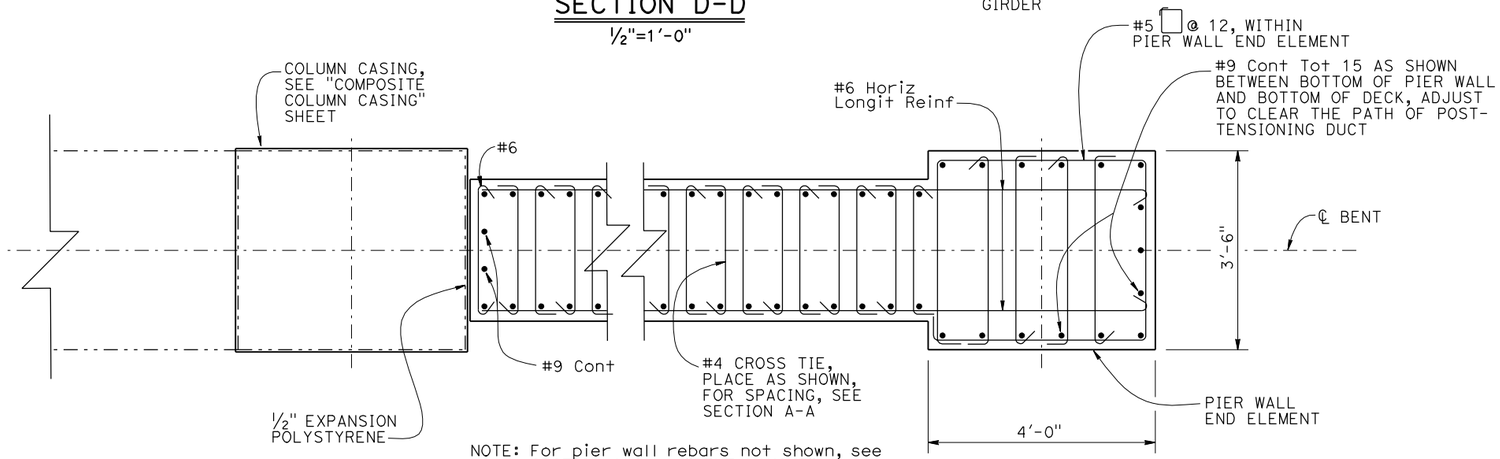

NOTE: For pier wall rebars not shown, see SECTION A-A on "BENT LAYOUT" sheet.

SECTION E-E

¾"=1'-0"

NOTE:
THE CONTRACTOR SHALL VERIFY ALL CONTROLLING FIELD DIMENSIONS BEFORE ORDERING OR FABRICATING ANY MATERIAL.

	BY	CHECKED
DESIGN	B. Shen	J. Wu
DETAILS	B. Jenko	B. Shen
QUANTITIES	B. Shen	J. Wu

STATE OF CALIFORNIA
DEPARTMENT OF TRANSPORTATION

DIVISION OF ENGINEERING SERVICES
STRUCTURE DESIGN
DESIGN BRANCH 22

BRIDGE NO. 53-1198
POST MILE 4.3

TEMPLE AVENUE OC (REPAIR)

BENT DETAILS NO. 2

STRUCTURES DESIGN DETAIL SHEET (ENGLISH) (REV. 09-01-10)

ORIGINAL SCALE IN INCHES FOR REDUCED PLANS 0 1 2 3

UNIT: 3626
PROJECT NUMBER & PHASE: 07000005391
CONTRACT NO.: 07-278304

DISREGARD PRINTS BEARING EARLIER REVISION DATES

REVISION DATES: 8-1-11 6-28-12 2-28-12

SHEET 16 OF 27

FILE => 53-1198-h-b01dt02.dgn

USERNAME => s133329 DATE PLOTTED => 20-MAY-2013 TIME PLOTTED => 13:27

DIST	COUNTY	ROUTE	POST MILES TOTAL PROJECT	SHEET No.	TOTAL SHEETS
07	LA	405	4.3	79	89

REGISTERED CIVIL ENGINEER 06/28/12 DATE

4-08-2013
PLANS APPROVAL DATE

REGISTERED PROFESSIONAL ENGINEER BIN SHEN No. C76221 Exp. 06-30-14 CIVIL STATE OF CALIFORNIA

The State of California or its officers or agents shall not be responsible for the accuracy or completeness of electronic copies of this plan sheet.

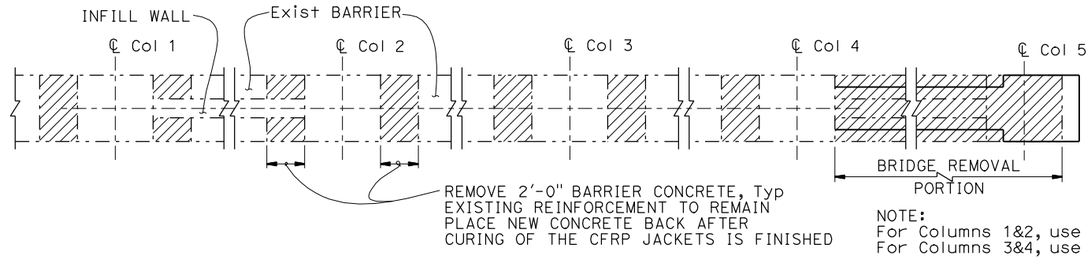

LEGEND:
Indicates removal portion of concrete

NOTE:
For Columns 1&2, use CFRP JACKET DETAIL 2,
For Columns 3&4, use CFRP JACKET DETAIL 1

COMPOSITE COLUMN CASING - PLAN

No Scale

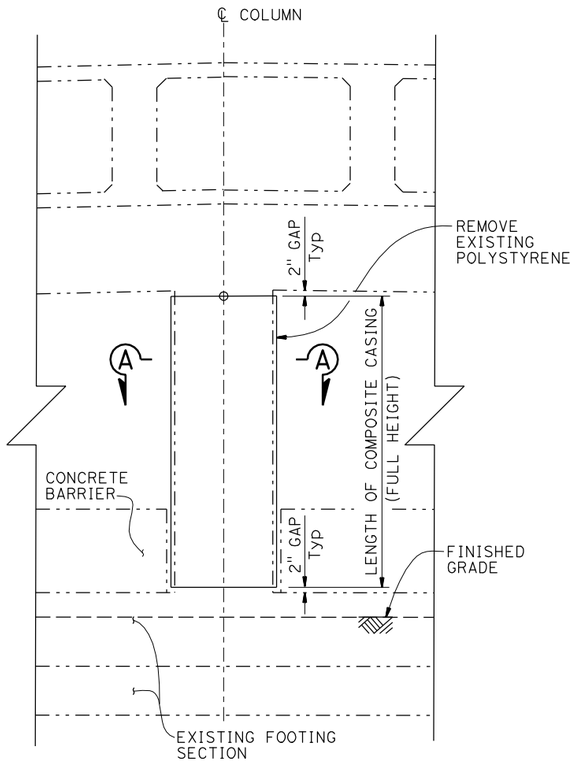

COMPOSITE COLUMN CASING PART ELEVATION

No Scale

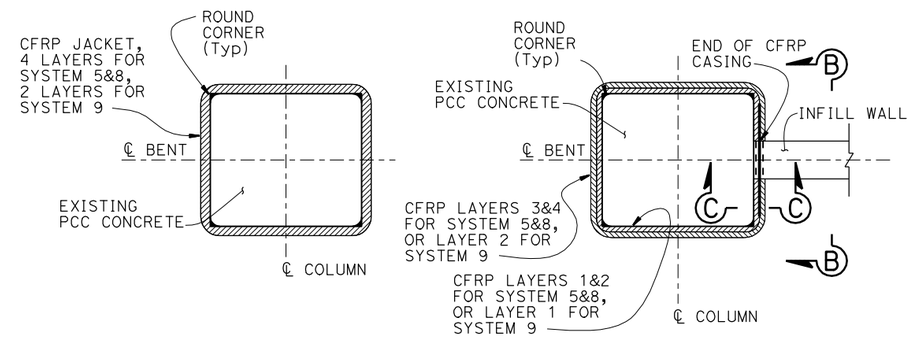

CFRP JACKET DETAIL 1 (WITHOUT INFILL WALL)

CFRP JACKET DETAIL 2 (WITH INFILL WALL)

SECTION A-A

No Scale

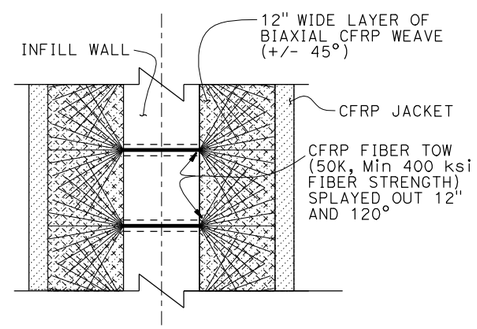

NOTE:
Sequence of Placement:
1. Install layers 1&2 for System 5&8 or Layer 1 for System 9
2. Place 12" Wide Layer of Biaxial CFRP Weave
3. CFRP Fiber Tow Anchorage
4. Install layers 3&4 for System 5&8 or Layer 2 for System 9

SECTION B-B

No Scale

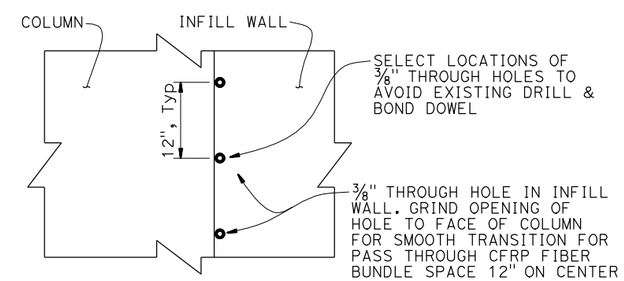

SECTION C-C

No Scale

NOTE:
THE CONTRACTOR SHALL VERIFY ALL CONTROLLING FIELD DIMENSIONS BEFORE ORDERING OR FABRICATING ANY MATERIAL.

	BY	CHECKED
DESIGN	B. Shen	J. Wu
DETAILS	B. Jenko / J. Valencia	B. Shen
QUANTITIES	B. Shen	J. Wu

STATE OF CALIFORNIA
DEPARTMENT OF TRANSPORTATION

DIVISION OF ENGINEERING SERVICES
STRUCTURE DESIGN
DESIGN BRANCH 22

BRIDGE NO. 53-1198
POST MILE 4.3

TEMPLE AVENUE OC (REPAIR)
COMPOSITE COLUMN CASING

STRUCTURES DESIGN DETAIL SHEET (ENGLISH) (REV. 09-01-10)

ORIGINAL SCALE IN INCHES FOR REDUCED PLANS 0 1 2 3

UNIT: 3626
PROJECT NUMBER & PHASE: 07000005391
CONTRACT NO.: 07-278304

DISREGARD PRINTS BEARING EARLIER REVISION DATES

REVISION DATES: 1-31-12 2-29-12 3-13-12 6-28-12

SHEET 17 OF 27

FILE => 53-1198-j-colretdt.dgn

USERNAME => s133329 DATE PLOTTED => 20-MAY-2013 TIME PLOTTED => 13:27

DIST	COUNTY	ROUTE	POST MILES TOTAL PROJECT	SHEET No.	TOTAL SHEETS
07	LA	405	4.3	80	89

REGISTERED CIVIL ENGINEER 06/28/12 DATE

4-08-2013
PLANS APPROVAL DATE

REGISTERED PROFESSIONAL ENGINEER BIN SHEN No. C76221 Exp. 06-30-14 CIVIL STATE OF CALIFORNIA

The State of California or its officers or agents shall not be responsible for the accuracy or completeness of electronic copies of this plan sheet.

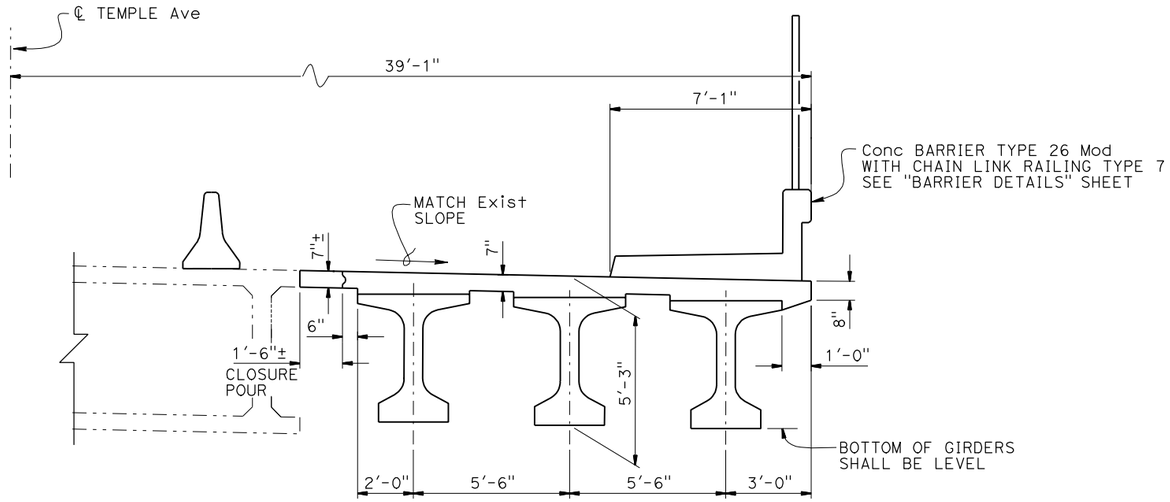

TYPICAL SECTION

3/8"=1'-0"

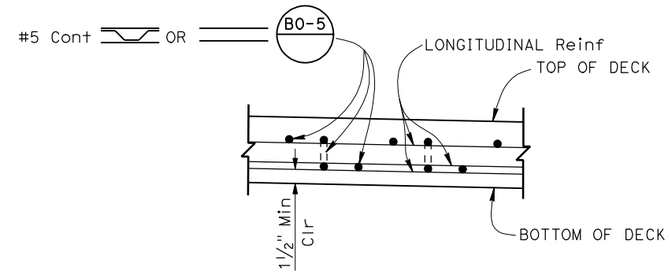

SECTION A-A

1½" = 1'-0"

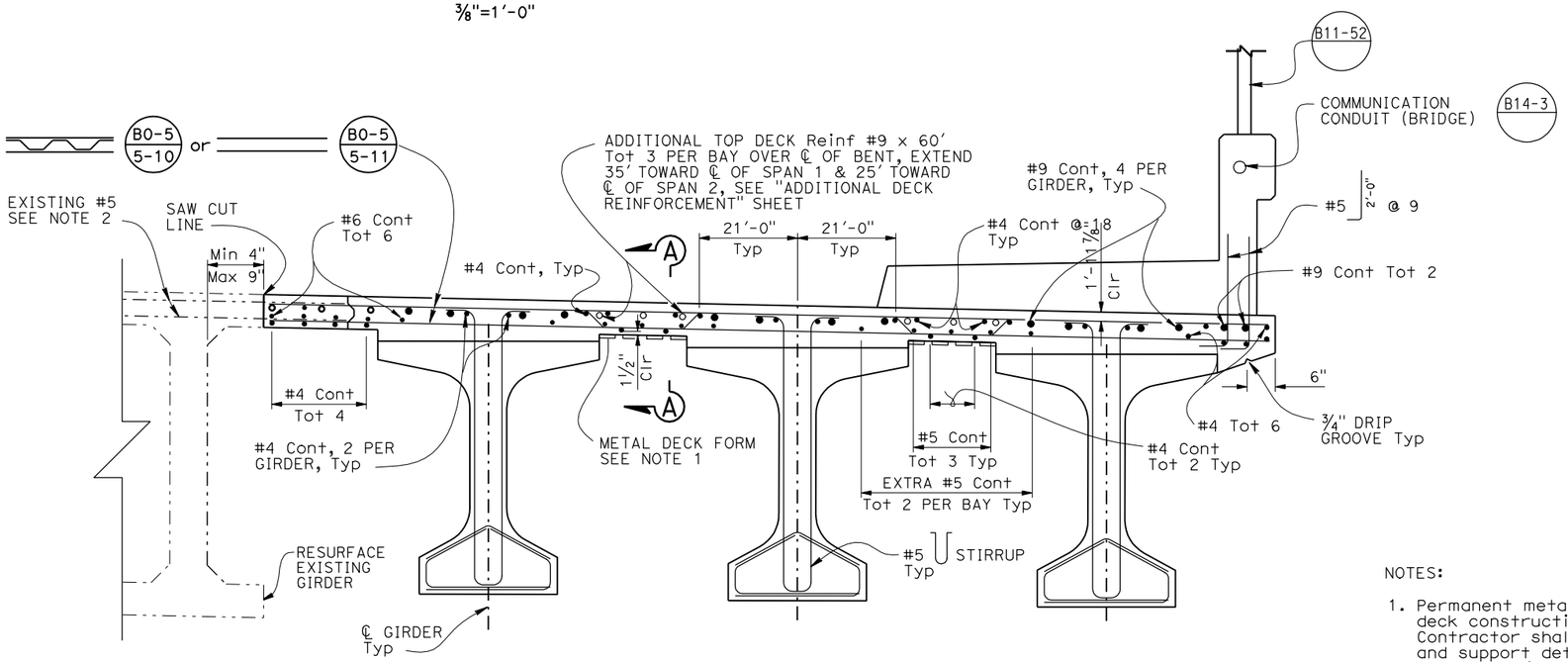

PART TYPICAL SECTION

B0-5 B11-52 B14-3

¾"=1'-0"

NOTES:

1. Permanent metal deck forms are required for deck construction except at overhang. Contractor shall provide design calculations and support details to the Engineer for approval prior to construction.
2. Existing reinforcement to be protected in place in the closure pour section.

LEGEND:

— · · — Indicates existing structure.

NOTE:
THE CONTRACTOR SHALL VERIFY ALL CONTROLLING FIELD DIMENSIONS BEFORE ORDERING OR FABRICATING ANY MATERIAL.

	BY	CHECKED
DESIGN	B. Shen	J. Wu
DETAILS	B. Jenko	B. Shen
QUANTITIES	B. Shen	J. Wu

STATE OF CALIFORNIA
DEPARTMENT OF TRANSPORTATION

DIVISION OF ENGINEERING SERVICES
STRUCTURE DESIGN
DESIGN BRANCH 22

BRIDGE NO. 53-1198
POST MILE 4.3

TEMPLE AVENUE OC (REPAIR)

TYPICAL SECTION

STRUCTURES DESIGN DETAIL SHEET (ENGLISH) (REV. 09-01-10)

ORIGINAL SCALE IN INCHES FOR REDUCED PLANS 0 1 2 3

UNIT: 3626
PROJECT NUMBER & PHASE: 07000005391
CONTRACT NO.: 07-278304

DISREGARD PRINTS BEARING EARLIER REVISION DATES

REVISION DATES: 6-9-11 8-24-11 11-17-11 6-28-12

SHEET 18 OF 27

FILE => 53-1198-k-ts01.dgn

USERNAME => s133329 DATE PLOTTED => 20-MAY-2013 TIME PLOTTED => 13:27

DIST	COUNTY	ROUTE	POST MILES TOTAL PROJECT	SHEET No.	TOTAL SHEETS
07	LA	405	4.3	81	89

REGISTERED CIVIL ENGINEER 06/28/12 DATE

4-08-2013
PLANS APPROVAL DATE

REGISTERED PROFESSIONAL ENGINEER BIN SHEN No. C76221 Exp. 06-30-14 CIVIL STATE OF CALIFORNIA

The State of California or its officers or agents shall not be responsible for the accuracy or completeness of electronic copies of this plan sheet.

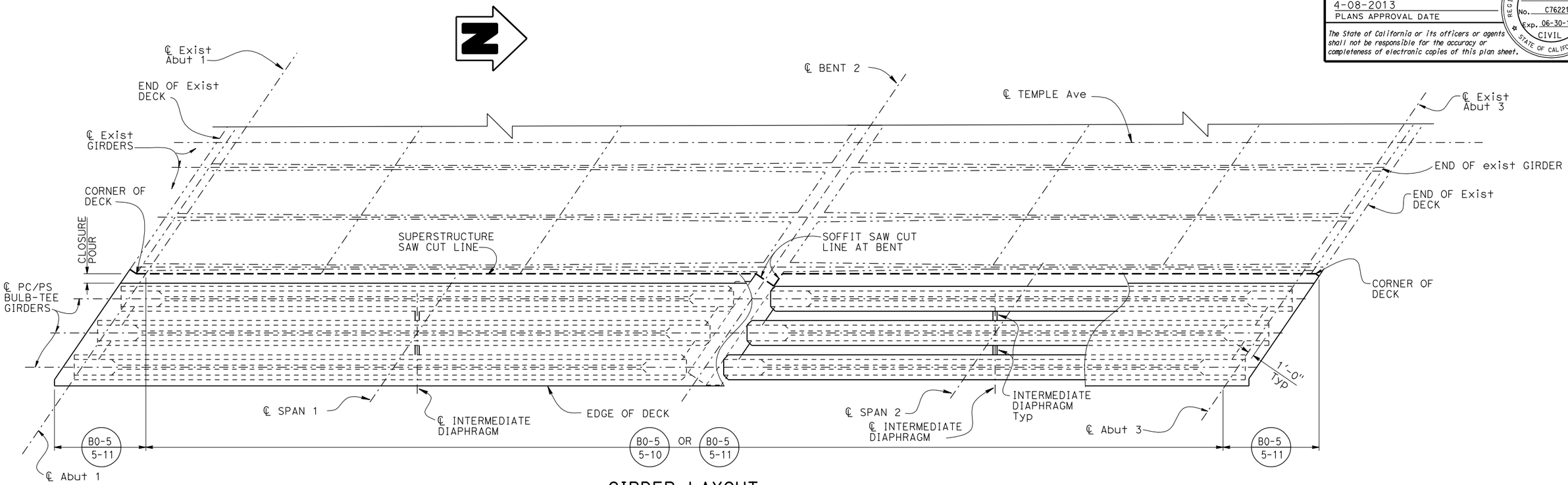

GIRDER LAYOUT

1/8"=1'-0"

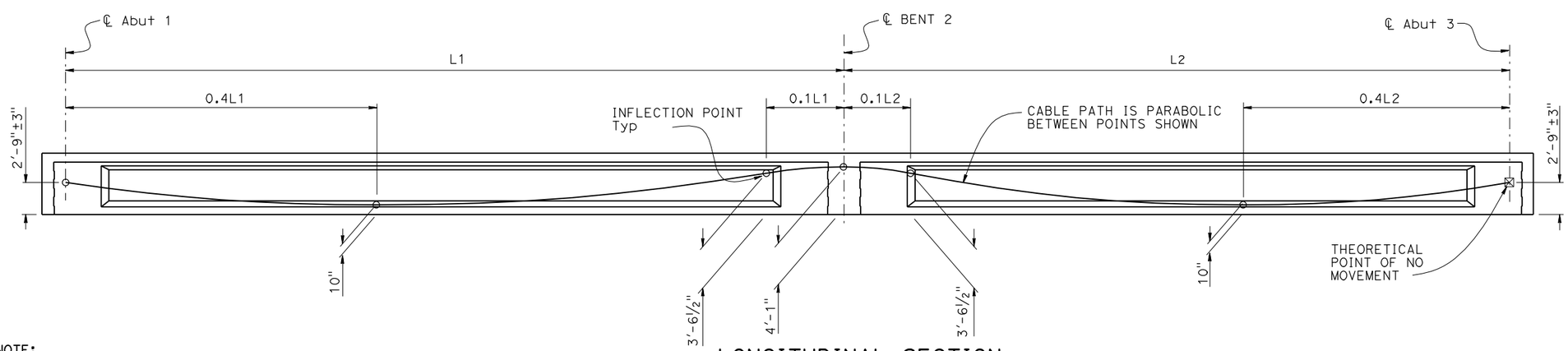

LONGITUDINAL SECTION

No scale

PRESTRESSING NOTES: (Post-tensioning)

270 ksi low relaxation strand:

P-jack = 660 kips per girder

Anchor set = 3/8in

Total number of girders = 3

Cast-In-Place Concrete:
f'_c = 5 ksi at 28 days
f'_{ci} = 3.5 ksi at time of stressing

Contractor shall submit elongation calculations based on Initial stress at ⊠ = 0.95 times jacking stress

Stressing shall be performed at Abut 1

Design is based on μ = 0.15(1/rad) and K =0.0002 (1/ft)

NOTE:
THE CONTRACTOR SHALL VERIFY ALL CONTROLLING FIELD DIMENSIONS BEFORE ORDERING OR FABRICATING ANY MATERIAL.

	BY	CHECKED
DESIGN	B. Shen	J. Wu
DETAILS	B. Jenko	B. Shen
QUANTITIES	B. Shen	J. Wu

STATE OF CALIFORNIA
DEPARTMENT OF TRANSPORTATION

DIVISION OF ENGINEERING SERVICES
STRUCTURE DESIGN
DESIGN BRANCH 22

BRIDGE NO. 53-1198
POST MILE 4.3

TEMPLE AVENUE OC (REPAIR)
GIRDER LAYOUT

STRUCTURES DESIGN DETAIL SHEET (ENGLISH) (REV. 09-01-10)

ORIGINAL SCALE IN INCHES FOR REDUCED PLANS 0 1 2 3

UNIT: 3626
PROJECT NUMBER & PHASE: 07000005391
CONTRACT NO.: 07-278304

DISREGARD PRINTS BEARING EARLIER REVISION DATES

REVISION DATES 6-13-11 6-28-12 1-3-12 SHEET 19 OF 27

FILE => 53-1198-1-g_lo.dgn

USERNAME => s133329 DATE PLOTTED => 20-MAY-2013 TIME PLOTTED => 13:28

DIST	COUNTY	ROUTE	POST MILES TOTAL PROJECT	SHEET No.	TOTAL SHEETS
07	LA	405	4.3	82	89

REGISTERED CIVIL ENGINEER 06/28/12 DATE

4-08-2013
PLANS APPROVAL DATE

REGISTERED PROFESSIONAL ENGINEER BIN SHEN No. C76221 Exp. 06-30-14 CIVIL STATE OF CALIFORNIA

The State of California or its officers or agents shall not be responsible for the accuracy or completeness of electronic copies of this plan sheet.

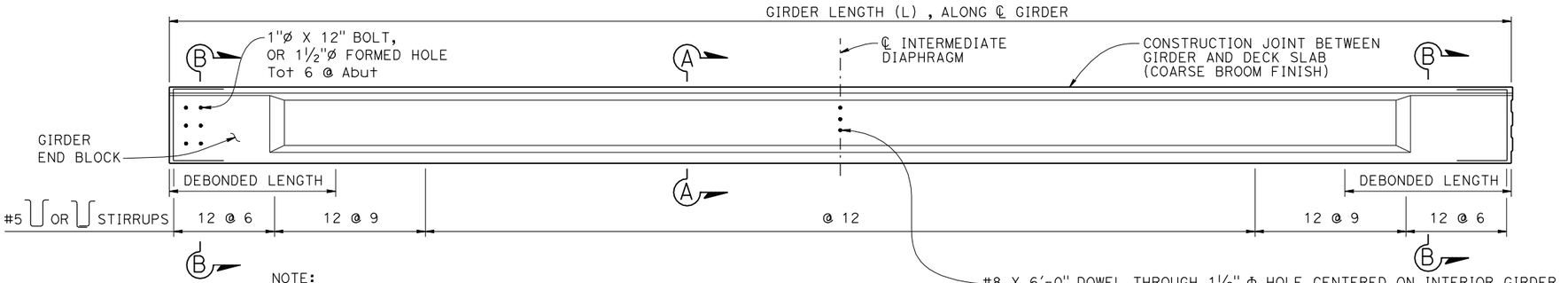

NOTE:
Girder ends to be cast such that a level surface is provided at bearing pads

GIRDER ELEVATION

NO SCALE

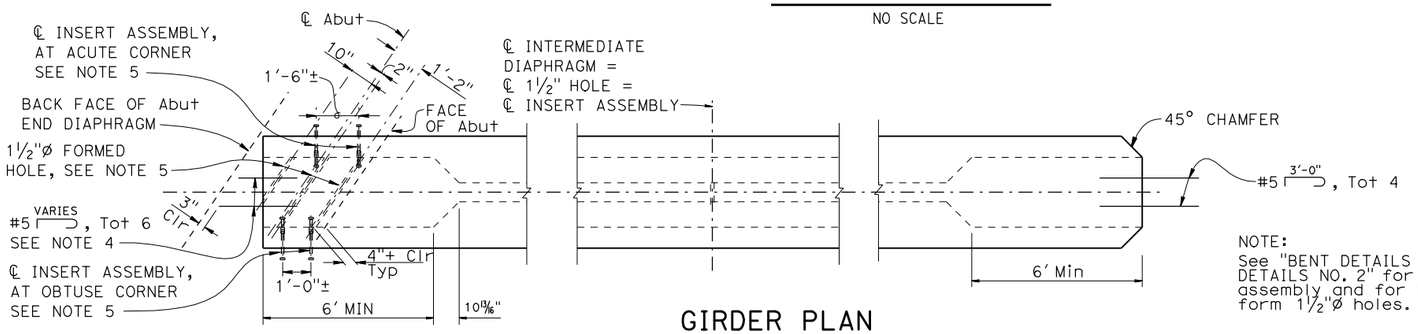

NOTE:
See "BENT DETAILS NO. 2" and " ABUTMENT DETAILS NO. 2" for locations to install insert assembly and for locations and limits to form 1½"ø holes.

GIRDER PLAN

NO SCALE

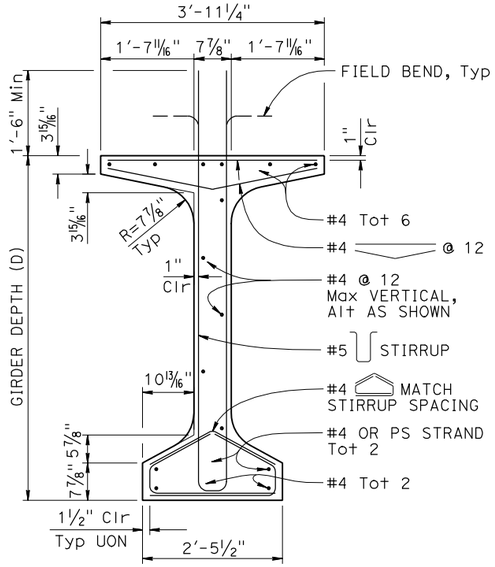

SECTION A-A

NO SCALE

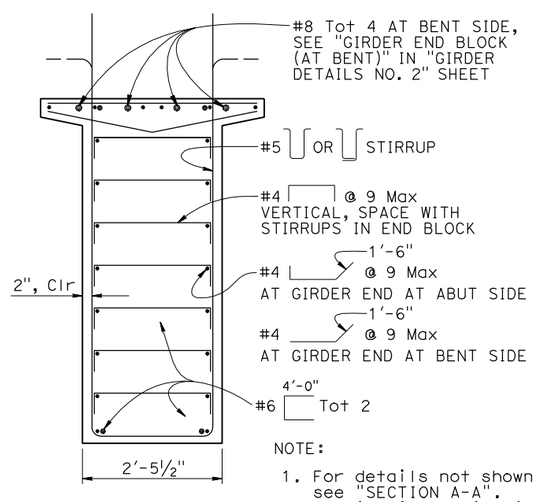

NOTE:
1. For details not shown, see "SECTION A-A".
2. Longitudinal reinf in block end of girders at bent location extend 1'-6" into bent, Typ

SECTION B-B

NO SCALE

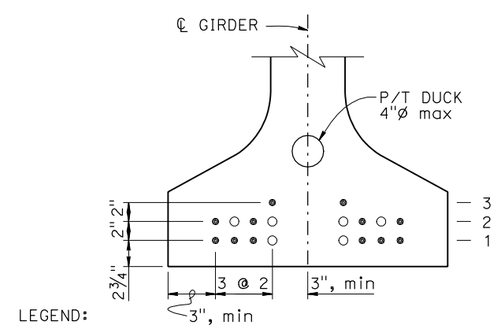

LEGEND:
- ● Denotes continuously bonded strand location, retain tail for extension into bent cap
- ○ Denotes debonded strand location, see NOTE 3

STRAND LAYOUT

NO SCALE

PRESTRESSING NOTES

1. The Jacking Force (P) is the jacking force required at the point of control along the span. The jacking force does not include any fabrication specific losses
2. The maximum temporary tensile stress (jacking stress) in the prestressing steel shall not exceed 80% of the specified minimum ultimate tensile strength of the prestressing steel
3. Concrete strength:
   f'ci is 3.5 ksi at time of initial stressing
   f'c is 5.0 ksi at 28 days
4. Deflection components are informational and will be used to set screed line elevations
5. Screed line elevations for deck concrete will be determined by the Engineer
6. Prestressing strand shall be 270 ksi low relaxation
7. The maximum tensile stress in the Prestressing steel upon release shall not exceed 75 percent of the specified minimum ultimate tensile strength of the Prestressing steel

NOTES:
1. No more than 33% of the total number of strands and 50% of the strands per horziontal row may be debonded
2. Strand pattern and locations may be adjusted as approved by the Engineer
3. Strand debonded equal length at both girder ends. Debonded length = 12'-0" @ Span 1, and = 9'-0" @ Span 2
4. Distribute hook bars, adjust to clear anchorage block
5. Insert assembly and 1½"ø formed hole be adjusted vertically to clear anchorage block and post-tensioning cable path but be distributed as evenly as possible.

LOCATION	GIRDER LENGTH (L)	GIRDER DEPTH (D)	NUMBER OF 0.6" ø STRANDS	JACKING FORCE (P)	CONCRETE STRENGTH (ksi)		MIDSPAN DEAD LOAD DEFLECTION (In)	
					f'ci	f'c	DECK	RAIL
SPAN 1	98'-3½"	4'-6"	18	790 kips (44 kips/STRAND)	3.5	5	0.40	0.47
SPAN 2	83'-8¾"	4'-6"	18	790 kips (44 kips/STRAND)	3.5	5	0.22	0.23

NOTE:
THE CONTRACTOR SHALL VERIFY ALL CONTROLLING FIELD DIMENSIONS BEFORE ORDERING OR FABRICATING ANY MATERIAL.

NOTE:
For "WELDED WIRE REINFORCEMENT (WWR) ALTERNATIVE", see "GIRDER DETAILS NO. 2" sheet

	BY	CHECKED
DESIGN	B. Shen	J. Wu
DETAILS	B. Jenko	B. Shen
QUANTITIES	B. Shen	J. Wu

STATE OF CALIFORNIA
DEPARTMENT OF TRANSPORTATION

DIVISION OF ENGINEERING SERVICES
STRUCTURE DESIGN
DESIGN BRANCH 22

BRIDGE NO. 53-1198
POST MILE 4.3

TEMPLE AVENUE OC (REPAIR)
PC/PS BULB-TEE GIRDER DETAILS NO. 1

STRUCTURES DESIGN DETAIL SHEET (ENGLISH) (REV. 09-01-10)

ORIGINAL SCALE IN INCHES FOR REDUCED PLANS 0 1 2 3

UNIT: 3626
PROJECT NUMBER & PHASE: 07000005391
CONTRACT NO.: 07-278304

DISREGARD PRINTS BEARING EARLIER REVISION DATES

REVISION DATES: 8-29-11 6-28-12 2-28-13

SHEET 20 OF 27

FILE => 53-1198-I-gdt01.dgn

USERNAME => s133329 DATE PLOTTED => 20-MAY-2013 TIME PLOTTED => 13:28

DIST	COUNTY	ROUTE	POST MILES TOTAL PROJECT	SHEET No.	TOTAL SHEETS
07	LA	405	4.3	83	89

REGISTERED CIVIL ENGINEER 06/28/12 DATE

4-08-2013
PLANS APPROVAL DATE

REGISTERED PROFESSIONAL ENGINEER BIN SHEN No. C76221 Exp. 06-30-14 CIVIL STATE OF CALIFORNIA

The State of California or its officers or agents shall not be responsible for the accuracy or completeness of electronic copies of this plan sheet.

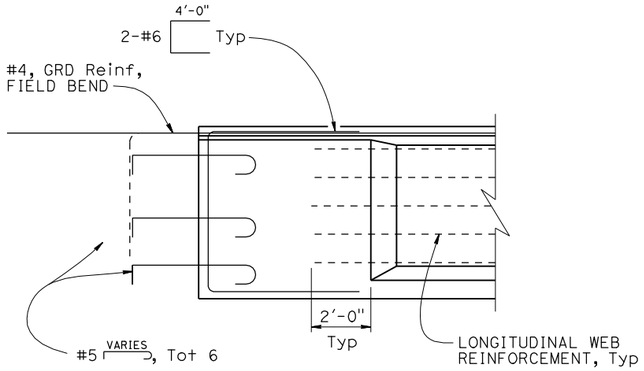

GIRDER END BLOCK (AT ABUTMENT)

NO SCALE

NOTE:
All girder reinforcement extending out keep 3" clearance to face of end diaphragm

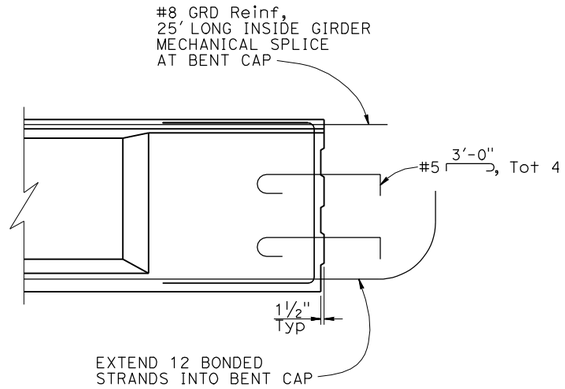

GIRDER END BLOCK (AT BENT)

NO SCALE

NOTE:
For "GIRDER ELEVATION", "GIRDER PLAN" and "TYPICAL GIRDER SECTION", see "PC/PS BULB-TEE GIRDER DETAILS NO. 1" sheet

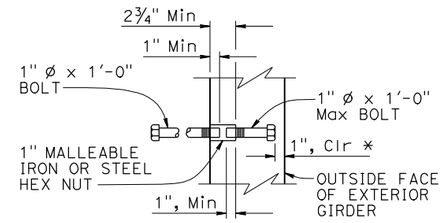

* Dimensin may be increased when insert assembly is used at end block

INSERT ASSEMBLY

NO SCALE

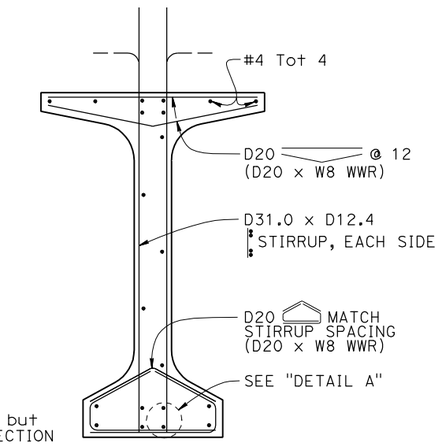

NOTES:
1. For details shown but not noted, see "SECTION A-A" detail
2. W8 WWR not shown

WELDED WIRE REINFORCEMENT (WWR) ALTERNATIVE

NO SCALE

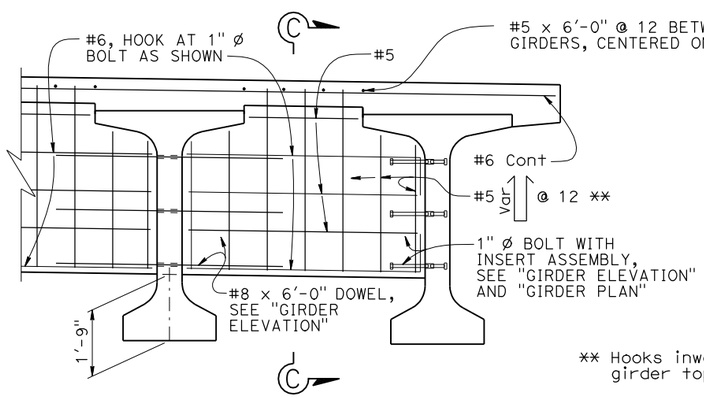

** Hooks inward below girder top flange

INTERMEDIATE DIAPHRAGM

NO SCALE

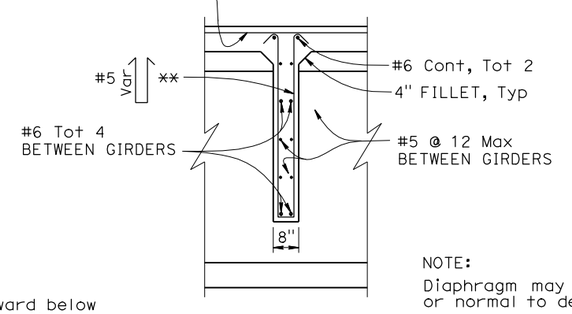

NOTE:
Diaphragm may be vertical or normal to deck grade

SECTION C-C

NO SCALE

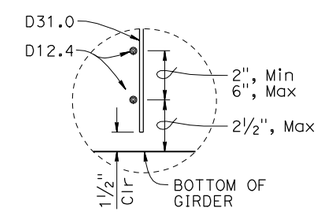

DETAIL A

NO SCALE

NOTES:
1. Bottom of stirrup WWR detail shown, top similar
2. Longitudinal wire area shall be 40% or greater of vertical deformed wire's area

NOTE:
THE CONTRACTOR SHALL VERIFY ALL CONTROLLING FIELD DIMENSIONS BEFORE ORDERING OR FABRICATING ANY MATERIAL.

DESIGN	BY B. Shen	CHECKED J. Wu	
DETAILS	BY B. Jenko	CHECKED B. Shen	
QUANTITIES	BY B. Shen	CHECKED J. Wu	

STATE OF CALIFORNIA
DEPARTMENT OF TRANSPORTATION

DIVISION OF ENGINEERING SERVICES
STRUCTURE DESIGN
DESIGN BRANCH 22

BRIDGE NO. 53-1198
POST MILE 4.3

TEMPLE AVENUE OC (REPAIR)

PC/PS BULB-TEE GIRDER DETAILS NO. 2

STRUCTURES DESIGN DETAIL SHEET (ENGLISH) (REV. 09-01-10)

ORIGINAL SCALE IN INCHES FOR REDUCED PLANS 0 1 2 3

UNIT: 3626
PROJECT NUMBER & PHASE: 07000005391
CONTRACT NO.: 07-278304

DISREGARD PRINTS BEARING EARLIER REVISION DATES

REVISION DATES 8-29-11 10-24-11 1-3-12 6-28-12

SHEET 21 OF 27

FILE => 53-1198-1-gdt02.dgn

USERNAME => s133329 DATE PLOTTED => 20-MAY-2013 TIME PLOTTED => 13:28

DIST	COUNTY	ROUTE	POST MILES TOTAL PROJECT	SHEET No.	TOTAL SHEETS
07	LA	405	4.3	84	89

REGISTERED CIVIL ENGINEER 06/28/12 DATE

4-08-2013
PLANS APPROVAL DATE

REGISTERED PROFESSIONAL ENGINEER
BIN SHEN
No. C76221
Exp. 06-30-14
CIVIL
STATE OF CALIFORNIA

The State of California or its officers or agents shall not be responsible for the accuracy or completeness of electronic copies of this plan sheet.

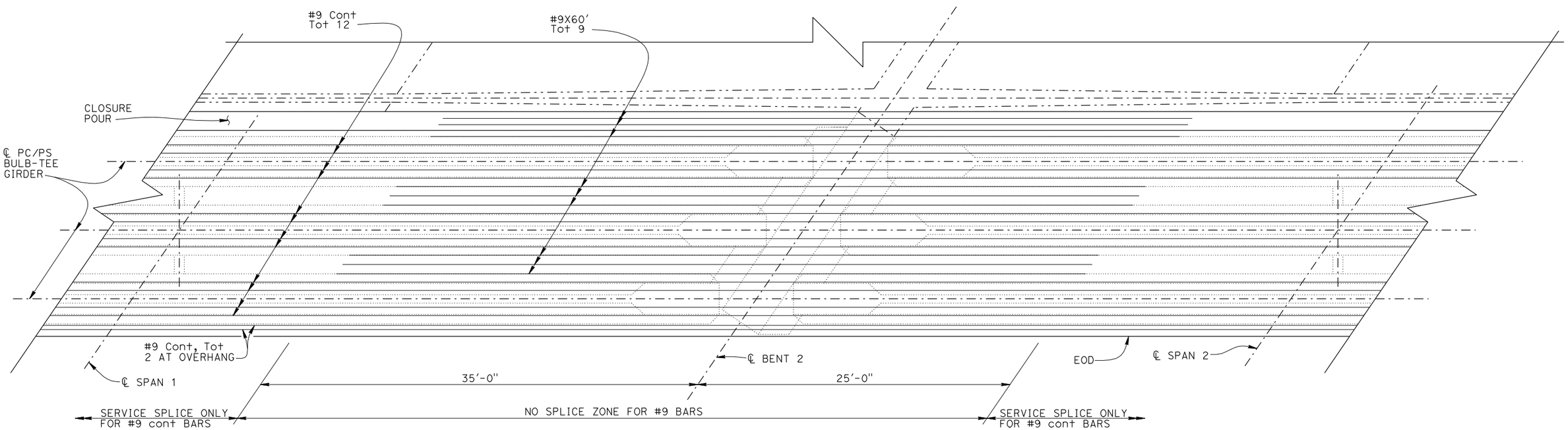

NOTE: For additional reinforcement and details, see "TYPICAL SECTION" sheet.

TOP SLAB REINFORCEMENT

1/4"=1'-0"

NOTE:
THE CONTRACTOR SHALL VERIFY ALL CONTROLLING FIELD DIMENSIONS BEFORE ORDERING OR FABRICATING ANY MATERIAL.

	BY	CHECKED
DESIGN	B. Shen	J. Wu
DETAILS	B. Jenko	B. Shen
QUANTITIES	B. Shen	J. Wu

STATE OF CALIFORNIA
DEPARTMENT OF TRANSPORTATION

DIVISION OF ENGINEERING SERVICES
STRUCTURE DESIGN
DESIGN BRANCH 22

BRIDGE NO. 53-1198
POST MILE 4.3

TEMPLE AVENUE OC (REPAIR)
ADDITIONAL DECK REINFORCEMENT

STRUCTURES DESIGN DETAIL SHEET (ENGLISH) (REV. 09-01-10)

ORIGINAL SCALE IN INCHES FOR REDUCED PLANS 0 1 2 3

UNIT: 3626
PROJECT NUMBER & PHASE: 07000005391
CONTRACT NO.: 07-278304

DISREGARD PRINTS BEARING EARLIER REVISION DATES

REVISION DATES: 10-25-11 1-3-12 3-14-12 6-28-12

SHEET 22 OF 27

FILE => 53-1198-1-w-tsr1.dgn

USERNAME => s133329 DATE PLOTTED => 20-MAY-2013 TIME PLOTTED => 13:28

DIST	COUNTY	ROUTE	POST MILES TOTAL PROJECT	SHEET No.	TOTAL SHEETS
07	LA	405	4.3	85	89

REGISTERED CIVIL ENGINEER 06/28/12 DATE

4-08-2013
PLANS APPROVAL DATE

REGISTERED PROFESSIONAL ENGINEER BIN SHEN No. C76221 Exp. 06-30-14 CIVIL STATE OF CALIFORNIA

The State of California or its officers or agents shall not be responsible for the accuracy or completeness of electronic copies of this plan sheet.

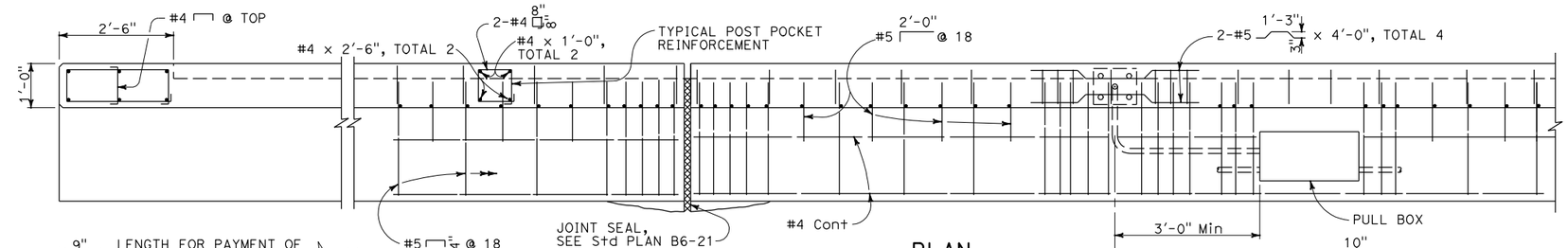

PLAN

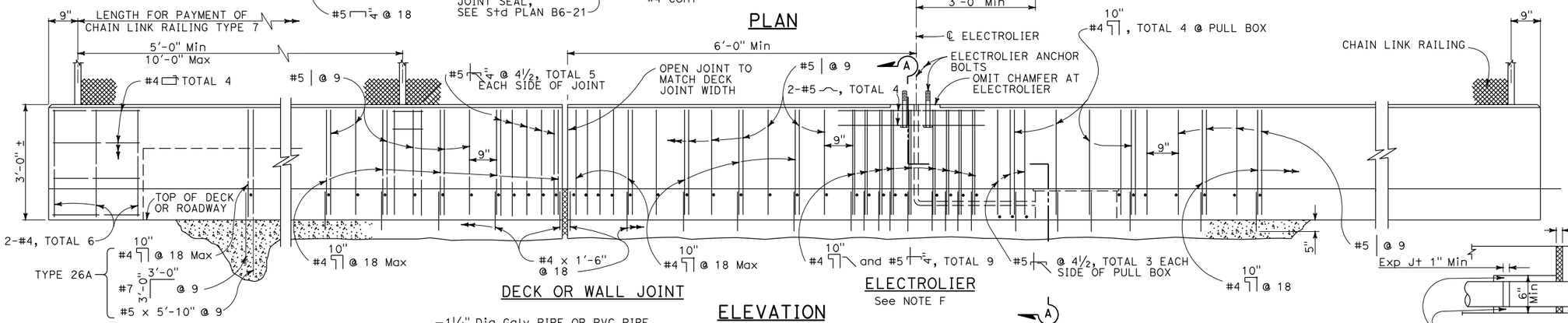

DECK OR WALL JOINT

ELECTROLIER
See NOTE F

ELEVATION

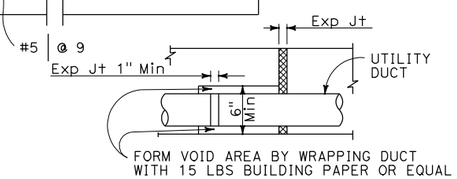

UTILITY DUCT EXPANSION JOINT

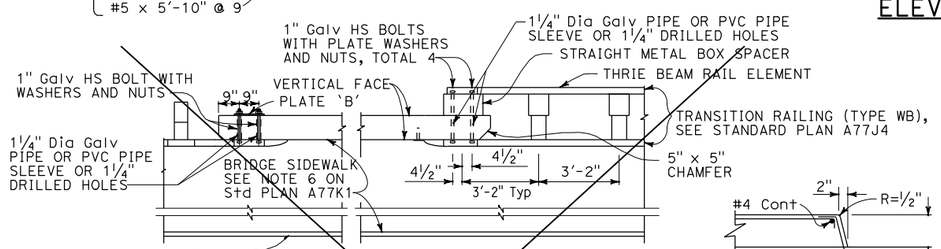

PLAN

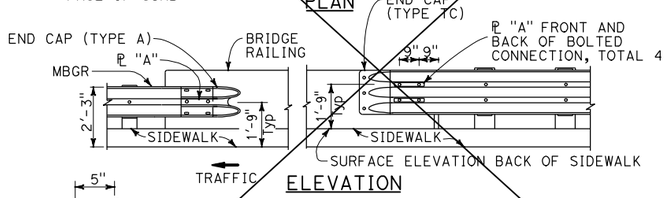

ELEVATION

METAL RAILING CONNECTION TO BRIDGE RAILING

See NOTE J

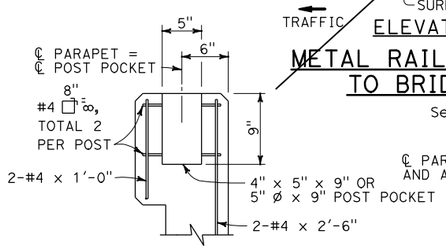

POST ANCHORAGE DETAIL

Applies to Chain Link Railing Type 7 and Tubular Hand Railing. See respective Standard Plans for additional details.

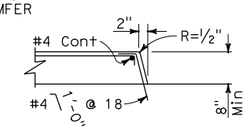

TYPE H

To be used unless otherwise shown on plans.

CURB DETAIL

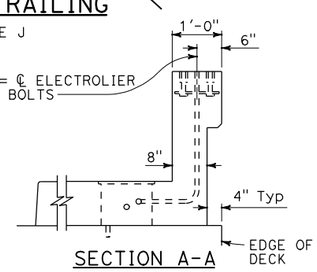

SECTION A-A

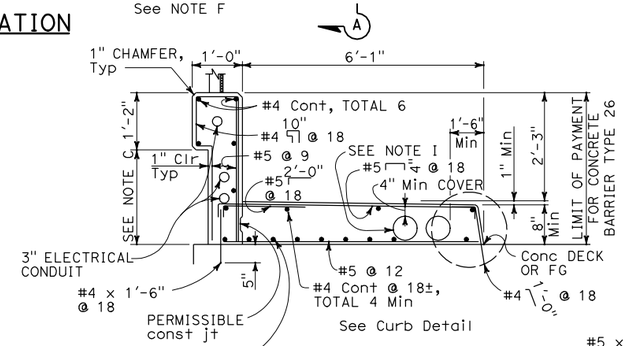

TYPE 26 Modified

On bridge deck

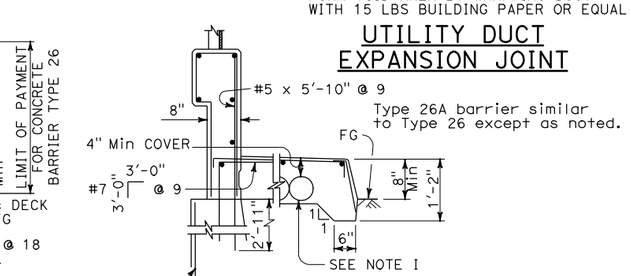

TYPE 26A

Off bridge deck

NOTES:

A. For Chain Link Railing notes and details not shown, see Standard Plan B11-52.

B. ~~For Hand Railing notes and details not shown, see Standard Plan B11-51.~~

C. Dimensions will vary with cross slope and with certain thicknesses of surfacing. See Project Plans.

D. Walls are to be backfilled before railing is placed.

E. Clearance to reinforcing steel in curb and railing to be 1" except as noted. Longitudinal reinforcement to stop at all expansion joints.

F. See Project Plans for electrolier locations and pull box type.

G. See Project Plans for limits of Chain Link Railing Type 7 and/or Tubular Hand Railing.

H. For electrical details, see Standard Plans ES-9A, 9B, 9C, 9D, and 9E.

I. A minimum of two - 5" round openings are required for future utilities in addition to those on other plan sheets. Openings are to be sealed at ends and extended 8" minimum past end of sidewalk if not used. Duct forms are to be tied down.

J. ~~For typical metal railing connection details not shown, see Standard Plan A77K1 and A77K2.~~

K. This barrier is to be used only for speeds of 45 MPH or less. For speeds greater than 45 MPH, pedestrians should be protected by a separation traffic barrier.

NOTE:
THE CONTRACTOR SHALL VERIFY ALL CONTROLLING FIELD DIMENSIONS BEFORE ORDERING OR FABRICATING ANY MATERIAL.

STATE OF CALIFORNIA
DEPARTMENT OF TRANSPORTATION

CONCRETE BARRIER TYPE 26 MODIFIED

NO SCALE

	BY	CHECKED
DESIGN	B. Shen	J. Wu
DETAILS	B. Jenko / J. Valencia	B. Shen
QUANTITIES	B. Shen	J. Wu

STATE OF CALIFORNIA DEPARTMENT OF TRANSPORTATION

DIVISION OF ENGINEERING SERVICES STRUCTURE DESIGN
DESIGN BRANCH 22

BRIDGE NO. 53-1198
POST MILE 4.3

TEMPLE AVENUE OC (REPAIR)
BARRIER DETAILS

STRUCTURES DESIGN DETAIL SHEET (ENGLISH) (REV. 09-01-10)

ORIGINAL SCALE IN INCHES FOR REDUCED PLANS 0 1 2 3

UNIT: 3626
PROJECT NUMBER & PHASE: 07000005391
CONTRACT NO.: 07-278304

DISREGARD PRINTS BEARING EARLIER REVISION DATES

REVISION DATES: ~~12-14-11~~ ~~1-3-12~~ 6-28-12

SHEET 23 OF 27

FILE => 53-1198-m-br-dt_01.dgn

USERNAME => s133329 DATE PLOTTED => 20-MAY-2013 TIME PLOTTED => 13:28

DIST	COUNTY	ROUTE	POST MILES TOTAL PROJECT	SHEET No.	TOTAL SHEETS
07	LA	405	4.3	86	89

REGISTERED CIVIL ENGINEER — DATE 1-13-12

4-08-2013
PLANS APPROVAL DATE

REGISTERED PROFESSIONAL ENGINEER — Haitao Liu — No. C66398 — Exp. 6-30-12 — CIVIL — STATE OF CALIFORNIA

The State of California or its officers or agents shall not be responsible for the accuracy or completeness of electronic copies of this plan sheet.

This LOTB sheet was prepared in accordance with the Caltrans Soil & Rock Logging, Classification, & Presentation Manual (2010 Edition).

BENCH MARK

PRHV 201

Fnd CT Tag on Curb
34.770 Lt ℄ Temple Ave
Sta 28+93.81
N 1 753 137.739
E 6 513 352.150
Elev = 57.876

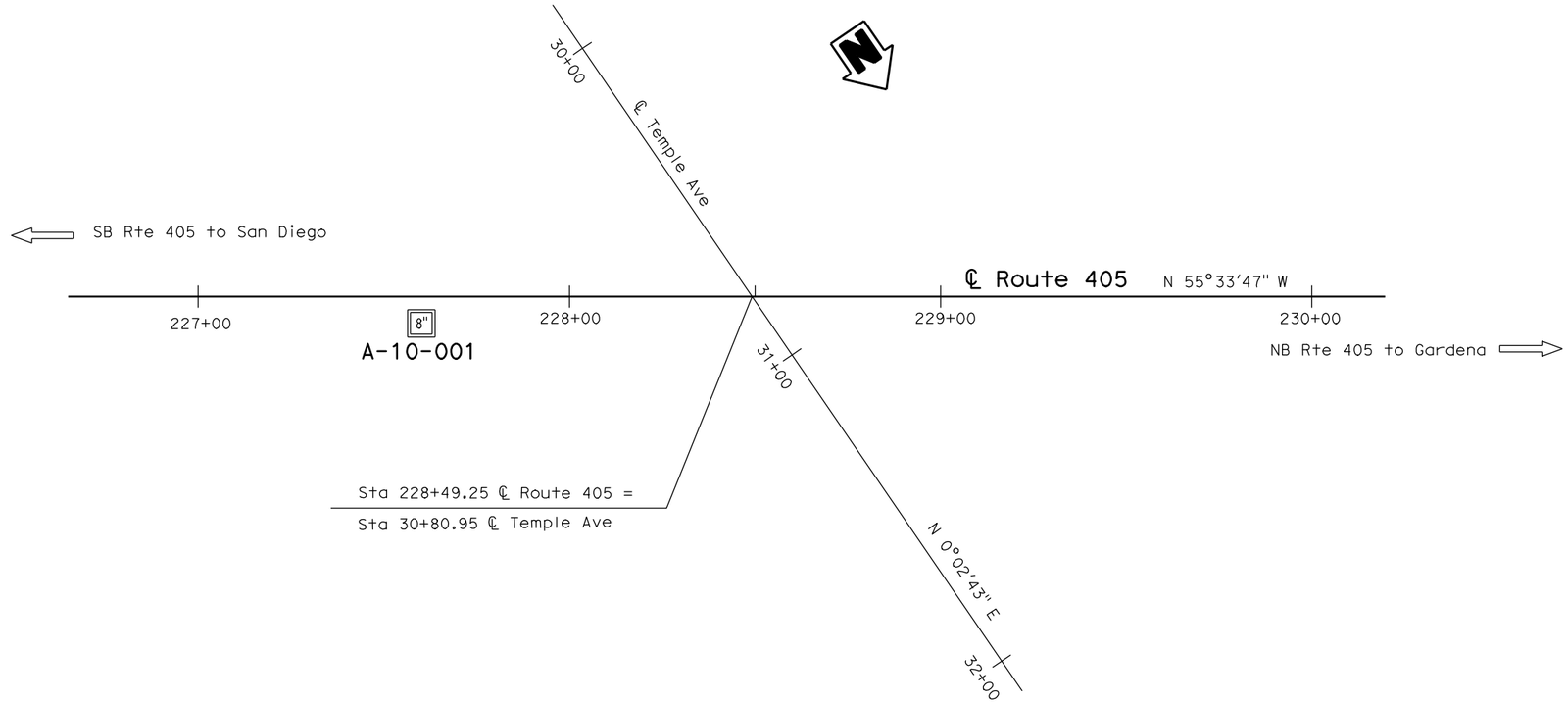

PLAN
1" = 40'

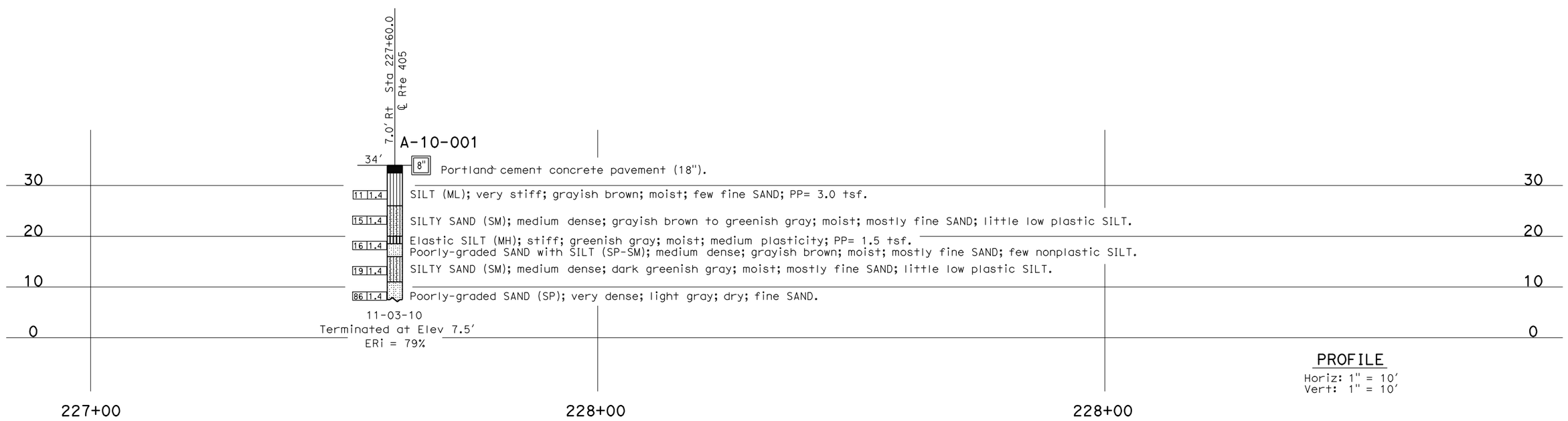

PROFILE
Horiz: 1" = 10'
Vert: 1" = 10'

ENGINEERING SERVICES	MATERIALS AND GEOTECHNICAL SERVICES	STATE OF CALIFORNIA DEPARTMENT OF TRANSPORTATION	DIVISION OF ENGINEERING SERVICES STRUCTURE DESIGN DESIGN BRANCH 22	BRIDGE NO. 53-1198 POST MILE 4.3	TEMPLE AVE OC REPAIR LOG OF TEST BORINGS 1 OF 4
FUNCTIONAL SUPERVISOR NAME: D. jang	DRAWN BY: F. Nguyen CHECKED BY: S. Cho	FIELD INVESTIGATION BY: H. Liu			

OGS CIVIL LOG OF TEST BORINGS SHEET — ORIGINAL SCALE IN INCHES FOR REDUCED PLANS 0 1 2 3 — UNIT: 3643 PROJECT NUMBER & PHASE: 07000005391 — CONTRACT NO.: 07-278304 — DISREGARD PRINTS BEARING EARLIER REVISION DATES — REVISION DATES 11-15-11 01-12-12 — SHEET 24 OF 27

FILE => 53-1198-n-lotb01.dgn

USERNAME => s133329 DATE PLOTTED => 20-MAY-2013 TIME PLOTTED => 13:28

DIST	COUNTY	ROUTE	POST MILES TOTAL PROJECT	SHEET No.	TOTAL SHEETS
07	LA	405	4.3	87	89

REGISTERED CIVIL ENGINEER — DATE 1-13-12

4-08-2013
PLANS APPROVAL DATE

REGISTERED PROFESSIONAL ENGINEER — Haitao Liu — No. C66398 — Exp. 6-30-12 — CIVIL — STATE OF CALIFORNIA

The State of California or its officers or agents shall not be responsible for the accuracy or completeness of electronic copies of this plan sheet.

REFERENCE: CALTRANS SOIL & ROCK LOGGING, CLASSIFICATION, AND PRESENTATION MANUAL (2010)

CEMENTATION

Description	Criteria
Weak	Crumbles or breaks with handling or little finger pressure.
Moderate	Crumbles or breaks with considerable finger pressure.
Strong	Will not crumble or break with finger pressure.

BOREHOLE IDENTIFICATION

Symbol	Hole Type	Description
Size	A	Auger Boring (hollow or solid stem bucket)
Size	R	Rotary drilled boring (conventional)
	RW	Rotary drilled with self-casing wire-line
	RC	Rotary core with continuously-sampled, self-casing wire-line
	P	Rotary percussion boring (air)
Size	R	Rotary drilled diamond core
	RC	Rotary drilled rock core
Size	HD	Hand driven (1-inch soil tube)
	HA	Hand Auger
●	D	Dynamic Cone Penetration Boring
▲	CPT	Cone Penetration Test (ASTM D 5778)
[ ]	O	Other (note on LOTB)

Note: Size in inches.

CONSISTENCY OF COHESIVE SOILS

Description	Shear Strength (tsf)	Pocket Penetrometer Measurement, PP, (tsf)	Torvane Measurement, TV, (tsf)	Vane Shear Measurement, VS, (tsf)
Very Soft	Less than 0.12	Less than 0.25	Less than 0.12	Less than 0.12
Soft	0.12 - 0.25	0.25 - 0.5	0.12 - 0.25	0.12 - 0.25
Medium Stiff	0.25 - 0.5	0.5 - 1	0.25 - 0.5	0.25 - 0.5
Stiff	0.5 - 1	1 - 2	0.5 - 1	0.5 - 1
Very Stiff	1 - 2	2 - 4	1 - 2	1 - 2
Hard	Greater than 2	Greater than 4	Greater than 2	Greater than 2

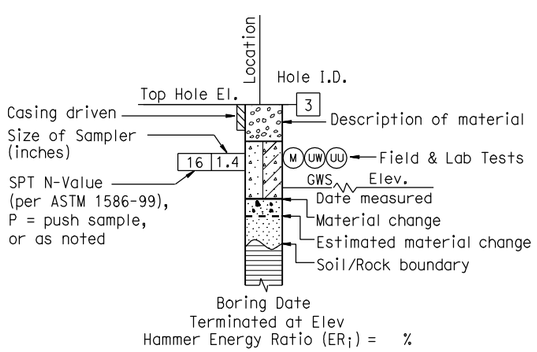

ROTARY BORING

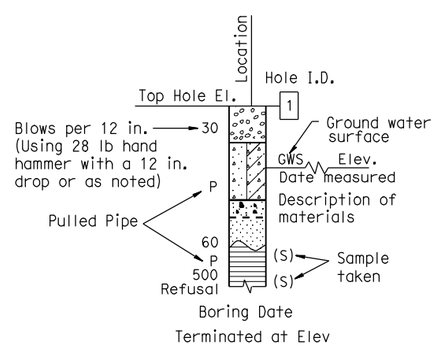

HAND BORING

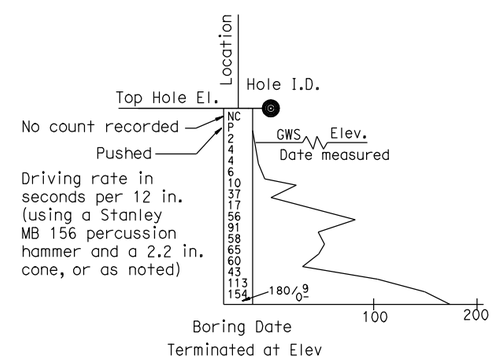

DYNAMIC CONE PENETRATION BORING

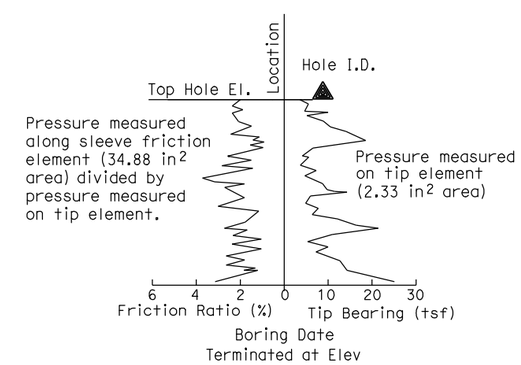

CONE PENETRATION TEST (CPT) BORING

ENGINEERING SERVICES	MATERIALS AND GEOTECHNICAL SERVICES	STATE OF CALIFORNIA DEPARTMENT OF TRANSPORTATION	DIVISION OF ENGINEERING SERVICES STRUCTURE DESIGN DESIGN BRANCH 22	BRIDGE NO. 53-1198 / POST MILE 4.3	TEMPLE AVE OC REPAIR LOG OF TEST BORINGS 2 OF 4
	PREPARED BY: F. Nguyen				

GS LOTB SOIL LEGEND

ORIGINAL SCALE IN INCHES FOR REDUCED PLANS 0 1 2 3

UNIT: 3643
PROJECT NUMBER & PHASE: 07000005391
CONTRACT NO.: 07-278304

DISREGARD PRINTS BEARING EARLIER REVISION DATES

REVISION DATES: 11-15-11 01-12-12

SHEET 25 OF 27

FILE => 53-1198-n-lotb02.dgn

USERNAME => s133329 DATE PLOTTED => 20-MAY-2013 TIME PLOTTED => 13:28

REFERENCE: CALTRANS SOIL & ROCK LOGGING, CLASSIFICATION, AND PRESENTATION MANUAL (2010)

DIST	COUNTY	ROUTE	POST MILES TOTAL PROJECT	SHEET No.	TOTAL SHEETS
07	LA	405	4.3	88	89

REGISTERED CIVIL ENGINEER 1-13-12 DATE

4-08-2013
PLANS APPROVAL DATE

REGISTERED PROFESSIONAL ENGINEER Haitao Liu No. C66398 Exp. 6-30-12 CIVIL STATE OF CALIFORNIA

The State of California or its officers or agents shall not be responsible for the accuracy or completeness of electronic copies of this plan sheet.

GROUP SYMBOLS AND NAMES

Graphic/Symbol	Group Names	Graphic/Symbol	Group Names
GW	Well-graded GRAVEL Well-graded GRAVEL with SAND	CL	Lean CLAY Lean CLAY with SAND Lean CLAY with GRAVEL SANDY lean CLAY SANDY lean CLAY with GRAVEL GRAVELLY lean CLAY GRAVELLY lean CLAY with SAND
GP	Poorly-graded GRAVEL Poorly-graded GRAVEL with SAND		
GW-GM	Well-graded GRAVEL with SILT Well-graded GRAVEL with SILT and SAND	CL-ML	SILTY CLAY SILTY CLAY with SAND SILTY CLAY with GRAVEL SANDY SILTY CLAY SANDY SILTY CLAY with GRAVEL GRAVELLY SILTY CLAY GRAVELLY SILTY CLAY with SAND
GW-GC	Well-graded GRAVEL with CLAY (or SILTY CLAY) Well-graded GRAVEL with CLAY and SAND (or SILTY CLAY and SAND)		
GP-GM	Poorly-graded GRAVEL with SILT Poorly-graded GRAVEL with SILT and SAND	ML	SILT SILT with SAND SILT with GRAVEL SANDY SILT SANDY SILT with GRAVEL GRAVELLY SILT GRAVELLY SILT with SAND
GP-GC	Poorly-graded GRAVEL with CLAY (or SILTY CLAY) Poorly-graded GRAVEL with CLAY and SAND (or SILTY CLAY and SAND)		
GM	SILTY GRAVEL SILTY GRAVEL with SAND	OL	ORGANIC lean CLAY ORGANIC lean CLAY with SAND ORGANIC lean CLAY with GRAVEL SANDY ORGANIC lean CLAY SANDY ORGANIC lean CLAY with GRAVEL GRAVELLY ORGANIC lean CLAY GRAVELLY ORGANIC lean CLAY with SAND
GC	CLAYEY GRAVEL CLAYEY GRAVEL with SAND		
GC-GM	SILTY, CLAYEY GRAVEL SILTY, CLAYEY GRAVEL with SAND	OL	ORGANIC SILT ORGANIC SILT with SAND ORGANIC SILT with GRAVEL SANDY ORGANIC SILT SANDY ORGANIC SILT with GRAVEL GRAVELLY ORGANIC SILT GRAVELLY ORGANIC SILT with SAND
SW	Well-graded SAND Well-graded SAND with GRAVEL		
SP	Poorly-graded SAND Poorly-graded SAND with GRAVEL	CH	Fat CLAY Fat CLAY with SAND Fat CLAY with GRAVEL SANDY fat CLAY SANDY fat CLAY with GRAVEL GRAVELLY fat CLAY GRAVELLY fat CLAY with SAND
SW-SM	Well-graded SAND with SILT Well-graded SAND with SILT and GRAVEL		
SW-SC	Well-graded SAND with CLAY (or SILTY CLAY) Well-graded SAND with CLAY and GRAVEL (or SILTY CLAY and GRAVEL)	MH	Elastic SILT Elastic SILT with SAND Elastic SILT with GRAVEL SANDY elastic SILT SANDY elastic SILT with GRAVEL GRAVELLY elastic SILT GRAVELLY elastic SILT with SAND
SP-SM	Poorly-graded SAND with SILT Poorly-graded SAND with SILT and GRAVEL		
SP-SC	Poorly-graded SAND with CLAY (or SILTY CLAY) Poorly-graded SAND with CLAY and GRAVEL (or SILTY CLAY and GRAVEL)	OH	ORGANIC fat CLAY ORGANIC fat CLAY with SAND ORGANIC fat CLAY with GRAVEL SANDY ORGANIC fat CLAY SANDY ORGANIC fat CLAY with GRAVEL GRAVELLY ORGANIC fat CLAY GRAVELLY ORGANIC fat CLAY with SAND
SM	SILTY SAND SILTY SAND with GRAVEL		
SC	CLAYEY SAND CLAYEY SAND with GRAVEL	OH	ORGANIC elastic SILT ORGANIC elastic SILT with SAND ORGANIC elastic SILT with GRAVEL SANDY ORGANIC elastic SILT SANDY ORGANIC elastic SILT with GRAVEL GRAVELLY ORGANIC elastic SILT GRAVELLY ORGANIC elastic SILT with SAND
SC-SM	SILTY, CLAYEY SAND SILTY, CLAYEY SAND with GRAVEL		
PT	PEAT	OL/OH	ORGANIC SOIL ORGANIC SOIL with SAND ORGANIC SOIL with GRAVEL SANDY ORGANIC SOIL SANDY ORGANIC SOIL with GRAVEL GRAVELLY ORGANIC SOIL GRAVELLY ORGANIC SOIL with SAND
	COBBLES COBBLES and BOULDERS BOULDERS		

FIELD AND LABORATORY TESTING

- (C) Consolidation (ASTM D 2435)
- (CL) Collapse Potential (ASTM D 5333)
- (CP) Compaction Curve (CTM 216)
- (CR) Corrosivity Testing (CTM 643, CTM 422, CTM 417)
- (CU) Consolidated Undrained Triaxial (ASTM D 4767)
- (DS) Direct Shear (ASTM D 3080)
- (EI) Expansion Index (ASTM D 4829)
- (M) Moisture Content (ASTM D 2216)
- (OC) Organic Content-% (ASTM D 2974)
- (P) Permeability (CTM 220)
- (PA) Particle Size Analysis (ASTM D 422)
- (PI) Plasticity Index (AASHTO T 90) Liquid Limit (AASHTO T 89)
- (PL) Point Load Index (ASTM D 5731)
- (PM) Pressure Meter
- (R) R-Value (CTM 301)
- (SE) Sand Equivalent (CTM 217)
- (SG) Specific Gravity (AASHTO T 100)
- (SL) Shrinkage Limit (ASTM D 427)
- (SW) Swell Potential (ASTM D 4546)
- (UC) Unconfined Compression-Soil (ASTM D 2166) Unconfined Compression-Rock (ASTM D 2938)
- (UU) Unconsolidated Undrained Triaxial (ASTM D 2850)
- (UW) Unit Weight (ASTM D 4767)

APPARENT DENSITY OF COHESIONLESS SOILS

Description	SPT N_{60} (Blows / 12 in.)
Very Loose	0 - 5
Loose	5 - 10
Medium Dense	10 - 30
Dense	30 - 50
Very Dense	Greater than 50

MOISTURE

Description	Criteria
Dry	No discernable moisture
Moist	Moisture present, but no free water
Wet	Visible free water

PERCENT OR PROPORTION OF SOILS

Description	Criteria
Trace	Particles are present but estimated to be less than 5%
Few	5% - 10%
Little	15% - 25%
Some	30% - 45%
Mostly	50% - 100%

PARTICLE SIZE

Description		Size (in.)
Boulder		Greater than 12
Cobble		3 - 12
Gravel	Coarse	3/4 - 3
	Fine	1/5 - 3/4
Sand	Coarse	1/16 - 1/5
	Medium	1/64 - 1/16
	Fine	1/300 - 1/64
Silt and Clay		Less than 1/300

ENGINEERING SERVICES

MATERIALS AND GEOTECHNICAL SERVICES
PREPARED BY: F. Nguyen

STATE OF CALIFORNIA DEPARTMENT OF TRANSPORTATION

DIVISION OF ENGINEERING SERVICES STRUCTURE DESIGN
DESIGN BRANCH 22

BRIDGE NO. 53-1198
POST MILE 4.3

TEMPLE AVE OC REPAIR
LOG OF TEST BORINGS 3 OF 4

GS LOTB SOIL LEGEND

ORIGINAL SCALE IN INCHES FOR REDUCED PLANS 0 1 2 3

UNIT: 3643
PROJECT NUMBER & PHASE: 07000005391
CONTRACT NO.: 07-278304

DISREGARD PRINTS BEARING EARLIER REVISION DATES

REVISION DATES 11-15-11 01-12-12

SHEET 26 OF 27

FILE => 53-1198-n-lotb03.dgn

USERNAME => s133329 DATE PLOTTED => 20-MAY-2013 TIME PLOTTED => 13:28

FED. ROAD DIV. NO.	STATE	PROJ. No.	FISCAL YEAR	SHEET No.	TOTAL SHEETS
7	CAL.			580	701

DIST.	COUNTY	ROUTE	SECT.	SHEET No.	TOTAL SHEETS
VII	LA	~~180~~ 405	LBch.	23	23

BRIDGE ENGINEER — CIVIL ENGINEER — LICENSE NO.

DATE APPROVED MAR 5 '62

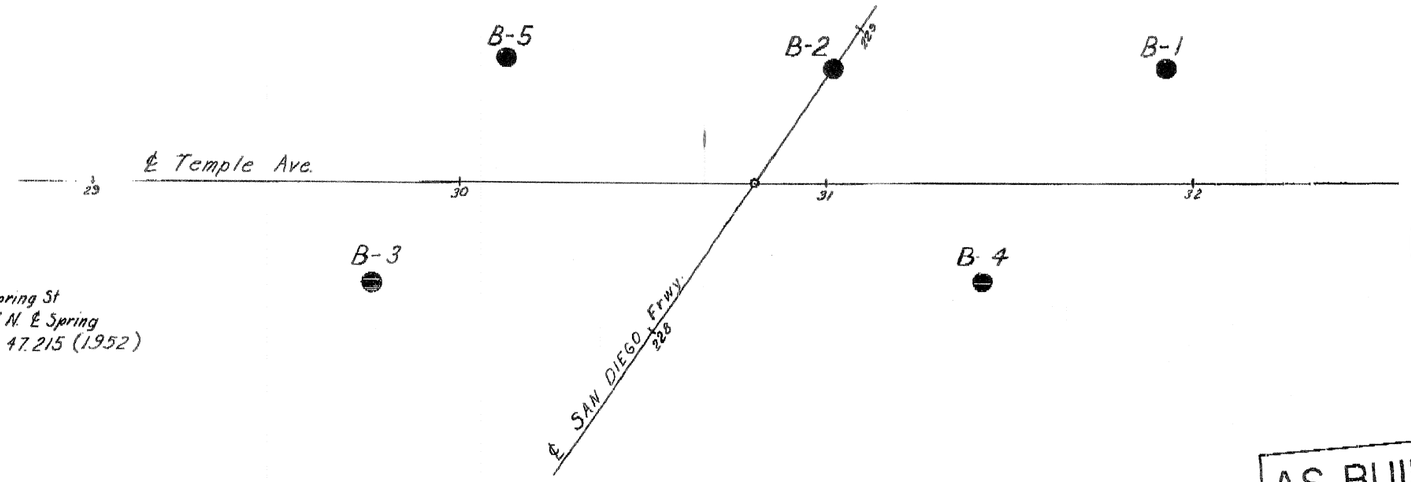

B.M. #23-LBch-53
City L.Bch. B.M. #541. Br. cap in conc. stamped "Montana Land Co. 1928" Spring St & Temple Ave., & Temple Ave. prod 30' N. & Spring St. (No P/L Spring St.) Elev. 47.215 (1952)

REGISTERED PROFESSIONAL ENGINEER — Haitao Liu — No. C66398 — Exp. 06-30-12 — CIVIL — STATE OF CALIFORNIA

DIVISION OF ENGINEERING SERVICES - MATERIALS AND GEOTECHNICAL SERVICES

As-Built Log of Test Borings sheet is considered an informational document only. As such, the State of California registration seal with signature, license number and registration certificate expiration date confirm that this is a true and accurate copy of the original document. It does not attest to the accuracy or validity of the information contained in the original document. This drawing is available and presented only for the convenience of any bidder, contractor or other interested party.

DIST.	COUNTY	ROUTE	POST MILE-TOTAL PROJECT	Sheet No.	Total Sheets
07	LA	405			

REGISTERED CIVIL ENGINEER — DATE 1/13/2012

TEMPLE AVE OC REPAIR

LOG OF TEST BORINGS 4 OF 4

UNIT: 3643	CONTRACT No.	BRIDGE No.
PROJ. No. & PHASE: 07000005391	07-278304	53-1198

VERT DATUM: NGVD29 CONVERSION: NAVD88 (+1.83') — Sheet 27 of 27

NOTE: A COPY OF THIS LOG OF TEST BORINGS IS AVAILABLE AT OFFICE OF STRUCTURE MAINTENANCE AND INVESTIGATIONS, SACRAMENTO, CALIFORNIA

AS BUILT PLANS
Contract No. 63-7V13C.12
Date Completed
Document No. 70002386

BRIDGE DEPARTMENT

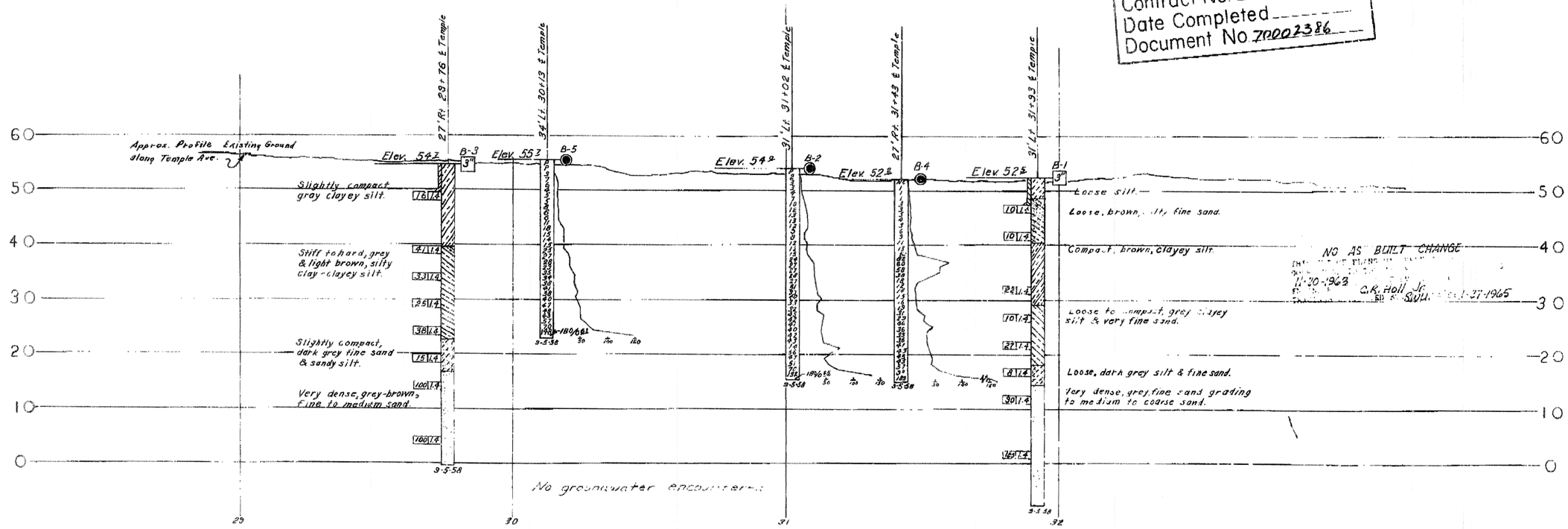

CLASSIFICATION OF MATERIAL BASED ON STANDARD GRADE SIZE LIMITS

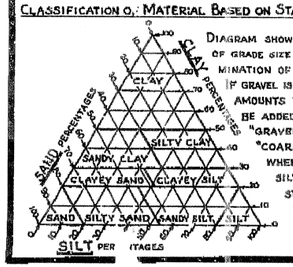

DIAGRAM SHOWING THE BASIS FOR ESTIMATES OF GRADE SIZE DISTRIBUTION USED IN DETERMINATION OF CLASS NAMES. IF GRAVEL IS PRESENT IN APPRECIABLE AMOUNTS THE TERM "GRAVELLY" MAY BE ADDED TO THE CLASS NAME, VIZ. "GRAVELLY SAND." THE TERMS "COARSE", "MEDIUM" AND "FINE" WHEN USED TO DESCRIBE SAND, SILT AND GRAVEL REFER TO STANDARD GRADE SIZE LIMITS.

LEGEND OF EARTH MATERIALS

- GRAVEL
- SAND
- SILT
- CLAY
- SANDY CLAY OR CLAYEY SAND
- SANDY SILT OR SILTY SAND
- SILTY CLAY OR CLAYEY SILT
- PEAT AND/OR ORGANIC MATTER
- FILL MATERIAL
- IGNEOUS ROCK
- SEDIMENTARY ROCK
- METAMORPHIC ROCK

LEGEND OF BORING OPERATIONS

- PLAN OF ANY BORING
- PENETROMETER
- 2¼" CONE PENETROMETER
- SAMPLER BORING (DRY)
- ROTARY BORING (WET)
- AUGER BORING (DRY)
- JET BORING
- CORE BORING
- TEST PIT

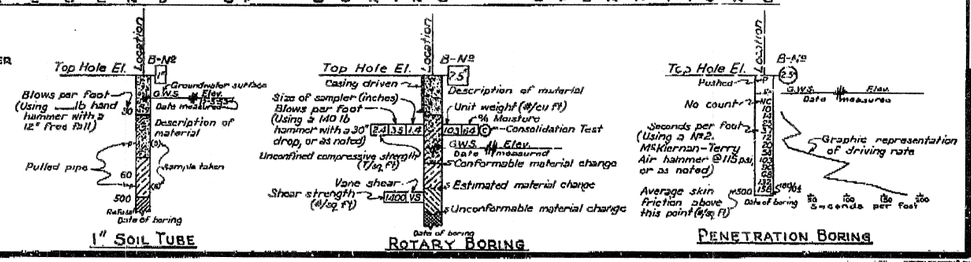

NOTES

~~The contractor's attention is directed to Section 2, Article (c) of the Standard Specifications and to the Special Provisions accompanying this set of plans.~~

Classification of earth material as shown on this sheet is based upon field inspection and is not to be construed to imply mechanical analysis.

STATE OF CALIFORNIA
DEPARTMENT OF PUBLIC WORKS
DIVISION OF HIGHWAYS

TEMPLE AVE OVERCROSSING

LOG OF TEST BORINGS

SCALE	BRIDGE	FILE	DRAWING
Horiz. 1"=20' Vert. 1"=10'	53-1198	E 53	C-4375-23

PREL. DRAWING NO. P-4375-35

580