| Dist | COUNTY | ROUTE | POST MILES TOTAL PROJECT | SHEET No. | TOTAL SHEETS |
|---|---|---|---|---|---|
| 07 | LA | 10,110,118 134,210,710 | Var | 101 | 152 |

George Olguin
LICENSED LANDSCAPE ARCHITECT

12-9-13
PLANS APPROVAL DATE

LICENSED LANDSCAPE ARCHITECT
GEORGE OLGUIN
NO. 4333
George Olguin
Signature
08-31-14
Renewal Date
10-31-13
Date
STATE OF CALIFORNIA

*THE STATE OF CALIFORNIA OR ITS OFFICERS OR AGENTS SHALL NOT BE RESPONSIBLE FOR THE ACCURACY OR COMPLETENESS OF SCANNED COPIES OF THIS PLAN SHEET.*

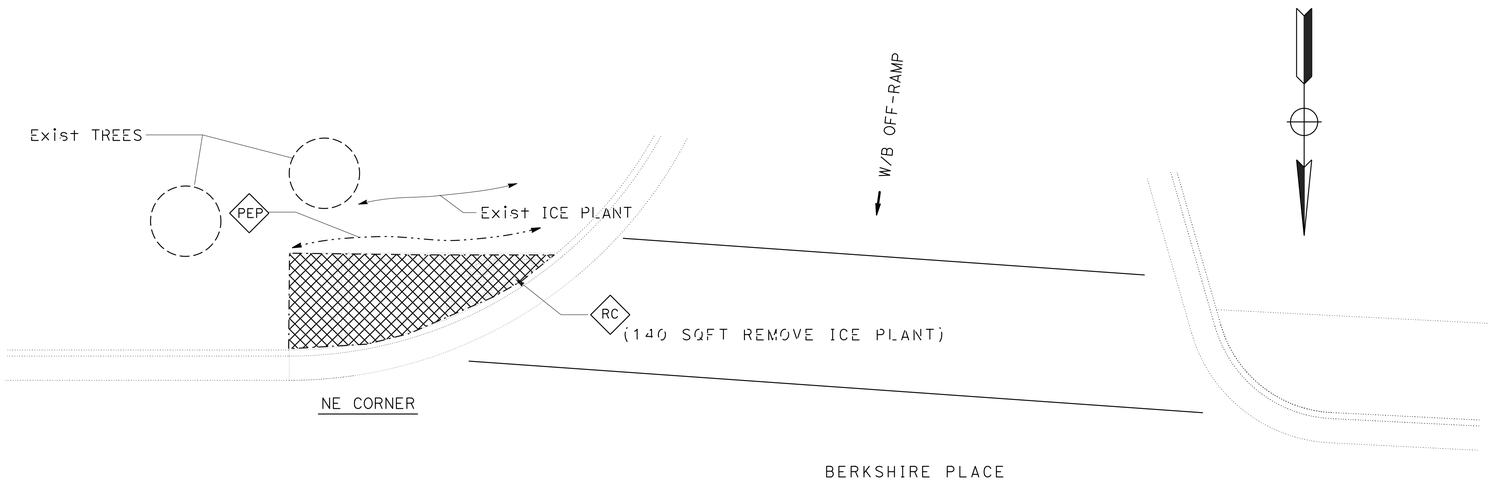


Loc 27
PLANTING PLAN

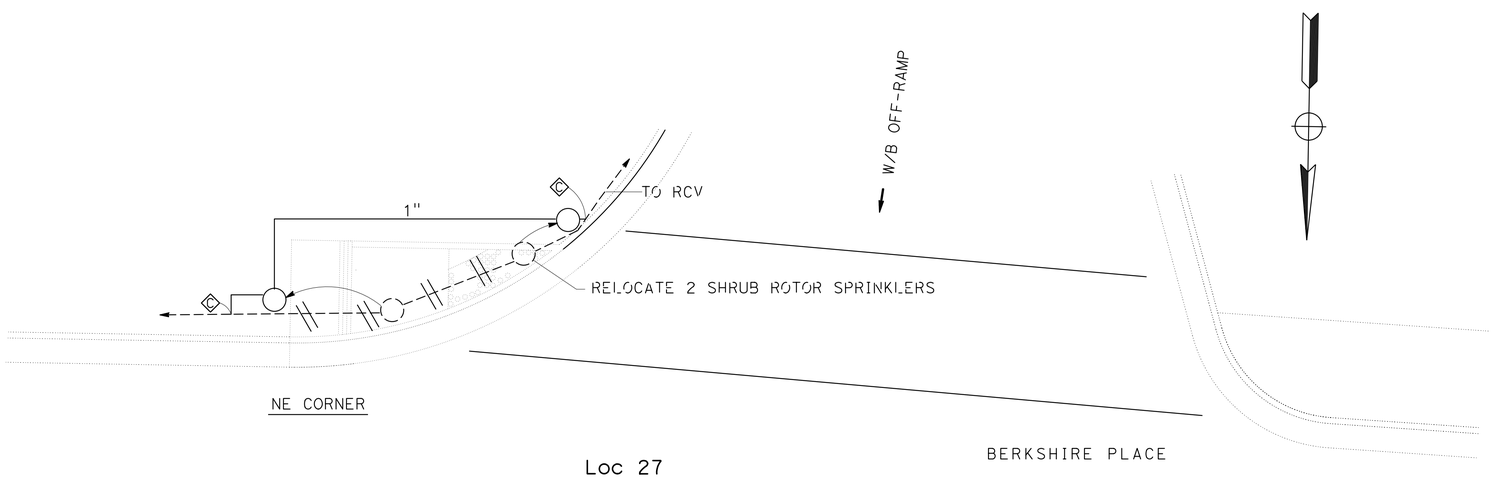


Loc 27
IRRIGATION PLAN

*APPROVED FOR PLANTING AND IRRIGATION WORK ONLY*

# IRRIGATION RELOCATION AND PLANT REMOVAL PLAN

NO SCALE

**IPP-2**

STATE OF CALIFORNIA - DEPARTMENT OF TRANSPORTATION
Caltrans LANDSCAPE ARCHITECTURE

SENIOR LANDSCAPE ARCHITECT: JENNIFER TAIRA
CALCULATED-DESIGNED BY: GEORGE OLGUIN
CHECKED BY: XUAN WU
REVISED BY
DATE REVISED

LAST REVISION 00-00-00
DATE PLOTTED => 10-MAR-2014
TIME PLOTTED => 13:42

| Dist | COUNTY | ROUTE | POST MILES TOTAL PROJECT | SHEET No. | TOTAL SHEETS |
|---|---|---|---|---|---|
| 07 | LA | 10,110,118 134,210,710 | Var | 102 | 152 |

George Olguin
LICENSED LANDSCAPE ARCHITECT

12-9-13
PLANS APPROVAL DATE

LICENSED LANDSCAPE ARCHITECT
GEORGE OLGUIN
NO. 4333
George Olguin
Signature
08-31-14
Renewal Date
10-31-13
Date
STATE OF CALIFORNIA

*THE STATE OF CALIFORNIA OR ITS OFFICERS OR AGENTS SHALL NOT BE RESPONSIBLE FOR THE ACCURACY OR COMPLETENESS OF SCANNED COPIES OF THIS PLAN SHEET.*

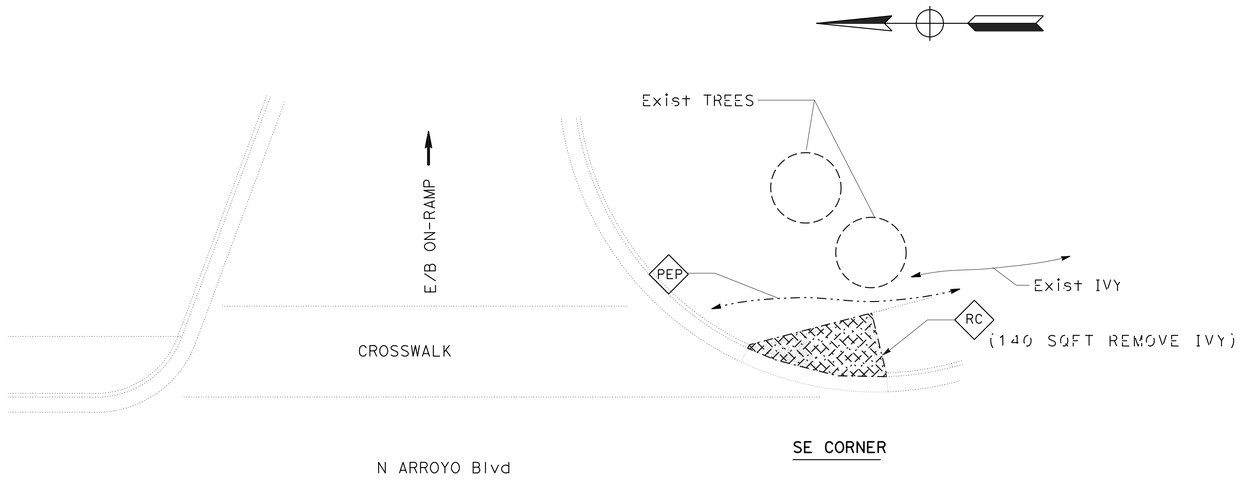


Loc 28
PLANTING PLAN

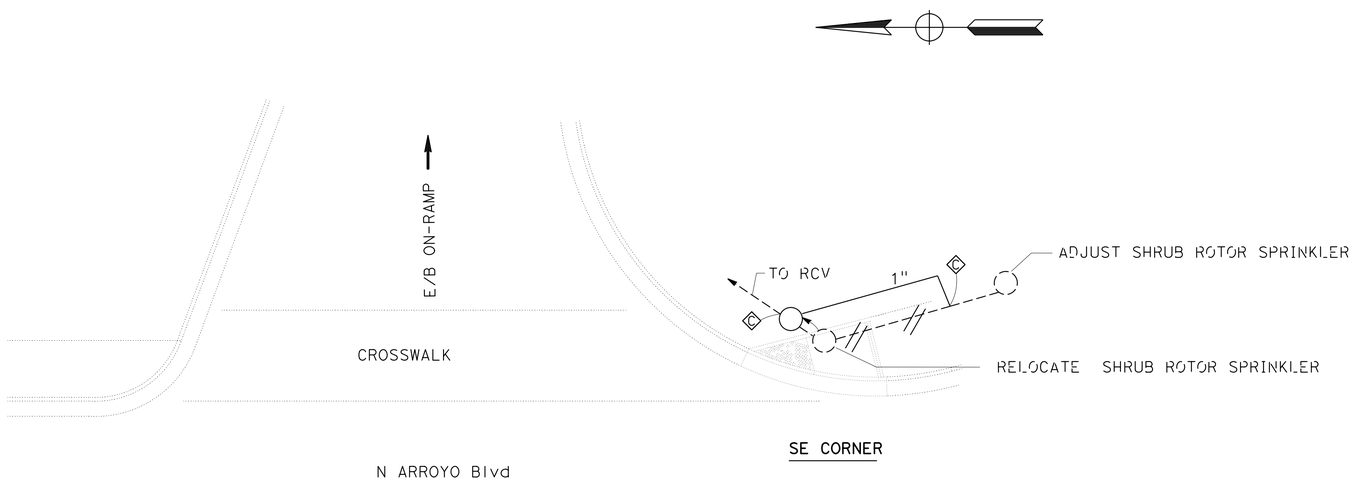


Loc 28
IRRIGATION PLAN

# IRRIGATION RELOCATION AND PLANT REMOVAL PLAN

NO SCALE

**IPP-3**

*APPROVED FOR PLANTING AND IRRIGATION WORK ONLY*

STATE OF CALIFORNIA - DEPARTMENT OF TRANSPORTATION
Caltrans LANDSCAPE ARCHITECTURE

SENIOR LANDSCAPE ARCHITECT: JENNIFER TAIRA
CALCULATED-DESIGNED BY: XUAN WU
CHECKED BY: GEORGE OLGUIN
REVISED BY
DATE REVISED

LAST REVISION 00-00-00
DATE PLOTTED => 10-MAR-2014
TIME PLOTTED => 13:42

| Dist | COUNTY | ROUTE | POST MILES TOTAL PROJECT | SHEET No. | TOTAL SHEETS |
|---|---|---|---|---|---|
| 07 | LA | 10,110,118 134,210,710 | Var | 103 | 152 |

George Olguin
LICENSED LANDSCAPE ARCHITECT

12-9-13
PLANS APPROVAL DATE

LICENSED LANDSCAPE ARCHITECT
GEORGE OLGUIN
NO. 4333
George Olguin
Signature
08-31-14
Renewal Date
10-31-13
Date
STATE OF CALIFORNIA

*THE STATE OF CALIFORNIA OR ITS OFFICERS OR AGENTS SHALL NOT BE RESPONSIBLE FOR THE ACCURACY OR COMPLETENESS OF SCANNED COPIES OF THIS PLAN SHEET.*

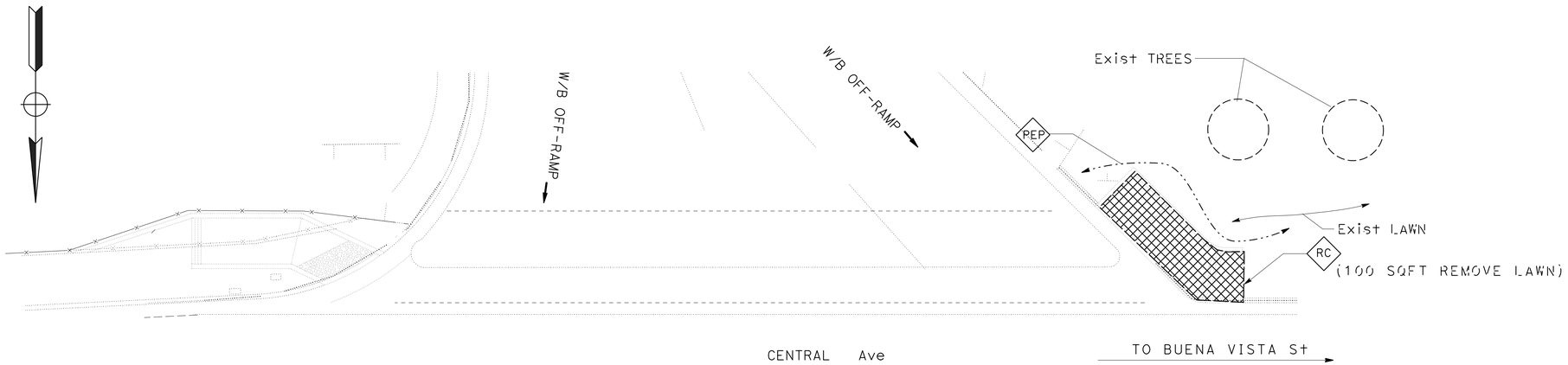


Loc 32

PLANT REMOVAL PLAN

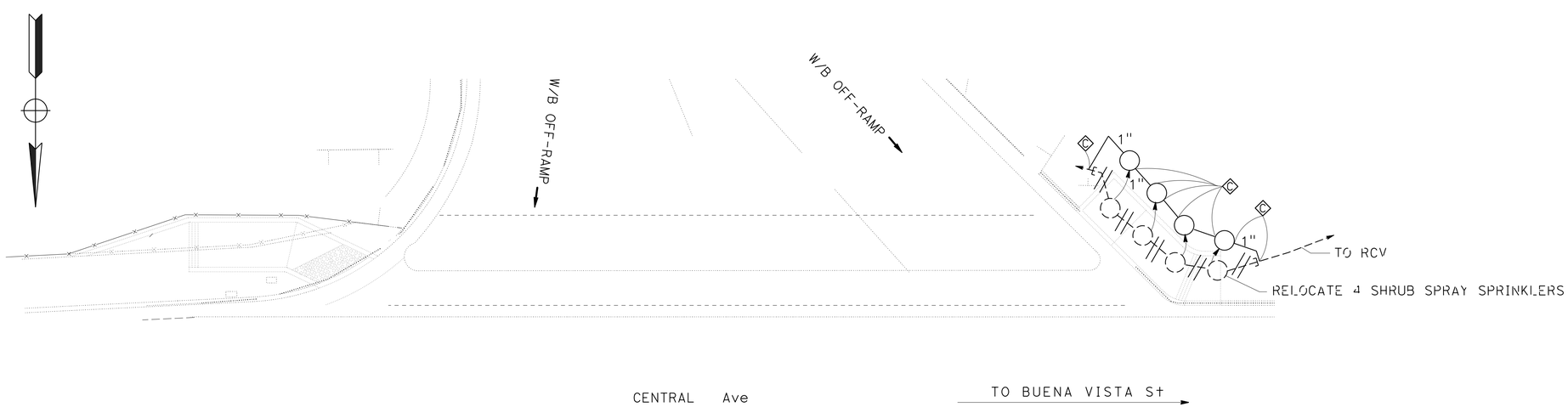


Loc 32

IRRIGATION PLAN

*APPROVED FOR PLANTING AND IRRIGATION WORK ONLY*

# IRRIGATION RELOCATION AND PLANT REMOVAL PLAN

NO SCALE **IPP-4**

STATE OF CALIFORNIA - DEPARTMENT OF TRANSPORTATION
Caltrans LANDSCAPE ARCHITECTURE

SENIOR LANDSCAPE ARCHITECT: JENNIFER TAIRA

CALCULATED-DESIGNED BY: XUAN WU
CHECKED BY: GEORGE OLGUIN

REVISED BY
DATE REVISED

LAST REVISION 00-00-00
DATE PLOTTED => 10-MAR-2014
TIME PLOTTED => 13:42

| Dist | COUNTY | ROUTE | POST MILES TOTAL PROJECT | SHEET No. | TOTAL SHEETS |
|---|---|---|---|---|---|
| 07 | LA | 10,110,118 134,210,710 | Var | 104 | 152 |

George Olguin
LICENSED LANDSCAPE ARCHITECT

12-9-13
PLANS APPROVAL DATE

LICENSED LANDSCAPE ARCHITECT
GEORGE OLGUIN
NO. 4333
George Olguin
Signature
08-31-14
Renewal Date
10-31-13
Date
STATE OF CALIFORNIA

*THE STATE OF CALIFORNIA OR ITS OFFICERS OR AGENTS SHALL NOT BE RESPONSIBLE FOR THE ACCURACY OR COMPLETENESS OF SCANNED COPIES OF THIS PLAN SHEET.*

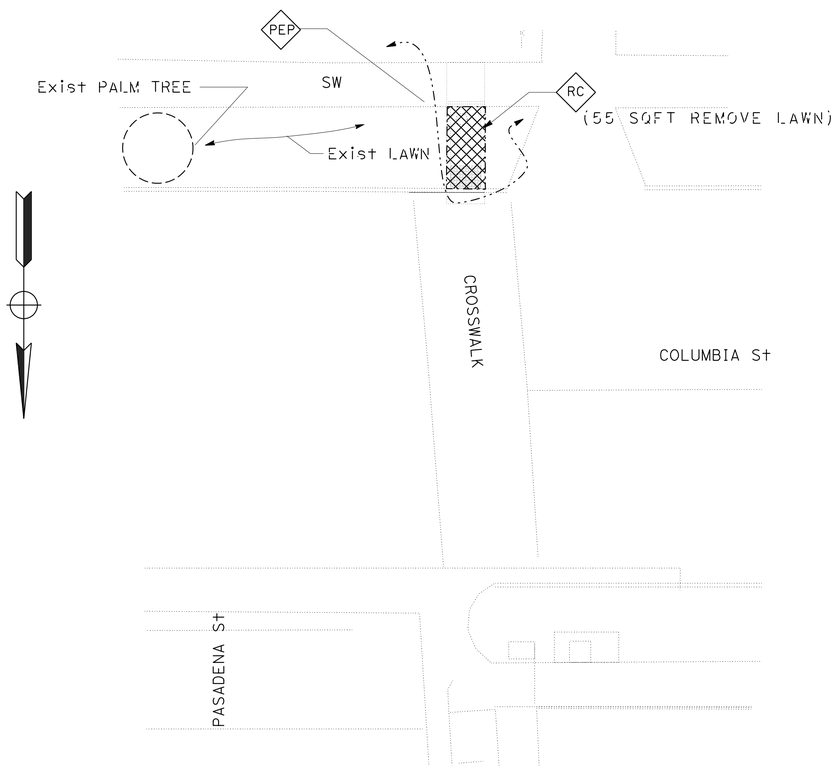


Loc 36
PLANTING PLAN

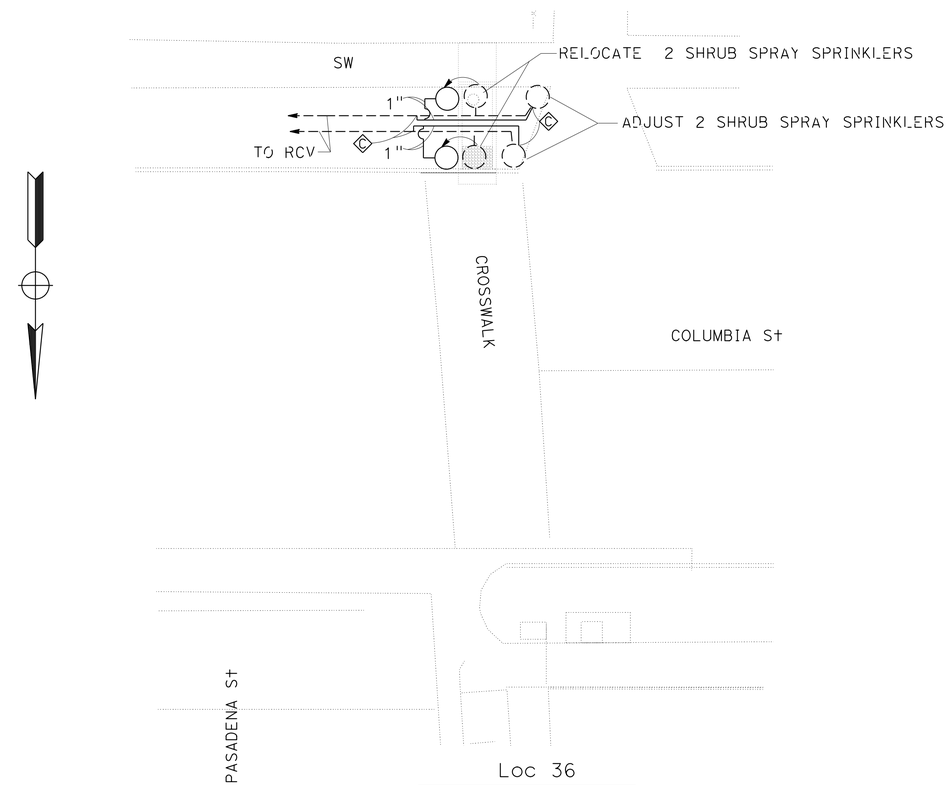


Loc 36
IRRIGATION PLAN

*APPROVED FOR PLANTING AND IRRIGATION WORK ONLY*

# IRRIGATION RELOCATION AND PLANT REMOVAL PLAN

NO SCALE

**IPP-5**

STATE OF CALIFORNIA - DEPARTMENT OF TRANSPORTATION
Caltrans LANDSCAPE ARCHITECTURE

SENIOR LANDSCAPE ARCHITECT: JENNIFER TAIRA
CALCULATED-DESIGNED BY: GEORGE OLGUIN
CHECKED BY: XUAN WU
REVISED BY
DATE REVISED

LAST REVISION 00-00-00
DATE PLOTTED => 10-MAR-2014
TIME PLOTTED => 13:42

| Dist | COUNTY | ROUTE | POST MILES TOTAL PROJECT | SHEET No. | TOTAL SHEETS |
|---|---|---|---|---|---|
| 07 | LA | 10,110,118 134,210,710 | Var | 105 | 152 |

George Olguin
LICENSED LANDSCAPE ARCHITECT
12-9-13
PLANS APPROVAL DATE

LICENSED LANDSCAPE ARCHITECT
GEORGE OLGUIN
NO. 4333
George Olguin
Signature
08-31-14
Renewal Date
10-31-13
Date
STATE OF CALIFORNIA

THE STATE OF CALIFORNIA OR ITS OFFICERS OR AGENTS SHALL NOT BE RESPONSIBLE FOR THE ACCURACY OR COMPLETENESS OF SCANNED COPIES OF THIS PLAN SHEET.

## SUBTOTALS PER VALVE ON LATERAL SUPPLY SIDE OF CONTROL VALVE

| DESCRIPTION | | | UNIT | SHEET NUMBER IP-1 | IP-2 | IP-3 | IP-4 | IP-5 | SUB TOTALS | UNIT | DESCRIPTION | |
|---|---|---|---|---|---|---|---|---|---|---|---|---|
| PLASTIC PIPE SUPPLY LINE | SCH 40 | 1" | LF | 100 | 100 | 50 | 50 | 50 | 350 | 1" | SCH 40 | PLASTIC PIPE SUPPLY LINE |
| GSP | | | | | | | | | | | | GSP |
| DIP | | | | | | | | | | | | DIP |
| SPRINKLER TYPE | | | | | | | | | | | | SPRINKLER TYPE |

## TOTAL QUANTITIES

| TOTALS | UNIT | DESCRIPTION | | |
|---|---|---|---|---|
| | | | | BPA |
| | | | | IC (BATTERY) |
| | | | CEC | VALVES AND ASSEMBLIES |
| | | | RCV | VALVES AND ASSEMBLIES |
| | | | GV | VALVES AND ASSEMBLIES |
| | | | QCV | VALVES AND ASSEMBLIES |
| | | | BV | VALVES AND ASSEMBLIES |
| | | | FAU | VALVES AND ASSEMBLIES |
| | | | CSP | CONDUIT |
| | | | WSP | CONDUIT |
| 350 | LF | 1" | SCH 40 | PLASTIC PIPE SUPPLY LINE |
| | | | | GSP |
| | | | | DIP |
| | | | | SPRINKLER TYPE |

REVISED BY: YI SU
DATE REVISED
CALCULATED-DESIGNED BY: YI SU
CHECKED BY: JAMES WU
SENIOR LANDSCAPE ARCHITECT: JENNIFER TAITA
STATE OF CALIFORNIA - DEPARTMENT OF TRANSPORTATION
Caltrans® LANDSCAPE ARCHITECTURE

# IRRIGATION QUANTITIES

IQ-1

| Dist | COUNTY | ROUTE | POST MILES TOTAL PROJECT | SHEET No. | TOTAL SHEETS |
|---|---|---|---|---|---|
| 07 | LA | 10, 110, 118, 134, 210, 710 | Var | 106 | 152 |

REGISTERED ELECTRICAL ENGINEER 4-30-12 DATE

12-9-13
PLANS APPROVAL DATE

REGISTERED PROFESSIONAL ENGINEER JESSE RUELAS No. E015604 Exp. 12-31-15 ELECTRICAL STATE OF CALIFORNIA

*THE STATE OF CALIFORNIA OR ITS OFFICERS OR AGENTS SHALL NOT BE RESPONSIBLE FOR THE ACCURACY OR COMPLETENESS OF SCANNED COPIES OF THIS PLAN SHEET.*

## EXISTING POLE AND EQUIPMENT SCHEDULE

| No. | STANDARD Type | STANDARD SMA | STANDARD LMA | VEH SIG MTG Mast Arm | VEH SIG MTG Pole | PED SIGNAL MTG | PPB Ø | PPB ARROW | HPS LUMINAIRE | SPECIAL REQUIREMENTS |
|---|---|---|---|---|---|---|---|---|---|---|
| A | 17-2-70 | 15′ | 12′ | MAS | SV-1-T | SP-1-T | | | 310 W | |
| B | PPB POST | | | | | | 2 | →(N) | | RL Exist. ppb |
| C | 1-A | | | | TV-1-T | SP-1-T | 4 | → | | |
| D | 17-2-70 | 15′ | 12′ | MAS | SV-1-T (N) | SP-1-T | | | 310 W | |
| E | PPB POST (N) | | | | | | 4 | ←(N) | | |
| F | 1-A | | | | TV-1-T | SP-1-T (N) | 2 | → | | RC Exist. SP-1-T |
| G | 17-2-70 | 15′ | 12′ | MAS | SV-2-T (N) | SP-1-T | 2 | → | 310 W | |
| H | 24-3-100 (N) | 35′(N) | 15′(N) | MAS (N) | SV-1-T (N) | SP-1-T (N) | 2 | →(N) | 310 W(N) | |
| I | 1-A | | | | TV-1-T | | | | | RC Exist. ppb |

(N) = NEW

## PHASE DIAGRAM




## LEGEND: (THIS SHEET ONLY)

1. EXISTING MODEL 170 CONTROLLER ASSEMBLY TO REMAIN.
2. RE-ROUTE EXISTING SIC CABLE TO NEW CONDUIT.
3. INSTALL 1½"C, 3 CSC.
4. RC EXISTING MASTARM MOUNTED SIGN, VEHICLE SIGNAL HEAD, PED SIGNAL, TRAFFIC SIGNAL STANDARD, LUMINAIRE, ADJACENT TRAFFIC SIGNAL PULL BOX AND STREET LIGHTING PULL BOX AND LUMINAIRE.
   RL INTERNAL ILLUMINATE STREET NAME SIGN TO NEW POLE.
5. STREET LIGHTING PULL BOX TO REMAIN.
6. RC EXISTING R17B SIGN. INSTALL NEW R3-18 SIGN.
7. RC Exist. SV-1-T AND PPB.

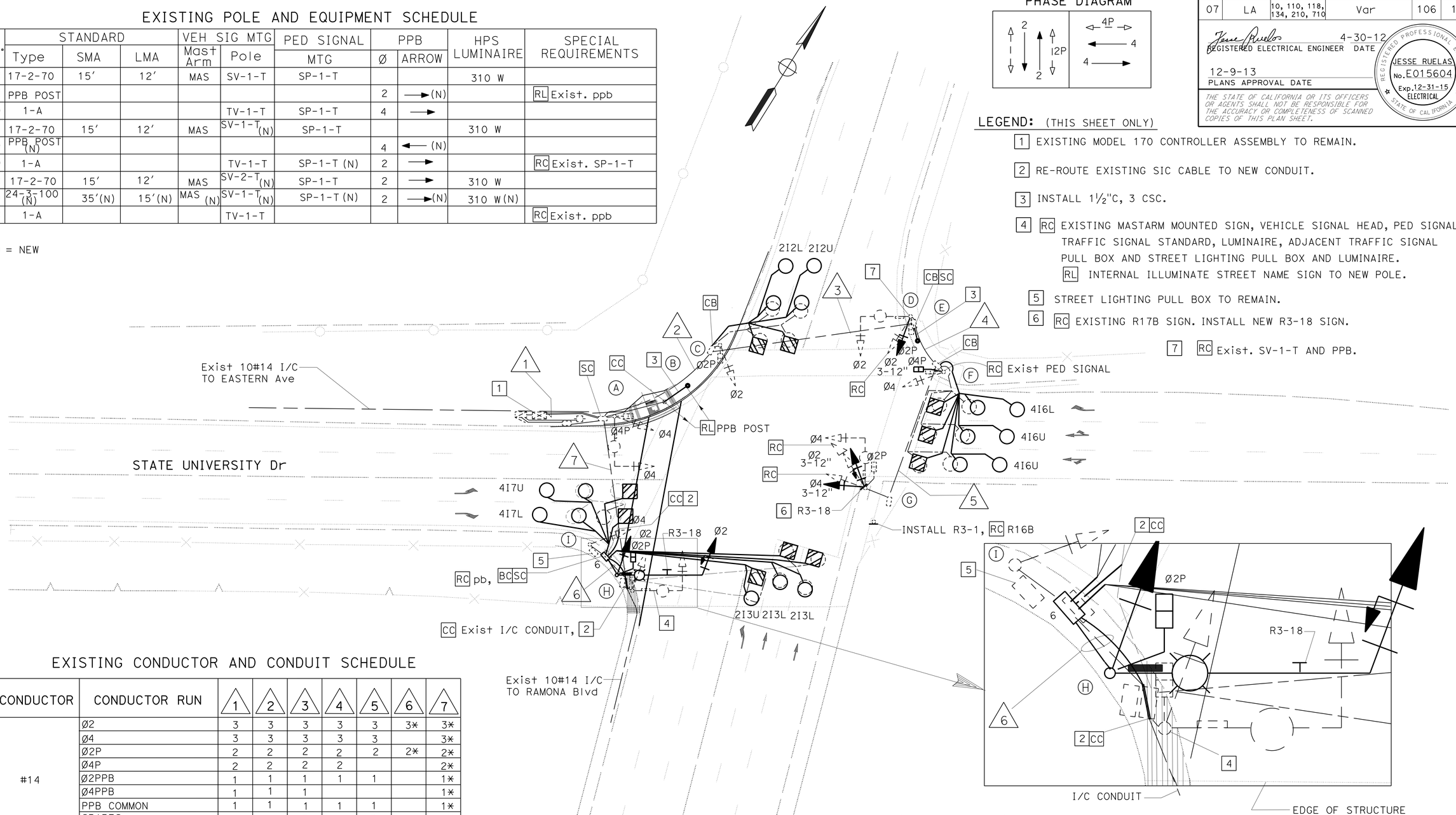


## EXISTING CONDUCTOR AND CONDUIT SCHEDULE

| CONDUCTOR | CONDUCTOR RUN | 1 | 2 | 3 | 4 | 5 | 6 | 7 |
|---|---|---|---|---|---|---|---|---|
| #14 | Ø2 | 3 | 3 | 3 | 3 | 3 | 3* | 3* |
| | Ø4 | 3 | 3 | 3 | 3 | 3 | | 3* |
| | Ø2P | 2 | 2 | 2 | 2 | 2 | 2* | 2* |
| | Ø4P | 2 | 2 | 2 | 2 | | | 2* |
| | Ø2PPB | 1 | 1 | 1 | 1 | 1 | | 1* |
| | Ø4PPB | 1 | 1 | 1 | | | | 1* |
| | PPB COMMON | 1 | 1 | 1 | 1 | 1 | | 1* |
| | SPARES | | | 3 | | 3 | | 3* |
| | TOTAL | 13 | 13 | 16 | 12 | 13 | 5* | 16* |
| #10 | SIGNAL COMMON | 1 | 1 | 1 | 1 | 1 | 1* | 1* |
| #8 | LUMINAIRES | | 2 | 2 | 2 | 2 | 2(N) | 2(N) |
| #10 | I.I.S.N.S. | | | | | | 2(N) | 2(N) |
| DLC | Ø2 | 4 | 2 | | | | | 2 |
| | Ø4 | 4 | 2 | 2 | 2 | | | 2 |
| #14 | 12CSC CABLE | | | | | | 1(N) | 2(N) |
| 10#14 | SIC | 2 | | | | | 1 | 1 |
| | CONDUITS | | | | | | 2"(N) | |
| | | 2-3" | 2" | 2" | 2" | 2" | 2" | 2-2" |

(N) = NEW
(*) = RC EXISTING CONDUCTORS

## NOTES: (THIS SHEET ONLY)

1. AT SW CORNER, INSTALL NEW TYPE 24 STANDARD COMPLETE PRIOR TO WHEEL CHAIR CONSTRUCTION.
2. FOR CONDUIT RUN No. 7, REUSE EXISTING DLC, I.I.S.N.S. CONDUCTORS, LUMINAIRE CONDUCTORS AND EXISTING SIC CABLE. EXISTING SIC CABLE AND DLC SHALL NOT BE SPLICED.
3. AB EXISTING LOOPS.

# MODIFY SIGNAL AND LIGHTING
## W/B OFF RAMP AT CAMPUS RD

SCALE: 1"=20′

*APPROVED FOR ELECTRICAL WORK ONLY*

**E-1**

STATE OF CALIFORNIA - DEPARTMENT OF TRANSPORTATION
Caltrans® TRAFFIC DESIGN
FUNCTIONAL SUPERVISOR: YI TSAU
CALCULATED-DESIGNED BY: LIEN VO
CHECKED BY: JESSE RUELAS
REVISED BY / DATE REVISED

LAST REVISION 04-19-12
DATE PLOTTED => 10-MAR-2014
TIME PLOTTED => 13:42

| Dist | COUNTY | ROUTE | POST MILES TOTAL PROJECT | SHEET No. | TOTAL SHEETS |
|---|---|---|---|---|---|
| 07 | LA | 10, 110, 118, 134, 210, 710 | Var | 107 | 152 |

REGISTERED ELECTRICAL ENGINEER 4-30-12 DATE

12-9-13
PLANS APPROVAL DATE

REGISTERED PROFESSIONAL ENGINEER JESSE RUELAS No. E015604 Exp. 12-31-13 ELECTRICAL STATE OF CALIFORNIA

*THE STATE OF CALIFORNIA OR ITS OFFICERS OR AGENTS SHALL NOT BE RESPONSIBLE FOR THE ACCURACY OR COMPLETENESS OF SCANNED COPIES OF THIS PLAN SHEET.*

## EXISTING POLE AND EQUIPMENT SCHEDULE

| NO. | STANDARD Type | STANDARD Sig M.A. | STANDARD Lum M.A. | VEH SIG MTG Mast Arm | VEH SIG MTG Pole | PED SIG. MTG | APS(N) Ø | APS(N) ARROW | HPS LUMINAIRE | SPECIAL REQUIREMENTS |
|---|---|---|---|---|---|---|---|---|---|---|
| 1 | PPB POST (N) | - | - | - | - | - | 7 | ← (N) | - | - |
| 2 | 29-5-80 | 50′ | 15′ | 2-MAS | SV-2-T | SP-2-CS | 7 2 | ← / → | 200W | McKinley Ave |
| 3 | 17-2-70 | 15′ | 12′ | MAS | SV-1-T | SP-1-CS | 2 | ← | 200W | Orange Grove Ave |
| 4 | 1-A | - | - | - | TV-2-T | SP-1-CS | 8 | → | - | - |
| 5 | 19-4-70 | 25′ | 12′ | 2-MAS | SV-1-T | SP-1-CS | 8 | ← | 200W | McKinley Ave |
| 6 | 29-5-80 | 50′ | 15′ | - | SV-2-T | SP-1-CS | 6 | → | 200W | Orange Grove Ave |
| 7 | 1-A | - | - | - | TV-1-T | - | 6 | ← | - | - |
| 8 | 1-A | - | - | - | TV-2-T | SP-1-CS | - | - | - | - |
| 9 | 15 | - | 12′ | - | SV-2-T | SP-1-CS | 7 | ← | 200W | - |

APS - ACCESSIBLE PEDESTRIAN SIGNAL( RC Exist. PPB, INSTALL APS)
(N) = NEW

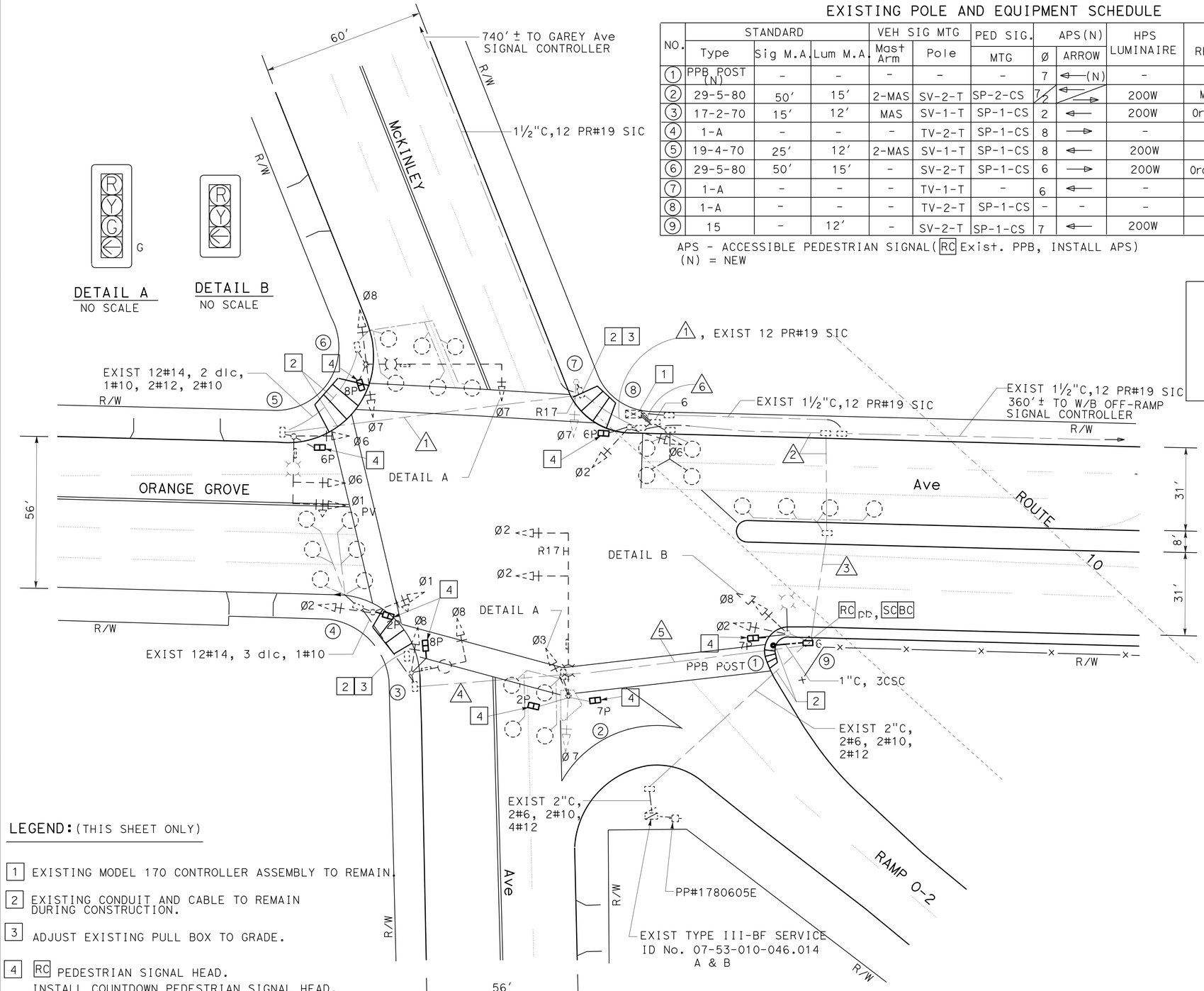


## PHASE DIAGRAM

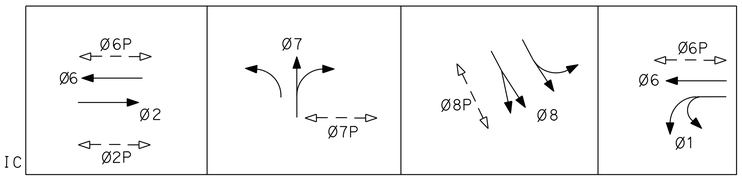


## EXISTING CONDUCTOR AND CONDUIT SCHEDULE

| AWG OR CABLE | CONDUCTOR RUN | 1 | 2 | 3 | 4 | 5 | 6 |
|---|---|---|---|---|---|---|---|
| #14 | Ø1 | 3 | 3 | 3 | 3 | 3 | 6 |
| | Ø2 | - | 3 | 3 | 3 | 3 | 6 |
| | Ø6 | 3 | - | - | - | - | 3 |
| | Ø7 | 3 | 3 | 3 | - | 3 | 6 |
| | Ø8 | 3 | 3 | 3 | 3 | 3 | 6 |
| | Ø2P | - | 2 | 2 | 2 | 2 | 2 |
| | Ø6P | 2 | - | - | - | - | 2 |
| | Ø7P | - | 2 | 2 | - | 2 | 2 |
| | Ø8P | 2 | 2 | 2 | 2 | 2 | 4 |
| | Ø2PPB | - | 1 | 1 | 1 | 1 | 1 |
| | Ø6PPB | 1 | - | - | - | - | 1 |
| | Ø7PPB | - | 1 | 1 | - | 1 | 1 |
| | Ø8PPB | 1 | 1 | 1 | 1 | 1 | 2 |
| | PPB COMMON | 1 | 1 | 1 | 1 | 1 | 2 |
| | SPARES | 3 | 3 | 3 | 3 | 3 | 6 |
| | TOTAL | 22 | 25 | 25 | 19 | 25 | 50 |
| #12 | IISNS | 2 | 2 | 2 | 2 | 2 | 2 |
| | TOTAL | 2 | 2 | 2 | 2 | 2 | 2 |
| #10 | SIGNAL COMMON | 1 | 1 | 1 | 1 | 1 | 2 |
| | LUMINAIRES | 2 | 2 | 2 | 2 | 2 | 2 |
| | TOTAL | 3 | 3 | 3 | 3 | 3 | 3 |
| # 6 | SIGNAL SERVICE | - | 2 | 2 | - | - | 2 |
| dlc | Ø1 DETECTOR | - | 1 | - | - | - | 1 |
| | Ø2 DETECTOR | - | 3 | 3 | 3 | 3 | 3 |
| | Ø6 DETECTOR | - | - | - | - | - | 2 |
| | Ø7 DETECTOR | - | 2 | 2 | - | 2 | 2 |
| | Ø8 DETECTOR | 2 | - | - | - | - | 2 |
| | TOTAL | 2 | 6 | 5 | 3 | 5 | 2+8 |
| 12Pr#19 | SIC | 1 | | | | | 1 |
| CONDUIT SIZE | | 2" | 2" | 2" | 2" | 2" | 3-3" |

** ALL EQUIPMENTS ARE EXISTING UNLESS OTHERWISE NOTED

LEGEND: (THIS SHEET ONLY)

1. EXISTING MODEL 170 CONTROLLER ASSEMBLY TO REMAIN.
2. EXISTING CONDUIT AND CABLE TO REMAIN DURING CONSTRUCTION.
3. ADJUST EXISTING PULL BOX TO GRADE.
4. RC PEDESTRIAN SIGNAL HEAD. INSTALL COUNTDOWN PEDESTRIAN SIGNAL HEAD.

# MODIFY SIGNAL AND LIGHTING
## ROUTE 10 EB ON FROM ORANGE GROVE AVE

SCALE: 1"=20′

*APPROVED FOR ELECTRICAL WORK ONLY*

E-2

STATE OF CALIFORNIA - DEPARTMENT OF TRANSPORTATION
Caltrans TRAFFIC DESIGN
FUNCTIONAL SUPERVISOR: YI TSAU
CALCULATED-DESIGNED BY: LIEN VO
CHECKED BY: JESSE RUELAS
REVISED BY / DATE REVISED

LAST REVISION 04-24-12 DATE PLOTTED => 10-MAR-2014 TIME PLOTTED => 13:42

BORDER LAST REVISED 7/2/2010 | USERNAME => s116260 DGN FILE => 727820ua002.dgn | RELATIVE BORDER SCALE IS IN INCHES 0 1 2 3 | UNIT 1880 | PROJECT NUMBER & PHASE 07000005381

| Dist | COUNTY | ROUTE | POST MILES TOTAL PROJECT | SHEET No. | TOTAL SHEETS |
|---|---|---|---|---|---|
| 07 | LA | 10, 110, 118, 134, 210, 710 | Var | 108 | 152 |

REGISTERED ELECTRICAL ENGINEER 4-20-12 DATE

12-9-13
PLANS APPROVAL DATE

REGISTERED PROFESSIONAL ENGINEER JESSE RUELAS No. E015604 Exp. 12-31-15 ELECTRICAL STATE OF CALIFORNIA

*THE STATE OF CALIFORNIA OR ITS OFFICERS OR AGENTS SHALL NOT BE RESPONSIBLE FOR THE ACCURACY OR COMPLETENESS OF SCANNED COPIES OF THIS PLAN SHEET.*

## EXISTING POLE AND EQUIPMENT SCHEDULE

| NO. | STANDARD Type | STANDARD Sig M.A. | STANDARD Lum M.A. | VEH SIG MTG Mast Arm | VEH SIG MTG Pole | PED SIG. MTG | PPB Ø | PPB ARROW | HPS LUMINAIRE | I.I.S.N.S. |
|---|---|---|---|---|---|---|---|---|---|---|
| A | 29-5-70 | 45′ | 15′ | 2-MAS | SV-1-T | SP-1-CS | 4 | ← | 400W | Sanchez Dr |
| B | 1-A | - | - | - | TV-1-T | SP-1-CS | 6 | → | - | - |
| C | 15 | - | 15′ | - | SV-2-T | SP-1-CS | 6 | ← | 400W | - |
| D | 26-4-70 | 30′ | 15′ | MAS | SV-2-T | SP-1-CS | 2 | → | 400W | Sanchez Dr |
| E | 24-4-70 | 40′ | 15′ | MAS | SV-1-T | SP-1-CS | 2 | ← | 400W | Central Ave |
| F | 1-A | - | - | - | TV-1-T | SP-1-CS | 4 | → | - | - |

## PHASE DIAGRAM

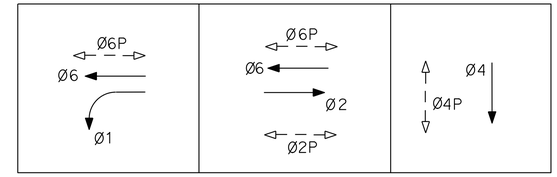


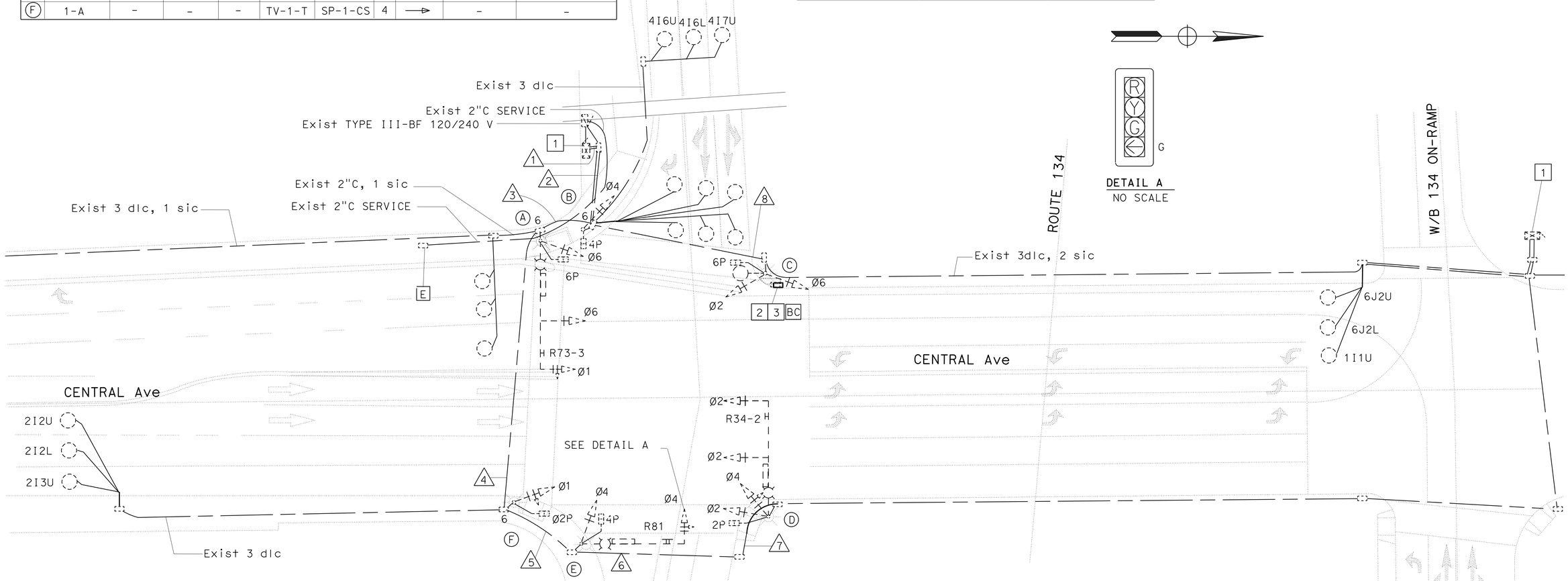


## EXISTING CONDUCTOR AND CONDUIT SCHEDULE

| AWG OR CABLE | CONDUCTOR RUN | 1 | 2 | 3 | 4 | 5 | 6 | 7 | 8 |
|---|---|---|---|---|---|---|---|---|---|
| #14 | 28CSC | 6 | 6 | 4 | 3 | 1 | 1 | 2 | 1 |
| #10 | IISNS | - | 2 | 2 | 2 | 2 | 2 | 2 | - |
| #8 | SIGNAL SERVICE | | | | | | | | |
| | LIGHTING | - | 4 | 2 | - | 2 | 2 | 2 | 2 |
| | SIGNAL COMMON | - | - | - | - | - | - | - | - |
| dlc | Ø1 DETECTOR | 1 | 1 | - | - | - | - | - | 1 |
| | Ø2 DETECTOR | 3 | 3 | 3 | 3 | - | - | - | - |
| | Ø4 DETECTOR | 6 | 6 | - | - | - | - | - | - |
| | Ø6 DETECTOR | 2 | 2 | - | - | 2 | 2 | - | 2 |
| 4#18 | SENSOR CABLE | 1 | 1 | 1 | - | | - | - | - |
| 25Pr#19 | SIC | - | - | - | - | - | - | - | 1 |
| 6Pr#19 | SIC | 2 | 2 | 1 | - | - | 2 | - | 2 |
| | CONDUIT SIZE | 2-3" | 2-3" | 3" | 3" | 3" | 3" | 3" | 3" |

## LEGEND: (THIS SHEET ONLY)

1. EXISTING MODEL 170 CONTROLLER ASSEMBLY TO REMAIN.
2. EXISTING CONDUIT AND CABLE TO REMAIN.
3. RC EXISTING PULL BOX.

# MODIFY SIGNAL AND LIGHTING
## ROUTE 134 E/B OFF RAMP AT CENTRAL Ave

SCALE: 1"=20′

*APPROVED FOR ELECTRICAL WORK ONLY*

**E-3**

REVISED BY | DATE REVISED
LIEN VO | JESSE RUELAS
CALCULATED-DESIGNED BY | CHECKED BY
FUNCTIONAL SUPERVISOR | YI TSAU

STATE OF CALIFORNIA - DEPARTMENT OF TRANSPORTATION
Caltrans TRAFFIC DESIGN

LAST REVISION 04-19-12 | DATE PLOTTED => 10-MAR-2014 | TIME PLOTTED => 13:42

| Dist | COUNTY | ROUTE | POST MILES TOTAL PROJECT | SHEET No. | TOTAL SHEETS |
|---|---|---|---|---|---|
| 07 | LA | 10, 110, 118 134, 210, 710 | Var | 109 | 152 |

REGISTERED ELECTRICAL ENGINEER 4-20-12 DATE

12-9-13
PLANS APPROVAL DATE

REGISTERED PROFESSIONAL ENGINEER CECILIO BURCIAGA No. E015302 Exp. 3/31/15 ELECTRICAL STATE OF CALIFORNIA

*THE STATE OF CALIFORNIA OR ITS OFFICERS OR AGENTS SHALL NOT BE RESPONSIBLE FOR THE ACCURACY OR COMPLETENESS OF SCANNED COPIES OF THIS PLAN SHEET.*

## NOTE:

FOR ACCURATE RIGHT OF WAY DATA, CONTACT RIGHT OF WAY ENGINEERING AT THE DISTRICT OFFICE.

## PROJECT NOTES:

1. EXIST 120/240 V SERVICE, 60 A IN-LINE FUSE.
2. PULL OUT Exist CONDUCTORS. AB Exist CONDUIT.
3. INSTALL 2"C.
4. RC **EXIST CONDUCTORS EXCEPT FOR dlc.**
5. RC **EXIST CONDUCTORS, EXCEPT FOR** SERVICE, INTERCONNECT CONDUCTORS AND dlc.
6. INSTALL CITY OF LA PULL BOX (PB3). (SEE SHEETS E-10 FOR DETAILS)
7. PED XING (BLACK ON YELLOW)

## EXISTING SIGNAL STANDARD SCHEDULE

| No. | Type | FOUNDATION TYPE | PPB TYPE | PPB Ø |
|---|---|---|---|---|
| 1 | 332 Cab | F-332 | — | — |
| 2 | CD953C-7 | BSL | 6" | 8 |
| 3 | 1 | F-1 | 4" | 8 |

SEE CITY OF LOS ANGLES STANDARD PLANS FOR POLE AND FOUNDATION TYPE.

## CONDUIT AND CONDUCTOR SCHEDULE

| SIZE No. | CABLE/WIRE | CONDUIT RUN 1 | 2 | 3 | 4 | 5 |
|---|---|---|---|---|---|---|
| MULTI | 3 CSC, 3#14 | 1 | | | | |
| | 5 CSC, 5#14 | 3 | | | | |
| | 13 CSC, 12#14 & 1#10 (COM) | | | | | |
| | 28 CSC, 27#14 & 1#10 (COM) | | 1 | 1 | 1 | 1 |
| #6 | SERVICE | | | | | 2 |
| | | | | | | |
| #18 | dlc (2 PR) | | | | 1 | 1 |
| | | | | | | |
| #22 | I/C (12 PR) | | | | | 1 |
| CONDUIT SIZE | | 2" | 2" | 2"* | 2"* | 2-3"* |

* - EXISTING CONDUIT

Exist PHASE DIAGRAM

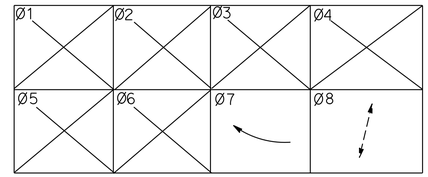


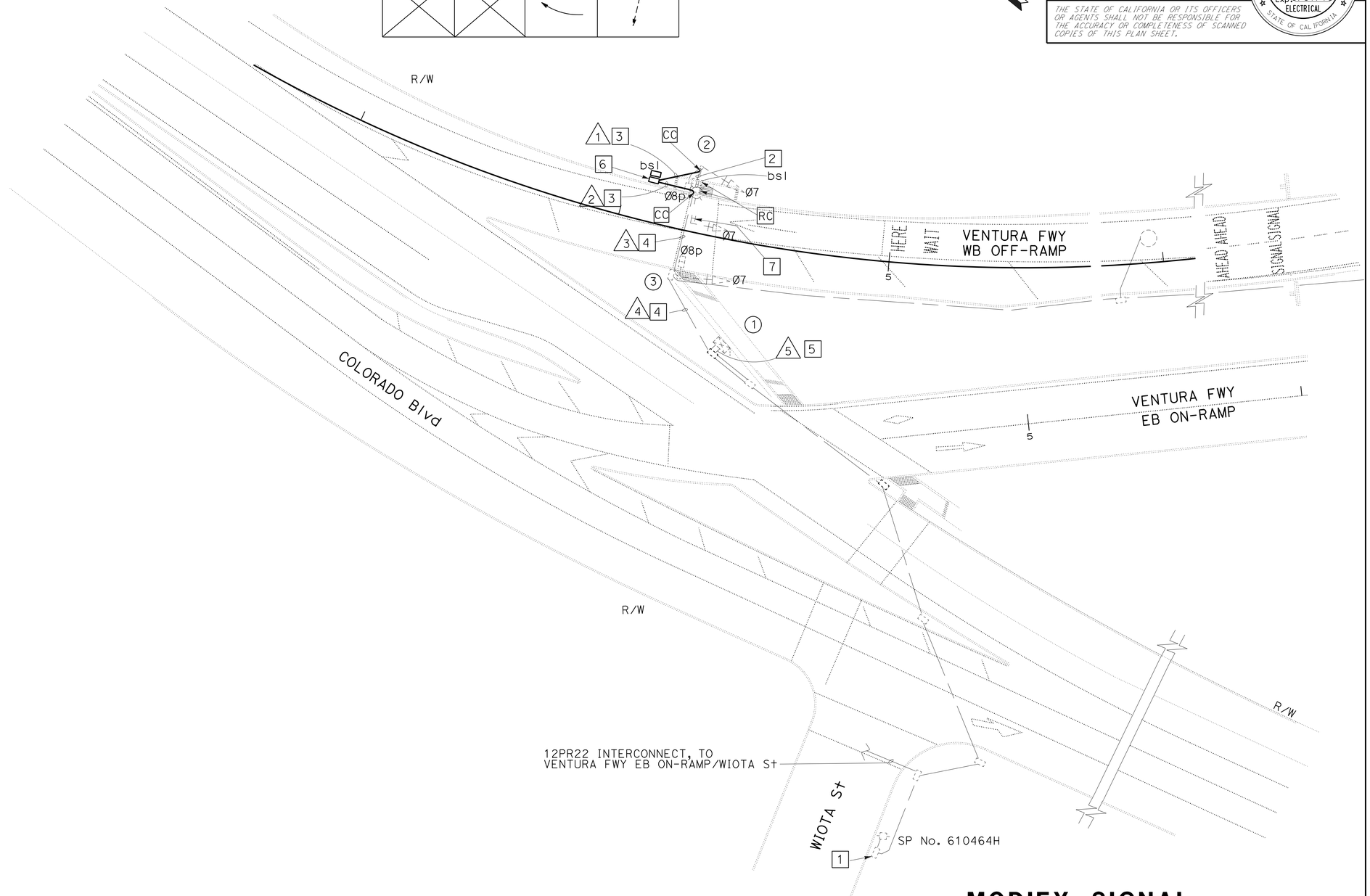


# MODIFY SIGNAL
## (CITY)
## COLORADO BL: VENTURA FWY WB OFF RAMP
## LADOT: INTERSECTION #03950

SCALE: 1" = 20'

*APPROVED FOR ELECTRICAL WORK ONLY*

**E-4**

STATE OF CALIFORNIA - DEPARTMENT OF TRANSPORTATION
Caltrans® TRAFFIC DESIGN

FUNCTIONAL SUPERVISOR: YI TSAU
CALCULATED-DESIGNED BY: CECILIO BURCIAGA
CHECKED BY: YI TSAU
REVISED BY / DATE REVISED

LAST REVISION 08-7-13
DATE PLOTTED => 10-MAR-2014
TIME PLOTTED => 13:42

| Dist | COUNTY | ROUTE | POST MILES TOTAL PROJECT | SHEET No. | TOTAL SHEETS |
|---|---|---|---|---|---|
| 07 | LA | 10, 110, 118 134, 210, 710 | Var | 110 | 152 |

REGISTERED ELECTRICAL ENGINEER 4-20-12 DATE

12-9-13
PLANS APPROVAL DATE

REGISTERED PROFESSIONAL ENGINEER CECILIO BURCIAGA No. E015302 Exp. 3/31/15 ELECTRICAL STATE OF CALIFORNIA

*THE STATE OF CALIFORNIA OR ITS OFFICERS OR AGENTS SHALL NOT BE RESPONSIBLE FOR THE ACCURACY OR COMPLETENESS OF SCANNED COPIES OF THIS PLAN SHEET.*

## NOTE:

FOR ACCURATE RIGHT OF WAY DATA, CONTACT RIGHT OF WAY ENGINEERING AT THE DISTRICT OFFICE.

## PROJECT NOTES: (THIS SHEET)

1. INSTALL 1.5"C, 3#6 AWG CONDUCTORS
2. INSTALL CONNECTING DEVICES AND ONE APPROVED FUSE HOLDER WITH 30 AMP FUSE BETWEEN EACH SERVICE WIRE (NOT NEUTRAL WIRE) OR SERVICE WIRE CONNECTING DEVICE AND ST. LIGHTING CKT WIRE.
3. MULTIPLE SERVICE LOCATION, INSTALL TYPE 3 "COMPOSITE/POLYMER" SERVICE PULL BOX AND 10' OF 2" GALVANIZED CONDUIT SERVICE RISER ON ADJACENT POLE. INSTALL PULL BOX NO CLOSER THAN 5' AND NO FURTHER THAN 15' FROM THE SERVICE POLE. (SEE E-8 FOR "COMPOSITE/POLYMER" TYPE 3 PULL BOX DETAILS)
4. RC EXISTING LUMINAIRE, EXISTING WIRES BETWEEN LUMINAIRE AND PULL BOX AND INSTALL NEW 2#10 AWG CONDUCTORS.
5. TAPE ENDS OF SPARE WIRE IN PULL BOX.
6. JOIN NEW CONDUIT TO EXISTING STUB OUT.
7. CONNECT SERIES WIRING PER SERIES WIRING DIAGRAM WHERE APPLICABLE AS SHOWN ON SHEET E-6.
8. INSTALL TYPE 2 "COMPOSITE/POLYMER" MATERIAL PULLBOX WITH BOLT DOWN LID. (SEE PAGE E-9 FOR "COMPOSITE/POLYMER" TYPE 2 PULL BOX DETAILS)

## LEGEND: (THIS SHEET ONLY)

- EXISTING CONDUIT
- NEW 1.5" CONDUIT
- EXISTING ELECTROLIER TO REMAIN.
- CITY OF LA PULL BOX (SEE SHEET E-8 FOR DETAILS)
- REMOVE EXISTING PULL BOX.

STATE MAINTENANCE AGREEMENT
CITY CONTRACT No. 65895
MAINTAINED BY CITY

## WARNING

BEFORE STARTING WORK ON EXISTING SERIES LIGHTING CIRCUITS, THE CONTRACTOR MUST OBTAIN DAILY SAFETY CIRCUIT CLEARANCE FROM LABSL, DISCONNECT CIRCUITS AND PLACE "MEN AT WORK" SIGNS NEAR OPEN SWITCHES BEFORE DOING ANY WORK ON CIRCUITS.

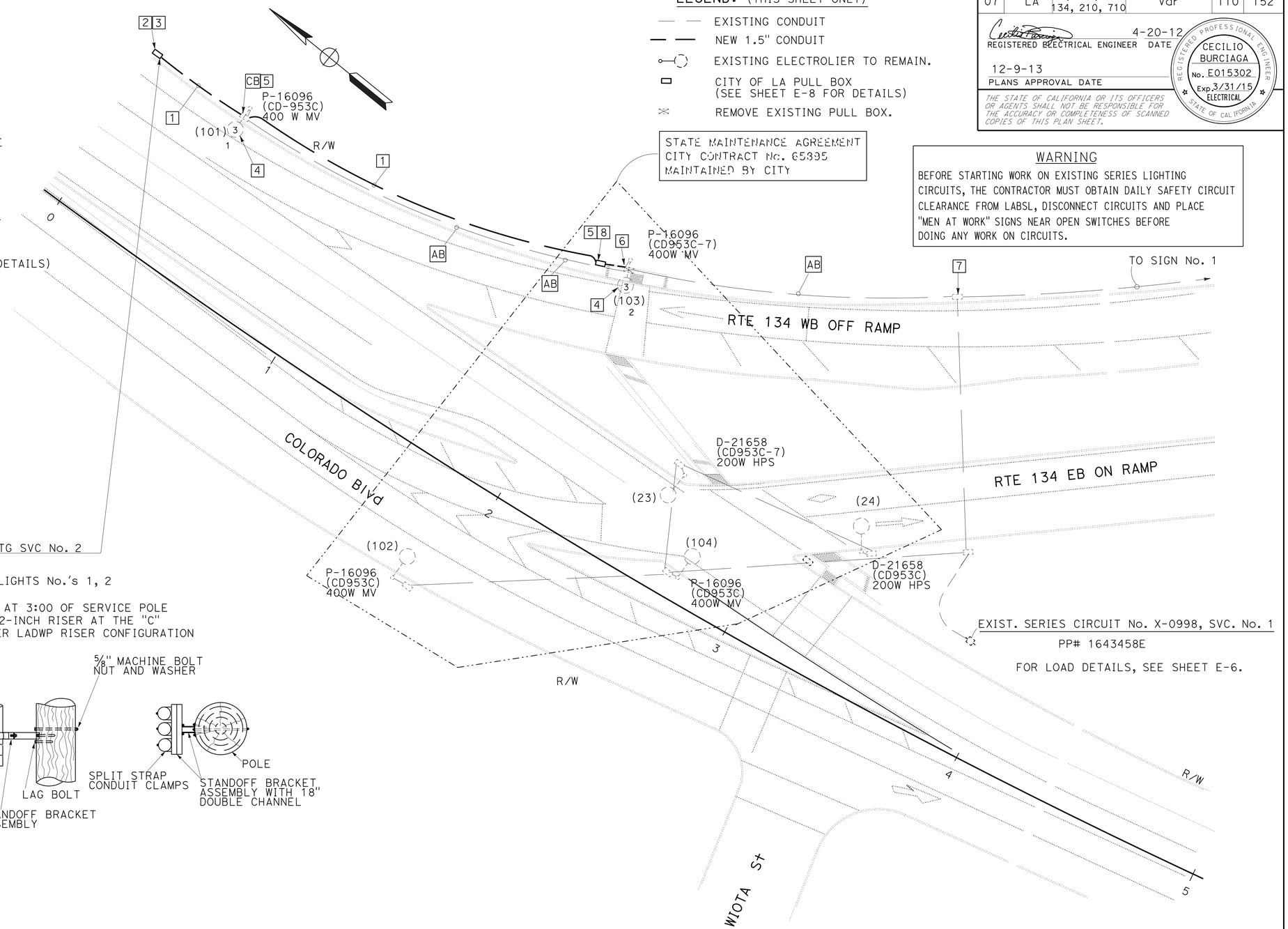


NEW PROPOSED O.H. MULTI. ST. LTG SVC No. 2
P.P. #1643460E *
INSTALL: CKT "2A" 2-149 W LED LIGHTS No.'s 1, 2

* - INSTALL STAND OFF BRACKET AT 3:00 OF SERVICE POLE 1643460E. THEN INSTALL A 2-INCH RISER AT THE "C" POSITION OF THE BRACKET PER LADWP RISER CONFIGURATION DETAILS SHOWN BELOW.

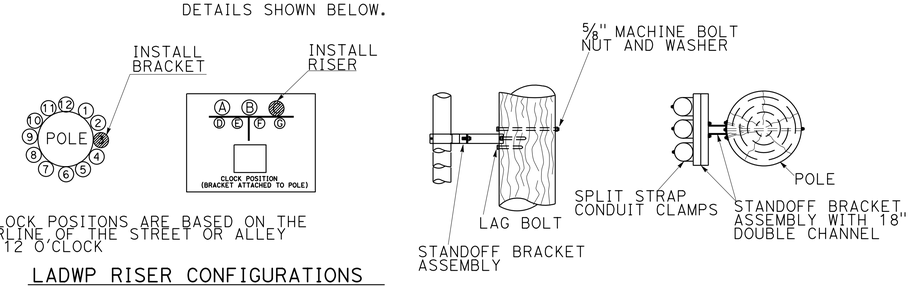


ALL CLOCK POSITONS ARE BASED ON THE CENTERLINE OF THE STREET OR ALLEY BEING 12 O'CLOCK

LADWP RISER CONFIGURATIONS

## MATERIALS LIST (FOR E-5 ONLY)

FOLLOWING IS A SUMMARY OF NEW LUMINAIRES, LAMPS, BALLAST AND OTHER EQUIPMENT WHICH SHALL BE SUPPLIED AND INSTALLED BY THE CONTRACTOR.

THIS IS NOT INTENDED TO BE A COMPLETE LIST OF ALL MATERIALS NEEDED.

| SYMBOL | ITEM | QTY | DESCRIPTION | STD. PLAN No. |
|---|---|---|---|---|
| (3) | LUMINAIRE * | 2 | 149 W LED (EQ 310 W HPS) WITH ROAM | |

* REFER TO CITY OF LOS ANGELES BSL WEBSITE, HTTP://BSL/LACITY.ORG FOR LIST OF CITY APPROVED LED LUMINAIRES AND REQUIREMENTS.

ROAM - REMOTE OPERATION ASSET MANAGEMENT

SEE SHEET E-6 FOR WIRING DIAGRAM

*APPROVED FOR ELECTRICAL WORK ONLY*

# MODIFY LIGHTING (CITY)

SCALE: 1" = 20'

**E-5**

STATE OF CALIFORNIA - DEPARTMENT OF TRANSPORTATION
Caltrans TRAFFIC DESIGN

FUNCTIONAL SUPERVISOR: YI TSAU
CALCULATED-DESIGNED BY: CECILIO BURCIAGA
CHECKED BY: YI TSAU
REVISED BY
DATE REVISED

LAST REVISION 07-08-13
DATE PLOTTED => 10-MAR-2014
TIME PLOTTED => 13:42

| Dist | COUNTY | ROUTE | POST MILES TOTAL PROJECT | SHEET No. | TOTAL SHEETS |
|---|---|---|---|---|---|
| 07 | LA | 10, 110, 118 134, 210, 710 | Var | 111 | 152 |

REGISTERED ELECTRICAL ENGINEER 4-20-12 DATE

12-9-13
PLANS APPROVAL DATE

REGISTERED PROFESSIONAL ENGINEER CECILIO BURCIAGA No. E015302 Exp. 3/31/15 ELECTRICAL STATE OF CALIFORNIA

*THE STATE OF CALIFORNIA OR ITS OFFICERS OR AGENTS SHALL NOT BE RESPONSIBLE FOR THE ACCURACY OR COMPLETENESS OF SCANNED COPIES OF THIS PLAN SHEET.*

**NOTE:**

FOR ACCURATE RIGHT OF WAY DATA, CONTACT RIGHT OF WAY ENGINEERING AT THE DISTRICT OFFICE.

NEW PROPOSED O.H. MULTI. ST. LTG. SVC No. 2
P.P. #1643460E

INSTALL CKT "2A", 2-149 W LED LIGHTS No.'s 1, 2

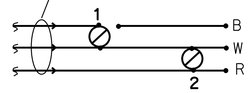


MULTIPLE WIRING DIAGRAM

NO SCALE

## WIRING DIAGRAM LEGEND: (THIS SHEET ONLY)

- EXISTING LAMP AND BALLAST TO REMAIN.
- EXISTING SIGN ILLUMINATION EQUIPMENT TO REMAIN.
- EXISTING LAMP AND BALLAST TO BE REMOVED.
- RC EXISTING CABLE.
- EXISTING #8 5KV CABLE TO REMAIN.
- EXIST 120 V CONDUCTOR TO REMAIN.
- NEW CONDUCTOR, MULTIPLE OR SERIES AS REQUIRED.
- SPLICE CONDUCTORS.
- NEW 165 W LED LUMINAIRE

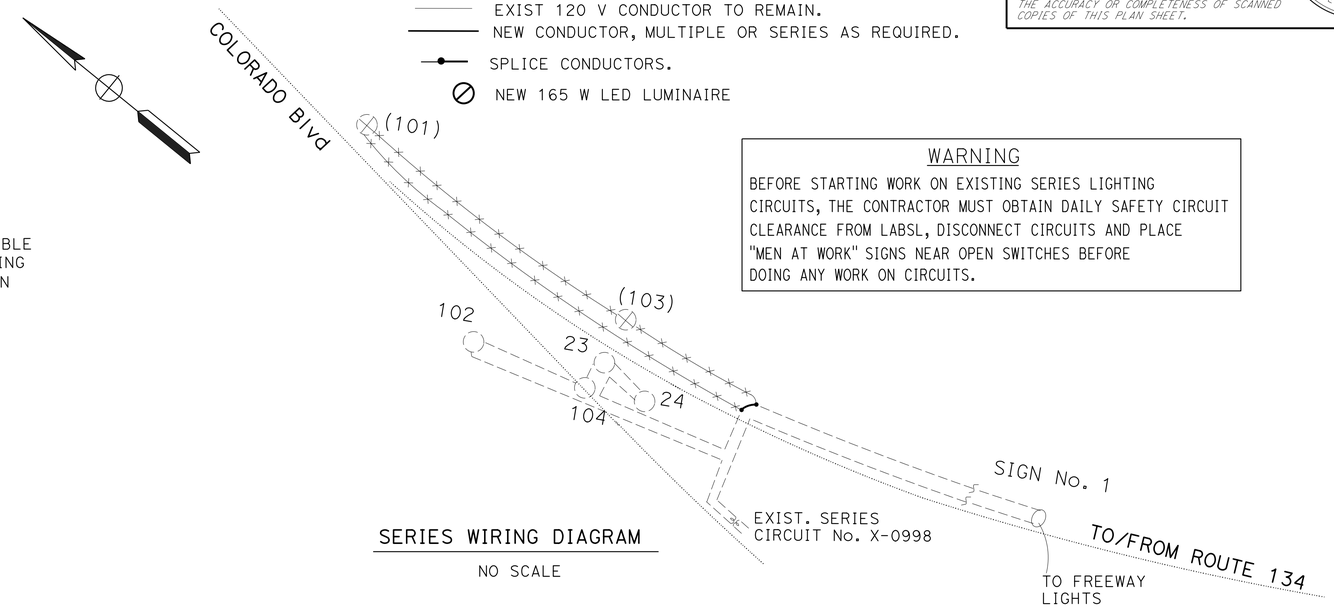


SERIES WIRING DIAGRAM

NO SCALE

**WARNING**

BEFORE STARTING WORK ON EXISTING SERIES LIGHTING CIRCUITS, THE CONTRACTOR MUST OBTAIN DAILY SAFETY CIRCUIT CLEARANCE FROM LABSL, DISCONNECT CIRCUITS AND PLACE "MEN AT WORK" SIGNS NEAR OPEN SWITCHES BEFORE DOING ANY WORK ON CIRCUITS.

Ex. SERIES CKT. No. X-0998 SVC No. 1
P.P. #1643458E

Ex. : 2-200 W HPS LAMPS, LIGHT No.'s (23), (24)
4-400 W MV LAMPS, LIGHT No.'s (101), (102), (103), (104)

REMOVE: 2-400 W MV LAMPS, LIGHT No.'s (101), (103)

Ex. LIGHTS TO REMAIN: 4

## STREET LIGHTING MULTIPLE CIRCUIT NOTES (FOR E-5 ONLY)

1. WARNING: SAFETY CLEARANCE SHALL BE PERFORMED DAILY BY THE QUALIFIED CONTRACTOR RESPONSIBLE FOR CONSTRUCTION PROJECTS. BEFORE DOING ANY WORK OR MAKING ANY CONNECTIONS ON AN EXISTING CIRCUIT. SEE SECTION 2100 OF LABSL SPECIAL SPECIFICATIONS AND SAFETY CLEARNACE NOTE 2 ON THIS PAGE/ BSL DIRECTIVE 414.
2. MULTIPLE CIRCUIT WIRE SHALL BE No. 6 AWG STRANDED COPPER CONDUCTOR, TYPE THWN/THHN INSULATION, UL APPROVED FOR 600 VOLT OPERATION UNLESS OTHERWISE SPECIFIED HEREON.
3. THREE WIRES (COLOR CODE: 1-RED, 1-BLACK, 1-WHITE) SHALL BE INSTALLED IN ALL MULTIPLE CIRCUIT CONDUIT UNLESS OTHERWISE SPECIFIED HEREON.
4. EVEN NUMBERED ELECTROLIERS SHALL BE CONNECTED TO RED AND WHITE WIRES AND ODD NUMBERED ELECTROLIERS SHALL BE CONNECTED TO BLACK AND WHITE WIRES.
5. ELECTROLIERS SHALL BE WIRED PER TYPICAL MULTIPLE CIRCUIT ELECTROLIER WIRING DETAIL, BUREAU OF STREET LIGHTING STANDARD DRAWING NUMBER L-301-1, UNLESS SPECIFIED OTHERWISE.
6. MULTIPLE CIRCUITS IN CONDUITS CONTAINING MORE THAN THREE CONDUCTORS SHALL BE APPROPRIATELY IDENTIFIED BY LABELING CONDUCTORS "A", "B" , ETC, WITH APPROVED SELF-LAMINATING LETTER TAPE WRAPPED AT LEAST TWICE AROUND THE CONDUCTOR IN EACH PULL BOX. (SPECIAL SELF-LAMINATING WIRE MARKERS OR EQUIVALENT).

## STREET LIGHTING CIRCUIT CLEARANCE PROCEDURES (FOR E-5 ONLY)

### SAFETY CLEARANCE NOTE 1

**HIGH VOLTAGE CIRCUITS** - NO CONTRACTOR IS ALLOWED TO CLEAR HIGH VOLTAGE CIRCUITS. TO OBTAIN A CIRCUIT CLEARANCE THE CONTRACTOR SHALL CALL THE BUREAU OF STREET LIGHTING, FIELD OPERATIONS DIVISION AT (323) 913 4744, 48 HOURS PRIOR TO THE REQUESTED CLEARANCE. THE CITY CREW WILL DE-ENERGIZE AND RE-ENERGIZE CIRCUIT BETWEEN THE HOURS OF 8:30 AM TO 2:30 PM MONDAY THRU FRIDAY. IN THE EVENT CREWS ARE REQUIRED TO "STAND BY" DURING THE COURSE OF WORK OR THE CONTRACTOR FAILS TO COMPLETE THE WORK SUFFICIENTLY IN TIME FOR CITY CREWS TO RE-ENERGIZE THE CIRCUIT WITHIN THE PRESCRIBED TIME, THE CONTRACTOR SHALL BE LIABLE FOR ANY AND ALL "STAND BY" AND OVERTIME CHARGES ACCRUED BY CITY CREWS.

### SAFETY CLEARANCE NOTE 2

**LOW VOLTAGE CIRCUITS**- A PERSON WHO HAS A CURRENT AND VALID STATE OF CALIFORNIA C-10 LICENSE OR IS A JOURNEY LEVEL ELECTRICIAN SHALL CREATE THEIR OWN ELECTRICAL SAFETY CLEARANCES AT THEIR OWN RISK AND ASSUME ALL LIABILITY TO LIFE, LIMB AND PROPERTY. THE CLEARANCE SHALL BE IN ACCORDANCE WITH THE CALIFORNIA CODE OF REGULATIONS- TITLE 8: INDUSTRIAL RELATIONS; DIVISION OF INDUSTRIAL SAFETY; ELECTRICAL SAFETY ORDERS SECTION 2320.6. NO OTHER INDIVIDUAL MAY CONDUCT THE STREETLIGHT CIRCUIT CLEARANCE. THE LOCKOUT, TAGOUT PROCEDURE SHALL INCLUDE INSTALLATION OF AN APPROVED "DO NOT CONNECT/DANGER" ACCIDENT PREVENTION TAG (APT) IN THE SERVICE PULLBOX WITH ALL THE REQUIRED INFORMATION ON THE TAG. THE STREET LIGHTING CIRCUIT SHALL BE RECONNECTED AT THE END OF EACH WORK DAY. ALL APT TAGS MUST BE REMOVED AND CIRCUIT RECONNECTED 30 MINUTES BEFORE DUSK. ANY VIOLATION OF THIS PROCEDURE WILL RESULT IN A NOTICE OF NON-COMPLIANCE.

EXTRA FUSES AND SPARES SHALL BE ON THE JOB SITE TO ENSURE AGAINST OUTAGES AFTER DUSK. ANY WORK REQUIRED BY CITY STAFF TO RE-ENERGIZE THE LOW VOLTAGE CIRCUIT AS A RESULT OF FAILURE TO ADHERE TO THE POLICY WILL BE CHARGED TO THE CONTRACTOR.

## NOTICE TO CONTRACTORS

## SERIES SERVICE NOTES

1. SERIES CIRCUIT WIRE SHALL BE NO. 8 AWG SOLID COPPER CONDUCTOR, INSULATED WITH 0.110" APPROVED POLYETHYLENE COMPOUND RATED FOR 5,000 VOLT OPERATION.
2. CONTRACTOR SHALL GIVE THE BUREAU OF STREET LIGHTING YARD (PHONE 323-913-4743) TWO WORKING DAYS NOTICE BEFORE ANY WORK IS DONE ON AN EXISTING SERIES CIRCUIT.

*APPROVED FOR ELECTRICAL WORK ONLY*

**MODIFY LIGHTING**
**(CITY)**
SCALE: 1" = 20'

**E-6**

REVISED BY | DATE REVISED
CECILIO BURCIAGA | YI TSAU
CALCULATED-DESIGNED BY | CHECKED BY
FUNCTIONAL SUPERVISOR | YI TSAU

STATE OF CALIFORNIA - DEPARTMENT OF TRANSPORTATION
Caltrans® TRAFFIC DESIGN

LAST REVISION 00-00-00 | DATE PLOTTED => 10-MAR-2014 | TIME PLOTTED => 13:42

| Dist | COUNTY | ROUTE | POST MILES TOTAL PROJECT | SHEET No. | TOTAL SHEETS |
|---|---|---|---|---|---|
| 07 | LA | 10, 110, 118 134, 210, 710 | VAR | 112 | 152 |

REGISTERED ELECT ENGINEER 4-20-12 DATE

12-9-13
PLANS APPROVAL DATE

REGISTERED PROFESSIONAL ENGINEER C.BURCIAGA No. E015302 Exp. 3/31/15 ELECT STATE OF CALIFORNIA

*THE STATE OF CALIFORNIA OR ITS OFFICERS OR AGENTS SHALL NOT BE RESPONSIBLE FOR THE ACCURACY OR COMPLETENESS OF SCANNED COPIES OF THIS PLAN SHEET.*

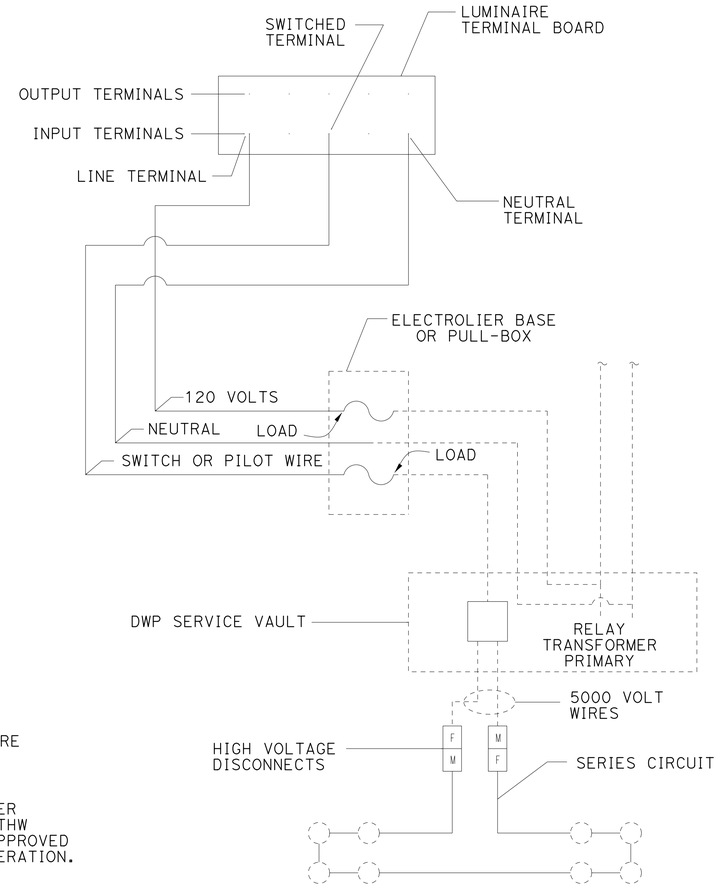


TYPICAL SERIES CIRCUIT CONTROL PHOTOELECTRIC SWITCH WIRING DETAIL.

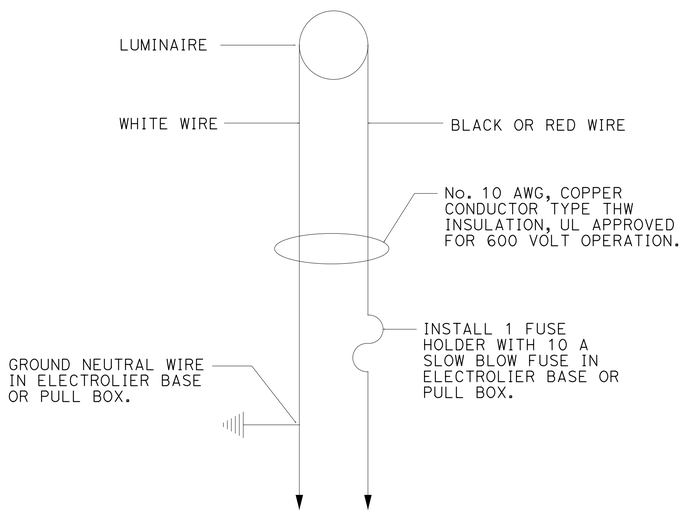


TYPICAL MULTIPLE CIRCUIT ELECTROLIER WIRING DETAIL.

WARNING

BEFORE STARTING WORK ON EXISTING SERIES LIGHTING CIRCUITS, THE CONTRACTOR MUST OBTAIN DAILY SAFETY CIRCUIT CLEARANCE FROM LABSL, DISCONNECT CIRCUITS AND PLACE "MEN AT WORK" SIGNS NEAR OPEN SWITCHES BEFORE DOING ANY WORK ON CIRCUITS.

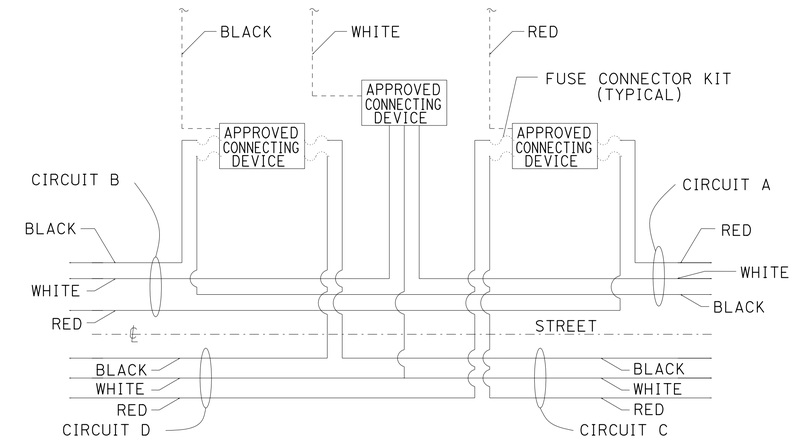


TYPICAL CONNECTOR DETAIL A

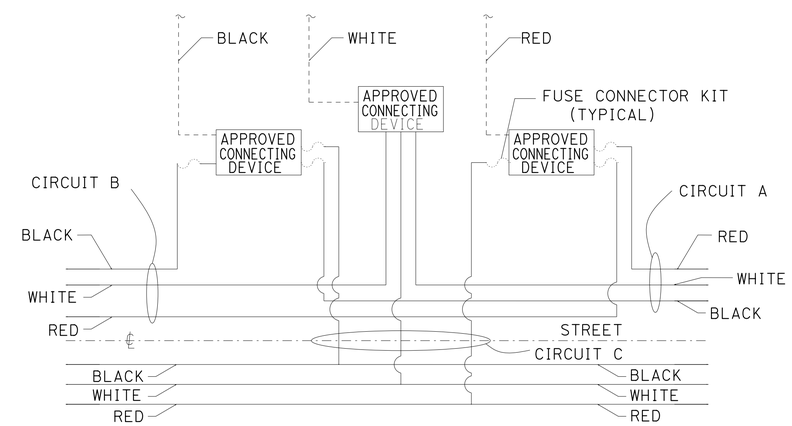


TYPICAL CONNECTOR DETAIL B

INDICATES WIRES INSTALLED BY STREET LIGHTING CONTRACTOR

INDICATES WIRES INSTALLED BY SERVING COMPANY

# MODIFY LIGHTING
## (CITY)
## (ELECTRICAL DETAILS)

NO SCALE

APPROVED FOR ELECTRICAL WORK ONLY.

E-7

STATE OF CALIFORNIA - DEPARTMENT OF TRANSPORTATION
Caltrans TRAFFIC DESIGN

FUNCTIONAL SUPERVISOR: YI TSAU
CALCULATED-DESIGNED BY: CECILIO BURCIAGA
CHECKED BY: YI TSAU
REVISED BY
DATE REVISED

LAST REVISION 07-08-13
DATE PLOTTED => 10-MAR-2014
TIME PLOTTED => 13:42

| Dist | COUNTY | ROUTE | POST MILES TOTAL PROJECT | SHEET No. | TOTAL SHEETS |
|---|---|---|---|---|---|
| 07 | LA | 10,110,118, 134,210,710 | Var | 113 | 152 |

REGISTERED ELECTRICAL ENGINEER 4-20-12 DATE

12-9-13
PLANS APPROVAL DATE

REGISTERED PROFESSIONAL ENGINEER CECILIO BURCIAGA No. E015302 Exp. 3/31/15 ELECTRICAL STATE OF CALIFORNIA

*THE STATE OF CALIFORNIA OR ITS OFFICERS OR AGENTS SHALL NOT BE RESPONSIBLE FOR THE ACCURACY OR COMPLETENESS OF SCANNED COPIES OF THIS PLAN SHEET.*

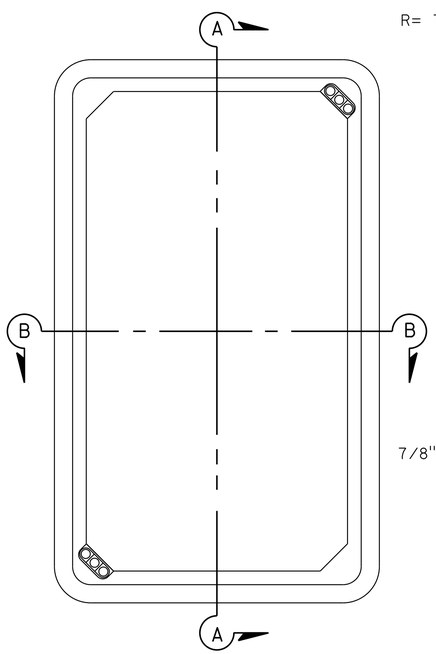


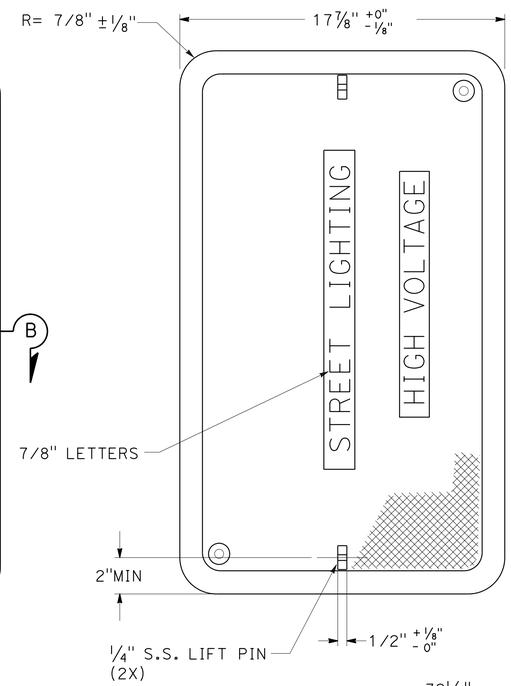


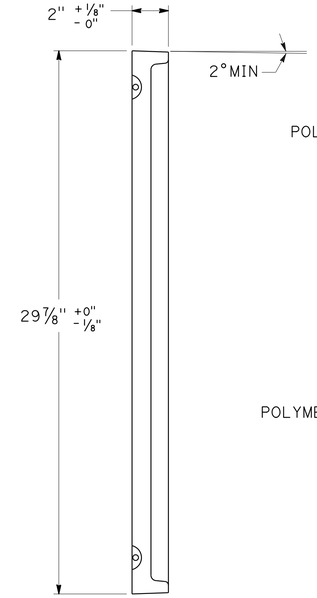


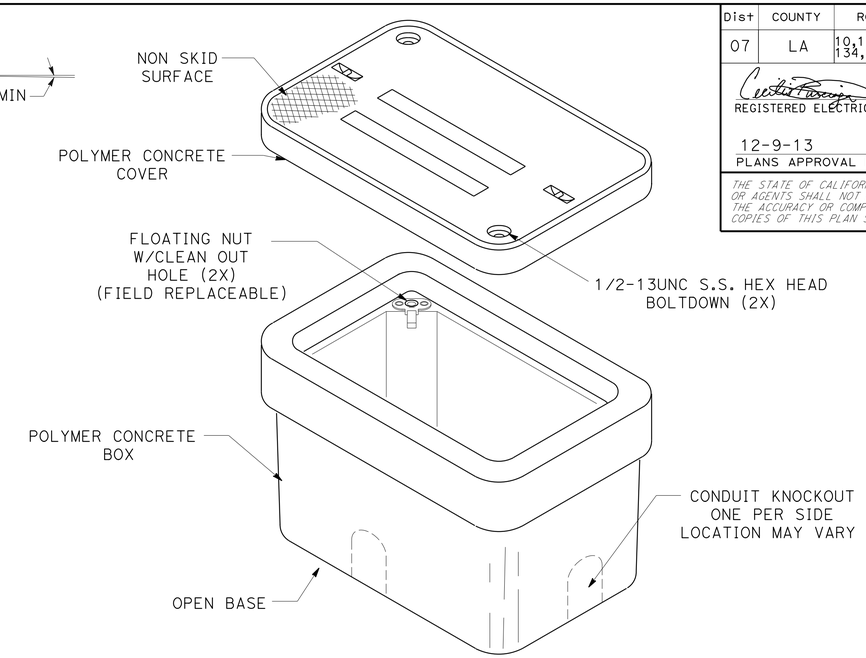


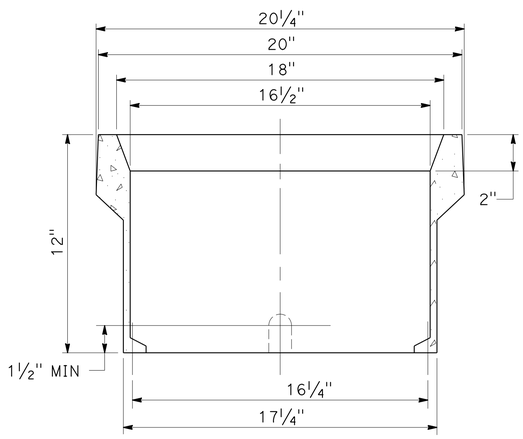


SECTION B-B

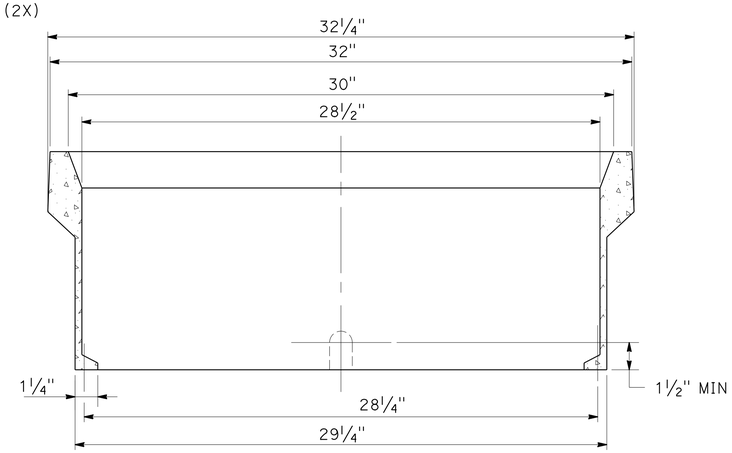


SECTION A-A

1. WHERE "PULL-BOX" IS SPECIFIED IN THE PLANS, IT SHALL CONSIST OF A PULL-BOX AND LID, AND SHALL MEET THE REQUIREMENTS OF THIS PLAN.
2. PULL-BOXS CAN BE MADE OF NON-CONCRETE, NON-CORROSIVE MATERIALS UPON APPOVAL BY THE ENGINEER.
3. ALL EDGES AND CORNERS SHALL HAVE SMOOTH AND UNIFORM RADIUS OF 1/4" OR UNLESS OTHERWISE SPECIFIED HEREON.
4. VOIDS,BLEMISHES, OR IMPERFECTIONS EXCEEDING 3/8" IN MAXIMUM DIMENSION SHALL NOT EXIST IN ANY SURFACE.
5. ALL SURFACES EXPOSED AFTER INSTALLATION SHALL BE SMOOTHLY FINISHED. CHIPS AND VOIDS THEREIN ARE NOT PERMITTED.
6. MOLD, JOINT, OR SEAM LINES WITHIN 1" OF THE TOP BOX SHALL BE SMOOTHLY FINISHED.
7. CONDUIT KNOCKOUTS SHALL BE REMOVABLE WITHOUT DAMAGE TO THE REMAINDER OF THE BOX.
8. LIDS MADE OF POLYMER CONCRETE MUST HAVE A MINIMUM OF TWO LAYERS OF CONTINUOUS REINFORCMENT, ONE AT THE TOP AND ONE AT THE BOTTOM. PULL BOXES MADE OF POLYMER CONCRETE MUST HAVE CONTINUOUS REINFORCEMENT ON THE INNER AND OUTER FACE OF THE BOX.
9. WHERE REINFORCING INTERSECTS, IT SHALL BE SECURE.
10. THE LIFT BAR IN THE PULL-BOX LID SHALL BE SECURELY ATTACHED TO THE REINFORCING MATERIAL OR MADE EQUALLY SECURE IN THE LID BY SOME OTHER METHOD.
11. LETTERS SHOWN ON LID SHALL NOT BE DIFFERENT FROM OR OF A SIZE LESS THAN THAT INDICATED HEREON.
12. LID SHALL SEAT EVENLY ON THE FLANGE AND SHALL NOT ROCK MORE THAN 1/8 INCH.
13. ONE LID BOLT 1/2"-13UNC x 3 1/2"LG MINIMUM SHALL BE PROVIDED WHICH SHALL EXTEND THROUGH THE PULL-BOX AND LID. THEY SHALL SECURE THE LID WITH HEX HEAD NUT AND WASHER WHICH SHALL BE RECESSED BELOW THE TOP OF LID. BOLTS SHALL BE LOCATED SYMMETRICALLY WITH RESPECT TO THE TOP SURFACE OF THE LID AND SHALL HAVE A NON-CORROSIVE SURFACE.
14. ALL PULLBOXES AND LIDS MUST COMPLY WITH ALL TEST PROVISIONS OF ANSI/SCTE 77 2007 SPECIFICATION FOR UNDERGROUND ENCLOSURE INTEGRITY. PULLBOXES AND LIDS MUST COMPLY WITH THE TIER 22 RATING. MARKINGS SHOWING THE RATING MUST BE LABELED OR STENCILED ON THE INSIDE AND OUTSIDE FACE OF THE BOX AND ON THE UNDERSIDE OF THE LID.
15. PULL-BOX AND LID SHALL NOT SHOW ANY EVIDENCE OF FAILURE WHEN SUBJECTED TO ANSI/SCTE 77 2007 SPECIFICATIONS AT THE CENTER OF THE LID WITH THE EDGES SUPPORTED BY THE PULL BOX FOR 10 CYCLES. THE TEST LOAD SHALL BE APPLIED ON A SMOOTH STEEL LOAD PLATE (1" x 10" x 20") THAT IS POSITIONED OVER A 1/2" THICK RUBBER PAD.
16. PULL-BOX AND LID SHALL NOT SHOW ANY EVIDENCE OF FAILURE WHEN SUBJECTED TO ANSI/SCTE 77 2007 SPECIFICATIONS AT THE CENTER OF AND PERPENDICULAR TO ANY SIDE WITH THE OPPOSITE SIDE UNIFORMLY SUPPORTED. TEST LOAD SHALL BE APPLIED AS IN NOTE 15 ABOVE.
17. PULL-BOX LID SHALL NOT PUNCTURE, CRACK OR SPLIT WHEN SUBJECTED TO IMPACT OF 70 FOOT-POUNDS USING A "C" TUP ASTM D-2444.
18. LIDS SHALL NOT CHIP WHEN DROPPED.
19. TWO PULL-BOXES MAY BE SELECTED FROM EACH LOT OF ONE HUNDRED DELIVERED, AND USED FOR TEST PURPOSES. FAILURE OF ANY TEST PULL-BOX MAY BE CAUSE FOR REJECTION OF THE LOT.
20. WHERE A PULL-BOX WITH EXTENSION IS SPECIFIED IN THE PLANS, IT MAY CONSIST OF A SECOND PULL-BOX INSTALLED IMMEDIATELY BENEATH THE FIRST, OR IT MAY BE A DIFFERENT PART WHICH MEETS THE APPLICABLE DIMENSIONS AND SPECIFICATIONS OF THIS PLAN.
21. PULL-BOXES SHALL BE INSTALLED ON A BED OF 1" CRUSHED ROCK WHICH SHALL BE A MINIMUM OF 12 INCHES IN DEPTH AND SHALL EXTEND A MINIMUM OF 6 INCHES BEYOND THE PULL-BOX SIDES.
22. ALL MATERIAL MUST BE NEW AND SHALL HAVE CONSISTENT DIMENSIONS, THICKNESS AND COLOR WITHIN THE ALLOWABLE MANUFACTURING TOLERANCE SPECIFIED IN THE SUBMITTAL OR REFERENCED STANDARDS.
23. REQUIRED INFORMATION AND SUBMITTAL
    IN ADDITION TO THE INFORMATION AS REQUIRED IN PUBLIC WORKS MATERIAL APPROVAL PROCEDURES, THE FOLLOWING INFORMATION SHALL BE SUBMITTED TO THE CITY ENGINEER BEFORE ANY TESTING OR APPROVAL CAN BE GRANTED.
    (a) FOR MATERIALS AND PRODUCTS CONSISTING OF PLASTIC RESIN, FIBERGLASS MATERIALS, FIBERGLASS REINFORCED PLASTIC(FRP), REINFORCED PLASTIC MORTAR(RPM), POLYMER CONCRETE OR VITRIFIED POLYMER COMPOSITE, OR ANY COMBINATION THEREOF.
        (1) A DESCRIPTION OF ANY FELT OR OTHER FABRIC USED TO MANUFACTURE THE PRODUCTS.
        (2) WOVEN, NON-WOVEN OR PUNCHED.
        (3) PROPERTIES OF AGGREGATES, CHOPPED GLASS FIBERS OR OTHER REINFORCING REQUIRED.
            i THE AMOUNT, LOCATION AND ORIENATION OF THE CHOPPED GLASS FIBERS.
            ii THE GRADE OF THE GLASS FIBERS.
            iii THE TYPE AND GRADATION OF ANY AGGREGATES OR SANDS USED.
24. COVERS AND FRAMES WITH MATERIALS THAT ARE MADE OF PLASTIC RESIN, FIBERGLASS, FRP, RPM, POLYMER CONCRETE OR VITRIFIED POLYMER COMPOSITE SHALL NOT BE USED IN VEHICULAR TRAFFIC AREA AND SHALL BE TESTED SEPARATELY.
25. ALL PULLBOXES AND LIDS MUST BE TESTED AND CERTIFED BY AN INDEPENDENT THIRD PARTY TESTING LAB AT NO COAST TO THE CITY. THE CITY HAS A RIGHT TO RECERTIFY EACH MANUFACTURER EVERY YEAR AT NO COAST TO THE CITY.
26. THE MANUFACTURER WILL WARRANTY THEIR PULLBOXES AND LIDS FOR 2 YEARS.

*APPROVED FOR ELECTRICAL WORK ONLY*

# MODIFY SIGNAL
## (CITY)
## (ELECTRICAL DETAILS)
## (COMPOSITE TYPE 3 PULL BOX)
NO SCALE

**E-8**

STATE OF CALIFORNIA - DEPARTMENT OF TRANSPORTATION
Caltrans® **TRAFFIC DESIGN**

FUNCTIONAL SUPERVISOR: YI TSAU
CALCULATED-DESIGNED BY: CECILIO BURCIAGA
CHECKED BY: YI TSAU
REVISED BY
DATE REVISED

LAST REVISION 00-00-00 | DATE PLOTTED => 10-MAR-2014 | TIME PLOTTED => 13:42

| Dist | COUNTY | ROUTE | POST MILES TOTAL PROJECT | SHEET No. | TOTAL SHEETS |
|---|---|---|---|---|---|
| 07 | LA | 10,110,118, 134,210,710 | Var | 114 | 152 |

REGISTERED ELECTRICAL ENGINEER 4-20-12 DATE

12-9-13
PLANS APPROVAL DATE

REGISTERED PROFESSIONAL ENGINEER CECILIO BURCIAGA No. E015302 Exp. 3/31/15 ELECTRICAL STATE OF CALIFORNIA

*THE STATE OF CALIFORNIA OR ITS OFFICERS OR AGENTS SHALL NOT BE RESPONSIBLE FOR THE ACCURACY OR COMPLETENESS OF SCANNED COPIES OF THIS PLAN SHEET.*

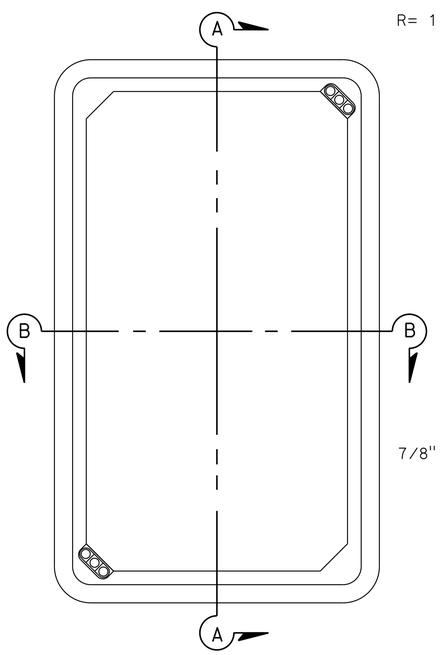


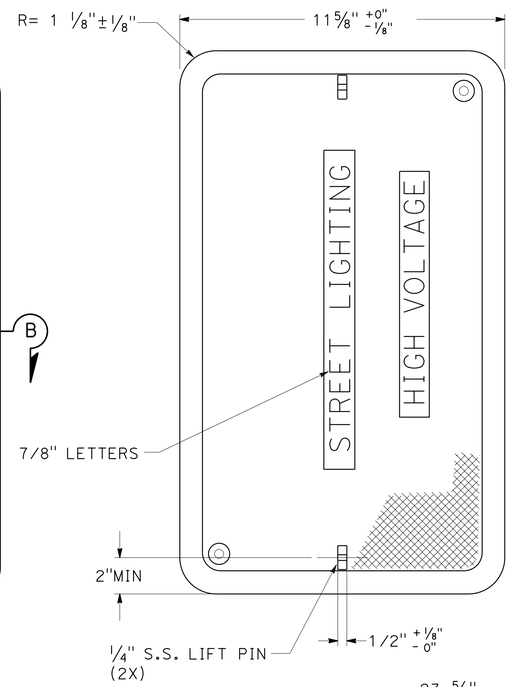


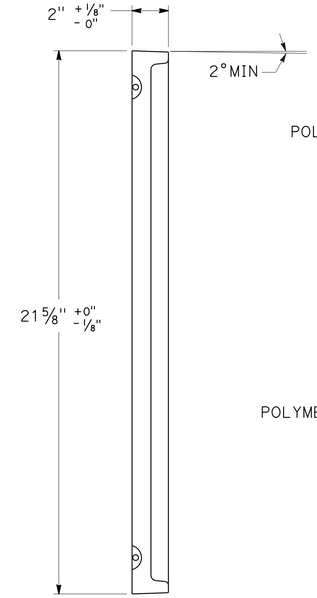


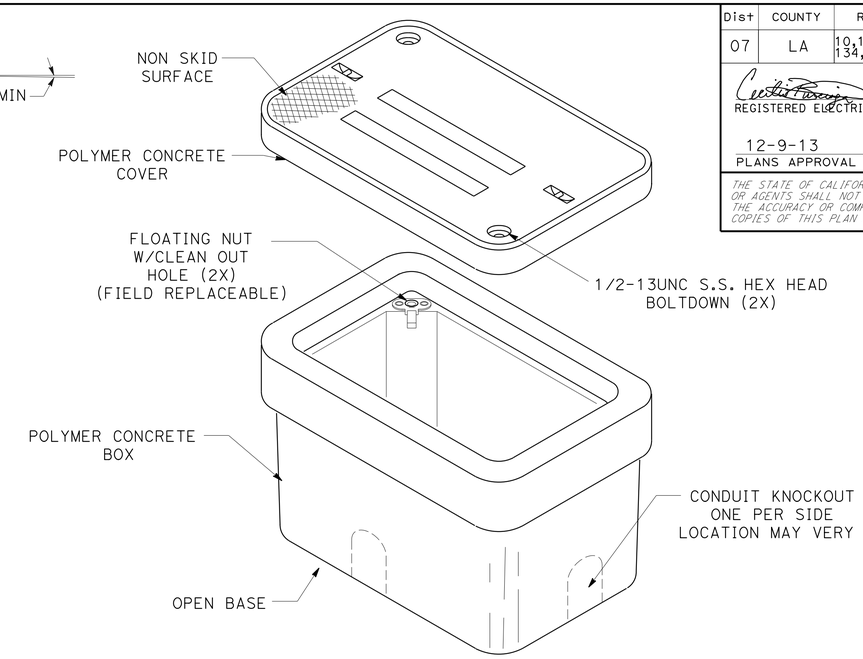


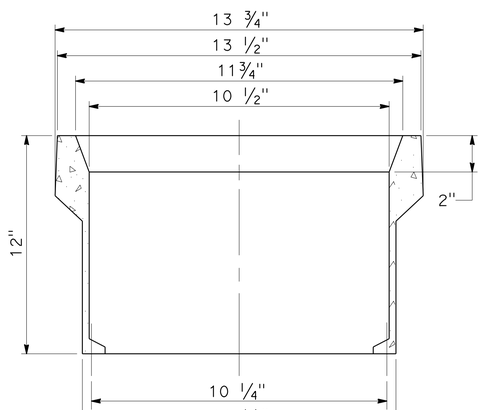


SECTION B-B

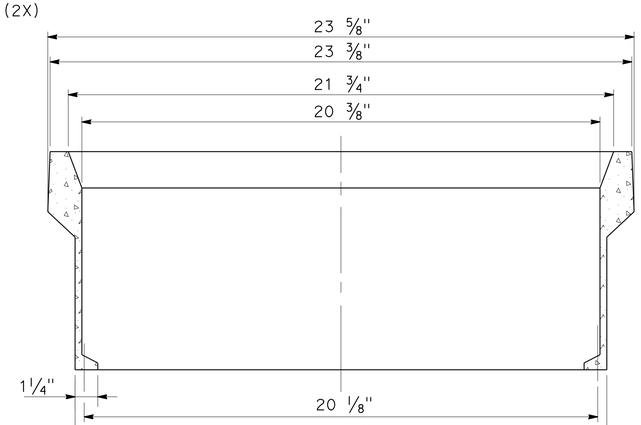


SECTION A-A

1. WHERE "PULL-BOX" IS SPECIFIED IN THE PLANS, IT SHALL CONSIST OF A PULL-BOX AND LID, AND SHALL MEET THE REQUIREMENTS OF THIS PLAN.
2. PULL-BOXS CAN BE MADE OF NON-CONCRETE, NON-CORROSIVE MATERIALS UPON APPOVAL BY THE ENGINEER.
3. ALL EDGES AND CORNERS SHALL HAVE SMOOTH AND UNIFORM RADIUS OF 1/4" OR UNLESS OTHERWISE SPECIFIED HEREON.
4. VOIDS,BLEMISHES, OR IMPERFECTIONS EXCEEDING 3/8" IN MAXIMUM DIMENSION SHALL NOT EXIST IN ANY SURFACE.
5. ALL SURFACES EXPOSED AFTER INSTALLATION SHALL BE SMOOTHLY FINISHED. CHIPS AND VOIDS THEREIN ARE NOT PERMITTED.
6. MOLD, JOINT, OR SEAM LINES WITHIN 1" OF THE TOP BOX SHALL BE SMOOTHLY FINISHED.
7. CONDUIT KNOCKOUTS SHALL BE REMOVABLE WITHOUT DAMAGE TO THE REMAINDER OF THE BOX.
8. LIDS MADE OF POLYMER CONCRETE MUST HAVE A MINIMUM OF TWO LAYERS OF CONTINUOUS REINFORCMENT, ONE AT THE TOP AND ONE AT THE BOTTOM. PULL BOXES MADE OF POLYMER CONCRETE MUST HAVE CONTINUOUS REINFORCEMENT ON THE INNER AND OUTER FACE OF THE BOX.
9. WHERE REINFORCING INTERSECTS, IT SHALL BE SECURE.
10. THE LIFT BAR IN THE PULL-BOX LID SHALL BE SECURELY ATTACHED TO THE REINFORCING MATERIAL OR MADE EQUALLY SECURE IN THE LID BY SOME OTHER METHOD.
11. LETTERS SHOWN ON LID SHALL NOT BE DIFFERENT FROM OR OF A SIZE LESS THAN THAT INDICATED HEREON.
12. LID SHALL SEAT EVENLY ON THE FLANGE AND SHALL NOT ROCK MORE THAN 1/8 INCH.
13. ONE LID BOLT 1/2"-13UNC x 2 1/2"LG MINIMUM SHALL BE PROVIDED WHICH SHALL EXTEND THROUGH THE PULL-BOX AND LID. THEY SHALL SECURE THE LID WITH HEX HEAD NUT AND WASHER WHICH SHALL BE RECESSED BELOW THE TOP OF LID. BOLTS SHALL BE LOCATED SYMMETRICALLY WITH RESPECT TO THE TOP SURFACE OF THE LID AND SHALL HAVE A NON-CORROSIVE SURFACE.
14. ALL PULLBOXES AND LIDS MUST COMPLY WITH ALL TEST PROVISIONS OF ANSI/SCTE 77 2007 SPECIFICATION FOR UNDERGROUND ENCLOSURE INTEGRITY. PULLBOXES MUST COMPLY WITH THE TIER 22 RATING. THE LIDS MUST COMPLY TO THE TIER 15 RATING. MARKINGS SHOWING THE RATING MUST BE LABELED OR STENCILED ON THE INSIDE AND OUTSIDE FACE OF THE BOX AND ON THE UNDERSIDE OF THE LID.
15. PULL-BOX AND LID SHALL NOT SHOW ANY EVIDENCE OF FAILURE WHEN SUBJECTED TO ANSI/SCTE 77 2007 SPECIFICATIONS AT THE CENTER OF THE LID WITH THE EDGES SUPPORTED BY THE PULL BOX FOR 10 CYCLES. THE TEST LOAD SHALL BE APPLIED ON A SMOOTH STEEL LOAD PLATE (1" x 10" x 20") THAT IS POSITIONED OVER A 1/2" THICK RUBBER PAD.
16. PULL-BOX AND LID SHALL NOT SHOW ANY EVIDENCE OF FAILURE WHEN SUBJECTED TO ANSI/SCTE 77 2007 SPECIFICATIONS AT THE CENTER OF AND PERPENDICULAR TO ANY SIDE WITH THE OPPOSITE SIDE UNIFORMLY SUPPORTED. TEST LOAD SHALL BE APPLIED AS IN NOTE 15 ABOVE.
17. PULL-BOX LID SHALL NOT PUNCTURE, CRACK OR SPLIT WHEN SUBJECTED TO IMPACT OF 70 FOOT-POUNDS USING A "C" TUP ASTM D-2444.
18. LIDS SHALL NOT CHIP WHEN DROPPED.
19. TWO PULL-BOXES MAY BE SELECTED FROM EACH LOT OF ONE HUNDRED DELIVERED, AND USED FOR TEST PURPOSES. FAILURE OF ANY TEST PULL-BOX MAY BE CAUSE FOR REJECTION OF THE LOT.
20. WHERE A PULL-BOX WITH EXTENSION IS SPECIFIED IN THE PLANS, IT MAY CONSIST OF A SECOND PULL-BOX INSTALLED IMMEDIATELY BENEATH THE FIRST, OR IT MAY BE A DIFFERENT PART WHICH MEETS THE APPLICABLE DIMENSIONS AND SPECIFICATIONS OF THIS PLAN.
21. PULL-BOXES SHALL BE INSTALLED ON A BED OF 1" CRUSHED ROCK WHICH SHALL BE A MINIMUM OF 12 INCHES IN DEPTH AND SHALL EXTEND A MINIMUM OF 6 INCHES BEYOND THE PULL-BOX SIDES.
22. ALL MATERIAL MUST BE NEW AND SHALL HAVE CONSISTENT DIMENSIONS, THICKNESS AND COLOR WITHIN THE ALLOWABLE MANUFACTURING TOLERANCE SPECIFIED IN THE SUBMITTAL OR REFERENCED STANDARDS.
23. REQUIRED INFORMATION AND SUBMITTAL
    IN ADDITION TO THE INFORMATION AS REQUIRED IN PUBLIC WORKS MATERIAL APPROVAL PROCEDURES, THE FOLLOWING INFORMATION SHALL BE SUBMITTED TO THE CITY ENGINEER BEFORE ANY TESTING OR APPROVAL CAN BE GRANTED.
    (a) FOR MATERIALS AND PRODUCTS CONSISTING OF PLASTIC RESIN, FIBERGLASS MATERIALS, FIBERGLASS REINFORCED PLASTIC(FRP), REINFORCED PLASTIC MORTAR(RPM), POLYMER CONCRETE OR VITRIFIED POLYMER COMPOSITE, OR ANY COMBINATION THEREOF.
        (1) A DESCRIPTION OF ANY FELT OR OTHER FABRIC USED TO MANUFACTURE THE PRODUCTS.
        (2) WOVEN, NON-WOVEN OR PUNCHED.
        (3) PROPERTIES OF AGGREGATES, CHOPPED GLASS FIBERS OR OTHER REINFORCING REQUIRED.
            i THE AMOUNT, LOCATION AND ORIENATION OF THE CHOPPED GLASS FIBERS.
            ii THE GRADE OF THE GLASS FIBERS.
            iii THE TYPE AND GRADATION OF ANY AGGREGATES OR SANDS USED.
24. COVERS AND FRAMES WITH MATERIALS THAT ARE MADE OF PLASTIC RESIN, FIBERGLASS, FRP, RPM, POLYMER CONCRETE OR VITRIFIED POLYMER COMPOSITE SHALL NOT BE USED IN VEHICULAR TRAFFIC AREAS.
25. ALL PULLBOXES AND LIDS MUST BE TESTED AND CERTIFED BY AN INDEPENDENT THIRD PARTY TESTING LAB AT NO COAST TO THE CITY. THE CITY HAS A RIGHT TO RECERTIFY EACH MANUFACTURER EVERY YEAR AT NO COAST TO THE CITY.
26. THE MANUFACTURER WILL WARRANTY THEIR PULLBOXES AND LIDS FOR 2 YEARS.

*APPROVED FOR ELECTRICAL WORK ONLY*

# MODIFY SIGNAL
## (CITY)
## (ELECTRICAL DETAILS)
## (COMPOSITE TYPE 2 PULL BOX)

NO SCALE

**E-9**

| REVISED BY | DATE REVISED |
|---|---|
| CECILIO BURCIAGA | YI TSAU |

| CALCULATED-DESIGNED BY | CHECKED BY |
|---|---|
| YI TSAU | |

FUNCTIONAL SUPERVISOR

STATE OF CALIFORNIA - DEPARTMENT OF TRANSPORTATION
Caltrans® TRAFFIC DESIGN

LAST REVISION 00-00-00 | DATE PLOTTED => 10-MAR-2014 | TIME PLOTTED => 13:42

| Dist | COUNTY | ROUTE | POST MILES TOTAL PROJECT | SHEET No. | TOTAL SHEETS |
|---|---|---|---|---|---|
| 07 | LA | 10,110,118, 134,210,710 | Var | 115 | 152 |

REGISTERED ELECTRICAL ENGINEER 4-20-12 DATE

12-9-13
PLANS APPROVAL DATE

REGISTERED PROFESSIONAL ENGINEER
CECILIO BURCIAGA
No. E015302
Exp. 3/31/15
ELECTRICAL
STATE OF CALIFORNIA

*THE STATE OF CALIFORNIA OR ITS OFFICERS OR AGENTS SHALL NOT BE RESPONSIBLE FOR THE ACCURACY OR COMPLETENESS OF SCANNED COPIES OF THIS PLAN SHEET.*

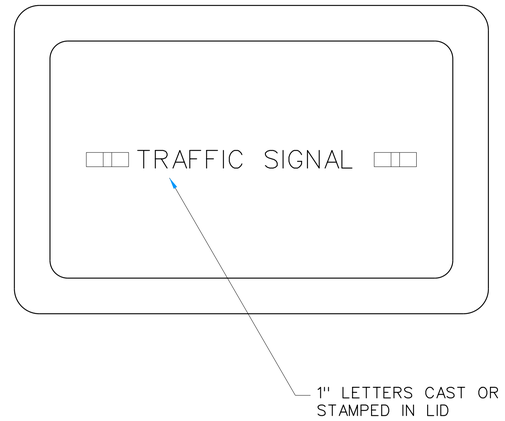


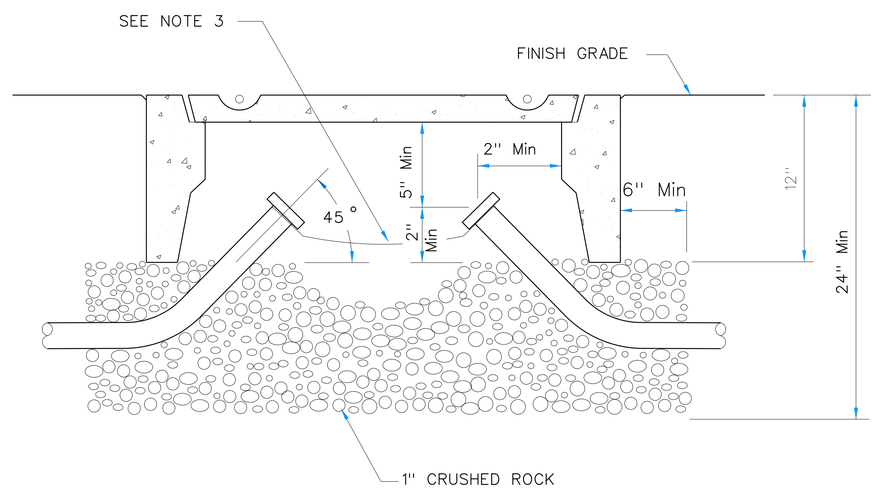


NOTES:

1. OUTSIDE DIMENSION: TYPE PB2 - 15" X 25", TYPE PB3 - 22" X 34"
2. GALVANIZED CONDUITS MUST BE BONDED WITH COPPER GROUND STRAP AROUND THE NECK OF EACH CONDUIT. PVC CONDUITS MUST HAVE THEIR GROUND WIRES SPLICED TOGETHER.

# MODIFY SIGNAL
## (CITY)
## (ELECTRICAL DETAILS)

NO SCALE

**E-10**

APPROVED FOR ELECTRICAL WORK ONLY.

STATE OF CALIFORNIA - DEPARTMENT OF TRANSPORTATION
Caltrans® TRAFFIC DESIGN

FUNCTIONAL SUPERVISOR: YI TSAU
CALCULATED-DESIGNED BY: CECILIO BURCIAGA
CHECKED BY: YI TSAU
REVISED BY
DATE REVISED

LAST REVISION 00-00-00
DATE PLOTTED => 10-MAR-2014
TIME PLOTTED => 13:42

| Dist | COUNTY | ROUTE | POST MILES TOTAL PROJECT | SHEET No. | TOTAL SHEETS |
|---|---|---|---|---|---|
| 07 | LA | 10, 110, 118 134, 210, 710 | Var | 116 | 152 |

REGISTERED ELECTRICAL ENGINEER 4-20-12 DATE

12-9-13
PLANS APPROVAL DATE

REGISTERED PROFESSIONAL ENGINEER CECILIO BURCIAGA No. E015302 Exp. 3/31/15 ELECTRICAL STATE OF CALIFORNIA

*THE STATE OF CALIFORNIA OR ITS OFFICERS OR AGENTS SHALL NOT BE RESPONSIBLE FOR THE ACCURACY OR COMPLETENESS OF SCANNED COPIES OF THIS PLAN SHEET.*

NOTE:

FOR ACCURATE RIGHT OF WAY DATA, CONTACT RIGHT OF WAY ENGINEERING AT THE DISTRICT OFFICE.

## PROJECT NOTES (THIS SHEET)

1. RL ELECTROLIER BEHIND SIDEWALK. RC FOUNDATION.
2. 1½"C, 2#8.
3. EXISTING 120/240 V TYPE III-BF SERVICE EQUIPMENT ECLOSURE. ID No. 07-53-210R-040.400

# MODIFY LIGHTING AND SIGN ILLUMINATION

SCALE 1" = 20'

APPROVED FOR ELECTRICAL WORK ONLY

**E-11**

CECILIO BURCIAGA — REVISED BY
YI TSAU — DATE REVISED
CALCULATED-DESIGNED BY
CHECKED BY
FUNCTIONAL SUPERVISOR: YI TSAU

STATE OF CALIFORNIA - DEPARTMENT OF TRANSPORTATION
Caltrans® TRAFFIC DESIGN

LAST REVISION 00-00-00 | DATE PLOTTED => 10-MAR-2014 | TIME PLOTTED => 13:42

| Dist | COUNTY | ROUTE | POST MILES TOTAL PROJECT | SHEET No. | TOTAL SHEETS |
|---|---|---|---|---|---|
| 07 | LA | 10,110,118, 134,210,710 | Var | 117 | 152 |

REGISTERED ELECT ENGINEER 4-20-12 DATE

12-9-13
PLANS APPROVAL DATE

REGISTERED PROFESSIONAL ENGINEER C.BURCIAGA No. E015302 Exp. 3/31/15 ELECT STATE OF CALIFORNIA

*THE STATE OF CALIFORNIA OR ITS OFFICERS OR AGENTS SHALL NOT BE RESPONSIBLE FOR THE ACCURACY OR COMPLETENESS OF SCANNED COPIES OF THIS PLAN SHEET.*

NOTE: FOR ACCURATE RIGHT OF WAY, CONTACT RIGHT OF WAY ENGINEERING AT THE DISTRICT OFFICE.

## PROJECT NOTES (THIS SHEET)

1 RL ELECTROLIER BEHIND SIDEWALK. RC FOUNDATION.

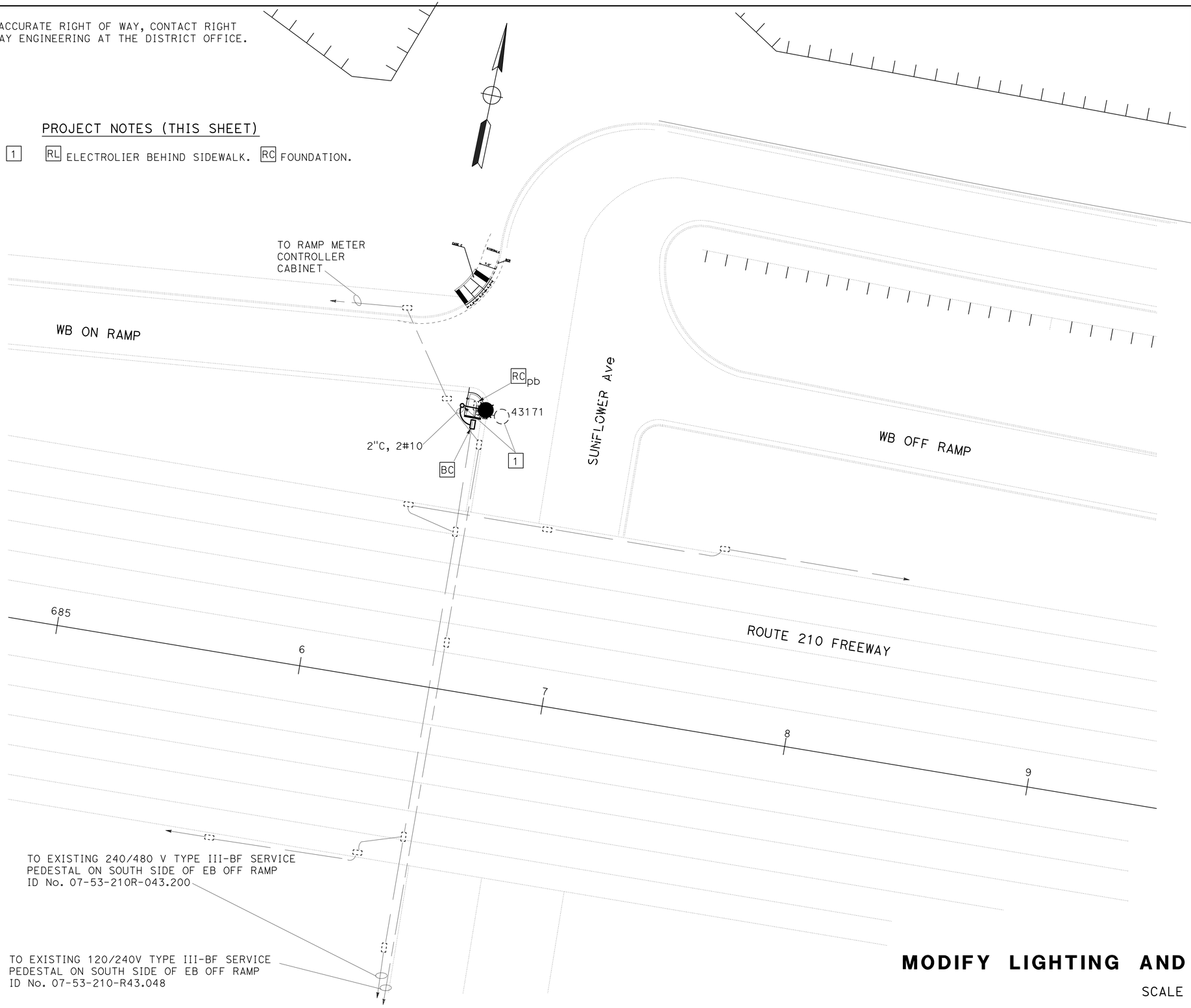


# MODIFY LIGHTING AND SIGN ILLUMINATION

SCALE 1" = 20'

*APPROVED FOR ELECTRICAL WORK ONLY*

**E-12**

STATE OF CALIFORNIA - DEPARTMENT OF TRANSPORTATION
Caltrans® **TRAFFIC DESIGN**

FUNCTIONAL SUPERVISOR: YI TSAU
CALCULATED-DESIGNED BY: CECILIO BURCIAGA
CHECKED BY: YI TSAU
REVISED BY
DATE REVISED

LAST REVISION 00-00-00
DATE PLOTTED => 10-MAR-2014
TIME PLOTTED => 13:42

| Dist | COUNTY | ROUTE | POST MILES TOTAL PROJECT | SHEET No. | TOTAL SHEETS |
|---|---|---|---|---|---|
| 07 | LA | 10, 110, 118 134, 210, 710 | Var | 118 | 152 |

REGISTERED ELECTRICAL ENGINEER 4-20-12 DATE

12-9-13
PLANS APPROVAL DATE

REGISTERED PROFESSIONAL ENGINEER CECILIO BURCIAGA No. E015302 Exp. 3/31/15 ELECTRICAL STATE OF CALIFORNIA

*THE STATE OF CALIFORNIA OR ITS OFFICERS OR AGENTS SHALL NOT BE RESPONSIBLE FOR THE ACCURACY OR COMPLETENESS OF SCANNED COPIES OF THIS PLAN SHEET.*

**NOTE:**

FOR ACCURATE RIGHT OF WAY DATA, CONTACT RIGHT OF WAY ENGINEERING AT THE DISTRICT OFFICE.

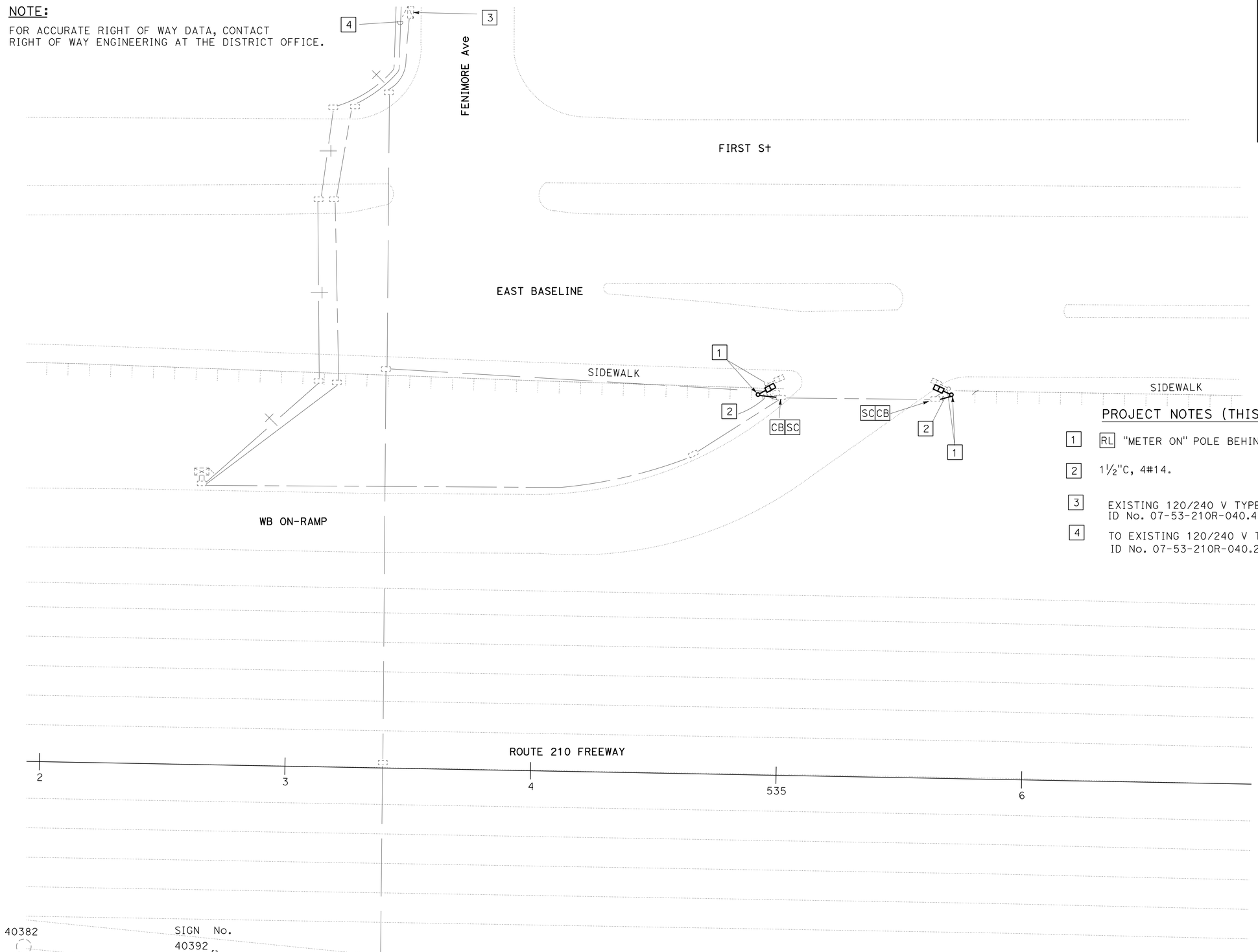


## PROJECT NOTES (THIS SHEET)

1. RL "METER ON" POLE BEHIND SIDEWALK. RC FOUNDATION.
2. 1½"C, 4#14.
3. EXISTING 120/240 V TYPE III-BF SERVICE EQUIPMENT ECLOSURE. ID No. 07-53-210R-040.400
4. TO EXISTING 120/240 V TYPE III-BF SERVICE EQUIPMENT ECLOSURE. ID No. 07-53-210R-040.278

APPROVED FOR ELECTRICAL WORK ONLY

# MODIFY RAMP METERING SYSTEM

SCALE 1" = 20'

**E-13**

STATE OF CALIFORNIA - DEPARTMENT OF TRANSPORTATION
Caltrans® TRAFFIC DESIGN

FUNCTIONAL SUPERVISOR: YI TSAU

CALCULATED-DESIGNED BY: CECILIO BURCIAGA
CHECKED BY: YI TSAU

REVISED BY
DATE REVISED

LAST REVISION 00-00-00
DATE PLOTTED => 10-MAR-2014
TIME PLOTTED => 13:42

| Dist | COUNTY | ROUTE | POST MILES TOTAL PROJECT | SHEET No. | TOTAL SHEETS |
|---|---|---|---|---|---|
| 07 | LA | 10,110,118, 134,210,710 | Var | 119 | 152 |

REGISTERED ELECT ENGINEER 4-20-12 DATE

12-9-13
PLANS APPROVAL DATE

REGISTERED PROFESSIONAL ENGINEER C.BURCIAGA No. E015302 Exp. 3/31/15 ELECT STATE OF CALIFORNIA

*THE STATE OF CALIFORNIA OR ITS OFFICERS OR AGENTS SHALL NOT BE RESPONSIBLE FOR THE ACCURACY OR COMPLETENESS OF SCANNED COPIES OF THIS PLAN SHEET.*

NOTE: FOR ACCURATE RIGHT OF WAY, CONTACT RIGHT OF WAY ENGINEERING AT THE DISTRICT OFFICE.

PROJECT NOTES (THIS SHEET)

1

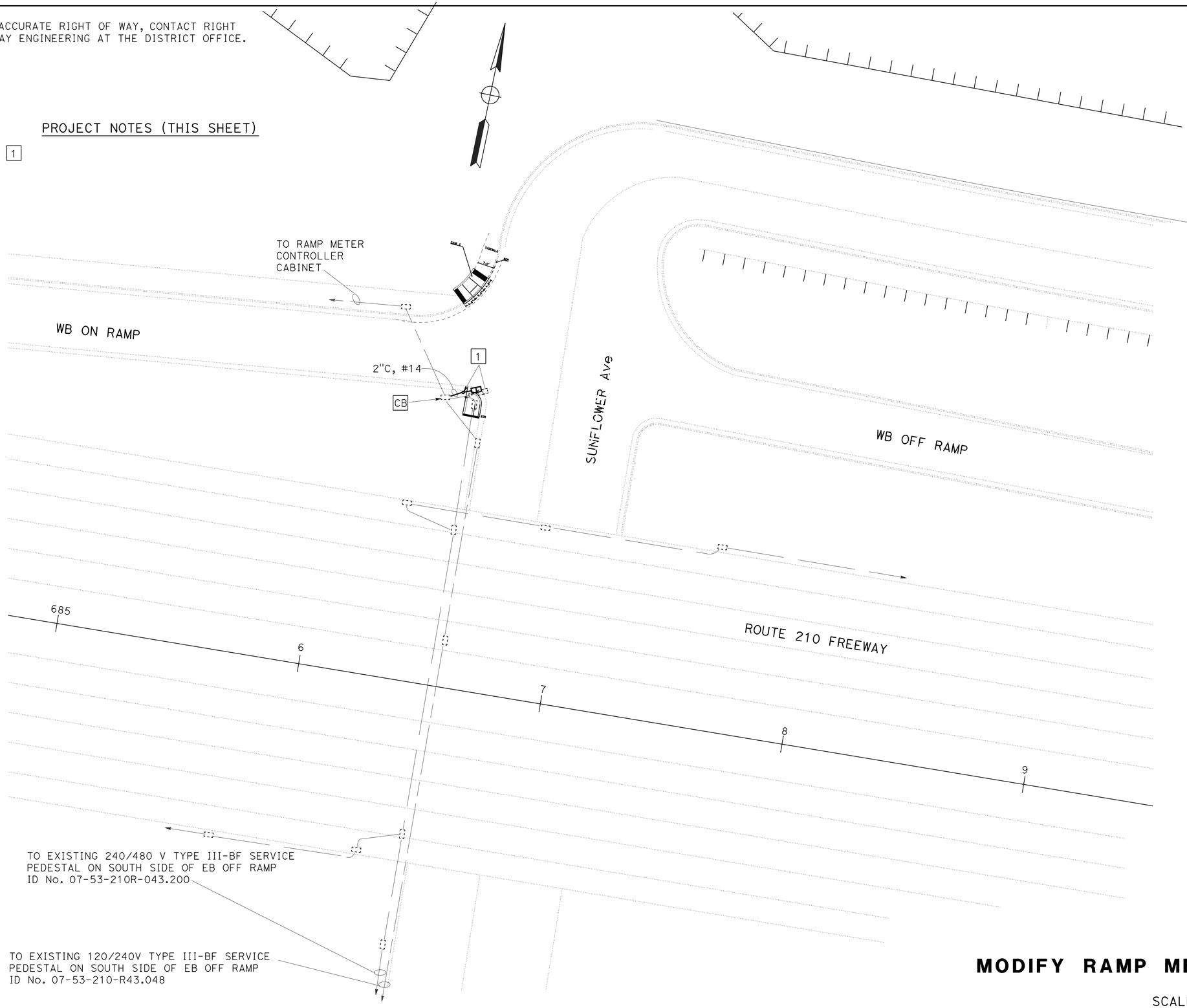


# MODIFY RAMP METERING SYSTEM

SCALE 1" = 20'

**E-14**

*APPROVED FOR ELECTRICAL WORK ONLY*

STATE OF CALIFORNIA - DEPARTMENT OF TRANSPORTATION
Caltrans® TRAFFIC DESIGN

FUNCTIONAL SUPERVISOR: YI TSAU
CALCULATED-DESIGNED BY: CECILIO BURCIAGA
CHECKED BY: YI TSAU
REVISED BY
DATE REVISED

LAST REVISION 00-00-00
DATE PLOTTED => 10-MAR-2014
TIME PLOTTED => 13:42

| Dist | COUNTY | ROUTE | POST MILES TOTAL PROJECT | SHEET No. | TOTAL SHEETS |
|---|---|---|---|---|---|
| 07 | LA | 10,110,118, 134,210,710 | Var | 120 | 152 |

REGISTERED ELECTRICAL ENGINEER 4-20-12 DATE

12-9-13
PLANS APPROVAL DATE

REGISTERED PROFESSIONAL ENGINEER C. BURCIAGA No. E015302 Exp. 3/31/15 ELECT STATE OF CALIFORNIA

*THE STATE OF CALIFORNIA OR ITS OFFICERS OR AGENTS SHALL NOT BE RESPONSIBLE FOR THE ACCURACY OR COMPLETENESS OF SCANNED COPIES OF THIS PLAN SHEET.*

NOTE

(N) - NOT A SEPERATE PAY ITEM, FOR INFORMATION ONLY.

## MODIFY SIGNAL AND LIGHTING

| Sheet No | TYPE 24-3-100 POLE (EA) (N) | PPB POST (EA) (N) | NEW SIGNAL HEAD (EA) (N) | NEW PED HEAD (FT) (N) | TYPE E DETECTOR LOOP (EA) (N) | TYPE D DETECTOR LOOP (EA) (N) | NEW PULL BOX (EA) (N) | 310 W HPS LUMINAIRE (EA) (N) | 12 CSC (FT) (N) | #8 AWG (FT) (N) | #10 AWG (FT) (N) | 1½"C (FT) (N) | 3 CSC (FT) (N) | RC PB (EA) (N) | 1"C (FT) (N) | CB (EA) (N) | CC (EA) (N) | SC (EA) (N) | BC (EA) (N) | RC PED HEAD (EA) (N) | RC PPB (EA) (N) | COUNTDOWN PED HEAD (EA) (N) | APS SYSTEM (EA) (N) |
|---|---|---|---|---|---|---|---|---|---|---|---|---|---|---|---|---|---|---|---|---|---|---|---|
| E-1 | 1 | 2 | 5 | 2 | 17 | 10 | 1 | 1 | 250 | 250 | 250 | 20 | 20 | 1 | | 3 | 2 | 3 | 1 | 6 | 6 | 6 | 1 |
| E-2 | | 1 | | 1 | | | 1 | | | | | 10 | 10 | 1 | 10 | | | 1 | 1 | 8 | 8 | 8 | 1 |
| E-3 | | | | | | | 1 | | | | | | | 1 | | | | | 1 | | | | |
| Total | 1 | 3 | 5 | 3 | 17 | 10 | 3 | 1 | 250 | 250 | 250 | 30 | 30 | 3 | 10 | 3 | 2 | 4 | 3 | 14 | 14 | 14 | 2 |

## MODIFY SIGNAL

| Sheet No | RC-pb (EA) (N) | NEW PB (EA) (N) | 2"C (FT) (N) | CC (EA) (N) | RC Exist CONDUCTORS (FT) (N) | 28 CSC (FT) (N) | 5 CSC (FT) (N) | 3 CSC (FT) (N) |
|---|---|---|---|---|---|---|---|---|
| E-4 | 1 | 1 | 30 | 1 | 70 | 85 | 75 | 25 |
| Total | 1 | 1 | 30 | 1 | 70 | 85 | 75 | 25 |

## MODIFY LIGHTING

| Sheet No | 1½"C (FT) (N) | #6 AWG (FT) (N) | #10 AWG UP LIGHT POLE (FT) (N) | NEW PB (EA) (N) | CB (EA) (N) | 149 W LED LUMINAIRE (EA) (N) | 2" RISER (EA) (N) | RC PB (EA) (N) | AB-Conduit (FT) (N) | CONNECT SERIES WIRING (EA) (N) |
|---|---|---|---|---|---|---|---|---|---|---|
| E-5 | 200 | 600 | 160 | 2 | 2 | 2 | 1 | 1 | 285 | 1 |
| Total | 200 | 600 | 160 | 2 | 2 | 2 | 1 | 1 | 285 | 1 |

## MODIFY LIGHTING AND SIGN ILLUMINATION

| Sheet No | RC PB (EA) (N) | #5 PB (EA) (N) | RL TYPE 21 POLE (EA) (N) | RC FOUNDATION (EA) | 2"C (FT) (N) | 1½"C (FT) (N) | NEW PB (EA) (N) | BC (EA) (N) | SC (EA) (N) | CC (EA) (N) |
|---|---|---|---|---|---|---|---|---|---|---|
| E-11 | 1 | 1 | 1 | 1 | | 15 | 20 | | 1 | 2 |
| E-12 | 1 | 1 | 1 | 1 | 10 | | 1 | 1 | | |
| Total | 2 | 2 | 2 | 2 | 20 | 15 | 2 | 1 | 1 | 2 |

## MODIFY RAMP METERING SYSTEM

| Sheet No | RL Meter-On POLE (EA) (N) | 2"C (FT) (N) | CB (EA) (N) | SC (EA) (N) | 1½"C (FT) (N) | RC FOUNDATION (EA) |
|---|---|---|---|---|---|---|
| E-13 | 2 | 10 | 2 | 2 | 10 | 2 |
| E-14 | 1 | 5 | 1 | | | 1 |
| Total | 3 | 15 | 3 | 2 | 10 | 3 |

# ELECTRICAL QUANTITIES

E-15

REVISED BY | DATE REVISED
C.BURCIAGA | YI TSAU
CALCULATED-DESIGNED BY | CHECKED BY
FUNCTIONAL SUPERVISOR: YI TSAU
STATE OF CALIFORNIA - DEPARTMENT OF TRANSPORTATION
Caltrans® TRAFFIC DESIGN

LAST REVISION 08-06-13 | DATE PLOTTED => 10-MAR-2014 TIME PLOTTED => 13:42

| Dist | COUNTY | ROUTE | POST MILES TOTAL PROJECT | SHEET No. | TOTAL SHEETS |
|---|---|---|---|---|---|
| 07 | LA | 10,110,118, 134,210,710 | Var | 99 | 152 |

REGISTERED CIVIL ENGINEER 8-13-13 DATE

12-9-13
PLANS APPROVAL DATE

REGISTERED PROFESSIONAL ENGINEER LOHIT R. KOTHA No. C75977 Exp. 06/30/14 CIVIL STATE OF CALIFORNIA

THE STATE OF CALIFORNIA OR ITS OFFICERS OR AGENTS SHALL NOT BE RESPONSIBLE FOR THE ACCURACY OR COMPLETENESS OF SCANNED COPIES OF THIS PLAN SHEET.

# CURB RAMPS QUANTITIES

| LOCATION No. (X) | ROUTE | LOCATIONS | REMOVE CONCRETE (CURB, GUTTER, & SIDEWALK) | ROADWAY EXCAVATION | REMOVE CHAIN LINK FENCE | REMOVE METAL POST | MINOR CONCRETE (CURB RAMP) | MINOR CONCRETE (CURB, GUTTER, SIDEWALK & DRIVEWAY) | LEAN CONCRETE BASE | CLASS 3 AGGREGATE BASE | PEDESTRAIN BARRICADE | CHAINLINK FENCE (CL-6) | IMPORTED BORROW | ADJUST PULL BOX TO GRADE | DETECTABLE WARNING SURFACE |
|---|---|---|---|---|---|---|---|---|---|---|---|---|---|---|---|
| | | | CY | CY | LF | EA | CY | CY | CY | TON | LF | LF | CY | EA | SQFT |
| 25 | 210 | EB ON FROM HONOLULU Ave | 1.40 | 3.60 | | | 2.10 | 3.60 | 1.00 | 2.54 | | | 1.90 | 1 | 30 |
| 26 | 210 | WB ON FROM GOULD Ave | 1.60 | 4.60 | | | 1.50 | 3.30 | 1.20 | 2.74 | | | | 1 | 15 |
| 27 | 210 | WB OFF TO BERKSHIRE Place | 1.20 | 4.00 | | | 1.70 | 2.60 | 0.90 | 2.15 | | | 1.10 | | 27 |
| 28 | 210 | EB ON FROM ARROYO Blvd | 2.30 | 3.40 | | | 1.20 | 3.10 | 0.80 | 1.96 | | | | | 20 |
| 29 | 210 | WB ON/OFF LINCOLN Ave | 12.30 | 20.70 | | | 10.00 | 8.50 | 3.20 | 7.44 | 13.00 | | | 1 | 67 |
| 30 | 210 | EB OFF FAIR OAKS Ave 1 | 0.40 | | | | | 0.80 | | | | | | | |
| 31 | 210 | WB ON/OFF TO MICHILLINDA Ave/ FOOTHILL Blvd | 10.00 | 15.00 | | | 5.20 | 10.90 | 3.70 | 8.42 | 21.00 | | | 1 | 80.40 |
| 32 | 210 | WB OFF TO BUENA VISTA/CENTRAL Ave | 3.20 | 10.10 | 35.00 | | 3.70 | 4.50 | 1.40 | 3.33 | | 35.00 | | | 48 |
| 33 | 210 | WB ON FROM CITRUS Ave/BASELINE Ave | 4.70 | 7.30 | | | 1.90 | 5.70 | 2.00 | 4.89 | | | | | 74 |
| 34 | 210 | WB ON/OFF TO SUNFLOWER Ave | 11.20 | 16.30 | | | 5.90 | 12.80 | 4.90 | 10.96 | | | 1.70 | | 96 |
| 35 | 710 | SEG SB ON FROM RAMONA Blvd | 1.00 | 6.90 | | | 2.50 | 1.60 | 0.70 | 1.57 | | | | | 12 |
| 36 | 710 | PASADENA St/COLUMBIA Ave | 0.60 | 1.40 | | 1 | 1.10 | 0.50 | 0.20 | 0.59 | | | | | 12 |
| SUB TOTAL Q-2 1 | | | 49.90 ~~49.50~~ | 93.30 | 35.00 | 1 | 36.80 | 57.90 | 20.00 | 46.59 | 34.00 | 35.00 | 4.70 | 4 | 481.40 |
| SUB TOTAL Q-1 | | | 98.10 | 181.20 | 9.00 | | 63.20 | 112.90 | 35.80 | 82.42 | 15.00 | 0.00 | 2.70 | 5 | 809.50 |
| GRAND TOTAL 1 | | | 148.00 ~~147.60~~ | 274.50 | 44.00 | 1 | 100.00 | 170.80 | 55.80 | 129.01 | 49.00 | 35.00 | 7.40 | 9 | 1291.00 |

# TEMPORARY BMP QUANTITIES

| TEMPORARY DRAINAGE INLET PROTECTION | TEMPORARY GRAVEL BAG BERM |
|---|---|
| EA | LF |
| 30 | 1500 |

1 REPLACED PER ADDENDUM No. 1 DATED MARCH 11, 2014

# SUMMARY OF QUANTITIES

Q-2

STATE OF CALIFORNIA - DEPARTMENT OF TRANSPORTATION
Caltrans OFFICE OF DESIGN D

FUNCTIONAL SUPERVISOR: KHAN A HOSSAIN
CALCULATED-DESIGNED BY: ZABUNNESA TAREQUE
CHECKED BY: LOHIT KOTHA
REVISED BY
DATE REVISED

LAST REVISION 01-06-12 | DATE PLOTTED => 10-MAR-2014 | TIME PLOTTED => 13:42

| Dist | COUNTY | ROUTE | POST MILES TOTAL PROJECT | SHEET No. | TOTAL SHEETS |
|---|---|---|---|---|---|
| 07 | LA | 10,110,118 134,210,710 | Var | 129A | 152 |

REGISTERED CIVIL ENGINEER

July 19, 2013
PLANS APPROVAL DATE

REGISTERED PROFESSIONAL ENGINEER Gurinderpal Bhullar No. C48815 Exp. 9-30-14 CIVIL STATE OF CALIFORNIA

*THE STATE OF CALIFORNIA OR ITS OFFICERS OR AGENTS SHALL NOT BE RESPONSIBLE FOR THE ACCURACY OR COMPLETENESS OF SCANNED COPIES OF THIS PLAN SHEET.*

1 TO ACCOMPANY PLANS DATED 12-9-13

## TABLE 1

### TAPER LENGTH CRITERIA AND CHANNELIZING DEVICE SPACING

| SPEED (S) | MINIMUM TAPER LENGTH * FOR WIDTH OF OFFSET 12 FEET (W) | | | | MAXIMUM CHANNELIZING DEVICE SPACING | | |
|---|---|---|---|---|---|---|---|
| | | | | | X | Y | Z ** |
| | TANGENT 2L | MERGING L | SHIFTING L/2 | SHOULDER L/3 | TAPER | TANGENT | CONFLICT |
| mph | ft | ft | ft | ft | ft | ft | ft |
| 20 | 160 | 80 | 40 | 27 | 20 | 40 | 10 |
| 25 | 250 | 125 | 63 | 42 | 25 | 50 | 12 |
| 30 | 360 | 180 | 90 | 60 | 30 | 60 | 15 |
| 35 | 490 | 245 | 123 | 82 | 35 | 70 | 17 |
| 40 | 640 | 320 | 160 | 107 | 40 | 80 | 20 |
| 45 | 1080 | 540 | 270 | 180 | 45 | 90 | 22 |
| 50 | 1200 | 600 | 300 | 200 | 50 | 100 | 25 |
| 55 | 1320 | 660 | 330 | 220 | 55 | 110 | 27 |
| 60 | 1440 | 720 | 360 | 240 | 60 | 120 | 30 |
| 65 | 1560 | 780 | 390 | 260 | 65 | 130 | 32 |
| 70 | 1680 | 840 | 420 | 280 | 70 | 140 | 35 |

* - For other offsets, use the following merging taper length formula for L:
For speed of 40 mph or less, $L = WS^2/60$
For speed of 45 mph or more, $L = WS$

Where: L = Taper length in feet
W = Width of offset in feet
S = Posted speed limit, off-peak 85th-percentile speed prior to work starting, or the anticipated operating speed in mph

** - Use for taper and tangent sections where there are no pavement markings or where there is a conflict between existing pavement markings and channelizers (CA).

## TABLE 2

### LONGITUDINAL BUFFER SPACE AND FLAGGER STATION SPACING

| SPEED * | Min D ** | DOWNGRADE Min D *** | | |
|---|---|---|---|---|
| | | -3% | -6% | -9% |
| mph | ft | ft | ft | ft |
| 20 | 115 | 116 | 120 | 126 |
| 25 | 155 | 158 | 165 | 173 |
| 30 | 200 | 205 | 215 | 227 |
| 35 | 250 | 257 | 271 | 287 |
| 40 | 305 | 315 | 333 | 354 |
| 45 | 360 | 378 | 400 | 427 |
| 50 | 425 | 446 | 474 | 507 |
| 55 | 495 | 520 | 553 | 593 |
| 60 | 570 | 598 | 638 | 686 |
| 65 | 645 | 682 | 728 | 785 |
| 70 | 730 | 771 | 825 | 891 |

* - Speed is posted speed limit, off-peak 85th-percentile speed prior to work starting, or the anticipated operating speed in mph

** - Longitudinal buffer space or flagger station spacing

*** - Use on sustained downgrade steeper than -3 percent and longer than 1 mile.

## TABLE 3

### ADVANCE WARNING SIGN SPACING

| ROAD TYPE | DISTANCE BETWEEN SIGNS * | | |
|---|---|---|---|
| | A | B | C |
| | ft | ft | ft |
| URBAN - 25 mph OR LESS | 100 | 100 | 100 |
| URBAN - MORE THAN 25 mph TO 40 mph | 250 | 250 | 250 |
| URBAN - MORE THAN 40 mph | 350 | 350 | 350 |
| RURAL | 500 | 500 | 500 |
| EXPRESSWAY / FREEWAY | 1000 | 1500 | 2640 |

* - The distances are approximate, are intended for guidance purposes only, and should be applied with engineering judgment. These distances should be adjusted by the Engineer for field conditions, if necessary, by increasing or decreasing the recommmended distances.

**1 ADDED PER ADDENDUM No. 1 DATED MARCH 11, 2014**

STATE OF CALIFORNIA
DEPARTMENT OF TRANSPORTATION

# TRAFFIC CONTROL SYSTEM TABLES FOR LANE AND RAMP CLOSURES

NO SCALE

RSP T9 DATED JULY 19, 2013 SUPERSEDES RSP T9 DATED APRIL 19, 2013 THAT SUPPLEMENTS THE STANDARD PLANS BOOK DATED 2010.

**REVISED STANDARD PLAN RSP T9**

**2010 REVISED STANDARD PLAN RSP T9**

4-30-13

| Dist | COUNTY | ROUTE | POST MILES TOTAL PROJECT | SHEET No. | TOTAL SHEETS |
|---|---|---|---|---|---|
| 07 | LA | 10,110,118 134,210,710 | Var | 129B | 152 |

REGISTERED CIVIL ENGINEER

April 19, 2013
PLANS APPROVAL DATE

REGISTERED PROFESSIONAL ENGINEER Gurinderpal Bhullar No. C48815 Exp. 9-30-14 CIVIL STATE OF CALIFORNIA

THE STATE OF CALIFORNIA OR ITS OFFICERS OR AGENTS SHALL NOT BE RESPONSIBLE FOR THE ACCURACY OR COMPLETENESS OF SCANNED COPIES OF THIS PLAN SHEET.

1 TO ACCOMPANY PLANS DATED 12-9-13

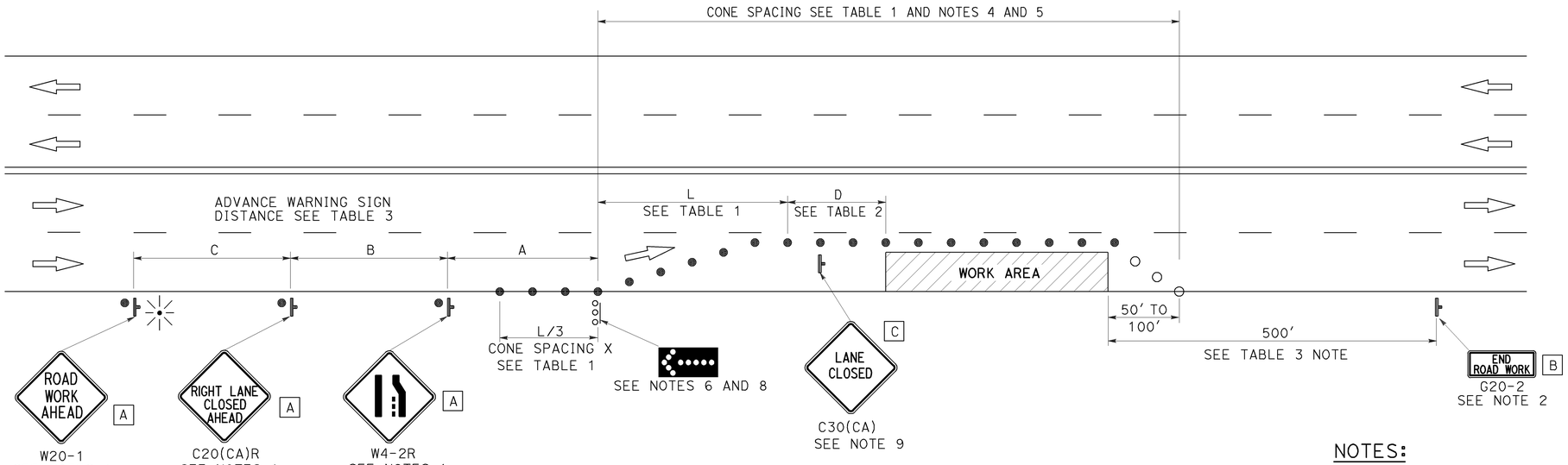


## TYPICAL LANE CLOSURE

## NOTES:

See Revised Standard Plan RSP T9 for tables.

Use cone spacing X for taper segment, Y for tangent segment or Z for conflict situations, as approriate, per Table 1, unless X, Y, or Z cone spacing is shown on this sheet.

Unless otherwise specified in the special provisions, all temporary warning signs shall have black legend on fluorescent orange background.

California codes are designated by (CA). Otherwise, Federal (MUTCD) codes are shown.

**1 ADDED PER ADDENDUM No. 1 DATED MARCH 11, 2014**

## NOTES:

1. Each advance warning sign shall be equipped with at least two flags for daytime closure. Each flag shall be at least 16" x 16" in size and shall be orange or fluorescent red-orange in color. Flashing beacons shall be placed at the locations indicated for lane closure during hours of darkness.
2. A G20-2 "END ROAD WORK" sign, as appropriate, shall be placed at the end of the lane closure unless the end of work area is obvious, or ends within a larger project's limits.
3. If the W20-1 sign would follow within 2000' of a stationary W20-1 or G20-1 "ROAD WORK NEXT _____ MILES", use a C20(CA) sign for the first advance warning sign.
4. All cones used for lane closures during the hours of darkness shall be fitted with retroreflective bands (or sleeves) as specified in the specifications.
5. Portable delineators, placed at one-half the spacing indicated for traffic cones, may be used instead of cones for daytime closures only.
6. Flashing arrow sign shall be either Type I or Type II.
7. For approach speeds over 50 mph, use the "Traffic Control System for Lane Closure On Freeways And Expressways" plan for lane closure details and requirements.
8. A minimum 1500' of sight distance shall be provided where possible for vehicles approaching the first flashing arrow sign. Lane closures shall not begin at the top of crest vertical curve or on a horizontal curve.
9. Place a C30(CA) sign every 2000' throughout length of lane closure.
10. Median lane closures shall conform to the details as shown except that C20(CA)L and W4-2L signs shall be used.
11. At least one person shall be assigned to provide full time maintenance of traffic control devices for lane closure unless, otherwise directed by the Engineer.

## LEGEND

- TRAFFIC CONE
- TRAFFIC CONE (OPTIONAL TAPER)
- TEMPORARY TRAFFIC CONTROL SIGN
- FLASHING ARROW SIGN (FAS)
- FAS SUPPORT OR TRAILER
- PORTABLE FLASHING BEACON

## SIGN PANEL SIZE (Min)

| | |
|---|---|
| A | 48" x 48" |
| B | 36" x 18" |
| C | 30" x 30" |

STATE OF CALIFORNIA
DEPARTMENT OF TRANSPORTATION

# TRAFFIC CONTROL SYSTEM FOR LANE CLOSURE ON MULTILANE CONVENTIONAL HIGHWAYS

NO SCALE

RSP T11 DATED APRIL 19, 2013 SUPERSEDES STANDARD PLAN T11 DATED MAY 20, 2011 - PAGE 239 OF THE STANDARD PLANS BOOK DATED 2010.

**REVISED STANDARD PLAN RSP T11**

2010 REVISED STANDARD PLAN RSP T11

4-2-13