Dist	COUNTY	ROUTE	POST MILES TOTAL PROJECT	SHEET No.	TOTAL SHEETS
07	Ven	1, 33, 101 & 126	Var	1	59

STATE OF CALIFORNIA

DEPARTMENT OF TRANSPORTATION

PROJECT PLANS FOR CONSTRUCTION ON

STATE HIGHWAY

IN VENTURA COUNTY AT VARIOUS LOCATIONS

TO BE SUPPLEMENTED BY STANDARD PLANS DATED MAY 2006

INDEX OF PLANS

SHEET No.	DESCRIPTION
1	TITLE AND LOCATION MAP
2-18	CONSTRUCTION DETAILS
19-22	UTILITY PLANS
23-27	CONSTRUCTION AREA SIGNS
28	TRAFFIC HANDLING PLAN
29-32	TRAFFIC HANDLING DETAILS
33	TRAFFIC HANDLING QUANTITIES
34-36	PAVEMENT DELINEATION PLAN
37	SUMMARY OF QUANTITIES
38-44	ELECTRICAL PLANS
45-59	REVISED AND NEW STANDARD PLANS

THE STANDARD PLANS LIST APPLICABLE TO THIS CONTRACT IS INCLUDED IN THE NOTICE TO BIDDERS AND SPECIAL PROVISIONS BOOK.

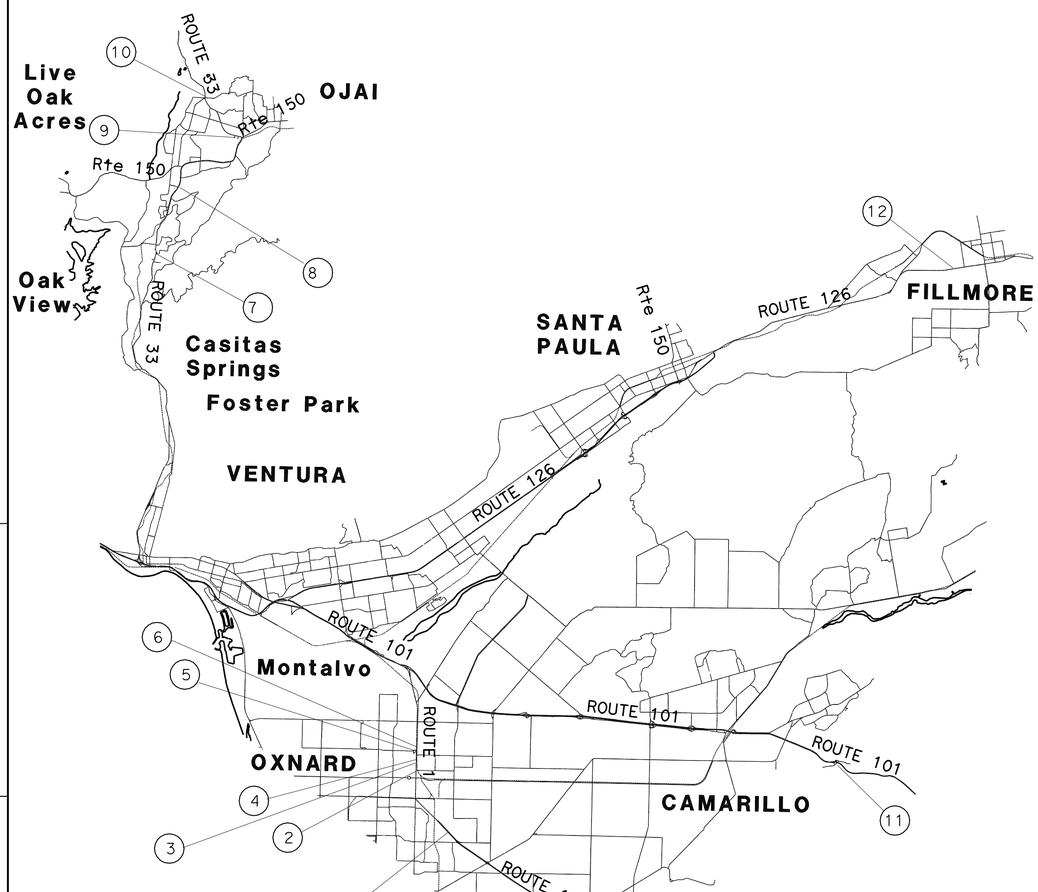

LOCATION MAP

LOCATIONS OF CONSTRUCTION

Loc No.	Route	POST MILE	DESCRIPTION	DIRECTION
1	1	16.64	SW CORNER OF STATHAM Blvd	SOUTHBOUND
2	1	18.24	SW, SE, NE, AND NW CORNERS OF FOURTH St	NORTHBOUND/SOUTHBOUND
3	1	18.44	SE CORNER OF SECOND St-Lt	NORTHBOUND
4	1	18.59	NW CORNER OF MAGNOLIA Ave	SOUTHBOUND
5	1	18.71	PALM Dr-Lt	SOUTHBOUND
6	1	18.85	DEODAR Ave-Lt	SOUTHBOUND
7	33	8.79	NW CORNER OF OAK VIEW Ave	SOUTHBOUND
8	33	10.65	WOODLAND Rd	NORTHBOUND
9	33	11.42	VALLERIO Ave-Lt	WESTBOUND
10	33	12.80	NE CORNER OF FAIRVIEW Ave	NORTHBOUND
11	101	10.89	SB ON RAMP FROM CAMARILLO SPRINGS Rd	SOUTHBOUND
12	126	20.33	LOS SERENOS Rd-Lt	WESTBOUND

PROJECT ENGINEER REGISTERED CIVIL ENGINEER — DATE 5/4/12

REGISTERED PROFESSIONAL ENGINEER — FREW KOTISSO — No. C72485 — Exp. 6/30/12 — CIVIL — STATE OF CALIFORNIA

May 21, 2012
PLANS APPROVAL DATE

THE STATE OF CALIFORNIA OR ITS OFFICERS OR AGENTS SHALL NOT BE RESPONSIBLE FOR THE ACCURACY OR COMPLETENESS OF SCANNED COPIES OF THIS PLAN SHEET.

THE CONTRACTOR SHALL POSSESS THE CLASS (OR CLASSES) OF LICENSE AS SPECIFIED IN THE "NOTICE TO BIDDERS."

PROJECT MANAGER DAVID MIRAANEY

DESIGN ENGINEER FREW KOTISSO

CONTRACT No.	07-276704
PROJECT ID	0700000526

LASTREVISION 00-00-00 — DATE PLOTTED => 12-OCT-2012 TIME PLOTTED => 14:18

Dist	COUNTY	ROUTE	POST MILES TOTAL PROJECT	SHEET No.	TOTAL SHEETS
07	Ven	1, 33,101 & 126	Var	2	59

REGISTERED CIVIL ENGINEER 5/4/12 DATE

5-21-12
PLANS APPROVAL DATE

REGISTERED PROFESSIONAL ENGINEER FREW KOTISSO No. C72485 Exp. 6/30/14 CIVIL STATE OF CALIFORNIA

THE STATE OF CALIFORNIA OR ITS OFFICERS OR AGENTS SHALL NOT BE RESPONSIBLE FOR THE ACCURACY OR COMPLETENESS OF SCANNED COPIES OF THIS PLAN SHEET.

NOTES:

1. FOR ACCURATE RIGHT OF WAY DATA, CONTACT RIGHT OF WAY ENGINEERING AT THE DISTRICT OFFICE.
2. EXISTING UTILITIES HAVE NOT BEEN PLOTTED ON THESE PLANS.
3. GRADES SHOWN ON PLANS SHALL GOVERN OVER NUMBERS.

Loc No. 1

ROUTE 1 AND STATHAM Blvd (SW CORNER) (PM 16.64)

LEGEND:

- DETECTABLE WARNING SURFACE
- GROOVING
- ROADWAY EXCAVATION (TYPE Z-2) (AERIALLY DEPOSITED LEAD)

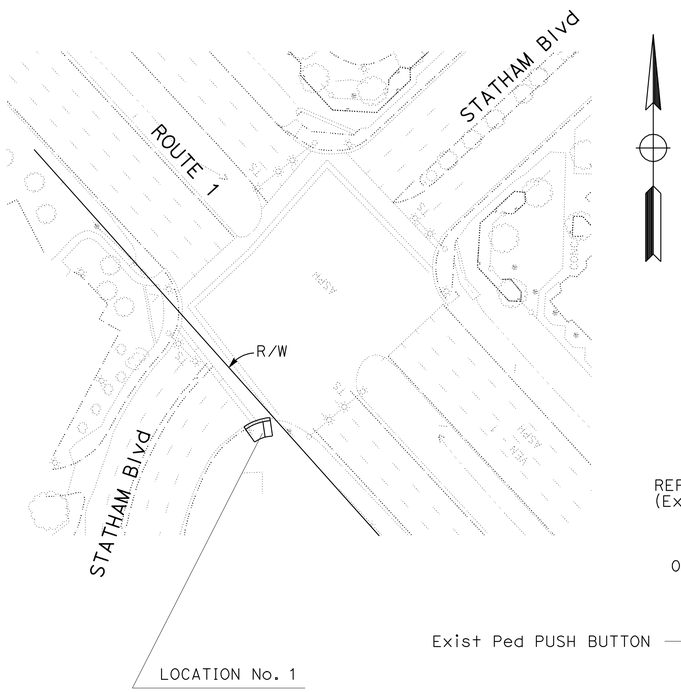

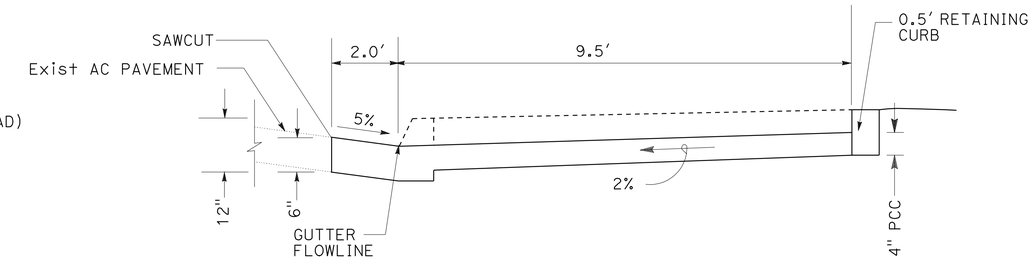

SECTION A-A

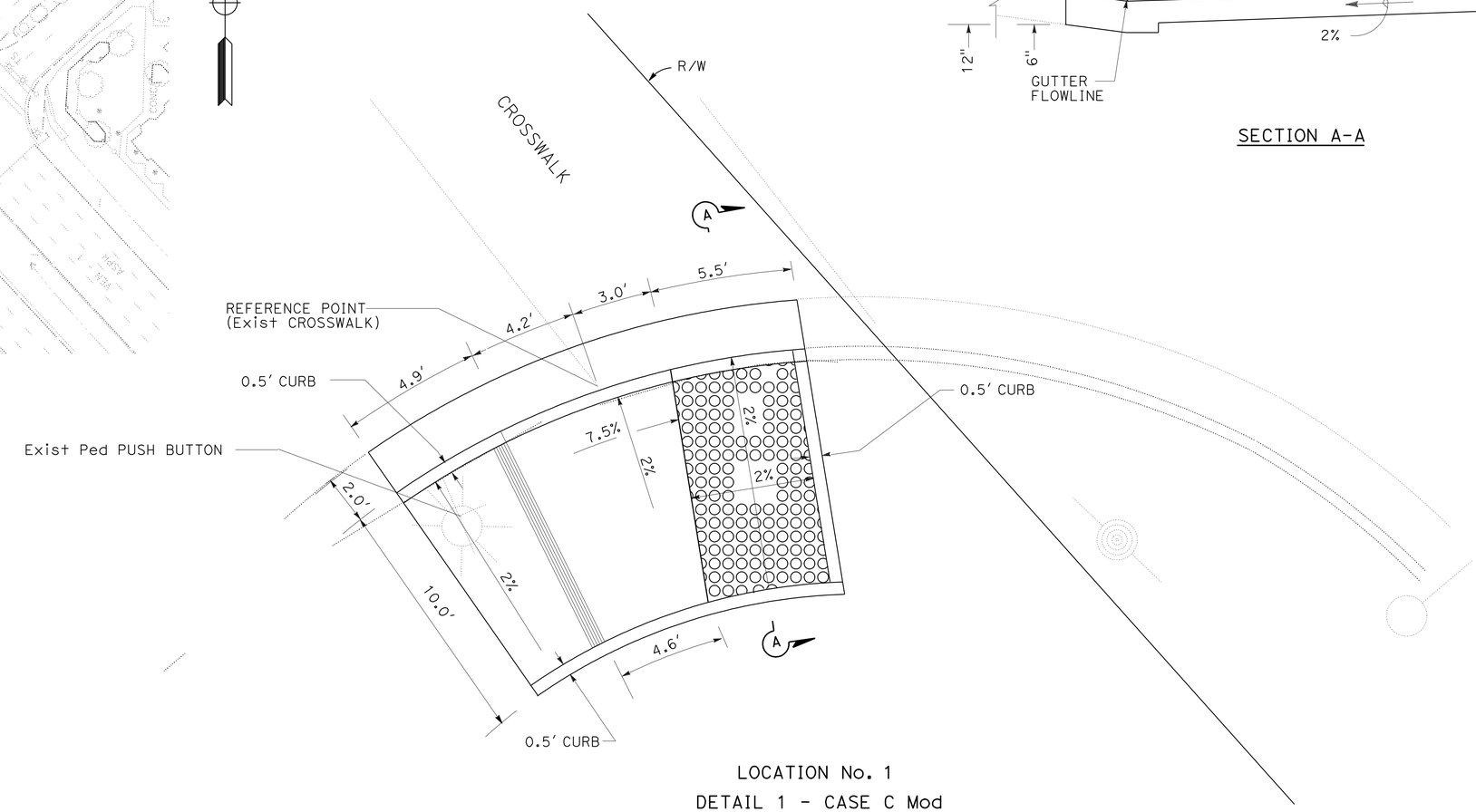

LOCATION No. 1

DETAIL 1 - CASE C Mod

NO SCALE

CONSTRUCTION DETAILS

NO SCALE

C-1

STATE OF CALIFORNIA - DEPARTMENT OF TRANSPORTATION

Caltrans

TRAFFIC DESIGN

FUNCTIONAL SUPERVISOR: GRISH BIGLARIAN

CALCULATED-DESIGNED BY: FREW KOTISSO

CHECKED BY: SHAHAN PETROSSIAN

REVISED BY

DATE REVISED

LAST REVISION: 00-00-00

DATE PLOTTED => 12-OCT-2012

TIME PLOTTED => 14:19

Dist	COUNTY	ROUTE	POST MILES TOTAL PROJECT	SHEET No.	TOTAL SHEETS
07	Ven	1, 33,101 & 126	Var	3	59

REGISTERED CIVIL ENGINEER 5/4/12 DATE

5-21-12
PLANS APPROVAL DATE

REGISTERED PROFESSIONAL ENGINEER FREW KOTISSO No. C72485 Exp. 6/30/14 CIVIL STATE OF CALIFORNIA

THE STATE OF CALIFORNIA OR ITS OFFICERS OR AGENTS SHALL NOT BE RESPONSIBLE FOR THE ACCURACY OR COMPLETENESS OF SCANNED COPIES OF THIS PLAN SHEET.

NOTES:

1. FOR ACCURATE RIGHT OF WAY DATA, CONTACT RIGHT OF WAY ENGINEERING AT THE DISTRICT OFFICE.
2. EXISTING UTILITIES HAVE NOT BEEN PLOTTED ON THESE PLANS.

Loc No. 2

ROUTE 1 AND FOURTH St
(SW, SE, NW, & NE CORNERS) (PM 18.24)

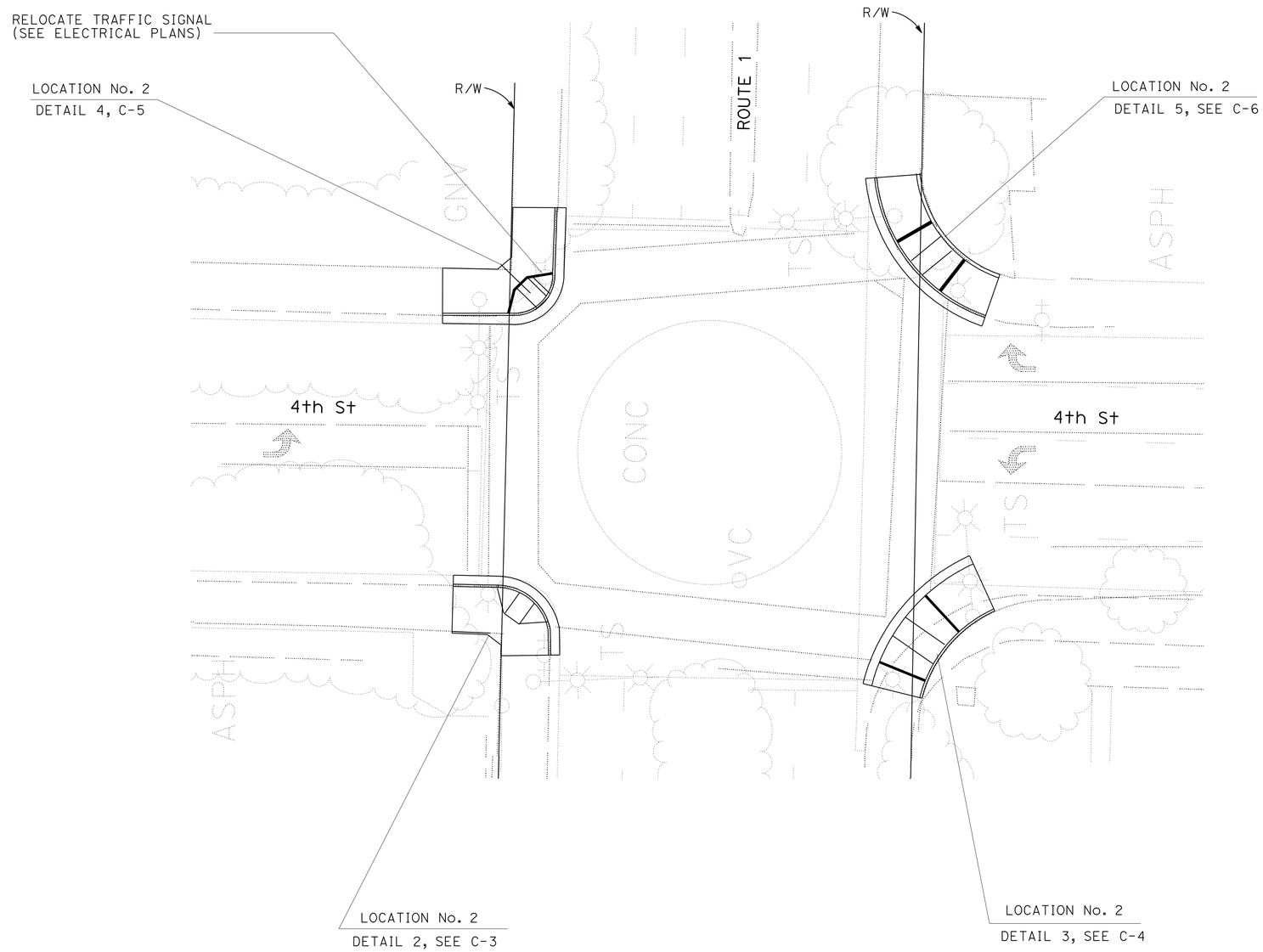

CONSTRUCTION DETAILS

NO SCALE

C-2

STATE OF CALIFORNIA - DEPARTMENT OF TRANSPORTATION
Caltrans
TRAFFIC DESIGN

FUNCTIONAL SUPERVISOR: GRISH BIGLARIAN
CALCULATED-DESIGNED BY: FREW KOTISSO
CHECKED BY: SHAHAN PETROSSIAN
REVISED BY
DATE REVISED

LAST REVISION 00-00-00
DATE PLOTTED => 12-OCT-2012
TIME PLOTTED => 14:19

Dist	COUNTY	ROUTE	POST MILES TOTAL PROJECT	SHEET No.	TOTAL SHEETS
07	Ven	1, 33,101 & 126	Var	4	59

REGISTERED CIVIL ENGINEER 5/4/12 DATE

5-21-12
PLANS APPROVAL DATE

REGISTERED PROFESSIONAL ENGINEER FREW KOTISSO No. C72485 Exp. 6/30/14 CIVIL STATE OF CALIFORNIA

THE STATE OF CALIFORNIA OR ITS OFFICERS OR AGENTS SHALL NOT BE RESPONSIBLE FOR THE ACCURACY OR COMPLETENESS OF SCANNED COPIES OF THIS PLAN SHEET.

NOTES:

1. FOR ACCURATE RIGHT OF WAY DATA, CONTACT RIGHT OF WAY ENGINEERING AT THE DISTRICT OFFICE.
2. EXISTING UTILITIES HAVE NOT BEEN PLOTTED ON THESE PLANS.

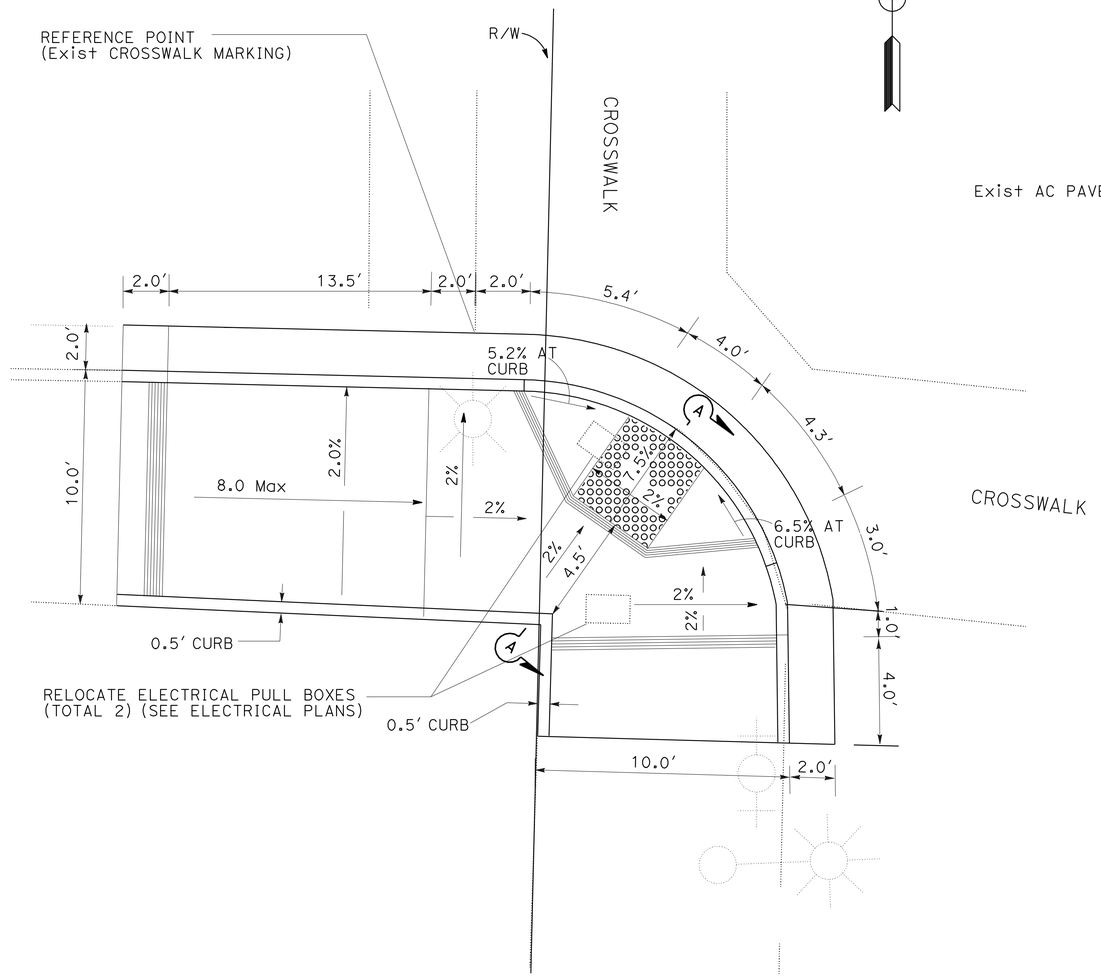

LOCATION No. 2

DETAIL 2 - CASE A Mod

NO SCALE

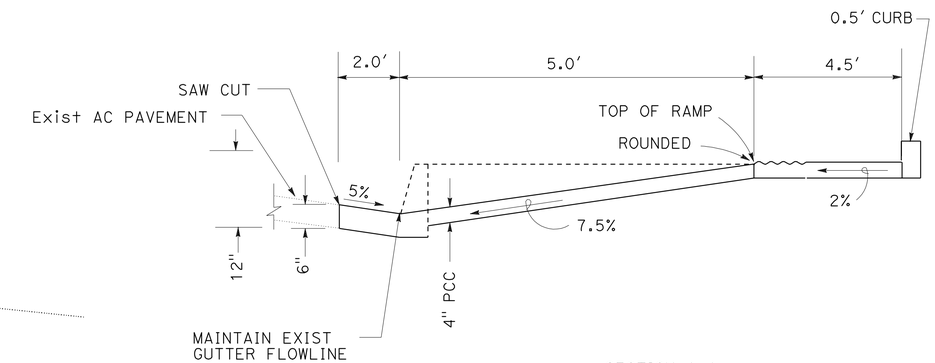

SECTION A-A

CONSTRUCTION DETAILS

NO SCALE

C-3

STATE OF CALIFORNIA - DEPARTMENT OF TRANSPORTATION

Caltrans

TRAFFIC DESIGN

FUNCTIONAL SUPERVISOR: GRISH BIGLARIAN

CALCULATED-DESIGNED BY: FREW KOTISSO

CHECKED BY: SHAHAN PETROSSIAN

REVISED BY | DATE REVISED

LAST REVISION 00-00-00 | DATE PLOTTED => 12-OCT-2012 | TIME PLOTTED => 14:19

Dist	COUNTY	ROUTE	POST MILES TOTAL PROJECT	SHEET No.	TOTAL SHEETS
07	Ven	1, 33,101 & 126	Var	5	59

REGISTERED CIVIL ENGINEER 5/4/12 DATE

5-21-12
PLANS APPROVAL DATE

REGISTERED PROFESSIONAL ENGINEER FREW KOTISSO No. C72485 Exp. 6/30/14 CIVIL STATE OF CALIFORNIA

THE STATE OF CALIFORNIA OR ITS OFFICERS OR AGENTS SHALL NOT BE RESPONSIBLE FOR THE ACCURACY OR COMPLETENESS OF SCANNED COPIES OF THIS PLAN SHEET.

NOTES:

1. FOR ACCURATE RIGHT OF WAY DATA, CONTACT RIGHT OF WAY ENGINEERING AT THE DISTRICT OFFICE.
2. EXISTING UTILITIES HAVE NOT BEEN PLOTTED ON THESE PLANS.

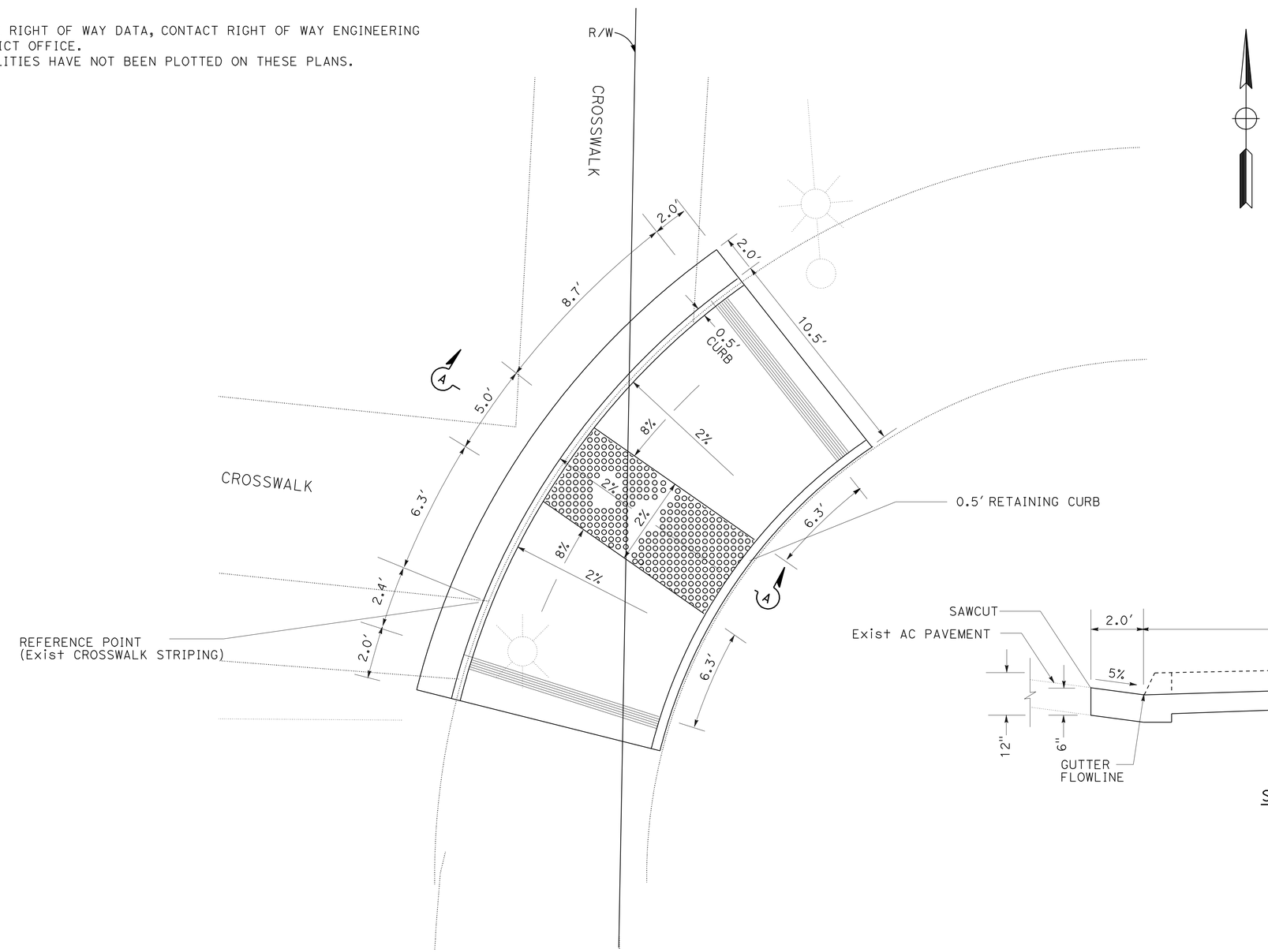

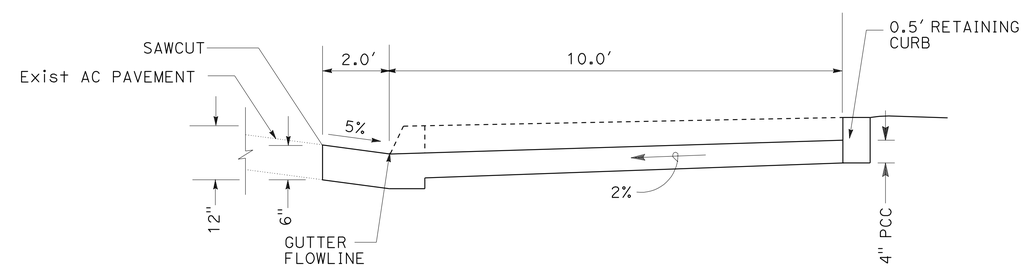

SECTION A-A

LOCATION No. 2
DETAIL 3 - CASE C
NO SCALE

CONSTRUCTION DETAILS

NO SCALE

C-4

STATE OF CALIFORNIA - DEPARTMENT OF TRANSPORTATION
Caltrans
TRAFFIC DESIGN

FUNCTIONAL SUPERVISOR: GRISH BIGLARIAN
CALCULATED-DESIGNED BY: FREW KOTISSO
CHECKED BY: SHAHAN PETROSSIAN
REVISED BY
DATE REVISED

LAST REVISION 00-00-00
DATE PLOTTED => 12-OCT-2012
TIME PLOTTED => 14:19

Dist	COUNTY	ROUTE	POST MILES TOTAL PROJECT	SHEET No.	TOTAL SHEETS
07	Ven	1, 33,101 & 126	Var	6	59

REGISTERED CIVIL ENGINEER 5/4/12 DATE

5-21-12
PLANS APPROVAL DATE

REGISTERED PROFESSIONAL ENGINEER FREW KOTISSO No. C72485 Exp. 6/30/14 CIVIL STATE OF CALIFORNIA

THE STATE OF CALIFORNIA OR ITS OFFICERS OR AGENTS SHALL NOT BE RESPONSIBLE FOR THE ACCURACY OR COMPLETENESS OF SCANNED COPIES OF THIS PLAN SHEET.

NOTES:

1. FOR ACCURATE RIGHT OF WAY DATA, CONTACT RIGHT OF WAY ENGINEERING AT THE DISTRICT OFFICE.
2. EXISTING UTILITIES HAVE NOT BEEN PLOTTED ON THESE PLANS.

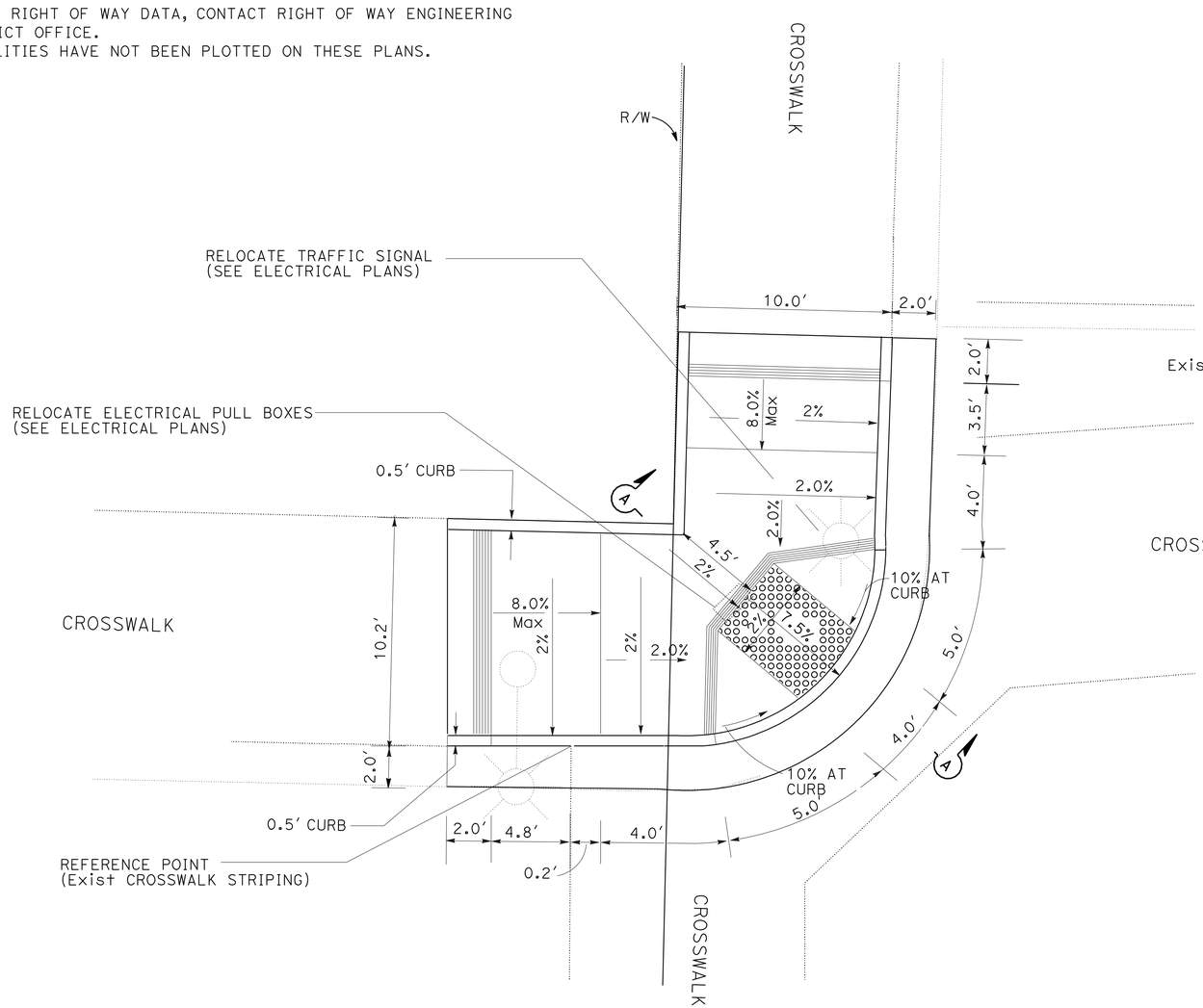

LOCATION No. 2
DETAIL 4 - CASE A Mod
NO SCALE

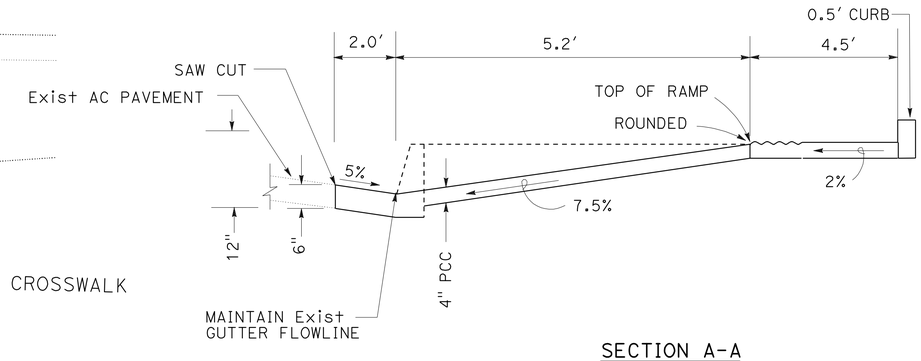

SECTION A-A

CONSTRUCTION DETAILS

NO SCALE

C-5

STATE OF CALIFORNIA - DEPARTMENT OF TRANSPORTATION
Caltrans
TRAFFIC DESIGN

FUNCTIONAL SUPERVISOR: GRISH BIGLARIAN
CALCULATED-DESIGNED BY: FREW KOTISSO
CHECKED BY: SHAHAN PETROSSIAN
REVISED BY
DATE REVISED

LAST REVISION 00-00-00
DATE PLOTTED => 12-OCT-2012
TIME PLOTTED => 14:19

Dist	COUNTY	ROUTE	POST MILES TOTAL PROJECT	SHEET No.	TOTAL SHEETS
07	Ven	1, 33,101 & 126	Var	7	59

REGISTERED CIVIL ENGINEER — DATE 5/4/12

5-21-12
PLANS APPROVAL DATE

REGISTERED PROFESSIONAL ENGINEER — FREW KOTISSO — No. C72485 — Exp. 6/30/14 — CIVIL — STATE OF CALIFORNIA

THE STATE OF CALIFORNIA OR ITS OFFICERS OR AGENTS SHALL NOT BE RESPONSIBLE FOR THE ACCURACY OR COMPLETENESS OF SCANNED COPIES OF THIS PLAN SHEET.

NOTES:

1. FOR ACCURATE RIGHT OF WAY DATA, CONTACT RIGHT OF WAY ENGINEERING AT THE DISTRICT OFFICE.
2. EXISTING UTILITIES HAVE NOT BEEN PLOTTED ON THESE PLANS.

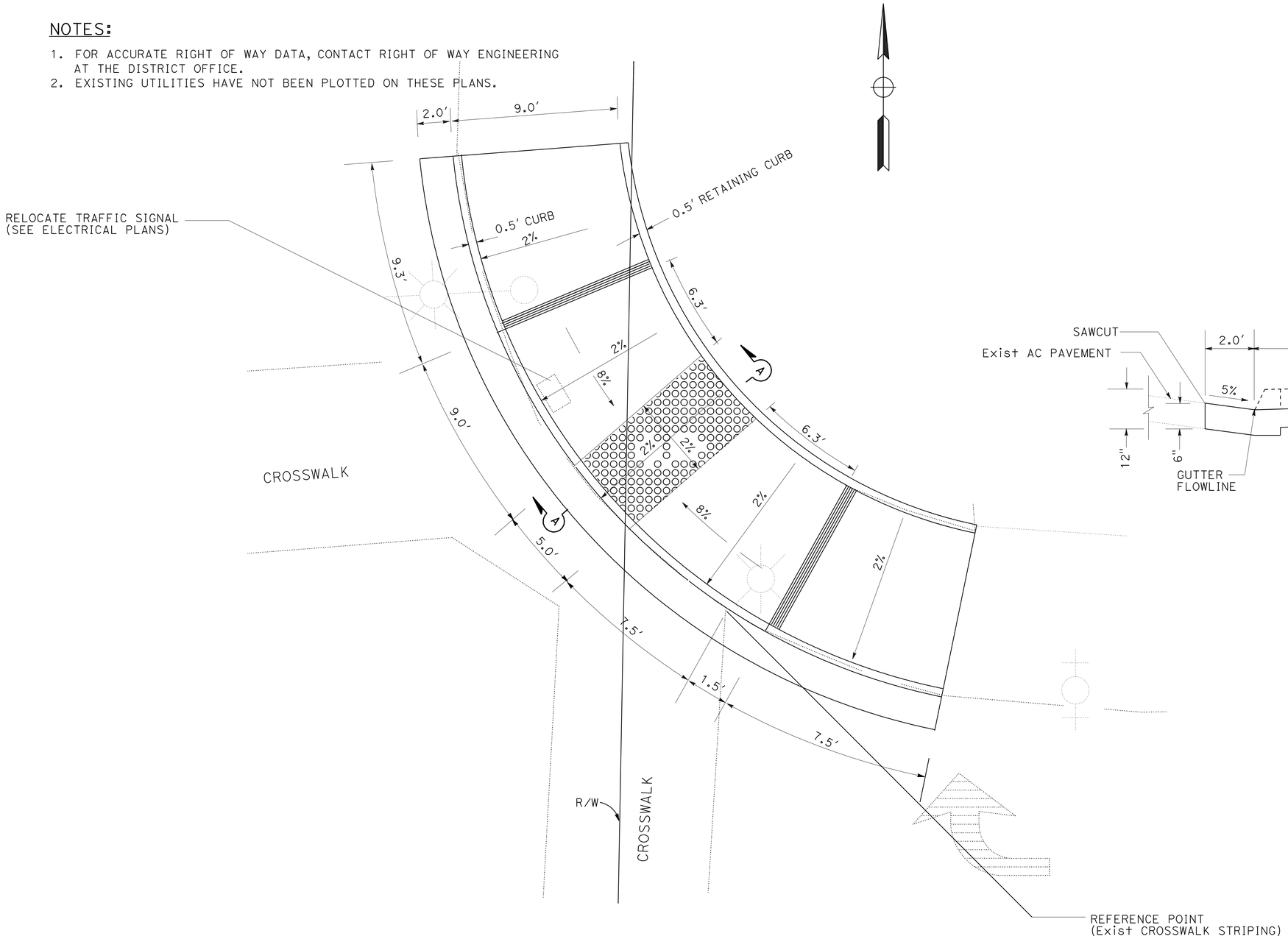

LOCATION No. 2
DETAIL 5 - CASE A
NO SCALE

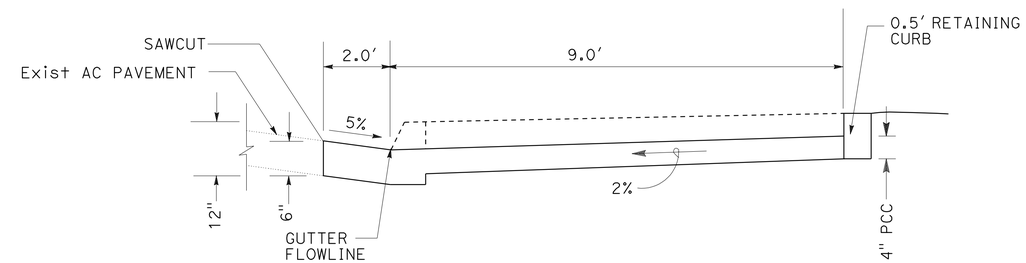

SECTION A-A

CONSTRUCTION DETAILS

NO SCALE

C-6

STATE OF CALIFORNIA - DEPARTMENT OF TRANSPORTATION
Caltrans
TRAFFIC DESIGN

FUNCTIONAL SUPERVISOR: GRISH BIGLARIAN
CALCULATED-DESIGNED BY: FREW KOTISSO
CHECKED BY: SHAHAN PETROSSIAN
REVISED BY
DATE REVISED

LAST REVISION 00-00-00
DATE PLOTTED => 12-OCT-2012
TIME PLOTTED => 14:19

Dist	COUNTY	ROUTE	POST MILES TOTAL PROJECT	SHEET No.	TOTAL SHEETS
07	Ven	1, 33,101 & 126	Var	8	59

REGISTERED CIVIL ENGINEER 5/4/12 DATE

5-21-12
PLANS APPROVAL DATE

REGISTERED PROFESSIONAL ENGINEER FREW KOTISSO No. C72485 Exp. 6/30/14 CIVIL STATE OF CALIFORNIA

THE STATE OF CALIFORNIA OR ITS OFFICERS OR AGENTS SHALL NOT BE RESPONSIBLE FOR THE ACCURACY OR COMPLETENESS OF SCANNED COPIES OF THIS PLAN SHEET.

NOTES:

1. FOR ACCURATE RIGHT OF WAY DATA, CONTACT RIGHT OF WAY ENGINEERING AT THE DISTRICT OFFICE.
2. EXISTING UTILITIES HAVE NOT BEEN PLOTTED ON THESE PLANS.

Loc No. 3

ROUTE 1 AND SECOND St (SE CORNER) (PM 18.44)

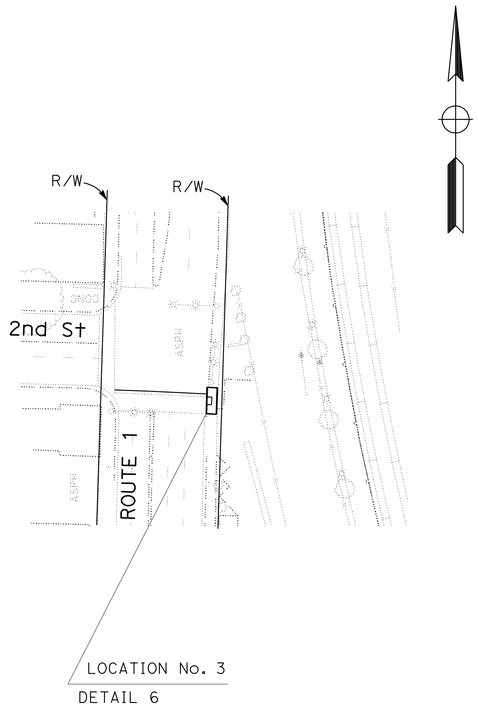

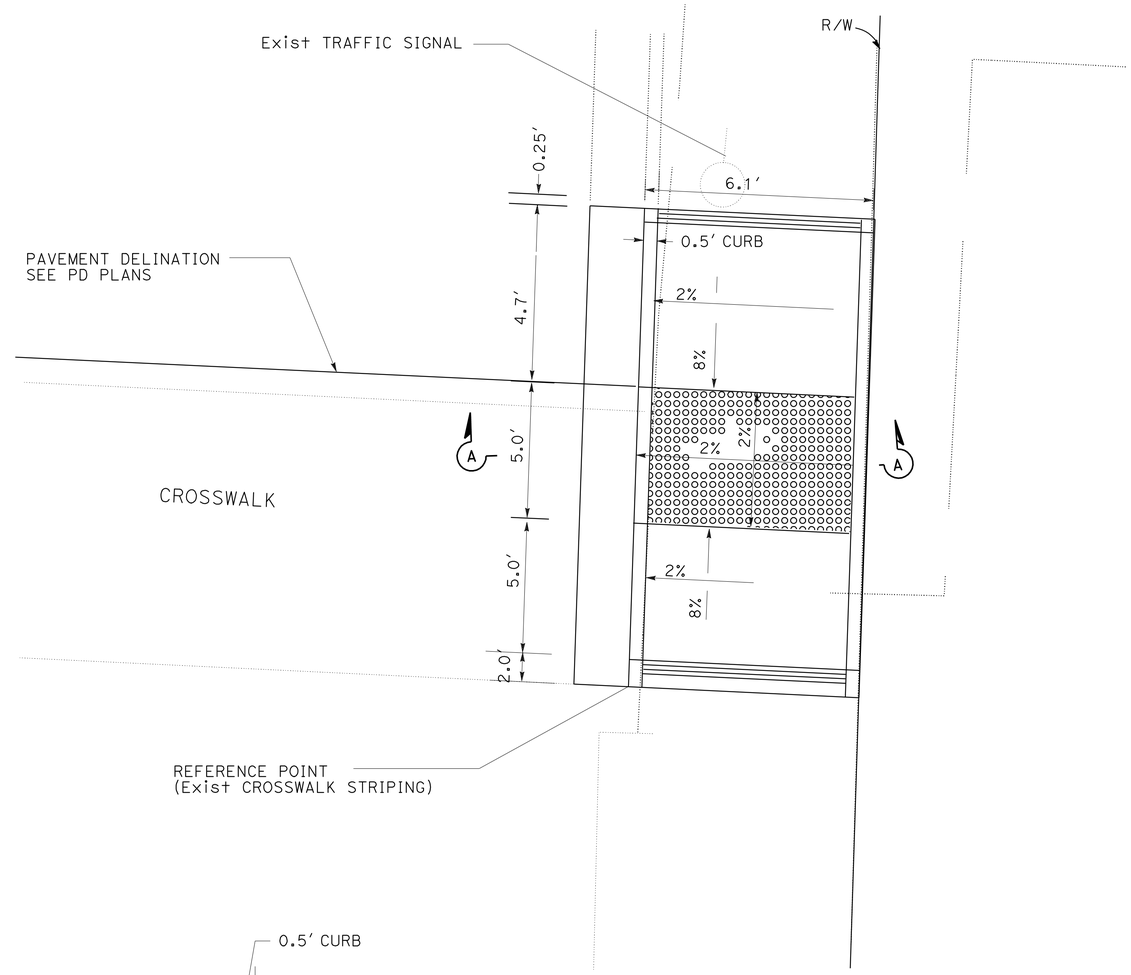

LOCATION No. 3
DETAIL 6 - CASE C
NO SCALE

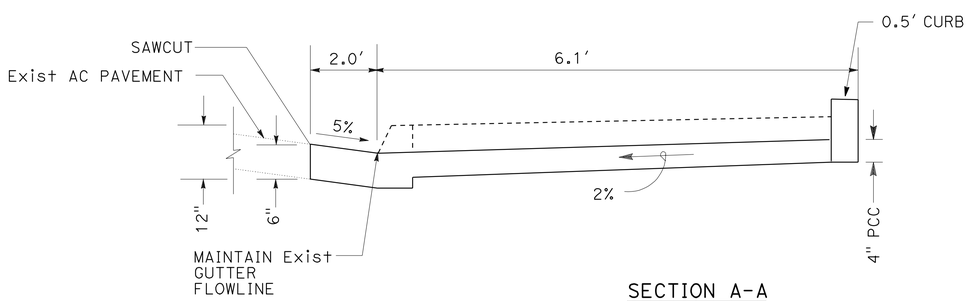

SECTION A-A

CONSTRUCTION DETAILS

NO SCALE

C-7

STATE OF CALIFORNIA - DEPARTMENT OF TRANSPORTATION
Caltrans
TRAFFIC DESIGN

FUNCTIONAL SUPERVISOR: GRISH BIGLARIAN
CALCULATED-DESIGNED BY: FREW KOTISSO
CHECKED BY: SHAHAN PETROSSIAN
REVISED BY
DATE REVISED

LAST REVISION 00-00-00
DATE PLOTTED => 12-OCT-2012
TIME PLOTTED => 14:19

Dist	COUNTY	ROUTE	POST MILES TOTAL PROJECT	SHEET No.	TOTAL SHEETS
07	Ven	1, 33,101 & 126	Var	9	59

REGISTERED CIVIL ENGINEER 5/4/12 DATE

5-21-12
PLANS APPROVAL DATE

REGISTERED PROFESSIONAL ENGINEER FREW KOTISSO No. C72485 Exp. 6/30/14 CIVIL STATE OF CALIFORNIA

THE STATE OF CALIFORNIA OR ITS OFFICERS OR AGENTS SHALL NOT BE RESPONSIBLE FOR THE ACCURACY OR COMPLETENESS OF SCANNED COPIES OF THIS PLAN SHEET.

NOTES:

1. FOR ACCURATE RIGHT OF WAY DATA, CONTACT RIGHT OF WAY ENGINEERING AT THE DISTRICT OFFICE.
2. EXISTING UTILITIES HAVE NOT BEEN PLOTTED ON THESE PLANS.

Loc No. 4

ROUTE 1 AND MAGNOLIA Ave (NW CORNER) (PM 18.59)

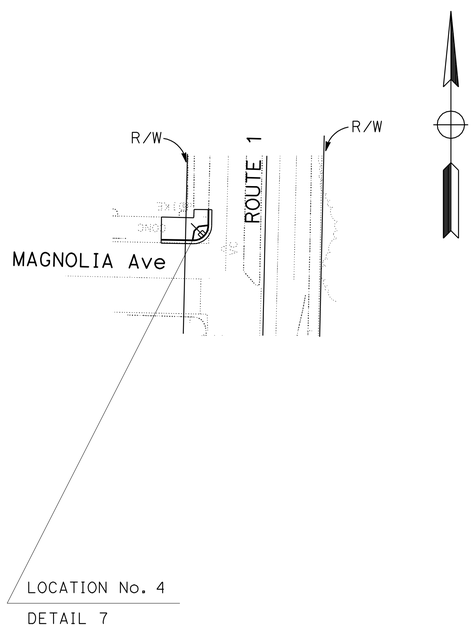

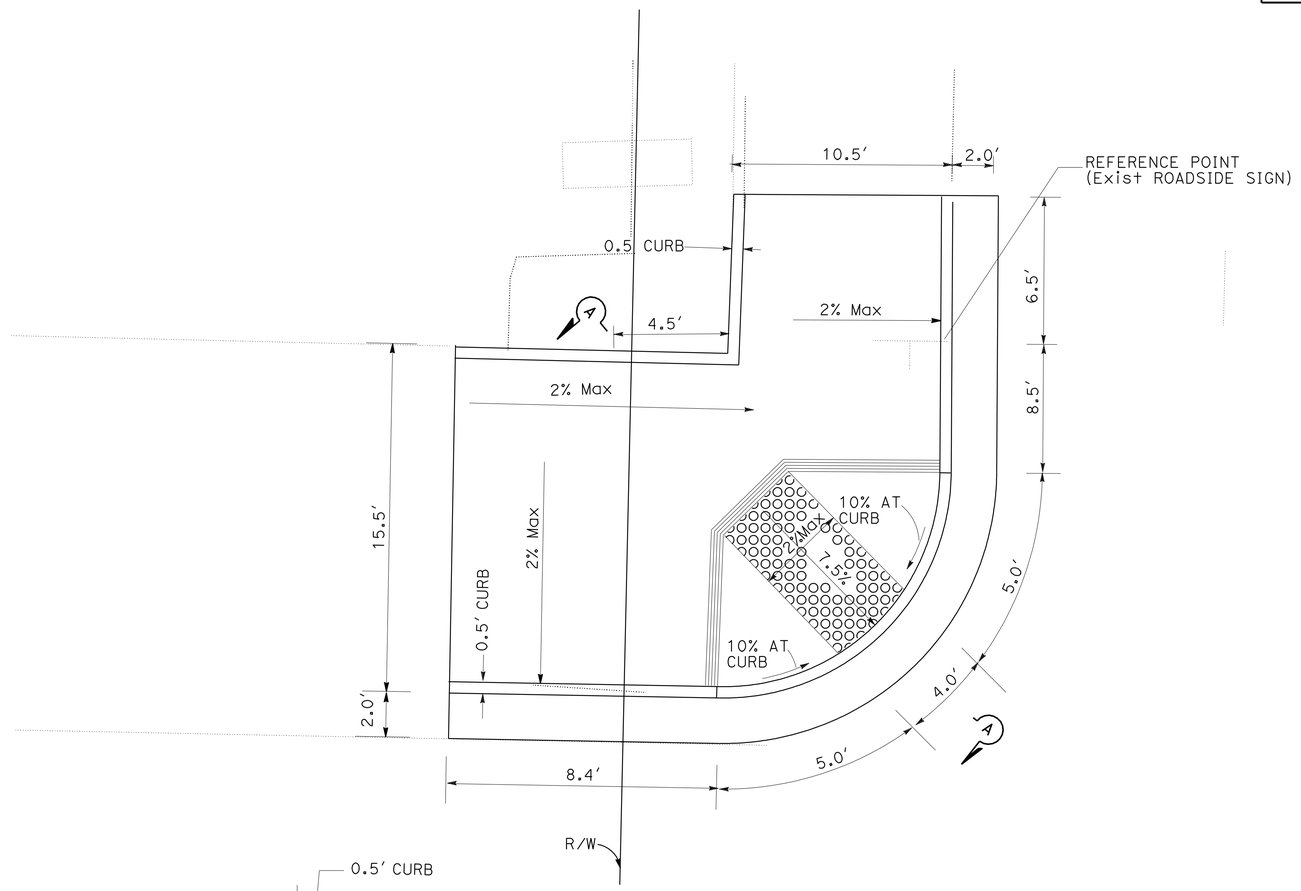

LOCATION No. 4
DETAIL 7 - CASE A
NO SCALE

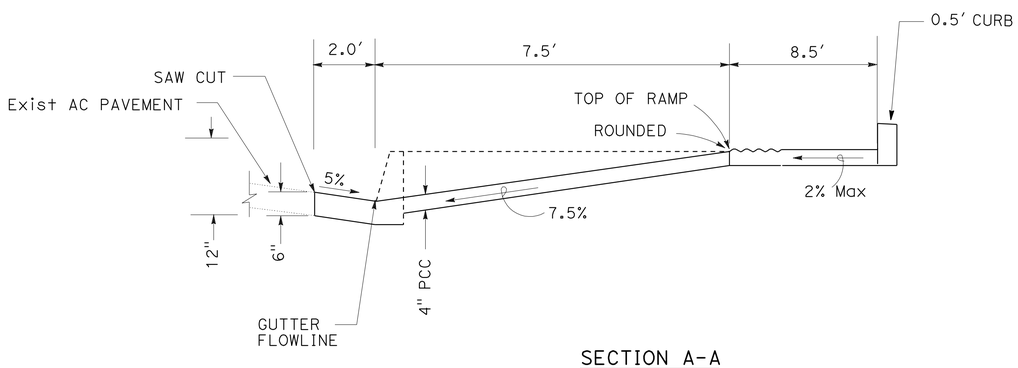

SECTION A-A

CONSTRUCTION DETAILS

NO SCALE

C-8

STATE OF CALIFORNIA - DEPARTMENT OF TRANSPORTATION
Caltrans
TRAFFIC DESIGN

FUNCTIONAL SUPERVISOR: GRISH BIGLARIAN
CALCULATED-DESIGNED BY: FREW KOTISSO
CHECKED BY: SHAHAN PETROSSIAN
REVISED BY
DATE REVISED

LAST REVISION 00-00-00
DATE PLOTTED => 12-OCT-2012
TIME PLOTTED => 14:20

Dist	COUNTY	ROUTE	POST MILES TOTAL PROJECT	SHEET No.	TOTAL SHEETS
07	Ven	1, 33,101 & 126	Var	10	59

REGISTERED CIVIL ENGINEER 5/4/12 DATE

5-21-12
PLANS APPROVAL DATE

REGISTERED PROFESSIONAL ENGINEER FREW KOTISSO No. C72485 Exp. 6/30/14 CIVIL STATE OF CALIFORNIA

THE STATE OF CALIFORNIA OR ITS OFFICERS OR AGENTS SHALL NOT BE RESPONSIBLE FOR THE ACCURACY OR COMPLETENESS OF SCANNED COPIES OF THIS PLAN SHEET.

NOTES:

1. FOR ACCURATE RIGHT OF WAY DATA, CONTACT RIGHT OF WAY ENGINEERING AT THE DISTRICT OFFICE.
2. EXISTING UTILITIES HAVE NOT BEEN PLOTTED ON THESE PLANS.

Loc No. 5

AT ROUTE 1 AND PALM Dr (PM 18.71)

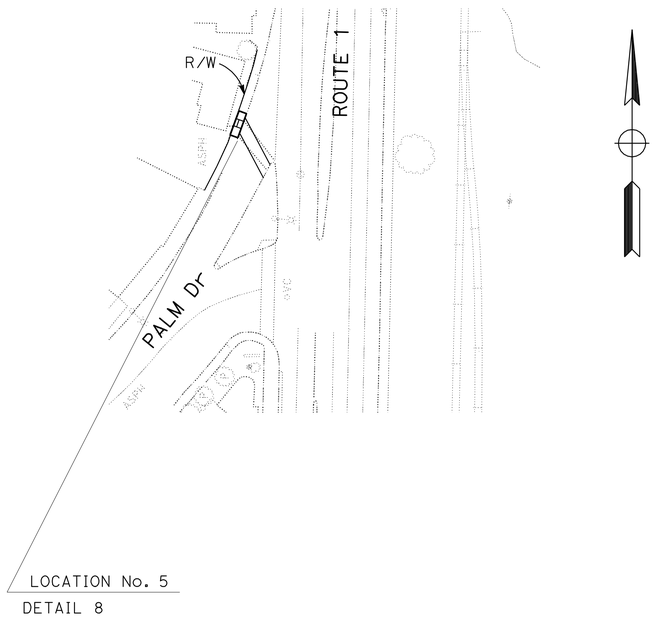

LOCATION No. 5
DETAIL 8

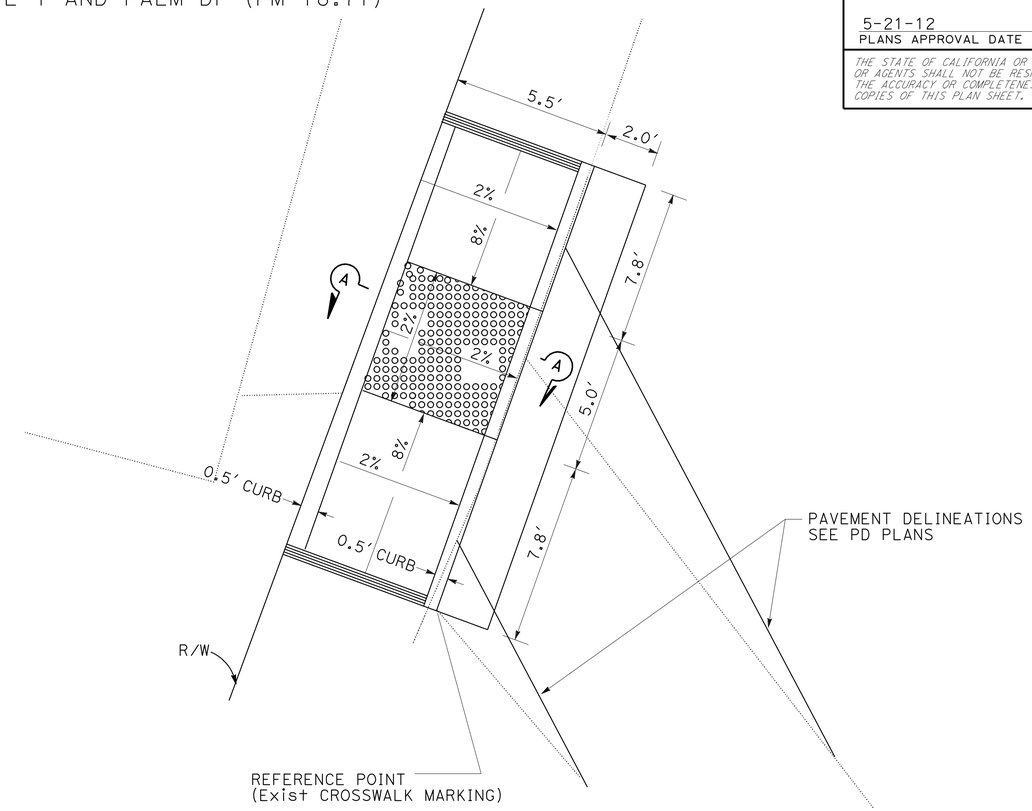

LOCATION No. 5
DETAIL 8 - CASE C
NO SCALE

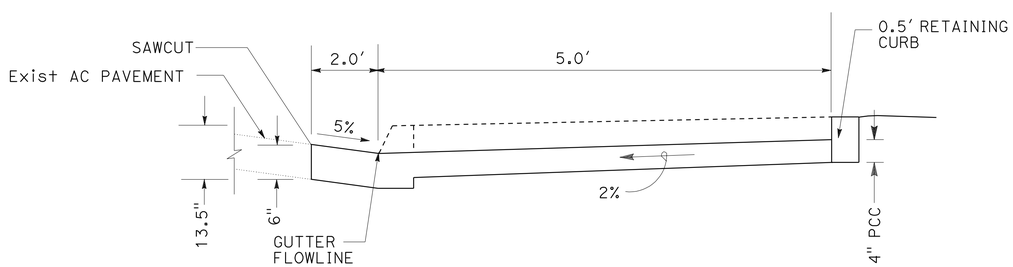

SECTION A-A

CONSTRUCTION DETAILS

NO SCALE

C-9

REVISED BY	DATE REVISED

FREW KOTISSO
SHAHAN PETROSSIAN

CALCULATED-DESIGNED BY
CHECKED BY

FUNCTIONAL SUPERVISOR
GRISH BIGLARIAN

STATE OF CALIFORNIA - DEPARTMENT OF TRANSPORTATION
Caltrans
TRAFFIC DESIGN

LAST REVISION 00-00-00
DATE PLOTTED => 12-OCT-2012
TIME PLOTTED => 14:20

Dist	COUNTY	ROUTE	POST MILES TOTAL PROJECT	SHEET No.	TOTAL SHEETS
07	Ven	1, 33,101 & 126	Var	11	59

REGISTERED CIVIL ENGINEER 5/4/12 DATE

5-21-12
PLANS APPROVAL DATE

REGISTERED PROFESSIONAL ENGINEER FREW KOTISSO No. C72485 Exp. 6/30/14 CIVIL STATE OF CALIFORNIA

THE STATE OF CALIFORNIA OR ITS OFFICERS OR AGENTS SHALL NOT BE RESPONSIBLE FOR THE ACCURACY OR COMPLETENESS OF SCANNED COPIES OF THIS PLAN SHEET.

Loc No. 6

AT ROUTE 1 AND DEODAR Ave (PM 18.85)

NOTES:

1. FOR ACCURATE RIGHT OF WAY DATA, CONTACT RIGHT OF WAY ENGINEERING AT THE DISTRICT OFFICE.
2. EXISTING UTILITIES HAVE NOT BEEN PLOTTED ON THESE PLANS.

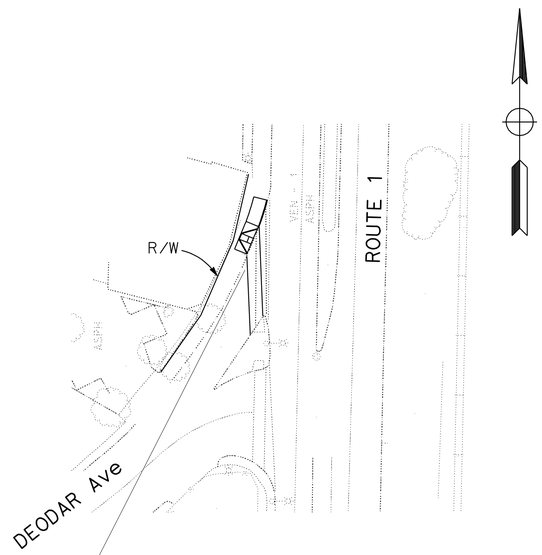

LOCATION No. 6
DETAIL 9

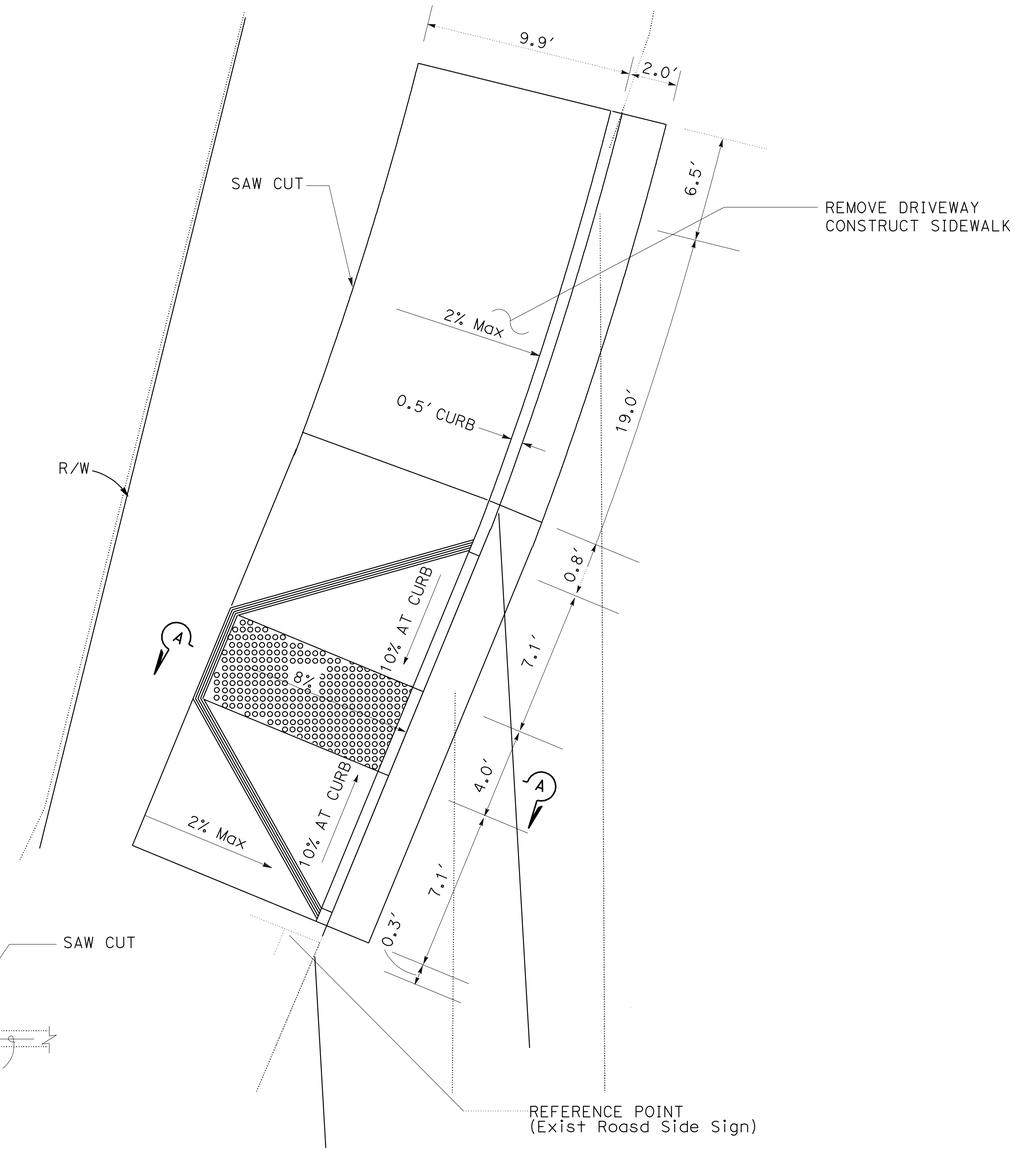

LOCATION No. 6
DETAIL 9- CASE A
NO SCALE

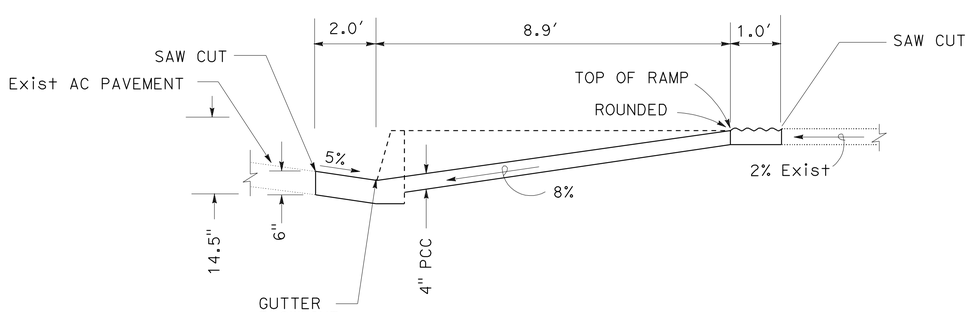

SECTION A-A

CONSTRUCTION DETAILS

NO SCALE

C-10

STATE OF CALIFORNIA - DEPARTMENT OF TRANSPORTATION
Caltrans
TRAFFIC DESIGN

FUNCTIONAL SUPERVISOR: GRISH BIGLARIAN
CALCULATED-DESIGNED BY: FREW KOTISSO
CHECKED BY: SHAHAN PETROSSIAN
REVISED BY
DATE REVISED

LAST REVISION 00-00-00
DATE PLOTTED => 12-OCT-2012
TIME PLOTTED => 14:20

Dist	COUNTY	ROUTE	POST MILES TOTAL PROJECT	SHEET No.	TOTAL SHEETS
07	Ven	1, 33,101 & 126	Var	12	59

REGISTERED CIVIL ENGINEER 5/4/12 DATE

5-21-12
PLANS APPROVAL DATE

REGISTERED PROFESSIONAL ENGINEER FREW KOTISSO No. C72485 Exp. 6/30/14 CIVIL STATE OF CALIFORNIA

THE STATE OF CALIFORNIA OR ITS OFFICERS OR AGENTS SHALL NOT BE RESPONSIBLE FOR THE ACCURACY OR COMPLETENESS OF SCANNED COPIES OF THIS PLAN SHEET.

Loc No. 7

ROUTE 33 AND OAK VIEW Ave (NW CORNER) (PM 8.79)

NOTES:

1. FOR ACCURATE RIGHT OF WAY DATA, CONTACT RIGHT OF WAY ENGINEERING AT THE DISTRICT OFFICE.
2. EXISTING UTILITIES HAVE NOT BEEN PLOTTED ON THESE PLANS.

LOCATION No. 7
DETAIL 10

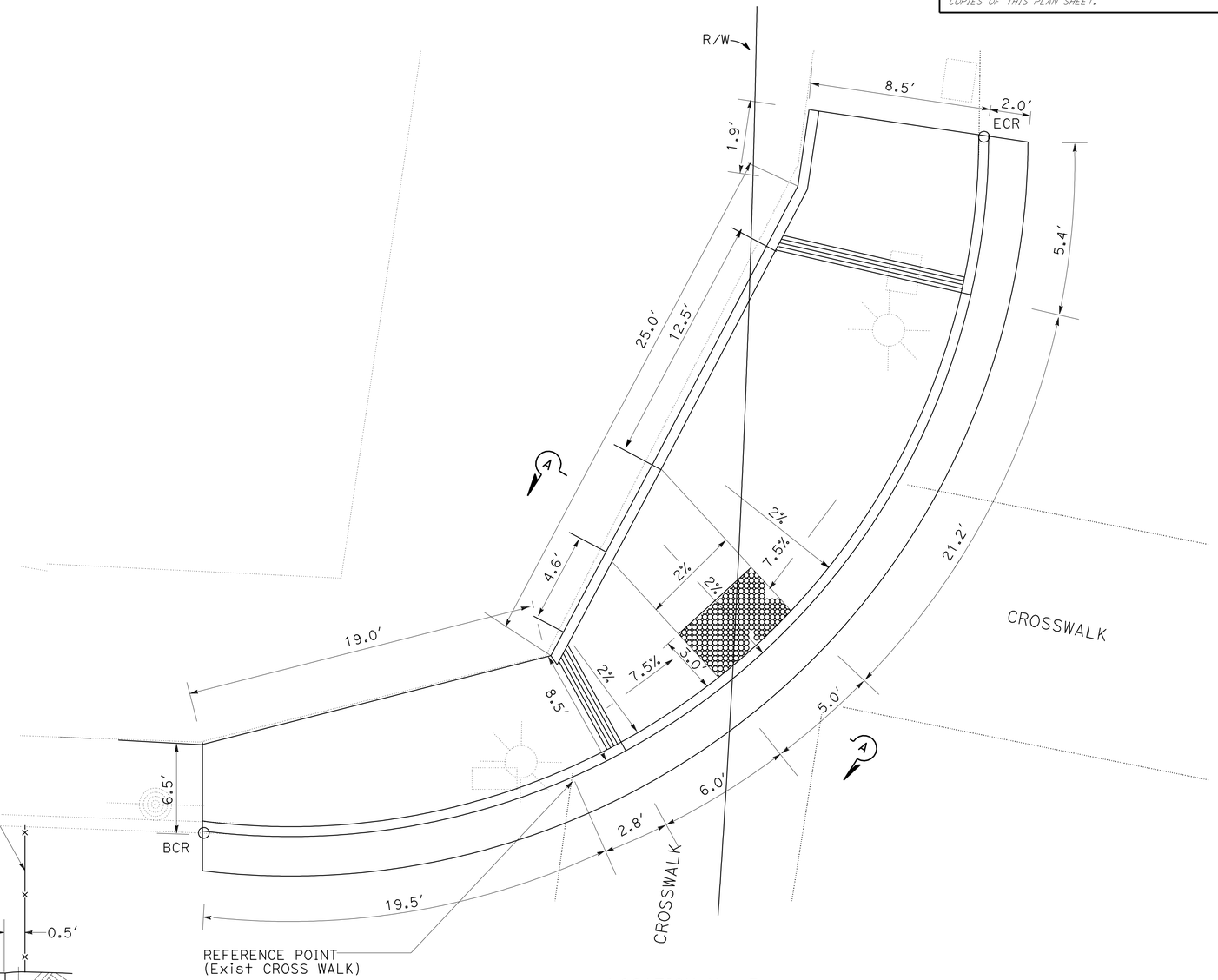

LOCATION No. 7

DETAIL 10 - CASE C Mod

NO SCALE

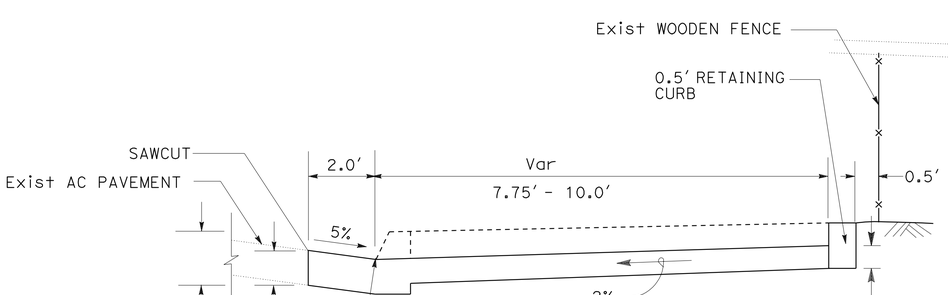

SECTION A-A

CONSTRUCTION DETAILS

NO SCALE

C-11

STATE OF CALIFORNIA - DEPARTMENT OF TRANSPORTATION
Caltrans®
TRAFFIC DESIGN

FUNCTIONAL SUPERVISOR: GRISH BIGLARIAN
CALCULATED-DESIGNED BY / CHECKED BY
FREW KOTISSO / SHAHAN PETROSSIAN
REVISED BY / DATE REVISED

LAST REVISION 00-00-00 | DATE PLOTTED => 12-OCT-2012 | TIME PLOTTED => 14:20

Dist	COUNTY	ROUTE	POST MILES TOTAL PROJECT	SHEET No.	TOTAL SHEETS
07	Ven	1, 33,101 & 126	Var	13	59

REGISTERED CIVIL ENGINEER 5/4/12 DATE

5-21-12
PLANS APPROVAL DATE

REGISTERED PROFESSIONAL ENGINEER FREW KOTISSO No. C72485 Exp. 6/30/14 CIVIL STATE OF CALIFORNIA

THE STATE OF CALIFORNIA OR ITS OFFICERS OR AGENTS SHALL NOT BE RESPONSIBLE FOR THE ACCURACY OR COMPLETENESS OF SCANNED COPIES OF THIS PLAN SHEET.

NOTES:

1. FOR ACCURATE RIGHT OF WAY DATA, CONTACT RIGHT OF WAY ENGINEERING AT THE DISTRICT OFFICE.
2. EXISTING UTILITIES HAVE NOT BEEN PLOTTED ON THESE PLANS.

Loc No. 8

AT ROUTE 33 AND WOODLAND Rd (PM 10.65)

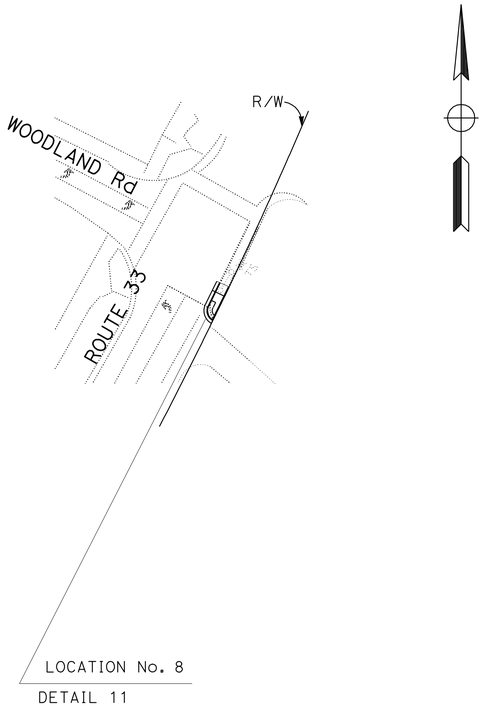

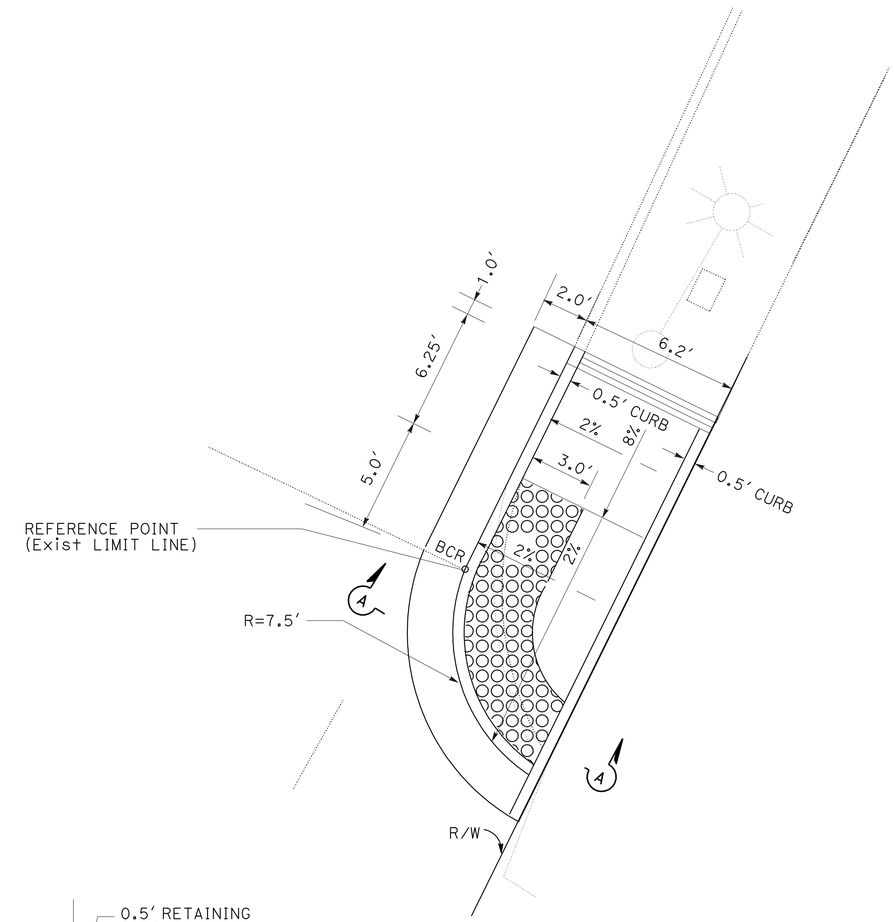

LOCATION No. 8
DETAIL 11 - CASE CM
NO SCALE

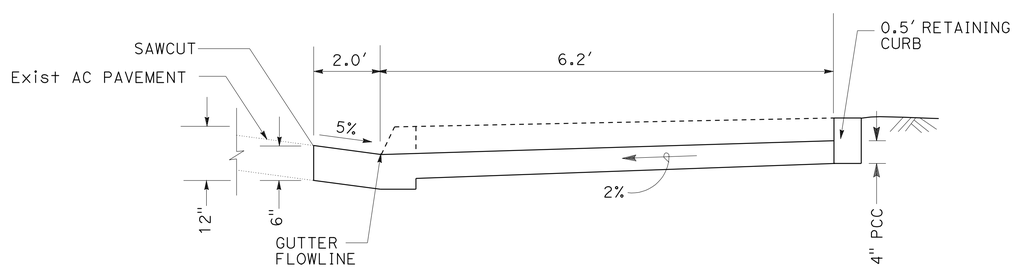

SECTION A-A

CONSTRUCTION DETAILS

NO SCALE

C-12

STATE OF CALIFORNIA - DEPARTMENT OF TRANSPORTATION
Caltrans
TRAFFIC DESIGN

FUNCTIONAL SUPERVISOR: GRISH BIGLARIAN
CALCULATED-DESIGNED BY: FREW KOTISSO
CHECKED BY: SHAHAN PETROSSIAN
REVISED BY
DATE REVISED

LAST REVISION 00-00-00
DATE PLOTTED => 12-OCT-2012
TIME PLOTTED => 14:20

Dist	COUNTY	ROUTE	POST MILES TOTAL PROJECT	SHEET No.	TOTAL SHEETS
07	Ven	1, 33,101 & 126	Var	14	59

REGISTERED CIVIL ENGINEER 5/4/12 DATE

5-21-12
PLANS APPROVAL DATE

REGISTERED PROFESSIONAL ENGINEER FREW KOTISSO No. C72485 Exp. 6/30/14 CIVIL STATE OF CALIFORNIA

THE STATE OF CALIFORNIA OR ITS OFFICERS OR AGENTS SHALL NOT BE RESPONSIBLE FOR THE ACCURACY OR COMPLETENESS OF SCANNED COPIES OF THIS PLAN SHEET.

Loc No. 9

AT ROUTE 33 AND VALLERIO Ave (PM 11.42)

NOTES:

1. FOR ACCURATE RIGHT OF WAY DATA, CONTACT RIGHT OF WAY ENGINEERING AT THE DISTRICT OFFICE.
2. EXISTING UTILITIES HAVE NOT BEEN PLOTTED ON THESE PLANS.

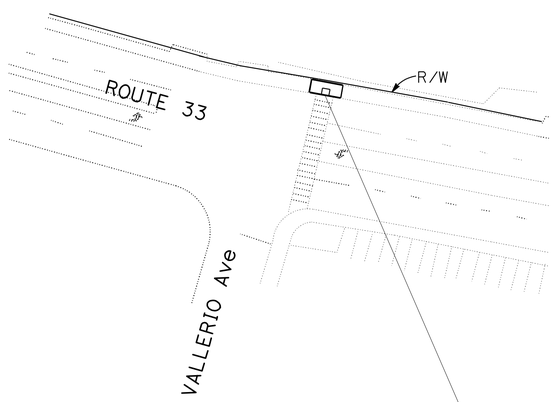

LOCATION No. 9
DETAIL 12

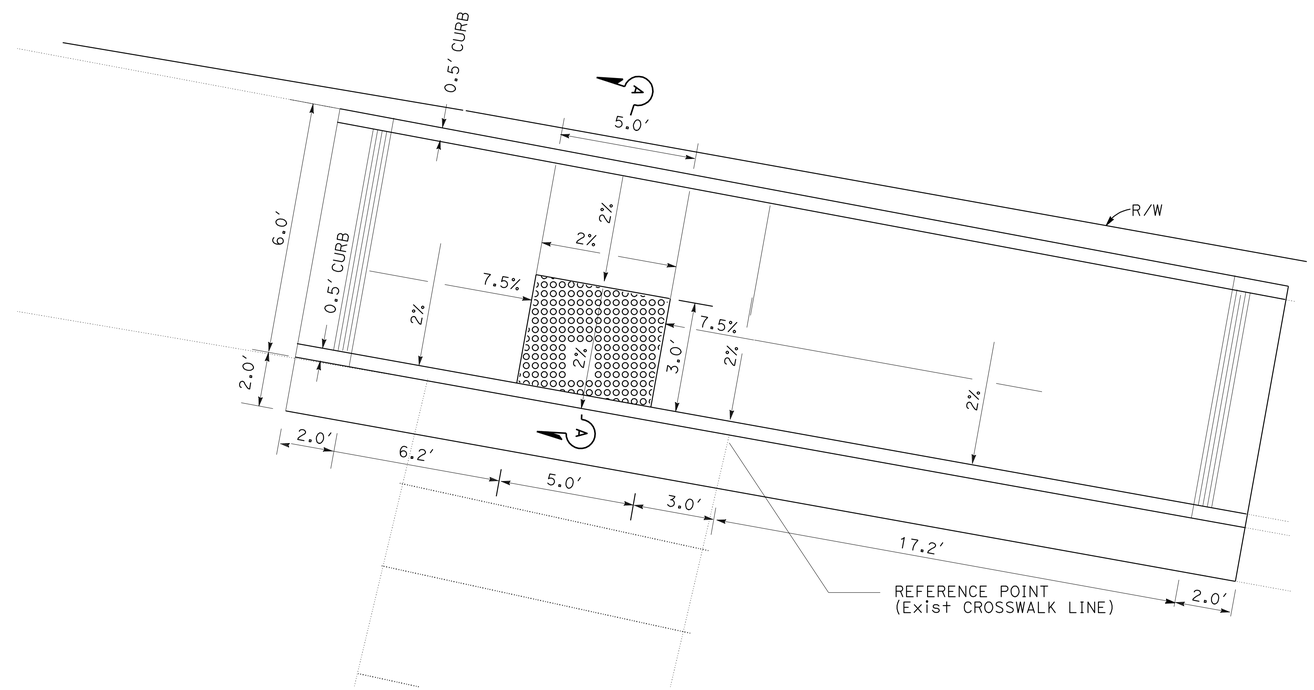

LOCATION No. 9
DETAIL 12 - CASE C
NO SCALE

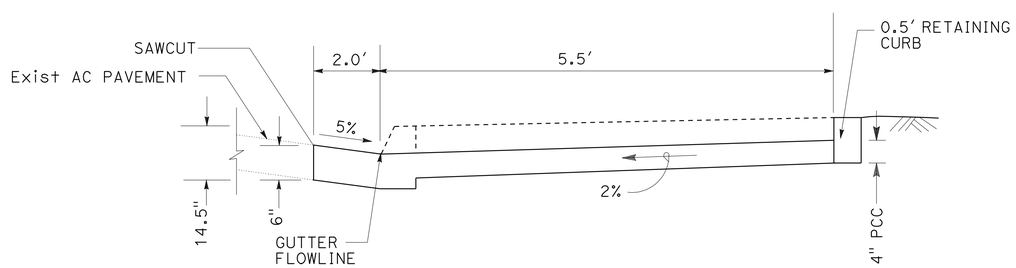

SECTION A-A

CONSTRUCTION DETAILS

NO SCALE

C-13

STATE OF CALIFORNIA - DEPARTMENT OF TRANSPORTATION
Caltrans
TRAFFIC DESIGN

FUNCTIONAL SUPERVISOR: GRISH BIGLARIAN
CALCULATED-DESIGNED BY: FREW KOTISSO
CHECKED BY: SHAHAN PETROSSIAN
REVISED BY
DATE REVISED

LAST REVISION 00-00-00
DATE PLOTTED => 12-OCT-2012
TIME PLOTTED => 14:20

Dist	COUNTY	ROUTE	POST MILES TOTAL PROJECT	SHEET No.	TOTAL SHEETS
07	Ven	1, 33,101 & 126	Var	15	59

REGISTERED CIVIL ENGINEER 5/4/12 DATE

5-21-12
PLANS APPROVAL DATE

REGISTERED PROFESSIONAL ENGINEER FREW KOTISSO No. C72485 Exp. 6/30/14 CIVIL STATE OF CALIFORNIA

THE STATE OF CALIFORNIA OR ITS OFFICERS OR AGENTS SHALL NOT BE RESPONSIBLE FOR THE ACCURACY OR COMPLETENESS OF SCANNED COPIES OF THIS PLAN SHEET.

Loc No. 10

AT ROUTE 33 AND FAIRVIEW Ave (PM 12.80)

NOTES:

1. FOR ACCURATE RIGHT OF WAY DATA, CONTACT RIGHT OF WAY ENGINEERING AT THE DISTRICT OFFICE.
2. EXISTING UTILITIES HAVE NOT BEEN PLOTTED ON THESE PLANS.

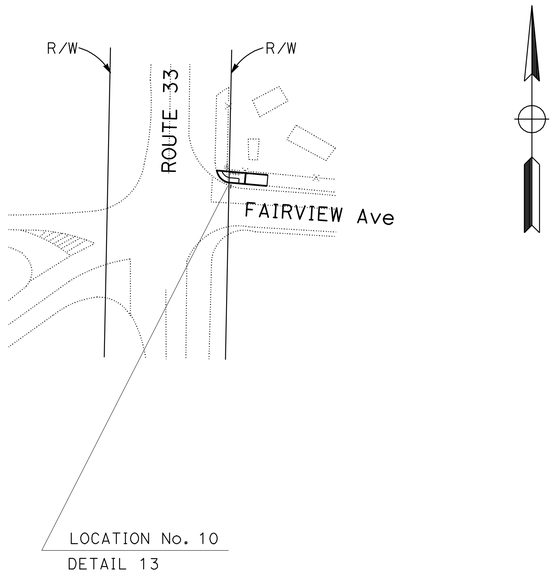

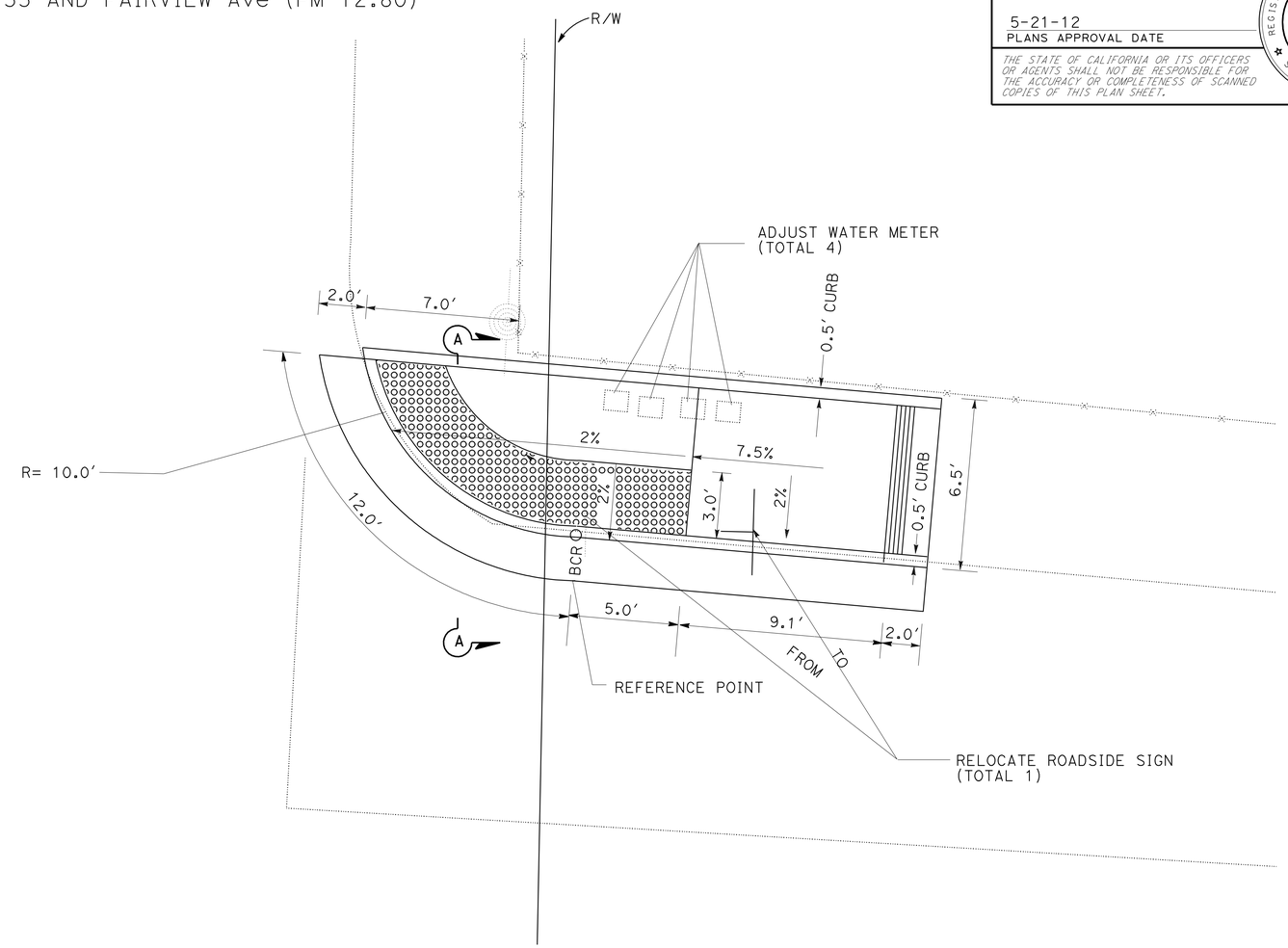

LOCATION No. 10
DETAIL 13 - CASE CM
NO SCALE

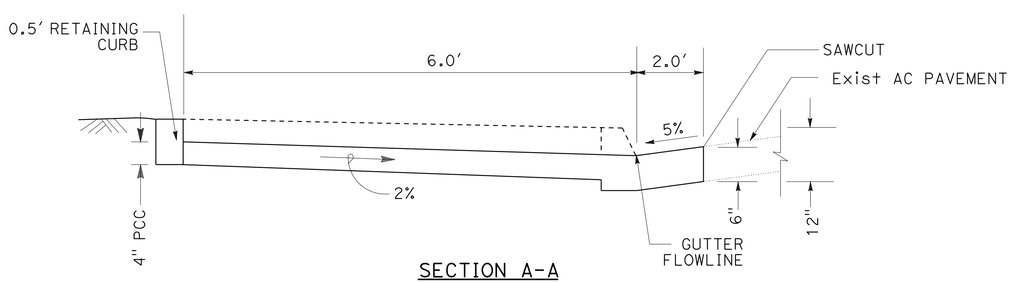

SECTION A-A

CONSTRUCTION DETAILS

NO SCALE

C-14

STATE OF CALIFORNIA - DEPARTMENT OF TRANSPORTATION
Caltrans
TRAFFIC DESIGN

FUNCTIONAL SUPERVISOR: GRISH BIGLARIAN
CALCULATED-DESIGNED BY: FREW KOTISSO
CHECKED BY: SHAHAN PETROSSIAN
REVISED BY
DATE REVISED

LAST REVISION 00-00-00
DATE PLOTTED => 12-OCT-2012
TIME PLOTTED => 14:20

Dist	COUNTY	ROUTE	POST MILES TOTAL PROJECT	SHEET No.	TOTAL SHEETS
07	Ven	1, 33,101 & 126	Var	16	59

REGISTERED CIVIL ENGINEER 5/4/12 DATE

5-21-12
PLANS APPROVAL DATE

REGISTERED PROFESSIONAL ENGINEER FREW KOTISSO No. C72485 Exp. 6/30/14 CIVIL STATE OF CALIFORNIA

THE STATE OF CALIFORNIA OR ITS OFFICERS OR AGENTS SHALL NOT BE RESPONSIBLE FOR THE ACCURACY OR COMPLETENESS OF SCANNED COPIES OF THIS PLAN SHEET.

Loc No. 11

ROUTE 101 SB ON RAMP FROM CAMARILLO SPRINGS Rd (PM 10.90)

NOTES:

1. FOR ACCURATE RIGHT OF WAY DATA, CONTACT RIGHT OF WAY ENGINEERING AT THE DISTRICT OFFICE.
2. EXISTING UTILITIES HAVE NOT BEEN PLOTTED ON THESE PLANS.

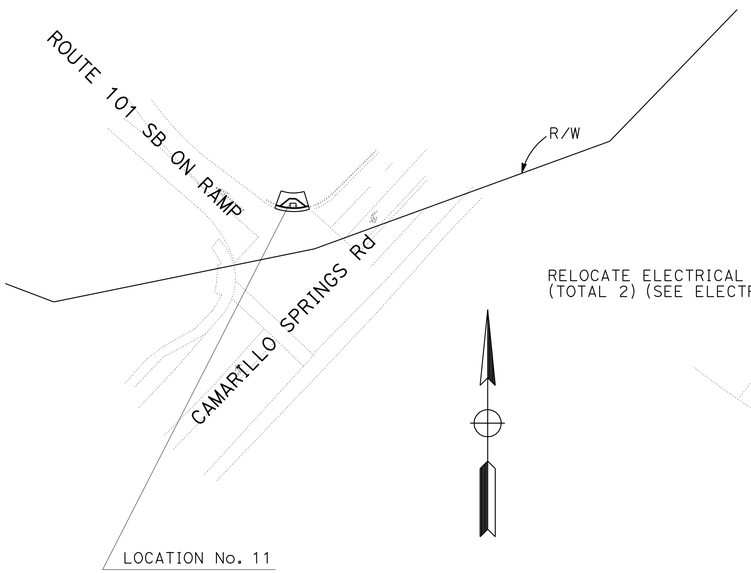

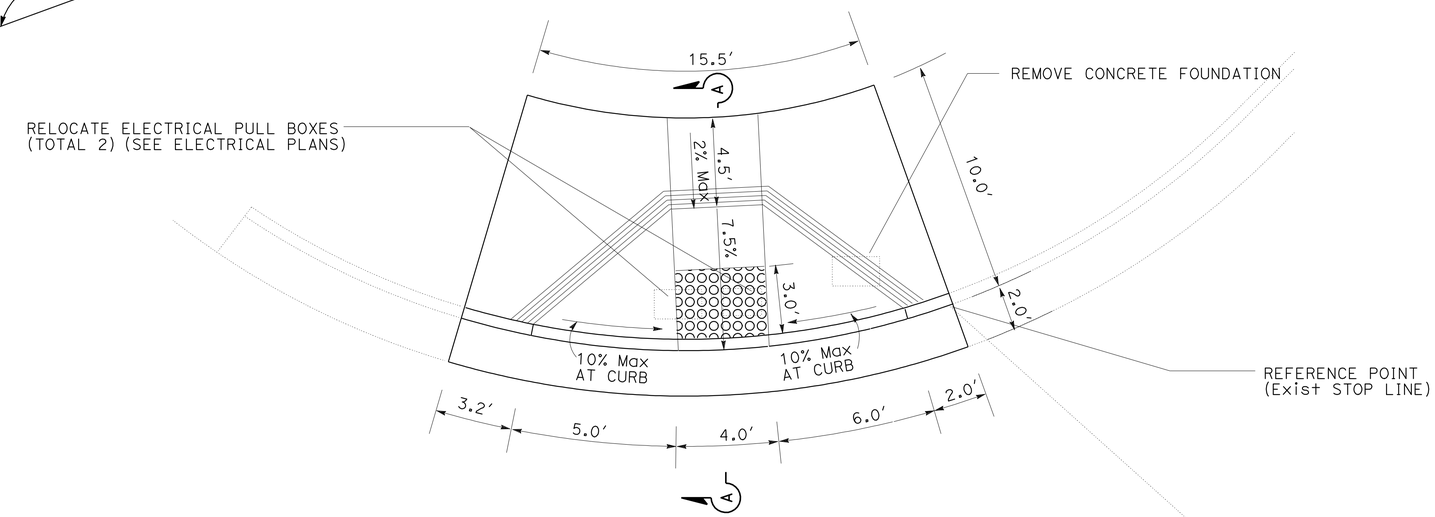

LOCATION No. 11
DETAIL 14 - CASE A
NO SCALE

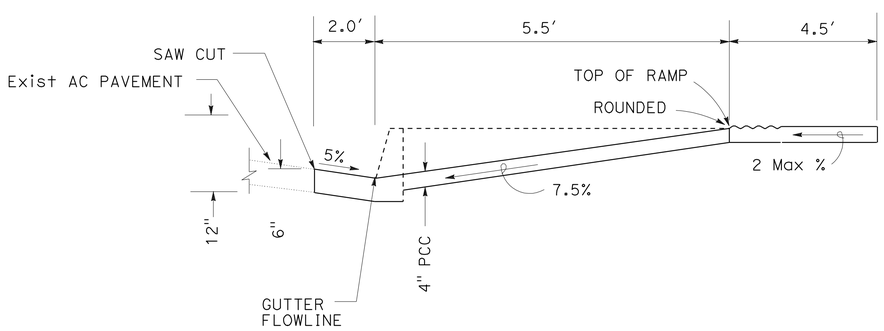

CONSTRUCTION DETAILS

NO SCALE

C-15

STATE OF CALIFORNIA - DEPARTMENT OF TRANSPORTATION
Caltrans
TRAFFIC DESIGN

FUNCTIONAL SUPERVISOR: GRISH BIGLARIAN
CALCULATED-DESIGNED BY: FREW KOTISSO
CHECKED BY: SHAHAN PETROSSIAN
REVISED BY
DATE REVISED

LAST REVISION 00-00-00
DATE PLOTTED => 12-OCT-2012
TIME PLOTTED => 14:20

Dist	COUNTY	ROUTE	POST MILES TOTAL PROJECT	SHEET No.	TOTAL SHEETS
07	Ven	1, 33,101 & 126	Var	17	59

REGISTERED CIVIL ENGINEER 5/4/12 DATE

5-21-12
PLANS APPROVAL DATE

REGISTERED PROFESSIONAL ENGINEER FREW KOTISSO No. C72485 Exp. 6/30/14 CIVIL STATE OF CALIFORNIA

THE STATE OF CALIFORNIA OR ITS OFFICERS OR AGENTS SHALL NOT BE RESPONSIBLE FOR THE ACCURACY OR COMPLETENESS OF SCANNED COPIES OF THIS PLAN SHEET.

Loc No. 12

AT ROUTE 126 AND LOS SERENOS Rd (PM 20.33)

NOTES:

1. FOR ACCURATE RIGHT OF WAY DATA, CONTACT RIGHT OF WAY ENGINEERING AT THE DISTRICT OFFICE.
2. EXISTING UTILITIES HAVE NOT BEEN PLOTTED ON THESE PLANS.

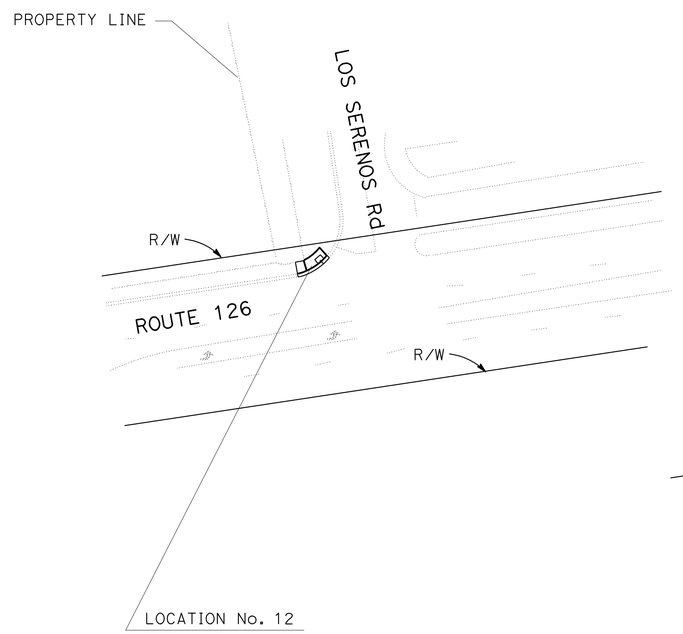

LOCATION No. 12
DETAIL 15

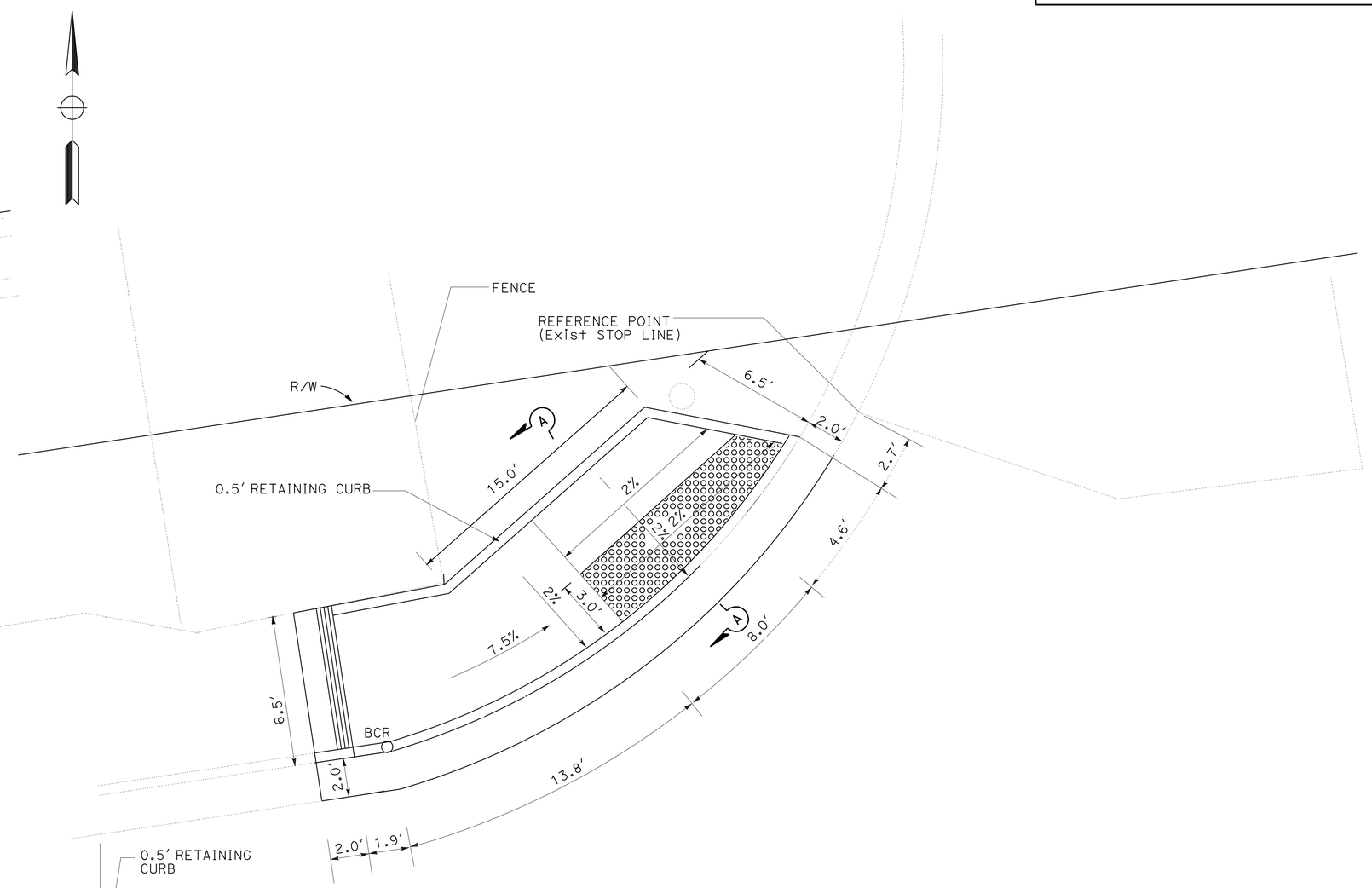

LOCATION No. 12
DETAIL 15 - CASE C Mod
NO SCALE

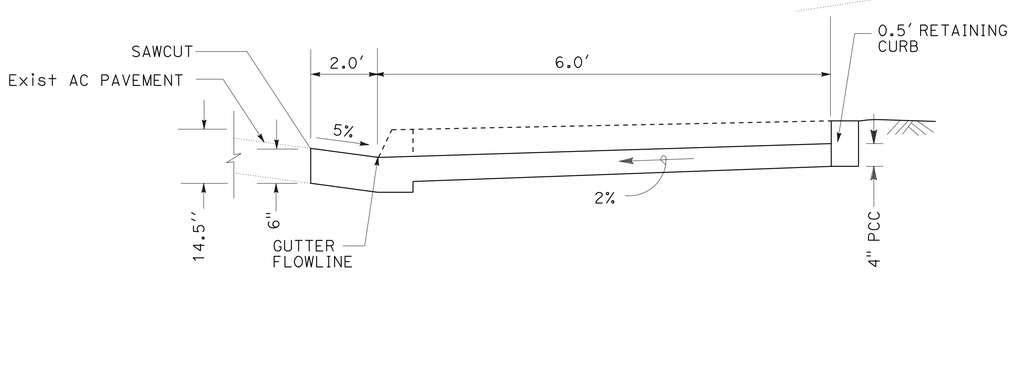

CONSTRUCTION DETAILS

NO SCALE

C-16

STATE OF CALIFORNIA - DEPARTMENT OF TRANSPORTATION
Caltrans
TRAFFIC DESIGN

FUNCTIONAL SUPERVISOR: GRISH BIGLARIAN
CALCULATED-DESIGNED BY: FREW KOTISSO
CHECKED BY: SHAHAN PETROSSIAN
REVISED BY
DATE REVISED

LAST REVISION 00-00-00
DATE PLOTTED => 12-OCT-2012
TIME PLOTTED => 14:20

Dist	COUNTY	ROUTE	POST MILES TOTAL PROJECT	SHEET No.	TOTAL SHEETS
07	Ven	1, 33,101 & 126	Var	18	59

REGISTERED CIVIL ENGINEER — DATE 5/4/12

5-21-12
PLANS APPROVAL DATE

REGISTERED PROFESSIONAL ENGINEER FREW KOTISSO No. C72485 Exp. 6/30/14 CIVIL STATE OF CALIFORNIA

THE STATE OF CALIFORNIA OR ITS OFFICERS OR AGENTS SHALL NOT BE RESPONSIBLE FOR THE ACCURACY OR COMPLETENESS OF SCANNED COPIES OF THIS PLAN SHEET.

NOTES:

1. FOR ACCURATE RIGHT OF WAY DATA, CONTACT RIGHT OF WAY ENGINEERING AT THE DISTRICT OFFICE.
2. EXISTING UTILITY FACILITIES HAVE NOT BEEN PLOTTED ON THESE PLANS.

Loc No. 1

ROUTE 1 AND STATHAM Blvd (SW CORNER) (PM 16.64)

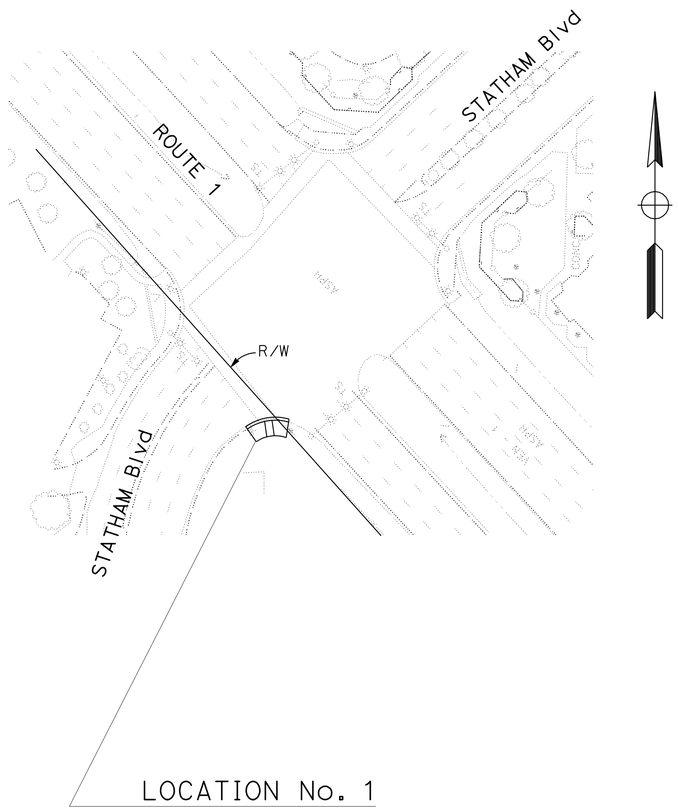

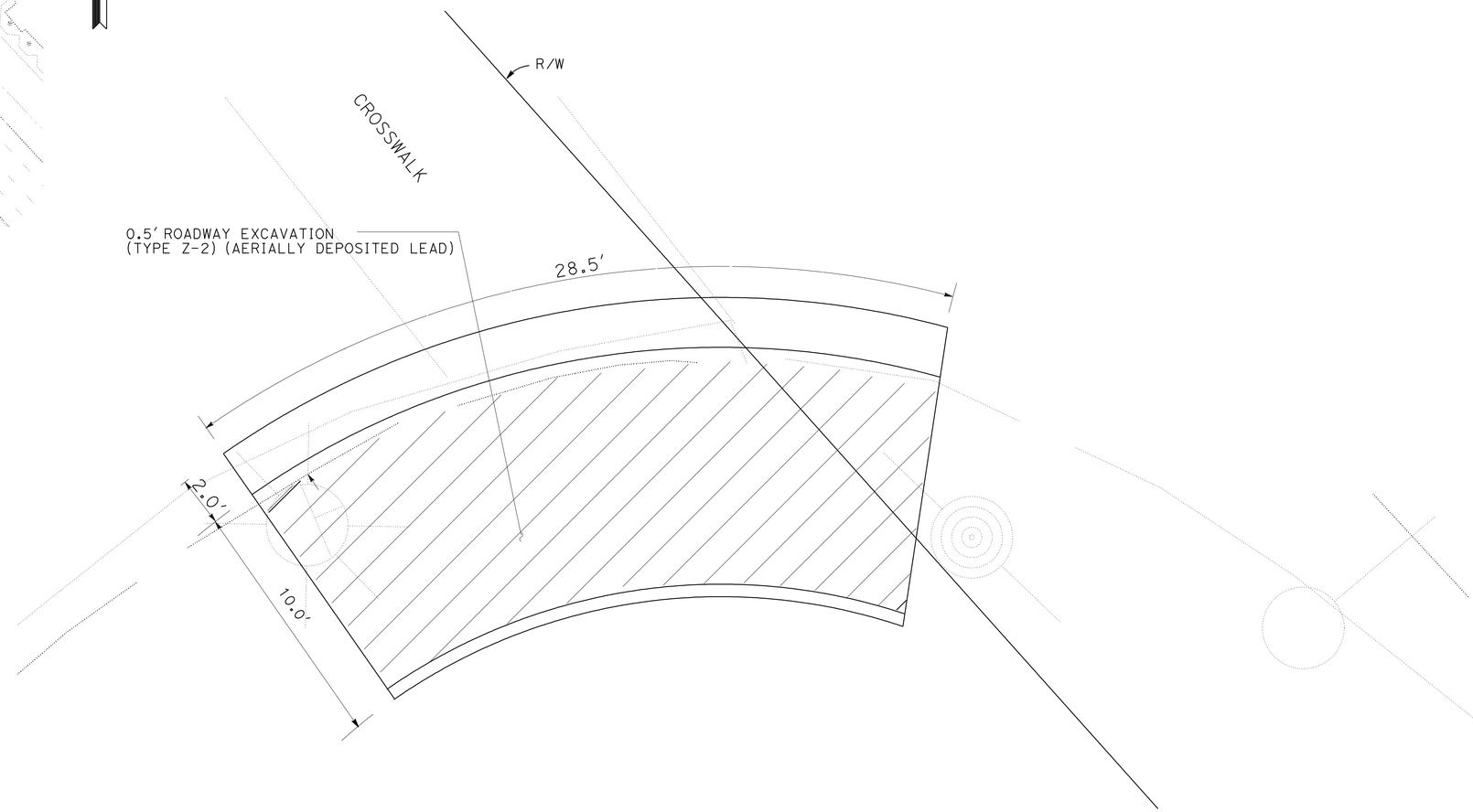

LOCATIONS OF ROADWAY EXCAVATION (TYPE Z-2) (AERIALLY DEPOSITED LEAD)

CONSTRUCTION DETAILS

NO SCALE

C-17

STATE OF CALIFORNIA - DEPARTMENT OF TRANSPORTATION
Caltrans
TRAFFIC DESIGN

FUNCTIONAL SUPERVISOR: GRISH BIGLARIAN
CALCULATED-DESIGNED BY: FREW KOTISSO
CHECKED BY: SHAHAN PETROSSIAN
REVISED BY / DATE REVISED

LAST REVISION 00-00-00 | DATE PLOTTED => 12-OCT-2012 | TIME PLOTTED => 14:21

Dist	COUNTY	ROUTE	POST MILES TOTAL PROJECT	SHEET No.	TOTAL SHEETS
07	Ven	1, 33,101 & 126	Var	19	59

REGISTERED CIVIL ENGINEER — DATE 5/4/12

PLANS APPROVAL DATE 5-21-12

REGISTERED PROFESSIONAL ENGINEER — CELINA AVILES — No. C57106 — Exp. 12/31/13 — CIVIL — STATE OF CALIFORNIA

THE STATE OF CALIFORNIA OR ITS OFFICERS OR AGENTS SHALL NOT BE RESPONSIBLE FOR THE ACCURACY OR COMPLETENESS OF SCANNED COPIES OF THIS PLAN SHEET.

NOTES:

1. FOR ACCURATE RIGHT OF WAY DATA, CONTACT RIGHT OF WAY ENGINEERING AT THE DISTRICT OFFICE.
2. LOCATIONS OF UTILITIES SHOWN ON THESE PLANS ARE APPROXIMATE AND SHALL BE VERIFIED BY THE CONTRACTOR PRIOR TO CONSTRUCTION.
3. UTILITY OWNERSHIP ON THIS PROJECT:
   - WATER - LOS ANGELES DEPARTMENT OF WATER & POWER (LADWP), OXNARD MUNICIPAL WATER AND CASITAS MUNICIPAL WATER DEPARTMENT
   - GAS - SOUTHERN CALIFORNIA GAS COMPANY (SCG)
   - ELECTRIC - LOS ANGELES DEPARTMENT OF WATER & POWER (LADWP) SOUTHERN CALIFORNIA EDISON (SCE)
   - TELEPHONE - AT&T AND VERIZON
   - GASOLINE - TEXACO OIL
   - SEWER - VENTURA COUNTY OAK VIEW SANITATION
4. ALL THE SOUTHERN CALIFORNIA GAS LINES ARE MEDIUM PRESSURED UNLESS STATED OTHERWISE.

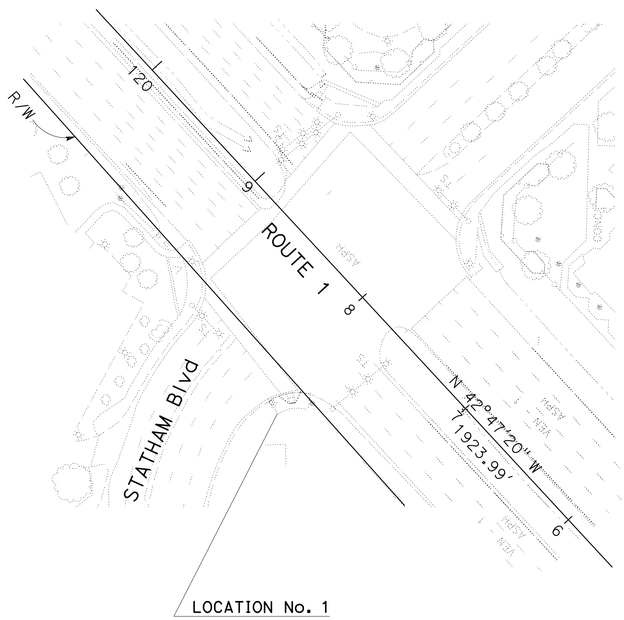

LOCATION No. 1 (ROUTE 1/PM 16.64)

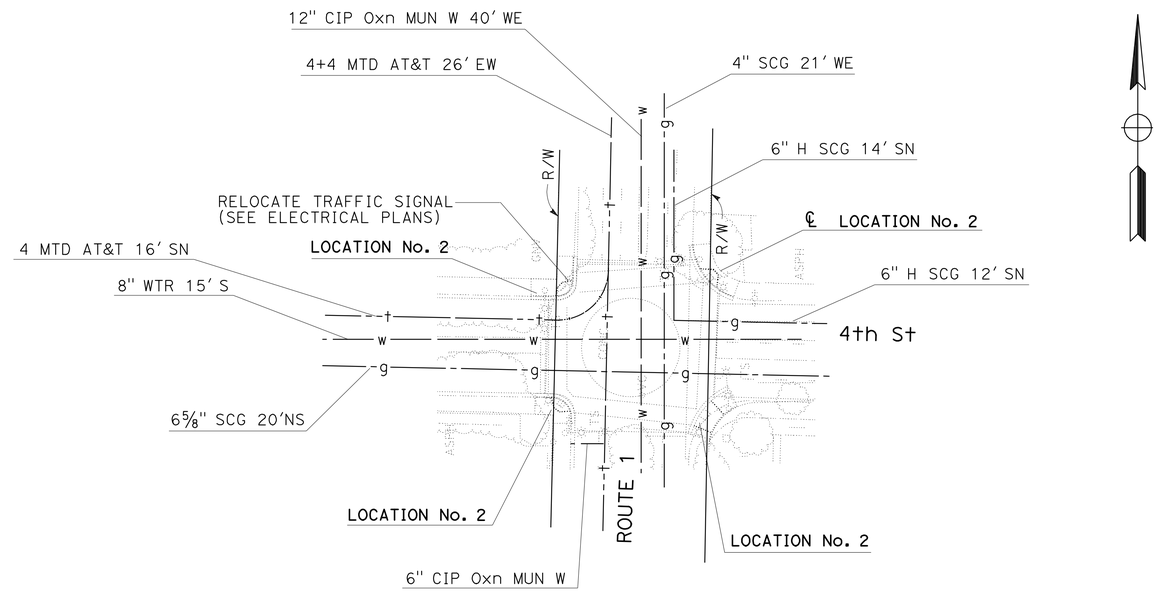

LOCATION No. 2 (ROUTE 1/PM 18.24)

UTILITY ABBREVIATION:

CL	CEMENT LINED PIPE
CPC	PLASTIC DUCT
BUR CA	BURIED CABLE
Du	DUCT
MTD	MULTIPLE TITLE DUCTS
MCD	MULTIPLE CONCRETE DUCTS
MWD	MUNICIPAL WATER DISTRICT
Oxn MUN W	OXNARD MUNICIPAL
AT&T	AMERICAN TELEPHONE AND TELEGRAPH
PVC	POLYVINYL CHLORIDE
SCG	SOUTHERN CALIFORNIA GAS
WTR	WATER

APPROVED FOR UTILITY INFORMATION ONLY

UTILITY PLAN

NO SCALE

U-1

STATE OF CALIFORNIA - DEPARTMENT OF TRANSPORTATION — Caltrans® OFFICE OF DESIGN A

FUNCTIONAL SUPERVISOR: CELINA AVILES

CALCULATED-DESIGNED BY: SHAHAN PETROSSIAN — CHECKED BY: FREW KOTISSO

REVISED BY — DATE REVISED

LAST REVISION 00-00-00 — DATE PLOTTED => 12-OCT-2012 — TIME PLOTTED => 14:21

Dist	COUNTY	ROUTE	POST MILES TOTAL PROJECT	SHEET No.	TOTAL SHEETS
07	Ven	1, 33,101 & 126	Var	20	59

M. Celina Aviles 5/4/12
REGISTERED CIVIL ENGINEER DATE

5-21-12
PLANS APPROVAL DATE

REGISTERED PROFESSIONAL ENGINEER CELINA AVILES No. C57106 Exp. 12/31/13 CIVIL STATE OF CALIFORNIA

THE STATE OF CALIFORNIA OR ITS OFFICERS OR AGENTS SHALL NOT BE RESPONSIBLE FOR THE ACCURACY OR COMPLETENESS OF SCANNED COPIES OF THIS PLAN SHEET.

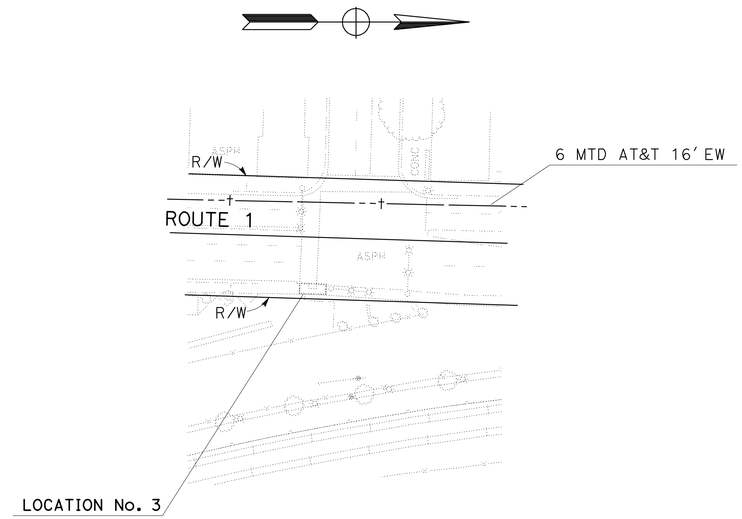

LOCATION No. 3 (ROUTE 1/PM 18.44)

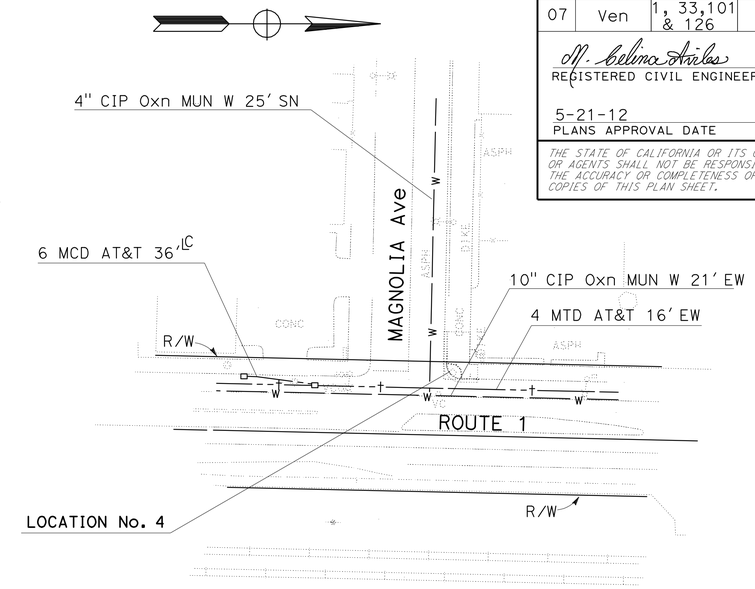

LOCATION No. 4 (ROUTE 1/PM 18.59)

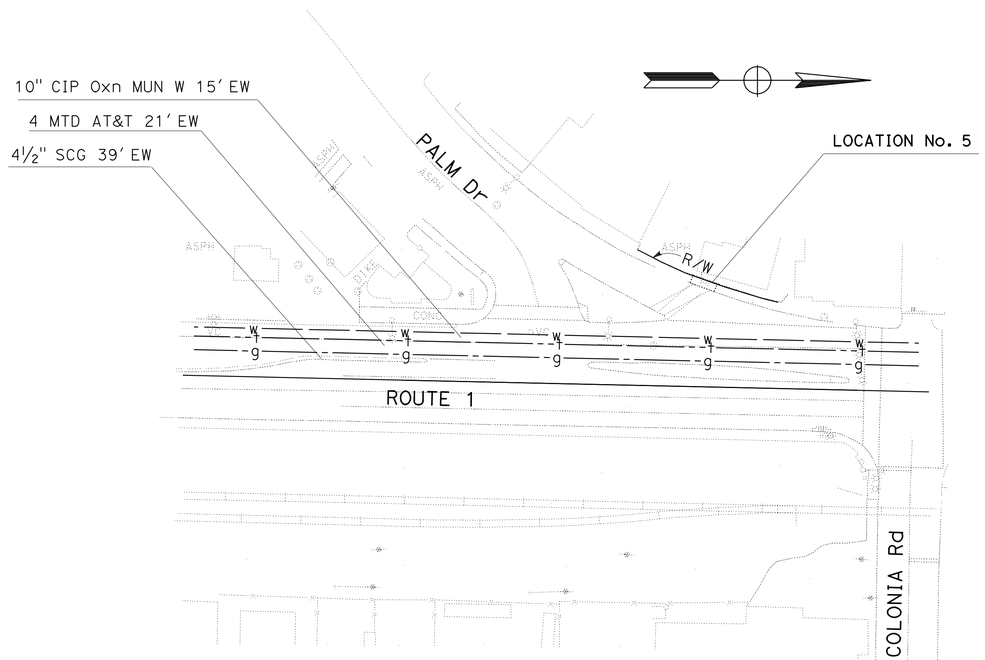

LOCATION No. 5 (ROUTE 1/ PM 18.71)

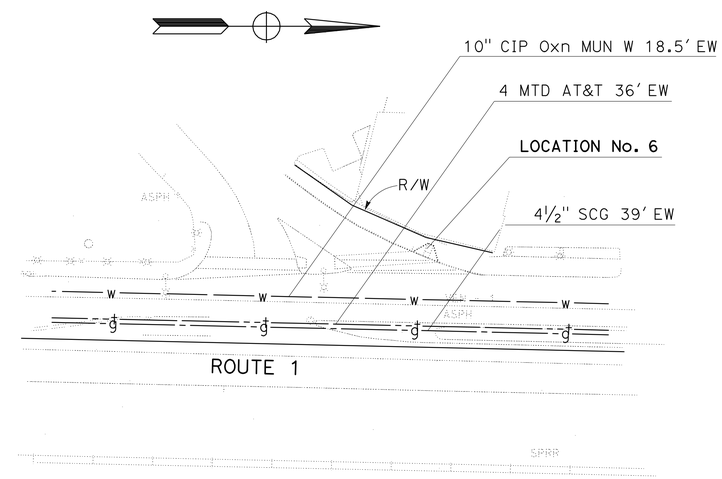

LOCATION No. 6 (ROUTE 1/PM 18.85)

APPROVED FOR UTILITY INFORMATION ONLY

UTILITY PLAN
NO SCALE

U-2

STATE OF CALIFORNIA - DEPARTMENT OF TRANSPORTATION
Caltrans® OFFICE OF DESIGN A

FUNCTIONAL SUPERVISOR: CELINA AVILES
CALCULATED-DESIGNED BY: SHAHAN PETROSSIAN
CHECKED BY: FREW KOTISSO
REVISED BY / DATE REVISED

LAST REVISION 00-00-00
DATE PLOTTED => 12-OCT-2012
TIME PLOTTED => 14:21

Dist	COUNTY	ROUTE	POST MILES TOTAL PROJECT	SHEET No.	TOTAL SHEETS
07	Ven	1, 33,101 & 126	Var	21	59

REGISTERED CIVIL ENGINEER — DATE 5/4/12

5-21-12
PLANS APPROVAL DATE

REGISTERED PROFESSIONAL ENGINEER — CELINA AVILES — No. C57106 — Exp. 12/31/13 — CIVIL — STATE OF CALIFORNIA

THE STATE OF CALIFORNIA OR ITS OFFICERS OR AGENTS SHALL NOT BE RESPONSIBLE FOR THE ACCURACY OR COMPLETENESS OF SCANNED COPIES OF THIS PLAN SHEET.

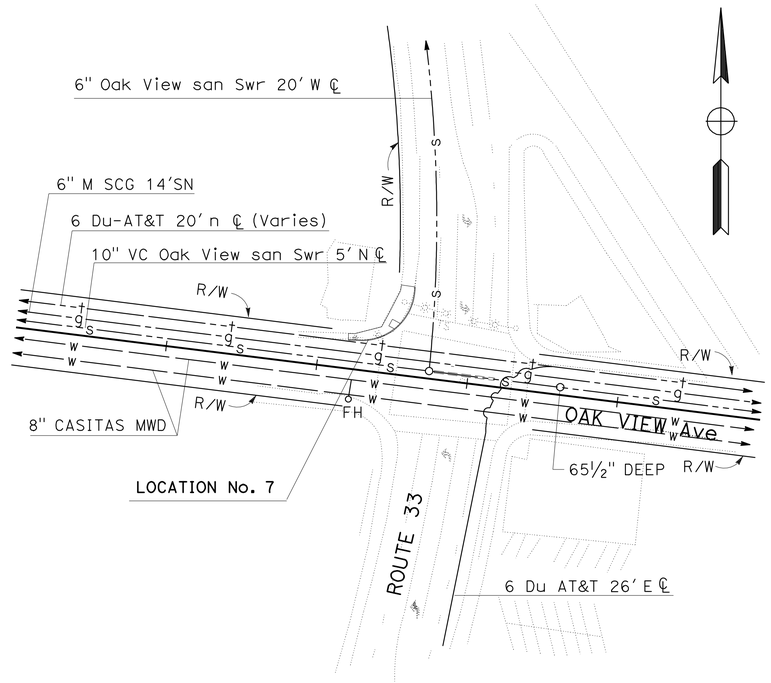

LOCATION No. 7 (ROUTE 33/PM 8.79)

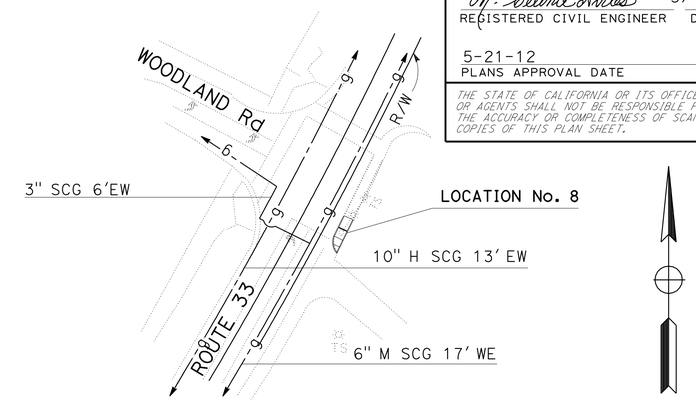

LOCATION No. 8 (ROUTE 33/ PM 10.65)

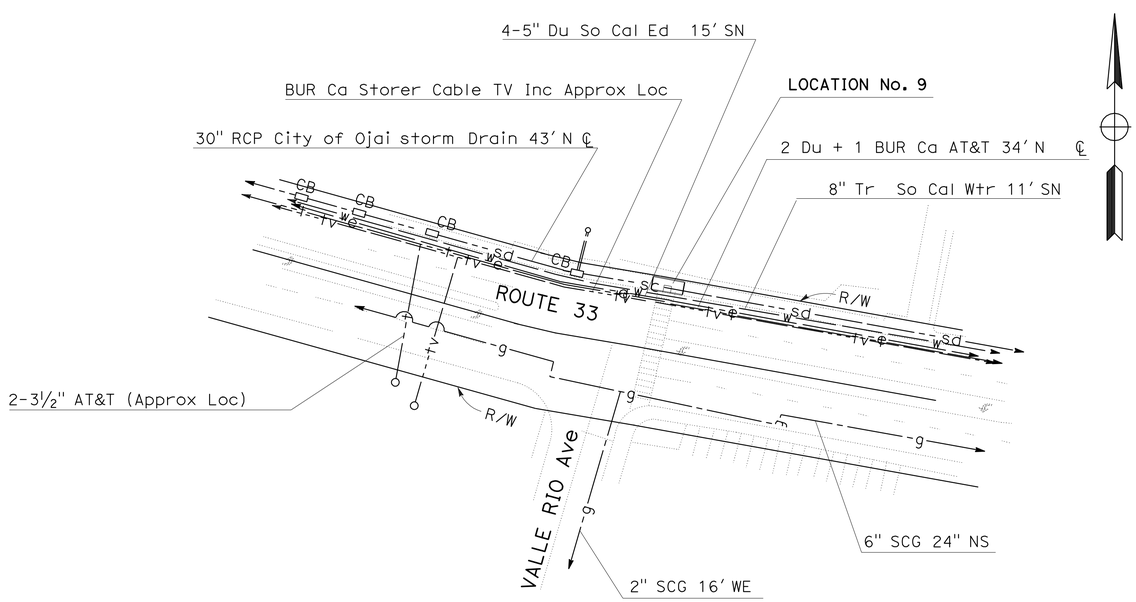

LOCATION No. 9 (ROUTE 33/PM 11.42)

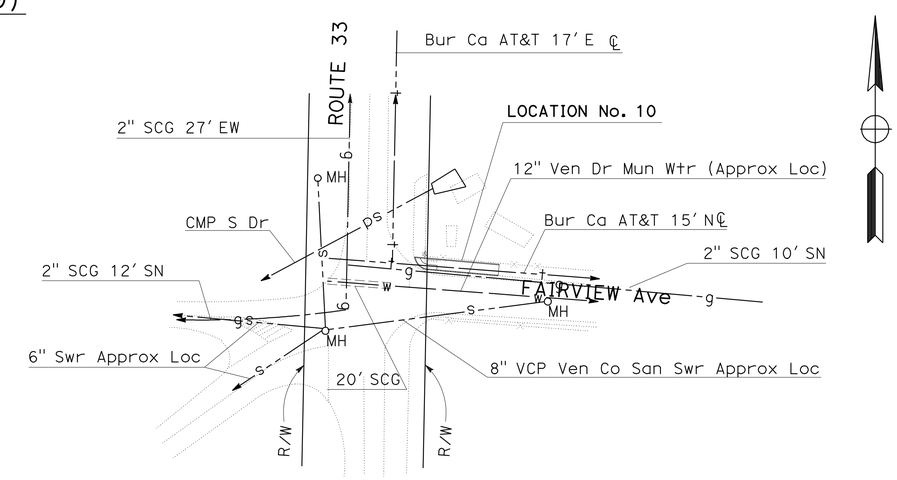

LOCATION No. 10 (ROUTE 33/PM 12.80)

UTILITY PLAN

NO SCALE

APPROVED FOR UTILITY INFORMATION ONLY

U-3

STATE OF CALIFORNIA - DEPARTMENT OF TRANSPORTATION
Caltrans® OFFICE OF DESIGN A

FUNCTIONAL SUPERVISOR: CELINA AVILES
CALCULATED-DESIGNED BY: SHAHAN PETROSSIAN
CHECKED BY: FREW KOTISSO
REVISED BY
DATE REVISED

LAST REVISION 00-00-00
DATE PLOTTED => 12-OCT-2012
TIME PLOTTED => 14:21

Dist	COUNTY	ROUTE	POST MILES TOTAL PROJECT	SHEET No.	TOTAL SHEETS
07	Ven	1, 33,101 & 126	Var	22	59

M. Celina Aviles 5/4/12
REGISTERED CIVIL ENGINEER DATE

5-21-12
PLANS APPROVAL DATE

REGISTERED PROFESSIONAL ENGINEER
CELINA AVILES
No. C57106
Exp. 12/31/13
CIVIL
STATE OF CALIFORNIA

THE STATE OF CALIFORNIA OR ITS OFFICERS OR AGENTS SHALL NOT BE RESPONSIBLE FOR THE ACCURACY OR COMPLETENESS OF SCANNED COPIES OF THIS PLAN SHEET.

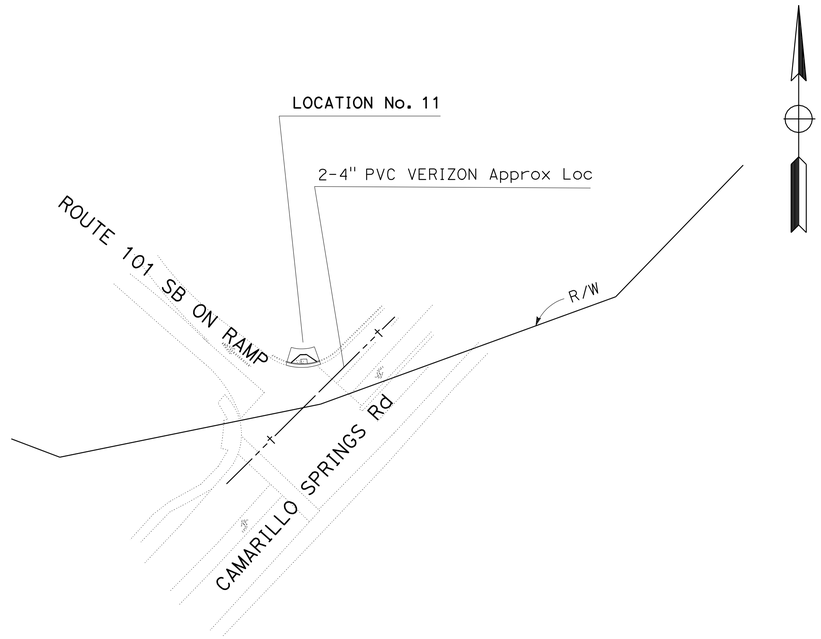

LOCATION No. 11 (ROUTE 101/PM 10.89)

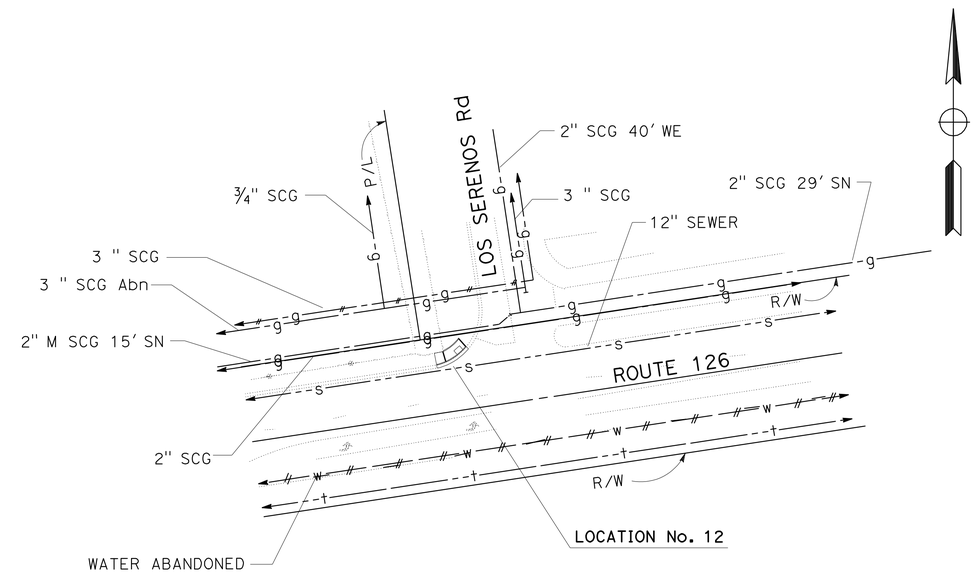

LOCATION No. 12 (ROUTE 126/ PM 20.33)

UTILITY PLAN
NO SCALE

U-4

APPROVED FOR UTILITY INFORMATION ONLY

STATE OF CALIFORNIA - DEPARTMENT OF TRANSPORTATION
Caltrans OFFICE OF DESIGN A

FUNCTIONAL SUPERVISOR: CELINA AVILES
CALCULATED-DESIGNED BY: SHAHAN PETROSSIAN
CHECKED BY: FREW KOTISSO
REVISED BY
DATE REVISED

LAST REVISION 00-00-00
DATE PLOTTED => 12-OCT-2012
TIME PLOTTED => 14:21

Dist	COUNTY	ROUTE	POST MILES TOTAL PROJECT	SHEET No.	TOTAL SHEETS
07	Ven	1, 33,101 & 126	Var	23	59

REGISTERED CIVIL ENGINEER DATE 5/4/12

PLANS APPROVAL DATE 5-21-12

REGISTERED PROFESSIONAL ENGINEER FREW KOTISSO No. C72485 Exp. 6/30/14 CIVIL STATE OF CALIFORNIA

THE STATE OF CALIFORNIA OR ITS OFFICERS OR AGENTS SHALL NOT BE RESPONSIBLE FOR THE ACCURACY OR COMPLETENESS OF ELECTRONIC COPIES OF THIS PLAN SHEET.

STATIONARY MOUNTED CONSTRUCTION AREA SIGNS

SIGN No.	SIGN CODE FEDERAL	SIGN CODE CALIFORNIA	PANEL SIZE	SIGN MESSAGE	NUMBER OF POSTS AND SIZE	NUMBER OF SIGNS
A	W20-1		48" X 48"	ROAD WORK AHEAD	1 - 4" X 6"	3
B	G20-2		48" X 24"	END ROAD WORK	1 - 4" X 6"	3

NOTES:

1. EXACT SIGN LOCATIONS WILL BE DETERMINED BY THE ENGINEER.
2. SIGN CODES PER MANUAL ON UNIFORM TRAFFIC CONTROL DEVICES (MUTCD).

CONSTRUCTION AREA SIGNS

NO SCALE

APPROVED FOR CONSTRUCTION AREA SIGN WORK ONLY

CS-1

STATE OF CALIFORNIA - DEPARTMENT OF TRANSPORTATION

Caltrans TRAFFIC DESIGN

FUNCTIONAL SUPERVISOR: GRISH BIGLARIAN

CALCULATED-DESIGNED BY: SHAHAN PETROSSIAN

CHECKED BY: FREW KOTISSO

REVISED BY

DATE REVISED

LAST REVISION 00-00-00

DATE PLOTTED => 12-OCT-2012

TIME PLOTTED => 14:21

Dist	COUNTY	ROUTE	POST MILES TOTAL PROJECT	SHEET No.	TOTAL SHEETS
07	Ven	1, 33,101 & 126	Var	24	59

REGISTERED CIVIL ENGINEER DATE 5/4/12

5-21-12
PLANS APPROVAL DATE

REGISTERED PROFESSIONAL ENGINEER FREW KOTISSO No. C72485 Exp. 6/30/14 CIVIL STATE OF CALIFORNIA

THE STATE OF CALIFORNIA OR ITS OFFICERS OR AGENTS SHALL NOT BE RESPONSIBLE FOR THE ACCURACY OR COMPLETENESS OF ELECTRONIC COPIES OF THIS PLAN SHEET.

STATIONARY MOUNTED CONSTRUCTION AREA SIGNS

SIGN No.	SIGN CODE	PANEL SIZE	No. OF POSTS AND SIZE	SIGN MESSAGE	No. OF SIGNS
A	W20-1	36" X 36"	1 - 4" X 6"	ROAD WORK AHEAD	16
B	G20-2	36" X 18"	1 - 4" X 6"	END ROAD WORK	16

NOTES:

1. EXACT SIGN LOCATIONS WILL BE DETERMINED BY THE ENGINEER.
2. SIGN CODES PER MANUAL ON UNIFORM TRAFFIC CONTROL DEVICES (MUTCD).

LOCATION No. 6
DEODAR Ave PM 18.85

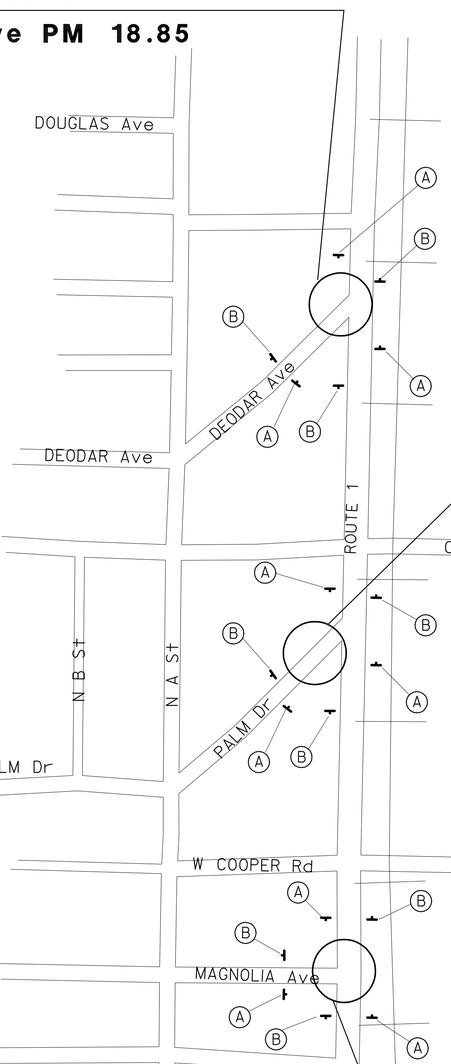

LOCATION No. 3
SECOND St PM 18.44

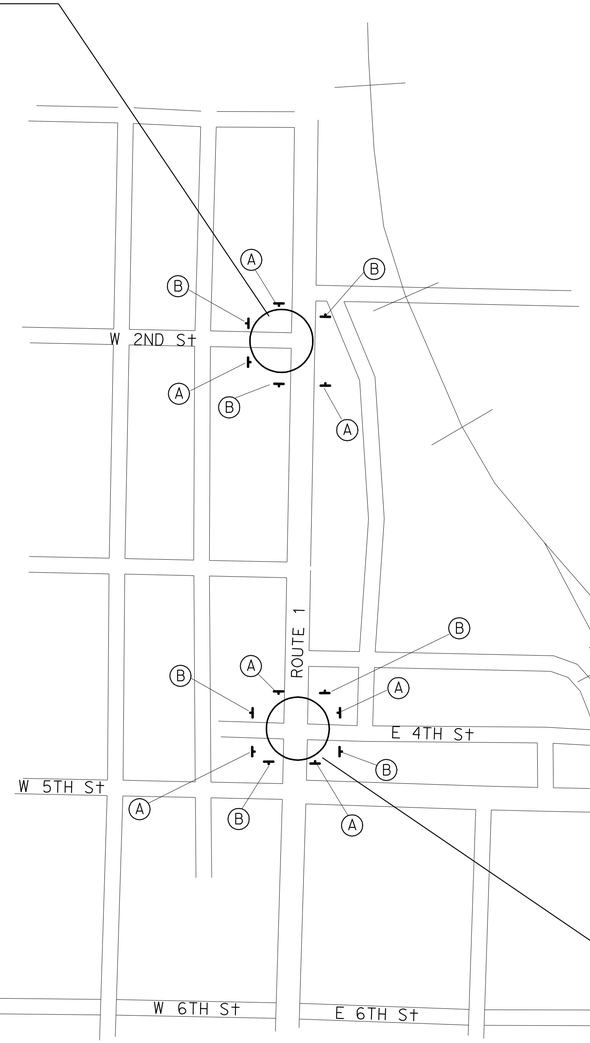

LOCATION No. 5
PALM Dr PM 18.71

LOCATION No. 2
FOURTH St PM 18.24

LOCATION No. 4
MAGNOLIA Ave PM 18.59

APPROVED FOR CONSTRUCTION AREA SIGN WORK ONLY

CONSTRUCTION AREA SIGNS

NO SCALE

CS-2

STATE OF CALIFORNIA - DEPARTMENT OF TRANSPORTATION
Caltrans TRAFFIC DESIGN

FUNCTIONAL SUPERVISOR: GRISH BIGLARIAN
CALCULATED-DESIGNED BY: SHAHAN PETROSSIAN
CHECKED BY: FREW KOTISSO
REVISED BY
DATE REVISED

LAST REVISION 00-00-00
DATE PLOTTED => 12-OCT-2012
TIME PLOTTED => 14:21

STATIONARY MOUNTED CONSTRUCTION AREA SIGNS

SIGN No.	SIGN CODE FEDERAL	SIGN CODE CALIFORNIA	PANEL SIZE	SIGN MESSAGE	NUMBER OF POSTS AND SIZE	NUMBER OF SIGNS
A	W20-1		36" X 36"	ROAD WORK AHEAD	1 - 4" X 6"	7
B	G20-2		36" X 18"	END ROAD WORK	1 - 4" X 6"	7

Dist	COUNTY	ROUTE	POST MILES TOTAL PROJECT	SHEET No.	TOTAL SHEETS
07	Ven	1, 33,101 & 126	Var	25	59

REGISTERED CIVIL ENGINEER DATE 5/4/12

PLANS APPROVAL DATE 5-21-12

REGISTERED PROFESSIONAL ENGINEER FREW KOTISSO No. C72485 Exp. 6/30/14 CIVIL STATE OF CALIFORNIA

THE STATE OF CALIFORNIA OR ITS OFFICERS OR AGENTS SHALL NOT BE RESPONSIBLE FOR THE ACCURACY OR COMPLETENESS OF ELECTRONIC COPIES OF THIS PLAN SHEET.

NOTES:

1. EXACT SIGN LOCATIONS WILL BE DETERMINED BY THE ENGINEER.
2. SIGN CODES PER MANUAL ON UNIFORM TRAFFIC CONTROL DEVICES (MUTCD).

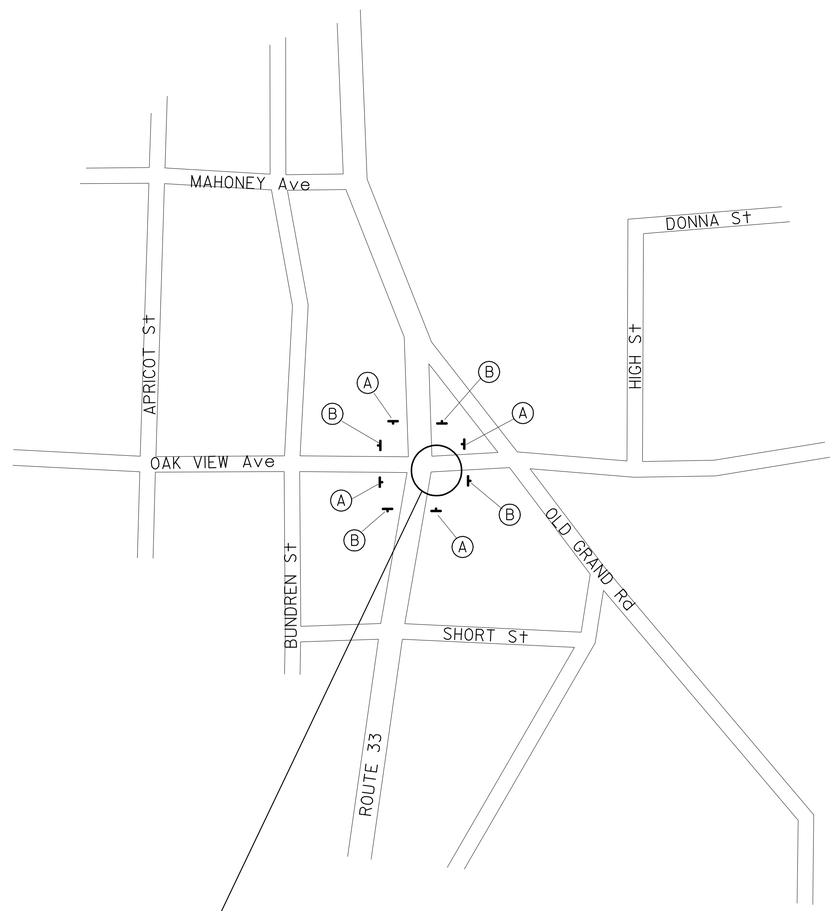

LOCATION No. 7

OAK VIEW Ave PM 8.79

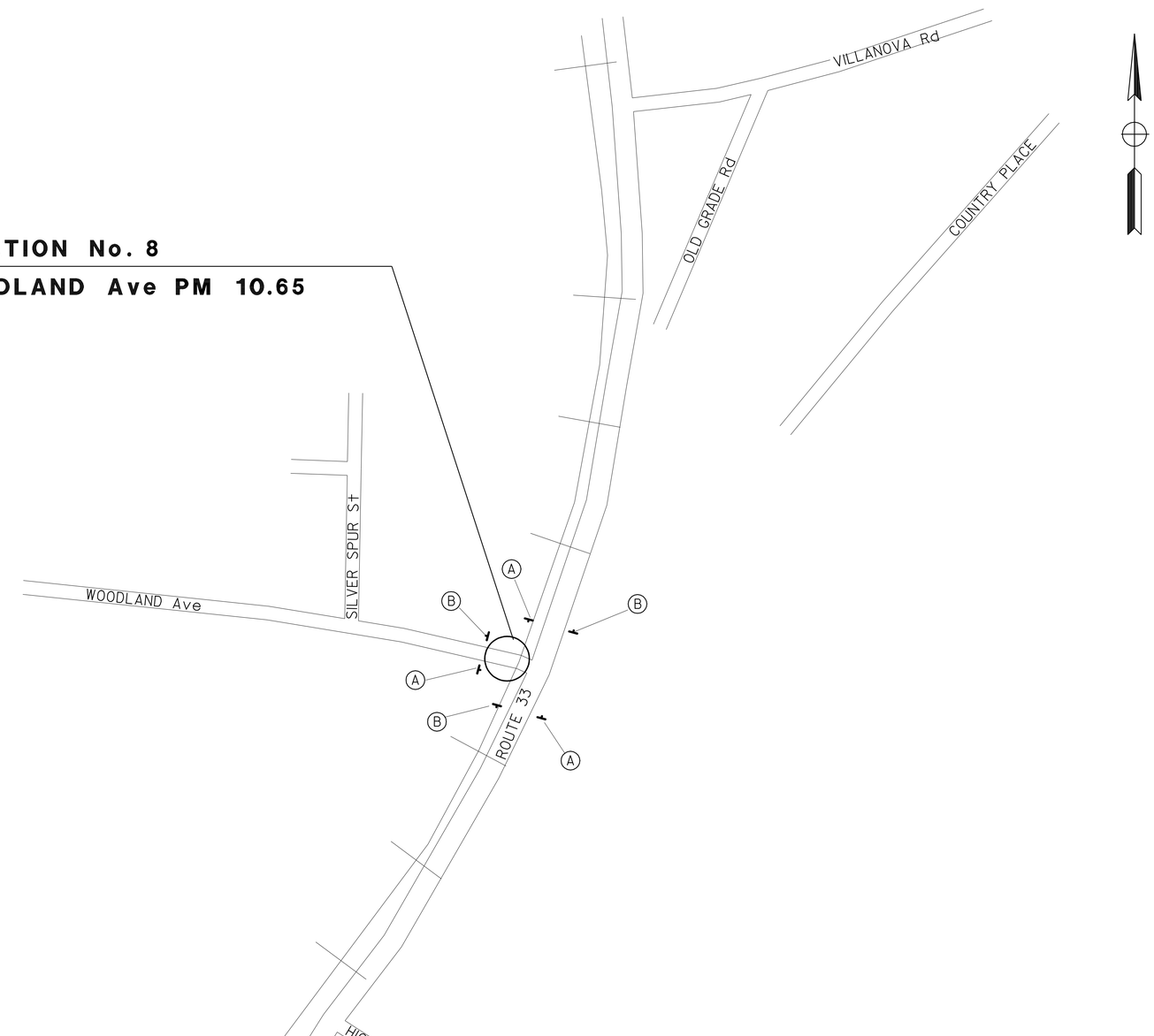

LOCATION No. 8

WOODLAND Ave PM 10.65

APPROVED FOR CONSTRUCTION AREA SIGN WORK ONLY

CONSTRUCTION AREA SIGNS

NO SCALE

CS-3

STATE OF CALIFORNIA - DEPARTMENT OF TRANSPORTATION

Caltrans **TRAFFIC DESIGN**

FUNCTIONAL SUPERVISOR: GRISH BIGLARIAN

CALCULATED-DESIGNED BY: SHAHAN PETROSSIAN

CHECKED BY: FREW KOTISSO

REVISED BY

DATE REVISED

LAST REVISION 00-00-00

DATE PLOTTED => 12-OCT-2012

TIME PLOTTED => 14:22

Dist	COUNTY	ROUTE	POST MILES TOTAL PROJECT	SHEET No.	TOTAL SHEETS
07	Ven	1, 33,101 & 126	Var	26	59

REGISTERED CIVIL ENGINEER DATE 5/4/12

PLANS APPROVAL DATE 5-21-12

REGISTERED PROFESSIONAL ENGINEER FREW KOTISSO No. C72485 Exp. 6/30/14 CIVIL STATE OF CALIFORNIA

THE STATE OF CALIFORNIA OR ITS OFFICERS OR AGENTS SHALL NOT BE RESPONSIBLE FOR THE ACCURACY OR COMPLETENESS OF ELECTRONIC COPIES OF THIS PLAN SHEET.

STATIONARY MOUNTED CONSTRUCTION AREA SIGNS

SIGN No.	SIGN CODE FEDERAL	SIGN CODE CALIFORNIA	PANEL SIZE	SIGN MESSAGE	NUMBER OF POSTS AND SIZE	NUMBER OF SIGNS
A	W20-1		36" X 36"	ROAD WORK AHEAD	1 - 4" X 6"	8
B	G20-2		36" X 18"	END ROAD WORK	1 - 4" X 6"	8

NOTES:

1. EXACT SIGN LOCATIONS WILL BE DETERMINED BY THE ENGINEER.
2. SIGN CODES PER MANUAL ON UNIFORM TRAFFIC CONTROL DEVICES (MUTCD).

LOCATION No. 9
VALLE RIO Ave PM 11.42

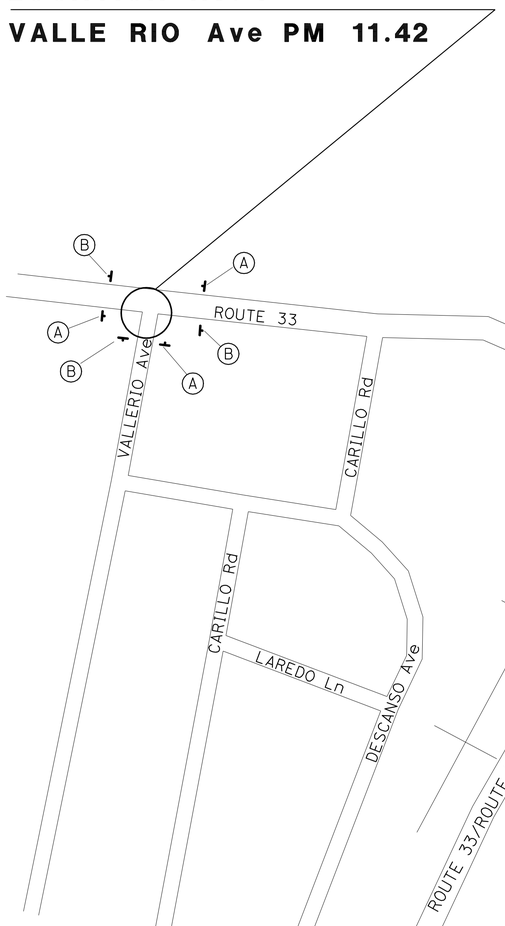

LOCATION No. 10
FAIRVIEW Ave PM 12.8

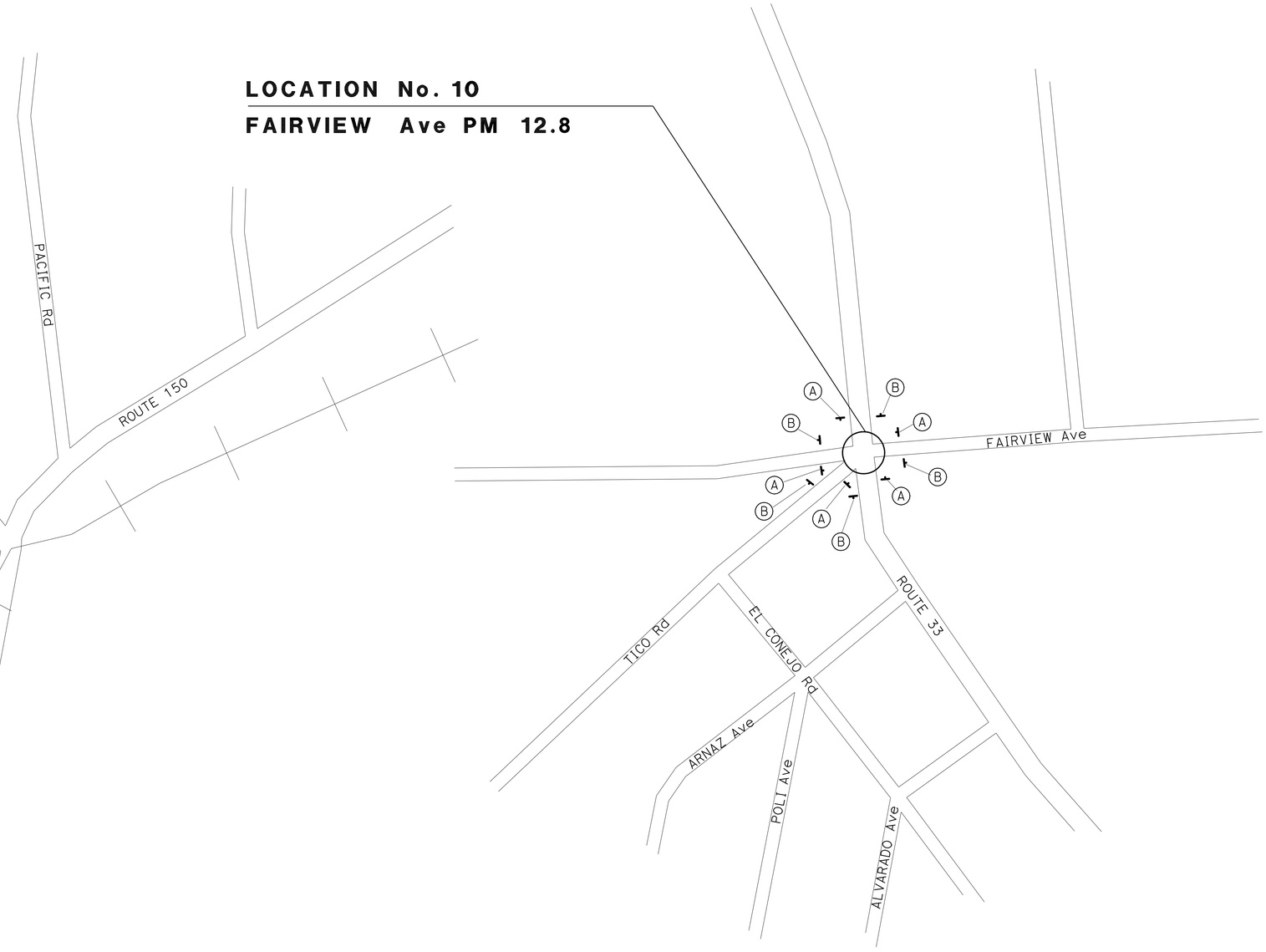

CONSTRUCTION AREA SIGNS

NO SCALE

APPROVED FOR CONSTRUCTION AREA SIGN WORK ONLY

CS-4

STATE OF CALIFORNIA - DEPARTMENT OF TRANSPORTATION

Caltrans **TRAFFIC DESIGN**

FUNCTIONAL SUPERVISOR: GRISH BIGLARIAN

CALCULATED-DESIGNED BY: SHAHAN PETROSSIAN

CHECKED BY: FREW KOTISSO

REVISED BY

DATE REVISED

LAST REVISION 00-00-00 DATE PLOTTED => 12-OCT-2012 TIME PLOTTED => 14:22

Dist	COUNTY	ROUTE	POST MILES TOTAL PROJECT	SHEET No.	TOTAL SHEETS
07	Ven	1, 33,101 & 126	Var	27	59

REGISTERED CIVIL ENGINEER DATE 5/4/12

5-21-12
PLANS APPROVAL DATE

REGISTERED PROFESSIONAL ENGINEER FREW KOTISSO No. C72485 Exp. 6/30/14 CIVIL STATE OF CALIFORNIA

THE STATE OF CALIFORNIA OR ITS OFFICERS OR AGENTS SHALL NOT BE RESPONSIBLE FOR THE ACCURACY OR COMPLETENESS OF ELECTRONIC COPIES OF THIS PLAN SHEET.

STATIONARY MOUNTED CONSTRUCTION AREA SIGNS

SIGN No.	SIGN CODE FEDERAL	SIGN CODE CALIFORNIA	PANEL SIZE	SIGN MESSAGE	NUMBER OF POSTS AND SIZE	NUMBER OF SIGNS
(A)	W20-1		36" X 36"	ROAD WORK AHEAD	1 - 4" X 6"	6
(B)	G20-2		36" X 18"	END ROAD WORK	1 - 4" X 6"	6
					TOTAL CS-1 THRU CS-5	80

NOTES:

1. EXACT SIGN LOCATIONS WILL BE DETERMINED BY THE ENGINEER.
2. SIGN CODES PER MANUAL ON UNIFORM TRAFFIC CONTROL DEVICES (MUTCD).

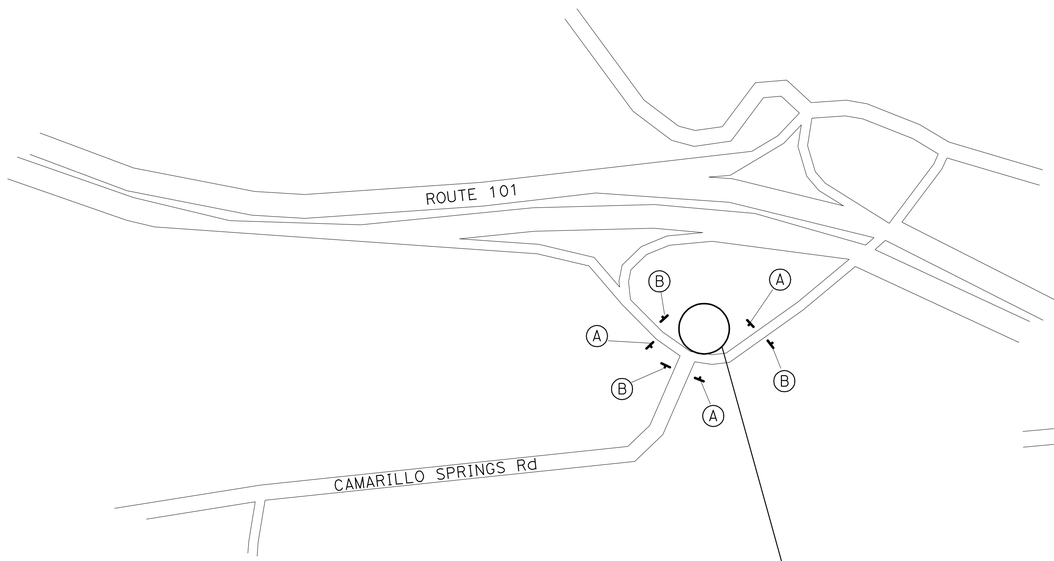

LOCATION No. 11

SB OFF CAMARILLO SPRING PM 10.89

LOCATION No. 12

LOS SERENOS Rd PM 20.33

APPROVED FOR CONSTRUCTION AREA SIGN WORK ONLY

CONSTRUCTION AREA SIGNS

NO SCALE

CS-5

STATE OF CALIFORNIA - DEPARTMENT OF TRANSPORTATION
Caltrans **TRAFFIC DESIGN**

FUNCTIONAL SUPERVISOR: GRISH BIGLARIAN
CALCULATED-DESIGNED BY: SHAHAN PETROSSIAN
CHECKED BY: FREW KOTISSO
REVISED BY
DATE REVISED

LAST REVISION 00-00-00
DATE PLOTTED => 12-OCT-2012
TIME PLOTTED => 14:22

Dist	COUNTY	ROUTE	POST MILES TOTAL PROJECT	SHEET No.	TOTAL SHEETS
07	Ven	1, 33,101 & 126	Var	28	59

REGISTERED CIVIL ENGINEER 5/4/12 DATE

5-21-12
PLANS APPROVAL DATE

REGISTERED PROFESSIONAL ENGINEER FREW KOTISSO No. C72485 Exp. 6/30/14 CIVIL STATE OF CALIFORNIA

THE STATE OF CALIFORNIA OR ITS OFFICERS OR AGENTS SHALL NOT BE RESPONSIBLE FOR THE ACCURACY OR COMPLETENESS OF SCANNED COPIES OF THIS PLAN SHEET.

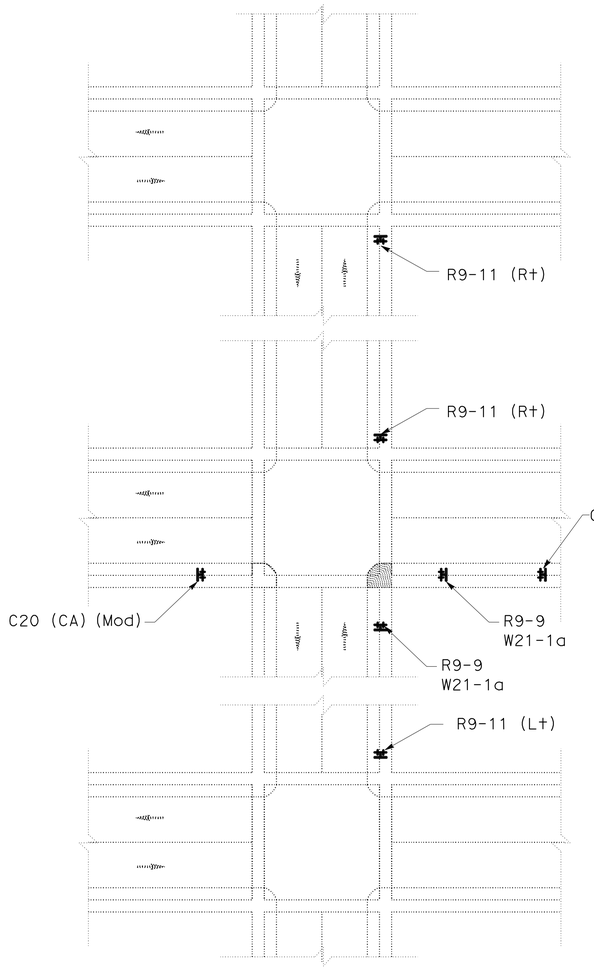

CASE A-ONE CORNER

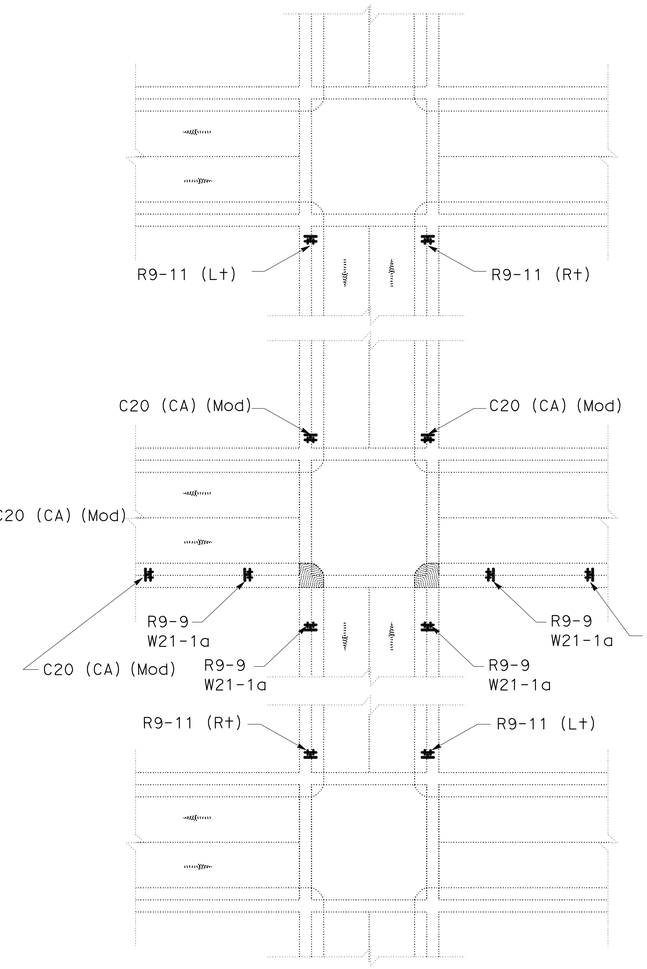

CASE B-Min TWO CORNERS
(ONE CORNER AT A TIME)

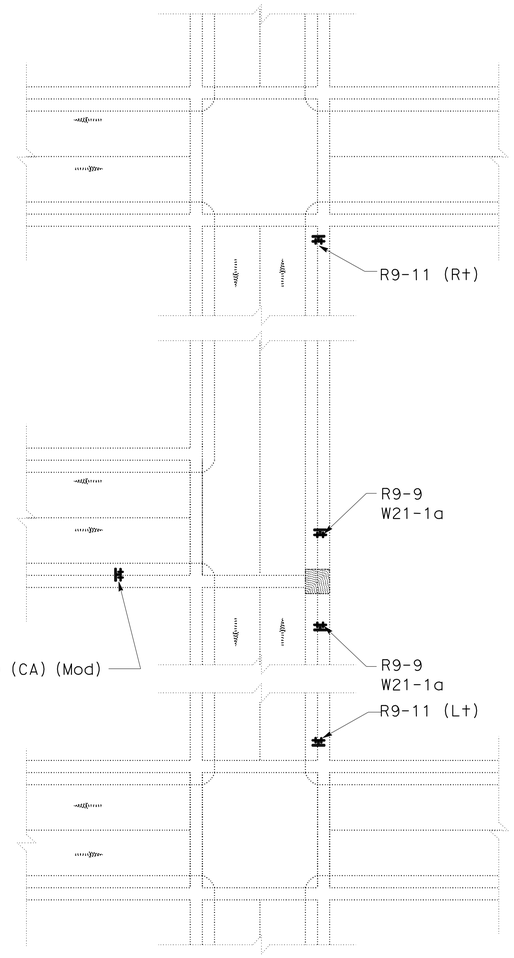

CASE C

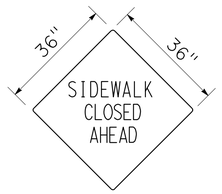

C20 (CA) (Mod)

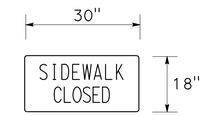

R9-9

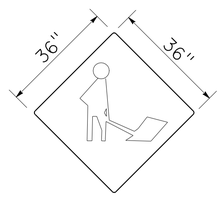

W21-1a

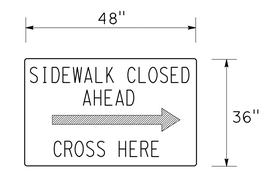

R9-11 (Rt)

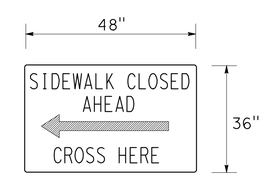

R9-11 (Lt)

NOTES:

1. EXACT SIGN LOCATIONS WILL BE DETERMINED BY THE ENGINEER.
2. SEE STANDARD PLAN T11 FOR LANE CLOSURE DETAILS.
3. ONLY TWO CORNERS OF FOURTH STREET MAY BE CLOSED CONCURRENTLY.

LEGEND:

WORKING AREA
SIGN
BARRICADE (TYPE II)

SIGN CODE:

XXYY-#: FEDERAL HIGHWAY SIGN CODE PER MANUAL ON UNIFORM TRAFFIC CONTROL DEVICES (MUTCD)
XXYY-# (CA) CALIFORNIA SIGN CODE PER CALIFORNIA MUTCD

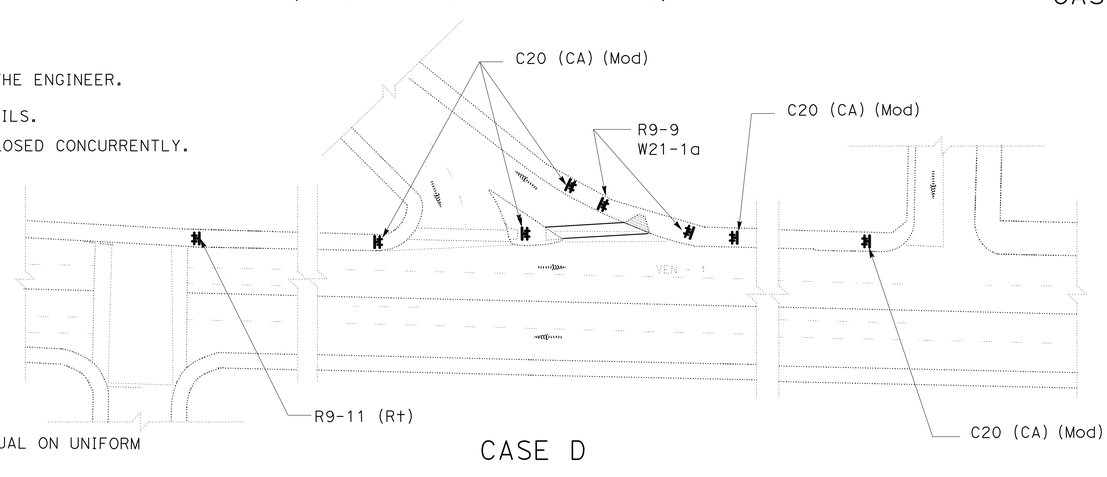

CASE D

TRAFFIC HANDLING PLAN
TRAFFIC CONTROL SYSTEM
FOR SIDEWALK CLOSURES

SCALE 1"=50'

TH-1

STATE OF CALIFORNIA - DEPARTMENT OF TRANSPORTATION
Caltrans
TRAFFIC DESIGN
FUNCTIONAL SUPERVISOR: GRISH BIGLARIAN
CALCULATED-DESIGNED BY
CHECKED BY
REVISED BY
DATE REVISED
SHAHAN PETROSSIAN
FREW KOTISSO

LAST REVISION 00-00-00
DATE PLOTTED => 12-OCT-2012
TIME PLOTTED => 14:22

Dist	COUNTY	ROUTE	POST MILES TOTAL PROJECT	SHEET No.	TOTAL SHEETS
07	Ven	1, 33,101 & 126	Var	29	59

REGISTERED CIVIL ENGINEER 5/4/12 DATE

5-21-12
PLANS APPROVAL DATE

REGISTERED PROFESSIONAL ENGINEER SHANGJIA HORN No. 51846 Exp. 6-30-14 CIVIL STATE OF CALIFORNIA

THE STATE OF CALIFORNIA OR ITS OFFICERS OR AGENTS SHALL NOT BE RESPONSIBLE FOR THE ACCURACY OR COMPLETENESS OF SCANNED COPIES OF THIS PLAN SHEET.

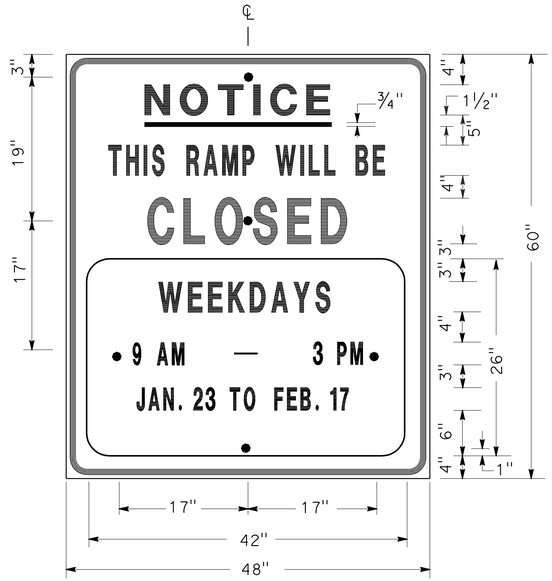

SIGN SP-1

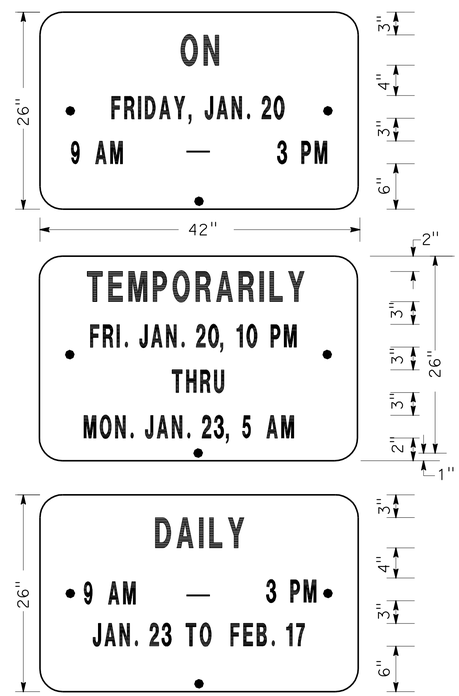

ALTERNATE OVERLAY PANELS (TYPICAL)

SPECIAL ADVANCE NOTICE PUBLICITY SIGN

NOTES: (SIGN SP-1)

1. SIGNS SHALL HAVE ORANGE RETROREFLECTORIZED BACKGROUND WITH BLACK BORDER AND LETTERS.
2. BOLT HOLES SHALL BE 3/8" DIAMETER.
3. BASE MATERIAL SHALL BE ALUMINUM (MINIMUM 0.06").
4. SIGNS SHALL BE MOUNTED WITH BOTTOMS OF SIGNS A MINIMUM OF 6' ABOVE GROUND.

SIZE	BORDER WIDTH	MARGIN WIDTH	LETTER SIZE					CORNER RADIUS
			LINE 1	LINE 2*	LINE 3	LINE 4	LINE 5,6 & 7*	
48"x60"	1 1/4"	3/4"	4E	4D	6E	4D		3"
42"x26"	OVERLAY						3D	1 1/2"
* CONDENSED SPACING IF NECESSARY								

SIGN SP-4

NOTES: (SIGN SP-4)

1. LETTERS - 6" SERIES C.
2. LETTERS AND BORDERS - BLACK ON RETROREFLECTORIZED WHITE BACKGROUND.
3. BASE MATERIAL SHALL BE ALUMINUM (MINIMUM 0.06").
4. SIGNS SHALL BE PLACED AT RAMP ENTRANCES IN ADDITION TO SIGNS POSTED IN ACCORDANCE WITH STANDARD PLAN T14.

SPECIAL SIGN FOR ENTRANCE RAMP CLOSURES

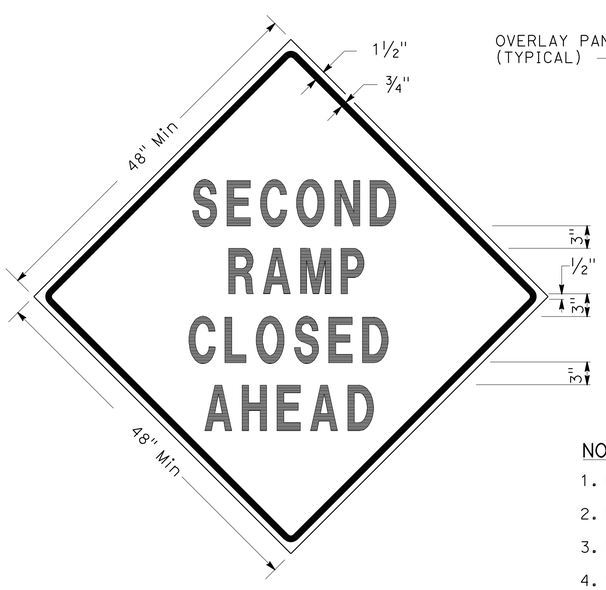

SIGN SP-3

SIGN SP-5

NOTES: (SIGNS SP-3 & SP-5)

1. LETTERS - 6" SERIES D.
2. LETTERS AND BORDERS - BLACK ON RETROREFLECTORIZED ORANGE BACKGROUND.
3. BASE MATERIAL SHALL BE ALUMINUM (MINIMUM 0.06").
4. SIGNS SHALL BE MOUNTED WITH BOTTOMS OF SIGNS A MINIMUM OF 6' ABOVE GROUND.

SPECIAL SIGN FOR EXIT RAMP CLOSURES

TRAFFIC HANDLING DETAILS
TRAFFIC CONTROL SYSTEM FOR RAMP CLOSURES, DETOUR SIGNS AND MISCELLANEOUS DETAILS
SHEET 1 OF 2

NO SCALE

THD-1

STATE OF CALIFORNIA - DEPARTMENT OF TRANSPORTATION
Caltrans® DTM

FUNCTIONAL SUPERVISOR: ALBERT YU
CALCULATED-DESIGNED BY: SHANGJIA HORN
CHECKED BY: JOCELYN C CHIANG
REVISED BY: JC
DATE REVISED: 7/10

LAST REVISION DATE PLOTTED => 12-OCT-2012
00-00-00 TIME PLOTTED => 14:22

Dist	COUNTY	ROUTE	POST MILES TOTAL PROJECT	SHEET No.	TOTAL SHEETS
07	Ven	1, 33,101 & 126	Var	30	59

REGISTERED CIVIL ENGINEER 5/4/12 DATE

5-21-12
PLANS APPROVAL DATE

REGISTERED PROFESSIONAL ENGINEER SHANGJIA HORN No. 51846 Exp. 6-30-14 CIVIL STATE OF CALIFORNIA

THE STATE OF CALIFORNIA OR ITS OFFICERS OR AGENTS SHALL NOT BE RESPONSIBLE FOR THE ACCURACY OR COMPLETENESS OF SCANNED COPIES OF THIS PLAN SHEET.

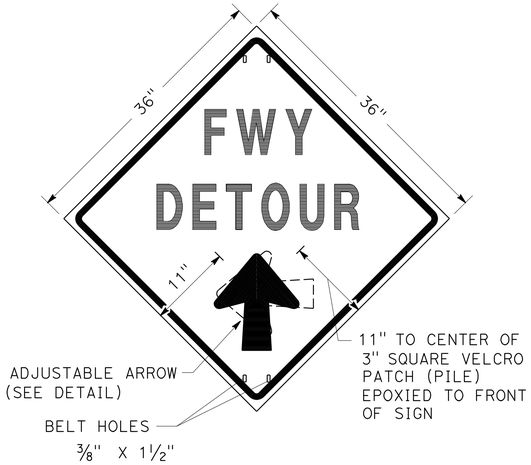

SIGN SP-2

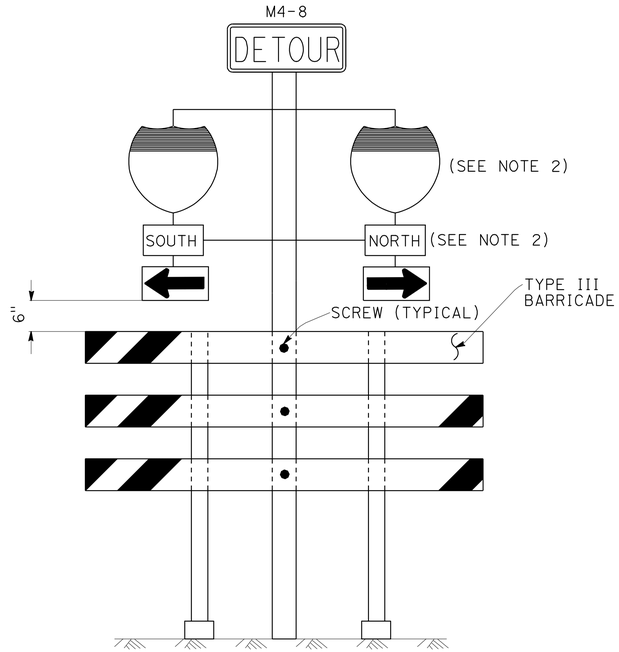

SIGN SP-6 (SEE NOTE 1)

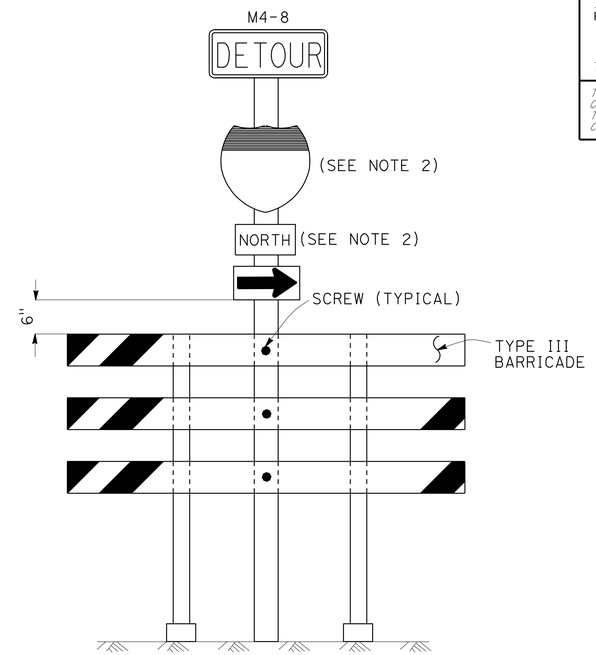

SIGN SP-7 (SEE NOTE 1)

NOTES: (SIGN SP-2)

1. LETTERS -6" SERIES E.
2. LETTERS, BORDER AND ARROW - BLACK ON RETROREFLECTORIZED ORANGE BACKGROUND.
3. BASE MATERIAL FOR SIGNS AND ARROWS SHALL BE ALUMINUM (MINIMUM 0.06").
4. BELTS (LUGGAGE STRAPS) SHALL BE 1" WIDE BY 48" LONG, MADE OF COTTON OR POLYPROPYLENE WEB MATERIAL.
5. SIGNS SHALL BE MOUNTED WITH BOTTOMS OF SIGNS A MINIMUM OF 6' ABOVE GROUND EXCEPT AS OTHERWISE SHOWN ON OTHER TRAFFIC HANDLING DETAILS PLANS.

ABBREVIATION

(CA) CALIFORNIA CODE

NOTES: (SIGNS SP-6 & SP-7)

1. IN LIEU OF PLACING SIGNS ON TYPE III BARRICADES, SIGNS, INCLUDING POSTS, MAY BE PLACED INTO THE GROUND OR FASTENED ONTO ELECTROLIERS.
2. USE APPROPRIATE ROUTE SHIELD [G26-2(CA), G27-2(CA), G28-2(CA)] AND CARDINAL DIRECTION [NORTH (M3-1), SOUTH (M3-3), EAST (M3-2), WEST (M3-4)]

SPECIAL PORTABLE FREEWAY DETOUR SIGNS

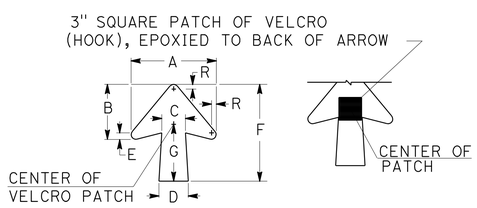

DIMENSIONS							
A	B	C	D	E	F	G	R
11 1/4"	7 1/4"	3 1/8"	4"	7/8"	13"	7 1/2"	5/8"

SPECIAL PORTABLE FREEWAY DETOUR SIGN

ADJUSTABLE ARROW DETAIL

TRAFFIC HANDLING DETAILS

TRAFFIC CONTROL SYSTEM FOR RAMP CLOSURES, DETOUR SIGNS AND MISCELLANEOUS DETAILS

SHEET 2 OF 2

NO SCALE

THD-2

STATE OF CALIFORNIA - DEPARTMENT OF TRANSPORTATION
Caltrans DTM

FUNCTIONAL SUPERVISOR: ALBERT YU
CALCULATED-DESIGNED BY: SHANGJIA HORN
CHECKED BY: JOCELYN C CHIANG
REVISED BY: JC
DATE REVISED: 7/10

LAST REVISION 00-00-00
DATE PLOTTED => 12-OCT-2012
TIME PLOTTED => 14:23

Dist	COUNTY	ROUTE	POST MILES TOTAL PROJECT	SHEET No.	TOTAL SHEETS
07	Ven	1, 33,101 & 126	Var	31	59

REGISTERED CIVIL ENGINEER 5/4/12 DATE

5-21-12
PLANS APPROVAL DATE

REGISTERED PROFESSIONAL ENGINEER SHANGJIA HORN No. 51846 Exp. 6-30-14 CIVIL STATE OF CALIFORNIA

THE STATE OF CALIFORNIA OR ITS OFFICERS OR AGENTS SHALL NOT BE RESPONSIBLE FOR THE ACCURACY OR COMPLETENESS OF SCANNED COPIES OF THIS PLAN SHEET.

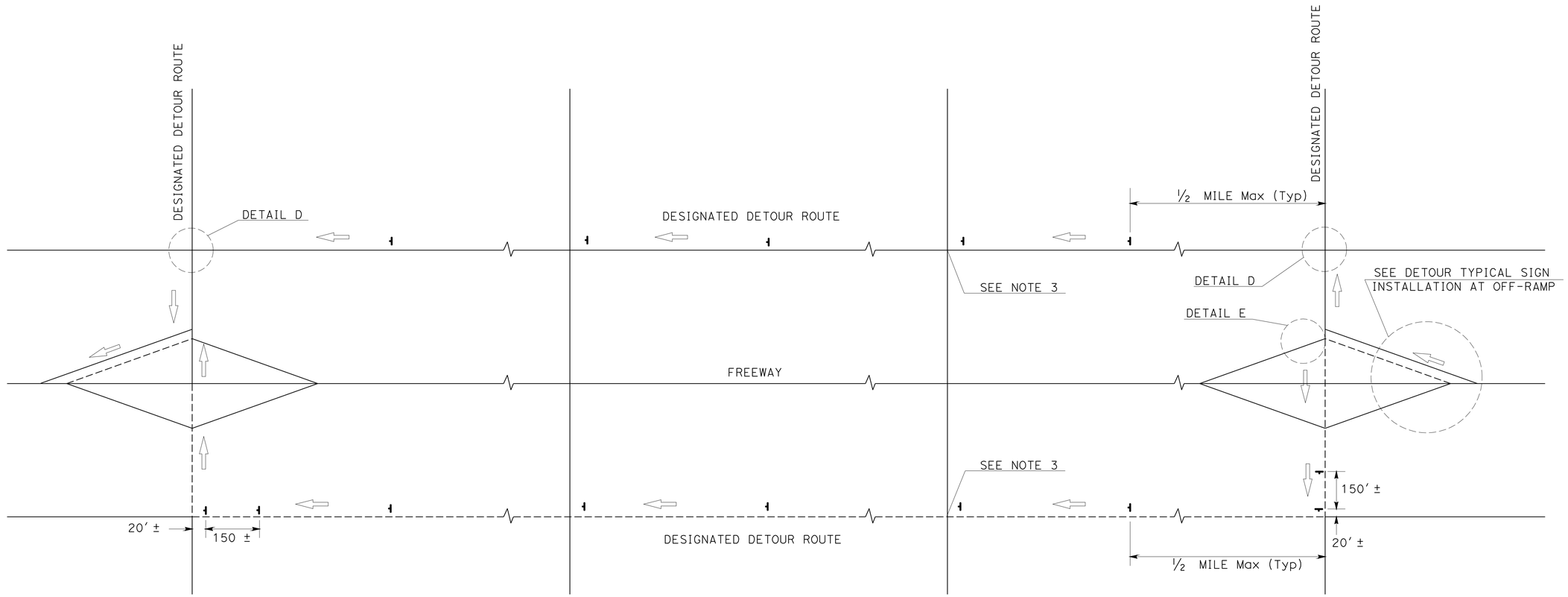

TYPICAL DETOUR SIGN INSTALLATION ALONG DESIGNATED DETOUR ROUTE

LEGEND

- TEMPORARY SIGN (SP-2)
- AND/OR DESIGNATED DETOUR ROUTE
- DIRECTION OF TRAVEL

NOTES:

1. SP-2 SIGNS SHALL NOT BE INSTALLED ON BARRICADES EXCEPT AS OTHERWISE SHOWN.
2. SIGN LOCATIONS ARE APPROXIMATE. EXACT LOCATIONS WILL BE DETERMINED BY THE ENGINEER.
3. SP-2 SIGNS SHALL BE POSTED AT SIGNALIZED INTERSECTIONS ALONG THE DESIGNATED DETOUR ROUTE OR ½ MILE MAXIMUM APART.

TRAFFIC HANDLING DETAILS

TRAFFIC CONTROL SYSTEM FOR DETOUR SIGN INSTALLATION ALONG DESIGNATED DETOUR ROUTE SHEET 1 OF 2

NO SCALE

THD-3

STATE OF CALIFORNIA - DEPARTMENT OF TRANSPORTATION
Caltrans DTM

FUNCTIONAL SUPERVISOR: ALBERT YU
CALCULATED-DESIGNED BY: SHANGJIA HORN
CHECKED BY: JOCELYN C CHIANG
REVISED BY: JC
DATE REVISED: 7/10

LAST REVISION DATE PLOTTED => 12-OCT-2012
00-00-00 TIME PLOTTED => 14:23

Dist	COUNTY	ROUTE	POST MILES TOTAL PROJECT	SHEET No.	TOTAL SHEETS
07	Ven	1, 33,101 & 126	Var	32	59

REGISTERED CIVIL ENGINEER 5/4/12 DATE

5-21-12
PLANS APPROVAL DATE

REGISTERED PROFESSIONAL ENGINEER SHANGJIA HORN No. 51846 Exp. 6-30-14 CIVIL STATE OF CALIFORNIA

THE STATE OF CALIFORNIA OR ITS OFFICERS OR AGENTS SHALL NOT BE RESPONSIBLE FOR THE ACCURACY OR COMPLETENESS OF SCANNED COPIES OF THIS PLAN SHEET.

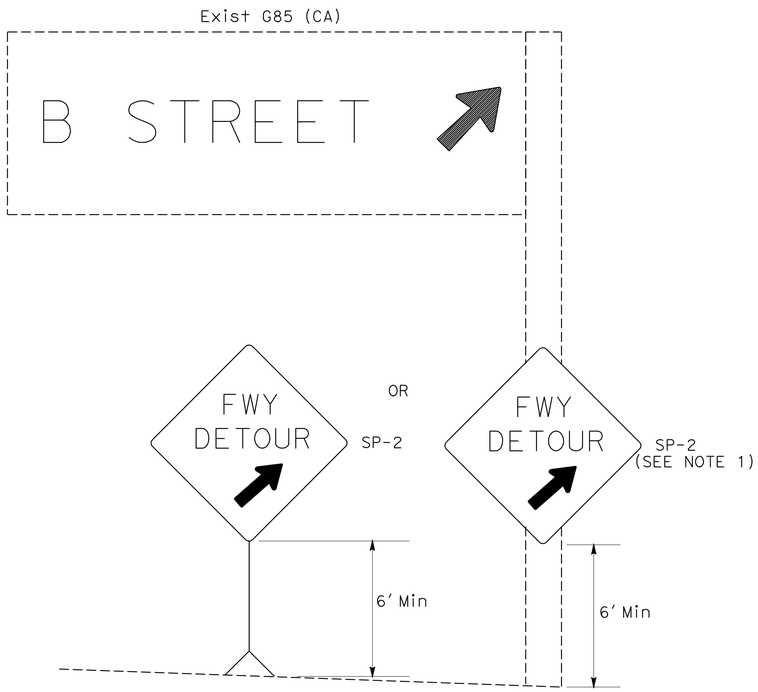

DETAIL A

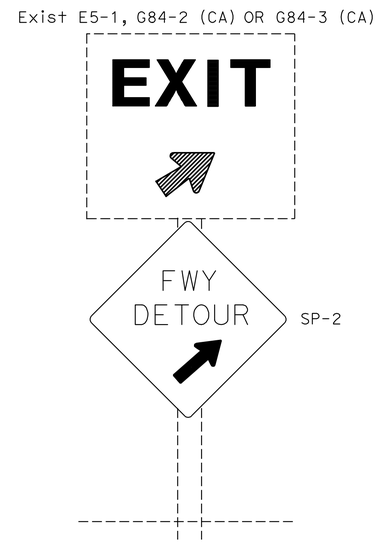

DETAIL B

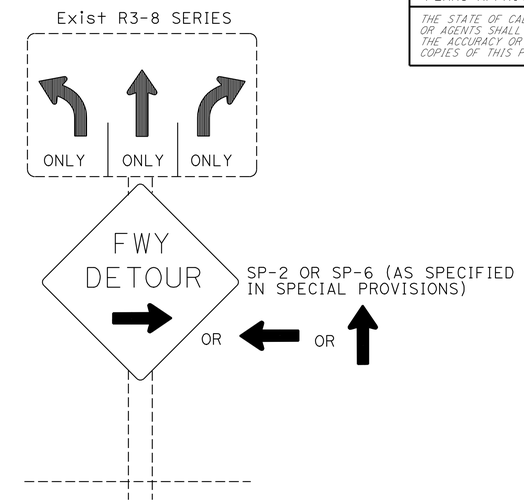

DETAIL C

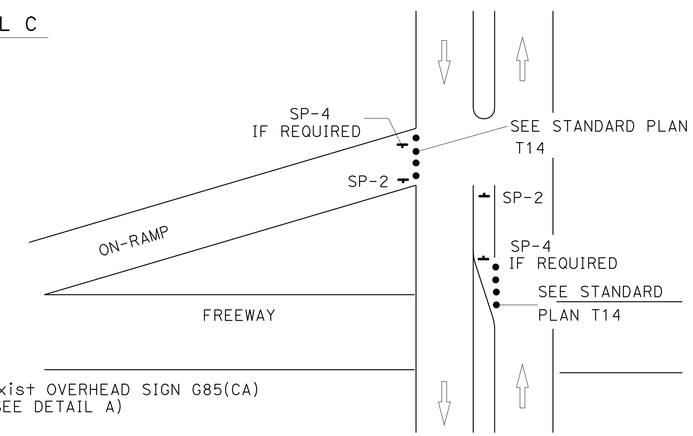

DETAIL E

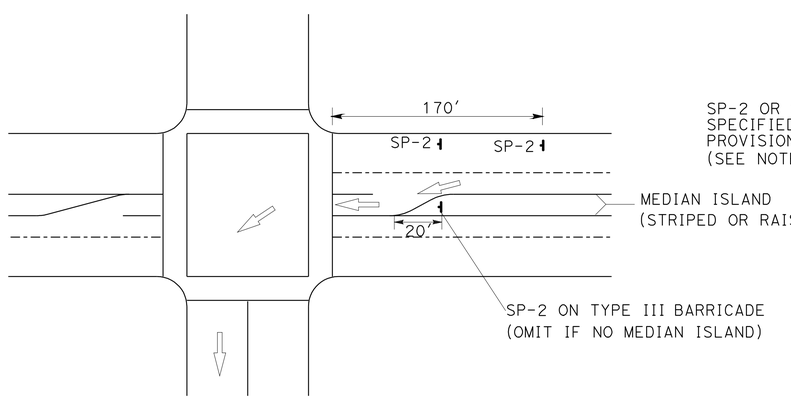

DETAIL D

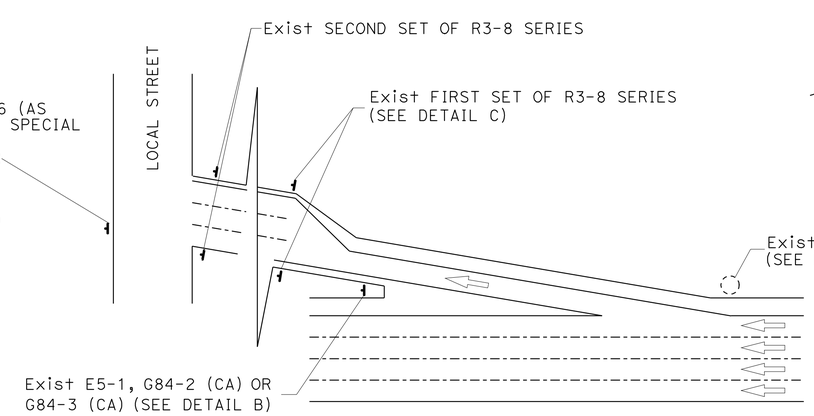

TYPICAL DETOUR SIGN INSTALLATION AT OFF-RAMP

NOTES:

1. TEMPORARY SIGNS MAY BE STRAPPED ON EXISTING ELECTROLIER, SIGNAL POSTS, OR SIGN POSTS.
2. OMIT DETAIL A AND DETAIL B FOR FULL FREEWAY CLOSURES.
3. SEE TRAFFIC HANDLING DETAILS PLAN-TRAFFIC CONTROL SYSTEM FOR RAMP CLOSURES, DETOUR SIGNS AND MISCELLANEOUS DETAILS SHEET 2 OF 2 FOR SP-6.

ABBREVIATIONS

(CA) CALIFORNIA CODE

LEGENDS

- TRAFFIC CONE
- TEMPORARY SIGN
- DIRECTION OF TRAVEL
- EXISTING OVERHEAD SIGN

TRAFFIC HANDLING DETAILS
TRAFFIC CONTROL SYSTEM FOR DETOUR SIGN INSTALLATION ALONG DESIGNATED DETOUR ROUTE SHEET 2 OF 2

NO SCALE

THD-4

STATE OF CALIFORNIA - DEPARTMENT OF TRANSPORTATION
Caltrans DTM

FUNCTIONAL SUPERVISOR: ALBERT YU
CALCULATED-DESIGNED BY: SHANGJIA HORN
CHECKED BY: JOCELYN C CHIANG
REVISED BY: JC
DATE REVISED: 8/10

LAST REVISION 00-00-00
DATE PLOTTED => 12-OCT-2012
TIME PLOTTED => 14:23

Dist	COUNTY	ROUTE	POST MILES TOTAL PROJECT	SHEET No.	TOTAL SHEETS
07	Ven	1, 33,101 & 126	Var	33	59

REGISTERED CIVIL ENGINEER 5/4/12 DATE

5-21-12
PLANS APPROVAL DATE

REGISTERED PROFESSIONAL ENGINEER FREW KOTISSO No. C72485 Exp. 6/30/14 CIVIL STATE OF CALIFORNIA

THE STATE OF CALIFORNIA OR ITS OFFICERS OR AGENTS SHALL NOT BE RESPONSIBLE FOR THE ACCURACY OR COMPLETENESS OF THOANNED COPIES OF THIS PLAN SHEET.

TRAFFIC HANDLING QUANTITIES

SHEET No.	Loc No.	SIDEWALK CLOSURE CASE	SIGNS				
			R9-9	R9-11(L)	R9-11(R)	C20(CA)(Mod)	W21-1a
			EA				
C-1	Loc No. 1	CASE A	2	1	2	2	2
C-2	Loc No. 2	CASE B	8	4	4	8	8
C-7	Loc No. 4	CASE C	2	1	1	1	2
C-8	Loc No. 4	CASE A	2	1	2	2	2
C-9	Loc No. 5	CASE D	1		1	5	1
C-10	Loc No. 6	CASE D	1		1	5	1
C-11	Loc No. 7	CASE A	2	1	2	2	2
C-12	Loc No. 8	CASE C	2	1	1	1	2
C-13	Loc No. 9	CASE C	2	1	1	1	2
C-14	Loc No. 10	CASE A	2	1	2	2	2
C-15	Loc No. 11	CASE A	2	1	2	2	2
C-16	Loc No. 12	CASE A	2	1	2	2	2
TOTAL			28	13	21	33	28

REVISED BY | DATE REVISED

SHAHAN PETROSSIAN | FREW KOTISSO

CALCULATED-DESIGNED BY | CHECKED BY

FUNCTIONAL SUPERVISOR: GRISH BIGLARIAN

STATE OF CALIFORNIA - DEPARTMENT OF TRANSPORTATION

Caltrans® TRAFFIC DESIGN

TRAFFIC HANDLING QUANTITIES

THQ-1

LAST REVISION 04-20-11 | DATE PLOTTED => 12-OCT-2012 | TIME PLOTTED => 14:23

Dist	COUNTY	ROUTE	POST MILES TOTAL PROJECT	SHEET No.	TOTAL SHEETS
07	Ven	1, 33,101 & 126	Var	34	59

REGISTERED CIVIL ENGINEER 5/4/12 DATE

5-21-12
PLANS APPROVAL DATE

REGISTERED PROFESSIONAL ENGINEER FREW KOTISSO No. C72485 Exp. 6/30/14 CIVIL STATE OF CALIFORNIA

THE STATE OF CALIFORNIA OR ITS OFFICERS OR AGENTS SHALL NOT BE RESPONSIBLE FOR THE ACCURACY OR COMPLETENESS OF SCANNED COPIES OF THIS PLAN SHEET.

NOTES:

1. FOR ACCURATE RIGHT OF WAY DATA, CONTACT RIGHT OF WAY ENGINEERING AT THE DISTRICT OFFICE.
2. EXISTING UTILITIES HAVE NOT BEEN PLOTTED ON THESE PLANS.

Loc No. 3

ROUTE 1 AND SECOND St (SE CORNER) (PM 18.44)

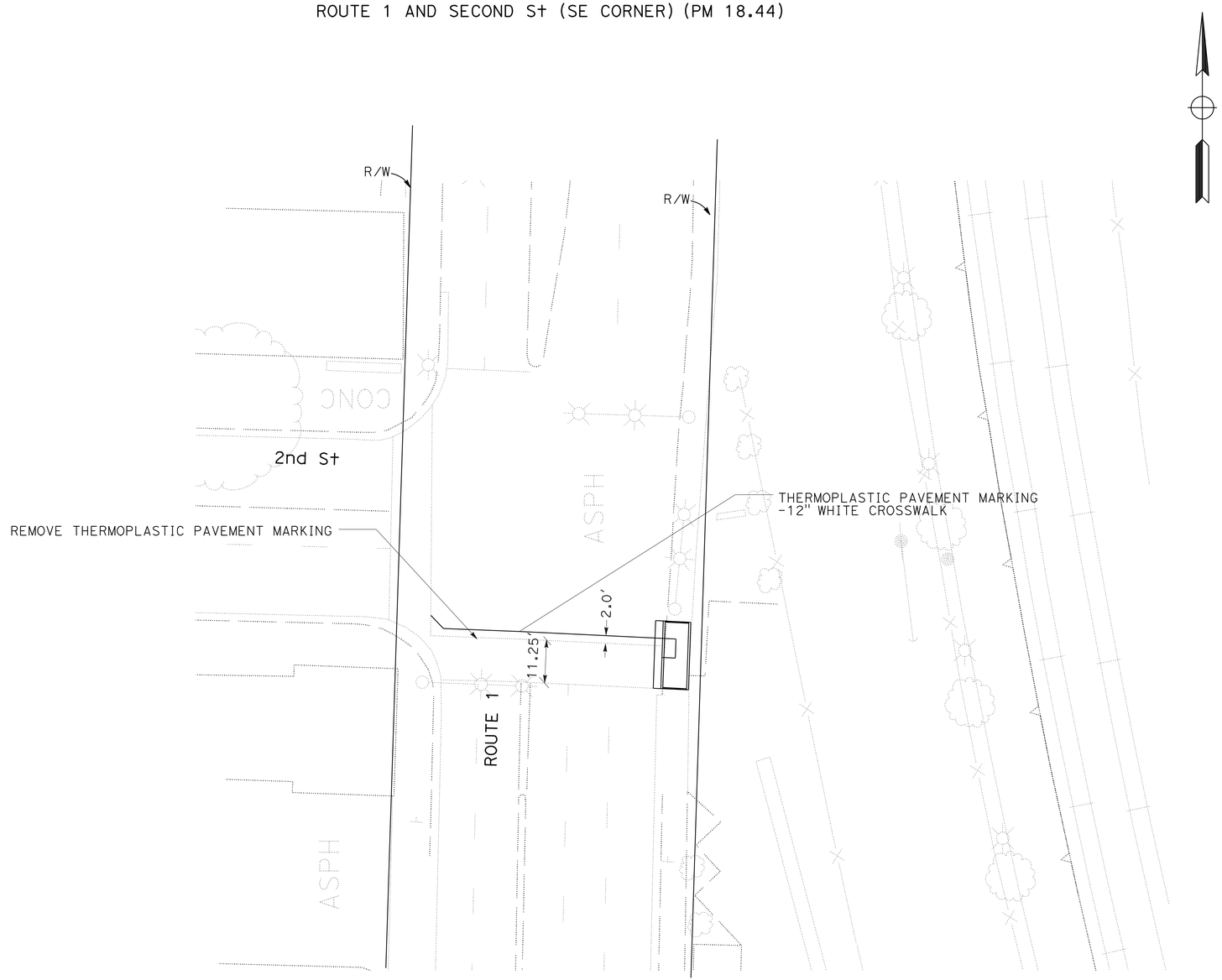

LOCATION No. 3

PAVEMENT DELINEATION PLAN

NO SCALE

PD-1

STATE OF CALIFORNIA - DEPARTMENT OF TRANSPORTATION
Caltrans® TRAFFIC DESIGN

FUNCTIONAL SUPERVISOR: GRISH BIGLARIAN

CALCULATED-DESIGNED BY: FREW KOTISSO
CHECKED BY: SHAHAN PETROSSIAN

REVISED BY
DATE REVISED

LAST REVISION 00-00-00
DATE PLOTTED => 12-OCT-2012
TIME PLOTTED => 14:23

Dist	COUNTY	ROUTE	POST MILES TOTAL PROJECT	SHEET No.	TOTAL SHEETS
07	Ven	1, 33,101 & 126	Var	35	59

REGISTERED CIVIL ENGINEER 5/4/12 DATE

5-21-12
PLANS APPROVAL DATE

REGISTERED PROFESSIONAL ENGINEER FREW KOTISSO No. C72485 Exp. 6/30/14 CIVIL STATE OF CALIFORNIA

THE STATE OF CALIFORNIA OR ITS OFFICERS OR AGENTS SHALL NOT BE RESPONSIBLE FOR THE ACCURACY OR COMPLETENESS OF SCANNED COPIES OF THIS PLAN SHEET.

NOTES:

1. FOR ACCURATE RIGHT OF WAY DATA, CONTACT RIGHT OF WAY ENGINEERING AT THE DISTRICT OFFICE.
2. EXISTING UTILITIES HAVE NOT BEEN PLOTTED ON THESE PLANS.

Loc No. 5

AT ROUTE 1 AND PALM Dr (PM 18.71)

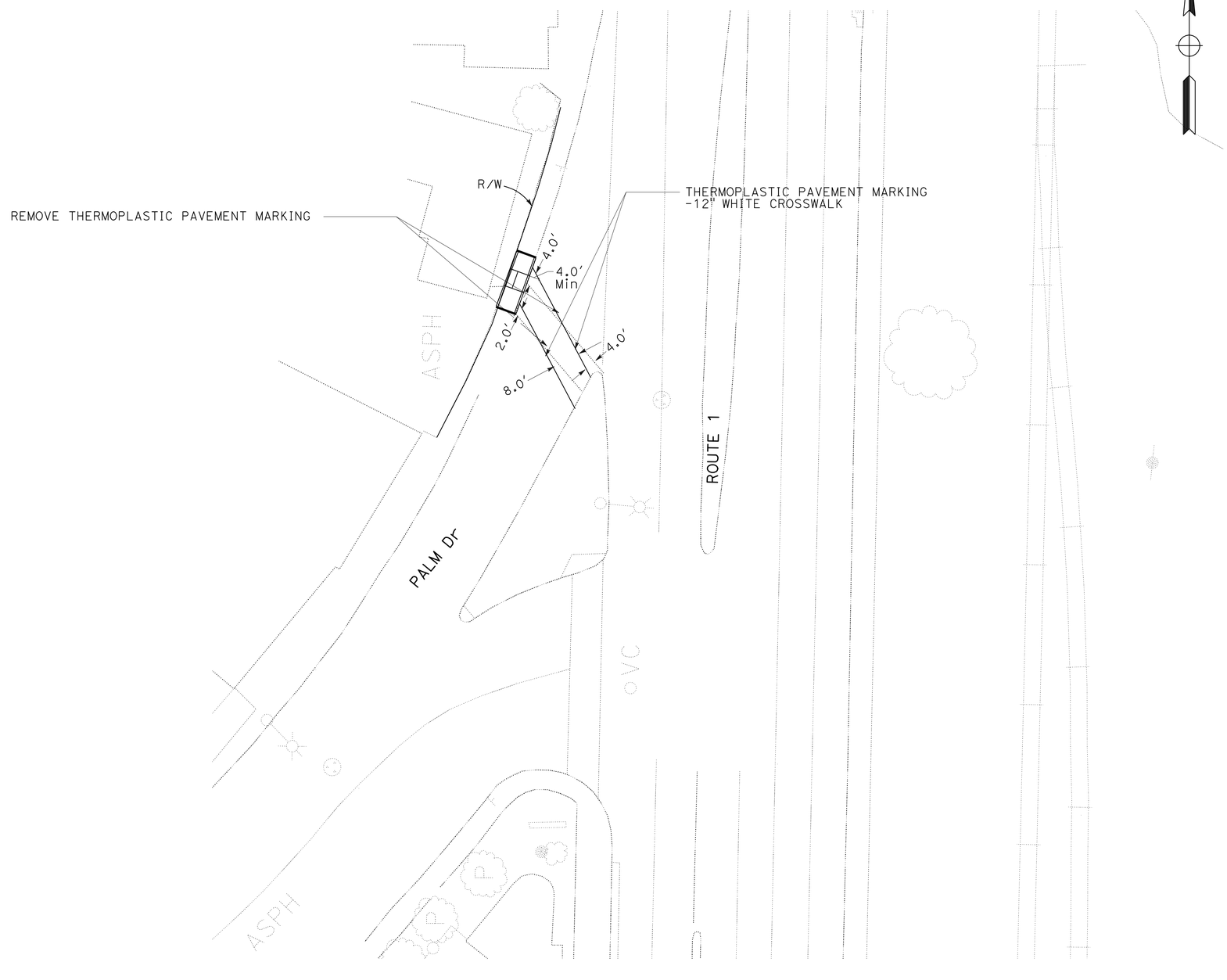

LOCATION No. 5

PAVEMENT DELINEATION PLAN

NO SCALE

PD-2

STATE OF CALIFORNIA - DEPARTMENT OF TRANSPORTATION
Caltrans® TRAFFIC DESIGN

FUNCTIONAL SUPERVISOR: GRISH BIGLARIAN
CALCULATED-DESIGNED BY: FREW KOTISSO
CHECKED BY: SHAHAN PETROSSIAN
REVISED BY
DATE REVISED

LAST REVISION 00-00-00
DATE PLOTTED => 12-OCT-2012
TIME PLOTTED => 14:23

Dist	COUNTY	ROUTE	POST MILES TOTAL PROJECT	SHEET No.	TOTAL SHEETS
07	Ven	1, 33,101 & 126	Var	36	59

REGISTERED CIVIL ENGINEER 5/4/12 DATE

5-21-12
PLANS APPROVAL DATE

REGISTERED PROFESSIONAL ENGINEER FREW KOTISSO No. C72485 Exp. 6/30/14 CIVIL STATE OF CALIFORNIA

THE STATE OF CALIFORNIA OR ITS OFFICERS OR AGENTS SHALL NOT BE RESPONSIBLE FOR THE ACCURACY OR COMPLETENESS OF SCANNED COPIES OF THIS PLAN SHEET.

NOTES:

1. FOR ACCURATE RIGHT OF WAY DATA, CONTACT RIGHT OF WAY ENGINEERING AT THE DISTRICT OFFICE.
2. EXISTING UTILITIES HAVE NOT BEEN PLOTTED ON THESE PLANS.

Loc No. 6

AT ROUTE 1 AND DEODAR Ave (PM 18.85)

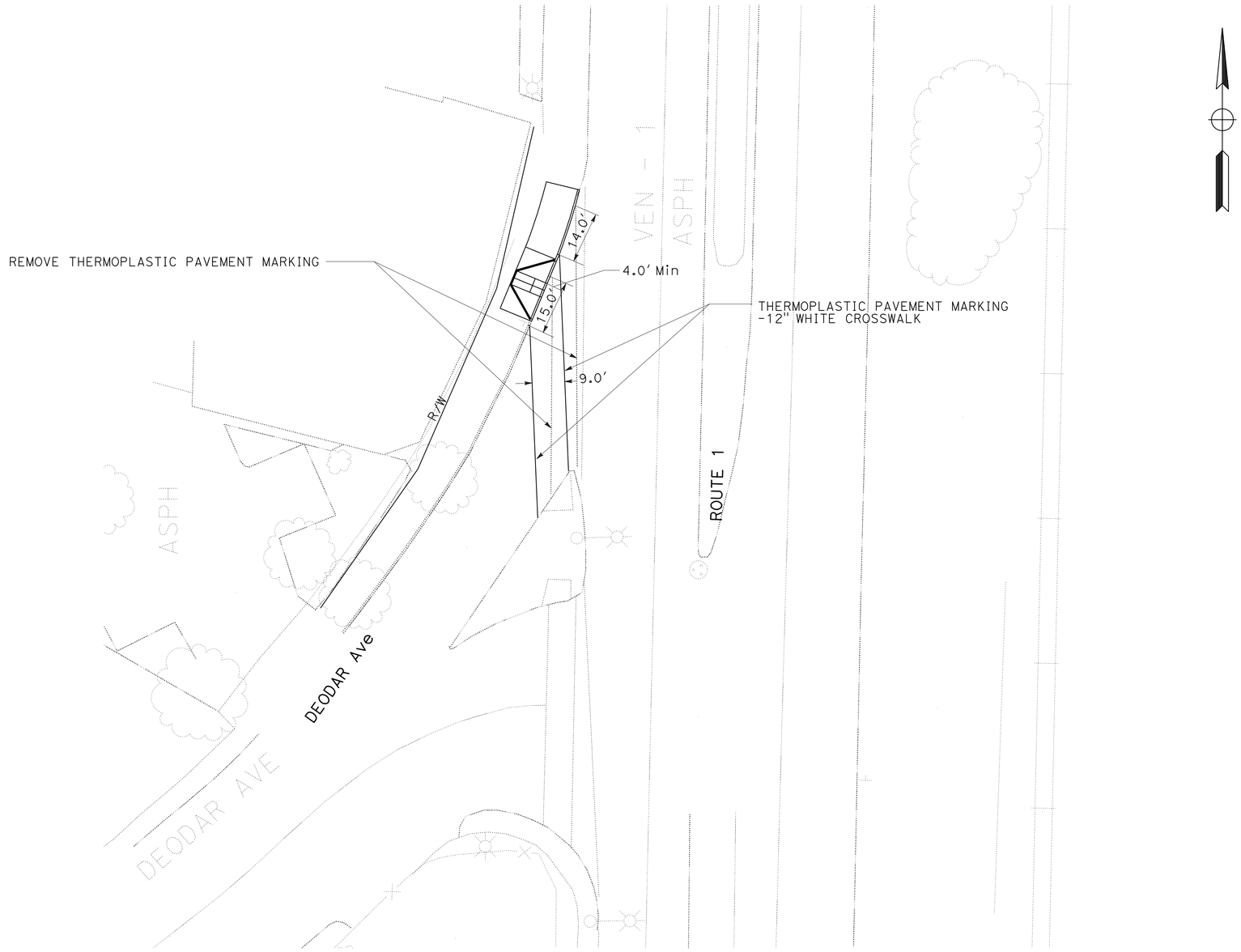

LOCATION No. 6

PAVEMENT DELINEATION PLAN

NO SCALE

PD-3

STATE OF CALIFORNIA - DEPARTMENT OF TRANSPORTATION
Caltrans® TRAFFIC DESIGN

FUNCTIONAL SUPERVISOR: GRISH BIGLARIAN
CALCULATED-DESIGNED BY: FREW KOTISSO
CHECKED BY: SHAHAN PETROSSIAN
REVISED BY
DATE REVISED

LAST REVISION 00-00-00
DATE PLOTTED => 12-OCT-2012
TIME PLOTTED => 14:24

Dist	COUNTY	ROUTE	POST MILES TOTAL PROJECT	SHEET No.	TOTAL SHEETS
07	Ven	1, 33,101 & 126	Var	37	59

REGISTERED CIVIL ENGINEER DATE 5/4/12

PLANS APPROVAL DATE 5-21-12

REGISTERED PROFESSIONAL ENGINEER FREW KOTISSO No. C72485 Exp. 6/30/14 CIVIL STATE OF CALIFORNIA

THE STATE OF CALIFORNIA OR ITS OFFICERS OR AGENTS SHALL NOT BE RESPONSIBLE FOR THE ACCURACY OR COMPLETENESS OF ELECTRONIC COPIES OF THIS PLAN SHEET.

ROADWAY QUANTITIES

SHEET No.	LOCATION	ROADWAY EXCAVATION	ROADWAY EXCAVATION (TYPE Z-2) (AERIALLY DEPOSITED LEAD)	REMOVE CONCRETE	MINOR CONCRETE (CURB, SIDEWALK AND CURB RAMP)	DETECTABLE WARNING SURFACE (N)	RELOCATE ROAD SIDE SIGN -ONE POST	TEMPORARY DRAINAGE INLET PROTECTION	TYPE II BARRICADE
		CY	CY	CY	CY	SQFT	EA	EA	EA
C-1	ROUTE 1 AND STATHAM Blvd (SW CORNER)	3.6		1.1	5.3	45.0		1	7
C-2	ROUTE 1 AND FOURTH St (SW, SE, NE AND NW CORNERS)								12
C-3	ROUTE 1 AND FOURTH St (SW CORNER)			13.9	14.3	20.0		1	
C-4	ROUTE 1 AND FOURTH St (SE CORNER)			11.6	11.6	47.5		1	
C-5	ROUTE 1 AND FOURTH St (NW CORNER)			10.9	11.6	20.8		1	
C-6	ROUTE 1 AND FOURTH St (NE CORNER)			17.1	18.0	42.5		1	
C-7	ROUTE 1 AND SECOND St (SE CORNER)			5.1	7.3	28.0		1	5
C-8	ROUTE 1 AND MAGNOLIA Ave (NW CORNER)			15.5	16.2	30.0		1	7
C-9	AT ROUTE 1 AND PALM Dr			5.0	5.0	22.5		1	7
C-10	AT ROUTE 1 AND DEODAR Ave			14.6	14.6	37.6		1	7
C-11	ROUTE 33 AND OAK VIEW Ave (NW CORNER)	14.0		3.6	20.1	15.0		1	7
C-12	AT ROUTE 33 AND WOODLAND Rd			5.0	5.7	30.0		1	5
C-13	AT ROUTE 33 AND VALLE RIO Ave			9.3	10.6	15.0		1	5
C-14	AT ROUTE 33 AND FAIRVIEW Ave			2.0	6.2	30.0	1	1	7
C-15	ROUTE 101 SB ON RAMP FROM CAMARILLO SPRING	6.7		1.4	8.1	12.0		1	7
C-16	AT ROUTE 126 AND LOS SERENOS Rd	7.0		2.1	10.1	15.0		1	7
C-17	ROUTE 1 AND STATHAM Blvd (SW CORNER)		3.6						
TOTAL		31.3	3.6	121.9	164.7	410.9	1	16	83

(N) NOT A SEPARATE PAY ITEM, FOR INFORMATION ONLY.

PAVEMENT DELINEATION QUANTITIES

SHEET No.	LOCATION	REMOVE THERMOPLASTIC PAVEMENT MARKING	THERMOPLASTIC PAVEMENT MARKING 12" SOLID WHITE (CROSSWALK)
		SQFT	SQFT
PD-1	ROUTE 1 AND SECOND St (SE CORNER)	61.2	61.2
PD-2	AT ROUTE 1 AND PALM Dr	57.3	66.0
PD-3	AT ROUTE 1 AND DEODAR Ave	131.8	111.9
TOTAL		250.3	239.1

SUMMARY OF QUANTITIES

Q-1

STATE OF CALIFORNIA - DEPARTMENT OF TRANSPORTATION

Caltrans TRAFFIC DESIGN

FUNCTIONAL SUPERVISOR: GRISH BIGLARIAN

CALCULATED-DESIGNED BY: FREW KOTISSO

CHECKED BY: SHAHAN PETROSSIAN

REVISED BY

DATE REVISED

LAST REVISION 00-00-00

DATE PLOTTED => 12-OCT-2012

TIME PLOTTED => 14:24

FOR ACCURATE RIGHT OF WAY AND ACCESS DATA,
CONTACT RIGHT OF WAY ENGINEERING AT THE DISTRICT OFFICE.

Dist	COUNTY	ROUTE	POST MILES TOTAL PROJECT	SHEET No.	TOTAL SHEETS
07	Ven	1, 33,101 & 126	Var	38	59

REGISTERED ELECTRICAL ENGINEER 5/5/12 DATE

5-21-12
PLANS APPROVAL DATE

REGISTERED PROFESSIONAL ENGINEER G.S. TOOR No. E15613 Exp. 12/31/13 ELECTRICAL STATE OF CALIFORNIA

THE STATE OF CALIFORNIA OR ITS OFFICERS OR AGENTS SHALL NOT BE RESPONSIBLE FOR THE ACCURACY OR COMPLETENESS OF SCANNED COPIES OF THIS PLAN SHEET.

PHASE DIAGRAM

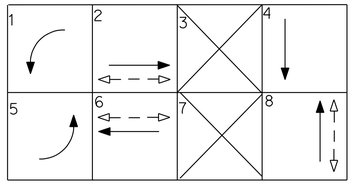

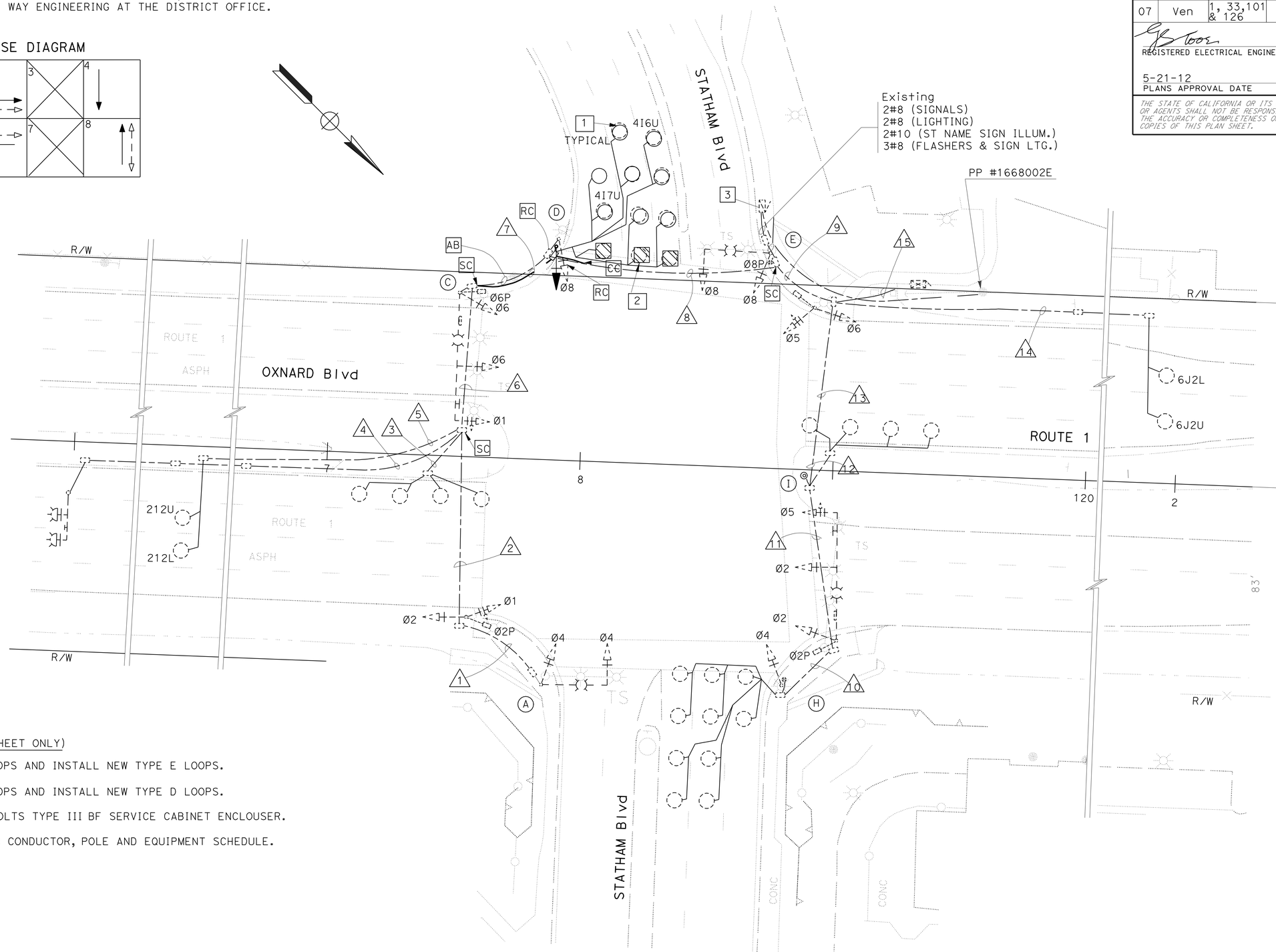

NOTES: (THIS SHEET ONLY)

1. REMOVE EXISTING LOOPS AND INSTALL NEW TYPE E LOOPS.
2. REMOVE EXISTING LOOPS AND INSTALL NEW TYPE D LOOPS.
3. EXISTING 120/240 VOLTS TYPE III BF SERVICE CABINET ENCLOUSER.
4. SEE SHEET E-2 FOR CONDUCTOR, POLE AND EQUIPMENT SCHEDULE.

MODIFY SIGNAL AND LIGHTING

SCALE: 1" = 20'

E-1

APPROVED FOR ELECTRICAL WORK ONLY

STATE OF CALIFORNIA - DEPARTMENT OF TRANSPORTATION
Caltrans TRAFFIC DESIGN

FUNCTIONAL SUPERVISOR: OSWALD ELIZONDO
CALCULATED-DESIGNED BY: GARY TOOR
CHECKED BY: OSWALD ELIZONDO
REVISED BY
DATE REVISED

LAST REVISION 00-00-00
DATE PLOTTED => 12-OCT-2012
TIME PLOTTED => 14:24

Dist	COUNTY	ROUTE	POST MILES TOTAL PROJECT	SHEET No.	TOTAL SHEETS
07	Ven	1, 33, 101 & 126	Var	39	59

REGISTERED ELECTRICAL ENGINEER 5/5/12 DATE

5-21-12
PLANS APPROVAL DATE

REGISTERED PROFESSIONAL ENGINEER G.S. TOOR No. E15613 Exp. 12/31/13 ELECTRICAL STATE OF CALIFORNIA

THE STATE OF CALIFORNIA OR ITS OFFICERS OR AGENTS SHALL NOT BE RESPONSIBLE FOR THE ACCURACY OR COMPLETENESS OF SCANNED COPIES OF THIS PLAN SHEET.

EXISTING CONDUCTOR AND CONDUIT SCHEDULE

AWG	CIRCUIT	CONDUIT SCHEDULE														
		1	2	3	4	5	6	7	8	9	10	11	12	13	14	15
#4	Ø1	-	3	-	-	-	3	3 (N)	3 (N)	3	-	-	-	-	-	3
	Ø2	-	3	-	-	-	3	3 (N)	3 (N)	3	-	3	-	3	-	3
	Ø4	3	3	-	-	-	3	3 (N)	3 (N)	3	3	3	-	3	-	3
	Ø5	-	-	-	-	-	-	-	-	-	-	3	-	3	-	3
	Ø6	-	-	-	-	-	-	3 (N)	3 (N)	3	-	-	-	-	-	3
	Ø8	-	-	-	-	-	-	-	3 (N)	3	-	-	-	-	-	3
	Ø2P	-	2	-	-	-	2	2 (N)	2 (N)	2	-	2	-	2	-	4
	Ø6P	-	-	-	-	-	-	2 (N)	2 (N)	2	-	-	-	-	-	2
	Ø8P	-	-	-	-	-	-	-	-	2	2	2	-	2	-	4
	Ø2PP8	1	1	-	-	-	1	1 (N)	1 (N)	1	1	1	-	1	-	2
	Ø6PP8	-	-	-	-	-	-	-	1 (N)	1	-	-	-	-	-	1
	Ø8PP8	-	-	-	-	-	-	-	-	-	-	1	-	1	-	1
	SPARES	3	3	-	-	-	3	3 (N)	3 (N)	3	3	3	-	3	-	6
	TOTAL	7	15	-	-	-	15	20(N)	24(N)	26	9	18	-	18	-	44
#10	ISNS	2	2	-	-	-	2	2 (N)	2 (N)	2	-	2	-	2	-	-
	SIGNAL COMMON	1	1	-	-	-	1	1 (N)	1 (N)	1		1	-	1	-	2
	TOTAL	3	3	-	-	-	3	3 (N)	3 (N)	3	-	3	-	3	-	2
#8	LUMINARES	2	2	-	-	-	2	2 (N)	2 (N)	2	-	2	-	2	-	-
	SIGNAL SERVICE	-	-	-	-	-	-	-	-	2	-	-	-	-	-	2
	FLASHING BEACON	-	-	-	3	-	3	3 (N)	3 (N)	-	-	-	-	-	-	-
	TOTAL	2	2	-	3	-	5	5 (N)	5 (N)	4	-	2	-	2	-	-
DLC	Ø1 DETECTOR	-	-	-	-	-	-	-	-	-	-	-	1	1	-	1
	Ø2 DETECTOR	-	-	-	-	2 (N)	2 (N)	2 (N)	2 (N)	2 (N)	-	-	-	-	-	2 (N)
	Ø4 DETECTOR	-	-	-	-	-	-	-	3 (N)	3 (N)	-	-	-	-	-	3 (N)
	Ø5 DETECTOR	-	-	1 (N)	-	-	1 (N)	1 (N)	1 (N)	1 (N)	-	-	-	-	-	1 (N)
	Ø6 DETECTOR	-	-	-	-	-	-	-	-	-	-	-	-	-	2	2
	Ø8 DETECTOR	-	-	-	-	-	-	-	-	-	3	3	-	3	-	3
	TOTAL	-	-	1	-	2	3	3	6	6	3	3	1	4	2	12
CONDUIT SIZE		2"	2"	2"	1"	2"	2"	2"(N)	2½"(N)	2½"	2"	2"	2"	2½"	2"	3"

(N) NEW

EXISTING POLE AND EQUIPMENT SCHEDULE

No.	STANDARD			VEH SIG MTG		PED SIGNAL	PPB		HPS	IISNS
	Type	SMA (Ft)	LMA (Ft)	Mast Arm	Pole	MTG	Ø	ARROW		
A	17A-S	20'	15'	MAS	SV-1-T	-	2	←	310 W	OXNARD Blvd
B	1-A	-	-	-	TV-2-TA	SP-1-T	-	-	-	-
C	26A-4-70	45'	15'	2MAS	SV-1-T	SP-1-T	-	-	310 W	STATHAM Blvd
D	1-A (N)	-	-	-	TV-1-T	-	6	→	-	-
E	17A-S	20'	15'	MAS	SV-1-T	SP-1-T	6	←	310 W	OXNARD Blvd
F	1-A	-	-	-	TV-2-TA	SP-1-T	8	→	-	-
G	26A-4-70	45'	15'	2MAS	SV-1-T	SP-1-T	8	←	310 W	STATHAM Blvd
H	1-A	-	-	-	TV-1-T	SP-1-T	2	→	-	-
I	PPB POST	-	-	-	-	-	8	↔	-	-

(N) NEW

APPROVED FOR ELECTRICAL WORK ONLY

MODIFY SIGNAL AND LIGHTING

NO SCALE

E-2

STATE OF CALIFORNIA - DEPARTMENT OF TRANSPORTATION
Caltrans TRAFFIC DESIGN

FUNCTIONAL SUPERVISOR: OSWALD ELIZONDO
CALCULATED-DESIGNED BY: GARY TOOR
CHECKED BY: OSWALD ELIZONDO
REVISED BY
DATE REVISED

LAST REVISION 00-00-00
DATE PLOTTED => 12-OCT-2012
TIME PLOTTED => 14:24

Dist	COUNTY	ROUTE	POST MILES TOTAL PROJECT	SHEET No.	TOTAL SHEETS
07	Ven	1, 33,101 & 126	Var	40	59

Nooshin Ansari 5/4/12
REGISTERED ELECTRICAL ENGINEER DATE

5-21-12
PLANS APPROVAL DATE

REGISTERED PROFESSIONAL ENGINEER NOOSHIN ANSARI No. E17010 Exp. 09/30/13 ELECTRICAL STATE OF CALIFORNIA

THE STATE OF CALIFORNIA OR ITS OFFICERS OR AGENTS SHALL NOT BE RESPONSIBLE FOR THE ACCURACY OR COMPLETENESS OF SCANNED COPIES OF THIS PLAN SHEET.

FOR ACCURATE RIGHT OF WAY AND ACCESS DATA, CONTACT RIGHT OF WAY ENGINEERING AT THE DISTRICT OFFICE.

GENERAL NOTES: (THIS SHEET)

1. SEE SHEET E-4 FOR CONDUCTOR & CONDUIT SCHEDULE, POLE & EQUIPMENT SCHEDULE AND PHASE DIAGRAM.
2. SPLICE NOT ALLOWED BETWEEN CONTROLLER CABINETS FOR 12 PAIR #19 INTERCONNECT CABLE. SPLICE NOT ALLOWED BETWEEN CONTROLLER CABINET AND DETECTOR HANDHOLE.

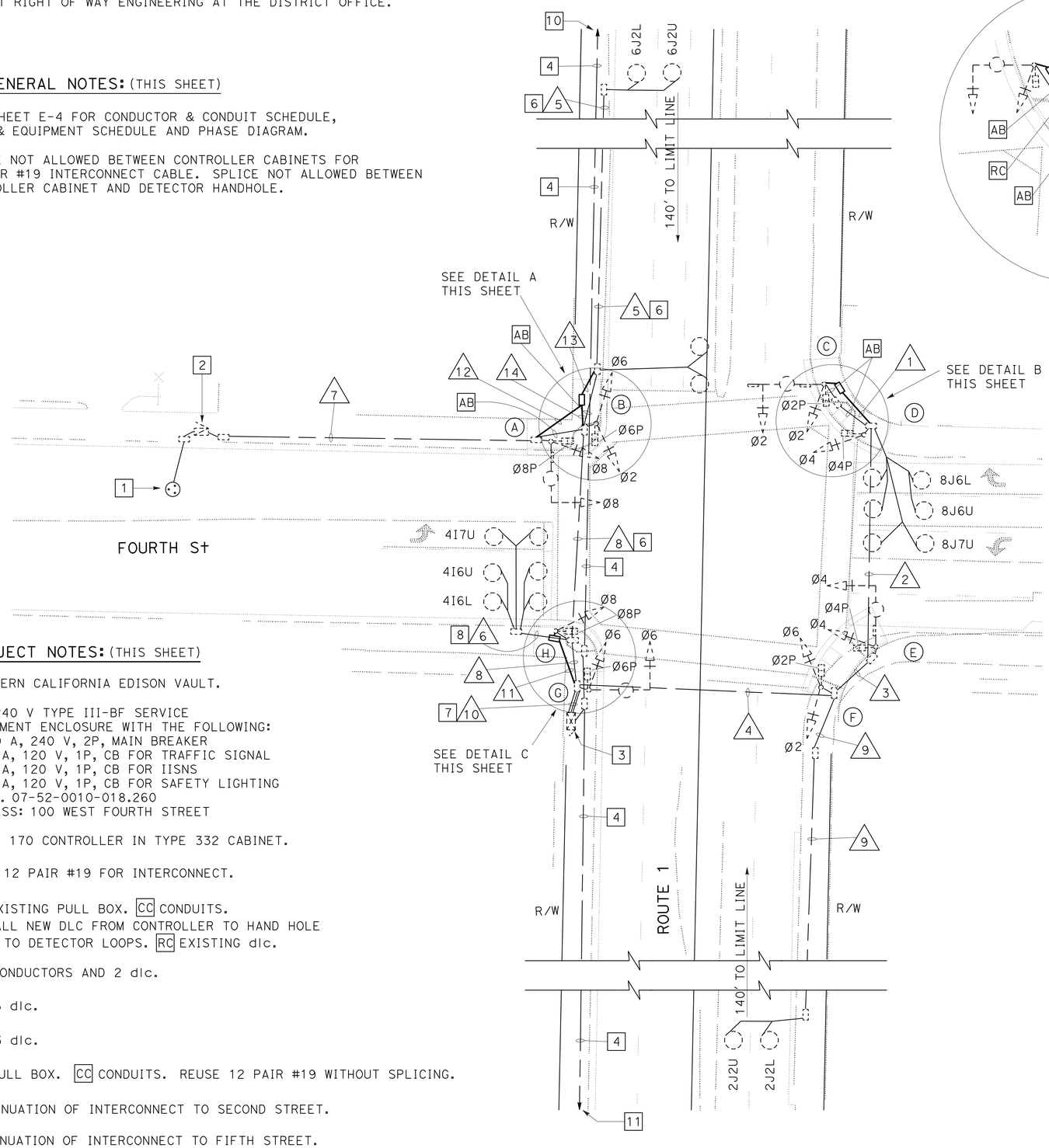

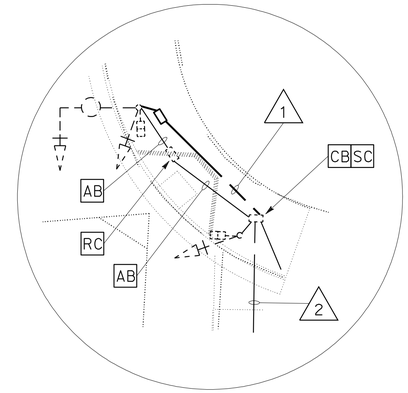

DETAIL B
NO SCALE

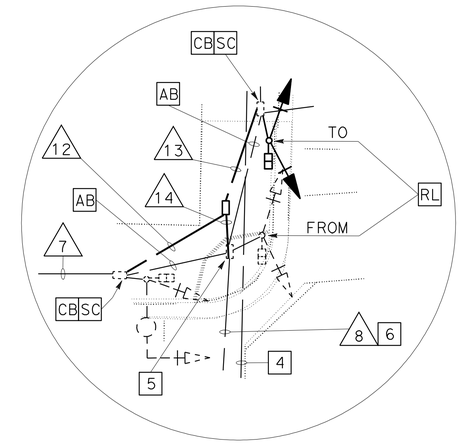

DETAIL A
NO SCALE

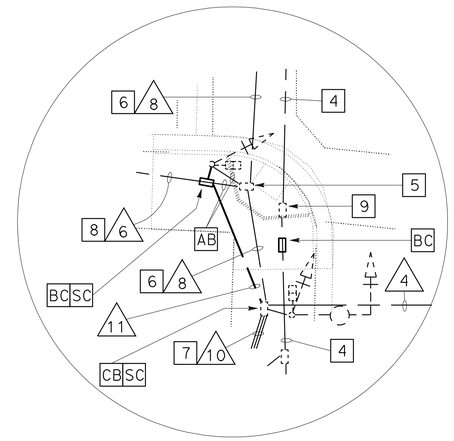

DETAIL C
NO SCALE

PROJECT NOTES: (THIS SHEET)

1. SOUTHERN CALIFORNIA EDISON VAULT.
2. 120/240 V TYPE III-BF SERVICE EQUIPMENT ENCLOSURE WITH THE FOLLOWING:
   100 A, 240 V, 2P, MAIN BREAKER
   40 A, 120 V, 1P, CB FOR TRAFFIC SIGNAL
   15 A, 120 V, 1P, CB FOR IISNS
   30 A, 120 V, 1P, CB FOR SAFETY LIGHTING
   ID No. 07-52-0010-018.260
   ADDRESS: 100 WEST FOURTH STREET
3. MODEL 170 CONTROLLER IN TYPE 332 CABINET.
4. 1½C, 12 PAIR #19 FOR INTERCONNECT.
5. RC EXISTING PULL BOX. CC CONDUITS. INSTALL NEW DLC FROM CONTROLLER TO HAND HOLE NEXT TO DETECTOR LOOPS. RC EXISTING dlc.
6. RC CONDUCTORS AND 2 dlc.
7. RC 6 dlc.
8. RC 3 dlc.
9. RC PULL BOX. CC CONDUITS. REUSE 12 PAIR #19 WITHOUT SPLICING.
10. CONTINUATION OF INTERCONNECT TO SECOND STREET.
11. CONTINUATION OF INTERCONNECT TO FIFTH STREET.

MODIFY SIGNAL AND LIGHTING

SCALE: 1" = 20'

E-3

APPROVED FOR ELECTRICAL WORK ONLY

STATE OF CALIFORNIA - DEPARTMENT OF TRANSPORTATION
Caltrans TRAFFIC DESIGN

FUNCTIONAL SUPERVISOR: OSWALD ELIZONDO
CALCULATED-DESIGNED BY: PARESH PATEL
CHECKED BY: NOOSHIN ANSARI
REVISED BY
DATE REVISED

LAST REVISION 00-00-00
DATE PLOTTED => 12-OCT-2012
TIME PLOTTED => 14:24

Dist	COUNTY	ROUTE	POST MILES TOTAL PROJECT	SHEET No.	TOTAL SHEETS
07	Ven	1, 33, 101 & 126	Var	41	59

Nooshin Ansari 5/4/12
REGISTERED ELECTRICAL ENGINEER DATE

5-21-12
PLANS APPROVAL DATE

REGISTERED PROFESSIONAL ENGINEER
NOOSHIN ANSARI
No. E17010
Exp. 09/30/13
ELECTRICAL
STATE OF CALIFORNIA

THE STATE OF CALIFORNIA OR ITS OFFICERS OR AGENTS SHALL NOT BE RESPONSIBLE FOR THE ACCURACY OR COMPLETENESS OF SCANNED COPIES OF THIS PLAN SHEET.

EXISTING CONDUCTOR AND CONDUIT SCHEDULE

AWG OR CABLE	CIRCUIT	1	2	3	4	5	6	7	8	9	10	11	12	13	14
#14	Ø2	3(N)	3	3	3				3(N)		6			3(N)	3(N)
	Ø4		3	3	3						3				
	Ø6				3				3(N)		6			3(N)	3(N)
	Ø8								3(N)		3	3(N)	3(N)		3(N)
	Ø2P	2(N)	2	2	2						2				
	Ø4P			2	2										
	Ø6P								2(N)		2			2(N)	2(N)
	Ø8P		2	2	2				2(N)		2	2(N)	2(N)		2(N)
	SPARES	3(N)	3	3	3				3(N)		6		3(N)		3(N)
	TOTAL	8(N)	13	15	18				16(N)		32		8(N)	8(N)	16(N)
#10	IISNS	2(N)	2	2	2			2	2(N)				2(N)		2(N)
	SIGNAL COMMON	1(N)	1	1	1				1(N)		2		1(N)	1(N)	1(N)
	TOTAL	3(N)	3	3	3			2	3(N)		2		2(N)	1(N)	3(N)
#8	LUNINAIRE	2(N)	2	2	2			2	2(N)				2(N)		2(N)
	SIGNAL SERVICE							2	2(N)		2		2(N)		2(N)
	TOTAL	2(N)	2	2	2			4	4(N)		2		4(N)		4(N)
DLC	Ø2				2					2	2				
	Ø4						3(N)				3(N)	3(N)			
	Ø6					2(N)			3(N)		3(N)			3(N)	3(N)
	Ø8		3	3	3						3				
	TOTAL		3	3	5	2			3(N)		11			3(N)	3(N)
CONDUIT SIZE		2"(N)	2"	2"	2½"	2"	2"	2"	2"	2"	3-3"	2"(N)	2"(N)	2"(N)	2"(N)

(N) = NEW

PHASE DIAGRAM

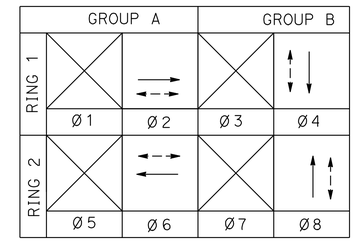

EXISTING POLE AND EQUIPMENT SCHEDULE

No.	STANDARD			VEH SIG MTG		PED SIGNAL MTG	PPB		HPS LUMINAIRE	SPECIAL REQUIREMENTS IISNS
	TYPE	SMA	LMA	MAST ARM	POLE		Ø	ARROW		
A	17B-1-70	20′	6′	MAS	SV-1-T	SP-1-T			200 W	Oxnard Bl
B	1-A				TV-1-T	SP-2-T				
C	19-3-70	25′	6′	MAS	SV-1-T	SP-1-T			200 W	Fourth St
D	1-A				TV-1-T	SP-1-T				
E	17B-2-70	20′	6′	MAS	SV-1-T	SP-1-T			200 W	Oxnard Bl
F	1-A				TV-2-T	SP-1-T				
G	17B-2-70	20′	6′	MAS	SV-1-T	SP-1-T			200 W	Fourth St
H	1-A				TV-1	SP-1-T				

MODIFY SIGNAL AND LIGHTING

E-4

APPROVED FOR ELECTRICAL WORK ONLY

STATE OF CALIFORNIA - DEPARTMENT OF TRANSPORTATION
Caltrans® TRAFFIC DESIGN

FUNCTIONAL SUPERVISOR: OSWALD ELIZONDO
CALCULATED-DESIGNED BY: PARESH PATEL
CHECKED BY: NOOSHIN ANSARI
REVISED BY
DATE REVISED

LAST REVISION 00-00-00
DATE PLOTTED => 12-OCT-2012
TIME PLOTTED => 14:24

FOR ACCURATE RIGHT OF WAY AND ACCESS DATA,
CONTACT RIGHT OF WAY ENGINEERING AT THE DISTRICT OFFICE.

Dist	COUNTY	ROUTE	POST MILES TOTAL PROJECT	SHEET No.	TOTAL SHEETS
07	Ven	1, 33,101 & 126	Var	42	59

Nooshin Ansari 5/4/12
REGISTERED ELECTRICAL ENGINEER DATE

5-21-12
PLANS APPROVAL DATE

REGISTERED PROFESSIONAL ENGINEER
NOOSHIN ANSARI
No. E17010
Exp. 09/30/13
ELECTRICAL
STATE OF CALIFORNIA

THE STATE OF CALIFORNIA OR ITS OFFICERS OR AGENTS SHALL NOT BE RESPONSIBLE FOR THE ACCURACY OR COMPLETENESS OF SCANNED COPIES OF THIS PLAN SHEET.

PROJECT NOTE: (THIS SHEET)

1 ADJUST PULL BOX TO GRADE.

DETAIL A
NO SCALE

MODIFY SIGNAL AND LIGHTING

NO SCALE

APPROVED FOR ELECTRICAL WORK ONLY

E-5

STATE OF CALIFORNIA - DEPARTMENT OF TRANSPORTATION
Caltrans® TRAFFIC DESIGN

FUNCTIONAL SUPERVISOR: OSWALD ELIZONDO
CALCULATED-DESIGNED BY: PARESH PATEL
CHECKED BY: NOOSHIN ANSARI
REVISED BY
DATE REVISED

LAST REVISION 00-00-00
DATE PLOTTED => 12-OCT-2012
TIME PLOTTED => 14:24

FOR ACCURATE RIGHT OF WAY AND ACCESS DATA,
CONTACT RIGHT OF WAY ENGINEERING AT THE DISTRICT OFFICE.

Dist	COUNTY	ROUTE	POST MILES TOTAL PROJECT	SHEET No.	TOTAL SHEETS
07	Ven	1, 33,101 & 126	Var	43	59

Nooshin Ansari 5/4/12
REGISTERED ELECTRICAL ENGINEER DATE

5-21-12
PLANS APPROVAL DATE

REGISTERED PROFESSIONAL ENGINEER
NOOSHIN ANSARI
No. E17010
Exp. 09/30/13
ELECTRICAL
STATE OF CALIFORNIA

THE STATE OF CALIFORNIA OR ITS OFFICERS OR AGENTS SHALL NOT BE RESPONSIBLE FOR THE ACCURACY OR COMPLETENESS OF SCANNED COPIES OF THIS PLAN SHEET.

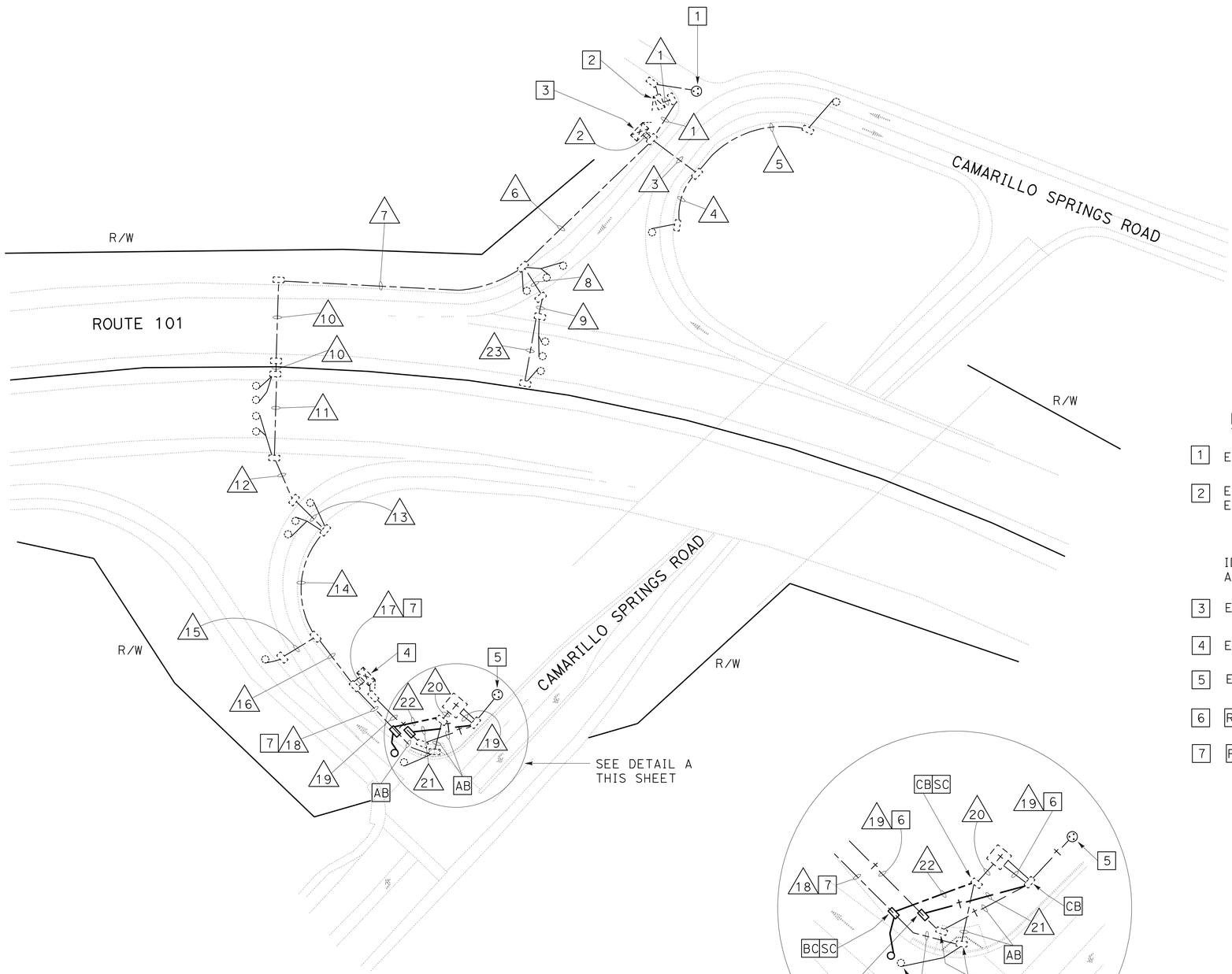

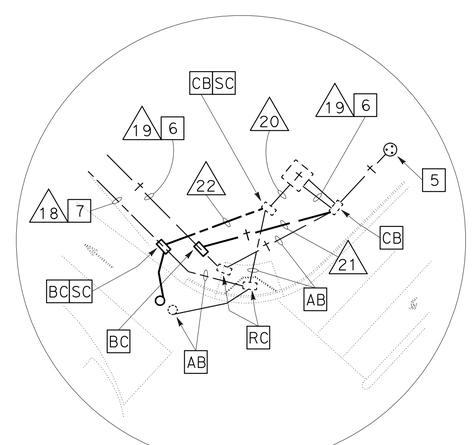

DETAIL A
NO SCALE

GENERAL NOTES: (THIS SHEET)

1. SEE SHEET E-7 FOR CONDUCTOR & CONDUIT SCHEDULE.
2. SPLICE NOT ALLOWED BETWEEN CONTROLLER CABINETS FOR 12 PAIR #19 INTERCONNECT CABLE. SPLICE NOT ALLOWED BETWEEN CONTROLLER CABINET AND DETECTOR HANDHOLE.

PROJECT NOTES: (THIS SHEET)

1 EXISTING SOUTHERN CALIFORNIA EDISON VAULT.

2 EXISTING 120/240 V TYPE III-CF SERVICE EQUIPMENT ENCLOSURE WITH THE FOLLOWING:
100 A, 240 V, 2P, MAIN BREAKER
2-40 A, 120 V, 1P, CB FOR RAMP METERING
20 A, 120 V, 1P, CB FOR TELEPHONE DEMARCATION CABINET
ID: 07-52-0101-R-010.741
ADDRESS: 100½CAMARILLO SPRINGS ROAD

3 EXISTING 170 CONTROLLER #1648.

4 EXISTING 170 CONTROLLER #1649.

5 EXISTING TELEPHONE VAULT.

6 RC EXISTING TELEPHONE CABLE. INSTALL NEW 4#22 TWISTED PAIR TELEPHONE CABLE.

7 RC EXISTING ONE dlc. INSTALL ONE NEW DLC.

MODIFY RAMP METERING

SCALE: 1" = 50'

APPROVED FOR ELECTRICAL WORK ONLY

E-6

REVISED BY | DATE REVISED
PARESH PATEL | NOOSHIN ANSARI
CALCULATED-DESIGNED BY | CHECKED BY
FUNCTIONAL SUPERVISOR | OSWALD ELIZONDO
STATE OF CALIFORNIA - DEPARTMENT OF TRANSPORTATION
Caltrans TRAFFIC DESIGN

LAST REVISION 00-00-00 | DATE PLOTTED => 12-OCT-2012 | TIME PLOTTED => 14:24

Dist	COUNTY	ROUTE	POST MILES TOTAL PROJECT	SHEET No.	TOTAL SHEETS
07	Ven	1, 33,101 & 126	Var	44	59

Nooshin Ansari 5/4/12
REGISTERED ELECTRICAL ENGINEER DATE

5-21-12
PLANS APPROVAL DATE

REGISTERED PROFESSIONAL ENGINEER
NOOSHIN ANSARI
No. E17010
Exp. 09/30/13
ELECTRICAL
STATE OF CALIFORNIA

THE STATE OF CALIFORNIA OR ITS OFFICERS OR AGENTS SHALL NOT BE RESPONSIBLE FOR THE ACCURACY OR COMPLETENESS OF SCANNED COPIES OF THIS PLAN SHEET.

EXISTING CONDUCTOR AND CONDUIT SCHEDULE

AWG OR CABLE	CIRCUIT	1	2	3	4	5	6	7	8	9	10	11	12	13	14	15	16	17	18	19	20	21	22	23
DLC	QUEUE DETECTOR		1	1		1												1	1(N)					
	DEMAND DETECTOR		1				1								1		1	1						
	PASSAGE DETECTOR		1				1								1		1	1						
	MAINLINE DETECTOR		3				3		3	3		2	4	4	4		4	4						1
	COUNT DETECTOR		1	1	1											1	1	1						
#8	SERVICE	4	2				2	2			2	2	2	2	2		2	2						
#12	DEMARCATION SERVICE	2					2	2			2	2	2	2	2		2		2		2		2(N)	
#14	RAMP METER		3				3		3					3	3		3	3						
#14	METER ON SIGN		2	2		2												2	2					
#14	SPARES		6				6		6					6	6		6	6						
4#22	TWISTED PAIR TELEPHONE CABLE		1				1	1			1	1	1	1	1		1	2		1(N)		1(N)		
#10	SIGNAL COMMON		1	1		1	1		1					1	1		1	1	1					
CONDUIT SIZE		1"	2-3"	2"	1"	1"	2½"	1"	2"	2"	2"	2"	2"	2½"	2½"	2"	3"	2-3"	2"	1"	1"	1"(N)	2"(N)	2"

(N) = NEW

APPROVED FOR ELECTRICAL WORK ONLY

MODIFY RAMP METERING

NO SCALE

E-7

REVISED BY	DATE REVISED

CALCULATED-DESIGNED BY	CHECKED BY
PARESH PATEL	NOOSHIN ANSARI

FUNCTIONAL SUPERVISOR: OSWALD ELIZONDO

STATE OF CALIFORNIA - DEPARTMENT OF TRANSPORTATION
Caltrans® TRAFFIC DESIGN

LAST REVISION 00-00-00 | DATE PLOTTED => 12-OCT-2012 | TIME PLOTTED => 14:25

DIST	COUNTY	ROUTE	POST MILES TOTAL PROJECT	SHEET NO.	TOTAL SHEETS
07	Ven	1,33,101 & 126	Var	45	59

REGISTERED CIVIL ENGINEER

July 20, 2012
PLANS APPROVAL DATE

REGISTERED PROFESSIONAL ENGINEER
Roberta L. McLaughlin
No. C40375
Exp. 3-31-13
CIVIL
STATE OF CALIFORNIA

The State of California or its officers or agents shall not be responsible for the accuracy or completeness of electronic copies of this plan sheet.

To accompany plans dated 5-21-12

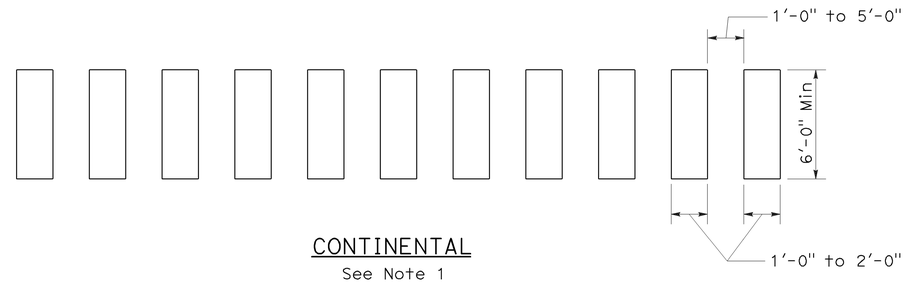

CONTINENTAL
See Note 1

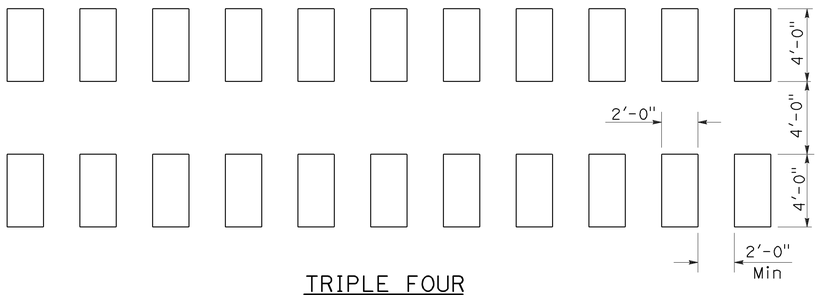

TRIPLE FOUR
See Note 1

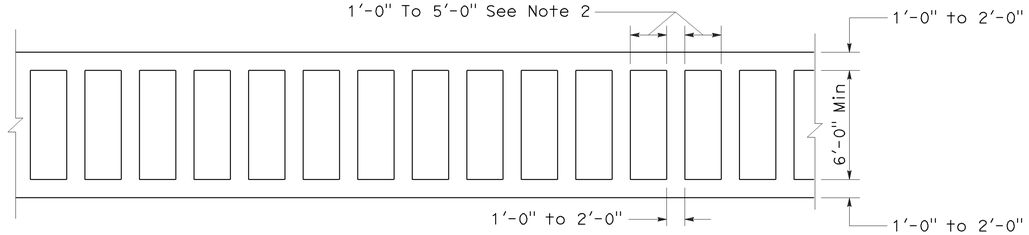

LADDER

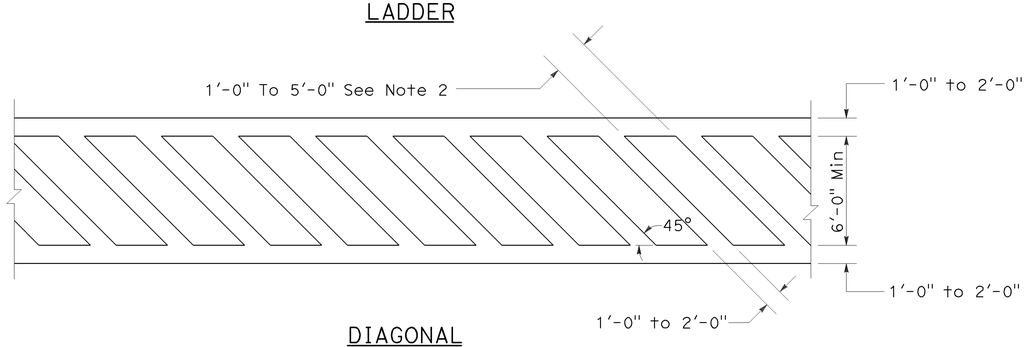

DIAGONAL

HIGHER VISIBILITY CROSSWALKS

NOTES:

1. Spaces between markings should be placed in wheel tracks of each lane.
2. Spacings not to exceed 2.5 times width of longitudinal line.
3. All crosswalk markings must be white except for those near schools must be yellow.

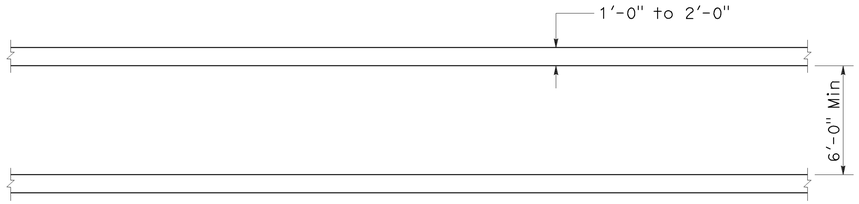

BASIC

STATE OF CALIFORNIA
DEPARTMENT OF TRANSPORTATION

PAVEMENT MARKINGS CROSSWALKS

NO SCALE

NSP A24F DATED JULY 20, 2012 SUPPLEMENTS THE STANDARD PLANS BOOK DATED MAY 2006.

NEW STANDARD PLAN NSP A24F

2006 NEW STANDARD PLAN NSP A24F

6-28-12

DIST	COUNTY	ROUTE	POST MILES TOTAL PROJECT	SHEET NO.	TOTAL SHEETS
07	Ven	1,33,101 & 126	Var	46	59

REGISTERED CIVIL ENGINEER

November 17, 2006
PLANS APPROVAL DATE

REGISTERED PROFESSIONAL ENGINEER Michael Janzen No. 44788 Exp. 03-31-08 CIVIL STATE OF CALIFORNIA

The State of California or its officers or agents shall not be responsible for the accuracy or completeness of electronic copies of this plan sheet.

To accompany plans dated 5-21-12

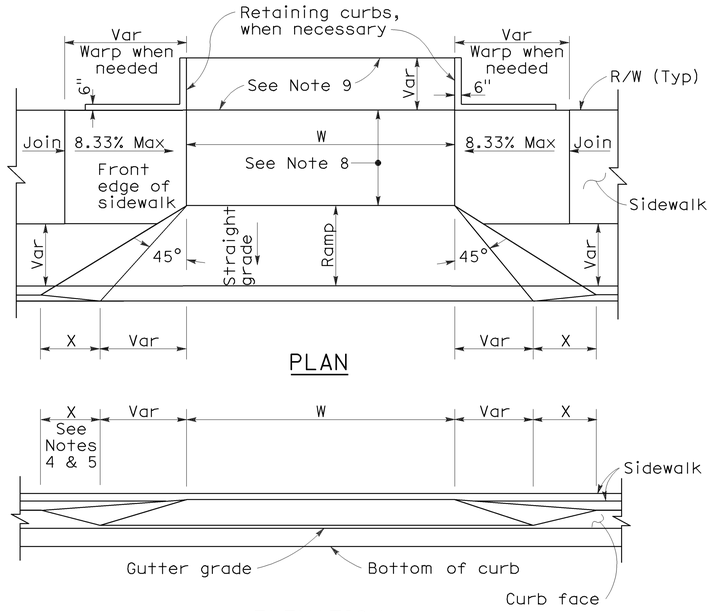

PLAN

ELEVATION

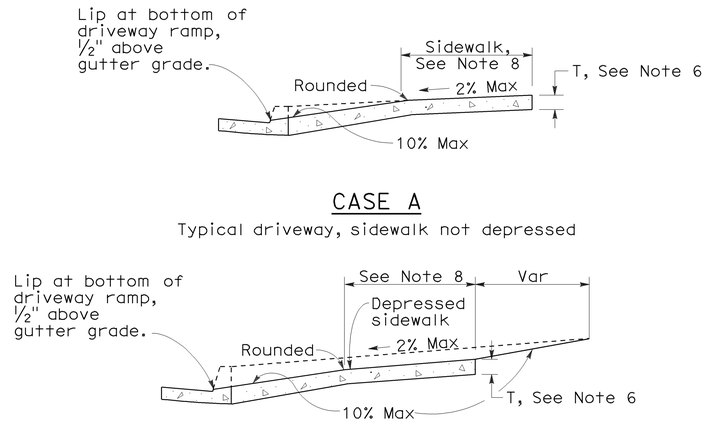

CASE A

Typical driveway, sidewalk not depressed

CASE B

Driveway with depressed sidewalk

SECTIONS

CURB QUANTITIES

TYPE	CUBIC YARDS PER LINEAR FOOT
A1-6	0.02585
A1-8	0.03084
A2-6	0.05903
A2-8	0.06379
A3-6	0.01036
A3-8	0.01435
B1-4	0.02185
B1-6	0.02930
B2-4	0.05515
B2-6	0.06171
B3-4	0.00641
B3-6	0.01074
B4	0.05709
D-4	0.04083
D-6	0.06804
E	0.06661

TABLE A

CURB TYPE	DIMENSIONS "H1"	"H2"	"W1"	"W2"
A1-6	1'-2"	6"	7½"	1½"
A1-8	1'-4"	8"	8"	2"
A2-6	1'-0"	6"	2'-7½"	1½"
A2-8	1'-2"	8"	2'-8"	2"
A3-6	6"	5"	7¼"	1¼"
A3-8	8"	7"	7¾"	1¾"
B1-4	1'-0"	4"	7½"	2½"
B1-6	1'-2"	6"	9"	4"
B2-4	10"	4"	2'-7½"	2½"
B2-6	1'-0"	6"	2'-9"	4"
B3-4	4"	3"	7"	2"
B3-6	6"	5"	8½"	3½"
D-4	10"	4"	1'-6"	1'-1"
D-6	1'-0"	6"	2'-2"	1'-8"

DRIVEWAYS

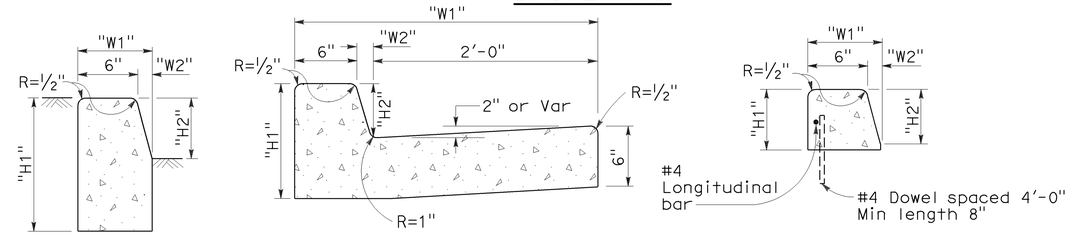

TYPE A1 CURBS
See Table A

TYPE A2 CURBS
See Table A

TYPE A3 CURBS
Superimposed on existing pavement
See Table A

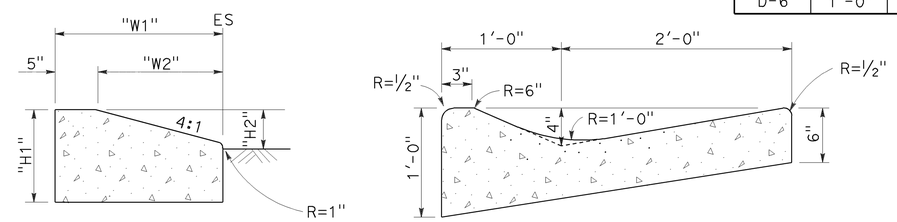

TYPE D CURBS
See Table A

TYPE E CURB

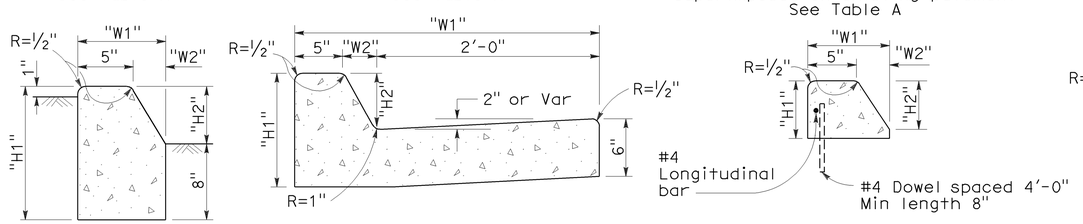

TYPE B1 CURBS
See Table A

TYPE B2 CURBS
See Table A

TYPE B3 CURBS
Superimposed on existing pavement
See Table A

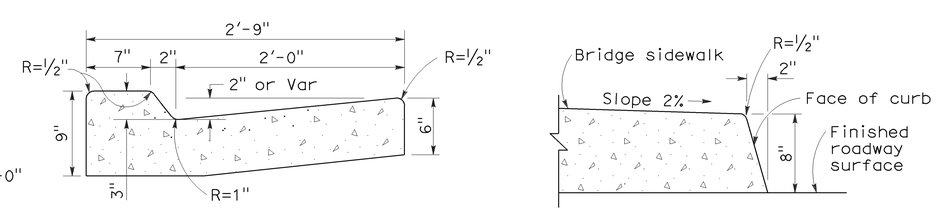

TYPE B4 CURBS

TYPE H CURB
On Bridges

CURBS

NOTES:

1. Case A driveway section typically applies.
2. Use Case B driveway section when ramp slopes would exceed 10% in Case A.
3. Use Case B driveway section when sidewalk cross slope would exceed 2% in Case A.
4. X=3'-0" except for curb heights over 10" where 4:1 slopes shall be used on curb slope.
5. X is a variable when sidewalk is located where wheelchairs may traverse the surface. Slopes shall not exceed 8.33%.
6. Sidewalk and ramp thickness "T" at driveway shall be 4" for residental and 6" for commercial.
7. Difference in slope of the driveway ramp and the slope of a line between the gutter and a point on the roadway 5'-0" from gutter line shall not exceed 15%. Reduce driveway ramp slope, not gutter slope, where required.
8. Minimum width of clear passageway for sidewalk shall be 4'-0".
9. Retaining curbs and acquisition of construction easement may be necessary for narrow sidewalks or curb heights in excess of 6".
10. Across the pedestrian route at curb ramp locations, the gutter pan slope shall not exceed 1" of depth for each 2'-0" of width.

STATE OF CALIFORNIA
DEPARTMENT OF TRANSPORTATION

CURBS AND DRIVEWAYS

NO SCALE

RSP A87A DATED NOVEMBER 17, 2006 SUPERSEDES STANDARD PLAN A87A DATED MAY 1, 2006 - PAGE 113 OF THE STANDARD PLANS BOOK DATED MAY 2006.

REVISED STANDARD PLAN RSP A87A

2006 REVISED STANDARD PLAN RSP A87A

10-25-06

DIST	COUNTY	ROUTE	POST MILES TOTAL PROJECT	SHEET NO.	TOTAL SHEETS
07	Ven	1,33,101 & 126	Var	47	59

REGISTERED CIVIL ENGINEER

September 1, 2006
PLANS APPROVAL DATE

Hector David Cordova No. C41957 Exp. 3-31-08 CIVIL — REGISTERED PROFESSIONAL ENGINEER — STATE OF CALIFORNIA

The State of California or its officers or agents shall not be responsible for the accuracy or completeness of electronic copies of this plan sheet.

To accompany plans dated 5-21-12

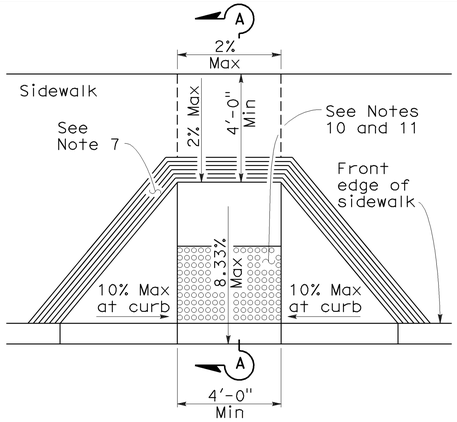

CASE A

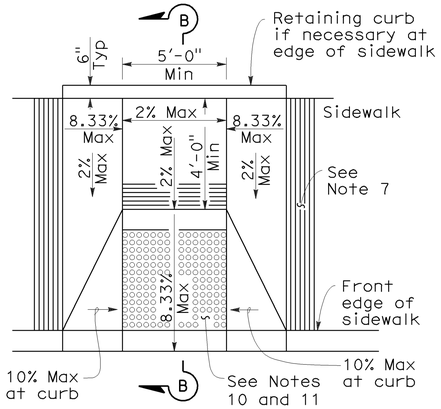

CASE B

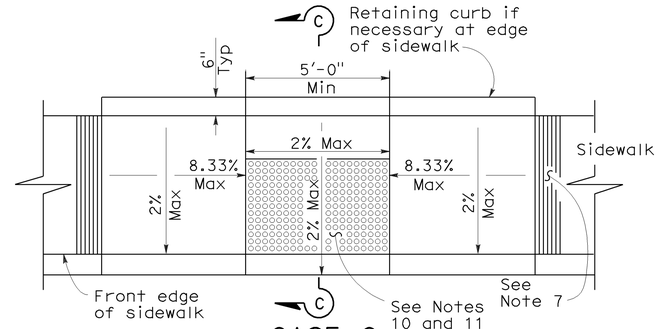

CASE C

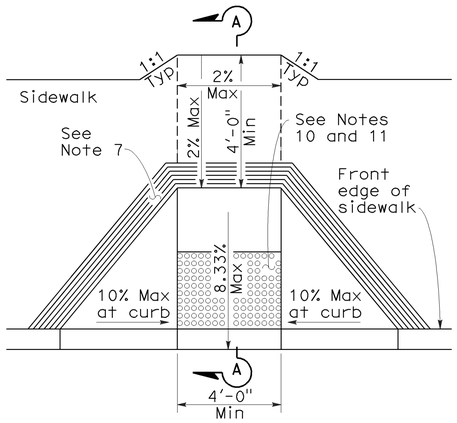

CASE D

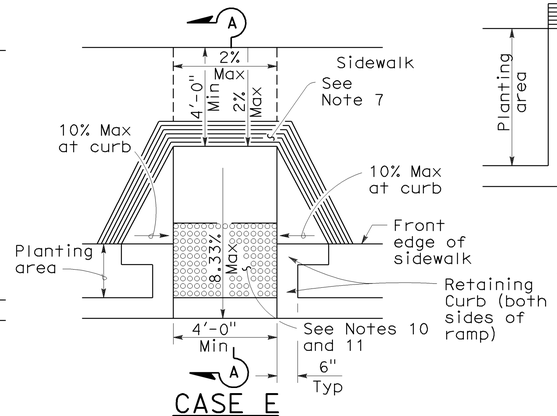

CASE E

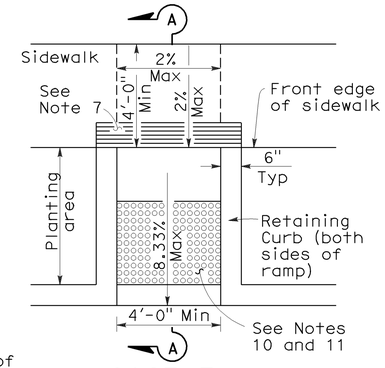

CASE F

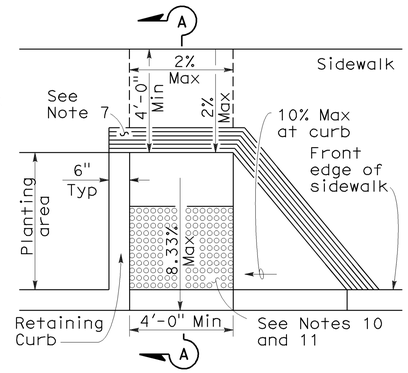

CASE G

See Note 4

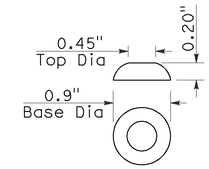

RAISED TRUNCATED DOME

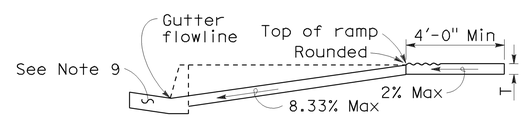

SECTION A-A

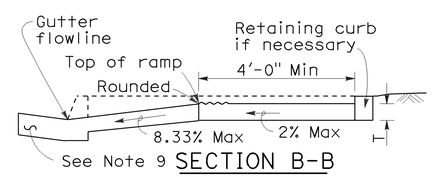

SECTION B-B

Depress entire sidewalk as required

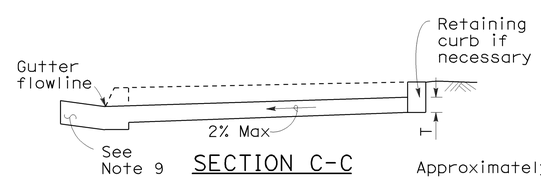

SECTION C-C

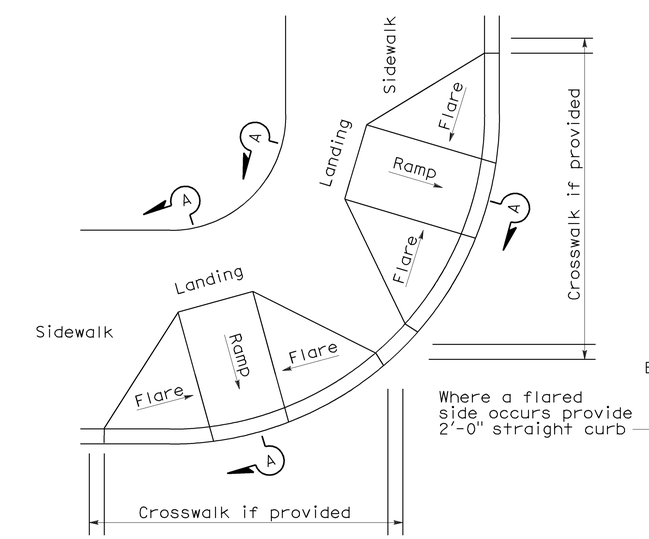

DETAIL A

TYPICAL TWO-RAMP CORNER INSTALLATION

See Note 1

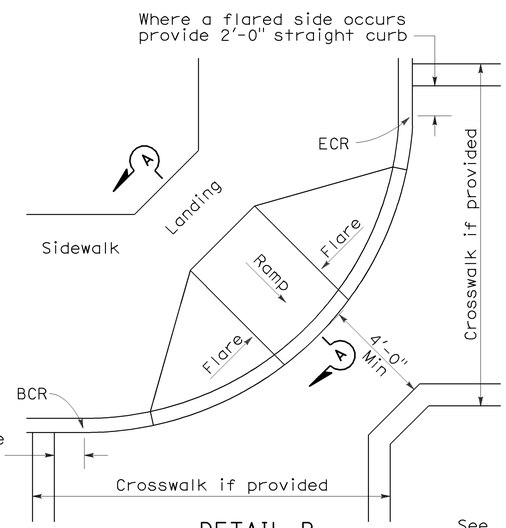

DETAIL B

TYPICAL ONE-RAMP CORNER INSTALLATION

See Notes 1 and 3

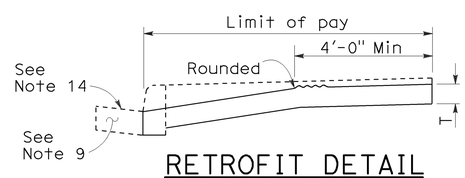

RETROFIT DETAIL

Existing curb and sidewalk

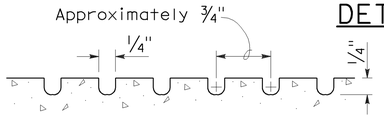

GROOVING DETAIL

NOTES:

1. As site conditions dictate, Case A through Case G curb ramps may be used for corner installations similar to those shown in Detail A and Detail B. The case of curb ramps used in Detail A do not have to be the same. Case A through Case G curb ramps also may be used at mid block locations, as site conditions dictate.
2. If distance from curb to back of sidewalk is too short to accommodate ramp and 4'-0" platform (landing) as shown in Case A, the sidewalk may be depressed longitudinally as in Case B, or C or may be widened as in Case D.
3. When ramp is located in center of curb return, crosswalk configuration must be similar to that shown for Detail B.
4. As site conditions dictate, the retaining curb side and the flared side of the Case G ramp shall be constructed in reversed position.
5. If located on a curve, the sides of the ramp need not be parallel, but the minimum width of the ramp shall be 4'-0".
6. Side slope of ramp flares vary uniformly from a maximum of 10% at curb to conform with longitudinal sidewalk slope adjacent to top of the ramp, except in Case C and Case F.
7. The curb ramp shall be outlined, as shown, with a 1'-0" wide border with 1/4" grooves approximately 3/4" on center. See grooving detail.
8. Transitions from ramps and landing to walks, gutters or streets shall be flush and free of abrupt changes.
9. Maximum slopes of adjoining gutters, the road surface immediately adjacent to the curb ramp or accessible route shall not exceed 5 percent within 4'-0" of the top and bottom of the curb ramp.
10. Curb ramps shall have a detectable warning surface that extends the full width and 3'-0" depth of the ramp. Detectable Warning Surfaces shall conform to the details on this plan and the requirements in the Special Provisions.
11. The edge of the detectable warning surface nearest the street shall be between 6" and 8" from the gutter flowline.
12. Sidewalk and ramp thickness, "T", shall be 3½" minimum.
13. Utility pull boxes, manholes, vaults and all other utility facilities within the boundaries of the curb ramp will be relocated or adjusted to grade by the owner prior to, or in conjunction with, curb ramp construction.
14. For retrofit conditions, removal and replacement of curb apron will be at the Contractor's option, unless otherwise shown on project plans.

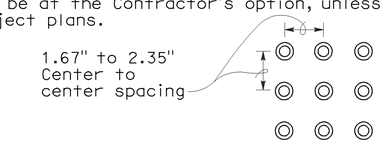

RAISED TRUNCATED DOME PATTERN (IN-LINE)

DETECTABLE WARNING SURFACE

See Note 10

STATE OF CALIFORNIA
DEPARTMENT OF TRANSPORTATION

CURB RAMP DETAILS

NO SCALE

RSP A88A DATED SEPTEMBER 1, 2006 SUPERSEDES STANDARD PLAN A88A DATED MAY 1, 2006 - PAGE 115 OF THE STANDARD PLANS BOOK DATED MAY 2006.

REVISED STANDARD PLAN RSP A88A

2006 REVISED STANDARD PLAN RSP A88A

8-3-06

DIST	COUNTY	ROUTE	POST MILES TOTAL PROJECT	SHEET NO.	TOTAL SHEETS
07	Ven	1, 33, 101 & 126	Var	48	59

Randell D. Hiatt
REGISTERED CIVIL ENGINEER

June 6, 2008
PLANS APPROVAL DATE

REGISTERED PROFESSIONAL ENGINEER
Randell D. Hiatt
No. C50200
Exp. 6-30-09
CIVIL
STATE OF CALIFORNIA

The State of California or its officers or agents shall not be responsible for the accuracy or completeness of electronic copies of this plan sheet.

To accompany plans dated 5-21-12

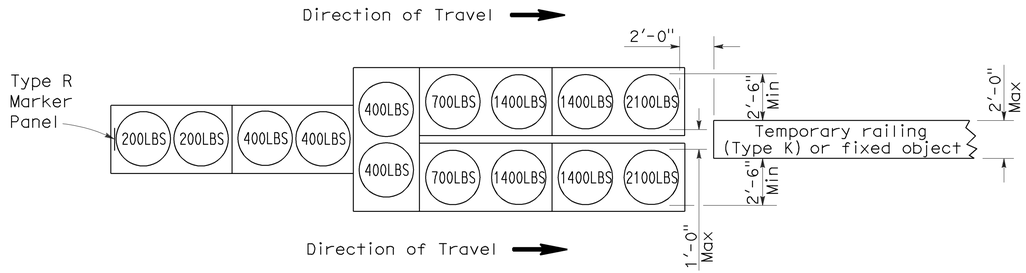

ARRAY 'TU14'

Approach speed 45 mph or more

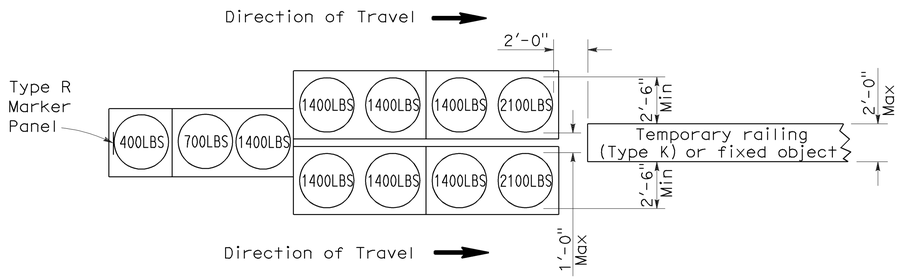

ARRAY 'TU11'

Approach speed less than 45 mph

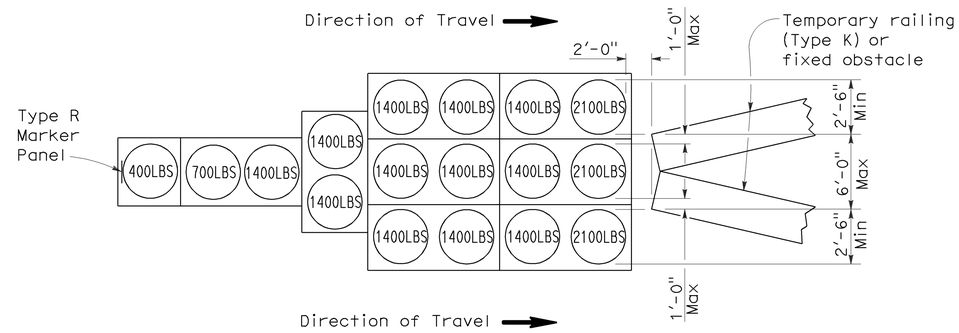

ARRAY 'TU17'

Approach speed less than 45 mph

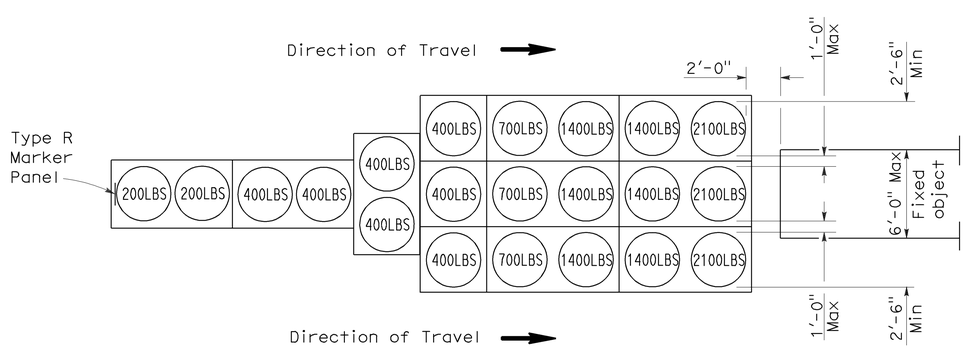

ARRAY 'TU21'

Approach speed 45 mph or more

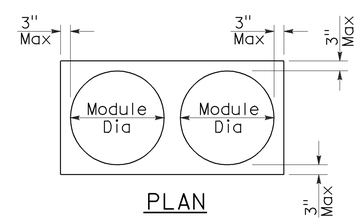

PLAN

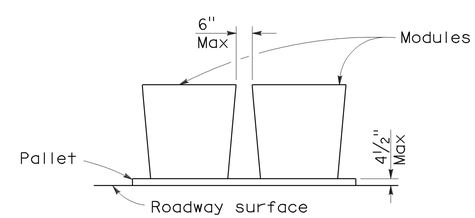

ELEVATION

CRASH CUSHION PALLET DETAIL

See Note 7

NOTES:

1. (XXX) Indicates sand filled module location and weight of sand in pounds for each module. Module spacing is based on the greater diameter of the module.
2. All sand weights are nominal.
3. Temporary crash cushion arrays shall not encroach on the traveled way.
4. Place the top of Type R marker panel 1" below the module lid.
5. Refer to Standard Plan A73B for marker details.
6. Approach speeds indicated conform to NCHRP 350 Report criteria.
7. Use of pallets is optional.

STATE OF CALIFORNIA
DEPARTMENT OF TRANSPORTATION

TEMPORARY CRASH CUSHION, SAND FILLED (UNIDIRECTIONAL)

NO SCALE

RSP T1A DATED JUNE 6, 2008 SUPERSEDES STANDARD PLAN T1A
DATED MAY 1, 2006 - PAGE 211 OF THE STANDARD PLANS BOOK DATED MAY 2006.

REVISED STANDARD PLAN RSP T1A

2006 REVISED STANDARD PLAN RSP T1A

DIST	COUNTY	ROUTE	POST MILES TOTAL PROJECT	SHEET NO.	TOTAL SHEETS
07	Ven	1, 33, 101 & 126	Var	49	59

Randell D. Hiatt
REGISTERED CIVIL ENGINEER

June 6, 2008
PLANS APPROVAL DATE

REGISTERED PROFESSIONAL ENGINEER
Randell D. Hiatt
No. C50200
Exp. 6-30-09
CIVIL
STATE OF CALIFORNIA

The State of California or its officers or agents shall not be responsible for the accuracy or completeness of electronic copies of this plan sheet.

To accompany plans dated 5-21-12

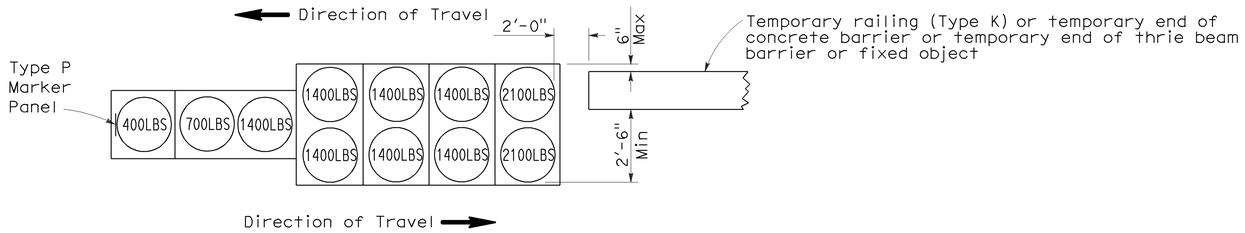

ARRAY 'TB11'

Approach speed less than 45 mph

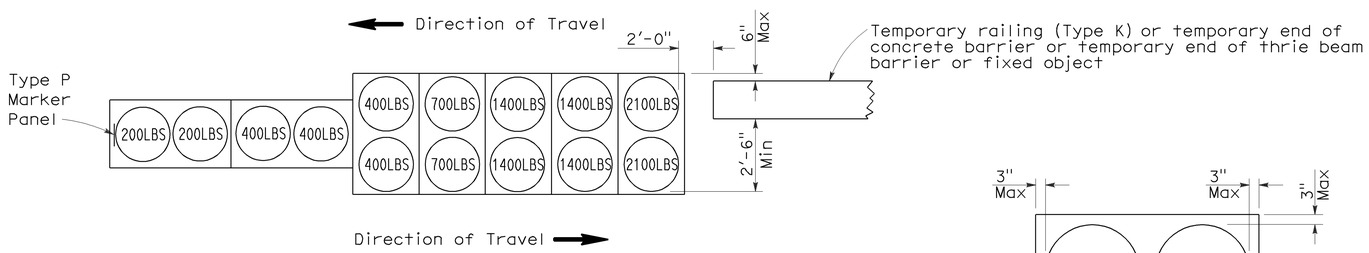

ARRAY 'TB14'

Approach speed 45 mph or more

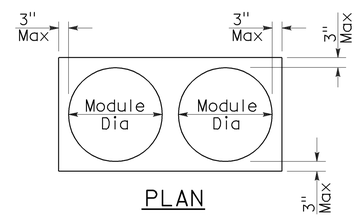

PLAN

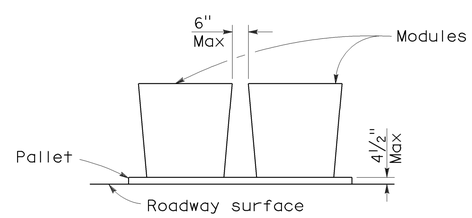

ELEVATION

CRASH CUSHION PALLET DETAIL

See Note 7

NOTES:

1. (XXX) Indicates sand filled module location and weight of sand in pounds for each module. Module spacing is based on the greater diameter of the module.
2. All sand weights are nominal.
3. Temporary crash cushion arrays shall not encroach on the traveled way.
4. Place the Type P marker panel so that the bottom of the panel rests upon the pallet.
5. Refer to Standard Plan A73B for marker details.
6. Approach speeds indicated conform to NCHRP 350 Report criteria.
7. Use of pallets is optional.

STATE OF CALIFORNIA
DEPARTMENT OF TRANSPORTATION

TEMPORARY CRASH CUSHION, SAND FILLED (BIDIRECTIONAL)

NO SCALE

RSP T1B DATED JUNE 6, 2008 SUPERSEDES STANDARD PLAN T1B
DATED MAY 1, 2006 - PAGE 212 OF THE STANDARD PLANS BOOK DATED MAY 2006.

REVISED STANDARD PLAN RSP T1B

2006 REVISED STANDARD PLAN RSP T1B

5-15-08

DIST	COUNTY	ROUTE	POST MILES TOTAL PROJECT	SHEET NO.	TOTAL SHEETS
07	Ven	1,33,101 & 126	Var	50	59

Randell D. Hiatt
REGISTERED CIVIL ENGINEER

June 6, 2008
PLANS APPROVAL DATE

REGISTERED PROFESSIONAL ENGINEER
Randell D. Hiatt
No. C50200
Exp. 6-30-09
CIVIL
STATE OF CALIFORNIA

The State of California or its officers or agents shall not be responsible for the accuracy or completeness of electronic copies of this plan sheet.

To accompany plans dated 5-21-12

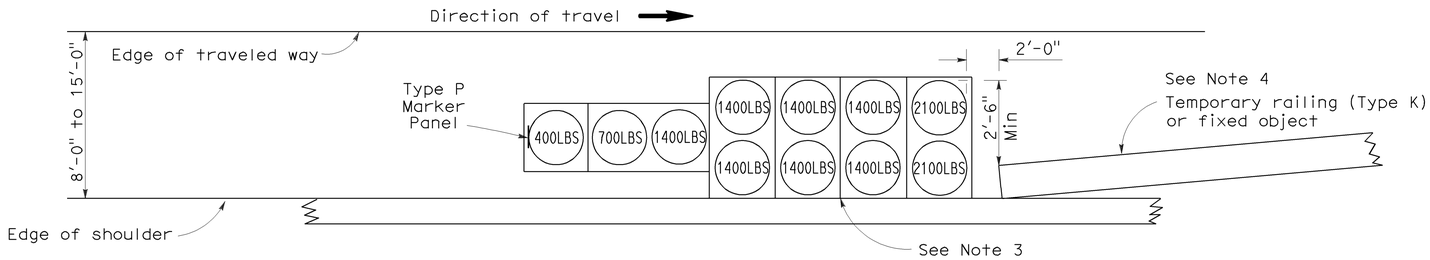

ARRAY 'TS11'

Approach speed less than 45 mph
See Note 9

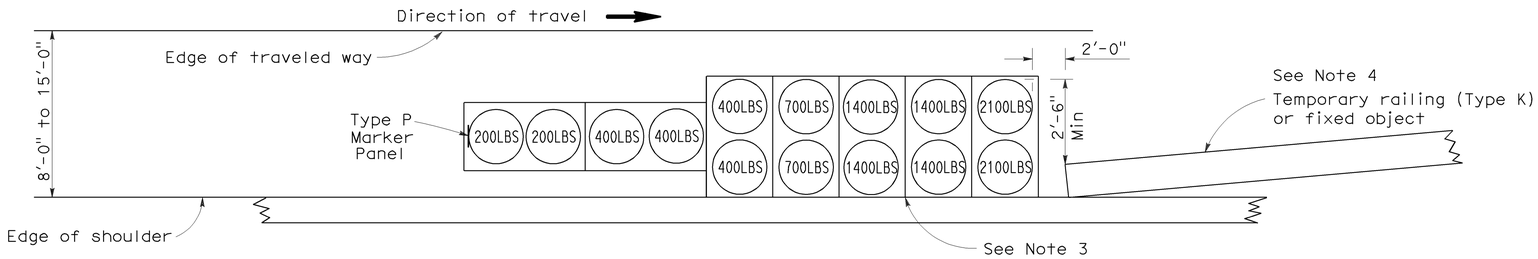

ARRAY 'TS14'

Approach speed 45 mph or more
See Note 9

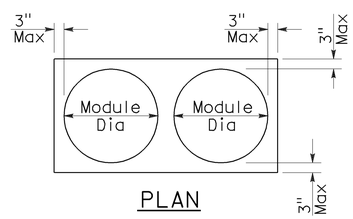

PLAN

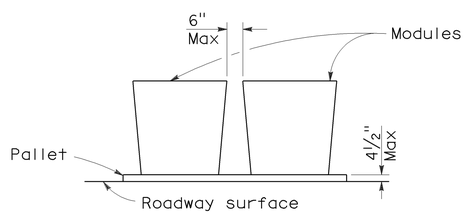

ELEVATION

CRASH CUSHION PALLET DETAIL

See Note 11

NOTES:

1. (XXX) Indicates sand filled module location and weight of sand in pounds for each module. Module spacing is based on the greater diameter of the module.
2. All sand weights are nominal.
3. The temporary crash cushion arrays shown on this plan shall be used only in locations where there will be traffic on one side of the temporary crash cushion array.
4. If the fixed object or approach end of the temporary railing is less than 15'-0" from the edge of traveled way, a temporary crash cushion is required in a construction or work zone.
5. Temporary crash cushion arrays shall not encroach on the traveled way.
6. Arrays for median shoulders shall conform to details shown on this plan for outside shoulders.
7. Place the Type P marker panel so that the bottom of the panel rests upon the pallet and faces traffic.
8. Refer to Standard Plan A73B for marker details.
9. For shoulder widths less than 8'-0", appropriate approved crash cushion protection, other than sand filled modules, shall be provided at fixed objects and at approach ends of temporary railing. The specific type of crash cushion shall be as shown on the project plans or as specified in the Special Provisions, or if not shown on the project plans or specified in the Special Provisions, shall be as approved by the Engineer.
10. Approach speeds indicated conform to NCHRP 350 Report criteria.
11. Use of pallets is optional.

STATE OF CALIFORNIA
DEPARTMENT OF TRANSPORTATION

TEMPORARY CRASH CUSHION, SAND FILLED (SHOULDER INSTALLATIONS)

NO SCALE

RSP T2 DATED JUNE 6, 2008 SUPERSEDES STANDARD PLAN T2
DATED MAY 1, 2006 - PAGE 213 OF THE STANDARD PLANS BOOK DATED MAY 2006.

REVISED STANDARD PLAN RSP T2

2006 REVISED STANDARD PLAN RSP T2

5-15-08

Dist	COUNTY	ROUTE	POST MILES TOTAL PROJECT	SHEET No.	TOTAL SHEETS
07	Ven	1, 33, 101 & 126	Var	51	59

Randell D. Hiatt
REGISTERED CIVIL ENGINEER

May 20, 2011
PLANS APPROVAL DATE

REGISTERED PROFESSIONAL ENGINEER
Randell D. Hiatt
No. C50200
Exp. 6-30-11
CIVIL
STATE OF CALIFORNIA

The State of California or its officers or agents shall not be responsible for the accuracy or completeness of electronic copies of this plan sheet.

To accompany plans dated 5-21-12

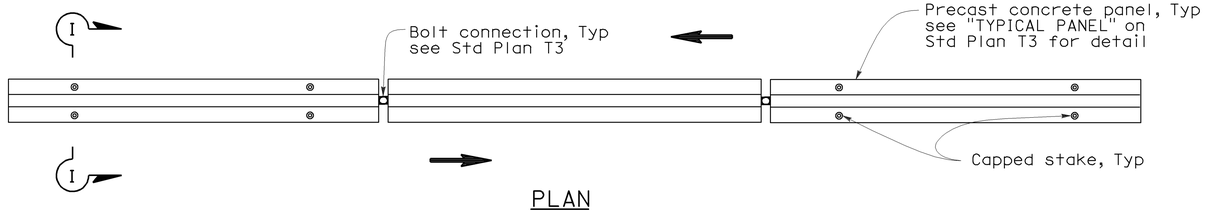

PLAN

RAILING STAKING CONFIGURATION FOR TWO-WAY TRAFFIC

See Note 1

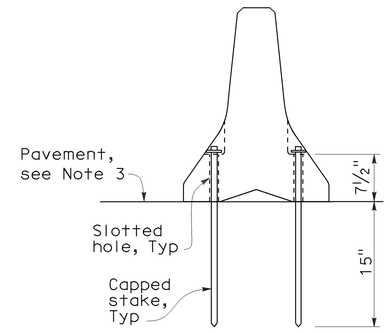

SECTION I-I

NOTES:

1. Where Type K Temporary Railing is placed as a temporary or long term barrier in two-way traffic on highways with less than 24" from the edge of traveled way, use four capped stakes per every other panel with end panels staked.
2. Where Type K Temporary Railing is placed 3" to 24" from the edge of an excavation on highways, use two capped stakes per panel along the traffic side.
3. Staked Type K Temporary Railing must be supported by at least 4" thick concrete, hot mix asphalt or existing asphalt concrete pavement.
4. The minimum yield strength for the washer must be 60,000 psi.
5. Direction of adjacent traffic indicated by ⟹.

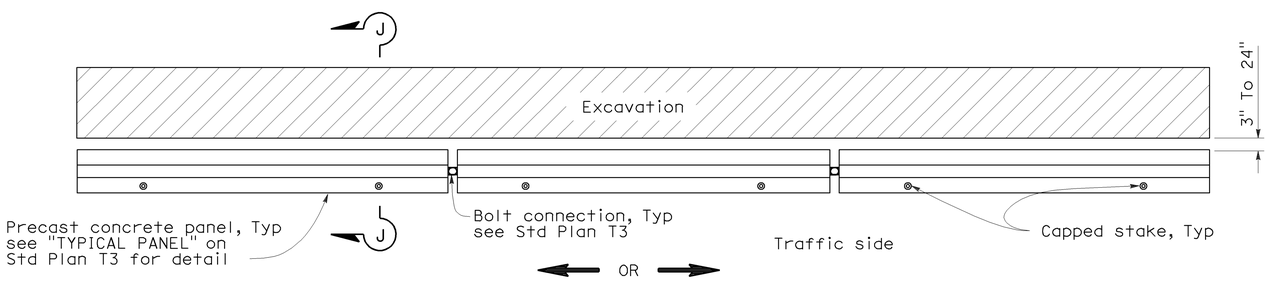

PLAN

RAILING STAKING CONFIGURATION ADJACENT TO AN EXCAVATION

See Note 2

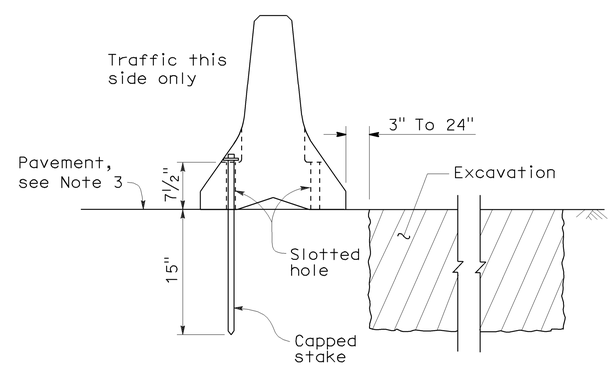

SECTION J-J

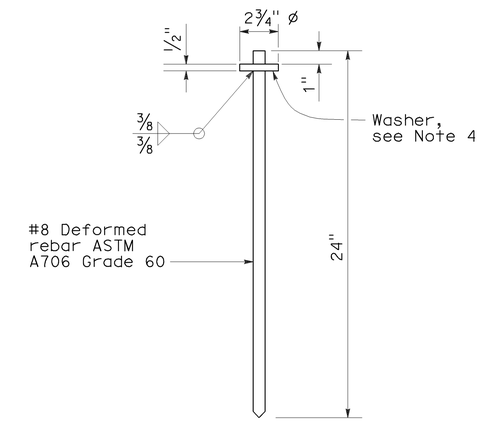

CAPPED STAKE DETAIL

STATE OF CALIFORNIA
DEPARTMENT OF TRANSPORTATION

TEMPORARY RAILING (TYPE K)

NO SCALE

NSP T3A DATED MAY 20, 2011 SUPPLEMENTS
THE STANDARD PLANS BOOK DATED MAY 2006.

NEW STANDARD PLAN NSP T3A

2006 NEW STANDARD PLAN NSP T3A

DIST	COUNTY	ROUTE	POST MILES TOTAL PROJECT	SHEET NO.	TOTAL SHEETS
07	Ven	1,33,101 & 126	Var	52	59

LICENSED LANDSCAPE ARCHITECT

August 15, 2008
PLANS APPROVAL DATE

LICENSED LANDSCAPE ARCHITECT
Robert B. Schott 3635
Signature
11-04-08
Renewal Date
08-11-08
Date
STATE OF CALIFORNIA

The State of California or its officers or agents shall not be responsible for the accuracy or completeness of electronic copies of this plan sheet.

To accompany plans dated 5-21-12

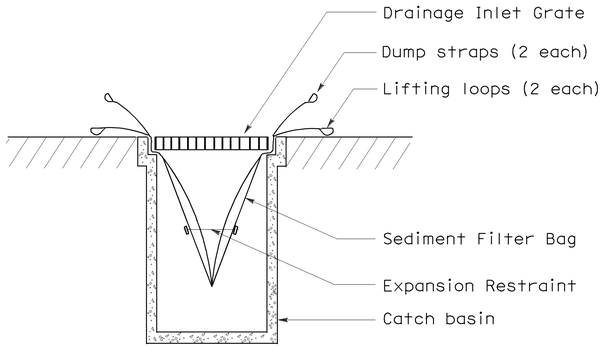

SECTION B-B

SEDIMENT FILTER BAG DETAIL

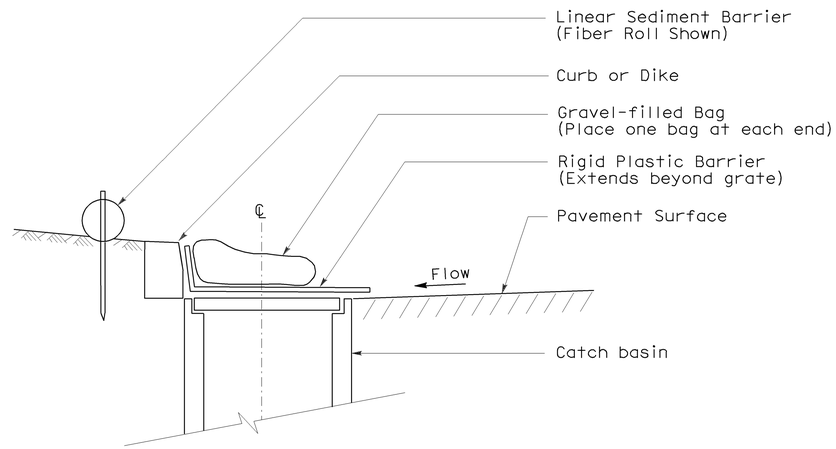

SECTION

TEMPORARY DRAINAGE INLET PROTECTION (TYPE 6A) (CATCH BASIN WITH GRATE)

NOTES:

1. See Standard Plan T51 for Temporary Silt Fence.
2. Dimensions may vary to fit field conditions.

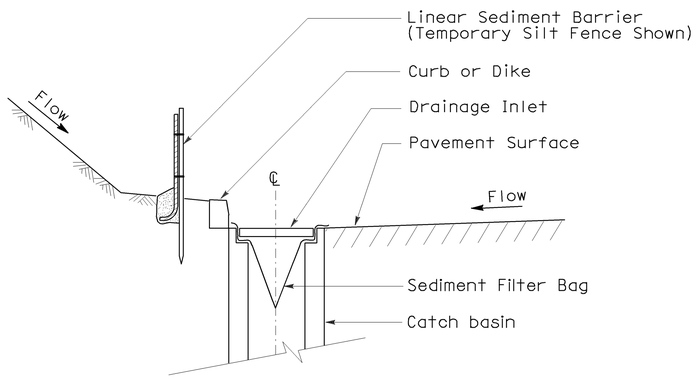

SECTION A-A

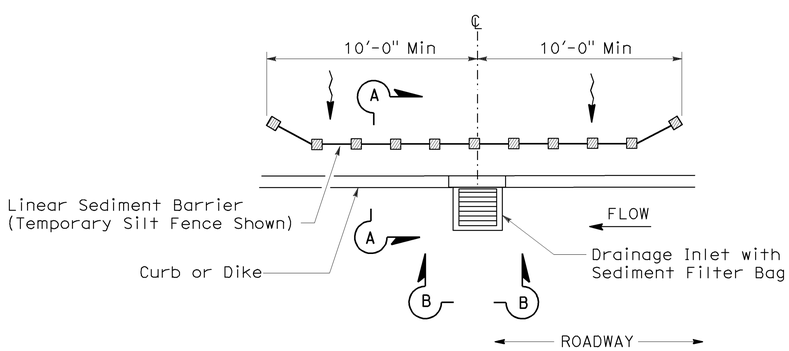

PLAN

TEMPORARY DRAINAGE INLET PROTECTION (TYPE 5) (SEDIMENT FILTER BAG)

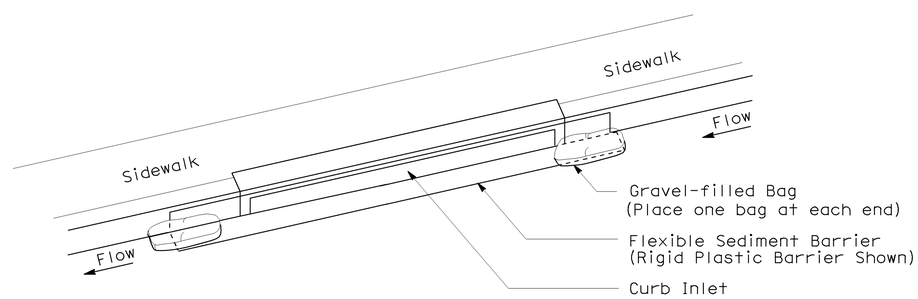

PERSPECTIVE

TEMPORARY DRAINAGE INLET PROTECTION (TYPE 6B) (CURB INLET WITHOUT GRATE)

STATE OF CALIFORNIA
DEPARTMENT OF TRANSPORTATION

TEMPORARY WATER POLLUTION CONTROL DETAILS (TEMPORARY DRAINAGE INLET PROTECTION)

NO SCALE

NSP T64 DATED AUGUST 15, 2008 SUPPLEMENTS
THE STANDARD PLANS BOOK DATED MAY 2006.

NEW STANDARD PLAN NSP T64

2006 NEW STANDARD PLAN NSP T64

7-11-08

DIST	COUNTY	ROUTE	POST MILES TOTAL PROJECT	SHEET NO.	TOTAL SHEETS
07	Ven	1,33,101 & 126	Var	53	59

REGISTERED ELECTRICAL ENGINEER

October 5, 2007
PLANS APPROVAL DATE

REGISTERED PROFESSIONAL ENGINEER Jeffery G. McRae No. E14512 Exp. 6-30-08 ELECTRICAL STATE OF CALIFORNIA

The State of California or its officers or agents shall not be responsible for the accuracy or completeness of electronic copies of this plan sheet.

To accompany plans dated 5-21-12

ELECTROLIERS

STANDARD TYPES
15, 15D
15 STRUCTURE
21, 21D STRUCTURE
30
31
32
35
36-20A

High mast light pole

Double Arm lighting standard

Existing electrolier

Electrolier foundation (Future installation)

NOTES:

1. Luminaires shall be 310 W HPS when installed on Type 21, 21D, 30, 31, 32, 35 and 36-20A Standards, unless otherwise specified. Luminaires shall be 200 W HPS when installed on other type standards or poles, unless otherwise specified.
2. Luminaires shall be the cutoff type, ANSI Type III medium cutoff lighting distribution, unless otherwise specified.
3. Variations noted adjacent to symbol on project plans.

Electrolier (see project notes or project plans)

Luminaire on wood pole

STANDARD NOTES:

- AB — Abandon. If applied to conduit, remove conductors.
- BC — Install pull box in existing conduit run.
- BP — Pedestrian barricade, type as indicated on plan.
- CB — Install conduit into existing pull box.
- CC — Connect new and existing conduit. Remove existing conductors and install conductors as indicated.
- CF — Conduit to remain for future use. Remove conductors. Install pull wire or rope.
- DH — Detector handhole.
- FA — Foundation to be abandoned.
- IS — Install sign on signal mast arm.
- NS — No slip base on standard.
- PEC — Photoelectric control.
- PEU — Photoelectric unit.
- RC — Equipment or material to be removed and become the property of the Contractor.
- RE — Remove electrolier, fuses and ballast. Tape ends of conductors.
- RL — Relocate equipment.
- RR — Remove and reuse equipment.
- RS — Remove and salvage equipment.
- SC — Splice new to existing conductors.
- SD — Service disconnect.
- SF — Standard to remain for future use. Remove luminaire, pole conductors, fuses and ballast.
- TSP — Telephone service point.

ABBREVIATIONS AND EQUIPMENT DESIGNATIONS

PROPOSED	EXISTING	
BBS	bbs	Battery backup system
BC	bc	Bolt circle
C	C	Conduit
CCTV	cctv	Closed circuit television
CKT	ckt	Circuit
CMS	cms	Changeable message sign
DLC	dlc	Loop detector lead-in cable
EMS	ems	Extinguishable message sign
EVC	evc	Emergency vehicle cable
EVD	evd	Emergency vehicle detector
FB	fb	Flashing beacon
FBCA	fbca	Flashing beacon control assembly
FBS	fbs	Flashing beacon with slip base
FO	fo	Fiber optic
G	G	Ground (Equipment Grounding Conductor)
GFCI	GFCI	Ground fault circuit interrupt
HAR	har	Highway advisory radio
HEX	hex	Hexagonal
HPS	hps	High pressure sodium
IISNS	iisns	Internally illuminated street name sign
ISL	isl	Induction sign lighting
LED	led	Light emitting diode
LMA	lma	Luminaire mast arm
LPS	lps	Low pressure sodium
LTG	ltg	Lighting
LUM	lum	Luminaire
MAT	mat	Mast arm mounting vehicle signal faces, top attachment
MAS	mas	Mast arm mounting vehicle signal faces, side attachment
MAS-4A	mas-4A	Mast arm mounting vehicle signal faces, side attachment - 4 signal section
MAS-4B	mas-4B	
MAS-4C	mas-4C	
MAS-5A	mas-5A	Mast arm mounting vehicle signal faces, side attachment - 5 signal section
MAS-5B	mas-5B	
MC	mc	Mercury contactor
M/M	m/m	Multiple to multiple transformer
MT	mt	Conduit with pull wire or rope only
MTG	mtg	Mounting
	mv	Mercury vapor lighting fixture
N	N	Neutral (Grounded Conductor)
NC	NC	Normally closed
NO	NO	Normally open
PB	pb	Pull box
PEC	pec	Photoelectric control (Type I, II, III, IV or V as shown)
PED	ped	Pedestrian
PEU	peu	Photoelectric unit
PPB	ppb	Pedestrian push button
RL		Relocated equipment
RM	rm	Ramp metering
SB	sb	Slip base
SIC	sic	Signal interconnect cable
SIG	sig	Signal
SMA	sma	Signal mast arm
SNS	sns	Street name sign
SP	sp	Service point
TDC	tdc	Telephone demarcation cabinet
TMS	tms	Traffic monitoring station
TOS	tos	Traffic Operations System
VEH	veh	Vehicle
XFMR	xfmr	Transformer
COMM	comm	Communication
RWIS	rwis	Roadway weather information system

SOFFIT AND WALL MOUNTED LUMINAIRES

Pendant, 70 W HPS unless otherwise specified.

Flush, 70 W HPS unless otherwise specified.

Wall surface, 70 W HPS unless otherwise specified.

Existing soffit or wall luminaire to remain unmodified.

Existing soffit or wall luminaire to be modified as specified.

NOTE:

Arrow indicates "street side" of luminaire.

STATE OF CALIFORNIA
DEPARTMENT OF TRANSPORTATION

ELECTRICAL SYSTEMS (SYMBOLS AND ABBREVIATIONS)

NO SCALE

RSP ES-1A DATED OCTOBER 5, 2007 SUPERSEDES STANDARD PLAN ES-1A DATED MAY 1, 2006 - PAGE 400 OF THE STANDARD PLANS BOOK DATED MAY 2006.

REVISED STANDARD PLAN RSP ES-1A

2006 REVISED STANDARD PLAN RSP ES-1A

DIST	COUNTY	ROUTE	POST MILES TOTAL PROJECT	SHEET NO.	TOTAL SHEETS
07	Ven	1, 33, 101 & 126	Var	54	59

REGISTERED ELECTRICAL ENGINEER

October 5, 2007
PLANS APPROVAL DATE

REGISTERED PROFESSIONAL ENGINEER Jeffery G. McRae No. E14512 Exp. 6-30-08 ELECTRICAL STATE OF CALIFORNIA

The State of California or its officers or agents shall not be responsible for the accuracy or completeness of electronic copies of this plan sheet.

To accompany plans dated 5-21-12

CONDUIT

PROPOSED	EXISTING	
		Lighting Conduit, unless otherwise indicated or noted
		Traffic signal conduit
C	c	Communication conduit
T	t	Telephone conduit
F	f	Fire alarm conduit
FO	fo	Fiber optic conduit
		Conduit termination (RSP ES-9A C)
R	r	Conduit riser in/on structure or service pole

SERVICE EQUIPMENT

PROPOSED	EXISTING	
OH	oh	Overhead lines
U	U	Wood pole "U" indicates utility owned
		Pole guy with anchor
		Utility transformer - ground mounted
III		Service equipment enclosure type
		Service equipment enclosure door indicates front of enclosure
T	t	Telephone demarcation cabinet

POLE-MOUNTED SERVICE DESIGNATION

Type of installation

TYPE H SERVICE - 28'-10" ← Pole height above grade

ILLUMINATED OVERHEAD SIGN

PROPOSED	EXISTING	
		Overhead sign - Single post
		Overhead sign - Two post
		Overhead sign - Mounted on structure
		Overhead sign with electrolier

SIGNAL EQUIPMENT

PROPOSED	EXISTING	
		Pedestrian signal face
		Pedestrian push button post
		Pedestrian barricade
		Vehicle signal face (with backplate, 3-Section: red, yellow and green)
		Vehicle signal face with angle visors
PV	PV	Modifications of basic symbols: "L" indicates all non-arrow sections louvered "LG" indicates louvered green section only "PV" indicates 12" programmed visibility sections "8" indicates all 8" sections (only when specified)
		Type 15TS and Vehicle signal face
		Vehicle signal face with red, yellow and green left arrow sections
		Vehicle signal face with red and yellow sections and up green arrow
		Vehicle signal face (5 Section) with red, yellow and green sections and yellow and green right arrows
		Type 1 Standard and attached vehicle signal faces
		Standard with signal mast arm only and attached vehicle signal faces and internally illuminated street name sign
		Type 33 Standard, Left-turn vehicle signal face and sign
		Standard with luminaire and signal mast arms and attached vehicle signal faces
		Cantilever flashing beacon Type 9 Frame, with a sign unless otherwise specified or indicated
		Type 15-FBS Standard with two vehicle signal face sections with lens, backplate and visor with a sign
R	Y	Flashing beacon. One vehicle signal face section with lens, backplate and visor. "R" indicates red indication, "Y" indicates yellow indication
		Controller assembly. Door indicates front of cabinet

SIGNAL EQUIPMENT Cont

PROPOSED	EXISTING	
		Guard post
		Type 1 Standard with "Meter On" sign
		Emergency Vehicle detector

NOTES:

1. All signal sections shall be 12" unless shown otherwise.
2. Signal heads shall be provided with backplates unless shown otherwise.
3. Signal indication shall be LED.

STATE OF CALIFORNIA
DEPARTMENT OF TRANSPORTATION

ELECTRICAL SYSTEMS (SYMBOLS AND ABBREVIATIONS)

NO SCALE

RSP ES-1B DATED OCTOBER 5, 2007 SUPERCEDES STANDARD PLAN ES-1B DATED MAY 1, 2006 - PAGE 401 OF THE STANDARD PLANS BOOK DATED MAY 2006.

REVISED STANDARD PLAN RSP ES-1B

2006 REVISED STANDARD PLAN RSP ES-1B

7-10-07

DIST	COUNTY	ROUTE	POST MILES TOTAL PROJECT	SHEET NO.	TOTAL SHEETS
07	Ven	1, 33, 101 & 126	Var	55	59

REGISTERED ELECTRICAL ENGINEER

October 5, 2007
PLANS APPROVAL DATE

REGISTERED PROFESSIONAL ENGINEER Jeffery G. McRae No. E14512 Exp. 6-30-08 ELECTRICAL STATE OF CALIFORNIA

The State of California or its officers or agents shall not be responsible for the accuracy or completeness of electronic copies of this plan sheet.

To accompany plans dated 5-21-12

EQUIPMENT IDENTIFICATION

ILLUMINATED SIGN IDENTIFICATION NUMBER:

Sign No. 12345 — Sign number - Place on post or structure

10 ISL SCI 1.0

- 10 — Transformer rating (kVA)
- ISL — Lighting control type
- SCI — Number and type of fixtures

Do NOT place on standard or structure

ELECTROLIER OR EQUIPMENT IDENTIFICATION NUMBER:

12345 - 15'-0"

- 15'-0" — Mast arm length, if shown. Do not place on standard or structure.
- 12345 — Equipment number - Place on standard or structure. Existing equipment numbers are shown in parenthesis

CONDUIT AND CONDUCTOR IDENTIFICATION:

1½"C, 2#10, 15#14, 2 DLC

- 2#10, 15#14, 2 DLC — Number and size of conductors and cables
- 1½"C — Size of conduit in inches

Ø1, Ø2, Ø2P, etc.	Traffic phase identification for signal faces, detectors and phase diagrams
1 2 3	Project note numbers
A B C	Equipment description, installation or item numbers
1 2 3	Conduit run numbers

SIGNAL AND LIGHTING STANDARD (TYPICAL DESIGNATION):

19A - 3 - 100

- 100 — Wind velocity = 100 mph
- 3 — Case 3 arm loading
- 19A — Standard type
- Standard Plan sheet number
- Detail number or letter

MISCELLANEOUS EQUIPMENT

PROPOSED	EXISTING	
CMS	cms	Changeable message sign
		Closed circuit television camera
		Highway advisory radio pole and antenna
EMS	ems	Extinguishable message sign
M V	m v	Detection device M = Microwave sensor V = Video image sensor

WIRING DIAGRAM LEGEND

P	Pole
CB	Circuit breaker
A	Ampere
V	Volt
M	Metered
UM	Unmetered
NB	Neutral bus
GB	Ground bus
G	Equipment grounding conductor
N	Grounded conductor (Neutral)

- External conductor
- Conductor or bus
- Tie point
- Contactor coil
- Contactor, Contact NO
- Terminal blocks
- Contactor, Contact NC
- Enclosure bond
- Grounding electrode
- Circuit breaker
- Receptacle

PULL BOXES

PROPOSED EXISTING

Pull box-No. 5 unless otherwise indicated or noted.

3 — 9A(21)

Pull box-Additional designations or descriptions

- 3 = No. 3½ pull box
- 5 = No. 5 pull box
- 6 = No. 6 pull box
- 7 = No. 7 (Ceiling pull box)
- 8 = No. 8 (Pendant soffit pull box)
- 9 = No. 9 pull box
- 9A = No. 9A pull box

- (C) = Communications pull box
- (E) = Pull box with extension
- (S) = Sprinkler control pull box
- (21) = Anchor bolts and conduit for future installation of Type 21 Standard
- (T) = Traffic pull box

VEHICLE DETECTORS

5 J 9 U

- U = Upper
- L = Lower
- 9 — Slot number in input file
- J — Input file (I or J)
- 5 — Phase

PROPOSED	EXISTING	
		Type A detector loop. Outline of sawcut shown.
		Type B detector loop. Outline of sawcut shown.
		Type C detector loop. Outline of sawcut shown.
		Type D detector loop. Outline of sawcut shown.
		Type E detector loop. Outline of sawcut shown.
		Type Q detector loop. Outline of sawcut shown.
		Magnetic detector
DH	dh	Detector handhole
		Microwave or video detection zone

STATE OF CALIFORNIA
DEPARTMENT OF TRANSPORTATION

ELECTRICAL SYSTEMS (SYMBOLS AND ABBREVIATIONS)

NO SCALE

RSP ES-1C DATED OCTOBER 5, 2007 SUPERCEDES STANDARD PLAN ES-1C DATED MAY 1, 2006 - PAGE 402 OF THE STANDARD PLANS BOOK DATED MAY 2006.

REVISED STANDARD PLAN RSP ES-1C

2006 REVISED STANDARD PLAN RSP ES-1C

7-10-07

DIST	COUNTY	ROUTE	POST MILES TOTAL PROJECT	SHEET NO.	TOTAL SHEETS
07	Ven	1, 33, 101 & 126	Var	56	59

REGISTERED ELECTRICAL ENGINEER

June 6, 2008
PLANS APPROVAL DATE

REGISTERED PROFESSIONAL ENGINEER
Jeffery G. McRae
No. E14512
Exp. 6-30-10
ELECTRICAL
STATE OF CALIFORNIA

The State of California or its officers or agents shall not be responsible for the accuracy or completeness of electronic copies of this plan sheet.

To accompany plans dated 5-21-12

VISORS

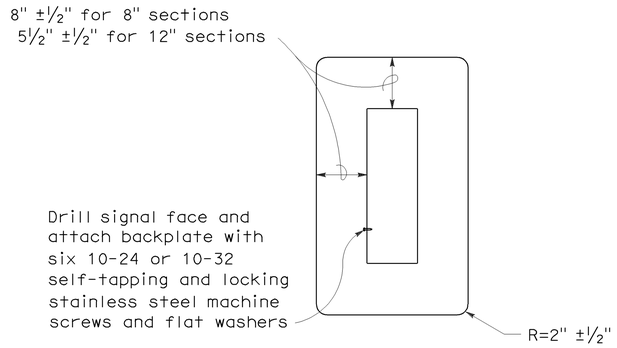

8" AND 12" SECTIONS

BACKPLATE

1/16" minimum thickness
3001-14 aluminum, or plastic when specified

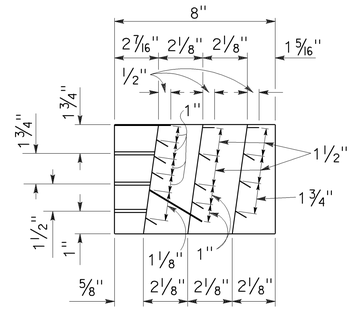

SECTION A-A

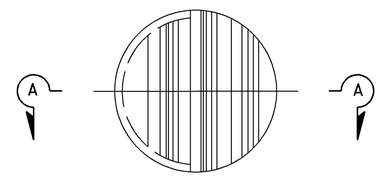

FRONT VIEW

DIRECTIONAL LOUVER

Directional louvers shall be oriented as directed by the Engineer and secured in place with one plated brass machine screw and nut.

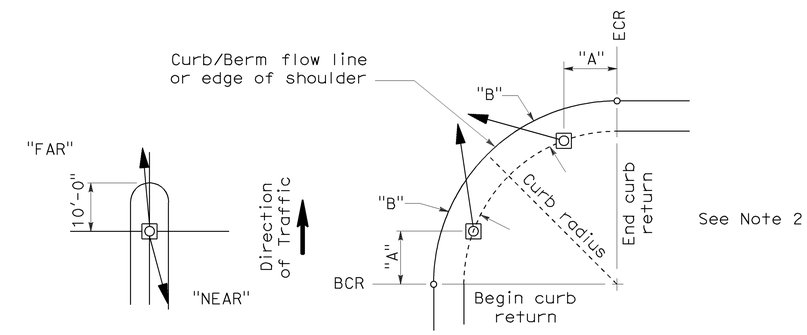

NOTES:

1. Typical signal pole placement unless dimensioned on plans.
2. For "A" and "B" dimensions, see Pole Schedule, or as directed by the Engineer.

SIGNAL STANDARD PLACEMENT DIMENSIONS AND EQUIPMENT LOCATIONS

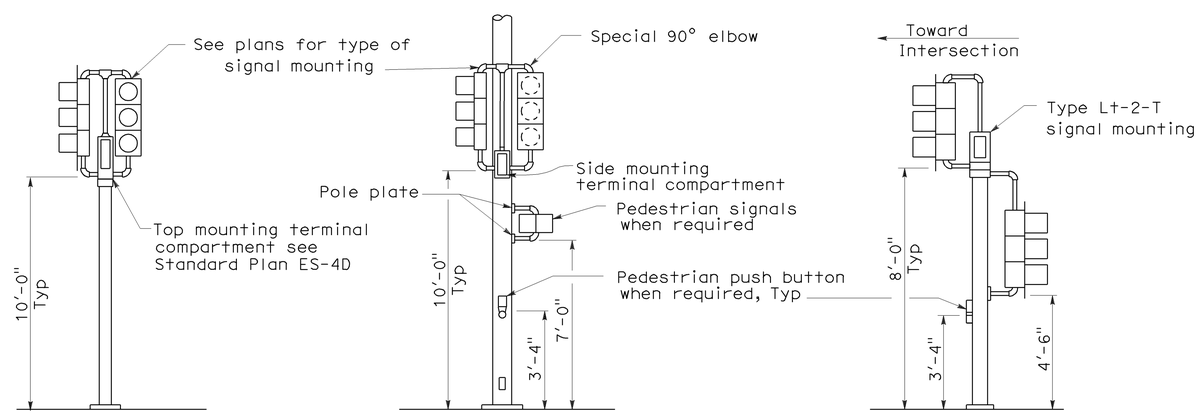

TOP MOUNTED SIGNALS (TV)

Type 1-A, 1-B, 1-C and 1-D standard as indicated on the plans

SIDE MOUNTED SIGNALS (SV AND SP)

Normally used on standards with luminaire or signal mast arm

LEFT TURN LANE SIGNAL

Type 1-A, 1-B, 1-C and 1-D standard as indicated on plans

TYPICAL SIGNAL INSTALLATIONS

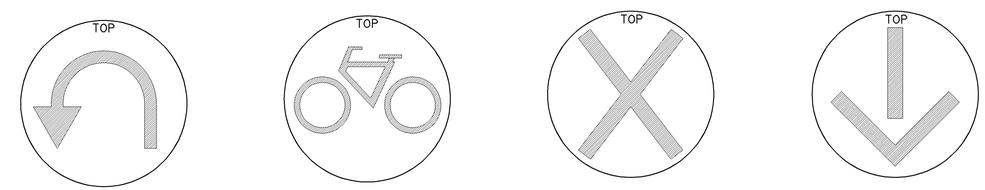

U-TURN SIGNAL FACE

BICYCLE SIGNAL FACE

LANE CONTROL SIGNAL FACE

LANE CONTROL SIGNAL FACE

STATE OF CALIFORNIA
DEPARTMENT OF TRANSPORTATION

ELECTRICAL SYSTEMS (SIGNAL HEADS AND MOUNTINGS)

NO SCALE

RSP ES-4C DATED JUNE 6, 2008 SUPERSEDES STANDARD PLAN ES-4C DATED MAY 1, 2006 - PAGE 420 OF THE STANDARD PLANS BOOK DATED MAY 2006.

REVISED STANDARD PLAN RSP ES-4C

2006 REVISED STANDARD PLAN RSP ES-4C

5-19-08

DIST	COUNTY	ROUTE	POST MILES TOTAL PROJECT	SHEET NO.	TOTAL SHEETS
07	Ven	1,33,101 & 126	Var	57	59

REGISTERED ELECTRICAL ENGINEER

October 5, 2007
PLANS APPROVAL DATE

REGISTERED PROFESSIONAL ENGINEER Jeffery G. McRae No. E14512 Exp. 6-30-08 ELECTRICAL STATE OF CALIFORNIA

The State of California or its officers or agents shall not be responsible for the accuracy or completeness of electronic copies of this plan sheet.

To accompany plans dated 5-21-12

LOOP INSTALLATION PROCEDURE

1. Loops shall be centered in lanes.
2. Saw slots in pavement for loop conductors as shown in details.
3. Distance between side of loop and a lead-in saw cut from adjacent detectors shall be 2'-0" minimum. Distance between lead-in saw cuts shall be 6" minimum.
4. Bottom of saw slot shall be smooth with no sharp edges.
5. Slots shall be washed until clean, blown out and thoroughly dried before installing loop conductors.
6. Adjacent loops on the same sensor unit channel shall be wound in opposite directions.
7. Identify and tag loop circuit pairs in the pull box with loop number, start (S) and finish (F) of conductor. Identify and tag lead-in-cable with sensor number and phase.
8. Install loop conductor in slot using a 3/16" to 1/4" thick wood paddle. Hold loop conductors with wood paddles (at the bottom of the sawed slot) during sealant placement.
9. No more than 2 twisted pairs shall be installed in one sawed slot.
10. Allow additional 5'-0" of slack length of conductor for the lead-in run to pull box.
11. The additional length of each conductor for each loop shall be twisted together into a pair (6 turns per 3'-4" minimum) before being placed in the slot and conduit leading to pull box.
12. Test each loop circuit for continuity, circuit resistance and insulation resistance at the pull box before filling slots.
13. Fill slots as shown in details.
14. Splice loop conductors to lead-in-cable. Splices shall be soldered.
15. End of lead-in-cable and Type 2 loop conductor shall be waterproofed prior to installing in conduit to prevent moisture from entering the cable.
16. Lead-in-cable shall not be spliced between the pull box and the controller cabinet terminals.
17. Test each loop circuit for continuity, circuit resistance and insulation resistance at the controller cabinet location.
18. Where loop conductors are not to be spliced to a lead-in-cable, the ends of the conductors shall be taped and waterproofed with electrical insulating coating.

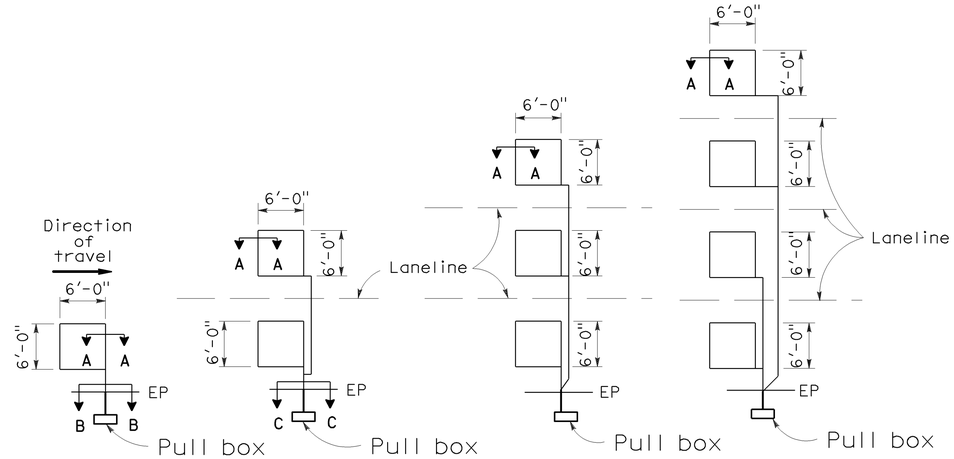

TYPE 1A INSTALLATION | TYPE 2A INSTALLATION | TYPE 3A INSTALLATION | TYPE 4A INSTALLATION

SAWCUT DETAILS

(Type A loop detector configurations illustrated)

1. 1A thru 4A = 1 Type A loop configuration in each lane.
2. 1B thru 4B = 1 Type B loop configuration in each lane.
3. 1C = 1 Type C loop configuration entering lanes as required.
4. 1D thru 4D = 1 Type D loop configuration in each lane.
5. 1E thru 4E = 1 Type E loop configuration in each lane.
6. 1Q thru 4Q = 1 Type Q loop configuration in each lane. (Use Type A, B, C, D, E or Q loop detector configurations only when specified or shown on plans)

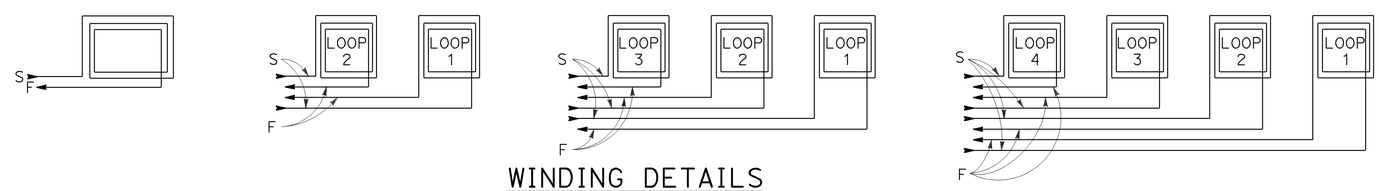

WINDING DETAILS

See Notes 6 and 7

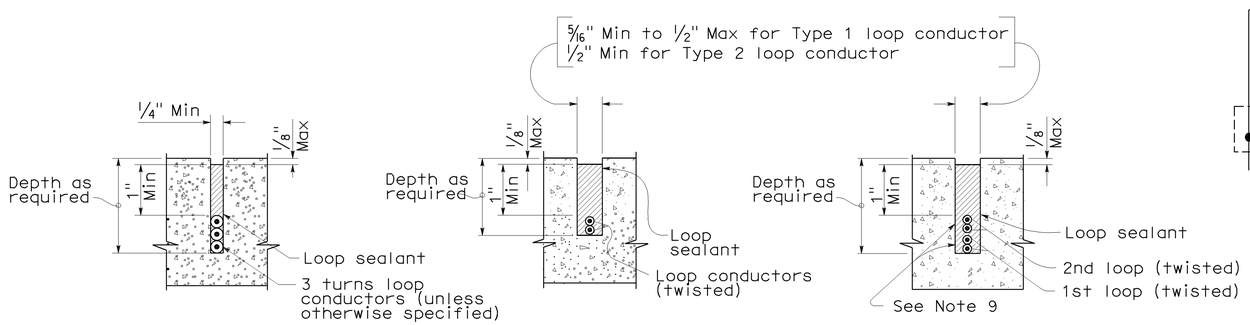

SECTION A-A | SECTION B-B | SECTION C-C

SLOT DETAILS - TYPE 1 AND TYPE 2 LOOP CONDUCTOR

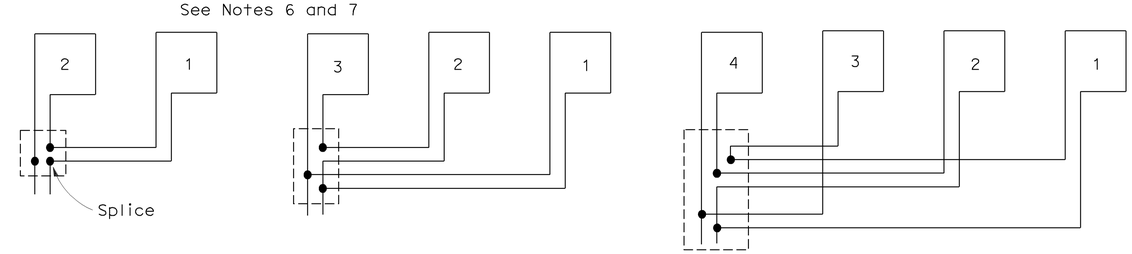

TYPICAL LOOP CONNECTIONS

(Dashed lines represent the pull box)

STATE OF CALIFORNIA
DEPARTMENT OF TRANSPORTATION

ELECTRICAL SYSTEMS (DETECTORS)

NO SCALE

RSP ES-5A DATED OCTOBER 5, 2007 SUPERCEDES STANDARD PLAN ES-5A DATED MAY 1, 2006 - PAGE 423 OF THE STANDARD PLANS BOOK DATED MAY 2006.

REVISED STANDARD PLAN RSP ES-5A

2006 REVISED STANDARD PLAN RSP ES-5A

8-17-07

DIST	COUNTY	ROUTE	POST MILES TOTAL PROJECT	SHEET NO.	TOTAL SHEETS
07	Ven	1, 33, 101 & 126	Var	58	59

REGISTERED CIVIL ENGINEER

October 5, 2007
PLANS APPROVAL DATE

REGISTERED PROFESSIONAL ENGINEER Stanley P. Johnson No. C57793 Exp. 3-31-08 CIVIL STATE OF CALIFORNIA

The State of California or its officers or agents shall not be responsible for the accuracy or completeness of electronic copies of this plan sheet.

To accompany plans dated 5-21-12

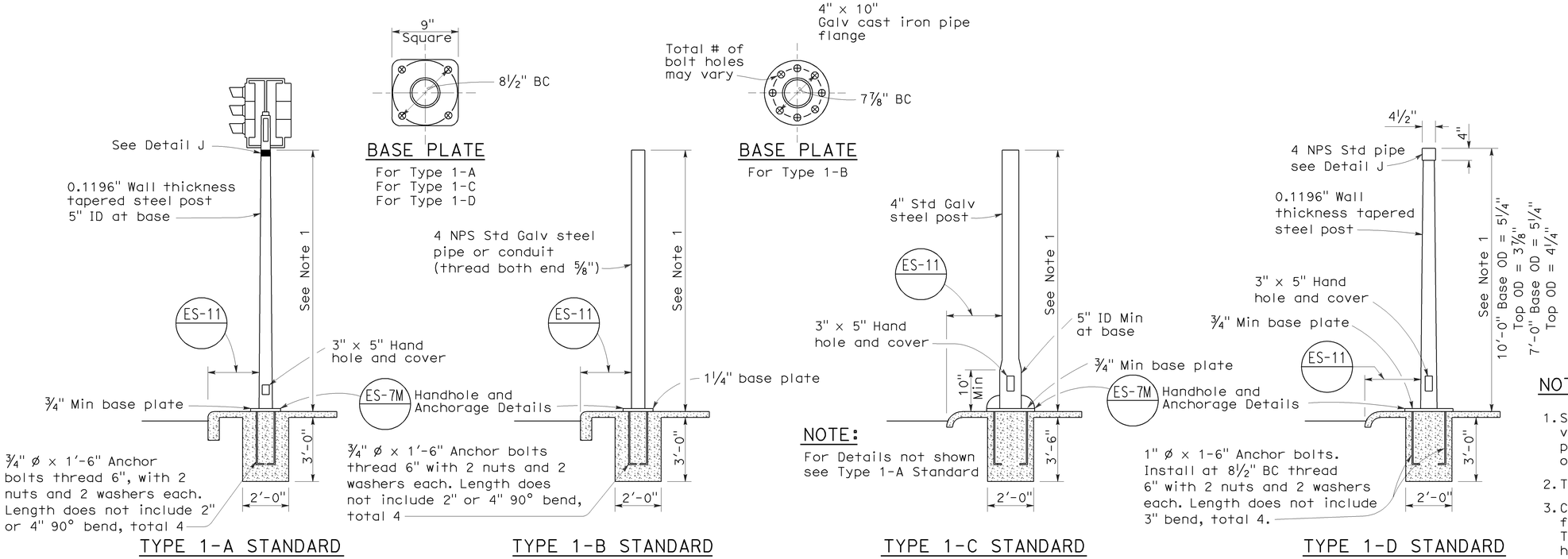

TYPE 1 SIGNAL STANDARDS

NOTES:

1. Standards shall be 10'-0" ± 2" for vehicle signals and 7'-0" ± 2" for pedestrian signals unless otherwise noted on plans.
2. Top of standards shall be 4½" OD.
3. Conduits shall extend 2" maximum above finished surface of foundation and for Types 1-A, 1-C and 1-D shall be sloped toward handhole.
4. Anchor bolts shall be bonded to conduit or grounding conductor.
5. Conduit between standard and adjacent pull box shall be 2" minimum.
6. Paint numbers on roadway side facing traffic when electrolier or post is left of direction of traffic.

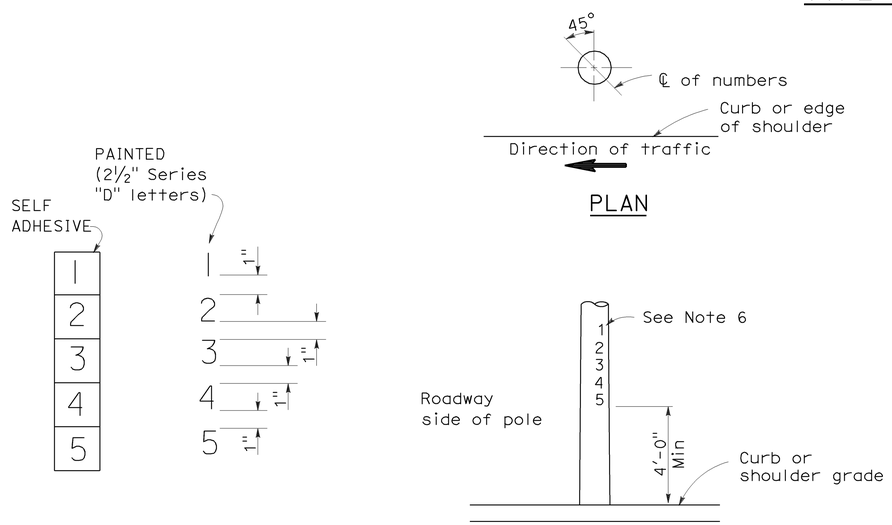

LOCATION OF EQUIPMENT NUMBERS ON STANDARDS AND POSTS

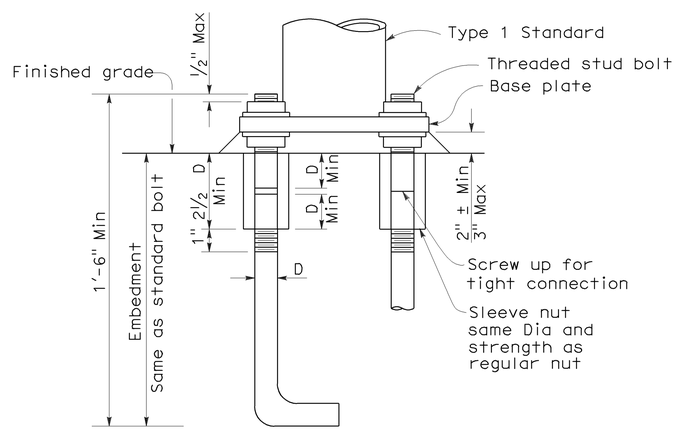

ANCHOR BOLTS WITH SLEEVE NUTS

Sleeve nuts to be used only when shown or specified on Project Plans

D = Diameter of anchor bolt

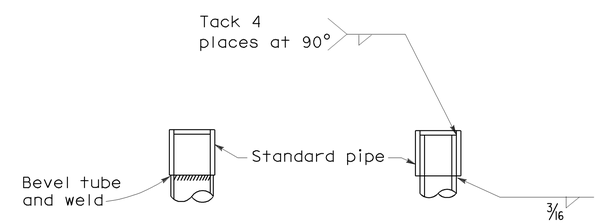

DETAIL J

Tube may be inserted into pipe or butted as required

STATE OF CALIFORNIA
DEPARTMENT OF TRANSPORTATION

ELECTRICAL SYSTEMS (SIGNAL AND LIGHTING STANDARD TYPE 1 STANDARD AND EQUIPMENT NUMBERING)

NO SCALE

RSP ES-7B DATED OCTOBER 5, 2007 SUPERCEDES STANDARD PLAN ES-7B DATED MAY 1, 2006 - PAGE 438 OF THE STANDARD PLANS BOOK DATED MAY 2006.

REVISED STANDARD PLAN RSP ES-7B

2006 REVISED STANDARD PLAN RSP ES-7B

7-10-07

DIST	COUNTY	ROUTE	POST MILES TOTAL PROJECT	SHEET NO.	TOTAL SHEETS
07	Ven	1,33,101 & 126	Var	59	59

REGISTERED ELECTRICAL ENGINEER

January 20, 2012
PLANS APPROVAL DATE

REGISTERED PROFESSIONAL ENGINEER Jeffery G. McRae No. E14512 Exp. 6-30-12 ELECTRICAL STATE OF CALIFORNIA

The State of California or its officers or agents shall not be responsible for the accuracy or completeness of electronic copies of this plan sheet.

To accompany plans dated 5-21-12

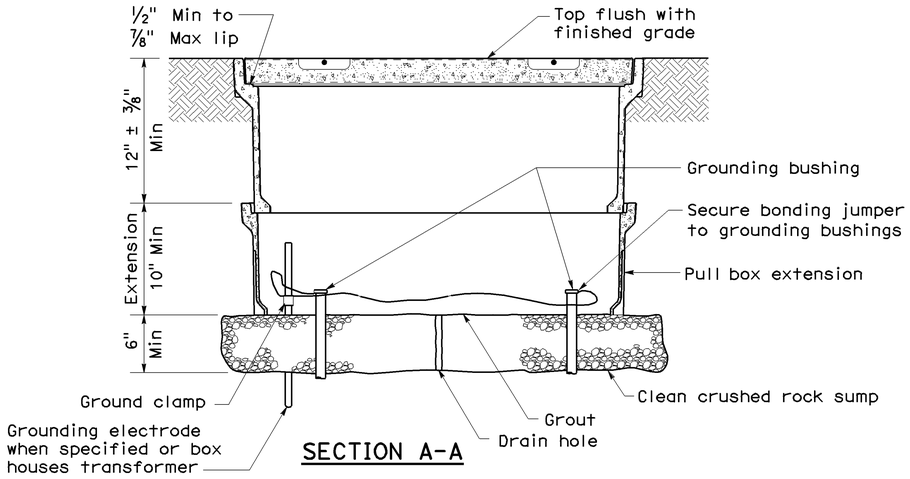

SECTION A-A

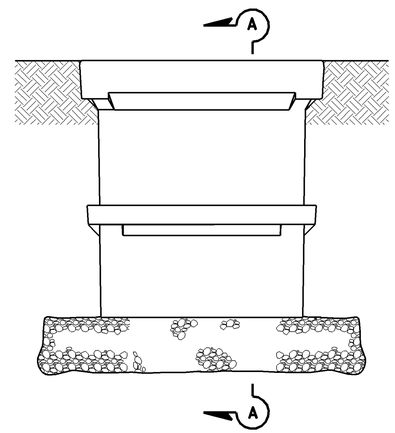

SIDE VIEW

INSTALLATION DETAILS

DETAIL A

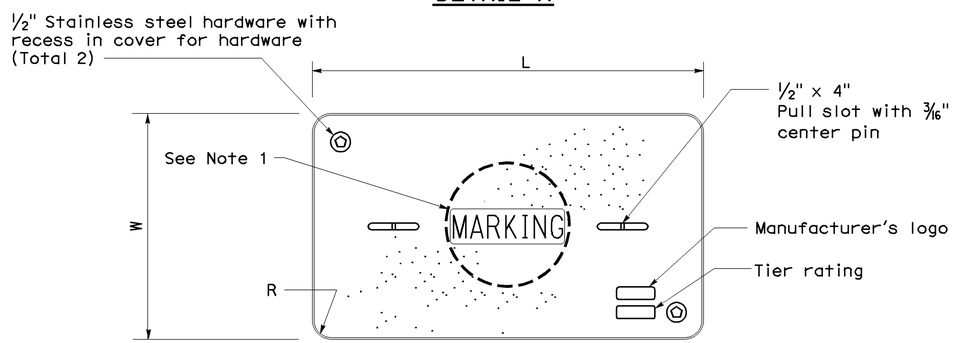

COVER TOP VIEW

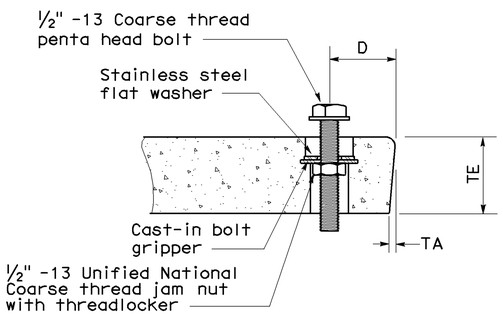

TYPICAL COVER CAPTIVE BOLT
(Or similar)

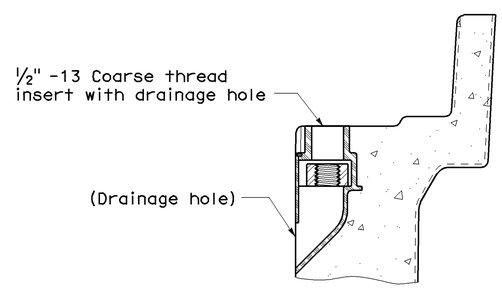

TYPICAL THREADED INSERT
(Or similar)

DIMENSION TABLE

PULL BOX	PULL BOX			COVER						
	Minimum Depth Box	Minimum Depth Extension	Maximum Weight	L	W	R	TE	TA	D	Maximum Weight
No. 3½	12"	N/A	40 lb	1' - 3⅜"	10⅛"	1⅜"	2"	⅛"	1¾"	30 lb
No. 5	12"	10"	55 lb	1' - 11¼"	1' - 1¾"	1⅜"	2"	⅛"	1¾"	60 lb
No. 6	12"	10"	70 lb	2' - 6½"	1' - 5½"	1⅜"	2"	⅛"	2"	85 lb

NOTES ON PULL BOXES:

1. Pull box covers must be marked as follows: "SERVICE" Service circuits between service point and service disconnect; "SPRINKLER-CONTROL" sprinkler control circuits, 50 V or less; "CALTRANS" on all pull boxes, except pull boxes marked "SPRINKLER-CONTROL"; and "TELEPHONE" Telephone service;

   A) No. 3½ pull box.
      1) "SIGNAL" - Traffic signal circuits with or without street or sign lighting circuits.
      2) "ST LIGHTING" - Street or sign lighting circuits where voltage is under 600 V.

   B) No. 5, 6, 9 or 9A pull box.
      1) "TRAFFIC SIGNAL" - Traffic signal circuits with or without street or sign lighting circuits.
      2) "STREET LIGHTING" - Street or sign lighting circuits where voltage is under 600 V.
      3) "STREET LIGHTING-HIGH VOLTAGE" - Street or sign lighting circuits where voltage is above 600 V.
      4) "IRRIGATION" - Circuits to irrigation controller 120 V or more.
      5) "RAMP METER" - Ramp meter circuits.
      6) "COUNT STATION" - Count or speed monitor circuits.
      7) "COMMUNICATIONS" - Communication circuits.
      8) "TOS COMMUNICATIONS" - TOS communication line.
      9) "TOS POWER" -TOS power.
      10) "TDC POWER" - Telephone demarcation cabinet power.
      11) "CCTV" - Closed circuit television circuits.
      12) "TMS" - Traffic monitoring station circuits.
      13) "CMS" - Changeable message sign circuits.
      14) "HAR" - Highway advisory radio circuits.

2. The nominal dimensions of the opening in which the cover sets must be the same as the cover dimensions (L and W) plus ⅛" or greater.

3. Covers and boxes must be interchangeable with California Standard. When interchanged with a standard, the top surfaces must be flush within ⅛". Top outside radius of covers and pull boxes must have a ⅛" radius.

4. Pull box extension may be another pull box as long as the bottom edge of the pull box can fit into the cover opening.

STATE OF CALIFORNIA
DEPARTMENT OF TRANSPORTATION

ELECTRICAL SYSTEMS (PULL BOX)

NO SCALE

NSP ES-8A DATED JANUARY 20, 2012 SUPPLEMENTS THE STANDARD PLANS BOOK DATED MAY 2006.

NEW STANDARD PLAN NSP ES-8A

2006 NEW STANDARD PLAN NSP ES-8A