Dist	COUNTY	ROUTE	POST MILES TOTAL PROJECT	SHEET No.	TOTAL SHEETS
07	LA,Ven	2,5,14,33, 101, *etc.*	Var	101	142

REGISTERED CIVIL ENGINEER 10-18-10 DATE

10-3-11
PLANS APPROVAL DATE

REGISTERED PROFESSIONAL ENGINEER BENJAMIN RAMOS No. C 61340 Exp. 6-30-13 CIVIL STATE OF CALIFORNIA

THE STATE OF CALIFORNIA OR ITS OFFICERS OR AGENTS SHALL NOT BE RESPONSIBLE FOR THE ACCURACY OR COMPLETENESS OF SCANNED COPIES OF THIS PLAN SHEET.

LEGEND

- CONE
- TRAFFIC PLASTIC DRUM
- FLASHING ARROW SIGN
- PORTABLE SIGN
- DIRECTION OF TRAVEL
- PORTABLE CHANGEABLE MESSAGE SIGN (PCMS)

ABBREVIATIONS

(CA) CALIFORNIA CODE

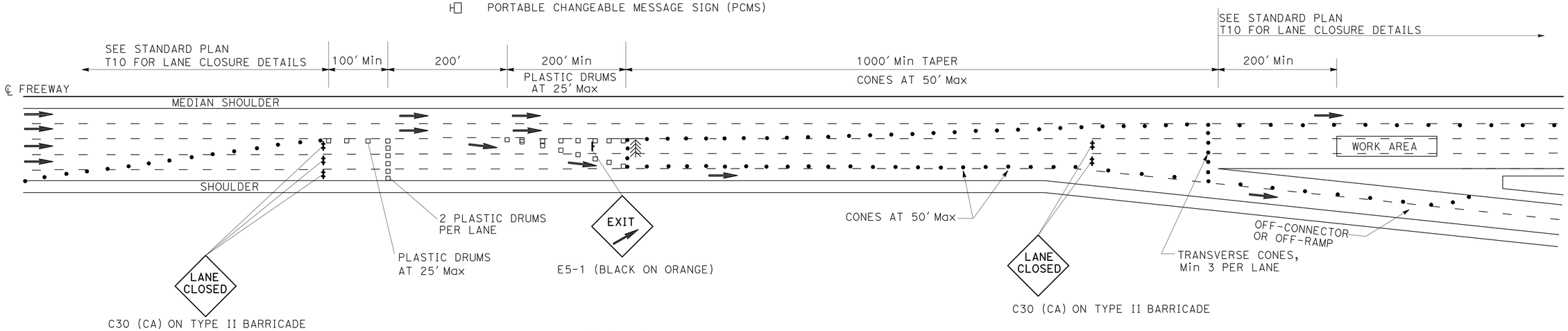

OPTION 1

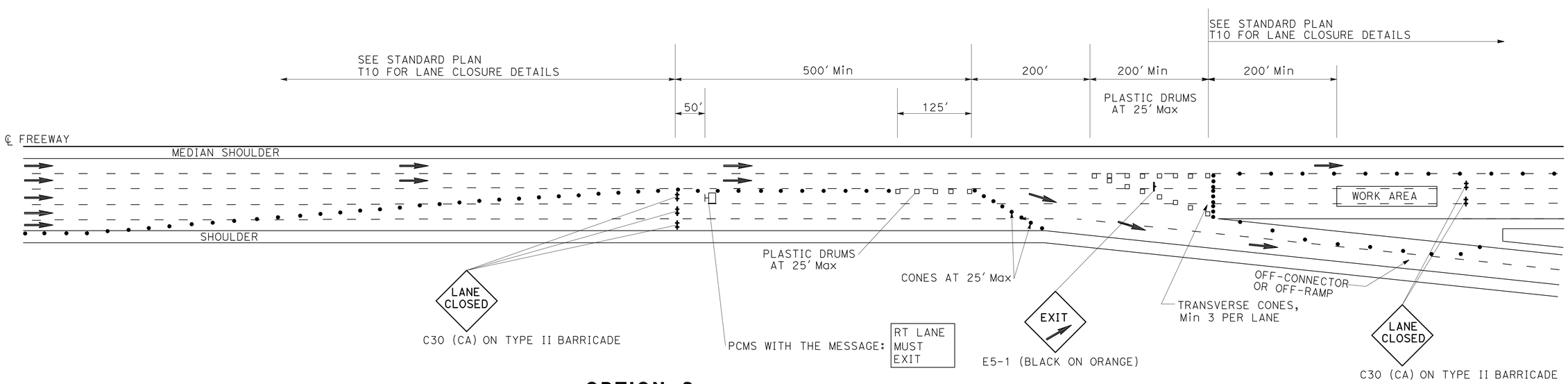

OPTION 2

TRAFFIC HANDLING DETAILS

TRAFFIC CONTROL SYSTEM FOR SLIP-RAMP AT OFF-CONNECTOR OR OFF-RAMP

NO SCALE

THD-3

THIS PLAN ACCURATE FOR TRAFFIC HANDLING WORK ONLY.

REVISED BY	DATE REVISED
JC	7/10

CALCULATED-DESIGNED BY: ALBERT K YU
CHECKED BY: JOCELYN C CHIANG
FUNCTIONAL SUPERVISOR: MARTIN OREGEL

STATE OF CALIFORNIA - DEPARTMENT OF TRANSPORTATION
Caltrans® DTM

LAST REVISION 00-00-00 | DATE PLOTTED => 03-OCT-2011 | TIME PLOTTED => 14:38

Dist	COUNTY	ROUTE	POST MILES TOTAL PROJECT	SHEET No.	TOTAL SHEETS
07	LA,Ven	2,5,14,33, 101, etc.	Var	102	142

REGISTERED CIVIL ENGINEER 10-18-10 DATE

10-3-11
PLANS APPROVAL DATE

REGISTERED PROFESSIONAL ENGINEER BENJAMIN RAMOS No. C 61340 Exp. 6-30-13 CIVIL STATE OF CALIFORNIA

THE STATE OF CALIFORNIA OR ITS OFFICERS OR AGENTS SHALL NOT BE RESPONSIBLE FOR THE ACCURACY OR COMPLETENESS OF SCANNED COPIES OF THIS PLAN SHEET.

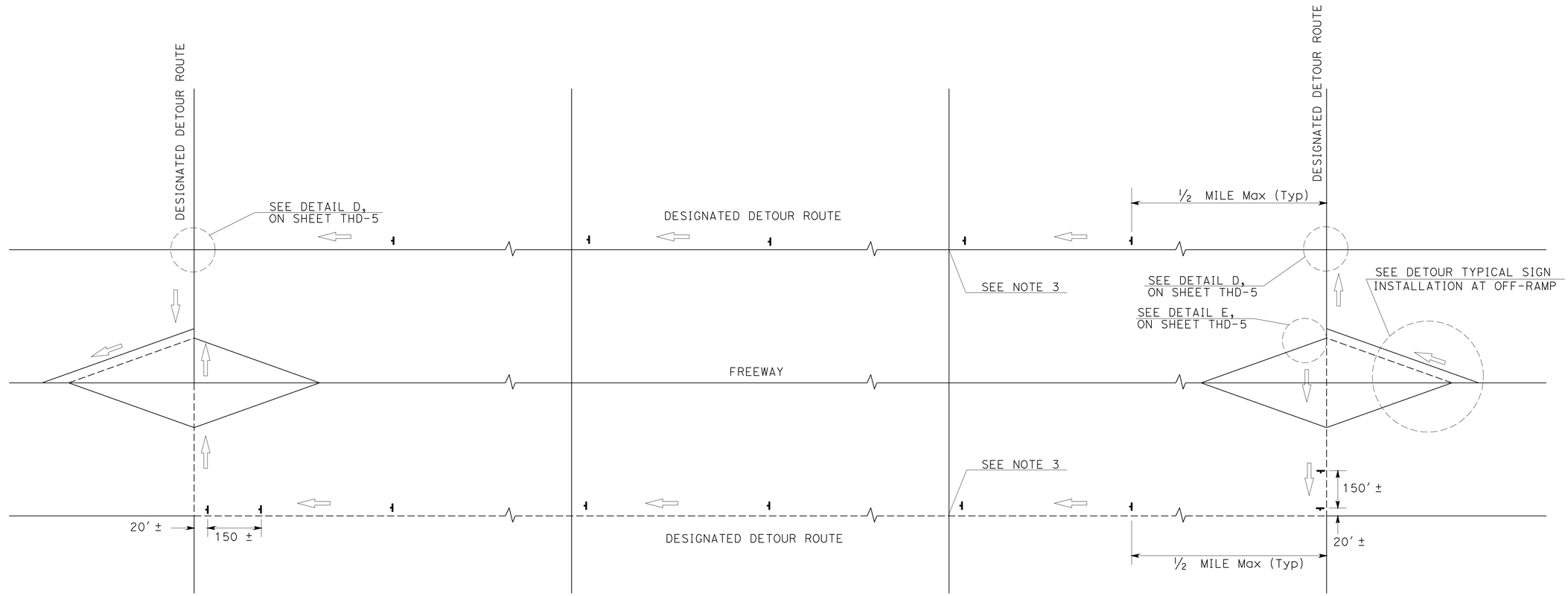

TYPICAL DETOUR SIGN INSTALLATION ALONG DESIGNATED DETOUR ROUTE

LEGEND

- TEMPORARY SIGN (SP-2)
- AND/OR DESIGNATED DETOUR ROUTE
- DIRECTION OF TRAVEL

NOTES:

1. SP-2 SIGNS SHALL NOT BE INSTALLED ON BARRICADES EXCEPT AS OTHERWISE SHOWN.
2. SIGN LOCATIONS ARE APPROXIMATE. EXACT LOCATIONS WILL BE DETERMINED BY THE ENGINEER.
3. SP-2 SIGNS SHALL BE POSTED AT SIGNALIZED INTERSECTIONS ALONG THE DESIGNATED DETOUR ROUTE OR ½ MILE MAXIMUM APART.

TRAFFIC HANDLING DETAILS

TRAFFIC CONTROL SYSTEM FOR DETOUR SIGN INSTALLATION ALONG DESIGNATED DETOUR ROUTE

SHEET 1 OF 2

NO SCALE

THIS PLAN ACCURATE FOR TRAFFIC HANDLING WORK ONLY.

THD-4

STATE OF CALIFORNIA - DEPARTMENT OF TRANSPORTATION
Caltrans DTM

FUNCTIONAL SUPERVISOR: MARTIN OREGEL
CALCULATED-DESIGNED BY: ALBERT K YU
CHECKED BY: JOCELYN C CHIANG
REVISED BY: JC
DATE REVISED: 7/10

LAST REVISION 00-00-00 | DATE PLOTTED => 03-OCT-2011 | TIME PLOTTED => 14:39

Dist	COUNTY	ROUTE	POST MILES TOTAL PROJECT	SHEET No.	TOTAL SHEETS
07	LA,Ven	2,5,14,33, 101, *etc.*	Var	103	142

REGISTERED CIVIL ENGINEER 10-18-10 DATE

10-3-11
PLANS APPROVAL DATE

REGISTERED PROFESSIONAL ENGINEER BENJAMIN RAMOS No. C 61340 Exp. 6-30-13 CIVIL STATE OF CALIFORNIA

THE STATE OF CALIFORNIA OR ITS OFFICERS OR AGENTS SHALL NOT BE RESPONSIBLE FOR THE ACCURACY OR COMPLETENESS OF SCANNED COPIES OF THIS PLAN SHEET.

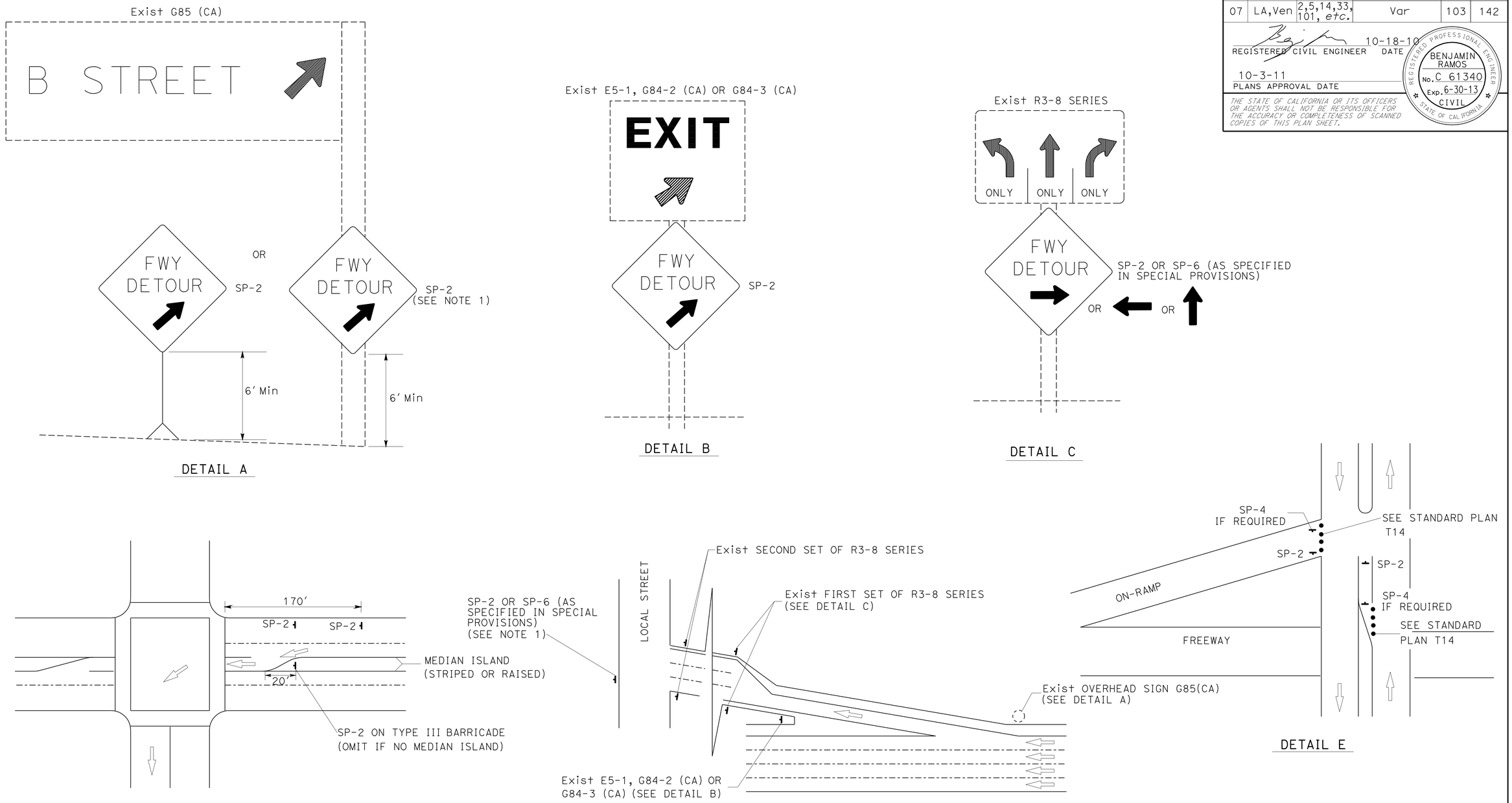

TYPICAL DETOUR SIGN INSTALLATION AT OFF-RAMP

NOTES:

1. TEMPORARY SIGNS MAY BE STRAPPED ON EXISTING ELECTROLIER, SIGNAL POSTS, OR SIGN POSTS.
2. OMIT DETAIL A AND DETAIL B FOR FULL FREEWAY CLOSURES.

ABBREVIATIONS

(CA) CALIFORNIA CODE

LEGENDS

- TRAFFIC CONE
- TEMPORARY SIGN
- DIRECTION OF TRAVEL
- EXISTING OVERHEAD SIGN

TRAFFIC HANDLING DETAILS
TRAFFIC CONTROL SYSTEM FOR DETOUR SIGN INSTALLATION ALONG DESIGNATED DETOUR ROUTE SHEET 2 OF 2

NO SCALE

THIS PLAN ACCURATE FOR TRAFFIC HANDLING WORK ONLY.

THD-5

STATE OF CALIFORNIA - DEPARTMENT OF TRANSPORTATION
Caltrans DTM

FUNCTIONAL SUPERVISOR: MARTIN OREGEL

CALCULATED-DESIGNED BY: ALBERT K YU
CHECKED BY: JOCELYN C CHIANG

REVISED BY: JC
DATE REVISED: 8/10

LAST REVISION 00-00-00
DATE PLOTTED => 03-OCT-2011
TIME PLOTTED => 14:39

Dist	COUNTY	ROUTE	POST MILES TOTAL PROJECT	SHEET No.	TOTAL SHEETS
07	LA,Ven	2,5,14,33, 101, etc.	Var	104	142

REGISTERED CIVIL ENGINEER 7/29/11 DATE

10-3-11
PLANS APPROVAL DATE

REGISTERED PROFESSIONAL ENGINEER FREW KOTISSO No. C72485 Exp. 6/30/12 CIVIL STATE OF CALIFORNIA

THE STATE OF CALIFORNIA OR ITS OFFICERS OR AGENTS SHALL NOT BE RESPONSIBLE FOR THE ACCURACY OR COMPLETENESS OF SCANNED COPIES OF THIS PLAN SHEET.

ROADWAY QUANTITIES / PAVEMENT DELINEATION

SHEET NUMBER	LOCATION NUMBER	ROADWAY EXCAVATION	ROADWAY* EXCAVATION (TYPE Z-2) (AERIALLY DEPOSITED LEAD)	REMOVE CONCRETE ISLAND	REMOVE CONCRETE TYPE A1 CURB	REMOVE CONCRETE TYPE A2 CURB	REMOVE CONCRETE TYPE B2 CURB	LEAN CONCRETE BASE	CLASS 3 AGGREGATE BASE	HOT MIX ASPHALT (TYPE B)	MINOR CONCRETE (STAMPED CONCRETE)	MINOR CONCRETE (COLORED)	MINOR CONCRETE (CURB AND GUTTER) (TYPE B4)	MINOR CONCRETE (CURB AND GUTTER) (TYPE B4-Mod)	PLACE HMA DIKE (TYPE C)	REMOVE PAVEMENT MARKER	REMOVE THERMOPLASTIC PAMVEMENT MARKING	REMOVE THERMOPLASTIC TRAFFIC STRIPE YELLOW (HAZARDOUS WASTE)	REMOVE THERMOPLASTIC TRAFFIC STRIPE WHITE	REMOVE DELINEATOR	DELINEATOR (CLASS 1) TYPE G	DELINEATOR (CLASS 1) TYPE F	THERMOPLASTIC PAVEMENT MARKING	THERMOPLASTIC TRAFFIC STRIPE Det 8 4" BROKEN 17-7 WHITE	THERMOPLASTIC TRAFFIC STRIPE Det 25A 4" SOLID YELLOW	THERMOPLASTIC TRAFFIC STRIPE Det 27B 4" SOLID WHITE	THERMOPLASTIC TRAFFIC STRIPE Det 36 8" SOLID WHITE	THERMOPLASTIC TRAFFIC STRIPE Det 36A 8" SOLID WHITE	THERMOPLASTIC TRAFFIC STRIPE Det 36B 8" SOLID WHITE	THERMOPLASTIC TRAFFIC STRIPE Det 38B 8" SOLID WHITE	PAVEMENT MARKER (RETROREFLECTIVE) TYPE G	PAVEMENT MARKER (RETROREFLECTIVE) TYPE H	ADJUST PULL BOX TO GRADE
		CY	CY	CY	CY	CY	CY	CY	CY	TON	CY	CY	CY	CY	LF	EA	SQFT	LF	LF	EA	EA	EA	SQFT		LF	LF	LF	LF	LF	LF	EA	EA	EA
L-1	1	45.9						10.0	14.4		20.0					17		194.6	672.1				55.6		194.6	353.7		159.2			33	9	
L-2	2	12.0	138.0					31.4	44.9		62.8		11.9			20		124.8	1,370.1	1	2		125.0		229.2	456.7		456.7			145	11	1
L-3	3	82.0						15.6	22.3		31.2		13.0			32		255.0	1,609.7		2		136.0		255.0	706.5		451.6			120	12	
L-4	4	107.7	19.5					24.3	37.7		48.7										3											
L-5	5	265.6	44.5					57.2	81.7		114.6		12.4			18		234.3	687.3		3		48.4		234.3	385.3		150.9			37	11	
L-6	6	215.0						48.5	69.4		97.0					15		132.5	669.4		5		41.1		132.5	311.3		178.8			33	7	
L-7	7	91.2						20.6	29.4		41.2					17		160.0	1,284.5		2		56.3	190.4	160.0	344.4		184.4			49	8	
L-8	8	145.0						32.8	46.8		65.6					14		128.5	660.4		2		50.0	147.9	128.5	305.8		177.3			28	6	
L-9	9	256.6						56.0	79.9		111.6		8.8			18		201.7	810.3	2	5	5	74.0		201.7	404.6		202.9			39	9	
L-10	10															18		203.8	794.7				84.3		203.8	400.8		196.9			49	9	
L-11	11	128.3						28.9	41.4		57.9					15		131.4	694.2	1	3	3	59.7		131.4	319.0		187.6			39	6	
L-12	12	101.6						22.6	33.8		45.2					36	65.7	200.9	1,442.9		3	3	213.0		200.9	200.9	621.0				160	9	
L-13	13	92.9				7.1		20.6	30.9				6.8			13		132.7	498.8		3		29.5		132.7	254.8		122.0			26	7	
L-14	14															14		132.6	554.1			4	47.8		132.6	273.3		140.5			37	7	
L-15	15	173.0				20.0		39.5	70.0	49.6	25.3		19.4			16		170.0	680.0						170.0	340.0		170.0			8	8	2
L-15	16															37			968.0				152.4				671.8			297.1	90		
L-16	17																		2,142.0				174.8				1071.6				100		
L-17	18																		2,056.0				166.0								80		
L-18	19															25			1,146.0				87.1								60		
L-19	20															28	30.5		1,280.0				104.2			640.0		640.0			70		
L-20	21	88.2						18.9	28.4		37.8		3.1			11			715.7		3					241.8		237.0			51		
L-21	22	189.9						41.5	59.4		89.0					21		258.8	817.6		5		46.9		258.8	445.0		186.3			39	12	
L-22	23	114.4						25.0	35.8		53.6					19		225.4	815.0		4		34.7		225.4	421.9		196.5			29	10	
L-23	24	73.8						16.2	23.0		34.6					14		150.8	606.0		3		46.3		150.8	302.5		151.7			32	7	
L-24	25	210.8						43.0	61.3		92.0		14.5			20		306.0	680.6		5		35.5		305.9	430.8		124.9			26	14	
L-25	26	75.8						16.6	23.7		35.5					11		98.6	481.7		4		38.6		98.6	226.3		127.7			31	5	
L-25	27	66.7						14.6	20.8		31.3					13		147.1	518.5		3		40.2		147.2	270.9		123.9			31	7	
L-26	28	298.8						64.3	91.8		137.0		5.7			24		386.8	820.0		7		36.2		386.8	531.3		144.4			29	17	
L-27	29	146.1						31.9	45.6	0.3	68.5				43.5								69.3								40		
L-28	30	134.9						28.8	41.2		61.8		2.9			13		145.0	505.4		3		30.2		145.0	265.4		120.3			22	7	
L-29	31																						147.5									90	
SUBTOTAL		3,116.2	202.0			27.1		708.8	1,033.6	49.9	1,362.2		98.5		43.5	499	96.2	4,121.3	2,5981.0	4	70	15	2,230.6	338.3	4,225.7	8,833.0	2,364.4	4,831.5		297.1	1,533	288	3
SHEET TOTAL		3,116.2	202.0			27.1		708.8	1,033.6	49.9	1,362.2		98.5		43.5	499	96.2	4,121.3	2,5981.0	4	85		2,230.6	338.3	1,3058.7			7,493.0			1,821		3

* SEE C-13 FOR EXACT LOCATION OF ROADWAY EXCAVATION (TYPE Z-2) (AERIALLY DEPOSITED LEAD)

SUMMARY OF QUANTITIES

Q-1

STATE OF CALIFORNIA - DEPARTMENT OF TRANSPORTATION
Caltrans TRAFFIC DESIGN

FUNCTIONAL SUPERVISOR: ANH D. NGUYEN
CALCULATED-DESIGNED BY: SHAHAN PETROSSIAN
CHECKED BY: FREW KOTISSO
REVISED BY / DATE REVISED

LAST REVISION 00-00-00 | DATE PLOTTED => 03-OCT-2011 | TIME PLOTTED => 14:39

Dist	COUNTY	ROUTE	POST MILES TOTAL PROJECT	SHEET No.	TOTAL SHEETS
07	LA,Ven	2,5,14,33, 101, etc.	Var	105	142

REGISTERED CIVIL ENGINEER 7/29/11 DATE

10-3-11
PLANS APPROVAL DATE

REGISTERED PROFESSIONAL ENGINEER FREW KOTISSO No. C72485 Exp. 6/30/12 CIVIL STATE OF CALIFORNIA

THE STATE OF CALIFORNIA OR ITS OFFICERS OR AGENTS SHALL NOT BE RESPONSIBLE FOR THE ACCURACY OR COMPLETENESS OF SCANNED COPIES OF THIS PLAN SHEET.

ROADWAY QUANTITIES / PAVEMENT DELINEATION

SHEET NUMBER	LOCATION NUMBER	ROADWAY EXCAVATION	ROADWAY* EXCAVATION (TYPE Z-2) (AERIALLY DEPOSITED LEAD)	REMOVE CONCRETE: ISLAND	REMOVE CONCRETE: TYPE A1 CURB	REMOVE CONCRETE: TYPE A2 CURB	REMOVE CONCRETE: TYPE B2 CURB	LEAN CONCRETE BASE	CLASS 3 AGGREGATE BASE	HOT MIX ASPHALT (TYPE B)	MINOR CONCRETE (STAMPED CONCRETE)	MINOR CONCRETE (COLORED)	MINOR CONCRETE (CURB AND GUTTER): (TYPE B4)	MINOR CONCRETE (CURB AND GUTTER): (TYPE B4-Mod)	PLACE HMA DIKE (TYPE C)	REMOVE PAVEMENT MARKER	REMOVE THERMOPLASTIC PAMVEMENT MARKING	REMOVE THERMOPLASTIC TRAFFIC STRIPE: YELLOW (HAZARDOUS WASTE)	REMOVE THERMOPLASTIC TRAFFIC STRIPE: WHITE	REMOVE DELINEATOR	DELINEATOR (CLASS 1): TYPE G	DELINEATOR (CLASS 1): TYPE F	THERMOPLASTIC PAVEMENT MARKING	THERMOPLASTIC TRAFFIC STRIPE: Det 8 4" BROKEN 17-7 WHITE	THERMOPLASTIC TRAFFIC STRIPE: Det 25A 4" SOLID YELLOW	THERMOPLASTIC TRAFFIC STRIPE: Det 27B 4" SOLID WHITE	THERMOPLASTIC TRAFFIC STRIPE: Det 36 8" SOLID WHITE	THERMOPLASTIC TRAFFIC STRIPE: Det 36A 8" SOLID WHITE	THERMOPLASTIC TRAFFIC STRIPE: Det 36B 8" SOLID WHITE	THERMOPLASTIC TRAFFIC STRIPE: Det 38B 8" SOLID WHITE	PAVEMENT MARKER (RETROREFLECTIVE) TYPE G	PAVEMENT MARKER (RETROREFLECTIVE) TYPE H	ADJUST PULL BOX TO GRADE
		CY	CY	CY	CY	CY	CY	CY	CY	TON	CY	CY	CY	CY	LF	EA	SQFT	LF	LF	EA	EA	EA	SQFT		LF	LF	LF	LF	LF	LF	EA	EA	EA
L-30	32															36			1,676.0				106.9				838.0				106		
L-31	33																						43.6								25		
L-31	34	316.4				18.8		65.9	94.2			131.8	24.5			16		214.0	583.6		5				214.0	337.8		122.9			6	10	
L-32	35	74.8				6.8		15.3	21.9			30.6	7.0			9		96.0	336.0		3				96.0	176.0		80.0			4	5	
L-32	36	41.2				18.1		9.3	13.3			18.6	17.5			9		66.1	340.7		3				66.1	157.7		91.5			5	4	
L-33	37	20.8				5.7		4.5	6.5		9.7		5.5			22			1,000.0				39.7				813.6				55		
L-34	38	22.5			8.4						11.1			1.7		10		128.3	206.9		4				128.3	144.8		62.1			4	6	
L-35	39	80.3				10.5		18.1	25.9		36.3		13.9	1.3		16		121.5	768.8		2		68.8		121.5	337.3		215.7			50	6	
L-35	40	68.2				12.4		15.4	22.0		30.8		12.0			8		105.2	239.0		2				105.2	149.8		44.6			3	5	
L-36	41	8.3		6.8			5.9	3.4	4.9		6.8		5.4			6		47.7	214.2				27.0		47.7	104.3		55.0			18	3	
L-37	42	8.7				6.5		2.0	2.8		3.9		6.2			12		48.7	634.4				57.0		48.7	250.4		192.0			39	3	
L-38	43	42.6		35.1		14.5		17.6	25.0		35.1		22.8			18		202.2	744.8		2		67.8		202.2	383.0		180.9			50	9	
L-38	44	43.2		35.7		14.1		25.3	17.9		35.7		21.7			17		190.1	727.0		3		70.0		190.1	369.1		179.0			48	9	
L-39	45	98.2				7.5		22.2	31.7		44.4		8.8			14		126.4	646.8		3		68.9		126.4	299.8		173.5			48	6	
L-40	46	51.8					8.1	11.7	16.7		23.4		8.9	0.6		13		125.5	568.2		2		58.6		125.5	273.0		147.6			37	6	
L-41	47	81.8					8.8	18.5	26.4		36.9		10.7	0.9		13		93.4	588.5		2				93.4	258.5		165.0			8	5	2
L-42	48	171.8					10.8	37.4	53.5		74.9		14.7	1.6		12		128.4	516.3		2		43.8		128.4	257.3		129.3			26	6	
L-43	49	127.5					10.8	28.8	41.1		57.6		14.3	1.6		12		125.4	509.1		2		35.7		125.4	253.3		127.8			31	6	
L-44	50	246.7				15.8		57.5	106.4	65.4	47.3		15.3			21		246.5	927.3		4		89.7		246.5	473.5		226.9			70	7	
L-45	51	106.9		24.6		12.0		24.8	44.3	24.4	24.6		11.6			18		182.2	734.2		3				182.2	366.2		184.0			9	9	
L-46	52	77.0		21.0		9.2		22.8	41.3	24.0	21.0		8.9			15		156.3	600.3		3				156.3	304.3		148.0			8	7	
L-47	53	84.7		28.2		10.8		26.7	45.3	23.3	28.2		10.4			17		182.0	711.6		3				182.0	358.6		176.5			8	9	
L-48	54	54.4		18.1		6.7		16.7	29.5	15.2	18.1		6.4			12		111.1	458.8		3		39.8		111.1	227.0		115.9			26	6	
L-49	55	116.2		41.3		14.8		36.1	63.1	31.1	41.3		14.3			20		249.8	800.6		3		78.4		249.8	433.4		183.6			59	11	
L-50	56	296.4		135.9		19.7		98.0	163.7	63.8	135.9		19.0			24		333.4	910.6		3				333.4	525.8		192.4			9	15	2
L-51	57	16.7				5.9		4.1	8.7	7.6			10.7			19			1,274.3				177.6			424.3		424.3			150		
L-51	58	103.3	135.0			9.1		22.6	32.3		48.4		12.1			12		105.6	399.0		5				105.6	252.3		146.7			7	5	
L-52	59	57.9				8.9		10.9	15.6		23.4		5.8			13		101.8	574.7		2				101.8	259.5		157.6			8	5	
L-53	60	41.8		36.9		12.5		17.2	24.6		36.9		18.8			17		164.7	764.0		4				164.7	364.5		199.8			9	8	
L-54	61	43.0				19.5		9.4	13.5		20.2		18.8			21		161.9	1,025.4				73.0		161.6	449.8		287.8			53	8	
L-55	62															30			1,388.0				130.5				694.0				120		
SUBTOTAL		2,503.1	135.0	383.6	8.4	259.8	44.4	642.2	992.1	254.8	851.9	181.0	346.0	7.7		482		3,814.2	2,0869.1		68		1,276.8		3,813.9	8,191.3	2,345.6	4,410.4			1,099	179	4
SHEET TOTAL		2,503.1	135.0	696.2				642.2	992.1	254.8	851.9	181.0	353.7			482		3,814.2	2,0869.1		68		1,276.8		1,2005.2		6,756.0			1,278		4

* SEE C-13 FOR EXACT LOCATION OF ROADWAY EXCAVATION (TYPE Z-2) (AERIALLY DEPOSITED LEAD)

SUMMARY OF QUANTITIES

Q-2

THIS PLAN ACCURATE FOR TRAFFIC HANDLING WORK ONLY.

STATE OF CALIFORNIA - DEPARTMENT OF TRANSPORTATION
Caltrans TRAFFIC DESIGN
FUNCTIONAL SUPERVISOR: ANH D. NGUYEN
CALCULATED-DESIGNED BY: SHAHAN PETROSSIAN
CHECKED BY: FREW KOTISSO
REVISED BY / DATE REVISED

LAST REVISION 00-00-00 | DATE PLOTTED => 03-OCT-2011 | TIME PLOTTED => 14:39

Dist	COUNTY	ROUTE	POST MILES TOTAL PROJECT	SHEET No.	TOTAL SHEETS
07	LA,Ven	2,5,14,33, 101, etc.	Var	106	142

REGISTERED CIVIL ENGINEER 7/29/11 DATE

PLANS APPROVAL DATE 10-3-11

REGISTERED PROFESSIONAL ENGINEER FREW KOTISSO No. C72485 Exp. 6/30/12 CIVIL STATE OF CALIFORNIA

THE STATE OF CALIFORNIA OR ITS OFFICERS OR AGENTS SHALL NOT BE RESPONSIBLE FOR THE ACCURACY OR COMPLETENESS OF SCANNED COPIES OF THIS PLAN SHEET.

ROADWAY QUANTITIES / PAVEMENT DELINEATION

SHEET NUMBER	LOCATION NUMBER	ROADWAY EXCAVATION	ROADWAY* EXCAVATION (TYPE Z-2) (AERIALLY DEPOSITED LEAD)	REMOVE CONCRETE: ISLAND	REMOVE CONCRETE: TYPE A1 CURB	REMOVE CONCRETE: TYPE A2 CURB	REMOVE CONCRETE: TYPE B2 CURB	LEAN CONCRETE BASE	CLASS 3 AGGREGATE BASE	HOT MIX ASPHALT (TYPE B)	MINOR CONCRETE (STAMPED CONCRETE)	MINOR CONCRETE (COLORED)	MINOR CONCRETE (CURB AND GUTTER): (TYPE B4)	MINOR CONCRETE (CURB AND GUTTER): (TYPE B4-Mod)	PLACE HMA DIKE (TYPE C)	REMOVE PAVEMENT MARKER	REMOVE THERMOPLASTIC PAMVEMENT MARKING	REMOVE THERMOPLASTIC TRAFFIC STRIPE: YELLOW (HAZARDOUS WASTE)	REMOVE THERMOPLASTIC TRAFFIC STRIPE: WHITE	REMOVE DELINEATOR	DELINEATOR (CLASS 1): TYPE G	DELINEATOR (CLASS 1): TYPE F	THERMOPLASTIC PAVEMENT MARKING	THERMOPLASTIC TRAFFIC STRIPE: Det 8 4" BROKEN 17-7 WHITE	THERMOPLASTIC TRAFFIC STRIPE: Det 25A 4" SOLID YELLOW	THERMOPLASTIC TRAFFIC STRIPE: Det 27B 4" SOLID WHITE	THERMOPLASTIC TRAFFIC STRIPE: Det 36 8" SOLID WHITE	THERMOPLASTIC TRAFFIC STRIPE: Det 36A 8" SOLID WHITE	THERMOPLASTIC TRAFFIC STRIPE: Det 36B 8" SOLID WHITE	THERMOPLASTIC TRAFFIC STRIPE: Det 38B 8" SOLID WHITE	PAVEMENT MARKER (RETROREFLECTIVE) TYPE G	PAVEMENT MARKER (RETROREFLECTIVE) TYPE H	ADJUST PULL BOX TO GRADE
		CY	CY	CY	CY	CY	CY	CY	CY	TON	CY	CY	CY	CY	LF	EA	SQFT	LF	LF	EA	EA	EA	SQFT		LF	LF	LF	LF	LF	LF	EA	EA	EA
L-56	63	37.3				2.8		8.2	11.7		17.5		12.2			23		106.5	1,346.4		7				106.5	519.8			413.3		18	5	
L-57	64	12.8				5.3		3.1	6.5	5.7			7.9			22		277.9	653.7		5				277.9	465.9		187.9			9	13	
L-58	65	17.1				8.6		4.2	8.8	7.7			8.6			4					3				74.9						4		
L-59	66	10.8				8.2		2.7	5.6	4.8			7.9			4					5				69.2						4		
L-60	67															35			1,644.0				222.1				822.0				155		
L-61	68															20		281.3	740.5		5				281.3	434.5		153.2			7	13	
L-62	69	152.0						33.3	47.5		71.2					21		248.7	908.5		4				248.7	468.7		219.9			10	11	
L-63	70	81.7		1.0		4.3		15.5	22.0		33.6		9.9			30			1,272.6				160.4		73.0	72.6	600.0				116	4	
L-64	71	128.2				20.7		35.6	50.8		71.2		20.0			20		293.0	601.6		3				293.0	448.0		154.3			7	13	1
L-65	72	171.8				14.7		33.4	47.7		66.8		14.2			16		224.5	580.0		4				224.5	343.0		118.5			6	10	1
L-66	73	109.4				14.3		21.3	30.4		42.6		15.7			15		180.7	484.9		2				180.7	282.0		101.5			6	9	1
L-67	74	15.9				8.2		3.1	4.4		6.2		15.8			16		138.8	711.2		3				138.8	329.6		190.8			9	7	
L-68	75	76.8	101.4			12.2		14.9	21.3		29.9		17.4			15		194.7	582.6		4				194.7	324.0		129.3			6	9	1
L-69	76	96.5				8.8		18.8	26.8		37.5		10.9	1.2		19		145.5	971.4		3				145.5	420.8		275.3			12	7	
L-70	77	24.8				7.4		4.8	6.7		9.6		8.8			12		76.9	546.4		2		54.8		76.9	233.4		156.5			48	4	
L-71	78	77.0				16.6		14.6	21.4		29.9		24.9	1.0		22		226.9	1,053.3				67.7		226.9	502.4		275.4			52	10	
L-72	79	86.5				7.8		16.8	24.0		33.6		4.7			18		128.3	883.4		2		53.9		128.3	340.0		271.7			47	6	
SUBTOTAL		1,098.6	101.4	1.0		139.9		230.3	335.6	18.2	449.6		178.9	2.2		312		2,523.7	12,980.5		52		558.9		2,740.8	5,184.7	1,422.0	2,234.3	413.3		516	121	4
SHEET TOTAL		1,098.6	101.4	140.9				230.3	335.6	18.2	449.6		181.1			312		2,523.7	12,980.5		52		558.9		7,925.5			4,069.6			637		4
FROM Sht Q-1		3,116.2	202.0	27.1				708.8	1,033.6	49.9	1,362.2		98.5		43.5	499	96.2	4,121.3	25,981.0	4	85		2,230.6	338.3	13,058.7			7,493.0			1,821		3
FROM Sht Q-2		2,503.1	135.0	696.2				642.2	992.1	254.8	851.9	181.0	353.7			482		3,814.2	20,869.1		68		1,276.8		12,005.2			6,756.0			1,278		4
TOTAL		6,717.9	438.4	864.2				1,581.3	2,361.3	322.9	2,663.7	181.0	633.3		43.5	1,293	96.2	10,459.2	59,830.6	4	205		4,066.3	338.3	32,989.4			18,318.6			3,736		11

* SEE C-13 FOR EXACT LOCATION OF ROADWAY EXCAVATION (TYPE Z-2) (AERIALLY DEPOSITED LEAD)

SUMMARY OF QUANTITIES

Q-3

THIS PLAN ACCURATE FOR TRAFFIC HANDLING WORK ONLY.

STATE OF CALIFORNIA - DEPARTMENT OF TRANSPORTATION
Caltrans® TRAFFIC DESIGN

FUNCTIONAL SUPERVISOR: ANH D. NGUYEN
CALCULATED-DESIGNED BY: SHAHAN PETROSSIAN
CHECKED BY: FREW KOTISSO
REVISED BY / DATE REVISED

LAST REVISION 00-00-00 | DATE PLOTTED => 03-OCT-2011 | TIME PLOTTED => 14:39

Dist	COUNTY	ROUTE	POST MILES TOTAL PROJECT	SHEET No.	TOTAL SHEETS
07	LA,Ven	2,5,14,33, 101,etc.	Var	107	142

Keith Sellers
LICENSED LANDSCAPE ARCHITECT

10-3-11
PLANS APPROVAL DATE

LICENSED LANDSCAPE ARCHITECT
KEITH SELLERS
NO. 5286
Keith Sellers
Signature
04-30-13
Renewal Date
06-15-11
Date
STATE OF CALIFORNIA

THE STATE OF CALIFORNIA OR ITS OFFICERS OR AGENTS SHALL NOT BE RESPONSIBLE FOR THE ACCURACY OR COMPLETENESS OF SCANNED COPIES OF THIS PLAN SHEET.

NOTE:

1. FOR ACCURATE RIGHT OF WAY DATA, CONTACT RIGHT OF WAY ENGINEERING AT THE DISTRICT OFFICE.
2. CNC SHALL TYPICALLY FOLLOW SUPPLY LINE (MAIN) IN THE DIRECTION OF SHOWN ARROY ON PLANS. (SUPPLY LINE NOT SHOWN CONTINOUSLY, FOR CLARITY)

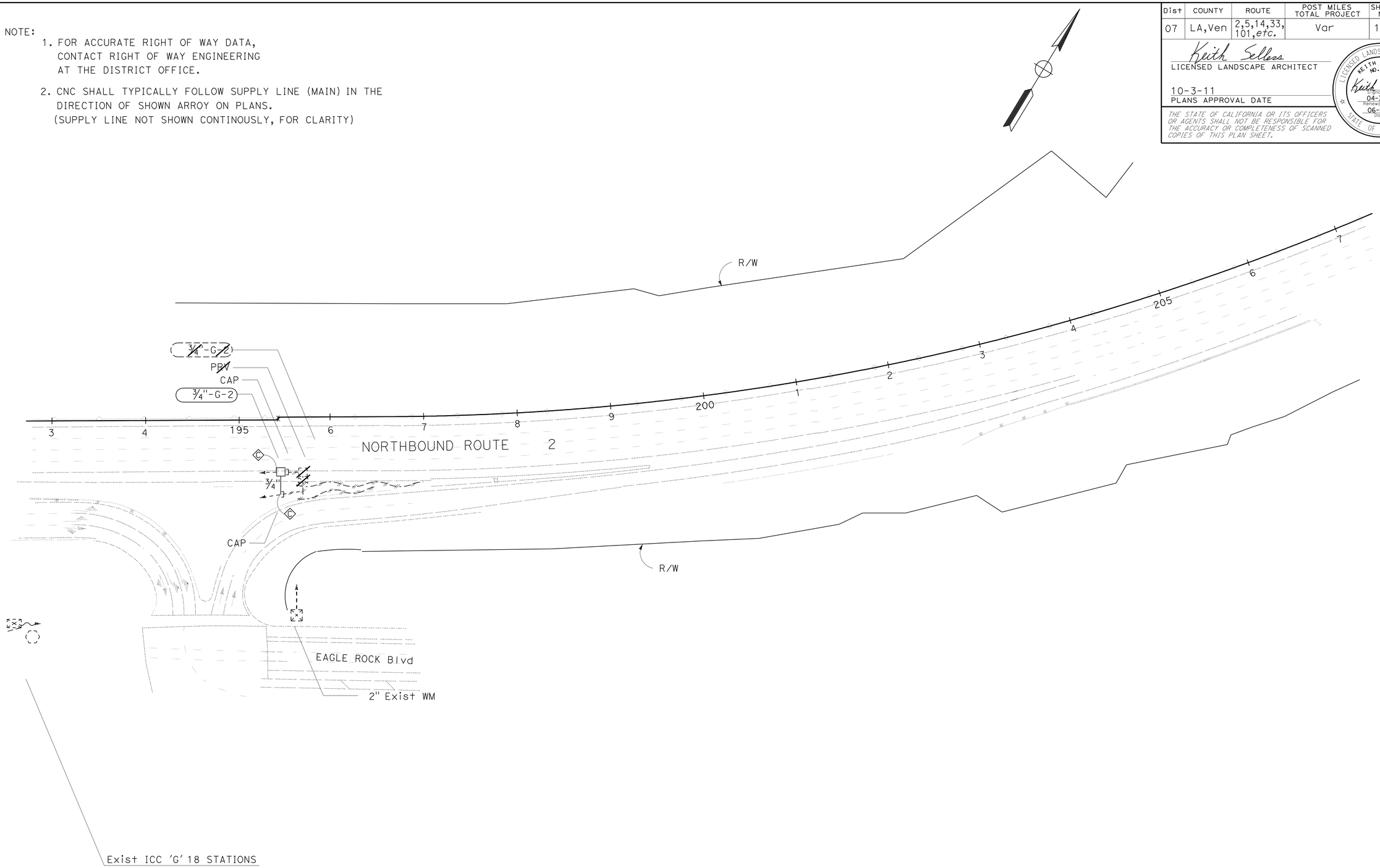

THIS PLAN ACCURATE FOR IRRIGATION WORK ONLY.

IRRIGATION PLAN

SCALE: 1" = 50'

IP-1

STATE OF CALIFORNIA - DEPARTMENT OF TRANSPORTATION
Caltrans LANDSCAPE ARCHITECTURE

SENIOR LANDSCAPE ARCHITECT: PATTY WATANABE
CALCULATED-DESIGNED BY: KATHLEEN LEDESMA
CHECKED BY: KEITH SELLERS
REVISED BY
DATE REVISED

LAST REVISION 00-00-00
DATE PLOTTED => 03-OCT-2011
TIME PLOTTED => 15:25

Dist	COUNTY	ROUTE	POST MILES TOTAL PROJECT	SHEET No.	TOTAL SHEETS
07	LA,Ven	2,5,14,33, 101,etc.	Var	108	142

Keith Selless
LICENSED LANDSCAPE ARCHITECT

10-3-11
PLANS APPROVAL DATE

LICENSED LANDSCAPE ARCHITECT
KEITH SELLESS
NO. 5288
Keith Selless
Signature
04-30-13
Renewal Date
06-15-11
Date
STATE OF CALIFORNIA

THE STATE OF CALIFORNIA OR ITS OFFICERS OR AGENTS SHALL NOT BE RESPONSIBLE FOR THE ACCURACY OR COMPLETENESS OF SCANNED COPIES OF THIS PLAN SHEET.

NOTE:
FOR ACCURATE RIGHT OF WAY DATA,
CONTACT RIGHT OF WAY ENGINEERING
AT THE DISTRICT OFFICE.

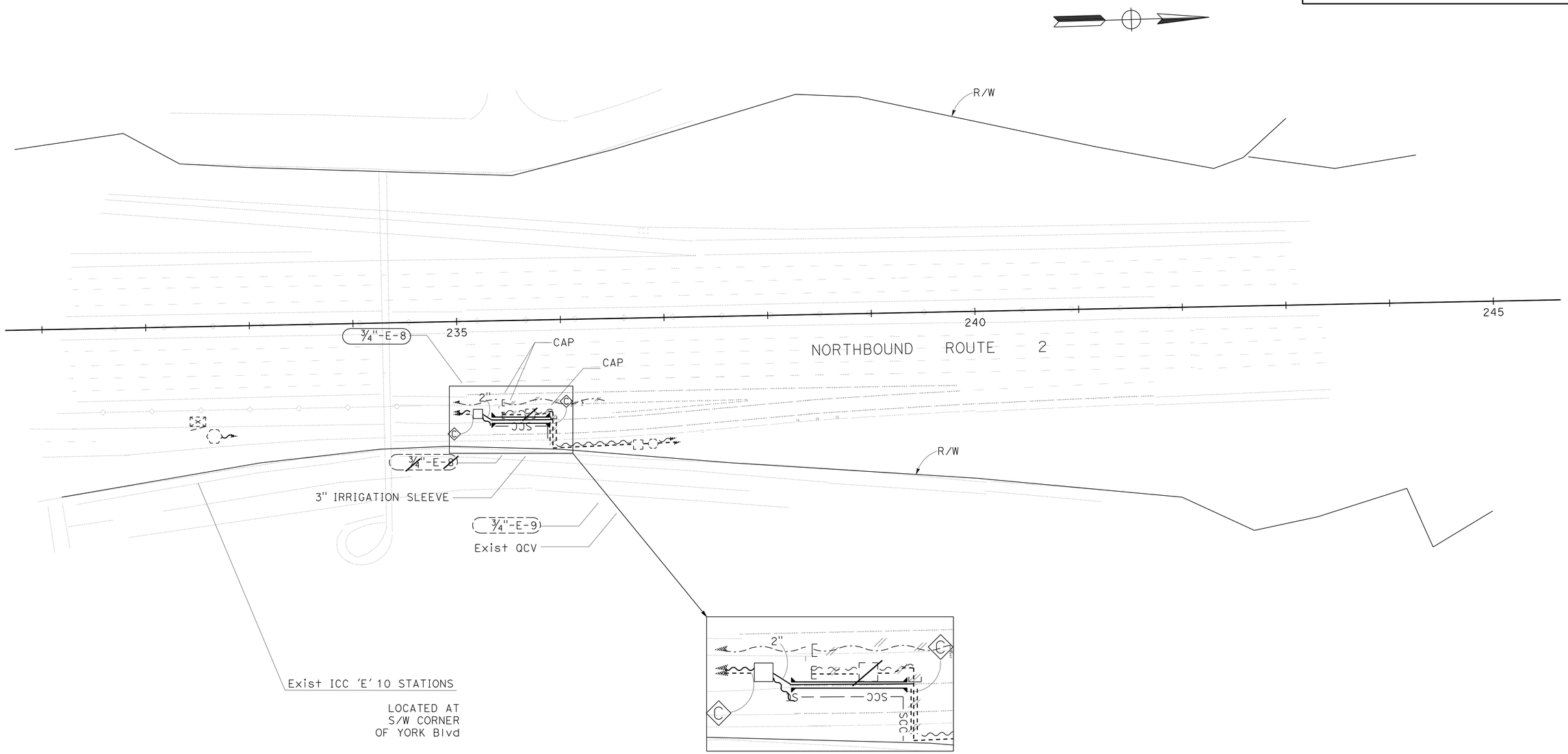

DETAIL

THIS PLAN ACCURATE FOR IRRIGATION WORK ONLY.

IRRIGATION PLAN

SCALE: 1" = 50'

IP-2

REVISED BY | DATE REVISED

CALCULATED-DESIGNED BY | CHECKED BY

SENIOR LANDSCAPE ARCHITECT
PATTY WATANABE

STATE OF CALIFORNIA - DEPARTMENT OF TRANSPORTATION
Caltrans® LANDSCAPE ARCHITECTURE

LAST REVISION 00-00-00 | DATE PLOTTED => 03-OCT-2011 | TIME PLOTTED => 15:25

Dist	COUNTY	ROUTE	POST MILES TOTAL PROJECT	SHEET No.	TOTAL SHEETS
07	LA,Ven	2,5,14,33, 101,etc.	Var	109	142

Keith Sellers
LICENSED LANDSCAPE ARCHITECT

10-3-11
PLANS APPROVAL DATE

LICENSED LANDSCAPE ARCHITECT
KEITH SELLERS
NO. 5286
Keith Sellers
04-30-13
Renewal Date
06-15-11
Date
STATE OF CALIFORNIA

THE STATE OF CALIFORNIA OR ITS OFFICERS OR AGENTS SHALL NOT BE RESPONSIBLE FOR THE ACCURACY OR COMPLETENESS OF SCANNED COPIES OF THIS PLAN SHEET.

NOTE:
FOR ACCURATE RIGHT OF WAY DATA,
CONTACT RIGHT OF WAY ENGINEERING
AT THE DISTRICT OFFICE.

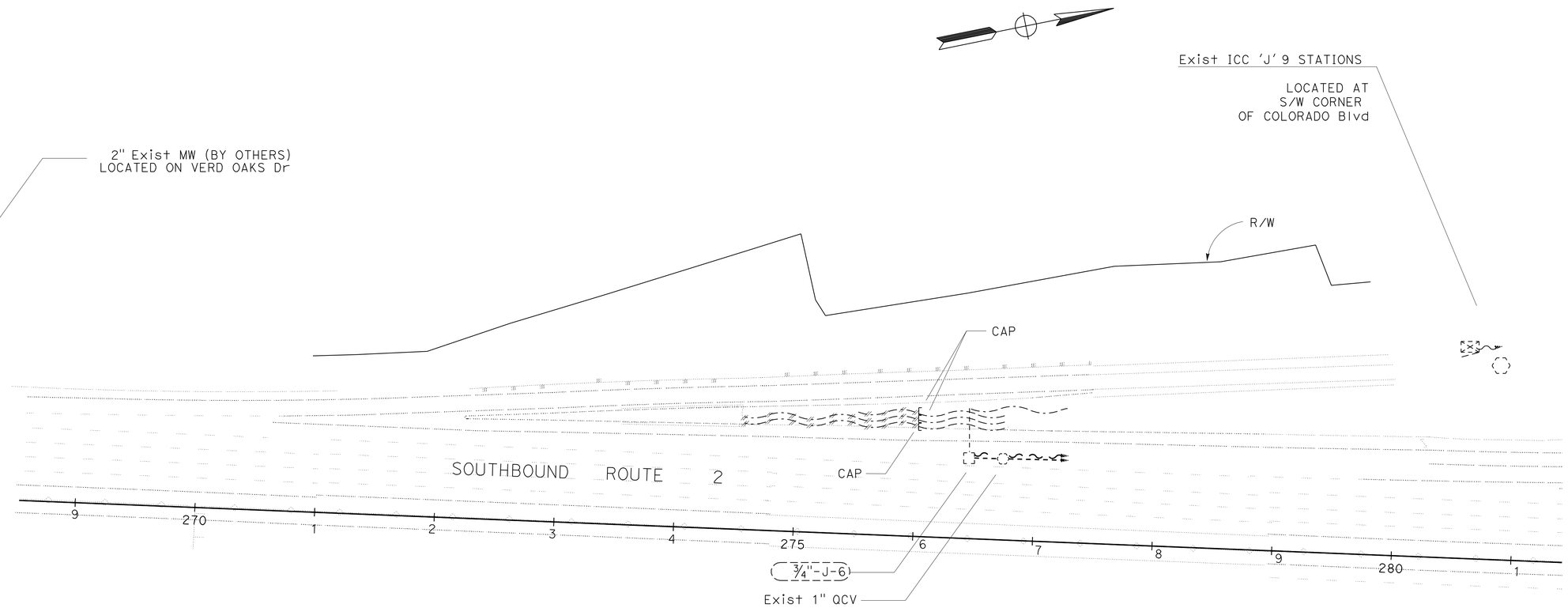

THIS PLAN ACCURATE FOR IRRIGATION WORK ONLY.

IRRIGATION PLAN

SCALE: 1" = 50'

IP-3

STATE OF CALIFORNIA - DEPARTMENT OF TRANSPORTATION
Caltrans® LANDSCAPE ARCHITECTURE

SENIOR LANDSCAPE ARCHITECT: PATTY WATANABE

CALCULATED-DESIGNED BY: KATHLEEN LEDESMA
CHECKED BY: KEITH SELLERS

REVISED BY
DATE REVISED

LAST REVISION 00-00-00
DATE PLOTTED => 05-OCT-2011
TIME PLOTTED => 05:40

Dist	COUNTY	ROUTE	POST MILES TOTAL PROJECT	SHEET No.	TOTAL SHEETS
07	LA,Ven	2,5,14,33, 101,etc.	Var	110	142

Keith Sellers
LICENSED LANDSCAPE ARCHITECT

10-3-11
PLANS APPROVAL DATE

LICENSED LANDSCAPE ARCHITECT
KEITH SELLERS
NO. 5286
Keith Sellers
Signature
04-30-13
Renewal Date
06-15-11
Date
STATE OF CALIFORNIA

THE STATE OF CALIFORNIA OR ITS OFFICERS OR AGENTS SHALL NOT BE RESPONSIBLE FOR THE ACCURACY OR COMPLETENESS OF SCANNED COPIES OF THIS PLAN SHEET.

NOTE:
FOR ACCURATE RIGHT OF WAY DATA,
CONTACT RIGHT OF WAY ENGINEERING
AT THE DISTRICT OFFICE.

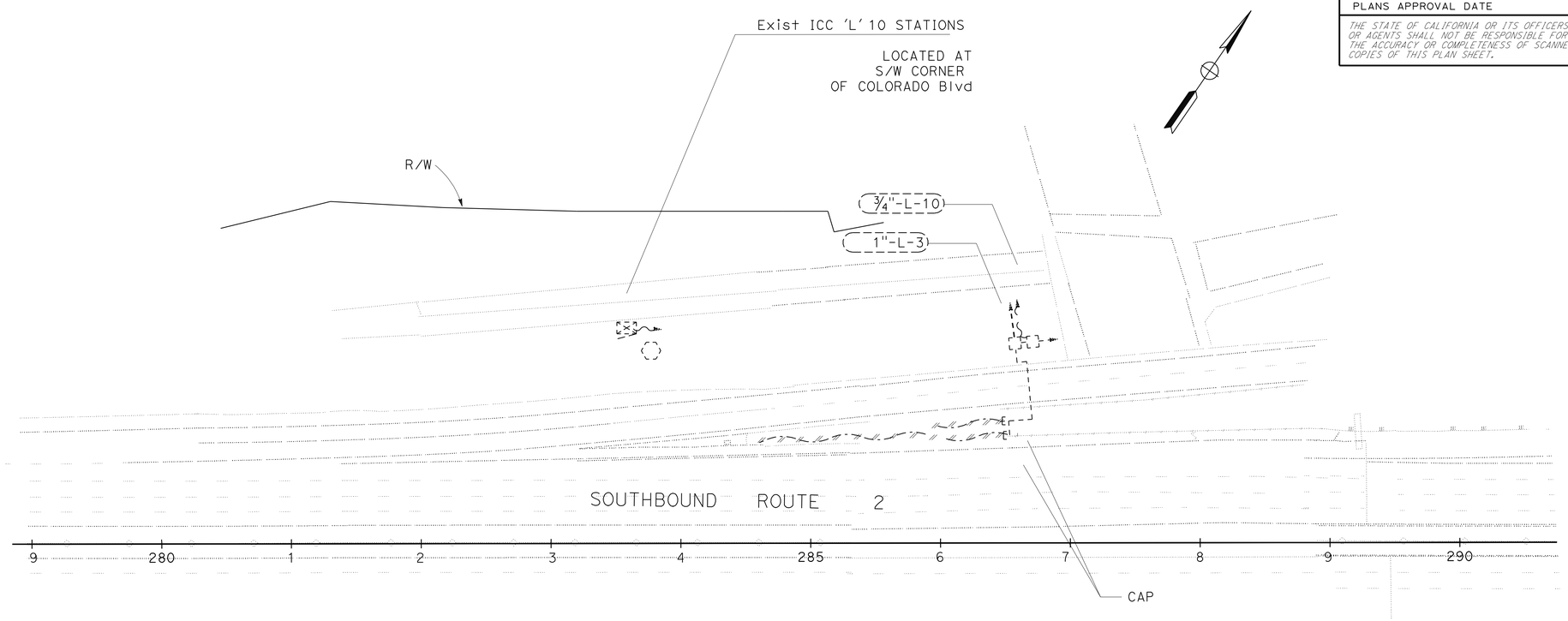

THIS PLAN ACCURATE FOR IRRIGATION WORK ONLY.

IRRIGATION PLAN

SCALE: 1" = 50'

IP-4

STATE OF CALIFORNIA - DEPARTMENT OF TRANSPORTATION
Caltrans® LANDSCAPE ARCHITECTURE

SENIOR LANDSCAPE ARCHITECT: PATTY WATANABE
CALCULATED-DESIGNED BY: KATHLEEN LEDESMA
CHECKED BY: KEITH SELLERS
REVISED BY
DATE REVISED

LAST REVISION 00-00-00
DATE PLOTTED => 03-OCT-2011
TIME PLOTTED => 15:26

Dist	COUNTY	ROUTE	POST MILES TOTAL PROJECT	SHEET No.	TOTAL SHEETS
07	LA,Ven	2,5,14,33, 101,etc.	Var	111	142

Keith Sellers
LICENSED LANDSCAPE ARCHITECT

10-3-11
PLANS APPROVAL DATE

LICENSED LANDSCAPE ARCHITECT
KEITH SELLERS
NO. 5286
Keith Sellers
Signature
04-30-13
Renewal Date
06-15-11
Date
STATE OF CALIFORNIA

THE STATE OF CALIFORNIA OR ITS OFFICERS OR AGENTS SHALL NOT BE RESPONSIBLE FOR THE ACCURACY OR COMPLETENESS OF SCANNED COPIES OF THIS PLAN SHEET.

NOTE:
FOR ACCURATE RIGHT OF WAY DATA,
CONTACT RIGHT OF WAY ENGINEERING
AT THE DISTRICT OFFICE.

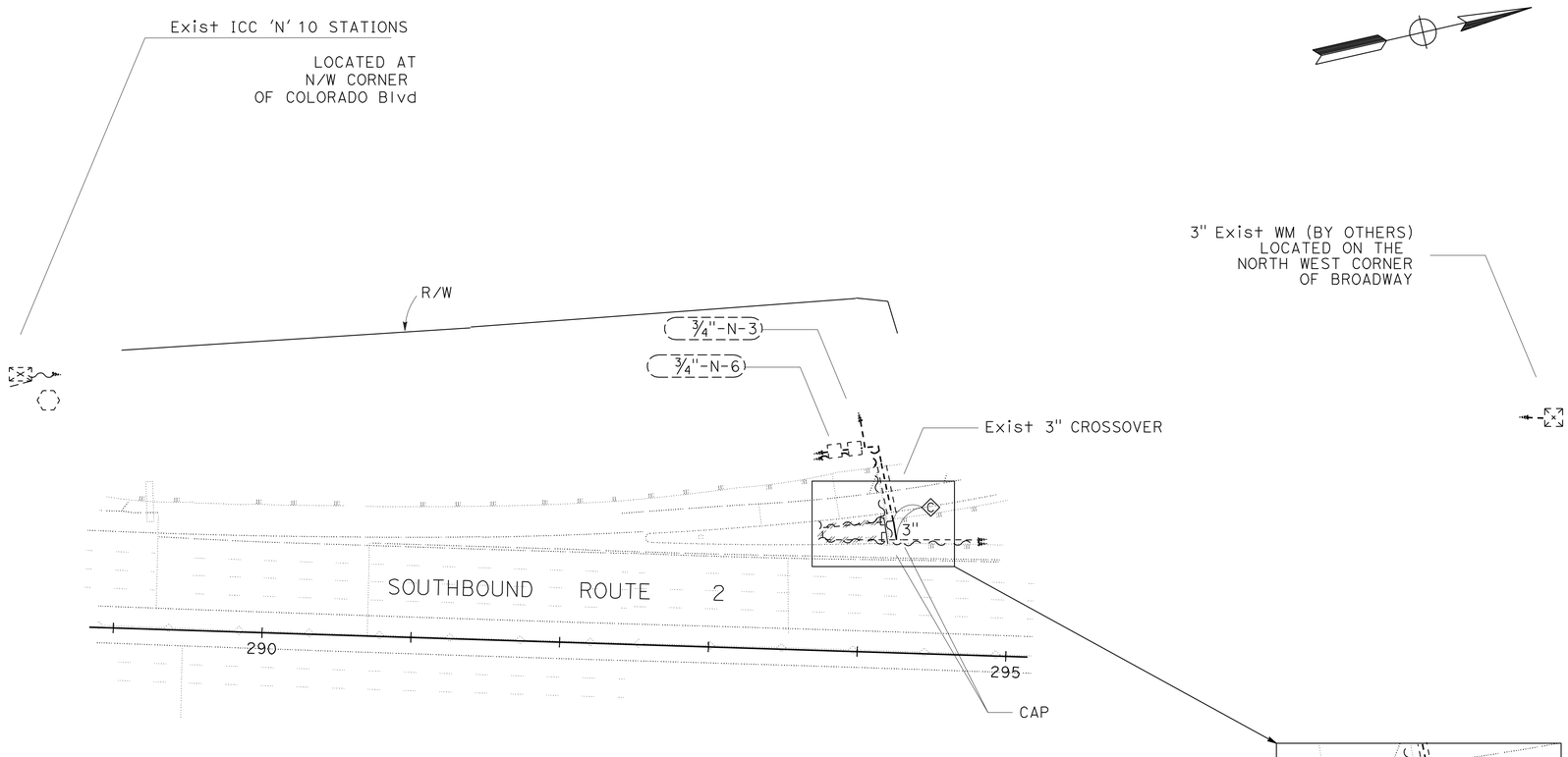

DETAIL

THIS PLAN ACCURATE FOR IRRIGATION WORK ONLY.

IRRIGATION PLAN

SCALE: 1" = 50'

IP-5

STATE OF CALIFORNIA - DEPARTMENT OF TRANSPORTATION
Caltrans® LANDSCAPE ARCHITECTURE

SENIOR LANDSCAPE ARCHITECT: PATTY WATANABE

CALCULATED-DESIGNED BY: KATHLEEN LEDESMA
CHECKED BY: KEITH SELLERS

REVISED BY
DATE REVISED

LAST REVISION 00-00-00
DATE PLOTTED => 03-OCT-2011
TIME PLOTTED => 15:26

Dist	COUNTY	ROUTE	POST MILES TOTAL PROJECT	SHEET No.	TOTAL SHEETS
07	LA,Ven	2,5,14,33, 101,etc.	Var	112	142

Keith Sellers
LICENSED LANDSCAPE ARCHITECT

10-3-11
PLANS APPROVAL DATE

LICENSED LANDSCAPE ARCHITECT
KEITH SELLERS
NO. 5286
Keith Sellers
Signature
04-30-13
Renewal Date
06-15-11
Date
STATE OF CALIFORNIA

THE STATE OF CALIFORNIA OR ITS OFFICERS OR AGENTS SHALL NOT BE RESPONSIBLE FOR THE ACCURACY OR COMPLETENESS OF SCANNED COPIES OF THIS PLAN SHEET.

NOTE:
FOR ACCURATE RIGHT OF WAY DATA,
CONTACT RIGHT OF WAY ENGINEERING
AT THE DISTRICT OFFICE.

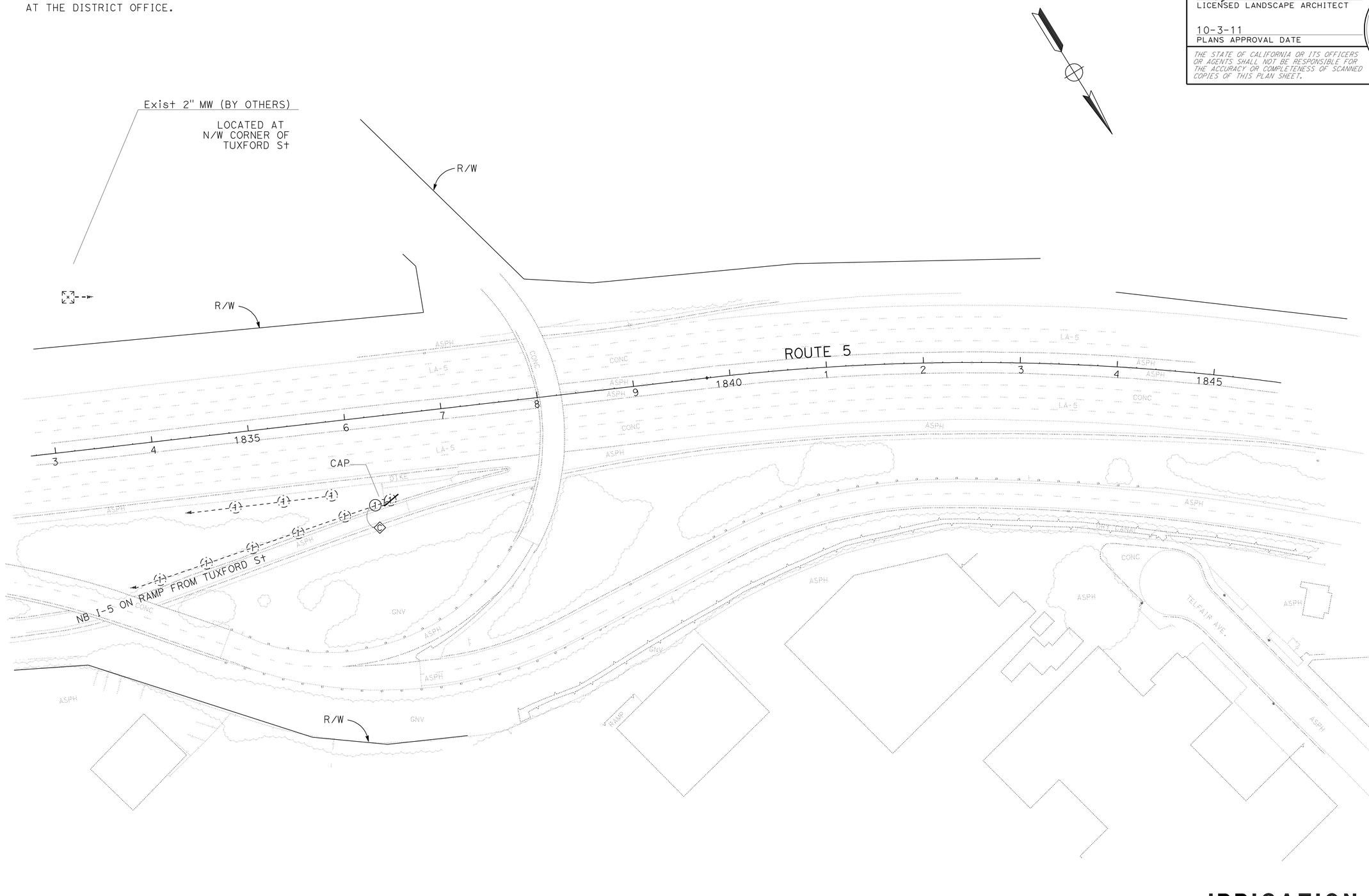

THIS PLAN ACCURATE FOR IRRIGATION WORK ONLY.

IRRIGATION PLAN

SCALE: 1" = 50'

IP-6

STATE OF CALIFORNIA - DEPARTMENT OF TRANSPORTATION
Caltrans® LANDSCAPE ARCHITECTURE

SENIOR LANDSCAPE ARCHITECT: PATTY WATANABE

CALCULATED-DESIGNED BY: KATHLEEN LEDESMA
CHECKED BY: KEITH SELLERS

REVISED BY
DATE REVISED

LAST REVISION 00-00-00
DATE PLOTTED => 03-OCT-2011
TIME PLOTTED => 15:26

Dist	COUNTY	ROUTE	POST MILES TOTAL PROJECT	SHEET No.	TOTAL SHEETS
07	LA,Ven	2,5,14,33, 101,etc.	Var	113	142

Keith Sellers
LICENSED LANDSCAPE ARCHITECT

10-3-11
PLANS APPROVAL DATE

LICENSED LANDSCAPE ARCHITECT
KEITH SELLERS
NO. 5286
Keith Sellers
Expiration Date
04-30-13
Renewal Date
06-15-11
Date
STATE OF CALIFORNIA

THE STATE OF CALIFORNIA OR ITS OFFICERS OR AGENTS SHALL NOT BE RESPONSIBLE FOR THE ACCURACY OR COMPLETENESS OF SCANNED COPIES OF THIS PLAN SHEET.

NOTE:
FOR ACCURATE RIGHT OF WAY DATA, CONTACT RIGHT OF WAY ENGINEERING AT THE DISTRICT OFFICE.

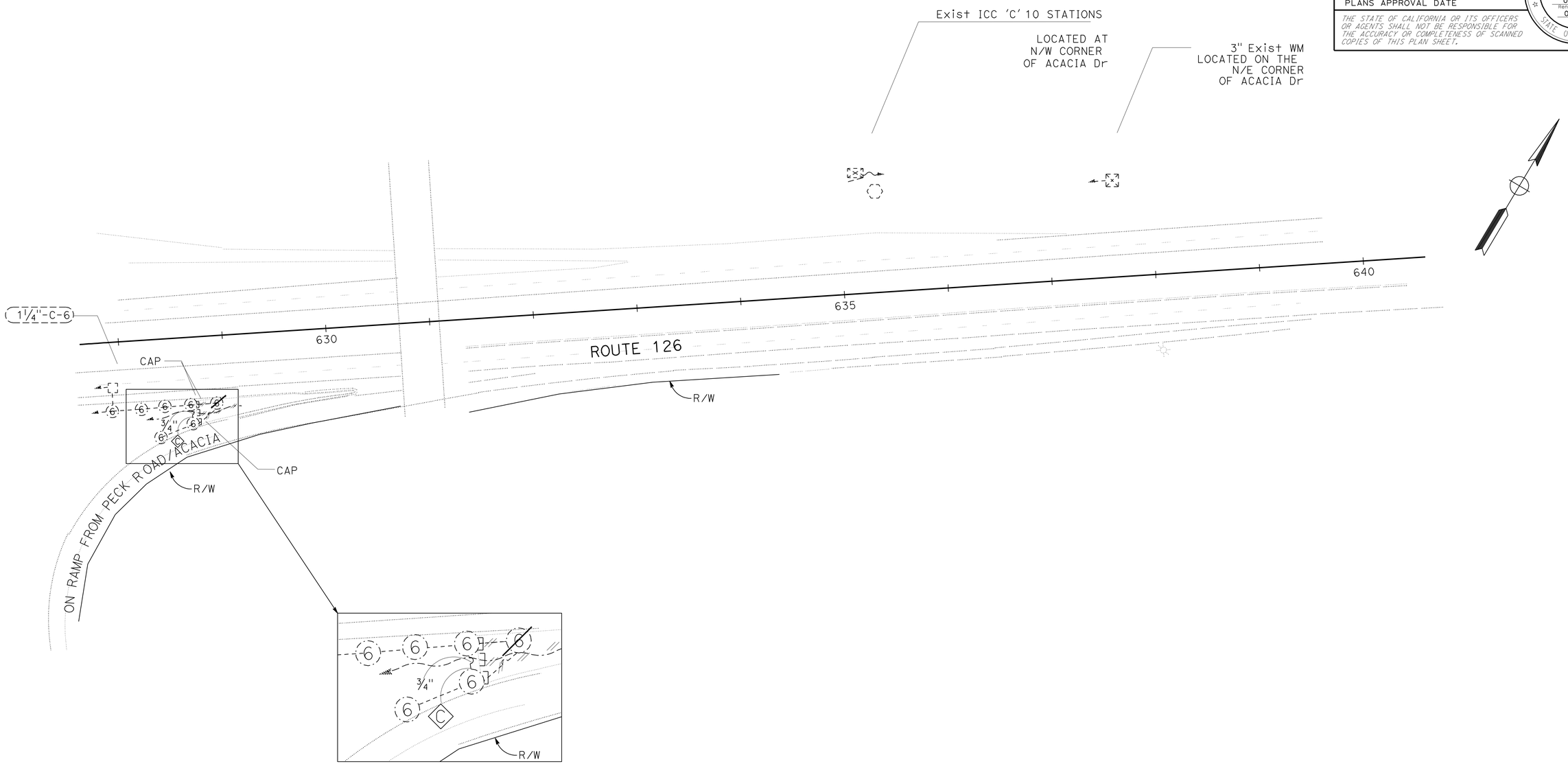

DETAIL

THIS PLAN ACCURATE FOR IRRIGATION WORK ONLY.

IRRIGATION PLAN

SCALE: 1" = 50'

IP-7

STATE OF CALIFORNIA - DEPARTMENT OF TRANSPORTATION
Caltrans® LANDSCAPE ARCHITECTURE

SENIOR LANDSCAPE ARCHITECT: PATTY WATANABE
CALCULATED-DESIGNED BY: KATHLEEN LEDESMA
CHECKED BY: KEITH SELLERS
REVISED BY
DATE REVISED

LAST REVISION 00-00-00
DATE PLOTTED => 03-OCT-2011
TIME PLOTTED => 15:26

Dist	COUNTY	ROUTE	POST MILES TOTAL PROJECT	SHEET No.	TOTAL SHEETS
07	LA,Ven	2,5,14,33, 101,etc.	Var	114	142

Keith Sellers
LICENSED LANDSCAPE ARCHITECT

10-3-11
PLANS APPROVAL DATE

LICENSED LANDSCAPE ARCHITECT
KEITH SELLERS
NO. 5286
Keith Sellers
Signature
04-30-13
Renewal Date
06-15-11
Date
STATE OF CALIFORNIA

THE STATE OF CALIFORNIA OR ITS OFFICERS OR AGENTS SHALL NOT BE RESPONSIBLE FOR THE ACCURACY OR COMPLETENESS OF SCANNED COPIES OF THIS PLAN SHEET.

NOTE:
FOR ACCURATE RIGHT OF WAY DATA,
CONTACT RIGHT OF WAY ENGINEERING
AT THE DISTRICT OFFICE.

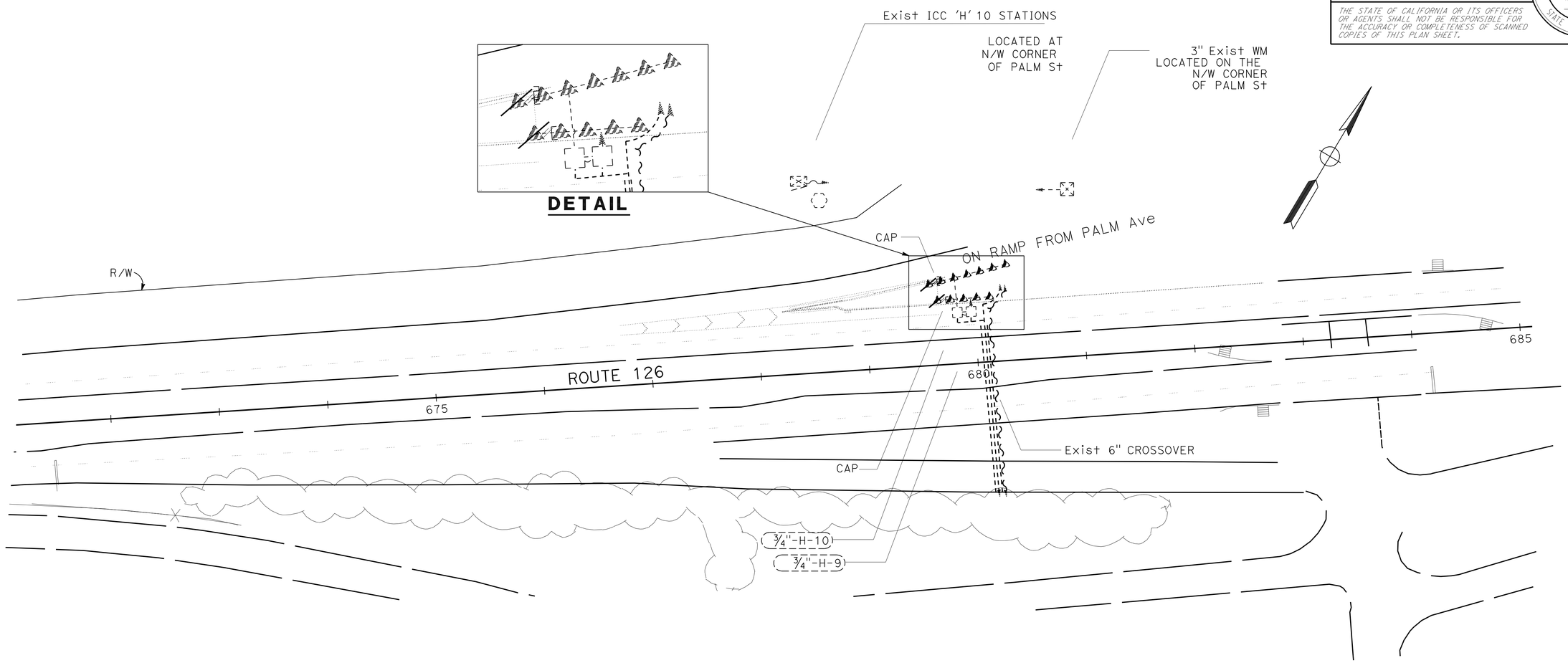

THIS PLAN ACCURATE FOR IRRIGATION WORK ONLY.

IRRIGATION PLAN

SCALE: 1" = 50'

IP-8

STATE OF CALIFORNIA - DEPARTMENT OF TRANSPORTATION
Caltrans LANDSCAPE ARCHITECTURE

SENIOR LANDSCAPE ARCHITECT: PATTY WATANABE

CALCULATED-DESIGNED BY: KATHLEEN LEDESMA
CHECKED BY: KEITH SELLERS

REVISED BY
DATE REVISED

LAST REVISION 00-00-00
DATE PLOTTED => 03-OCT-2011
TIME PLOTTED => 15:26

Dist	COUNTY	ROUTE	POST MILES TOTAL PROJECT	SHEET No.	TOTAL SHEETS
07	LA,Ven	2,5,14,33, 101,etc.	Var	115	142

Keith Sellers
LICENSED LANDSCAPE ARCHITECT

10-3-11
PLANS APPROVAL DATE

LICENSED LANDSCAPE ARCHITECT
KEITH SELLERS
NO. 5286
Keith Sellers
Signature
04-30-13
Renewal Date
06-15-11
Date
STATE OF CALIFORNIA

THE STATE OF CALIFORNIA OR ITS OFFICERS OR AGENTS SHALL NOT BE RESPONSIBLE FOR THE ACCURACY OR COMPLETENESS OF SCANNED COPIES OF THIS PLAN SHEET.

NOTE:
FOR ACCURATE RIGHT OF WAY DATA,
CONTACT RIGHT OF WAY ENGINEERING
AT THE DISTRICT OFFICE.

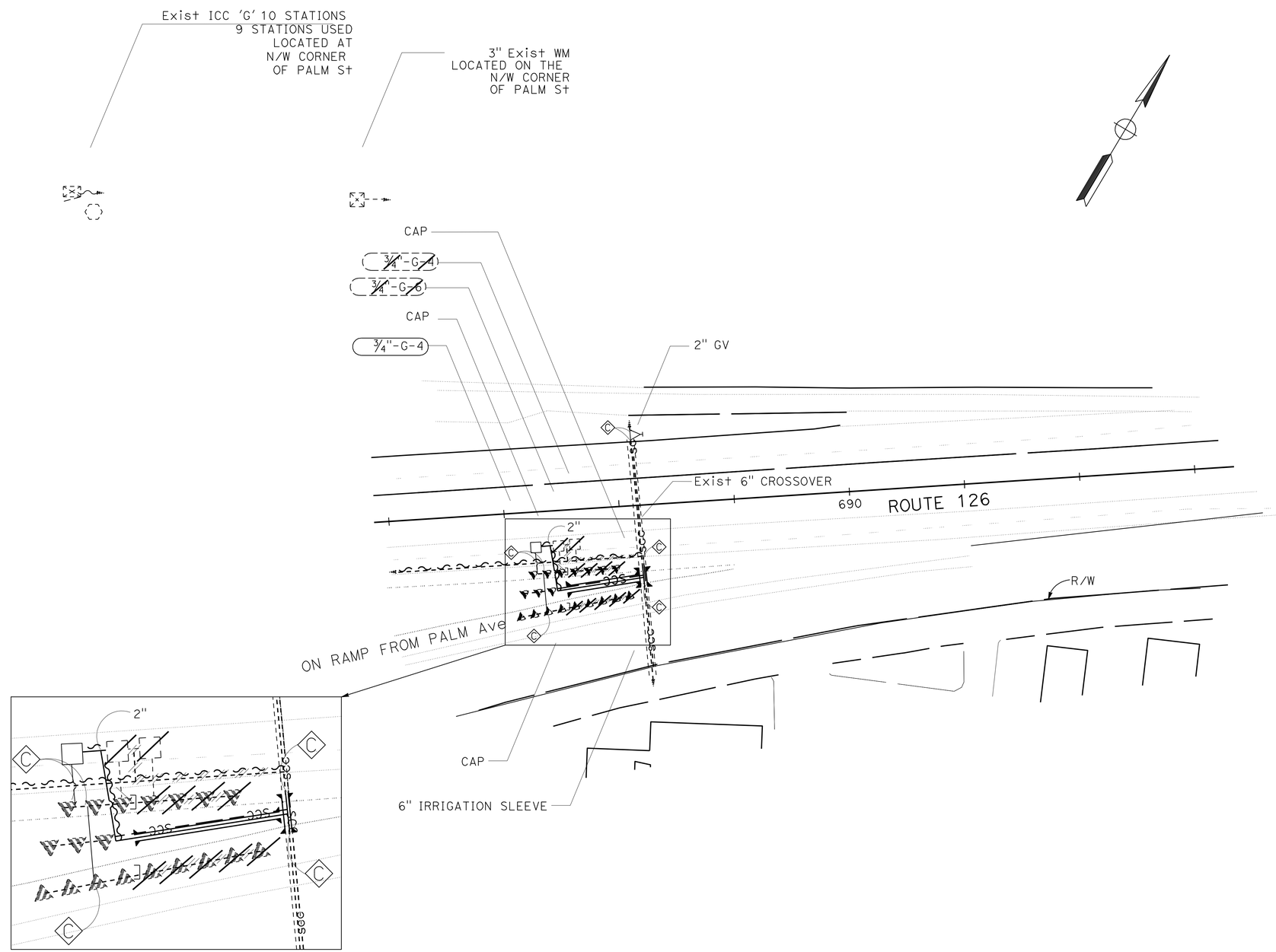

DETAIL

THIS PLAN ACCURATE FOR IRRIGATION WORK ONLY.

IRRIGATION PLAN

SCALE: 1" = 50'

IP-9

STATE OF CALIFORNIA - DEPARTMENT OF TRANSPORTATION
Caltrans® LANDSCAPE ARCHITECTURE

SENIOR LANDSCAPE ARCHITECT: PATTY WATANABE
CALCULATED-DESIGNED BY: KATHLEEN LEDESMA
CHECKED BY: KEITH SELLERS
REVISED BY
DATE REVISED

LAST REVISION 00-00-00
DATE PLOTTED => 03-OCT-2011
TIME PLOTTED => 15:26

Dist	COUNTY	ROUTE	POST MILES TOTAL PROJECT	SHEET No.	TOTAL SHEETS
07	LA,Ven	2,5,14,33, 101,etc.	Var	116	142

Keith Sellers
LICENSED LANDSCAPE ARCHITECT

10-3-11
PLANS APPROVAL DATE

LICENSED LANDSCAPE ARCHITECT
KEITH SELLERS
NO. 5286
Keith Sellers
Signature
04-30-13
Renewal Date
06-15-11
Date
STATE OF CALIFORNIA

THE STATE OF CALIFORNIA OR ITS OFFICERS OR AGENTS SHALL NOT BE RESPONSIBLE FOR THE ACCURACY OR COMPLETENESS OF SCANNED COPIES OF THIS PLAN SHEET.

NOTE:
FOR ACCURATE RIGHT OF WAY DATA,
CONTACT RIGHT OF WAY ENGINEERING
AT THE DISTRICT OFFICE.

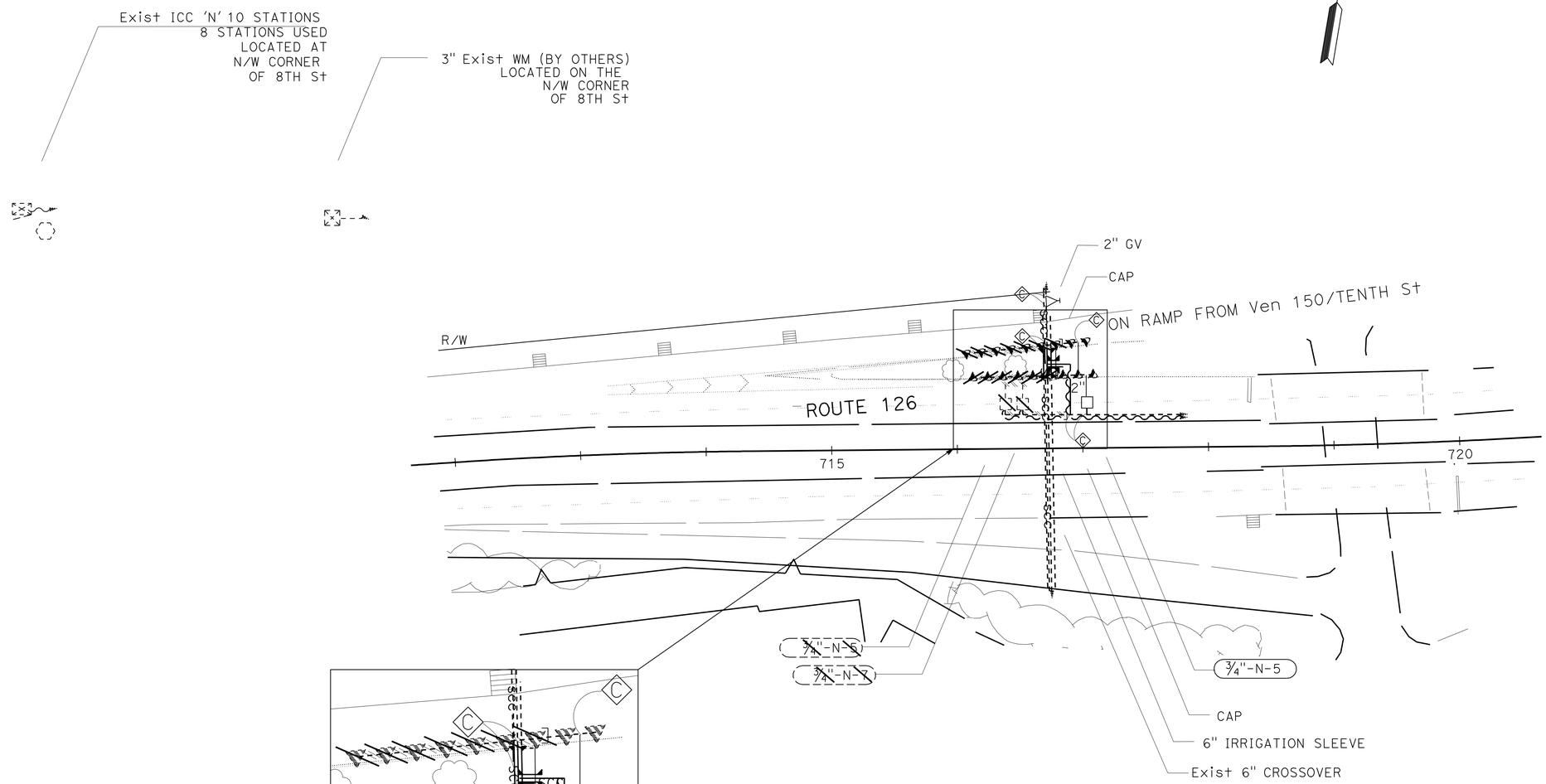

DETAIL

THIS PLAN ACCURATE FOR IRRIGATION WORK ONLY.

IRRIGATION PLAN

SCALE: 1" = 50'

IP-10

STATE OF CALIFORNIA - DEPARTMENT OF TRANSPORTATION
Caltrans® LANDSCAPE ARCHITECTURE

SENIOR LANDSCAPE ARCHITECT: PATTY WATANABE

CALCULATED-DESIGNED BY: KATHLEEN LEDESMA
CHECKED BY: KEITH SELLERS

REVISED BY | DATE REVISED

LAST REVISION 00-00-00 | DATE PLOTTED => 04-OCT-2011 | TIME PLOTTED => 06:40

Dist	COUNTY	ROUTE	POST MILES TOTAL PROJECT	SHEET No.	TOTAL SHEETS
07	LA,Ven	2,5,14,33, 101, *etc.*	Var	117	142

Keith Selless
LICENSED LANDSCAPE ARCHITECT

10-3-11
PLANS APPROVAL DATE

LICENSED LANDSCAPE ARCHITECT
KEITH SELLESS
NO. 5288
Keith Selless
Signature
04-30-13
Renewal Date
06-15-11
Date
STATE OF CALIFORNIA

THE STATE OF CALIFORNIA OR ITS OFFICERS OR AGENTS SHALL NOT BE RESPONSIBLE FOR THE ACCURACY OR COMPLETENESS OF SCANNED COPIES OF THIS PLAN SHEET.

NOTE:
FOR ACCURATE RIGHT OF WAY DATA, CONTACT RIGHT OF WAY ENGINEERING AT THE DISTRICT OFFICE.

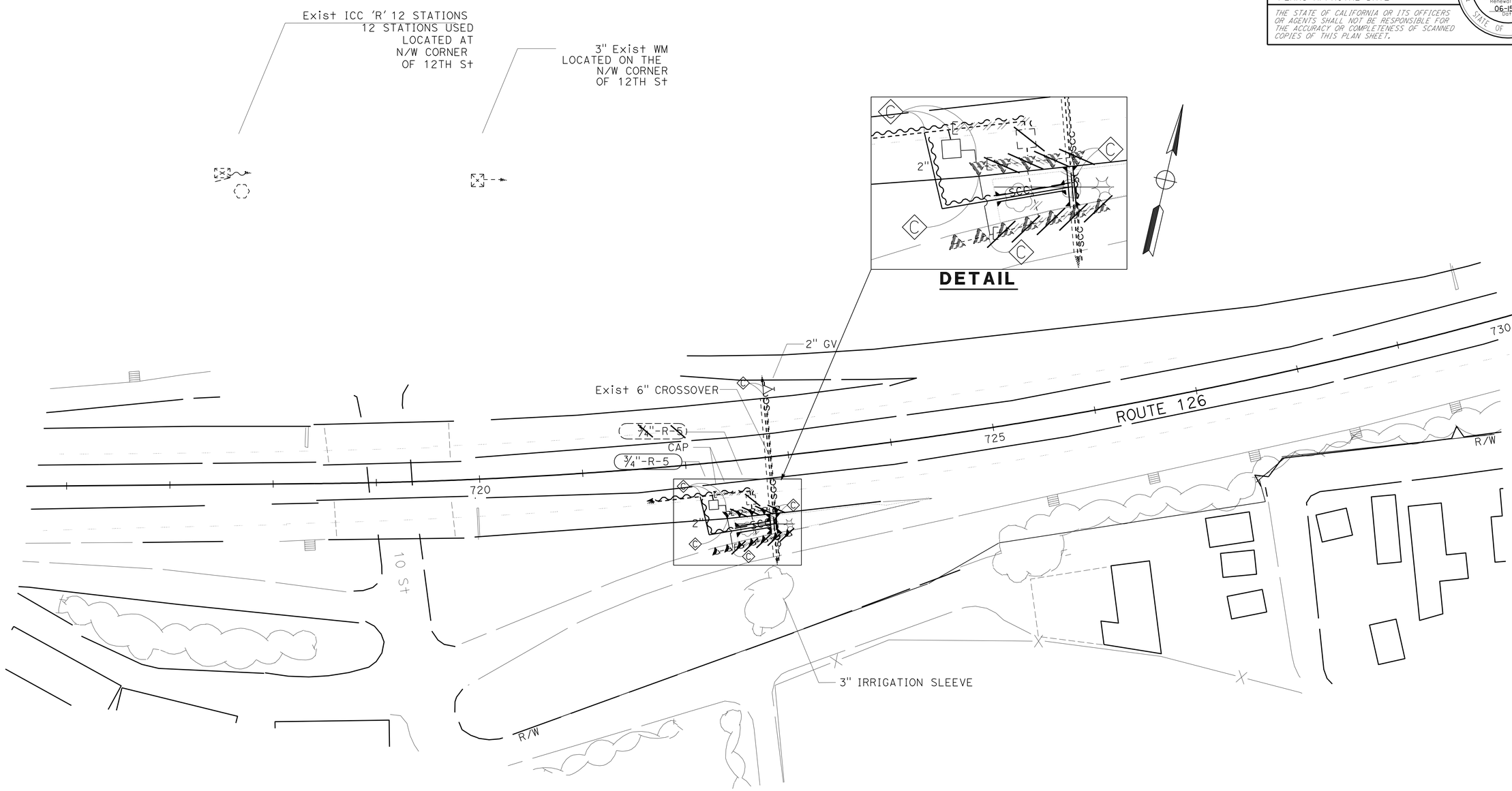

THIS PLAN ACCURATE FOR IRRIGATION WORK ONLY.

IRRIGATION PLAN

SCALE: 1" = 50'

IP-11

REVISED BY | DATE REVISED

CALCULATED-DESIGNED BY | CHECKED BY

SENIOR LANDSCAPE ARCHITECT
PATTY WATANABE

STATE OF CALIFORNIA - DEPARTMENT OF TRANSPORTATION
Caltrans® LANDSCAPE ARCHITECTURE

LAST REVISION 00-00-00 | DATE PLOTTED => 04-OCT-2011 | TIME PLOTTED => 06:40

Dist	COUNTY	ROUTE	POST MILES TOTAL PROJECT	SHEET No.	TOTAL SHEETS
07	LA,Ven	2,5,14,33, 101, *etc.*	Var	118	142

Keith Sellers
LICENSED LANDSCAPE ARCHITECT

10-3-11
PLANS APPROVAL DATE

LICENSED LANDSCAPE ARCHITECT
KEITH SELLERS
NO. 5286
Keith Sellers
Signature
04-30-13
Renewal Date
06-15-11
Date
STATE OF CALIFORNIA

THE STATE OF CALIFORNIA OR ITS OFFICERS OR AGENTS SHALL NOT BE RESPONSIBLE FOR THE ACCURACY OR COMPLETENESS OF SCANNED COPIES OF THIS PLAN SHEET.

NOTE:
FOR ACCURATE RIGHT OF WAY DATA,
CONTACT RIGHT OF WAY ENGINEERING
AT THE DISTRICT OFFICE.

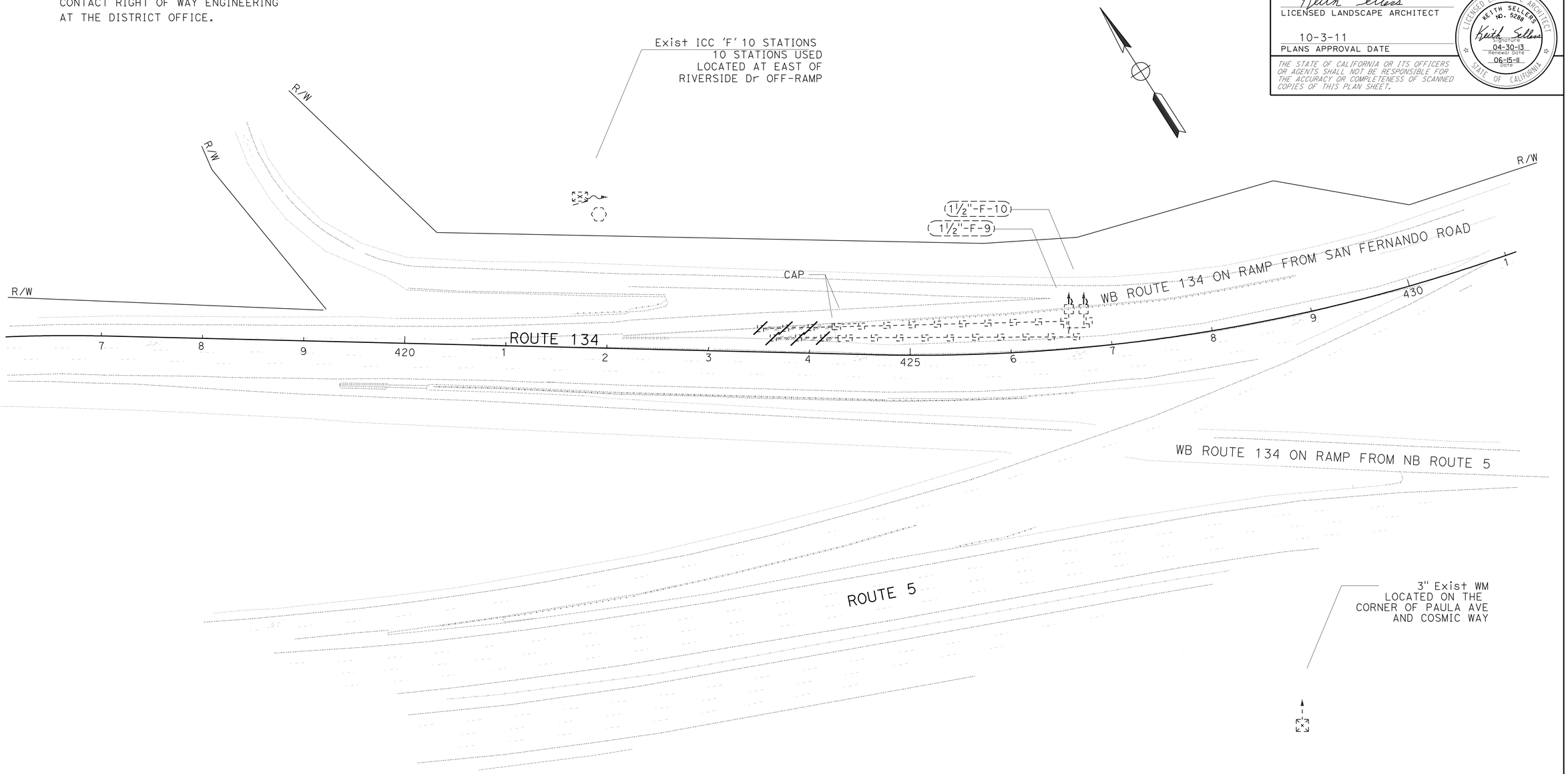

THIS PLAN ACCURATE FOR IRRIGATION WORK ONLY.

IRRIGATION PLAN

SCALE: 1" = 50'

IP-12

REVISED BY	DATE REVISED

KATHLEEN LEDESMA
KEITH SELLERS

CALCULATED-DESIGNED BY
CHECKED BY

SENIOR LANDSCAPE ARCHITECT
PATTY WATANABE

STATE OF CALIFORNIA - DEPARTMENT OF TRANSPORTATION
Caltrans LANDSCAPE ARCHITECTURE

LAST REVISION 00-00-00
DATE PLOTTED => 05-OCT-2011
TIME PLOTTED => 05:40

Dist	COUNTY	ROUTE	POST MILES TOTAL PROJECT	SHEET No.	TOTAL SHEETS
07	LA,Ven	2,5,14,33, 101, *etc.*	Var	119	142

Keith Sellers 7/29/11
LICENSED LANDSCAPE ARCHITECT

10-3-11
PLANS APPROVAL DATE

LICENSED LANDSCAPE ARCHITECT
KEITH SELLERS
NO. 5288
Keith Sellers
Signature
04-30-13
Renewal Date
06-15-11
Date
STATE OF CALIFORNIA

THE STATE OF CALIFORNIA OR ITS OFFICERS OR AGENTS SHALL NOT BE RESPONSIBLE FOR THE ACCURACY OR COMPLETENESS OF SCANNED COPIES OF THIS PLAN SHEET.

NOTE:
FOR ACCURATE RIGHT OF WAY DATA,
CONTACT RIGHT OF WAY ENGINEERING
AT THE DISTRICT OFFICE.

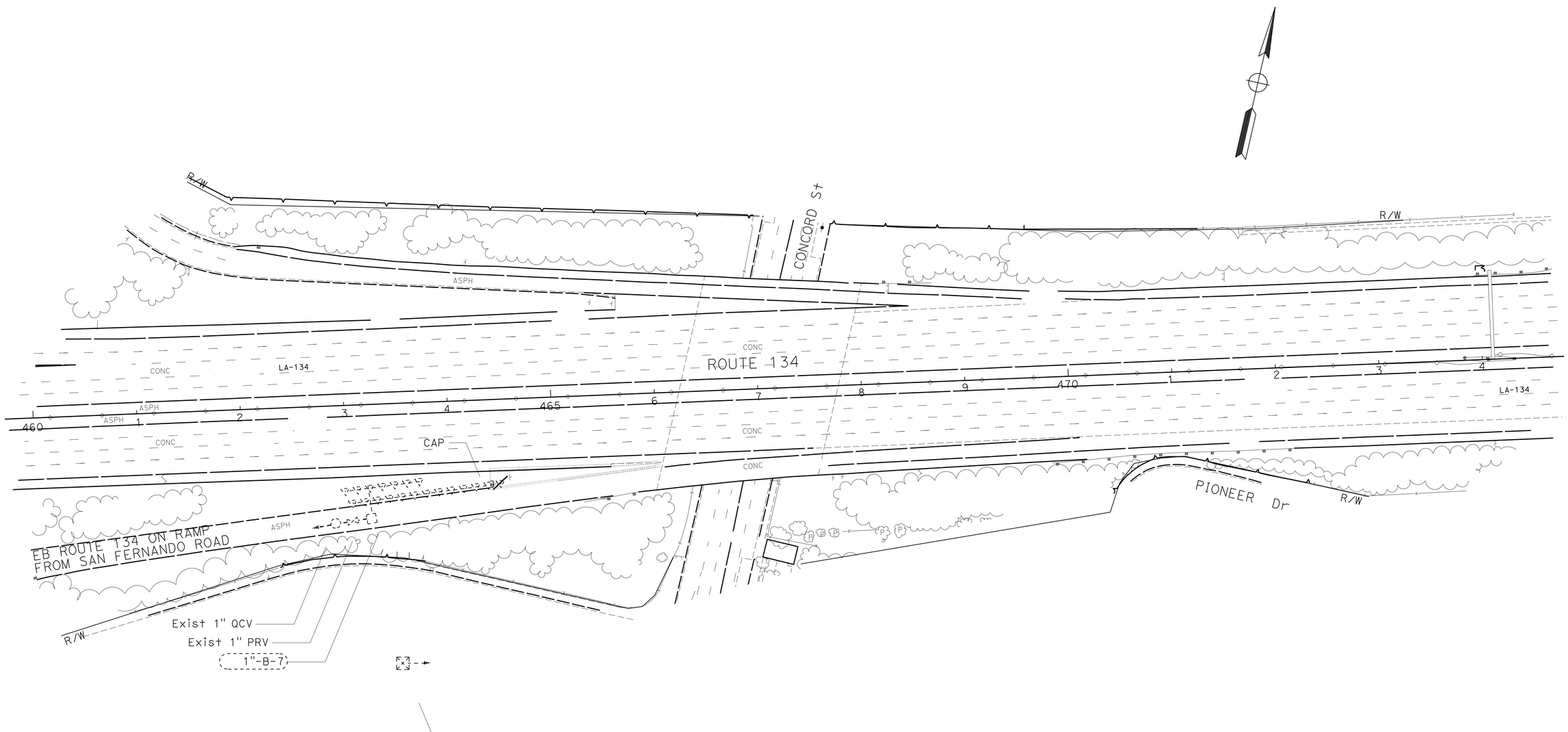

THIS PLAN ACCURATE FOR IRRIGATION WORK ONLY.

IRRIGATION PLAN

SCALE: 1" = 50'

IP-13

REVISED BY | DATE REVISED

KATHLEEN LEDESMA

CALCULATED-DESIGNED BY: KEITH SELLERS

CHECKED BY

SENIOR LANDSCAPE ARCHITECT: PATTY WATANABE

STATE OF CALIFORNIA - DEPARTMENT OF TRANSPORTATION
Caltrans® LANDSCAPE ARCHITECTURE

LAST REVISION 00-00-00 | DATE PLOTTED => 05-OCT-2011 | TIME PLOTTED => 0514

Dist	COUNTY	ROUTE	POST MILES TOTAL PROJECT	SHEET No.	TOTAL SHEETS
07	LA,Ven	2,5,14,33, 101, *etc.*	Var	120	142

Keith Sellers
LICENSED LANDSCAPE ARCHITECT

10-3-11
PLANS APPROVAL DATE

LICENSED LANDSCAPE ARCHITECT
KEITH SELLERS
NO. 5286
Keith Sellers
Signature
04-30-13
Renewal Date
06-15-11
Date
STATE OF CALIFORNIA

THE STATE OF CALIFORNIA OR ITS OFFICERS OR AGENTS SHALL NOT BE RESPONSIBLE FOR THE ACCURACY OR COMPLETENESS OF SCANNED COPIES OF THIS PLAN SHEET.

NOTE:
FOR ACCURATE RIGHT OF WAY DATA,
CONTACT RIGHT OF WAY ENGINEERING
AT THE DISTRICT OFFICE.

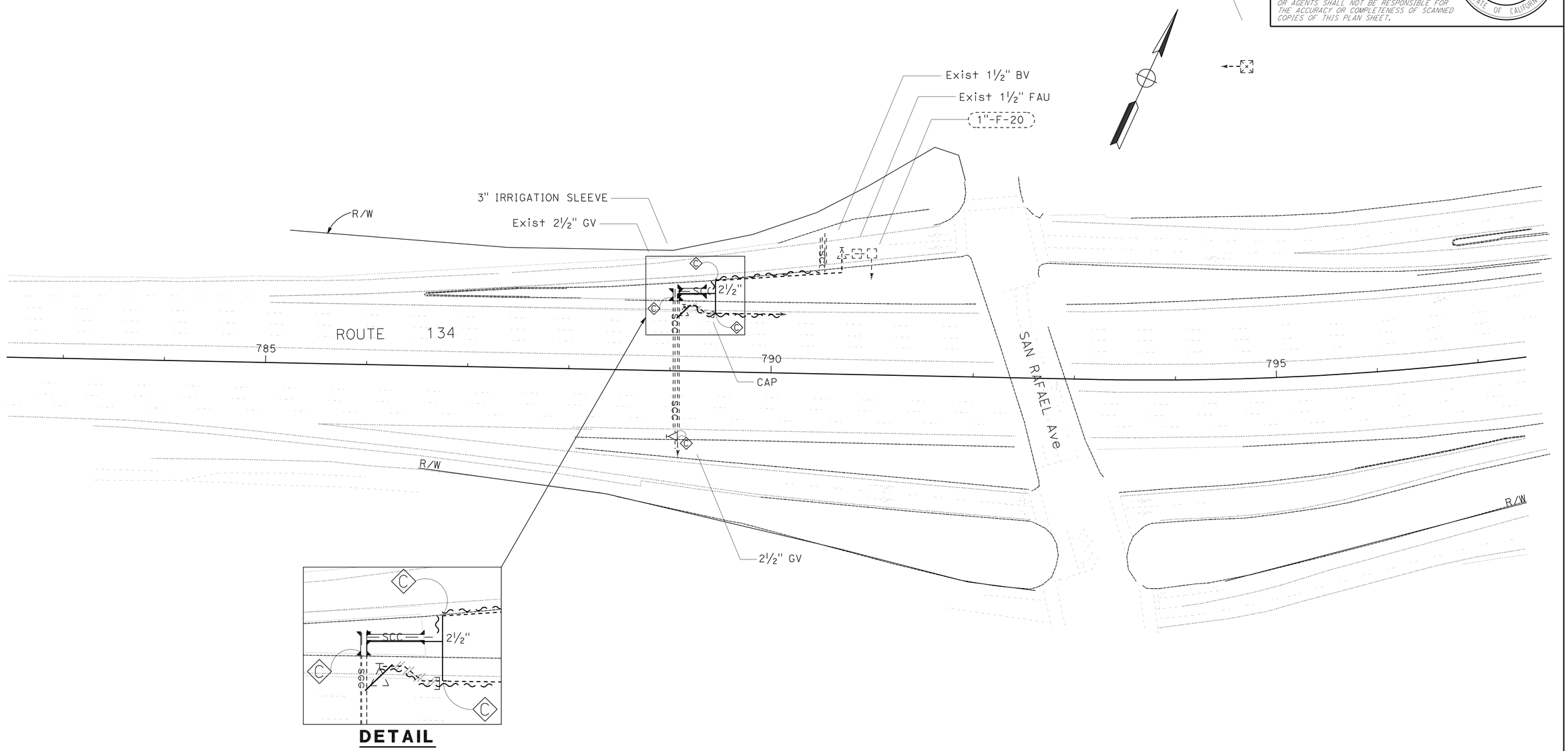

THIS PLAN ACCURATE FOR IRRIGATION WORK ONLY.

IRRIGATION PLAN

SCALE: 1" = 50'

IP-14

STATE OF CALIFORNIA - DEPARTMENT OF TRANSPORTATION
Caltrans® LANDSCAPE ARCHITECTURE

SENIOR LANDSCAPE ARCHITECT: PATTY WATANABE

CALCULATED-DESIGNED BY: KATHLEEN LEDESMA
CHECKED BY: KEITH SELLERS

REVISED BY
DATE REVISED

LAST REVISION 00-00-00
DATE PLOTTED => 04-OCT-2011
TIME PLOTTED => 06:40

Dist	COUNTY	ROUTE	POST MILES TOTAL PROJECT	SHEET No.	TOTAL SHEETS
07	LA,Ven	2,5,14,33, 101,etc.	Var	121	142

Keith Sellers
LICENSED LANDSCAPE ARCHITECT

10-3-11
PLANS APPROVAL DATE

LICENSED LANDSCAPE ARCHITECT
KEITH SELLERS
NO. 5286
Keith Sellers
Signature
04-30-13
Renewal Date
06-15-11
Date
STATE OF CALIFORNIA

THE STATE OF CALIFORNIA OR ITS OFFICERS OR AGENTS SHALL NOT BE RESPONSIBLE FOR THE ACCURACY OR COMPLETENESS OF SCANNED COPIES OF THIS PLAN SHEET.

NOTE:
FOR ACCURATE RIGHT OF WAY DATA, CONTACT RIGHT OF WAY ENGINEERING AT THE DISTRICT OFFICE.

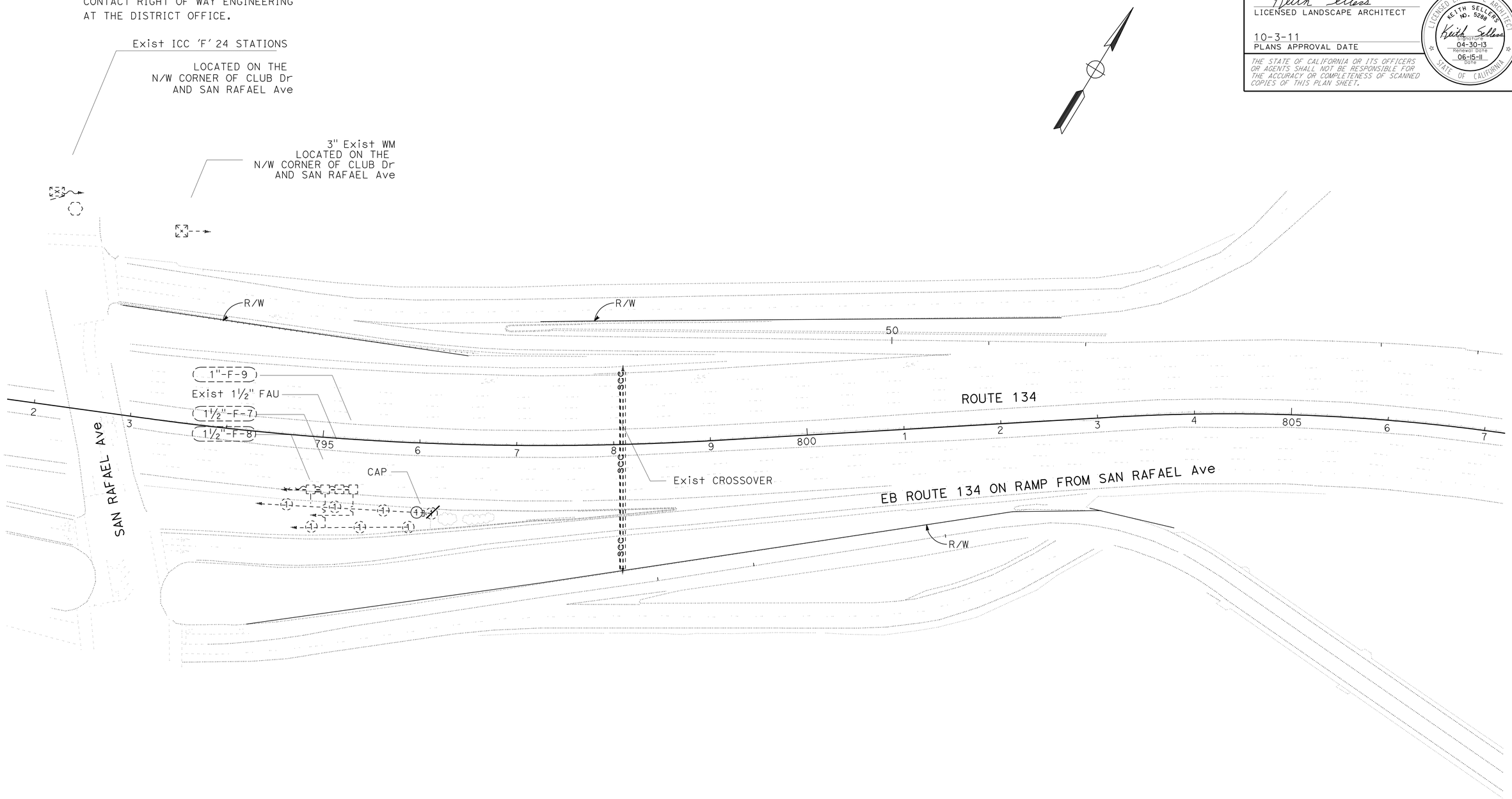

THIS PLAN ACCURATE FOR IRRIGATION WORK ONLY.

IRRIGATION PLAN

SCALE: 1" = 50'

IP-15

STATE OF CALIFORNIA - DEPARTMENT OF TRANSPORTATION
Caltrans® LANDSCAPE ARCHITECTURE

SENIOR LANDSCAPE ARCHITECT: PATTY WATANABE
CALCULATED-DESIGNED BY: KATHLEEN LEDESMA
CHECKED BY: KEITH SELLERS
REVISED BY
DATE REVISED

LAST REVISION 00-00-00
DATE PLOTTED => 03-OCT-2011
TIME PLOTTED => 15:35

Dist	COUNTY	ROUTE	POST MILES TOTAL PROJECT	SHEET No.	TOTAL SHEETS
07	LA,Ven	2,5,14,33, 101,etc.	Var	122	142

Keith Sellers
LICENSED LANDSCAPE ARCHITECT

10-3-11
PLANS APPROVAL DATE

LICENSED LANDSCAPE ARCHITECT
KEITH SELLERS
NO. 5286
Keith Sellers
Signature
04-30-13
Renewal Date
06-15-11
Date
STATE OF CALIFORNIA

THE STATE OF CALIFORNIA OR ITS OFFICERS OR AGENTS SHALL NOT BE RESPONSIBLE FOR THE ACCURACY OR COMPLETENESS OF SCANNED COPIES OF THIS PLAN SHEET.

NOTE:
FOR ACCURATE RIGHT OF WAY DATA,
CONTACT RIGHT OF WAY ENGINEERING
AT THE DISTRICT OFFICE.

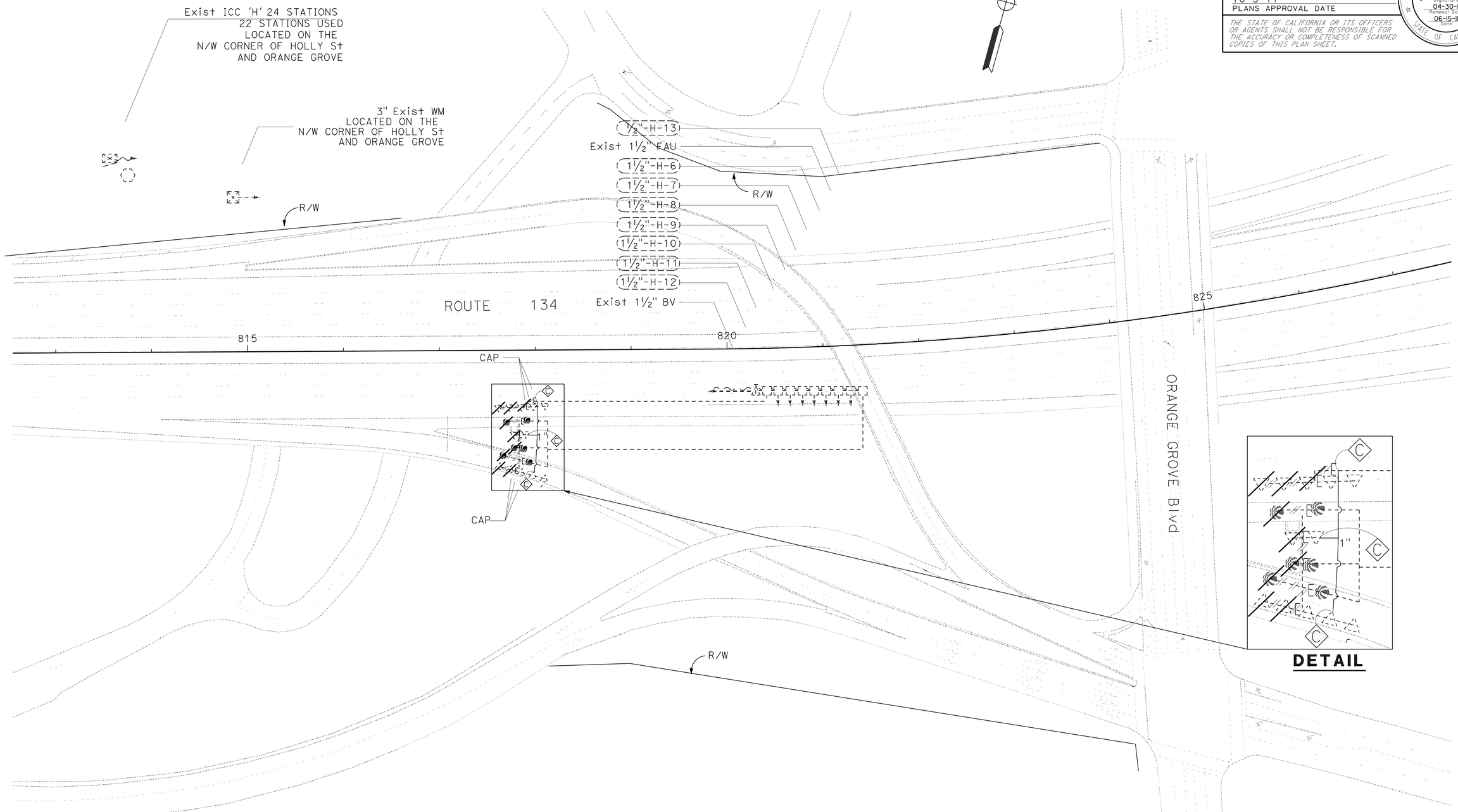

THIS PLAN ACCURATE FOR IRRIGATION WORK ONLY.

IRRIGATION PLAN

SCALE: 1" = 50'

IP-16

STATE OF CALIFORNIA - DEPARTMENT OF TRANSPORTATION
Caltrans® LANDSCAPE ARCHITECTURE

SENIOR LANDSCAPE ARCHITECT: PATTY WATANABE

CALCULATED-DESIGNED BY: KATHLEEN LEDESMA
CHECKED BY: KEITH SELLERS

REVISED BY | DATE REVISED

LAST REVISION 00-00-00 | DATE PLOTTED => 03-OCT-2011 | TIME PLOTTED => 15:35

Dist	COUNTY	ROUTE	POST MILES TOTAL PROJECT	SHEET No.	TOTAL SHEETS
07	LA,Ven	2,5,14,33, 101,etc.	Var	123	142

Keith Sellers
LICENSED LANDSCAPE ARCHITECT

10-3-11
PLANS APPROVAL DATE

LICENSED LANDSCAPE ARCHITECT
KEITH SELLERS
NO. 5286
Keith Sellers
Signature
04-30-13
Renewal Date
06-15-11
Date
STATE OF CALIFORNIA

THE STATE OF CALIFORNIA OR ITS OFFICERS OR AGENTS SHALL NOT BE RESPONSIBLE FOR THE ACCURACY OR COMPLETENESS OF SCANNED COPIES OF THIS PLAN SHEET.

NOTE:
FOR ACCURATE RIGHT OF WAY DATA,
CONTACT RIGHT OF WAY ENGINEERING
AT THE DISTRICT OFFICE.

THIS PLAN ACCURATE FOR IRRIGATION WORK ONLY.

IRRIGATION PLAN

SCALE: 1" = 50'

IP-17

STATE OF CALIFORNIA - DEPARTMENT OF TRANSPORTATION
Caltrans® LANDSCAPE ARCHITECTURE

SENIOR LANDSCAPE ARCHITECT: PATTY WATANABE

CALCULATED-DESIGNED BY: KATHLEEN LEDESMA
CHECKED BY: KEITH SELLERS

REVISED BY
DATE REVISED

LAST REVISION 00-00-00
DATE PLOTTED => 03-OCT-2011
TIME PLOTTED => 15:35

Dist	COUNTY	ROUTE	POST MILES TOTAL PROJECT	SHEET No.	TOTAL SHEETS
07	LA,Ven	2,5,14,33, 101,etc.	Var	124	142

Keith Sellers
LICENSED LANDSCAPE ARCHITECT

10-3-11
PLANS APPROVAL DATE

LICENSED LANDSCAPE ARCHITECT
KEITH SELLERS
NO. 5288
Keith Sellers
Signature
04-30-13
Renewal Date
06-15-11
Date
STATE OF CALIFORNIA

THE STATE OF CALIFORNIA OR ITS OFFICERS OR AGENTS SHALL NOT BE RESPONSIBLE FOR THE ACCURACY OR COMPLETENESS OF SCANNED COPIES OF THIS PLAN SHEET.

NOTE:
FOR ACCURATE RIGHT OF WAY DATA,
CONTACT RIGHT OF WAY ENGINEERING
AT THE DISTRICT OFFICE.

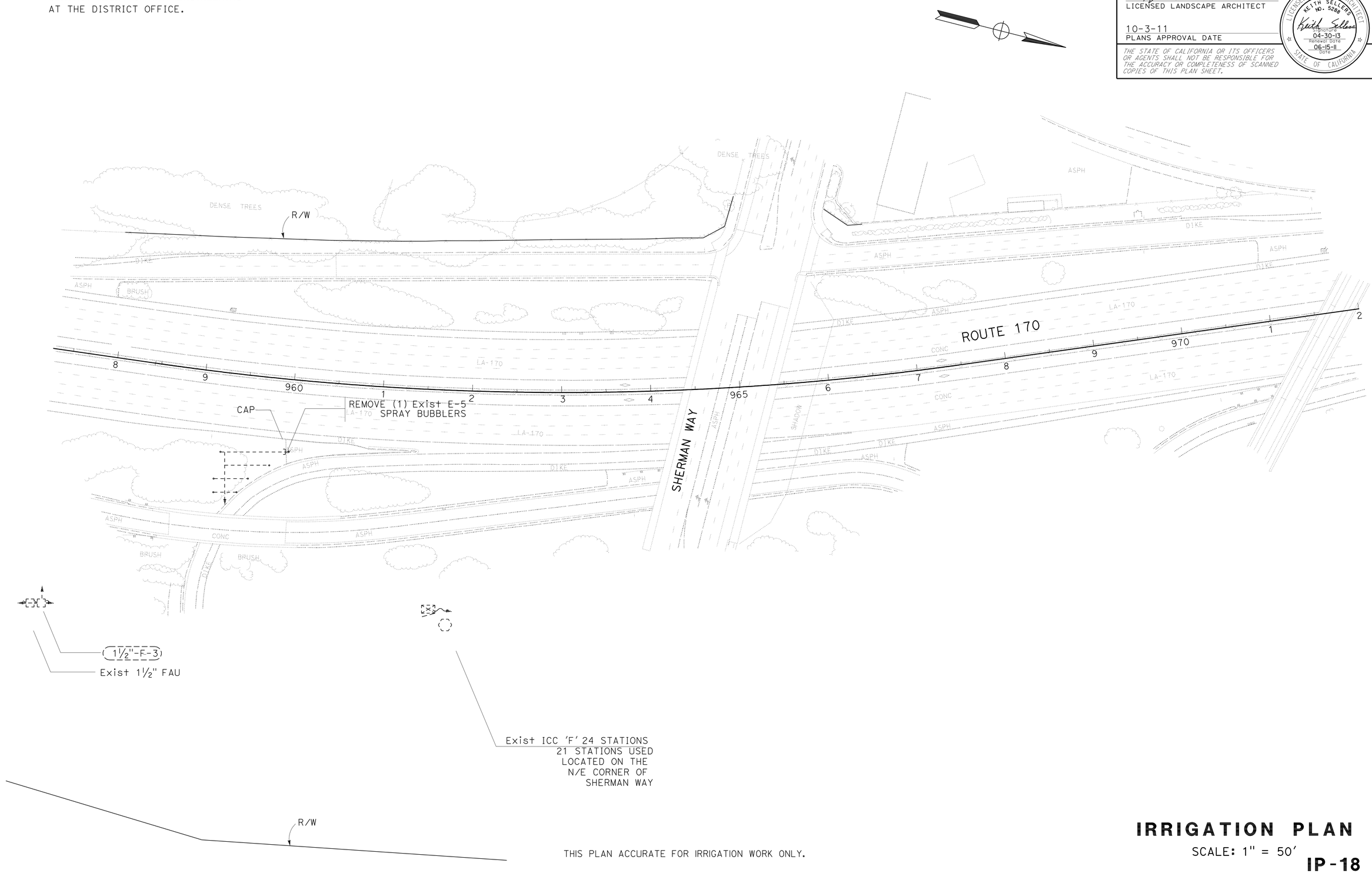

THIS PLAN ACCURATE FOR IRRIGATION WORK ONLY.

IRRIGATION PLAN

SCALE: 1" = 50'

IP-18

STATE OF CALIFORNIA - DEPARTMENT OF TRANSPORTATION
Caltrans® LANDSCAPE ARCHITECTURE

SENIOR LANDSCAPE ARCHITECT: PATTY WATANABE
CALCULATED-DESIGNED BY: KATHLEEN LEDESMA
CHECKED BY: KEITH SELLERS
REVISED BY
DATE REVISED

LAST REVISION 00-00-00
DATE PLOTTED => 03-OCT-2011
TIME PLOTTED => 15:35

Dist	COUNTY	ROUTE	POST MILES TOTAL PROJECT	SHEET No.	TOTAL SHEETS
07	LA,Ven	2,5,14,33, 101,etc.	Var	125	142

Keith Sellers
LICENSED LANDSCAPE ARCHITECT

10-3-11
PLANS APPROVAL DATE

LICENSED LANDSCAPE ARCHITECT
KEITH SELLERS
NO. 5288
Keith Sellers
Signature
04-30-13
Renewal Date
06-15-11
Date
STATE OF CALIFORNIA

THE STATE OF CALIFORNIA OR ITS OFFICERS OR AGENTS SHALL NOT BE RESPONSIBLE FOR THE ACCURACY OR COMPLETENESS OF SCANNED COPIES OF THIS PLAN SHEET.

SPRINKLER SCHEDULE

SYMBOL	TYPE	DESCRIPTION	SPRAY PATTERN	OPERATING PRESSURE (PSI)	PRESSURE COMPENSATING	PLUS/MINUS 5% ② DISCHARGE GALLONS PER MINUTE (GPM)	GALLONS PER HOUR (GPH)	RADIUS (Ft)	WIDTH x LENGTH (Ft)	MATERIAL	INLET CONNECTION (NPT INCH)	POSITIVE-LOCKING Adj ARC STOP	BACKSPLASH PREVENTER	DIFFUSER PIN	DISTANCE CONTROL FLAP	Adj DISCHARGE	RISER TYPE	RISER MATERIAL PLASTIC	RISER MATERIAL GALVANIZED	RISER SIZE (IPS INCH)	RISER HEIGHT (INCH)	RISER FLOW SHUTOFF DEVICE	⑤ SWING JOINT (TYPE)	RISER SUPPORT	SPRINKLER PROTECTOR (TYPE)	REMARKS
①	A-1	SIDE IMPACT	H	40	—	4.4	—	40	—	B/B	½	X	X	X	—	—	I	—	X	½	18	X	III	—	—	

X IN BOX DENOTES REQUIREMENT

APPLICABLE WHEN CIRCLED BELOW:

1 - See Special Provisions.
2 - If a pressure compensating device is specified, the discharge and radii shown reflect its use.
3 - Arc Stop shall be fitted with a nut and bolt.
4 - Vinyl-coated cast iron housing.
⑤ - Swing Joints required adjacent to shoulders, curbs, sidewalks, and dikes.
6 - Unless otherwise shown on plans.

ABBREVIATIONS

F — full circle
P — part circle
F/P — full/part circle
Q — quarter circle
T — third circle
H — half circle
TT — two third circle
TQ — three quarter circle
CST — center strip
SST — side strip
EST — end strip
Ft — feet/foot
GPM — gallons per minute
GPH — gallons per hour
Adj — adjustable
PL — plastic
B/B — brass/bronze
B/PL — brass/plastic
B/B/PL — brass/bronze/plastic
NPT — national pipe thread
IPS — iron pipe size
PSI — pounds per square inch

IRRIGATION SLEEVE

LOCATION ROUTE	LOCATION STATION	SIDE R†	SIDE L†	CONDUIT TYPE ① SIZE (INCH) 3" LENGTH (LF)	CONDUIT TYPE ① SIZE (INCH) 6" LENGTH (LF)	(N) WATER LINE SLEEVE SIZE (INCH)	(N) SPRINKLER CONTROL SLEEVE SIZE (INCH)
2	235+32	X	—	56	—	2"	
126	687+51	X	—	—	81	2"	
126	716+69	—	X	—	34	2"	
126	722+42	X	—	—	53	2"	
134	790+01	—	X	41	—	2½"	
TOTAL				231	34		

(N) - NOT A SEPARATE PAY ITEM FOR INFORMATION ONLY
X - DENOTES REQUIREMENT

SLEEVE TYPE
(Applicable when circled below and shown under the 'SLEEVE TYPE' column heading)

① POLYVINYL CHLORIDE (PVC) PLASTIC PIPE
2 CORRUGATED STEEL PIPE (0.064 INCH THICK)
3 CORRUGATED HIGH DENSITY POLYETHYLENE PIPE
4 ALTERNATIVE CONDUIT

IRRIGATION DETAIL

LD-1

STATE OF CALIFORNIA - DEPARTMENT OF TRANSPORTATION
Caltrans LANDSCAPE ARCHITECTURE
SENIOR LANDSCAPE ARCHITECT PATTY WATANABE
CALCULATED-DESIGNED BY KATHLEEN LEDESMA
CHECKED BY KEITH SELLERS
REVISED BY
DATE REVISED

LAST REVISION 00-00-00
DATE PLOTTED => 03-OCT-2011
TIME PLOTTED => 15:35

DIST	COUNTY	ROUTE	POST MILES TOTAL PROJECT	SHEET NO.	TOTAL SHEETS
07	LA,Ven	2,5,14,33, 101, *etc.*	Var	126	142

REGISTERED CIVIL ENGINEER

November 17, 2006
PLANS APPROVAL DATE

REGISTERED PROFESSIONAL ENGINEER Michael Janzen No. 44788 Exp. 03-31-08 CIVIL STATE OF CALIFORNIA

The State of California or its officers or agents shall not be responsible for the accuracy or completeness of electronic copies of this plan sheet.

To accompany plans dated 10-3-11

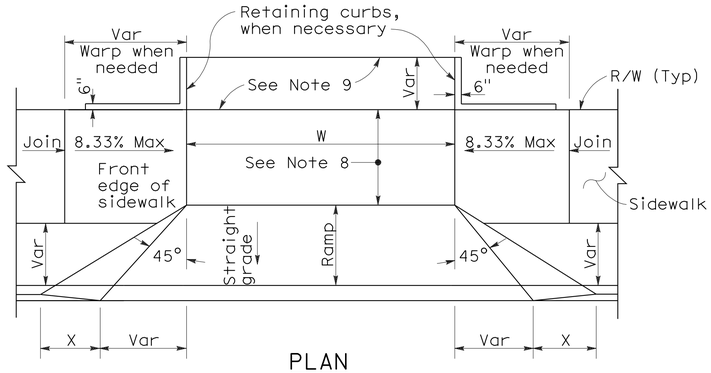

PLAN

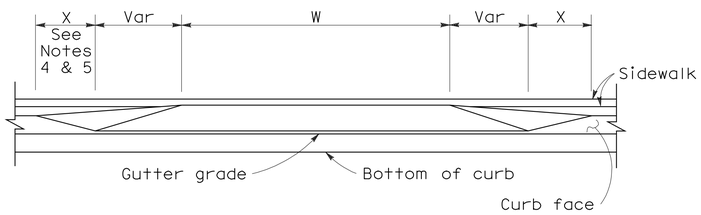

ELEVATION

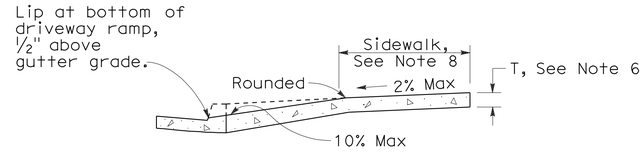

CASE A

Typical driveway, sidewalk not depressed

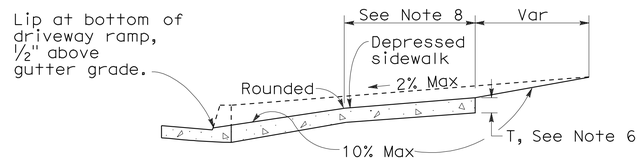

CASE B

Driveway with depressed sidewalk

SECTIONS

DRIVEWAYS

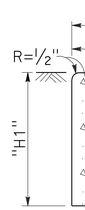

TYPE A1 CURBS

See Table A

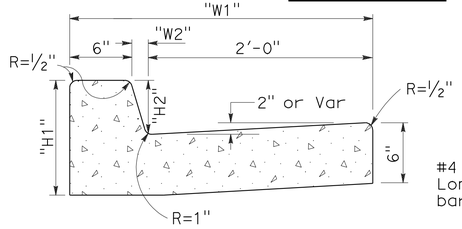

TYPE A2 CURBS

See Table A

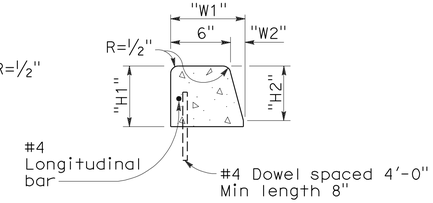

TYPE A3 CURBS

Superimposed on existing pavement
See Table A

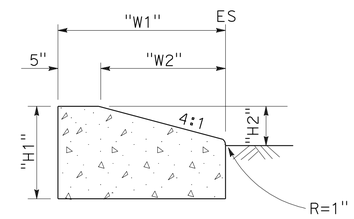

TYPE D CURBS

See Table A

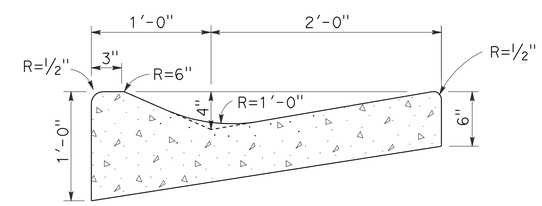

TYPE E CURB

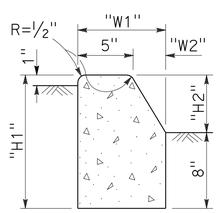

TYPE B1 CURBS

See Table A

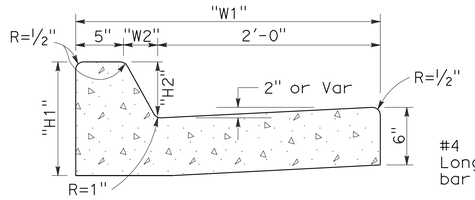

TYPE B2 CURBS

See Table A

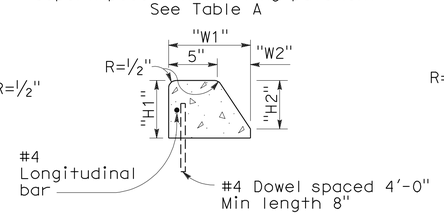

TYPE B3 CURBS

Superimposed on existing pavement
See Table A

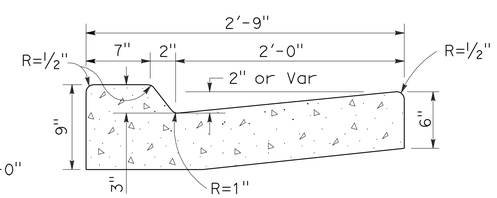

TYPE B4 CURBS

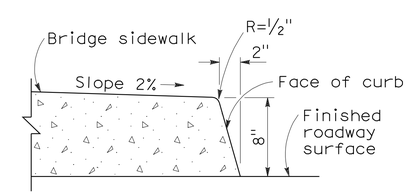

TYPE H CURB

On Bridges

CURBS

CURB QUANTITIES

TYPE	CUBIC YARDS PER LINEAR FOOT
A1-6	0.02585
A1-8	0.03084
A2-6	0.05903
A2-8	0.06379
A3-6	0.01036
A3-8	0.01435
B1-4	0.02185
B1-6	0.02930
B2-4	0.05515
B2-6	0.06171
B3-4	0.00641
B3-6	0.01074
B4	0.05709
D-4	0.04083
D-6	0.06804
E	0.06661

TABLE A

CURB TYPE	DIMENSIONS "H1"	"H2"	"W1"	"W2"
A1-6	1'-2"	6"	7½"	1½"
A1-8	1'-4"	8"	8"	2"
A2-6	1'-0"	6"	2'-7½"	1½"
A2-8	1'-2"	8"	2'-8"	2"
A3-6	6"	5"	7¼"	1¼"
A3-8	8"	7"	7¾"	1¾"
B1-4	1'-0"	4"	7½"	2½"
B1-6	1'-2"	6"	9"	4"
B2-4	10"	4"	2'-7½"	2½"
B2-6	1'-0"	6"	2'-9"	4"
B3-4	4"	3"	7"	2"
B3-6	6"	5"	8½"	3½"
D-4	10"	4"	1'-6"	1'-1"
D-6	1'-0"	6"	2'-2"	1'-8"

NOTES:

1. Case A driveway section typically applies.
2. Use Case B driveway section when ramp slopes would exceed 10% in Case A.
3. Use Case B driveway section when sidewalk cross slope would exceed 2% in Case A.
4. X=3'-0" except for curb heights over 10" where 4:1 slopes shall be used on curb slope.
5. X is a variable when sidewalk is located where wheelchairs may traverse the surface. Slopes shall not exceed 8.33%.
6. Sidewalk and ramp thickness "T" at driveway shall be 4" for residental and 6" for commercial.
7. Difference in slope of the driveway ramp and the slope of a line between the gutter and a point on the roadway 5'-0" from gutter line shall not exceed 15%. Reduce driveway ramp slope, not gutter slope, where required.
8. Minimum width of clear passageway for sidewalk shall be 4'-0".
9. Retaining curbs and acquisition of construction easement may be necessary for narrow sidewalks or curb heights in excess of 6".
10. Across the pedestrian route at curb ramp locations, the gutter pan slope shall not exceed 1" of depth for each 2'-0" of width.

STATE OF CALIFORNIA
DEPARTMENT OF TRANSPORTATION

CURBS AND DRIVEWAYS

NO SCALE

RSP A87A DATED NOVEMBER 17, 2006 SUPERSEDES STANDARD PLAN A87A DATED MAY 1, 2006 - PAGE 113 OF THE STANDARD PLANS BOOK DATED MAY 2006.

REVISED STANDARD PLAN RSP A87A

2006 REVISED STANDARD PLAN RSP A87A

10-25-06

DIST	COUNTY	ROUTE	POST MILES TOTAL PROJECT	SHEET NO.	TOTAL SHEETS
07	LA,Ven	2,5,14,33, 101, etc.	Var	127	142

William K. Farnbach
REGISTERED CIVIL ENGINEER

May 15, 2009
PLANS APPROVAL DATE

REGISTERED PROFESSIONAL ENGINEER
William K. Farnbach
No. C49042
Exp. 9-30-10
CIVIL
STATE OF CALIFORNIA

The State of California or its officers or agents shall not be responsible for the accuracy or completeness of electronic copies of this plan sheet.

To accompany plans dated 10-3-11

NOTES:

1. Details for gore area paving are applicable to both exit and entrance ramps.
2. Transverse Joint Layouts are not shown. Refer to Revised Standard Plan RSP P1 or Project Plans for details regarding joint layouts, tie bars, and dowel bars not shown.
3. WWF 4 x 4 - W4.0 x W4.0 can be used in place of steel reinforcement for gore area paving only.
4. Omit longitudinal joint when concrete on ramp shoulder is less than 3'-0".
5. Place joint perpendicular to ramp longitudinal joints. Match location of joint with ramp transverse joints.
6. Place joint perpendicular to ramp longitudinal joints. Match location of joint with mainline transverse joints.
7. Isolation joint detail shown on Revised Standard Plan RSP P18.
8. For jointed plain concrete pavement, transverse joints to be spaced from fixed transverse joint and shall follow spacing pattern on Revised Standard Plan RSP P1. Minimum spacing shall be 6 feet.

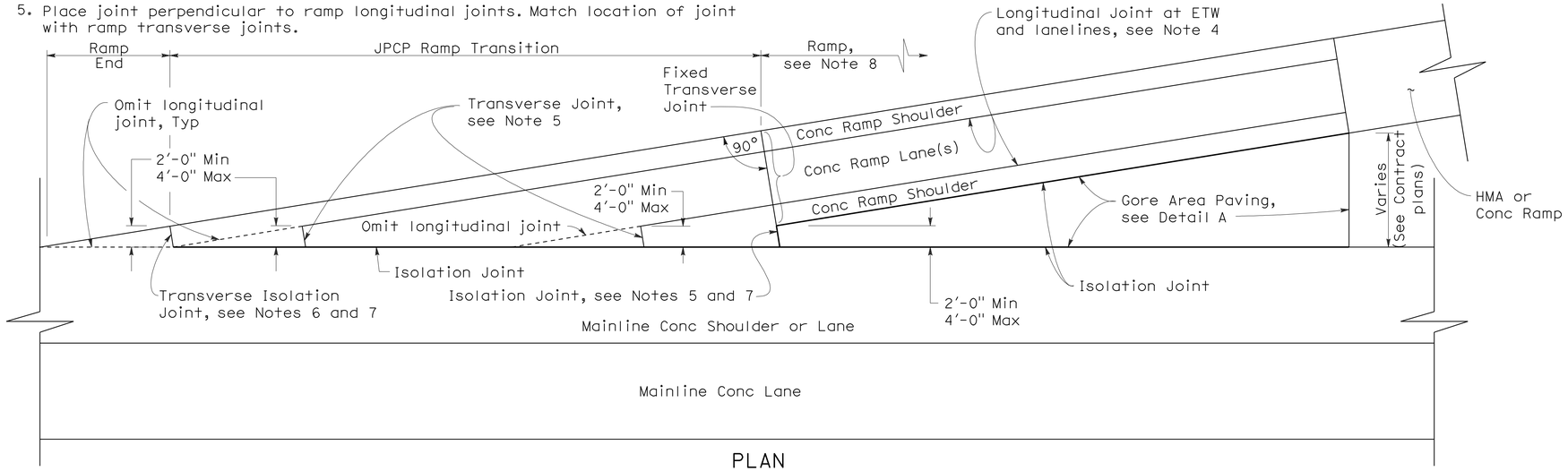

PLAN

RAMP TRANSITION DETAIL

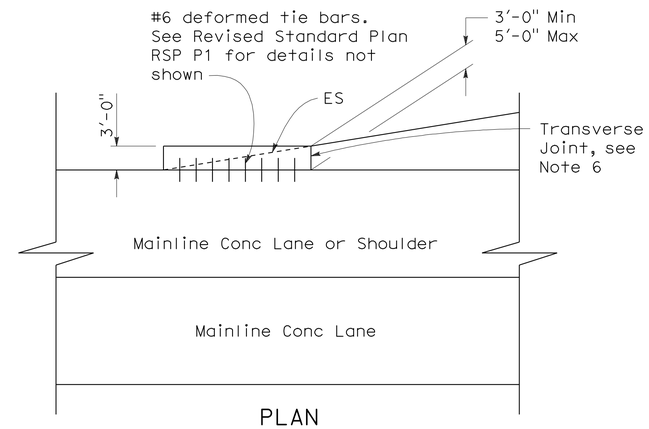

PLAN

ALTERNATE RAMP END DETAIL

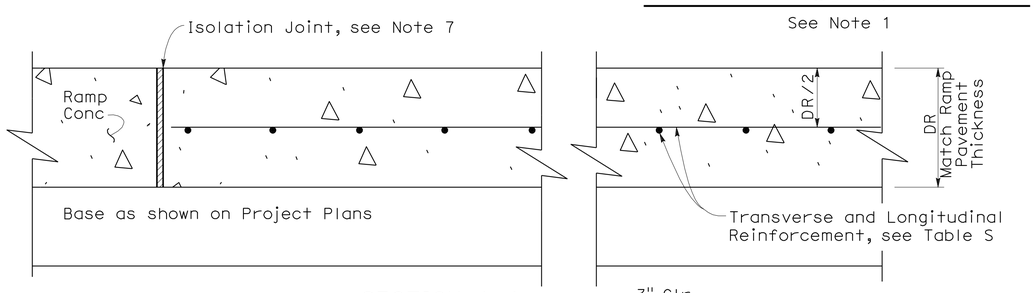

SECTION A-A

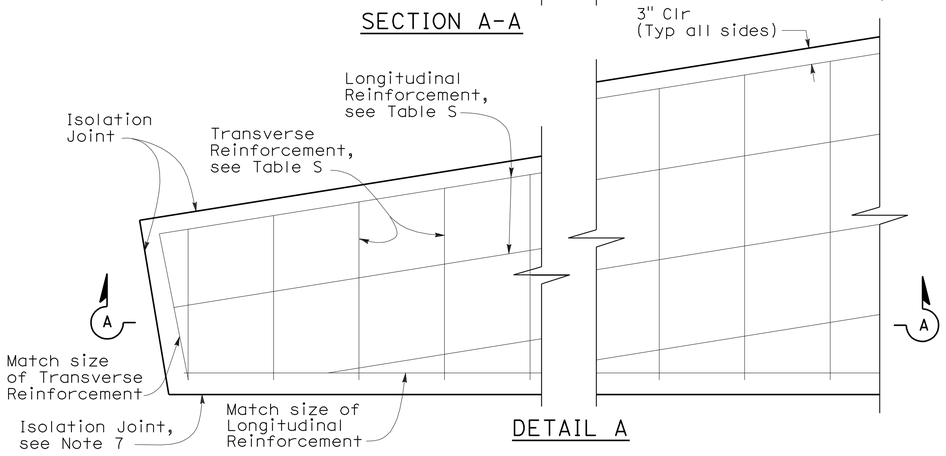

DETAIL A

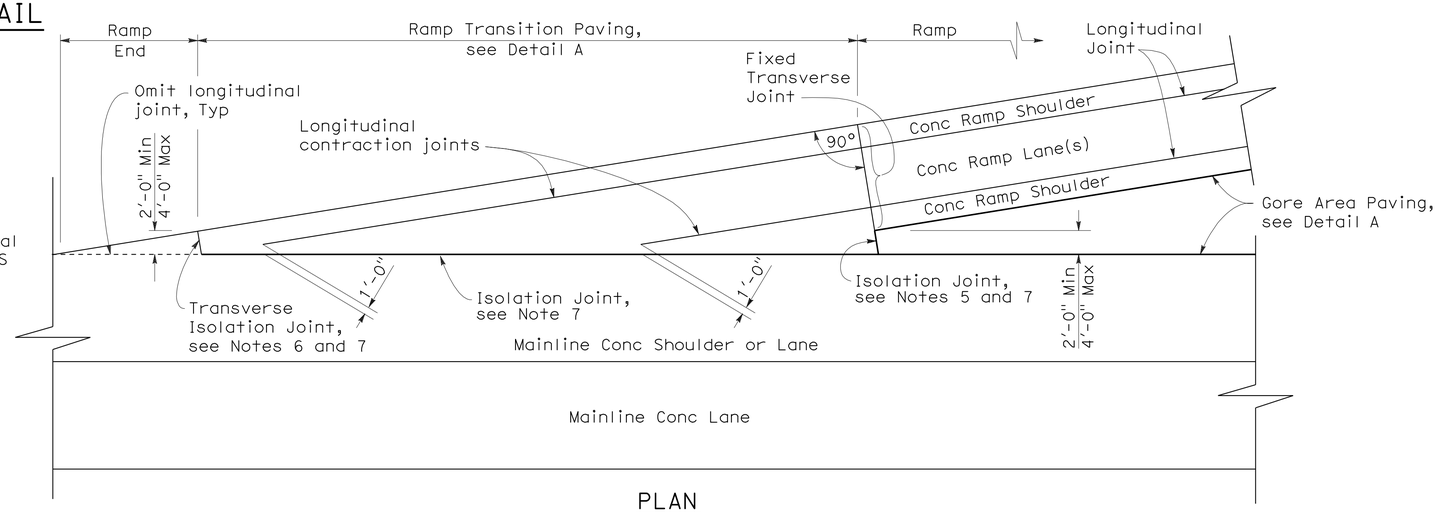

PLAN

ALTERNATE RAMP TRANSITION DETAIL

(For JPCP and CRCP)

TABLE S

Location	Transverse Reinf	Longitudinal Reinf
Gore Area Paving	#4 @ 1'-0" *	#4 @ 1'-0" *
Ramp Transition (JPCP)	#6 @ 1'-6"	#6 @ 9"
Ramp Transition (CRCP)	See NSP P4, Table No. 2	See NSP P4, Table No. 1

* See Note 3

STATE OF CALIFORNIA
DEPARTMENT OF TRANSPORTATION

CONCRETE PAVEMENT-RAMP TRANSITION PAVING DETAILS

NO SCALE

RSP P35 DATED MAY 15, 2009 SUPERSEDES STANDARD PLAN P35 DATED MAY 1, 2006 - PAGE 131 OF THE STANDARD PLANS BOOK DATED MAY 2006.

REVISED STANDARD PLAN RSP P35

2006 REVISED STANDARD PLAN RSP P35

5-8-09

DIST	COUNTY	ROUTE	POST MILES TOTAL PROJECT	SHEET NO.	TOTAL SHEETS
07	LA,Ven	2,5,14,33, 101, etc.	Var	128	142

LICENSED LANDSCAPE ARCHITECT

June 5, 2009
PLANS APPROVAL DATE

The State of California or its officers or agents shall not be responsible for the accuracy or completeness of electronic copies of this plan sheet.

LICENSED LANDSCAPE ARCHITECT — Gregory A. Balzer — 2516 — 10 January — 2-28-11 (Renewal Date) — 5-14-09 (Date) — STATE OF CALIFORNIA

To accompany plans dated 10-3-11

2006 REVISED STANDARD PLAN RSP H1

A

AB	aggregate base
ABS	acrylonitrile-butadiene-styrene
AC	asphalt concrete
Adj	adjacent/adjustable
AIC	auxiliary irrigation controller
Alt	alternative
AMEND	amendment
ARV	air release valve
AUTO	automatic
AUX	auxiliary
AVB	atmospheric vacuum breaker

B

B&B	balled and burlapped
B/B	brass/bronze
B/B/PL	brass/bronze/plastic
B/PL	brass/plastic
BFM	bonded fiber matrix
Bit Ctd	bituminous coated
BP	booster pump
BPA	backflow preventer assembly
BPAE	backflow preventer assembly in enclosure
BPE	backflow preventer enclosure
BV	ball valve

C

CAP	corrugated aluminum pipe
CARV	combination air release valve
CCA	cam coupler assembly
CEC	controller enclosure cabinet
CHDPE	corrugated high density polyethylene
CL	chain link
CNC	control and neutral conductors
Conc	concrete
Cond	conduit
CSP	corrugated steel pipe
CST	center strip
CV	check valve

D

Dia	diameter
DIP	ductile iron pipe
DN	diameter nominal

E

EA	each
Elect	electric/electrical
Elev	elevation
ENCL	enclosure
EP	edge of pavement
ES	edge of shoulder
EST	end strip
ESTB	establishment
ETW	edge of traveled way

F

F	full circle
F/P	full/part circle
FAU	filter assembly unit
FCV	flow control valve
FERT	fertilizer
FG	finished grade
FIPT	female iron pipe thread
FIS	fertilizer injector system
FL	flow line
FM	flow monitor
FS	flow sensor
Ft	foot/feet
FV	flush valve

G

GAL	Gallon(s)
Galv	galvanized
GARV	garden valve
GPH	gallons per hour
GPM	gallons per minute
GSP	galvanized steel pipe
GV	gate valve

H

H	half circle
HB	hose bib
HDPE	high density polyethylene
HP	horsepower/hinge point
HPL	high pressure line
Hwy	highway

I

IC	irrigation controller
ICC	irrigation controller(s) in controller enclosure cabinet
ID	inside diameter
In	inches
IFS	irrigation filtration system
IPS	iron pipe size
IPT	iron pipe thread
Irr	irrigation

L

L	length
LF	linear foot

M

Max	maximum
MBGR	metal beam guard railing
MCV	manual control valve
MIC	master irrigation controller
Min	minimum
MIPT	male iron pipe thread
Misc	miscellaneous
Mtl	material
MVP	maintenance vehicle pullout

N

NCN	no common name
NL	nozzle line
No.	number
NPT	national pipe thread

O

O/C	on center
OD	outside diameter
Oz	ounce

P

P	part circle
PB	pull box
PCC	portland cement concrete
PE	polyethylene
Pkt	packet
PL	plastic
PLT	plant/planting
PLT ESTB	plant establishment
PM	post mile
PR	pressure rated
PRLV	pressure relief valve
PSFM	polymer stabilized fiber matrix
PSI	pounds per square inch
PRV	pressure reducing valve
PVC	polyvinyl chloride
Pvmt	pavement

Q

Q	quarter circle
QCV	quick coupling valve

R

R	radius
RCP	reinforced concrete pipe
RCV	remote control valve
RCVM	remote control valve (master)
RCVMF	remote control valve (master) w/ flow meter
RCW	recycled/reclaimed water
RECP	rolled erosion control product
REQ	required
R/W	right of way

S

S	slip
SCC	sprinkler control conduit
SCH	schedule
SF	state-furnished
Shld	shoulder
SQFT	square foot/feet
SQYD	square yard(s)
SST	side strip
Sta	station
Std	standard
SW	sidewalk/sound wall

T

T	third circle/thread
TLS	truck loading standpipe
TQ	three quarter circle
TRM	turf reinforcement mat
TRVD	traveled
TT	two third circle
Typ	typical

U

UG	underground

V

VAU	valve assembly unit

W

W	width
W/	with
WM	water meter
WS	wye strainer
WSP	welded steel pipe
WWM	welded wire mesh

NOTE:

FOR ADDITIONAL ABBREVIATIONS, SEE STANDARD PLANS A10A AND A10B.

STATE OF CALIFORNIA
DEPARTMENT OF TRANSPORTATION

PLANTING AND IRRIGATION ABBREVIATIONS

NO SCALE

RSP H1 DATED JUNE 5, 2009 SUPERSEDES STANDARD PLAN H1 DATED MAY 1, 2006 - PAGE 201 OF THE STANDARD PLANS BOOK DATED MAY 2006.

REVISED STANDARD PLAN RSP H1

DIST	COUNTY	ROUTE	POST MILES TOTAL PROJECT	SHEET NO.	TOTAL SHEETS
07	LA,Ven	2,5,14,33, 101, etc.	Var	129	142

LICENSED LANDSCAPE ARCHITECT

June 5, 2009
PLANS APPROVAL DATE

The State of California or its officers or agents shall not be responsible for the accuracy or completeness of electronic copies of this plan sheet.

LICENSED LANDSCAPE ARCHITECT — Gregory A. Balzer — 2516 — 10 expiration date 2-28-11 — renewal date 5-14-09 — date — STATE OF CALIFORNIA

To accompany plans dated 10-3-11

EXISTING	PROPOSED	ITEM DESCRIPTION
		WATER METER (WM)
		BACKFLOW PREVENTER ASSEMBLY (BPA)
		BACKFLOW PREVENTER ASSEMBLY IN ENCLOSURE (BPAE)
		BACKFLOW PREVENTER ENCLOSURE (BPE)
		BOOSTER PUMP (BP)
		TRUCK LOADING STANDPIPE (TLS)
FS	FS	FLOW SENSOR (FS)
X	X	MASTER IRRIGATION CONTROLLER (MIC)
		AUXILIARY IRRIGATION CONTROLLER (AIC)
		IRRIGATION CONTROLLER (IC)/ IRRIGATION CONTROLLER (IC) (BATTERY) IRRIGATION CONTROLLER (IC) (SOLAR)
		IRRIGATION CONTROLLER(S) IN CONTROLLER ENCLOSURE CABINET (ICC)
		CONTROL AND NEUTRAL CONDUCTORS (CNC)
SCC	SCC	SPRINKLER CONTROL CONDUIT (SCC)
		IRRIGATION CROSSOVER
		EXTEND IRRIGATION CROSSOVER
		IRRIGATION SLEEVE
dip	DIP	DUCTILE IRON PIPE (SUPPLY LINE) (MAIN) (DIP)
		GALVANIZED STEEL PIPE (SUPPLY LINE) (MAIN) (GSP)
		GALVANIZED STEEL PIPE (SUPPLY LINE) (LATERAL) (GSP)
		PLASTIC PIPE (PR 200) (SUPPLY LINE) (MAIN)
		PLASTIC PIPE (PR 200) (SUPPLY LINE) (LATERAL)
		PLASTIC PIPE (IRRIGATION LINE)
		REMOTE CONTROL VALVE (RCV) REMOTE CONTROL VALVE (MASTER) (RCVM) REMOTE CONTROL VALVE (MASTER) W/FLOW METER (RCVMF)
		MANUAL CONTROL VALVE (MCV)
		VALVE ASSEMBLY UNIT (VAU)
		WYE STRAINER (WS)
		FILTER ASSEMBLY UNIT (FAU)
		GATE VALVE (GV)
		BALL VALVE (BV)

EXISTING	PROPOSED	ITEM DESCRIPTION
		QUICK COUPLING VALVE (QCV)
		CAM COUPLER ASSEMBLY (CCA)
		PRESSURE REDUCING VALVE (PRV)
		PRESSURE RELIEF VALVE (PRLV)
		FLOW CONTROL VALVE (FCV)
		COMBINATION AIR RELEASE VALVE (CARV)
		CHECK VALVE (CV)
		FLUSH VALVE (FV)
		NOZZLE LINE W/TURNING UNION
		IRRIGATION SYSTEM
		IRRIGATION SYSTEM TO BE REMOVED
		CHAIN LINK GATE
		QUICK COUPLING VALVE W/SPRINKLER PROTECTOR
3	3	SPRINKLER W/SPRINKLER PROTECTOR
	C	CONNECT TO EXISTING SYSTEM
		CAP
		CAP EXISTING

VALVE CODE

RCV SIZE
IRRIGATION CONTROLLER
CONTROLLER STATION
VALVE IN PARALLEL (IF APPLICABLE)
GPM
QUANTITY OF SPRINKLERS (WHEN SHOWN)

* 2½"-A-2b-40 -60

MCV SIZE
VALVE NUMBER
GPM
QUANTITY OF TYPE SPRINKLERS (WHEN SHOWN)

* 2"-3-30 -50

* VALVE CODES FOR EXISTING VALVES ARE SHOWN IN A DASHED ENCLOSURE.

STATE OF CALIFORNIA
DEPARTMENT OF TRANSPORTATION

PLANTING AND IRRIGATION SYMBOLS

NO SCALE

RSP H2 DATED JUNE 5, 2009 SUPERSEDES RSP H2 DATED MARCH 7, 2008 AND STANDARD PLAN H2 DATED MAY 1, 2006 - PAGE 202 OF THE STANDARD PLANS BOOK DATED MAY 2006.

REVISED STANDARD PLAN RSP H2

2006 REVISED STANDARD PLAN RSP H2

DIST	COUNTY	ROUTE	POST MILES TOTAL PROJECT	SHEET NO.	TOTAL SHEETS
07	LA,Ven	2,5,14,33, 101, etc.	Var	130	142

LICENSED LANDSCAPE ARCHITECT

June 5, 2009
PLANS APPROVAL DATE

LICENSED LANDSCAPE ARCHITECT
Gregory A. Balzer 2516
10-3-11 Signature
2-28-11 Renewal Date
5-14-09 Date
STATE OF CALIFORNIA

The State of California or its officers or agents shall not be responsible for the accuracy or completeness of electronic copies of this plan sheet.

To accompany plans dated 10-3-11

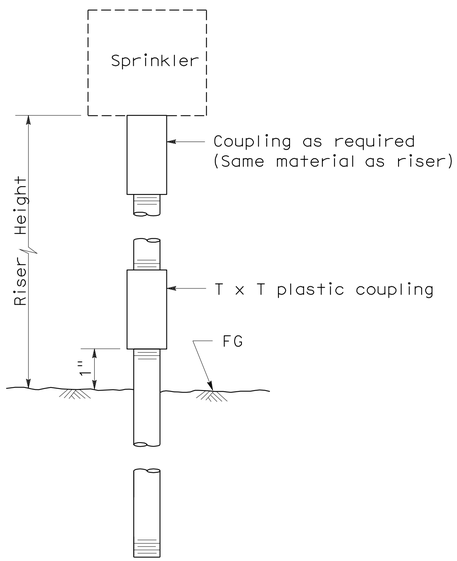

ELEVATION
RISER TYPE I

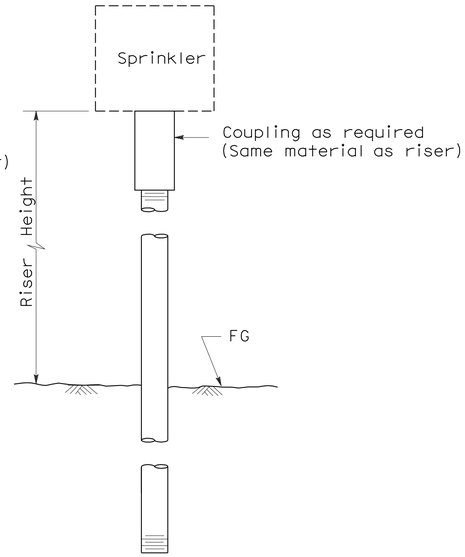

ELEVATION
RISER TYPE II

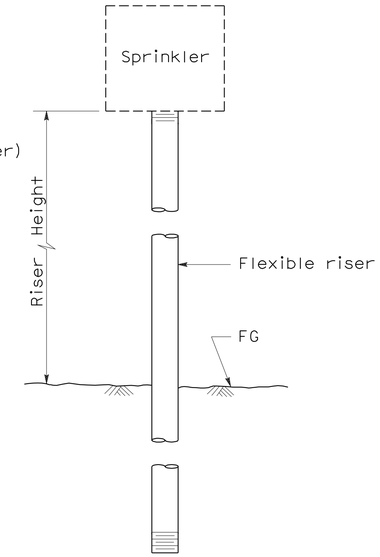

ELEVATION
RISER TYPE III

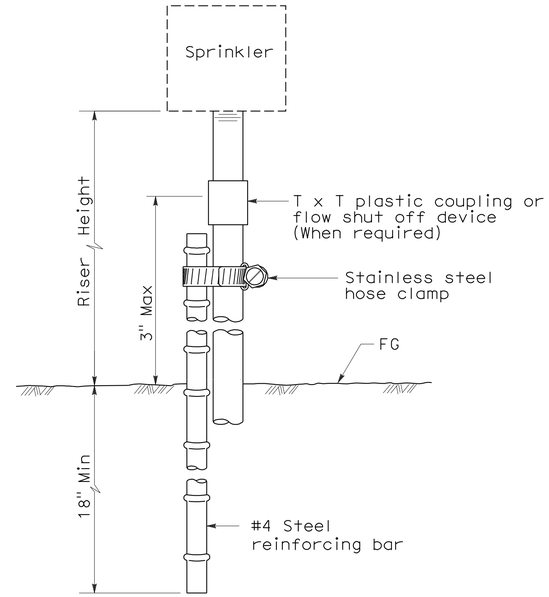

ELEVATION
RISER TYPE IV

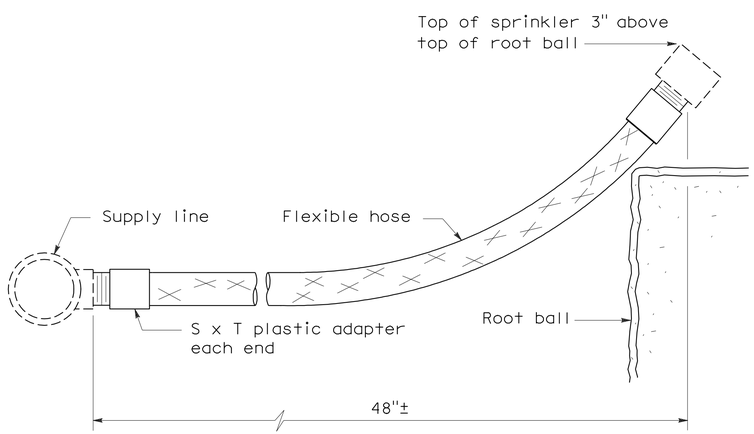

ELEVATION
RISER TYPE V

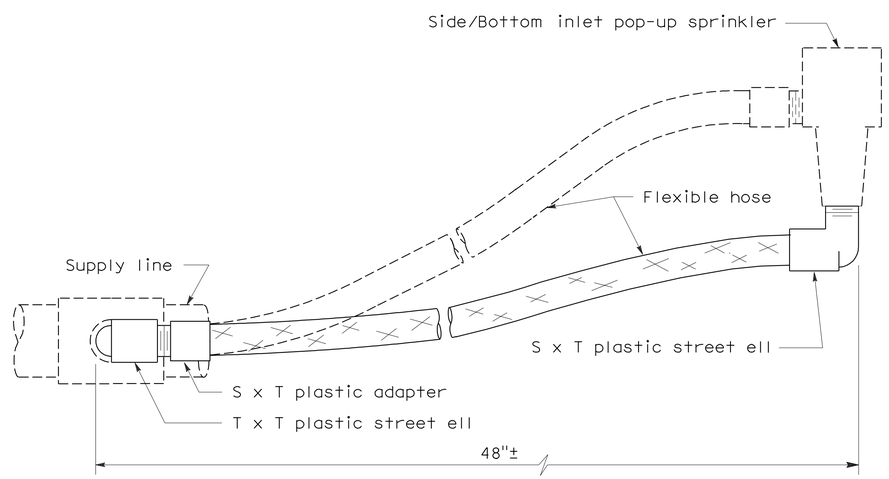

ELEVATION
RISER TYPE VI

STATE OF CALIFORNIA
DEPARTMENT OF TRANSPORTATION

PLANTING AND IRRIGATION DETAILS

NO SCALE

RSP H5 DATED JUNE 5, 2009 SUPERSEDES STANDARD PLAN H5
DATED MAY 1, 2006 - PAGE 205 OF THE STANDARD PLANS BOOK DATED MAY 2006.

REVISED STANDARD PLAN RSP H5

2006 REVISED STANDARD PLAN RSP H5

5-28-09

DIST	COUNTY	ROUTE	POST MILES TOTAL PROJECT	SHEET NO.	TOTAL SHEETS
07	LA,Ven	2,5,14,33, 101, *etc.*	Var	131	142

LICENSED LANDSCAPE ARCHITECT

June 5, 2009
PLANS APPROVAL DATE

The State of California or its officers or agents shall not be responsible for the accuracy or completeness of electronic copies of this plan sheet.

LICENSED LANDSCAPE ARCHITECT — Gregory A. Balzer 2576 — 10-3-11 Renewal Date — 2-28-11 Renewal Date — 5-14-09 Date — STATE OF CALIFORNIA

To accompany plans dated 10-3-11

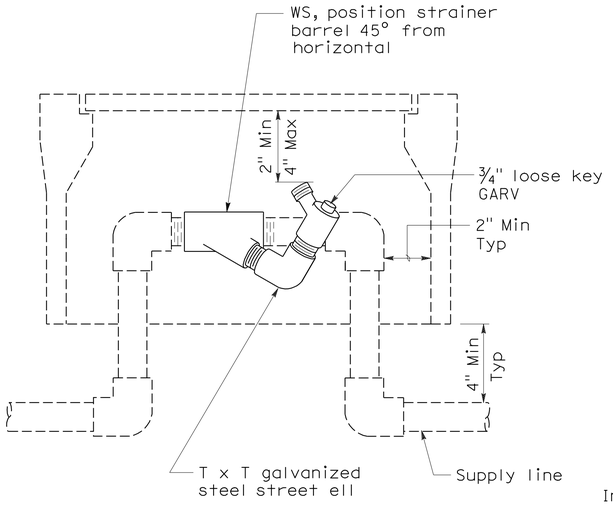

ELEVATION
WYE STRAINER

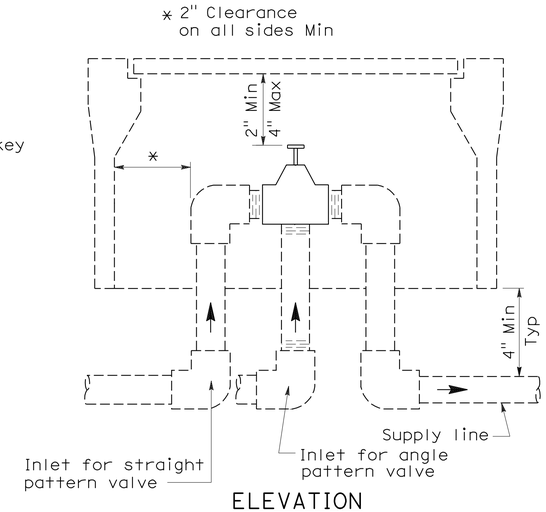

ELEVATION
VALVE

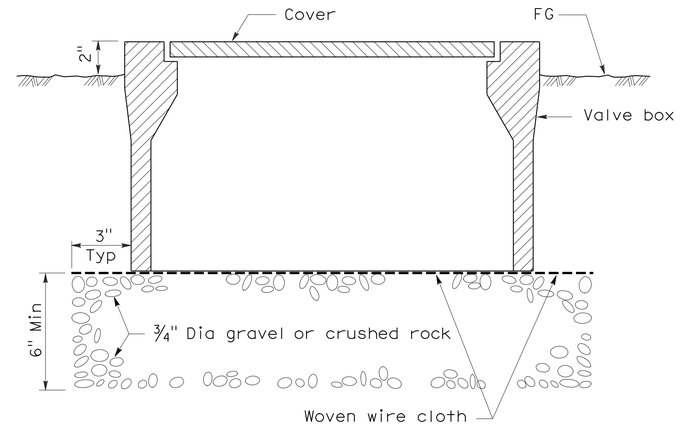

SECTION
VALVE BOX

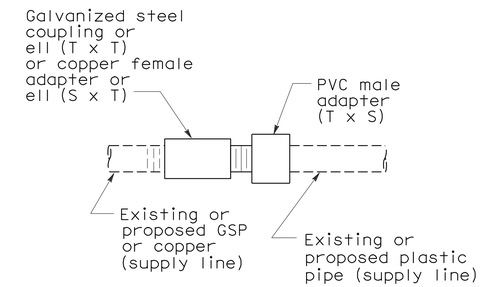

PLAN
GALVANIZED OR COPPER PIPE CONNECTION TO PLASTIC PIPE

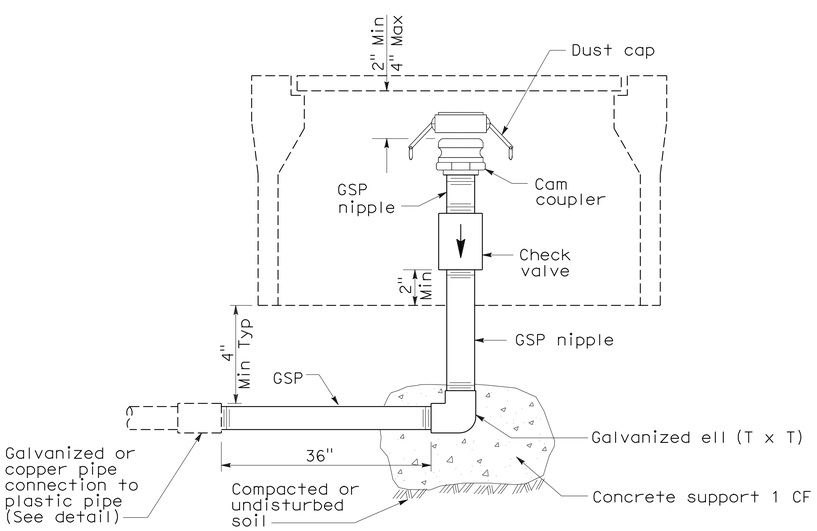

ELEVATION
CAM COUPLER ASSEMBLY

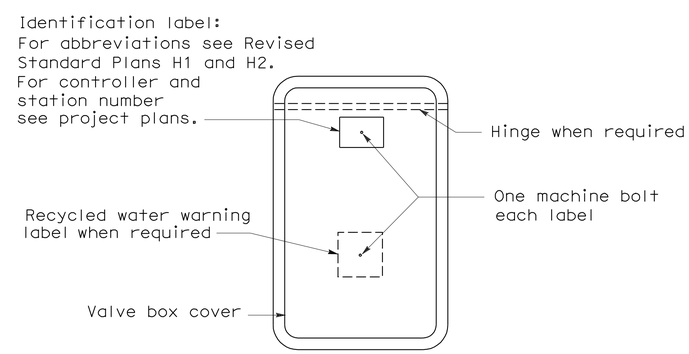

PLAN

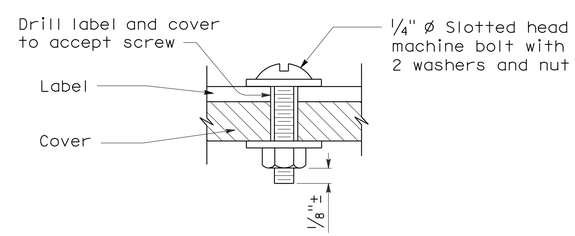

SECTION
VALVE BOX IDENTIFICATION

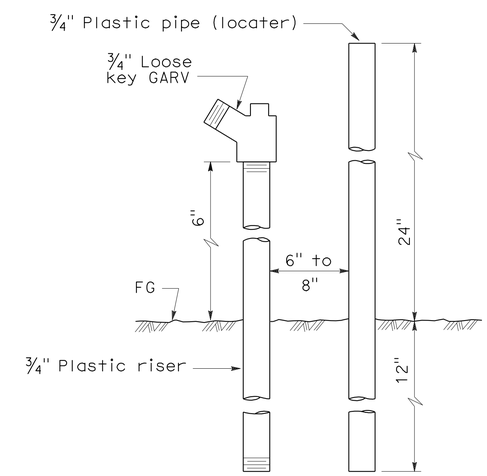

ELEVATION
FLUSH VALVE

STATE OF CALIFORNIA
DEPARTMENT OF TRANSPORTATION

PLANTING AND IRRIGATION DETAILS

NO SCALE

RSP H7 DATED JUNE 5, 2009 SUPERSEDES STANDARD PLAN H7
DATED MAY 1, 2006 - PAGE 207 OF THE STANDARD PLANS BOOK DATED MAY 2006.

REVISED STANDARD PLAN RSP H7

2006 REVISED STANDARD PLAN RSP H7

5-28-09

DIST	COUNTY	ROUTE	POST MILES TOTAL PROJECT	SHEET NO.	TOTAL SHEETS
07	LA,Ven	2,5,14,33, 101, etc.	Var	132	142

Randell D. Hiatt
REGISTERED CIVIL ENGINEER

June 6, 2008
PLANS APPROVAL DATE

REGISTERED PROFESSIONAL ENGINEER
Randell D. Hiatt
No. C50200
Exp. 6-30-09
CIVIL
STATE OF CALIFORNIA

The State of California or its officers or agents shall not be responsible for the accuracy or completeness of electronic copies of this plan sheet.

To accompany plans dated 10-3-11

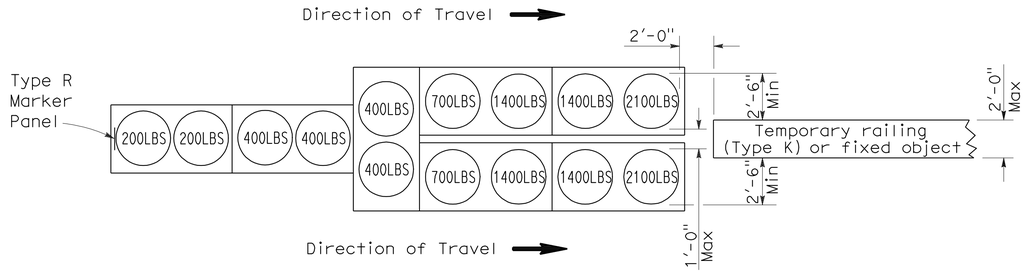

ARRAY 'TU14'

Approach speed 45 mph or more

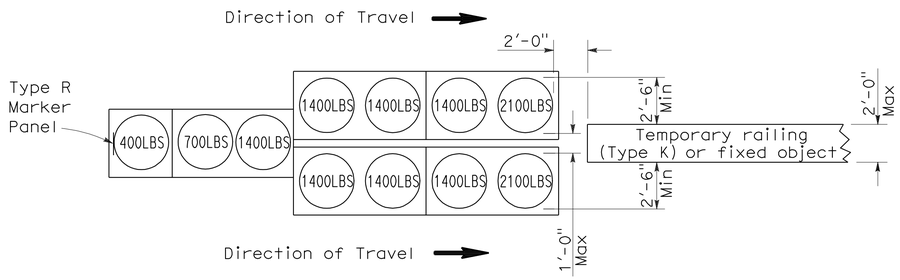

ARRAY 'TU11'

Approach speed less than 45 mph

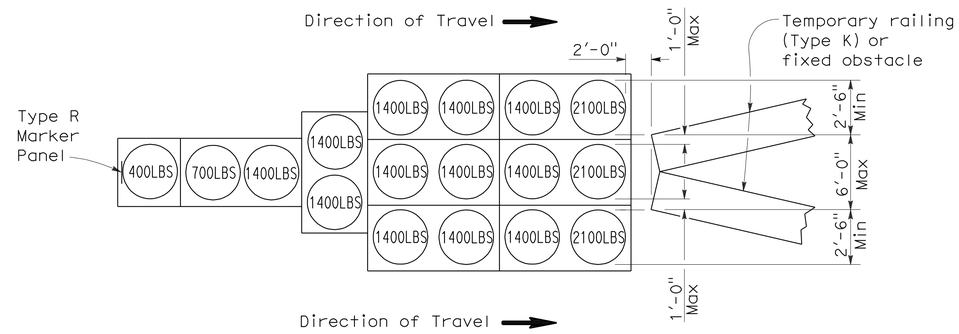

ARRAY 'TU17'

Approach speed less than 45 mph

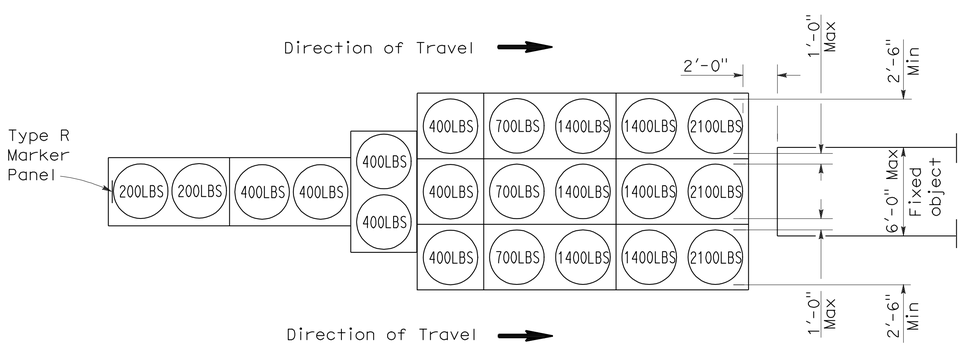

ARRAY 'TU21'

Approach speed 45 mph or more

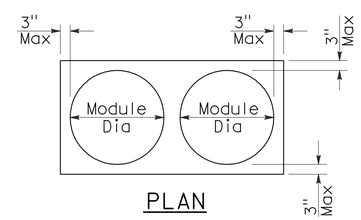

PLAN

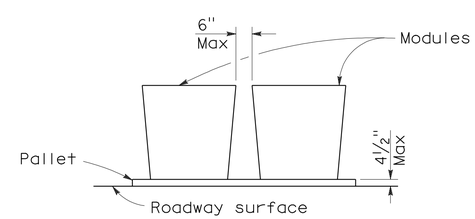

ELEVATION

CRASH CUSHION PALLET DETAIL

See Note 7

NOTES:

1. (XXX) Indicates sand filled module location and weight of sand in pounds for each module. Module spacing is based on the greater diameter of the module.
2. All sand weights are nominal.
3. Temporary crash cushion arrays shall not encroach on the traveled way.
4. Place the top of Type R marker panel 1" below the module lid.
5. Refer to Standard Plan A73B for marker details.
6. Approach speeds indicated conform to NCHRP 350 Report criteria.
7. Use of pallets is optional.

STATE OF CALIFORNIA
DEPARTMENT OF TRANSPORTATION

TEMPORARY CRASH CUSHION, SAND FILLED (UNIDIRECTIONAL)

NO SCALE

RSP T1A DATED JUNE 6, 2008 SUPERSEDES STANDARD PLAN T1A
DATED MAY 1, 2006 - PAGE 211 OF THE STANDARD PLANS BOOK DATED MAY 2006.

REVISED STANDARD PLAN RSP T1A

2006 REVISED STANDARD PLAN RSP T1A

DIST	COUNTY	ROUTE	POST MILES TOTAL PROJECT	SHEET NO.	TOTAL SHEETS
07	LA,Ven	2,5,14,33, 101, etc.	Var	133	142

Randell D. Hiatt
REGISTERED CIVIL ENGINEER

June 6, 2008
PLANS APPROVAL DATE

REGISTERED PROFESSIONAL ENGINEER
Randell D. Hiatt
No. C50200
Exp. 6-30-09
CIVIL
STATE OF CALIFORNIA

The State of California or its officers or agents shall not be responsible for the accuracy or completeness of electronic copies of this plan sheet.

To accompany plans dated 10-3-11

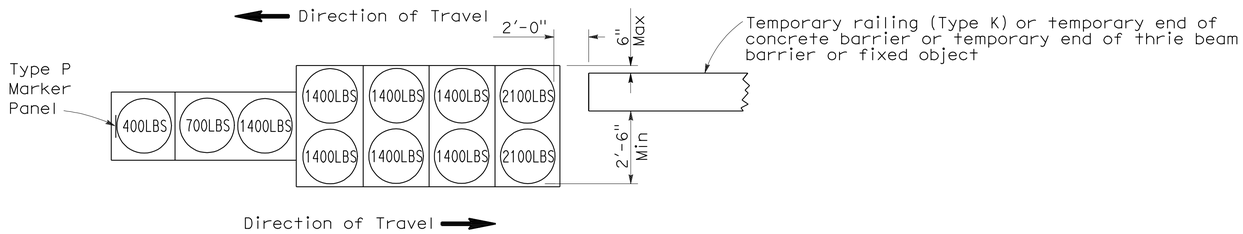

ARRAY 'TB11'

Approach speed less than 45 mph

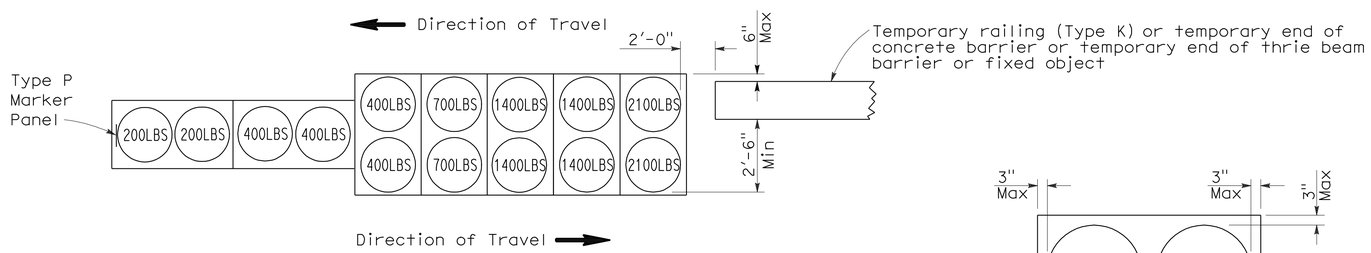

ARRAY 'TB14'

Approach speed 45 mph or more

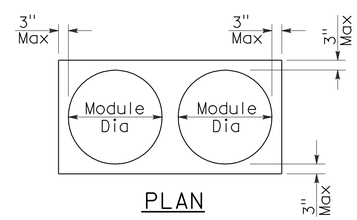

PLAN

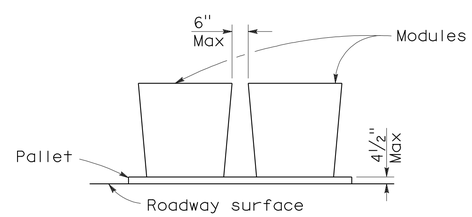

ELEVATION

CRASH CUSHION PALLET DETAIL

See Note 7

NOTES:

1. (XXX) Indicates sand filled module location and weight of sand in pounds for each module. Module spacing is based on the greater diameter of the module.
2. All sand weights are nominal.
3. Temporary crash cushion arrays shall not encroach on the traveled way.
4. Place the Type P marker panel so that the bottom of the panel rests upon the pallet.
5. Refer to Standard Plan A73B for marker details.
6. Approach speeds indicated conform to NCHRP 350 Report criteria.
7. Use of pallets is optional.

STATE OF CALIFORNIA
DEPARTMENT OF TRANSPORTATION

TEMPORARY CRASH CUSHION, SAND FILLED (BIDIRECTIONAL)

NO SCALE

RSP T1B DATED JUNE 6, 2008 SUPERSEDES STANDARD PLAN T1B
DATED MAY 1, 2006 - PAGE 212 OF THE STANDARD PLANS BOOK DATED MAY 2006.

REVISED STANDARD PLAN RSP T1B

2006 REVISED STANDARD PLAN RSP T1B

5-15-08

DIST	COUNTY	ROUTE	POST MILES TOTAL PROJECT	SHEET NO.	TOTAL SHEETS
07	LA,Ven	2,5,14,33, 101, etc.	Var	134	142

Randell D. Hiatt
REGISTERED CIVIL ENGINEER

June 6, 2008
PLANS APPROVAL DATE

REGISTERED PROFESSIONAL ENGINEER
Randell D. Hiatt
No. C50200
Exp. 6-30-09
CIVIL
STATE OF CALIFORNIA

The State of California or its officers or agents shall not be responsible for the accuracy or completeness of electronic copies of this plan sheet.

To accompany plans dated 10-3-11

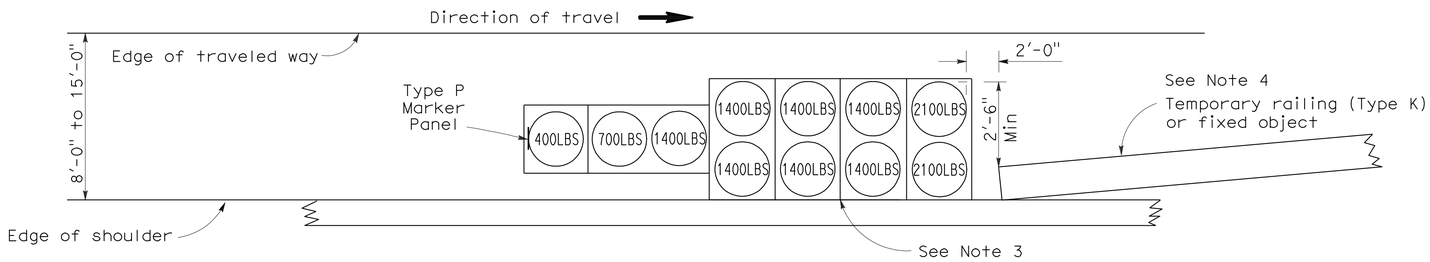

ARRAY 'TS11'

Approach speed less than 45 mph
See Note 9

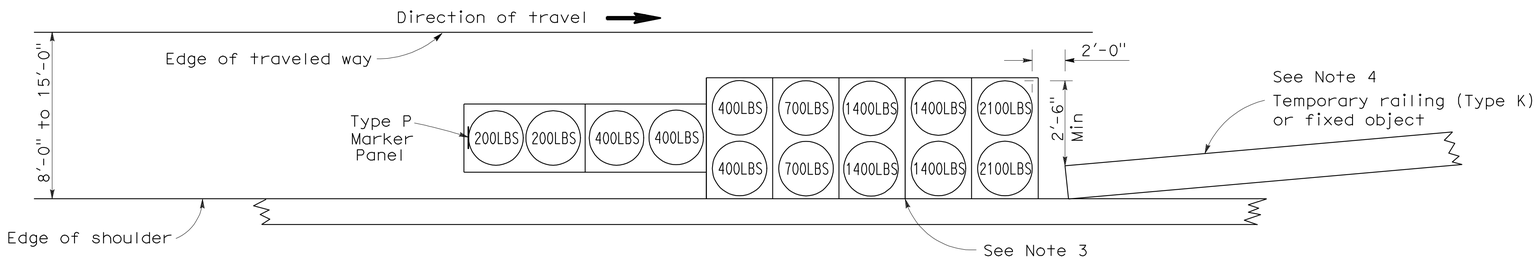

ARRAY 'TS14'

Approach speed 45 mph or more
See Note 9

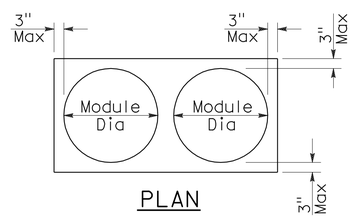

PLAN

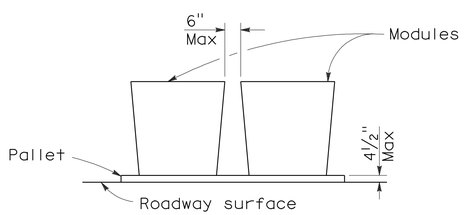

ELEVATION

CRASH CUSHION PALLET DETAIL

See Note 11

NOTES:

1. (XXX) Indicates sand filled module location and weight of sand in pounds for each module. Module spacing is based on the greater diameter of the module.
2. All sand weights are nominal.
3. The temporary crash cushion arrays shown on this plan shall be used only in locations where there will be traffic on one side of the temporary crash cushion array.
4. If the fixed object or approach end of the temporary railing is less than 15'-0" from the edge of traveled way, a temporary crash cushion is required in a construction or work zone.
5. Temporary crash cushion arrays shall not encroach on the traveled way.
6. Arrays for median shoulders shall conform to details shown on this plan for outside shoulders.
7. Place the Type P marker panel so that the bottom of the panel rests upon the pallet and faces traffic.
8. Refer to Standard Plan A73B for marker details.
9. For shoulder widths less than 8'-0", appropriate approved crash cushion protection, other than sand filled modules, shall be provided at fixed objects and at approach ends of temporary railing. The specific type of crash cushion shall be as shown on the project plans or as specified in the Special Provisions, or if not shown on the project plans or specified in the Special Provisions, shall be as approved by the Engineer.
10. Approach speeds indicated conform to NCHRP 350 Report criteria.
11. Use of pallets is optional.

STATE OF CALIFORNIA
DEPARTMENT OF TRANSPORTATION

TEMPORARY CRASH CUSHION, SAND FILLED (SHOULDER INSTALLATIONS)

NO SCALE

RSP T2 DATED JUNE 6, 2008 SUPERSEDES STANDARD PLAN T2
DATED MAY 1, 2006 - PAGE 213 OF THE STANDARD PLANS BOOK DATED MAY 2006.

REVISED STANDARD PLAN RSP T2

2006 REVISED STANDARD PLAN RSP T2

5-15-08

Dist	COUNTY	ROUTE	POST MILES TOTAL PROJECT	SHEET No.	TOTAL SHEETS
07	LA,Ven	2,5,14,33, 101, etc.	Var	135	142

Randell D. Hiatt
REGISTERED CIVIL ENGINEER

May 20, 2011
PLANS APPROVAL DATE

REGISTERED PROFESSIONAL ENGINEER
Randell D. Hiatt
No. C50200
Exp. 6-30-11
CIVIL
STATE OF CALIFORNIA

The State of California or its officers or agents shall not be responsible for the accuracy or completeness of electronic copies of this plan sheet.

To accompany plans dated 10-3-11

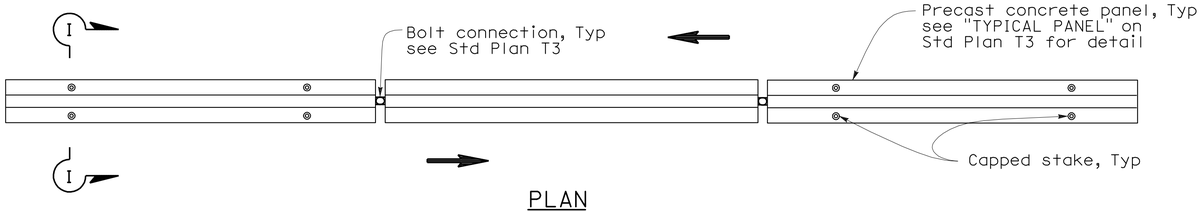

PLAN

RAILING STAKING CONFIGURATION FOR TWO-WAY TRAFFIC

See Note 1

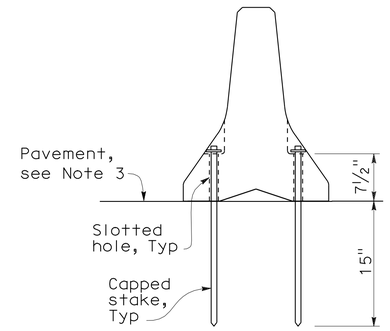

SECTION I-I

NOTES:

1. Where Type K Temporary Railing is placed as a temporary or long term barrier in two-way traffic on highways with less than 24" from the edge of traveled way, use four capped stakes per every other panel with end panels staked.
2. Where Type K Temporary Railing is placed 3" to 24" from the edge of an excavation on highways, use two capped stakes per panel along the traffic side.
3. Staked Type K Temporary Railing must be supported by at least 4" thick concrete, hot mix asphalt or existing asphalt concrete pavement.
4. The minimum yield strength for the washer must be 60,000 psi.
5. Direction of adjacent traffic indicated by ⟹.

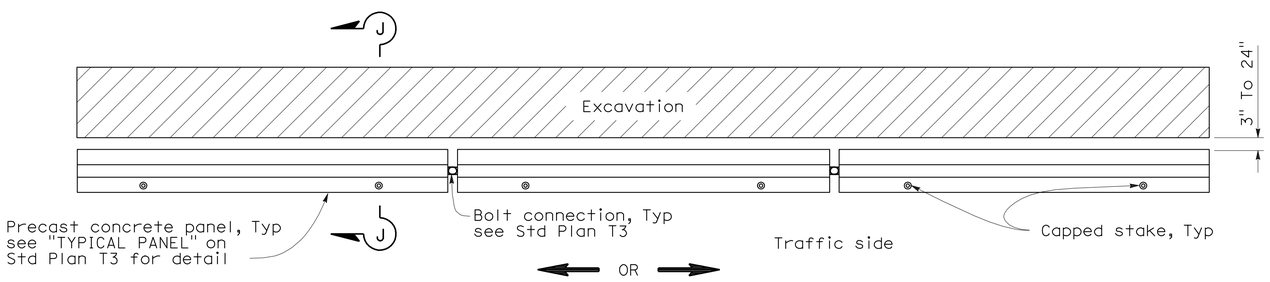

PLAN

RAILING STAKING CONFIGURATION ADJACENT TO AN EXCAVATION

See Note 2

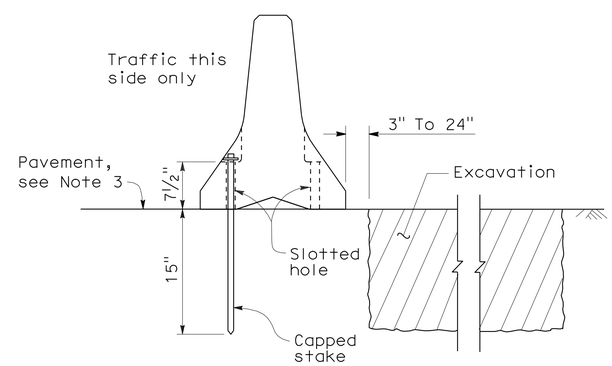

SECTION J-J

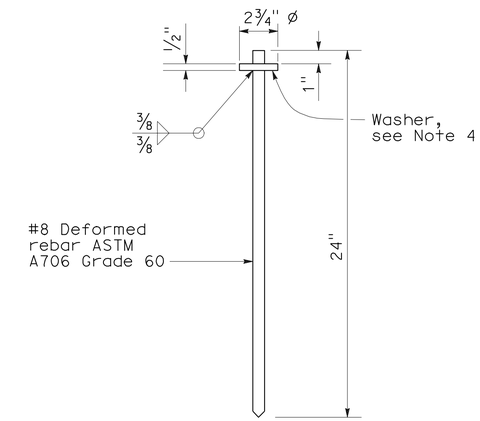

CAPPED STAKE DETAIL

STATE OF CALIFORNIA
DEPARTMENT OF TRANSPORTATION

TEMPORARY RAILING (TYPE K)

NO SCALE

NSP T3A DATED MAY 20, 2011 SUPPLEMENTS
THE STANDARD PLANS BOOK DATED MAY 2006.

NEW STANDARD PLAN NSP T3A

2006 NEW STANDARD PLAN NSP T3A

DIST	COUNTY	ROUTE	POST MILES TOTAL PROJECT	SHEET NO.	TOTAL SHEETS
07	LA,Ven	2,5,14,33, 101, etc.	Var	136	142

LICENSED LANDSCAPE ARCHITECT

August 15, 2008
PLANS Approval DATE

The State of California or its officers or agents shall not be responsible for the accuracy or completeness of electronic copies of this plan sheet.

LICENSED LANDSCAPE ARCHITECT Robert B. Schott 3625 Signature 11-04-08 Renewal Date 08-11-08 Date STATE OF CALIFORNIA

To accompany plans dated 10-3-11

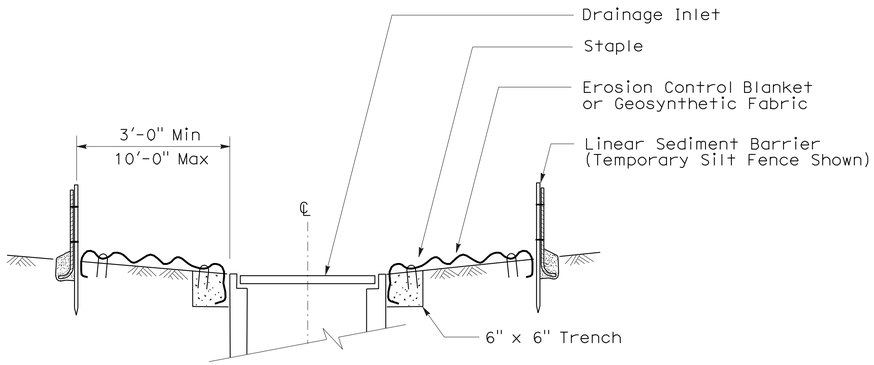

SECTION A-A

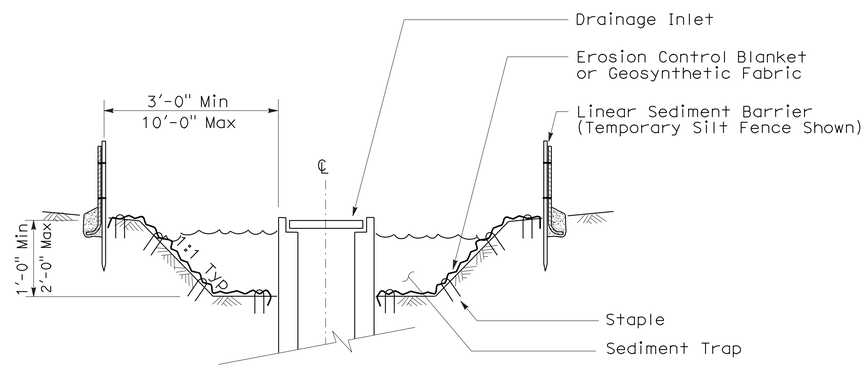

SECTION B-B

NOTES:

1. See Standard Plan T51 for Temporary Silt Fence.
2. Dimensions may vary to fit field conditions.

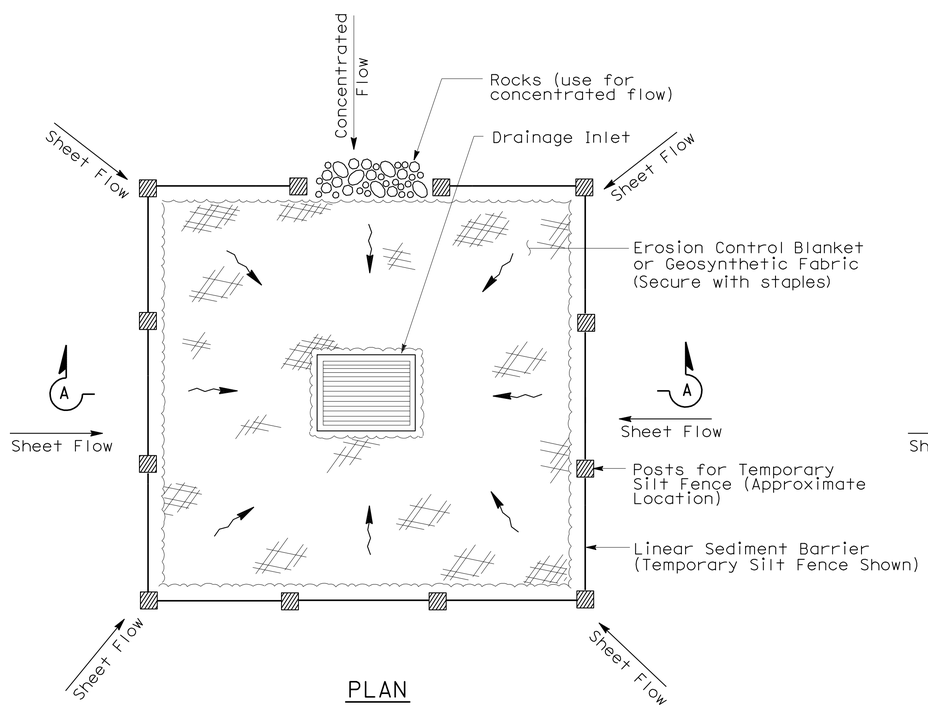

PLAN

TEMPORARY DRAINAGE INLET PROTECTION (TYPE 1)

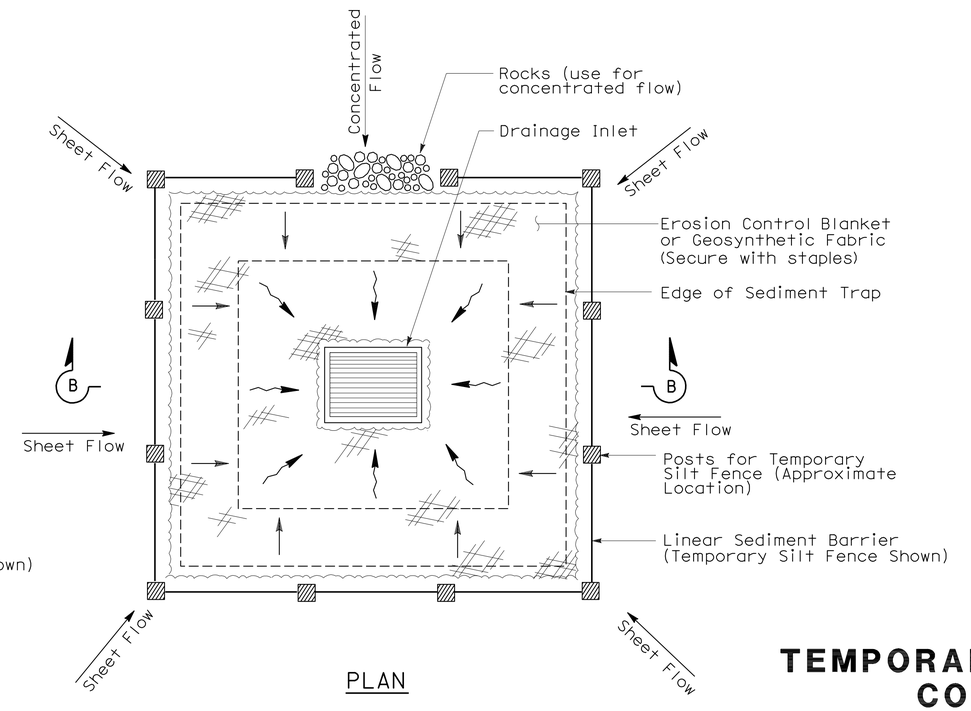

PLAN

TEMPORARY DRAINAGE INLET PROTECTION (TYPE 2) (EXCAVATED SEDIMENT TRAP)

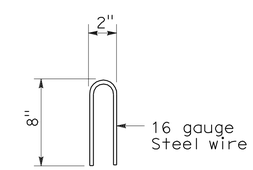

STAPLE DETAIL

STATE OF CALIFORNIA
DEPARTMENT OF TRANSPORTATION

TEMPORARY WATER POLLUTION CONTROL DETAILS (TEMPORARY DRAINAGE INLET PROTECTION)

NO SCALE

NSP T61 DATED AUGUST 15, 2008 SUPPLEMENTS THE STANDARD PLANS BOOK DATED MAY 2006.

NEW STANDARD PLAN NSP T61

2006 NEW STANDARD PLAN NSP T61

7-11-08

DIST	COUNTY	ROUTE	POST MILES TOTAL PROJECT	SHEET NO.	TOTAL SHEETS
07	LA,Ven	2,5,14,33, 101, etc.	Var	137	142

LICENSED LANDSCAPE ARCHITECT

August 15, 2008
PLANS APPROVAL DATE

The State of California or its officers or agents shall not be responsible for the accuracy or completeness of electronic copies of this plan sheet.

LICENSED LANDSCAPE ARCHITECT Robert B. Schott 3895 Signature 11-04-08 Renewal Date 08-11-08 Date STATE OF CALIFORNIA

To accompany plans dated 10-3-11

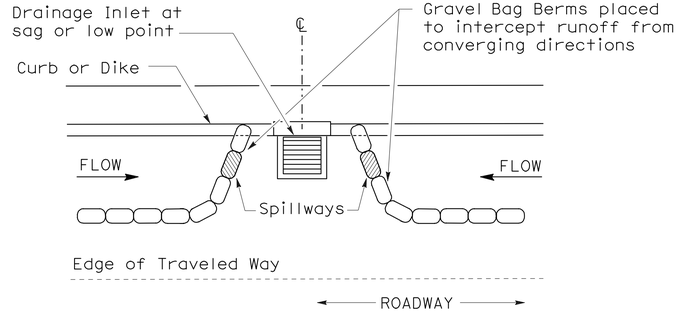

PLAN

CONFIGURATION FOR SAG POINT INLET (GRAVEL BAG BERM)

GRAVEL BAG BERM (TYPE 3A) SPACING TABLE

SLOPE OF ROADWAY (PERCENT)	1 to 3.9	4 to 5.9	6 to 7.9	8 to 10	10+
INTERVAL BETWEEN BERM	100′	75′	50′	25′	12′

For slope of less than 1%, install barriers only if erosion/sediment is prevalent

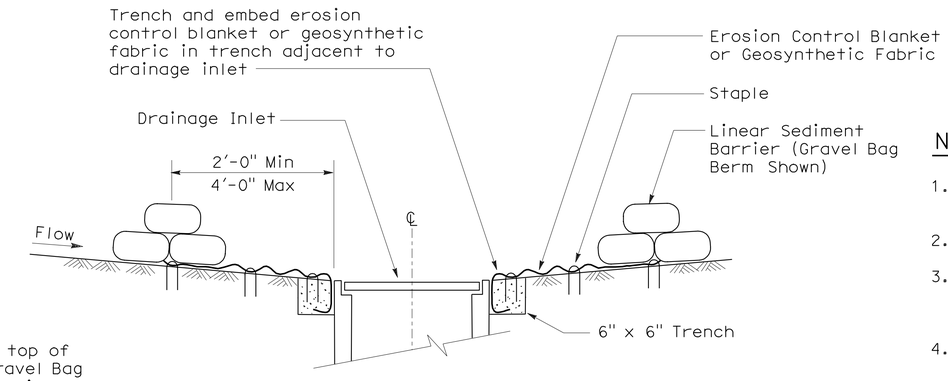

SECTION A-A

NOTES:

1. Place safety cones adjacent to drainage inlet protection.
2. Dimensions may vary to fit field conditions.
3. Install a minimum of 3 gravel bag berms upstream of each drainage inlet to be protected.
4. Position erosion control blanket or geosynthetic fabric at edge of concrete apron and secure in trench.
5. Erosion control blanket or geosynthetic fabric is not required if the area adjacent to the drainage inlet is vegetated or paved.

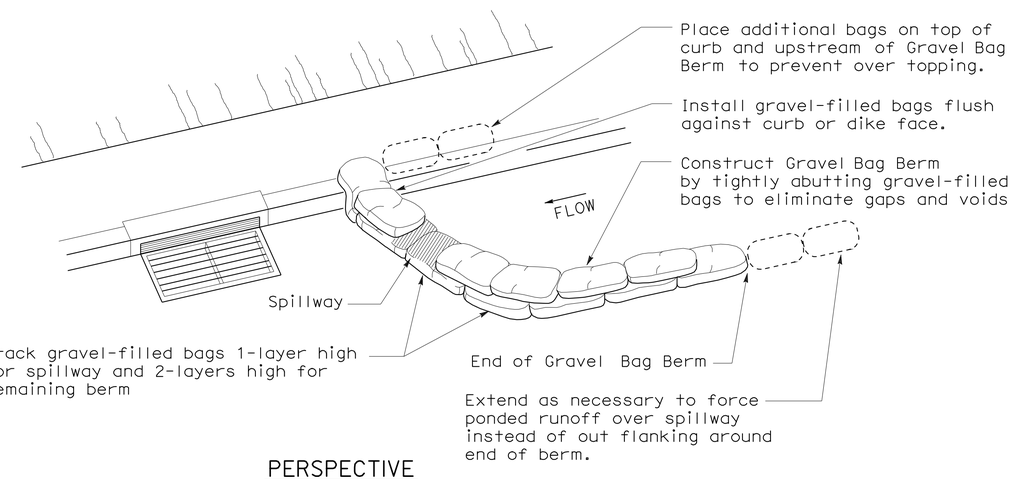

PERSPECTIVE

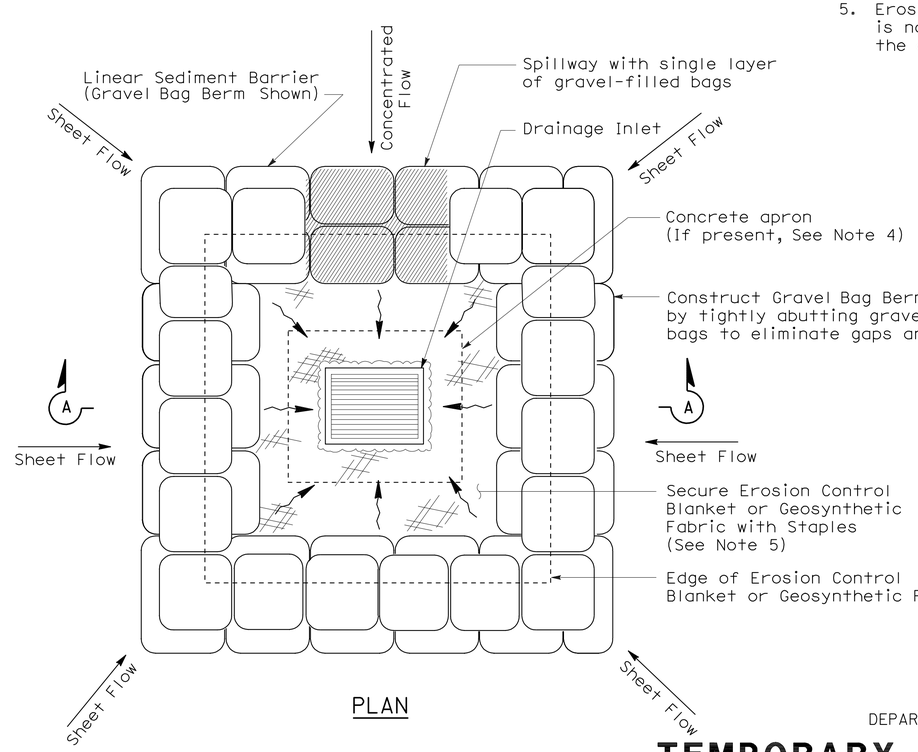

PLAN

TEMPORARY DRAINAGE INLET PROTECTION (TYPE 3B)

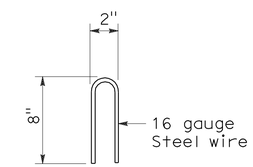

STAPLE DETAIL

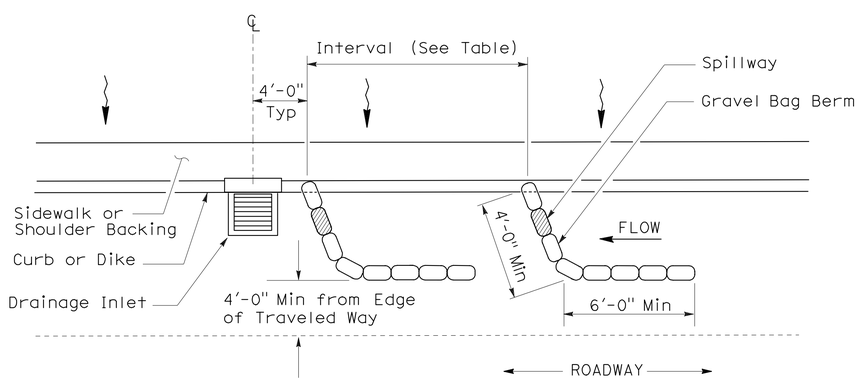

PLAN

TEMPORARY DRAINAGE INLET PROTECTION (TYPE 3A) (GRAVEL BAG BERM)

STATE OF CALIFORNIA
DEPARTMENT OF TRANSPORTATION

TEMPORARY WATER POLLUTION CONTROL DETAILS (TEMPORARY DRAINAGE INLET PROTECTION)

NO SCALE

NSP T62 DATED AUGUST 15, 2008 SUPPLEMENTS THE STANDARD PLANS BOOK DATED MAY 2006.

NEW STANDARD PLAN NSP T62

2006 NEW STANDARD PLAN NSP T62

7-11-08

DIST	COUNTY	ROUTE	POST MILES TOTAL PROJECT	SHEET NO.	TOTAL SHEETS
07	LA,Ven	2,5,14,33, 101, etc.	Var	138	142

LICENSED LANDSCAPE ARCHITECT

August 15, 2008
PLANS APPROVAL DATE

The State of California or its officers or agents shall not be responsible for the accuracy or completeness of electronic copies of this plan sheet.

LICENSED LANDSCAPE ARCHITECT — Robert B. Schott — Signature — 11-04-08 Renewal Date — 08-11-08 Date — STATE OF CALIFORNIA

To accompany plans dated 10-3-11

FLEXIBLE SEDIMENT BARRIER SPACING TABLE

SLOPE OF ROADWAY (PERCENT)	0 to 0.9	1 to 1.9	2 to 2.9	3 to 4	5+
INTERVAL BETWEEN BARRIERS	50′	35′	30′	25′	20′
ANGLE FROM FACE OF CURB	70°	70°	70°	45°	45°
SUGGESTED BARRIER LENGTH	6′	6′	6′	6′	6′

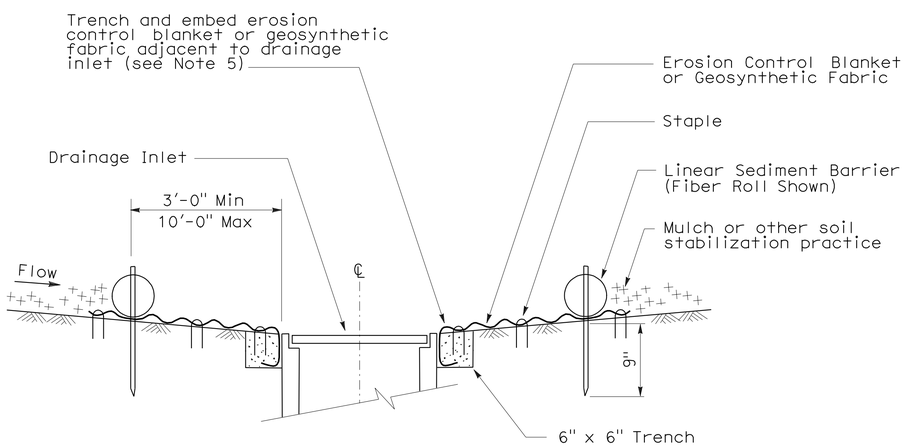

SECTION A-A

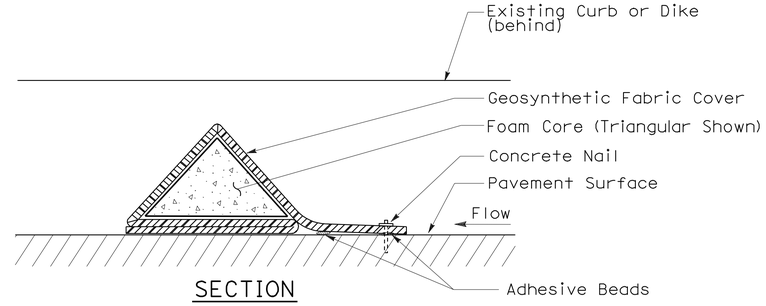

SECTION

FLEXIBLE SEDIMENT BARRIER DETAIL (FOAM BARRIER SHOWN)

NOTES:

1. See Standard Plan T51 for Temporary Silt Fence.
2. Dimensions may vary to fit field conditions.
3. Install a minimum of 3 flexible sediment barriers upstream of each drainage inlet to be protected.
4. Position erosion control blanket or geosynthetic fabric at edge of concrete apron and secure in trench.
5. Erosion control blanket or geosynthetic fabric is not required if the area adjacent to the drainage inlet is vegetated.

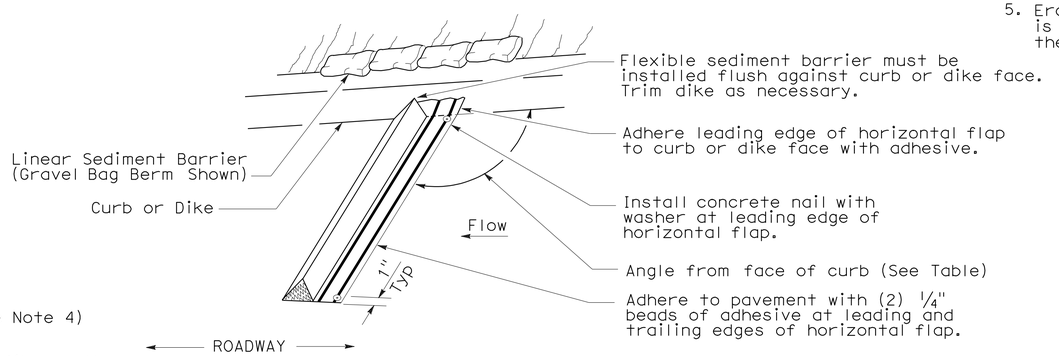

PERSPECTIVE

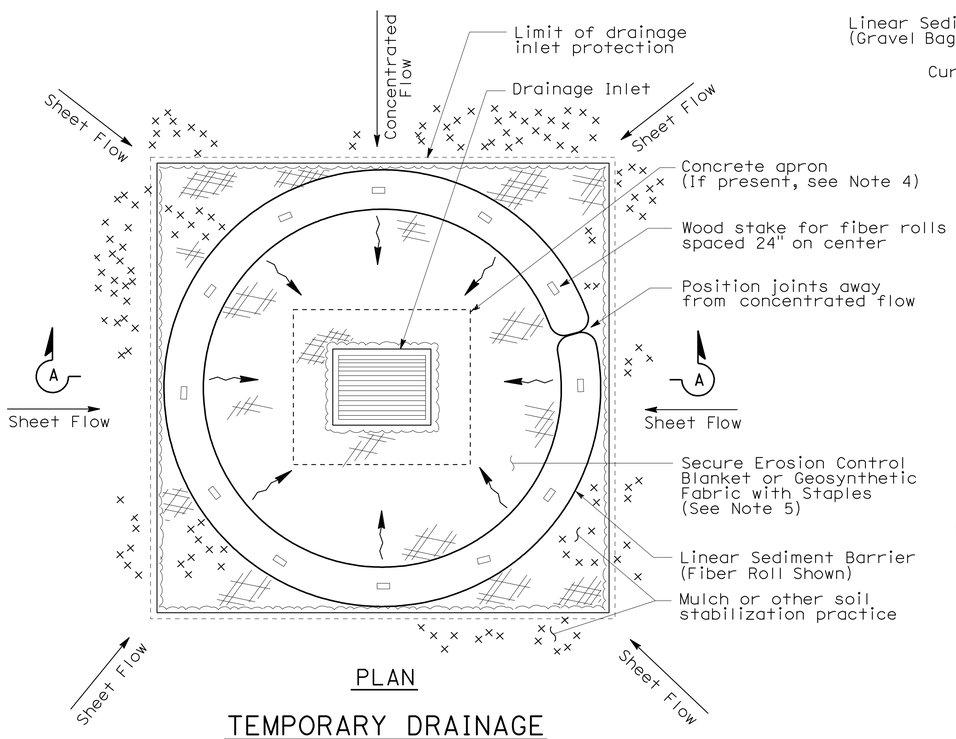

PLAN

TEMPORARY DRAINAGE INLET PROTECTION (TYPE 4A)

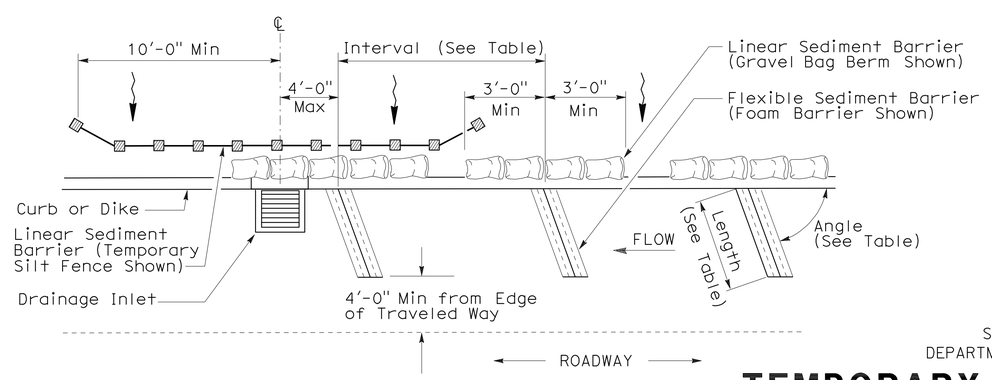

PLAN

TEMPORARY DRAINAGE INLET PROTECTION (TYPE 4B) FLEXIBLE SEDIMENT BARRIER

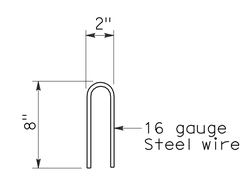

STAPLE DETAIL

STATE OF CALIFORNIA
DEPARTMENT OF TRANSPORTATION

TEMPORARY WATER POLLUTION CONTROL DETAILS (TEMPORARY DRAINAGE INLET PROTECTION)

NO SCALE

NSP T63 DATED AUGUST 15, 2008 SUPPLEMENTS THE STANDARD PLANS BOOK DATED MAY 2006.

NEW STANDARD PLAN NSP T63

2006 NEW STANDARD PLAN NSP T63

7-11-08

DIST	COUNTY	ROUTE	POST MILES TOTAL PROJECT	SHEET NO.	TOTAL SHEETS
07	LA,Ven	2,5,14,33, 101, etc.	Var	139	142

LICENSED LANDSCAPE ARCHITECT

August 15, 2008
PLANS APPROVAL DATE

LICENSED LANDSCAPE ARCHITECT
Robert B. Schott 3625
Signature
11-04-08
Renewal Date
08-11-08
Date
STATE OF CALIFORNIA

The State of California or its officers or agents shall not be responsible for the accuracy or completeness of electronic copies of this plan sheet.

To accompany plans dated 10-3-11

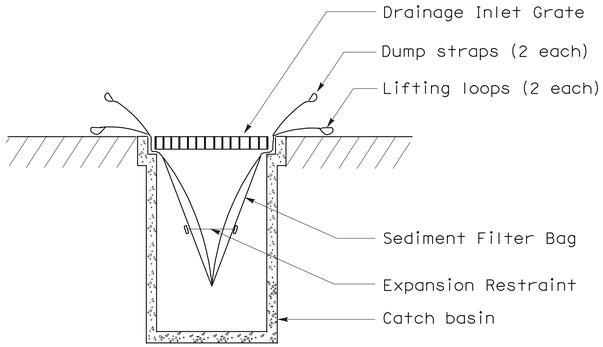

SECTION B-B

SEDIMENT FILTER BAG DETAIL

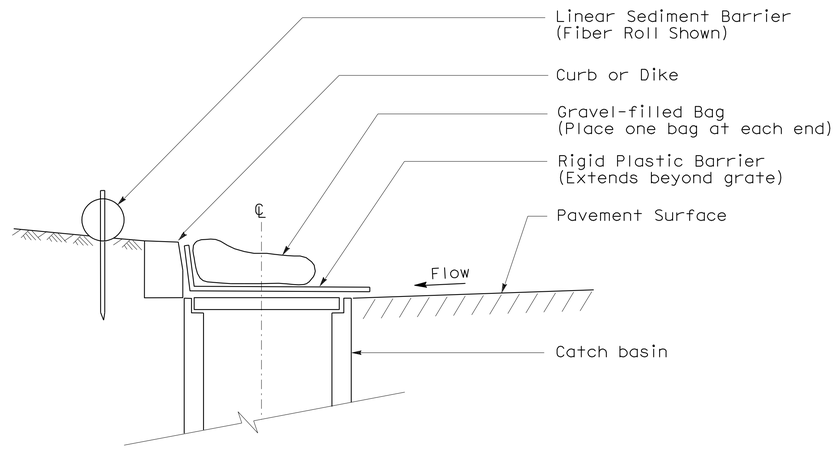

SECTION

TEMPORARY DRAINAGE INLET PROTECTION (TYPE 6A) (CATCH BASIN WITH GRATE)

NOTES:

1. See Standard Plan T51 for Temporary Silt Fence.
2. Dimensions may vary to fit field conditions.

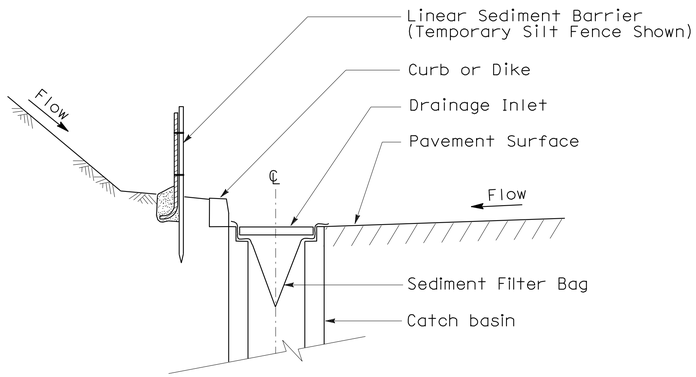

SECTION A-A

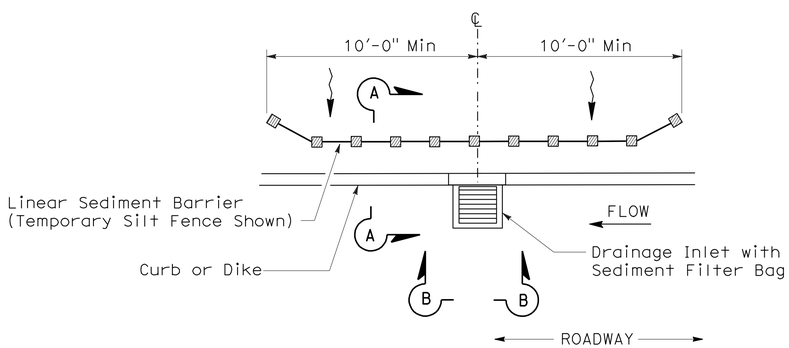

PLAN

TEMPORARY DRAINAGE INLET PROTECTION (TYPE 5) (SEDIMENT FILTER BAG)

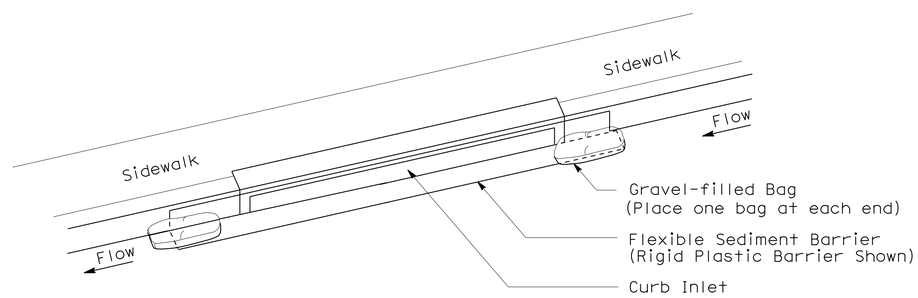

PERSPECTIVE

TEMPORARY DRAINAGE INLET PROTECTION (TYPE 6B) (CURB INLET WITHOUT GRATE)

STATE OF CALIFORNIA
DEPARTMENT OF TRANSPORTATION

TEMPORARY WATER POLLUTION CONTROL DETAILS (TEMPORARY DRAINAGE INLET PROTECTION)

NO SCALE

NSP T64 DATED AUGUST 15, 2008 SUPPLEMENTS
THE STANDARD PLANS BOOK DATED MAY 2006.

NEW STANDARD PLAN NSP T64

2006 NEW STANDARD PLAN NSP T64

7-11-08

DIST	COUNTY	ROUTE	POST MILES TOTAL PROJECT	SHEET NO.	TOTAL SHEETS
07	LA,Ven	2,5,14,33, 101, etc.	Var	140	142

REGISTERED ELECTRICAL ENGINEER

October 5, 2007
PLANS APPROVAL DATE

REGISTERED PROFESSIONAL ENGINEER Jeffery G. McRae No. E14512 Exp. 6-30-08 ELECTRICAL STATE OF CALIFORNIA

The State of California or its officers or agents shall not be responsible for the accuracy or completeness of electronic copies of this plan sheet.

To accompany plans dated 10-3-11

ELECTROLIERS

STANDARD TYPES
15, 15D
15 STRUCTURE
21, 21D STRUCTURE
30
31
32
35
36-20A

High mast light pole

Double Arm lighting standard

Existing electrolier

Electrolier foundation (Future installation)

NOTES:

1. Luminaires shall be 310 W HPS when installed on Type 21, 21D, 30, 31, 32, 35 and 36-20A Standards, unless otherwise specified. Luminaires shall be 200 W HPS when installed on other type standards or poles, unless otherwise specified.
2. Luminaires shall be the cutoff type, ANSI Type Ⅲ medium cutoff lighting distribution, unless otherwise specified.
3. Variations noted adjacent to symbol on project plans.

Electrolier (see project notes or project plans)

Luminaire on wood pole

STANDARD NOTES:

- AB — Abandon. If applied to conduit, remove conductors.
- BC — Install pull box in existing conduit run.
- BP — Pedestrian barricade, type as indicated on plan.
- CB — Install conduit into existing pull box.
- CC — Connect new and existing conduit. Remove existing conductors and install conductors as indicated.
- CF — Conduit to remain for future use. Remove conductors. Install pull wire or rope.
- DH — Detector handhole.
- FA — Foundation to be abandoned.
- IS — Install sign on signal mast arm.
- NS — No slip base on standard.
- PEC — Photoelectric control.
- PEU — Photoelectric unit.
- RC — Equipment or material to be removed and become the property of the Contractor.
- RE — Remove electrolier, fuses and ballast. Tape ends of conductors.
- RL — Relocate equipment.
- RR — Remove and reuse equipment.
- RS — Remove and salvage equipment.
- SC — Splice new to existing conductors.
- SD — Service disconnect.
- SF — Standard to remain for future use. Remove luminaire, pole conductors, fuses and ballast.
- TSP — Telephone service point.

ABBREVIATIONS AND EQUIPMENT DESIGNATIONS

PROPOSED	EXISTING	
BBS	bbs	Battery backup system
BC	bc	Bolt circle
C	C	Conduit
CCTV	cctv	Closed circuit television
CKT	ckt	Circuit
CMS	cms	Changeable message sign
DLC	dlc	Loop detector lead-in cable
EMS	ems	Extinguishable message sign
EVC	evc	Emergency vehicle cable
EVD	evd	Emergency vehicle detector
FB	fb	Flashing beacon
FBCA	fbca	Flashing beacon control assembly
FBS	fbs	Flashing beacon with slip base
FO	fo	Fiber optic
G	G	Ground (Equipment Grounding Conductor)
GFCI	GFCI	Ground fault circuit interrupt
HAR	har	Highway advisory radio
HEX	hex	Hexagonal
HPS	hps	High pressure sodium
IISNS	iisns	Internally illuminated street name sign
ISL	isl	Induction sign lighting
LED	led	Light emitting diode
LMA	lma	Luminaire mast arm
LPS	lps	Low pressure sodium
LTG	ltg	Lighting
LUM	lum	Luminaire
MAT	mat	Mast arm mounting vehicle signal faces, top attachment
MAS	mas	Mast arm mounting vehicle signal faces, side attachment
MAS-4A	mas-4A	Mast arm mounting vehicle signal faces, side attachment - 4 signal section
MAS-4B	mas-4B	
MAS-4C	mas-4C	
MAS-5A	mas-5A	Mast arm mounting vehicle signal faces, side attachment - 5 signal section
MAS-5B	mas-5B	
MC	mc	Mercury contactor
M/M	m/m	Multiple to multiple transformer
MT	mt	Conduit with pull wire or rope only
MTG	mtg	Mounting
	mv	Mercury vapor lighting fixture
N	N	Neutral (Grounded Conductor)
NC	NC	Normally closed
NO	NO	Normally open
PB	pb	Pull box
PEC	pec	Photoelectric control (Type Ⅰ, Ⅱ, Ⅲ, Ⅳ or Ⅴ as shown)
PED	ped	Pedestrian
PEU	peu	Photoelectric unit
PPB	ppb	Pedestrian push button
RL		Relocated equipment
RM	rm	Ramp metering
SB	sb	Slip base
SIC	sic	Signal interconnect cable
SIG	sig	Signal
SMA	sma	Signal mast arm
SNS	sns	Street name sign
SP	sp	Service point
TDC	tdc	Telephone demarcation cabinet
TMS	tms	Traffic monitoring station
TOS	tos	Traffic Operations System
VEH	veh	Vehicle
XFMR	xfmr	Transformer
COMM	comm	Communication
RWIS	rwis	Roadway weather information system

SOFFIT AND WALL MOUNTED LUMINAIRES

Pendant, 70 W HPS unless otherwise specified.

Flush, 70 W HPS unless otherwise specified.

Wall surface, 70 W HPS unless otherwise specified.

Existing soffit or wall luminaire to remain unmodified.

Existing soffit or wall luminaire to be modified as specified.

NOTE:

Arrow indicates "street side" of luminaire.

STATE OF CALIFORNIA
DEPARTMENT OF TRANSPORTATION

ELECTRICAL SYSTEMS (SYMBOLS AND ABBREVIATIONS)

NO SCALE

RSP ES-1A DATED OCTOBER 5, 2007 SUPERSEDES STANDARD PLAN ES-1A DATED MAY 1, 2006 - PAGE 400 OF THE STANDARD PLANS BOOK DATED MAY 2006.

REVISED STANDARD PLAN RSP ES-1A

2006 REVISED STANDARD PLAN RSP ES-1A

DIST	COUNTY	ROUTE	POST MILES TOTAL PROJECT	SHEET NO.	TOTAL SHEETS
07	LA,Ven	2,5,14,33, 101, etc.	Var	141	142

REGISTERED ELECTRICAL ENGINEER

October 5, 2007
PLANS APPROVAL DATE

The State of California or its officers or agents shall not be responsible for the accuracy or completeness of electronic copies of this plan sheet.

REGISTERED PROFESSIONAL ENGINEER
Jeffery G. McRae
No. E14512
Exp. 6-30-08
ELECTRICAL
STATE OF CALIFORNIA

To accompany plans dated 10-3-11

CONDUIT

PROPOSED	EXISTING	
		Lighting Conduit, unless otherwise indicated or noted
		Traffic signal conduit
C	c	Communication conduit
T	t	Telephone conduit
F	f	Fire alarm conduit
FO	fo	Fiber optic conduit
		Conduit termination (RSP ES-9A C)
R	r	Conduit riser in/on structure or service pole

SERVICE EQUIPMENT

PROPOSED	EXISTING	
OH	oh	Overhead lines
U	U	Wood pole "U" indicates utility owned
		Pole guy with anchor
		Utility transformer - ground mounted
III		Service equipment enclosure type
		Service equipment enclosure door indicates front of enclosure
T	t	Telephone demarcation cabinet

POLE-MOUNTED SERVICE DESIGNATION

Type of installation

TYPE H SERVICE - 28'-10" ← Pole height above grade

ILLUMINATED OVERHEAD SIGN

PROPOSED	EXISTING	
		Overhead sign - Single post
		Overhead sign - Two post
		Overhead sign - Mounted on structure
		Overhead sign with electrolier

SIGNAL EQUIPMENT

PROPOSED	EXISTING	
		Pedestrian signal face
		Pedestrian push button post
		Pedestrian barricade
		Vehicle signal face (with backplate, 3-Section: red, yellow and green)
		Vehicle signal face with angle visors
PV	PV	Modifications of basic symbols: "L" indicates all non-arrow sections louvered "LG" indicates louvered green section only "PV" indicates 12" programmed visibility sections "8" indicates all 8" sections (only when specified)
		Type 15TS and Vehicle signal face
		Vehicle signal face with red, yellow and green left arrow sections
		Vehicle signal face with red and yellow sections and up green arrow
		Vehicle signal face (5 Section) with red, yellow and green sections and yellow and green right arrows
		Type 1 Standard and attached vehicle signal faces
		Standard with signal mast arm only and attached vehicle signal faces and internally illuminated street name sign
		Type 33 Standard, Left-turn vehicle signal face and sign
		Standard with luminaire and signal mast arms and attached vehicle signal faces
		Cantilever flashing beacon Type 9 Frame, with a sign unless otherwise specified or indicated
		Type 15-FBS Standard with two vehicle signal face sections with lens, backplate and visor with a sign
R	Y	Flashing beacon. One vehicle signal face section with lens, backplate and visor. "R" indicates red indication, "Y" indicates yellow indication
		Controller assembly. Door indicates front of cabinet

SIGNAL EQUIPMENT Cont

PROPOSED	EXISTING	
		Guard post
		Type 1 Standard with "Meter On" sign
		Emergency Vehicle detector

NOTES:

1. All signal sections shall be 12" unless shown otherwise.
2. Signal heads shall be provided with backplates unless shown otherwise.
3. Signal indication shall be LED.

STATE OF CALIFORNIA
DEPARTMENT OF TRANSPORTATION

ELECTRICAL SYSTEMS (SYMBOLS AND ABBREVIATIONS)

NO SCALE

RSP ES-1B DATED OCTOBER 5, 2007 SUPERCEDES STANDARD PLAN ES-1B DATED MAY 1, 2006 - PAGE 401 OF THE STANDARD PLANS BOOK DATED MAY 2006.

REVISED STANDARD PLAN RSP ES-1B

2006 REVISED STANDARD PLAN RSP ES-1B

DIST	COUNTY	ROUTE	POST MILES TOTAL PROJECT	SHEET NO.	TOTAL SHEETS
07	LA,Ven	2,5,14,33, 101, etc.	Var	142	142

Jeffery G. McRae
REGISTERED ELECTRICAL ENGINEER

October 5, 2007
PLANS APPROVAL DATE

REGISTERED PROFESSIONAL ENGINEER
Jeffery G. McRae
No. E14512
Exp. 6-30-08
ELECTRICAL
STATE OF CALIFORNIA

The State of California or its officers or agents shall not be responsible for the accuracy or completeness of electronic copies of this plan sheet.

To accompany plans dated 10-3-11

EQUIPMENT IDENTIFICATION

ILLUMINATED SIGN IDENTIFICATION NUMBER:

Sign No. 12345

10 ISL SCI 1.0

- Sign number - Place on post or structure
- Transformer rating (kVA)
- Lighting control type
- Number and type of fixtures

Do NOT place on standard or structure

ELECTROLIER OR EQUIPMENT IDENTIFICATION NUMBER:

12345 - 15'-0"

- Mast arm length, if shown. Do not place on standard or structure.
- Equipment number - Place on standard or structure. Existing equipment numbers are shown in parenthesis

CONDUIT AND CONDUCTOR IDENTIFICATION:

1½"C, 2#10, 15#14, 2 DLC

- Number and size of conductors and cables
- Size of conduit in inches

Ø1, Ø2, Ø2P, etc.	Traffic phase identification for signal faces, detectors and phase diagrams
1 2 3	Project note numbers
A B C	Equipment description, installation or item numbers
1 2 3	Conduit run numbers

SIGNAL AND LIGHTING STANDARD (TYPICAL DESIGNATION):

19A - 3 - 100

- Wind velocity = 100 mph
- Case 3 arm loading
- Standard type
- Standard Plan sheet number
- Detail number or letter

MISCELLANEOUS EQUIPMENT

PROPOSED	EXISTING	
CMS	cms	Changeable message sign
		Closed circuit television camera
		Highway advisory radio pole and antenna
EMS	ems	Extinguishable message sign
M V	m v	Detection device M = Microwave sensor V = Video image sensor

WIRING DIAGRAM LEGEND

P	Pole
CB	Circuit breaker
A	Ampere
V	Volt
M	Metered
UM	Unmetered
NB	Neutral bus
GB	Ground bus
G	Equipment grounding conductor
N	Grounded conductor (Neutral)

- External conductor
- Conductor or bus
- Tie point
- Contactor coil
- Contactor, Contact NO
- Terminal blocks
- Contactor, Contact NC
- Enclosure bond
- Grounding electrode
- Circuit breaker
- Receptacle

PULL BOXES

PROPOSED EXISTING

Pull box-No. 5 unless otherwise indicated or noted.

3 9A(21)

Pull box-Additional designations or descriptions

3	= No. 3½ pull box
5	= No. 5 pull box
6	= No. 6 pull box
7	= No. 7 (Ceiling pull box)
8	= No. 8 (Pendant soffit pull box)
9	= No. 9 pull box
9A	= No. 9A pull box

(C)	= Communications pull box
(E)	= Pull box with extension
(S)	= Sprinkler control pull box
(21)	= Anchor bolts and conduit for future installation of Type 21 Standard
(T)	= Traffic pull box

VEHICLE DETECTORS

5 J 9 U

- Vehicle detector designation
- U = Upper
  L = Lower
- Slot number in input file
- Input file (I or J)
- Phase

PROPOSED EXISTING

- Type A detector loop. Outline of sawcut shown.
- Type B detector loop. Outline of sawcut shown.
- Type C detector loop. Outline of sawcut shown.
- Type D detector loop. Outline of sawcut shown.
- Type E detector loop. Outline of sawcut shown.
- Type Q detector loop. Outline of sawcut shown.
- Magnetic detector
- Detector handhole (DH / dh)
- Microwave or video detection zone

STATE OF CALIFORNIA
DEPARTMENT OF TRANSPORTATION

ELECTRICAL SYSTEMS (SYMBOLS AND ABBREVIATIONS)

NO SCALE

RSP ES-1C DATED OCTOBER 5, 2007 SUPERCEDES STANDARD PLAN ES-1C DATED MAY 1, 2006 - PAGE 402 OF THE STANDARD PLANS BOOK DATED MAY 2006.

REVISED STANDARD PLAN RSP ES-1C

2006 REVISED STANDARD PLAN RSP ES-1C