Dist	COUNTY	ROUTE	POST MILES TOTAL PROJECT	SHEET No.	TOTAL SHEETS
07	LA	1	26.9	1	27

STATE OF CALIFORNIA

DEPARTMENT OF TRANSPORTATION

PROJECT PLANS FOR CONSTRUCTION ON

STATE HIGHWAY

IN LOS ANGELES COUNTY
IN LOS ANGELES
AT CENTURY BOULEVARD OVERCROSSING

TO BE SUPPLEMENTED BY STANDARD PLANS DATED MAY 2006

INDEX OF PLANS

SHEET No.	DESCRIPTION
1	TITLE AND LOCATION MAP
2	LAYOUT
3	CONSTRUCTION DETAILS
4	CONSTRUCTION AREA SIGNS
5-10	TRAFFIC HANDLING PLAN, DETAILS, AND QUANTITIES
11	PAVEMENT DELINEATION PLAN
12	SUMMARY OF QUANTITIES
13-15	REVISED STANDARD PLANS

STRUCTURE PLANS

16-27	CENTURY BOULEVARD OVERCROSSING

THE STANDARD PLANS LIST APPLICABLE TO THIS CONTRACT IS INCLUDED IN THE NOTICE TO BIDDERS AND SPECIAL PROVISIONS BOOK.

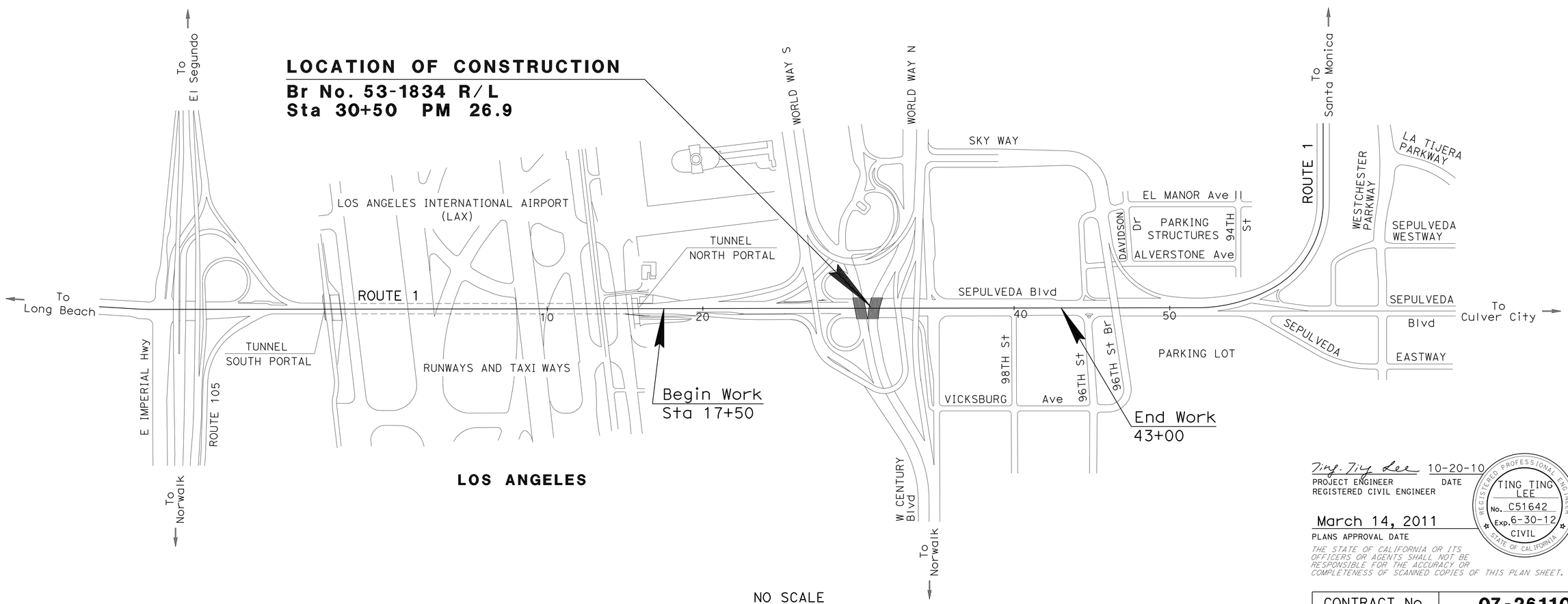

NO SCALE

THE CONTRACTOR SHALL POSSESS THE CLASS (OR CLASSES) OF LICENSE AS SPECIFIED IN THE "NOTICE TO BIDDERS."

Ting-Ting Lee 10-20-10
PROJECT ENGINEER DATE
REGISTERED CIVIL ENGINEER

March 14, 2011
PLANS APPROVAL DATE

REGISTERED PROFESSIONAL ENGINEER TING TING LEE No. C51642 Exp. 6-30-12 CIVIL STATE OF CALIFORNIA

THE STATE OF CALIFORNIA OR ITS OFFICERS OR AGENTS SHALL NOT BE RESPONSIBLE FOR THE ACCURACY OR COMPLETENESS OF SCANNED COPIES OF THIS PLAN SHEET.

PROJECT MANAGER DAVID YAN

DESIGN ENGINEER TING TING LEE

CONTRACT No.	07-261104
PROJECT ID	0700000492

LAST REVISION 00-00-00

DATE PLOTTED => 14-MAR-2011
TIME PLOTTED => 11:24

Dist	COUNTY	ROUTE	POST MILES TOTAL PROJECT	SHEET No.	TOTAL SHEETS
07	LA	1	26.9	2	27

Ting-Ting Lee 10-20-10
REGISTERED CIVIL ENGINEER DATE

3-14-11
PLANS APPROVAL DATE

REGISTERED PROFESSIONAL ENGINEER
TING TING LEE
No. C51642
Exp. 6-30-12
CIVIL
STATE OF CALIFORNIA

THE STATE OF CALIFORNIA OR ITS OFFICERS OR AGENTS SHALL NOT BE RESPONSIBLE FOR THE ACCURACY OR COMPLETENESS OF SCANNED COPIES OF THIS PLAN SHEET.

NOTE:

1. FOR ACCURATE RIGHT OF WAY DATA, CONTACT RIGHT OF WAY ENGINEERING AT THE DISTRICT OFFICE.

LEGEND:

WORKING AREA

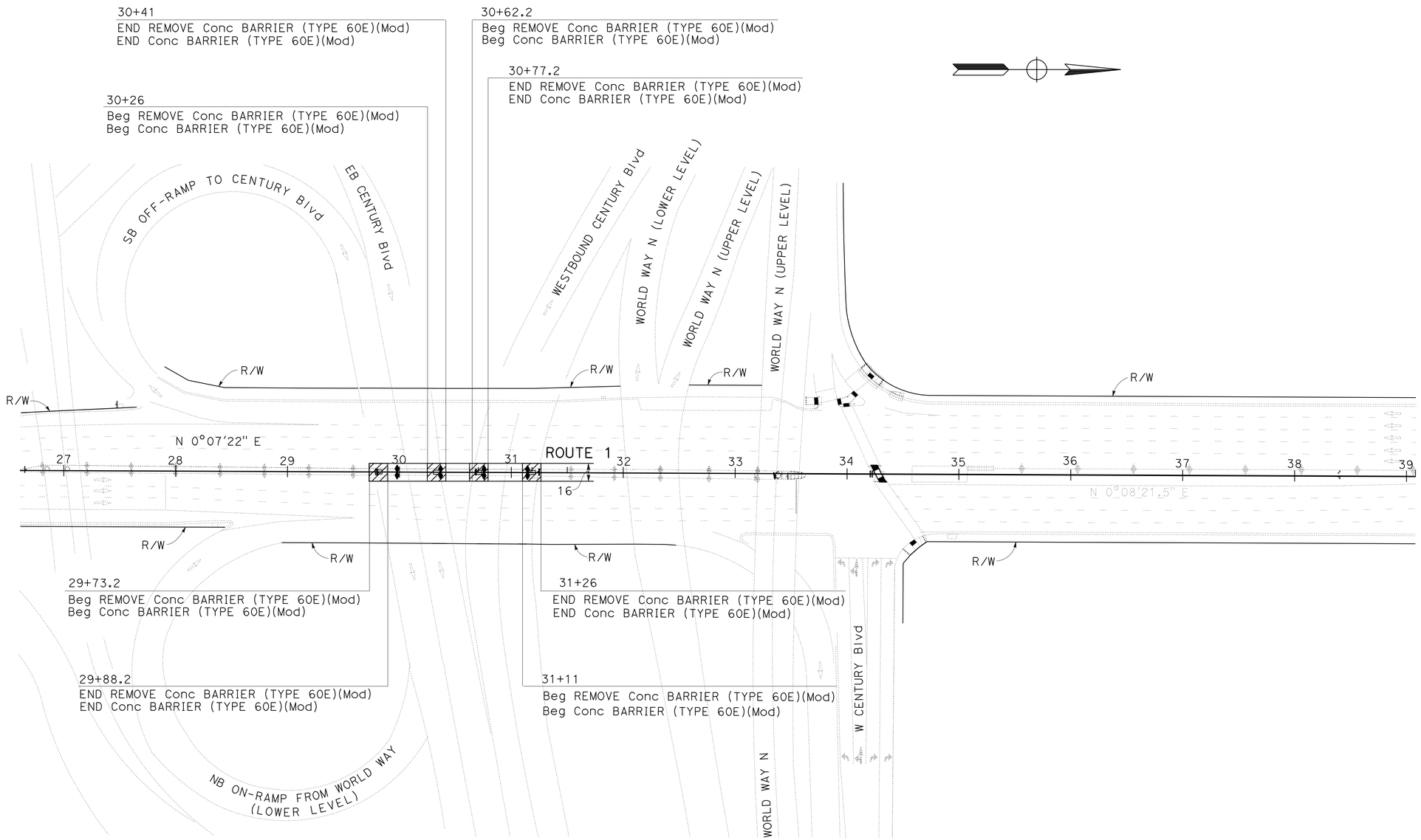

LAYOUT

SCALE: 1"=50'

L-1

STATE OF CALIFORNIA - DEPARTMENT OF TRANSPORTATION
Caltrans® OFFICE OF DESIGN A

FUNCTIONAL SUPERVISOR: MARIO A. GUTIERREZ
CALCULATED-DESIGNED BY: EDMUND S. SPIRAUSKAS
CHECKED BY: TING TING LEE
REVISED BY
DATE REVISED

LAST REVISION 00-00-00 | DATE PLOTTED => 14-MAR-2011 | TIME PLOTTED => 11:25

Dist	COUNTY	ROUTE	POST MILES TOTAL PROJECT	SHEET No.	TOTAL SHEETS
07	LA	1	26.9	3	27

REGISTERED CIVIL ENGINEER 10-20-10 DATE

3-14-11
PLANS APPROVAL DATE

REGISTERED PROFESSIONAL ENGINEER TING TING LEE No. C51642 Exp. 6-30-12 CIVIL STATE OF CALIFORNIA

THE STATE OF CALIFORNIA OR ITS OFFICERS OR AGENTS SHALL NOT BE RESPONSIBLE FOR THE ACCURACY OR COMPLETENESS OF SCANNED COPIES OF THIS PLAN SHEET.

NOTE:

1. DIMENSIONS OF THE PAVEMENT STRUCTURES (STRUCTURAL SECTIONS) ARE SUBJECT TO TOLERANCES SPECIFIED IN THE STANDARD SPECIFICATIONS.

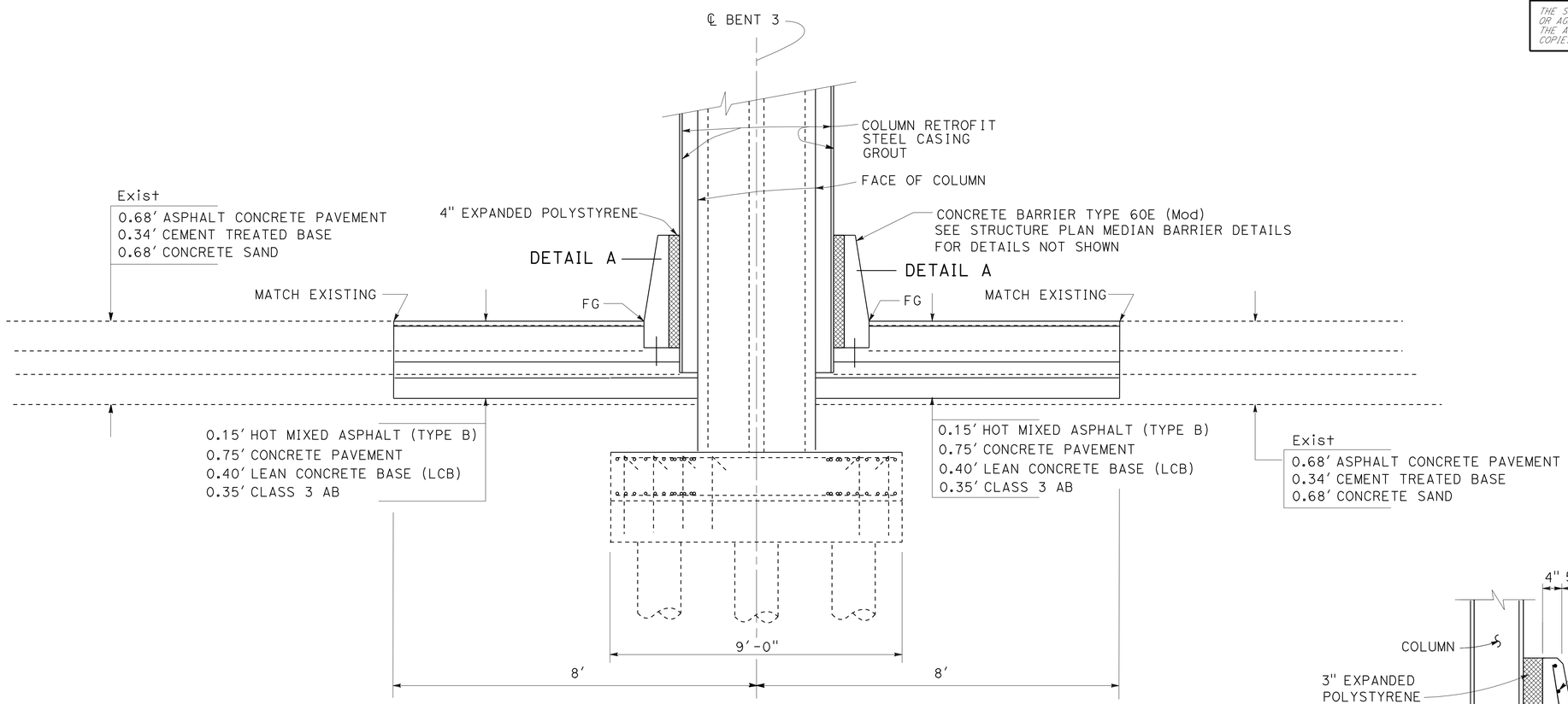

Sta 29+73.2 TO 29+88.2 (ROUTE 1)
Sta 30+26 TO 30+41
Sta 30+62.2 TO 30+77.2
Sta 31+11 TO 31+26

BRIDGE 53-1834L OC
BRIDGE 53-1834R OC

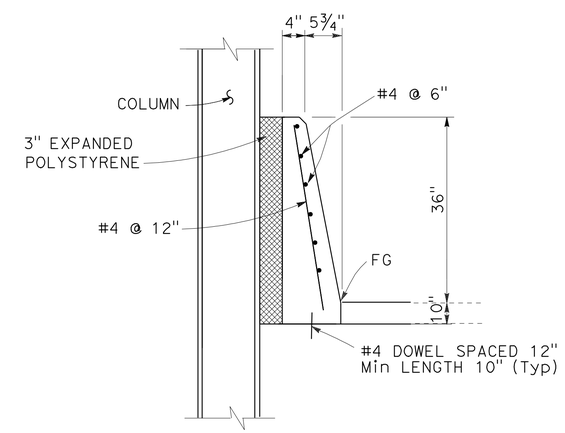

DETAIL A

CONSTRUCTION DETAILS

NO SCALE

C-1

STATE OF CALIFORNIA - DEPARTMENT OF TRANSPORTATION
Caltrans® OFFICE OF DESIGN A

FUNCTIONAL SUPERVISOR: MARIO A. GUTIERREZ
CALCULATED-DESIGNED BY: EDMUND S. SPIRAUSKAS
CHECKED BY: TING TING LEE
REVISED BY
DATE REVISED

LAST REVISION 00-00-00
DATE PLOTTED => 14-MAR-2011
TIME PLOTTED => 11:25

Dist	COUNTY	ROUTE	POST MILES TOTAL PROJECT	SHEET No.	TOTAL SHEETS
07	LA	1	26.9	4	27

Ting-Ting Lee 10-20-10
REGISTERED CIVIL ENGINEER DATE

3-14-11
PLANS APPROVAL DATE

REGISTERED PROFESSIONAL ENGINEER TING TING LEE No. C51642 Exp. 6-30-12 CIVIL STATE OF CALIFORNIA

THE STATE OF CALIFORNIA OR ITS OFFICERS OR AGENTS SHALL NOT BE RESPONSIBLE FOR THE ACCURACY OR COMPLETENESS OF SCANNED COPIES OF THIS PLAN SHEET.

STATIONARY MOUNTED CONSTRUCTION AREA SIGNS

SIGN No. (X)	SIGN CODE FEDERAL	SIGN CODE CALIFORNIA	PANEL SIZE	SIGN MESSAGE	No. OF POSTS AND SIZE	No. OF SIGNS
A	W20-1		48" x 48"	ROAD WORK AHEAD	1- 6" x 6"	9
B	G20-2		48" x 24"	END ROAD WORK	1 - 4" x 6"	5
C		C40	72" x 36"	TRAFFIC FINES DOUBLED IN CONSTRUCTION ZONE	2 - 4" x 6"	3
TOTAL						17

NOTES:

1. SIGN LOCATIONS SHOWN ARE APPROXIMATE.
2. EXACT LOCATIONS WILL BE DETERMINED BY THE ENGINEER.
3. "TRAFFIC FINES DOUBLED IN CONSTRUCTION ZONE" SIGN SHALL BE PLACED APPROXIMATELY 500 FEET IN ADVANCE OF "ROAD WORK AHEAD" SIGN OR AS DETERMINED BY THE ENGINEER.

LEGEND:

SS STRAP AND SADDLE BRACKET METHOD

⬆ OR ⬇ STATIONARY MOUNTED SIGN

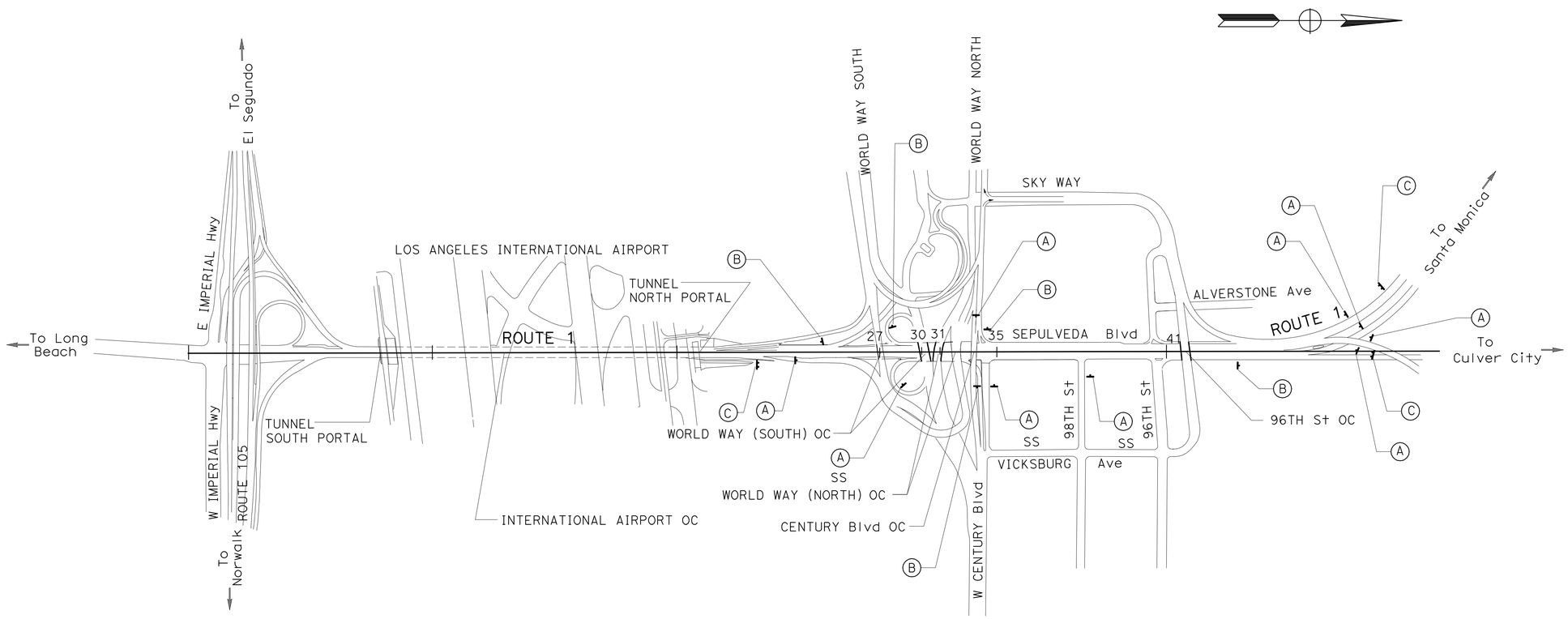

CONSTRUCTION AREA SIGNS

NO SCALE

CS-1

THIS PLAN ACCURATE FOR CONSTRUCTION AREA SIGN WORK ONLY

STATE OF CALIFORNIA - DEPARTMENT OF TRANSPORTATION
Caltrans OFFICE OF DESIGN A

FUNCTIONAL SUPERVISOR: MARIO A. GUTIERREZ

CALCULATED-DESIGNED BY: EDMUND S. SPIRAUSKAS
CHECKED BY: TING TING LEE

REVISED BY
DATE REVISED

LAST REVISION 00-00-00 | DATE PLOTTED => 14-MAR-2011 | TIME PLOTTED => 11:25

Dist	COUNTY	ROUTE	POST MILES TOTAL PROJECT	SHEET No.	TOTAL SHEETS
07	LA	1	26.9	5	27

Ting-Ting Lee 10-20-10
REGISTERED CIVIL ENGINEER DATE

3-14-11
PLANS APPROVAL DATE

REGISTERED PROFESSIONAL ENGINEER TING TING LEE No. C51642 Exp. 6-30-12 CIVIL STATE OF CALIFORNIA

THE STATE OF CALIFORNIA OR ITS OFFICERS OR AGENTS SHALL NOT BE RESPONSIBLE FOR THE ACCURACY OR COMPLETENESS OF SCANNED COPIES OF THIS PLAN SHEET.

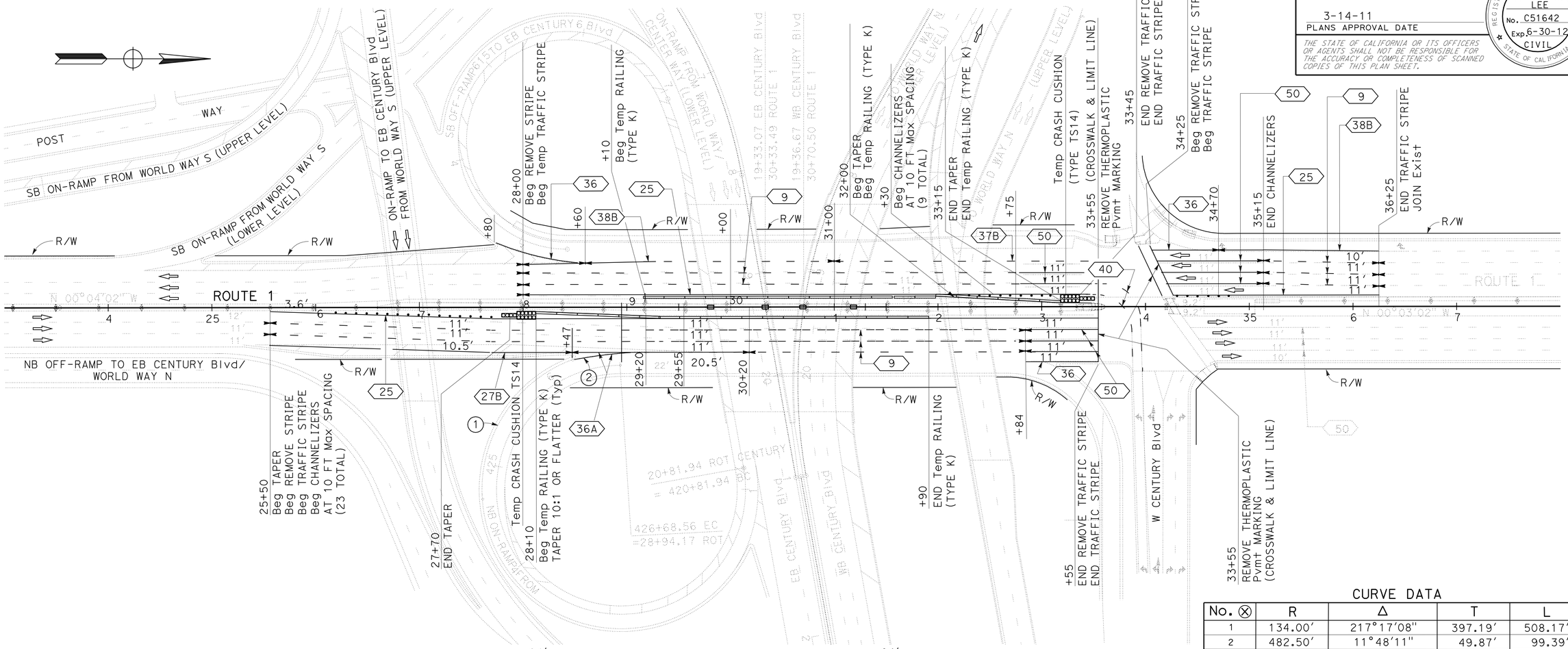

CURVE DATA

No. ⊗	R	Δ	T	L
1	134.00'	217°17'08"	397.19'	508.17'
2	482.50'	11°48'11"	49.87'	99.39'

LEGEND:

- WORK AREA
- STRIPING DETAIL
- TEMPORARY RAILING (TYPE K)
- CHANNELIZER (SURFACE MOUNTED)
- TEMPORARY CRASH CUSHION
- DIRECTION OF TRAFFIC

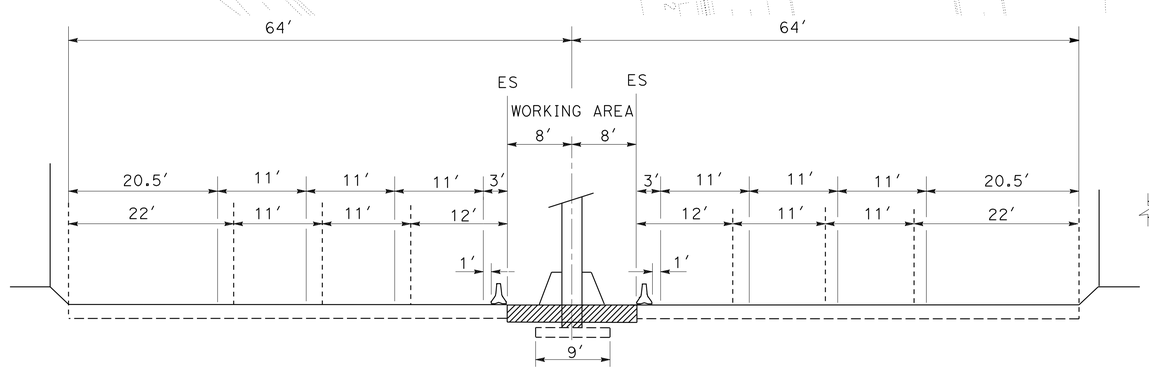

CONSTRUCTION AREA
Sta 29+73.2 TO 29+88.2
Sta 30+26 TO 30+41
Sta 30+62.2 TO 30+77.2
Sta 31+11 TO 31+26

THIS PLAN ACCURATE FOR TRAFFIC HANDLING WORK ONLY

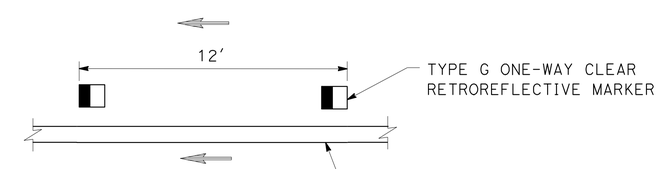

DETAIL 50
(AT INTERSECTION)
NO SCALE

TRAFFIC HANDLING PLAN

SCALE: 1" = 50'

TH-1

STATE OF CALIFORNIA - DEPARTMENT OF TRANSPORTATION
Caltrans® OFFICE OF DESIGN A

FUNCTIONAL SUPERVISOR: MARIO A. GUTIERREZ
CALCULATED-DESIGNED BY: EDMUND S. SPIRAUSKAS
CHECKED BY: TING TING LEE
REVISED BY
DATE REVISED

LAST REVISION 00-00-00
DATE PLOTTED => 14-MAR-2011
TIME PLOTTED => 11:25

Dist	COUNTY	ROUTE	POST MILES TOTAL PROJECT	SHEET No.	TOTAL SHEETS
07	LA	1	26.9	6	27

REGISTERED CIVIL ENGINEER 10-20-10 DATE

3-14-11
PLANS APPROVAL DATE

REGISTERED PROFESSIONAL ENGINEER YUNUS GHAUSI No. 36477 Exp 6/30/12 CIVIL STATE OF CALIFORNIA

THE STATE OF CALIFORNIA OR ITS OFFICERS OR AGENTS SHALL NOT BE RESPONSIBLE FOR THE ACCURACY OR COMPLETENESS OF SCANNED COPIES OF THIS PLAN SHEET.

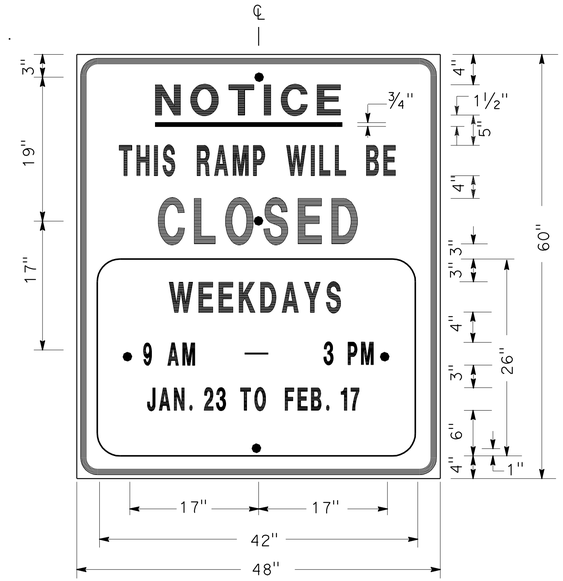

SIGN SP-1

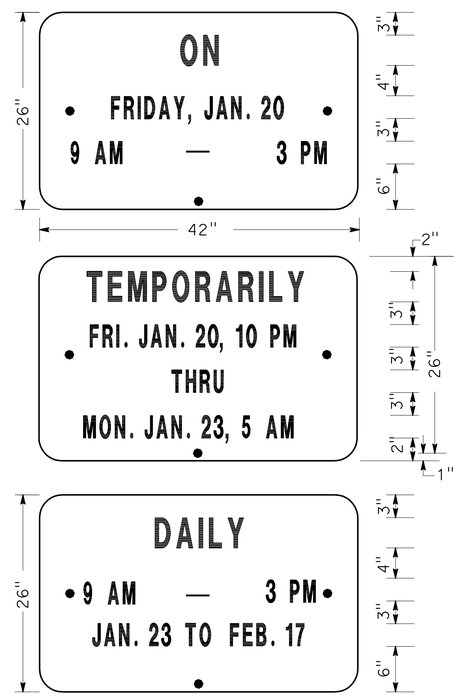

ALTERNATE OVERLAY PANELS (TYPICAL)

SPECIAL ADVANCE NOTICE PUBLICITY SIGN

NOTES: (SIGN SP-1)

1. SIGNS SHALL HAVE ORANGE RETROREFLECTORIZED BACKGROUND WITH BLACK BORDER AND LEGENDS.
2. BOLT HOLES SHALL BE 3/8" DIAMETERS.
3. BASE MATERIAL SHALL BE ALUMINUM (MINIMUM 0.06").
4. SIGNS SHALL BE MOUNTED WITH BOTTOMS OF SIGNS A MINIMUM OF 6′ ABOVE GROUND.

SIZE	BORDER WIDTH	MARGIN WIDTH	LETTER SIZE					CORNER RADIUS
			LINE 1	LINE 2*	LINE 3	LINE 4	LINE 5,6 & 7*	
48"×60"	1 1/4"	3/4"	4E	4D	6E	4D		3"
42"×26"	OVERLAY						3D	1 1/2"
* CONDENSED SPACING IF NECESSARY								

SIGN SP-4

NOTES: (SIGN SP-4)

1. LETTERS - 6" SERIES C.
2. LETTERS AND BORDERS - BLACK ON RETROREFLECTORIZED WHITE BACKGROUND.
3. BASE MATERIAL SHALL BE ALUMINUM (MINIMUM 0.06").
4. SIGNS SHALL BE PLACED AT RAMP ENTRANCES IN ADDITION TO SIGNS POSTED IN ACCORDANCE WITH STANDARD PLAN T14.

SPECIAL SIGN FOR ENTRANCE RAMP CLOSURES

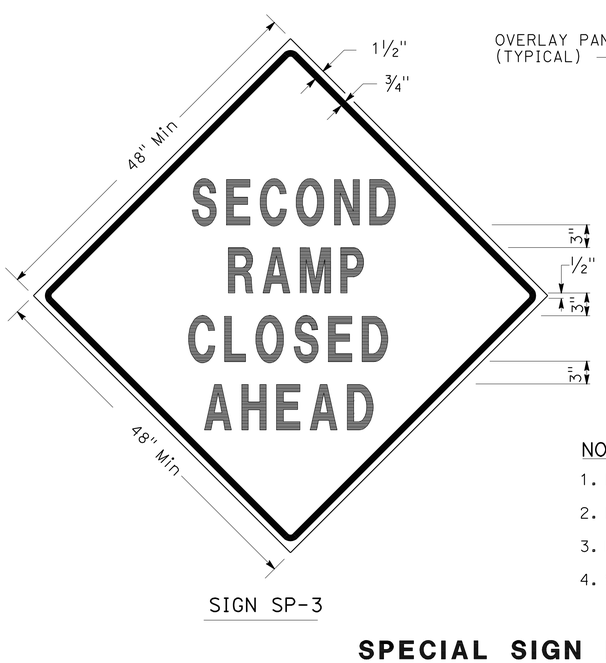

SIGN SP-3

SIGN SP-5

NOTES: (SIGNS SP-3 & SP-5)

1. LETTERS - 6" SERIES D.
2. LETTERS AND BORDERS - BLACK ON RETROREFLECTORIZED ORANGE BACKGROUND.
3. BASE MATERIAL SHALL BE ALUMINUM (MINIMUM 0.06").
4. SIGNS SHALL BE MOUNTED WITH BOTTOMS OF SIGNS A MINIMUM OF 6′ ABOVE GROUND.

SPECIAL SIGN FOR EXIT RAMP CLOSURES

TRAFFIC HANDLING DETAILS

TRAFFIC CONTROL SYSTEM FOR RAMP CLOSURES, DETOUR SIGNS AND MISCELLANEOUS DETAILS

NO SCALE

THD-1

STATE OF CALIFORNIA - DEPARTMENT OF TRANSPORTATION
Caltrans DTM

FUNCTIONAL SUPERVISOR: YUNUS GHAUSI
CALCULATED-DESIGNED BY: GEORGE CHAMMAS
CHECKED BY: YUNUS GHAUSI
REVISED BY
DATE REVISED

LAST REVISION 00-00-00
DATE PLOTTED => 14-MAR-2011
TIME PLOTTED => 11:25

Dist	COUNTY	ROUTE	POST MILES TOTAL PROJECT	SHEET No.	TOTAL SHEETS
07	LA	1	26.9	7	27

REGISTERED CIVIL ENGINEER 10-20-10 DATE

3-14-11
PLANS APPROVAL DATE

REGISTERED PROFESSIONAL ENGINEER YUNUS GHAUSI No. 36477 Exp 6/30/12 CIVIL STATE OF CALIFORNIA

THE STATE OF CALIFORNIA OR ITS OFFICERS OR AGENTS SHALL NOT BE RESPONSIBLE FOR THE ACCURACY OR COMPLETENESS OF SCANNED COPIES OF THIS PLAN SHEET.

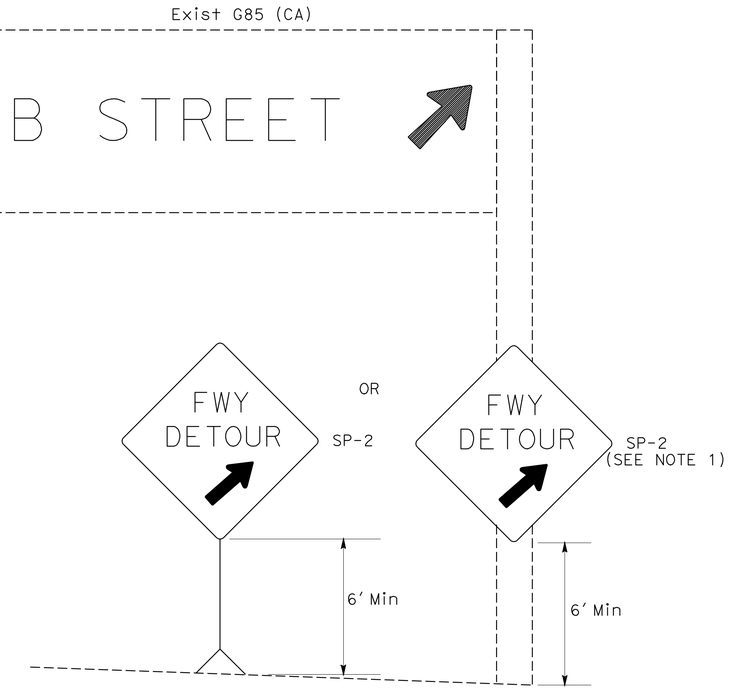

DETAIL A (SEE NOTE 2)

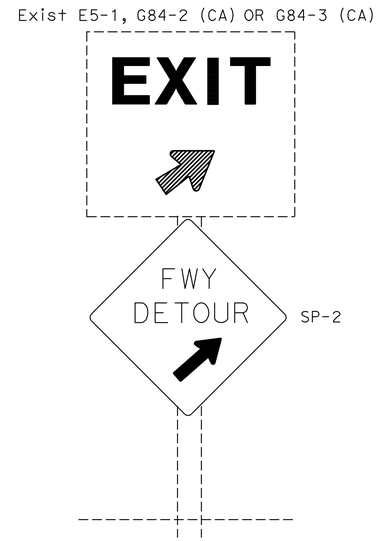

DETAIL B (SEE NOTE 2)

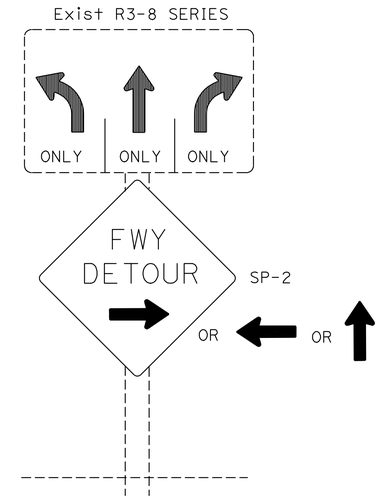

DETAIL C (SEE NOTE 3)

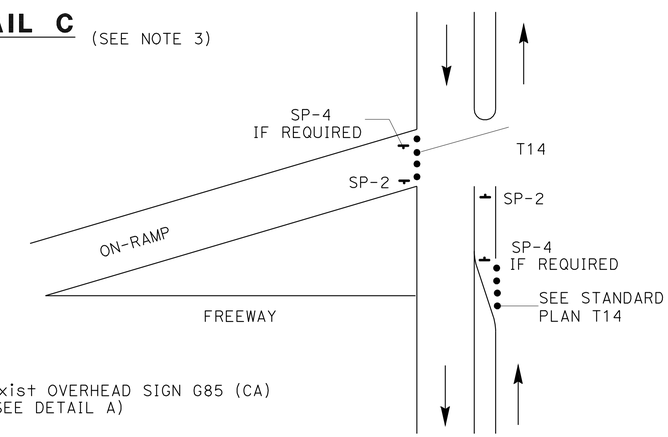

DETAIL E

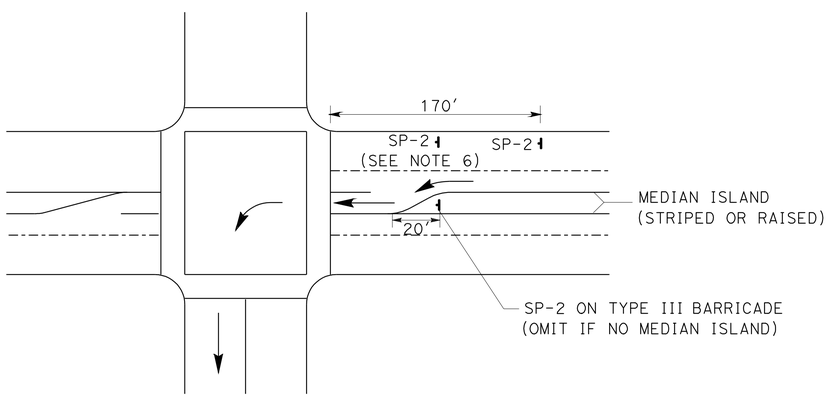

DETAIL D

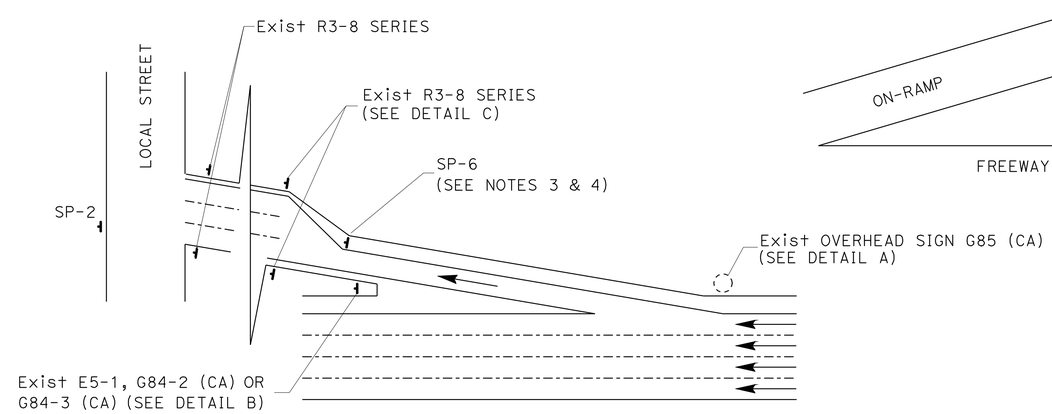

TYPICAL DETOUR SIGN INSTALLATION AT OFF-RAMP

NOTES:

1. SP-2 MAY BE STRAPPED ON EXISTING ELECTROLIER SIGNAL POSTS OR SIGN POSTS.
2. OMIT DETAIL A AND DETAIL B FOR FULL FREEWAY CLOSURES.
3. SEE SPECIAL PROVISIONS FOR SIGN REQUIREMENTS.
4. OMIT DETAIL C WHEN SP-6 IS USED.
5. SEE TRAFFIC HANDLING DETAILS PLAN-TRAFFIC CONTROL SYSTEM FOR RAMP CLOSURES, DETOUR SIGNS AND MISCELLANEOUS DETAILS SHEET 2 OF 2 FOR SP-6.
6. OMIT IF MEDIAN ISLAND EXIST.

ABBREVIATIONS:

(CA) CALIFORNIA CODE

LEGENDS:

- CONE
- PORTABLE SIGN
- DIRECTION OF TRAVEL
- EXISTING OVERHEAD SIGN

TRAFFIC HANDLING DETAILS

TRAFFIC CONTROL SYSTEM FOR DETOUR SIGN INSTALLATION ALONG DESIGNATED DETOUR ROUTE

NO SCALE

THD-2

STATE OF CALIFORNIA - DEPARTMENT OF TRANSPORTATION
Caltrans DTM

FUNCTIONAL SUPERVISOR: YUNUS GHAUSI
CALCULATED-DESIGNED BY: GEORGE CHAMMAS
CHECKED BY: YUNUS GHAUSI
REVISED BY
DATE REVISED

LAST REVISION 00-00-00
DATE PLOTTED => 14-MAR-2011
TIME PLOTTED => 11:25

Dist	COUNTY	ROUTE	POST MILES TOTAL PROJECT	SHEET No.	TOTAL SHEETS
07	LA	1	26.9	8	27

REGISTERED CIVIL ENGINEER 10-20-10 DATE

3-14-11
PLANS APPROVAL DATE

REGISTERED PROFESSIONAL ENGINEER
YUNUS GHAUSI
No. 36477
Exp. 6/30/12
CIVIL
STATE OF CALIFORNIA

THE STATE OF CALIFORNIA OR ITS OFFICERS OR AGENTS SHALL NOT BE RESPONSIBLE FOR THE ACCURACY OR COMPLETENESS OF SCANNED COPIES OF THIS PLAN SHEET.

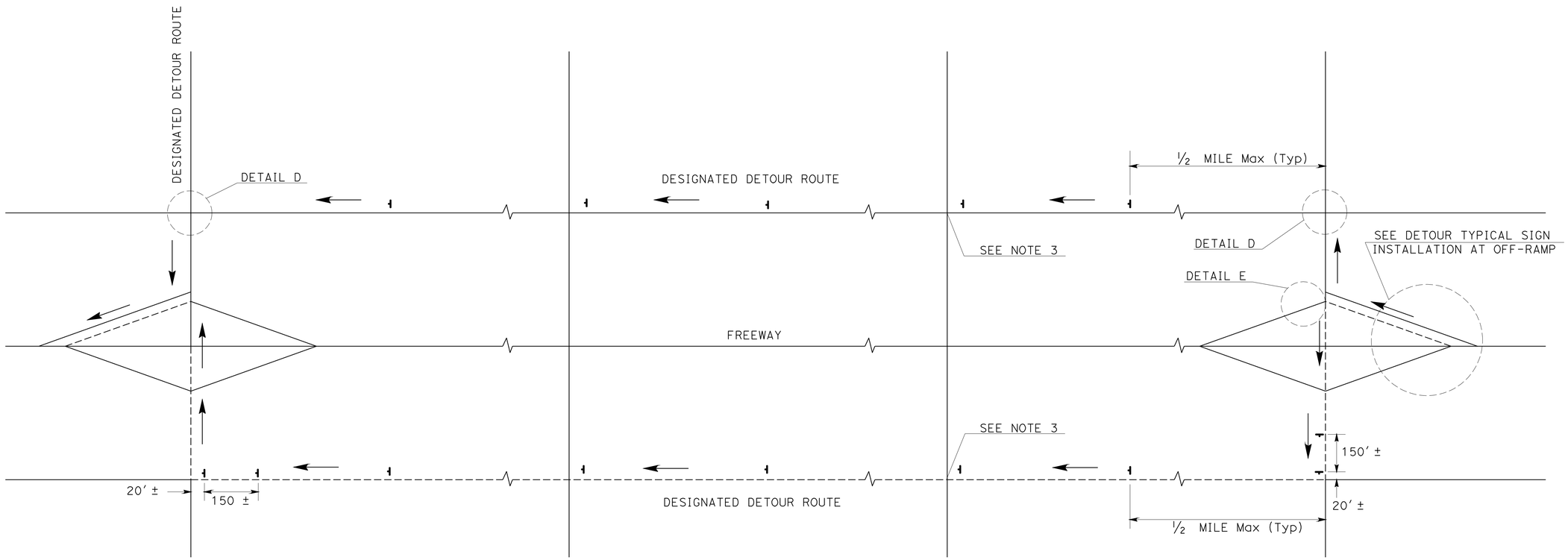

TYPICAL DETOUR SIGN INSTALLATION ALONG DESIGNATED DETOUR ROUTE

LEGEND

- SIGN SP-2
- AND/OR DESIGNATED DETOUR ROUTE
- DIRECTION OF TRAVEL

NOTES:

1. SP-2 SIGNS SHALL NOT BE INSTALLED ON BARRICADES EXCEPT AS OTHERWISE SHOWN.
2. SIGN LOCATIONS ARE APPROXIMATE. EXACT LOCATIONS WILL BE DETERMINED BY THE ENGINEER.
3. SP-2 SIGNS SHALL BE POSTED AT SIGNALIZED INTERSECTIONS ALONG THE DESIGNATED DETOUR ROUTE OR ½ MILE MAXIMUM APART.

TRAFFIC HANDLING DETAILS

TRAFFIC CONTROL SYSTEM FOR DETOUR SIGN INSTALLATION ALONG DESIGNATED DETOUR ROUTE

NO SCALE

THD-3

STATE OF CALIFORNIA - DEPARTMENT OF TRANSPORTATION
Caltrans
DTM

FUNCTIONAL SUPERVISOR: YUNUS GHAUSI
CALCULATED-DESIGNED BY: GEORGE CHAMMAS
CHECKED BY: YUNUS GHAUSI
REVISED BY
DATE REVISED

LAST REVISION 00-00-00
DATE PLOTTED => 14-MAR-2011
TIME PLOTTED => 11:25

Dist	COUNTY	ROUTE	POST MILES TOTAL PROJECT	SHEET No.	TOTAL SHEETS
07	LA	1	26.9	9	27

REGISTERED CIVIL ENGINEER 10-20-10 DATE

3-14-11
PLANS APPROVAL DATE

REGISTERED PROFESSIONAL ENGINEER YUNUS GHAUSI No. 36477 Exp 6/30/12 CIVIL STATE OF CALIFORNIA

THE STATE OF CALIFORNIA OR ITS OFFICERS OR AGENTS SHALL NOT BE RESPONSIBLE FOR THE ACCURACY OR COMPLETENESS OF SCANNED COPIES OF THIS PLAN SHEET.

LEGEND:

- CONE
- TRAFFIC PLASTIC DRUM
- FLASHING ARROW SIGN
- PORTABLE SIGN
- DIRECTION OF TRAVEL
- PORTABLE CHANGEABLE MESSAGE SIGN (PCMS)

ABBREVIATIONS:

(CA) CALIFORNIA CODE

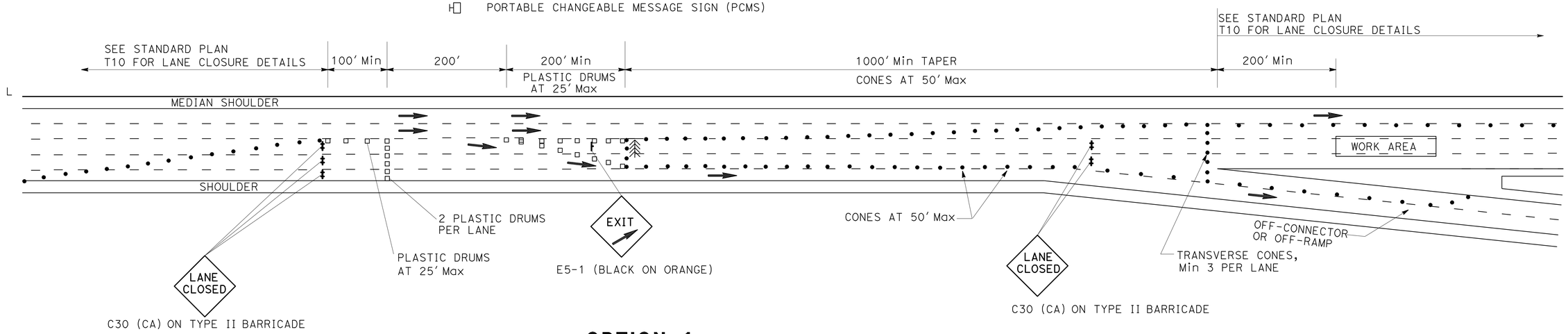

OPTION 1

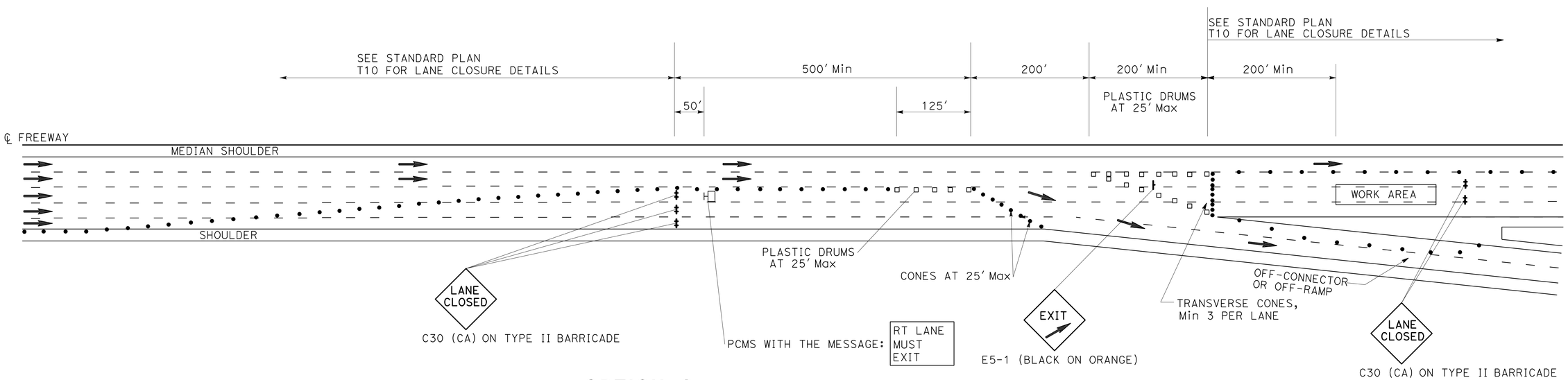

OPTION 2

TRAFFIC HANDLING DETAILS

TRAFFIC CONTROL SYSTEM FOR SLIP-RAMP AT OFF-CONNECTOR OR OFF-RAMP

NO SCALE

THD-4

REVISED BY | DATE REVISED
GEORGE CHAMMAS | YUNUS GHAUSI
CALCULATED-DESIGNED BY | CHECKED BY
FUNCTIONAL SUPERVISOR: YUNUS GHAUSI
STATE OF CALIFORNIA - DEPARTMENT OF TRANSPORTATION
Caltrans® DTM

LAST REVISION 00-00-00 | DATE PLOTTED => 14-MAR-2011 | TIME PLOTTED => 11:25

Dist	COUNTY	ROUTE	POST MILES TOTAL PROJECT	SHEET No.	TOTAL SHEETS
07	LA	1	26.9	10	27

Ting-Ting Lee 10-20-10
REGISTERED CIVIL ENGINEER DATE

3-14-11
PLANS APPROVAL DATE

REGISTERED PROFESSIONAL ENGINEER
TING TING LEE
No. C51642
Exp. 6-30-12
CIVIL
STATE OF CALIFORNIA

THE STATE OF CALIFORNIA OR ITS OFFICERS OR AGENTS SHALL NOT BE RESPONSIBLE FOR THE ACCURACY OR COMPLETENESS OF SCANNED COPIES OF THIS PLAN SHEET.

TRAFFIC HANDLING QUANTITIES

SHEET No.		CHANNELIZER (SURFACE MOUNTED)	TEMPORARY RAILING (TYPE K)	TEMPORARY CRASH CUSHION MODULE	TEMPORARY PAVEMENT MARKER RETROREFLECTIVE			TEMPORARY TRAFFIC STRIPE (PAINT)								PAVEMENT MARKING
					TYPE C	TYPE G	TYPE H	4" SOLID	4" BROKEN (7'-17')	4" SOLID	4" BROKEN (1'-6')	4" SOLID	8" WHITE	8" BROKEN (3'-12')	8" SOLID	
								YELLOW	WHITE	WHITE	WHITE	WHITE	WHITE	WHITE	WHITE	
								Det 25	Det 9	Det 27B	Det 40	Det 50	Det 38B	Det 37B	Det 36A,36	
		EA	LF	EA	EA	EA	EA	LF	LF	LF	LF	LF	LF	LF	LF	SQFT
TH-1	NB	23	380	14		70	18	805	1732	220		213			321	110
	SB	30	405	14	10	51	17	755	1280		110		395	255	105	155
TOTAL		53	785	28	10	121	35	1560	3012	220	110	213	395	255	426	265
					166			6192								

STATE OF CALIFORNIA - DEPARTMENT OF TRANSPORTATION
Caltrans OFFICE OF DESIGN A

FUNCTIONAL SUPERVISOR: MARIO A. GUTIERREZ
CALCULATED-DESIGNED BY: EDMUND S. SPIRSUSKAS
CHECKED BY: TING TING LEE
REVISED BY
DATE REVISED

TRAFFIC HANDLING QUANTITIES

THQ-1

LAST REVISION 00-00-00
DATE PLOTTED => 14-MAR-2011
TIME PLOTTED => 11:25

Dist	COUNTY	ROUTE	POST MILES TOTAL PROJECT	SHEET No.	TOTAL SHEETS
07	LA	1	26.9	11	27

REGISTERED CIVIL ENGINEER 10-20-10 DATE

3-14-11
PLANS APPROVAL DATE

REGISTERED PROFESSIONAL ENGINEER TING TING LEE No. C51642 Exp. 6-30-12 CIVIL STATE OF CALIFORNIA

THE STATE OF CALIFORNIA OR ITS OFFICERS OR AGENTS SHALL NOT BE RESPONSIBLE FOR THE ACCURACY OR COMPLETENESS OF SCANNED COPIES OF THIS PLAN SHEET.

LEGEND:

- DIRECTION OF TRAFFIC
- LIMIT OF DETAIL OF TRAFFIC STRIPE
- (XX) STRIPING DETAIL

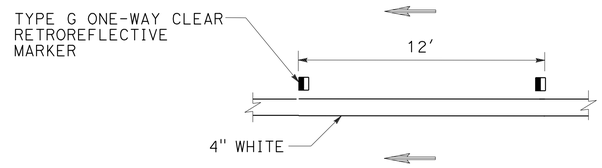

DETAIL 50
(AT INTERSECTION)
NO SCALE

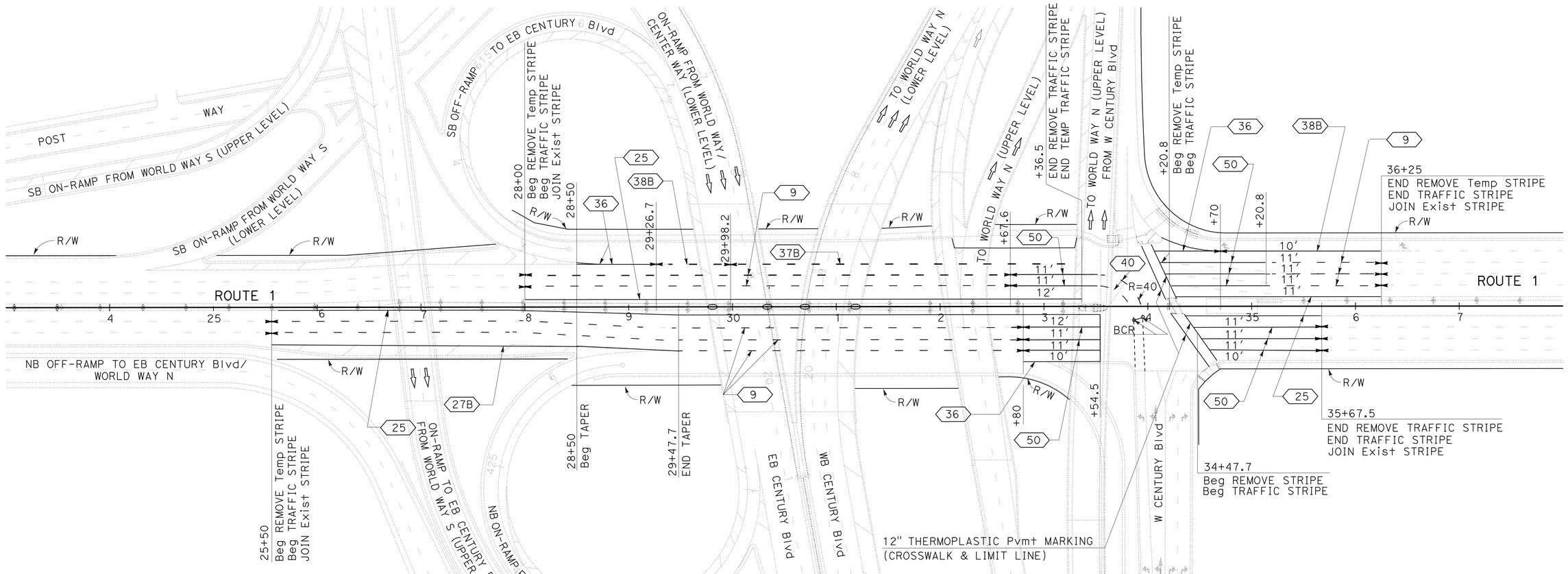

PAVEMENT DELINEATION PLAN

SCALE: 1" = 50'

THIS PLAN ACCURATE FOR PAVEMENT DELINEATION WORK ONLY

PD-1

STATE OF CALIFORNIA - DEPARTMENT OF TRANSPORTATION
Caltrans® OFFICE OF DESIGN A

FUNCTIONAL SUPERVISOR: MARIO A. GUTIERREZ
CALCULATED-DESIGNED BY: EDMUND S. SPIRSUSKAS
CHECKED BY: TING TING LEE
REVISED BY
DATE REVISED

LAST REVISION 00-00-00
DATE PLOTTED => 14-MAR-2011
TIME PLOTTED => 11:25

Dist	COUNTY	ROUTE	POST MILES TOTAL PROJECT	SHEET No.	TOTAL SHEETS
07	LA	1	26.9	12	27

Ting-Ting Lee 10-20-10
REGISTERED CIVIL ENGINEER DATE

3-14-11
PLANS APPROVAL DATE

REGISTERED PROFESSIONAL ENGINEER
TING TING LEE
No. C51642
Exp. 6-30-12
CIVIL
STATE OF CALIFORNIA

THE STATE OF CALIFORNIA OR ITS OFFICERS OR AGENTS SHALL NOT BE RESPONSIBLE FOR THE ACCURACY OR COMPLETENESS OF SCANNED COPIES OF THIS PLAN SHEET.

ROADWAY AND TEMPORARY WATER CONTROL QUANTITIES

SHEET No.	ROADWAY EXCAVATION	CLASS 3 AGGREGATE BASE	HOT MIXED ASPHALT (TYPE B)	CONCRETE PAVEMENT	REMOVE CONCRETE BARRIER (TYPE 60E-Mod)	CONCRETE BARRIER (TYPE 60E-Mod)	TEMPORARY COVER	REMOVE CONCRETE PAVEMENT	LEAN CONCRETE BASE
	CY	CY	TON	CY	LF	LF	SQYD	CY	CY
L-1	60	12	12	26.5	60	60	400	23.7	14
TOTAL	60	12	12	26.5	60	60	400	23.7	14

PAVEMENT DELINEATION QUANTITIES

SHEET No.		THERMOPLASTIC TRAFFIC STRIPE									PAVEMENT MARKER			REMOVE					
											RETROREFLECTIVE						PAVEMENT MARKER		
		4" SOLID	4" SOLID	4" SOLID	8" SOLID	8" SOLID	8" BROKEN (12-3)	4" BROKEN (6-1)	4" BROKEN (17-7)	THERMOPLASTIC PAVEMENT MARKING	TYPE C	TYPE G	TYPE H	THERMOPLASTIC TRAFFIC STRIPE	YELLOW THERMOPLASTIC TRAFFIC STRIPE (HAZARDOUS WASTE)	THERMOPLASTIC PAVEMENT MARKING	TYPE C	TYPE G	TYPE H
		YELLOW	WHITE	WHITE	WHITE	WHITE	WHITE	WHITE	WHITE	WHITE									
		Det 25	Det 27B	Det 50	Det 36	Det 37B	Det 38B	Det 40	Det 9										
		LF	LF	LF	LF	LF	LF	LF	LF	SQFT	EA	EA	EA	LF	LF	SQFT	EA	EA	EA
PD-1	NB	952	300	666	75			115	1890	110		103	21	3121	952	110		103	21
	SB	957		342	391	155	411		1302	155	12	55	21	3555	957	155	12	55	21
TOTAL		1909	300	1008	466	155	411	115	3192	265	12	158	42	6676	1909	265	12	158	42
		3217			621						212						212		

SUMMARY OF QUANTITIES

Q-1

STATE OF CALIFORNIA - DEPARTMENT OF TRANSPORTATION
Caltrans® OFFICE OF DESIGN A

FUNCTIONAL SUPERVISOR: MARIO A. GUTIERREZ
CALCULATED-DESIGNED BY: EDMUND S. SPIRAUSKAS
CHECKED BY: TING TING LEE
REVISED BY
DATE REVISED

LAST REVISION 00-00-00
DATE PLOTTED => 14-MAR-2011
TIME PLOTTED => 11:25

DIST	COUNTY	ROUTE	POST MILES TOTAL PROJECT	SHEET NO.	TOTAL SHEETS
07	LA	1	26.9	13	27

Randell D. Hiatt
REGISTERED CIVIL ENGINEER

June 6, 2008
PLANS APPROVAL DATE

REGISTERED PROFESSIONAL ENGINEER
Randell D. Hiatt
No. C50200
Exp. 6-30-09
CIVIL
STATE OF CALIFORNIA

The State of California or its officers or agents shall not be responsible for the accuracy or completeness of electronic copies of this plan sheet.

To accompany plans dated 3-14-11

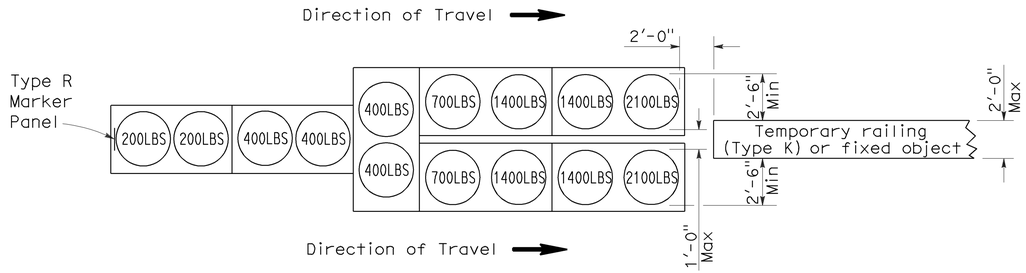

ARRAY 'TU14'

Approach speed 45 mph or more

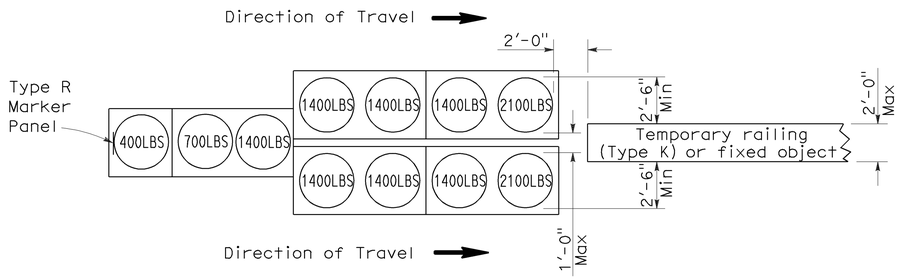

ARRAY 'TU11'

Approach speed less than 45 mph

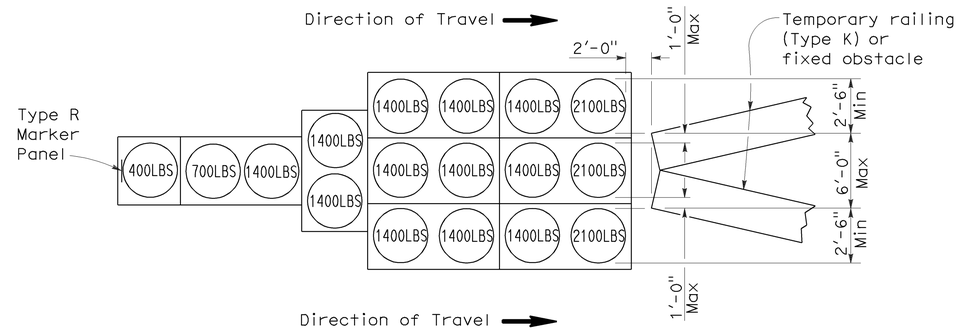

ARRAY 'TU17'

Approach speed less than 45 mph

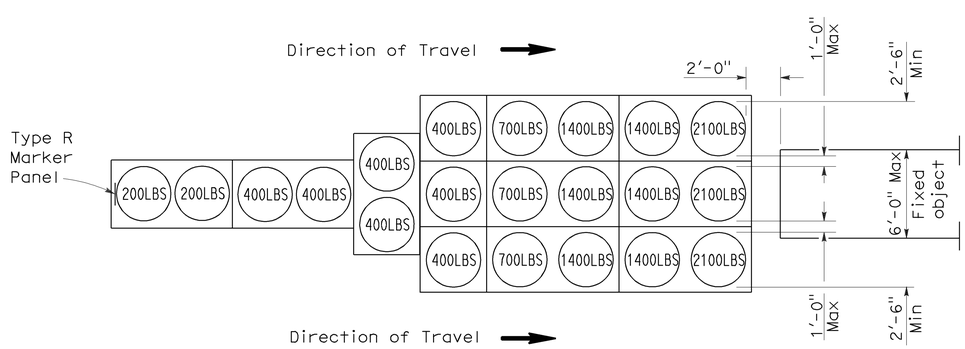

ARRAY 'TU21'

Approach speed 45 mph or more

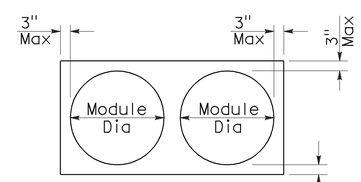

PLAN

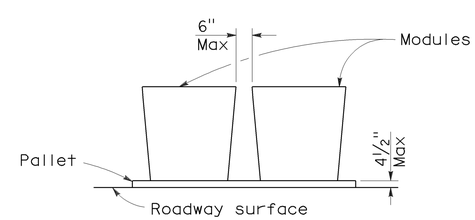

ELEVATION

CRASH CUSHION PALLET DETAIL

See Note 7

NOTES:

1. (XXX) Indicates sand filled module location and weight of sand in pounds for each module. Module spacing is based on the greater diameter of the module.
2. All sand weights are nominal.
3. Temporary crash cushion arrays shall not encroach on the traveled way.
4. Place the top of Type R marker panel 1" below the module lid.
5. Refer to Standard Plan A73B for marker details.
6. Approach speeds indicated conform to NCHRP 350 Report criteria.
7. Use of pallets is optional.

STATE OF CALIFORNIA
DEPARTMENT OF TRANSPORTATION

TEMPORARY CRASH CUSHION, SAND FILLED (UNIDIRECTIONAL)

NO SCALE

RSP T1A DATED JUNE 6, 2008 SUPERSEDES STANDARD PLAN T1A
DATED MAY 1, 2006 - PAGE 211 OF THE STANDARD PLANS BOOK DATED MAY 2006.

REVISED STANDARD PLAN RSP T1A

2006 REVISED STANDARD PLAN RSP T1A

DIST	COUNTY	ROUTE	POST MILES TOTAL PROJECT	SHEET NO.	TOTAL SHEETS
07	LA	1	26.9	14	27

Randell D. Hiatt
REGISTERED CIVIL ENGINEER

June 6, 2008
PLANS APPROVAL DATE

REGISTERED PROFESSIONAL ENGINEER
Randell D. Hiatt
No. C50200
Exp. 6-30-09
CIVIL
STATE OF CALIFORNIA

The State of California or its officers or agents shall not be responsible for the accuracy or completeness of electronic copies of this plan sheet.

To accompany plans dated 3-14-11

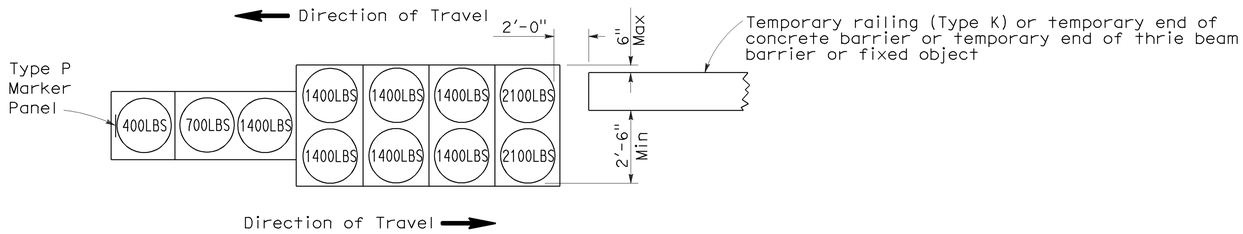

ARRAY 'TB11'

Approach speed less than 45 mph

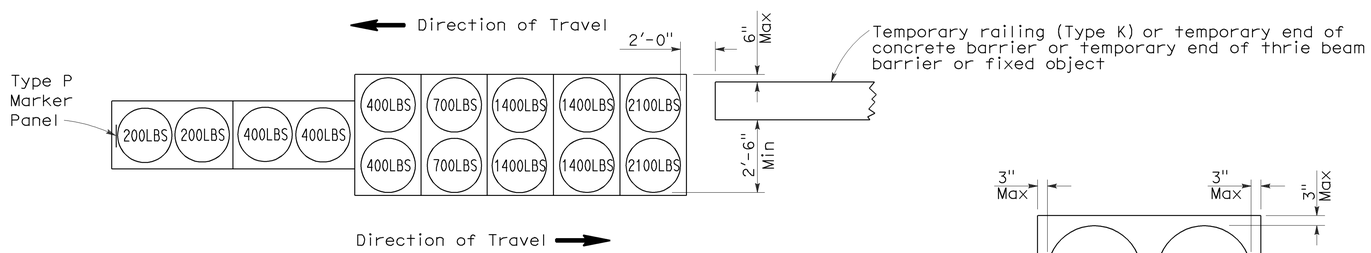

ARRAY 'TB14'

Approach speed 45 mph or more

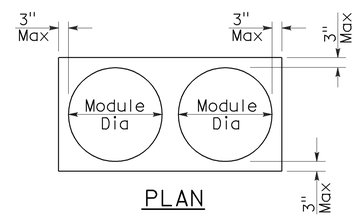

PLAN

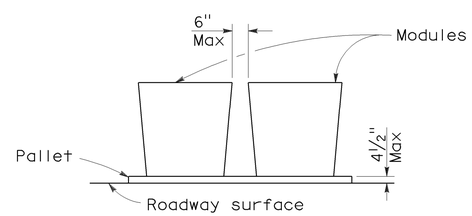

ELEVATION

CRASH CUSHION PALLET DETAIL

See Note 7

NOTES:

1. (XXX) Indicates sand filled module location and weight of sand in pounds for each module. Module spacing is based on the greater diameter of the module.
2. All sand weights are nominal.
3. Temporary crash cushion arrays shall not encroach on the traveled way.
4. Place the Type P marker panel so that the bottom of the panel rests upon the pallet.
5. Refer to Standard Plan A73B for marker details.
6. Approach speeds indicated conform to NCHRP 350 Report criteria.
7. Use of pallets is optional.

STATE OF CALIFORNIA
DEPARTMENT OF TRANSPORTATION

TEMPORARY CRASH CUSHION, SAND FILLED (BIDIRECTIONAL)

NO SCALE

RSP T1B DATED JUNE 6, 2008 SUPERSEDES STANDARD PLAN T1B
DATED MAY 1, 2006 - PAGE 212 OF THE STANDARD PLANS BOOK DATED MAY 2006.

REVISED STANDARD PLAN RSP T1B

2006 REVISED STANDARD PLAN RSP T1B

5-15-08

DIST	COUNTY	ROUTE	POST MILES TOTAL PROJECT	SHEET NO.	TOTAL SHEETS
07	LA	1	26.9	15	27

Randell D. Hiatt
REGISTERED CIVIL ENGINEER

June 6, 2008
PLANS APPROVAL DATE

REGISTERED PROFESSIONAL ENGINEER
Randell D. Hiatt
No. C50200
Exp. 6-30-09
CIVIL
STATE OF CALIFORNIA

The State of California or its officers or agents shall not be responsible for the accuracy or completeness of electronic copies of this plan sheet.

To accompany plans dated 3-14-11

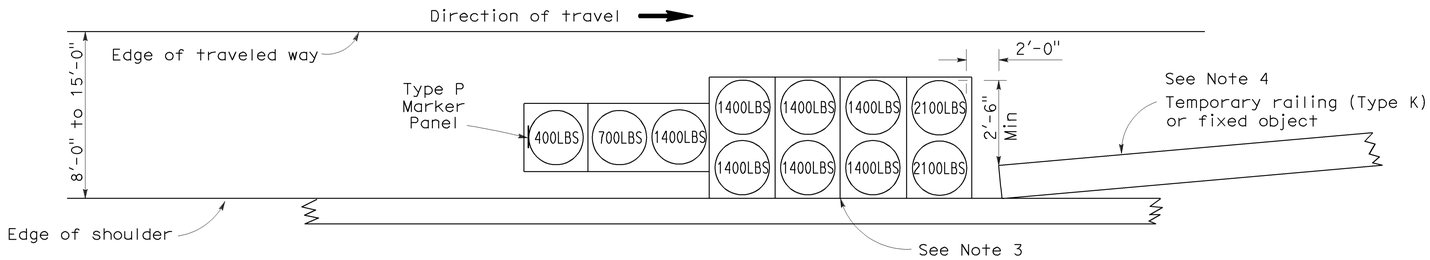

ARRAY 'TS11'

Approach speed less than 45 mph
See Note 9

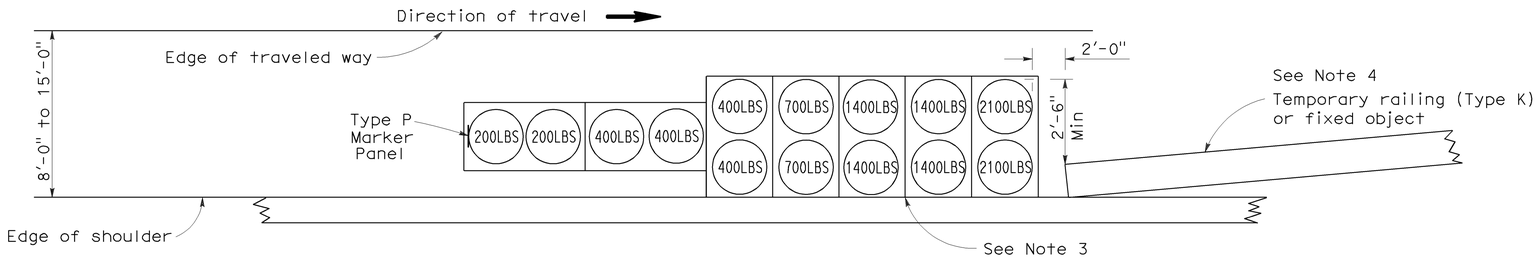

ARRAY 'TS14'

Approach speed 45 mph or more
See Note 9

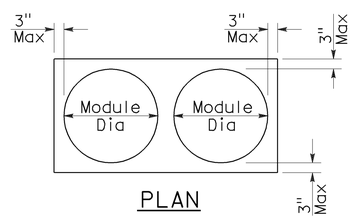

PLAN

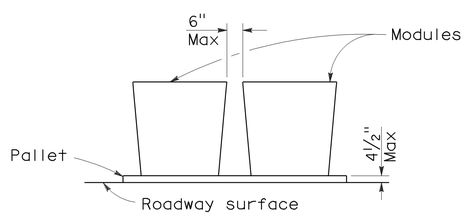

ELEVATION

CRASH CUSHION PALLET DETAIL

See Note 11

NOTES:

1. (XXX) Indicates sand filled module location and weight of sand in pounds for each module. Module spacing is based on the greater diameter of the module.
2. All sand weights are nominal.
3. The temporary crash cushion arrays shown on this plan shall be used only in locations where there will be traffic on one side of the temporary crash cushion array.
4. If the fixed object or approach end of the temporary railing is less than 15'-0" from the edge of traveled way, a temporary crash cushion is required in a construction or work zone.
5. Temporary crash cushion arrays shall not encroach on the traveled way.
6. Arrays for median shoulders shall conform to details shown on this plan for outside shoulders.
7. Place the Type P marker panel so that the bottom of the panel rests upon the pallet and faces traffic.
8. Refer to Standard Plan A73B for marker details.
9. For shoulder widths less than 8'-0", appropriate approved crash cushion protection, other than sand filled modules, shall be provided at fixed objects and at approach ends of temporary railing. The specific type of crash cushion shall be as shown on the project plans or as specified in the Special Provisions, or if not shown on the project plans or specified in the Special Provisions, shall be as approved by the Engineer.
10. Approach speeds indicated conform to NCHRP 350 Report criteria.
11. Use of pallets is optional.

STATE OF CALIFORNIA
DEPARTMENT OF TRANSPORTATION

TEMPORARY CRASH CUSHION, SAND FILLED (SHOULDER INSTALLATIONS)

NO SCALE

RSP T2 DATED JUNE 6, 2008 SUPERSEDES STANDARD PLAN T2
DATED MAY 1, 2006 - PAGE 213 OF THE STANDARD PLANS BOOK DATED MAY 2006.

REVISED STANDARD PLAN RSP T2

2006 REVISED STANDARD PLAN RSP T2

5-15-08

DIST	COUNTY	ROUTE	POST MILES TOTAL PROJECT	SHEET No	TOTAL SHEETS
07	LA	1	26.9	16	27

REGISTERED CIVIL ENGINEER 9-16-10 DATE

3-14-11
PLANS APPROVAL DATE

The State of California or its officers or agents shall not be responsible for the accuracy or completeness of electronic copies of this plan sheet.

REGISTERED PROFESSIONAL ENGINEER MICHAEL VAN DE POL No. 35610 Exp. 9-30-11 CIVIL STATE OF CALIFORNIA

QUANTITIES

BRIDGE REMOVAL (PORTION)	LUMP	SUM
STRUCTURE EXCAVATION (BRIDGE)	90	CY
STRUCTURE BACKFILL (BRIDGE)	80	CY
LIGHTWEIGHT CONCRETE	50	CY
DRILL AND BOND DOWEL	280	LF
CORE AND PRESSURE GROUT DOWELS	765	LF
BAR REINFORCING STEEL (BRIDGE)	26,700	LB
ASPHALT MEMBRANE WATERPROOFING	590	SQFT
COLUMN CASING	58,700	LB
MISCELLANEOUS METAL (BRIDGE)	780	LB

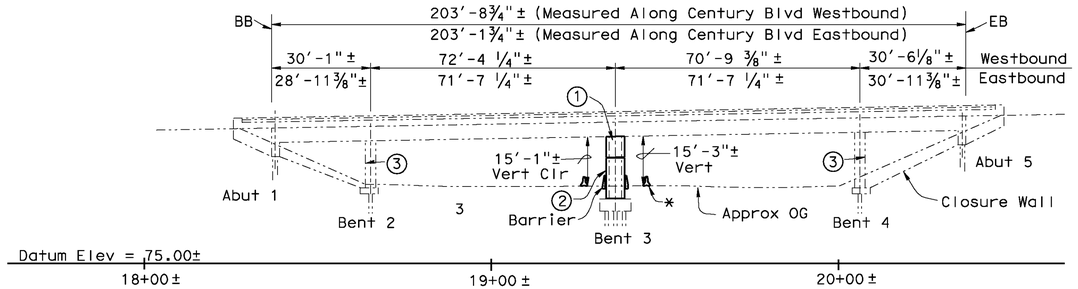

ELEVATION

1" = 20'

Bridge Mounted
Sign Not Shown
* For Temporary Railing, See "Road Plans"

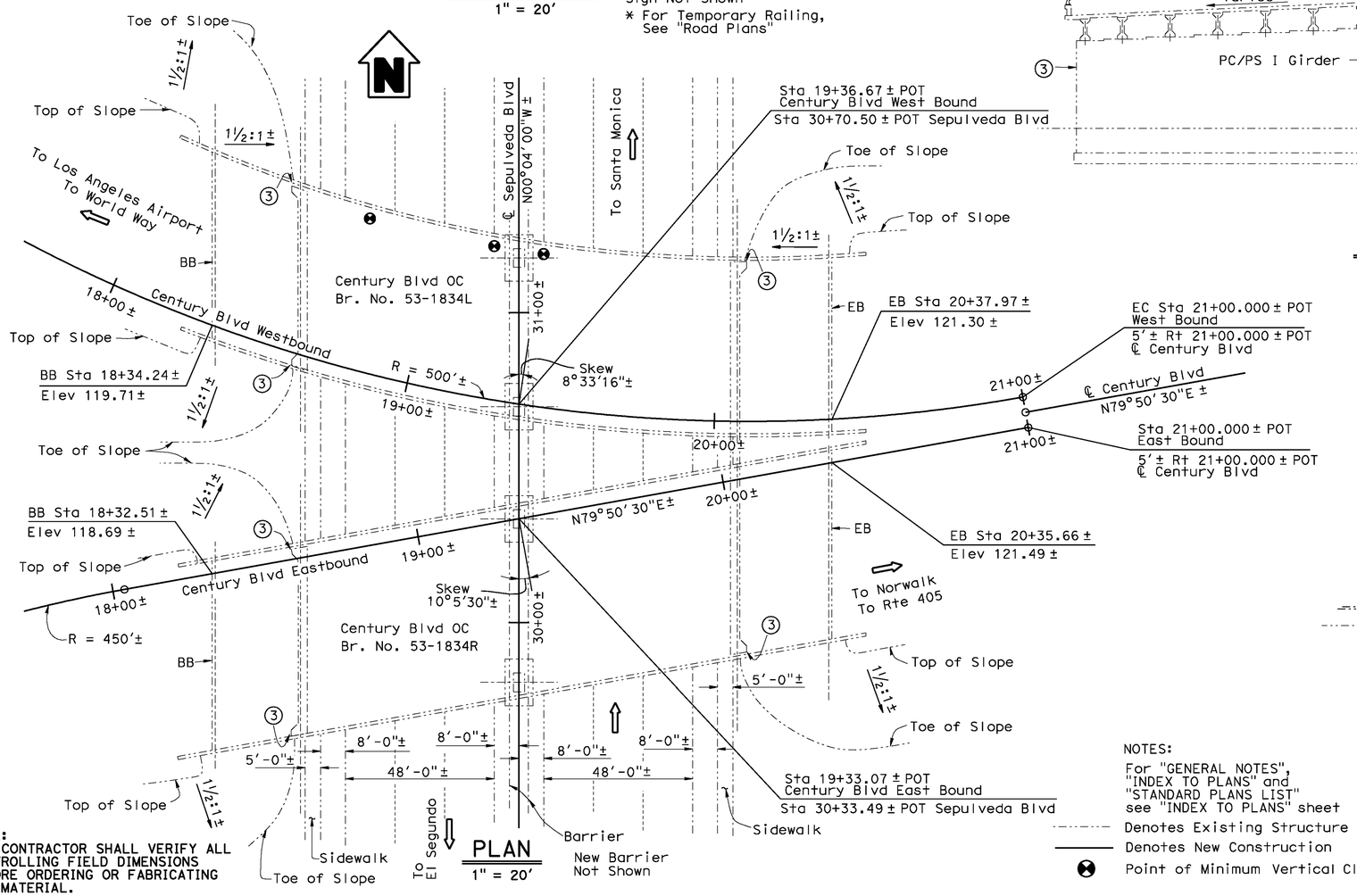

PLAN

1" = 20'

NOTE:
THE CONTRACTOR SHALL VERIFY ALL CONTROLLING FIELD DIMENSIONS BEFORE ORDERING OR FABRICATING ANY MATERIAL.

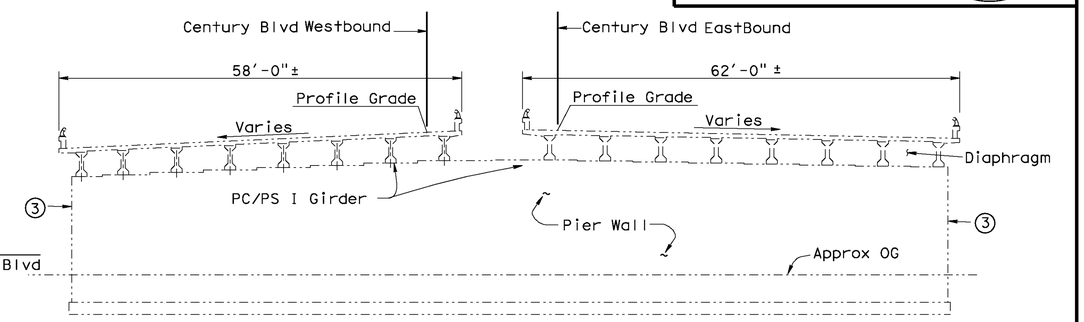

BENT 2 & 4

Piles Not Shown
Bent 4 Shown

TYPICAL SECTION

1"= 10'

LEGEND

1. Bent Cap Retrofit
2. Column Retrofit
3. Closure Wall Retrofit

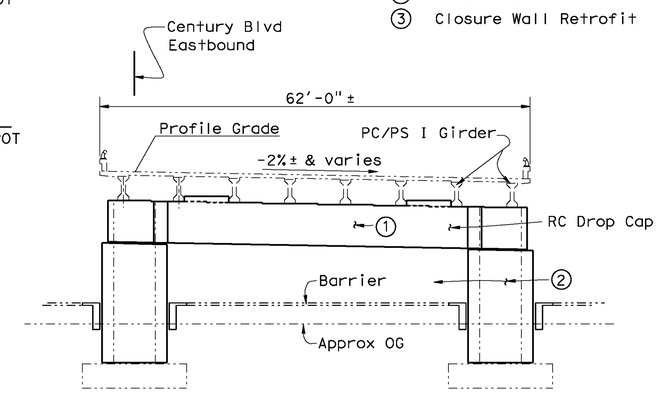

Piles Not Shown

EASTBOUND, RIGHT STRUCTURE BENT 3 ELEVATION

Westbound, Left Structure similiar

TYPICAL SECTION

1"= 10'

NOTES:
For "GENERAL NOTES", "INDEX TO PLANS" and "STANDARD PLANS LIST" see "INDEX TO PLANS" sheet

Denotes Existing Structure
Denotes New Construction
Point of Minimum Vertical Clearance

SEISMIC RETROFIT
CENTURY BOULEVARD OVERCROSSING
GENERAL PLAN

DESIGN	BY Mike Van De Pol	CHECKED John O'Brien	LOAD & RESISTANCE FACTOR DESIGN	LIVE LOADING:	
DETAILS	BY D. Elliot/Mike Van De Pol	CHECKED John O'Brien	LAYOUT	BY Mike Van De Pol	CHECKED John O'Brien
QUANTITIES	BY Mike Van De Pol	CHECKED John O'Brien	SPECIFICATIONS	BY Paul Altamura	PLANS AND SPECS COMPARED Paul Altamura

Gordon Danke
DESIGN ENGINEER

STATE OF CALIFORNIA
DEPARTMENT OF TRANSPORTATION

DIVISION OF ENGINEERING SERVICES
STRUCTURE DESIGN
DESIGN BRANCH 9

BRIDGE NO. 53-1834R/L
POST MILE 26.91

CU 07
EA 261101

ORIGINAL SCALE IN INCHES FOR REDUCED PLANS 0 1 2 3

DISREGARD PRINTS BEARING EARLIER REVISION DATES 12-5-06 08-27-09

REVISION DATES

SHEET 1 OF 12

STRUCTURES DESIGN GENERAL PLAN SHEET (ENGLISH) (REV.07-24-06)

FILE => 53-1834-a-gp01.dgn

USERNAME => hfairall DATE PLOTTED => 15-SEP-2010 TIME PLOTTED => 09:45

DIST	COUNTY	ROUTE	POST MILES TOTAL PROJECT	SHEET No	TOTAL SHEETS
07	LA	1	26.9	17	27

REGISTERED CIVIL ENGINEER 9-16-10 DATE

3-14-11
PLANS APPROVAL DATE

REGISTERED PROFESSIONAL ENGINEER M.Van De Pol No. C35610 Exp. 09-30-11 CIVIL STATE OF CALIFORNIA

The State of California or its officers or agents shall not be responsible for the accuracy or completeness of electronic copies of this plan sheet.

INDEX TO PLANS

Sheet No.	Description
1.	GENERAL PLAN
2.	INDEX TO PLANS
3.	BENT LAYOUT NO. 1
4.	BENT LAYOUT NO. 2
5.	BENT DETAILS NO. 1
6.	BENT DETAILS NO. 2
7.	BENT DETAILS NO. 3
8.	BENT DETAILS NO. 4
9.	BENT DETAILS NO. 5
10.	MEDIAN BARRIER DETAILS
11.	EXCAVATION AND BACKFILL DETAILS
12.	CLOSURE WALL DETAILS

GENERAL NOTES
LOAD AND RESISTANCE FACTOR DESIGN

DESIGN: AASHTO LRFD BRIDGE DESIGN SPECIFICATIONS, 3rd Edition with the 2005 Interims and Caltrans Amendments v3.06.01: except the caps are designed using Bridge Design Specifications (1996 AASHTO with Interims and Revisions by CALTRANS)

SEISMIC DESIGN: Caltrans Seismic Design Criteria (SDC), Version 1.4 June 2006

DEAD LOAD: Includes 50 psf For Future Wearing Surface and Barrier Type Change

SEISMIC LOADING: See Site Specific Acceleration Response Spectra Curve

REINFORCED CONCRETE: f_y = 60000 psi n = 9
f'_c = 5000 psi at 28 Days (Cap Bolster and Keys)
Density = 125 pcf Maximum (Cap Bolster and Keys)

STRUCTURAL STEEL: ASTM Designation A709, Grade 36
f_y = 36000 psi
f_u = 58000 psi

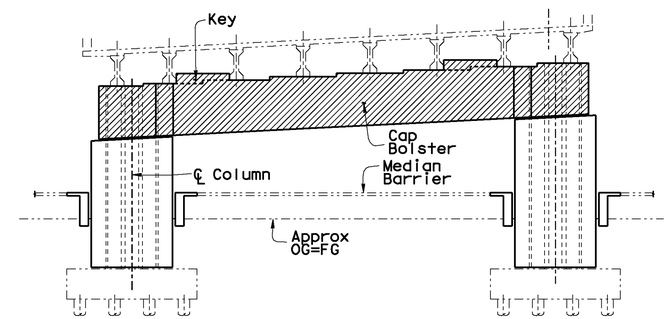

BENT

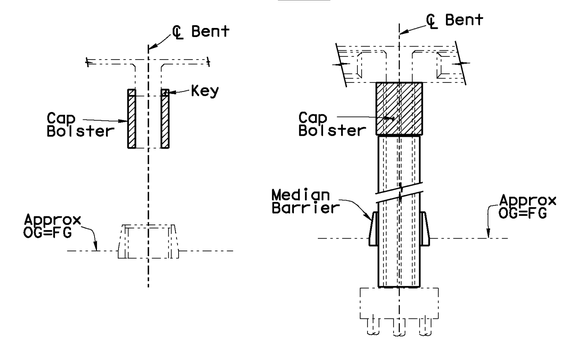

BETWEEN COLUMNS AT COLUMN

ELEVATIONS

CONCRETE STRENGTH AND TYPE LIMITS

Lightweight Concrete (5000 psi at 28 days)

STANDARD PLANS Dated May 2006

A10A	Acronyms and Abbreviations (A-L)
A10B	Acronyms and Abbreviations (M-Z)
A10C	Symbols (Sheet 1 of 2)
A10D	Symbols (Sheet 2 of 2)
A62B	Limits of Payment for Excavaton and Backfill Bridge
A76C	Concrete Barrier Type 60E
B0-1	Bridge Details
B0-13	Bridge Details

STANDARD PLAN SHEET NO.

DETAIL NO.

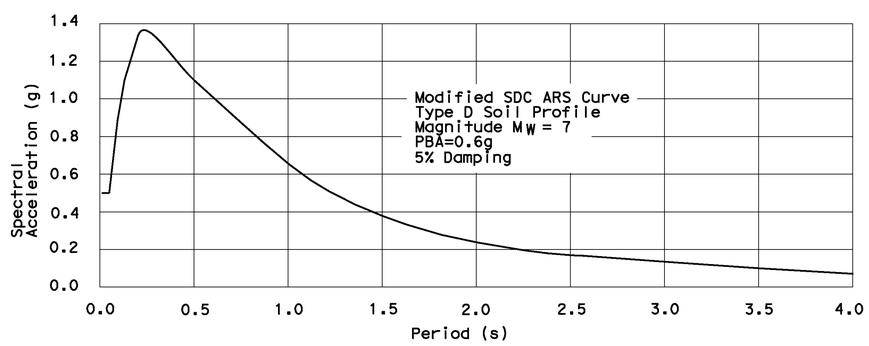

SITE SPECIFIC ACCELERATION RESPONSE SPECTRA CURVE

No Scale

	BY	CHECKED
DESIGN	M. Van De Pol	J. O'Brien
DETAILS	M. Van De Pol	J. O'Brien
QUANTITIES	M. Van De Pol	J. O'Brien

STATE OF CALIFORNIA DEPARTMENT OF TRANSPORTATION

DIVISION OF ENGINEERING SERVICES STRUCTURE DESIGN DESIGN BRANCH 9

BRIDGE NO. 53-1834R/L
POST MILE 26.89

SEISMIC RETROFIT
CENTURY BOULEVARD OVERCROSSING
INDEX TO PLANS

STRUCTURES DESIGN DETAIL SHEET (ENGLISH) (REV. 10/25/05)

ORIGINAL SCALE IN INCHES FOR REDUCED PLANS 0 1 2 3

CU 07
EA 261101

DISREGARD PRINTS BEARING EARLIER REVISION DATES

REVISION DATES 01/21/10

SHEET 2 OF 12

FILE => 53-1834-b-itp.dgn

USERNAME => hfairall DATE PLOTTED => 15-SEP-2010 TIME PLOTTED => 09:45

DIST	COUNTY	ROUTE	POST MILES TOTAL PROJECT	SHEET No	TOTAL SHEETS
07	LA	1	26.9	18	27

REGISTERED CIVIL ENGINEER 9-16-10 DATE

3-14-11
PLANS APPROVAL DATE

REGISTERED PROFESSIONAL ENGINEER M.Van De Pol No. C35610 Exp. 09-30-11 CIVIL STATE OF CALIFORNIA

The State of California or its officers or agents shall not be responsible for the accuracy or completeness of electronic copies of this plan sheet.

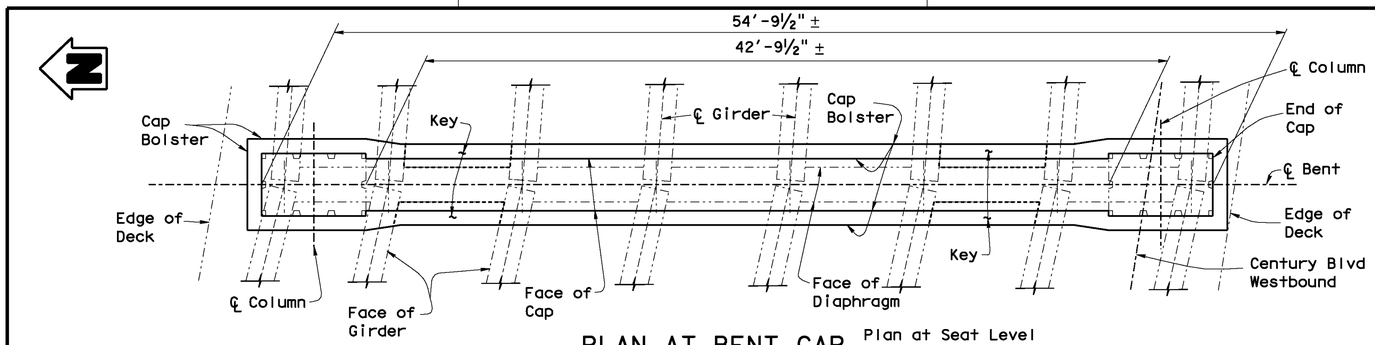

PLAN AT BENT CAP

Plan at Seat Level
Column Casings Not Shown

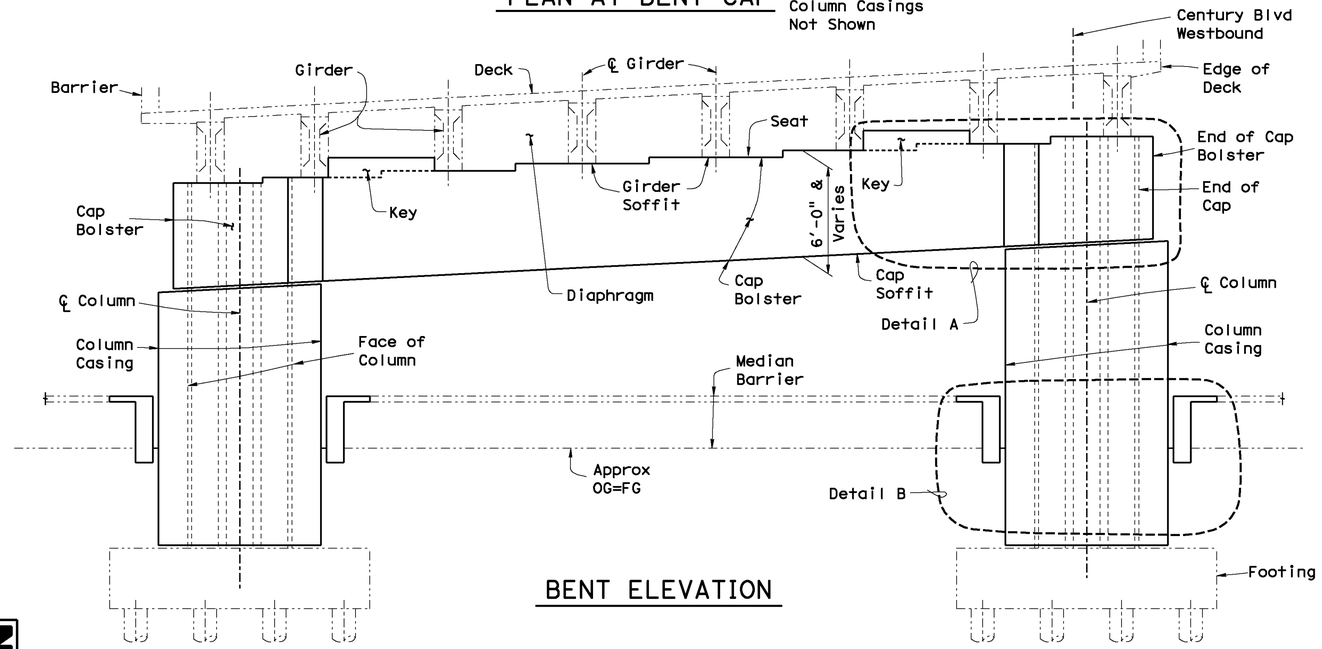

BENT ELEVATION

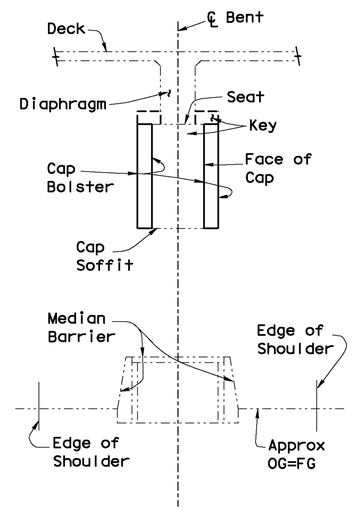

ELEVATION BETWEEN COLUMNS

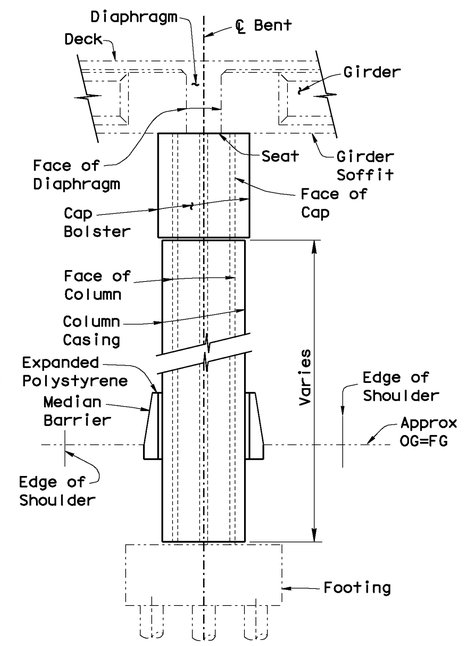

ELEVATION AT COLUMN

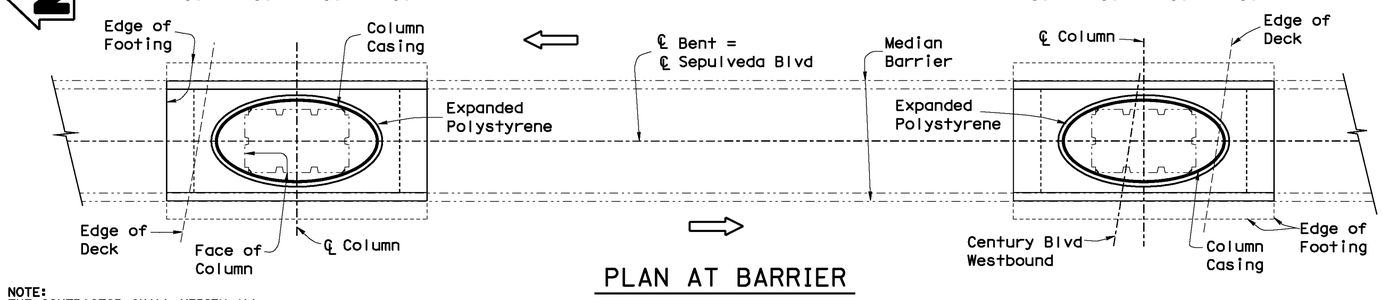

PLAN AT BARRIER

Median Barrier = Concrete Barrier Type 60E See "ROAD PLANS" A76C

Notes

For "Detail A" and "Detail B", See "Bent Details No. 1" Sheet

Denotes Existing Structure
Denotes New Construction

NOTE:
THE CONTRACTOR SHALL VERIFY ALL CONTROLLING FIELD DIMENSIONS BEFORE ORDERING OR FABRICATING ANY MATERIAL.

WESTBOUND - LEFT STRUCTURE DETAILS

¼" = 1'-0"

	BY	CHECKED
DESIGN	M. Van De Pol	J. O'Brien
DETAILS	M. Van De Pol	J. O'Brien
QUANTITIES	M. Van De Pol	J. O'Brien

STATE OF CALIFORNIA
DEPARTMENT OF TRANSPORTATION

DIVISION OF ENGINEERING SERVICES
STRUCTURE DESIGN
DESIGN BRANCH 9

BRIDGE NO. 53-1834R/L
POST MILE 26.89

SEISMIC RETROFIT
CENTURY BOULEVARD OVERCROSSING
BENT LAYOUT No. 1

STRUCTURES DESIGN DETAIL SHEET (ENGLISH) (REV. 10/25/05)

ORIGINAL SCALE IN INCHES FOR REDUCED PLANS 0 1 2 3

CU 07
EA 261101

DISREGARD PRINTS BEARING EARLIER REVISION DATES 01/21/10

REVISION DATES

SHEET 3 OF 12

FILE => 53-1834-h_bntlo1.dgn

USERNAME => tfairall DATE PLOTTED => 15-SEP-2010 TIME PLOTTED => 09:46

DIST	COUNTY	ROUTE	POST MILES TOTAL PROJECT	SHEET No	TOTAL SHEETS
07	LA	1	26.9	19	27

REGISTERED CIVIL ENGINEER 9-16-10 DATE

3-14-11
PLANS APPROVAL DATE

REGISTERED PROFESSIONAL ENGINEER M.Van De Pol No. C35610 Exp. 09-30-11 CIVIL STATE OF CALIFORNIA

The State of California or its officers or agents shall not be responsible for the accuracy or completeness of electronic copies of this plan sheet.

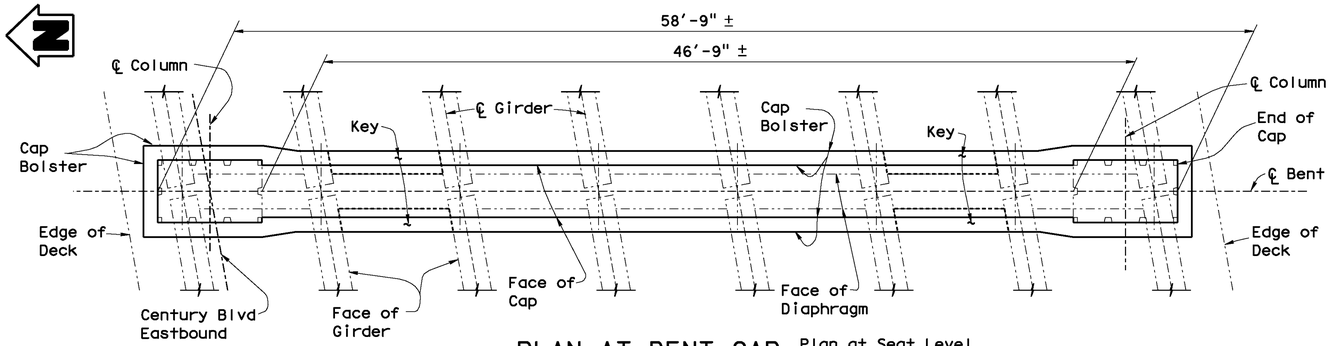

PLAN AT BENT CAP

Plan at Seat Level
Column Casings
Not Shown

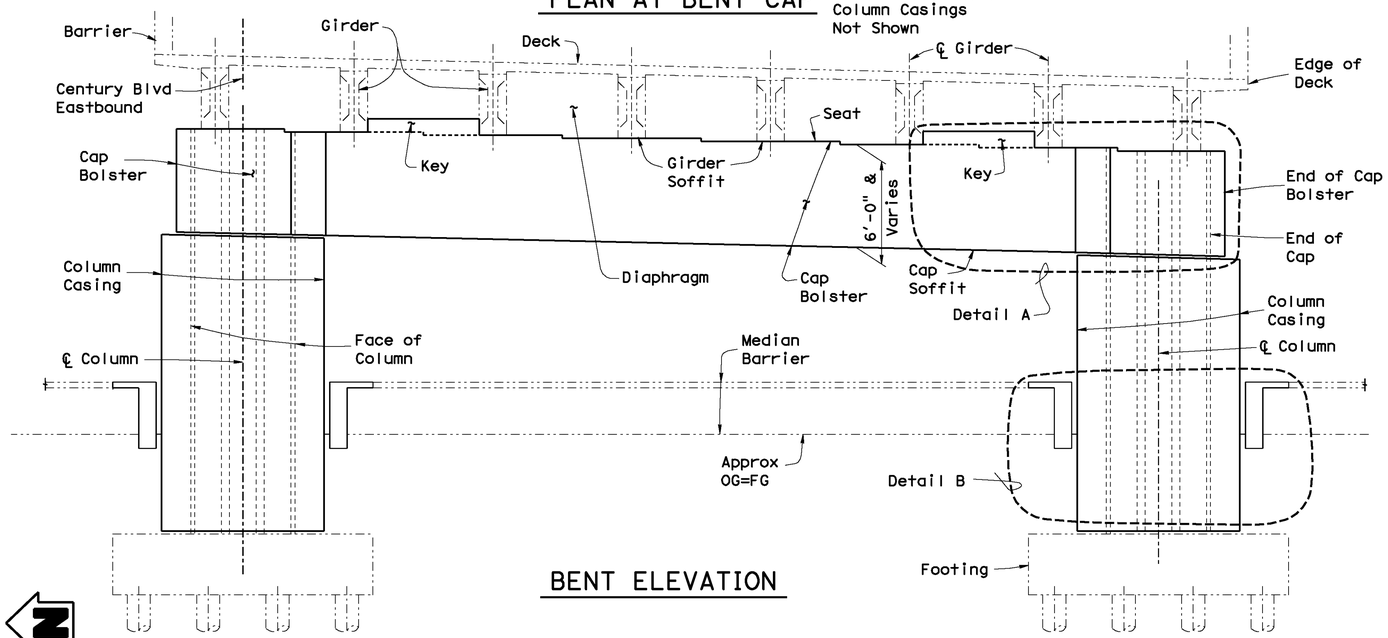

BENT ELEVATION

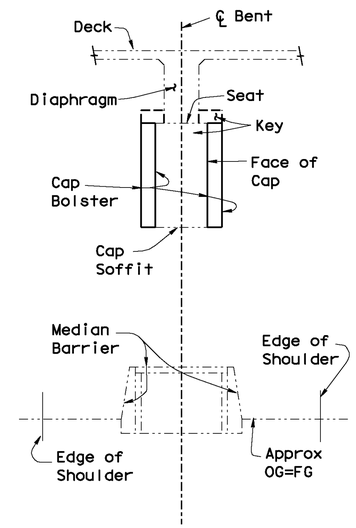

ELEVATION BETWEEN COLUMNS

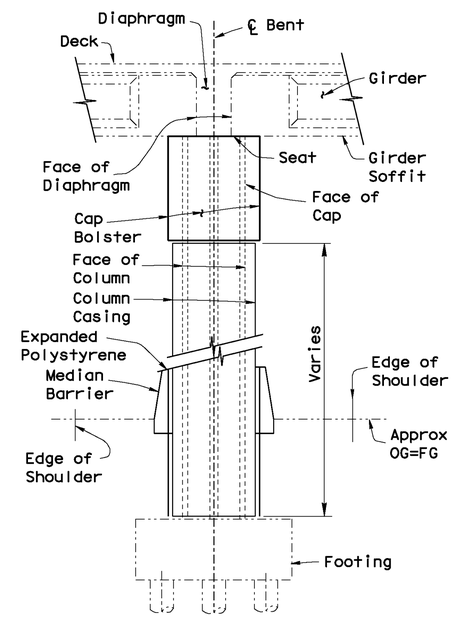

ELEVATION AT COLUMN

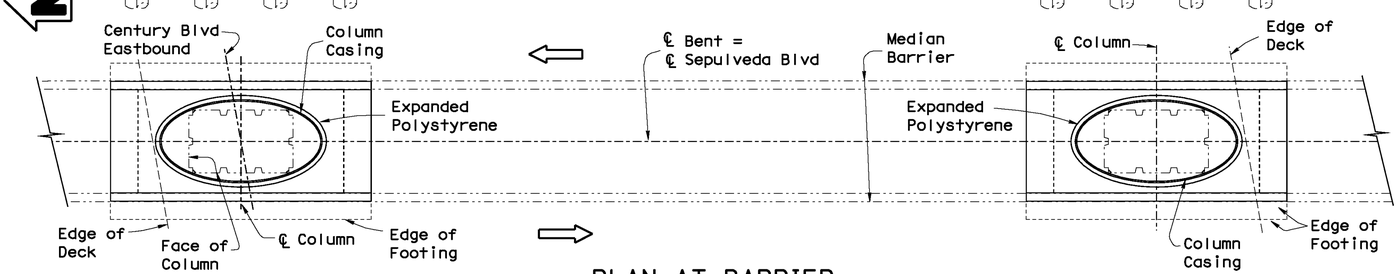

PLAN AT BARRIER

Median Barrier =
Concrete Barrier
Type 60E
See "ROAD PLANS"
A76C

Notes

For "Detail A"and "Detail B",
See "Bent Details No. 1" Sheet

Denotes Existing Structure
Denotes New Construction

NOTE:
THE CONTRACTOR SHALL VERIFY ALL CONTROLLING FIELD DIMENSIONS BEFORE ORDERING OR FABRICATING ANY MATERIAL.

EASTBOUND - RIGHT STRUCTURE DETAILS

1/4" = 1'-0"

	BY	CHECKED
DESIGN	M. Van De Pol	J. O'Brien
DETAILS	M. Van De Pol	J. O'Brien
QUANTITIES	M. Van De Pol	J. O'Brien

STATE OF CALIFORNIA
DEPARTMENT OF TRANSPORTATION

DIVISION OF ENGINEERING SERVICES
STRUCTURE DESIGN
DESIGN BRANCH 9

BRIDGE NO. 53-1834R/L
POST MILE 26.89

SEISMIC RETROFIT
CENTURY BOULEVARD OVERCROSSING
BENT LAYOUT No. 2

STRUCTURES DESIGN DETAIL SHEET (ENGLISH) (REV. 10/25/05)

ORIGINAL SCALE IN INCHES FOR REDUCED PLANS 0 1 2 3

CU 07
EA 261101

DISREGARD PRINTS BEARING EARLIER REVISION DATES

REVISION DATES: 01/21/10

SHEET 4 OF 12

FILE => 53-1834-h_bnt1o2.dgn

USERNAME => tfoirall DATE PLOTTED => 15-SEP-2010 TIME PLOTTED => 09:46

DIST	COUNTY	ROUTE	POST MILES TOTAL PROJECT	SHEET No	TOTAL SHEETS
07	LA	1	26.9	20	27

REGISTERED CIVIL ENGINEER 9-16-10 DATE

3-14-11
PLANS APPROVAL DATE

REGISTERED PROFESSIONAL ENGINEER M.Van De Pol No. C35610 Exp. 09-30-11 CIVIL STATE OF CALIFORNIA

The State of California or its officers or agents shall not be responsible for the accuracy or completeness of electronic copies of this plan sheet.

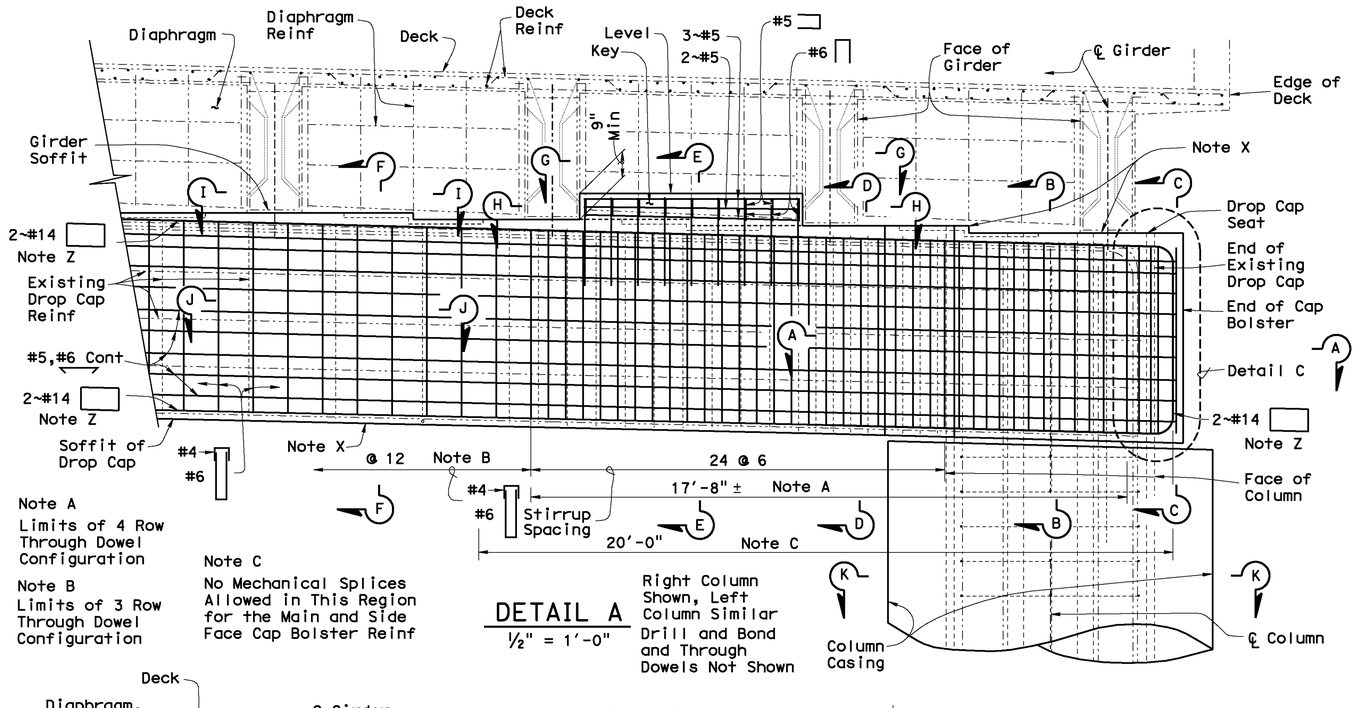

DETAIL A

½" = 1'-0"

Coring Notes

No More Than 15 Adjacent Open Cored Holes are Allowed in the Bent Cap Before the Through Bars Have to be Placed and Grout is Pressure Injected, as Approved by the Engineer.

Care Shall be Taken in Coring the Holes for the Through Bars, to Avoid Cutting Through Any Existing Bent Cap Reinforcement. The Engineer Shall be Notified if Existing Reinforcement is Cut or Damaged During Coring Operations.

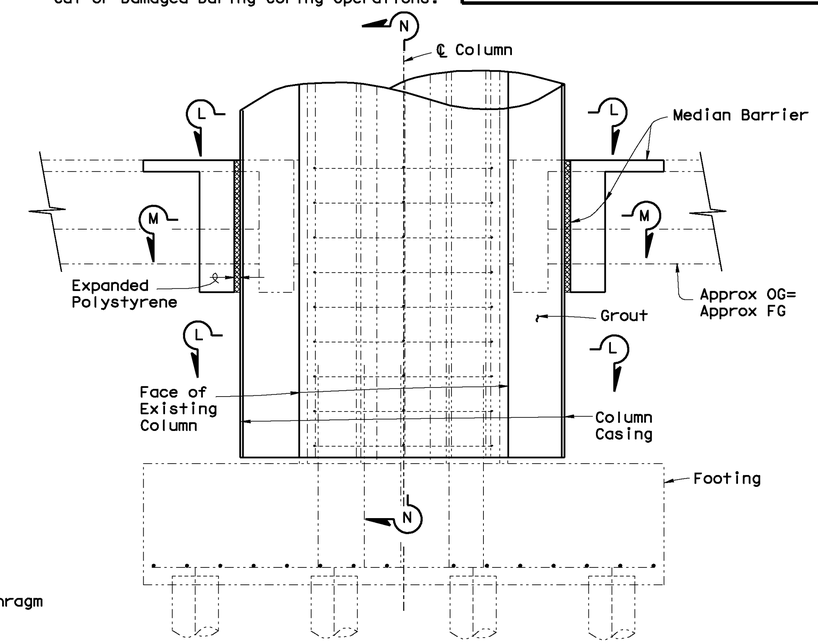

DETAIL B

½" = 1'-0"

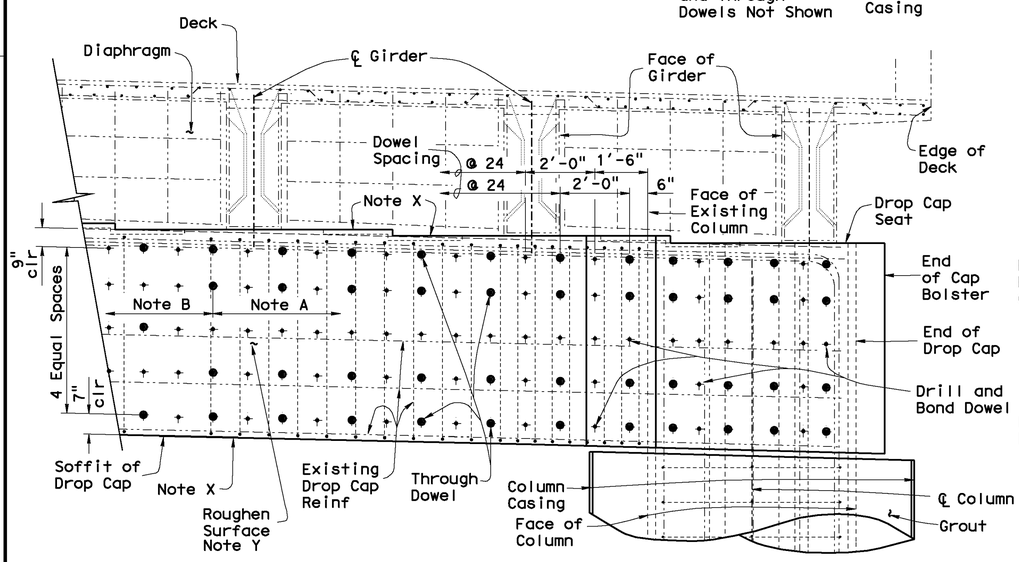

SIDE OF DROP CAP

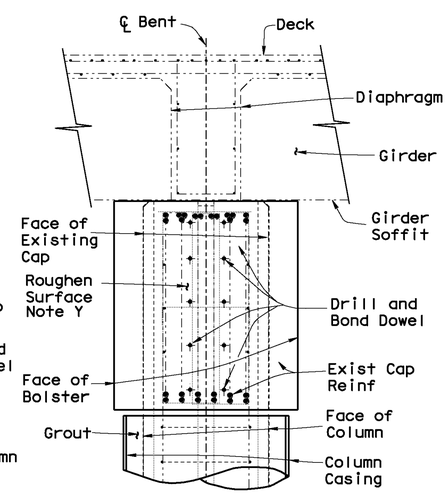

END OF DROP CAP

Note X
Top and Bottom Surfaces of Cap Bolster Match Corresponding Existing Cap Surfaces

Note Y
Roughen Surface to ¼" Minimum Amplitude

Note Z
For Other Details, see "Bent Details No. 3" Sheet

Bond #6 ⟵ Through Dowels in 1½" dia Cored Hole. Field Bend on One End. Dowels Pressure Grouted in Cored Holes

NOTES

For Locations of "Detail A" and "Detail B", see "Bent Layout No. 1" and "Bent Layout No. 2" Sheets

For "Detail C", see "Bent Details No. 3" Sheet

Details for Left (Westbound) Bridge Shown, Details for Right (Eastbound) Bridge Similar

For Casing Details, see "Bent Details No. 5" Sheet

For Barrier Details, see "Median Barrier Details" Sheet

For "Section A-A" Through "Section F-F", see "Bent Details No. 2" Sheet

For "Section G-G" Through "Section J-J", see "Bent Details No. 3" Sheet

For "Section K-K" Through "Section N-N", see "Bent Details No. 4" Sheet

-·-·-·-·- Denotes Existing Structure
——— Denotes New Construction

NOTE:
THE CONTRACTOR SHALL VERIFY ALL CONTROLLING FIELD DIMENSIONS BEFORE ORDERING OR FABRICATING ANY MATERIAL.

For Added Dowel Spacing Details, see "Section A-A" on "Bent Details No. 2" Sheet

DOWEL LAYOUTS

½" = 1'-0"

Bolster Reinf Not Shown

● Denotes #6 ⟵ Through Dowel
+ Denotes Drill and Bond Dowel, #5 ⟵

DESIGN	BY M. Van De Pol	CHECKED J. O'Brien	
DETAILS	BY M. Van De Pol	CHECKED J. O'Brien	
QUANTITIES	BY M. Van De Pol	CHECKED J. O'Brien	

STATE OF CALIFORNIA
DEPARTMENT OF TRANSPORTATION

DIVISION OF ENGINEERING SERVICES
STRUCTURE DESIGN
DESIGN BRANCH 9

BRIDGE NO. 53-1834R/L
POST MILE 26.89

SEISMIC RETROFIT
CENTURY BOULEVARD OVERCROSSING
BENT DETAILS No. 1

STRUCTURES DESIGN DETAIL SHEET (ENGLISH) (REV. 10/25/05)

ORIGINAL SCALE IN INCHES FOR REDUCED PLANS 0 1 2 3

CU 07
EA 261101

DISREGARD PRINTS BEARING EARLIER REVISION DATES 01/21/10

REVISION DATES

SHEET 5 OF 12

FILE => 53-1834-h-bntdets-01.dgn

USERNAME => tfairall DATE PLOTTED => 13-SEP-2010 TIME PLOTTED => 09:46

DIST	COUNTY	ROUTE	POST MILES TOTAL PROJECT	SHEET No	TOTAL SHEETS
07	LA	1	26.9	21	27

REGISTERED CIVIL ENGINEER 9-16-10 DATE

3-14-11
PLANS APPROVAL DATE

REGISTERED PROFESSIONAL ENGINEER M.Van De Pol No. C35610 Exp. 09-30-11 CIVIL STATE OF CALIFORNIA

The State of California or its officers or agents shall not be responsible for the accuracy or completeness of electronic copies of this plan sheet.

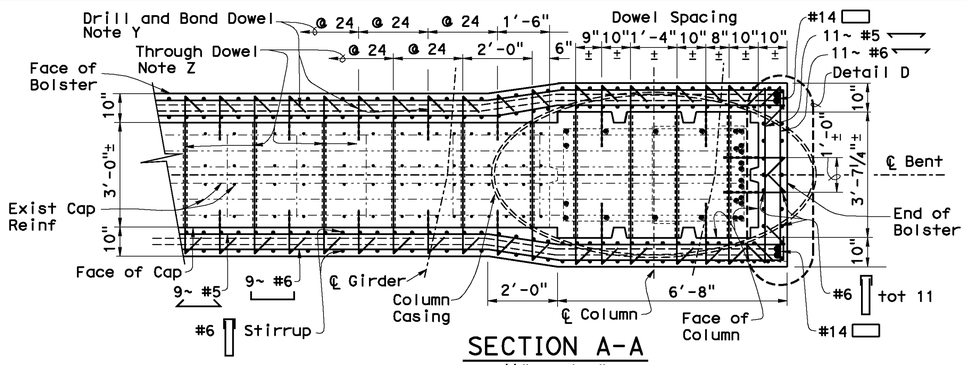

SECTION A-A
½" = 1'-0"

No Lap Splices Allowed in Cap Bolster Longitudinal Reinforcement.
"Ultimate" Mechanical Splices Shall be Used

For Coring Notes, see "Bent Details No. 1" Sheet

NOTES

For Locations of "Section A-A" Through "Section F-F", see "Bent Details No. 1" Sheet

For Key Locations, see "Bent Layout No. 1" and "Bent Layout No. 2" Sheets

For Added Dowel Spacing Details, see "Bent Details No. 1" and "Bent Details No. 3" Sheets

For "Detail D", see "Bent Details No. 3" Sheet

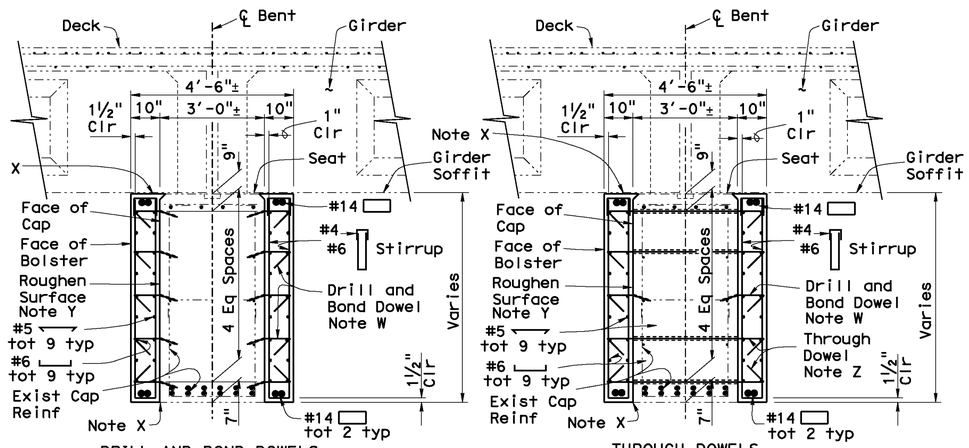

SECTION D-D
½" = 1'-0"

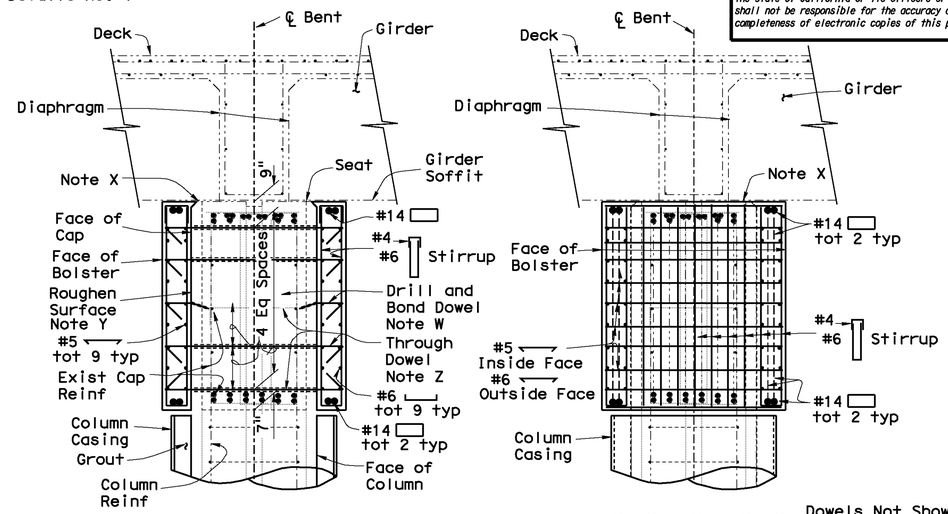

SECTION B-B
½" = 1'-0"

SECTION C-C
½" = 1'-0"

Dowels Not Shown
See "Detail D", on "Bent Details No. 3" Sheet

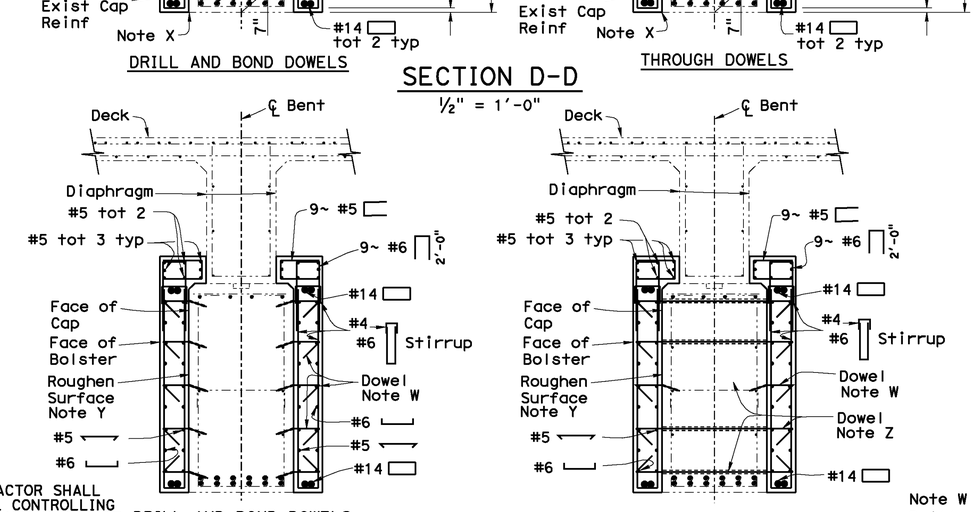

SECTION E-E
½" = 1'-0"

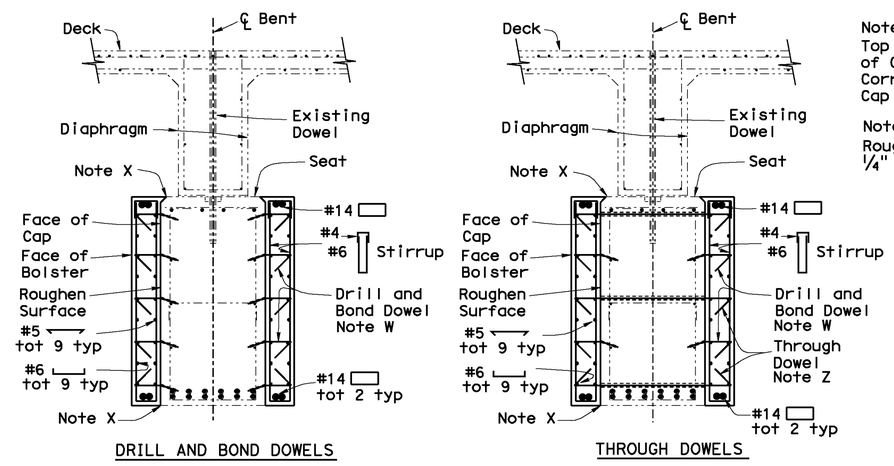

Note X
Top and Bottom Surfaces of Cap Bolster Match Corresponding Existing Cap Surfaces

Note Y
Roughen Surface to ¼" Minimum Amplitude

SECTION F-F
½" = 1'-0"

NOTE:
THE CONTRACTOR SHALL VERIFY ALL CONTROLLING FIELD DIMENSIONS BEFORE ORDERING OR FABRICATING ANY MATERIAL.

Note W
Drill and Bond #5 Dowels in 6" Deep Hole. 1:3 Slope

Note Z
Bond #6 Through Dowels in 1½" dia Cored Hole. Field Bend on One End. Dowels Pressure Grouted in Cored Holes

Denotes Existing Structure
Denotes New Construction

	BY	CHECKED
DESIGN	M. Van De Pol	J. O'Brien
DETAILS	M. Van De Pol	J. O'Brien
QUANTITIES	M. Van De Pol	J. O'Brien

STATE OF CALIFORNIA
DEPARTMENT OF TRANSPORTATION

DIVISION OF ENGINEERING SERVICES
STRUCTURE DESIGN
DESIGN BRANCH 9

BRIDGE NO. 53-1834R/L
POST MILE 26.89

SEISMIC RETROFIT
CENTURY BOULEVARD OVERCROSSING
BENT DETAILS No. 2

STRUCTURES DESIGN DETAIL SHEET (ENGLISH) (REV. 10/25/05)

ORIGINAL SCALE IN INCHES FOR REDUCED PLANS 0 1 2 3

CU 07
EA 261101

DISREGARD PRINTS BEARING EARLIER REVISION DATES

REVISION DATES: 01/21/10

SHEET 6 OF 12

FILE => 53-1834-h-bntdets-02.dgn

USERNAME => tfairoll | DATE PLOTTED => 15-SEP-2010 | TIME PLOTTED => 09:46

DIST	COUNTY	ROUTE	POST MILES TOTAL PROJECT	SHEET No	TOTAL SHEETS
07	LA	1	26.9	22	27

REGISTERED CIVIL ENGINEER 9-16-10 DATE

3-14-11
PLANS APPROVAL DATE

REGISTERED PROFESSIONAL ENGINEER M.Van De Pol No. C35610 Exp. 09-30-11 CIVIL STATE OF CALIFORNIA

The State of California or its officers or agents shall not be responsible for the accuracy or completeness of electronic copies of this plan sheet.

NOTE:
THE CONTRACTOR SHALL VERIFY ALL CONTROLLING FIELD DIMENSIONS BEFORE ORDERING OR FABRICATING ANY MATERIAL.

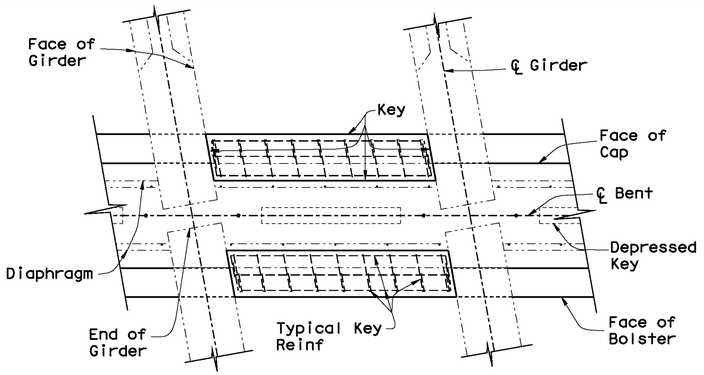

SECTION G-G
½" = 1'-0"

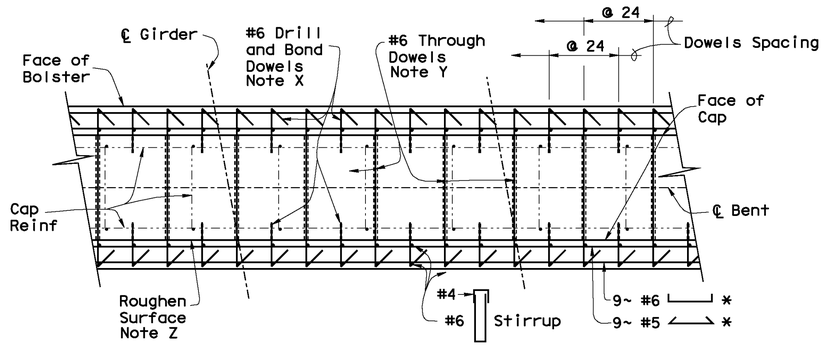

SECTION J-J
½" = 1'-0"

For Added Details, see Section D-D and Section F-F on "Bent Details No. 2" Sheet

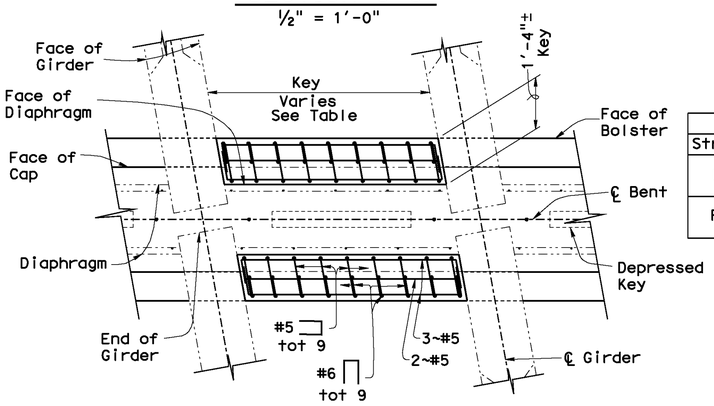

KEY TABLE		
Structure	Location	Length
Left	Left	6'-1¼"±
	Right	6'-1¼"±
Right	Left	6'-4¾"±
	Right	6'-4¾"±

For Key Locations, see "Bent Layout No. 1" and "Bent Layout No. 2" Sheets

SECTION H-H
½" = 1'-0"

For Added Details, see Section E-E on "Bent Details No. 2" Sheet

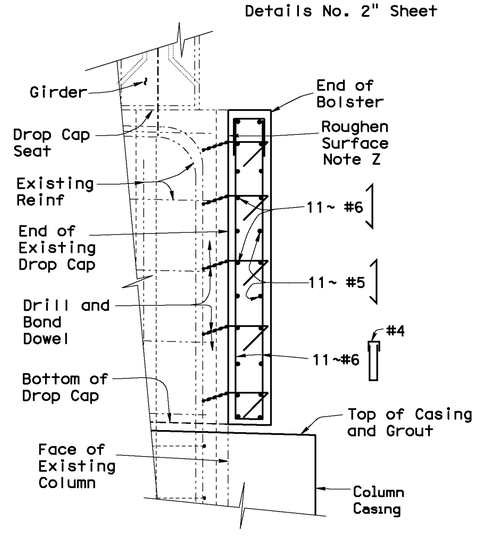

DETAIL C
¾" = 1'-0"

Through Dowels Not Shown

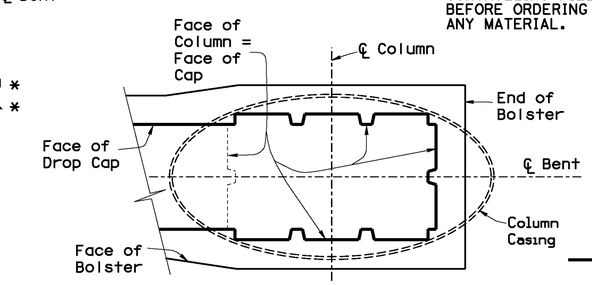

Denotes Limits of Surface Roughening
¼" Minimum Amplitude

SURFACE ROUGHENING DETAIL
¼" = 1'-0"

Detail Shown at End of Drop Cap

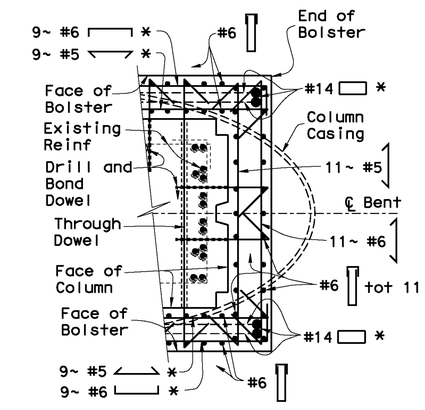

DETAIL D
¾" = 1'-0"

* No Lap Splices Allowed in Bolster Reinforcement. For Allowable Mechanical Splice Locations, see Detail on "Bent Details No. 1" Sheet

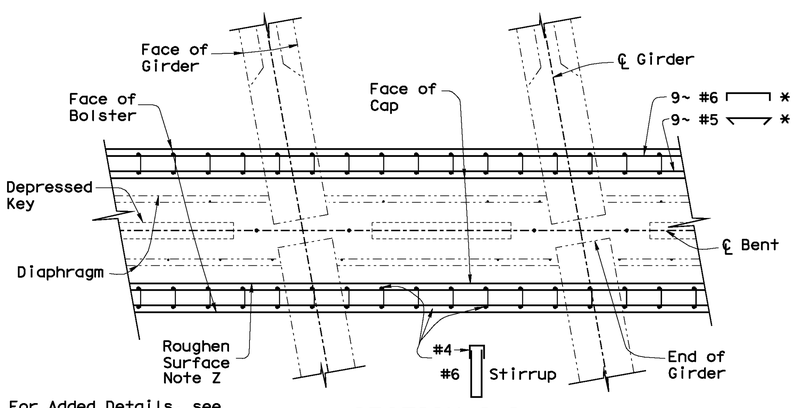

For Added Details, see Section D-D and Section F-F on "Bent Details No. 2" Sheet

SECTION I-I
½" = 1'-0"

Dowels Not Shown

Note X
Drill and Bond #5 Dowels in 6" Deep Hole. 1:3 Slope

Note Y
Bond #6 Through Dowels in 1½" dia Cored Hole. Field Bend Dowels Pressure Grouted in Cored Holes

Note Z
Roughen Surface to ¼" Minimum Amplitude

NOTES

For Locations of "Section G-G" Through "Section J-J" and "Detail C", see "Bent Details No. 1" Sheet

For Location of "Detail D", see "Bent Details No. 2" Sheet

For Added Dowel Spacing Details, see "Section A-A" on "Bent Details No. 2" and "Detail A" on "Bent Details No. 1" Sheet

Denotes Existing Structure
Denotes New Construction

	BY	CHECKED
DESIGN	M. Van De Pol	J. O'Brien
DETAILS	M. Van De Pol	J. O'Brien
QUANTITIES	M. Van De Pol	J. O'Brien

STATE OF CALIFORNIA
DEPARTMENT OF TRANSPORTATION

DIVISION OF ENGINEERING SERVICES
STRUCTURE DESIGN
DESIGN BRANCH 9

BRIDGE NO. 53-1834R/L
POST MILE 26.89

SEISMIC RETROFIT
CENTURY BOULEVARD OVERCROSSING
BENT DETAILS No. 3

STRUCTURES DESIGN DETAIL SHEET (ENGLISH) (REV. 10/25/05)

ORIGINAL SCALE IN INCHES FOR REDUCED PLANS 0 1 2 3

CU 07
EA 261101

DISREGARD PRINTS BEARING EARLIER REVISION DATES 01/21/10

REVISION DATES

SHEET 7 OF 12

FILE => 53-1834-h-bntdets-03.dgn

USERNAME => tfairall DATE PLOTTED => 15-SEP-2010 TIME PLOTTED => 09:47

DIST	COUNTY	ROUTE	POST MILES TOTAL PROJECT	SHEET No	TOTAL SHEETS
07	LA	1	26.9	23	27

REGISTERED CIVIL ENGINEER 9-16-10 DATE

3-14-11
PLANS APPROVAL DATE

REGISTERED PROFESSIONAL ENGINEER M.Van De Pol No. C35610 Exp. 09-30-11 CIVIL STATE OF CALIFORNIA

The State of California or its officers or agents shall not be responsible for the accuracy or completeness of electronic copies of this plan sheet.

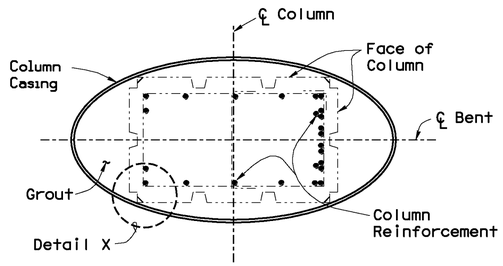

SECTION K-K
½" = 1'-0"

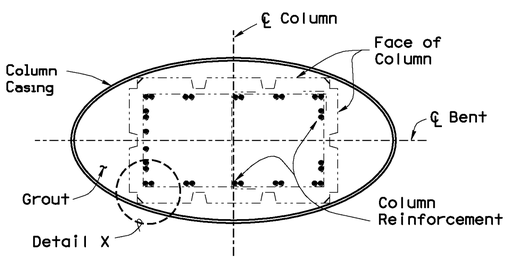

SECTION L-L
½" = 1'-0"

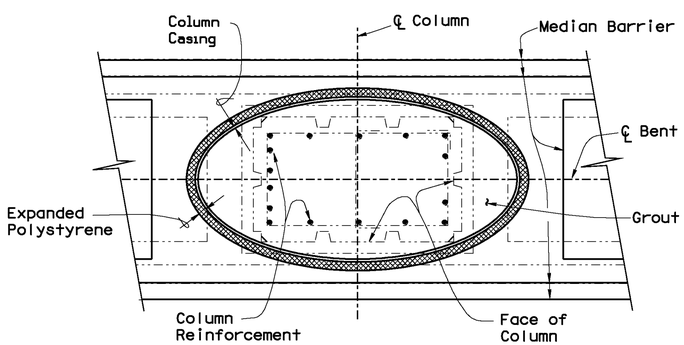

SECTION M-M
½" = 1'-0"

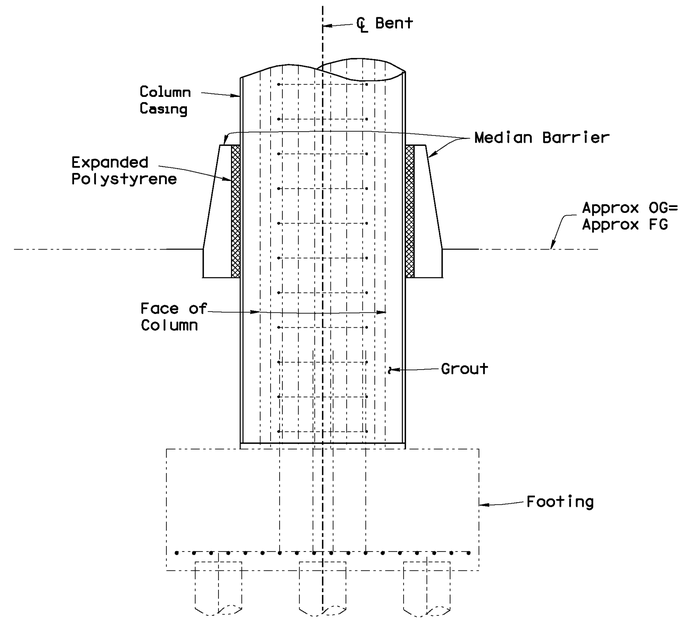

SECTION N-N
½" = 1'-0"

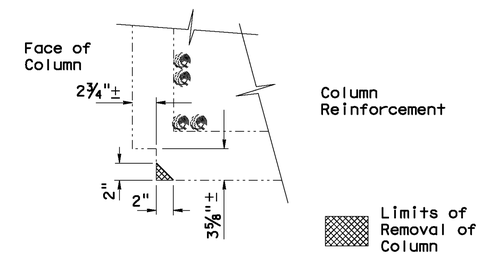

DETAIL X
1½" = 1'-0"

Steel Shell
Thickness = 1"

NOTES

For Locations of "Section K-K" Through "Section N-N", see "Bent Details No. 1" Sheet

Details for Left (Westbound) Bridge Shown, Details for Right (Eastbound) Bridge Similar

For Added Casing Details, see "Bent Details No. 5" Sheet

For Added Barrier Details, see "Median Barrier Details" Sheet

For Added Details, see "Excavation and Backfill Details" Sheet

Denotes Existing Structure

Denotes New Construction

NOTE:
THE CONTRACTOR SHALL VERIFY ALL CONTROLLING FIELD DIMENSIONS BEFORE ORDERING OR FABRICATING ANY MATERIAL.

	BY	CHECKED
DESIGN	M. Van De Pol	J. O'Brien
DETAILS	M. Van De Pol	J. O'Brien
QUANTITIES	M. Van De Pol	J. O'Brien

STATE OF CALIFORNIA
DEPARTMENT OF TRANSPORTATION

DIVISION OF ENGINEERING SERVICES
STRUCTURE DESIGN
DESIGN BRANCH 9

BRIDGE NO. 53-1834R/L
POST MILE 26.89

SEISMIC RETROFIT
CENTURY BOULEVARD OVERCROSSING
BENT DETAILS No. 4

STRUCTURES DESIGN DETAIL SHEET (ENGLISH) (REV. 10/25/05)

ORIGINAL SCALE IN INCHES FOR REDUCED PLANS 0 1 2 3

CU 07
EA 261101

DISREGARD PRINTS BEARING EARLIER REVISION DATES

REVISION DATES: 01/21/10

SHEET 8 OF 12

FILE => 53-1834-h-bntdets-04.dgn

USERNAME => tfoirail DATE PLOTTED => 15-SEP-2010 TIME PLOTTED => 09:47

DIST	COUNTY	ROUTE	POST MILES TOTAL PROJECT	SHEET No	TOTAL SHEETS
07	LA	1	26.9	24	27

REGISTERED CIVIL ENGINEER 9-16-10 DATE

3-14-11
PLANS APPROVAL DATE

REGISTERED PROFESSIONAL ENGINEER M.Van De Pol No. C35610 Exp. 09-30-11 CIVIL STATE OF CALIFORNIA

The State of California or its officers or agents shall not be responsible for the accuracy or completeness of electronic copies of this plan sheet.

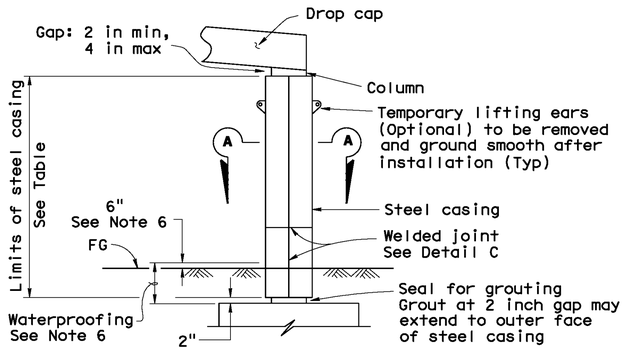

COLUMN ELEVATION

No Scale

Median barrier not shown
Girders not shown

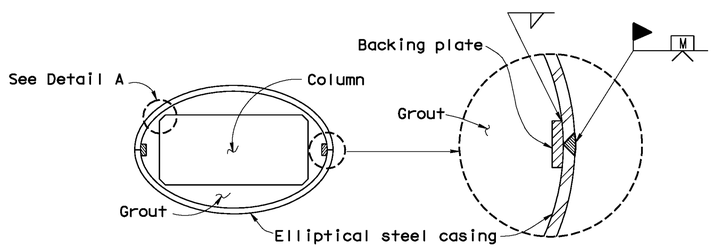

SECTION A-A

No Scale

For added details, see "Bent Details No. 1" sheet

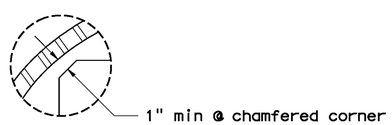

DETAIL A

No Scale

See "Detail X" on "Bent Details No. 4" Sheet

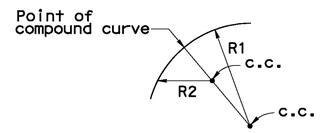

ELLIPTICAL CASING DETAIL

No Scale

Radii R1 and R2 to be determined by the Contractor subject to the approval of the Engineer

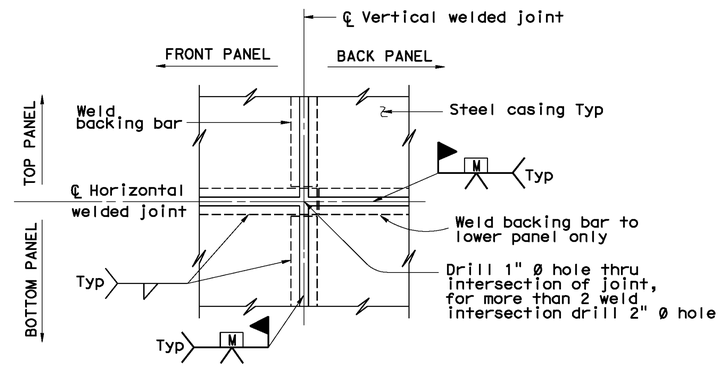

(TWO WELDED INTERSECTION JOINT)

DETAIL C

No Scale

CASING TABLE		
Structure	Column	Casing Length
Left	Left	14'-9½"±
	Right	17'-3⅜"±
Right	Left	16'-11⅞"±
	Right	15'-9¼"±

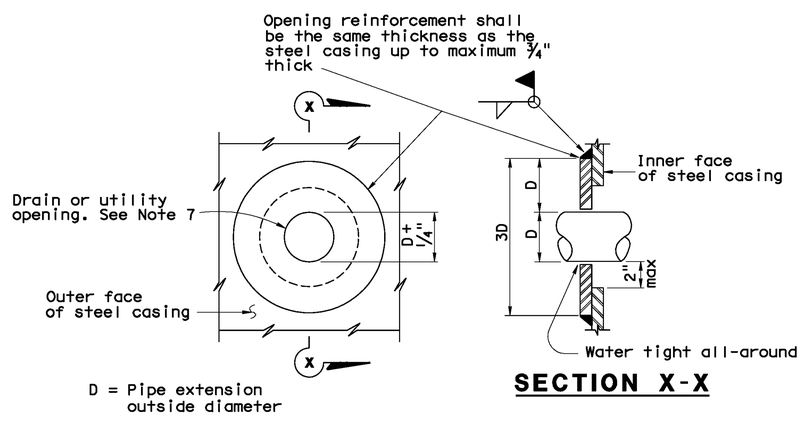

SECTION X-X

CASING OPENING

No Scale

Note: Opening reinforcement required for drain or utility openings larger than 4 in.

NOTES:

1) For varying thickness steel casing inside surface to remain flush. Minimum clearance from PCC column to casing shall be maintained.
2) Appropriate injection nozzles to be provided on casing, but removed and ground flush following completion of grouting operation.
3) All voids between steel casing and PCC column to be filled with grout.
4) Location and number of vertical and horizontal welds to be determined by the Contractor, and subject to the approval of the Engineer. The location of casing welds are for illustration. No skip welds allowed.
5) Backing plates to be the same thickness as casing up to maximum ½" thick.
6) Waterproof limits for steel casings.
7) For pipe extensions, opening shall be no more than ¼" greater than the pipe extension diameter. For other openings, the opening diameter to be determined by the Engineer.
8) For barrier details, see "Median Barrier Details" sheet
9) For other details, see "Bent Layout" and other Bent Details" sheets

	BY	CHECKED
DESIGN	M. Van De Pol	J. O'Brien
DETAILS	M. Van De Pol	J. O'Brien
QUANTITIES	M. Van De Pol	J. O'Brien

STATE OF CALIFORNIA
DEPARTMENT OF TRANSPORTATION

DIVISION OF ENGINEERING SERVICES
STRUCTURE DESIGN
DESIGN BRANCH 9

BRIDGE NO. 53-1834R/L
POST MILE 26.89

SEISMIC RETROFIT
CENTURY BOULEVARD OVERCROSSING
BENT DETAILS No. 5

STRUCTURES DESIGN DETAIL SHEET (ENGLISH) (REV. 10/25/05)

ORIGINAL SCALE IN INCHES FOR REDUCED PLANS 0 1 2 3

CU 07
EA 261101

DISREGARD PRINTS BEARING EARLIER REVISION DATES 01/21/10

REVISION DATES

SHEET 9 OF 12

FILE => 53-1834-h-bntdets-05.dgn

USERNAME => tfairall DATE PLOTTED => 15-SEP-2010 TIME PLOTTED => 09:47

DIST	COUNTY	ROUTE	POST MILES TOTAL PROJECT	SHEET No	TOTAL SHEETS
07	LA	1	26.9	25	27

REGISTERED CIVIL ENGINEER 9-16-10 DATE

3-14-11
PLANS APPROVAL DATE

REGISTERED PROFESSIONAL ENGINEER M.Van De Pol No. C35610 Exp. 09-30-11 CIVIL STATE OF CALIFORNIA

The State of California or its officers or agents shall not be responsible for the accuracy or completeness of electronic copies of this plan sheet.

For Additional Details and Notes, See "Excavation and Backfill Details" Sheet

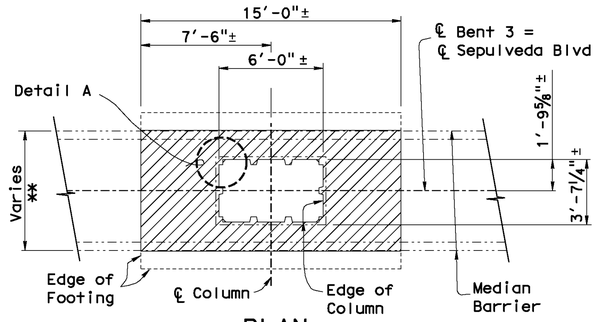

PLAN
¼" = 1'-0"

** 6'-10½"± - 6'-11⅝"±

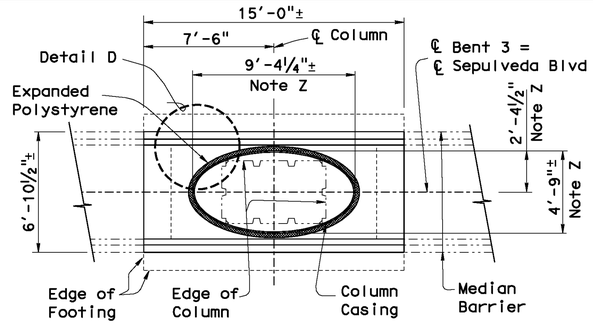

PLAN
¼" = 1'-0"

Note Z
Dimensions Shown Correspond to Elliptical Steel Casing. Actual Casing Dimensions May Vary. Casing Radii Determined by the Contractor as Approved by the Engineer

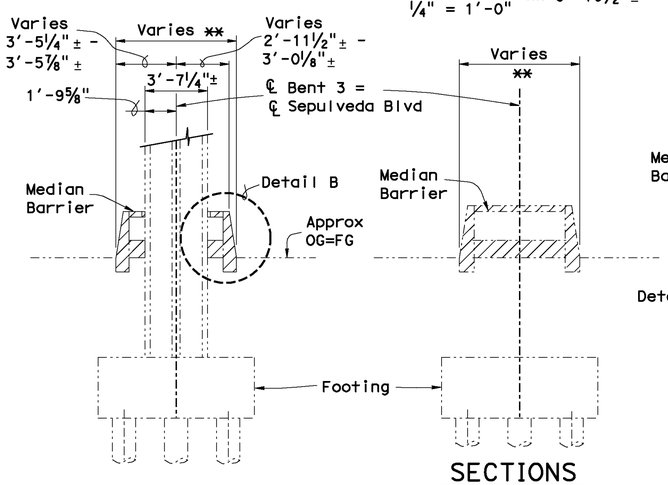

SECTIONS
¼" = 1'-0"

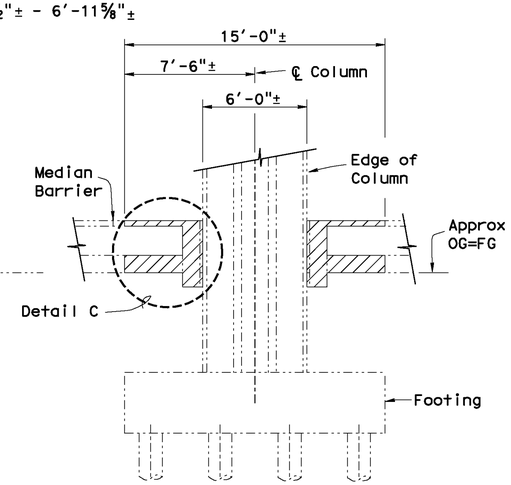

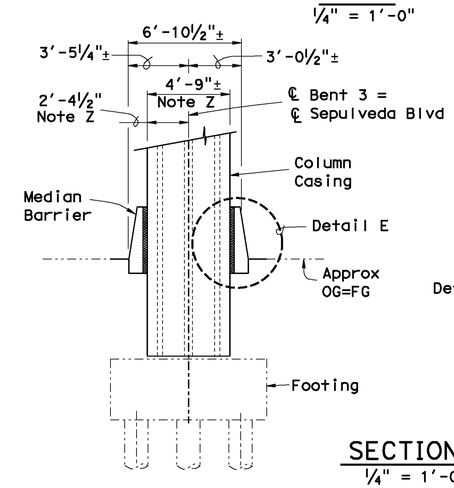

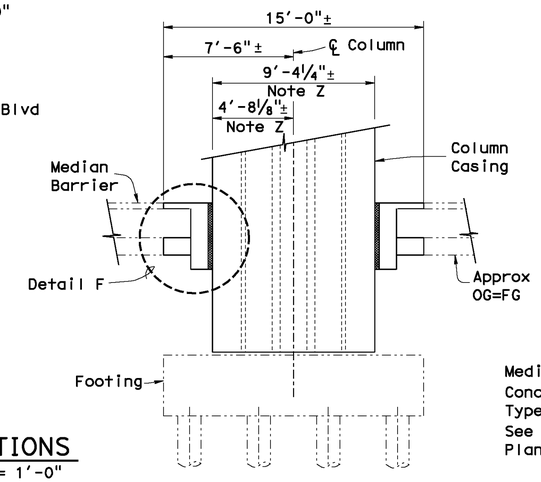

SECTIONS
¼" = 1'-0"

Median Barrier = Concrete Barrier Type 60E See "Road Plans" A76C

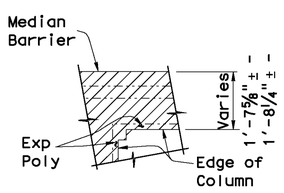

DETAIL A
½" = 1'-0"

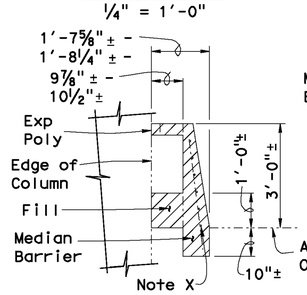

DETAIL B
½" = 1'-0"

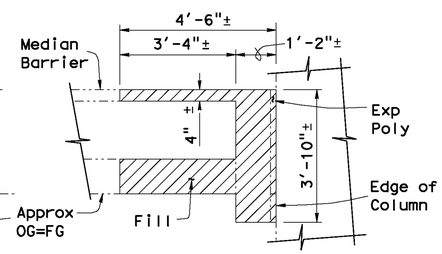

DETAIL C
½" = 1'-0"

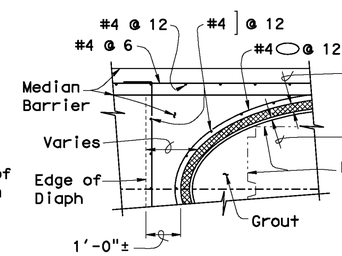

DETAIL D
½" = 1'-0"

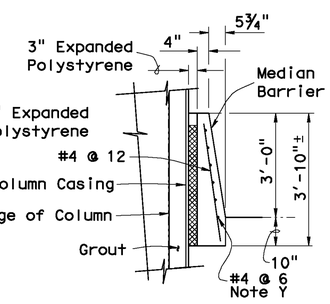

DETAIL E
½" = 1'-0"

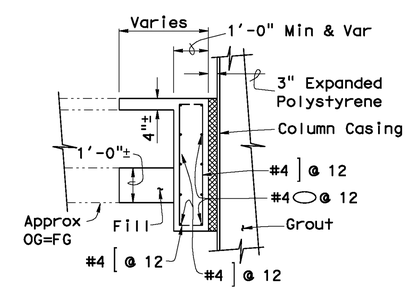

DETAIL F
½" = 1'-0"

REMOVAL DETAILS

NOTE:
THE CONTRACTOR SHALL VERIFY ALL CONTROLLING FIELD DIMENSIONS BEFORE ORDERING OR FABRICATING ANY MATERIAL.

Note X
Retain Portion of Existing Longitudinal Reinforcement to Facilitate Lap Splice with New Reinforcement

Denotes Limits of Removal of Existing Median Barrier. Portion of Existing Reinf to be Retained

NEW CONSTRUCTION DETAILS

Note Y
Lap with Retained Existing Longitudinal Reinforcement
Min Lap = 2'-0"

For Additional Details and Notes, See Standard Plan A76C and "ROAD PLANS"

Denotes Existing Structure

Denotes New Construction

	BY	CHECKED
DESIGN	M. Van De Pol	J. O'Brien
DETAILS	M. Van De Pol	J. O'Brien
QUANTITIES	M. Van De Pol	J. O'Brien

STATE OF CALIFORNIA
DEPARTMENT OF TRANSPORTATION

DIVISION OF ENGINEERING SERVICES
STRUCTURE DESIGN
DESIGN BRANCH 9

BRIDGE NO. 53-1834R/L
POST MILE 26.89

SEISMIC RETROFIT
CENTURY BOULEVARD OVERCROSSING
MEDIAN BARRIER DETAILS

STRUCTURES DESIGN DETAIL SHEET (ENGLISH) (REV. 10/25/05)

ORIGINAL SCALE IN INCHES FOR REDUCED PLANS 0 1 2 3

CU 07
EA 261101

DISREGARD PRINTS BEARING EARLIER REVISION DATES

REVISION DATES: 01/21/10

SHEET 10 OF 12

FILE => 53-1834-t-barr.dgn

USERNAME => tfairoll DATE PLOTTED => 15-SEP-2010 TIME PLOTTED => 09:47

DIST	COUNTY	ROUTE	POST MILES TOTAL PROJECT	SHEET No	TOTAL SHEETS
07	LA	1	26.9	26	27

REGISTERED CIVIL ENGINEER 9-16-10 DATE

3-14-11
PLANS APPROVAL DATE

REGISTERED PROFESSIONAL ENGINEER M.Van De Pol No. C35610 Exp. 09-30-11 CIVIL STATE OF CALIFORNIA

The State of California or its officers or agents shall not be responsible for the accuracy or completeness of electronic copies of this plan sheet.

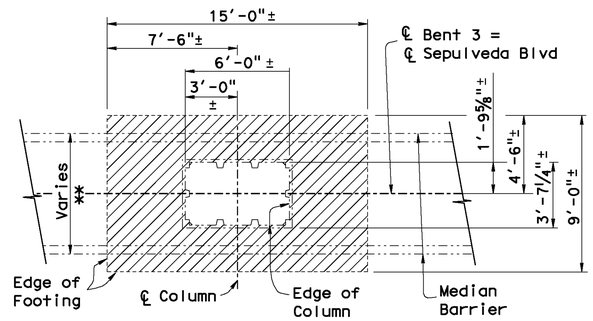

PLAN

** 6'-10½"± - 6'-11⅝"±

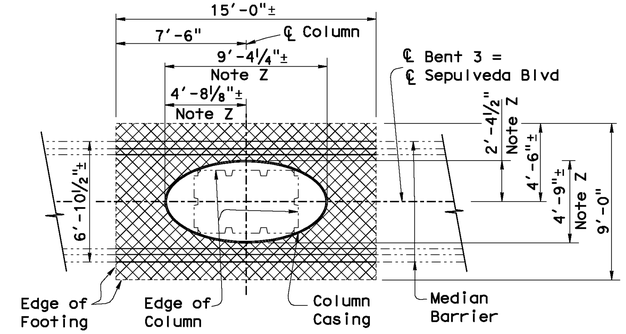

PLAN

Note Z
Dimensions Shown Correspond to Elliptical Steel Casing. Actual Casing Dimensions May Vary. Casing Radii Determined by the Contractor as Approved by the Engineer

Note X
Denote Bottom of Aggregate Base, See "Road Plans"

TABLE	
Structure	Dimension
Left	5'-9"± - 6'-0"±
Right	6'-0"± - 6'-3"±

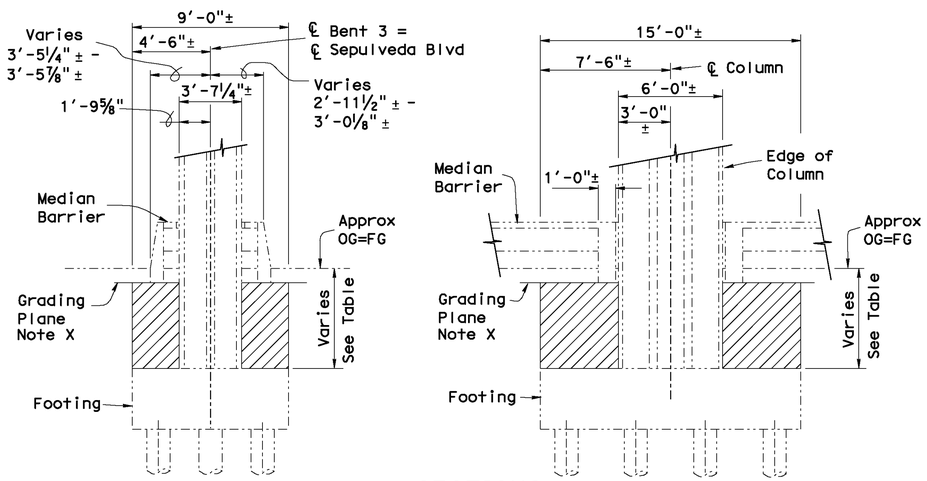

SECTIONS

EXCAVATION DETAILS
¼" = 1'-0"

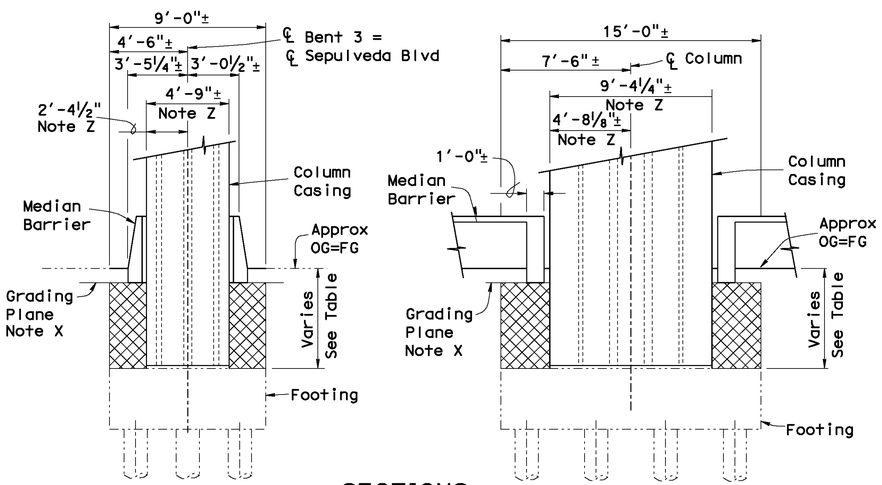

SECTIONS

BACKFILL DETAILS
¼" = 1'-0"

Denotes Limits of Structure Excavation

Denotes Limits of Structure Backfill

Denotes Existing Structure

Denotes New Construction

NOTE:
THE CONTRACTOR SHALL VERIFY ALL CONTROLLING FIELD DIMENSIONS BEFORE ORDERING OR FABRICATING ANY MATERIAL.

	BY	CHECKED
DESIGN	M. Van De Pol	J. O'Brien
DETAILS	M. Van De Pol	J. O'Brien
QUANTITIES	M. Van De Pol	J. O'Brien

STATE OF CALIFORNIA
DEPARTMENT OF TRANSPORTATION

DIVISION OF ENGINEERING SERVICES
STRUCTURE DESIGN
DESIGN BRANCH 9

BRIDGE NO. 53-1834R/L
POST MILE 26.89

SEISMIC RETROFIT
CENTURY BOULEVARD OVERCROSSING
EXCAVATION AND BACKFILL DETAILS

STRUCTURES DESIGN DETAIL SHEET (ENGLISH) (REV. 10/25/05)

ORIGINAL SCALE IN INCHES FOR REDUCED PLANS 0 1 2 3

CU 07
EA 261101

DISREGARD PRINTS BEARING EARLIER REVISION DATES 01/21/10

REVISION DATES

SHEET 11 OF 12

FILE => 53-1834-t-excbckf.dgn

USERNAME => tfairall DATE PLOTTED => 15-SEP-2010 TIME PLOTTED => 09:48

DIST	COUNTY	ROUTE	POST MILES TOTAL PROJECT	SHEET No	TOTAL SHEETS
07	LA	1	26.9	27	27

REGISTERED CIVIL ENGINEER 9-16-10 DATE

3-14-11
PLANS APPROVAL DATE

REGISTERED PROFESSIONAL ENGINEER M.Van De Pol No. C35610 Exp. 09-30-11 CIVIL STATE OF CALIFORNIA

The State of California or its officers or agents shall not be responsible for the accuracy or completeness of electronic copies of this plan sheet.

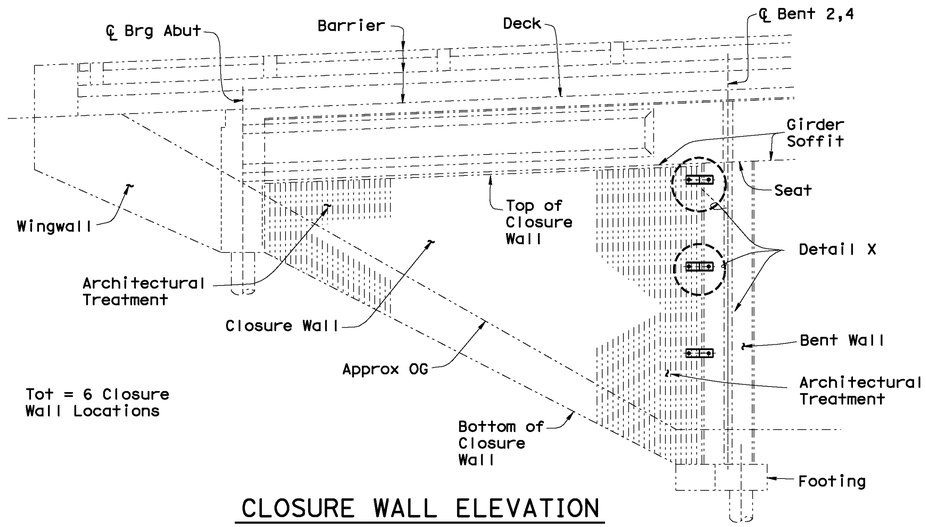

CLOSURE WALL ELEVATION

1/4" = 1'-0"

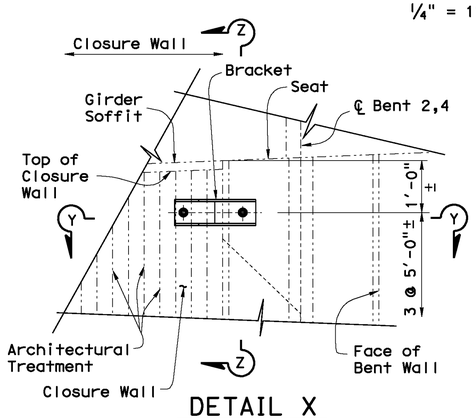

DETAIL X

3/4" = 1'-0"

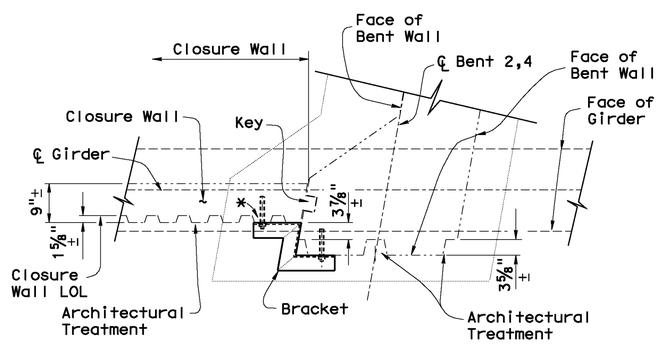

SECTION Y-Y

3/4" = 1'-0"

Beveled Washer Not Shown

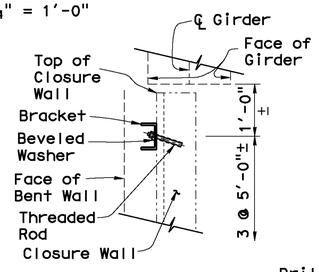

SECTION Z-Z

3/4" = 1'-0"

Drill and Bond 3/4" dia Threaded Rod in 6" Deep Drilled Hole typ Slope 1:3

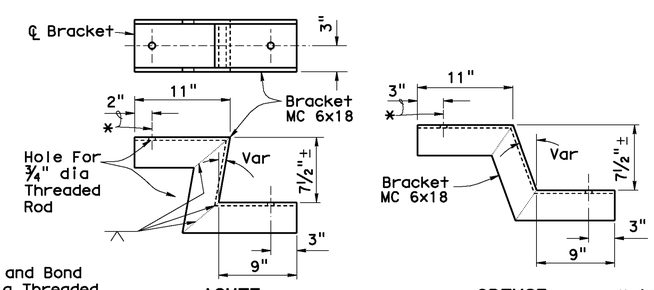

* Adjust so Hole is Centered About Raised Portion of Architectural Treatment

BRACKET DETAILS

1 1/2" = 1'-0"

NOTE:
THE CONTRACTOR SHALL VERIFY ALL CONTROLLING FIELD DIMENSIONS BEFORE ORDERING OR FABRICATING ANY MATERIAL.

Notes

For Locations of Closure Walls, see "General Plans" Sheets

Denotes Existing Structure

Denotes New Construction

	BY	CHECKED
DESIGN	M. Van De Pol	J. O'Brien
DETAILS	M. Van De Pol	J. O'Brien
QUANTITIES	M. Van De Pol	J. O'Brien

STATE OF CALIFORNIA
DEPARTMENT OF TRANSPORTATION

DIVISION OF ENGINEERING SERVICES
STRUCTURE DESIGN
DESIGN BRANCH 9

BRIDGE NO. 53-1834R/L
POST MILE 26.89

SEISMIC RETROFIT
CENTURY BOULEVARD OVERCROSSING
CLOSURE WALL DETAILS

STRUCTURES DESIGN DETAIL SHEET (ENGLISH) (REV. 10/25/05)

ORIGINAL SCALE IN INCHES FOR REDUCED PLANS 0 1 2 3

CU 07
EA 261101

DISREGARD PRINTS BEARING EARLIER REVISION DATES 01/21/10

REVISION DATES

SHEET 12 OF 12

FILE => 53-1834-u-clwalldets.dgn

USERNAME => tfairall DATE PLOTTED => 15-SEP-2010 TIME PLOTTED => 09:48