Dist	COUNTY	ROUTE	POST MILES TOTAL PROJECT	SHEET No.	TOTAL SHEETS
07	LA	91, 110, 710	R6.3, 9.9, R11.7, 13.0	1	30

ACNH-X037(153)E

STATE OF CALIFORNIA
DEPARTMENT OF TRANSPORTATION

PROJECT PLANS FOR CONSTRUCTION ON
STATE HIGHWAY
IN LOS ANGELES COUNTY
IN LOS ANGELES AND LONG BEACH AT
ROUTE 110/91 SEPARATION AND ROUTE 91/710 SEPARATION

TO BE SUPPLEMENTED BY STANDARD PLANS DATED MAY 2006

INDEX OF PLANS

SHEET No.	DESCRIPTION
1	TITTLE AND LOCATION MAP
2	CONSTRUCTION AREA SIGNS
3-10	TRAFFIC HANDLING DETAILS
11-12	PAVEMENT DELINEATION PLANS AND QUANTITIES
13-22	REVISED AND NEW STANDARD PLANS

STRUCTURE PLANS

23-26	LOS ANGELES RIVER BRIDGE RE-SURFACE
27-30	W91-S110 CONNECTOR OVERCROSSING

THE STANDARD PLANS LIST APPLICABLE TO THIS CONTRACT IS INCLUDED IN THE NOTICE TO BIDDERS AND SPECIAL PROVISIONS BOOK.

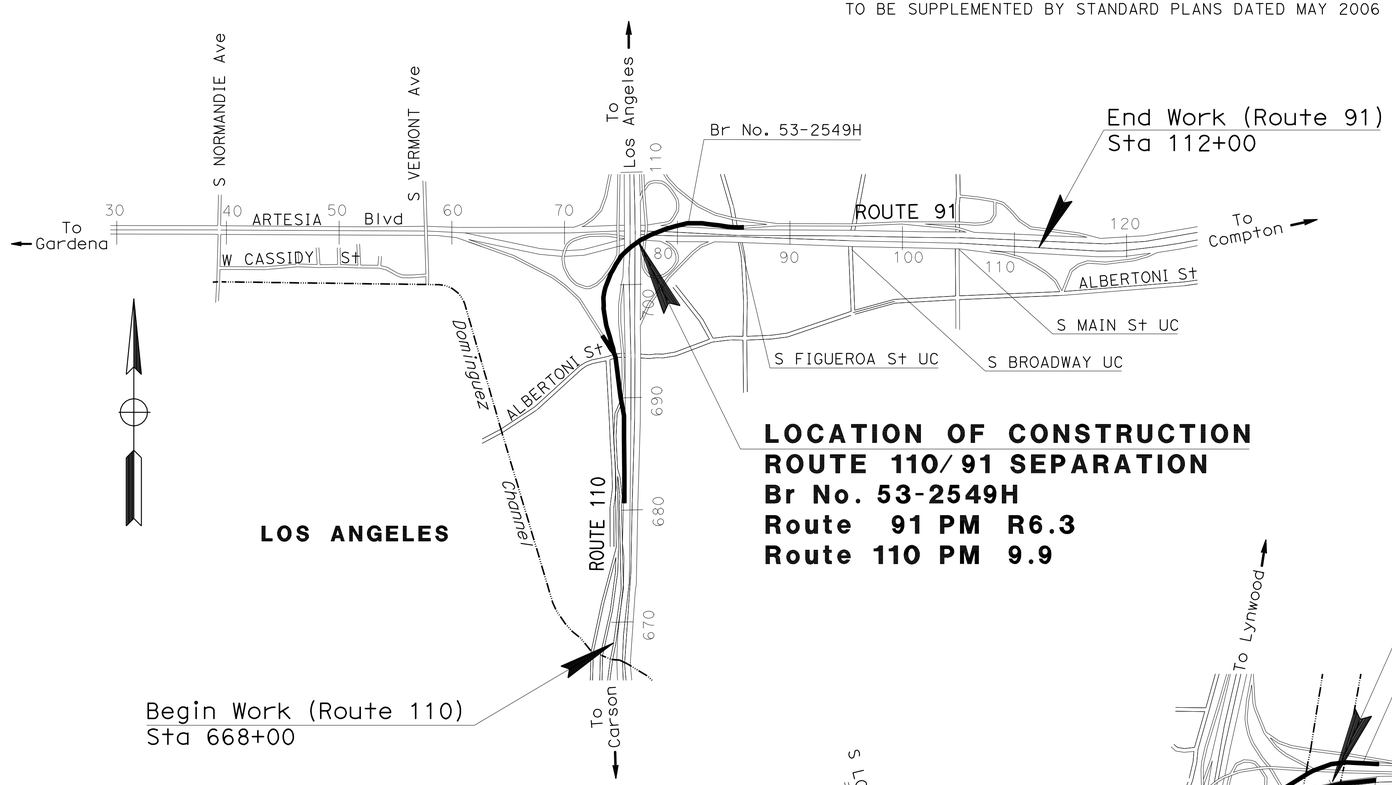

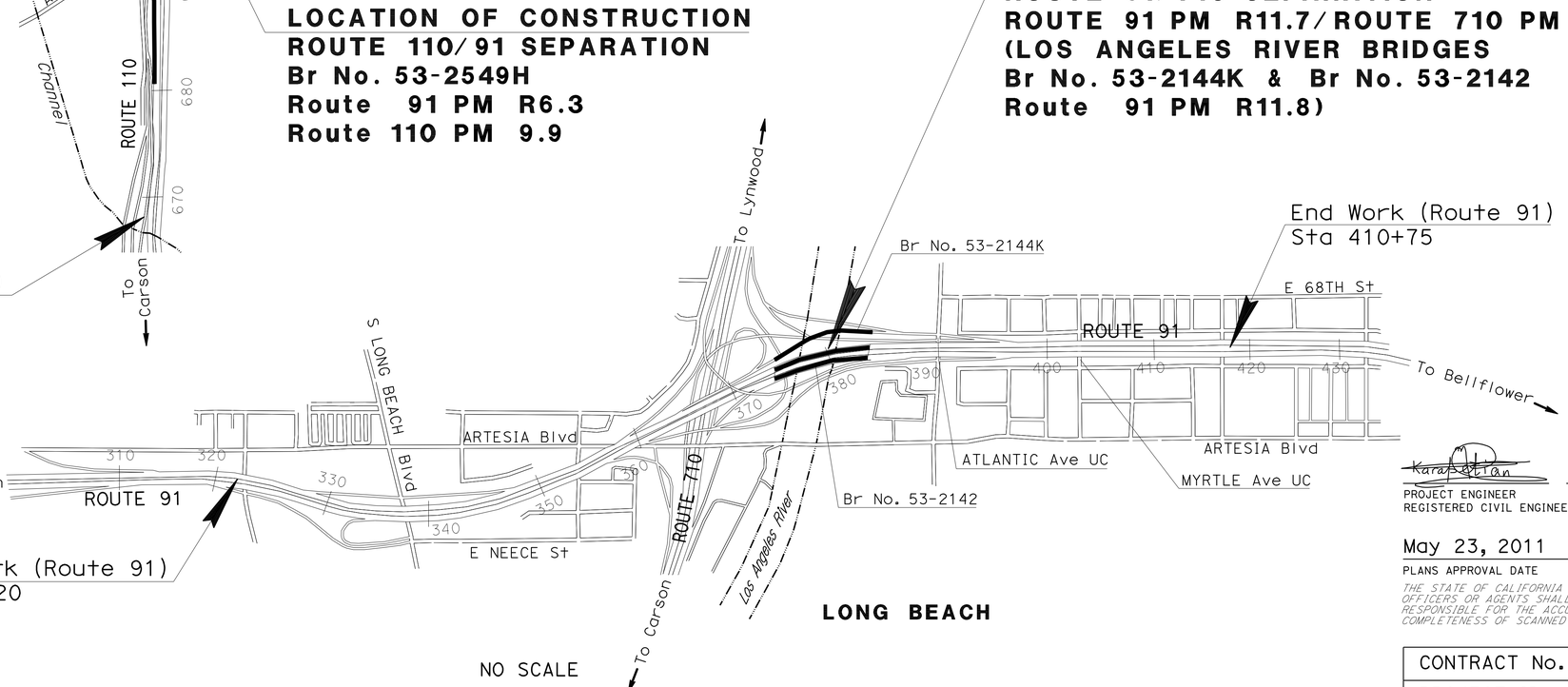

THE CONTRACTOR SHALL POSSESS THE CLASS (OR CLASSES) OF LICENSE AS SPECIFIED IN THE "NOTICE TO BIDDERS."

PROJECT MANAGER: JOHN VASSILIADES
DESIGN ENGINEER: BARKEF KARAPETIAN

PROJECT ENGINEER REGISTERED CIVIL ENGINEER — DATE 3-15-11

May 23, 2011
PLANS APPROVAL DATE

REGISTERED PROFESSIONAL ENGINEER — BARKEF KARAPETIAN — No. C55718 — Exp. 12/31/12 — CIVIL — STATE OF CALIFORNIA

THE STATE OF CALIFORNIA OR ITS OFFICERS OR AGENTS SHALL NOT BE RESPONSIBLE FOR THE ACCURACY OR COMPLETENESS OF SCANNED COPIES OF THIS PLAN SHEET.

CONTRACT No.	07-260504
PROJECT ID	0700001841

LAST REVISION 00-00-00 | DATE PLOTTED => 21-JUN-2011 | TIME PLOTTED => 09:54

Dist	COUNTY	ROUTE	POST MILES TOTAL PROJECT	SHEET No.	TOTAL SHEETS
07	LA	91, 110, 710	R6.3, 9.9, R11.7, 13.0	2	30

REGISTERED CIVIL ENGINEER 3-15-11 DATE

05-23-11
PLANS APPROVAL DATE

REGISTERED PROFESSIONAL ENGINEER BARKEF KARAPETIAN No. C55718 Exp. 12/31/12 CIVIL STATE OF CALIFORNIA

THE STATE OF CALIFORNIA OR ITS OFFICERS OR AGENTS SHALL NOT BE RESPONSIBLE FOR THE ACCURACY OR COMPLETENESS OF SCANNED COPIES OF THIS PLAN SHEET.

NOTES:

1. SIGN LOCATIONS SHOWN ARE APPROXIMATE. EXACT LOCATIONS WILL BE DETERMINED BY THE ENGINEER.
2. FOR ADDITIONAL CONSTRUCTION AREA SIGNS SEE TRAFFIC HANDLING DETAILS.

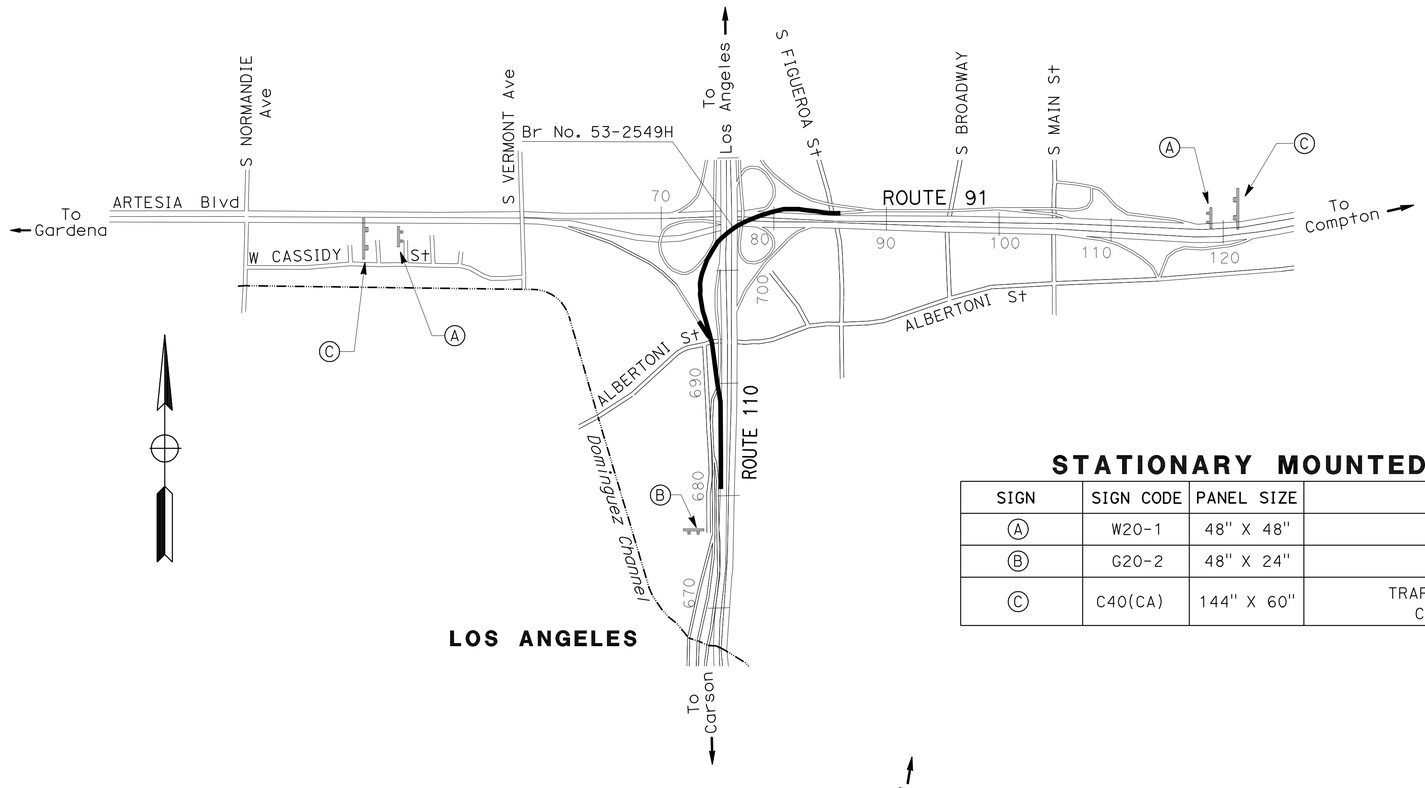

STATIONARY MOUNTED CONSTRUCTION AREA SIGNS

SIGN	SIGN CODE	PANEL SIZE	SIGN MESSAGE	POST No & SIZE	No. OF SIGNS
A	W20-1	48" X 48"	ROAD WORK AHEAD	TWO-6"X6"	5
B	G20-2	48" X 24"	END ROAD WORK	TWO-6"X6"	3
C	C40(CA)	144" X 60"	TRAFFIC FINES DOUBLED IN CONSTRUCTION ZONES	TWO-6"X6"	5

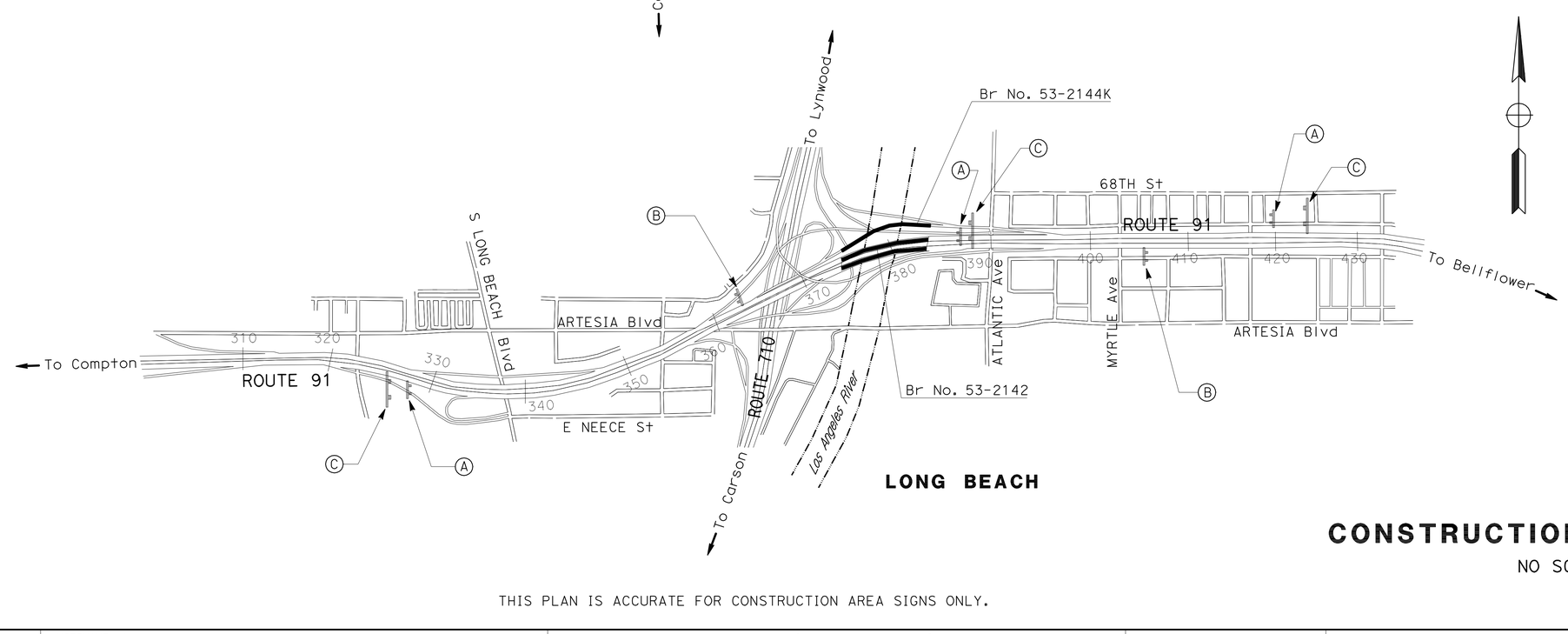

CONSTRUCTION AREA SIGNS

NO SCALE

CS-1

THIS PLAN IS ACCURATE FOR CONSTRUCTION AREA SIGNS ONLY.

STATE OF CALIFORNIA - DEPARTMENT OF TRANSPORTATION
DESIGN

REVISED BY | DATE REVISED
BARKEF KARAPETIAN | REFUGIO DOMINGUEZ
CALCULATED-DESIGNED BY | CHECKED BY
FUNCTIONAL SUPERVISOR | REFUGIO DOMINGUEZ

LAST REVISION 00-00-00 | DATE PLOTTED => 21-JUN-2011 | TIME PLOTTED => 09:54

Dist	COUNTY	ROUTE	POST MILES TOTAL PROJECT	SHEET No.	TOTAL SHEETS
07	LA	91,110, 710	R6.3, 9.9, R11.7, 13.0	3	30

Denis Katayama 2-23-11
REGISTERED CIVIL ENGINEER DATE

05-23-11
PLANS APPROVAL DATE

REGISTERED PROFESSIONAL ENGINEER D.S. KATAYAMA No. C50648 Exp. 9-30-11 CIVIL STATE OF CALIFORNIA

THE STATE OF CALIFORNIA OR ITS OFFICERS OR AGENTS SHALL NOT BE RESPONSIBLE FOR THE ACCURACY OR COMPLETENESS OF SCANNED COPIES OF THIS PLAN SHEET.

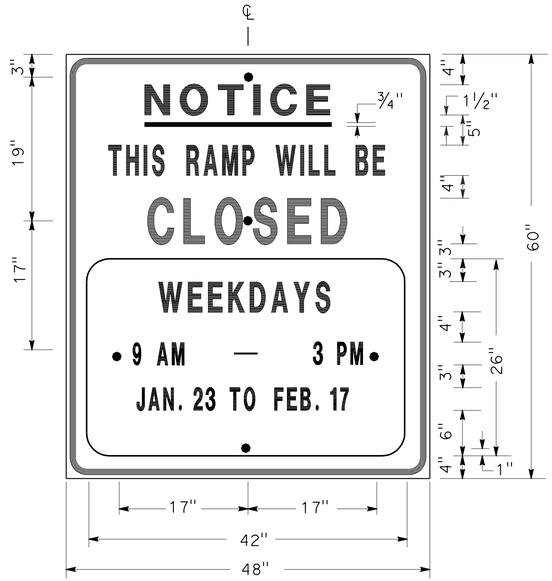

SIGN SP-1

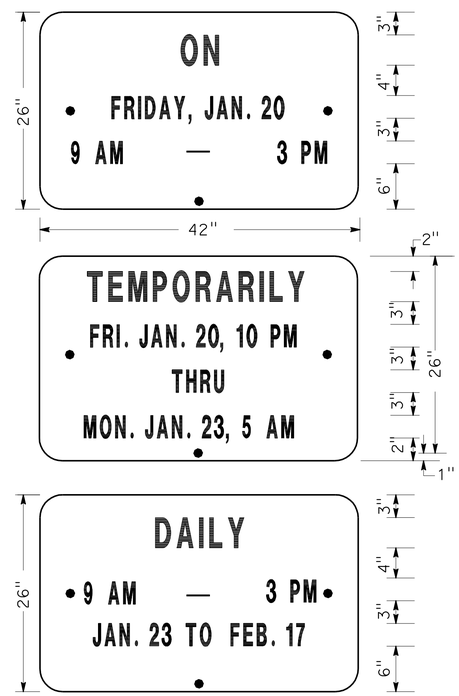

ALTERNATE OVERLAY PANELS (TYPICAL)

SPECIAL ADVANCE NOTICE PUBLICITY SIGN

NOTES: (SIGN SP-1)

1. SIGNS SHALL HAVE ORANGE RETROREFLECTORIZED BACKGROUND WITH BLACK BORDER AND LETTERS.
2. BOLT HOLES SHALL BE 3/8" DIAMETER.
3. BASE MATERIAL SHALL BE ALUMINUM (MINIMUM 0.06").
4. SIGNS SHALL BE MOUNTED WITH BOTTOMS OF SIGNS A MINIMUM OF 6' ABOVE GROUND.

SIZE	BORDER WIDTH	MARGIN WIDTH	LETTER SIZE					CORNER RADIUS
			LINE 1	LINE 2*	LINE 3	LINE 4	LINE 5,6 & 7*	
48"x60"	1 1/4"	3/4"	4E	4D	6E	4D		3"
42"x26"	OVERLAY						3D	1 1/2"
* CONDENSED SPACING IF NECESSARY								

SIGN SP-4

NOTES: (SIGN SP-4)

1. LETTERS - 6" SERIES C.
2. LETTERS AND BORDERS - BLACK ON RETROREFLECTORIZED WHITE BACKGROUND.
3. BASE MATERIAL SHALL BE ALUMINUM (MINIMUM 0.06").
4. SIGNS SHALL BE PLACED AT RAMP ENTRANCES IN ADDITION TO SIGNS POSTED IN ACCORDANCE WITH STANDARD PLAN T14.

SPECIAL SIGN FOR ENTRANCE RAMP CLOSURES

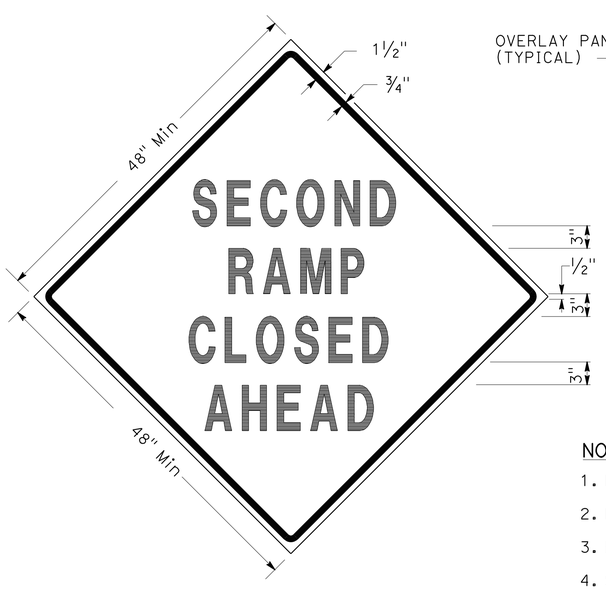

SIGN SP-3

SIGN SP-5

NOTES: (SIGNS SP-3 & SP-5)

1. LETTERS - 6" SERIES D.
2. LETTERS AND BORDERS - BLACK ON RETROREFLECTORIZED ORANGE BACKGROUND.
3. BASE MATERIAL SHALL BE ALUMINUM (MINIMUM 0.06").
4. SIGNS SHALL BE MOUNTED WITH BOTTOMS OF SIGNS A MINIMUM OF 6' ABOVE GROUND.

SPECIAL SIGN FOR EXIT RAMP CLOSURES

TRAFFIC HANDLING DETAILS
TRAFFIC CONTROL SYSTEM FOR RAMP CLOSURES, DETOUR SIGNS AND MISCELLANEOUS DETAILS
SHEET 1 OF 2
NO SCALE

THD-1

STATE OF CALIFORNIA - DEPARTMENT OF TRANSPORTATION
Caltrans DTM

FUNCTIONAL SUPERVISOR: JOHN YANG
CALCULATED-DESIGNED BY: ALBERT K YU
CHECKED BY: JOCELYN C CHIANG
REVISED BY: JC
DATE REVISED: 7/10

LAST REVISION 00-00-00
DATE PLOTTED => 21-JUN-2011
TIME PLOTTED => 09:54

Dist	COUNTY	ROUTE	POST MILES TOTAL PROJECT	SHEET No.	TOTAL SHEETS
07	LA	91,110, 710	R6.3, 9.9, R11.7, 13.0	4	30

Denis Katayama 2-23-11
REGISTERED CIVIL ENGINEER DATE

05-23-11
PLANS APPROVAL DATE

REGISTERED PROFESSIONAL ENGINEER D.S. KATAYAMA No. C50648 Exp. 9-30-11 CIVIL STATE OF CALIFORNIA

THE STATE OF CALIFORNIA OR ITS OFFICERS OR AGENTS SHALL NOT BE RESPONSIBLE FOR THE ACCURACY OR COMPLETENESS OF SCANNED COPIES OF THIS PLAN SHEET.

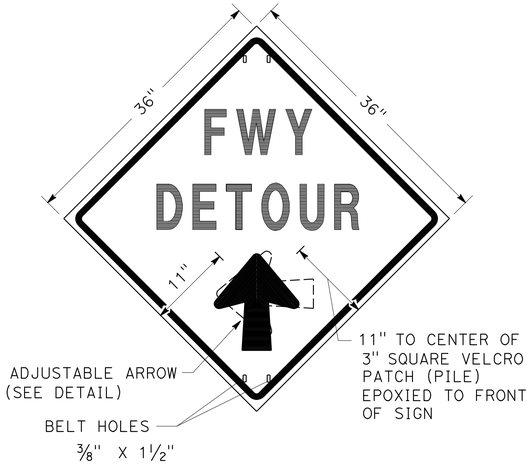

SIGN SP-2

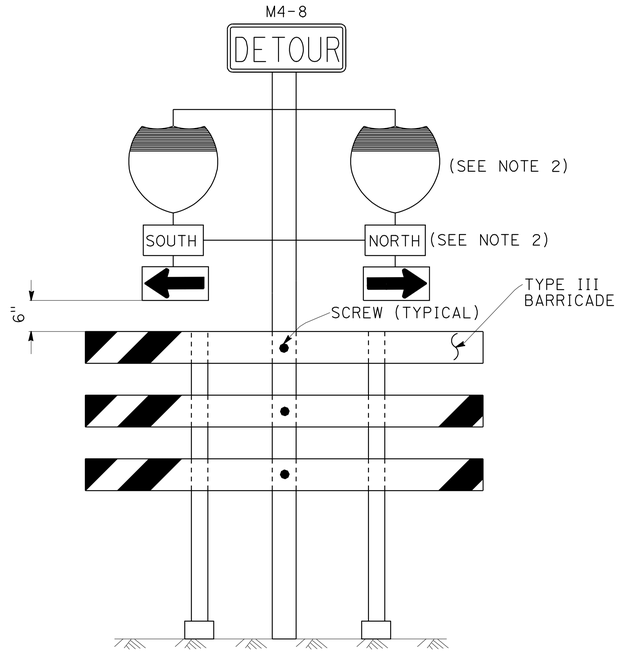

SIGN SP-6 (SEE NOTE 1)

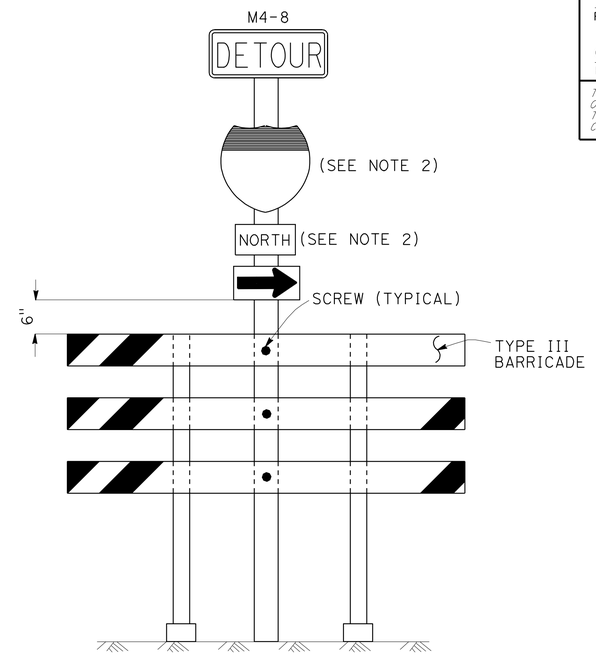

SIGN SP-7 (SEE NOTE 1)

NOTES: (SIGN SP-2)

1. LETTERS -6" SERIES E.
2. LETTERS, BORDER AND ARROW - BLACK ON RETROREFLECTORIZED ORANGE BACKGROUND.
3. BASE MATERIAL FOR SIGNS AND ARROWS SHALL BE ALUMINUM (MINIMUM 0.06").
4. BELTS (LUGGAGE STRAPS) SHALL BE 1" WIDE BY 48" LONG, MADE OF COTTON OR POLYPROPYLENE WEB MATERIAL.
5. SIGNS SHALL BE MOUNTED WITH BOTTOMS OF SIGNS A MINIMUM OF 6' ABOVE GROUND EXCEPT AS OTHERWISE SHOWN ON OTHER TRAFFIC HANDLING DETAILS PLANS.

ABBREVIATION

(CA) CALIFORNIA CODE

NOTES: (SIGNS SP-6 & SP-7)

1. IN LIEU OF PLACING SIGNS ON TYPE III BARRICADES, SIGNS, INCLUDING POSTS, MAY BE PLACED INTO THE GROUND OR FASTENED ONTO ELECTROLIERS.
2. USE APPROPRIATE ROUTE SHIELD [G26-2(CA), G27-2(CA), G28-2(CA)] AND CARDINAL DIRECTION [NORTH (M3-1), SOUTH (M3-3), EAST (M3-2), WEST (M3-4)]

SPECIAL PORTABLE FREEWAY DETOUR SIGNS

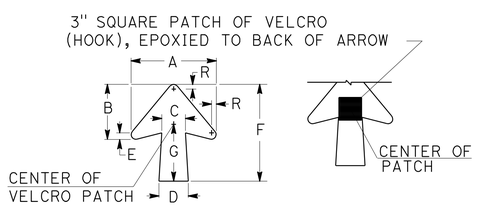

DIMENSIONS							
A	B	C	D	E	F	G	R
11 1/4"	7 1/4"	3 1/8"	4"	7/8"	13"	7 1/2"	5/8"

SPECIAL PORTABLE FREEWAY DETOUR SIGN

ADJUSTABLE ARROW DETAIL

TRAFFIC HANDLING DETAILS

TRAFFIC CONTROL SYSTEM FOR RAMP CLOSURES, DETOUR SIGNS AND MISCELLANEOUS DETAILS

SHEET 2 OF 2

NO SCALE

THD-2

STATE OF CALIFORNIA - DEPARTMENT OF TRANSPORTATION
Caltrans DTM

FUNCTIONAL SUPERVISOR: JOHN YANG
CALCULATED-DESIGNED BY: ALBERT K YU
CHECKED BY: JOCELYN C CHIANG
REVISED BY: JC
DATE REVISED: 7/10

LAST REVISION 00-00-00
DATE PLOTTED => 21-JUN-2011
TIME PLOTTED => 09:54

Dist	COUNTY	ROUTE	POST MILES TOTAL PROJECT	SHEET No.	TOTAL SHEETS
07	LA	91,110, 710	R6.3, 9.9, R11.7, 13.0	5	30

Denis Katayama 2-23-11
REGISTERED CIVIL ENGINEER DATE

05-23-11
PLANS APPROVAL DATE

REGISTERED PROFESSIONAL ENGINEER D.S. KATAYAMA No. C50648 Exp. 9-30-11 CIVIL STATE OF CALIFORNIA

THE STATE OF CALIFORNIA OR ITS OFFICERS OR AGENTS SHALL NOT BE RESPONSIBLE FOR THE ACCURACY OR COMPLETENESS OF SCANNED COPIES OF THIS PLAN SHEET.

NOTES:

1. LANE CLOSURES SHALL NOT BE PLACED ON CREST VERTICAL CURVES OR ON HORIZONTAL CURVES.
2. PCMS SHALL BE ACTIVATED PRIOR TO TRAFFIC CONTROL ACTIVITIES ON THE HOV LANE.
3. A MINIMUM SIGHT DISTANCE OF 1500′ SHALL BE PROVIDED IN ADVANCE OF PCMS.
4. VEHICLE-MOUNTED SIGN PANELS SHALL BE TYPE III OR IV RETROREFLECTORIZED SHEETING, BLACK ON WHITE OR BLACK ON ORANGE WITH 8" MINIMUM SERIES D LETTERS PER CALTRANS SIGN SPECIFICATIONS.
5. PLACE PCMS ON THE MEDIAN SHOULDER WHERE SUFFICIENT ROOM (SUCH AS CHP ENFORCEMENT AREAS) EXISTS.

LEGEND

V1, V2	SHADOW VEHICLE
V3	WORK/APPLICATION VEHICLE
	PORTABLE CHANGEABLE MESSAGE SIGN (PCMS)
	DIRECTION OF TRAVEL
	HOV LANE

ABBREVIATIONS

FAS	FLASHING ARROW SIGN
IAV	IMPACT ATTENUATOR VEHICLE
CMS	CHANGEABLE MESSAGE SIGN
(CA)	CALIFORNIA CODE
PCMS	PORTABLE CHANGEABLE MESSAGE SIGN
HOV	HIGH OCCUPANCY VEHICLE

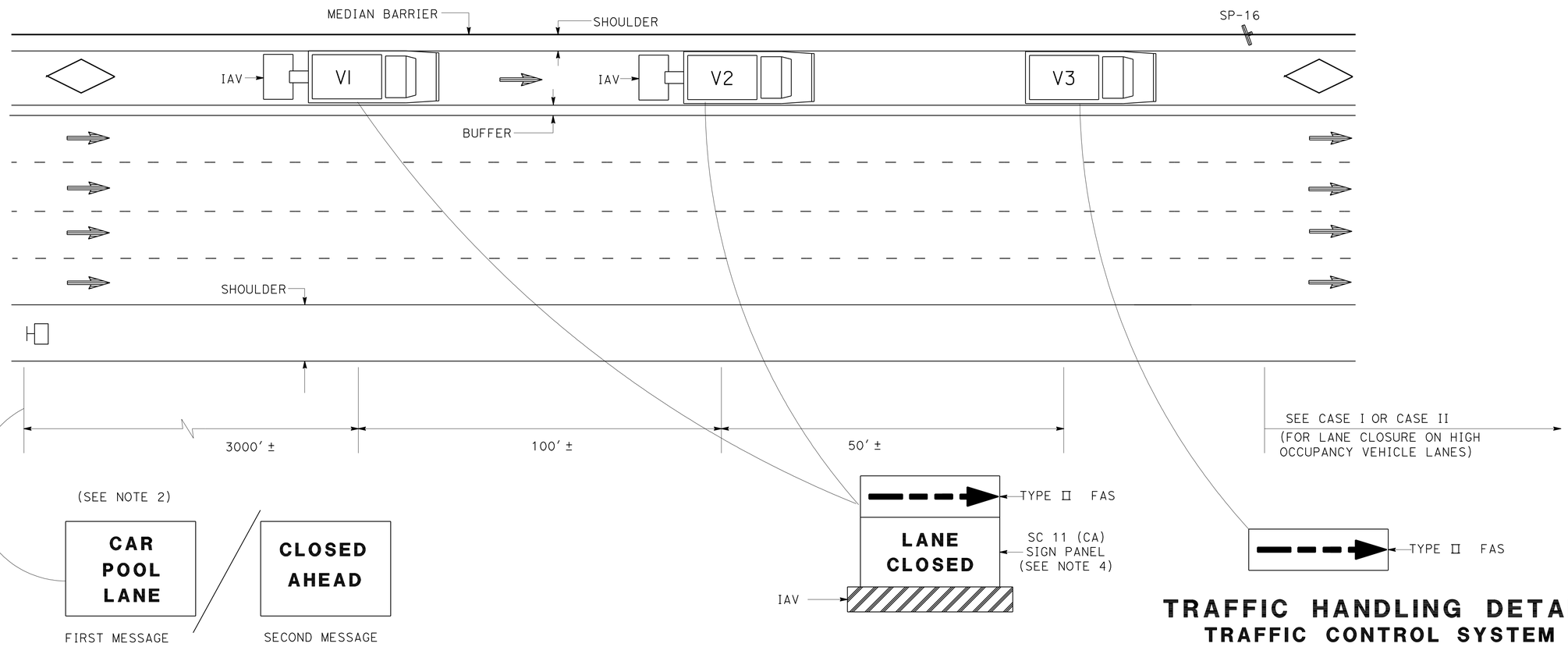

PCMS/TRUCK MOUNTED CMS
(SEE NOTE 5)

TRAFFIC HANDLING DETAILS
TRAFFIC CONTROL SYSTEM FOR HIGH OCCUPANCY VEHICLE LANES WITH MEDIAN SHOULDERS LESS THAN 8 FEET

NO SCALE

THD-3

STATE OF CALIFORNIA - DEPARTMENT OF TRANSPORTATION
Caltrans
DTM

FUNCTIONAL SUPERVISOR: JOHN YANG
CALCULATED-DESIGNED BY: ALBERT K YU
CHECKED BY: JOCELYN C CHIANG
REVISED BY: JC
DATE REVISED: 7/10

LAST REVISION 00-00-00
DATE PLOTTED => 21-JUN-2011
TIME PLOTTED => 09:54

Dist	COUNTY	ROUTE	POST MILES TOTAL PROJECT	SHEET No.	TOTAL SHEETS
07	LA	91,110, 710	R6.3, 9.9, R11.7, 13.0	6	30

Denis Katayama 2-23-11
REGISTERED CIVIL ENGINEER DATE

05-23-11
PLANS APPROVAL DATE

REGISTERED PROFESSIONAL ENGINEER D.S. KATAYAMA No. C50648 Exp. 9-30-11 CIVIL STATE OF CALIFORNIA

THE STATE OF CALIFORNIA OR ITS OFFICERS OR AGENTS SHALL NOT BE RESPONSIBLE FOR THE ACCURACY OR COMPLETENESS OF SCANNED COPIES OF THIS PLAN SHEET.

LEGEND

- CONE
- TRAFFIC PLASTIC DRUM
- FLASHING ARROW SIGN
- PORTABLE SIGN
- DIRECTION OF TRAVEL
- PORTABLE CHANGEABLE MESSAGE SIGN (PCMS)

ABBREVIATIONS

(CA) CALIFORNIA CODE

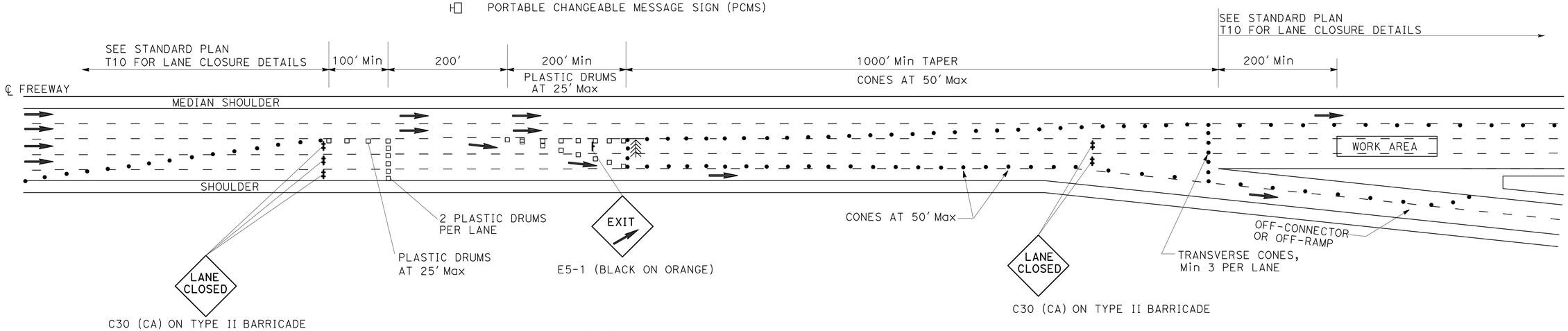

OPTION 1

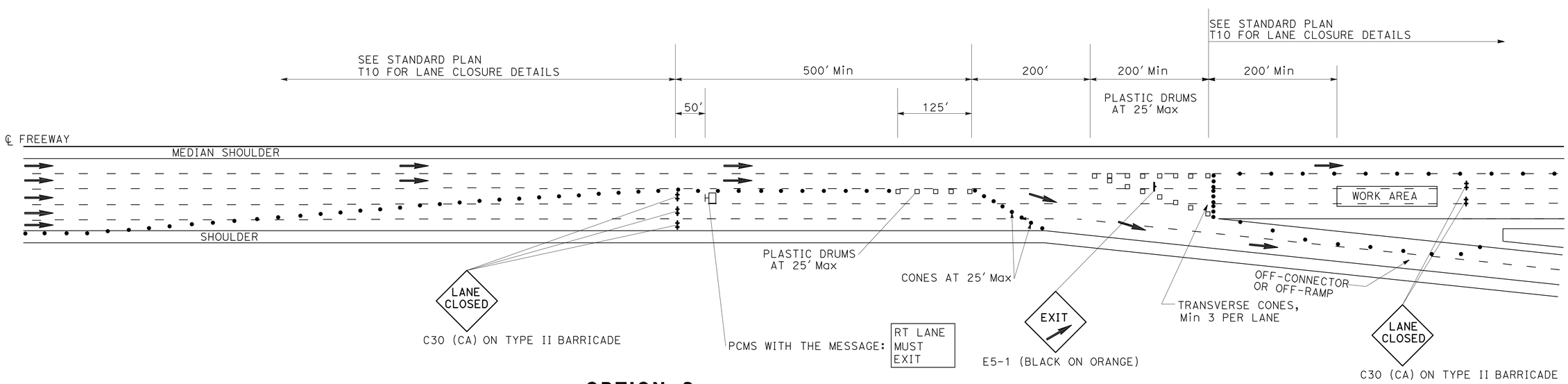

OPTION 2

TRAFFIC HANDLING DETAILS

TRAFFIC CONTROL SYSTEM FOR SLIP-RAMP AT OFF-CONNECTOR OR OFF-RAMP

NO SCALE

THD-4

REVISED BY	DATE REVISED
JC	7/10

CALCULATED-DESIGNED BY: ALBERT K YU
CHECKED BY: JOCELYN C CHIANG
FUNCTIONAL SUPERVISOR: JOHN YANG

STATE OF CALIFORNIA - DEPARTMENT OF TRANSPORTATION
Caltrans® DTM

LAST REVISION 00-00-00
DATE PLOTTED => 21-JUN-2011
TIME PLOTTED => 09:54

Dist	COUNTY	ROUTE	POST MILES TOTAL PROJECT	SHEET No.	TOTAL SHEETS
07	LA	91,110, 710	R6.3, 9.9, R11.7, 13.0	7	30

Denis Katayama 2-23-11
REGISTERED CIVIL ENGINEER DATE

05-23-11
PLANS APPROVAL DATE

REGISTERED PROFESSIONAL ENGINEER D.S. KATAYAMA No. C50648 Exp. 9-30-11 CIVIL STATE OF CALIFORNIA

THE STATE OF CALIFORNIA OR ITS OFFICERS OR AGENTS SHALL NOT BE RESPONSIBLE FOR THE ACCURACY OR COMPLETENESS OF SCANNED COPIES OF THIS PLAN SHEET.

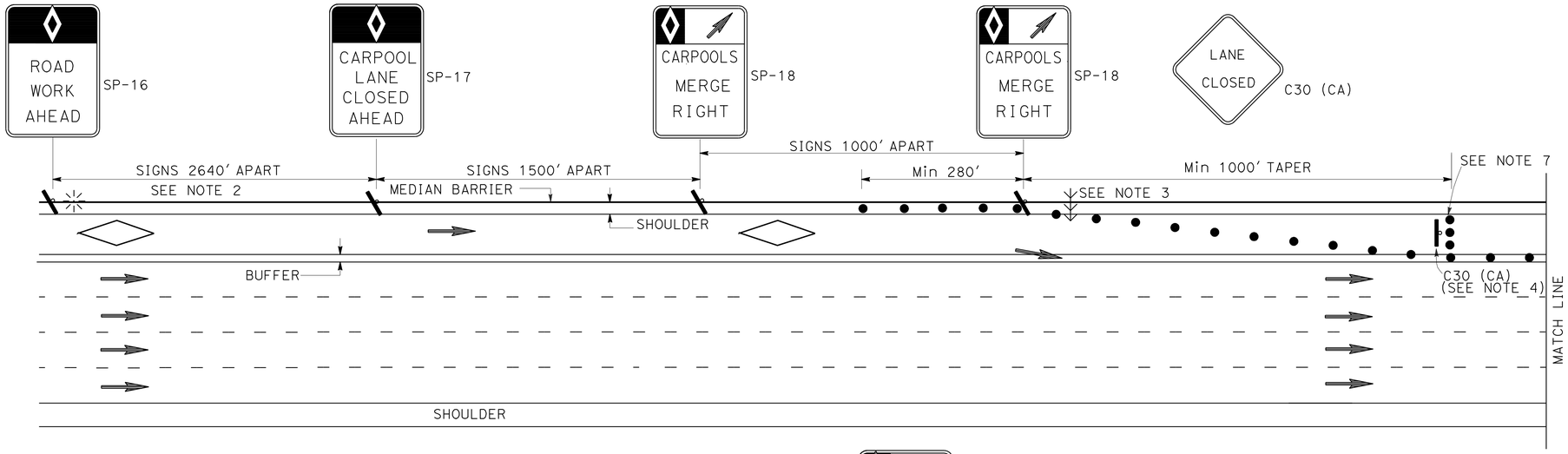

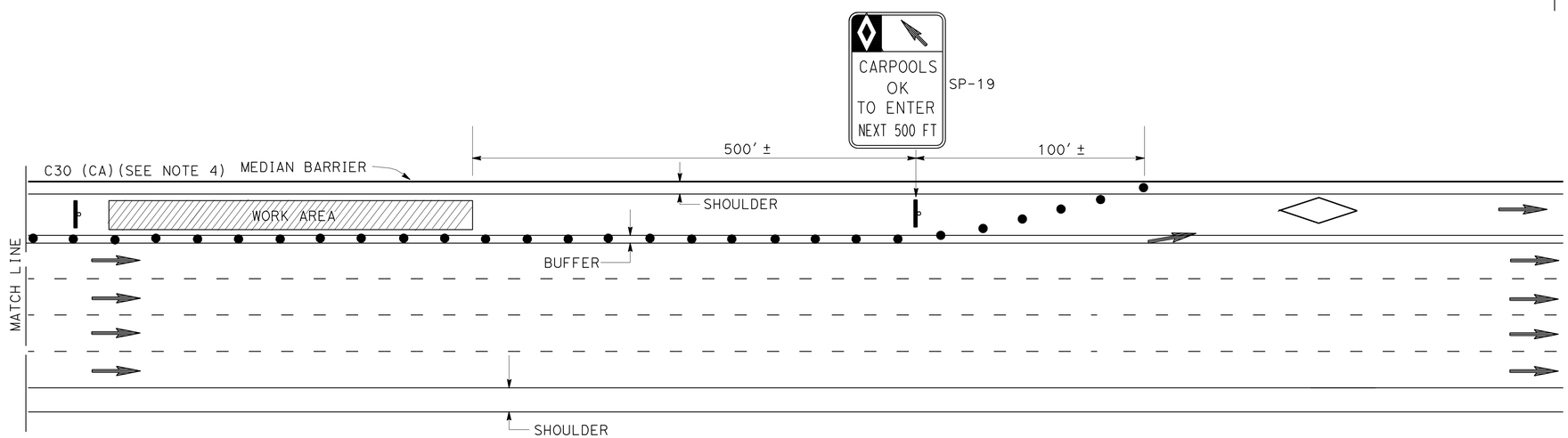

ABBREVIATIONS

(CA) CALIFORNIA CODE

HOV HIGH OCCUPANCY VEHICLE

NOTES: FOR CASE I AND CASE II

1. AT LEAST ONE PERSON SHALL BE ASSIGNED TO FULL TIME MAINTENANCE OF TRAFFIC CONTROL DEVICES ON NIGHT LANE CLOSURES OR DAY-TIME CLOSURES EXCEEDING 1 MILE LENGTH, INCLUDING TAPERS.
2. ADVANCE WARNING SIGN INSTALLATIONS SHALL BE EQUIPPED WITH FLAGS FOR DAYTIME CLOSURES. TYPE B HIGH INTENSITY FLASHING WARNING LIGHTS SHALL BE USED ON SP-16 SIGNS DURING NIGHT LANE CLOSURES. FLAGS AND WARNING LIGHTS SHALL BE ATTACHED TO SIGNS AS APPROVED BY THE ENGINEER.
3. THE FLASHING ARROW SIGN SHALL BE TYPE I.
4. PLACE C30 (CA) SIGNS EVERY 2000' THROUGHOUT THE LENGTH OF LANE CLOSURE.
5. A MINIMUM 1500' OF SIGHT DISTANCE SHALL BE PROVIDED WHERE POSSIBLE FOR VEHICLES APPROACHING THE FLASHING ARROW SIGN. LANE CLOSURES SHALL NOT BE PLACED ON CREST VERTICAL CURVES OR ON HORIZONTAL CURVES.
6. PORTABLE DELINEATORS PLACED AT ONE-HALF THE SPACING INDICATED FOR TRAFFIC CONES MAY BE USED INSTEAD OF CONES FOR DAYTIME CLOSURES.
7. A MINIMUM OF 3 CONES SHALL BE PLACED TRANSVERSELY ACROSS CLOSED LANES WHERE TAPERS END AND EVERY 2000'. TWO TYPE II BARRICADES MAY BE USED INSTEAD OF 3 CONES. THE ALIGNMENT OF CONES OR BARRICADES MAY BE SHIFTED FROM THE TRANSVERSE ALIGNMENT TO PROVIDE ACCESS TO WORK.
8. IF AN INGRESS/EGRESS AREA IS WITHIN 5250' UPSTREAM OR DOWNSTREAM OF THE WORK AREA, LANE CLOSURES SHALL BE EXTENDED TO THAT AREA AS SHOWN IN CASE II.
9. SIGNS SP-16, 17, 18, AND 19 MAY BE OVERLAID ON EXISTING CARPOOL SIGNS IN MEDIANS AS APPROVED BY THE ENGINEER.
10. SIGNS SP-16, 17, 18, AND C30 (CA) SHALL BE BLACK ON ORANGE BACKGROUND. SIGN SP-19 SHALL BE BLACK ON WHITE BACKGROUND. DIAMONDS ON SIGNS SHALL BE WHITE.
11. FOR CLOSURE OF LANE(S) ADJACENT TO HOV LANES, SEE CASE II.
12. THE MAXIMUM SPACING BETWEEN CONES SHALL BE APPROXIMATELY 50' IN TAPERS AND 100' ON TANGENTS.

LEGEND

- CONE
- FLASHING BEACON
- HOV LANE
- FLASHING ARROW SIGN
- PORTABLE SIGN
- DIRECTION OF TRAVEL

SIGN PANEL

SIZE (MIN)

SP-16 36" X 54"
SP-17 36" X 54"
SP-18 36" X 48"
SP-19 36" X 60"
C30 (CA) 30" X 30"
G20-2 48" X 24"

TRAFFIC HANDLING DETAILS
TRAFFIC CONTROL SYSTEM FOR HIGH OCCUPANCY VEHICLE LANES AT NON-INGRESS/EGRESS AREAS CASE I

NO SCALE

THD-5

CALCULATED-DESIGNED BY	CHECKED BY	REVISED BY	DATE REVISED	FUNCTIONAL SUPERVISOR
ALBERT K YU	JOCELYN C CHIANG	JC	7/10	JOHN YANG

STATE OF CALIFORNIA - DEPARTMENT OF TRANSPORTATION
Caltrans DTM

LAST REVISION 00-00-00 | DATE PLOTTED => 21-JUN-2011 | TIME PLOTTED => 09:54

Dist	COUNTY	ROUTE	POST MILES TOTAL PROJECT	SHEET No.	TOTAL SHEETS
07	LA	91,110, 710	R6.3, 9.9, R11.7, 13.0	8	30

Denis Katayama 2-23-11
REGISTERED CIVIL ENGINEER DATE

05-23-11
PLANS APPROVAL DATE

REGISTERED PROFESSIONAL ENGINEER D.S. KATAYAMA No. C50648 Exp. 9-30-11 CIVIL STATE OF CALIFORNIA

THE STATE OF CALIFORNIA OR ITS OFFICERS OR AGENTS SHALL NOT BE RESPONSIBLE FOR THE ACCURACY OR COMPLETENESS OF SCANNED COPIES OF THIS PLAN SHEET.

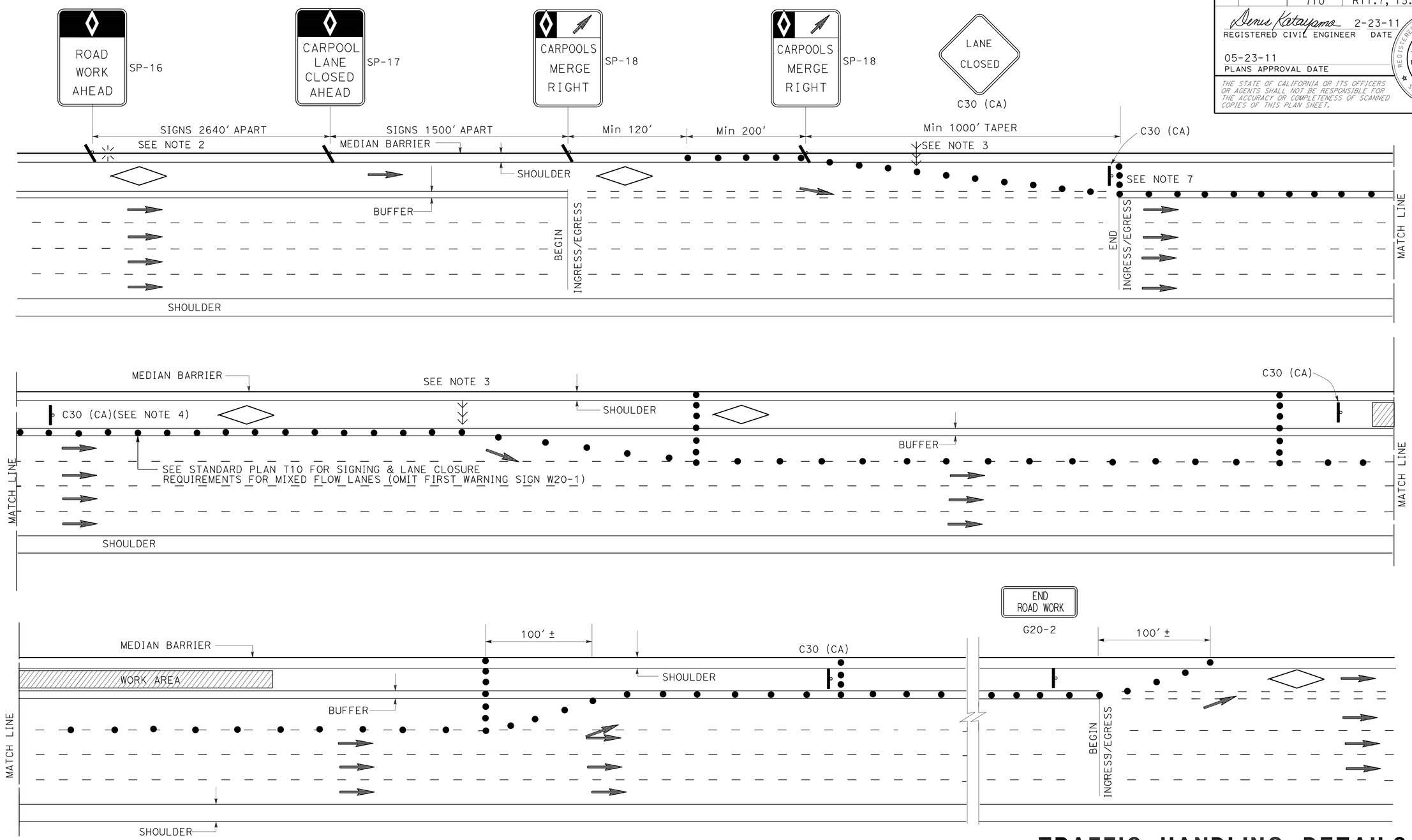

NOTES:

1. SEE CASE I FOR NOTES, LEGENDS AND ABBREVIATIONS FOR THIS SHEET.
2. CLOSURES OF ONE MIXED FLOW TRAFFIC LANE ADJACENT TO HOV LANE SHOWN. MULTIPLE MIXED FLOW LANE CLOSURES ARE SIMILAR.

TRAFFIC HANDLING DETAILS
TRAFFIC CONTROL SYSTEM FOR HIGH OCCUPANCY VEHICLE LANES AND ADJACENT FREEWAY LANES BETWEEN INGRESS/EGRESS AREAS
CASE II

NO SCALE

THD-6

REVISED BY	DATE REVISED
JC	7/10

CALCULATED-DESIGNED BY: ALBERT K YU
CHECKED BY: JOCELYN C CHIANG
FUNCTIONAL SUPERVISOR: JOHN YANG

STATE OF CALIFORNIA - DEPARTMENT OF TRANSPORTATION
Caltrans DTM

LAST REVISION 00-00-00 | DATE PLOTTED => 21-JUN-2011 | TIME PLOTTED => 09:55

Dist	COUNTY	ROUTE	POST MILES TOTAL PROJECT	SHEET No.	TOTAL SHEETS
07	LA	91,110, 710	R6.3, 9.9, R11.7, 13.0	9	30

Denis Katayama 2-23-11
REGISTERED CIVIL ENGINEER DATE

05-23-11
PLANS APPROVAL DATE

REGISTERED PROFESSIONAL ENGINEER D.S. KATAYAMA No. C50648 Exp. 9-30-11 CIVIL STATE OF CALIFORNIA

THE STATE OF CALIFORNIA OR ITS OFFICERS OR AGENTS SHALL NOT BE RESPONSIBLE FOR THE ACCURACY OR COMPLETENESS OF SCANNED COPIES OF THIS PLAN SHEET.

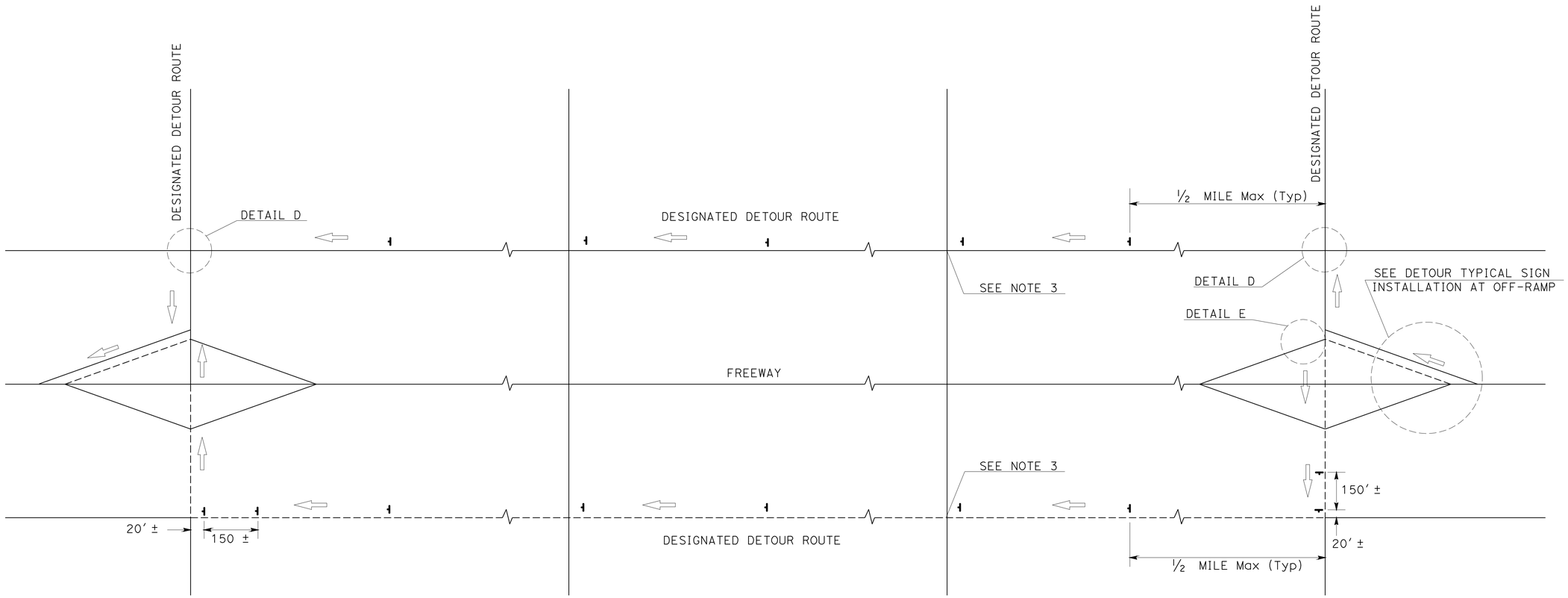

TYPICAL DETOUR SIGN INSTALLATION ALONG DESIGNATED DETOUR ROUTE

LEGEND

- TEMPORARY SIGN (SP-2)
- AND/OR DESIGNATED DETOUR ROUTE
- DIRECTION OF TRAVEL

NOTES:

1. SP-2 SIGNS SHALL NOT BE INSTALLED ON BARRICADES EXCEPT AS OTHERWISE SHOWN.
2. SIGN LOCATIONS ARE APPROXIMATE. EXACT LOCATIONS WILL BE DETERMINED BY THE ENGINEER.
3. SP-2 SIGNS SHALL BE POSTED AT SIGNALIZED INTERSECTIONS ALONG THE DESIGNATED DETOUR ROUTE OR ½ MILE MAXIMUM APART.

TRAFFIC HANDLING DETAILS

TRAFFIC CONTROL SYSTEM FOR DETOUR SIGN INSTALLATION ALONG DESIGNATED DETOUR ROUTE SHEET 1 OF 2

NO SCALE

THD-7

STATE OF CALIFORNIA - DEPARTMENT OF TRANSPORTATION
Caltrans DTM

FUNCTIONAL SUPERVISOR: JOHN YANG
CALCULATED-DESIGNED BY: JOCELYN C CHIANG
CHECKED BY: ALBERT K YU
REVISED BY: JC
DATE REVISED: 7/10

LAST REVISION 00-00-00 | DATE PLOTTED => 21-JUN-2011 | TIME PLOTTED => 09:55

Dist	COUNTY	ROUTE	POST MILES TOTAL PROJECT	SHEET No.	TOTAL SHEETS
07	LA	91,110, 710	R6.3, 9.9, R11.7, 13.0	10	30

Denis Katayama 2-23-11
REGISTERED CIVIL ENGINEER DATE

05-23-11
PLANS APPROVAL DATE

REGISTERED PROFESSIONAL ENGINEER D.S. KATAYAMA No. C50648 Exp. 9-30-11 CIVIL STATE OF CALIFORNIA

THE STATE OF CALIFORNIA OR ITS OFFICERS OR AGENTS SHALL NOT BE RESPONSIBLE FOR THE ACCURACY OR COMPLETENESS OF SCANNED COPIES OF THIS PLAN SHEET.

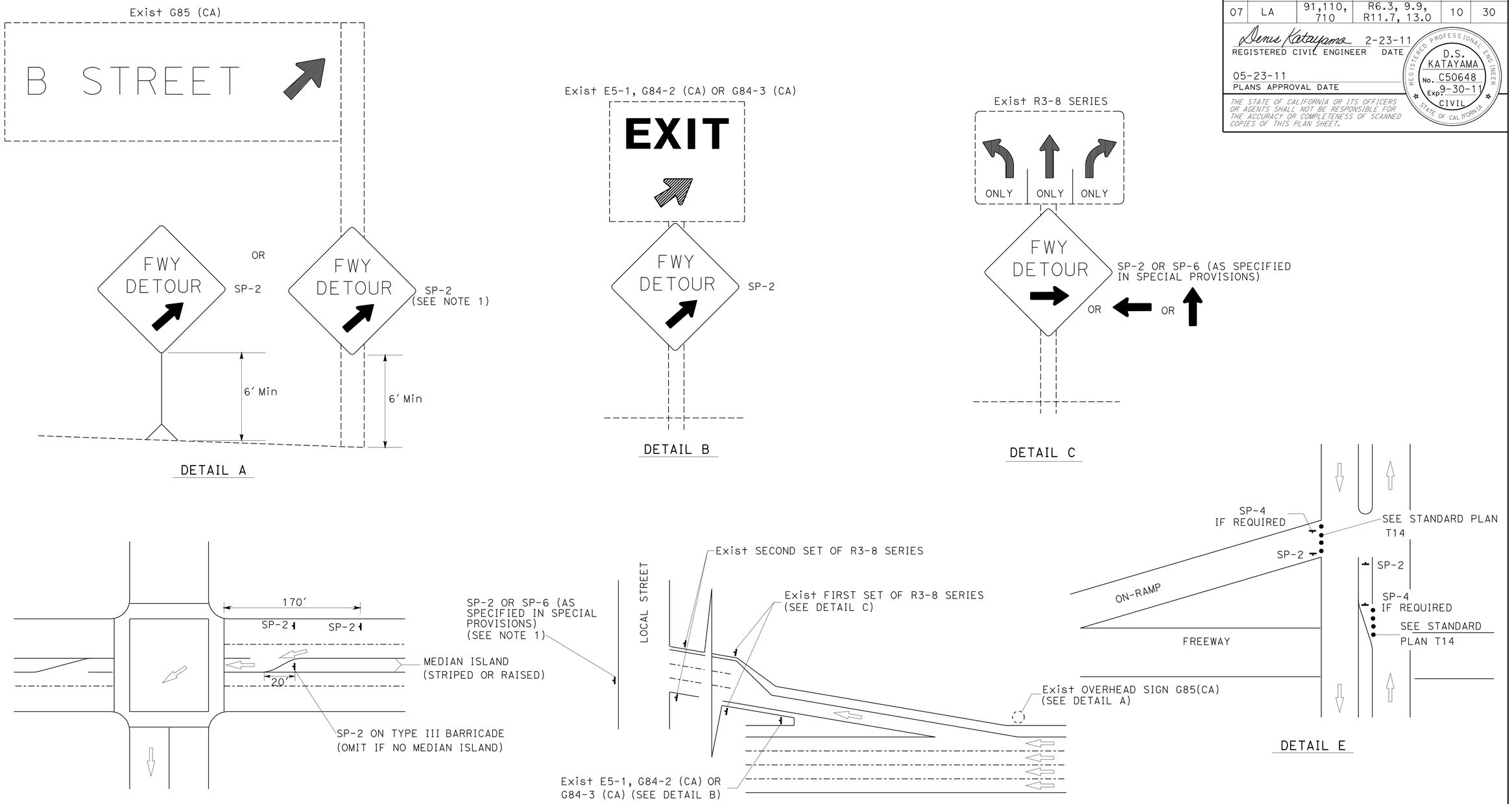

TYPICAL DETOUR SIGN INSTALLATION AT OFF-RAMP

NOTES:

1. TEMPORARY SIGNS MAY BE STRAPPED ON EXISTING ELECTROLIER, SIGNAL POSTS, OR SIGN POSTS.
2. OMIT DETAIL A AND DETAIL B FOR FULL FREEWAY CLOSURES.
3. SEE TRAFFIC HANDLING DETAILS PLAN-TRAFFIC CONTROL SYSTEM FOR RAMP CLOSURES, DETOUR SIGNS AND MISCELLANEOUS DETAILS SHEET 2 OF 2 FOR SP-6.

ABBREVIATIONS

(CA) CALIFORNIA CODE

LEGENDS

- TRAFFIC CONE
- TEMPORARY SIGN
- DIRECTION OF TRAVEL
- EXISTING OVERHEAD SIGN

TRAFFIC HANDLING DETAILS
TRAFFIC CONTROL SYSTEM FOR DETOUR SIGN INSTALLATION ALONG DESIGNATED DETOUR ROUTE
SHEET 2 OF 2

NO SCALE

THD-8

STATE OF CALIFORNIA - DEPARTMENT OF TRANSPORTATION
DTM
Caltrans®

FUNCTIONAL SUPERVISOR: JOHN YANG
CALCULATED-DESIGNED BY: ALBERT K YU
CHECKED BY: JOCELYN C CHIANG
REVISED BY: JC
DATE REVISED: 8/10

LAST REVISION: 00-00-00
DATE PLOTTED => 21-JUN-2011
TIME PLOTTED => 09:55

Dist	COUNTY	ROUTE	POST MILES TOTAL PROJECT	SHEET No.	TOTAL SHEETS
07	LA	91, 110, 710	R6.3, 9.9, R11.7, 13.0	11	30

REGISTERED CIVIL ENGINEER 3/14/11 DATE

05-23-11
PLANS APPROVAL DATE

REGISTERED PROFESSIONAL ENGINEER ESTHER M. KIM No. 48363 Exp. 6/30/12 CIVIL STATE OF CALIFORNIA

THE STATE OF CALIFORNIA OR ITS OFFICERS OR AGENTS SHALL NOT BE RESPONSIBLE FOR THE ACCURACY OR COMPLETENESS OF SCANNED COPIES OF THIS PLAN SHEET.

LEGEND:

- XX — PAVEMENT DELINEATION DETAIL NUMBER
- PM — PAVEMENT MARKING
- CH — 12" CHEVRON (WHITE)
- "E" — 4" SOLID (BLACK)
- CHANGE OF PAVEMENT DELINEATION DETAIL
- HOV DIAMOND SYMBOL
- TYPE G ONE WAY CLEAR RETROREFLECTIVE MARKERS
- TYPE H ONE WAY YELLOW RETROREFLECTIVE MARKERS
- DIRECTION OF TRAVEL

NOTES:

1. REMOVE CONFLICTING TRAFFIC STRIPES, PAVEMENT MARKING AND PAVEMENT MARKERS.
2. CHEVRON MARKING (30′ CENTER TO CENTER) SHALL BE APPLIED AT 45 DEGREES TO STRIPES.
3. EXACT LOCATION OF PAVEMENT MARKING WILL BE DETERMINED BY THE ENGINEER.
4. FOR DETAIL 13(Mod) INSTALL MARKERS BEFORE APPLYING STRIPE.

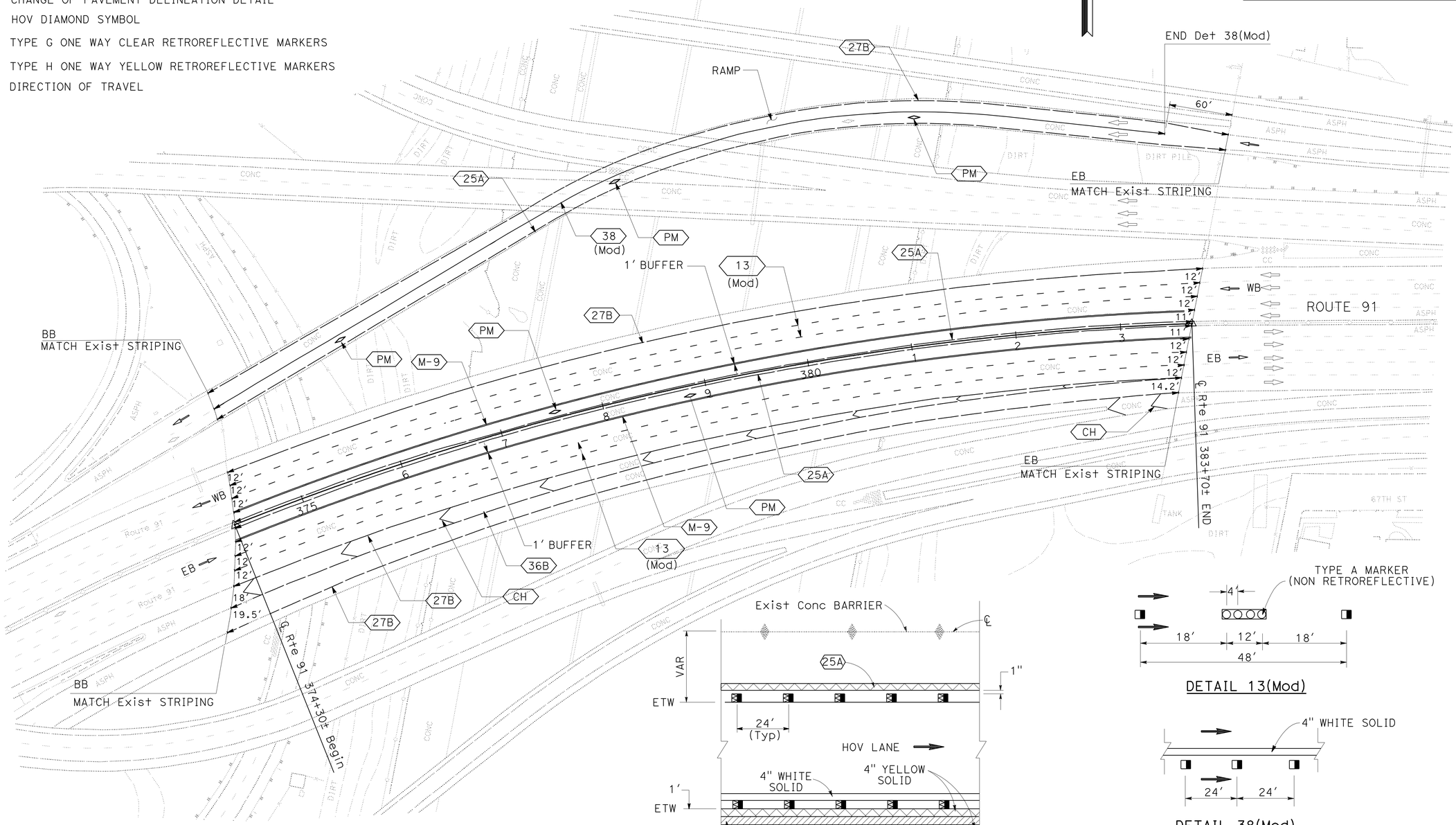

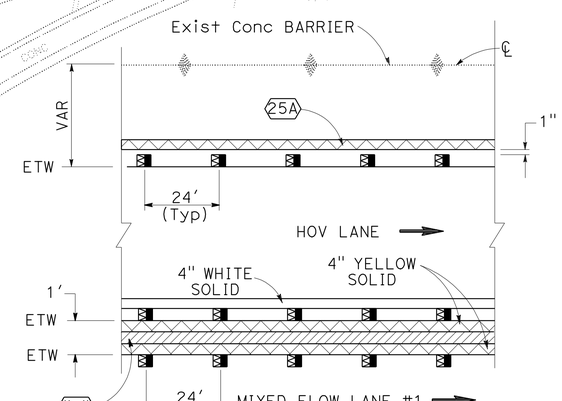

BUFFER STRIPING DETAIL (M-9)
BUFFER WITH 1 FT (Mod)

DETAIL 13(Mod)

DETAIL 38(Mod)

PAVEMENT DELINEATION PLAN

SCALE: 1" = 50′

PD-1

THIS PLAN ACCURATE FOR PAVEMENT DELINEATION ONLY.

STATE OF CALIFORNIA - DEPARTMENT OF TRANSPORTATION
Caltrans®
TRAFFIC DESIGN

FUNCTIONAL SUPERVISOR: MOHAMMED CHOWDHURY
CALCULATED-DESIGNED BY: SULIASTI SUTANTO
CHECKED BY: ESTHER M. KIM
REVISED BY
DATE REVISED

LAST REVISION 00-00-00
DATE PLOTTED => 21-JUN-2011
TIME PLOTTED => 09:55

Dist	COUNTY	ROUTE	POST MILES TOTAL PROJECT	SHEET No.	TOTAL SHEETS
07	LA	91, 110, 710	R6.3, 9.9, R11.7, 13.0	12	30

REGISTERED CIVIL ENGINEER 3/14/11 DATE

05-23-11
PLANS APPROVAL DATE

REGISTERED PROFESSIONAL ENGINEER ESTHER M. KIM No. 48363 Exp. 6/30/12 CIVIL STATE OF CALIFORNIA

THE STATE OF CALIFORNIA OR ITS OFFICERS OR AGENTS SHALL NOT BE RESPONSIBLE FOR THE ACCURACY OR COMPLETENESS OF SCANNED COPIES OF THIS PLAN SHEET.

PAVEMENT DELINEATION QUANTITIES

LOCATION	SHEET No.	LOCATION (ROUTE 91)	REMOVE				THERMOPLASTIC TRAFFIC STRIPE								PAVEMENT MARKER			THERMOPLASTIC PAVEMENT MARKING	
			Det 25A	Det M-9			Det 13(Mod)	Det 36B	Det "E"	Det M-9		Det 25A	Det 27B	Det 38(Mod)	RETRO-REFLECTIVE		NON-REFLECTIVE		
			YELLOW THERMOPLASTIC TRAFFIC STRIPE (HAZARDOUS WASTE)		THERMOPLASTIC TRAFFIC STRIPE AND PAVEMENT MARKING (N)	PAVEMENT MARKER (N)	4" WHITE (BROKEN 36-12)	8" WHITE	4" BLACK	4" YELLOW	4" WHITE	4" YELLOW	4" WHITE		TYPE G	TYPE H	TYPE A	CHEVRON	SYMBOL
			LF	LF	SQFT	EA	LF	LF	LF	LF	LF	LF	LF	LF	EA	EA	EA	SQFT	SQFT
1	PD-1	374+30 TO 383+70	1,880	3,760	3,000	515	3,760	940	1,880	3,760	1,880	1,880	2,820		122	235	320	268	22
2	PD-1	RAMP	985		650	82						985	985	925	42	42			33
TOTAL			6,625		3,650	597	3,760	940	15,115						441		320	323	

(N) NOT A SEPARATE PAY ITEM, FOR INFORMATION ONLY.

PAVEMENT DELINEATION QUANTITIES

PDQ-1

STATE OF CALIFORNIA - DEPARTMENT OF TRANSPORTATION
Caltrans
TRAFFIC DESIGN

FUNCTIONAL SUPERVISOR: MOHAMMED CHOWDHURY
CALCULATED-DESIGNED BY: SULIASTI SUTANTO
CHECKED BY: ESTHER M. KIM
REVISED BY
DATE REVISED

LAST REVISION 00-00-00
DATE PLOTTED => 21-JUN-2011
TIME PLOTTED => 09:55

DIST	COUNTY	ROUTE	POST MILES TOTAL PROJECT	SHEET NO.	TOTAL SHEETS
07	LA	91, 110, 710	R6.3, 9.9, R11.7, 13.0	13	30

REGISTERED CIVIL ENGINEER

June 6, 2008
PLANS APPROVAL DATE

REGISTERED PROFESSIONAL ENGINEER Donald E. Howe No. C46402 Exp. 3-31-09 CIVIL STATE OF CALIFORNIA

The State of California or its officers or agents shall not be responsible for the accuracy or completeness of electronic copies of this plan sheet.

To accompany plans dated 05-23-11

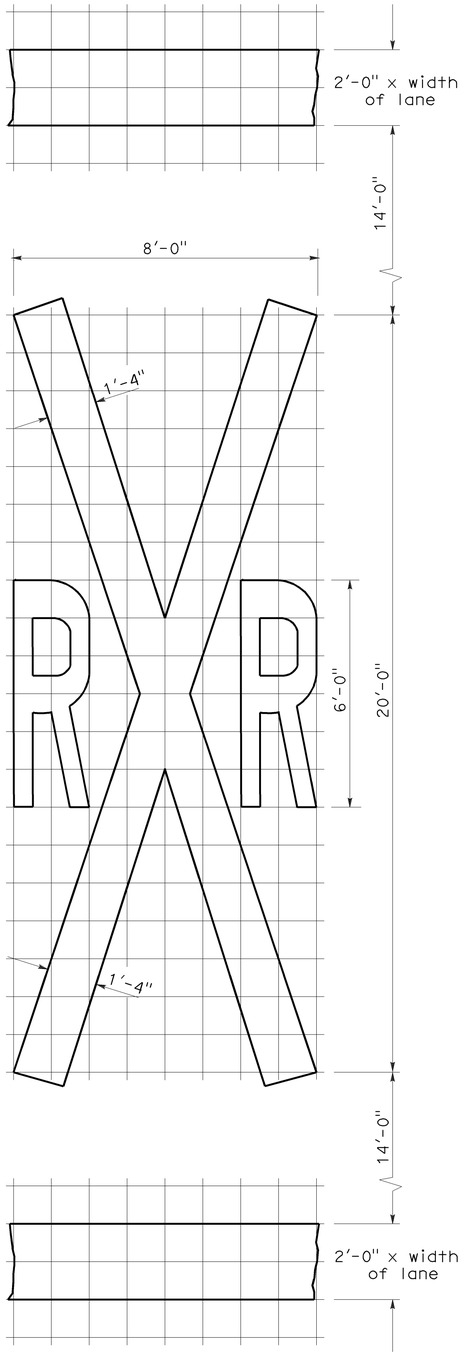

RAILROAD CROSSING SYMBOL

✳70 sq ft DOES NOT INCLUDE THE 2'-0" x VARIABLE WIDTH TRANSVERSE LINES.

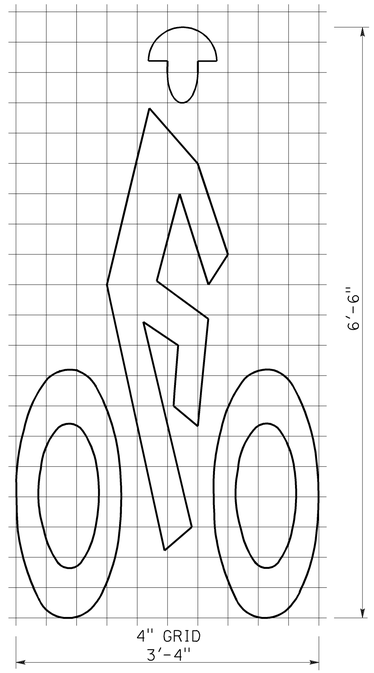

BIKE LANE SYMBOL

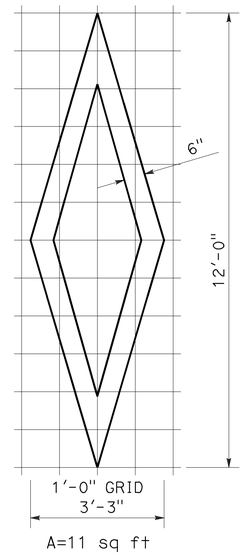

DIAMOND SYMBOL

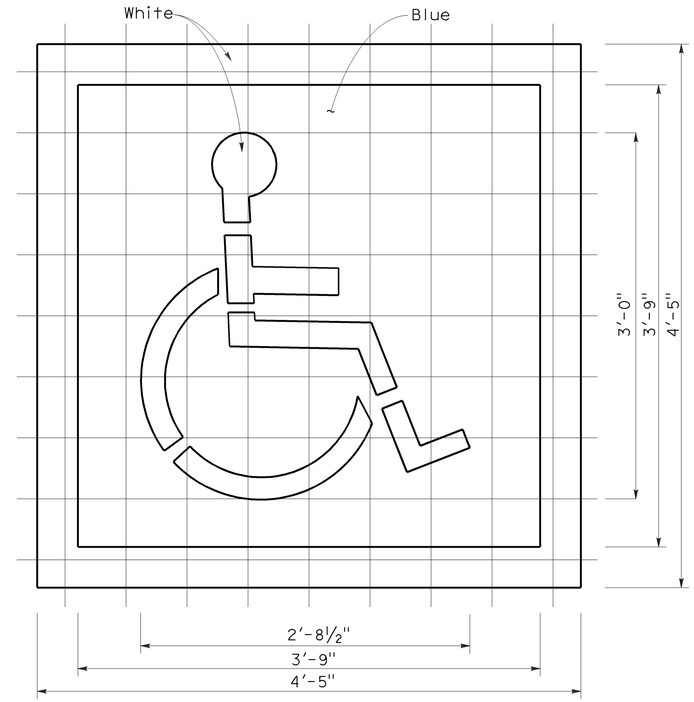

INTERNATIONAL SYMBOL OF ACCESSIBILITY MARKING

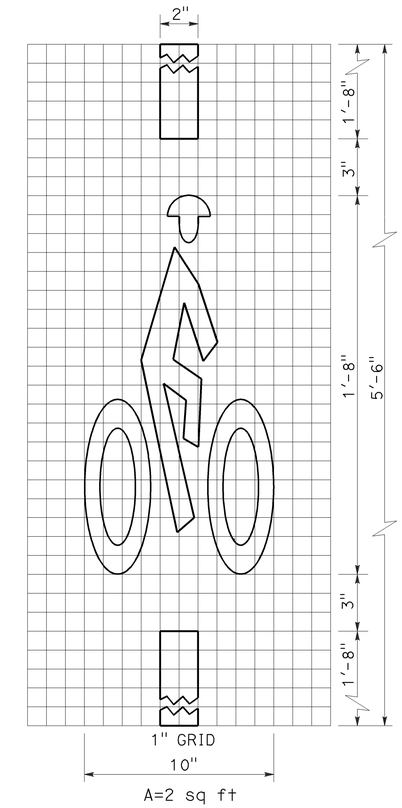

BICYCLE LOOP DETECTOR SYMBOL

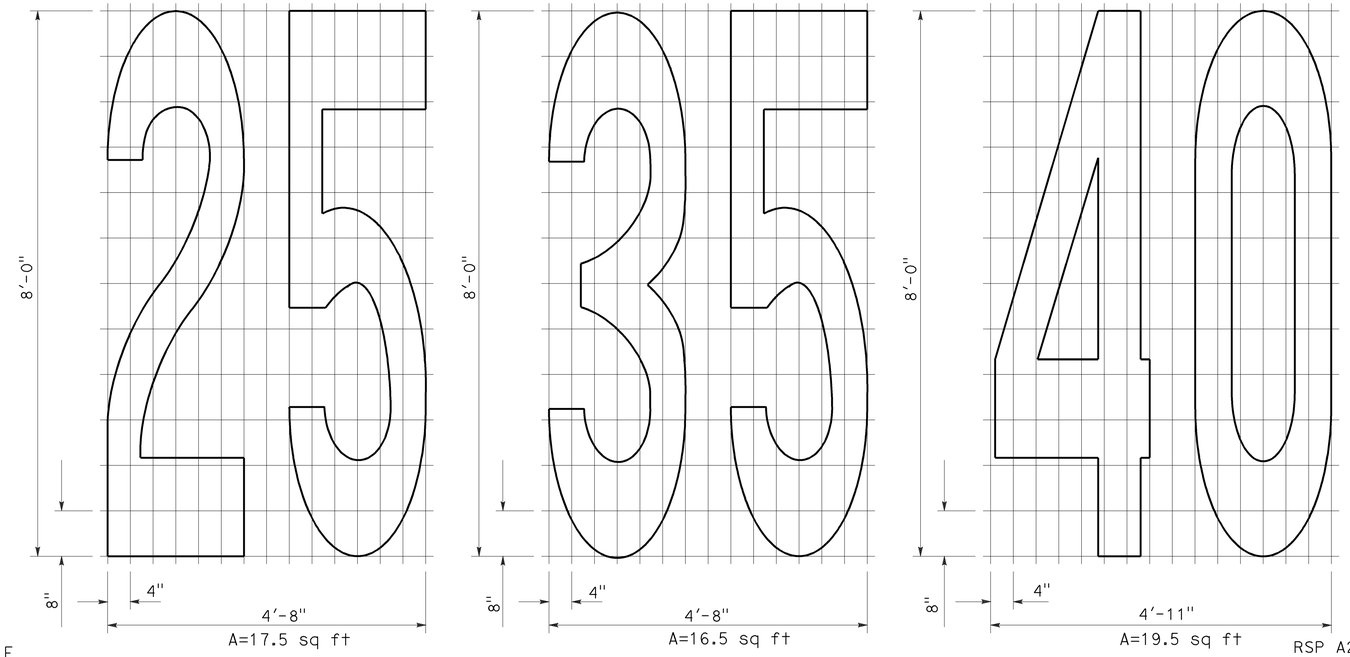

NUMERALS

NOTE:

1. Minor variations in dimensions may be accepted by the Engineer.

STATE OF CALIFORNIA
DEPARTMENT OF TRANSPORTATION

PAVEMENT MARKINGS SYMBOLS AND NUMERALS

NO SCALE

RSP A24C DATED JUNE 6, 2008 SUPERSEDES STANDARD PLAN A24C DATED MAY 1, 2006 - PAGE 11 OF THE STANDARD PLANS BOOK DATED MAY 2006.

REVISED STANDARD PLAN RSP A24C

2006 REVISED STANDARD PLAN RSP A24C

5-27-08

DIST	COUNTY	ROUTE	POST MILES TOTAL PROJECT	SHEET NO.	TOTAL SHEETS
07	LA	91, 110, 710	R6.3, 9.9, R11.7, 13.0	14	30

REGISTERED CIVIL ENGINEER

October 5, 2007
PLANS APPROVAL DATE

REGISTERED PROFESSIONAL ENGINEER Efthymios Delis No. C51434 Exp. 6-30-08 CIVIL STATE OF CALIFORNIA

The State of California or its officers or agents shall not be responsible for the accuracy or completeness of electronic copies of this plan sheet.

To accompany plans dated 05-23-11

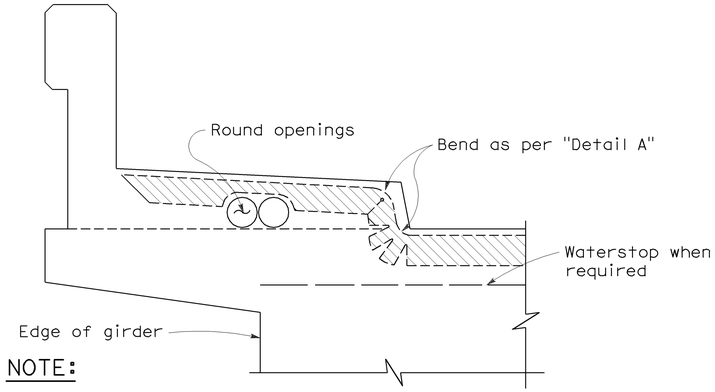

NOTE:

Type "B" seal shown. Type "A" seals to comform to the general path of seal shown, cuts for bending not required. Bend Type "A" seals 3" up into curb or barrier rail on only the low end of the seal.

CONCRETE BARRIER AND SIDEWALK

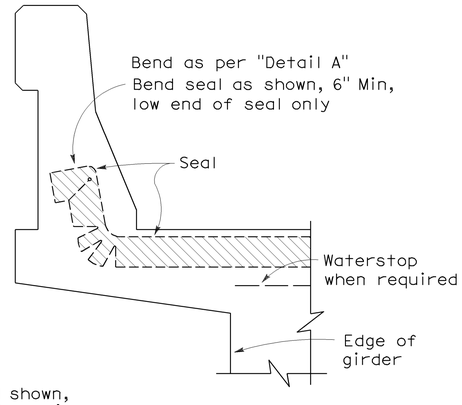

CONCRETE BARRIER

JOINT SEALS DETAILS

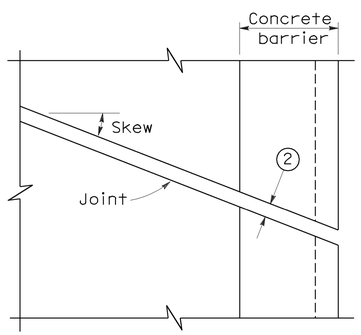

PLAN OF JOINT (SKEW ≤ 20°)

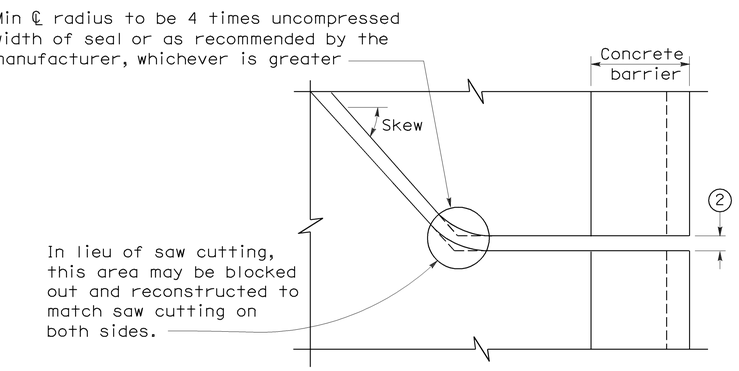

PLAN OF JOINT (SKEW > 20°)

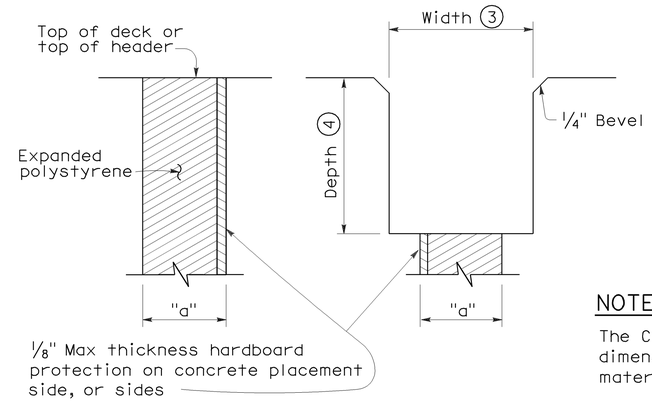

FORMING DETAIL SAWCUT DETAIL

NOTE:

The Contractor shall verify all controlling field dimensions before ordering or fabricatiing any material.

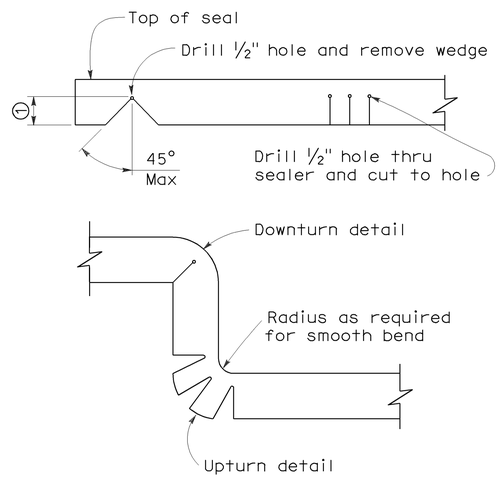

DETAIL A

NOTES:

1. Make smooth cuts from the bottom of seal to 1½" clear of top leaving at least one complete cell between the top of the cut and top of the seal. When necessary cut back of seal to clear conduit and round openings.
2. Opening in barrier to match width of sawn deck joint.
3. Sawcut groove widths shall be as ordered by the Engineer.
4. Depth of sawcut: Type A - Depth to be 2" minimum.
   Type B - Depth to be equal to or greater than the depth of seal measured along the contact surface, when compressed to minimum width position (W_2) plus dimensions shown.
5. MR (movement rating) as shown on other plan sheets.
6. Other depths must be approved by the Engineer.

DIMENSIONS "a" OF JOINT REQUIRED

Movement Rating (MR) 5	Bridge Type	"a" Dimension Deck Concrete Placed		
		Winter	Fall-Spring	Summer
2"	All except CIP/PS	1½"	1¼"	¾"
	CIP/PS	1¼"	1"	½"
1½"	All except CIP/PS	1¼"	1"	½"
	CIP/PS	1"	¾"	½"
1"	All except CIP/PS	1"	¾"	½"
	CIP/PS	¾"	½"	½"
½"	All except CIP/PS	¾"	¾"	½"
	CIP/PS	½"	½"	½"

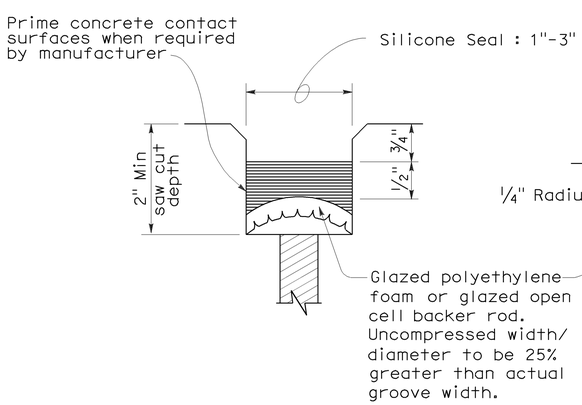

TYPE A SEAL

Movement rating : Silicone = 1" Max

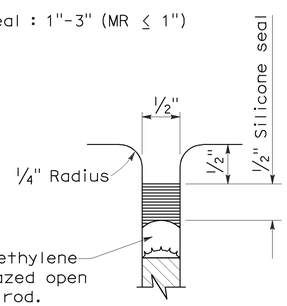

TYPE AL SEAL

Longitudinal joints only

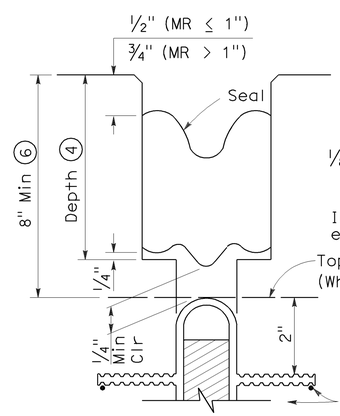

TYPE B JOINT SEAL
IN MINIMUM WIDTH POSITION (W_2)

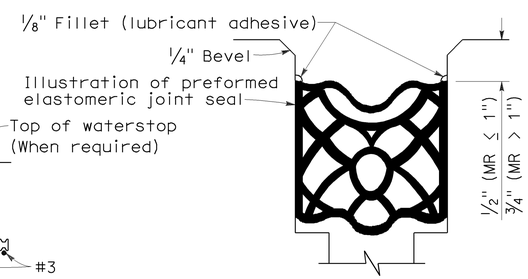

TYPE B SEAL

Movement Rating ≤ 2"

STATE OF CALIFORNIA
DEPARTMENT OF TRANSPORTATION

JOINT SEALS (MAXIMUM MOVEMENT RATING = 2")

NO SCALE

RSP B6-21 DATED OCTOBER 5, 2007 SUPERSEDES STANDARD PLAN B6-21 DATED MAY 1, 2006 - PAGE 258 OF THE STANDARD PLANS BOOK DATED MAY 2006.

REVISED STANDARD PLAN RSP B6-21

2006 REVISED STANDARD PLAN RSP B6-21

5-8-07

DIST	COUNTY	ROUTE	POST MILES TOTAL PROJECT	SHEET NO.	TOTAL SHEETS
07	LA	91, 110, 710	R6.3, 9.9, R11.7, 13.0	15	30

Randell D. Hiatt
REGISTERED CIVIL ENGINEER

June 6, 2008
PLANS APPROVAL DATE

REGISTERED PROFESSIONAL ENGINEER
Randell D. Hiatt
No. C50200
Exp. 6-30-09
CIVIL
STATE OF CALIFORNIA

The State of California or its officers or agents shall not be responsible for the accuracy or completeness of electronic copies of this plan sheet.

To accompany plans dated 05-23-11

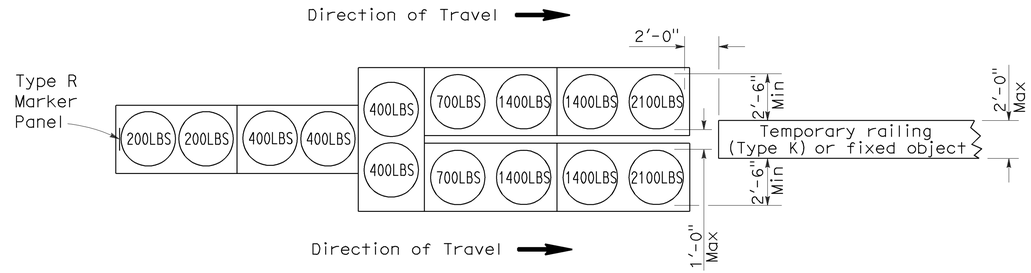

ARRAY 'TU14'

Approach speed 45 mph or more

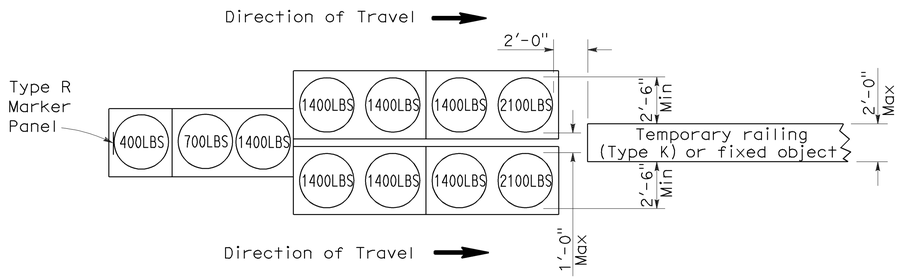

ARRAY 'TU11'

Approach speed less than 45 mph

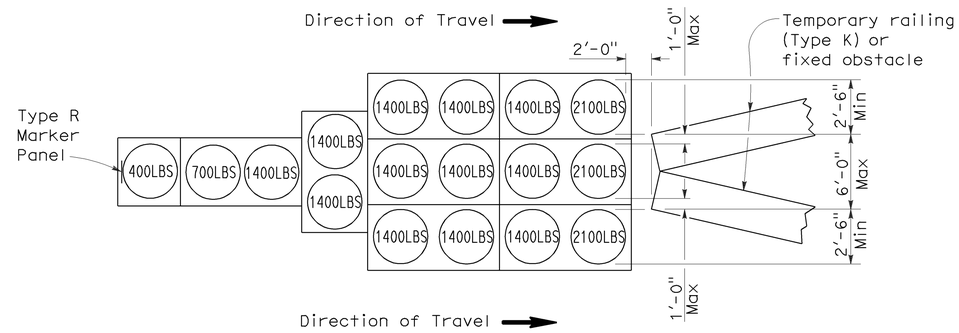

ARRAY 'TU17'

Approach speed less than 45 mph

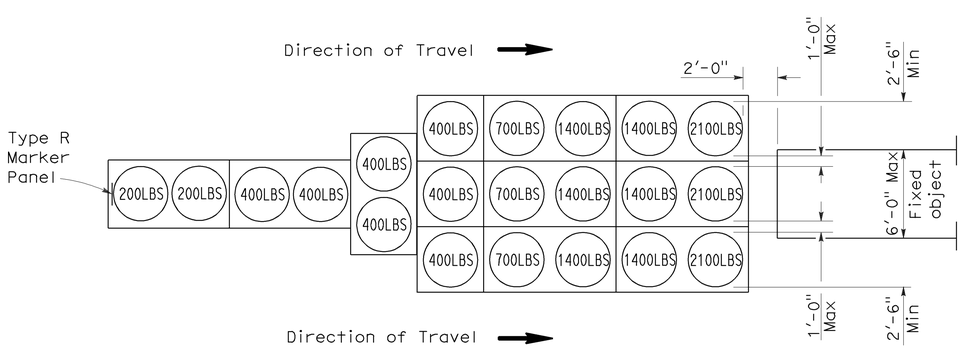

ARRAY 'TU21'

Approach speed 45 mph or more

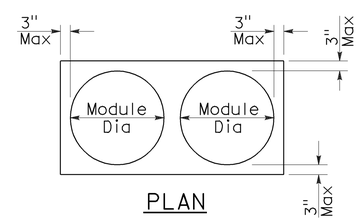

PLAN

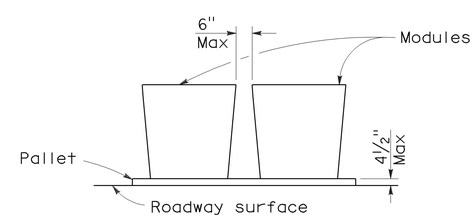

ELEVATION

CRASH CUSHION PALLET DETAIL

See Note 7

NOTES:

1. (XXX) Indicates sand filled module location and weight of sand in pounds for each module. Module spacing is based on the greater diameter of the module.
2. All sand weights are nominal.
3. Temporary crash cushion arrays shall not encroach on the traveled way.
4. Place the top of Type R marker panel 1" below the module lid.
5. Refer to Standard Plan A73B for marker details.
6. Approach speeds indicated conform to NCHRP 350 Report criteria.
7. Use of pallets is optional.

STATE OF CALIFORNIA
DEPARTMENT OF TRANSPORTATION

TEMPORARY CRASH CUSHION, SAND FILLED (UNIDIRECTIONAL)

NO SCALE

RSP T1A DATED JUNE 6, 2008 SUPERSEDES STANDARD PLAN T1A
DATED MAY 1, 2006 - PAGE 211 OF THE STANDARD PLANS BOOK DATED MAY 2006.

REVISED STANDARD PLAN RSP T1A

2006 REVISED STANDARD PLAN RSP T1A

DIST	COUNTY	ROUTE	POST MILES TOTAL PROJECT	SHEET NO.	TOTAL SHEETS
07	LA	91, 110, 710	R6.3, 9.9, R11.7, 13.0	16	30

Randell D. Hiatt
REGISTERED CIVIL ENGINEER

June 6, 2008
PLANS APPROVAL DATE

REGISTERED PROFESSIONAL ENGINEER
Randell D. Hiatt
No. C50200
Exp. 6-30-09
CIVIL
STATE OF CALIFORNIA

The State of California or its officers or agents shall not be responsible for the accuracy or completeness of electronic copies of this plan sheet.

To accompany plans dated 05-23-11

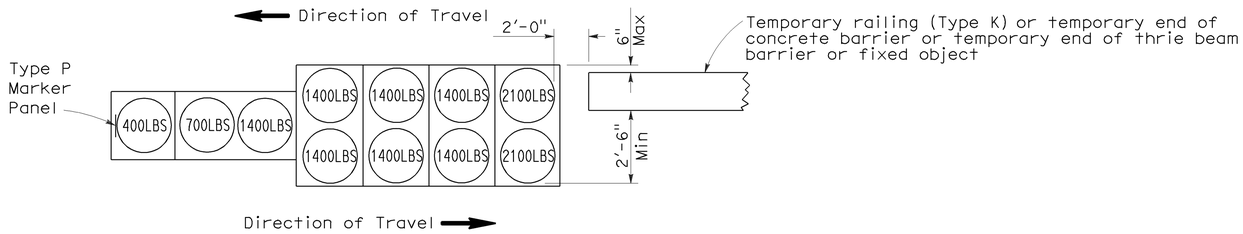

ARRAY 'TB11'

Approach speed less than 45 mph

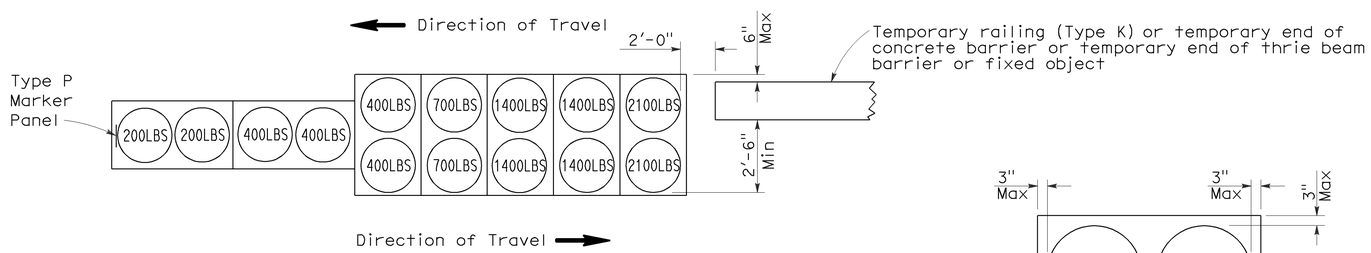

ARRAY 'TB14'

Approach speed 45 mph or more

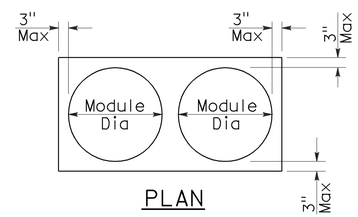

PLAN

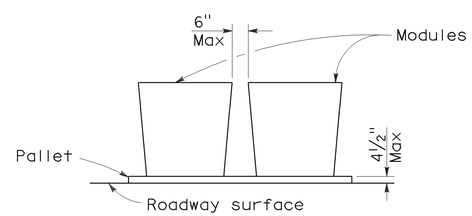

ELEVATION

CRASH CUSHION PALLET DETAIL

See Note 7

NOTES:

1. (XXX) Indicates sand filled module location and weight of sand in pounds for each module. Module spacing is based on the greater diameter of the module.
2. All sand weights are nominal.
3. Temporary crash cushion arrays shall not encroach on the traveled way.
4. Place the Type P marker panel so that the bottom of the panel rests upon the pallet.
5. Refer to Standard Plan A73B for marker details.
6. Approach speeds indicated conform to NCHRP 350 Report criteria.
7. Use of pallets is optional.

STATE OF CALIFORNIA
DEPARTMENT OF TRANSPORTATION

TEMPORARY CRASH CUSHION, SAND FILLED (BIDIRECTIONAL)

NO SCALE

RSP T1B DATED JUNE 6, 2008 SUPERSEDES STANDARD PLAN T1B
DATED MAY 1, 2006 - PAGE 212 OF THE STANDARD PLANS BOOK DATED MAY 2006.

REVISED STANDARD PLAN RSP T1B

2006 REVISED STANDARD PLAN RSP T1B

5-15-08

DIST	COUNTY	ROUTE	POST MILES TOTAL PROJECT	SHEET NO.	TOTAL SHEETS
07	LA	91, 110, 710	R6.3, 9.9, R11.7, 13.0	17	30

Randell D. Hiatt
REGISTERED CIVIL ENGINEER

June 6, 2008
PLANS APPROVAL DATE

REGISTERED PROFESSIONAL ENGINEER
Randell D. Hiatt
No. C50200
Exp. 6-30-09
CIVIL
STATE OF CALIFORNIA

The State of California or its officers or agents shall not be responsible for the accuracy or completeness of electronic copies of this plan sheet.

To accompany plans dated 05-23-11

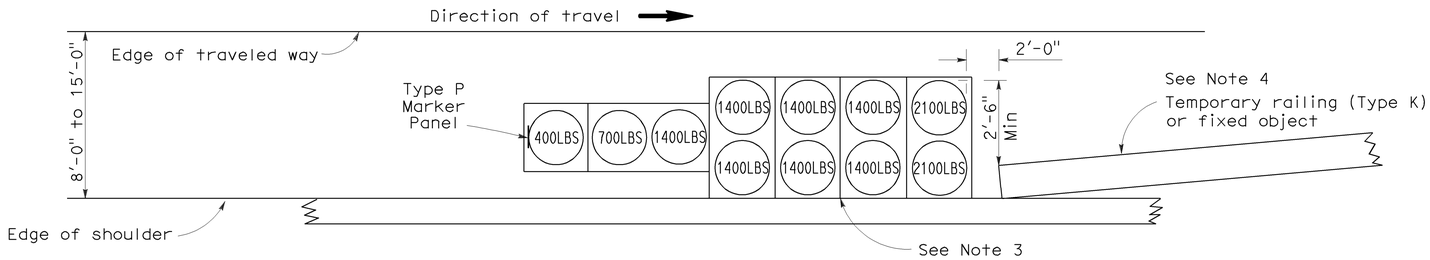

ARRAY 'TS11'

Approach speed less than 45 mph
See Note 9

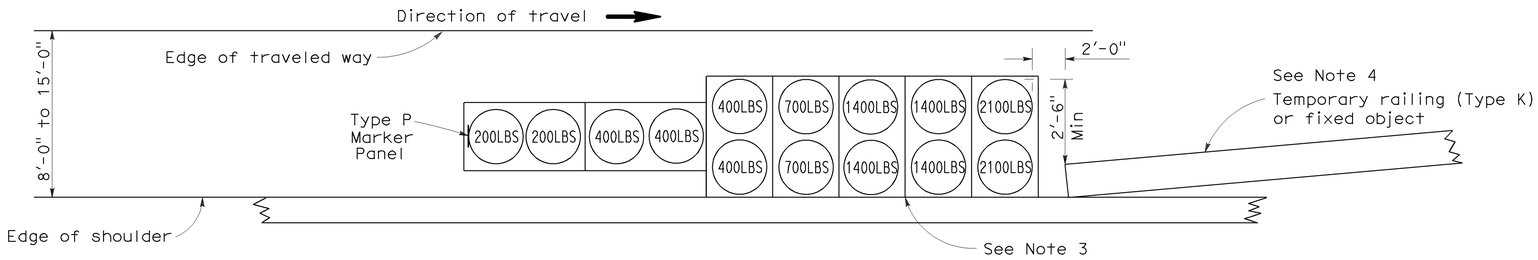

ARRAY 'TS14'

Approach speed 45 mph or more
See Note 9

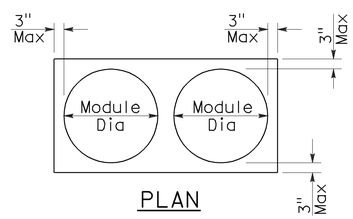

PLAN

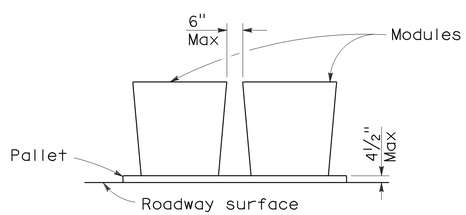

ELEVATION

CRASH CUSHION PALLET DETAIL

See Note 11

NOTES:

1. (XXX) Indicates sand filled module location and weight of sand in pounds for each module. Module spacing is based on the greater diameter of the module.
2. All sand weights are nominal.
3. The temporary crash cushion arrays shown on this plan shall be used only in locations where there will be traffic on one side of the temporary crash cushion array.
4. If the fixed object or approach end of the temporary railing is less than 15'-0" from the edge of traveled way, a temporary crash cushion is required in a construction or work zone.
5. Temporary crash cushion arrays shall not encroach on the traveled way.
6. Arrays for median shoulders shall conform to details shown on this plan for outside shoulders.
7. Place the Type P marker panel so that the bottom of the panel rests upon the pallet and faces traffic.
8. Refer to Standard Plan A73B for marker details.
9. For shoulder widths less than 8'-0", appropriate approved crash cushion protection, other than sand filled modules, shall be provided at fixed objects and at approach ends of temporary railing. The specific type of crash cushion shall be as shown on the project plans or as specified in the Special Provisions, or if not shown on the project plans or specified in the Special Provisions, shall be as approved by the Engineer.
10. Approach speeds indicated conform to NCHRP 350 Report criteria.
11. Use of pallets is optional.

STATE OF CALIFORNIA
DEPARTMENT OF TRANSPORTATION

TEMPORARY CRASH CUSHION, SAND FILLED (SHOULDER INSTALLATIONS)

NO SCALE

RSP T2 DATED JUNE 6, 2008 SUPERSEDES STANDARD PLAN T2
DATED MAY 1, 2006 - PAGE 213 OF THE STANDARD PLANS BOOK DATED MAY 2006.

REVISED STANDARD PLAN RSP T2

2006 REVISED STANDARD PLAN RSP T2

5-15-08

Dist	COUNTY	ROUTE	POST MILES TOTAL PROJECT	SHEET No.	TOTAL SHEETS
07	LA	91, 110, 710	R6.3, 9.9, R11.7, 13.0	18	30

Randell D. Hiatt
REGISTERED CIVIL ENGINEER

May 20, 2011
PLANS APPROVAL DATE

REGISTERED PROFESSIONAL ENGINEER
Randell D. Hiatt
No. C50200
Exp. 6-30-11
CIVIL
STATE OF CALIFORNIA

The State of California or its officers or agents shall not be responsible for the accuracy or completeness of electronic copies of this plan sheet.

To accompany plans dated 05-23-11

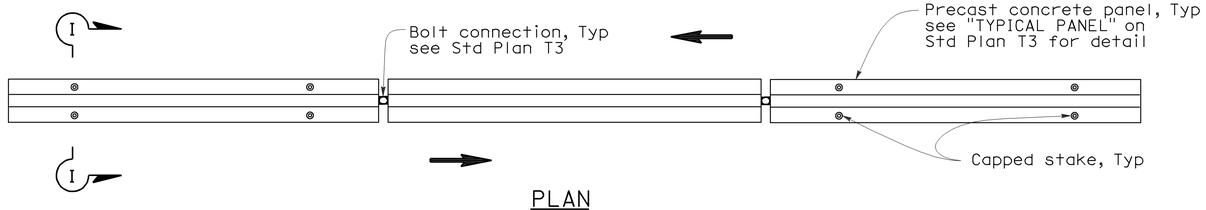

PLAN

RAILING STAKING CONFIGURATION FOR TWO-WAY TRAFFIC

See Note 1

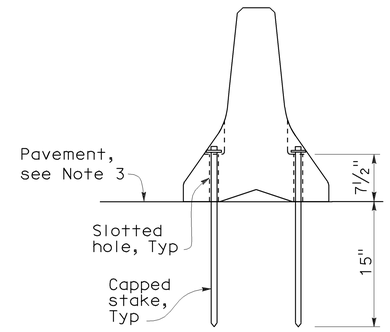

SECTION I-I

NOTES:

1. Where Type K Temporary Railing is placed as a temporary or long term barrier in two-way traffic on highways with less than 24" from the edge of traveled way, use four capped stakes per every other panel with end panels staked.
2. Where Type K Temporary Railing is placed 3" to 24" from the edge of an excavation on highways, use two capped stakes per panel along the traffic side.
3. Staked Type K Temporary Railing must be supported by at least 4" thick concrete, hot mix asphalt or existing asphalt concrete pavement.
4. The minimum yield strength for the washer must be 60,000 psi.
5. Direction of adjacent traffic indicated by ⟹.

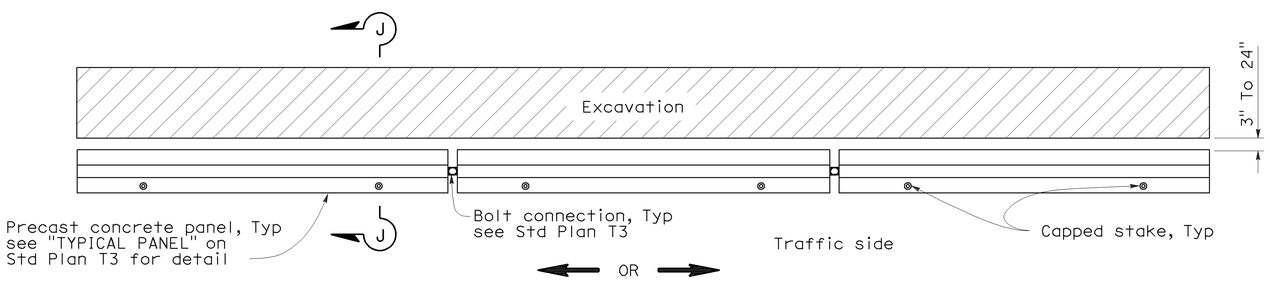

PLAN

RAILING STAKING CONFIGURATION ADJACENT TO AN EXCAVATION

See Note 2

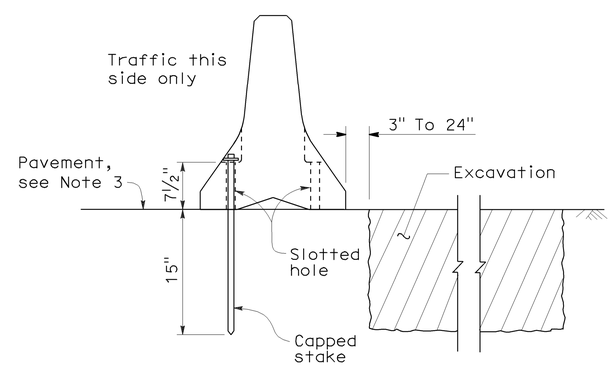

SECTION J-J

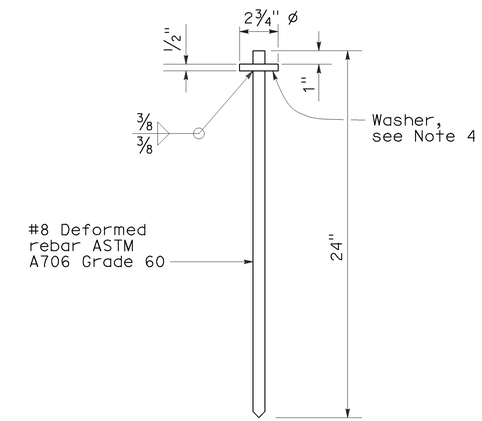

CAPPED STAKE DETAIL

STATE OF CALIFORNIA
DEPARTMENT OF TRANSPORTATION

TEMPORARY RAILING (TYPE K)

NO SCALE

NSP T3A DATED MAY 20, 2011 SUPPLEMENTS THE STANDARD PLANS BOOK DATED MAY 2006.

NEW STANDARD PLAN NSP T3A

2006 NEW STANDARD PLAN NSP T3A

DIST	COUNTY	ROUTE	POST MILES TOTAL PROJECT	SHEET NO.	TOTAL SHEETS
07	LA	91, 110, 710	R6.3, 9.9, R11.7, 13.0	19	30

LICENSED LANDSCAPE ARCHITECT

August 15, 2008
PLANS Approval DATE

The State of California or its officers or agents shall not be responsible for the accuracy or completeness of electronic copies of this plan sheet.

LICENSED LANDSCAPE ARCHITECT Robert B. Schott 3635 Signature 11-04-08 Renewal Date 08-11-08 Date STATE OF CALIFORNIA

To accompany plans dated 05-23-11

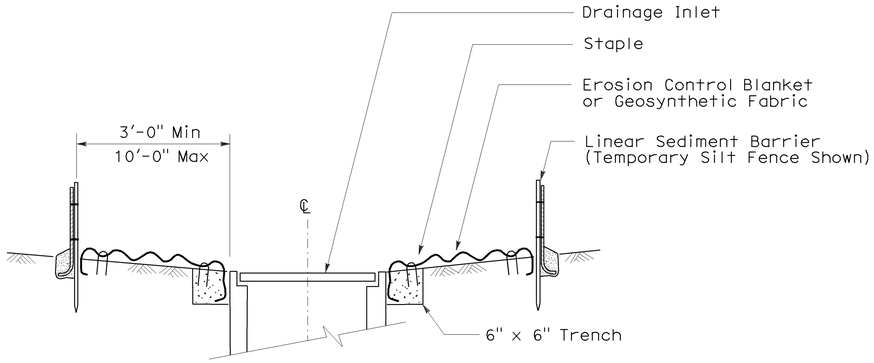

SECTION A-A

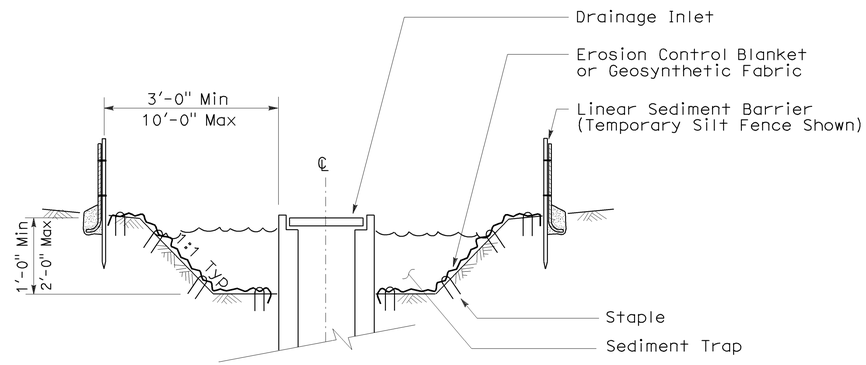

SECTION B-B

NOTES:

1. See Standard Plan T51 for Temporary Silt Fence.
2. Dimensions may vary to fit field conditions.

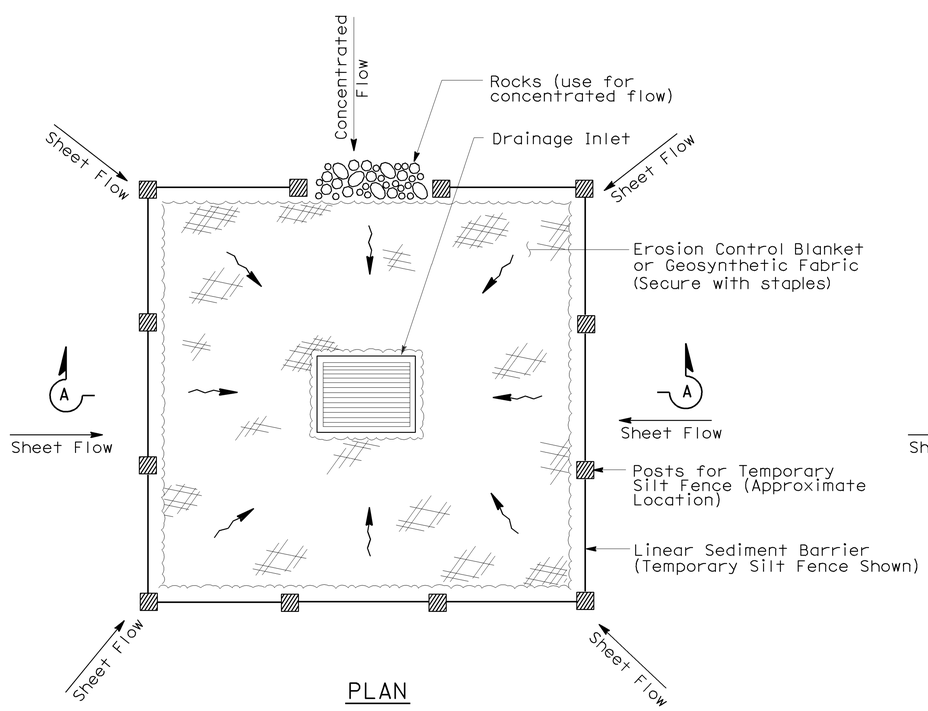

PLAN

TEMPORARY DRAINAGE INLET PROTECTION (TYPE 1)

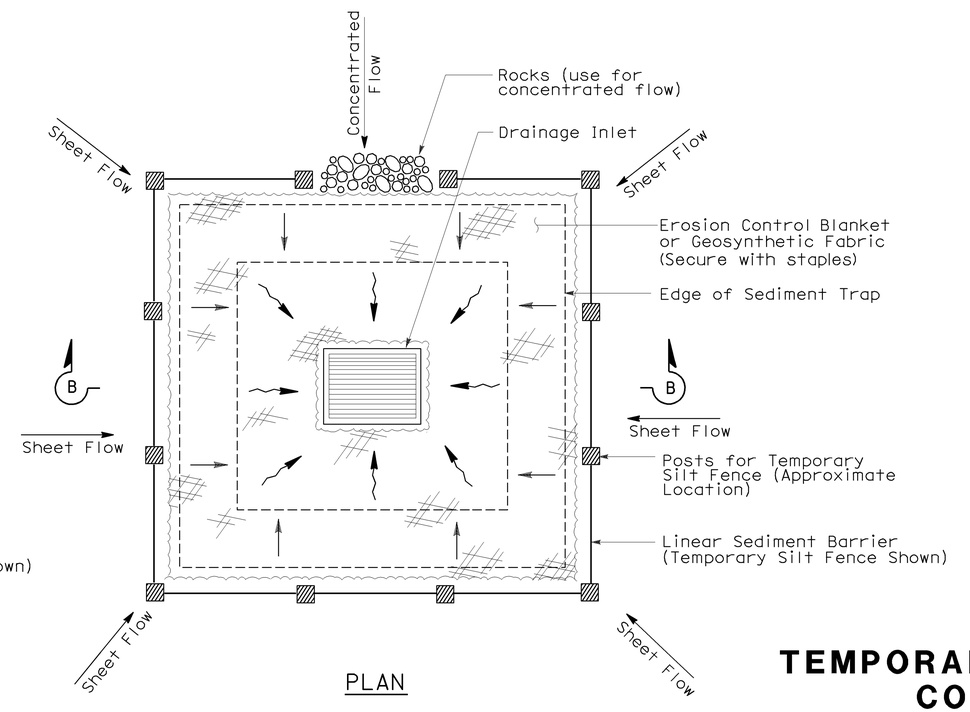

PLAN

TEMPORARY DRAINAGE INLET PROTECTION (TYPE 2) (EXCAVATED SEDIMENT TRAP)

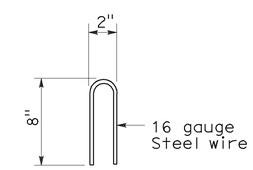

STAPLE DETAIL

STATE OF CALIFORNIA
DEPARTMENT OF TRANSPORTATION

TEMPORARY WATER POLLUTION CONTROL DETAILS (TEMPORARY DRAINAGE INLET PROTECTION)

NO SCALE

Nsp t61 dated august 15, 2008 supplements the standard plans book dated may 2006.

NEW STANDARD PLAN NSP T61

2006 NEW STANDARD PLAN NSP T61

7-11-08

DIST	COUNTY	ROUTE	POST MILES TOTAL PROJECT	SHEET NO.	TOTAL SHEETS
07	LA	91, 110, 710	R6.3, 9.9, R11.7, 13.0	20	30

LICENSED LANDSCAPE ARCHITECT

August 15, 2008
PLANS APPROVAL DATE

The State of California or its officers or agents shall not be responsible for the accuracy or completeness of electronic copies of this plan sheet.

LICENSED LANDSCAPE ARCHITECT Robert B. Schott 3635 Signature 11-04-08 Renewal Date 08-11-08 Date STATE OF CALIFORNIA

To accompany plans dated 05-23-11

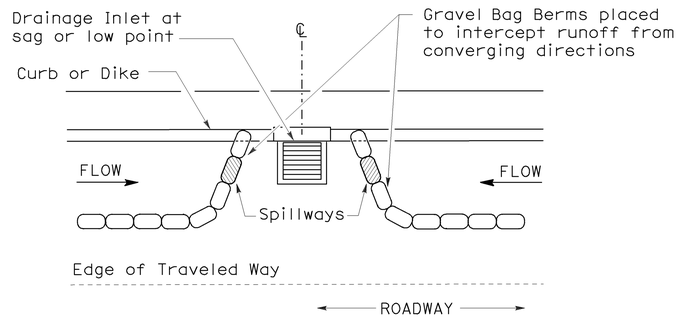

PLAN

CONFIGURATION FOR SAG POINT INLET (GRAVEL BAG BERM)

GRAVEL BAG BERM (TYPE 3A) SPACING TABLE

SLOPE OF ROADWAY (PERCENT)	1 to 3.9	4 to 5.9	6 to 7.9	8 to 10	10+
INTERVAL BETWEEN BERM	100′	75′	50′	25′	12′

For slope of less than 1%, install barriers only if erosion/sediment is prevalent

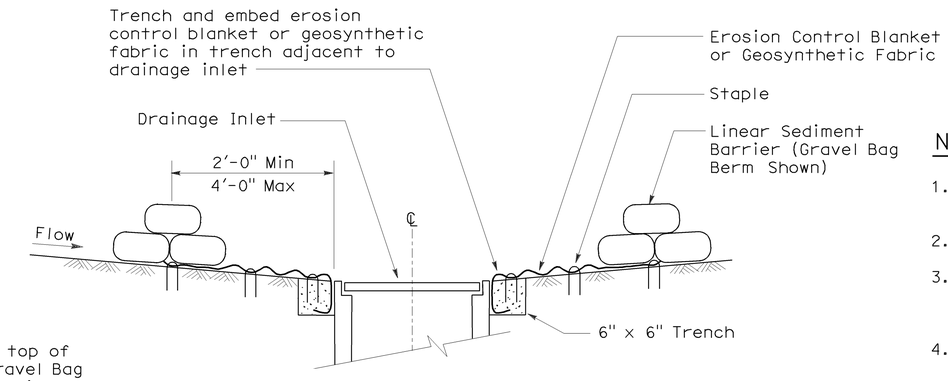

SECTION A-A

NOTES:

1. Place safety cones adjacent to drainage inlet protection.
2. Dimensions may vary to fit field conditions.
3. Install a minimum of 3 gravel bag berms upstream of each drainage inlet to be protected.
4. Position erosion control blanket or geosynthetic fabric at edge of concrete apron and secure in trench.
5. Erosion control blanket or geosynthetic fabric is not required if the area adjacent to the drainage inlet is vegetated or paved.

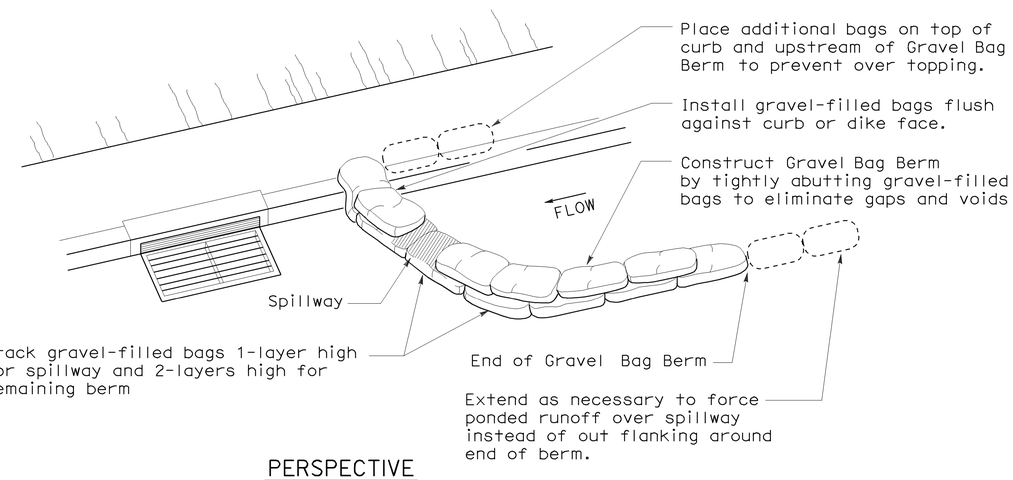

PERSPECTIVE

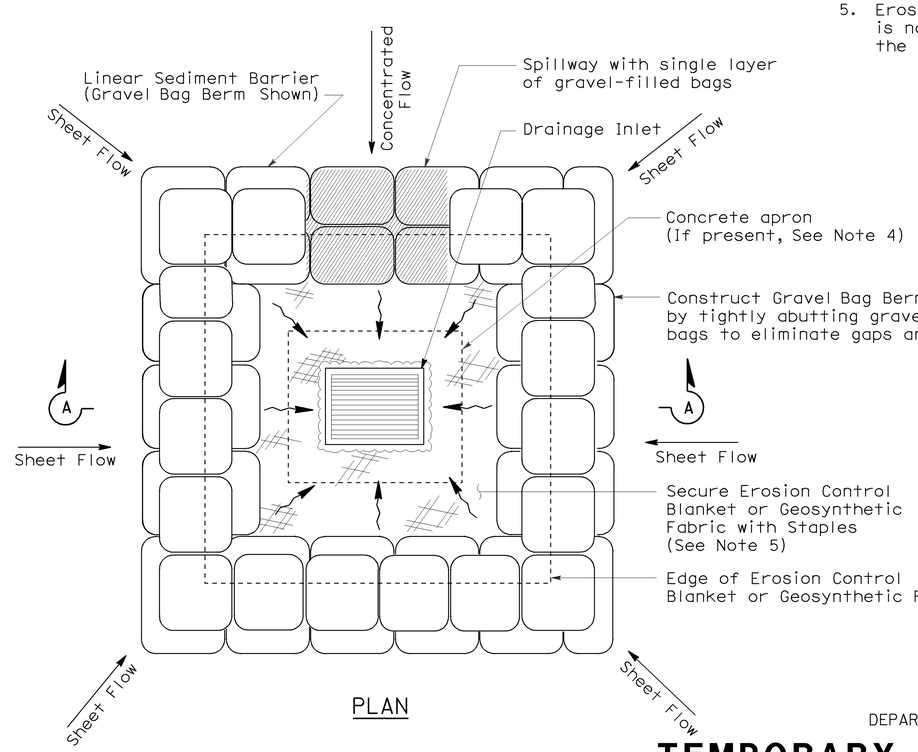

PLAN

TEMPORARY DRAINAGE INLET PROTECTION (TYPE 3B)

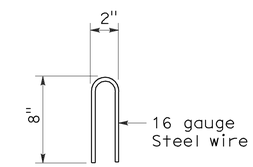

STAPLE DETAIL

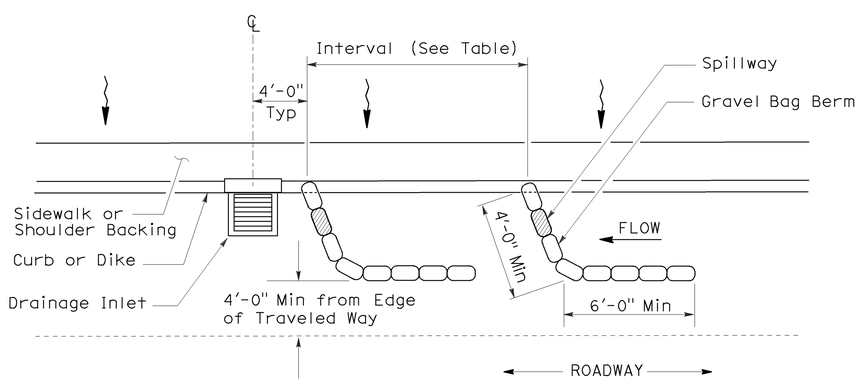

PLAN

TEMPORARY DRAINAGE INLET PROTECTION (TYPE 3A) (GRAVEL BAG BERM)

STATE OF CALIFORNIA
DEPARTMENT OF TRANSPORTATION

TEMPORARY WATER POLLUTION CONTROL DETAILS (TEMPORARY DRAINAGE INLET PROTECTION)

NO SCALE

NSP T62 DATED AUGUST 15, 2008 SUPPLEMENTS THE STANDARD PLANS BOOK DATED MAY 2006.

NEW STANDARD PLAN NSP T62

2006 NEW STANDARD PLAN NSP T62

7-11-08

DIST	COUNTY	ROUTE	POST MILES TOTAL PROJECT	SHEET NO.	TOTAL SHEETS
07	LA	91, 110, 710	R6.3, 9.9, R11.7, 13.0	21	30

LICENSED LANDSCAPE ARCHITECT

August 15, 2008
PLANS APPROVAL DATE

LICENSED LANDSCAPE ARCHITECT Robert B. Schott 3835 Signature 11-04-08 Renewal Date 08-11-08 Date STATE OF CALIFORNIA

The State of California or its officers or agents shall not be responsible for the accuracy or completeness of electronic copies of this plan sheet.

To accompany plans dated 05-23-11

FLEXIBLE SEDIMENT BARRIER SPACING TABLE

SLOPE OF ROADWAY (PERCENT)	0 to 0.9	1 to 1.9	2 to 2.9	3 to 4	5+
INTERVAL BETWEEN BARRIERS	50′	35′	30′	25′	20′
ANGLE FROM FACE OF CURB	70°	70°	70°	45°	45°
SUGGESTED BARRIER LENGTH	6′	6′	6′	6′	6′

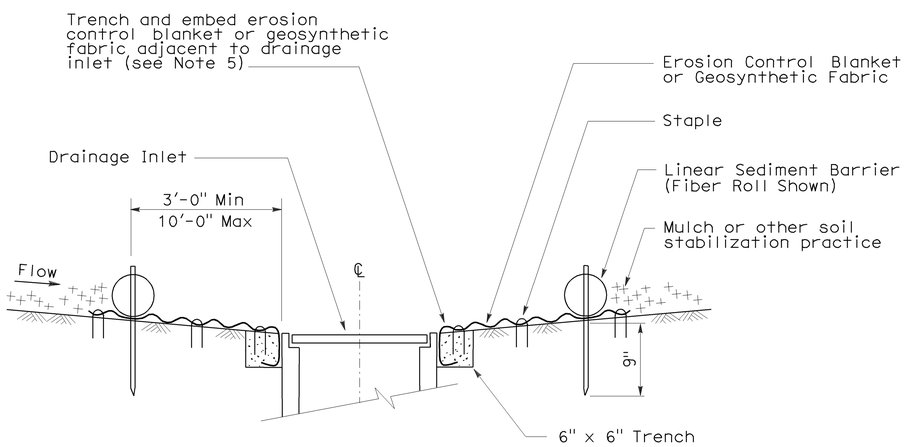

SECTION A-A

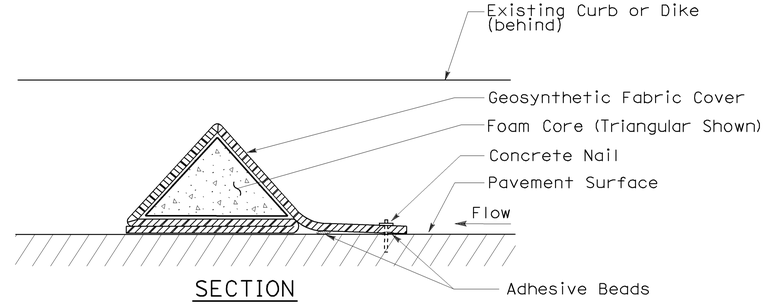

SECTION

FLEXIBLE SEDIMENT BARRIER DETAIL (FOAM BARRIER SHOWN)

NOTES:

1. See Standard Plan T51 for Temporary Silt Fence.
2. Dimensions may vary to fit field conditions.
3. Install a minimum of 3 flexible sediment barriers upstream of each drainage inlet to be protected.
4. Position erosion control blanket or geosynthetic fabric at edge of concrete apron and secure in trench.
5. Erosion control blanket or geosynthetic fabric is not required if the area adjacent to the drainage inlet is vegetated.

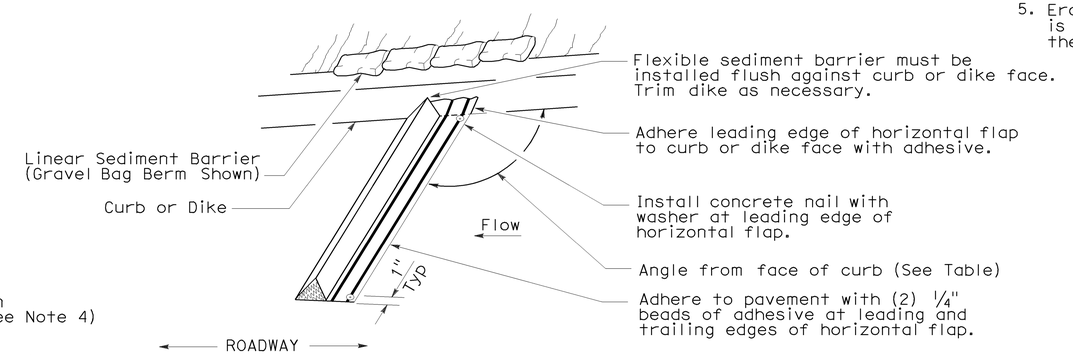

PERSPECTIVE

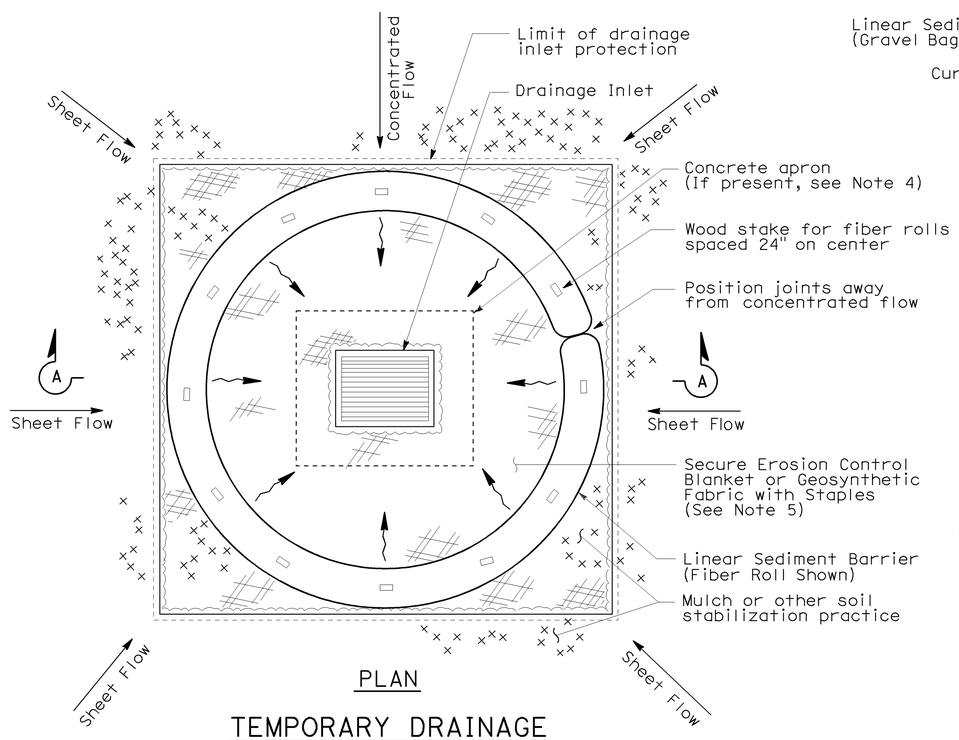

PLAN

TEMPORARY DRAINAGE INLET PROTECTION (TYPE 4A)

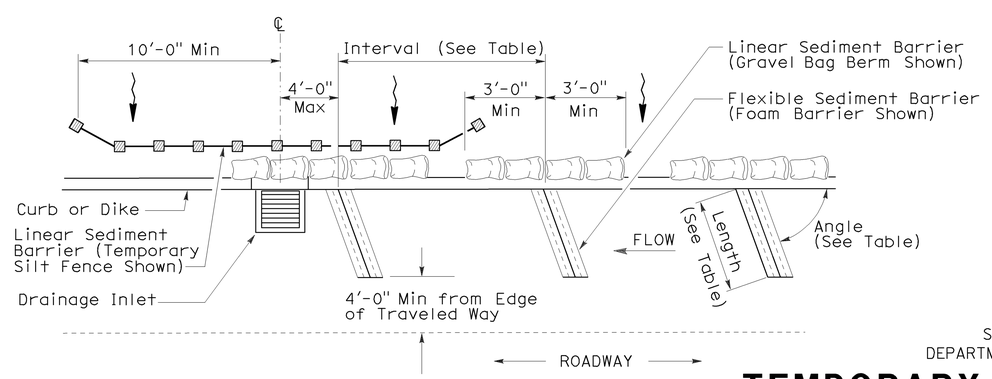

PLAN

TEMPORARY DRAINAGE INLET PROTECTION (TYPE 4B) FLEXIBLE SEDIMENT BARRIER

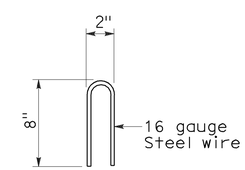

STAPLE DETAIL

STATE OF CALIFORNIA
DEPARTMENT OF TRANSPORTATION

TEMPORARY WATER POLLUTION CONTROL DETAILS (TEMPORARY DRAINAGE INLET PROTECTION)

NO SCALE

NSP T63 DATED AUGUST 15, 2008 SUPPLEMENTS THE STANDARD PLANS BOOK DATED MAY 2006.

NEW STANDARD PLAN NSP T63

2006 NEW STANDARD PLAN NSP T63

7-11-08

DIST	COUNTY	ROUTE	POST MILES TOTAL PROJECT	SHEET NO.	TOTAL SHEETS
07	LA	91, 110, 710	R6.3, 9.9, R11.7, 13.0	22	30

LICENSED LANDSCAPE ARCHITECT

August 15, 2008
PLANS APPROVAL DATE

LICENSED LANDSCAPE ARCHITECT Robert B. Schott 3635 Signature 11-04-08 Renewal Date 08-11-08 Date STATE OF CALIFORNIA

The State of California or its officers or agents shall not be responsible for the accuracy or completeness of electronic copies of this plan sheet.

To accompany plans dated 05-23-11

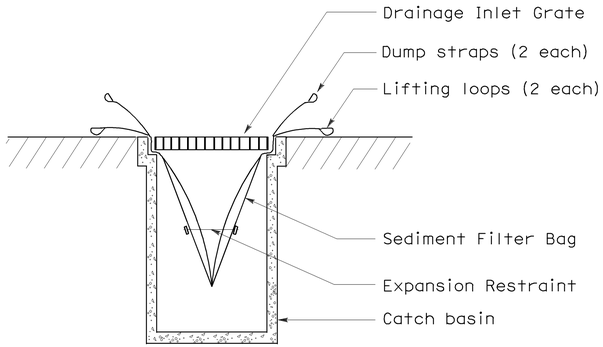

SECTION B-B

SEDIMENT FILTER BAG DETAIL

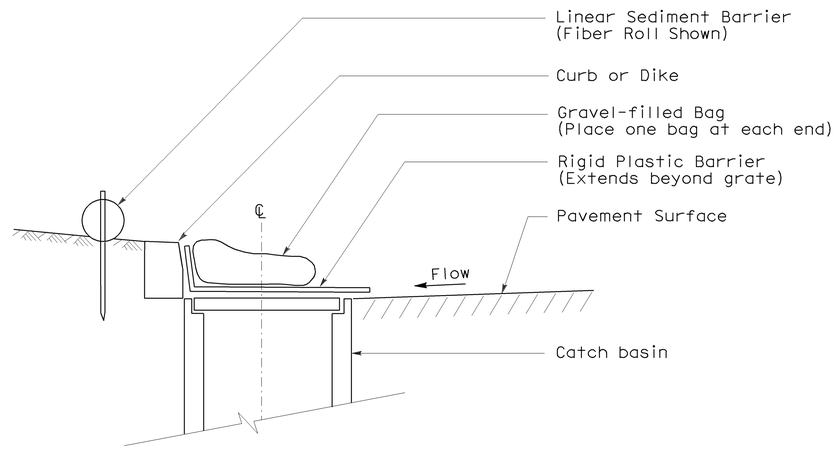

SECTION

TEMPORARY DRAINAGE INLET PROTECTION (TYPE 6A) (CATCH BASIN WITH GRATE)

NOTES:

1. See Standard Plan T51 for Temporary Silt Fence.
2. Dimensions may vary to fit field conditions.

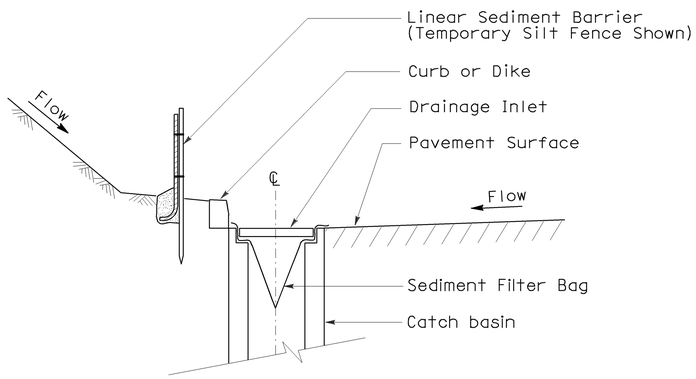

SECTION A-A

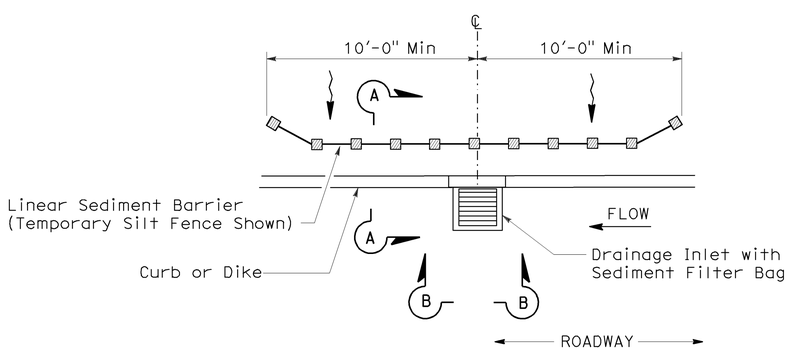

PLAN

TEMPORARY DRAINAGE INLET PROTECTION (TYPE 5) (SEDIMENT FILTER BAG)

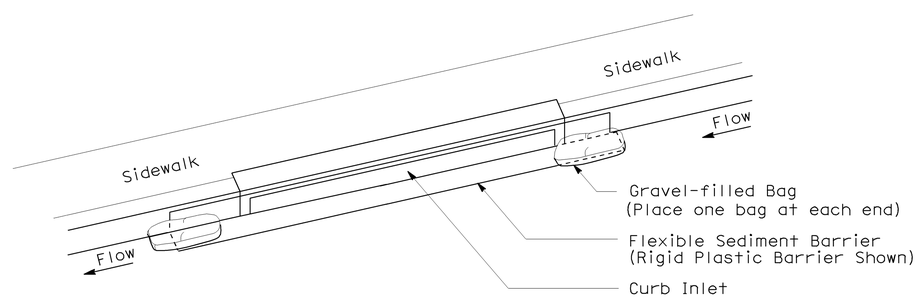

PERSPECTIVE

TEMPORARY DRAINAGE INLET PROTECTION (TYPE 6B) (CURB INLET WITHOUT GRATE)

STATE OF CALIFORNIA
DEPARTMENT OF TRANSPORTATION

TEMPORARY WATER POLLUTION CONTROL DETAILS (TEMPORARY DRAINAGE INLET PROTECTION)

NO SCALE

NSP T64 DATED AUGUST 15, 2008 SUPPLEMENTS THE STANDARD PLANS BOOK DATED MAY 2006.

NEW STANDARD PLAN NSP T64

2006 NEW STANDARD PLAN NSP T64

7-11-08

DIST	COUNTY	ROUTE	POST MILES TOTAL PROJECT	SHEET No	TOTAL SHEETS
07	LA	91, 110, 710	R6.3, 9.9, R11.7, 13.0	23	30

REGISTERED CIVIL ENGINEER 3-23-11 DATE

05-23-11
PLANS APPROVAL DATE

The State of California or its officers or agents shall not be responsible for the accuracy or completeness of electronic copies of this plan sheet.

REGISTERED PROFESSIONAL ENGINEER J.A. POSEY No. 51770 Exp. 06-30-12 CIVIL STATE OF CALIFORNIA

INDEX TO PLANS

SHEET NO.	TITLE
1	GENERAL PLAN
2	DECK REPAIR DETAILS

QUANTITIES

REMOVE CONTRAST TREATMENT	18,900	SQFT
REMOVE CONCRETE DECK SURFACE	141,470	SQFT
REMOVE UNSOUND CONCRETE	707	CF
PREPARE CONCRETE BRIDGE DECK SURFACE	141,470	SQFT
CLEAN EXPANSION JOINT	1,717	LF
RAPID SETTING CONCRETE (PATCH)	707	CF
FURNISH POLYESTER CONCRETE OVERLAY	8,845	CF
PLACE POLYESTER CONCRETE OVERLAY	141,470	SQFT
JOINT SEAL (MR 1")	604	LF
JOINT SEAL (MR 2")	173	LF
JOINT SEAL (TYPE AL)	940	LF
PUBLIC SAFETY PLAN	LUMP SUM	

STANDARD PLANS DATED MAY 2006

SHEET NO.	TITLE
A10A	ACRONYMS AND ABBREVIATIONS (SHEET 1 OF 2)
A10B	ACRONYMS AND ABBREVIATIONS (SHEET 2 OF 2)
RSP B6-21	JOINT SEALS (MAXIMUM MOVEMENT RATING = 2")

LEGEND:

—·—· Indicates existing structure.

—— Indicates location of existing joint seal removal and placement of new joint seal. See Standard Plan RSP B6-21

Indicates limits of:

1. Remove unsound concrete and replace with rapid setting concrete where required
2. Remove ¾" depth of PCC deck surface
3. Place ¾" depth Polyester concrete overlay

Indicates limits of remove contrast treatment.

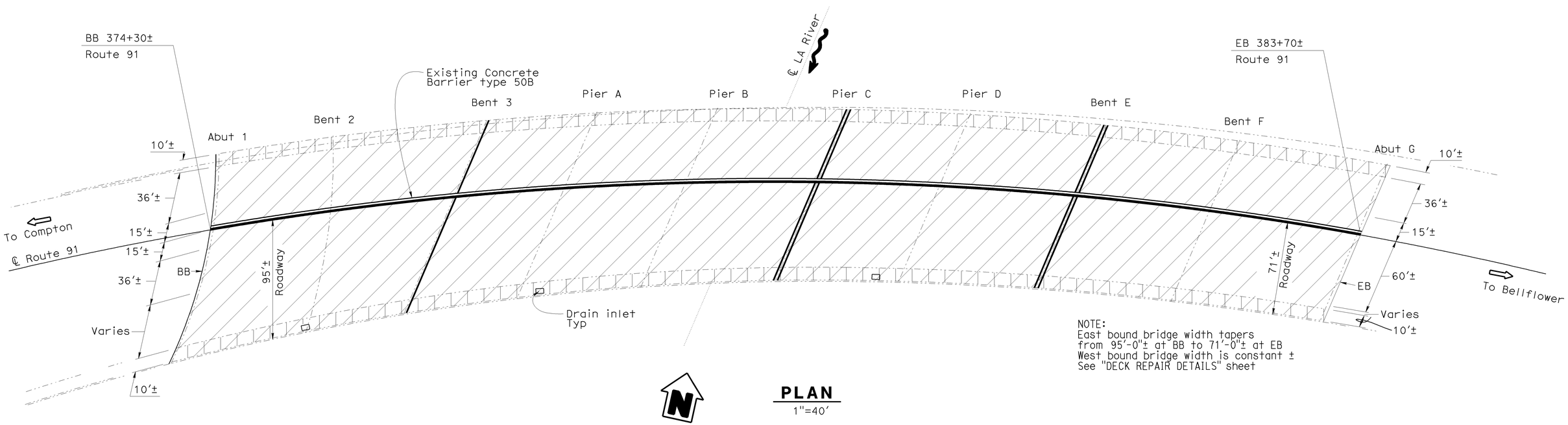

NOTE:
East bound bridge width tapers from 95'-0"± at BB to 71'-0"± at EB
West bound bridge width is constant ±
See "DECK REPAIR DETAILS" sheet

PLAN
1"=40'

NOTE:
THE CONTRACTOR SHALL VERIFY ALL CONTROLLING FIELD DIMENSIONS BEFORE ORDERING OR FABRICATING ANY MATERIAL.

Ramin Rashedi
DESIGN ENGINEER

	BY	CHECKED			
DESIGN	J. Posey	M. Okimura	LOAD & RESISTANCE FACTOR DESIGN	LIVE LOADING:	HL93 W/"LOW-BOY"; PERMIT DESIGN VEHICLE
DETAILS	L. Goldthwait	M. Okimura	LAYOUT	J. Posey	M. Okimura
QUANTITIES	J. Posey	M. Okimura	SPECIFICATIONS	K. Ellingson	PLANS AND SPECS COMPARED K. Ellingson

ORIGINAL SCALE IN INCHES FOR REDUCED PLANS 0 1 2 3

STATE OF CALIFORNIA
DEPARTMENT OF TRANSPORTATION

DIVISION OF ENGINEERING SERVICES
STRUCTURE DESIGN
DESIGN BRANCH 11

CU 07
EA 260501

BRIDGE NO. 53-2142
POST MILE 11.9

LOS ANGELES RIVER BRIDGE RE-SURFACE
GENERAL PLAN

DISREGARD PRINTS BEARING EARLIER REVISION DATES

REVISION DATES: 3-17-10 | 3-24-11 | 5-23-10 | 6-21-10 | 7-15-10 | 7-19-10 | 10-25-10 | 10-28-10 | 3-24-11

SHEET 1 OF 2

STRUCTURES DESIGN GENERAL PLAN SHEET (ENGLISH) (REV.07-24-06)

FILE => 53-2142-a-gp.dgn

USERNAME => jramirez DATE PLOTTED => 29-MAR-2011 TIME PLOTTED => 11:04

DIST	COUNTY	ROUTE	POST MILES TOTAL PROJECT	SHEET No	TOTAL SHEETS
07	LA	91, 110, 710	R6.3, 9.9, R11.7, 13.0	24	30

Jay Posey 3-23-11
REGISTERED CIVIL ENGINEER DATE

05-23-11
PLANS APPROVAL DATE

REGISTERED PROFESSIONAL ENGINEER J.A. POSEY No. 51770 Exp. 06-30-12 CIVIL STATE OF CALIFORNIA

The State of California or its officers or agents shall not be responsible for the accuracy or completeness of electronic copies of this plan sheet.

DECK REPAIR DETAILS

TOTAL DECK AREA (sq ft)	APPROXIMATE AREA DAMAGED (percent)	APPROXIMATE DEPTH DAMAGED (inches)	REMOVE UNSOUND CONCRETE (cu ft)	RAPID SETTING CONCRETE PATCH (cu ft)
141,470±	3±	2±	707±	707±

JOINT SEAL TABLE

LOCATION		MIN "MR" (in)	APPROX LENGTH (ft) ±	EXISTING WATERSTOP	APPROX DEPTH TO CLEAN EXP JOINT
Longitudinal		½	940 ±	NO	1'-0"
Transverse Seal	Bent 3	2	173	NO	3'-6½"
	Pier C Left	1	156	NO	3'-6½"
	Pier C Right	1	156	NO	3'-6½"
	Bent E Left	1	146	NO	3'-6½"
	Bent E Right	1	146	NO	3'-6½"

NOTES:

1. Locations of deck repair will be determined by the Engineer
2. Remove unsound Portland Cement concrete and unsound concrete patches to expose sound, hard concrete substrate. Replace original deck surface with rapid setting concrete patch
3. Reinforcement may be encountered during deck concrete removal

④ Longitudinal Joint Seal Type AL silicone see Standard Plan RSP B6-21

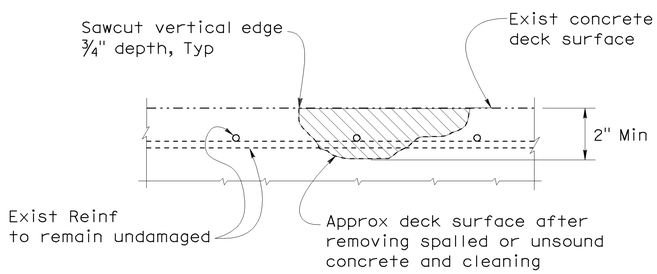

DECK DAMAGE REPAIR DETAIL

NO SCALE

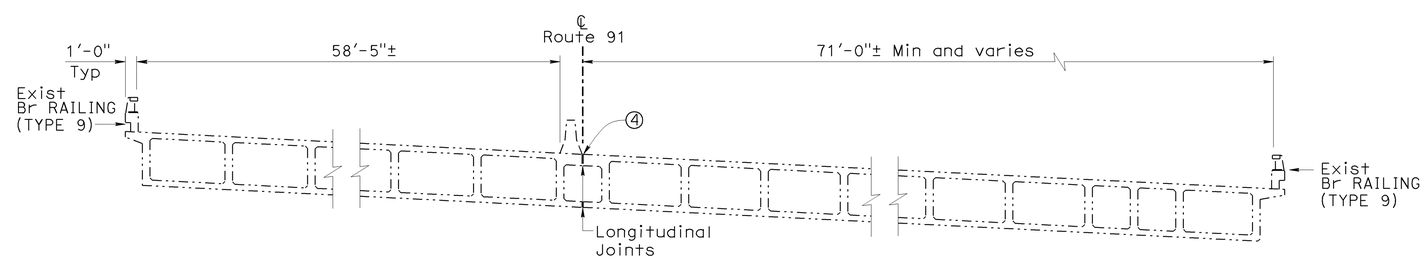

TYPICAL LIMITS OF DECK WORK

NO SCALE

NOTE:
THE CONTRACTOR SHALL VERIFY ALL CONTROLLING FIELD DIMENSIONS BEFORE ORDERING OR FABRICATING ANY MATERIAL.

	BY	CHECKED
DESIGN	J. Posey	M. Okimura
DETAILS	P. Tong	M. Okimura
QUANTITIES	J. Posey	M. Okimura

STATE OF CALIFORNIA
DEPARTMENT OF TRANSPORTATION

DIVISION OF ENGINEERING SERVICES
STRUCTURE DESIGN
DESIGN BRANCH 11

BRIDGE NO. 53-2142
POST MILE 11.9

LOS ANGELES RIVER BRIDGE RE-SURFACE
DECK REPAIR DETAILS

STRUCTURES DESIGN DETAIL SHEET (ENGLISH) (REV. 10/25/05)

ORIGINAL SCALE IN INCHES FOR REDUCED PLANS 0 1 2 3

CU 07
EA 260501

DISREGARD PRINTS BEARING EARLIER REVISION DATES

REVISION DATES: 5-27-10 6-29-10 7-15-10 7-19-10 8-31-10 10-28-10 3-14-11

SHEET 2 OF 2

FILE => 53-2142-b-rrepdt01.dgn

USERNAME => jromtrez DATE PLOTTED => 29-MAR-2011 TIME PLOTTED => 11:04

DIST	COUNTY	ROUTE	POST MILES TOTAL PROJECT	SHEET No	TOTAL SHEETS
07	LA	91, 110, 710	R6.3, 9.9, R11.7, 13.0	25	30

Jay Posey 3-23-11
REGISTERED CIVIL ENGINEER DATE

05-23-11
PLANS APPROVAL DATE

REGISTERED PROFESSIONAL ENGINEER J.A. POSEY No. 51770 Exp. 06-30-12 CIVIL STATE OF CALIFORNIA

The State of California or its officers or agents shall not be responsible for the accuracy or completeness of electronic copies of this plan sheet.

INDEX TO PLANS

SHEET NO.	TITLE
1	GENERAL PLAN
2	REPAIR DETAILS

QUANTITIES

REMOVE CONCRETE DECK SURFACE	26,010	SQFT
REMOVE UNSOUND CONCRETE	130	CF
PREPARE CONCRETE BRIDGE DECK SURFACE	26,010	SQFT
CLEAN EXPANSION JOINT	73	LF
RAPID SETTING CONCRETE (PATCH)	130	CF
FURNISH POLYESTER CONCRETE OVERLAY	1,625	CF
PLACE POLYESTER CONCRETE OVERLAY	26,010	SQFT
JOINT SEAL (MR 1 1/2")	24	LF
JOINT SEAL (MR 2")	49	LF
PUBLIC SAFETY PLAN	LUMP	SUM

STANDARD PLANS DATED MAY 2006

SHEET NO.	TITLE
A10A	ACRONYMS AND ABBREVIATIONS (SHEET 1 OF 2)
A10B	ACRONYMS AND ABBREVIATIONS (SHEET 2 OF 2)
RSP B6-21	JOINT SEAL (MAXIMUM MOVEMENT RATING = 2")

LEGEND:

—·—·— Indicates existing structure

Indicates limits of remove unsound concrete and replace with rapid setting concrete where required, Remove 1/4" depth and apply 3/4" of polyester concrete overlay

✱✱ Indicates location of existing joint seal removal and placement of new joint seal

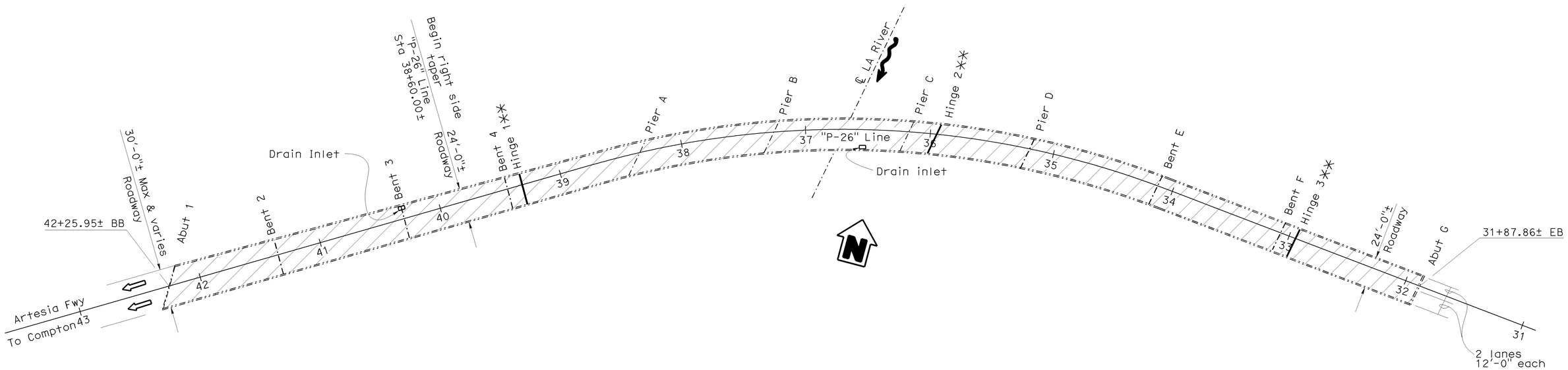

PLAN

1"=40'

NOTES:

THE CONTRACTOR SHALL VERIFY ALL CONTROLLING FIELD DIMENSIONS BEFORE ORDERING OR FABRICATING ANY MATERIAL.

Ramin Rashedi
DESIGN ENGINEER

	BY	CHECKED			
DESIGN	J. Posey	M. Okimura	LOAD & RESISTANCE FACTOR DESIGN	LIVE LOADING: HL93 W/"LOW-BOY"; PERMIT DESIGN VEHICLE	
DETAILS	L Goldthwait/G. D	M. Okimura	LAYOUT BY J. Posey		CHECKED M. Okimura
QUANTITIES	J. Posey	M. Okimura	SPECIFICATIONS BY K. Ellingson		PLANS AND SPECS COMPARED K. Ellingson

ORIGINAL SCALE IN INCHES FOR REDUCED PLANS 0 1 2 3

STATE OF CALIFORNIA
DEPARTMENT OF TRANSPORTATION

DIVISION OF ENGINEERING SERVICES
STRUCTURE DESIGN
DESIGN BRANCH 11

CU 07
EA 260501

BRIDGE NO. 53-2144K
POST MILE 11.8

LOS ANGELES RIVER BRIDGE (ROUTE 91 ON-RAMP) RE-SURFACE

GENERAL PLAN

DISREGARD PRINTS BEARING EARLIER REVISION DATES →

REVISION DATES: ~~04-30-10~~ ~~5-14-10~~ ~~5-28-10~~ ~~5-27-10~~ ~~6-22-10~~ ~~8-5-10~~ ~~8-25-10~~ ~~9-20-10~~ ~~10-25-10~~ 11/2/10

SHEET 1 OF 2

FILE => 53-2144k-a-gp01.dgn

USERNAME => jramirez DATE PLOTTED => 29-MAR-2011 TIME PLOTTED => 11:04

DIST	COUNTY	ROUTE	POST MILES TOTAL PROJECT	SHEET No	TOTAL SHEETS
07	LA	91, 110, 710	R6.3, 9.9, R11.7, 13.0	26	30

REGISTERED CIVIL ENGINEER 3-23-11 DATE

05-23-11
PLANS APPROVAL DATE

REGISTERED PROFESSIONAL ENGINEER J.A. POSEY No. 51770 Exp. 06-30-12 CIVIL STATE OF CALIFORNIA

The State of California or its officers or agents shall not be responsible for the accuracy or completeness of electronic copies of this plan sheet.

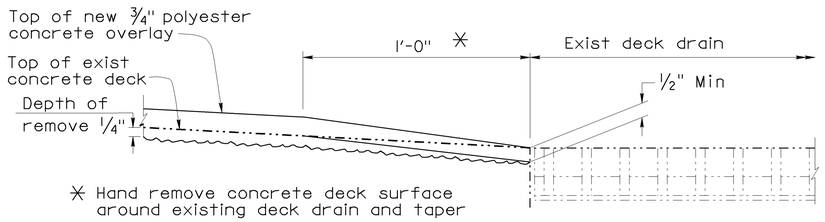

DECK INLET DETAIL

No Scale

JOINT SEAL TABLE ✳				
LOCATION	MIN "MR" (in)	APPROX LENGTH (ft) ±	EXISTING WATERSTOP	APPROX DEPTH TO CLEAN EXP JOINT
Hinge 1	2.0	24	NO	3'-0"
Hinge 2	2.0	25	NO	3'-0"
Hinge 3	1.5	24	NO	3'-0"

✳ See Standard Plan "RSP B6-21" for Joint Seal details

DECK REPAIR DETAILS				
TOTAL DECK AREA (sq ft)	APPROXIMATE AREA DAMAGED (percent)	APPROXIMATE DEPTH DAMAGED (inches)	REMOVE UNSOUND CONCRETE (cu ft)	RAPID SETTING CONCRETE PATCH (cu ft)
26010 ±	3 ±	2 ±	130±	130±

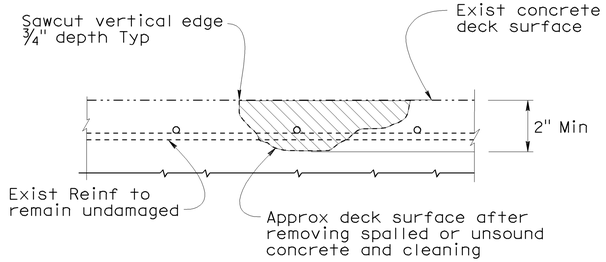

DECK DAMAGE REPAIR DETAIL

No Scale

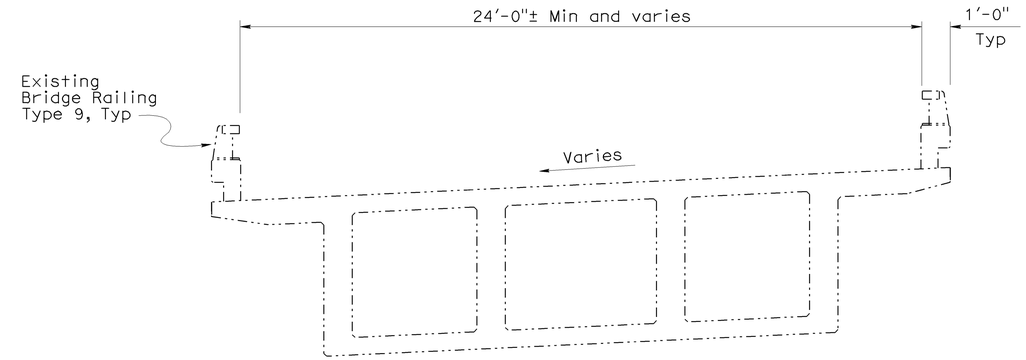

TYPICAL LIMITS OF DECK WORK

No Scale

NOTES:

1. Locations of deck repair will be determined by the Engineer.
2. Reinforcement may be encountered during deck unsound concrete removal.
3. Remove unsound Portland Cement concrete and unsound concrete patches to expose sound, hard concrete substrate. Replace original deck surface with rapid setting concrete patch.

NOTE:

THE CONTRACTOR SHALL VERIFY ALL CONTROLLING FIELD DIMENSIONS BEFORE ORDERING OR FABRICATING ANY MATERIAL.

	BY	CHECKED
DESIGN	J. Posey	M. Okimura
DETAILS	P. Tong	M. Okimura
QUANTITIES	J. Posey	M. Okimura

STATE OF CALIFORNIA
DEPARTMENT OF TRANSPORTATION

DIVISION OF ENGINEERING SERVICES
STRUCTURE DESIGN
DESIGN BRANCH 11

BRIDGE NO. 53-2144K
POST MILE 11.8

LOS ANGELES RIVER BRIDGE (ROUTE 91 ON-RAMP) RE-SURFACE

REPAIR DETAILS

STRUCTURES DESIGN DETAIL SHEET (ENGLISH) (REV. 10/25/05)

ORIGINAL SCALE IN INCHES FOR REDUCED PLANS 0 1 2 3

CU 07
EA 260501

DISREGARD PRINTS BEARING EARLIER REVISION DATES

REVISION DATES: 3-18-10 5/28/10 5/28/10 6/22/10 8/5/10 8/11/10 8-23-10 9/28/10 10/28/10 10/28/10

SHEET 2 OF 2

FILE => 53-2144k-b-dt01.dgn

USERNAME => jramirez DATE PLOTTED => 29-MAR-2011 TIME PLOTTED => 10:50

DIST	COUNTY	ROUTE	POST MILES TOTAL PROJECT	SHEET No	TOTAL SHEETS
07	LA	91, 110, 710	R6.3, 9.9, R11.7, 13.0	27	30

REGISTERED CIVIL ENGINEER 3-23-11 DATE

05-23-11
PLANS APPROVAL DATE

REGISTERED PROFESSIONAL ENGINEER J.A. POSEY No. 51770 Exp. 06-30-12 CIVIL STATE OF CALIFORNIA

The State of California or its officers or agents shall not be responsible for the accuracy or completeness of electronic copies of this plan sheet.

INDEX TO PLANS

SHEET NO.	TITLE
1	GENERAL PLAN
2	JOINT SEAL REMOVAL DETAILS
3	JOINT SEAL REPLACEMENT DETAILS
4	JOINT SEAL ASSEMBLY (MAXIMUM MOVEMENT RATING = 4")

STANDARD PLANS DATED MAY 2006

SHEET NO.	TITLE
A10A	ACRONYMS AND ABBREVIATIONS (SHEET 1 OF 2)
A10B	ACRONYMS AND ABBREVIATIONS (SHEET 2 OF 2)

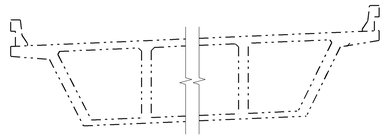

TYPICAL SECTION

1/8"=1'-0"

QUANTITIES

REMOVE CONCRETE DECK SURFACE	448	SQFT
PREPARE CONCRETE BRIDGE DECK SURFACE	448	SQFT
BRIDGE REMOVAL (PORTION)	LUMP	SUM
STRUCTURAL CONCRETE, BRIDGE	27	CY
DRILL AND BOND DOWEL	132	LF
CLEAN EXPANSION JOINT	237	LF
FURNISH POLYESTER CONCRETE OVERLAY	76	CF
PLACE POLYESTER CONCRETE OVERLAY	448	SQFT
JOINT SEAL (MR 1 1/2")	84	LF
JOINT SEAL ASSEMBLY (MR 2 1/2")	36	LF
JOINT SEAL ASSEMBLY (MR 3")	71	LF
JOINT SEAL ASSEMBLY (MR 3 1/2")	48	LF
BAR REINFORCING STEEL (BRIDGE)	1,080	LB

STANDARD PLAN SHEET NO.

DETAIL NO.

AREAS OF WORK

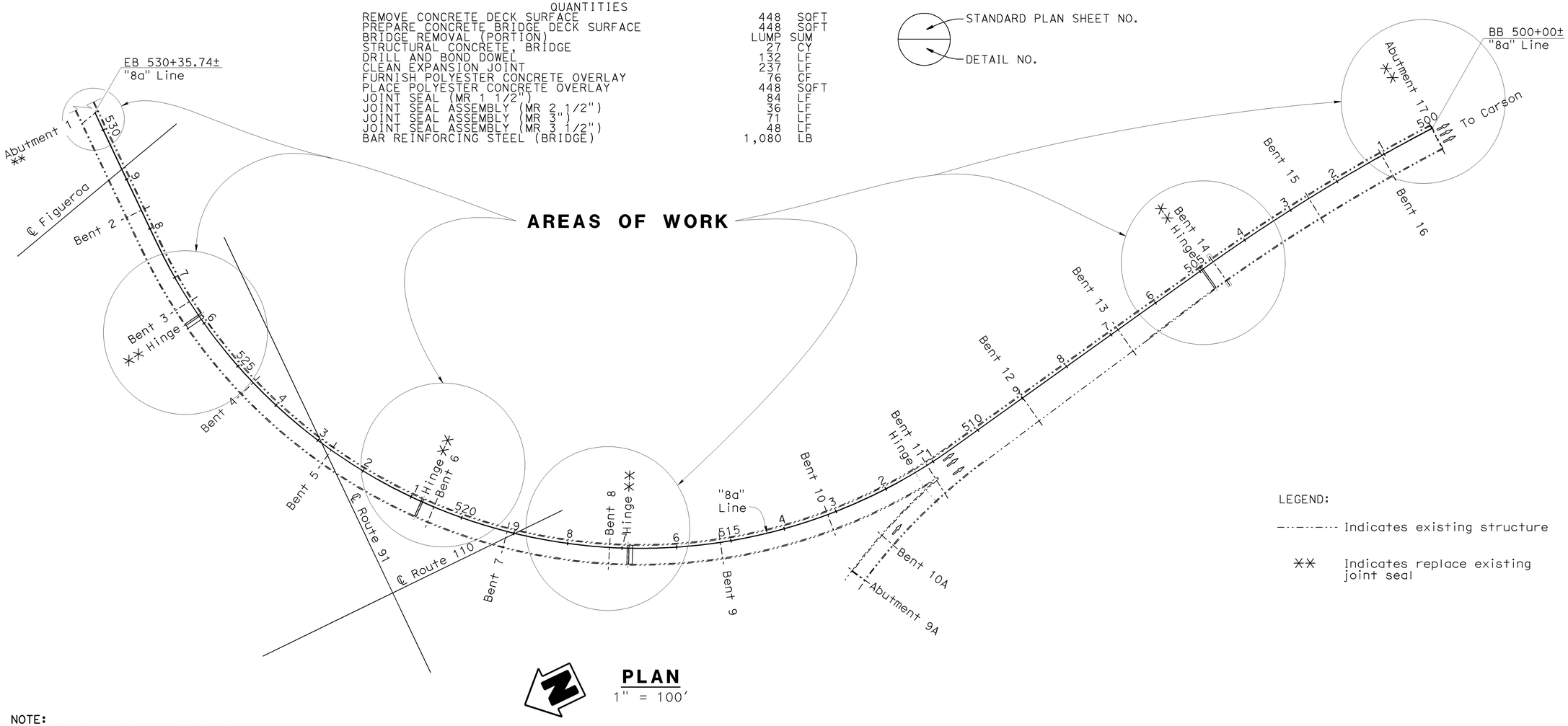

LEGEND:

Indicates existing structure

Indicates replace existing joint seal

PLAN

1" = 100'

NOTE:
THE CONTRACTOR SHALL VERIFY ALL CONTROLLING FIELD DIMENSIONS BEFORE ORDERING OR FABRICATING ANY MATERIAL.

DESIGN	BY J. Posey	CHECKED M. Okimura	LOAD & RESISTANCE FACTOR DESIGN	LIVE LOADING: HL93 W/"LOW-BOY"; PERMIT DESIGN VEHICLE
DETAILS	BY P. Tong	CHECKED M. Okimura	LAYOUT: BY J. Posey	CHECKED M. Okimura
QUANTITIES	BY J. Posey	CHECKED M. Okimura	SPECIFICATIONS: BY K. Ellingson	PLANS AND SPECS COMPARED K. Ellingson

Ramin Rashedi
DESIGN ENGINEER

STRUCTURES DESIGN DETAIL SHEET (ENGLISH) (REV. 10/25/05)

ORIGINAL SCALE IN INCHES FOR REDUCED PLANS 0 1 2 3

STATE OF CALIFORNIA
DEPARTMENT OF TRANSPORTATION

DIVISION OF ENGINEERING SERVICES
STRUCTURE DESIGN
DESIGN BRANCH 11

CU 07
EA 260501

BRIDGE NO. 53-2549H
POST MILE 6.4

W91-S110 CONNECTOR OC - REPLACE JOINT SEAL

GENERAL PLAN

DISREGARD PRINTS BEARING EARLIER REVISION DATES

REVISION DATES: 5-25-10 6/11/10 7/26/10 8/23/10 10/25/10 1/28/11 2/9/11 3/15/11

SHEET 1 OF 4

FILE => 53-2549h-a-gp01.dgn

USERNAME => jromirez DATE PLOTTED => 29-MAR-2011 TIME PLOTTED => 10:50

DIST	COUNTY	ROUTE	POST MILES TOTAL PROJECT	SHEET No	TOTAL SHEETS
07	LA	91, 110, 710	R6.3, 9.9, R11.7, 13.0	28	30

REGISTERED CIVIL ENGINEER 3-23-11 DATE

05-23-11
PLANS APPROVAL DATE

REGISTERED PROFESSIONAL ENGINEER J.A. POSEY No. 51770 Exp. 06-30-12 CIVIL STATE OF CALIFORNIA

The State of California or its officers or agents shall not be responsible for the accuracy or completeness of electronic copies of this plan sheet.

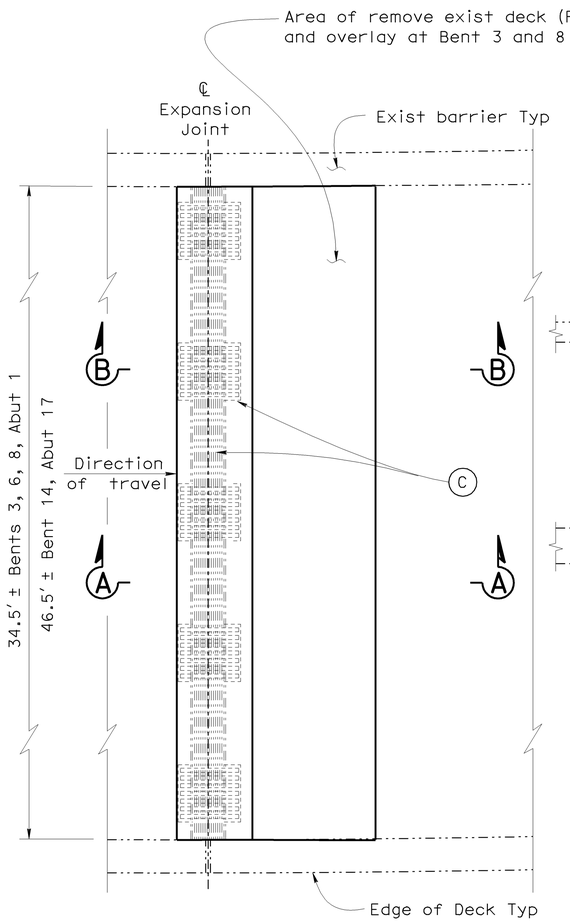

HINGE JOINT PLAN AT BENTS 3,6,8,14 ABUTMENTS 1,17 SIMILAR

1/4"=1'-0"

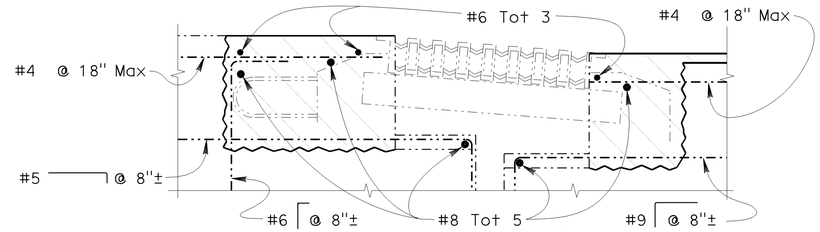

DETAIL "B"

1 1/2"=1'-0"

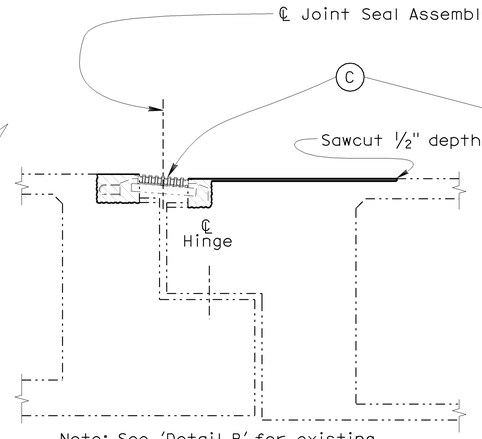

Note: See 'Detail B' for existing reinforcement steel not shown
See 'Section A-A' for details not shown

SECTION B-B BENTS 3, 8

3/8"=1'-0"

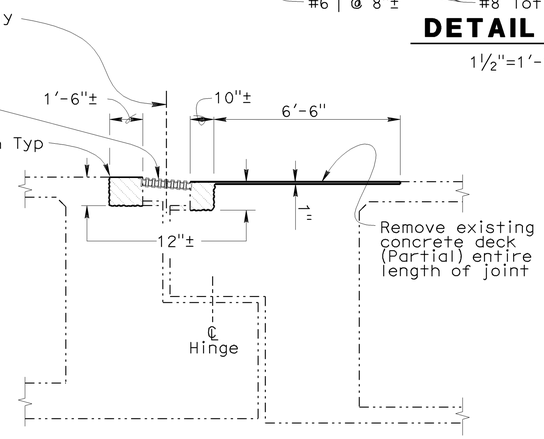

Note: See 'Detail B' for existing reinforcement steel not shown

SECTION A-A BENTS 3, 8

3/8"=1'-0"

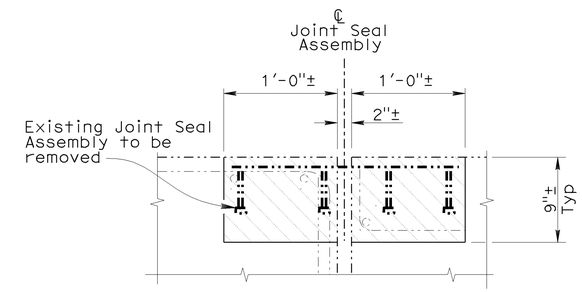

DETAIL "A"

1 1/2"=1'-0"

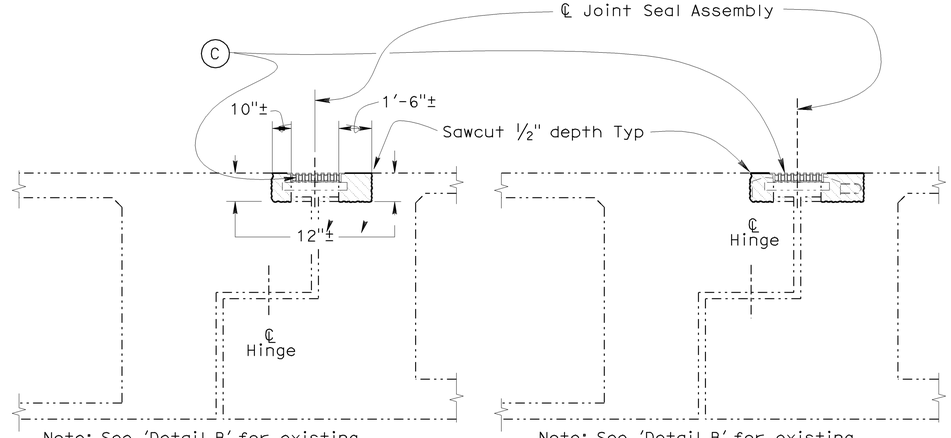

Note: See 'Detail B' for existing reinforcement steel not shown

SECTION A-A BENTS 6,14

3/8"=1'-0"

Note: See 'Detail B' for existing reinforcement steel not shown
See 'Section A-A' for details not shown

SECTION B-B BENTS 6,14

3/8"=1'-0"

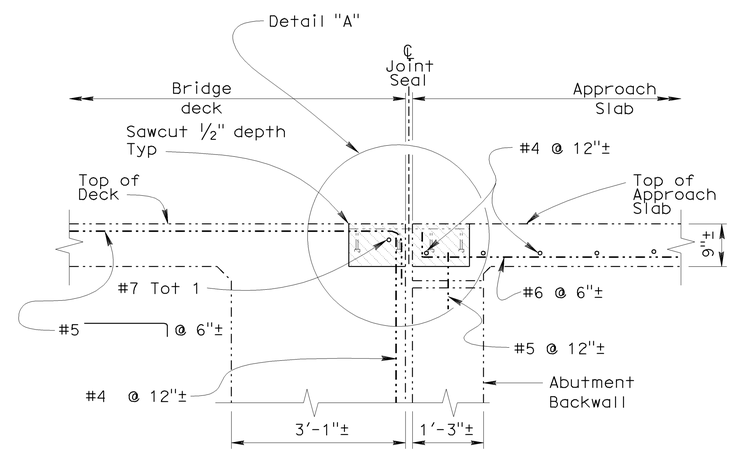

ABUTMENTS 1,17 JOINT SEAL SECTION

3/4"=1'-0"

NOTE:

(C) Remove existing modular expansion joint

Indicates remove existing concrete entire length of joint. Existing reinforcing to remain undamaged

Indicates exiting Structure

NOTE:
THE CONTRACTOR SHALL VERIFY ALL CONTROLLING FIELD DIMENSIONS BEFORE ORDERING OR FABRICATING ANY MATERIAL.

	BY	CHECKED
DESIGN	J. Posey	M. Okimura
DETAILS	G. Dickerson	M. Okimura
QUANTITIES	J. Posey	M. Okimura

STATE OF CALIFORNIA
DEPARTMENT OF TRANSPORTATION

DIVISION OF ENGINEERING SERVICES
STRUCTURE DESIGN
DESIGN BRANCH 11

BRIDGE NO. 53-2549H
POST MILE 6.4

W91-S110 CONNECTOR OC - REPLACE JOINT SEAL
JOINT SEAL REMOVAL DETAILS

STRUCTURES DESIGN DETAIL SHEET (ENGLISH) (REV. 10/25/05)

ORIGINAL SCALE IN INCHES FOR REDUCED PLANS 0 1 2 3

CU 07
EA 260501

DISREGARD PRINTS BEARING EARLIER REVISION DATES

REVISION DATES: 5-28-10 6-15-10 7-16-10 7-28-10 8-4-10 10-25-10 11-12-10 1-28-11 2-1-11

SHEET 2 OF 4

FILE => 53-2549h-m-remdets.dgn

USERNAME => jromirez DATE PLOTTED => 29-MAR-2011 TIME PLOTTED => 10:50

DIST	COUNTY	ROUTE	POST MILES TOTAL PROJECT	SHEET No	TOTAL SHEETS
07	LA	91, 110, 710	R6.3, 9.9, R11.7, 13.0	29	30

REGISTERED CIVIL ENGINEER 3-23-11 DATE

05-23-11
PLANS APPROVAL DATE

REGISTERED PROFESSIONAL ENGINEER J.A. POSEY No. 51770 Exp. 06-30-12 CIVIL STATE OF CALIFORNIA

The State of California or its officers or agents shall not be responsible for the accuracy or completeness of electronic copies of this plan sheet.

JOINT SEAL TABLE

LOCATION	MAXIMUM "MR" (in)	APPROXIMATE LENGTH (ft)	EXISTING WATERSTOP	APPROX DEPTH TO CLEAN EXPANSION JOINT
Abutment 1	1.5	36.5	No	8'-6"±
Hinge at Bent 3	2.5	35.5	No	4'-0"±
Hinge at Bent 6	3.0	35.5	No	4'-0"±
Hinge at Bent 8	3.0	35.5	No	4'-0"±
Hinge at Bent 14	3.5	47.5	No	4'-0"±
Abutment 17	1.5	47.5	No	8'-6"±

TEMPORARY DECK PLATE LOAD CRITERIA

LOCATION	MOMENT DEMAND/FOOT (kips-ft/ft)	BOLT SHEAR/FOOT (kips/ft)	BOLT TENSION (kips) / bolt
Bents 3,6,8,14	11.0	3.4	4
Abutments 1,17	6.5	3.4	4

Maximum anchor bolt spacing = 1'-0"

GENERAL NOTES LOAD AND RESISTANCE FACTOR DESIGN

DESIGN: AASHTO LRFD BRIDGE DESIGN SPECIFITIONS 4TH EDITION with the 2007 Interims and the California Amendments V4

LIVE LOAD: HL 93 w/' Low Boy' and Permit design load

REINFORCED CONCRETE: f_y = 60,000 psi
f'_c = 4,000 psi
n = 9

Indicates concrete to be replaced

Area of remove exist deck (Partial) and overlay at Bents 3 and 8 only

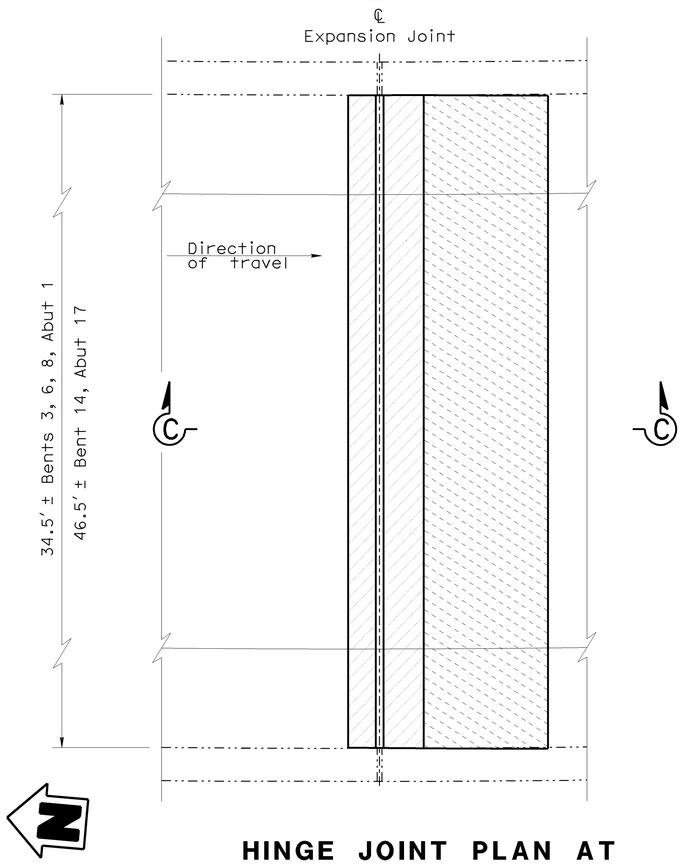

HINGE JOINT PLAN AT BENTS 3,6,8,14 ABUTMENTS 1,17, SIMILAR

1/4"=1'-0"

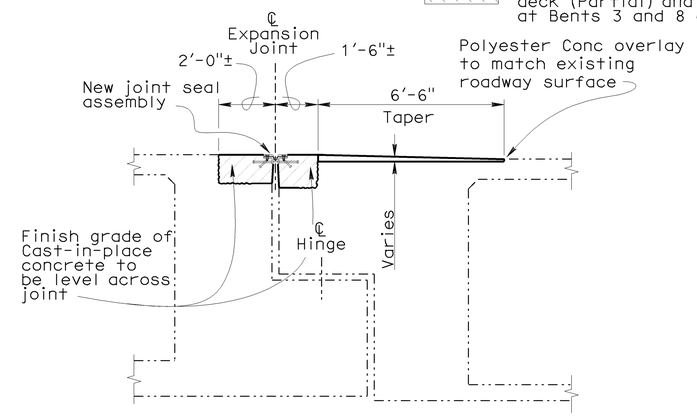

SECTION C-C BENTS 3, 8

3/8"=1'-0"

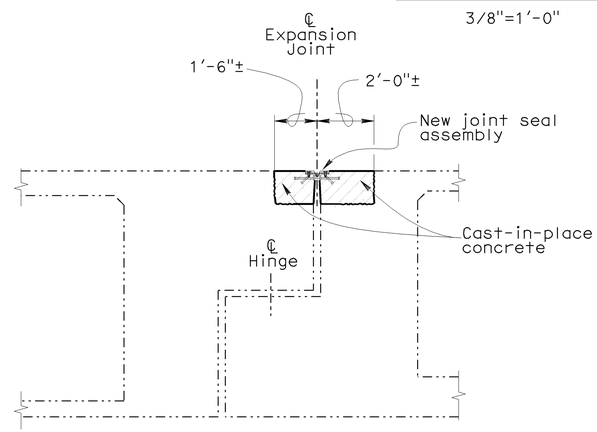

SECTION C-C BENTS 6,14

3/8"=1'-0"

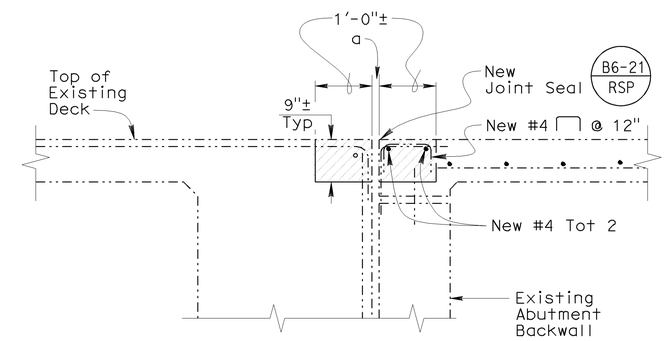

ABUTMENTS 1,17 JOINT SEAL SECTION

3/4"=1'-0"

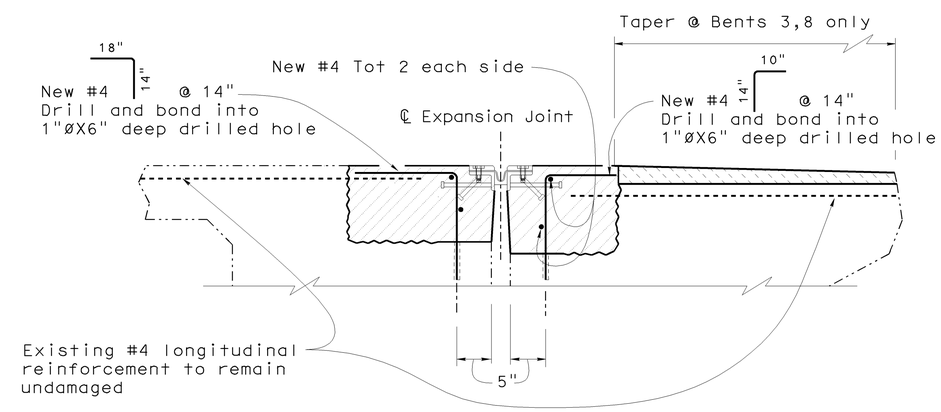

BENT JOINT SEAL DETAIL

1"=1'-0"

NOTE:
THE CONTRACTOR SHALL VERIFY ALL CONTROLLING FIELD DIMENSIONS BEFORE ORDERING OR FABRICATING ANY MATERIAL.

	BY	CHECKED
DESIGN	J. Posey	M. Okimura
DETAILS	P. Tong	M. Okimura
QUANTITIES	J. Posey	M. Okimura

STATE OF CALIFORNIA DEPARTMENT OF TRANSPORTATION

DIVISION OF ENGINEERING SERVICES STRUCTURE DESIGN DESIGN BRANCH 11

BRIDGE NO. 53-2549H
POST MILE 6.4

W91-S110 CONNECTOR OC - REPLACE JOINT SEAL
JOINT SEAL REPLACEMENT DETAILS

STRUCTURES DESIGN DETAIL SHEET (ENGLISH) (REV. 10/25/05)

ORIGINAL SCALE IN INCHES FOR REDUCED PLANS 0 1 2 3

CU 07
EA 260501

DISREGARD PRINTS BEARING EARLIER REVISION DATES

REVISION DATES: 5-25-10 12-30-11 12-14-11 2-17-11 3/15/11 8-4-10 8-23-10 10-29-10 11-5-10

SHEET 3 OF 4

FILE => 53-2549h-m-repdets.dgn

USERNAME => jromirez DATE PLOTTED => 29-MAR-2011 TIME PLOTTED => 10:50

DIST	COUNTY	ROUTE	POST MILES TOTAL PROJECT	SHEET No	TOTAL SHEETS
07	LA	91, 110, 710	R6.3, 9.9, R11.7, 13.0	30	30

REGISTERED CIVIL ENGINEER — DATE 3-23-11

05-23-11
PLANS APPROVAL DATE

REGISTERED PROFESSIONAL ENGINEER — J.A. POSEY No. 51770 Exp. 06-30-12 CIVIL — STATE OF CALIFORNIA

The State of California or its officers or agents shall not be responsible for the accuracy or completeness of electronic copies of this plan sheet.

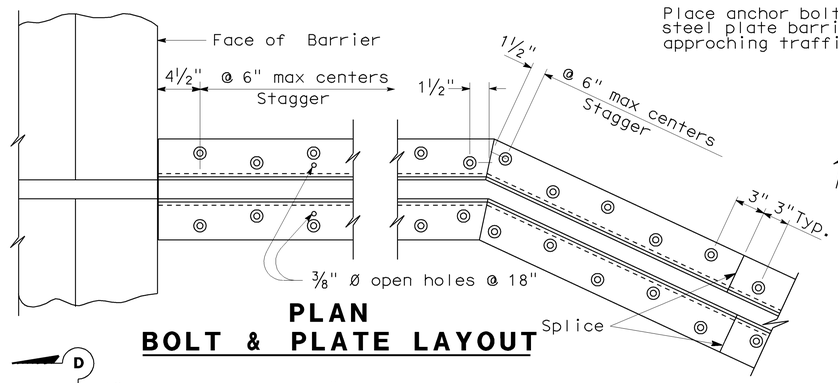

PLAN
BOLT & PLATE LAYOUT

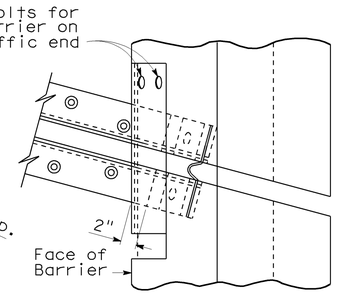

SKEW ≤ 20°

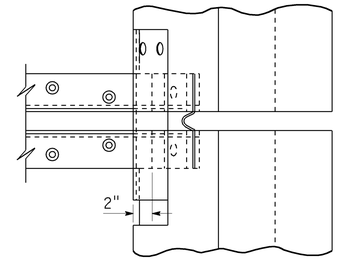

SKEW > 20°

2 NOTE:
THE CONTRACTOR SHALL VERIFY ALL CONTROLLING FIELD DIMENSIONS BEFORE ORDERING OR FABRICATING ANY MATERIAL.

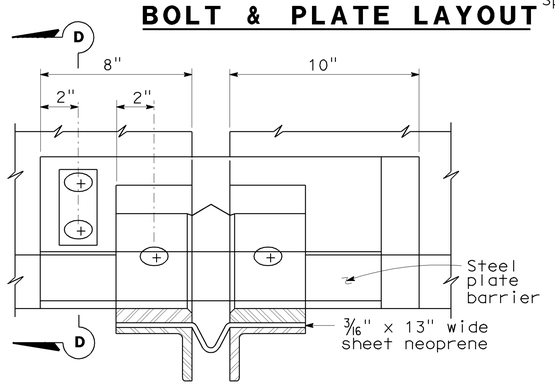

VIEW B-B

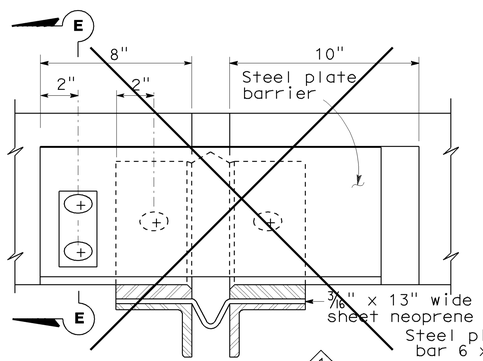

VIEW C-C 1

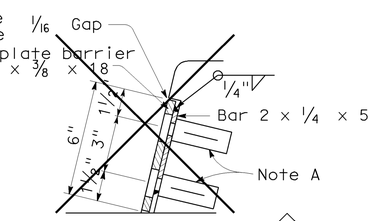

SECTION E-E 1

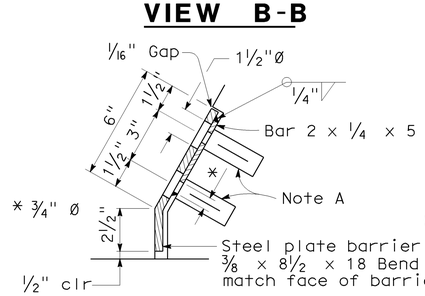

SECTION D-D

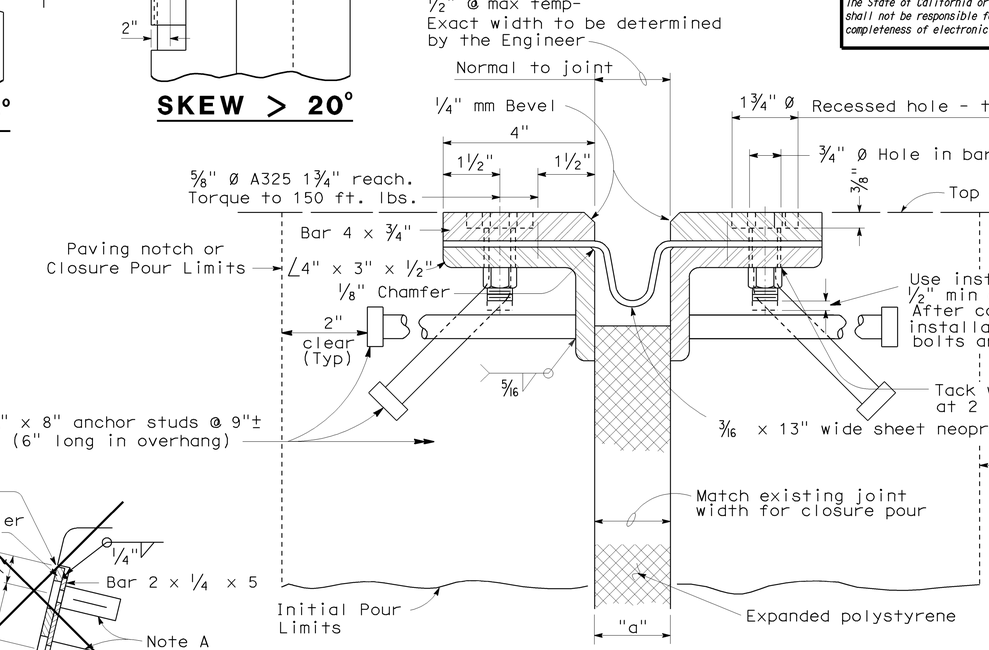

SECTION A-A

Note :
Stagger anchor studs @ 4½"± on centers thus:

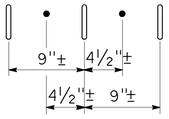

3

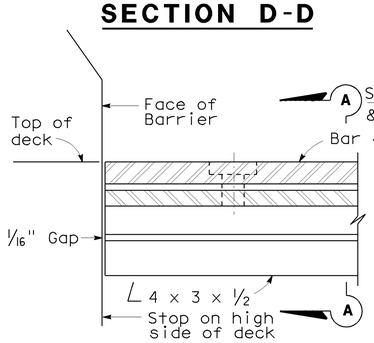

HIGH SIDE BARRIER DETAIL

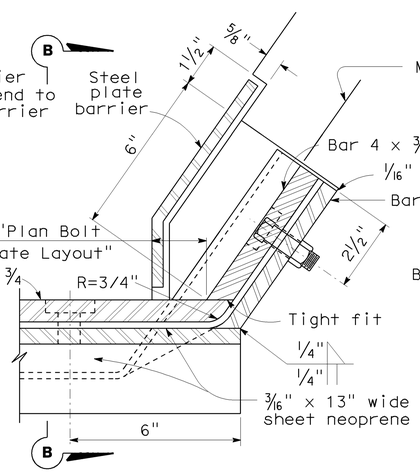

LOW SIDE BARRIER DETAIL
(See Note B)

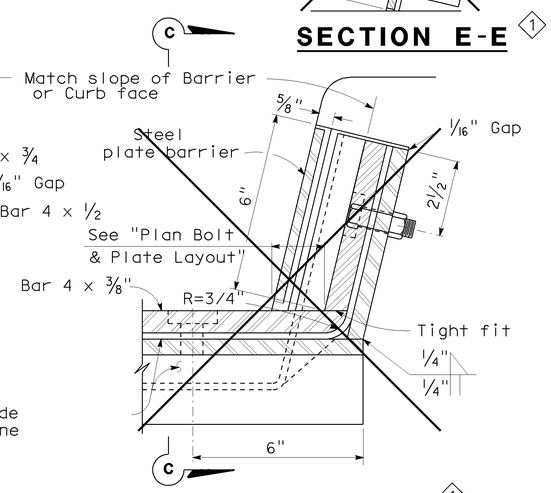

SIDEWALK DETAIL 1
(See Note B)

NOTES:

Full penetration butt welds may be substituted for fillet welds on all anchor studs.

Alternate types of anchor studs may be permitted subject to the approval by the Engineer.

Joint seal assembly to be used in conjunction with closure pour. (See other sheets for limits). Closure pour shall not be placed until final deck surface is within the tolerances specified.

Use joint at crown of roadway, at any change in traverse slope in deck and at changes in horizontal direction. Place other joints at or near lanes. All metal parts to be painted or galvanized after fabrication.

Sheet neoprene shall be fabricated in one continuous piece or joints shall be vulcanized. Neoprene shall be fabricated to bend around corners. 1" holes in neoprene sheets shall be drilled or punched so that the neoprene is not distorted at the time of installation.

NOTE A

Insert assembly or expansion anchorage for ⅝" x 1¾" A325 bolt.

NOTE B

Use the sidewalk Detail at all sidewalk joints. Use the Barrier Detail at both sides if the roadway is crowned or if the difference in elevation between the ends of the seal is 0.5' or less.

NO SCALE

STANDARD DRAWING

FILE NO. xs8-010e

APPROVED BY T. DELIS — RESPONSIBLE TECHNICAL SPECIALIST
APPROVAL DATE 5-8-08

RELEASED BY ROBERTO LACALLE — RESPONSIBLE OFFICE CHIEF
RELEASE DATE 5-8-08

1 Sidewalk details deleted
2 Added note
3 Delete Table

STATE OF CALIFORNIA
DEPARTMENT OF TRANSPORTATION

DIVISION OF ENGINEERING SERVICES

BRIDGE NO. 53-2549H
POST MILE 6.4

W91-S110 CONNECTOR OC - REPLACE JOINT SEAL
JOINT SEAL ASSEMBLY (MAXIMUM MOVEMENT RATING = 4")

DS OSD 2147A (ENGLISH STANDARD DRAWING "XS" BORDER REV. 01/11/08)

ORIGINAL SCALE IN INCHES FOR REDUCED PLANS 0 1 2 3

CU 07
EA 260501

DISREGARD PRINTS BEARING EARLIER REVISION DATES — REVISION DATES (PRELIMINARY STAGE ONLY) 5-8-10 6/11/10 7/19/10

SHEET 4 OF 4

USERNAME => jramirez

53-2549h-q-jsassy.dgn

DATE PLOTTED => 29-MAR-2011 TIME PLOTTED => 10:50